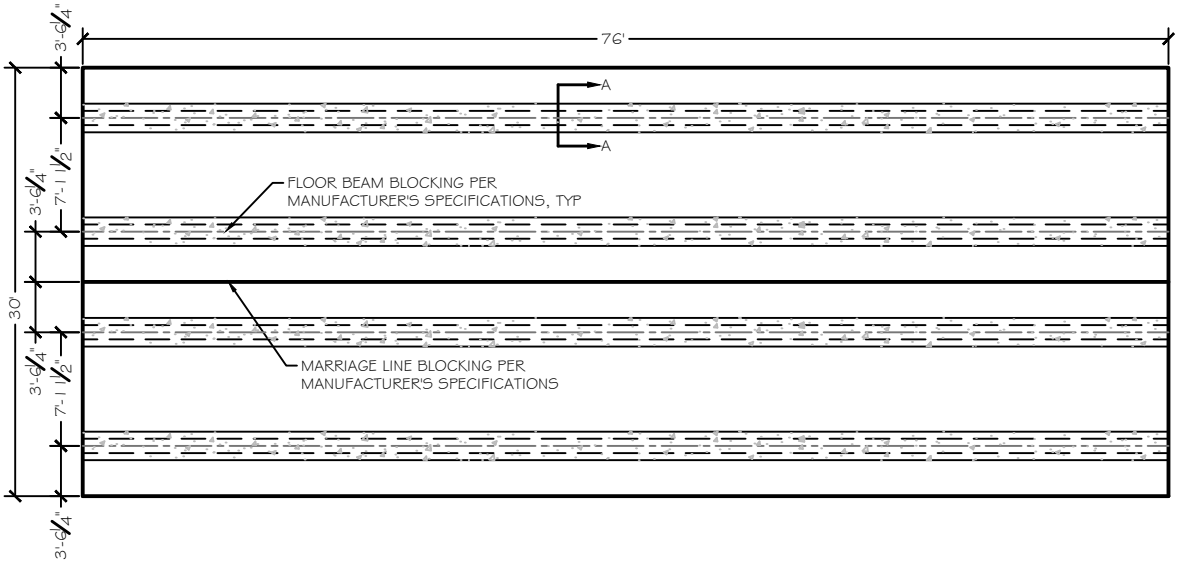

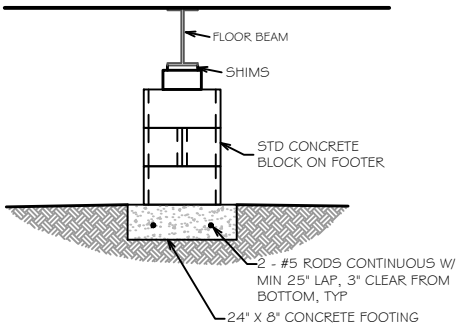

CONCRETE FOOTING DETAIL A-A

NOTE:
CONTRACTOR TO VERIFY ALL
DIMENSIONS PRIOR TO CONSTRUCTION.

NOTE:
SOIL UNDER FOOTING SHALL BE COMPACTED.
CONCRETE STRENGTH SHALL BE 2500 PSI.

Digitally signed by Carol Chadwick
DN: c=US, o=Florida, dnQualifier=A01410D0000018D463B4E7500032FEE, cn=Carol Chadwick
Date: 2025.10.23 14:39:45 -04'00'

This item has been digitally signed and sealed by Carol Chadwick, P.E. on the date adjacent to the seal. Printed copies of this document are not considered signed and sealed and the signature must be verified on any electronic copies.

CAROL CHADWICK P.E.
Civil Engineer
208 SW Hendrix Circle
Lake City, FL 32025
386.680.1771
carewigo@gmail.com
www.carolchadwickpe.com
FLORIDA • WYOMING
CALIFORNIA • A.C.E.E.S.

CAROL J. CHADWICK LICENSE No. 82560 STATE OF FLORIDA PROFESSIONAL ENGINEER

DATE	REVISION DESCRIPTION

PREPARED FOR
GARRETT NORMAN

BUILDER
SHOWCASE HOMES
CLAY YOUNG
386.965.6207

MOBILE HOME FOOTING PLAN
TBD SW HORNET COURT
FORT WHITE, FL

PROJECT NO.	DATE	REVISION DATE	SHEET	SHEETS
FL25551	OCT. 23, 2025		1 OF	1

C:\CONSULTING\JOB FILES\SHOWCASE HOMES\FL25551\DWGS\FOOTING PLAN\FL25551 FP01.dwg, 10/23/2025 2:39:24 PM