DATE 11/07/2005

Columbia County Building Permit

This Permit Expires One Year From the Date of Issue

PERMIT
000023819

APPLICANT MELANIE RODER PHONE 752-2281

ADDRESS 387 SW KEMP COURT LAKE CITY FL 32024

OWNER MATTHEW ERKINGER PHONE 754-5555

ADDRESS 103 SW WOODLEAF COURT LAKE CITY FL 32024

CONTRACTOR MATTHEW ERKINGER PHONE 754-5555

LOCATION OF PROPERTY 90W, TR ON HEATHERIDGE DRIVE, TR ON WOODLEAF, STRAIGHT AHEAD ON CUL-DE-SAC

TYPE DEVELOPMENT SFD,UTILITY ESTIMATED COST OF CONSTRUCTION 109750.00

HEATED FLOOR AREA 2195.00 TOTAL AREA 3142.00 HEIGHT .00 STORIES 1

FOUNDATION CONC WALLS FRAMED ROOF PITCH 7/12 FLOOR SLAB

LAND USE & ZONING RSF-2 MAX. HEIGHT 22

Minimum Set Back Requirments: STREET-FRONT 25.00 REAR 15.00 SIDE 10.00

NO. EX.D.U. 0 FLOOD ZONE X PP DEVELOPMENT PERMIT NO.

PARCEL ID 33-3S-16-02438-117 SUBDIVISION EMERALD COVE

LOT 17 BLOCK PHASE 1 UNIT TOTAL ACRES

000000877		RR067135	Melanie Roder	
Culvert Permit No.	Culvert Waiver	Contractor's License Number	Applicant/Owner/Contractor	
CURB/GUTTER	05-1086-N	BK	JH	Y
Driveway Connection	Septic Tank Number	LU & Zoning checked by	Approved for Issuance	New Resident

COMMENTS: ONE FOOT ABOVE THE ROAD, NOC ON FILE
CURB & GUTTER, WAITING APPROVAL FROM ROAD DEPT.

Check # or Cash 15092

FOR BUILDING & ZONING DEPARTMENT ONLY

(footer/Slab)

Temporary Power _____ date/app. by Foundation _____ date/app. by Monolithic _____ date/app. by

Under slab rough-in plumbing _____ date/app. by Slab _____ date/app. by Sheathing/Nailing _____ date/app. by

Framing _____ date/app. by Rough-in plumbing above slab and below wood floor _____ date/app. by

Electrical rough-in _____ date/app. by Heat & Air Duct _____ date/app. by Peri. beam (Lintel) _____ date/app. by

Permanent power _____ date/app. by C.O. Final _____ date/app. by Culvert _____ date/app. by

M/H tie downs, blocking, electricity and plumbing _____ date/app. by Pool _____ date/app. by

Reconnection _____ date/app. by Pump pole _____ date/app. by Utility Pole _____ date/app. by

M/H Pole _____ date/app. by Travel Trailer _____ date/app. by Re-roof _____ date/app. by

BUILDING PERMIT FEE $ 550.00 CERTIFICATION FEE $ 15.71 SURCHARGE FEE $ 15.71

MISC. FEES $ .00 ZONING CERT. FEE $ 50.00 FIRE FEE $ .00 WASTE FEE $

FLOOD DEVELOPMENT FEE $ FLOOD ZONE FEE $ 25.00 CULVERT FEE $ **TOTAL FEE** 656.42

INSPECTORS OFFICE [signature] CLERKS OFFICE CH

NOTICE: IN ADDITION TO THE REQUIREMENTS OF THIS PERMIT, THERE MAY BE ADDITIONAL RESTRICTIONS APPLICABLE TO THIS PROPERTY THAT MAY BE FOUND IN THE PUBLIC RECORDS OF THIS COUNTY. AND THERE MAY BE ADDITIONAL PERMITS REQUIRED FROM OTHER GOVERNMENTAL ENTITIES SUCH AS WATER MANAGEMENT DISTRICTS, STATE AGENCIES, OR FEDERAL AGENCIES.

"WARNING TO OWNER: YOUR FAILURE TO RECORD A NOTICE OF COMMENCEMENT MAY RESULT IN YOUR PAYING TWICE FOR IMPROVEMENTS TO YOUR PROPERTY. IF YOU INTEND TO OBTAIN FINANCING, CONSULT WITH YOUR LENDER OR AN ATTORNEY BEFORE RECORDING YOUR NOTICE OF COMMENCEMENT."

This Permit Must Be Prominently Posted on Premises During Construction

PLEASE NOTIFY THE COLUMBIA COUNTY BUILDING DEPARTMENT AT LEAST 24 HOURS IN ADVANCE OF EACH INSPECTION, IN ORDER THAT IT MAY BE MADE WITHOUT DELAY OR INCONVIENCE, PHONE 758-1008. THIS PERMIT IS NOT VALID UNLESS THE WORK AUTHORIZED BY IT IS COMMENCED WITHIN 6 MONTHS AFTER ISSUANCE.

The Issuance of this Permit Does Not Waive Compliance by Permittee with Deed Restrictions.

Lot 17 Emerald Cove

Columbia County Building Permit Application

Revised 9-23-04

For Office Use Only Application # 0510-81 Date Received 10-27-05 By LH Permit # 87/23819

Application Approved by - Zoning Official RLK Date 03.11.05 Plans Examiner OK JTH Date 11-4-05

Flood Zone X Per Plat Development Permit N/A Zoning RSF-2 Land Use Plan Map Category Res. Low Den.

Comments

Applicants Name Linda or Melanie Roder Phone 752-2281

Address 387 S.W. Kemp Ct. Lake City FL 32024

Owners Name Erkinger Home Builders Phone 754-5555

911 Address 103 SW Woodleaf Ct Lake City FL 32024

Contractors Name Matthew Erkinger Phone 754-5555

Address 248 S.E. Nassau St. Lake City FL 32025

Fee Simple Owner Name & Address NA

Bonding Co. Name & Address NA

Architect/Engineer Name & Address Matthew Erkinger / Mark Disosway

Mortgage Lenders Name & Address 1st Federal

Circle the correct power company - FL Power & Light - Clay Elec. - Suwannee Valley Elec. - Progressive Energy

Property ID Number 33-3S-16-02438-009 Estimated Cost of Construction 160,000

Subdivision Name Emerald Cove Lot 17 Block ___ Unit ___ Phase 1

Driving Directions 90 West, 3/4 mile past Brown Rd, go left on Emerald Cove Entrance, go 1/2 mi on road, lot is at end of cul de sac, go to end of

Type of Construction SFD Number of Existing Dwellings on Property 0

Total Acreage .5 Lot Size ___ Do you need a - Culvert Permit or Culvert Waiver or Have an Existing Drive

Actual Distance of Structure from Property Lines - Front 35' Side 32' Side 29' Rear 79'

Total Building Height 22' Number of Stories 1 Heated Floor Area 2195 Roof Pitch 7-12

Porches 376 Garage 571 TOTAL 3142

Application is hereby made to obtain a permit to do work and installations as indicated. I certify that no work or installation has commenced prior to the issuance of a permit and that all work be performed to meet the standards of all laws regulating construction in this jurisdiction.

OWNERS AFFIDAVIT: I hereby certify that all the foregoing information is accurate and all work will be done in compliance with all applicable laws and regulating construction and zoning.

WARNING TO OWNER: YOUR FAILURE TO RECORD A NOTICE OF COMMENCMENT MAY RESULT IN YOU PAYING TWICE FOR IMPROVEMENTS TO YOUR PROPERTY. IF YOU INTEND TO OBTAIN FINANCING, CONSULT WITH YOUR LENDER OR ATTORNEY BEFORE RECORDING YOUR NOTICE OF COMMENCEMENT.

X Matthew A. Erkinger

Owner Builder or Agent (Including Contractor)

Contractor Signature

Contractors License Number RR067135

Competency Card Number

NOTARY STAMP/SEAL

Linda R. Roder
Commission #DD303275
Expires: Mar 24, 2008
Bonded Thru
Atlantic Bonding Co., Inc.

STATE OF FLORIDA
COUNTY OF COLUMBIA

Sworn to (or affirmed) and subscribed before me this 1 day of September 20 05.

Personally known ✓ or Produced Identification ___

Linda R. Roder

Notary Signature

BUILDING SET BACKS:

FRONT: 25 FEET
SIDE: 10 FEET

N 38°43'40"W	42.43'
S 51°16'20"W	42.43'
N 38°43'40"W	42.43'
N 06°16'20"E	21.28'
S 79°16'05"W	30.00'
N 06°16'20"E	40.51'
S 80°11'22"W	30.43'
S 80°11'22"W	30.38'
S 79°16'05"W	30.00'
N 35°12'20"E	5.02'
S 35°12'20"W	2.81

4	10°31'51"	350.00	64.33	32.26	64.24	S 76°27'45"E
5	5°11'01"	600.00	54.28	27.16	54.27	S 8°51'51"W
6	4°16'36"	600.00	44.79	22.40	44.77	S 12°52'13"E
7	16°37'03"	600.00	174.02	87.62	173.41	S 14°34'52"W
8	23°21'07"	600.00	244.54	123.99	242.85	S 11°12'50"W
10	31°48'42"	600.00	333.13	170.98	328.87	S 0°53'50"W
12	28°56'00"	420.00	212.09	108.36	209.85	S 20°44'20"W
13	90°00'00"	320.00	502.65	320.00	452.55	S 38°43'40"E
14	41°24'35"	30.00	21.68	11.34	21.21	N 75°34'03"E
15	172°49'09"	50.00	150.81	796.86	99.80	S 38°43'40"E
16	41°24'35"	30.00	21.68	11.34	21.21	S 26°58'37"W
17	5°11'01"	630.00	57.00	28.52	56.98	S 8°51'51"W
24	5°11'01"	570.00	51.57	25.80	51.55	N 8°51'51"E
25	16°37'03"	630.00	182.72	92.01	182.08	S 14°34'52"W
26	22°51'19"	570.00	227.37	115.22	225.87	S 11°27'44"W
33	23°48'03"	630.00	261.70	132.77	259.83	S 10°59'22"W
34	16°37'03"	570.00	165.32	83.24	164.74	N 14°34'52"E
35	31°48'42"	570.00	316.47	162.43	312.43	S 0°53'50"W
42	31°48'42"	630.00	349.79	179.53	345.31	N 0°53'50"E
43	70°25'00"	380.00	467.02	268.14	438.18	N 28°56'10"W
44	28°40'11"	480.00	240.18	122.66	237.68	N 20°36'25"E
45	17°55'35"	420.00	131.41	66.24	130.87	S 26°14'33"W
46	11°00'25"	420.00	80.69	40.47	80.56	S 11°46'33"W
47	16°05'49"	320.00	89.90	45.25	89.61	S 1°46'35"E
48	44°51'20"	320.00	250.52	132.08	244.17	S 32°15'09"E
49	3°40'27"	320.00	20.52	10.26	20.52	S 56°31'03"E
50	23°47'23"	320.00	132.87	67.40	131.91	S 70°14'58"E
51	1°35'01"	320.00	8.84	4.42	8.84	S 82°56'10"E
52	53°27'47"	50.00	46.66	25.18	44.98	N 81°35'39"E
53	73°44'23"	50.00	64.35	37.50	60.00	S 34°48'16"E
54	45°36'59"	50.00	39.81	21.03	38.76	S 24°52'25"W
62	11°04'28"	630.00	121.77	61.08	121.58	S 11°48'34"W
63	5°32'35"	630.00	60.95	30.50	60.93	S 20°07'06"W
64	8°45'03"	570.00	87.06	43.61	86.97	S 18°30'52"W
65	14°06'15"	570.00	140.31	70.51	139.96	S 7°05'12"W
81	9°54'02"	630.00	108.86	54.57	108.73	S 5°51'41"E
82	12°53'04"	630.00	141.67	71.14	141.37	N 5°31'52"E
83	7°16'50"	630.00	80.05	40.08	80.00	N 15°36'49"E
84	3°38'09"	630.00	39.98	20.00	39.97	N 21°04'19"E
85	4°01'28"	570.00	40.04	20.03	40.03	N 20°52'39"E
86	12°35'35"	570.00	125.28	62.89	125.03	N 12°34'07"E
87	8°53'27"	570.00	88.45	44.31	88.36	S 12°21'28"W
88	17°29'56"	570.00	174.09	87.73	173.41	S 0°50'14"E
89	5°25'20"	570.00	53.94	26.99	53.92	S 12°17'51"E
90	4°16'36"	630.00	47.02	23.52	47.01	S 12°52'13"E
100	4°16'36"	570.00	42.55	21.28	42.54	N 12°52'13"W
101	12°32'25"	630.00	137.89	69.22	137.61	N 8°44'19"W
102	11°41'56"	630.00	128.64	64.54	128.41	N 3°22'52"E
103	7°34'21"	630.00	83.26	41.69	83.20	N 13°01'00"E
104	37°46'47"	380.00	250.56	130.03	246.05	N 45°15'16"W
105	32°38'13"	380.00	216.46	111.25	213.54	N 10°02'46" W

FLOOD ZONE INFORMATION:

THE PROPERTY AS SURVEYED FALLS WITHIN ZONE "X" AS PER THE FLOOD INSURANCE RATE MAP OF THE FEDERAL EMERGENCY MANAGEMENT AGENCY PANEL NO. 120070 0175B

UTILITY EASEMENT DETAIL:

DENOTES 20' UTILITY EASEMENT ALONG ROAD RIGHTS-OF-WAY. EASEMENTS FOR UTILITIES SHALL ALSO BE EASEMENTS FOR THE CONSTRUCTION, INSTALLATION, MAINTENANCE AND OPERATION OF CABLE TELEVISION SERVICES.

CERTIFICATE OF SUBDIVIDER'S ENGINEER

THIS IS TO CERTIFY THAT ON THIS 29 OF JULY, 2005, GARY GILL, REGISTERED FLORIDA ENGINEER, AS SPECIFIED WITHIN CHAPTER 471, FLORIDA STATUTES, LICENSE NO. 51942, DOES HEREBY CERTIFY THAT ALL REQUIRED IMPROVEMENTS HAVE BEEN INSTALLED IN COMPLIANCE WITH THE APPROVED CONSTRUCTION PLANS AND IFF APPLICABLE, ANY SUBMITTED "AS-BUILT" BLUEPRINTS IN ACCORDANCE WITH THE REQUIREMENTS OF THE BOARD OF COUNTY COMMISSIONERS OF COLUMBIA COUNTY, FLORIDA.

REGISTERED FLORIDA ENGINEER

I LINE OF
LAKE PHASE 3

Inst:2005023273 Date:09/21/2005 Time:15:02
Doc Stamp-Deed : 279.30
DC,P.DeWitt Cason,Columbia County B:1059 P:355

PREPARED BY AND RETURN TO:

TERRY McDAVID
POST OFFICE BOX 1328
LAKE CITY, FL 32056-1328

Property Appraiser's Identification Number 02458-000 02421-000

TM File No: 05-790

WARRANTY DEED

This Warranty Deed, made this 16th day of September, 2005, BETWEEN D D P CORPORATION, a Florida corporation, whose post office address is 4158 US Highway 90 West, Lake City, Florida 32055, of the County of Columbia, State of Florida, grantor, and ERKINGER HOME BUILDERS, INC., a Florida Corporation, whose post office address is 248 SE Nassau St., Lake City, Florida 32025, grantee.

(Whenever used herein the terms "grantor" and "grantee" include all the parties to this instrument and the heirs, legal representatives and assigns of individuals, and the successors and assigns of corporations, trusts and trustees)

Witnesseth: that said grantor, for and in consideration of the sum of Ten Dollars ($10.00), and other good and valuable considerations to said grantor in hand paid by said grantee, the receipt whereof is hereby acknowledged, has granted, bargained and sold to the said grantee, and grantee's heirs and assigns forever, the following described land, situate, lying and being in Columbia County, Florida, to-wit:

> Lot 17, Emerald Cove, Phase 1, a subdivision according to the plat thereof recorded in Plat Book 8, Pages 35-36, public records, Columbia County, Florida.

Together with all the tenements, hereditaments and appurtenances thereto belonging or in anywise appertaining.

To Have and to Hold, the same in fee simple forever.

And subject to taxes for the current year and later years and all valid easements and restrictions of record, if any, which are not hereby reimposed; and also subject to any claim, right, title or interest arising from any recorded instrument reserving, conveying, leasing, or otherwise alienating any interest in the oil, gas and other minerals. And grantor does warrant the title to said land and will defend the same against the lawful claims of all persons whomsoever, subject only to the exceptions set forth herein.

In Witness Whereof, grantor has hereunto set grantor's hand and seal the day and year first above written.

Signed, sealed and delivered in our presence:

(Signature of First Witness)

CRYSTAL L. BRUNNER

(Typed Name of First Witness)

(Signature of Second Witness)

KAREN A. WRIGHT

(Typed Name of Second Witness)

D D P CORPORATION

BY: _____ (SEAL)
O. P. Daughtry, III,
President

(Corporate Seal)

STATE OF FLORIDA
COUNTY OF COLUMBIA

The foregoing instrument was acknowledged before me this 16th day of September, 2005, by O. P. Daughtry, III, President of D D P Corporation, a Florida corporation, on behalf of said corporation, who is/are personally known to me or who has/have produced Personal Knowledge as identification and who did not take an oath.

My Commission Expires:

Notary Public
Printed, typed, or stamped name:

KAREN M. WRIGHT
Notary Public - State of Florida
My Commission Expires Jan 23, 2008
Commission # DD466234
Bonded By National Notary Assn.

Inst:2005023273 Date:09/21/2005 Time:15:02
Doc Stamp-Deed : 279.30
DC,P.DeWitt Cason,Columbia County B:1059 P:356

PREPARED BY AND RETURN TO:

TERRY McDAVID
POST OFFICE BOX 1328
LAKE CITY, FL 32056-1328

File No. 05-789

Inst:2005023275 Date:09/21/2005 Time:15:02
DC,P.DeWitt Cason,Columbia County B:1059 P:365

PERMIT NO._____ TAX FOLIO NO.:02438-000 & 02421-000

NOTICE OF COMMENCEMENT

STATE OF FLORIDA
COUNTY OF COLUMBIA

The undersigned hereby gives notice that improvement will be made to certain real property, and in accordance with Chapter 713, Florida Statutes, the following information is provided in this Notice of Commencement.

1. Description of property:

Lot 17, Emerald Cove, Phase 1, a subdivision according to the plat thereof recorded in Plat Book 8, Pages 35-36, public records, Columbia County, Florida.

2. General description of improvement: Construction of dwelling

3. Owner information:

a. Name and address: Erkinger Home Builders, Inc., 248 SE Nassau St., Lake City, Florida 32025.

b. Interest in property: Fee Simple

c. Name and address of fee simple title holder (if other than Owner):

4. Contractor: Erkinger Home Builders, Inc., 248 SE Nassau St., Lake City, Florida 32025.

5. Surety

a. Name and address: None

b. Amount of bond:

6. Lender: FIRST FEDERAL SAVINGS BANK OF FLORIDA, 4705 West US Highway 90, Lake City, Florida 32055.

7. Persons within the State of Florida designated by Owner upon whom notices or other documents may be served as provided by Section 713.13(1)(a)7., Florida Statutes: None

8. In addition to himself, Owner designates Attn: Teresa Davis, FIRST FEDERAL SAVINGS BANK OF FLORIDA, 4705 West US Highway 90, Lake City, Florida 32055, to receive a copy of the Lienor's Notice as provided in Section 713.13(1)(b), Florida Statutes.

9. Expiration date of notice of commencement (the expiration date is 1 year from the date of recording unless a different date is specified). September 16, 2006.

STATE OF FLORIDA, COUNTY OF COLUMBIA
I HEREBY CERTIFY, that the above and foregoing is a true copy of the original filed in this office.
P. DeWITT CASON, CLERK OF COURTS
By Marcel Keen
Deputy Clerk
Date Sept 21, 2005

CLERK CIRCUIT COURT COLUMBIA COUNTY, FLORIDA

ERKINGER HOME BUILDERS, INC.

By: Matthew A. Erkinger
Matthew A. Erkinger, Sr.
President

The foregoing instrument was acknowledged before me this 16th day of September, 2005, by Matthew A. Erkinger, Sr., President of Erkinger Home Builders, Inc., a Florida corporation, on behalf of the corporation. He is personally known to me and did not take an oath.

KAREN M. WRIGHT
Notary Public - State of Florida
My Commission Expires Jan 23, 2008
Commission # DD086239
Bonded By National Notary Assn.

Karen M. Wright
Notary Public
My commission expires:_____

Application for Onsite Sewage Disposal System Construction Permit. Part II Site Plan

Permit Application Number: 05-1086N

ALL CHANGES MUST BE APPROVED BY THE COUNTY HEALTH UNIT

ERKINGER/CR 05-3149

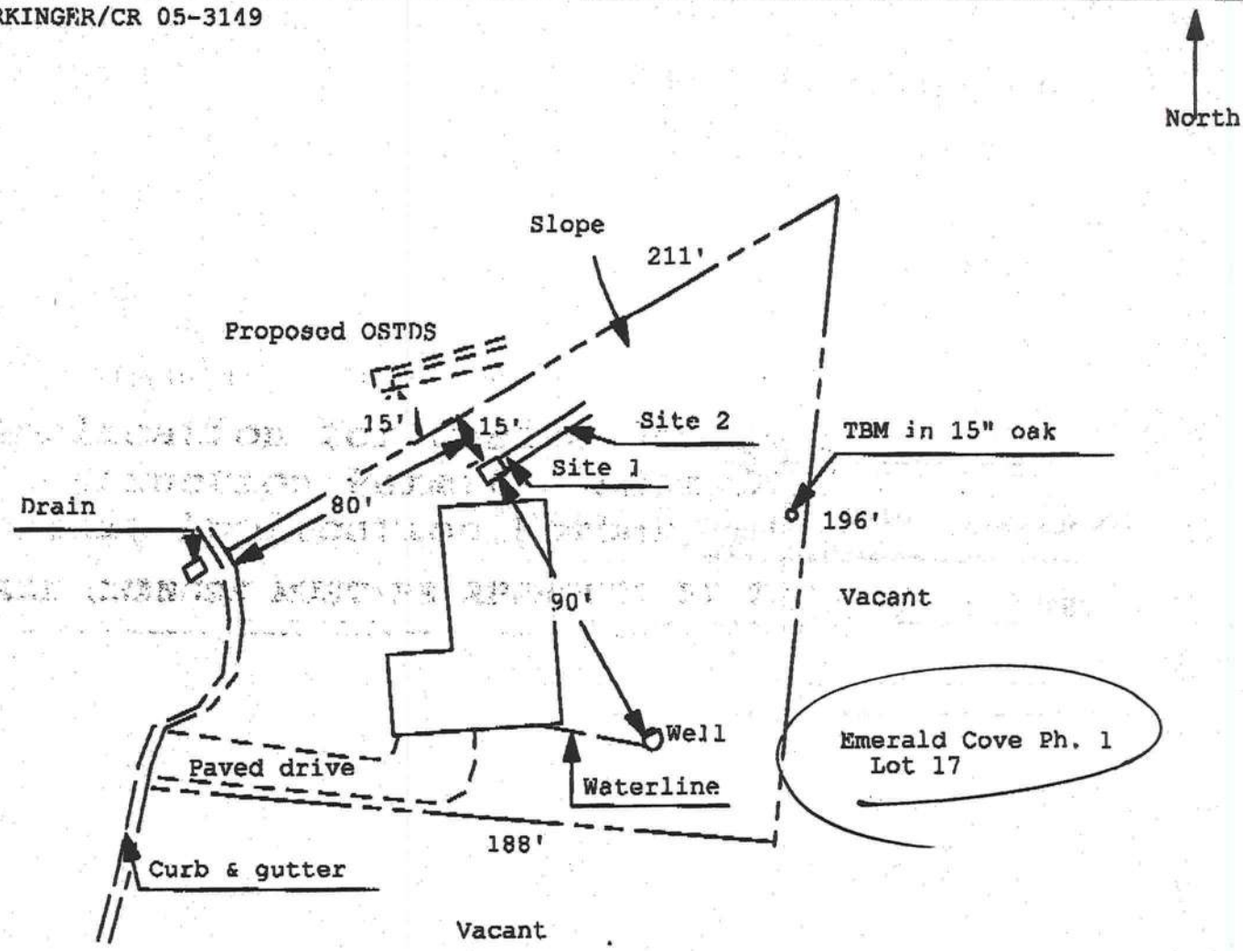

1 inch = 50 feet

Site Plan Submitted By Paul Lloyd **Date** 10/14/05

Plan Approved ✓ **Not Approved** ____ **Date** 10/25/05

By [illegible] Columbia **CPHU**

Notes:

ASPEN PEST CONTROL, INC.

Phone (386) 755-3611
Fax (386) 752-5381

Notice of Intent for Preventative Treatment for Termites

(As required by Florida Building Code (FBC) 104.2.6)

Aspen Pest Control, Inc.
(386) 755-3611
State License # - JB109476
State Certification # - JF104376

Lot # 17 Emerald Cove – Lake City, Fl 32055

Address of Treatment or Lot/Block of Treatment

Bora-Care Wood Treatment – 23% Disodium Octaborate Tetrahydrate

Method of Termite Prevention Treatment – Soil Barrier, Wood Treatment, Bait System, Other

Application onto Structural Wood

Description of Treatment

The above named structure will receive a complete treatment for the prevention of subterranean termites at the dried-in stage of construction. Treatment is done in accordance with the rules and laws established by the Florida Department of Agriculture and Consumer Services and according to EPA registered label directions as stated in Florida Building Code Section 1861.1.8.

Susie Loeng
Authorized Signature

9-12-05
Date

Erkinger Home builders
Lot 17 Emerald Cove

Site Plan

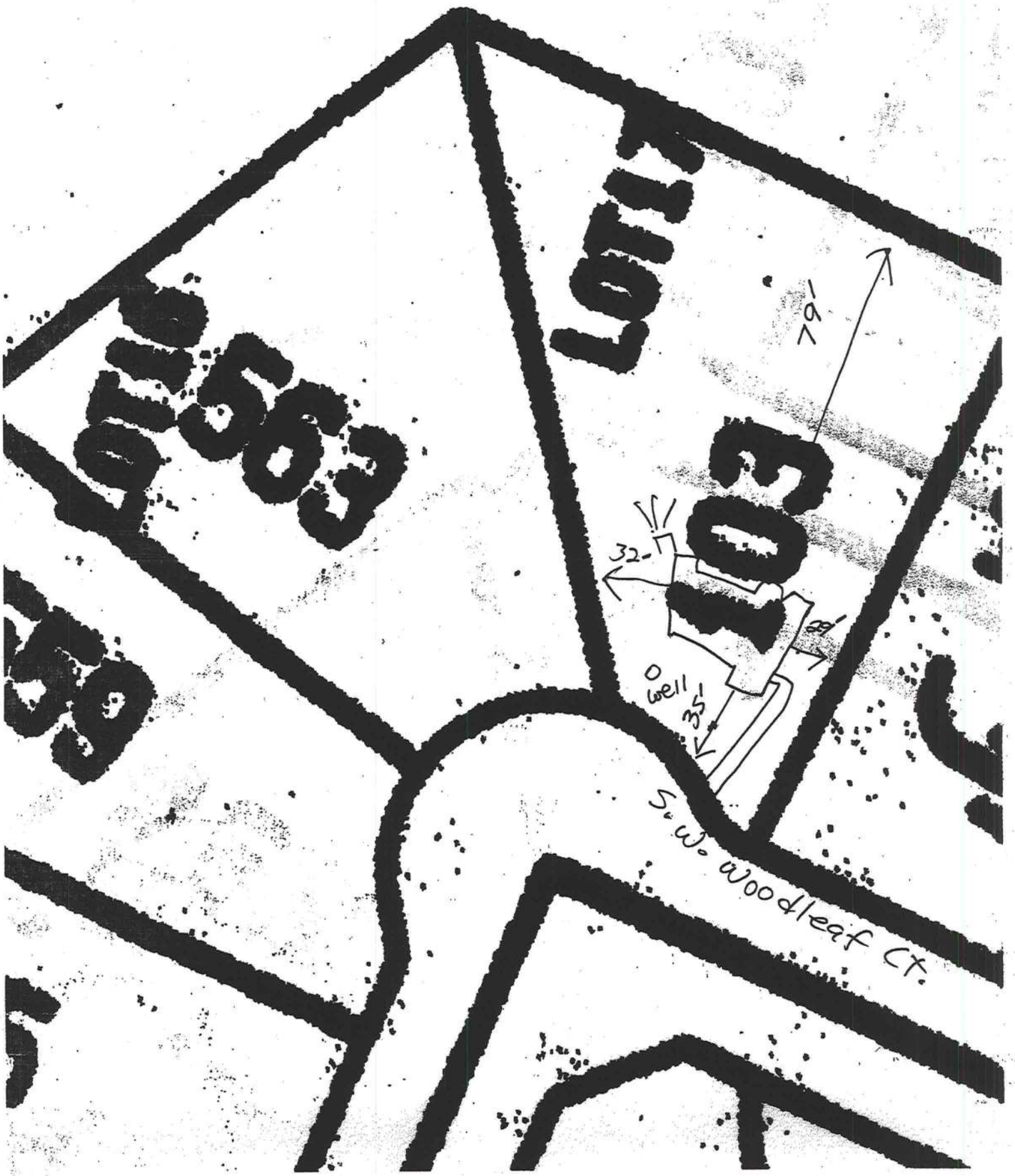

FLORIDA ENERGY EFFICIENCY CODE FOR BUILDING CONSTRUCTION

Florida Department of Community Affairs

Residential Whole Building Performance Method A

Project Name:	**Lt 17 Phase 1 Emerald Cove**	Builder:	**Erkinger Homes**
Address:		Permitting Office:	
City, State:	**Lake City, Fl**	Permit Number:	
Owner:	**Erkinger Homes**	Jurisdiction Number:	
Climate Zone:	**North**		

1. New construction or existing		New	__
2. Single family or multi-family		Single family	__
3. Number of units, if multi-family		1	__
4. Number of Bedrooms		4	__
5. Is this a worst case?		No	__
6. Conditioned floor area (ft²)		2195 ft²	__
7. Glass area & type	Single Pane	Double Pane	
a. Clear glass, default U-factor	0.0 ft²	390.0 ft²	__
b. Default tint, default U-factor	0.0 ft²	0.0 ft²	__
c. Labeled U-factor or SHGC	0.0 ft²	0.0 ft²	__
8. Floor types			
a. Slab-On-Grade Edge Insulation		R=0.0, 212.0(p) ft	__
b. N/A			__
c. N/A			__
9. Wall types			
a. Frame, Wood, Exterior		R=11.0, 1399.0 ft²	__
b. Frame, Wood, Adjacent		R=11.0, 203.0 ft²	__
c. N/A			__
d. N/A			__
e. N/A			__
10. Ceiling types			__
a. Under Attic		R=30.0, 2195.0 ft²	
b. N/A			__
c. N/A			__
11. Ducts			__
a. Sup: Unc. Ret: Unc. AH: Interior		Sup. R=6.0, 185.0 ft	
b. N/A			__
			__

12. Cooling systems		
a. Central Unit	Cap: 42.0 kBtu/hr	__
	SEER: 10.30	__
b. N/A		__
		__
c. N/A		__
		__
13. Heating systems		
a. Electric Heat Pump	Cap: 42.0 kBtu/hr	__
	HSPF: 7.30	__
b. N/A		__
		__
c. N/A		__
		__
14. Hot water systems		
a. Electric Resistance	Cap: 50.0 gallons	__
	EF: 0.93	__
b. N/A		__
		__
c. Conservation credits (HR-Heat recovery, Solar DHP-Dedicated heat pump)		__
15. HVAC credits (CF-Ceiling fan, CV-Cross ventilation, HF-Whole house fan, PT-Programmable Thermostat, MZ-C-Multizone cooling, MZ-H-Multizone heating)		__

Glass/Floor Area: 0.18

Total as-built points: 33776
Total base points: 33874

PASS

I hereby certify that the plans and specifications covered by this calculation are in compliance with the Florida Energy Code.

PREPARED BY: _____

DATE: 9-26-05

I hereby certify that this building, as designed, is in compliance with the Florida Energy Code.

OWNER/AGENT: _____

DATE: 10-3-05

Review of the plans and specifications covered by this calculation indicates compliance with the Florida Energy Code. Before construction is completed this building will be inspected for compliance with Section 553.908 Florida Statutes.

GREAT SEAL OF THE STATE OF FLORIDA · IN GOD WE TRUST

BUILDING OFFICIAL: _____

DATE: _____

SUMMER CALCULATIONS

Residential Whole Building Performance Method A - Details

ADDRESS: **, Lake City, Fl,** PERMIT #:

BASE

GLASS TYPES

.18 X Conditioned Floor Area	X BSPM	= Points
.18 **2195.0**	**20.04**	**7917.8**

WALL TYPES	Area	X BSPM	= Points
Adjacent	203.0	0.70	142.1
Exterior	1399.0	1.70	2378.3
Base Total:	**1602.0**		**2520.4**

DOOR TYPES	Area	X BSPM	= Points
Adjacent	21.0	2.40	50.4
Exterior	36.0	6.10	219.6
Base Total:	**57.0**		**270.0**

CEILING TYPES	Area	X BSPM	= Points
Under Attic	2195.0	1.73	3797.4
Base Total:	**2195.0**		**3797.4**

FLOOR TYPES	Area	X BSPM	= Points
Slab	212.0(p)	-37.0	-7844.0
Raised	0.0	0.00	0.0
Base Total:			**-7844.0**

INFILTRATION	Area	X BSPM	= Points
	2195.0	10.21	22410.9

AS-BUILT

Type/SC	Overhang Ornt	Len	Hgt	Area	X SPM	X SOF	= Points
Double, Clear	N	1.5	8.0	102.0	19.20	0.97	1894.3
Double, Clear	E	1.5	8.0	40.0	42.06	0.96	1611.1
Double, Clear	S	1.5	8.0	210.0	35.87	0.92	6954.2
Double, Clear	W	1.5	8.0	38.0	38.52	0.96	1402.6
As-Built Total:				**390.0**			**11862.1**

Type	R-Value	Area	X SPM	= Points
Frame, Wood, Exterior	11.0	1399.0	1.70	2378.3
Frame, Wood, Adjacent	11.0	203.0	0.70	142.1
As-Built Total:		**1602.0**		**2520.4**

Type	Area	X SPM	= Points
Exterior Wood	36.0	6.10	219.6
Adjacent Wood	21.0	2.40	50.4
As-Built Total:	**57.0**		**270.0**

Type	R-Value	Area	X SPM X SCM	= Points
Under Attic	30.0	2195.0	1.73 X 1.00	3797.4
As-Built Total:		**2195.0**		**3797.4**

Type	R-Value	Area	X SPM	= Points
Slab-On-Grade Edge Insulation	0.0	212.0(p	-41.20	-8734.4
As-Built Total:		**212.0**		**-8734.4**

	Area	X SPM	= Points
	2195.0	10.21	22410.9

SUMMER CALCULATIONS

Residential Whole Building Performance Method A - Details

ADDRESS: **, Lake City, Fl,** PERMIT #:

BASE				AS-BUILT								
Summer Base Points:			**29072.5**	**Summer As-Built Points:**								**32126.4**
Total Summer Points	X System Multiplier	=	Cooling Points	Total Component	X Cap Ratio	X Duct Multiplier (DM x DSM x AHU)	X System Multiplier	X Credit Multiplier	= Cooling Points			
				32126.4	1.000	(1.090 x 1.147 x 0.91)	0.331	1.000	12111.4			
29072.5	**0.4266**		**12402.3**	**32126.4**	**1.00**	**1.138**	**0.331**	**1.000**	**12111.4**			

WINTER CALCULATIONS

Residential Whole Building Performance Method A - Details

ADDRESS: **, Lake City, Fl,** PERMIT #:

BASE				AS-BUILT							
GLASS TYPES .18 X Conditioned Floor Area	X BWPM	= Points		Type/SC	Overhang Ornt	Len	Hgt	Area X	WPM X	WOF	= Points
.18	**2195.0**	**12.74**	**5033.6**	Double, Clear	N	1.5	8.0	102.0	24.58	1.00	2509.1
				Double, Clear	E	1.5	8.0	40.0	18.79	1.02	766.6
				Double, Clear	S	1.5	8.0	210.0	13.30	1.04	2907.1
				Double, Clear	W	1.5	8.0	38.0	20.73	1.01	796.4
				As-Built Total:				**390.0**			**6979.3**
WALL TYPES	Area X	BWPM	= Points	Type		R-Value		Area X	WPM		= Points
Adjacent	203.0	3.60	730.8	Frame, Wood, Exterior		11.0		1399.0	3.70		5176.3
Exterior	1399.0	3.70	5176.3	Frame, Wood, Adjacent		11.0		203.0	3.60		730.8
Base Total:	**1602.0**		**5907.1**	**As-Built Total:**				**1602.0**			**5907.1**
DOOR TYPES	Area X	BWPM	= Points	Type				Area X	WPM		= Points
Adjacent	21.0	11.50	241.5	Exterior Wood				36.0	12.30		442.8
Exterior	36.0	12.30	442.8	Adjacent Wood				21.0	11.50		241.5
Base Total:	**57.0**		**684.3**	**As-Built Total:**				**57.0**			**684.3**
CEILING TYPES	Area X	BWPM	= Points	Type		R-Value		Area X	WPM X	WCM	= Points
Under Attic	2195.0	2.05	4499.8	Under Attic		30.0		2195.0	2.05 X	1.00	4499.8
Base Total:	**2195.0**		**4499.8**	**As-Built Total:**				**2195.0**			**4499.8**
FLOOR TYPES	Area X	BWPM	= Points	Type		R-Value		Area X	WPM		= Points
Slab	212.0(p)	8.9	1886.8	Slab-On-Grade Edge Insulation		0.0		212.0(p	18.80		3985.6
Raised	0.0	0.00	0.0								
Base Total:			**1886.8**	**As-Built Total:**				**212.0**			**3985.6**
INFILTRATION	Area X	BWPM	= Points					Area X	WPM		= Points
	2195.0	-0.59	-1295.0					2195.0	-0.59		-1295.0

WINTER CALCULATIONS

Residential Whole Building Performance Method A - Details

ADDRESS: **, Lake City, Fl,** PERMIT #:

BASE				AS-BUILT							
Winter Base Points:			**16716.5**	**Winter As-Built Points:**							**20761.0**
Total Winter Points	X	System Multiplier	= Heating Points	Total Component	X	Cap Ratio	X Duct Multiplier (DM x DSM x AHU)	X System Multiplier	X	Credit Multiplier	= Heating Points
16716.5		**0.6274**	**10487.9**	20761.0 **20761.0**		1.000 **1.00**	(1.069 x 1.169 x 0.93) **1.162**	0.467 **0.467**		1.000 **1.000**	11270.8 **11270.8**

WATER HEATING & CODE COMPLIANCE STATUS

Residential Whole Building Performance Method A - Details

ADDRESS: **, Lake City, Fl,** PERMIT #:

BASE				AS-BUILT							
WATER HEATING											
Number of Bedrooms	X	Multiplier	= Total	Tank Volume	EF	Number of Bedrooms	X	Tank Ratio	X Multiplier	X Credit Multiplier	= Total
4		2746.00	10984.0	50.0	0.93	4		1.00	2598.37	1.00	10393.5
				As-Built Total:							**10393.5**

CODE COMPLIANCE STATUS

BASE				AS-BUILT			
Cooling Points +	Heating Points +	Hot Water Points =	Total Points	Cooling Points +	Heating Points +	Hot Water Points =	Total Points
12402	**10488**	**10984**	**33874**	**12111**	**11271**	**10393**	**33776**

PASS

Code Compliance Checklist

Residential Whole Building Performance Method A - Details

ADDRESS: **, Lake City, Fl,** PERMIT #:

6A-21 INFILTRATION REDUCTION COMPLIANCE CHECKLIST

COMPONENTS	SECTION	REQUIREMENTS FOR EACH PRACTICE	CHECK
Exterior Windows & Doors	606.1.ABC.1.1	Maximum:.3 cfm/sq.ft. window area; .5 cfm/sq.ft. door area.	
Exterior & Adjacent Walls	606.1.ABC.1.2.1	Caulk, gasket, weatherstrip or seal between: windows/doors & frames, surrounding wall; foundation & wall sole or sill plate; joints between exterior wall panels at corners; utility penetrations; between wall panels & top/bottom plates; between walls and floor. EXCEPTION: Frame walls where a continuous infiltration barrier is installed that extends from, and is sealed to, the foundation to the top plate.	
Floors	606.1.ABC.1.2.2	Penetrations/openings >1/8" sealed unless backed by truss or joint members. EXCEPTION: Frame floors where a continuous infiltration barrier is installed that is sealed to the perimeter, penetrations and seams.	
Ceilings	606.1.ABC.1.2.3	Between walls & ceilings; penetrations of ceiling plane of top floor; around shafts, chases, soffits, chimneys, cabinets sealed to continuous air barrier; gaps in gyp board & top plate; attic access. EXCEPTION: Frame ceilings where a continuous infiltration barrier is installed that is sealed at the perimeter, at penetrations and seams.	
Recessed Lighting Fixtures	606.1.ABC.1.2.4	Type IC rated with no penetrations, sealed; or Type IC or non-IC rated, installed inside a sealed box with 1/2" clearance & 3" from insulation; or Type IC rated with < 2.0 cfm from conditioned space, tested.	
Multi-story Houses	606.1.ABC.1.2.5	Air barrier on perimeter of floor cavity between floors.	
Additional Infiltration reqts	606.1.ABC.1.3	Exhaust fans vented to outdoors, dampers; combustion space heaters comply with NFPA, have combustion air.	

6A-22 OTHER PRESCRIPTIVE MEASURES (must be met or exceeded by all residences.)

COMPONENTS	SECTION	REQUIREMENTS	CHECK
Water Heaters	612.1	Comply with efficiency requirements in Table 6-12. Switch or clearly marked circuit breaker (electric) or cutoff (gas) must be provided. External or built-in heat trap required.	
Swimming Pools & Spas	612.1	Spas & heated pools must have covers (except solar heated). Non-commercial pools must have a pump timer. Gas spa & pool heaters must have a minimum thermal efficiency of 78%.	
Shower heads	612.1	Water flow must be restricted to no more than 2.5 gallons per minute at 80 PSIG.	
Air Distribution Systems	610.1	All ducts, fittings, mechanical equipment and plenum chambers shall be mechanically attached, sealed, insulated, and installed in accordance with the criteria of Section 610. Ducts in unconditioned attics: R-6 min. insulation.	
HVAC Controls	607.1	Separate readily accessible manual or automatic thermostat for each system.	
Insulation	604.1, 602.1	Ceilings-Min. R-19. Common walls-Frame R-11 or CBS R-3 both sides. Common ceiling & floors R-11.	

752-2282

CLYATT WELL DRILLING, INC.

Established in 1971
Post Office Box 180
Worthington Springs, Florida 32697
Phone (386)496-2488 FAX (386)496-4640

INVOICE DATE	INVOICE NUMBER
3/31/2003	WELL SPECS

DUE AND PAYABLE UPON RECEIPT

CUSTOMER NAME AND ADDRESS	DESCRIPTION OF WORK
Erkinger Home Builders Attn.: Matthew A. Erkinger 248 Southeast Nassau Street Lake City, Florida 32025	4" Well and Pump

QTY	DESCRIPTION	PRICE	SUB-TOTAL
	Feet 4" Well 1 HP Submersible Pump 1-1/4" Galvanized Pipe 14/3 Submersible Pump Wire With Ground WF255 (220 Gallon Equivalent) Tank 4 X 1-1/4 Well Seal Pressure Relief Valve Controls & Fittings		

From: The Columbia County Building Department
Plans Review
135 NE Hernando Av.
P. O Box 1529
Lake City Florida, 32056-1529

Reference to: Build permit application Number: 0510-81

Erkinger Home Builders Owner Erkinger Home Builders lot 17 of Emerald Cove Subdivision

On the date of November 2, 2005 application 0510-82 and plans for construction of a single family dwelling were reviewed and the following information or alteration to the plans will be required to continue processing this application. If you should have any question please contact the above address, or contact phone number (386) 758-1163 or fax any information to (386) 754-7088.

Please include application number 0510-81 when making reference to this application.

1. Application 0510-81 which was filed with the building department on the date of October 27, 2005 will be reviewed under the Florida Building Code 2004. The Wind Load design by Mr. Mark Disosway was design under the Florida Building Code 2001. The wind Load design should reflect the code sections of the Florida Building Code 2004 that relate to wind Load design code requirements.

2. Please show compliance with sections R309 of the FRC-2004 R309.1 Opening protection. Openings from a private garage directly into a room used for sleeping purposes shall not be permitted. Other openings between the garage and residence shall be equipped with solid wood doors not less than 13/8 inches (35 mm) in thickness, solid or honeycomb core steel doors not less than 13/8 inches (35 mm) thick, or 20-minute fire-rated doors. R309.1.1 Duct penetration: Ducts in the garage and ducts penetrating the

walls or ceilings separating the dwelling from the garage shall be constructed of a minimum No. 26 gage (0.48 mm) sheet steel or other approved material and shall have no openings into the garage. R309.2 Separation required: The garage shall be separated from the residence and its attic area by not less than ½-inch (12.7 mm) gypsum board applied to the garage side. Garages beneath habitable rooms shall be separated from all habitable rooms above by not less than 5/8-inch (15.9 mm) Type X gypsum board or equivalent. Where the separation is a floor-ceiling assembly, the structure supporting the separation shall also be protected by not less than ½-inch (12.7 mm) gypsum board or equivalent.

Thank you,

Joe Haltiwanger
Plan Examiner
Columbia County Building Department

CERTIFICATE OF

OCCUPANCY

COLUMBIA COUNTY, FLORIDA

Department of Building and Zoning Inspection

This Certificate of Occupancy is issued to the below named permit holder for the building and premises at the below named location, and certifies that the work has been completed in accordance with the Columbia County Building Code.

Parcel Number 33-3S-16-02438-117 **Building permit No.** 000023819

Use Classification SFD,UTILITY **Fire:** 23.68

Permit Holder MATTHEW ERKINGER **Waste:** 49.00

Owner of Building MATTHEW ERKINGER **Total:** 72.68

Location: 103 SW WOODLEAF COURT

Date: 06/23/2006

Harry Dicks

Building Inspector

POST IN A CONSPICUOUS PLACE
(Business Places Only)

Mark Disosway, P.E.
POB 868, Lake City, FL 32056, Ph (386) 754-5419, Fax (386) 269-4871

November 3, 2005

Building Department

Re: Permit 0510-81, Erkinger Builders, Spec House, Lot #17, Phase I, Emerald Cove S/D, Columbia County, Florida

Dear Building Official:

Please accept this letter as addendum to the plans for the above referenced house to change all references to FBC 2001 to FBC 2004.

- The plan was drawn prior to the effective date for FBC 2004, 01 October 2005.
- Since the wind load requirements of FBC 2004 remain basically unchanged from FBC 2001 there are no structural changes required to this plan.

03NOV05

Mark Disosway, PE
Florida Registered Professional Engineer

Cc Erkinger Builders

[redacted]

[redacted]

[redacted]

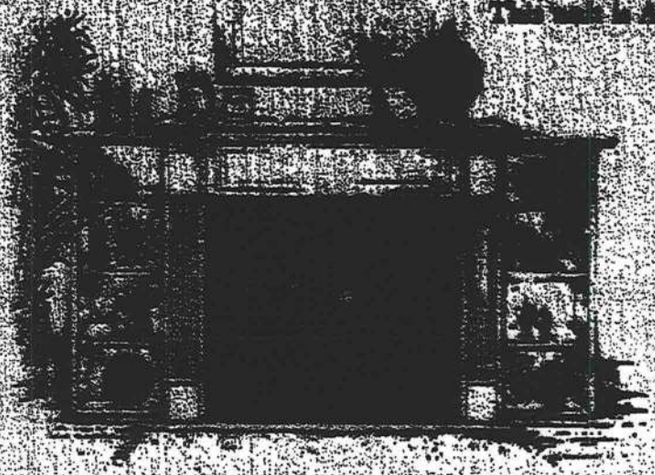

VF-4000

- [redacted]
- 19,500 – 65,000 Btu/hr with millivolt control valve
- Fully assembled and ready to install
- Attractive wood surround available
- 15" x 30" fixed or operable screen opening

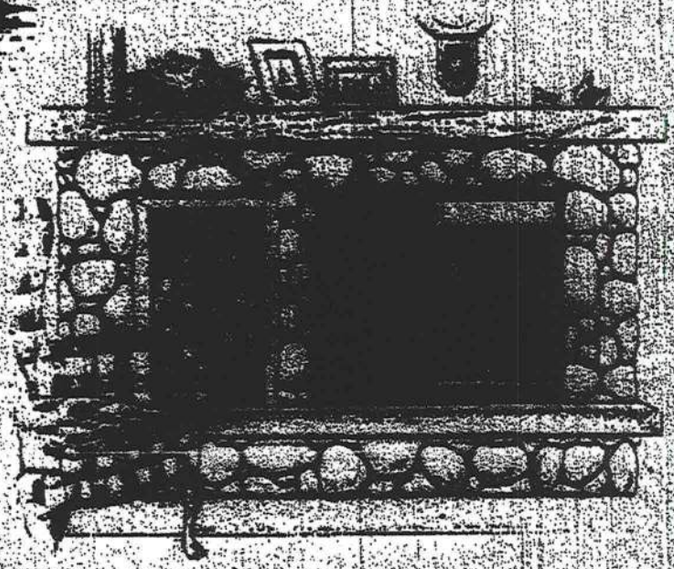

VF-5000

- 25,000 Btu/hr millivolt variable heat output
- 15" X 30" glass or screen viewing area
- Clean burning, safe and easy to install
- Realistic charred oak logs with glowing embers

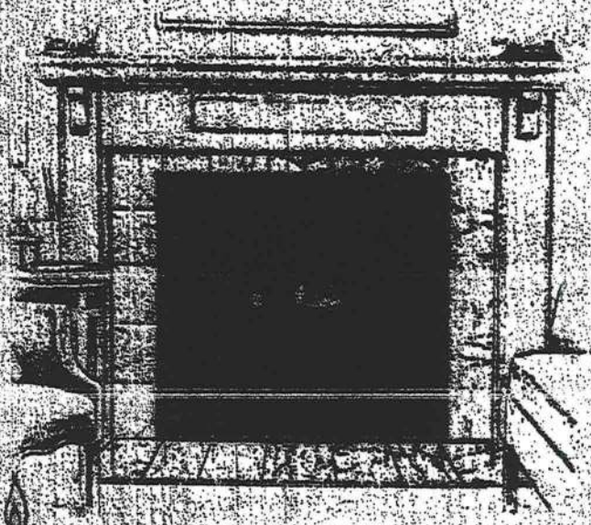

VF-6000

- 32,000 Btu/hr millivolt variable heat output
- Beautiful 20" X 34" glass or screen viewing area
- Will operate during a power failure
- Designed for large rooms

[redacted]

FROM :LAKE CITY INDUSTRIES FAX NO. :+386 758 4735 May. 01 2003 09:50AM P1

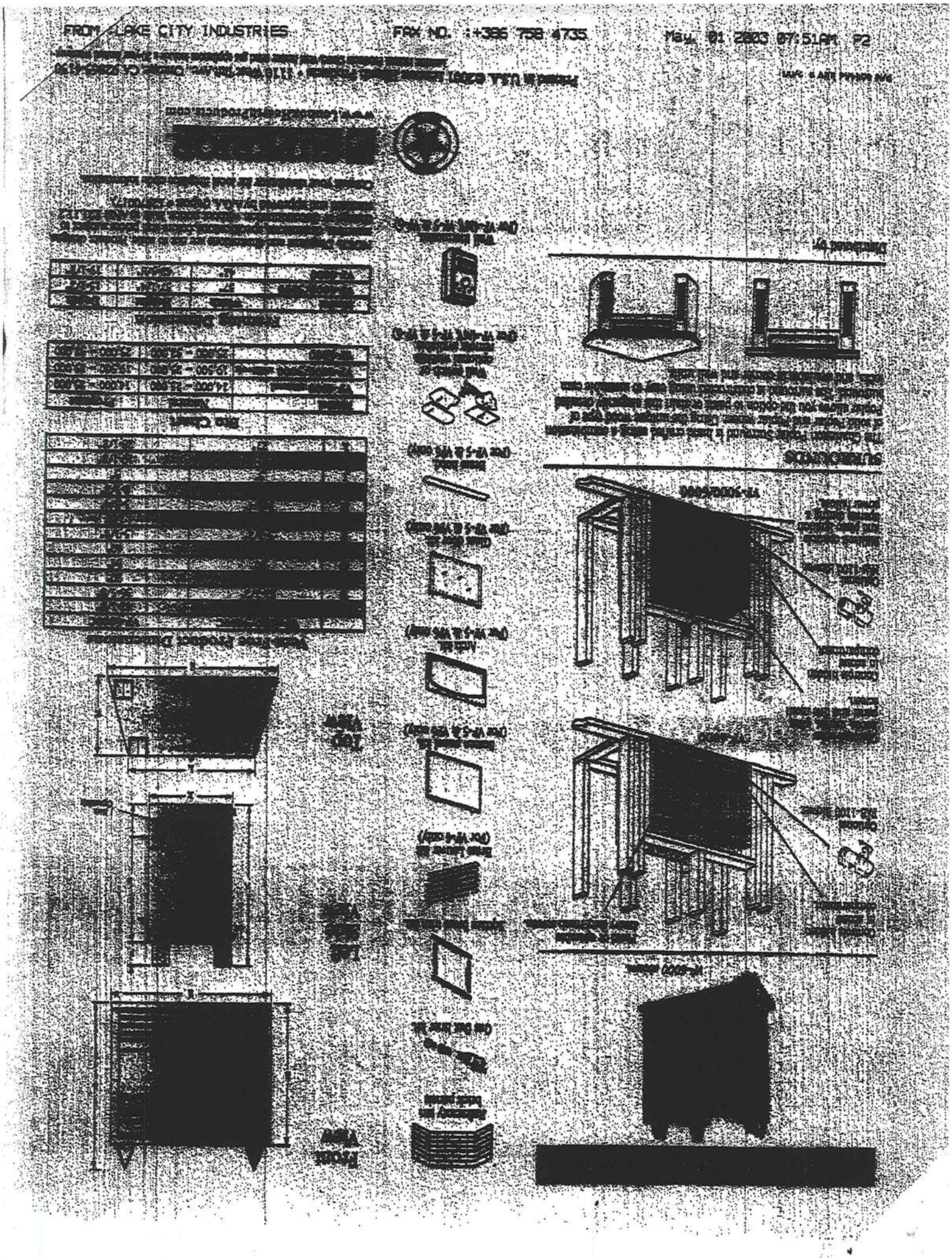

REV.	DATE	BY	DESCRIPTION
A-A	11-10-00	[illegible]	[illegible]

NOTES:

1. TESTED TO POSITIVE AND NEGATIVE 20 PSF DESIGN AND POSITIVE AND NEGATIVE 30 PSF TEST PRESSURE PER ASTM E-330.
2. MINIMUM SECTION HEIGHT 8'.
3. SECTION HEIGHTS OF 8'-0" AND 7'-0" ARE AVAILABLE AND MAY BE USED IN ANY COMBINATION TO ACHIEVE VARIOUS DOOR HEIGHTS.
4. VENTING MAY BE INSTALLED IN THE TOP SECTION ONE TESTED WITH 1/4" [illegible] GLASS OR CORRUGATED ON ON THE SECTION IMMEDIATELY BELOW THE TOP SECTION.
5. MINIMUM LENGTH OF ROLLER SIDE IS 9" AT ANY SECTION.
6. THE STRUT PLACEMENT IS DONE PRIOR TO CONSTRUCTION WITH THE DOOR FRAME.
7. STRUTS REQUIRED AT ALL OPENINGS WITH TOP SCREWS.
8. QUANTITY OF SIDE LOCKS ONE AT ALL 90° AT ALL SECTIONS.
9. DOOR IS SHIPPED IN SEPARATION OF SECTIONS.

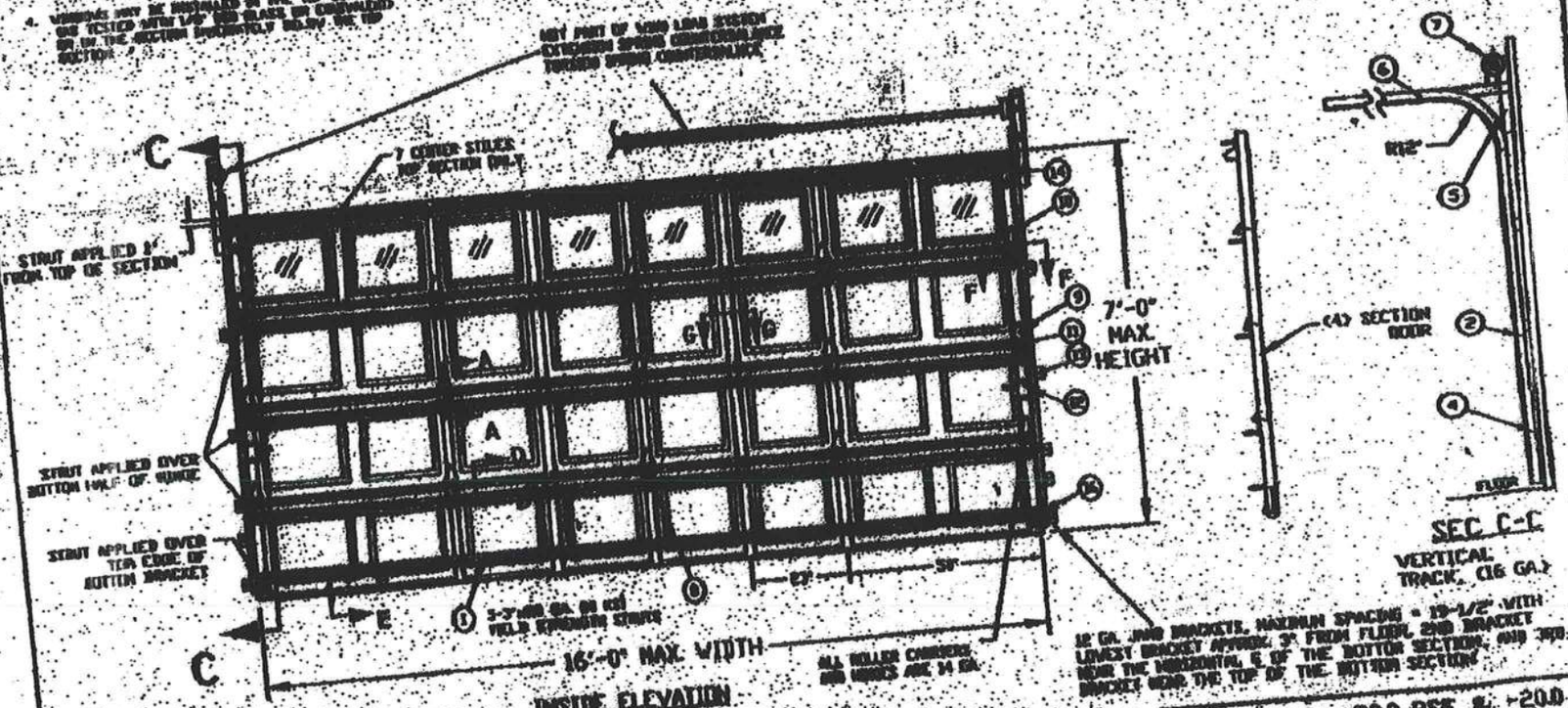

SEC C-C
VERTICAL TRACK, (16 GA.)

DESIGN LOAD +20.0 PSF & -20.0 PSF
TEST LOAD +30.0 PSF & -30.0 PSF

TEST REPORTS ON FILE VIDON 10/19/00 [illegible]

GARDY MFG.
SERIES 7000, EXTERIOR STEEL =.047 MIN GA. TESTED
SERIES 7025, EXTERIOR STEEL =.059" MIN
SERIES 7004, EXTERIOR STEEL =.047" MIN
EXTERIOR VIEW SHOWN

MAXIMUM WIDTH	MAXIMUM HEIGHT	TYPICAL STILE BRACKETS	STRUT 20 GA. SIZE	STRUT 20 GA. QTY.	VERTICAL TRACK
16'	7'	23"	3"	5	2 IN.

REPORT NO. 2202

GENERAL AMERICAN DOOR COMPANY
3000 BASELINE ROAD
MONTGOMERY, IL 60538

DRAWN BY	CHECKED BY	DRAWING NO. & REVISION
DATE 11-10-00		REVISIONS (A) 11-14-00
DESCRIPTION 16' X 7' MAX. RAISED PANEL STEEL DOOR -VINYLDAR ±20 PSF		
TITLE SHEET	PAGE 1 OF 2	DRAWING NUMBER W13220-1

SEC A-A
SEC E-E
SEC F-F
SEC D-D
SEC D-D
SEC C-C
FASTENER ARRANGEMENT
SEAL
PC No. 0000

WIND LOAD VS ANCHOR SPACING

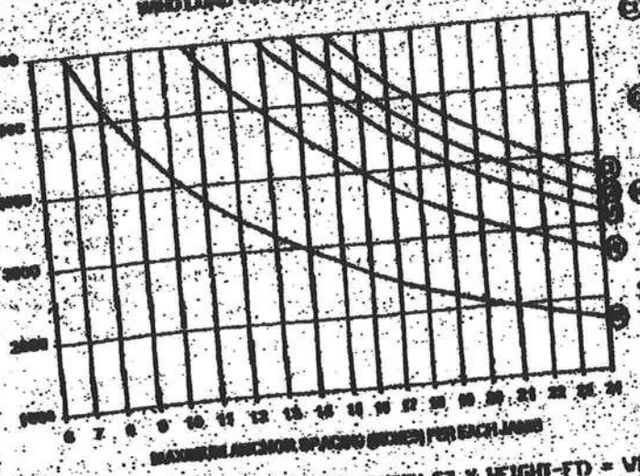

DESIGN LOAD (LBS/FT²) X GARAGE DOOR AREA(WIDTH-FT X HEIGHT-FT) = WIND LOAD(LBS)

EXAMPLE

30 LBS/FT² X 16 FT WIDE X 8 FT HIGH = 3840 LBS

- ① USE 22" SPACING
- ② USE 21" SPACING
- ③ USE 19" SPACING
- ④ USE 16" SPACING
- ⑤ USE 14" SPACING

SEE NOTE 8 FOR ADDITIONAL REMARKS ON VOID JAMB ANCHORS

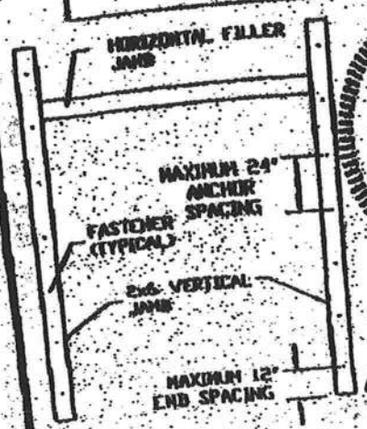

2x6 JAMB TO SUPPORTING STRUCTURE ATTACHMENT

2x6 PRESSURE TREATED (GRADE #2 OR BETTER SOUTHERN PINE) VOID JAMB SHALL BE ANCHORED TO BUILDING WOOD FRAME, GROUTED AND REINFORCED CONCRETE MASONRY UNIT (CMU) WALLS OR COLUMNS, OR REINFORCED CONCRETE COLUMNS.

NOTES:

1) ALL JAMB SPACING SUPPORTING STRUCTURE TO BE DETERMINED BY REGISTERED ENGINEER OR ARCHITECT WITH DUE CONSIDERATION GIVEN TO INSTALLATIONS WITHIN CENTER "HURRICANE" PERIOD.

2) ALL JAMB SPACING STRUCTURE AND FASTENERS TO COMPLY WITH ALL APPLICABLE CODES INCLUDING SBCCI "STANDARD FOR HURRICANE RESISTANT RESIDENTIAL CONSTRUCTION SSTD 10-", CURRENT EDITION.

3) ALL FASTENERS TO BE INSTALLED IN STRICT ACCORDANCE WITH MANUFACTURERS SPECIFICATIONS, INSTRUCTIONS AND RECOMMENDATIONS.

4) VOID JAMB AND VOID STUDS AT EACH SIDE OF DOOR OPENING SHALL BE PROPERLY SIZED, CONNECTED, ANCHORED AND SHALL CONSIST OF A MINIMUM OF THREE (3) LAMINATIONS OF 2X6 PRESSURE TREATED SOUTHERN PINE #2 GRADE OR BETTER WALL STUDS CONTINUOUS FROM FOOTING TO DOUBLE TOP PLATE.

5) [illegible] 2X6 JAMB AND SHALL BE ANCHORED TO [illegible] CONCRETE MASONRY UNIT (CMU) WALLS OR COLUMNS, OR REINFORCED CONCRETE COLUMNS. ANCHOR SPACING AND EMBEDMENT IS BASED ON CONCRETE MASONRY UNITS COMPLYING WITH ASTM C90 WITH A MINIMUM NET AREA COMPRESSIVE STRENGTH OF 2000 PSI, GROUT WITH A MINIMUM COMPRESSIVE STRENGTH OF 3000 PSI, REINFORCED CONCRETE COLUMNS WITH A MINIMUM COMPRESSIVE STRENGTH OF 3000 PSI.

6) EMBEDMENTS LISTED ARE THE MINIMUM ALLOWABLE EMBEDMENTS.

7) ANCHORS FOR CONCRETE AND CONCRETE MASONRY UNITS (CMU) SHALL HAVE A MINIMUM 2" EDGE DISTANCE FROM ALL EDGES OF CONCRETE OR CONCRETE MASONRY UNITS. ANCHORS FOR CONCRETE AND CMU SHALL HAVE A MINIMUM SPACING OF 3-3/4".

8) LAG SCREWS SHALL BE CENTERED IN ONE OF THE 1-1/2" DIMENSION FACES OF THE TRIPLE 2X6 WALL STUDS.

9) WASHERS ARE REQUIRED ON ALL FASTENERS.

10) THE WIND LOAD VS. ANCHOR SPACING CHART IS FOR A MAXIMUM DOOR SIZE OF 16' X 8' AT A MAXIMUM 40 PSF DESIGN WIND LOAD.

11) FOR THE UPPER THREE SURVIVING STEEL JAMB BRACKETS, BRACKETS SHALL BE CENTERED BETWEEN THE TWO CLOSEST 2X6 VOID JAMB ANCHORS. IF THE STEEL JAMB BRACKET IS NOT CENTERED BETWEEN THE TWO CLOSEST 2X6 VOID JAMB ANCHORS, ADD AN ADDITIONAL 2X6 VOID JAMB ANCHOR NEAR THAT STEEL BRACKET TO ENSURE THAT THE LOAD FROM THE STEEL BRACKET IS EQUALLY TRANSFERRED TO TWO VOID JAMB ANCHORS.

SEAL
PE No. [illegible]
STATE OF FLORIDA
PROFESSIONAL ENGINEER

3/8/2002

CENTRAL AMERICAN DOOR COMPANY
[illegible] MONTGOMERY, IL [illegible]

JAMB TO SUPPORTING ATTACHMENT
FOR VOID LOADED GARAGE DOORS

ALSB

Project Information for:	L130985		
Builder:	ERKINGER HOMES	Date:	9/8/2005
Lot:	LOT 17 EMERALD COVE	Start Number:	415
Subdivision:	N/A		
County or City:	COULMBIA COUNTY		
Truss Page Count:	40		

Truss Design Load Information (UNO) Design Program: MiTek 5.2 / 6.2

Gravity		**Wind**		**Building Code:**	FBC2001
Roof (psf):	42	Wind Standard:	ASCE 7-98		
Floor (psf):	55	Wind Speed (mph):	120		

Note: See individual truss drawings for special loading conditions

Building Designer, responsible for Structural Engineering: (See attached)

ERKINGER,MATTHEW ANTHONY RR0067135

Address: 248 SE NASSAU STREET

LAKE CITY, FL 32025 Designer: 24

Truss Design Engineer: Thomas, E. Miller, P.E., 56877 - Byron K. Anderson, PE FL 60987

Company: Structural Engineering and Inspections, Inc. EB 9196

Address 16105 N. Florida Ave, Ste B, Lutz, FL 33549

Notes:

1. Truss Design Engineer is responsible for the individual trusses as components only.
2. Determination as to the suitability and use of these truss components for the structure is the responsibility of the Building Designer of Record, as defined in ANSI/TPI 1-1995 Section 2.2
3. The seal date shown on the individual truss component drawings must match the seal date on this index sheet.

#	Truss ID	Dwg. #	Seal Date	#	Truss ID	Dwg. #	Seal Date
1	CJ1	090805415	9/8/2005				
2	EJ3	090805416	9/8/2005				
3	EJ7	090805417	9/8/2005				
4	EJ7A	090805418	9/8/2005				
5	EJ7B	090805419	9/8/2005				
6	EJ7C	090805420	9/8/2005				
7	HJ3	090805421	9/8/2005				
8	PB01	090805422	9/8/2005				
9	PB02	090805423	9/8/2005				
10	PB03	090805424	9/8/2005				
11	T01	090805425	9/8/2005				
12	T01G	090805426	9/8/2005				
13	T02	090805427	9/8/2005				
14	T02G	090805428	9/8/2005				
15	T03	090805429	9/8/2005				
16	T03G	090805430	9/8/2005				
17	T04	090805431	9/8/2005				
18	T05	090805432	9/8/2005				
19	T06	090805433	9/8/2005				
20	T07	090805434	9/8/2005				
21	T08	090805435	9/8/2005				
22	T09	090805436	9/8/2005				
23	T09G	090805437	9/8/2005				
24	T10	090805438	9/8/2005				
25	T11	090805439	9/8/2005				
26	T12	090805440	9/8/2005				
27	T13	090805441	9/8/2005				
28	T14	090805442	9/8/2005				
29	T15	090805443	9/8/2005				
30	T18	090805444	9/8/2005				
31	T19	090805445	9/8/2005				
32	T20	090805446	9/8/2005				
33	T21	090805447	9/8/2005				
34	T22	090805448	9/8/2005				
35	T23	090805449	9/8/2005				
36	T24	090805450	9/8/2005				
37	T25	090805451	9/8/2005				
38	T27	090805452	9/8/2005				
39	T28	090805453	9/8/2005				
40	T29	090805454	9/8/2005				

SEP 0 8 2005

Dwg.#090805414

Licensee Details

Licensee Information

Name:	**ERKINGER, MATTHEW ANTHONY** (Primary N
	INDIVIDUAL (DBA Name)
Main Address:	**248 SE NASSAU ST** **LAKE CITY Florida 32025**
County:	**COLUMBIA**
License Mailing:	
LicenseLocation:	

License Information

License Type:	**Registered Residential Contractor**
Rank:	**Reg Residential**
License Number:	**RR0067135**
Status:	**Current,Active**
Licensure Date:	**12/02/1997**
Expires:	**08/31/2007**
Special Qualifications	**Qualification Effective**
Bldg Code Core Course Credit	
No Qualified Business License Required	**02/20/2004**

View Related License Information

View License Complaint

SEPTEMBER 08, 2005 TRUSS DESIGN ENGINEER:
THOMAS E. MILLER PE 56877, BYRON K. ANDERSON PE 60987
STRUCTURAL ENGINEERING AND INSPECTIONS, INC. EB 9196
16105 N. FLORIDA AVE. STE B, LUTZ, FL 33549

Job	Truss	Truss Type	Qty	Ply	Dwg.#090805415
L130985	CJ1	MONO TRUSS	4	1	Job Reference (optional)

Builders FirstSource, Lake City, Fl 32055 — 6.200 s Jul 13 2005 MiTek Industries, Inc. Wed Sep 07 11:41:56 2005 Page 1

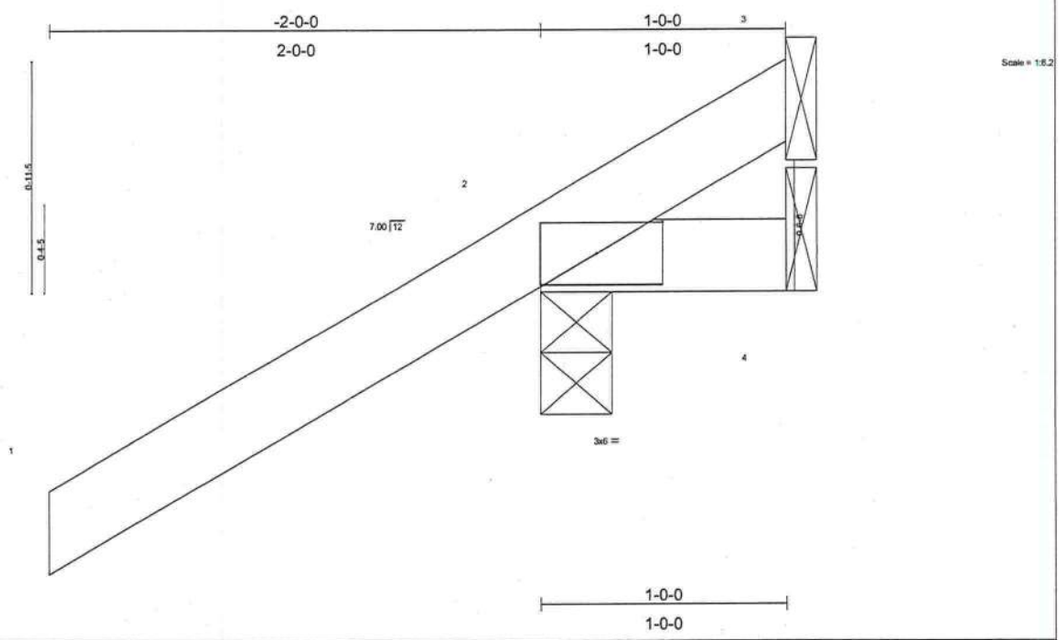

Plate Offsets (X,Y): [2:0-3-4,0-1-8]

LOADING (psf)		SPACING	2-0-0	CSI		DEFL	in	(loc)	l/defl	L/d	PLATES	GRIP
TCLL	20.0	Plates Increase	1.25	TC	0.29	Vert(LL)	-0.00	2	>999	240	MT20	244/190
TCDL	7.0	Lumber Increase	1.25	BC	0.01	Vert(TL)	-0.00	2	>999	180		
BCLL	10.0	Rep Stress Incr	YES	WB	0.00	Horz(TL)	0.00	3	n/a	n/a		
BCDL	5.0	Code FBC2001/TPI2002		(Matrix)							Weight: 7 lb	

LUMBER
TOP CHORD 2 X 4 SYP No.2D
BOT CHORD 2 X 4 SYP No.2D

BRACING
TOP CHORD Structural wood sheathing directly applied or 1-0-0 oc purlins.
BOT CHORD Rigid ceiling directly applied or 10-0-0 oc bracing.

REACTIONS (lb/size) 2=266/0-3-8, 4=14/Mechanical, 3=-90/Mechanical
Max Horz 2=120(load case 5)
Max Uplift2=-345(load case 5), 3=-90(load case 1)
Max Grav 2=266(load case 1), 4=14(load case 1), 3=164(load case 5)

FORCES (lb) - Maximum Compression/Maximum Tension
TOP CHORD 1-2=0/53, 2-3=-77/103
BOT CHORD 2-4=0/0

NOTES
1) Wind: ASCE 7-98; 120mph (3-second gust); h=20ft; TCDL=4.2psf; BCDL=3.0psf; Category II; Exp B; enclosed; MWFRS gable end zone and C-C Exterior(2) zone; Lumber DOL=1.60 plate grip DOL=1.60. This truss is designed for C-C for members and forces, and for MWFRS for reactions specified.
2) Refer to girder(s) for truss to truss connections.
3) Provide mechanical connection (by others) of truss to bearing plate capable of withstanding 345 lb uplift at joint 2 and 90 lb uplift at joint 3.

LOAD CASE(S) Standard

SEPTEMBER 08, 2005 TRUSS DESIGN ENGINEER:
THOMAS E. MILLER PE 56877, BYRON K. ANDERSON PE 60987
STRUCTURAL ENGINEERING AND INSPECTIONS, INC. EB 9196
16105 N. FLORIDA AVE. STE B, LUTZ, FL 33549

Job	Truss	Truss Type	Qty	Ply	Dwg.#090805416
L130985	EJ3	MONO TRUSS	3	1	Job Reference (optional)

Builders FirstSource, Lake City, Fl 32055 — 6.200 s Jul 13 2005 MiTek Industries, Inc. Wed Sep 07 11:41:56 2005 Page 1

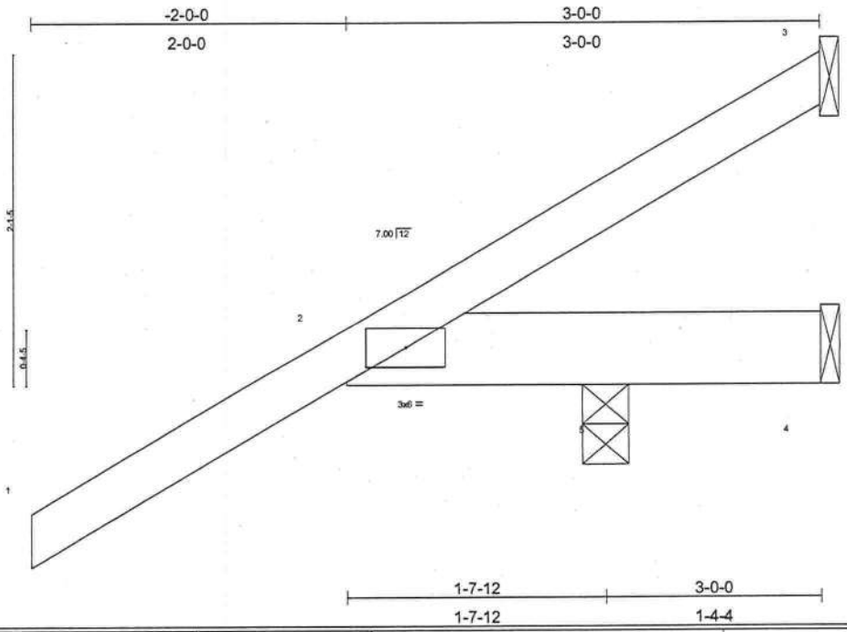

LOADING (psf)		SPACING 2-0-0		CSI		DEFL	in	(loc)	l/defl	L/d	PLATES	GRIP
TCLL	20.0	Plates Increase	1.25	TC	0.28	Vert(LL)	0.00	4-5	>999	240	MT20	244/190
TCDL	7.0	Lumber Increase	1.25	BC	0.30	Vert(TL)	0.00	4-5	>999	180		
BCLL	10.0	Rep Stress Incr	YES	WB	0.00	Horz(TL)	0.03	3	n/a	n/a		
BCDL	5.0	Code FBC2001/TPI2002		(Matrix)							Weight: 16 lb	

LUMBER
TOP CHORD 2 X 4 SYP No.2D
BOT CHORD 2 X 6 SYP No.1D

BRACING
TOP CHORD Structural wood sheathing directly applied or 3-0-0 oc purlins.
BOT CHORD Rigid ceiling directly applied or 10-0-0 oc bracing.

REACTIONS (lb/size) 3=43/Mechanical, 4=-298/Mechanical, 5=610/0-3-8
Max Horz 5=185(load case 5)
Max Uplift3=-32(load case 4), 4=-298(load case 1), 5=-617(load case 5)
Max Grav 3=43(load case 1), 4=341(load case 5), 5=610(load case 1)

FORCES (lb) - Maximum Compression/Maximum Tension
TOP CHORD 1-2=0/56, 2-3=-57/16
BOT CHORD 2-5=0/207, 4-5=-0/0

NOTES
1) Wind: ASCE 7-98; 120mph (3-second gust); h=20ft; TCDL=4.2psf; BCDL=3.0psf; Category II; Exp B; enclosed; MWFRS gable end zone and C-C Exterior(2) zone; cantilever left exposed ; Lumber DOL=1.60 plate grip DOL=1.60. This truss is designed for C-C for members and forces, and for MWFRS for reactions specified.
2) This truss is not designed to support a ceiling and is not intended for use where aesthetics are a consideration.
3) Refer to girder(s) for truss to truss connections.
4) Provide mechanical connection (by others) of truss to bearing plate capable of withstanding 32 lb uplift at joint 3, 298 lb uplift at joint 4 and 617 lb uplift at joint 5.

LOAD CASE(S) Standard

SEPTEMBER 08, 2005 TRUSS DESIGN ENGINEER:
THOMAS E. MILLER PE 56877, BYRON K. ANDERSON PE 60987
STRUCTURAL ENGINEERING AND INSPECTIONS, INC. EB 9196
16105 N. FLORIDA AVE. STE B, LUTZ, FL 33549

Job	Truss	Truss Type	Qty	Ply	Dwg.#090805417
L130985	EJ7	MONO TRUSS	22	1	Job Reference (optional)

Builders FirstSource, Lake City, Fl 32055 — 6.200 s Jul 13 2005 MiTek Industries, Inc. Wed Sep 07 11:41:57 2005 Page 1

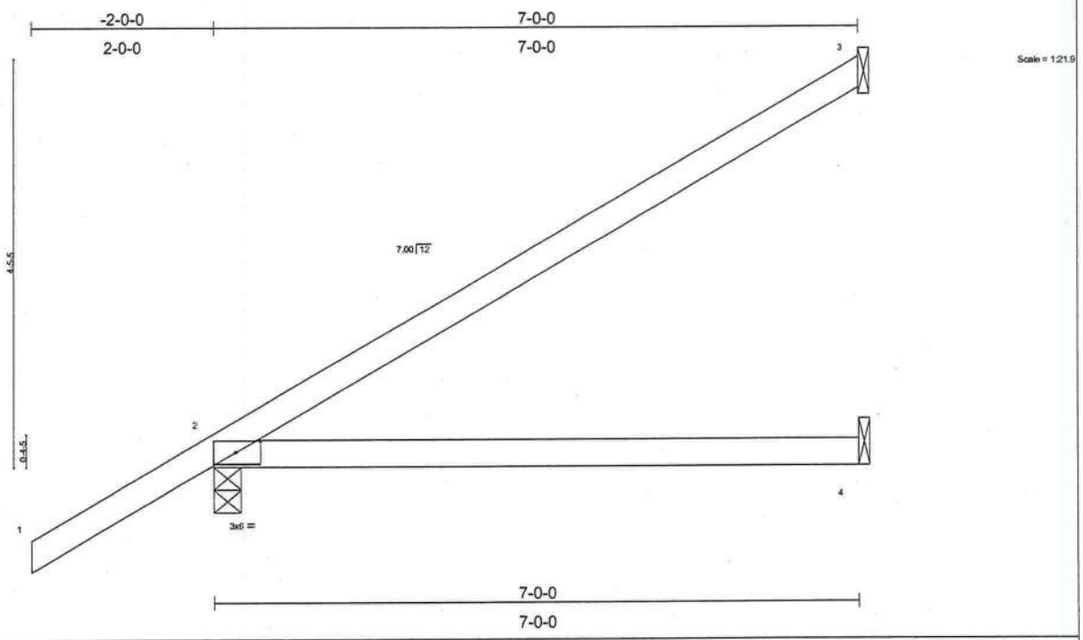

Plate Offsets (X,Y): [2:0-3-3,0-1-8]

LOADING (psf)		SPACING	2-0-0	CSI		DEFL	in	(loc)	l/defl	L/d	PLATES	GRIP
TCLL	20.0	Plates Increase	1.25	TC	0.43	Vert(LL)	-0.12	2-4	>698	240	MT20	244/190
TCDL	7.0	Lumber Increase	1.25	BC	0.31	Vert(TL)	-0.20	2-4	>417	180		
BCLL	10.0	Rep Stress Incr	YES	WB	0.00	Horz(TL)	-0.00	3	n/a	n/a		
BCDL	5.0	Code FBC2001/TPI2002		(Matrix)							Weight: 26 lb	

LUMBER
TOP CHORD 2 X 4 SYP No.2D
BOT CHORD 2 X 4 SYP No.2D

BRACING
TOP CHORD Structural wood sheathing directly applied or 6-0-0 oc purlins.
BOT CHORD Rigid ceiling directly applied or 10-0-0 oc bracing.

REACTIONS (lb/size) 3=162/Mechanical, 2=419/0-3-8, 4=105/Mechanical
Max Horz 2=311(load case 5)
Max Uplift3=-179(load case 5), 2=-247(load case 5)

FORCES (lb) - Maximum Compression/Maximum Tension
TOP CHORD 1-2=0/54, 2-3=-129/65
BOT CHORD 2-4=0/0

NOTES
1) Wind: ASCE 7-98; 120mph (3-second gust); h=20ft; TCDL=4.2psf; BCDL=3.0psf; Category II; Exp B; enclosed; MWFRS gable end zone and C-C Exterior(2) zone; Lumber DOL=1.60 plate grip DOL=1.60. This truss is designed for C-C for members and forces, and for MWFRS for reactions specified.
2) Refer to girder(s) for truss to truss connections.
3) Provide mechanical connection (by others) of truss to bearing plate capable of withstanding 179 lb uplift at joint 3 and 247 lb uplift at joint 2.

LOAD CASE(S) Standard

SEPTEMBER 08, 2005 TRUSS DESIGN ENGINEER:
THOMAS E. MILLER PE 56877, BYRON K. ANDERSON PE 60987
STRUCTURAL ENGINEERING AND INSPECTIONS, INC. EB 9196
16105 N. FLORIDA AVE. STE B, LUTZ, FL 33549

Job	Truss	Truss Type	Qty	Ply	Dwg.#090805418
L130985	EJ7A	MONO HIP	1	1	Job Reference (optional)

Builders FirstSource, Lake City, Fl 32055 — 6.200 s Jul 13 2005 MiTek Industries, Inc. Wed Sep 07 11:41:58 2005 Page 1

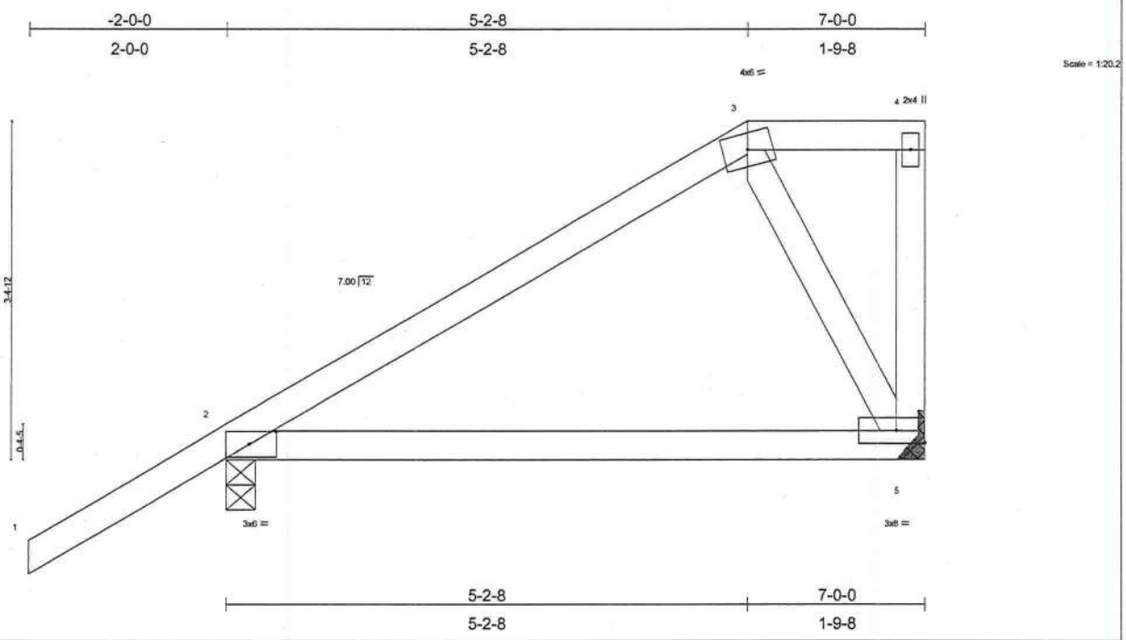

Plate Offsets (X,Y): [2:0-3-3,0-1-8]

LOADING (psf)		SPACING	2-0-0	CSI		DEFL	in	(loc)	l/defl	L/d	PLATES	GRIP
TCLL	20.0	Plates Increase	1.25	TC	0.33	Vert(LL)	-0.04	2-5	>999	240	MT20	244/190
TCDL	7.0	Lumber Increase	1.25	BC	0.13	Vert(TL)	-0.08	2-5	>999	180		
BCLL	10.0	Rep Stress Incr	YES	WB	0.06	Horz(TL)	0.00	5	n/a	n/a		
BCDL	5.0	Code FBC2001/TPI2002		(Matrix)							Weight: 35 lb	

LUMBER
TOP CHORD 2 X 4 SYP No.2D
BOT CHORD 2 X 4 SYP No.2D
WEBS 2 X 4 SYP No.3

BRACING
TOP CHORD Structural wood sheathing directly applied or 6-0-0 oc purlins, except end verticals.
BOT CHORD Rigid ceiling directly applied or 10-0-0 oc bracing.

REACTIONS (lb/size) 5=263/Mechanical, 2=416/0-3-8
Max Horz 2=256(load case 5)
Max Uplift5=-110(load case 5), 2=-269(load case 5)

FORCES (lb) - Maximum Compression/Maximum Tension
TOP CHORD 1-2=0/54, 2-3=-214/39, 3-4=-36/0, 4-5=-47/71
BOT CHORD 2-5=-105/126
WEBS 3-5=-193/253

NOTES
1) Wind: ASCE 7-98; 120mph (3-second gust); h=20ft; TCDL=4.2psf; BCDL=3.0psf; Category II; Exp B; enclosed; MWFRS gable end zone and C-C Exterior(2) zone; Lumber DOL=1.60 plate grip DOL=1.60. This truss is designed for C-C for members and forces, and for MWFRS for reactions specified.
2) Provide adequate drainage to prevent water ponding.
3) Refer to girder(s) for truss to truss connections.
4) Provide mechanical connection (by others) of truss to bearing plate capable of withstanding 110 lb uplift at joint 5 and 269 lb uplift at joint 2.

LOAD CASE(S) Standard

SEPTEMBER 08, 2005 TRUSS DESIGN ENGINEER:
THOMAS E. MILLER PE 56877, BYRON K. ANDERSON PE 60987
STRUCTURAL ENGINEERING AND INSPECTIONS, INC. EB 9196
16105 N. FLORIDA AVE. STE B, LUTZ, FL 33549

Job	Truss	Truss Type	Qty	Ply	Dwg.#090805419
L130985	EJ7B	MONO HIP	1	1	Job Reference (optional)

Builders FirstSource, Lake City, Fl 32055 — 6.200 s Jul 13 2005 MiTek Industries, Inc. Wed Sep 07 11:41:58 2005 Page 1

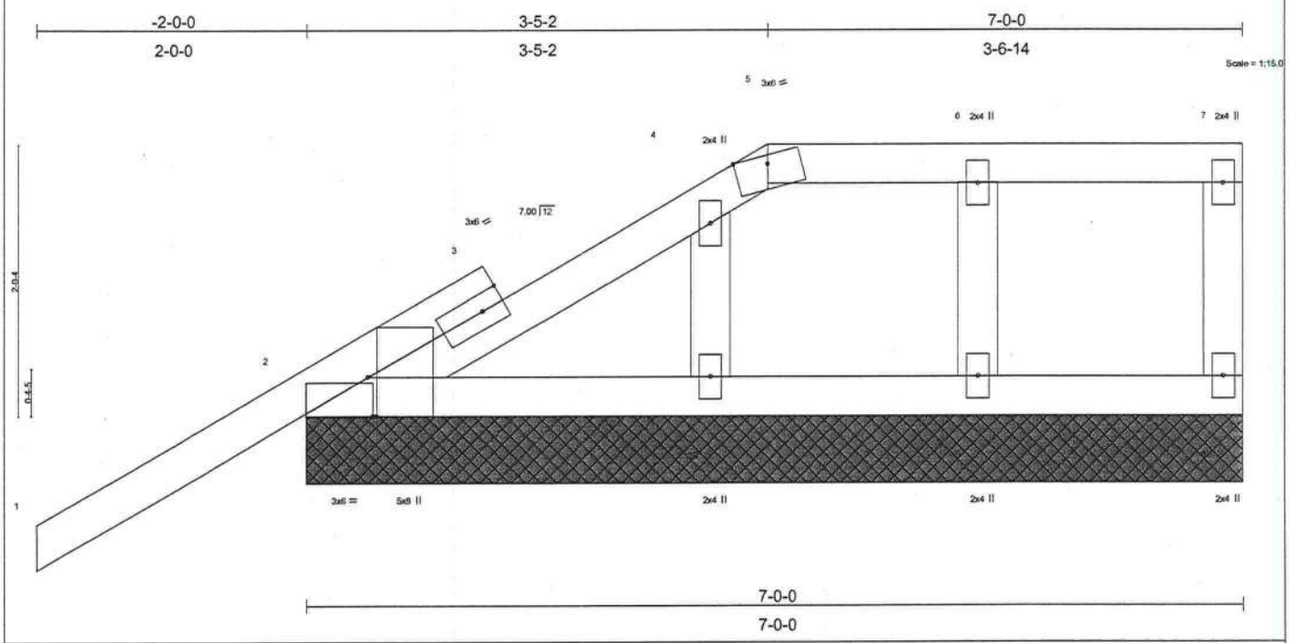

Plate Offsets (X,Y): [2:0-3-8,Edge], [2:0-0-7,Edge]

LOADING (psf)		SPACING	2-0-0	CSI		DEFL	in	(loc)	l/defl	L/d	PLATES	GRIP
TCLL	20.0	Plates Increase	1.25	TC	0.41	Vert(LL)	-0.02	1	n/r	90	MT20	244/190
TCDL	7.0	Lumber Increase	1.25	BC	0.05	Vert(TL)	-0.04	1	n/r	80		
BCLL	10.0	Rep Stress Incr	NO	WB	0.06	Horz(TL)	-0.00	8	n/a	n/a		
BCDL	5.0	Code FBC2001/TPI2002		(Matrix)							Weight: 33 lb	

LUMBER
TOP CHORD 2 X 4 SYP No.2D
BOT CHORD 2 X 4 SYP No.2D
WEBS 2 X 4 SYP No.3
OTHERS 2 X 4 SYP No.3

BRACING
TOP CHORD Structural wood sheathing directly applied or 6-0-0 oc purlins, except end verticals.
BOT CHORD Rigid ceiling directly applied or 10-0-0 oc bracing.

REACTIONS (lb/size) 2=468/7-0-0, 8=114/7-0-0, 9=262/7-0-0, 10=282/7-0-0
Max Horz 2=181(load case 5)
Max Uplift2=-337(load case 5), 8=-67(load case 3), 9=-176(load case 3), 10=-98(load case 4)
Max Grav 2=468(load case 1), 8=115(load case 8), 9=263(load case 8), 10=282(load case 1)

FORCES (lb) - Maximum Compression/Maximum Tension
TOP CHORD 1-2=-30/102, 2-3=-88/39, 3-4=-41/41, 4-5=-69/48, 5-6=-14/14, 6-7=-14/14, 7-8=-87/91
BOT CHORD 2-10=-14/14, 9-10=-14/14, 8-9=-14/14
WEBS 6-9=-210/235, 4-10=-212/171

NOTES
1) Unbalanced roof live loads have been considered for this design.
2) Wind: ASCE 7-98; 120mph (3-second gust); h=20ft; TCDL=4.2psf; BCDL=3.0psf; Category II; Exp B; enclosed; MWFRS gable end zone and C-C Exterior(2) zone; Lumber DOL=1.60 plate grip DOL=1.60. This truss is designed for C-C for members and forces, and for MWFRS for reactions specified.
3) Truss designed for wind loads in the plane of the truss only. For studs exposed to wind (normal to the face), see MiTek "Standard Gable End Detail"
4) Provide adequate drainage to prevent water ponding.
5) Gable requires continuous bottom chord bearing.
6) Gable studs spaced at 2-0-0 oc.
7) Provide mechanical connection (by others) of truss to bearing plate capable of withstanding 337 lb uplift at joint 2, 67 lb uplift at joint 8, 176 lb uplift at joint 9 and 98 lb uplift at joint 10.
8) In the LOAD CASE(S) section, loads applied to the face of the truss are noted as front (F) or back (B).

LOAD CASE(S) Standard
1) Regular: Lumber Increase=1.25, Plate Increase=1.25
Uniform Loads (plf)
Vert: 1-5=-104(F=-50), 5-7=-104(F=-50), 2-8=-30

SEPTEMBER 08, 2005 TRUSS DESIGN ENGINEER:
THOMAS E. MILLER PE 56877, BYRON K. ANDERSON PE 60987
STRUCTURAL ENGINEERING AND INSPECTIONS, INC. EB 9196
16105 N. FLORIDA AVE. STE B, LUTZ, FL 33549

Job	Truss	Truss Type	Qty	Ply	Dwg.#090805420
L130985	EJ7C	MONO HIP	1	1	Job Reference (optional)

Builders FirstSource, Lake City, Fl 32055 — 6.200 s Jul 13 2005 MiTek Industries, Inc. Wed Sep 07 11:41:59 2005 Page 1

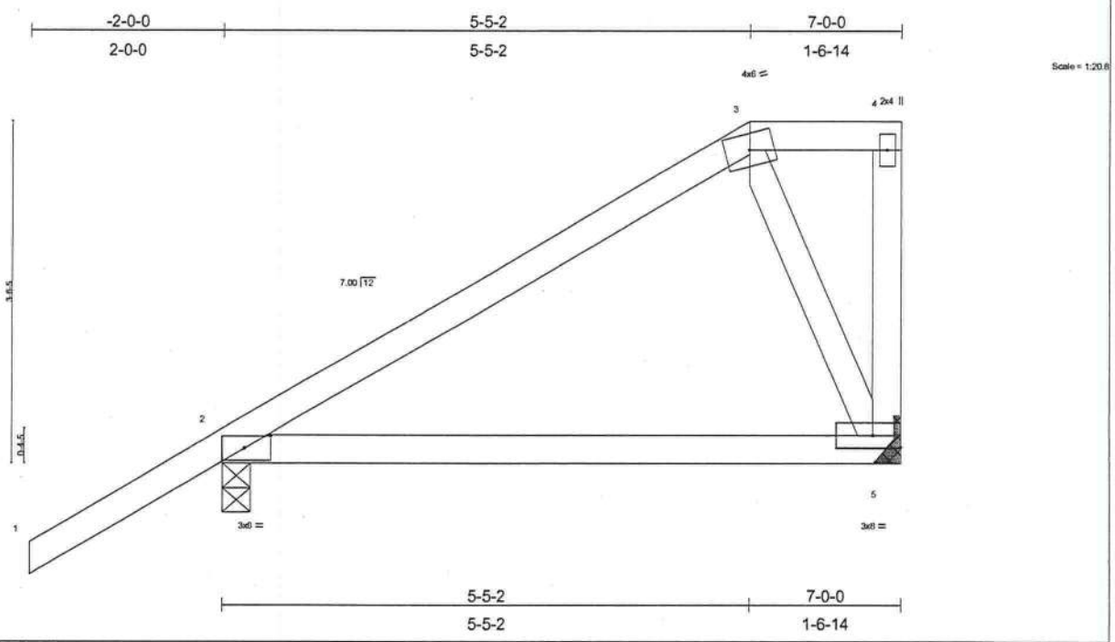

Plate Offsets (X,Y): [2:0-3-3,0-1-8]

LOADING (psf)		SPACING	2-0-0	CSI		DEFL	in	(loc)	l/defl	L/d	PLATES	GRIP
TCLL	20.0	Plates Increase	1.25	TC	0.34	Vert(LL)	-0.05	2-5	>999	240	MT20	244/190
TCDL	7.0	Lumber Increase	1.25	BC	0.13	Vert(TL)	-0.08	2-5	>999	180		
BCLL	10.0	Rep Stress Incr	YES	WB	0.07	Horz(TL)	0.00	5	n/a	n/a		
BCDL	5.0	Code FBC2001/TPI2002		(Matrix)							Weight: 35 lb	

LUMBER
TOP CHORD 2 X 4 SYP No.2D
BOT CHORD 2 X 4 SYP No.2D
WEBS 2 X 4 SYP No.3

BRACING
TOP CHORD Structural wood sheathing directly applied or 6-0-0 oc purlins, except end verticals.
BOT CHORD Rigid ceiling directly applied or 10-0-0 oc bracing.

REACTIONS (lb/size) 5=263/Mechanical, 2=416/0-3-8
Max Horz 2=263(load case 5)
Max Uplift5=-118(load case 5), 2=-267(load case 5)

FORCES (lb) - Maximum Compression/Maximum Tension
TOP CHORD 1-2=0/54, 2-3=-208/26, 3-4=-36/0, 4-5=-70/71
BOT CHORD 2-5=-99/120
WEBS 3-5=-210/276

NOTES
1) Wind: ASCE 7-98; 120mph (3-second gust); h=20ft; TCDL=4.2psf; BCDL=3.0psf; Category II; Exp B; enclosed; MWFRS gable end zone and C-C Exterior(2) zone; Lumber DOL=1.60 plate grip DOL=1.60. This truss is designed for C-C for members and forces, and for MWFRS for reactions specified.
2) Provide adequate drainage to prevent water ponding.
3) Refer to girder(s) for truss to truss connections.
4) Provide mechanical connection (by others) of truss to bearing plate capable of withstanding 118 lb uplift at joint 5 and 267 lb uplift at joint 2.

LOAD CASE(S) Standard

SEPTEMBER 08, 2005 TRUSS DESIGN ENGINEER:
THOMAS E. MILLER PE 56877, BYRON K. ANDERSON PE 60987
STRUCTURAL ENGINEERING AND INSPECTIONS, INC. EB 9196
16105 N. FLORIDA AVE. STE B, LUTZ, FL 33549

Job	Truss	Truss Type	Qty	Ply	
L130985	HJ3	MONO TRUSS	2	1	Job Reference (optional)

Dwg.#0908054211

Builders FirstSource, Lake City, Fl 32055

6.200 s Jul 13 2005 MiTek Industries, Inc. Wed Sep 07 11:42:00 2005 Page 1

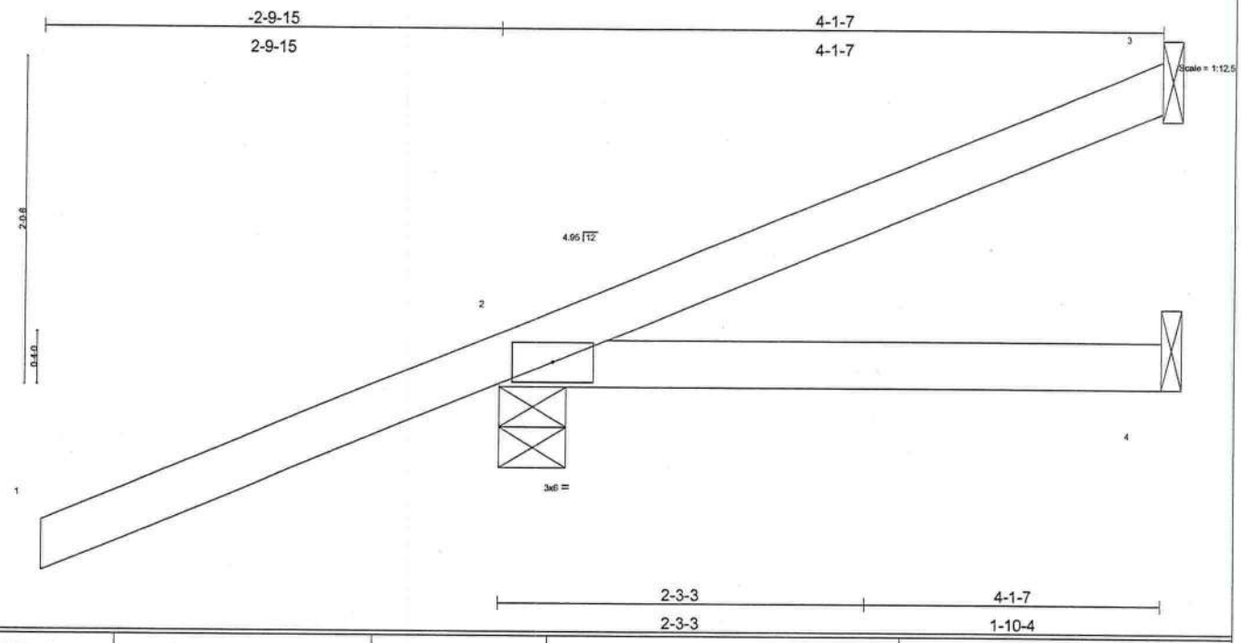

LOADING (psf)		SPACING	2-0-0	CSI		DEFL	in	(loc)	l/defl	L/d	PLATES	GRIP
TCLL	20.0	Plates Increase	1.25	TC	0.53	Vert(LL)	-0.01	2-4	>999	240	MT20	244/190
TCDL	7.0	Lumber Increase	1.25	BC	0.05	Vert(TL)	-0.01	2-4	>999	180		
BCLL	10.0	Rep Stress Incr	NO	WB	0.00	Horz(TL)	-0.00	3	n/a	n/a		
BCDL	5.0	Code FBC2001/TPI2002		(Matrix)							Weight: 17 lb	

LUMBER
TOP CHORD 2 X 4 SYP No.2D
BOT CHORD 2 X 4 SYP No.2D

BRACING
TOP CHORD Structural wood sheathing directly applied or 4-1-7 oc purlins.
BOT CHORD Rigid ceiling directly applied or 10-0-0 oc bracing.

REACTIONS (lb/size) 3=9/Mechanical, 2=288/0-4-15, 4=40/Mechanical
Max Horz 2=131(load case 4)
Max Uplift2=-308(load case 4)
Max Grav 3=37(load case 2), 2=288(load case 1), 4=40(load case 1)

FORCES (lb) - Maximum Compression/Maximum Tension
TOP CHORD 1-2=0/57, 2-3=-42/14
BOT CHORD 2-4=0/0

NOTES
1) Wind: ASCE 7-98; 120mph (3-second gust); h=20ft; TCDL=4.2psf; BCDL=3.0psf; Category II; Exp B; enclosed; MWFRS gable end zone; Lumber DOL=1.60 plate grip DOL=1.60.
2) Refer to girder(s) for truss to truss connections.
3) Provide mechanical connection (by others) of truss to bearing plate capable of withstanding 308 lb uplift at joint 2.
4) In the LOAD CASE(S) section, loads applied to the face of the truss are noted as front (F) or back (B).

LOAD CASE(S) Standard
1) Regular: Lumber Increase=1.25, Plate Increase=1.25
Uniform Loads (plf)
Vert: 1-2=-54
Trapezoidal Loads (plf)
Vert: 2=-3(F=26, B=26)-to-3=-56(F=-1, B=-1), 2=-0(F=15, B=15)-to-4=-31(F=-0, B=-0)

SEPTEMBER 08, 2005 TRUSS DESIGN ENGINEER:
THOMAS E. MILLER PE 56877, BYRON K. ANDERSON PE 60987
STRUCTURAL ENGINEERING AND INSPECTIONS, INC. EB 9196
16105 N. FLORIDA AVE. STE B, LUTZ, FL 33549

Job	Truss	Truss Type	Qty	Ply	Dwg.#090805422
L130985	PB01	HIP CAP	1	1	Job Reference (optional)

Builders FirstSource, Lake City, Fl 32055

6.200 s Jul 13 2005 MiTek Industries, Inc. Wed Sep 07 11:42:00 2005 Page 1

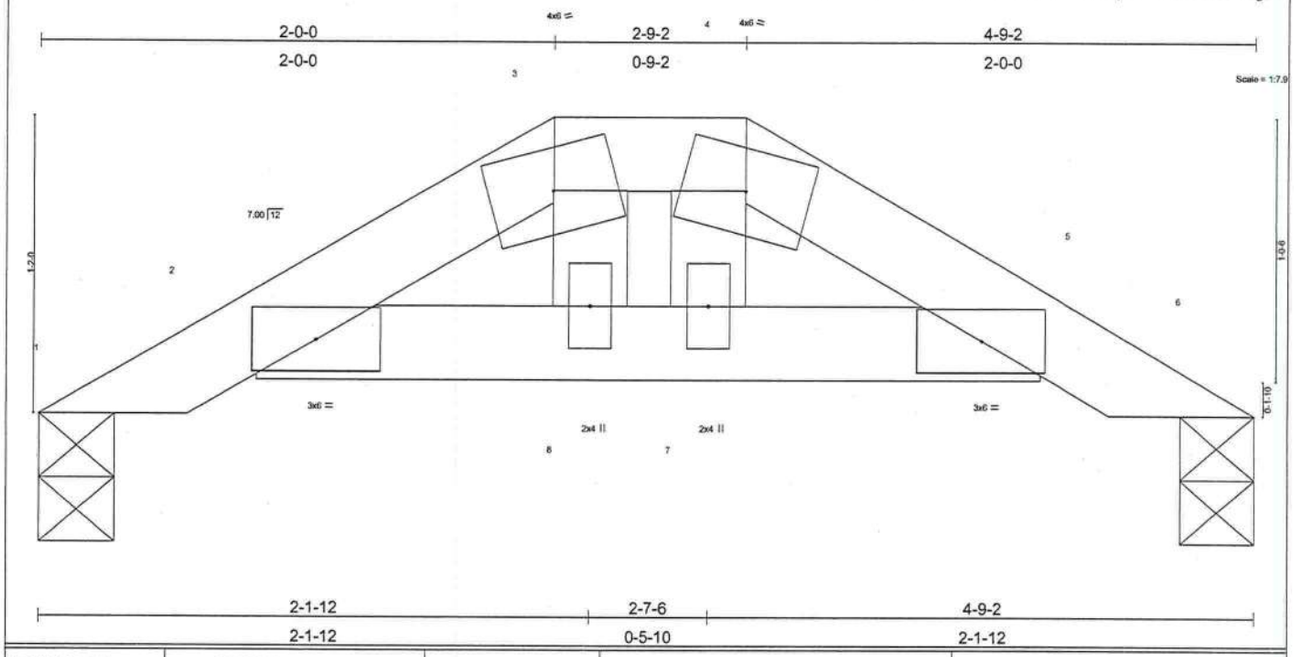

LOADING (psf)		SPACING 2-0-0		CSI		DEFL	in	(loc)	l/defl	L/d	PLATES	GRIP
TCLL	20.0	Plates Increase	1.25	TC	0.17	Vert(LL)	0.01	7	>999	240	MT20	244/190
TCDL	7.0	Lumber Increase	1.25	BC	0.14	Vert(TL)	0.01	7	>999	180		
BCLL	10.0	Rep Stress Incr	YES	WB	0.03	Horz(TL)	0.01	6	n/a	n/a		
BCDL	5.0	Code FBC2001/TPI2002		(Matrix)							Weight: 14 lb	

LUMBER
TOP CHORD 2 X 4 SYP No.2D
BOT CHORD 2 X 4 SYP No.2D
WEBS 2 X 4 SYP No.3

BRACING
TOP CHORD Structural wood sheathing directly applied or 4-9-2 oc purlins.
BOT CHORD Rigid ceiling directly applied or 10-0-0 oc bracing.

REACTIONS (lb/size) 1=175/0-3-8, 6=175/0-3-8
Max Horz 1=-45(load case 3)
Max Uplift1=-69(load case 5), 6=-69(load case 6)

FORCES (lb) - Maximum Compression/Maximum Tension
TOP CHORD 1-2=-79/57, 2-3=-324/205, 4-5=-324/205, 5-6=-79/57, 3-4=-299/212
BOT CHORD 2-8=-141/284, 7-8=-146/299, 5-7=-141/284
WEBS 3-8=-26/80, 4-7=-26/80

NOTES
1) Unbalanced roof live loads have been considered for this design.
2) Wind: ASCE 7-98; 120mph (3-second gust); h=20ft; TCDL=4.2psf; BCDL=3.0psf; Category II; Exp B; enclosed; MWFRS gable end zone and C-C Exterior(2) zone; Lumber DOL=1.60 plate grip DOL=1.60. This truss is designed for C-C for members and forces, and for MWFRS for reactions specified.
3) Provide adequate drainage to prevent water ponding.
4) Bearing at joint(s) 1, 6 considers parallel to grain value using ANSI/TPI 1 angle to grain formula. Building designer should verify capacity of bearing surface.
5) Provide mechanical connection (by others) of truss to bearing plate capable of withstanding 69 lb uplift at joint 1 and 69 lb uplift at joint 6.
6) SEE MiTek STANDARD PIGGYBACK TRUSS CONNECTION DETAIL FOR CONNECTION TO BASE TRUSS

LOAD CASE(S) Standard

SEPTEMBER 08, 2005 TRUSS DESIGN ENGINEER:
THOMAS E. MILLER PE 56877, BYRON K. ANDERSON PE 60987
STRUCTURAL ENGINEERING AND INSPECTIONS, INC. EB 9196
16105 N. FLORIDA AVE. STE B, LUTZ, FL 33549

Job	Truss	Truss Type	Qty	Ply	Dwg.#09080542B
L130985	PB02	HIP CAP	1	1	Job Reference (optional)

Builders FirstSource, Lake City, Fl 32055

6.200 s Jul 13 2005 MiTek Industries, Inc. Wed Sep 07 11:42:01 2005 Page 1

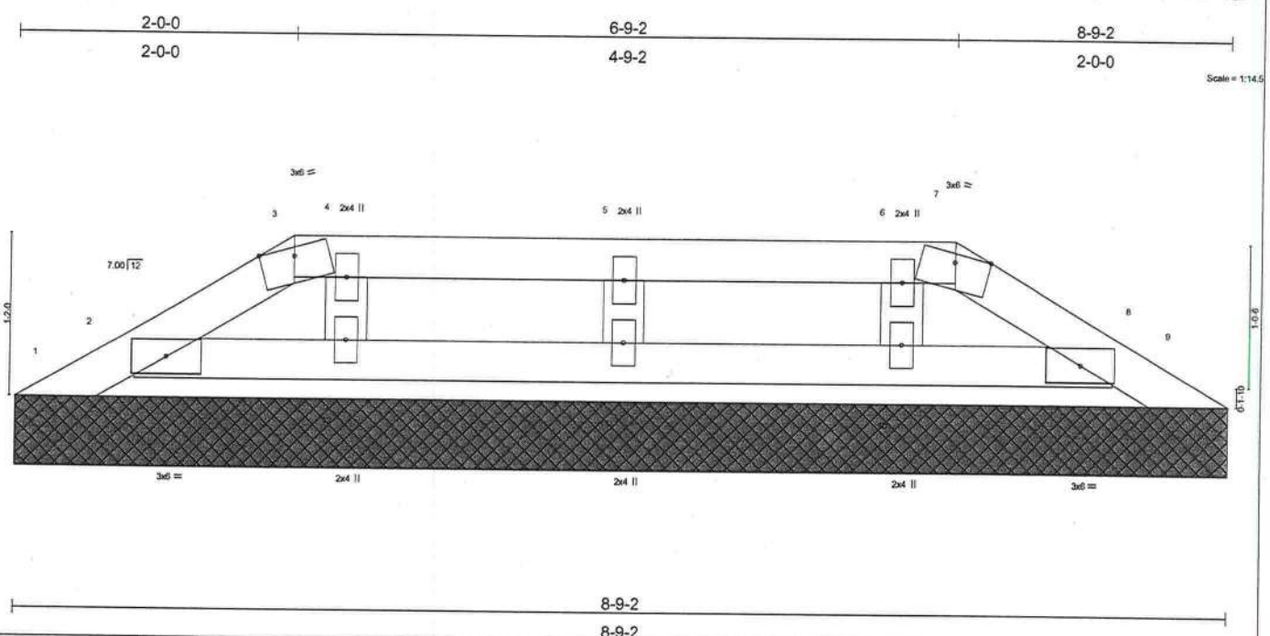

LOADING (psf)		SPACING	2-0-0	CSI		DEFL	in	(loc)	l/defl	L/d	PLATES	GRIP
TCLL	20.0	Plates Increase	1.25	TC	0.03	Vert(LL)	n/a	-	n/a	999	MT20	244/190
TCDL	7.0	Lumber Increase	1.25	BC	0.01	Vert(TL)	n/a	-	n/a	999		
BCLL	10.0	Rep Stress Incr	YES	WB	0.04	Horz(TL)	0.00	9	n/a	n/a		
BCDL	5.0	Code FBC2001/TPI2002		(Matrix)							Weight: 26 lb	

LUMBER
TOP CHORD 2 X 4 SYP No.2D
BOT CHORD 2 X 4 SYP No.2D
OTHERS 2 X 4 SYP No.3

BRACING
TOP CHORD Structural wood sheathing directly applied or 6-0-0 oc purlins.
BOT CHORD Rigid ceiling directly applied or 10-0-0 oc bracing.

REACTIONS (lb/size) 1=3/8-9-2, 9=3/8-9-2, 2=91/8-9-2, 8=91/8-9-2, 11=175/8-9-2, 12=152/8-9-2, 10=152/8-9-2
Max Horz 1=-42(load case 3)
Max Uplift1=-24(load case 3), 9=-3(load case 3), 2=-63(load case 5), 8=-55(load case 6), 11=-111(load case 3), 12=-87(load case 4), 10=-77(load case 3)
Max Grav 1=19(load case 4), 9=3(load case 1), 2=91(load case 1), 8=91(load case 1), 11=177(load case 7), 12=153(load case 7), 10=153(load case 8)

FORCES (lb) - Maximum Compression/Maximum Tension
TOP CHORD 1-2=-46/52, 2-3=-27/28, 7-8=-27/21, 8-9=-0/15, 3-4=-7/36, 4-5=-7/36, 5-6=-7/36, 6-7=-7/36
BOT CHORD 2-12=-3/23, 11-12=-3/23, 10-11=-3/23, 8-10=-3/23
WEBS 5-11=-115/153, 4-12=-96/112, 6-10=-96/112

NOTES
1) Unbalanced roof live loads have been considered for this design.
2) Wind: ASCE 7-98; 120mph (3-second gust); h=20ft; TCDL=4.2psf; BCDL=3.0psf; Category II; Exp B; enclosed; MWFRS gable end zone and C-C Exterior(2) zone; Lumber DOL=1.60 plate grip DOL=1.60. This truss is designed for C-C for members and forces, and for MWFRS for reactions specified.
3) Truss designed for wind loads in the plane of the truss only. For studs exposed to wind (normal to the face), see MiTek "Standard Gable End Detail"
4) Provide adequate drainage to prevent water ponding.
5) Gable requires continuous bottom chord bearing.
6) Gable studs spaced at 2-0-0 oc.
7) Provide mechanical connection (by others) of truss to bearing plate capable of withstanding 24 lb uplift at joint 1, 3 lb uplift at joint 9, 63 lb uplift at joint 2, 55 lb uplift at joint 8, 111 lb uplift at joint 11, 87 lb uplift at joint 12 and 77 lb uplift at joint 10.
8) SEE MiTek STANDARD PIGGYBACK TRUSS CONNECTION DETAIL FOR CONNECTION TO BASE TRUSS

LOAD CASE(S) Standard

SEPTEMBER 08, 2005 TRUSS DESIGN ENGINEER:
THOMAS E. MILLER PE 56877, BYRON K. ANDERSON PE 60987
STRUCTURAL ENGINEERING AND INSPECTIONS, INC. EB 9196
16105 N. FLORIDA AVE. STE B, LUTZ, FL 33549

Job	Truss	Truss Type	Qty	Ply	Dwg.#090805424
L130985	PB03	HIP CAP	1	1	Job Reference (optional)

Builders FirstSource, Lake City, Fl 32055

6.200 s Jul 13 2005 MiTek Industries, Inc. Wed Sep 07 11:42:02 2005 Page 1

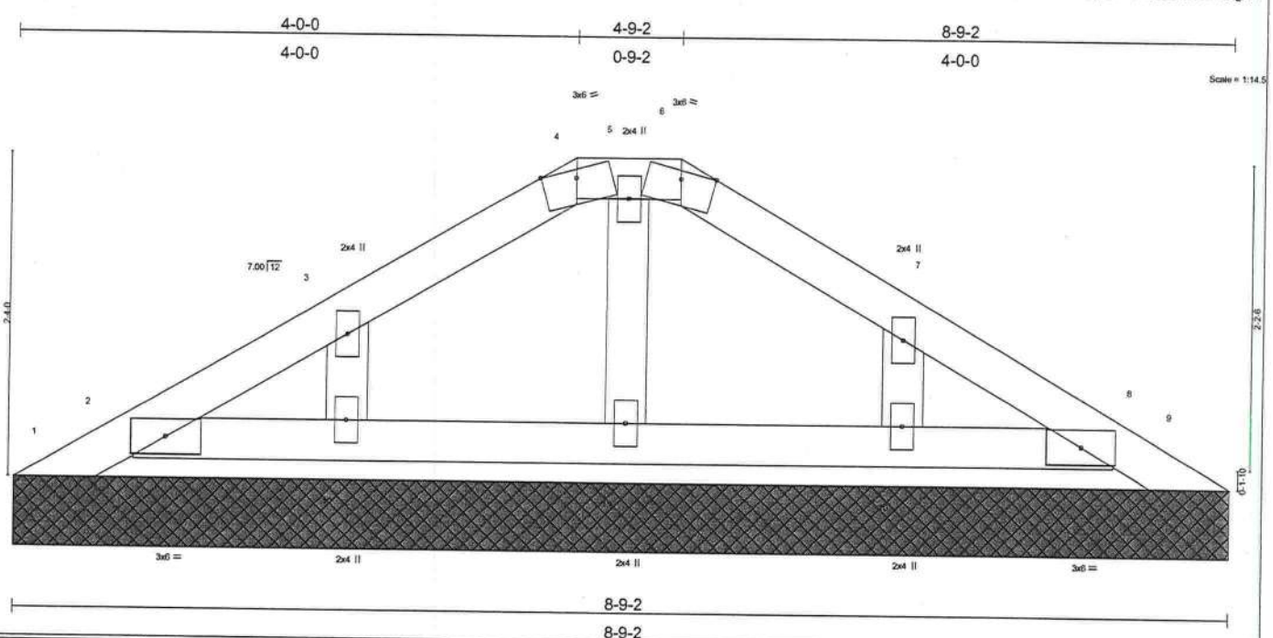

LOADING (psf)		SPACING	2-0-0	CSI		DEFL	in	(loc)	l/defl	L/d	PLATES	GRIP
TCLL	20.0	Plates Increase	1.25	TC	0.03	Vert(LL)	n/a	-	n/a	999	MT20	244/190
TCDL	7.0	Lumber Increase	1.25	BC	0.02	Vert(TL)	n/a	-	n/a	999		
BCLL	10.0	Rep Stress Incr	YES	WB	0.03	Horz(TL)	0.00	9	n/a	n/a		
BCDL	5.0	Code FBC2001/TPI2002		(Matrix)							Weight: 30 lb	

LUMBER
TOP CHORD 2 X 4 SYP No.2D
BOT CHORD 2 X 4 SYP No.2D
OTHERS 2 X 4 SYP No.3

BRACING
TOP CHORD Structural wood sheathing directly applied or 6-0-0 oc purlins.
BOT CHORD Rigid ceiling directly applied or 10-0-0 oc bracing.

REACTIONS (lb/size) 1=2/8-9-2, 9=2/8-9-2, 2=102/8-9-2, 8=102/8-9-2, 11=151/8-9-2, 12=153/8-9-2, 10=153/8-9-2
Max Horz 1=-90(load case 3)
Max Uplift1=-42(load case 3), 9=-2(load case 6), 2=-58(load case 5), 8=-44(load case 6), 11=-32(load case 4), 12=-110(load case 5), 10=-108(load case 6)
Max Grav 1=42(load case 4), 9=3(load case 8), 2=102(load case 1), 8=102(load case 1), 11=151(load case 1), 12=159(load case 7), 10=159(load case 8)

FORCES (lb) - Maximum Compression/Maximum Tension
TOP CHORD 1-2=-99/103, 2-3=-52/63, 3-4=-51/85, 6-7=-51/85, 7-8=-44/28, 8-9=-1/15, 4-5=-22/96, 5-6=-22/96
BOT CHORD 2-12=-23/45, 11-12=-23/45, 10-11=-23/45, 8-10=-23/45
WEBS 5-11=-89/45, 3-12=-103/120, 7-10=-103/120

NOTES
1) Unbalanced roof live loads have been considered for this design.
2) Wind: ASCE 7-98; 120mph (3-second gust); h=20ft; TCDL=4.2psf; BCDL=3.0psf; Category II; Exp B; enclosed; MWFRS gable end zone and C-C Exterior(2) zone; Lumber DOL=1.60 plate grip DOL=1.60. This truss is designed for C-C for members and forces, and for MWFRS for reactions specified.
3) Truss designed for wind loads in the plane of the truss only. For studs exposed to wind (normal to the face), see MiTek "Standard Gable End Detail"
4) Provide adequate drainage to prevent water ponding.
5) Gable requires continuous bottom chord bearing.
6) Gable studs spaced at 2-0-0 oc.
7) Provide mechanical connection (by others) of truss to bearing plate capable of withstanding 42 lb uplift at joint 1, 2 lb uplift at joint 9, 58 lb uplift at joint 2, 44 lb uplift at joint 8, 32 lb uplift at joint 11, 110 lb uplift at joint 12 and 108 lb uplift at joint 10.
8) SEE MiTek STANDARD PIGGYBACK TRUSS CONNECTION DETAIL FOR CONNECTION TO BASE TRUSS

LOAD CASE(S) Standard

SEPTEMBER 08, 2005 TRUSS DESIGN ENGINEER:
THOMAS E. MILLER PE 56877, BYRON K. ANDERSON PE 60987
STRUCTURAL ENGINEERING AND INSPECTIONS, INC. EB 9196
16105 N. FLORIDA AVE. STE B, LUTZ, FL 33549

Job	Truss	Truss Type	Qty	Ply	Dwg.#090805425
L130985	T01	COMMON	11	1	Job Reference (optional)

Builders FirstSource, Lake City, Fl 32055 — 6.200 s Jul 13 2005 MiTek Industries, Inc. Wed Sep 07 11:42:03 2005 Page 1

-2-0-0	5-11-13	11-6-0	17-0-3	23-0-0	25-0-0
2-0-0	5-11-13	5-6-3	5-6-3	5-11-13	2-0-0

Scale = 1:44.3

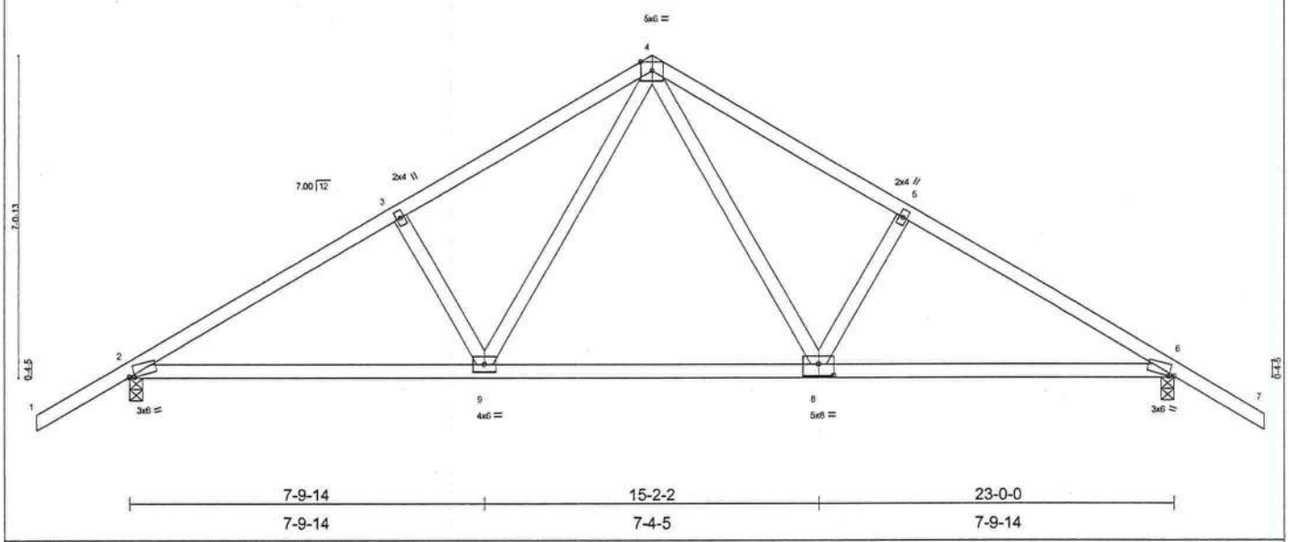

Plate Offsets (X,Y): [2:0-1-6,0-0-7], [6:0-1-6,0-0-7], [8:0-4-0,0-3-0]

LOADING (psf)		SPACING 2-0-0		CSI		DEFL	in	(loc)	l/defl	L/d	PLATES	GRIP
TCLL	20.0	Plates Increase	1.25	TC	0.34	Vert(LL)	-0.22	8-9	>999	240	MT20	244/190
TCDL	7.0	Lumber Increase	1.25	BC	0.79	Vert(TL)	-0.35	8-9	>770	180		
BCLL	10.0	Rep Stress Incr	NO	WB	0.38	Horz(TL)	0.05	6	n/a	n/a		
BCDL	5.0	Code FBC2001/TPI2002		(Matrix)							Weight: 114 lb	

LUMBER
TOP CHORD 2 X 4 SYP No.2D
BOT CHORD 2 X 4 SYP No.2D
WEBS 2 X 4 SYP No.3

BRACING
TOP CHORD Structural wood sheathing directly applied or 4-7-13 oc purlins.
BOT CHORD Rigid ceiling directly applied or 8-2-5 oc bracing.

REACTIONS (lb/size) 2=1254/0-3-8, 6=1254/0-3-8
Max Horz 2=286(load case 4)
Max Uplift2=-611(load case 5), 6=-611(load case 6)

FORCES (lb) - Maximum Compression/Maximum Tension
TOP CHORD 1-2=0/54, 2-3=-1830/782, 3-4=-1677/815, 4-5=-1677/815, 5-6=-1830/782, 6-7=0/54
BOT CHORD 2-9=-614/1499, 8-9=-295/1026, 6-8=-472/1499
WEBS 3-9=-258/305, 4-9=-360/762, 4-8=-360/762, 5-8=-258/305

NOTES
1) Unbalanced roof live loads have been considered for this design.
2) Wind: ASCE 7-98; 120mph (3-second gust); h=20ft; TCDL=4.2psf; BCDL=3.0psf; Category II; Exp B; enclosed; MWFRS gable end zone and C-C Exterior(2) zone; Lumber DOL=1.60 plate grip DOL=1.60. This truss is designed for C-C for members and forces, and for MWFRS for reactions specified.
3) Provide mechanical connection (by others) of truss to bearing plate capable of withstanding 611 lb uplift at joint 2 and 611 lb uplift at joint 6.
4) In the LOAD CASE(S) section, loads applied to the face of the truss are noted as front (F) or back (B).

LOAD CASE(S) Standard
1) Regular: Lumber Increase=1.25, Plate Increase=1.25
Uniform Loads (plf)
Vert: 1-4=-54, 4-7=-54, 2-9=-30, 8-9=-80(F=-50), 6-8=-30

SEPTEMBER 08, 2005 TRUSS DESIGN ENGINEER:
THOMAS E. MILLER PE 56877, BYRON K. ANDERSON PE 60987
STRUCTURAL ENGINEERING AND INSPECTIONS, INC. EB 9196
16105 N. FLORIDA AVE. STE B, LUTZ, FL 33549

Job	Truss	Truss Type	Qty	Ply	Dwg.#090805426
L130985	T01G	COMMON	1	1	Job Reference (optional)

Builders FirstSource, Lake City, Fl 32055

6.200 s Jul 13 2005 MiTek Industries, Inc. Wed Sep 07 11:42:03 2005 Page 1

-2-0-0 | 11-6-0 | 23-0-0 | 25-0-0

2-0-0 | 11-6-0 | 11-6-0 | 2-0-0

Scale = 1:44.3

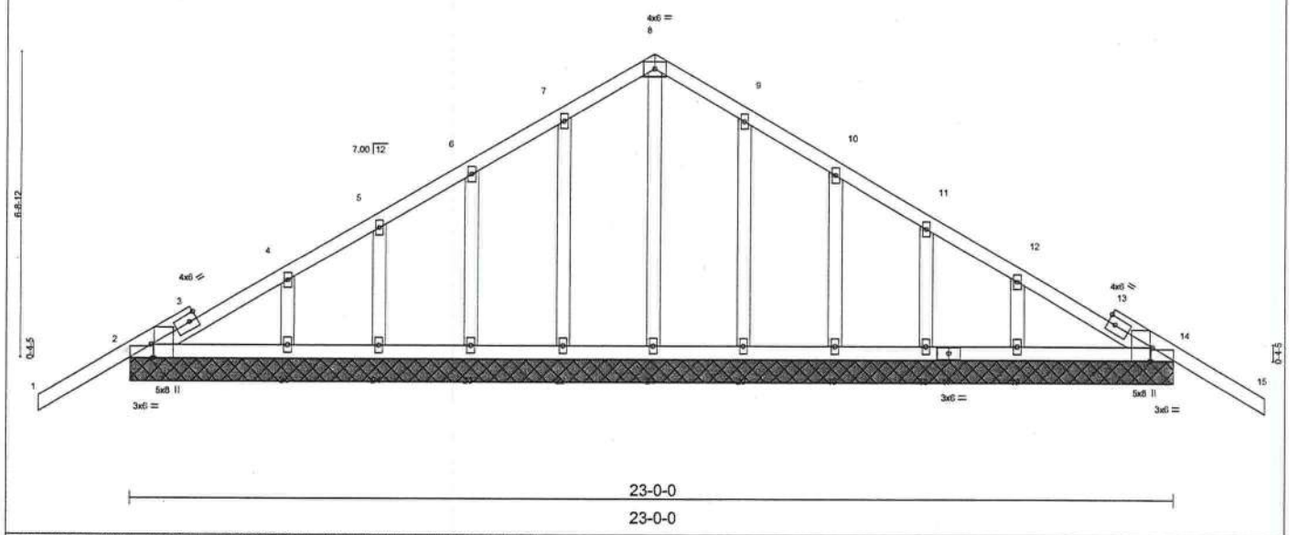

Plate Offsets (X,Y): [2:0-3-8,Edge], [2:0-0-7,Edge], [14:0-3-8,Edge], [14:0-0-7,Edge]

LOADING (psf)		SPACING	2-0-0	CSI		DEFL	in	(loc)	l/defl	L/d	PLATES	GRIP
TCLL	20.0	Plates Increase	1.25	TC	0.44	Vert(LL)	-0.03	15	n/r	90	MT20	244/190
TCDL	7.0	Lumber Increase	1.25	BC	0.06	Vert(TL)	-0.05	15	n/r	80		
BCLL	10.0	Rep Stress Incr	NO	WB	0.16	Horz(TL)	0.01	14	n/a	n/a		
BCDL	5.0	Code FBC2001/TPI2002		(Matrix)							Weight: 132 lb	

LUMBER
TOP CHORD 2 X 4 SYP No.2D
BOT CHORD 2 X 4 SYP No.2D
OTHERS 2 X 4 SYP No.3

BRACING
TOP CHORD Structural wood sheathing directly applied or 6-0-0 oc purlins.
BOT CHORD Rigid ceiling directly applied or 10-0-0 oc bracing.

REACTIONS (lb/size) 2=521/23-0-0, 14=521/23-0-0, 21=284/23-0-0, 22=287/23-0-0, 23=296/23-0-0, 24=255/23-0-0, 25=383/23-0-0, 20=287/23-0-0, 19=296/23-0-0, 18=255/23-0-0, 16=383/23-0-0
Max Horz 2=-272(load case 3)
Max Uplift2=-311(load case 5), 14=-345(load case 6), 21=-8(load case 4), 22=-170(load case 5), 23=-176(load case 5), 24=-187(load case 5), 25=-151(load case 5), 20=-165(load case 6), 19=-179(load case 6), 18=-183(load case 6), 16=-161(load case 6)
Max Grav 2=521(load case 1), 14=521(load case 1), 21=284(load case 1), 22=291(load case 7), 23=296(load case 1), 24=255(load case 7), 25=383(load case 1), 20=291(load case 8), 19=296(load case 1), 18=255(load case 8), 16=383(load case 1)

FORCES (lb) - Maximum Compression/Maximum Tension
TOP CHORD 1-2=-20/112, 2-3=-184/180, 3-4=-190/179, 4-5=-136/169, 5-6=-88/175, 6-7=-61/221, 7-8=-61/264, 8-9=-61/264, 9-10=-61/202, 10-11=-59/129, 11-12=-70/63, 12-13=-89/78, 13-14=-90/80, 14-15=-20/112
BOT CHORD 2-25=-40/204, 24-25=-40/204, 23-24=-40/204, 22-23=-40/204, 21-22=-40/204, 20-21=-40/204, 19-20=-40/204, 18-19=-40/204, 17-18=-40/204, 16-17=-40/204, 14-16=-40/204
WEBS 8-21=-223/21, 7-22=-232/181, 6-23=-233/191, 5-24=-207/189, 4-25=-293/186, 9-20=-232/177, 10-19=-233/193, 11-18=-207/186, 12-16=-293/194

NOTES
1) Unbalanced roof live loads have been considered for this design.
2) Wind: ASCE 7-98; 120mph (3-second gust); h=20ft; TCDL=4.2psf; BCDL=3.0psf; Category II; Exp B; enclosed; MWFRS gable end zone and C-C Exterior(2) zone; Lumber DOL=1.60 plate grip DOL=1.60. This truss is designed for C-C for members and forces, and for MWFRS for reactions specified.
3) Truss designed for wind loads in the plane of the truss only. For studs exposed to wind (normal to the face), see MiTek "Standard Gable End Detail"
4) All plates are 2x4 MT20 unless otherwise indicated.
5) Gable requires continuous bottom chord bearing.
6) Gable studs spaced at 2-0-0 oc.
7) Provide mechanical connection (by others) of truss to bearing plate capable of withstanding 311 lb uplift at joint 2, 345 lb uplift at joint 14, 8 lb uplift at joint 21, 170 lb uplift at joint 22, 176 lb uplift at joint 23, 187 lb uplift at joint 24, 151 lb uplift at joint 25, 165 lb uplift at joint 20, 179 lb uplift at joint 19, 183 lb uplift at joint 18 and 161 lb uplift at joint 16.
8) In the LOAD CASE(S) section, loads applied to the face of the truss are noted as front (F) or back (B).

LOAD CASE(S) Standard
1) Regular: Lumber Increase=1.25, Plate Increase=1.25
Uniform Loads (plf)
Vert: 1-8=-114(F=-60), 8-15=-114(F=-60), 2-14=-30

SEPTEMBER 08, 2005 TRUSS DESIGN ENGINEER:
THOMAS E. MILLER PE 56877, BYRON K. ANDERSON PE 60987
STRUCTURAL ENGINEERING AND INSPECTIONS, INC. EB 9196
16105 N. FLORIDA AVE. STE B, LUTZ, FL 33549

Job	Truss	Truss Type	Qty	Ply	Dwg.#0908054217
L130985	T02	COMMON	2	1	Job Reference (optional)

Builders FirstSource, Lake City, Fl 32055

6.200 s Jul 13 2005 MiTek Industries, Inc. Wed Sep 07 11:42:04 2005 Page 1

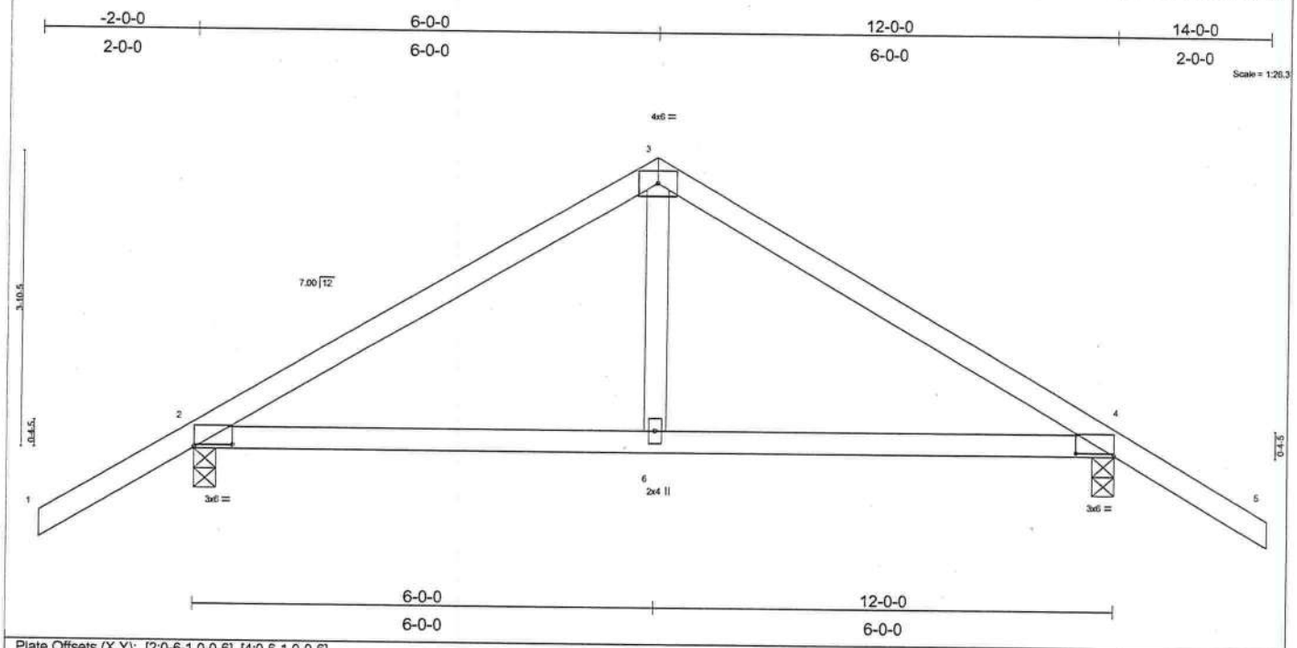

Plate Offsets (X,Y): [2:0-6-1,0-0-6], [4:0-6-1,0-0-6]

LOADING (psf)		SPACING	2-0-0	CSI		DEFL	in	(loc)	l/defl	L/d	PLATES	GRIP
TCLL	20.0	Plates Increase	1.25	TC	0.28	Vert(LL)	0.08	4-6	>999	240	MT20	244/190
TCDL	7.0	Lumber Increase	1.25	BC	0.21	Vert(TL)	0.06	4-6	>999	180		
BCLL	10.0	Rep Stress Incr	YES	WB	0.10	Horz(TL)	0.01	4	n/a	n/a		
BCDL	5.0	Code FBC2001/TPI2002		(Matrix)							Weight: 51 lb	

LUMBER
TOP CHORD 2 X 4 SYP No.2D
BOT CHORD 2 X 4 SYP No.2D
WEBS 2 X 4 SYP No.3

BRACING
TOP CHORD Structural wood sheathing directly applied or 6-0-0 oc purlins.
BOT CHORD Rigid ceiling directly applied or 9-8-12 oc bracing.

REACTIONS (lb/size) 2=608/0-3-8, 4=608/0-3-8
Max Horz 2=-153(load case 3)
Max Uplift2=-525(load case 5), 4=-525(load case 6)

FORCES (lb) - Maximum Compression/Maximum Tension
TOP CHORD 1-2=0/54, 2-3=-603/708, 3-4=-603/708, 4-5=0/54
BOT CHORD 2-6=-414/452, 4-6=-414/452
WEBS 3-6=-423/204

NOTES
1) Unbalanced roof live loads have been considered for this design.
2) Wind: ASCE 7-98; 120mph (3-second gust); h=20ft; TCDL=4.2psf; BCDL=3.0psf; Category II; Exp B; enclosed; MWFRS gable end zone and C-C Exterior(2) zone; porch left and right exposed; Lumber DOL=1.60 plate grip DOL=1.60. This truss is designed for C-C for members and forces, and for MWFRS for reactions specified.
3) Provide mechanical connection (by others) of truss to bearing plate capable of withstanding 525 lb uplift at joint 2 and 525 lb uplift at joint 4.

LOAD CASE(S) Standard

SEPTEMBER 08, 2005 TRUSS DESIGN ENGINEER:
THOMAS E. MILLER PE 56877, BYRON K. ANDERSON PE 60987
STRUCTURAL ENGINEERING AND INSPECTIONS, INC. EB 9196
16105 N. FLORIDA AVE. STE B, LUTZ, FL 33549

Job	Truss	Truss Type	Qty	Ply	Dwg.#09080542 8
L130985	T02G	COMMON	1	1	Job Reference (optional)

Builders FirstSource, Lake City, Fl 32055

6.200 s Jul 13 2005 MiTek Industries, Inc. Wed Sep 07 11:42:05 2005 Page 1

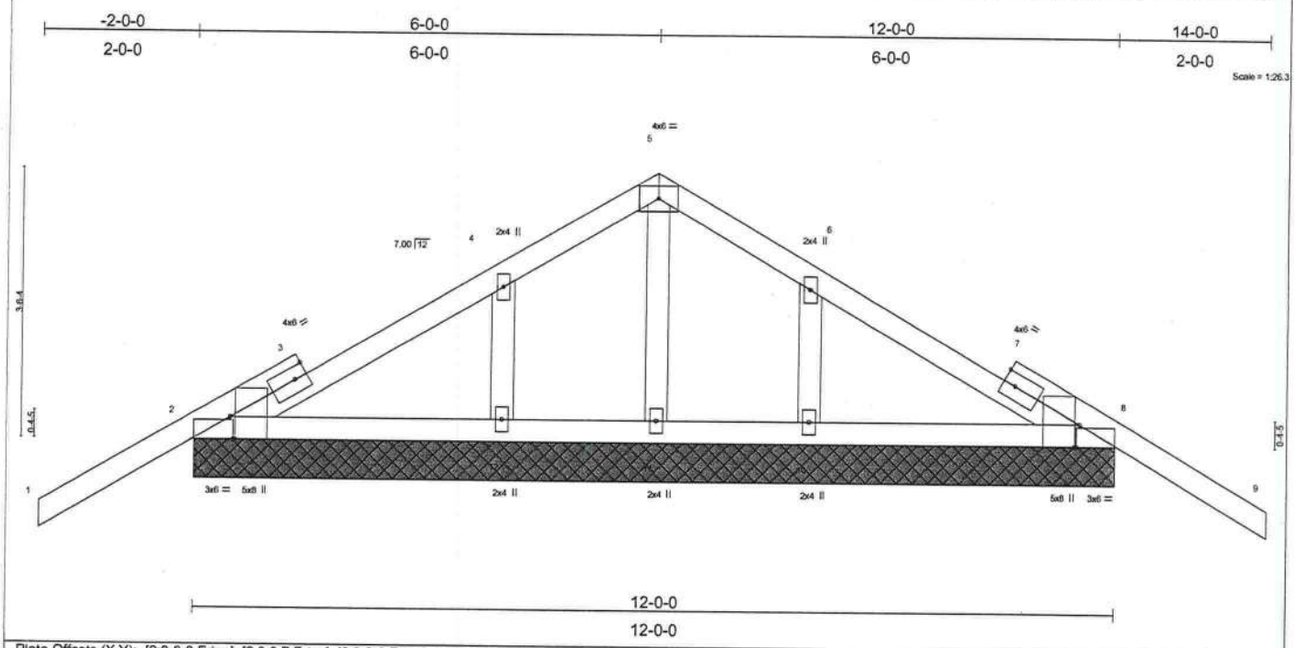

Plate Offsets (X,Y): [2:0-3-8,Edge], [2:0-0-7,Edge], [8:0-3-8,Edge], [8:0-0-7,Edge]

LOADING (psf)		SPACING	2-0-0	CSI		DEFL	in	(loc)	l/defl	L/d	PLATES	GRIP
TCLL	20.0	Plates Increase	1.25	TC	0.40	Vert(LL)	-0.03	9	n/r	90	MT20	244/190
TCDL	7.0	Lumber Increase	1.25	BC	0.07	Vert(TL)	-0.04	9	n/r	80		
BCLL	10.0	Rep Stress Incr	NO	WB	0.06	Horz(TL)	0.00	8	n/a	n/a		
BCDL	5.0	Code FBC2001/TPI2002		(Matrix)							Weight: 58 lb	

LUMBER
TOP CHORD 2 X 4 SYP No.2D
BOT CHORD 2 X 4 SYP No.2D
OTHERS 2 X 4 SYP No.3

BRACING
TOP CHORD Structural wood sheathing directly applied or 10-0-0 oc purlins.
BOT CHORD Rigid ceiling directly applied or 6-0-0 oc bracing.

REACTIONS (lb/size) 2=454/12-0-0, 8=454/12-0-0, 11=243/12-0-0, 12=437/12-0-0, 10=437/12-0-0
Max Horz 2=139(load case 4)
Max Uplift2=-329(load case 5), 8=-349(load case 6), 11=-46(load case 5), 12=-205(load case 5), 10=-210(load case 6)
Max Grav 2=460(load case 7), 8=460(load case 8), 11=243(load case 1), 12=439(load case 7), 10=439(load case 8)

FORCES (lb) - Maximum Compression/Maximum Tension
TOP CHORD 1-2=-15/102, 2-3=-69/91, 3-4=-75/187, 4-5=0/129, 5-6=0/129, 6-7=-28/187, 7-8=-21/43, 8-9=-15/102
BOT CHORD 2-12=-84/166, 11-12=-84/166, 10-11=-84/166, 8-10=-84/166
WEBS 5-11=-226/51, 4-12=-324/232, 6-10=-324/236

NOTES
1) Unbalanced roof live loads have been considered for this design.
2) Wind: ASCE 7-98; 120mph (3-second gust); h=20ft; TCDL=4.2psf; BCDL=3.0psf; Category II; Exp B; enclosed; MWFRS gable end zone and C-C Exterior(2) zone; Lumber DOL=1.60 plate grip DOL=1.60. This truss is designed for C-C for members and forces, and for MWFRS for reactions specified.
3) Truss designed for wind loads in the plane of the truss only. For studs exposed to wind (normal to the face), see MiTek "Standard Gable End Detail"
4) Gable requires continuous bottom chord bearing.
5) Gable studs spaced at 2-0-0 oc.
6) Provide mechanical connection (by others) of truss to bearing plate capable of withstanding 329 lb uplift at joint 2, 349 lb uplift at joint 8, 46 lb uplift at joint 11, 205 lb uplift at joint 12 and 210 lb uplift at joint 10.
7) In the LOAD CASE(S) section, loads applied to the face of the truss are noted as front (F) or back (B).

LOAD CASE(S) Standard
1) Regular: Lumber Increase=1.25, Plate Increase=1.25
Uniform Loads (plf)
Vert: 1-5=-104(F=-50), 5-9=-104(F=-50), 2-8=-30

SEPTEMBER 08, 2005 TRUSS DESIGN ENGINEER:
THOMAS E. MILLER PE 56877, BYRON K. ANDERSON PE 60987
STRUCTURAL ENGINEERING AND INSPECTIONS, INC. EB 9196
16105 N. FLORIDA AVE. STE B, LUTZ, FL 33549

Job	Truss	Truss Type	Qty	Ply	Dwg.#090805429
L130985	T03	SPECIAL	2	1	Job Reference (optional)

Builders FirstSource, Lake City, Fl 32055

6.200 s Jul 13 2005 MiTek Industries, Inc. Wed Sep 07 11:42:05 2005 Page 1

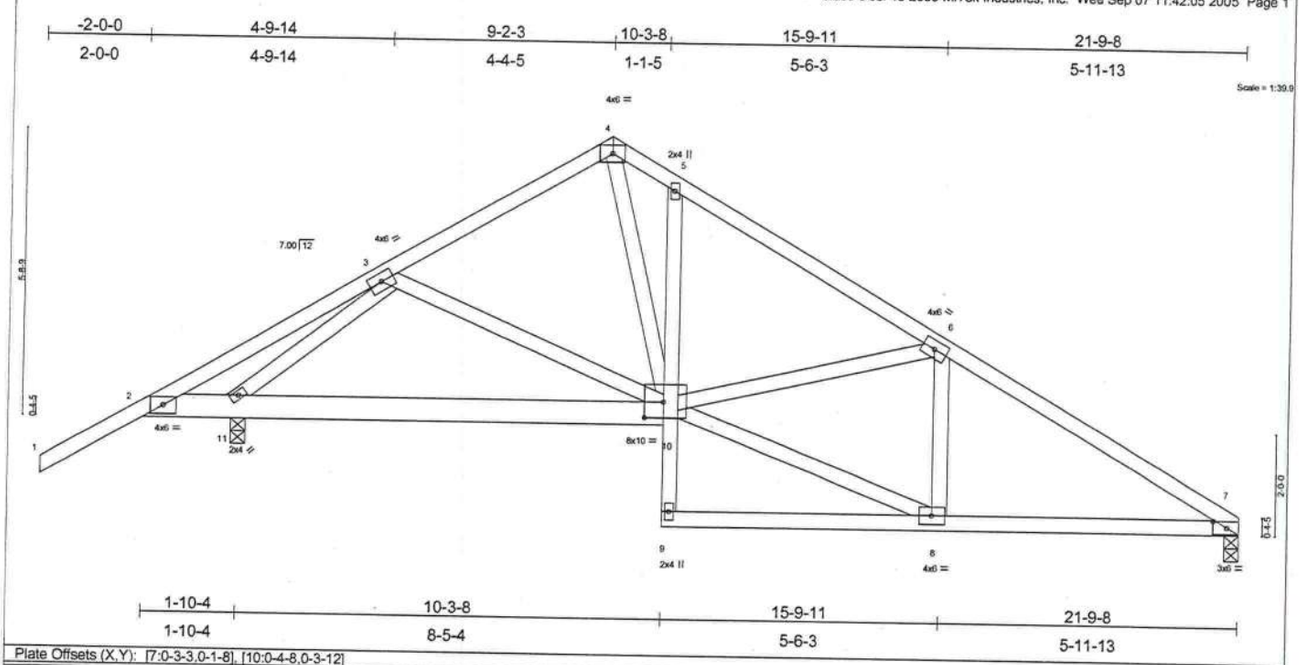

Plate Offsets (X,Y): [7:0-3-3,0-1-8], [10:0-4-8,0-3-12]

LOADING (psf)		SPACING	2-0-0	CSI		DEFL	in	(loc)	l/defl	L/d	PLATES	GRIP
TCLL	20.0	Plates Increase	1.25	TC	0.25	Vert(LL)	-0.06	7-8	>999	240	MT20	244/190
TCDL	7.0	Lumber Increase	1.25	BC	0.34	Vert(TL)	-0.10	7-8	>999	180		
BCLL	10.0	Rep Stress Incr	YES	WB	0.35	Horz(TL)	0.03	7	n/a	n/a		
BCDL	5.0	Code FBC2001/TPI2002		(Matrix)							Weight: 135 lb	

LUMBER
TOP CHORD 2 X 4 SYP No.2D
BOT CHORD 2 X 4 SYP No.2D *Except*
B1 2 X 6 SYP No.1D, B2 2 X 4 SYP No.3
WEBS 2 X 4 SYP No.3

BRACING
TOP CHORD Structural wood sheathing directly applied or 5-6-10 oc purlins.
BOT CHORD Rigid ceiling directly applied or 10-0-0 oc bracing, Except:
6-0-0 oc bracing: 2-11.

REACTIONS (lb/size) 7=822/0-3-8, 11=1104/0-3-8
Max Horz 11=-271(load case 3)
Max Uplift7=-355(load case 6), 11=-519(load case 5)

FORCES (lb) - Maximum Compression/Maximum Tension
TOP CHORD 1-2=0/56, 2-3=-507/224, 3-4=-874/408, 4-5=-999/525, 5-6=-1096/466, 6-7=-1276/545
BOT CHORD 2-11=-144/601, 10-11=-173/694, 9-10=0/71, 5-10=-165/191, 8-9=-15/20, 7-8=-370/1032
WEBS 3-10=-103/148, 4-10=-375/752, 8-10=-381/1085, 6-10=-196/298, 6-8=-189/153, 3-11=-1087/927

NOTES
1) Unbalanced roof live loads have been considered for this design.
2) Wind: ASCE 7-98; 120mph (3-second gust); h=20ft; TCDL=4.2psf; BCDL=3.0psf; Category II; Exp B; enclosed; MWFRS gable end zone and C-C Exterior(2) zone; Lumber DOL=1.60 plate grip DOL=1.60. This truss is designed for C-C for members and forces, and for MWFRS for reactions specified.
3) This truss is not designed to support a ceiling and is not intended for use where aesthetics are a consideration.
4) Provide mechanical connection (by others) of truss to bearing plate capable of withstanding 355 lb uplift at joint 7 and 519 lb uplift at joint 11.

LOAD CASE(S) Standard

SEPTEMBER 08, 2005 TRUSS DESIGN ENGINEER:
THOMAS E. MILLER PE 56877, BYRON K. ANDERSON PE 60987
STRUCTURAL ENGINEERING AND INSPECTIONS, INC. EB 9196
16105 N. FLORIDA AVE. STE B, LUTZ, FL 33549

Job	Truss	Truss Type	Qty	Ply	Dwg.#090805430
L130985	T03G	SPECIAL	1	1	Job Reference (optional)

Builders FirstSource, Lake City, Fl 32055

6.200 s Jul 13 2005 MiTek Industries, Inc. Wed Sep 07 11:42:07 2005 Page 1

-2-0-0	4-9-14	9-2-3	10-3-8	15-9-11	21-9-8
2-0-0	4-9-14	4-4-5	1-1-5	5-6-3	5-11-13

Scale = 1:39.5

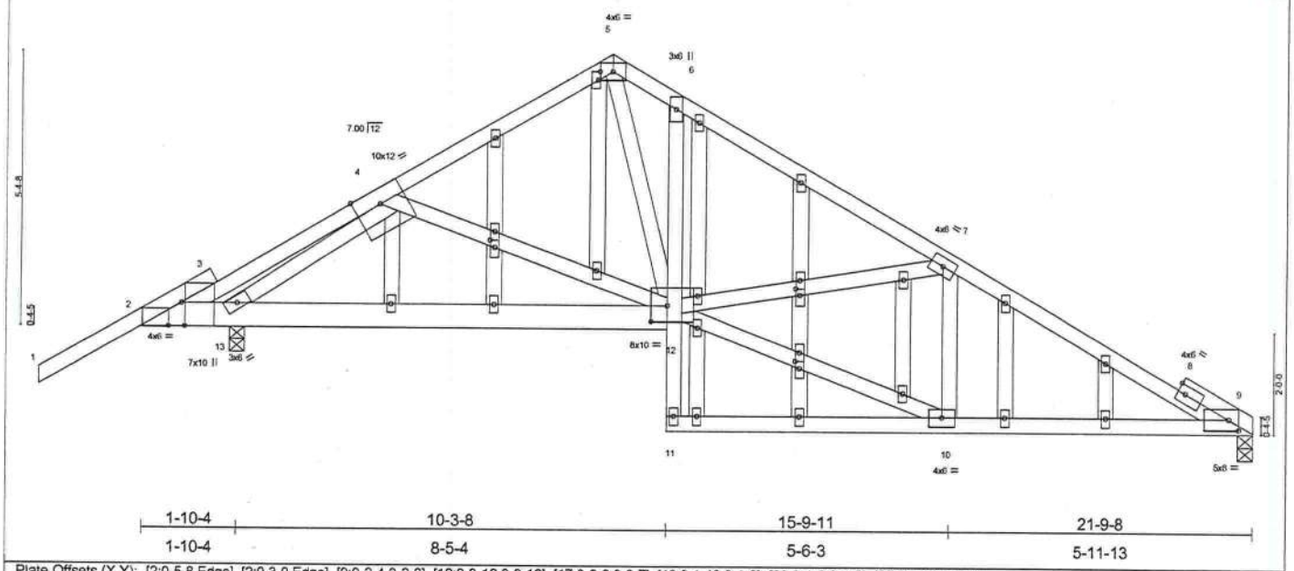

1-10-4	10-3-8	15-9-11	21-9-8
1-10-4	8-5-4	5-6-3	5-11-13

Plate Offsets (X,Y): [2:0-5-8,Edge], [2:0-3-0,Edge], [9:0-2-4,0-2-8], [12:0-3-12,0-3-12], [17:0-2-0,0-0-7], [18:0-1-12,0-1-0], [23:0-1-9,0-1-0], [25:0-1-12,0-1-0]

LOADING (psf)		SPACING	2-0-0	CSI		DEFL	in	(loc)	l/defl	L/d	PLATES	GRIP
TCLL	20.0	Plates Increase	1.25	TC	0.59	Vert(LL)	-0.15	9-10	>999	240	MT20	244/190
TCDL	7.0	Lumber Increase	1.25	BC	0.82	Vert(TL)	-0.23	9-10	>999	180		
BCLL	10.0	Rep Stress Incr	NO	WB	0.66	Horz(TL)	0.05	9	n/a	n/a		
BCDL	5.0	Code FBC2001/TPI2002		(Matrix)							Weight: 172 lb	

LUMBER
TOP CHORD 2 X 4 SYP No.2D
BOT CHORD 2 X 4 SYP No.2D *Except*
B1 2 X 6 SYP No.1D, B2 2 X 4 SYP No.3
WEBS 2 X 4 SYP No.3
OTHERS 2 X 4 SYP No.3

BRACING
TOP CHORD Structural wood sheathing directly applied or 3-6-2 oc purlins.
BOT CHORD Rigid ceiling directly applied or 6-0-0 oc bracing.

REACTIONS (lb/size) 9=1406/0-3-8, 13=1939/0-3-8
Max Horz 13=-257(load case 3)
Max Uplift9=-638(load case 6), 13=-923(load case 5)

FORCES (lb) - Maximum Compression/Maximum Tension
TOP CHORD 1-2=-21/118, 2-3=-689/370, 3-4=-714/563, 4-5=-1599/703, 5-6=-1793/867, 6-7=-2034/846, 7-8=-2284/1013, 8-9=-2360/1017
BOT CHORD 2-13=-409/779, 12-13=-476/1382, 11-12=0/68, 6-12=-251/231, 10-11=-33/53, 9-10=-808/1973
WEBS 4-12=-150/158, 5-12=-599/1254, 10-12=-840/2059, 7-12=-411/396, 7-10=-496/296, 4-13=-2200/1457

NOTES
1) Unbalanced roof live loads have been considered for this design.
2) Wind: ASCE 7-98; 120mph (3-second gust); h=20ft; TCDL=4.2psf; BCDL=3.0psf; Category II; Exp B; enclosed; MWFRS gable end zone and C-C Exterior(2) zone; Lumber DOL=1.60 plate grip DOL=1.60. This truss is designed for C-C for members and forces, and for MWFRS for reactions specified.
3) Truss designed for wind loads in the plane of the truss only. For studs exposed to wind (normal to the face), see MiTek "Standard Gable End Detail"
4) This truss is not designed to support a ceiling and is not intended for use where aesthetics are a consideration.
5) All plates are 2x4 MT20 unless otherwise indicated.
6) Gable studs spaced at 2-0-0 oc.
7) Provide mechanical connection (by others) of truss to bearing plate capable of withstanding 638 lb uplift at joint 9 and 923 lb uplift at joint 13.
8) In the LOAD CASE(S) section, loads applied to the face of the truss are noted as front (F) or back (B).

LOAD CASE(S) Standard
1) Regular: Lumber Increase=1.25, Plate Increase=1.25
Uniform Loads (plf)
Vert: 1-5=-114(F=-60), 5-9=-114(F=-60), 2-12=-30, 9-11=-30

SEPTEMBER 08, 2005 TRUSS DESIGN ENGINEER:
THOMAS E. MILLER PE 56877, BYRON K. ANDERSON PE 60987
STRUCTURAL ENGINEERING AND INSPECTIONS, INC. EB 9196
16105 N. FLORIDA AVE. STE B, LUTZ, FL 33549

Job	Truss	Truss Type	Qty	Ply	Dwg.#09080543 1
L130985	T04	SPECIAL	1	1	Job Reference (optional)

Builders FirstSource, Lake City, Fl 32055 — 6.200 s Jul 13 2005 MiTek Industries, Inc. Wed Sep 07 11:42:08 2005 Page 1

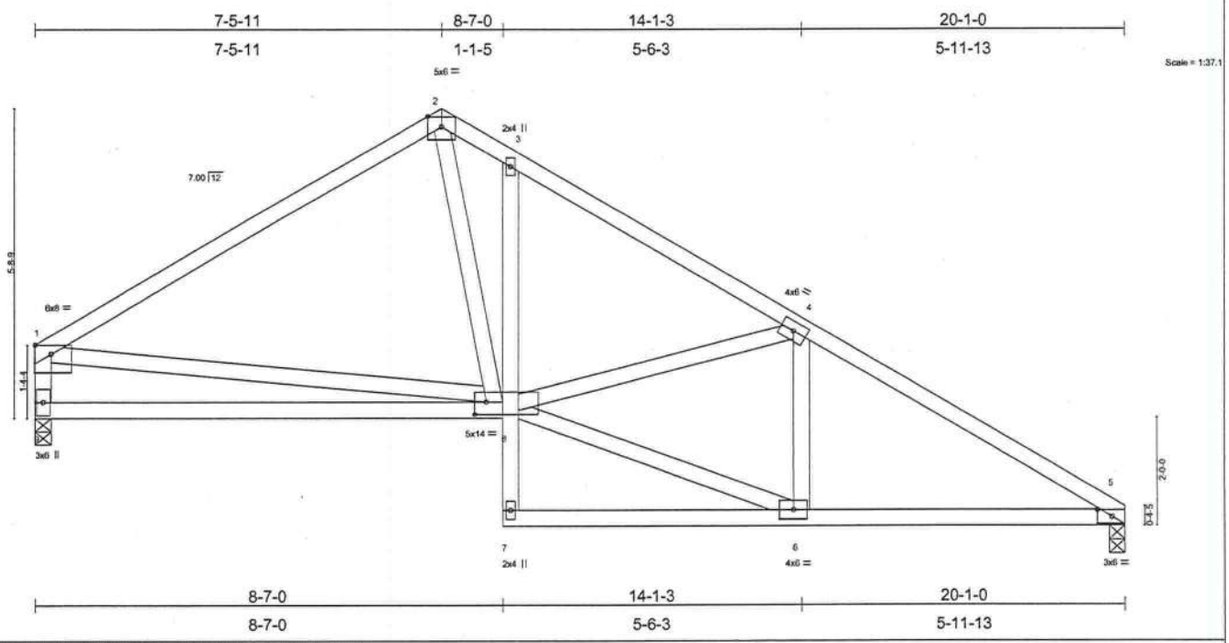

Plate Offsets (X,Y): [1:Edge,0-2-0], [5:0-3-3,0-1-8], [8:0-2-8,0-2-12]

LOADING (psf)		SPACING	2-0-0	CSI		DEFL	in	(loc)	l/defl	L/d	PLATES	GRIP
TCLL	20.0	Plates Increase	1.25	TC	0.40	Vert(LL)	-0.10	8-9	>999	240	MT20	244/190
TCDL	7.0	Lumber Increase	1.25	BC	0.35	Vert(TL)	-0.17	8-9	>999	180		
BCLL	10.0	Rep Stress Incr	YES	WB	0.37	Horz(TL)	0.03	5	n/a	n/a		
BCDL	5.0	Code FBC2001/TPI2002		(Matrix)							Weight: 116 lb	

LUMBER
TOP CHORD 2 X 4 SYP No.2D
BOT CHORD 2 X 4 SYP No.2D *Except*
B2 2 X 4 SYP No.3
WEBS 2 X 4 SYP No.3 *Except*
W1 2 X 4 SYP No.2D

BRACING
TOP CHORD Structural wood sheathing directly applied or 5-6-2 oc purlins, except end verticals.
BOT CHORD Rigid ceiling directly applied or 6-0-0 oc bracing.

REACTIONS (lb/size) 5=831/0-3-8, 9=831/0-3-8
Max Horz 9=-291(load case 3)
Max Uplift5=-356(load case 6), 9=-289(load case 5)

FORCES (lb) - Maximum Compression/Maximum Tension
TOP CHORD 1-2=-982/454, 2-3=-982/505, 3-4=-1120/514, 4-5=-1295/579, 1-9=-693/388
BOT CHORD 8-9=-299/393, 7-8=0/69, 3-8=-208/206, 6-7=-23/0, 5-6=-399/1049
WEBS 2-8=-273/739, 6-8=-419/1139, 4-8=-200/300, 4-6=-191/161, 1-8=-166/373

NOTES
1) Unbalanced roof live loads have been considered for this design.
2) Wind: ASCE 7-98; 120mph (3-second gust); h=20ft; TCDL=4.2psf; BCDL=3.0psf; Category II; Exp B; enclosed; MWFRS gable end zone and C-C Exterior(2) zone; Lumber DOL=1.60 plate grip DOL=1.60. This truss is designed for C-C for members and forces, and for MWFRS for reactions specified.
3) Provide mechanical connection (by others) of truss to bearing plate capable of withstanding 356 lb uplift at joint 5 and 289 lb uplift at joint 9.

LOAD CASE(S) Standard

SEPTEMBER 08, 2005 TRUSS DESIGN ENGINEER:
THOMAS E. MILLER PE 56877, BYRON K. ANDERSON PE 60987
STRUCTURAL ENGINEERING AND INSPECTIONS, INC. EB 9196
16105 N. FLORIDA AVE. STE B, LUTZ, FL 33549

Job	Truss	Truss Type	Qty	Ply	Dwg.#090805432
L130985	T05	SPECIAL	1	2	Job Reference (optional)

Builders FirstSource, Lake City, Fl 32055 — 6.200 s Jul 13 2005 MiTek Industries, Inc. Wed Sep 07 11:42:09 2005 Page 1

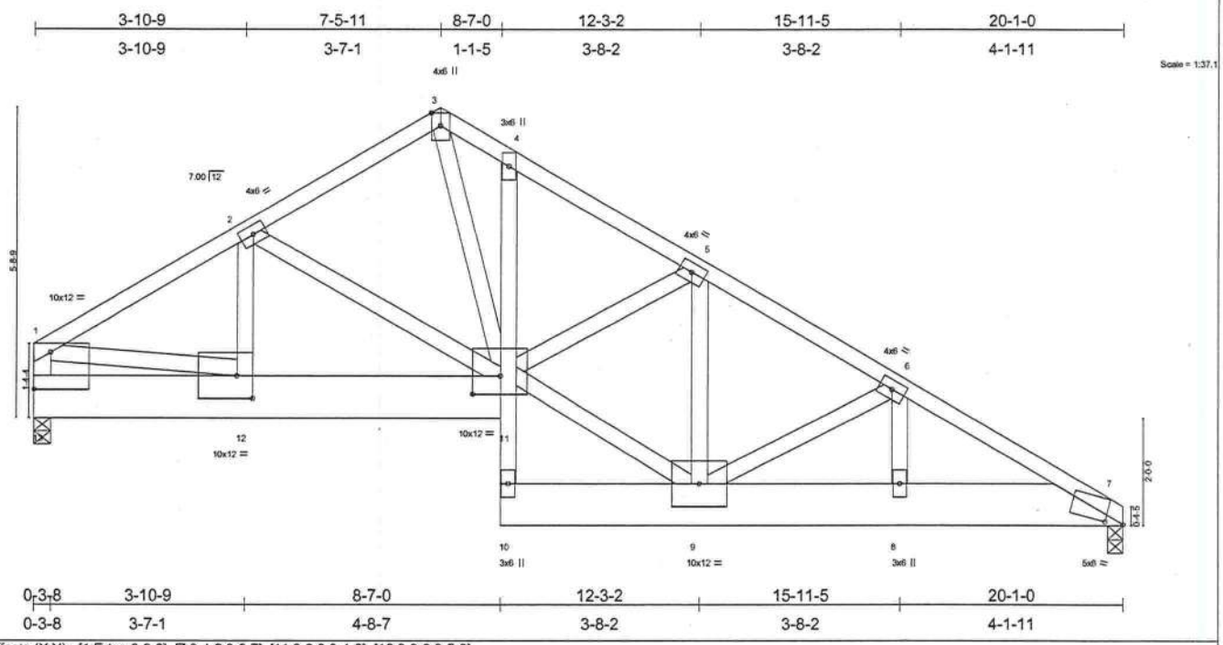

Plate Offsets (X,Y): [1:Edge,0-8-0], [7:0-4-2,0-0-7], [11:0-6-0,0-4-0], [12:0-3-8,0-5-0]

LOADING (psf)		SPACING	2-0-0	CSI		DEFL	in	(loc)	l/defl	L/d	PLATES	GRIP
TCLL	20.0	Plates Increase	1.25	TC	0.38	Vert(LL)	-0.10	10	>999	240	MT20	244/190
TCDL	7.0	Lumber Increase	1.25	BC	0.63	Vert(TL)	-0.17	10	>999	180		
BCLL	10.0	Rep Stress Incr	NO	WB	0.87	Horz(TL)	0.05	7	n/a	n/a		
BCDL	5.0	Code FBC2001/TPI2002		(Matrix)							Weight: 345 lb	

LUMBER
TOP CHORD 2 X 4 SYP No.2D
BOT CHORD 2 X 10 SYP No.2 *Except*
B2 2 X 4 SYP No.3
WEBS 2 X 4 SYP No.3

BRACING
TOP CHORD Structural wood sheathing directly applied or 5-2-6 oc purlins.
BOT CHORD Rigid ceiling directly applied or 10-0-0 oc bracing.

REACTIONS (lb/size) 7=4545/0-3-8, 13=4666/0-3-8
Max Horz 13=1902(load case 4)
Max Uplift7=-2040(load case 4), 13=-1964(load case 4)

FORCES (lb) - Maximum Compression/Maximum Tension
TOP CHORD 1-2=-5343/2131, 2-3=-4347/1753, 3-4=-5511/2073, 4-5=-5738/2909, 5-6=-5768/2694, 6-7=-7079/3226
BOT CHORD 12-13=-1902/0, 11-12=-3677/4574, 10-11=-330/770, 4-11=-673/357, 9-10=0/259, 8-9=-2814/6178, 7-8=-2814/6178
WEBS 2-12=-402/929, 2-11=-947/450, 3-11=-1743/4765, 9-11=-2784/5428, 5-11=-240/0, 5-9=-46/190, 6-9=-1397/582, 6-8=-540/1217, 1-13=-3868/1577, 1-12=-1825/4700

NOTES
1) 2-ply truss to be connected together with 0.131"x3" Nails as follows:
Top chords connected as follows: 2 X 4 - 1 row at 0-9-0 oc.
Bottom chords connected as follows: 2 X 10 - 2 rows at 0-9-0 oc, 2 X 4 - 1 row at 0-9-0 oc.
Webs connected as follows: 2 X 4 - 1 row at 0-9-0 oc.
2) All loads are considered equally applied to all plies, except if noted as front (F) or back (B) face in the LOAD CASE(S) section. Ply to ply connections have been provided to distribute only loads noted as (F) or (B), unless otherwise indicated.
3) Unbalanced roof live loads have been considered for this design.
4) Wind: ASCE 7-98; 120mph (3-second gust); h=20ft; TCDL=4.2psf; BCDL=3.0psf; Category II; Exp B; enclosed; MWFRS gable end zone; Lumber DOL=1.60 plate grip DOL=1.60.
5) Provide mechanical connection (by others) of truss to bearing plate capable of withstanding 2040 lb uplift at joint 7 and 1964 lb uplift at joint 13.
6) Girder carries tie-in span(s): 22-0-0 from 0-0-0 to 20-1-0

LOAD CASE(S) Standard
1) Regular: Lumber Increase=1.25, Plate Increase=1.25
Uniform Loads (plf)
Vert: 1-2=-54, 2-3=-14, 3-7=-14, 11-13=-444(F=-414), 7-10=-444(F=-414)

SEPTEMBER 08, 2005 TRUSS DESIGN ENGINEER:
THOMAS E. MILLER PE 56877, BYRON K. ANDERSON PE 60987
STRUCTURAL ENGINEERING AND INSPECTIONS, INC. EB 9196
16105 N. FLORIDA AVE. STE B, LUTZ, FL 33549

Job	Truss	Truss Type	Qty	Ply	Dwg.#09080543B
L130985	T06	HIP	1	1	Job Reference (optional)

Builders FirstSource, Lake City, Fl 32055

6.200 s Jul 13 2005 MiTek Industries, Inc. Wed Sep 07 11:42:10 2005 Page 1

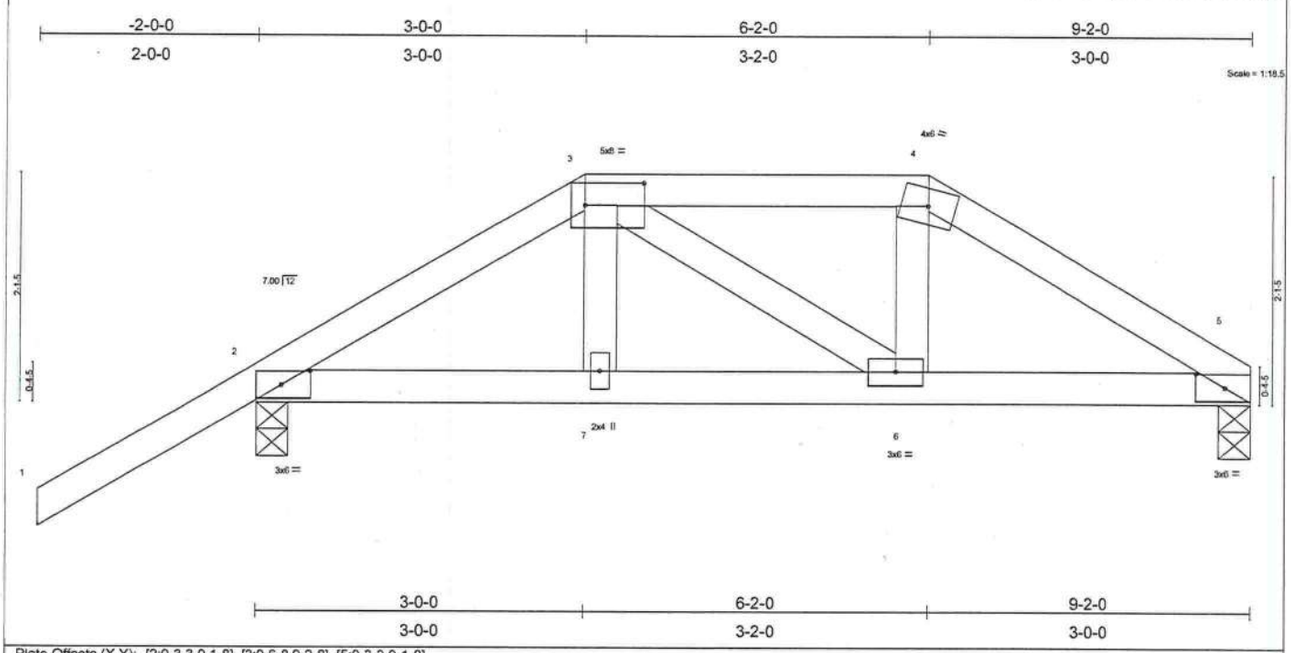

Plate Offsets (X,Y): [2:0-3-3,0-1-8], [3:0-6-8,0-2-8], [5:0-3-3,0-1-8]

LOADING (psf)		SPACING 2-0-0		CSI		DEFL	in	(loc)	l/defl	L/d	PLATES	GRIP
TCLL	20.0	Plates Increase	1.25	TC	0.30	Vert(LL)	0.01	6-7	>999	240	MT20	244/190
TCDL	7.0	Lumber Increase	1.25	BC	0.17	Vert(TL)	-0.02	6-7	>999	180		
BCLL	10.0	Rep Stress Incr	NO	WB	0.05	Horz(TL)	0.01	5	n/a	n/a		
BCDL	5.0	Code FBC2001/TPI2002		(Matrix)							Weight: 42 lb	

LUMBER
TOP CHORD 2 X 4 SYP No.2D
BOT CHORD 2 X 4 SYP No.2D
WEBS 2 X 4 SYP No.3

BRACING
TOP CHORD Structural wood sheathing directly applied or 6-0-0 oc purlins.
BOT CHORD Rigid ceiling directly applied or 10-0-0 oc bracing.

REACTIONS (lb/size) 5=445/0-3-8, 2=588/0-3-8
Max Horz 2=129(load case 4)
Max Uplift5=-196(load case 5), 2=-371(load case 4)

FORCES (lb) - Maximum Compression/Maximum Tension
TOP CHORD 1-2=0/54, 2-3=-645/296, 3-4=-561/303, 4-5=-674/318
BOT CHORD 2-7=-287/505, 6-7=-289/516, 5-6=-244/549
WEBS 3-7=-23/150, 3-6=-90/65, 4-6=-52/166

NOTES
1) Unbalanced roof live loads have been considered for this design.
2) Wind: ASCE 7-98; 120mph (3-second gust); h=20ft; TCDL=4.2psf; BCDL=3.0psf; Category II; Exp B; enclosed; MWFRS gable end zone; Lumber DOL=1.60 plate grip DOL=1.60.
3) Provide adequate drainage to prevent water ponding.
4) Provide mechanical connection (by others) of truss to bearing plate capable of withstanding 196 lb uplift at joint 5 and 371 lb uplift at joint 2.
5) Girder carries hip end with 3-0-0 end setback.
6) Hanger(s) or other connection device(s) shall be provided sufficient to support concentrated load(s) 63 lb down and 54 lb up at 6-2-0, and 63 lb down and 54 lb up at 3-0-0 on bottom chord. The design/selection of such connection device(s) is the responsibility of others.
7) In the LOAD CASE(S) section, loads applied to the face of the truss are noted as front (F) or back (B).

LOAD CASE(S) Standard
1) Regular: Lumber Increase=1.25, Plate Increase=1.25
Uniform Loads (plf)
Vert: 1-3=-54, 3-4=-64(F=-10), 4-5=-54, 2-7=-30, 6-7=-35(F=-5), 5-6=-30
Concentrated Loads (lb)
Vert: 7=-63(F) 6=-63(F)

SEPTEMBER 08, 2005 TRUSS DESIGN ENGINEER:
THOMAS E. MILLER PE 56877, BYRON K. ANDERSON PE 60987
STRUCTURAL ENGINEERING AND INSPECTIONS, INC. EB 9196
16105 N. FLORIDA AVE. STE B, LUTZ, FL 33549

Job	Truss	Truss Type	Qty	Ply	Dwg.#090805434
L130985	T07	COMMON	1	1	Job Reference (optional)

Builders FirstSource, Lake City, Fl 32055

6.200 s Jul 13 2005 MiTek Industries, Inc. Wed Sep 07 11:42:10 2005 Page 1

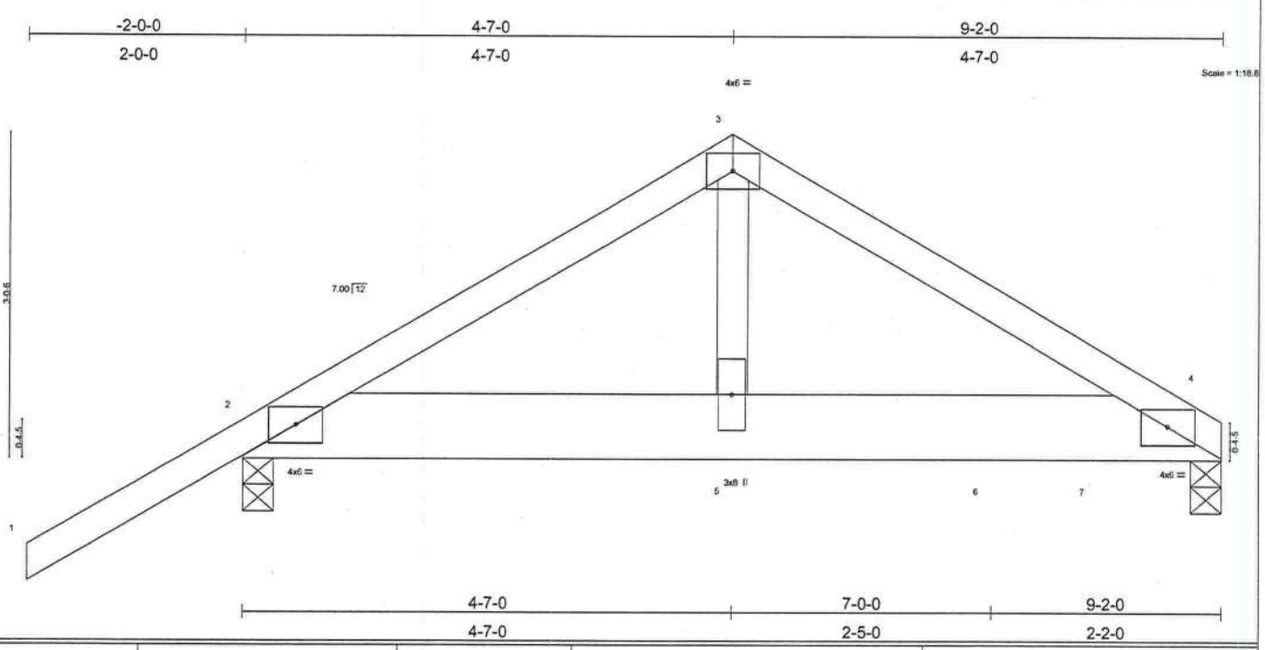

LOADING (psf)		SPACING	2-0-0	CSI		DEFL	in	(loc)	l/defl	L/d	PLATES	GRIP
TCLL	20.0	Plates Increase	1.25	TC	0.32	Vert(LL)	0.03	4-5	>999	240	MT20	244/190
TCDL	7.0	Lumber Increase	1.25	BC	0.39	Vert(TL)	-0.05	4-5	>999	180		
BCLL	10.0	Rep Stress Incr	NO	WB	0.26	Horz(TL)	0.01	4	n/a	n/a		
BCDL	5.0	Code FBC2001/TPI2002		(Matrix)							Weight: 51 lb	

LUMBER
TOP CHORD 2 X 4 SYP No.2D
BOT CHORD 2 X 8 SYP 2400F 2.0E
WEBS 2 X 4 SYP No.3

BRACING
TOP CHORD Structural wood sheathing directly applied or 6-0-0 oc purlins.
BOT CHORD Rigid ceiling directly applied or 10-0-0 oc bracing.

REACTIONS (lb/size) 4=1508/0-3-8, 2=762/0-3-8
Max Horz 2=159(load case 4)
Max Uplift4=-698(load case 5), 2=-441(load case 4)

FORCES (lb) - Maximum Compression/Maximum Tension
TOP CHORD 1-2=0/59, 2-3=-1123/494, 3-4=-1101/462
BOT CHORD 2-5=-338/922, 5-6=-338/922, 6-7=-338/922, 4-7=-338/922
WEBS 3-5=-306/812

NOTES
1) Unbalanced roof live loads have been considered for this design.
2) Wind: ASCE 7-98; 120mph (3-second gust); h=20ft; TCDL=4.2psf; BCDL=3.0psf; Category II; Exp B; enclosed; MWFRS gable end zone; Lumber DOL=1.60 plate grip DOL=1.60.
3) Provide mechanical connection (by others) of truss to bearing plate capable of withstanding 698 lb uplift at joint 4 and 441 lb uplift at joint 2.
4) Girder carries tie-in span(s): 19-2-8 from 8-0-0 to 9-2-0
5) Hanger(s) or other connection device(s) shall be provided sufficient to support concentrated load(s) 1046 lb down and 504 lb up at 7-0-0 on bottom chord. The design/selection of such connection device(s) is the responsibility of others.
6) In the LOAD CASE(S) section, loads applied to the face of the truss are noted as front (F) or back (B).

LOAD CASE(S) Standard
1) Regular: Lumber Increase=1.25, Plate Increase=1.25
Uniform Loads (plf)
Vert: 1-3=-54, 3-4=-54, 2-7=-30, 4-7=-385(F=-355)
Concentrated Loads (lb)
Vert: 6=-1046(F)

SEPTEMBER 08, 2005 TRUSS DESIGN ENGINEER:
THOMAS E. MILLER PE 56877, BYRON K. ANDERSON PE 60987
STRUCTURAL ENGINEERING AND INSPECTIONS, INC. EB 9196
16105 N. FLORIDA AVE. STE B, LUTZ, FL 33549

Job	Truss	Truss Type	Qty	Ply	Dwg.#090805435
L130985	T08	MONO TRUSS	1	1	Job Reference (optional)

Builders FirstSource, Lake City, Fl 32055

6.200 s Jul 13 2005 MiTek Industries, Inc. Wed Sep 07 11:42:11 2005 Page 1

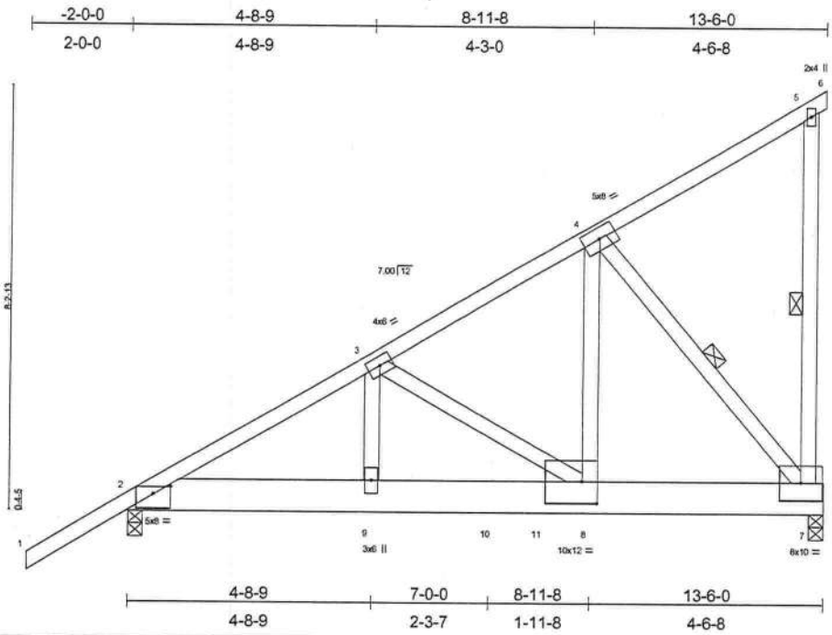

Plate Offsets (X,Y): [2:0-4-0,0-1-11], [8:0-3-8,0-5-0]

LOADING (psf)		SPACING	2-0-0	CSI		DEFL	in	(loc)	l/defl	L/d	PLATES	GRIP
TCLL	20.0	Plates Increase	1.25	TC	0.32	Vert(LL)	-0.06	8-9	>999	240	MT20	244/190
TCDL	7.0	Lumber Increase	1.25	BC	0.30	Vert(TL)	-0.09	8-9	>999	180		
BCLL	10.0	Rep Stress Incr	NO	WB	0.71	Horz(TL)	0.01	7	n/a	n/a		
BCDL	5.0	Code FBC2001/TPI2002		(Matrix)							Weight: 106 lb	

LUMBER
TOP CHORD 2 X 4 SYP No.2D
BOT CHORD 2 X 8 SYP 2400F 2.0E
WEBS 2 X 4 SYP No.3

BRACING
TOP CHORD Structural wood sheathing directly applied or 4-2-10 oc purlins, except end verticals.
BOT CHORD Rigid ceiling directly applied or 10-0-0 oc bracing.
WEBS 1 Row at midpt 5-7, 4-7

REACTIONS (lb/size) 7=2468/0-3-8, 2=1444/0-3-8
Max Horz 2=523(load case 4)
Max Uplift7=-1337(load case 4), 2=-680(load case 4)

FORCES (lb) - Maximum Compression/Maximum Tension
TOP CHORD 1-2=0/59, 2-3=-2322/821, 3-4=-1673/627, 4-5=-80/36, 5-6=-2/0, 5-7=-102/134
BOT CHORD 2-9=-1050/1954, 9-10=-1050/1954, 10-11=-1050/1954, 8-11=-1050/1954, 7-8=-748/1398
WEBS 3-9=-88/435, 3-8=-654/356, 4-8=-1020/2227, 4-7=-2163/1152

NOTES
1) Wind: ASCE 7-98; 120mph (3-second gust); h=20ft; TCDL=4.2psf; BCDL=3.0psf; Category II; Exp B; enclosed; MWFRS gable end zone; Lumber DOL=1.60 plate grip DOL=1.60.
2) Provide mechanical connection (by others) of truss to bearing plate capable of withstanding 1337 lb uplift at joint 7 and 680 lb uplift at joint 2.
3) Girder carries tie-in span(s): 19-2-8 from 8-0-0 to 13-6-0
4) Hanger(s) or other connection device(s) shall be provided sufficient to support concentrated load(s) 845 lb down and 407 lb up at 7-0-0 on bottom chord. The design/selection of such connection device(s) is the responsibility of others.
5) In the LOAD CASE(S) section, loads applied to the face of the truss are noted as front (F) or back (B).

LOAD CASE(S) Standard
1) Regular: Lumber Increase=1.25, Plate Increase=1.25
Uniform Loads (plf)
Vert: 1-5=-54, 5-6=-14, 2-11=-30, 7-11=-385(F=-355)
Concentrated Loads (lb)
Vert: 10=-845(F)

SEPTEMBER 08, 2005 TRUSS DESIGN ENGINEER:
THOMAS E. MILLER PE 56877, BYRON K. ANDERSON PE 60987
STRUCTURAL ENGINEERING AND INSPECTIONS, INC. EB 9196
16105 N. FLORIDA AVE. STE B, LUTZ, FL 33549

Job	Truss	Truss Type	Qty	Ply	Dwg.#090805436
L130985	T09	SCISSOR	9	1	Job Reference (optional)

Builders FirstSource, Lake City, Fl 32055

6.200 s Jul 13 2005 MiTek Industries, Inc. Wed Sep 07 11:42:12 2005 Page 1

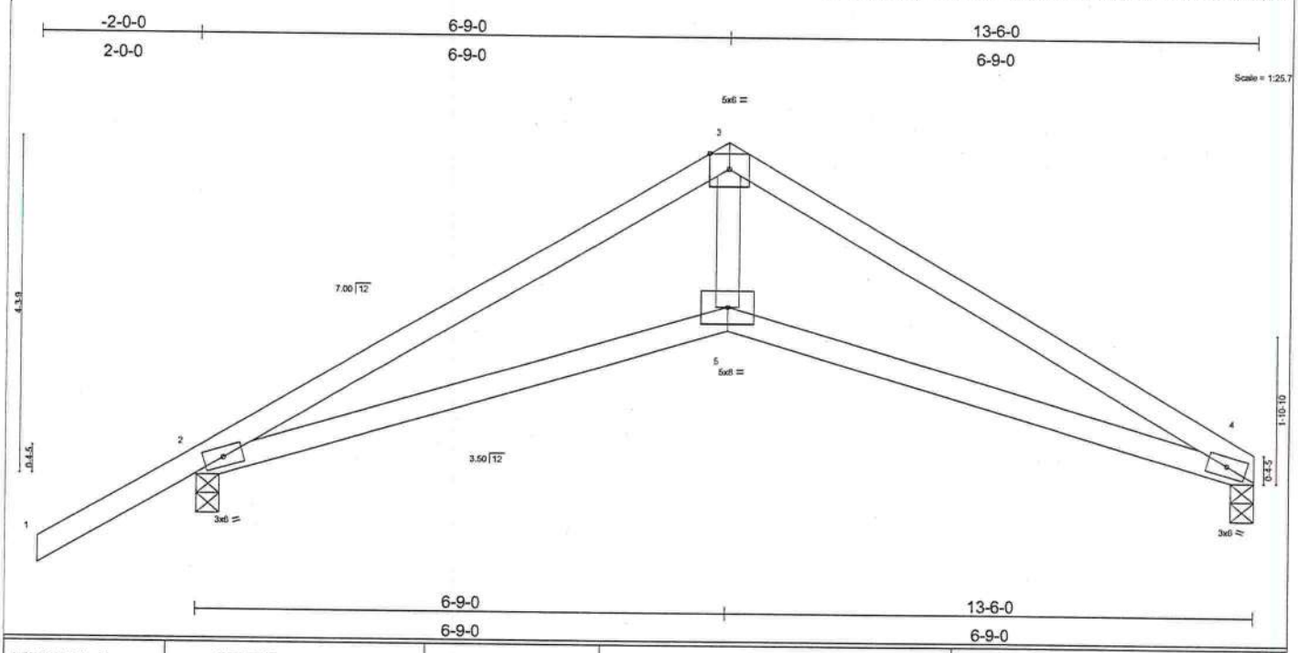

LOADING (psf)		SPACING	2-0-0	CSI		DEFL	in	(loc)	l/defl	L/d	PLATES	GRIP
TCLL	20.0	Plates Increase	1.25	TC	0.31	Vert(LL)	-0.10	4-5	>999	240	MT20	244/190
TCDL	7.0	Lumber Increase	1.25	BC	0.41	Vert(TL)	-0.16	4-5	>983	180		
BCLL	10.0	Rep Stress Incr	YES	WB	0.27	Horz(TL)	0.08	4	n/a	n/a		
BCDL	5.0	Code FBC2001/TPI2002		(Matrix)							Weight: 51 lb	

LUMBER
TOP CHORD 2 X 4 SYP No.2D
BOT CHORD 2 X 4 SYP No.2D
WEBS 2 X 4 SYP No.3

BRACING
TOP CHORD Structural wood sheathing directly applied or 5-5-0 oc purlins.
BOT CHORD Rigid ceiling directly applied or 10-0-0 oc bracing.

REACTIONS (lb/size) 4=545/0-3-8, 2=680/0-3-8
Max Horz 2=196(load case 4)
Max Uplift4=-210(load case 6), 2=-376(load case 5)

FORCES (lb) - Maximum Compression/Maximum Tension
TOP CHORD 1-2=0/52, 2-3=-1282/457, 3-4=-1278/449
BOT CHORD 2-5=-289/1100, 4-5=-293/1103
WEBS 3-5=-141/843

NOTES
1) Unbalanced roof live loads have been considered for this design.
2) Wind: ASCE 7-98; 120mph (3-second gust); h=20ft; TCDL=4.2psf; BCDL=3.0psf; Category II; Exp B; enclosed; MWFRS gable end zone and C-C Exterior(2) zone; Lumber DOL=1.60 plate grip DOL=1.60. This truss is designed for C-C for members and forces, and for MWFRS for reactions specified.
3) Bearing at joint(s) 4, 2 considers parallel to grain value using ANSI/TPI 1 angle to grain formula. Building designer should verify capacity of bearing surface.
4) Provide mechanical connection (by others) of truss to bearing plate capable of withstanding 210 lb uplift at joint 4 and 376 lb uplift at joint 2.

LOAD CASE(S) Standard

SEPTEMBER 08, 2005 TRUSS DESIGN ENGINEER:
THOMAS E. MILLER PE 56877, BYRON K. ANDERSON PE 60987
STRUCTURAL ENGINEERING AND INSPECTIONS, INC. EB 9196
16105 N. FLORIDA AVE. STE B, LUTZ, FL 33549

Job	Truss	Truss Type	Qty	Ply	Dwg.#090805437
L130985	T09G	SCISSOR	1	1	

Builders FirstSource, Lake City, Fl 32055

Job Reference (optional)

6.200 s Jul 13 2005 MiTek Industries, Inc. Fri Sep 09 17:07:33 2005 Page 1

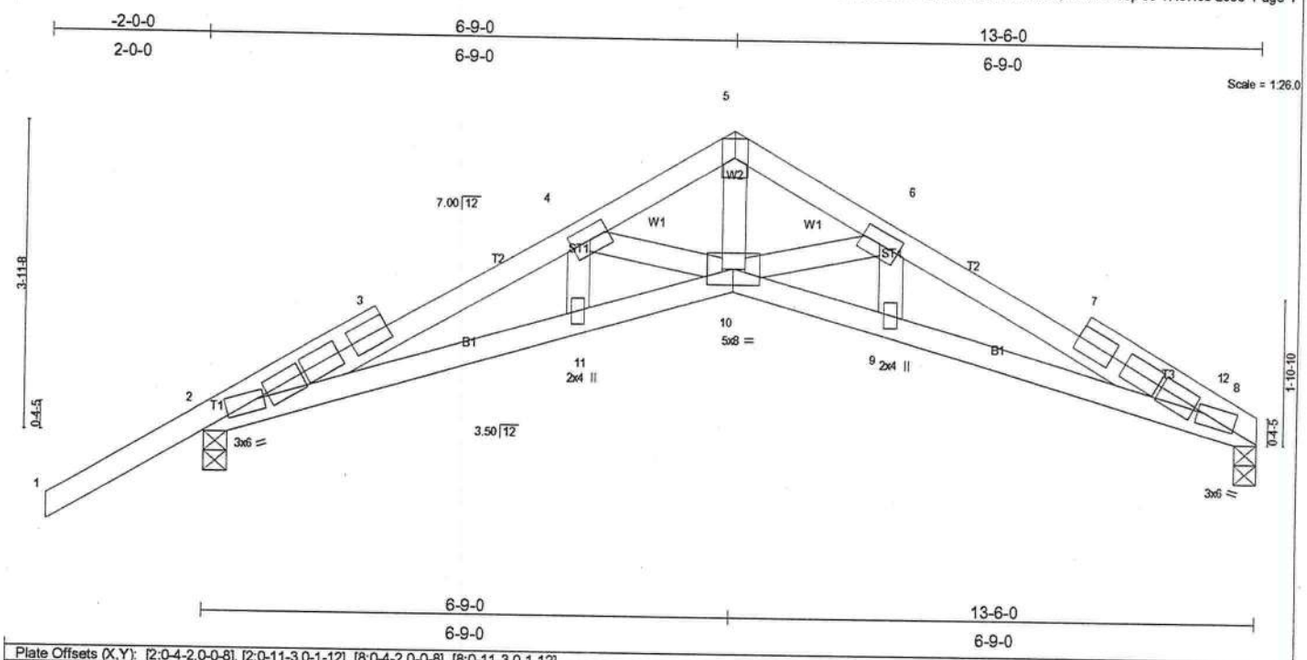

Plate Offsets (X,Y): [2:0-4-2,0-0-8], [2:0-11-3,0-1-12], [8:0-4-2,0-0-8], [8:0-11-3,0-1-12]

LOADING (psf)		SPACING	2-0-0	CSI		DEFL	in	(loc)	l/defl	L/d	PLATES	GRIP
TCLL	20.0	Plates Increase	1.25	TC	0.66	Vert(LL)	-0.16	10	>999	240	MT20	244/190
TCDL	7.0	Lumber Increase	1.25	BC	0.56	Vert(TL)	-0.25	10	>626	180		
BCLL	10.0	Rep Stress Incr	NO	WB	0.61	Horz(TL)	0.20	8	n/a	n/a		
BCDL	5.0	Code FBC2001/TPI2002		(Matrix)							Weight: 64 lb	

LUMBER
TOP CHORD 2 X 4 SYP No.2D
BOT CHORD 2 X 4 SYP No.1D
WEBS 2 X 4 SYP No.3
OTHERS 2 X 4 SYP No.3

BRACING
TOP CHORD Structural wood sheathing directly applied or 3-0-12 oc purlins.
BOT CHORD Rigid ceiling directly applied or 6-5-8 oc bracing.

REACTIONS (lb/size) 2=1215/0-3-8, 8=900/0-3-8
Max Horz 2=182(load case 4)
Max Uplift2=-636(load case 5), 8=-383(load case 6)

FORCES (lb) - Maximum Compression/Maximum Tension
TOP CHORD 1-2=-20/110, 2-3=-2825/1105, 3-4=-2712/1086, 4-5=-2056/856, 5-6=-2066/867, 6-7=-2815/1200, 7-12=-2816/1200, 8-12=-2917/1215
BOT CHORD 2-11=-935/2476, 10-11=-940/2472, 9-10=-1039/2588, 8-9=-1041/2599
WEBS 5-10=-790/1909, 4-11=0/90, 6-9=0/113, 4-10=-696/349, 6-10=-814/480

JOINT STRESS INDEX
2 = 0.74, 2 = 0.98, 3 = 0.00, 3 = 0.57, 3 = 0.91, 4 = 0.18, 5 = 0.45, 6 = 0.18, 7 = 0.00, 7 = 0.91, 7 = 0.57, 8 = 0.59, 8 = 0.98, 9 = 0.08, 10 = 0.86 and 11 = 0.08

NOTES
1) Unbalanced roof live loads have been considered for this design.
2) Wind: ASCE 7-98; 120mph (3-second gust); h=20ft; TCDL=4.2psf; BCDL=3.0psf; Category II; Exp B; enclosed; MWFRS gable end zone and C-C Exterior(2) zone; Lumber DOL=1.60 plate grip DOL=1.60. This truss is designed for C-C for members and forces, and for MWFRS for reactions specified.
3) Truss designed for wind loads in the plane of the truss only. For studs exposed to wind (normal to the face), see MiTek "Standard Gable End Detail"
4) All plates are 4x6 MT20 unless otherwise indicated.
5) Gable studs spaced at 2-0-0 oc.
6) Bearing at joint(s) 2, 8 considers parallel to grain value using ANSI/TPI 1 angle to grain formula. Building designer should verify capacity of bearing surface.
7) Provide mechanical connection (by others) of truss to bearing plate capable of withstanding 636 lb uplift at joint 2 and 383 lb uplift at joint 8.
8) In the LOAD CASE(S) section, loads applied to the face of the truss are noted as front (F) or back (B).

LOAD CASE(S) Standard
1) Regular: Lumber Increase=1.25, Plate Increase=1.25
Uniform Loads (plf)
Vert: 1-5=-114(F=-60), 5-12=-114(F=-60), 8-12=-54, 2-10=-30, 8-10=-30

SEPTEMBER 08, 2005 TRUSS DESIGN ENGINEER:
THOMAS E. MILLER PE 56877, BYRON K. ANDERSON PE 60987
STRUCTURAL ENGINEERING AND INSPECTIONS, INC. EB 9196
16105 N. FLORIDA AVE. STE B, LUTZ, FL 33549

Job	Truss	Truss Type	Qty	Ply	Dwg.#090805438
L130985	T10	SPECIAL	1	1	Job Reference (optional)

Builders FirstSource, Lake City, Fl 32055

6.200 s Jul 13 2005 MiTek Industries, Inc. Wed Sep 07 11:42:13 2005 Page 1

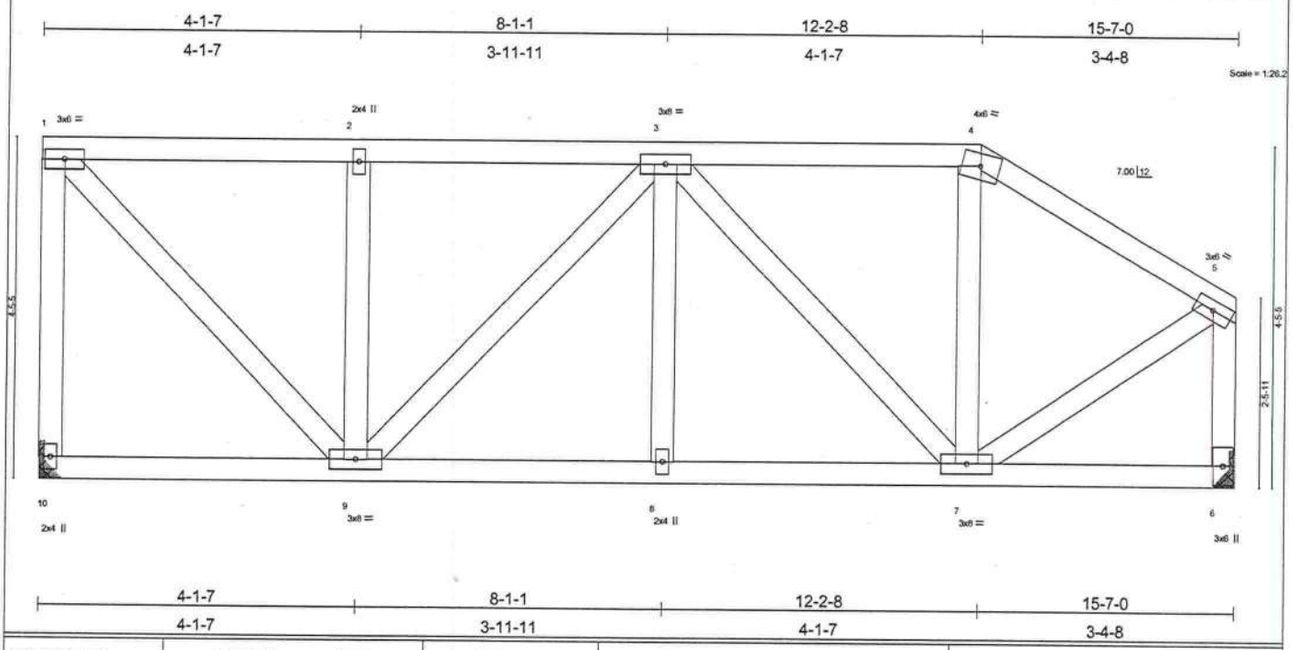

LOADING (psf)		SPACING	2-0-0	CSI		DEFL	in	(loc)	l/defl	L/d	PLATES	GRIP
TCLL	20.0	Plates Increase	1.25	TC	0.36	Vert(LL)	0.03	8-9	>999	240	MT20	244/190
TCDL	7.0	Lumber Increase	1.25	BC	0.31	Vert(TL)	-0.04	8-9	>999	180		
BCLL	10.0	Rep Stress Incr	NO	WB	0.30	Horz(TL)	0.01	6	n/a	n/a		
BCDL	5.0	Code FBC2001/TPI2002		(Matrix)							Weight: 103 lb	

LUMBER
TOP CHORD 2 X 4 SYP No.2D
BOT CHORD 2 X 4 SYP No.2D
WEBS 2 X 4 SYP No.3 *Except*
W4 2 X 4 SYP No.2D

BRACING
TOP CHORD Structural wood sheathing directly applied or 6-0-0 oc purlins, except end verticals.
BOT CHORD Rigid ceiling directly applied or 9-2-1 oc bracing.

REACTIONS (lb/size) 10=845/Mechanical, 6=1046/Mechanical
Max Horz 10=-105(load case 5)
Max Uplift10=-523(load case 3), 6=-499(load case 2)

FORCES (lb) - Maximum Compression/Maximum Tension
TOP CHORD 1-10=-769/529, 1-2=-638/388, 2-3=-638/388, 3-4=-636/364, 4-5=-771/386, 5-6=-825/400
BOT CHORD 9-10=-25/95, 8-9=-502/836, 7-8=-502/836, 6-7=-43/65
WEBS 1-9=-537/886, 2-9=-279/317, 3-9=-287/170, 3-8=0/135, 3-7=-291/249, 4-7=-47/136, 5-7=-382/679

NOTES
1) Wind: ASCE 7-98; 120mph (3-second gust); h=20ft; TCDL=4.2psf; BCDL=3.0psf; Category II; Exp B; enclosed; MWFRS gable end zone; Lumber DOL=1.60 plate grip DOL=1.60.
2) Provide adequate drainage to prevent water ponding.
3) Refer to girder(s) for truss to truss connections.
4) Provide mechanical connection (by others) of truss to bearing plate capable of withstanding 523 lb uplift at joint 10 and 499 lb uplift at joint 6.
5) Girder carries tie-in span(s): 7-0-0 from 12-2-8 to 15-7-0
6) Girder carries hip end with 3-4-8 right side setback, 0-0-0 left side setback, and 3-4-8 end setback.
7) In the LOAD CASE(S) section, loads applied to the face of the truss are noted as front (F) or back (B).

LOAD CASE(S) Standard
1) Regular: Lumber Increase=1.25, Plate Increase=1.25
Uniform Loads (plf)
Vert: 1-4=-69(F=-15), 4-5=-54, 7-10=-38(F=-8), 6-7=-129(F=-99)

SEPTEMBER 08, 2005 TRUSS DESIGN ENGINEER:
THOMAS E. MILLER PE 56877, BYRON K. ANDERSON PE 60987
STRUCTURAL ENGINEERING AND INSPECTIONS, INC. EB 9196
16105 N. FLORIDA AVE. STE B, LUTZ, FL 33549

Job	Truss	Truss Type	Qty	Ply	Dwg.#090805439
L130985	T11	SPECIAL	1	1	Job Reference (optional)

Builders FirstSource, Lake City, Fl 32055

6.200 s Jul 13 2005 MiTek Industries, Inc. Wed Sep 07 11:42:13 2005 Page 1

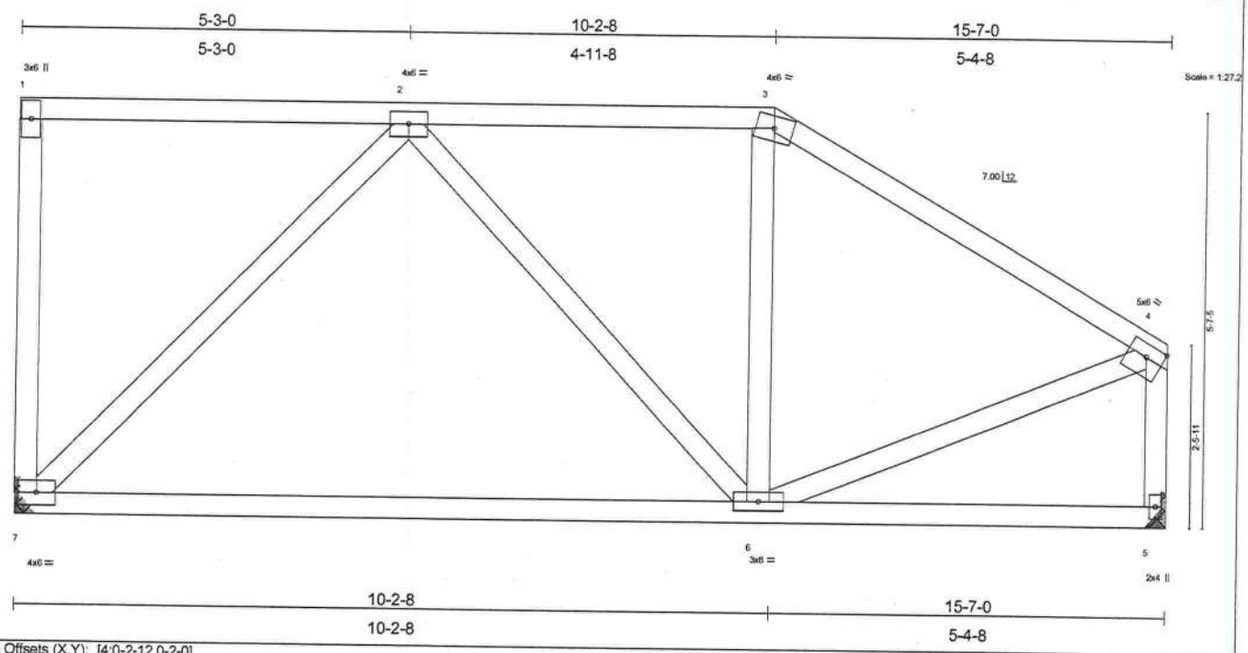

Plate Offsets (X,Y): [4:0-2-12,0-2-0]

LOADING (psf)		SPACING	2-0-0	CSI		DEFL	in	(loc)	l/defl	L/d	PLATES	GRIP
TCLL	20.0	Plates Increase	1.25	TC	0.68	Vert(LL)	-0.18	6-7	>999	240	MT20	244/190
TCDL	7.0	Lumber Increase	1.25	BC	0.36	Vert(TL)	-0.31	6-7	>587	180		
BCLL	10.0	Rep Stress Incr	YES	WB	0.48	Horz(TL)	0.01	5	n/a	n/a		
BCDL	5.0	Code FBC2001/TPI2002		(Matrix)							Weight: 95 lb	

LUMBER
TOP CHORD 2 X 4 SYP No.2D
BOT CHORD 2 X 4 SYP No.2D
WEBS 2 X 4 SYP No.3 *Except*
W5 2 X 4 SYP No.2D

BRACING
TOP CHORD Structural wood sheathing directly applied or 6-0-0 oc purlins, except end verticals.
BOT CHORD Rigid ceiling directly applied or 10-0-0 oc bracing.

REACTIONS (lb/size) 7=642/Mechanical, 5=642/Mechanical
Max Horz 7=-168(load case 6)
Max Uplift7=-318(load case 4), 5=-189(load case 6)

FORCES (lb) - Maximum Compression/Maximum Tension
TOP CHORD 1-7=-137/120, 1-2=-54/5, 2-3=-481/298, 3-4=-626/265, 4-5=-597/275
BOT CHORD 6-7=-233/399, 5-6=-65/52
WEBS 2-7=-499/397, 2-6=-81/144, 3-6=-1/118, 4-6=-171/464

NOTES
1) Wind: ASCE 7-98; 120mph (3-second gust); h=20ft; TCDL=4.2psf; BCDL=3.0psf; Category II; Exp B; enclosed; MWFRS gable end zone and C-C Exterior(2) zone; Lumber DOL=1.60 plate grip DOL=1.60. This truss is designed for C-C for members and forces, and for MWFRS for reactions specified.
2) Provide adequate drainage to prevent water ponding.
3) Refer to girder(s) for truss to truss connections.
4) Provide mechanical connection (by others) of truss to bearing plate capable of withstanding 318 lb uplift at joint 7 and 189 lb uplift at joint 5.

LOAD CASE(S) Standard

SEPTEMBER 08, 2005 TRUSS DESIGN ENGINEER:
THOMAS E. MILLER PE 56877, BYRON K. ANDERSON PE 60987
STRUCTURAL ENGINEERING AND INSPECTIONS, INC. EB 9196
16105 N. FLORIDA AVE. STE B, LUTZ, FL 33549

Job	Truss	Truss Type	Qty	Ply	Dwg.#090805440
L130985	T12	SPECIAL	1	1	Job Reference (optional)

Builders FirstSource, Lake City, Fl 32055

6.200 s Jul 13 2005 MiTek Industries, Inc. Wed Sep 07 11:42:14 2005 Page 1

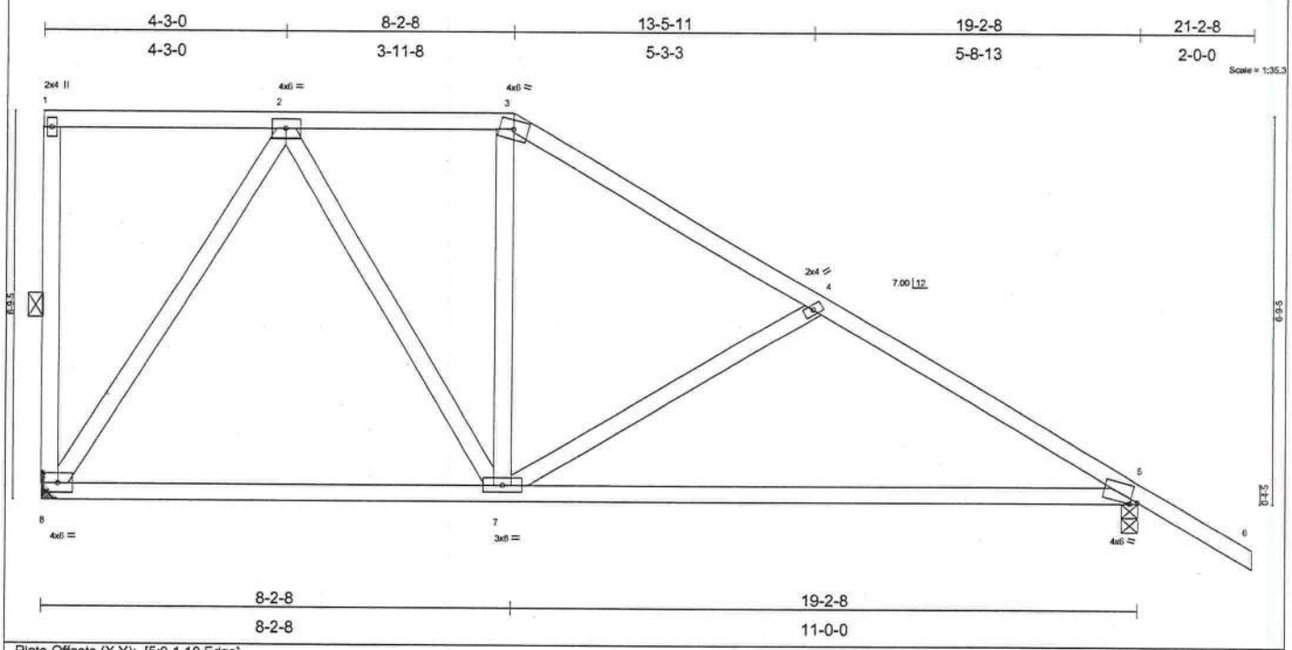

Plate Offsets (X,Y): [5:0-1-10,Edge]

LOADING (psf)		SPACING	2-0-0	CSI		DEFL	in	(loc)	l/defl	L/d	PLATES	GRIP
TCLL	20.0	Plates Increase	1.25	TC	0.30	Vert(LL)	-0.27	5-7	>832	240	MT20	244/190
TCDL	7.0	Lumber Increase	1.25	BC	0.54	Vert(TL)	-0.47	5-7	>480	180		
BCLL	10.0	Rep Stress Incr	YES	WB	0.73	Horz(TL)	0.02	5	n/a	n/a		
BCDL	5.0	Code FBC2001/TPI2002		(Matrix)							Weight: 113 lb	

LUMBER
TOP CHORD 2 X 4 SYP No.2D
BOT CHORD 2 X 4 SYP No.2D
WEBS 2 X 4 SYP No.3

BRACING
TOP CHORD Structural wood sheathing directly applied or 5-8-3 oc purlins, except end verticals.
BOT CHORD Rigid ceiling directly applied or 10-0-0 oc bracing.
WEBS 1 Row at midpt 1-8

REACTIONS (lb/size) 8=788/Mechanical, 5=917/0-3-8
Max Horz 8=-442(load case 6)
Max Uplift8=-341(load case 3), 5=-439(load case 6)

FORCES (lb) - Maximum Compression/Maximum Tension
TOP CHORD 1-8=-105/96, 1-2=-17/4, 2-3=-613/326, 3-4=-789/298, 4-5=-1086/422, 5-6=0/54
BOT CHORD 7-8=-117/392, 5-7=-168/898
WEBS 2-8=-701/418, 2-7=-214/435, 3-7=0/116, 4-7=-335/339

NOTES
1) Wind: ASCE 7-98; 120mph (3-second gust); h=20ft; TCDL=4.2psf; BCDL=3.0psf; Category II; Exp B; enclosed; MWFRS gable end zone and C-C Exterior(2) zone; Lumber DOL=1.60 plate grip DOL=1.60. This truss is designed for C-C for members and forces, and for MWFRS for reactions specified.
2) Provide adequate drainage to prevent water ponding.
3) Refer to girder(s) for truss to truss connections.
4) Provide mechanical connection (by others) of truss to bearing plate capable of withstanding 341 lb uplift at joint 8 and 439 lb uplift at joint 5.

LOAD CASE(S) Standard

SEPTEMBER 08, 2005 TRUSS DESIGN ENGINEER:
THOMAS E. MILLER PE 56877, BYRON K. ANDERSON PE 60987
STRUCTURAL ENGINEERING AND INSPECTIONS, INC. EB 9196
16105 N. FLORIDA AVE. STE B, LUTZ, FL 33549

Job	Truss	Truss Type	Qty	Ply	Dwg.#09080544 1
L130985	T13	SPECIAL	1	1	Job Reference (optional)

Builders FirstSource, Lake City, Fl 32055 — 6.200 s Jul 13 2005 MiTek Industries, Inc. Wed Sep 07 11:42:15 2005 Page 1

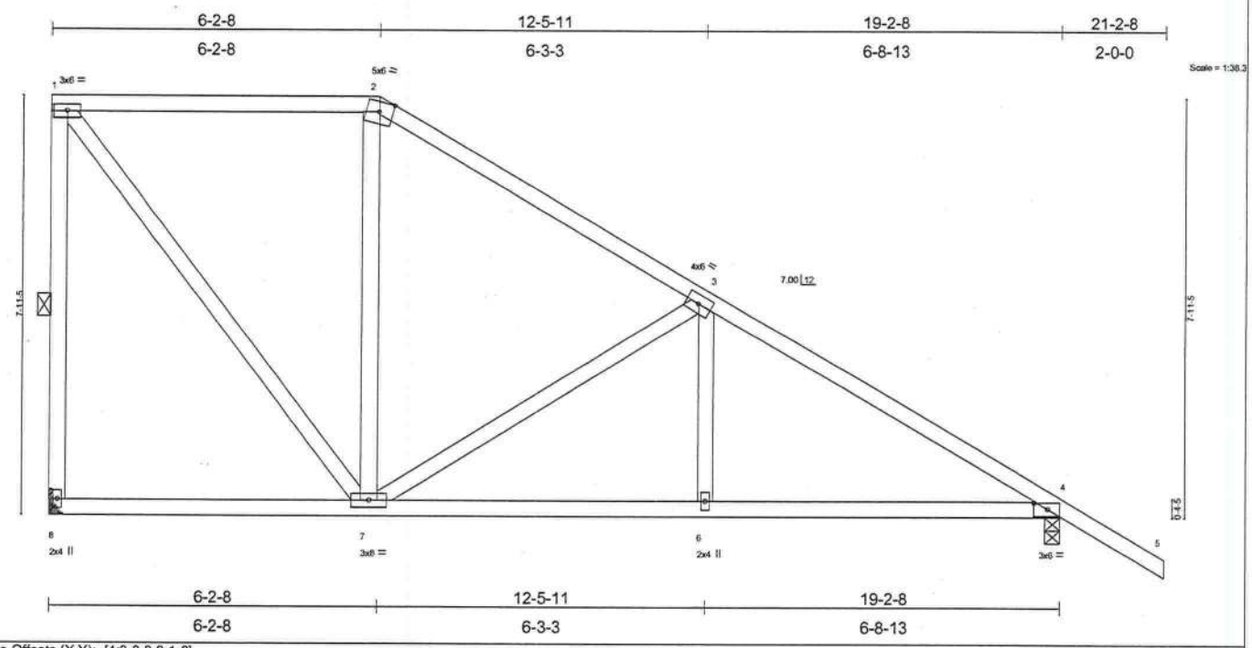

Plate Offsets (X,Y): [4:0-3-3,0-1-8]

LOADING (psf)		SPACING	2-0-0	CSI		DEFL	in	(loc)	l/defl	L/d	PLATES	GRIP
TCLL	20.0	Plates Increase	1.25	TC	0.34	Vert(LL)	-0.07	4-6	>999	240	MT20	244/190
TCDL	7.0	Lumber Increase	1.25	BC	0.29	Vert(TL)	-0.11	4-6	>999	180		
BCLL	10.0	Rep Stress Incr	YES	WB	0.68	Horz(TL)	0.02	4	n/a	n/a		
BCDL	5.0	Code FBC2001/TPI2002		(Matrix)							Weight: 116 lb	

LUMBER
TOP CHORD 2 X 4 SYP No.2D
BOT CHORD 2 X 4 SYP No.2D
WEBS 2 X 4 SYP No.3

BRACING
TOP CHORD Structural wood sheathing directly applied or 5-9-1 oc purlins, except end verticals.
BOT CHORD Rigid ceiling directly applied or 10-0-0 oc bracing.
WEBS 1 Row at midpt 1-8

REACTIONS (lb/size) 8=788/Mechanical, 4=917/0-3-8
Max Horz 8=-506(load case 6)
Max Uplift8=-336(load case 6), 4=-433(load case 6)

FORCES (lb) - Maximum Compression/Maximum Tension
TOP CHORD 1-8=-704/455, 1-2=-451/267, 2-3=-610/218, 3-4=-1158/330, 4-5=0/54
BOT CHORD 7-8=-26/504, 6-7=-78/919, 4-6=-78/919
WEBS 1-7=-421/705, 2-7=-83/198, 3-7=-549/386, 3-6=0/216

NOTES
1) Wind: ASCE 7-98; 120mph (3-second gust); h=20ft; TCDL=4.2psf; BCDL=3.0psf; Category II; Exp B; enclosed; MWFRS gable end zone and C-C Exterior(2) zone; Lumber DOL=1.60 plate grip DOL=1.60. This truss is designed for C-C for members and forces, and for MWFRS for reactions specified.
2) Provide adequate drainage to prevent water ponding.
3) Refer to girder(s) for truss to truss connections.
4) Provide mechanical connection (by others) of truss to bearing plate capable of withstanding 336 lb uplift at joint 8 and 433 lb uplift at joint 4.

LOAD CASE(S) Standard

SEPTEMBER 08, 2005 TRUSS DESIGN ENGINEER:
THOMAS E. MILLER PE 56877, BYRON K. ANDERSON PE 60987
STRUCTURAL ENGINEERING AND INSPECTIONS, INC. EB 9196
16105 N. FLORIDA AVE. STE B, LUTZ, FL 33549

Job	Truss	Truss Type	Qty	Ply	Dwg.#090805442
L130985	T14	SPECIAL	1	1	Job Reference (optional)

Builders FirstSource, Lake City, Fl 32055 — 6.200 s Jul 13 2005 MiTek Industries, Inc. Wed Sep 07 11:42:15 2005 Page 1

-2-0-0	6-0-3	11-6-14	17-11-7	24-4-0	28-4-0	31-4-0	39-4-0	41-4-0
2-0-0	6-0-3	5-6-10	6-4-9	6-4-9	4-0-0	3-0-0	8-0-0	2-0-0

Scale = 1:72.6

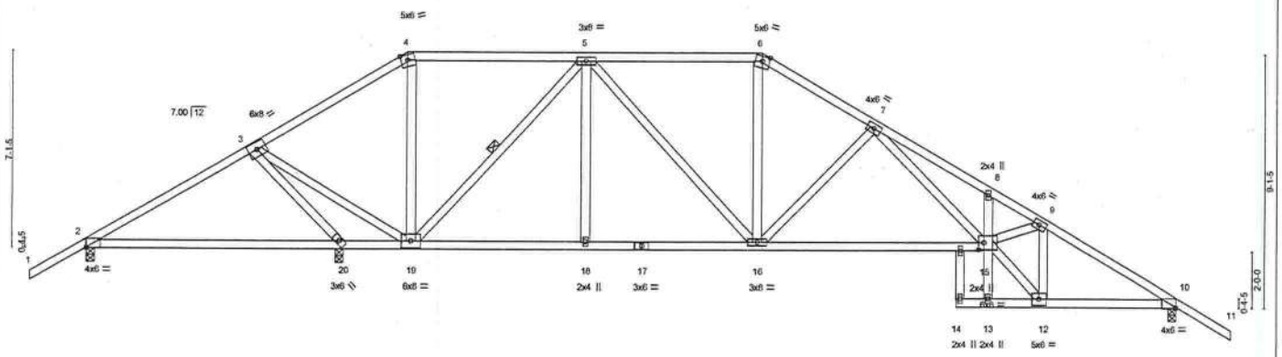

9-1-12	11-6-14	17-11-7	24-4-0	28-4-0	31-4-0	39-4-0
9-1-12	2-5-2	6-4-9	6-4-9	4-0-0	3-0-0	8-0-0

Plate Offsets (X,Y): [2:0-0-0,0-0-4], [10:Edge,0-0-4], [15:0-2-4,0-3-0]

LOADING (psf)		SPACING	2-0-0	CSI		DEFL	in	(loc)	l/defl	L/d	PLATES	GRIP
TCLL	20.0	Plates Increase	1.25	TC	0.29	Vert(LL)	0.27	2-20	>399	240	MT20	244/190
TCDL	7.0	Lumber Increase	1.25	BC	0.58	Vert(TL)	0.23	2-20	>486	180		
BCLL	10.0	Rep Stress Incr	YES	WB	0.97	Horz(TL)	0.13	10	n/a	n/a		
BCDL	5.0	Code FBC2001/TPI2002		(Matrix)							Weight: 240 lb	

LUMBER
TOP CHORD 2 X 4 SYP No.2D
BOT CHORD 2 X 4 SYP No.2D *Except*
B3 2 X 4 SYP No.3
WEBS 2 X 4 SYP No.3

BRACING
TOP CHORD Structural wood sheathing directly applied or 3-4-5 oc purlins.
BOT CHORD Rigid ceiling directly applied or 4-3-4 oc bracing.
WEBS 1 Row at midpt 5-19

REACTIONS (lb/size) 2=259/0-3-8, 10=1321/0-3-8, 20=1962/0-3-8
Max Horz 2=-362(load case 3)
Max Uplift2=-404(load case 5), 10=-642(load case 6), 20=-728(load case 4)
Max Grav 2=360(load case 7), 10=1321(load case 1), 20=1962(load case 1)

FORCES (lb) - Maximum Compression/Maximum Tension
TOP CHORD 1-2=0/54, 2-3=-43/418, 3-4=-308/219, 4-5=-192/256, 5-6=-1257/732, 6-7=-1495/777, 7-8=-3376/1475, 8-9=-3366/1377, 9-10=-1983/847, 10-11=0/54
BOT CHORD 2-20=-329/395, 19-20=-1772/901, 18-19=-418/939, 17-18=-418/939, 16-17=-418/939, 15-16=-477/1754, 13-14=0/0, 12-13=-11/34, 10-12=-539/1633
WEBS 3-20=-2307/1001, 3-19=-718/2210, 4-19=-237/162, 5-19=-1241/598, 5-18=0/189, 5-16=-200/478, 6-16=-150/448, 9-12=-1390/543, 13-15=-3/65, 8-15=-114/165, 12-15=-723/2186, 9-15=-403/1334, 7-16=-744/444, 7-15=-652/1699

NOTES
1) Unbalanced roof live loads have been considered for this design.
2) Wind: ASCE 7-98; 120mph (3-second gust); h=20ft; TCDL=4.2psf; BCDL=3.0psf; Category II; Exp B; enclosed; MWFRS gable end zone and C-C Exterior(2) zone; porch left exposed; Lumber DOL=1.60 plate grip DOL=1.60. This truss is designed for C-C for members and forces, and for MWFRS for reactions specified.
3) Provide adequate drainage to prevent water ponding.
4) Provide mechanical connection (by others) of truss to bearing plate capable of withstanding 404 lb uplift at joint 2, 642 lb uplift at joint 10 and 728 lb uplift at joint 20.

LOAD CASE(S) Standard

SEPTEMBER 08, 2005 TRUSS DESIGN ENGINEER:
THOMAS E. MILLER PE 56877, BYRON K. ANDERSON PE 60987
STRUCTURAL ENGINEERING AND INSPECTIONS, INC. EB 9196
16105 N. FLORIDA AVE. STE B, LUTZ, FL 33549

Job	Truss	Truss Type	Qty	Ply	Dwg.#090805443
L130985	T15	SPECIAL	3	1	Job Reference (optional)

Builders FirstSource, Lake City, Fl 32055 — 6.200 s Jul 13 2005 MiTek Industries, Inc. Wed Sep 07 11:42:16 2005 Page 1

-2-0-0	4-9-11	9-1-12	12-4-0	13-6-14	17-11-7	22-4-0	24-4-0	31-4-0	39-4-0	41-4-0
2-0-0	4-9-11	4-4-1	3-2-4	1-2-14	4-4-9	4-4-9	2-0-0	7-0-0	8-0-0	2-0-0

Scale = 1:73.4

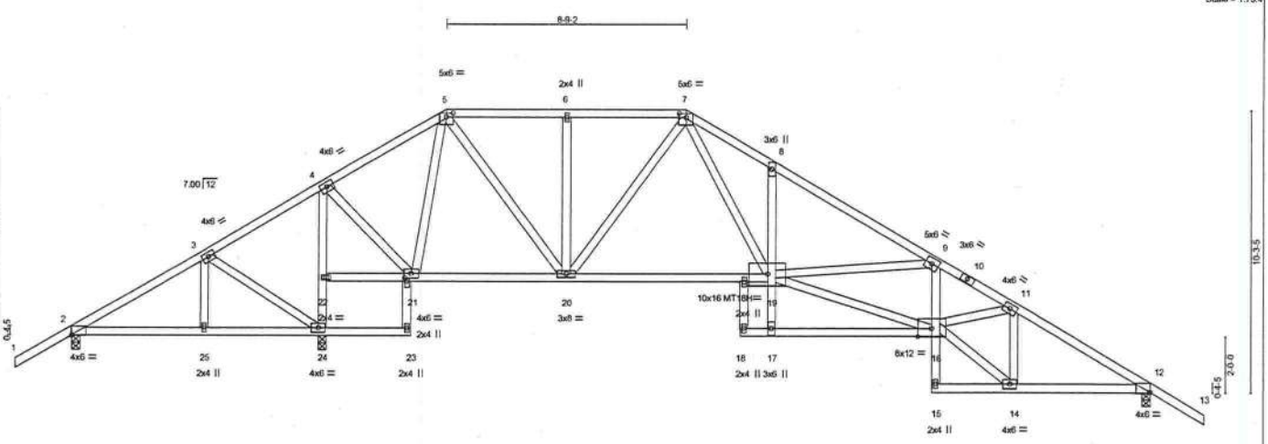

4-9-11	9-1-12	12-4-0	17-11-7	24-4-0	25-4-0	31-4-0	39-4-0
4-9-11	4-4-1	3-2-4	5-7-7	6-4-9	1-0-0	6-0-0	8-0-0

Plate Offsets (X,Y): [2:0-0-0,0-0-4], [5:0-3-0,0-1-12], [7:0-3-0,0-1-12], [12:Edge,0-0-4], [21:0-1-8,0-1-0]

LOADING (psf)		SPACING	2-0-0	CSI		DEFL	in	(loc)	l/defl	L/d	PLATES	GRIP
TCLL	20.0	Plates Increase	1.25	TC	0.29	Vert(LL)	-0.24	19-20	>999	240	MT20	244/190
TCDL	7.0	Lumber Increase	1.25	BC	0.41	Vert(TL)	-0.39	19-20	>923	180	MT18H	244/190
BCLL	10.0	Rep Stress Incr	YES	WB	0.92	Horz(TL)	0.11	12	n/a	n/a		
BCDL	5.0	Code FBC2001/TPI2002		(Matrix)							Weight: 261 lb	

LUMBER
TOP CHORD 2 X 4 SYP No.2D
BOT CHORD 2 X 4 SYP No.2D *Except*
B3 2 X 4 SYP No.3, B5 2 X 4 SYP No.3, B6 2 X 4 SYP No.3
WEBS 2 X 4 SYP No.3

BRACING
TOP CHORD Structural wood sheathing directly applied or 3-7-2 oc purlins.
BOT CHORD Rigid ceiling directly applied or 10-0-0 oc bracing, Except:
7-11-11 oc bracing: 12-14.
JOINTS 1 Brace at Jt(s): 22

REACTIONS (lb/size) 2=451/0-3-8, 12=1388/0-3-8, 24=1803/0-3-8
Max Horz 2=-411(load case 3)
Max Uplift2=-506(load case 6), 12=-750(load case 6), 24=-668(load case 4)
Max Grav 2=460(load case 7), 12=1388(load case 1), 24=1803(load case 1)

FORCES (lb) - Maximum Compression/Maximum Tension
TOP CHORD 1-2=0/54, 2-3=-344/736, 3-4=-197/569, 4-5=-808/676, 5-6=-1325/848, 6-7=-1325/848, 7-8=-2729/1384, 8-9=-2761/1249, 9-10=-3123/1488, 10-11=-3193/1477, 11-12=-2106/994, 12-13=0/54
BOT CHORD 2-25=-342/239, 24-25=-342/239, 23-24=0/0, 21-22=-73/49, 20-21=-221/764, 19-20=-314/1550, 17-19=0/144, 8-19=-254/309, 17-18=0/0, 16-17=-23/58, 15-16=-16/51, 9-16=0/76, 14-15=-51/63, 12-14=-662/1737
WEBS 3-25=-217/104, 3-24=-324/445, 22-24=-1435/457, 4-22=-1399/463, 4-21=-258/1033, 5-21=-632/216, 5-20=-356/974, 6-20=-247/273, 7-20=-389/147, 7-19=-693/1648, 16-19=-1070/2880, 9-19=-484/452, 11-14=-1067/490, 14-16=-746/2044, 11-16=-355/1040

NOTES
1) Unbalanced roof live loads have been considered for this design.
2) Wind: ASCE 7-98; 120mph (3-second gust); h=20ft; TCDL=4.2psf; BCDL=3.0psf; Category II; Exp B; enclosed; MWFRS gable end zone and C-C Exterior(2) zone; porch left exposed; Lumber DOL=1.60 plate grip DOL=1.60. This truss is designed for C-C for members and forces, and for MWFRS for reactions specified.
3) Provide adequate drainage to prevent water ponding.
4) All plates are MT20 plates unless otherwise indicated.
5) Provide mechanical connection (by others) of truss to bearing plate capable of withstanding 506 lb uplift at joint 2, 750 lb uplift at joint 12 and 668 lb uplift at joint 24.

LOAD CASE(S) Standard

SEPTEMBER 08, 2005 TRUSS DESIGN ENGINEER:
THOMAS E. MILLER PE 56877, BYRON K. ANDERSON PE 60987
STRUCTURAL ENGINEERING AND INSPECTIONS, INC. EB 9196
16105 N. FLORIDA AVE. STE B, LUTZ, FL 33549

Job	Truss	Truss Type	Qty	Ply	Dwg.#090805444
L130985	T18	SPECIAL	8	1	Job Reference (optional)

Builders FirstSource, Lake City, Fl 32055 — 6.200 s Jul 13 2005 MiTek Industries, Inc. Wed Sep 07 11:42:17 2005 Page 1

-2-0-0	4-9-11	9-1-12	12-4-0	17-11-7	24-4-0	27-6-12	31-1-0
2-0-0	4-9-11	4-4-1	3-2-4	5-7-7	6-4-9	3-2-12	3-6-4

Scale = 1:55.6

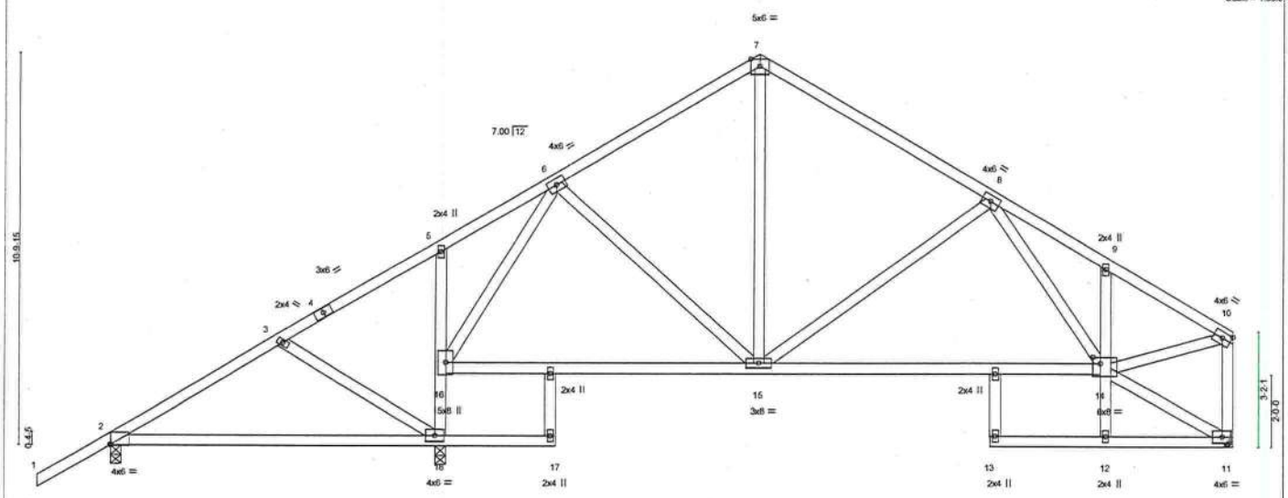

9-1-12	12-4-0	17-11-7	24-4-0	27-6-12	31-1-0
9-1-12	3-2-4	5-7-7	6-4-9	3-2-12	3-6-4

Plate Offsets (X,Y): [2:Edge,0-0-2], [14:0-2-8,0-2-0]

LOADING (psf)		SPACING	2-0-0	CSI		DEFL	in	(loc)	l/defl	L/d	PLATES	GRIP
TCLL	20.0	Plates Increase	1.25	TC	0.29	Vert(LL)	-0.21	14-15	>999	240	MT20	244/190
TCDL	7.0	Lumber Increase	1.25	BC	0.67	Vert(TL)	-0.37	14-15	>716	180		
BCLL	10.0	Rep Stress Incr	YES	WB	0.59	Horz(TL)	0.04	11	n/a	n/a		
BCDL	5.0	Code FBC2001/TPI2002		(Matrix)							Weight: 205 lb	

LUMBER
TOP CHORD 2 X 4 SYP No.2D
BOT CHORD 2 X 4 SYP No.2D *Except*
B3 2 X 4 SYP No.3, B3 2 X 4 SYP No.3
WEBS 2 X 4 SYP No.3 *Except*
W11 2 X 4 SYP No.2D

BRACING
TOP CHORD Structural wood sheathing directly applied or 5-7-14 oc purlins, except end verticals.
BOT CHORD Rigid ceiling directly applied or 10-0-0 oc bracing.

REACTIONS (lb/size) 2=479/0-3-8, 18=1430/0-3-8, 11=982/Mechanical
Max Horz 2=452(load case 4)
Max Uplift2=-229(load case 5), 18=-593(load case 5), 11=-373(load case 6)
Max Grav 2=481(load case 7), 18=1430(load case 1), 11=982(load case 1)

FORCES (lb) - Maximum Compression/Maximum Tension
TOP CHORD 1-2=0/54, 2-3=-308/291, 3-4=-315/335, 4-5=-305/350, 5-6=-228/347, 6-7=-805/464, 7-8=-821/458, 8-9=-1217/563, 9-10=-1244/478, 10-11=-973/403
BOT CHORD 2-18=-227/236, 17-18=0/0, 15-16=-172/457, 14-15=-340/928, 12-13=0/0, 11-12=0/21
WEBS 3-18=-283/269, 16-18=-1053/502, 5-16=-187/233, 6-15=0/287, 7-15=-173/392, 8-15=-389/353, 12-14=0/198, 9-14=-131/156, 8-14=-30/203, 11-14=-27/1, 10-14=-343/1053, 6-16=-901/337

NOTES
1) Unbalanced roof live loads have been considered for this design.
2) Wind: ASCE 7-98; 120mph (3-second gust); h=20ft; TCDL=4.2psf; BCDL=3.0psf; Category II; Exp B; enclosed; MWFRS gable end zone and C-C Exterior(2) zone; Lumber DOL=1.60 plate grip DOL=1.60. This truss is designed for C-C for members and forces, and for MWFRS for reactions specified.
3) Refer to girder(s) for truss to truss connections.
4) Provide mechanical connection (by others) of truss to bearing plate capable of withstanding 229 lb uplift at joint 2, 593 lb uplift at joint 18 and 373 lb uplift at joint 11.

LOAD CASE(S) Standard

SEPTEMBER 08, 2005 TRUSS DESIGN ENGINEER:
THOMAS E. MILLER PE 56877, BYRON K. ANDERSON PE 60987
STRUCTURAL ENGINEERING AND INSPECTIONS, INC. EB 9196
16105 N. FLORIDA AVE. STE B, LUTZ, FL 33549

Job	Truss	Truss Type	Qty	Ply	Dwg.#090805445
L130985	T19	MONO HIP	1	1	Job Reference (optional)

Builders FirstSource, Lake City, Fl 32055

6.200 s Jul 13 2005 MiTek Industries, Inc. Wed Sep 07 11:42:18 2005 Page 1

-2-0-0	3-6-14	8-10-13	14-1-0	19-3-3	24-5-6	29-7-9	34-11-8
2-0-0	3-6-14	5-3-15	5-2-3	5-2-3	5-2-3	5-2-3	5-3-15

Scale = 1:62.6

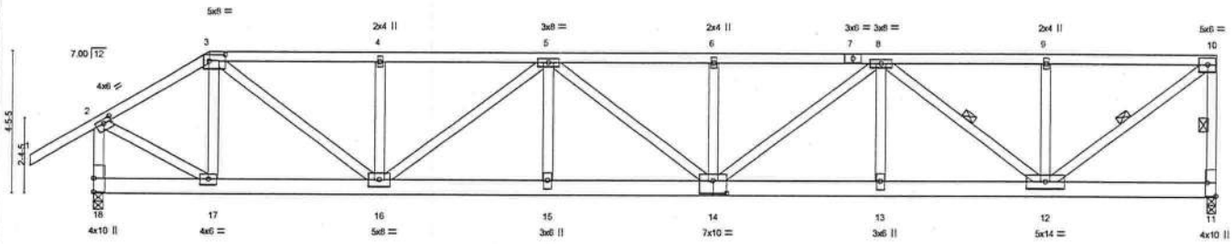

3-6-14	8-10-13	14-1-0	19-3-3	24-5-6	29-7-9	34-11-8
3-6-14	5-3-15	5-2-3	5-2-3	5-2-3	5-2-3	5-3-15

Plate Offsets (X,Y): [2:0-3-0,0-1-8], [3:0-6-0,0-2-4], [11:Edge,0-3-8], [14:0-5-0,0-4-8]

LOADING (psf)		SPACING	2-0-0	CSI		DEFL	in	(loc)	l/defl	L/d	PLATES	GRIP
TCLL	20.0	Plates Increase	1.25	TC	0.66	Vert(LL)	0.31	14-15	>999	240	MT20	244/190
TCDL	7.0	Lumber Increase	1.25	BC	0.50	Vert(TL)	-0.44	14-15	>944	180		
BCLL	10.0	Rep Stress Incr	NO	WB	0.97	Horz(TL)	0.08	11	n/a	n/a		
BCDL	5.0	Code FBC2001/TPI2002		(Matrix)							Weight: 239 lb	

LUMBER
TOP CHORD 2 X 4 SYP No.2D
BOT CHORD 2 X 6 SYP No.1D
WEBS 2 X 4 SYP No.3 *Except*
W1 2 X 4 SYP No.2D

BRACING
TOP CHORD Structural wood sheathing directly applied or 3-0-6 oc purlins, except end verticals.
BOT CHORD Rigid ceiling directly applied or 5-2-0 oc bracing.
WEBS 1 Row at midpt 10-11, 8-12, 10-12

REACTIONS (lb/size) 11=1943/0-3-8, 18=2381/0-3-8
Max Horz 18=266(load case 4)
Max Uplift11=-1272(load case 2), 18=-1279(load case 2)

FORCES (lb) - Maximum Compression/Maximum Tension
TOP CHORD 1-2=0/58, 2-3=-2020/1193, 3-4=-3261/2084, 4-5=-3261/2085, 5-6=-4165/2708, 6-7=-4165/2708, 7-8=-4165/2708, 8-9=-2151/1404, 9-10=-2151/1404, 10-11=-1823/1262, 2-18=-2167/1184
BOT CHORD 17-18=-186/22, 16-17=-1026/1688, 15-16=-2650/4095, 14-15=-2650/4095, 13-14=-2312/3539, 12-13=-2312/3539, 11-12=-46/56
WEBS 3-17=-486/419, 3-16=-1338/1977, 4-16=-377/444, 5-16=-1061/718, 5-15=0/230, 5-14=-74/89, 6-14=-364/418, 8-14=-503/796, 8-13=0/226, 8-12=-1765/1154, 9-12=-375/436, 10-12=-1725/2663, 2-17=-1218/1942

NOTES
1) Wind: ASCE 7-98; 120mph (3-second gust); h=20ft; TCDL=4.2psf; BCDL=3.0psf; Category II; Exp B; enclosed; MWFRS gable end zone; end vertical left exposed; Lumber DOL=1.60 plate grip DOL=1.60.
2) Provide adequate drainage to prevent water ponding.
3) Provide mechanical connection (by others) of truss to bearing plate capable of withstanding 1272 lb uplift at joint 11 and 1279 lb uplift at joint 18.
4) Girder carries tie-in span(s): 7-0-0 from 0-0-0 to 3-6-14
5) Girder carries hip end with 0-0-0 right side setback, 3-6-14 left side setback, and 3-6-14 end setback.
6) Hanger(s) or other connection device(s) shall be provided sufficient to support concentrated load(s) 104 lb down and 89 lb up at 3-6-14 on bottom chord. The design/selection of such connection device(s) is the responsibility of others.
7) In the LOAD CASE(S) section, loads applied to the face of the truss are noted as front (F) or back (B).

LOAD CASE(S) Standard
1) Regular: Lumber Increase=1.25, Plate Increase=1.25
Uniform Loads (plf)
Vert: 1-2=-54, 2-3=-54, 3-10=-71(F=-17), 17-18=-129(F=-99), 11-17=-40(F=-10)
Concentrated Loads (lb)
Vert: 17=-104(F)

SEPTEMBER 08, 2005 TRUSS DESIGN ENGINEER:
THOMAS E. MILLER PE 56877, BYRON K. ANDERSON PE 60987
STRUCTURAL ENGINEERING AND INSPECTIONS, INC. EB 9196
16105 N. FLORIDA AVE. STE B, LUTZ, FL 33549

Job	Truss	Truss Type	Qty	Ply	Dwg.#090805446
L130985	T20	MONO HIP	1	1	Job Reference (optional)

Builders FirstSource, Lake City, Fl 32055 — 6.200 s Jul 13 2005 MiTek Industries, Inc. Wed Sep 07 11:42:18 2005 Page 1

-2-0-0	5-6-14	12-10-2	20-1-7	27-4-11	34-11-8
2-0-0	5-6-14	7-3-5	7-3-5	7-3-5	7-6-13

Scale = 1:62.5

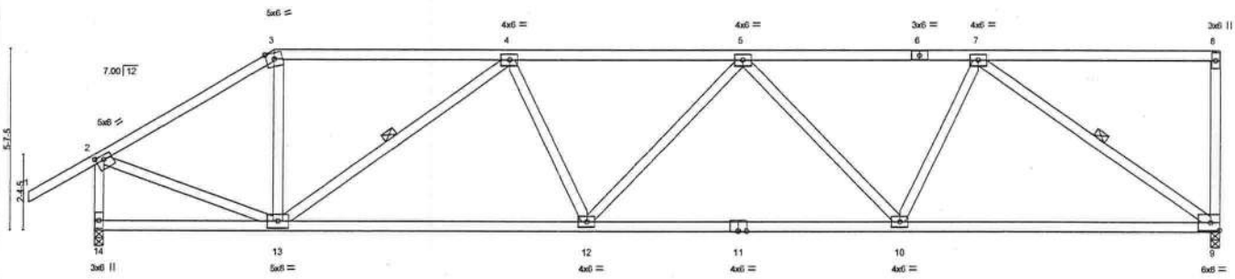

5-6-14	15-3-4	24-11-10	34-11-8
5-6-14	9-8-6	9-8-6	9-11-14

Plate Offsets (X,Y): [2:0-3-0,0-1-12]

LOADING (psf)		SPACING	2-0-0	CSI		DEFL	in	(loc)	l/defl	L/d	PLATES	GRIP
TCLL	20.0	Plates Increase	1.25	TC	0.71	Vert(LL)	-0.24	12-13	>999	240	MT20	244/190
TCDL	7.0	Lumber Increase	1.25	BC	0.66	Vert(TL)	-0.39	12-13	>999	180		
BCLL	10.0	Rep Stress Incr	YES	WB	0.78	Horz(TL)	0.09	9	n/a	n/a		
BCDL	5.0	Code FBC2001/TPI2002		(Matrix)							Weight: 198 lb	

LUMBER
TOP CHORD 2 X 4 SYP No.2D
BOT CHORD 2 X 4 SYP No.2D
WEBS 2 X 4 SYP No.3 *Except*
W1 2 X 4 SYP No.2D

BRACING
TOP CHORD Structural wood sheathing directly applied or 4-0-6 oc purlins, except end verticals.
BOT CHORD Rigid ceiling directly applied or 5-7-1 oc bracing.
WEBS 1 Row at midpt 4-13, 7-9

REACTIONS (lb/size) 9=1452/0-3-8, 14=1575/0-3-8
Max Horz 14=333(load case 5)
Max Uplift9=-837(load case 3), 14=-602(load case 4)

FORCES (lb) - Maximum Compression/Maximum Tension
TOP CHORD 1-2=0/58, 2-3=-1591/793, 3-4=-1326/761, 4-5=-2350/1253, 5-6=-1955/1068, 6-7=-1955/1068, 7-8=-69/27, 8-9=-191/189, 2-14=-1516/847
BOT CHORD 13-14=-284/74, 12-13=-1236/2226, 11-12=-1340/2328, 10-11=-1340/2328, 9-10=-963/1632
WEBS 3-13=-170/421, 4-13=-1123/795, 4-12=-41/297, 5-12=0/128, 5-10=-554/404, 7-10=-254/779, 7-9=-1922/1151, 2-13=-715/1388

NOTES
1) Wind: ASCE 7-98; 120mph (3-second gust); h=20ft; TCDL=4.2psf; BCDL=3.0psf; Category II; Exp B; enclosed; MWFRS gable end zone and C-C Exterior(2) zone; end vertical left exposed; Lumber DOL=1.60 plate grip DOL=1.60. This truss is designed for C-C for members and forces, and for MWFRS for reactions specified.
2) Provide adequate drainage to prevent water ponding.
3) Provide mechanical connection (by others) of truss to bearing plate capable of withstanding 837 lb uplift at joint 9 and 602 lb uplift at joint 14.

LOAD CASE(S) Standard

SEPTEMBER 08, 2005 TRUSS DESIGN ENGINEER:
THOMAS E. MILLER PE 56877, BYRON K. ANDERSON PE 60987
STRUCTURAL ENGINEERING AND INSPECTIONS, INC. EB 9196
16105 N. FLORIDA AVE. STE B, LUTZ, FL 33549

Job	Truss	Truss Type	Qty	Ply	Dwg.#090805447
L130985	T21	MONO HIP	1	1	Job Reference (optional)

Builders FirstSource, Lake City, Fl 32055 — 6.200 s Jul 13 2005 MiTek Industries, Inc. Wed Sep 07 11:42:19 2005 Page 1

-2-0-0	7-6-14	14-4-2	21-1-7	27-10-11	34-11-8
2-0-0	7-6-14	6-9-5	6-9-5	6-9-5	7-0-13

Scale = 1:62.5

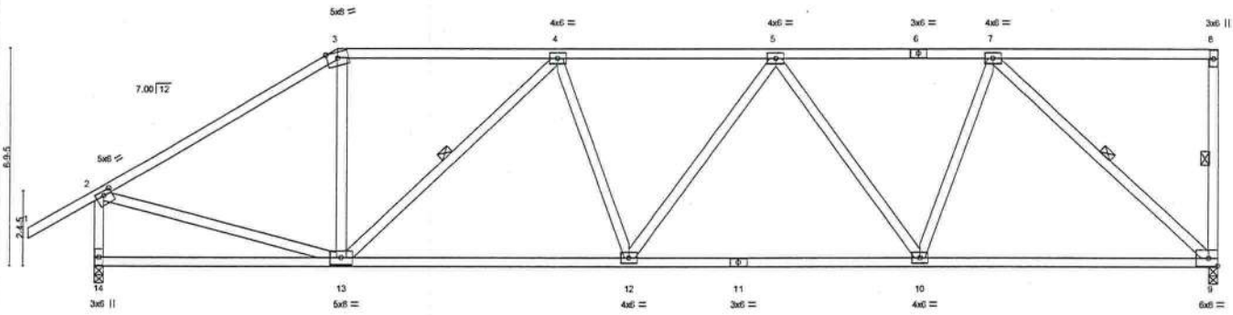

7-6-14	16-7-4	25-7-10	34-11-8
7-6-14	9-0-6	9-0-6	9-3-14

Plate Offsets (X,Y): [2:0-3-0,0-1-12]

LOADING (psf)		SPACING	2-0-0	CSI		DEFL	in	(loc)	l/defl	L/d	PLATES	GRIP
TCLL	20.0	Plates Increase	1.25	TC	0.56	Vert(LL)	-0.18	12-13	>999	240	MT20	244/190
TCDL	7.0	Lumber Increase	1.25	BC	0.55	Vert(TL)	-0.29	12-13	>999	180		
BCLL	10.0	Rep Stress Incr	YES	WB	0.73	Horz(TL)	0.07	9	n/a	n/a		
BCDL	5.0	Code FBC2001/TPI2002		(Matrix)							Weight: 211 lb	

LUMBER
TOP CHORD 2 X 4 SYP No.2D
BOT CHORD 2 X 4 SYP No.2D
WEBS 2 X 4 SYP No.3 *Except*
W1 2 X 4 SYP No.2D

BRACING
TOP CHORD Structural wood sheathing directly applied or 4-5-12 oc purlins, except end verticals.
BOT CHORD Rigid ceiling directly applied or 6-4-13 oc bracing.
WEBS 1 Row at midpt 8-9, 4-13, 7-9

REACTIONS (lb/size) 9=1452/0-3-8, 14=1575/0-3-8
Max Horz 14=397(load case 5)
Max Uplift9=-811(load case 3), 14=-564(load case 5)

FORCES (lb) - Maximum Compression/Maximum Tension
TOP CHORD 1-2=0/58, 2-3=-1683/815, 3-4=-1374/802, 4-5=-1949/1024, 5-6=-1534/804, 6-7=-1534/804, 7-8=-45/17, 8-9=-175/173, 2-14=-1467/836
BOT CHORD 13-14=-409/121, 12-13=-1048/1896, 11-12=-1018/1868, 10-11=-1018/1868, 9-10=-720/1269
WEBS 3-13=-190/411, 4-13=-731/603, 4-12=-3/162, 5-12=-37/142, 5-10=-583/412, 7-10=-291/806, 7-9=-1677/963, 2-13=-665/1291

NOTES
1) Wind: ASCE 7-98; 120mph (3-second gust); h=20ft; TCDL=4.2psf; BCDL=3.0psf; Category II; Exp B; enclosed; MWFRS gable end zone and C-C Exterior(2) zone; end vertical left exposed; Lumber DOL=1.60 plate grip DOL=1.60. This truss is designed for C-C for members and forces, and for MWFRS for reactions specified.
2) Provide adequate drainage to prevent water ponding.
3) Provide mechanical connection (by others) of truss to bearing plate capable of withstanding 811 lb uplift at joint 9 and 564 lb uplift at joint 14.

LOAD CASE(S) Standard

SEPTEMBER 08, 2005 TRUSS DESIGN ENGINEER:
THOMAS E. MILLER PE 56877, BYRON K. ANDERSON PE 60987
STRUCTURAL ENGINEERING AND INSPECTIONS, INC. EB 9196
16105 N. FLORIDA AVE. STE B, LUTZ, FL 33549

Job	Truss	Truss Type	Qty	Ply	Dwg.#090805448
L130985	T22	SPECIAL	1	1	Job Reference (optional)

Builders FirstSource, Lake City, Fl 32055

6.200 s Jul 13 2005 MiTek Industries, Inc. Wed Sep 07 11:42:20 2005 Page 1

-2-0-0	5-0-3	9-6-14	12-4-6	15-1-14	20-8-15	26-4-0	30-6-0	34-11-8
2-0-0	5-0-3	4-6-10	2-9-8	2-9-8	5-7-1	5-7-1	4-2-0	4-5-8

Scale = 1:63.1

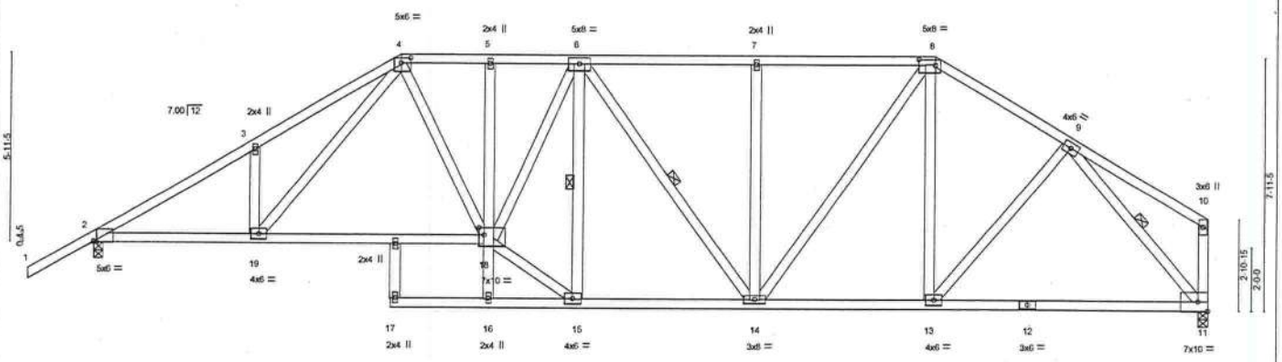

9-3-8	12-4-6	15-1-14	20-8-15	26-4-0	34-11-8
9-3-8	3-0-14	2-9-8	5-7-1	5-7-1	8-7-8

Plate Offsets (X,Y): [2:0-1-3,Edge], [4:0-3-8,0-2-0], [8:0-6-0,0-2-4], [18:0-2-0,0-2-12]

LOADING (psf)		SPACING	2-0-0	CSI		DEFL	in	(loc)	l/defl	L/d	PLATES	GRIP
TCLL	20.0	Plates Increase	1.25	TC	0.44	Vert(LL)	0.41	18-19	>999	240	MT20	244/190
TCDL	7.0	Lumber Increase	1.25	BC	0.55	Vert(TL)	-0.40	17	>999	180		
BCLL	10.0	Rep Stress Incr	YES	WB	0.97	Horz(TL)	0.11	11	n/a	n/a		
BCDL	5.0	Code FBC2001/TPI2002		(Matrix)							Weight: 249 lb	

LUMBER
TOP CHORD 2 X 4 SYP No.2D
BOT CHORD 2 X 4 SYP No.2D *Except*
B2 2 X 4 SYP No.3
WEBS 2 X 4 SYP No.3 *Except*
W11 2 X 4 SYP No.2D

BRACING
TOP CHORD Structural wood sheathing directly applied or 3-11-3 oc purlins, except end verticals.
BOT CHORD Rigid ceiling directly applied or 4-2-13 oc bracing.
WEBS 1 Row at midpt 6-15, 6-14, 9-11

REACTIONS (lb/size) 2=1636/0-3-8, 11=1479/0-3-8
Max Horz 2=261(load case 4)
Max Uplift2=-1128(load case 5), 11=-1155(load case 3)

FORCES (lb) - Maximum Compression/Maximum Tension
TOP CHORD 1-2=0/54, 2-3=-2625/2618, 3-4=-2583/2745, 4-5=-2139/2290, 5-6=-2134/2286, 6-7=-1659/1912, 7-8=-1660/1912, 8-9=-1538/1704, 9-10=-189/258, 10-11=-191/229
BOT CHORD 2-19=-2176/2178, 18-19=-1744/1851, 16-17=0/0, 15-16=-13/26, 14-15=-1679/1702, 13-14=-1278/1283, 12-13=-1073/1056, 11-12=-1073/1056
WEBS 16-18=0/167, 5-18=-74/104, 6-18=-759/937, 6-15=-1045/885, 6-14=-121/79, 7-14=-317/341, 8-14=-638/696, 8-13=-103/244, 9-13=-312/419, 9-11=-1494/1463, 4-18=-726/752, 4-19=-688/523, 3-19=-187/263, 15-18=-2015/2026

NOTES
1) Unbalanced roof live loads have been considered for this design.
2) Wind: ASCE 7-98; 120mph (3-second gust); h=20ft; TCDL=4.2psf; BCDL=3.0psf; Category II; Exp B; enclosed; MWFRS gable end zone and C-C Exterior(2) zone; porch left exposed; Lumber DOL=1.60 plate grip DOL=1.60. This truss is designed for C-C for members and forces, and for MWFRS for reactions specified.
3) Provide adequate drainage to prevent water ponding.
4) Provide mechanical connection (by others) of truss to bearing plate capable of withstanding 1128 lb uplift at joint 2 and 1155 lb uplift at joint 11.

LOAD CASE(S) Standard

SEPTEMBER 08, 2005 TRUSS DESIGN ENGINEER:
THOMAS E. MILLER PE 56877, BYRON K. ANDERSON PE 60987
STRUCTURAL ENGINEERING AND INSPECTIONS, INC. EB 9196
16105 N. FLORIDA AVE. STE B, LUTZ, FL 33549

Job	Truss	Truss Type	Qty	Ply	
L130985	T23	SPECIAL	1	1	Dwg.#090805449

Job Reference (optional)

Builders FirstSource, Lake City, Fl 32055

6.200 s Jul 13 2005 MiTek Industries, Inc. Wed Sep 07 11:42:21 2005 Page 1

-2-0-0	6-0-3	11-6-14	17-11-7	24-4-0	27-4-0	31-0-0	34-11-8
2-0-0	6-0-3	5-6-10	6-4-9	6-4-9	3-0-0	3-8-0	3-11-8

Scale = 1:62.9

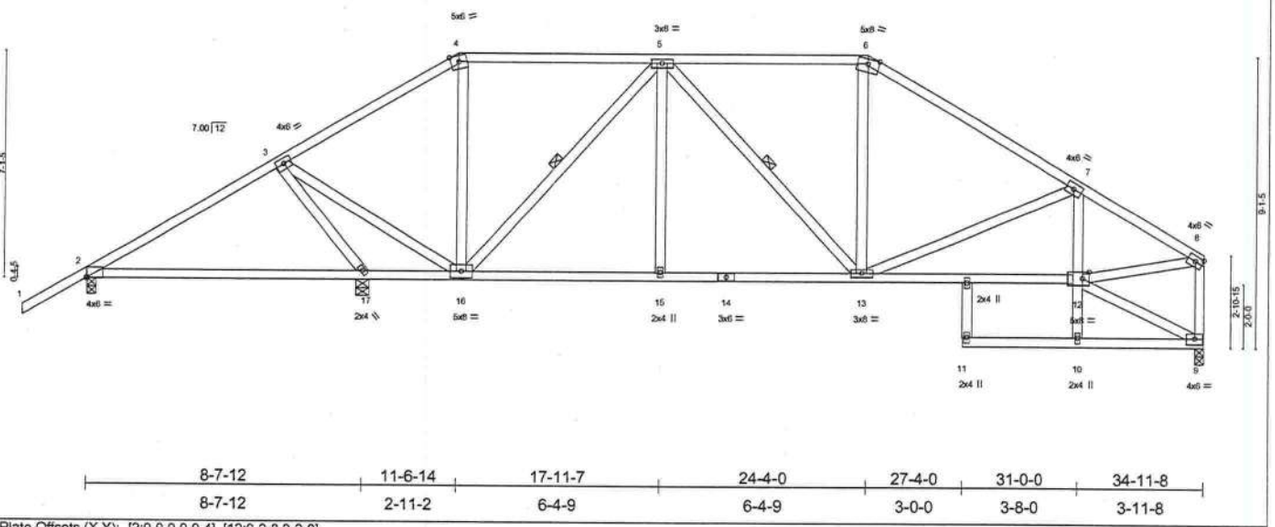

8-7-12	11-6-14	17-11-7	24-4-0	27-4-0	31-0-0	34-11-8
8-7-12	2-11-2	6-4-9	6-4-9	3-0-0	3-8-0	3-11-8

Plate Offsets (X,Y): [2:0-0-0,0-0-4], [12:0-2-8,0-2-8]

LOADING (psf)		SPACING	2-0-0	CSI		DEFL	in	(loc)	l/defl	L/d	PLATES	GRIP
TCLL	20.0	Plates Increase	1.25	TC	0.32	Vert(LL)	0.25	2-17	>410	240	MT20	244/190
TCDL	7.0	Lumber Increase	1.25	BC	0.49	Vert(TL)	0.21	2-17	>499	180		
BCLL	10.0	Rep Stress Incr	YES	WB	0.57	Horz(TL)	0.07	9	n/a	n/a		
BCDL	5.0	Code FBC2001/TPI2002		(Matrix)							Weight: 224 lb	

LUMBER
TOP CHORD 2 X 4 SYP No.2D
BOT CHORD 2 X 4 SYP No.2D *Except*
B3 2 X 4 SYP No.3
WEBS 2 X 4 SYP No.3 *Except*
W9 2 X 4 SYP No.2D

BRACING
TOP CHORD Structural wood sheathing directly applied or 4-9-14 oc purlins, except end verticals.
BOT CHORD Rigid ceiling directly applied or 6-0-0 oc bracing.
WEBS 1 Row at midpt 5-16, 5-13

REACTIONS (lb/size) 2=509/0-3-8, 17=1442/0-4-15, 9=1186/0-3-8
Max Horz 2=309(load case 4)
Max Uplift2=-418(load case 5), 17=-709(load case 4), 9=-380(load case 6)
Max Grav 2=521(load case 7), 17=1442(load case 1), 9=1186(load case 1)

FORCES (lb) - Maximum Compression/Maximum Tension
TOP CHORD 1-2=0/54, 2-3=-356/178, 3-4=-629/326, 4-5=-474/350, 5-6=-1121/652, 6-7=-1377/650, 7-8=-1680/659, 8-9=-1181/481
BOT CHORD 2-17=-263/260, 16-17=-727/395, 15-16=-446/1042, 14-15=-446/1042, 13-14=-446/1042, 12-13=-526/1429, 10-11=0/0, 9-10=-4/11
WEBS 3-17=-1539/787, 3-16=-503/1404, 4-16=-48/142, 5-16=-869/469, 5-15=0/194, 5-13=-126/222, 6-13=-35/312, 7-13=-344/277, 10-12=0/225, 7-12=0/167, 9-12=-11/0, 8-12=-522/1446

NOTES
1) Unbalanced roof live loads have been considered for this design.
2) Wind: ASCE 7-98; 120mph (3-second gust); h=20ft; TCDL=4.2psf; BCDL=3.0psf; Category II; Exp B; enclosed; MWFRS gable end zone and C-C Exterior(2) zone; porch left exposed; Lumber DOL=1.60 plate grip DOL=1.60. This truss is designed for C-C for members and forces, and for MWFRS for reactions specified.
3) Provide adequate drainage to prevent water ponding.
4) Provide mechanical connection (by others) of truss to bearing plate capable of withstanding 418 lb uplift at joint 2, 709 lb uplift at joint 17 and 380 lb uplift at joint 9.

LOAD CASE(S) Standard

SEPTEMBER 08, 2005 TRUSS DESIGN ENGINEER:
THOMAS E. MILLER PE 56877, BYRON K. ANDERSON PE 60987
STRUCTURAL ENGINEERING AND INSPECTIONS, INC. EB 9196
16105 N. FLORIDA AVE. STE B, LUTZ, FL 33549

Job	Truss	Truss Type	Qty	Ply	Dwg.#090805450
L130985	T24	SPECIAL	1	1	Job Reference (optional)

Builders FirstSource, Lake City, Fl 32055

6.200 s Jul 13 2005 MiTek Industries, Inc. Wed Sep 07 11:42:21 2005 Page 1

-2-0-0	6-7-12	13-6-14	17-11-7	22-4-0	27-4-0	31-0-0	34-11-8
2-0-0	6-7-12	6-11-2	4-4-9	4-4-9	5-0-0	3-8-0	3-11-8

Scale = 1:62.9

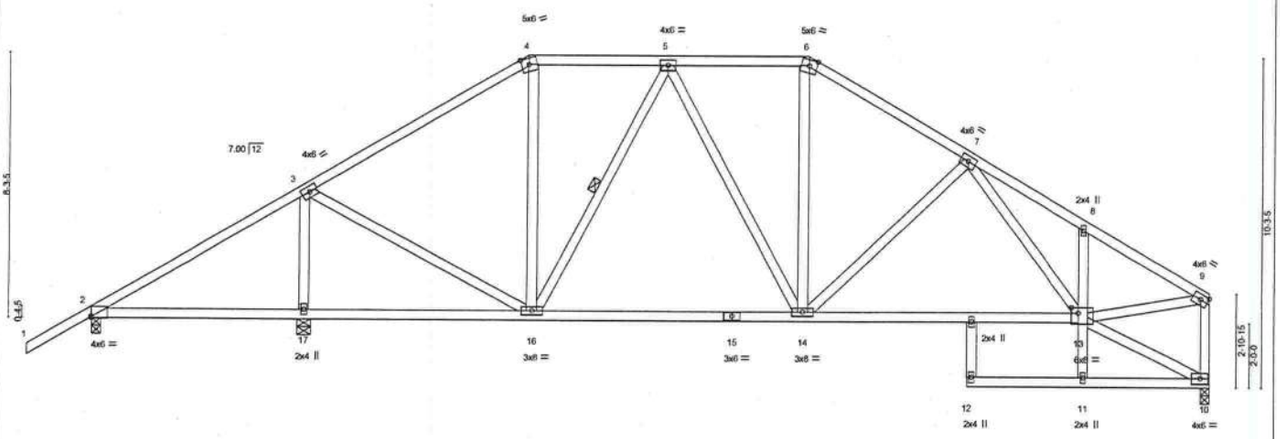

6-7-12	13-6-14	22-4-0	27-4-0	31-0-0	34-11-8
6-7-12	6-11-2	8-9-2	5-0-0	3-8-0	3-11-8

Plate Offsets (X,Y): [2:0-0-0,0-0-4], [13:0-2-8,0-2-0]

LOADING (psf)		SPACING	2-0-0	CSI		DEFL	in	(loc)	l/defl	L/d	PLATES	GRIP
TCLL	20.0	Plates Increase	1.25	TC	0.32	Vert(LL)	0.11	2-17	>685	240	MT20	244/190
TCDL	7.0	Lumber Increase	1.25	BC	0.61	Vert(TL)	-0.45	12	>751	180		
BCLL	10.0	Rep Stress Incr	YES	WB	0.48	Horz(TL)	0.07	10	n/a	n/a		
BCDL	5.0	Code FBC2001/TPI2002		(Matrix)							Weight: 228 lb	

LUMBER
TOP CHORD 2 X 4 SYP No.2D
BOT CHORD 2 X 4 SYP No.2D *Except*
B3 2 X 4 SYP No.3
WEBS 2 X 4 SYP No.3 *Except*
W10 2 X 4 SYP No.2D

BRACING
TOP CHORD Structural wood sheathing directly applied or 4-10-3 oc purlins, except end verticals.
BOT CHORD Rigid ceiling directly applied or 6-0-0 oc bracing.
WEBS 1 Row at midpt 5-16

REACTIONS (lb/size) 2=258/0-3-8, 17=1643/0-4-15, 10=1233/0-3-8
Max Horz 2=357(load case 4)
Max Uplift2=-301(load case 5), 17=-676(load case 5), 10=-420(load case 6)
Max Grav 2=291(load case 7), 17=1643(load case 1), 10=1233(load case 1)

FORCES (lb) - Maximum Compression/Maximum Tension
TOP CHORD 1-2=0/54, 2-3=-181/277, 3-4=-964/517, 4-5=-748/532, 5-6=-1063/658, 6-7=-1290/681, 7-8=-1758/809, 8-9=-1772/694, 9-10=-1225/515
BOT CHORD 2-17=-183/219, 16-17=-183/219, 15-16=-340/956, 14-15=-340/956, 13-14=-480/1308, 11-12=0/0, 10-11=-1/27
WEBS 3-17=-1417/765, 3-16=-314/1025, 4-16=-112/214, 5-16=-514/341, 5-14=-127/255, 6-14=-102/343, 7-14=-358/325, 11-13=0/225, 8-13=-181/223, 7-13=-124/311, 10-13=-34/1, 9-13=-513/1487

NOTES
1) Unbalanced roof live loads have been considered for this design.
2) Wind: ASCE 7-98; 120mph (3-second gust); h=20ft; TCDL=4.2psf; BCDL=3.0psf; Category II; Exp B; enclosed; MWFRS gable end zone and C-C Exterior(2) zone; porch left exposed; Lumber DOL=1.60 plate grip DOL=1.60. This truss is designed for C-C for members and forces, and for MWFRS for reactions specified.
3) Provide adequate drainage to prevent water ponding.
4) Provide mechanical connection (by others) of truss to bearing plate capable of withstanding 301 lb uplift at joint 2, 676 lb uplift at joint 17 and 420 lb uplift at joint 10.

LOAD CASE(S) Standard

SEPTEMBER 08, 2005 TRUSS DESIGN ENGINEER:
THOMAS E. MILLER PE 56877, BYRON K. ANDERSON PE 60987
STRUCTURAL ENGINEERING AND INSPECTIONS, INC. EB 9196
16105 N. FLORIDA AVE. STE B, LUTZ, FL 33549

Job	Truss	Truss Type	Qty	Ply	Dwg.#09080545 1
L130985	T25	SPECIAL	2	1	Job Reference (optional)

Builders FirstSource, Lake City, Fl 32055

6.200 s Jul 13 2005 MiTek Industries, Inc. Wed Sep 07 11:42:22 2005 Page 1

-2-0-0	5-7-12	10-7-5	15-6-14	20-4-0	27-4-0	31-0-0	34-11-8
2-0-0	5-7-12	4-11-9	4-11-9	4-9-2	7-0-0	3-8-0	3-11-8

Scale = 1:62.9

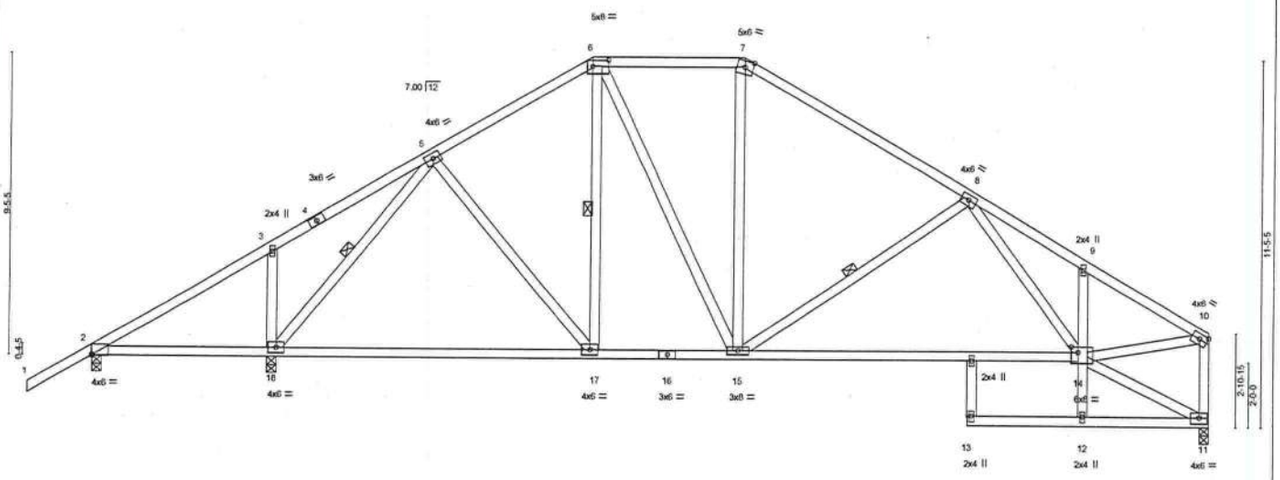

5-7-12	15-6-14	20-4-0	27-4-0	31-0-0	34-11-8
5-7-12	9-11-2	4-9-2	7-0-0	3-8-0	3-11-8

Plate Offsets (X,Y): [2:0-0-0,0-0-4], [6:0-6-0,0-2-4], [14:0-2-8,0-2-0]

LOADING (psf)		SPACING	2-0-0	CSI		DEFL	in	(loc)	l/defl	L/d	PLATES	GRIP
TCLL	20.0	Plates Increase	1.25	TC	0.37	Vert(LL)	-0.43	14-15	>808	240	MT20	244/190
TCDL	7.0	Lumber Increase	1.25	BC	0.71	Vert(TL)	-0.75	14-15	>467	180		
BCLL	10.0	Rep Stress Incr	YES	WB	0.49	Horz(TL)	0.08	11	n/a	n/a		
BCDL	5.0	Code FBC2001/TPI2002		(Matrix)							Weight: 234 lb	

LUMBER
TOP CHORD 2 X 4 SYP No.2D
BOT CHORD 2 X 4 SYP No.2D *Except*
B3 2 X 4 SYP No.3
WEBS 2 X 4 SYP No.3 *Except*
W11 2 X 4 SYP No.2D

BRACING
TOP CHORD Structural wood sheathing directly applied or 4-6-7 oc purlins, except end verticals.
BOT CHORD Rigid ceiling directly applied or 6-0-0 oc bracing.
WEBS 1 Row at midpt 5-18, 6-17, 8-15

REACTIONS (lb/size) 2=227/0-3-8, 18=1623/0-3-8, 11=1283/0-3-8
Max Horz 2=405(load case 4)
Max Uplift2=-252(load case 5), 18=-707(load case 5), 11=-449(load case 6)
Max Grav 2=253(load case 7), 18=1623(load case 1), 11=1283(load case 1)

FORCES (lb) - Maximum Compression/Maximum Tension
TOP CHORD 1-2=0/54, 2-3=-205/217, 3-4=-54/122, 4-5=-43/202, 5-6=-1078/624, 6-7=-1018/664, 7-8=-1270/661, 8-9=-1812/805, 9-10=-1843/709, 10-11=-1277/531
BOT CHORD 2-18=-156/233, 17-18=-299/709, 16-17=-254/871, 15-16=-254/871, 14-15=-525/1380, 12-13=0/0, 11-12=-1/27
WEBS 3-18=-293/354, 5-18=-1330/570, 5-17=-122/327, 6-17=-74/137, 6-15=-221/412, 7-15=-68/281, 8-15=-453/412, 12-14=0/225, 9-14=-145/178, 8-14=-59/303, 11-14=-38/2, 10-14=-519/1542

NOTES
1) Unbalanced roof live loads have been considered for this design.
2) Wind: ASCE 7-98; 120mph (3-second gust); h=20ft; TCDL=4.2psf; BCDL=3.0psf; Category II; Exp B; enclosed; MWFRS gable end zone and C-C Exterior(2) zone; porch left exposed; Lumber DOL=1.60 plate grip DOL=1.60. This truss is designed for C-C for members and forces, and for MWFRS for reactions specified.
3) Provide adequate drainage to prevent water ponding.
4) Provide mechanical connection (by others) of truss to bearing plate capable of withstanding 252 lb uplift at joint 2, 707 lb uplift at joint 18 and 449 lb uplift at joint 11.

LOAD CASE(S) Standard

SEPTEMBER 08, 2005 TRUSS DESIGN ENGINEER:
THOMAS E. MILLER PE 56877, BYRON K. ANDERSON PE 60987
STRUCTURAL ENGINEERING AND INSPECTIONS, INC. EB 9196
16105 N. FLORIDA AVE. STE B, LUTZ, FL 33549

Job	Truss	Truss Type	Qty	Ply	Dwg.#09080545 2
L130985	T27	COMMON	1	1	Job Reference (optional)

Builders FirstSource, Lake City, Fl 32055

6.200 s Jul 13 2005 MiTek Industries, Inc. Wed Sep 07 11:42:23 2005 Page 1

-2-0-0	5-11-4	11-11-5	17-11-7	24-4-7	31-1-0
2-0-0	5-11-4	6-0-2	6-0-2	6-5-1	6-8-9

Scale = 1:55.3

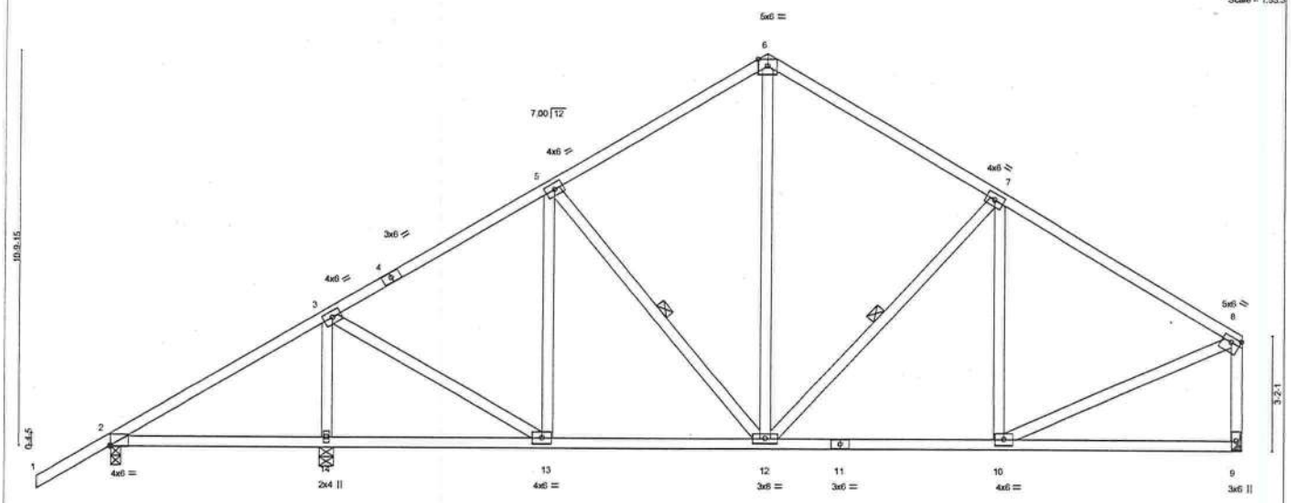

5-11-4	11-11-5	17-11-7	24-4-7	31-1-0
5-11-4	6-0-2	6-0-2	6-5-1	6-8-9

Plate Offsets (X,Y): [2:0-0-0,0-0-4], [8:Edge,0-1-12]

LOADING (psf)		SPACING	2-0-0	CSI		DEFL	in	(loc)	l/defl	L/d	PLATES	GRIP
TCLL	20.0	Plates Increase	1.25	TC	0.30	Vert(LL)	0.07	2-14	>999	240	MT20	244/190
TCDL	7.0	Lumber Increase	1.25	BC	0.24	Vert(TL)	-0.08	10-12	>999	180		
BCLL	10.0	Rep Stress Incr	YES	WB	0.47	Horz(TL)	0.01	9	n/a	n/a		
BCDL	5.0	Code FBC2001/TPI2002		(Matrix)							Weight: 194 lb	

LUMBER
TOP CHORD 2 X 4 SYP No.2D
BOT CHORD 2 X 4 SYP No.2D
WEBS 2 X 4 SYP No.3 *Except*
W9 2 X 4 SYP No.2D

BRACING
TOP CHORD Structural wood sheathing directly applied or 6-0-0 oc purlins, except end verticals.
BOT CHORD Rigid ceiling directly applied or 6-0-0 oc bracing.
WEBS 1 Row at midpt 5-12, 7-12

REACTIONS (lb/size) 2=307/0-3-8, 14=1362/0-4-15, 9=1033/Mechanical
Max Horz 2=452(load case 4)
Max Uplift2=-245(load case 5), 14=-710(load case 5), 9=-392(load case 6)
Max Grav 2=321(load case 7), 14=1362(load case 1), 9=1033(load case 1)

FORCES (lb) - Maximum Compression/Maximum Tension
TOP CHORD 1-2=0/54, 2-3=-237/186, 3-4=-859/391, 4-5=-776/414, 5-6=-807/519, 6-7=-816/517, 7-8=-987/463, 8-9=-934/466
BOT CHORD 2-14=-172/169, 13-14=-172/169, 12-13=-296/670, 11-12=-294/778, 10-11=-294/778, 9-10=-61/90
WEBS 3-14=-1164/670, 3-13=-284/821, 5-13=-243/205, 5-12=-145/196, 6-12=-240/396, 7-12=-274/292, 7-10=-114/156, 8-10=-257/754

NOTES
1) Unbalanced roof live loads have been considered for this design.
2) Wind: ASCE 7-98; 120mph (3-second gust); h=20ft; TCDL=4.2psf; BCDL=3.0psf; Category II; Exp B; enclosed; MWFRS gable end zone and C-C Exterior(2) zone; porch left exposed; Lumber DOL=1.60 plate grip DOL=1.60. This truss is designed for C-C for members and forces, and for MWFRS for reactions specified.
3) Refer to girder(s) for truss to truss connections.
4) Provide mechanical connection (by others) of truss to bearing plate capable of withstanding 245 lb uplift at joint 2, 710 lb uplift at joint 14 and 392 lb uplift at joint 9.

LOAD CASE(S) Standard

SEPTEMBER 08, 2005 TRUSS DESIGN ENGINEER:
THOMAS E. MILLER PE 56877, BYRON K. ANDERSON PE 60987
STRUCTURAL ENGINEERING AND INSPECTIONS, INC. EB 9196
16105 N. FLORIDA AVE. STE B, LUTZ, FL 33549

Job	Truss	Truss Type	Qty	Ply	
L130985	T28	COMMON	1	1	Job Reference (optional)

Dwg.#090805453

Builders FirstSource, Lake City, Fl 32055

6.200 s Jul 13 2005 MiTek Industries, Inc. Wed Sep 07 11:42:23 2005 Page 1

-2-0-0	7-11-4	12-11-5	17-11-7	24-4-7	31-1-0
2-0-0	7-11-4	5-0-2	5-0-2	6-5-1	6-8-9

Scale = 1:55.3

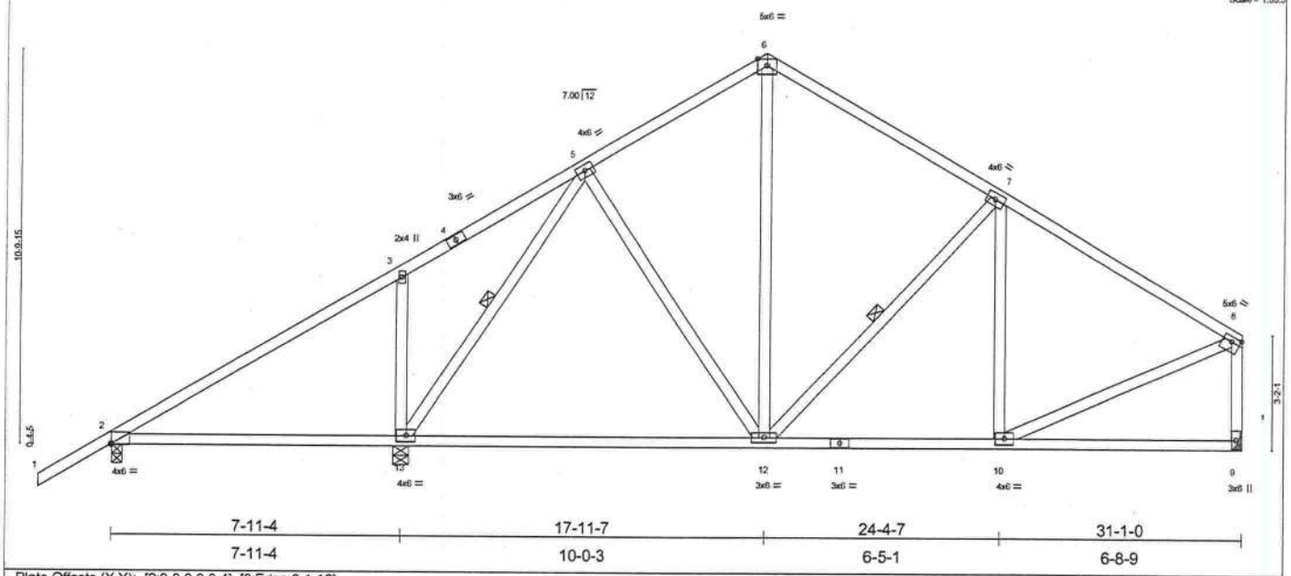

7-11-4	17-11-7	24-4-7	31-1-0
7-11-4	10-0-3	6-5-1	6-8-9

Plate Offsets (X,Y): [2:0-0-0,0-0-4], [8:Edge,0-1-12]

LOADING (psf)		SPACING	2-0-0	CSI		DEFL	in	(loc)	l/defl	L/d	PLATES	GRIP
TCLL	20.0	Plates Increase	1.25	TC	0.41	Vert(LL)	0.31	2-13	>304	240	MT20	244/190
TCDL	7.0	Lumber Increase	1.25	BC	0.45	Vert(TL)	0.28	2-13	>337	180		
BCLL	10.0	Rep Stress Incr	YES	WB	0.32	Horz(TL)	0.01	9	n/a	n/a		
BCDL	5.0	Code FBC2001/TPI2002		(Matrix)							Weight: 189 lb	

LUMBER
TOP CHORD 2 X 4 SYP No.2D
BOT CHORD 2 X 4 SYP No.2D
WEBS 2 X 4 SYP No.3 *Except*
W8 2 X 4 SYP No.2D

BRACING
TOP CHORD Structural wood sheathing directly applied or 6-0-0 oc purlins, except end verticals.
BOT CHORD Rigid ceiling directly applied or 10-0-0 oc bracing, Except:
6-0-0 oc bracing: 2-13.
WEBS 1 Row at midpt 5-13, 7-12

REACTIONS (lb/size) 2=386/0-3-8, 13=1375/0-4-15, 9=941/Mechanical
Max Horz 2=452(load case 4)
Max Uplift2=-295(load case 5), 13=-767(load case 5), 9=-356(load case 6)
Max Grav 2=393(load case 7), 13=1375(load case 1), 9=941(load case 1)

FORCES (lb) - Maximum Compression/Maximum Tension
TOP CHORD 1-2=0/54, 2-3=-239/151, 3-4=-87/143, 4-5=-48/162, 5-6=-663/435, 6-7=-695/429, 7-8=-880/406, 8-9=-837/416
BOT CHORD 2-13=-153/196, 12-13=-173/428, 11-12=-245/686, 10-11=-245/686, 9-10=-58/92
WEBS 3-13=-397/475, 5-13=-794/311, 5-12=-80/231, 6-12=-164/286, 7-12=-277/318, 7-10=-95/114, 8-10=-208/651

NOTES
1) Unbalanced roof live loads have been considered for this design.
2) Wind: ASCE 7-98; 120mph (3-second gust); h=20ft; TCDL=4.2psf; BCDL=3.0psf; Category II; Exp B; enclosed; MWFRS gable end zone and C-C Exterior(2) zone; porch left exposed; Lumber DOL=1.60 plate grip DOL=1.60. This truss is designed for C-C for members and forces, and for MWFRS for reactions specified.
3) Refer to girder(s) for truss to truss connections.
4) Provide mechanical connection (by others) of truss to bearing plate capable of withstanding 295 lb uplift at joint 2, 767 lb uplift at joint 13 and 356 lb uplift at joint 9.

LOAD CASE(S) Standard

SEPTEMBER 08, 2005 TRUSS DESIGN ENGINEER:
THOMAS E. MILLER PE 56877, BYRON K. ANDERSON PE 60987
STRUCTURAL ENGINEERING AND INSPECTIONS, INC. EB 9196
16105 N. FLORIDA AVE. STE B, LUTZ, FL 33549

Job	Truss	Truss Type	Qty	Ply	Dwg.#090805454
L130985	T29	COMMON	1	1	Job Reference (optional)

Builders FirstSource, Lake City, Fl 32055

6.200 s Jul 13 2005 MiTek Industries, Inc. Wed Sep 07 11:42:24 2005 Page 1

-2-0-0	6-3-8	12-1-8	17-11-7	24-4-7	31-1-0
2-0-0	6-3-8	5-9-15	5-9-15	6-5-1	6-8-9

Scale = 1:55.3

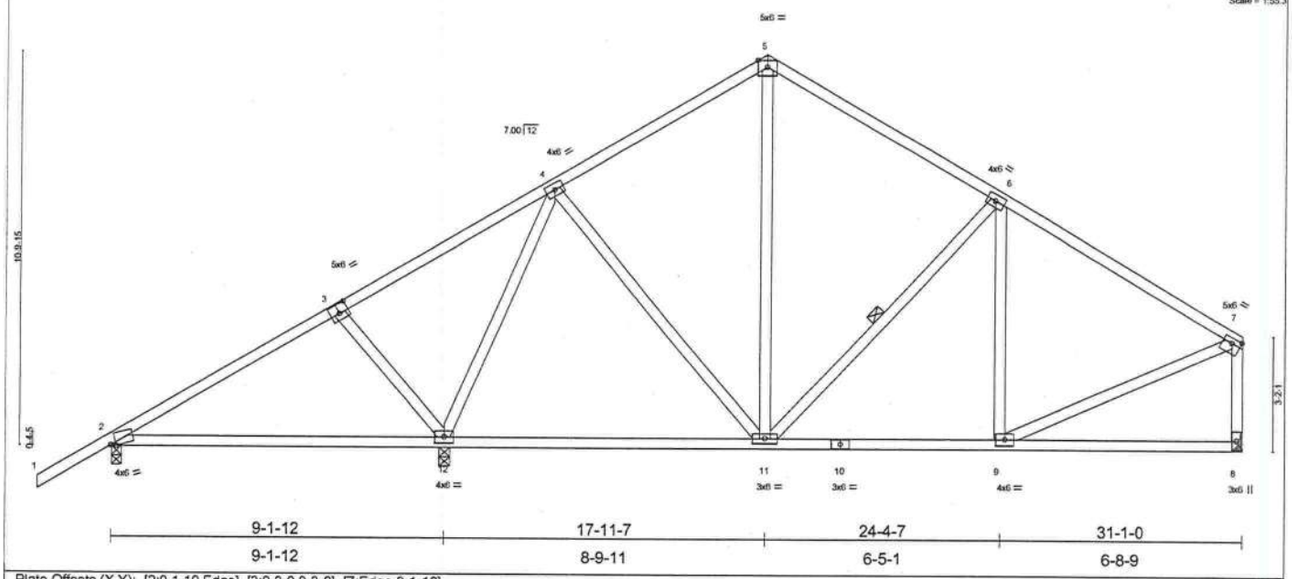

9-1-12	17-11-7	24-4-7	31-1-0
9-1-12	8-9-11	6-5-1	6-8-9

Plate Offsets (X,Y): [2:0-1-10,Edge], [3:0-3-0,0-3-0], [7:Edge,0-1-12]

LOADING (psf)		SPACING	2-0-0	CSI		DEFL	in	(loc)	l/defl	L/d	PLATES	GRIP
TCLL	20.0	Plates Increase	1.25	TC	0.31	Vert(LL)	0.41	2-12	>266	240	MT20	244/190
TCDL	7.0	Lumber Increase	1.25	BC	0.33	Vert(TL)	0.36	2-12	>302	180		
BCLL	10.0	Rep Stress Incr	YES	WB	0.98	Horz(TL)	0.01	8	n/a	n/a		
BCDL	5.0	Code FBC2001/TPI2002		(Matrix)							Weight: 187 lb	

LUMBER
TOP CHORD 2 X 4 SYP No.2D
BOT CHORD 2 X 4 SYP No.2D
WEBS 2 X 4 SYP No.3 *Except*
W8 2 X 4 SYP No.2D

BRACING
TOP CHORD Structural wood sheathing directly applied or 6-0-0 oc purlins, except end verticals.
BOT CHORD Rigid ceiling directly applied or 10-0-0 oc bracing, Except:
6-0-0 oc bracing: 2-12.
WEBS 1 Row at midpt 6-11

REACTIONS (lb/size) 2=425/0-3-8, 12=1396/0-3-8, 8=881/Mechanical
Max Horz 2=452(load case 4)
Max Uplift2=-336(load case 5), 12=-789(load case 5), 8=-337(load case 6)
Max Grav 2=437(load case 7), 12=1396(load case 1), 8=881(load case 1)

FORCES (lb) - Maximum Compression/Maximum Tension
TOP CHORD 1-2=0/54, 2-3=-180/131, 3-4=-163/196, 4-5=-591/386, 5-6=-604/384, 6-7=-815/371, 7-8=-780/385
BOT CHORD 2-12=-248/208, 11-12=-138/253, 10-11=-214/630, 9-10=-214/630, 8-9=-58/90
WEBS 3-12=-315/375, 4-12=-926/486, 4-11=-67/315, 5-11=-121/203, 6-11=-304/325, 6-9=-58/99, 7-9=-174/591

NOTES
1) Unbalanced roof live loads have been considered for this design.
2) Wind: ASCE 7-98; 120mph (3-second gust); h=20ft; TCDL=4.2psf; BCDL=3.0psf; Category II; Exp B; enclosed; MWFRS gable end zone and C-C Exterior(2) zone; porch left exposed; Lumber DOL=1.60 plate grip DOL=1.60. This truss is designed for C-C for members and forces, and for MWFRS for reactions specified.
3) Refer to girder(s) for truss to truss connections.
4) Provide mechanical connection (by others) of truss to bearing plate capable of withstanding 336 lb uplift at joint 2, 789 lb uplift at joint 12 and 337 lb uplift at joint 8.

LOAD CASE(S) Standard

SEPTEMBER 08, 2005 TRUSS DESIGN ENGINEER:
THOMAS E. MILLER PE 56877, BYRON K. ANDERSON PE 60987
STRUCTURAL ENGINEERING AND INSPECTIONS, INC. EB 9196
16105 N. FLORIDA AVE. STE B, LUTZ, FL 33549

Symbols

PLATE LOCATION AND ORIENTATION

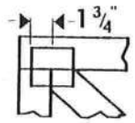

*Center plate on joint unless dimensions indicate otherwise. Dimensions are in inches. Apply plates to both sides of truss and securely seat.

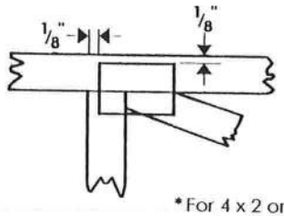

*For 4 x 2 orientation, locate plates 1/8" from outside edge of truss and vertical web.

*This symbol indicates the required direction of slots in connector plates.

PLATE SIZE

4 x 4

The first dimension is the width perpendicular to slots. Second dimension is the length parallel to slots.

LATERAL BRACING

Indicates location of required continuous lateral bracing.

BEARING

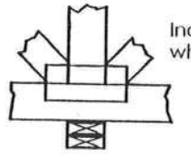

Indicates location of joints at which bearings (supports) occur.

Numbering System

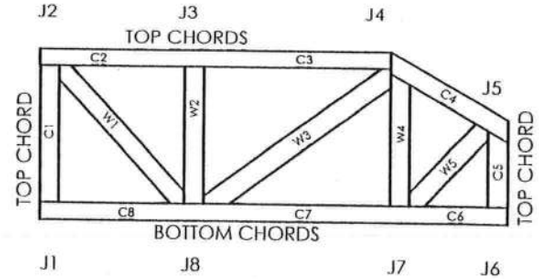

JOINTS AND CHORDS ARE NUMBERED CLOCKWISE AROUND THE TRUSS STARTING AT THE LOWEST JOINT FARTHEST TO THE LEFT.

WEBS ARE NUMBERED FROM LEFT TO RIGHT

CONNECTOR PLATE CODE APPROVALS

BOCA	96-31, 96-67
ICBO	3907, 4922
SBCCI	9667, 9432A
WISC/DILHR	960022-W, 970036-N
NER	561

MiTek® TEE-LOK®

MiTek Engineering Reference Sheet: MII-7473

General Safety Notes

Failure to Follow Could Cause Property Damage or Personal Injury

1. Provide copies of this truss design to the building designer, erection supervisor, property owner and all other interested parties.
2. Cut members to bear tightly against each other.
3. Place plates on each face of truss at each joint and embed fully. Avoid knots and wane at joint locations.
4. Unless otherwise noted, locate chord splices at ¼ panel length (± 6" from adjacent joint.)
5. Unless otherwise noted, moisture content of lumber shall not exceed 19% at time of fabrication.
6. Unless expressly noted, this design is not applicable for use with fire retardant or preservative treated lumber.
7. Camber is a non-structural consideration and is the responsibility of truss fabricator. General practice is to camber for dead load deflection.
8. Plate type, size and location dimensions shown indicate minimum plating requirements.
9. Lumber shall be of the species and size, and in all respects, equal to or better than the grade specified.
10. Top chords must be sheathed or purlins provided at spacing shown on design.
11. Bottom chords require lateral bracing at 10 ft. spacing, or less, if no ceiling is installed, unless otherwise noted.
12. Anchorage and / or load transferring connections to trusses are the responsibility of others unless shown.
13. Do not overload roof or floor trusses with stacks of construction materials.
14. Do not cut or alter truss member or plate without prior approval of a professional engineer.
15. Care should be exercised in handling, erection and installation of trusses.

© 1993 MiTek® Holdings, Inc.

Jerald Cox
Lot 17

COLUMBIA COUNTY BUILDING DEPARTMENT

RESIDENTIAL MINIMUM PLAN REQUIREMENTS AND CHECKLIST FOR FLORIDA BUILDING CODE 2001
ONE (1) AND TWO (2) FAMILY DWELLINGS

ALL REQUIREMENTS ARE SUBJECT TO CHANGE
EFFECTIVE MARCH 1, 2002

ALL BUILDING PLANS MUST INDICATE THE FOLLOWING ITEMS AND INDICATE COMPLIANCE WITH CHAPTER 1606 OF THE FLORIDA BUILDING CODE 2001 BY PROVIDING CALCULATIONS AND DETAILS THAT HAVE THE SEAL AND SIGNATURE OF A CERTIFIED ARCHITECT OR ENGINEER REGISTERED IN THE STATE OF FLORIDA, OR ALTERNATE METHODOLOGIES, APPROVED BY THE STATE OF FLORIDA BUILDING COMMISSION FOR ONE-AND-TWO FAMILY DWELLINGS. FOR DESIGN PURPOSES THE FOLLOWING BASIC WIND SPEED AS PER FIGURE 1606 SHALL BE USED.

WIND SPEED LINE SHALL BE DEFINED AS FOLLOWS: THE CENTERLINE OF INTERSTATE 75.

1. ALL BUILDINGS CONSTRUCTED EAST OF SAID LINE SHALL BE ------- 100 MPH
2. ALL BUILDINGS CONSTRUCTED WEST OF SAID LINE SHALL BE -------110 MPH
3. NO AREA IN COLUMBIA COUNTY IS IN A WIND BORNE DEBRIS REGION

APPLICANT – PLEASE CHECK ALL APPLICABLE BOXES BEFORE SUBMITTAL

GENERAL REQUIREMENTS: Two (2) complete sets of plans containing the following:

Applicant	Plans Examiner	
☑	☐	All drawings must be clear, concise and drawn to scale ("Optional " details that are not used shall be marked void or crossed off). Square footage of different areas shall be shown on plans.
☑	☐	Designers name and signature on document (FBC 104.2.1). If licensed architect or engineer, official seal shall be affixed.
☑	☐	**Site Plan including:** a) Dimensions of lot b) Dimensions of building set backs c) Location of all other buildings on lot, well and septic tank if applicable, and all utility easements. d) Provide a full legal description of property.
☑	☐	**Wind-load Engineering Summary, calculations and any details required** a) Plans or specifications must state compliance with FBC Section 1606 b) The following information must be shown as per section 1606.1.7 FBC a. Basic wind speed (MPH) b. Wind importance factor (I) and building category c. Wind exposure – if more than one wind exposure is used, the wind exposure and applicable wind direction shall be indicated d. The applicable internal pressure coefficient e. Components and Cladding. The design wind pressure in terms of psf (kN/m²), to be used for the design of exterior component and cladding materials not specifally designed by the registered design professional
☑	☐	**Elevations including:**
☑	☐	a) All sides
☑	☐	b) Roof pitch
☑	☐	c) Overhang dimensions and detail with attic ventilation
☑	☐	d) Location, size and height above roof of chimneys
☑	☐	e) Location and size of skylights
☑	☐	f) Building height
☑	☐	e) Number of stories

Floor Plan including:

a) Rooms labeled and dimensioned

b) Shear walls

c) Windows and doors (including garage doors) showing size, mfg., approval listing and attachment specs. (FBC 1707) and safety glazing where needed (egress windows in bedrooms to be shown)

d) Fireplaces (gas appliance) (vented or non-vented) or wood burning with hearth

e) Stairs with dimensions (width, tread and riser) and details of guardrails and handrails

f) Must show and identify accessibility requirements (accesssable bathroom)

Foundation Plan including:

a) Location of all load-bearing wall with required footings indicated as standard Or monolithic and dimensions and reinforcing

b) All posts and/or column footing including size and reinforcing

c) Any special support required by soil analysis such as piling

d) Location of any vertical steel

Roof System:

a) Truss package including:

1. Truss layout and truss details signed and sealed by Fl. Pro. Eng.
2. Roof assembly (FBC 104.2.1 Roofing system, materials, manufacturer, fastening requirements and product evaluation with wind resistance rating)

b) Conventional Framing Layout including:

1. Rafter size, species and spacing
2. Attachment to wall and uplift
3. Ridge beam sized and valley framing and support details
4. Roof assembly (FBC 104.2.1 Roofing systems, materials, manufacturer, fastening requirements and product evaluation with wind resistance rating)

Wall Sections including:

a) Masonry wall

1. All materials making up wall
2. Block size and mortar type with size and spacing of reinforcement
3. Lintel, tie-beam sizes and reinforcement
4. Gable ends with rake beams showing reinforcement or gable truss and wall bracing details
5. All required connectors with uplift rating and required number and size of fasteners for continuous tie from roof to foundation
6. Roof assembly shown here or on roof system detail (FBC 104.2.1 Roofing system, materials, manufacturer, fastening requirements and product evaluation with resistance rating)
7. Fire resistant construction (if required)
8. Fireproofing requirements
9. Shoe type of termite treatment (termiticide or alternative method)
10. Slab on grade
    a. Vapor retarder (6mil. Polyethylene with joints lapped 6 inches and sealed)
    b. Must show control joints, synthetic fiber reinforcement or Welded fire fabric reinforcement and supports
11. Indicate where pressure treated wood will be placed
12. Provide insulation R value for the following:
    a. Attic space
    b. Exterior wall cavity
    c. Crawl space (if applicable)

☑ ☐ b) Wood frame wall

1. All materials making up wall
2. Size and species of studs
3. Sheathing size, type and nailing schedule
4. Headers sized
5. Gable end showing balloon framing detail or gable truss and wall hinge bracing detail
6. All required fasteners for continuous tie from roof to foundation (truss anchors, straps, anchor bolts and washers)
7. Roof assembly shown here or on roof system detail (FBC104.2.1 Roofing system, materials, manufacturer, fastening requirements and product evaluation with wind resistance rating)
8. Fire resistant construction (if applicable)
9. Fireproofing requirements
10. Show type of termite treatment (termiticide or alternative method)
11. Slab on grade
    a. Vapor retarder (6Mil. Polyethylene with joints lapped 6 inches and sealed
    b. Must show control joints, synthetic fiber reinforcement or welded wire fabric reinforcement and supports
12. Indicate where pressure treated wood will be placed
13. Provide insulation R value for the following:
    a. Attic space
    b. Exterior wall cavity
    c. Crawl space (if applicable)

☐ ☐ c) Metal frame wall and roof (designed, signed and sealed by Florida Prof. Engineer or Architect)

Floor Framing System:

☑ ☐ a) Floor truss package including layout and details, signed and sealed by Florida Registered Professional Engineer

☑ ☐ b) Floor joist size and spacing

☑ ☐ c) Girder size and spacing

☑ ☐ d) Attachment of joist to girder

☑ ☐ e) Wind load requirements where applicable

Plumbing Fixture layout

Electrical layout including:

☑ ☐ a) Switches, outlets/receptacles, lighting and all required GFCI outlets identified

☑ ☐ b) Ceiling fans

☑ ☐ c) Smoke detectors

☑ ☐ d) Service panel and sub-panel size and location(s)

☑ ☐ e) Meter location with type of service entrance (overhead or underground)

☑ ☐ f) Appliances and HVAC equipment

HVAC information

☑ ☐ a) Manual J sizing equipment or equivalent computation

☑ ☐ b) Exhaust fans in bathroom

☑ ☐ **Energy Calculations** (dimensions shall match plans)

☐ ☐ **Gas System** Type (LP or Natural) Location and BTU demand of equipment

Disclosure Statement for Owner Builders

Notice Of Commencement

Private Potable Water

a) Size of pump motor

b) Size of pressure tank

c) Cycle stop valve if used

Residential System Sizing Calculation

Summary

Erkinger Homes

Lake City, Fl

Project Title:
Lt 17 Phase 1 Emerald Cove

Code Only
Professional Version
Climate: North

9/26/2005

Location for weather data: Jacksonville - User customized: Latitude(30) Temp Range(M)
Humidity data: Interior RH (50%) Outdoor wet bulb (78F) Humidity difference(49gr.)

Winter design temperature	32	F	Summer design temperature	99	F
Winter setpoint	70	F	Summer setpoint	75	F
Winter temperature difference	38	F	Summer temperature difference	24	F
Total heating load calculation	**38221**	**Btuh**	**Total cooling load calculation**	**38830**	**Btuh**
Submitted heating capacity	% of calc	Btuh	Submitted cooling capacity	% of calc	Btuh
Total (Electric Heat Pump)	109.9	42000	Sensible (SHR = 1)	142.9	42000
Heat Pump + Auxiliary(0.0kW)	109.9	42000	Latent	0.0	0
			Total (Electric Heat Pump)	108.2	42000

WINTER CALCULATIONS

Winter Heating Load (for 2195 sqft)

Load component			Load	
Window total	390	sqft	10764	Btuh
Wall total	1602	sqft	5122	Btuh
Door total	57	sqft	822	Btuh
Ceiling total	2195	sqft	2854	Btuh
Floor total	212	ft	6530	Btuh
Infiltration	247	cfm	10309	Btuh
Subtotal			**36401**	**Btuh**
Duct loss			1820	Btuh
TOTAL HEAT LOSS			**38221**	**Btuh**

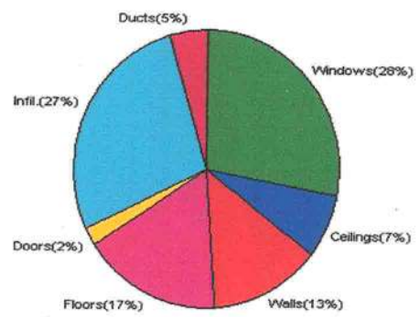

SUMMER CALCULATIONS

Summer Cooling Load (for 2195 sqft)

Load component			Load	
Window total	390	sqft	9048	Btuh
Wall total	1602	sqft	3843	Btuh
Door total	57	sqft	726	Btuh
Ceiling total	2195	sqft	3468	Btuh
Floor total			0	Btuh
Infiltration	228	cfm	6027	Btuh
Internal gain			3600	Btuh
Subtotal(sensible)			**26712**	**Btuh**
Duct gain			2671	Btuh
Total sensible gain			**29383**	**Btuh**
Latent gain(infiltration)			7607	Btuh
Latent gain(internal)			1840	Btuh
Total latent gain			**9447**	**Btuh**
TOTAL HEAT GAIN			**38830**	**Btuh**

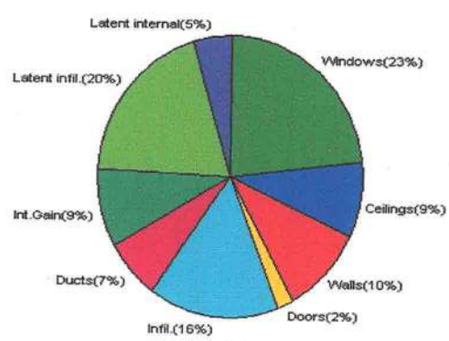

EnergyGauge® System Sizing based on ACCA Manual J.
PREPARED BY: [signature]
DATE: 9-26-05

EnergyGauge® FLRCPB v3.4

System Sizing Calculations - Winter

Residential Load - Component Details

Erkinger Homes

Lake City, Fl

Project Title:
Lt 17 Phase 1 Emerald Cove

Code Only
Professional Version
Climate: North

Reference City: Jacksonville (User customized) Winter Temperature Difference: 38.0 F

9/26/2005

Window	Panes/SHGC/Frame/U	Orientation	Area X	HTM=	Load
1	2, Clear, Metal, DEF	N	102.0	27.6	2815 Btuh
2	2, Clear, Metal, DEF	E	40.0	27.6	1104 Btuh
3	2, Clear, Metal, DEF	S	210.0	27.6	5796 Btuh
4	2, Clear, Metal, DEF	W	38.0	27.6	1049 Btuh
	Window Total		390		10764 Btuh
Walls	Type	R-Value	Area X	HTM=	Load
1	Frame - Exterior	11.0	1399	3.4	4757 Btuh
2	Frame - Adjacent	11.0	203	1.8	365 Btuh
	Wall Total		1602		5122 Btuh
Doors	Type		Area X	HTM=	Load
1	Wood - Exter		36	17.5	629 Btuh
2	Wood - Adjac		21	9.2	193 Btuh
	Door Total		57		822Btuh
Ceilings	Type	R-Value	Area X	HTM=	Load
1	Under Attic	30.0	2195	1.3	2854 Btuh
	Ceiling Total		2195		2854Btuh
Floors	Type	R-Value	Size X	HTM=	Load
1	Slab-On-Grade Edge Insul	0	212.0 ft(p)	30.8	6530 Btuh
	Floor Total		212		6530 Btuh
Infiltration	Type	ACH X	Building Volume	CFM=	Load
	Natural	0.40	21950(sqft)	147	6129 Btuh
	Mechanical			100	4180 Btuh
	Infiltration Total			247	10309 Btuh

Totals for Heating	**Subtotal**	**36401 Btuh**
	Duct Loss(using duct multiplier of 0.05)	**1820 Btuh**
	Total Btuh Loss	**38221 Btuh**

Key: Window types (SHGC - Shading coefficient of glass as SHGC numerical value or as clear or tint)
(Frame types - metal, wood or insulated metal)
(U - Window U-Factor or 'DEF' for default)
(HTM - ManualJ Heat Transfer Multiplier)

Key: Floor size (perimeter(p) for slab-on-grade or area for all other floor types)

System Sizing Calculations - Summer

Residential Load - Component Details

Erkinger Homes

Lake City, Fl

Project Title:
Lt 17 Phase 1 Emerald Cove

Code Only
Professional Version
Climate: North

Reference City: Jacksonville (User customized) Summer Temperature Difference: 24.0 F 9/26/2005

Window	Type Panes/SHGC/U/InSh/ExSh	Ornt	Overhang Len	Overhang Hgt	Window Area(sqft) Gross	Shaded	Unshaded	HTM Shaded	HTM Unshaded	Load
1	2, Clear, DEF, B, N	N	1.5	8	102.0	0.0	102.0	17	17	1734 Btuh
2	2, Clear, DEF, B, N	E	1.5	8	40.0	0.0	40.0	17	48	1920 Btuh
3	2, Clear, DEF, B, N	S	1.5	8	210.0	210.0	0.0	17	26	3570 Btuh
4	2, Clear, DEF, B, N	W	1.5	8	38.0	0.0	38.0	17	48	1824 Btuh
	Window Total				390					9048 Btuh

Walls	Type	R-Value	Area	HTM	Load
1	Frame - Exterior	11.0	1399.0	2.5	3498 Btuh
2	Frame - Adjacent	11.0	203.0	1.7	345 Btuh
	Wall Total		1602.0		3843 Btuh

Doors	Type	Area	HTM	Load
1	Wood - Exter	36.0	12.7	459 Btuh
2	Wood - Adjac	21.0	12.7	268 Btuh
	Door Total	57.0		726 Btuh

Ceilings	Type/Color	R-Value	Area	HTM	Load
1	Under Attic/Dark	30.0	2195.0	1.6	3468 Btuh
	Ceiling Total		2195.0		3468 Btuh

Floors	Type	R-Value	Size	HTM	Load
1	Slab-On-Grade Edge Insulation	0.0	212.0 ft(p)	0.0	0 Btuh
	Floor Total		212.0		0 Btuh

Infiltration	Type	ACH	Volume	CFM=	Load
	Natural	0.35	21950	128.3	3387 Btuh
	Mechanical			100	2640 Btuh
	Infiltration Total			228	6027 Btuh

Internal gain	Occupants		Btuh/occupant		Appliance	Load
	8	X	300	+	1200	3600 Btuh

Totals for Cooling		
	Subtotal	**26712 Btuh**
	Duct gain(using duct multiplier of 0.10)	**2671 Btuh**
	Total sensible gain	**29383 Btuh**
	Latent infiltration gain (for 49 gr. humidity difference)	**7607 Btuh**
	Latent occupant gain (8 people @ 230 Btuh per person)	**1840 Btuh**
	Latent other gain	**0 Btuh**
	TOTAL GAIN	**38830 Btuh**

Key: Window types (SHGC - Shading coefficient of glass as SHGC numerical value or as clear or tint)
(U - Window U-Factor or 'DEF' for default)
(InSh - Interior shading device: none(N), Blinds/Daperies(B) or Roller Shades(R))
(ExSh - Exterior shading device: none(N) or numerical value)
(Ornt - compass orientation)

ELK Premium Roofing

March 6, 2002

Subject: Elk Product Approval Information

All Prestique® and Capstone® products manufactured in Tuscaloosa, AL are certified under the Miami – Dade County Building Code Office (BCCO). These products also meet the requirements for the Florida Building Code since they are MD approved. The following test protocols must be passed by each of the products in order for MD product certification:
ASTM D3462
PA 100 (110 mph uplift and wind driven rain resistance)
PA 107 (Modified ASTM D3161 - 110 mph wind uplift resistance)

The nailing patterns that were used during the PA 100 and PA 107 wind test protocols for the Prestique and Capstone products are listed below. Also listed below are the Miami – Dade Notice of Acceptance Numbers (NOA).

Raised Profile, Prestique High Definition, Prestique 25, or Prestique 30 –
PA 100 = 4 nails
PA 107 = 5 nails
MD NOA# = 01-1226.04

Prestique I 35 or Prestique I* –
PA 100 = 4 nails
PA 107 = 5 nails
MD NOA# = 01-1226.05

Prestique Plus or Prestique Gallery Collection* –
PA 100 = 4 nails
PA 107 = 4 nails
MD NOA# = 01-1226.03

Capstone*
PA 100 = 4 Nails
PA 107 = 4 Nails
MD NOA# = 01-0523.01
* As per the Elk Limited Warranty, six nails are required for the Elk high wind warranty.

If there are any questions please contact:

Mike Reed – Technical Manager (205) 342-0287 or Daniel DeJarnette – QA Engineer (205) 342-0298

PRESTIQUE®
HIGH DEFINITION®

RAISED PROFILE™

High Definition

Product size	13¼"x 39⅜"	30-year limited warranty period: non-prorated coverage for shingles and application labor for the initial 5 years, plus an option for transferability*; prorated coverage for application labor and shingles for balance of limited warranty period; 5-year limited wind warranty*
Exposure	5⅝"	
Pieces/Bundle	16	
Bundles/Square	4/99.6 sq.ft.	
Squares/Pallet	11	

Product size	13¼"x 38⅜"	30-year limited warranty period: non-prorated coverage for shingles and application labor for the initial 5 years, plus an option for transferability*; prorated coverage for application labor and shingles for balance of limited warranty period; 5-year limited wind warranty*.
Exposure	5⅝"	
Pieces/Bundle	22	
Bundles/Square	3/100 sq.ft.	
Squares/Pallet	16	

High Definition

Product size	13¼"x 39⅜"	40-year limited warranty period: non-prorated coverage for shingles and application labor for the initial 5 years, plus an option for transferability*; prorated coverage for application labor and shingles for balance of limited warranty period; 5-year limited wind warranty*.
Exposure	5⅝"	
Pieces/Bundle	16	
Bundles/Square	4/99.6 sq.ft.	
Squares/Pallet	14	

HIP AND RIDGE SHINGLES

Size: 12"x 12"
Exposure: 5⅝"
Pieces/Bundle: 45
Coverage: 4 Bundles = 100 linear feet

High Definition

Product size	13¼"x 38⅜"	30-year limited warranty period: non-prorated coverage for shingles and application labor for the initial 5 years, plus an option for transferability*; prorated coverage for application labor and shingles for balance of limited warranty period; 5-year limited wind warranty*.
Exposure	5⅝"	
Pieces/Bundle	22	
Bundles/Square	3/100 sq.ft.	
Squares/Pallet	16	

52 Bundles/Pallet
12 Pallets/Truck
638 Bundles/Truck
19 Pieces/Bundle
1 Bundle = 120.33 linear feet

Available Colors: Antique Slate, Weathered Wood, Shakewood, Sablewood, Hickory, Barkwood**, Forest Green, Wedgewood**, Birchwood**, Sandalwood
Gallery Collection: Balsam Forest*, Weathered Sage*, Sierra Sunset*

All Prestique, Raised Profile and Seal-A-Ridge roofing products contain Elk WindGuard® sealant. WindGuard activates with the sun's heat, bonding shingles into a wind and weather resistant cover that resists blow-offs and leaks.

Check for availability with built-in StainGuard® treatment to inhibit the discoloration of roofing granules caused by the growth of certain types of algae. Not available in Sablewood.

All Prestique and Raised Profile shingles meet UL® Wind Resistant (UL 997) and Class "A" Fire Ratings (UL 790); and ASTM Specifications D 3018, Type-I; D 3161, Type-I; E 108 and the requirements of ASTM D 3462.

All Prestique and Raised Profile shingles meet the latest Metro Dade building code requirements.

*See actual limited warranty for conditions and limitations.
**Check for product availability.

SPECIFICATIONS

SCOPE: Work includes furnishing all labor, materials and equipment necessary to complete installation of (name) shingles specified herein. Color shall be (name of color). Hip and ridge type to be Elk Seal-A-Ridge with formula *FLX*.

All exposed metal surfaces (flashing, vents, etc.) to be painted with matching Elk roof accessory paint.

PREPARATION OF ROOF DECK: Roof deck to be dry, well-seasoned 1" x 6" (25/4mm x 152/4mm) board; exterior-grade plywood (exposure 1 rated sheathing) at least 1/2" (12.5mm) thick conforming to the specifications of the American Plywood Association; 7/16" (11.0/4mm) oriented strandboard; or chipboard. Vise the redundant plywood decks are NOT approved substrates for Elk shingles. Consult Elk Field Service for application specifications over other decks and other slopes.

MATERIALS: Underlayment for standard roof slopes, 4" per foot (101.6/304.4mm) or greater: 30#/lb non-perforated No. 15 or 30 asphalt-saturated felt underlayment. For low slopes, 4" per foot (101.6/304.8mm) to a minimum of 2" per foot (50.8/304.8mm): use two plies of underlayment overlapped a minimum of 19". Fasteners shall be of sufficient length and holding power for securing material as required by the application instructions printed on shingle wrapper.

For areas where algae is a problem, shingles shall be (name) with StainGuard treatment, as manufactured by the Elk Tuscaloosa plant. Hip and ridge type to be Seal-A-Ridge with formula *FLX* with StainGuard treatment.

Complete application instructions are published by Elk and printed on the back of every shingle bundle. All warranties are contingent upon the correct installation as shown on the instructions. These instructions are the minimum required to meet Elk application requirements. In some areas, building codes may require additional application techniques or methods beyond our instructions. In these cases, the local code must be followed. Under no circumstances will Elk accept application requirements less than those contained in its application instructions.

For specifications in CSI format, call 800.354.SPEC (7732) or e-mail specs@elkcorp.com.

SOUTHEAST & ATLANTIC OFFICE: 800.945.5551

CORPORATE HEADQUARTERS: 800.354.7732

PLANT LOCATION: 800.945.5545

ELK
www.elkcorp.com

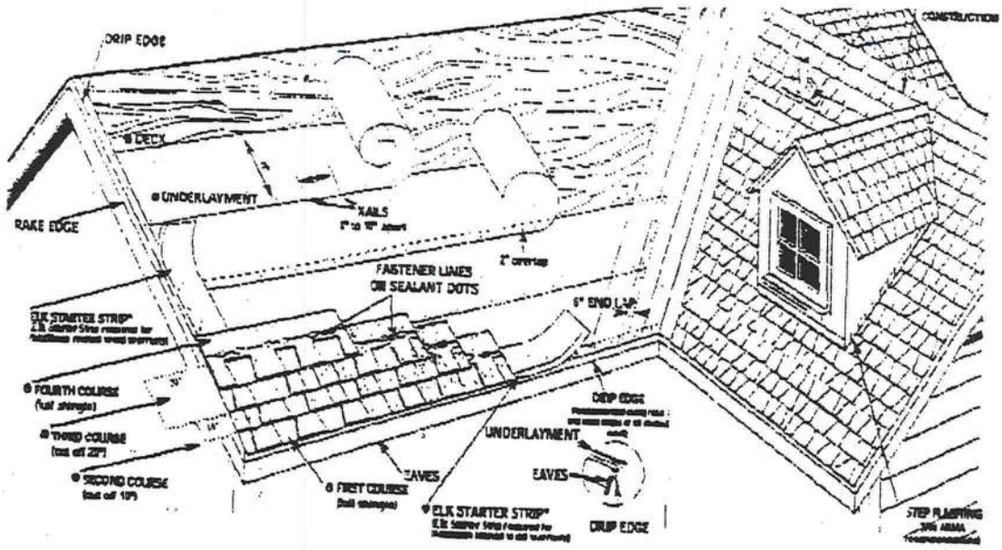

VALLEY CONSTRUCTION OPTION (Cascade Open and California Closed are also acceptable) NOTE: For complete ARMA valley installation details, see ARMA Residential Asphalt Roofing Manual.

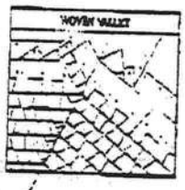

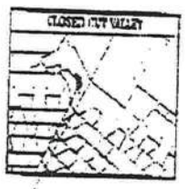

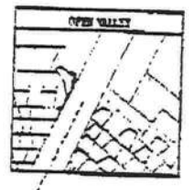

DIRECTIONS FOR APPLICATION

These application instructions are the minimum required to meet Elk's application requirements. Your failure to follow these instructions may void the product warranty in some areas. The ARMA codes may require additional application techniques or materials beyond our instructions. In these cases, the local codes must be followed. Under no circumstances will Elk accept application requirements that are less than those stated here. Shingles should not be jammed tightly together. All attics should be properly ventilated. Note: It is not necessary to remove tape on back of shingle.

DECK PREPARATION

Roof decks should be dry, well-seasoned 1" x 6" boards or outer or grade plywood (minimum 3/8" thick and conform to the specifications of the American Plywood Association or 7/16" oriented strandboard, or 7/16" chipboard.

UNDERLAYMENT

Apply underlayment (Non-Perforated No. 15 or 30 asphalt felt). Cover only edge at eaves only.

For low slope (2/12 to 4/12), completely cover the deck with two plies of underlayment overlapping a minimum of 19". Begin by fastening a 19" wide strip of underlayment parallel to the eaves. Place a full 36" wide sheet over the starter, horizontally placed along the eaves and completely overlapping the starter strip.

EAVE FLASHING FOR ICE DAMS (ASK A ROOFING CONTRACTOR, REFER TO ARMA MANUAL OR CHECK LOCAL CODES)

For standard slope (4/12 to less than 21/12), use cold roll roofing at no less than 36 inches over the full underlayment coverage from the eave edge to a point at least 24" beyond the inside wall of the living space below or one layer of a self-adhered eave and flashing membrane.

For low slope (2/12 up to 4/12), use a continuous layer of approved cement between the two plies of underlayment from the eave edge up to a point at least 24" beyond the inside wall of the living space below or one layer of a self-adhered eave and flashing membrane.

Consult the Elk Field Service Department for application specifications over other decks and other slopes.

STARTER SHINGLE COURSE

USE AN ELK STARTER STRIP OR A STRIP SHINGLE INVERTED WITH THE HEADLAP APPLIED AT THE EAVE EDGE. With at least 1" overhang from the end of the first shingle, start at the rake edge overhanging the edge 1/2" to 3/4". Fasten 2" from the lower outer and 1" from each side. Shingles may be secured with a course alignment of 45" on the roof.

FIRST COURSE

Start at rake and continue course with full shingles and finish with the starter course.

SECOND COURSE

Start at the rake with the shingle having 19" trimmed off and continue across roof with full shingles.

THIRD COURSE

Start at the rake with the shingle having 22" trimmed off and continue across roof with full shingles.

FOURTH COURSE

Start at the rake and continue with full shingles across roof.

FIFTH AND SUCCEEDING COURSES

Repeat application as shown for second, third, and fourth courses. Do not rack shingles straight up the roof.

VALLEY CONSTRUCTION

Open, woven and closed cut valleys are acceptable when applied by Asphalt Roofing Manufacturers Association (ARMA) recommended procedures. For metal valleys, use 36" wide vertical underlayment prior to applying 18" metal flashing. Secure edge with nails. No nails are to be within 6" of valley centers.

RIDGE CONSTRUCTION

For ridge construction use Elk's "A" Seal-A-Ridge® with formula FLX™ (See ridge package for installation instructions.)

FASTENERS

While nailing is the preferred method for Elk shingles, Elk will accept fastening methods according to the following instructions.

Always nail or staple through the fastener line or on exposed fastener area, nail or staple between zone in line with cement dots.

NAILS: Corrosion resistant, 3/8" head, minimum 12-gauge roofing nails. Elk recommends 1-1/4" for new roofs and 1-1/2" for roof-overs. In cases where vent are applying shingles to a roof that has an exposed overhang, for new roofs only, 3/4" long shingle nails are allowed to be used from the eave's edge up 6 rows up (control any is over the overhang line, 1" long shingle nails allowed for re-roof.

STAPLES: Corrosion resistant, 16 gauge minimum, crown width minimum of 15/16" Note: An improperly applied staple can cause result in raised staples that can cause a fastener/sealant clearance and can prevent sealing.

Fasteners should be long enough to cause 3/4" deck penetration or penetration through deck, whichever is less.

MANSARD APPLICATIONS

Correct fastening is critical to the performance of the roof. For slopes exceeding 50° (or 21/12) use six fasteners per shingle. Locate fasteners in the fastener area 1" from each side and place the remaining four fasteners evenly spaced along the length of the double thickness laminated area. Only fastening methods according to the above instructions are acceptable.

LIMITED WIND WARRANTY

- For a Limited Wind Warranty, all Prestique and Raised Profile™ shingles must be applied with 4 properly placed fasteners, or in the case of mansard applications, 6 properly placed fasteners per shingle.
- For a Limited Wind Warranty up to 110 MPH for Prestique Gallery Collection or Prestique Plus or 90 MPH for Prestique I shingles, must be applied with 6 properly placed NAILS per shingle. SHINGLES APPLIED WITH STAPLES WILL NOT QUALIFY FOR THIS ENHANCED LIMITED WIND WARRANTY. Also, Elk Starter Strip shingles must be applied at the eaves and rake edges to qualify. Prestique Plus, Prestique Gallery Collection and Prestique I shingles of the enhanced Limited Wind Warranty. Under no circumstances should the Elk Shingles or the Elk Starter Strip overhang the edge of roof more than 3/4 of an inch.

HELP STOP BLOW-OFFS AND CALL-BACKS

A minimum of four fasteners must be driven into the DOUBLE THICKNESS (laminated area of the shingle. Nails or staples must be placed along – and through – the "fastener line" or on product without fastener lines, nail or staple between and in line with sealant dots. CAUTION: Do not use fastener line for shingle alignment.

Refer to local codes which in some areas may require specific application techniques beyond those Elk has specified.

All Prestique and Raised Profile shingles have a Class A Wind Resistance Rating when applied in accordance with these instructions using nails or staples on re-roofs as well as new construction.

CAUTION TO WHOLESALER: Careless and improper stacking or handling can harm shingles and/or sealant. Keep these shingles carefully covered, dry, reasonably cool, and protected from the weather. Do not store near various sources of heat, do not store in direct sunlight until applied. DO NOT DOUBLE STACK. Systematically rotate all stock so that the material that has been stored the longest will be the first to be moved out.

© 2002 Elk Corporation of Dallas.

All trademarks, TM, and registered trademarks of Elk Corporation of Dallas, except Prestique, Raised Profile, Prestique Gallery Collection and FLX are trademarks pending registration of Elk Corporation of Dallas. UL is a registered trademark of Underwriters Laboratories, Inc.

ELK

www.elkcorp.com

Architectural Testing

AAMA/NWWDA 101/I.S.2-97 TEST REPORT

Rendered to

MI HOME PRODUCTS, INC.
650 West Market Street
P.O. Box 370
Gratz, Pennsylvania 17030-0370

Report No: 01-41134.01
Test Date: 03/07/02
Report Date: 03/26/02
Expiration Date: 03/07/06

Project Summary: Architectural Testing, Inc. (ATI) was contracted by MI Home Products, Inc. to perform tests on Series/Model 650 Fin, aluminum single hung window at their facility located in Elizabethville, Pennsylvania. The samples tested successfully met the performance requirements for a H-R40 52 x 72 rating.

Test Specification: The test specimen was evaluated in accordance with AAMA/NWWDA 101/I.S.2-97, *Voluntary Specifications for Aluminum, Vinyl (PVC) and Wood Windows and Glass Doors.*

Test Specimen Description:

Series/Model: 650 Fin

Type: Aluminum Single Hung Window

Overall Size: 4' 4-1/4" wide by 6' 0-3/8" high

Active Sash Size: 4' 1-3/4" wide by 3' 0-5/8" high

Daylight Opening Size: 3' 11-3/8" wide by 2' 9-1/2" high

Screen Size: 4' 0-1/4" wide by 2' 11-1/8" high

Finish: All aluminum was white.

Glazing Details: The active and fixed lites utilized 5/8" thick, sealed insulating glass constructed from two sheets of 1/8" thick, clear annealed glass and a metal reinforced butyl spacer system. The active sash was channel glazed utilizing a flexible vinyl wrap-around gasket. The fixed lite was interior glazed against double-sided adhesive foam tape and secured with PVC snap-in glazing beads.

130 Derry Court
York, PA 17402-9405
phone: 717.764.7700
fax: 717.764.4129
www.archtest.com

Allen N. Reeves
1 APRIL 2002

REEVES ☆ CERTIFICATE NO. 18354 ☆ STATE OF FLORIDA ☆ PROFESSIONAL ENGINEER

Test Specimen Description: (Continued)

Weatherstripping:

Description	Quantity	Location
0.230" high by 0.270" backed polypile with center fin	1 Row	Fixed meeting rail
0.250" high by 0.187" backed polypile with center fin	2 Rows	Active sash stiles
1/2" x 1/2" dust plug	4 Pieces	Active sash, top and bottom of stiles
1/4" foam-filled vinyl bulb seal	1 Row	Active sash, bottom rail

Frame Construction: The frame was constructed of extruded aluminum with coped, butted, and sealed corners fastened with two #8 x 1" screws through the head and sill into each jamb screw boss. End caps were utilized on the ends of the fixed meeting rail and secured with two 1-1/4" screws per cap. Meeting rail was secured to the frame utilizing two 1-1/4" screws.

Sash Construction: The sash was constructed of extruded aluminum with coped, butted, and sealed corners fastened with two #8 x 1-1/2" screws through the rails into each jamb screw boss.

Screen Construction: The screen was constructed from roll-formed aluminum with keyed corners. The fiberglass mesh was secured with a flexible spline.

Hardware:

Description	Quantity	Location
Metal cam lock with keeper		Midspan, active meeting rail with keeper adjacent on fixed meeting rail
Plastic tilt latch	2	Active sash, meeting rail ends
Metal tilt pin	2	Active sash, bottom rail ends
Balance assembly	2	One in each jamb
Screen plunger	2	4" from rail ends on top rail

ALLEN N. REEVES
CERTIFICATE NO. 18334
STATE OF FLORIDA
PROFESSIONAL ENGINEER

Allen N. Reeves
1 APRIL 2002

Test Specimen Description: (Continued)

Drainage: Sloped sill

Reinforcement: No reinforcement was utilized.

Installation: The test specimen was installed into a 2 x 8 #2 Spruce-Pine-Fir wood test buck with #8 x 1-5/8" drywall screws every 8" on center around the nail fin. Polyurethane was used as a sealant under the nail fin and around the exterior perimeter.

Test Results:

The results are tabulated as follows:

Paragraph	Title of Test - Test Method	Results	Allowed
2.2.1.6.1	Operating Force	11 lbs	30 lbs max
	Air Infiltration (ASTM E 283-91) @ 1.57 psf (25 mph)	0.13 cfm/ft^2	0.3 cfm/ft^2 max

Note #1: The tested specimen meets the performance levels specified in AAMA/NWWDA 101/I.S. 2-97 for air infiltration.

	Water Resistance (ASTM E 547-00) (with and without screen) WTP = 2.86 psf	No leakage	No leakage
2.1.4.1	Uniform Load Deflection (ASTM E 330-97) (Measurements reported were taken on the meeting rail) (Loads were held for 33 seconds)		
	@ 25.9 psf (positive)	0.42"*	0.26" max.
	@ 34.7 psf (negative)	0.43"*	0.26" max.

**Exceeds L/175 for deflection, but passes all other test requirements.*

2.1.4.2	Uniform Load Structural (ASTM E 330-97) (Measurements reported were taken on the meeting rail) (Loads were held for 10 seconds)		
	@ 38.9 psf (positive)	0.02"	0.18" max.
	@ 52.1 psf (negative)	0.02"	0.18" max.

Allen N. Reeves
1 APRIL 2002

ALLEN N. REEVES
CERTIFICATE
NO. 1937
STATE OF
FLORIDA
PROFESSIONAL ENGINEER

Test Specimen Description: (Continued)

Paragraph	Title of Test - Test Method	Results	Allowed
2.2.1.6.2	Deglazing Test (ASTM E 987)		
	In operating direction at 70 lbs		
	Meeting rail	0.12"/25%	0.50"/100%
	Bottom rail	0.12"/25%	0.50"/100%
	In remaining direction at 50 lbs		
	Left stile	0.06"/12%	0.50"/100%
	Right stile	0.06"/12%	0.50"/100%
	Forced Entry Resistance (ASTM F 588-97)		
	Type: A		
	Grade: 10		
	Lock Manipulation Test	No entry	No entry
	Tests A1 through A5	No entry	No entry
	Test A7	No entry	No entry
	Lock Manipulation Test	No entry	No entry
Optional Performance			
4.3	Water Resistance (ASTM E 547-00) (with and without screen) WTP = 6.00 psf	No leakage	No leakage
	Uniform Load Deflection (ASTM E 330-97) (Measurements reported were taken on the meeting rail) (Loads were held for 33 seconds)		
	@ 45.0 psf (positive)	0.47"*	0.26" max.
	@ 47.2 psf (negative)	0.46"*	0.26" max.

**Exceeds L/175 for deflection, but passes all other test requirements.*

	Uniform Load Structural (ASTM E 330-97) (Measurements reported were taken on the meeting rail) (Loads were held for 10 seconds)		
	@ 67.5 psf (positive)	0.05"	0.18" max.
	@ 70.8 psf (negative)	0.05"	0.18" max.

Allen N. Reeves
1 APRIL 2002

ALLEN N. REEVES
CERTIFICATE NO. 18334
STATE OF FLORIDA
PROFESSIONAL ENGINEER

Detailed drawings, representative samples of the test specimen, and a copy of this report will be retained by ATI for a period of four years. The above results were secured by using the designated test methods and they indicate compliance with the performance requirements of the above referenced specification. This report does not constitute certification of this product, which may only be granted by the certification program administrator.

For ARCHITECTURAL TESTING, INC:

Mark A. Hess
Technician

Allen N. Reeves, P.E.
Director - Engineering Services
1 APRIL 2002

MAH:nib
01-41134.01

ALLEN N. REEVES
CERTIFICATE
NO. 19[illegible]
STATE OF
FLORIDA
PROFESSIONAL ENGINEER

OXXO

Opaque Inswing Unit

COP-WL-MA0105-02

FIBERGLASS DOORS

APPROVED ARRANGEMENT:

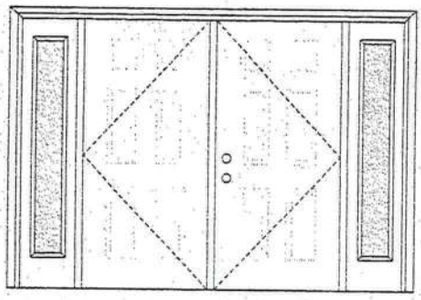

Double Door with 2 Sidelites
Maximum unit size = 8'4" x 6'8"

Warnock Hersey

Test Data Review Certificate #3026447A; #3026447B; #3026447C and COP/Test Report Validation Matrix #3026447A-001, 002, 003; #3026447B-001, 002, 003; #3026447C-001, 002, 003 provides additional information - available from the ITS/WH website (www.etisemko.com), the Masonite website (www.masonite.com) or the Masonite technical center.

Note:
Units of other sizes are covered by this report as long as the panels used do not exceed 3'0" x 6'8".

Design Pressure

+55.0/-55.0

limited water unless special threshold design is used.

Large Missile Impact Resistance

Hurricane protective system (shutters) is REQUIRED

Actual design pressure and impact resistant requirements for a specific building design and geographic location is determined by ASCE 7-national, state or local building codes specify the edition required.

MINIMUM ASSEMBLY DETAIL:

Compliance requires that minimum assembly details have been followed – see MAD-WL-MA0005-02 or MAD-WL-MA0008-02 and MAD-WL-MA0041-02.

MINIMUM INSTALLATION DETAIL:

Compliance requires that minimum installation details have been followed – see MID-WL-MA0005-02.

APPROVED DOOR STYLES:

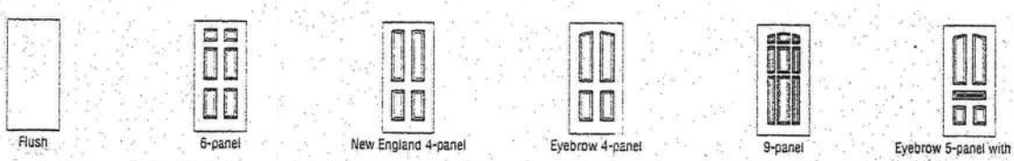

Flush | 6-panel | New England 4-panel | Eyebrow 4-panel | 9-panel | Eyebrow 5-panel with scroll

Oakcraft Wood Grain Textured FIBERGLASS ENTRY DOORS

ARTEK™ Non-Textured Fiberglass Entry Doors

PREMDOR Collection Premium Quality Doors

Exclusively from Masonite® Masonite International Corporation

June 17, 2002

Our continuing program of product improvement makes specifications, design and product detail subject to change without notice.

OXXO

Opaque Inswing Unit

COP-WL-MA0105-02

FIBERGLASS DOORS

APPROVED SIDELITE STYLES:

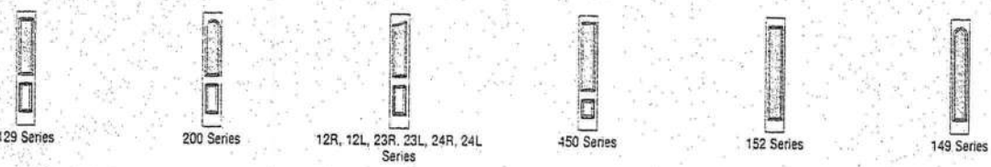

129 Series | 200 Series | 12R, 12L, 23R, 23L, 24R, 24L Series | 450 Series | 152 Series | 149 Series

CERTIFIED TEST REPORTS:

CTLA-772W-2

Certifying Engineer and License Number: Ramesh Patel, P.E./20224

Unit Tested in Accordance with Miami-Dade BCCO PA202.

Door panels constructed from 0.075" minimum thick fiberglass skins. Both stiles constructed of 1-5/8" laminated lumber. Top end rails constructed of 31/32" wood. Bottom end rails constructed of 31/32" wood composite. Interior cavity of slab filled with rigid polyurethane foam core.

Frame constructed of wood with an extruded aluminum threshold.

PRODUCT COMPLIANCE LABELING:

TESTED IN
ACCORDANCE WITH
MIAMI-DADE BCCO PA202

COMPANY NAME
CITY, STATE

To the best of my knowledge and ability the above side-hinged exterior door unit conforms to the requirements of the 2001 Florida Building Code, Chapter 17 (Structural Tests and Inspections).

Kurt L Balthazor

State of Florida, Professional Engineer
Kurt Balthazor, P.E. – License Number 56533

Warnock Hersey

Test Data Review Certificate #3026447A; #3026447B; #3026447C and COP/Test Report Validation Matrix #3026447A-001, 002, 003; #3026447B-001, 002, 003; #3026447C-001, 002, 003 provides additional information - available from the ITS/WH website (www.etlsemko.com), the Masonite website (www.masonite.com) or the Masonite technical center.

Oakcraft Wood Grain Textured FIBERGLASS ENTRY DOORS

ARTEK™ Non-Textured Fiberglass Entry Doors

PREMDOR Collection Premium Quality Doors

Exclusively from Masonite® Masonite International Corporation

June 17, 2002

Our continuing program of product improvement makes specifications, design and product detail subject to change without notice.

X
Glazed Inswing Unit

COP-WL-JH4141-02

WOOD-EDGE STEEL DOORS

APPROVED ARRANGEMENT:

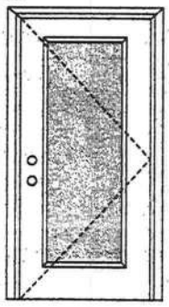

Note:
Units of other sizes are covered by this report as long as the panel used does not exceed 3'0" x 6'8".

Warnock Hersey

Test Data Review Certificate #3026447A and COP/Test Report Validation Matrix #3026447A-001 provides additional information - available from the ITS/WH website (www.etisemko.com), the Masonite website (www.masonite.com) or the Masonite technical center.

Single Door
Maximum unit size = 3'0" x 6'8"

Design Pressure
+40.5/-40.5
Limited water unless special threshold design is used.

Large Missile Impact Resistance
Hurricane protective system (shutters) is REQUIRED.

Actual design pressure and impact resistant requirements for a specific building design and geographic location is determined by ASCE 7-national, state or local building codes specify the edition required.

MINIMUM ASSEMBLY DETAIL:

Compliance requires that minimum assembly details have been followed – see MAD-WL-MA0001-02 and MAD-WL-MA0041-02.

MINIMUM INSTALLATION DETAIL:

Compliance requires that minimum installation details have been followed – see MID-WL-MA0001-02.

APPROVED DOOR STYLES:

1/4 GLASS:

100 Series

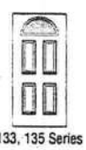
133, 135 Series

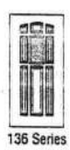
136 Series

680 Series

822 Series

1/2 GLASS:

105 Series*

106, 160 Series*

129 Series*

200 Series*

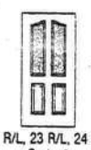
12 R/L, 23 R/L, 24 R/L Series*

107 Series*

108 Series

304 Series

*This glass kit may also be used in the following door styles: 5-panel; 5-panel with scroll; Eyebrow 5-panel; Eyebrow 5-panel with scroll.

Johnson™ EntrySystems

June 17, 2002
Our continuing program of product improvement makes specifications, design and product detail subject to change without notice.

PREMDOR Collection Premium Quality Doors

Exclusively from Masonite®
Masonite International Corporation

X
Glazed Inswing Unit

COP-WL-JH4141-02

WOOD-EDGE STEEL DOORS

APPROVED DOOR STYLES:

3/4 GLASS:

404 Series

410 Series

450 Series

FULL GLASS:

109 Series

114, 120, 122 Series

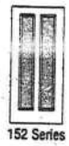
152 Series

149 Series

300 Series

CERTIFIED TEST REPORTS:

NCTL 210-1897-7, 8, 9, 10, 11, 12; NCTL 210-1861-4, 5, 6, 10, 11, 12; NCTL 210-2185-1, 2, 3

Certifying Engineer and License Number: Barry D. Portney, P.E. / 16258.

Unit Tested in Accordance with Miami-Dade BCCO PA202.

Evaluation report NCTL-210-2794-1

Door panels constructed from 26-gauge 0.017" thick steel skins. Both stiles constructed from wood. Top end rails constructed of 0.041" steel. Bottom end rails constructed of 0.021" steel. Interior cavity of slab filled with rigid polyurethane foam core. Slab glazed with insulated glass mounted in a rigid plastic lip lite surround.

Frame constructed of wood with an extruded aluminum threshold.

PRODUCT COMPLIANCE LABELING:

TESTED IN
ACCORDANCE WITH
MIAMI-DADE BCCO PA202

COMPANY NAME
CITY, STATE

To the best of my knowledge and ability the above side-hinged exterior door unit conforms to the requirements of the 2001 Florida Building Code, Chapter 17 (Structural Tests and Inspections).

Kurt L Balthazor

State of Florida, Professional Engineer
Kurt Balthazor, P.E. – License Number 56533

Warnock Hersey

Test Data Review Certificate #3026447A and COP/Test Report Validation Matrix #3026447A-001 provides additional information - available from the ITS/WH website (www.etlsemko.com), the Masonite website (www.masonite.com) or the Masonite technical center.

Johnson™ EntrySystems

June 17, 2002
Our continuing program of product improvement makes specifications, design and product detail subject to change without notice.

PREMDOR Collection Premium Quality Doors

Exclusively from Masonite®
Masonite International Corporation

Permit #: 23819

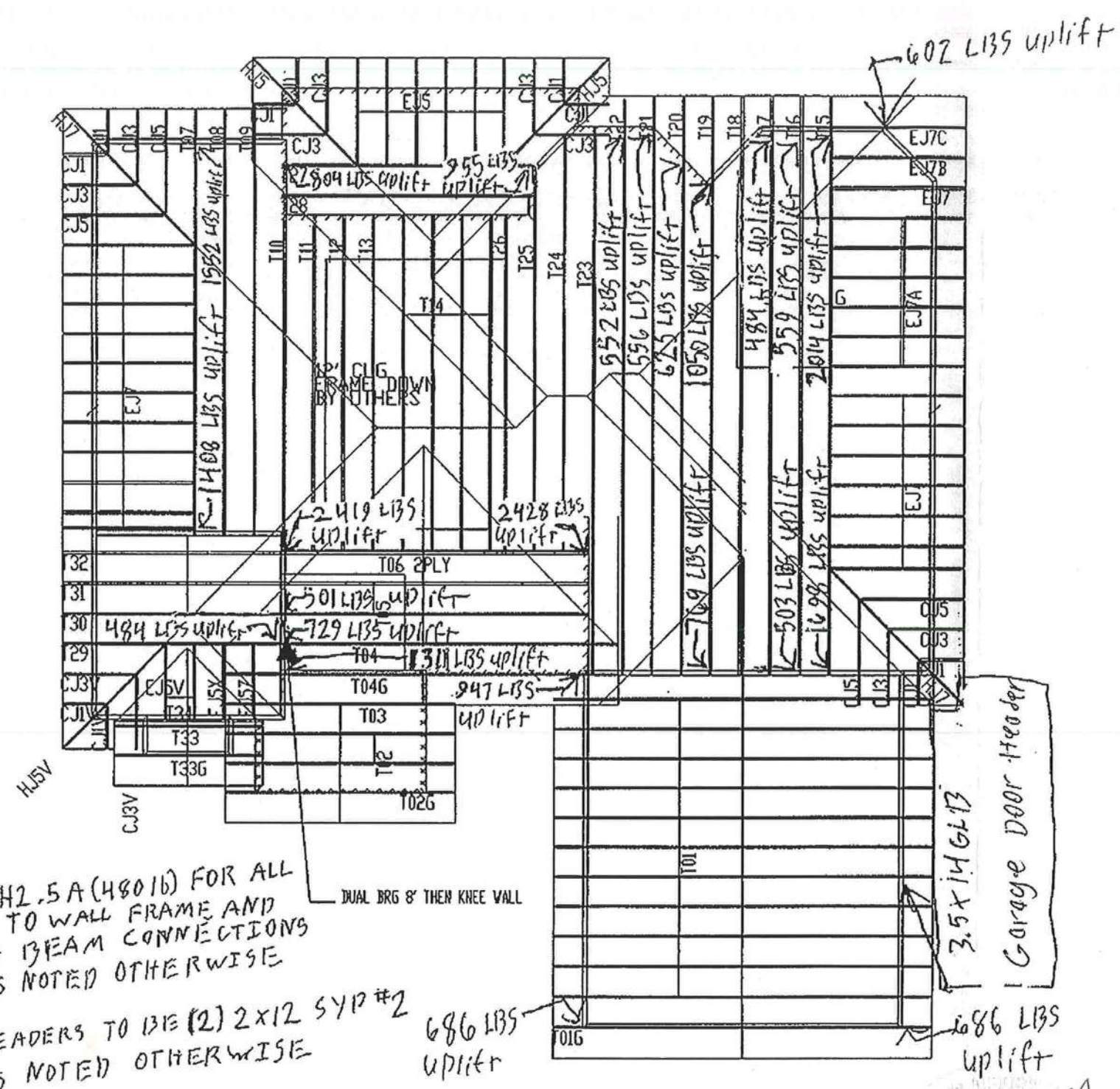

USE H2.5A(480lb) FOR ALL TRUSS TO WALL FRAME AND PORCH BEAM CONNECTIONS UNLESS NOTED OTHERWISE

ALL HEADERS TO BE (2) 2x12 SYP #2 UNLESS NOTED OTHERWISE

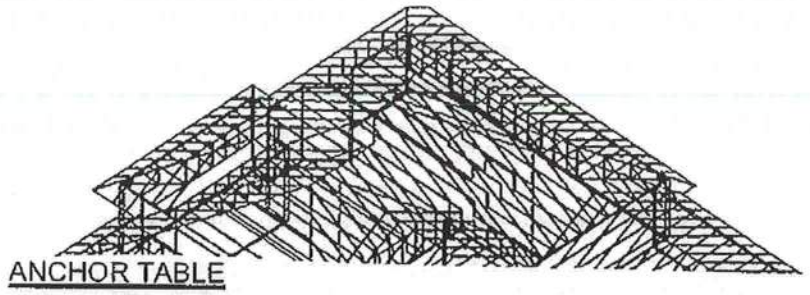

ANCHOR TABLE

OBTAIN UPLIFT REQUIREMENTS FROM TRUSS MANUFACTURER'S ENGINEERING

UPLIFT LBS. SYP	UPLIFT LBS. SPF	TRUSS CONNECTOR*	TO PLATES	TO RAFTER/TRUSS	TO STUDS
< 420	< 245	H5A	3-8d	3-8d	
< 455	< 265	H5	4-8d	4-8d	
< 360	< 235	H4	4-8d	4-8d	
< 455	< 320	H3	4-8d	4-8d	
< 415	< 365	H2.5	5-8d	5-8d	
< 600	< 535	H2.5A	5-8d	5-8d	
< 950	< 820	H6	8-8d	8-8d	
< 745	< 565	H8	5-10d, 1 1/2"	5-10d, 1 1/2"	
< 1465	< 1050	H14-1	13-8d	12-8d, 1 1/2"	
< 1465	< 1050	H14-2	15-8d	12-8d, 1 1/2"	
< 990	< 850	H10-1	8-8d, 1 1/2"	8-8d, 1 1/2"	
< 760	< 655	H10-2	6-10d	6-10d	
< 1470	< 1265	H16-1	10-10d, 1 1/2"	2-10d, 1 1/2"	
< 1470	< 1265	H16-2	10-10d, 1 1/2"	2-10d, 1 1/2"	
< 1000	< 860	MTS24C	7-10d 1 1/2"	7-10d 1 1/2"	
< 1450	< 1245	HTS24	12-10d 1 1/2"	12-10d 1 1/2"	
< 2900	< 2490	2 - HTS24			
< 2050	< 1785	LGTZ	14 -16d	14 -16d	
		HEAVY GIRDER TIEDOWNS*			TO FOUNDATION
< 3955	< 3330	MGT		22 -10d	1-5/8" THREADED ROD 12" EMBEDMENT
< 10960	< 8485	HGT-2		16 -10d	2-5/8" THREADED ROD 12" EMBEDMENT
< 10530	< 9035	HGT-3		16 -10d	2-5/8" THREADED ROD 12" EMBEDMENT
< 9250	< 9250	HGT-4		16 -10d	2-5/8" THREADED ROD 12" EMBEDMENT
		STUD STRAP CONNECTOR*			TO STUDS
< 435	< 435	SSP DOUBLE TOP PLATE	3 -10d		4 -10d
< 455	< 420	SSP SINGLE SILL PLATE	1 -10d		4 -10d
< 825	< 825	DSP DOUBLE TOP PLATE	6 -10d		8 -10d
< 825	< 600	DSP SINGLE SILL PLATE	2 -10d		8 -10d
< 885	< 760	SP4			6-10d, 1 1/2"
< 1240	< 1065	SPH4			10-10d, 1 1/2"
< 885	< 760	SP6			6-10d, 1 1/2"
< 1240	< 1065	SPH6			10-10d, 1 1/2"
< 1235	< 1165	LSTA18	14-10d		
< 1235	< 1235	LSTA21	16-10d		
< 1030	< 1030	CS20	18-8d		
< 1705	< 1705	CS16	28-8d		
		STUD ANCHORS*	TO STUDS		TO FOUNDATION
< 1350	< 1305	LTT19	8-16d		1/2" AB
< 2310	< 2310	LTT31	18-10d, 1 1/2"		1/2" AB
< 2775	< 2570	HD2A	2-5/8" BOLTS		5/8" AB
< 4175	< 3695	HTT16	18 - 16d		5/8" AB
< 1400	< 1400	PAHD42	16-16d		
< 3335	< 3335	HPAHD22	16-16d		
< 2200	< 2200	ABU44	12-16d		1/2" AB
< 2300	< 2300	ABU66	12-16d		1/2" AB
< 2320	< 2320	ABU88	18 - 16d		2-5/8" AB

BEARING HEIGHT SCHEDULE

7/12

NOTES:

1) REFER TO HIB 91 (RECOMMENDATIONS FOR HANDLING INSTALLATION AND TEMPORARY BRA REFER TO ENGINEERED DRAWINGS FOR PERMA

2) ALL TRUSSES (INCLUDING TRUSSES UNDER VALLEY FRAMING) MUST BE COMPLETELY DECKED OR REFER TO DETAIL V105 FOR

3) ALL VALLEYS ARE TO BE CONVENTIONALLY FRAMED BY BUILDER.

4) ALL TRUSSES ARE DESIGNED FOR 2' o.c. MAXIMUM SPACING, UNLESS OTHERWISE NOTED

5) ALL WALLS SHOWN ON PLACEMENT PLAN ARE CONSIDERED TO BE LOAD

6) SY42 TRUSSES MUST BE INSTALLED WITH THE TOP BEING UP.

7) ALL ROOF TRUSS HANGERS TO BE SIMPSON HUS26 UNLESS OTHERWISE NOTED. ALL FLOOR TRUSS HANGERS TO BE SIMPSON THA422 UNLESS OTHERWISE NOTED.

8) BEAM/HEADER/LINTEL CHORD TO BE

SHOP DRAWING APPROVAL

THIS LAYOUT IS THE SOLE SOURCE FOR FABRICATION OF TRUSSES AND VOIDS ALL PREVIOUS ARCHITECTURAL OR D TRUSS LAYOUTS. REVIEW AND APPROVAL OF THIS LAYOU BE RECEIVED BEFORE ANY TRUSSES WILL BE BUILT. VE CONDITIONS TO INSURE AGAINST CHANGES THAT WILL RES

Requested Delivery Date: _____

Approved by _____ Date _____

Builders FirstSource
Bunnell
PHONE: 904-437-3349 FAX: 904-437-
Jacksonville
PHONE: 904-772-6100 FAX: 904-772
Lake City
PHONE: 904-755-6894 FAX: 904-755-

BUILDER: ERKINGER HOME

JOB ADDRESS: LOT 16 PHASE I EMERALD COVE

SUBDIV: LAKES | PLAN: | SCALE: NTS

DATE: 09/20/05 | DRAWN: J.BENZ | JOB #: L130833

17 FEB 06
PE53918

Permit #: 23819

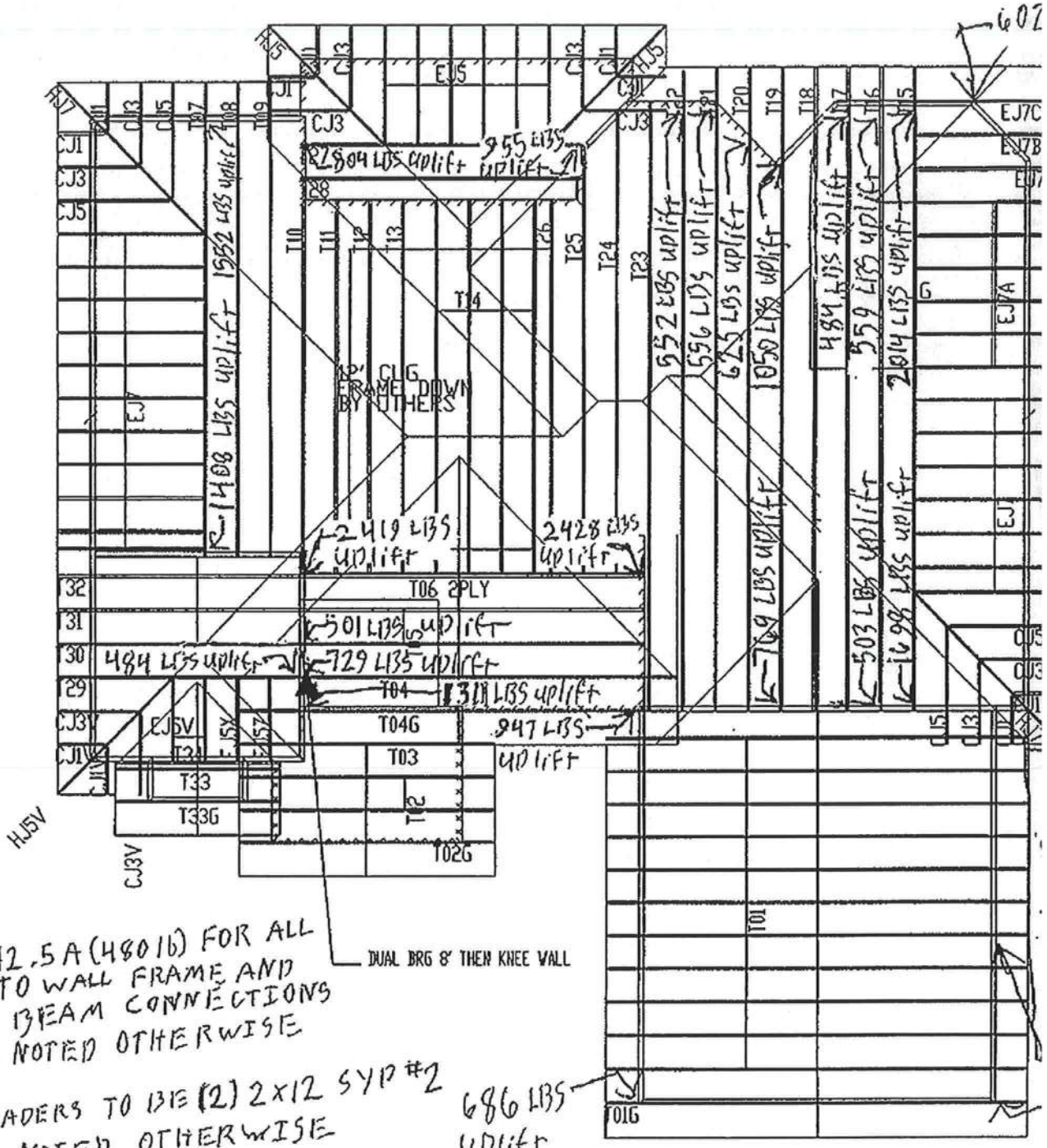

USE H2.5A (480lb) FOR ALL TRUSS TO WALL FRAME AND PORCH BEAM CONNECTIONS UNLESS NOTED OTHERWISE

ALL HEADERS TO BE (2) 2x12 SYP #2 UNLESS NOTED OTHERWISE

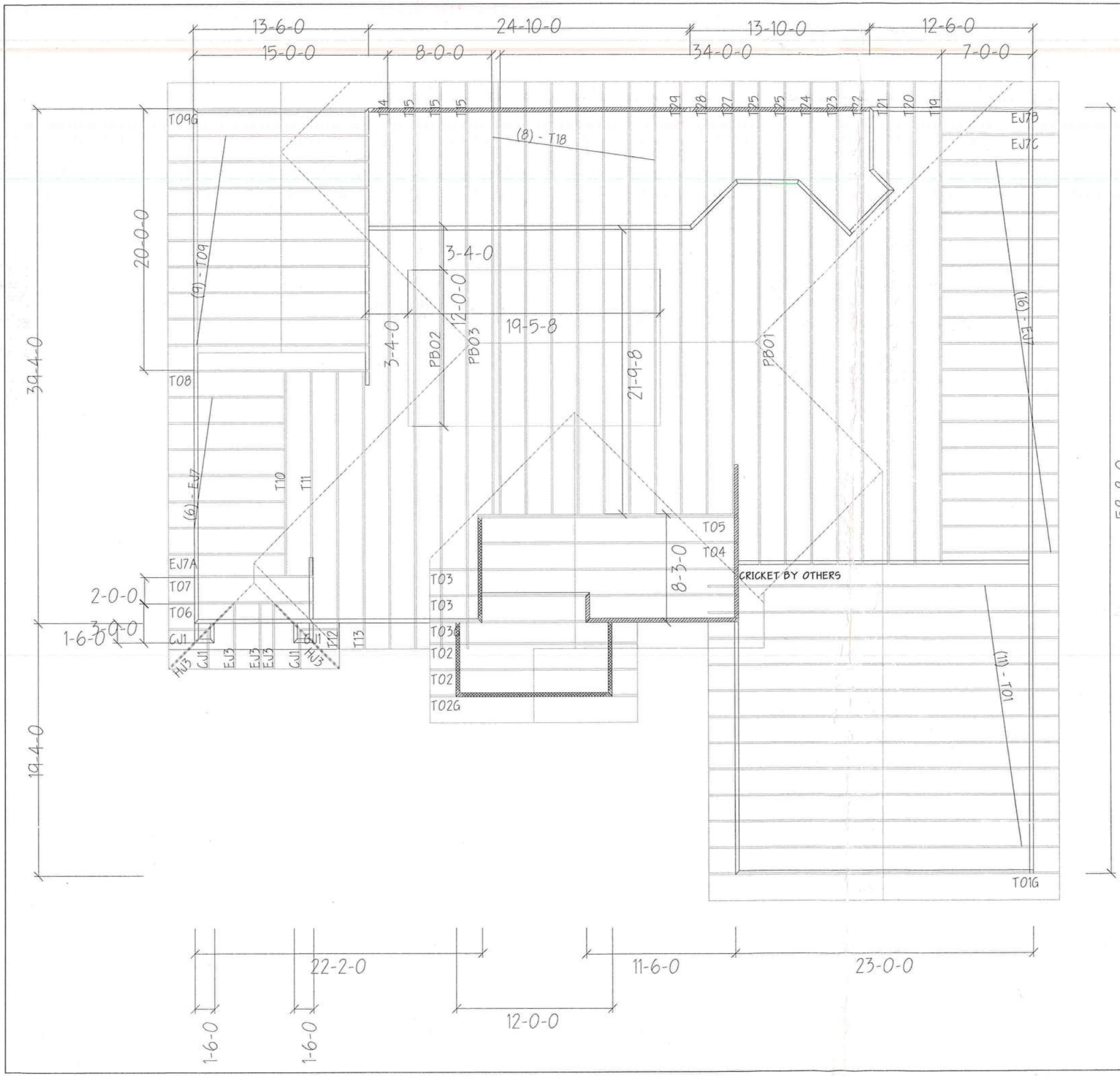

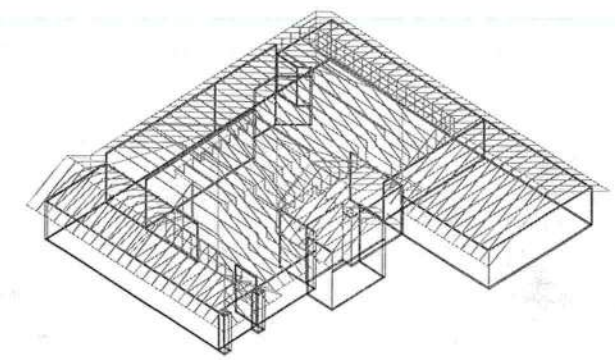

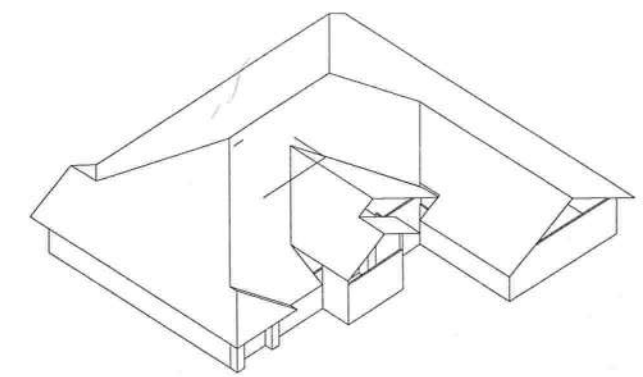

BEARING HEIGHT SCHEDUL

8'

10'

12'

7/12

2' O.H.

NOTES:

1) REFER TO HIB 91 (RECOMMENDATIONS FOR HANDLING INSTALLATION AND TEMPORARY E REFER TO ENGINEERED DRAWINGS FOR PERM BRACING REQUIRED.

2) ALL TRUSSES (INCLUDING TRUSSES UNDER VALLEY FRAMING) MUST BE COMPLETELY DECKED OR REFER TO DETAIL V105 FOR ALTERNATE BRACING REQUIREMENTS.

3.) ALL VALLEYS ARE TO BE CONVENTIONALLY FRAMED BY BUILDER.

4.) ALL TRUSSES ARE DESIGNED FOR 2' o.c. MAXIMUM SPACING, UNLESS OTHERWISE NOTE

5.) ALL WALLS SHOWN ON PLACEMENT PLAN ARE CONSIDERED TO BE LOAD BEARING, UNLESS OTHERWISE NOTED.

6.) SY42 TRUSSES MUST BE INSTALLED WITH THE TOP BEING UP.

7.) ALL ROOF TRUSS HANGERS TO BE SIMPSON HUS26 UNLESS OTHERWISE NOTED. ALL FLOOR TRUSS HANGERS TO BE SIMPSON THA422 UNLESS OTHERWISE NOTED.

8.) BEAM/HEADER/LINTEL (HDR) TO BE FURNISHED BY BUILDER.

SHOP DRAWING APPROV

THIS LAYOUT IS THE SOLE SOURCE FOR FABRICATI TRUSSES AND VOIDS ALL PREVIOUS ARCHITECTURAL O TRUSS LAYOUTS. REVIEW AND APPROVAL OF THIS LAY BE RECEIVED BEFORE ANY TRUSSES WILL BE BUILT. VE CONDITIONS TO INSURE AGAINST CHANGES THAT WILL IN EXTRA CHARGES TO YOU.

Requested Delivery Date : _____

Approved by: _____ Date: _____

Builder FirstSource

Bunnell
PHONE: 904-437-3349 FAX: 904-43

Jacksonville
PHONE: 904-772-6100 FAX: 904-77

Lake City
PHONE: 904-755-6894 FAX: 904-75

Sanford
PHONE: 407-322-0059 FAX: 407-322

BUILDER: ERKINGER HOM

LEGAL ADDRESS: LOT 17 EMERALD CO

MODEL: SANTE FE

REVISION:

SCALE: 1

DATE: 09/06/05

DRAWN BY: J.BENZ

JOB #: L130