ITW Building Components Group, Inc.

1950 Marley Drive Haines City, FL 33844
Florida Engineering Certificate of Authorization Number 0 278
Florida Certificate of Product Approval # FL1999
Page 1 of 1 Document ID 1UUR487-Z0225094009

DOUGLAS FLEMING LICENSE No. 66648 STATE OF FLORIDA PROFESSIONAL ENGINEER
03/25/2013

Truss Fabricator	Anderson Truss Company
Job Identification	13-106F--Don Reed Construction Decker House Floor System --Lake City, FL
Truss Count	18
Model Code	Florida Building Code 2010
Truss Criteria	FBC2010Res/TPI-2007(STD)
Engineering Software	Alpine Software,Version 10.03.
Structural Engineer of Record	The identity of the structural EOR did not exist as of
Address	the seal date per section 61G15-31.003(5a) of the FAC
Minimum Design Loads	Roof - N/A
	Floor - 55.0 PSF @ 1.00 Duration
	Wind - No Wind

Notes

1. Determination as to the suitability of these truss components for the structure is the responsibility of the building designer/engineer of record, as defined in ANSI/TPI 1
2. The drawing date shown on this index sheet must match the date shown on the individual truss component drawing.
3. As shown on attached drawings; the drawing number is preceded by: HCUSR487

Details: STRBRIBR-CNSY42PL-

Douglas Fleming
-Truss Design Engineer-

1950 Marley Drive
Haines City, FL 33844

#	Ref	Description	Drawing#	Date
1	29541--F1	12'4" Gable	13084001	03/25/13
2	29542-F2	12'4" Floor T	13084002	03/25/13
3	29543-F3	20" Floor Tru	13084003	03/25/13
4	29544-F4	20" Floor Tru	13084004	03/25/13
5	29545-F5	40'8" Floor T	13084005	03/25/13
6	29546-F6	40'8" Floor T	13084006	03/25/13
7	29547-F7	40'8" Floor T	13084007	03/25/13
8	29548-F8	19'10" Floor	13084008	03/25/13
9	29549-F9	21'2" Floor T	13084009	03/25/13
10	29550-F10	21'2" Floor	13084010	03/25/13
11	29551-F11	12'6" Floor	13084011	03/25/13
12	29552-F12	16'3" Floor	13084012	03/25/13
13	29553-F13	16'3" Floor	13084013	03/25/13
14	29554-F14	15'5"8 Floor	13084014	03/25/13
15	29555-F15	14'1"8 Floor	13084015	03/25/13
16	29556-F16	12'11" Gable	13084016	03/25/13
17	29557--F17	12'2" Gable	13084017	03/25/13
18	29558-FG1	19'10" Floor	13084018	03/25/13

COLUMBIA COUNTY BUILDING DEPARTMENT
Received for FILE COPY
Code Compliance
PLANS EXAMINER

THIS DWG PREPARED FROM COMPUTER INPUT (LOADS & DIMENSIONS) SUBMITTED BY TRUSS MFR

(13-106F--Don Reed Construction Decker House Floor System -- Lake City, FL - F1 12'4' Gable)

Top chord 4x2 SP_#1_12A
Bot chord 4x2 SP_#1_12A
Webs 4x2 SP_#3__12A

Lumber grades designated with "12A" use design values approved 1/5/2012 by ALSC

Truss must be installed as shown with top chord up

Fasten rated sheathing to one face of this frame

See detail STRBRIBR0211 for bracing and bridging recommendations

Trusses to be spaced at 16 0" OC maximum

Deflection meets L/360 live and L/360 total load Creep increase factor for dead load is 1 50

Sheathing is required for any longitudinal(drag) forces All connections to be designed by the building designer

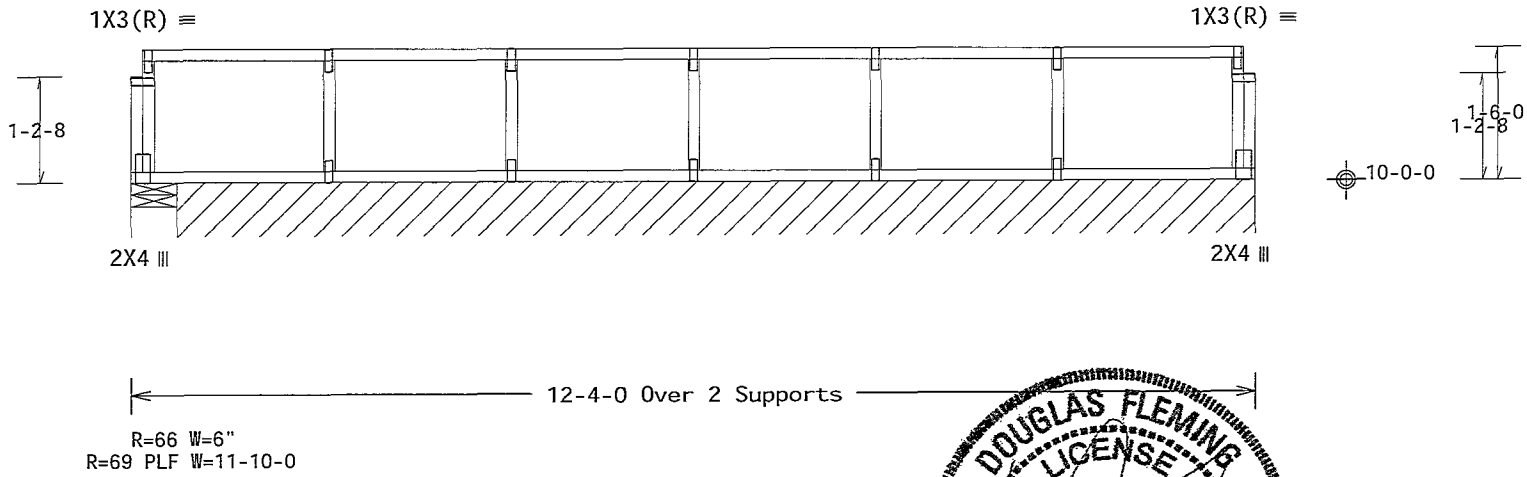

Note· All Plates Are 1X3 Except As Shown.

Design Crit· FBC2010Res/TPI-2007(STD)

PLT TYP. Wave FT/RT=12%(0%)/0(0) 10 03.11.0209.19 QTY:

DOUGLAS FLEMING LICENSE No.66648 STATE OF FLORIDA PROFESSIONAL ENGINEER 03/25/2013

FL/-/4/-/-/R/- Scale =.5"/Ft.

TC LL	40.0 PSF	REF	R487-- 29541
TC DL	10.0 PSF	DATE	03/25/13
BC DL	5.0 PSF	DRW	HCUSR487 13084001
BC LL	0.0 PSF	HC-ENG	DF/DF
TOT.LD.	55 0 PSF	SEQN-	60598
DUR.FAC	1.00		
SPACING	16 0"	JREF-	1UUR487_Z02

ALPINE

ITW Building Components Group Inc.

Haines City, FL 33844
FL COA #0 278

WARNING READ AND FOLLOW ALL NOTES ON THIS SHEET!
IMPORTANT FURNISH THIS DESIGN TO ALL CONTRACTORS INCLUDING INSTALLERS

Trusses require extreme care in fabricat ng hand! ng shipp ng nstalling and bracing Re to and follow the latest edition of BCSI (Bu ld ng Component Safety Information by TPI and WTCA) for pract ces prior to perform ng these funct ons Installers shall provide temporary bracing per BCSI Unless noted otherwise top chord shall have properly attached structural sheath ng and bottom chord shall have a properly attached rigid ce l ng Locations shown for permanent lateral restraint of web shall have brac ng nstalled per BCSI sections B3 B7 or B10 as applicable

ITW Building Components Group Inc (ITWBCG) shall not be respons ble for any deviation from this design any fa lure to build the truss in conformance w th ANSI/TPI 1 or for handl ng sh pping nstallation bracing of trusses Apply plates to each face of truss and pos t on as shown above and on the Joint Details unless noted otherw se Refer to draw ngs 160A-Z for standard plate pos tions A seal on this drawing or cover page list ng th s draw ng ind cates acceptance of professional engineering respons bility solely for the design shown The su tab lity and use of this design for any structure is the responsibility of the Bu lding Designer per ANSI/TPI 1 Sec 2 For more information see Th s job s general notes page ITW BCG www itwbcg com TPI www tpinst org WTCA www sbcindustry com ICC www iccsafe org

THIS DWG PREPARED FROM COMPUTER INPUT (LOADS & DIMENSIONS) SUBMITTED BY TRUSS MFR

(13-106F--Don Reed Construction Decker House Floor System -- Lake City, FL - F2 12'4" Floor Truss)

Top chord 4x2 SP_#1_12A
Bot chord 4x2 SP_#1_12A
Webs 4x2 SP_#3__12A

Lumber grades designated with '12A" use design values approved 1/5/2012 by ALSC

Deflection meets L/360 live and L/360 total load Creep increase factor for dead load is 1 50

+ 2x6 continuous strongback See detail STRBRIBR0211 for bracing and bridging recommendations

Maximum panel length exceeds 30" TPI allows non-bearing partition walls to be supported at any point when panels are 30" or less

Trusses to be spaced at 16 0" OC maximum

Truss must be installed as shown with top chord up

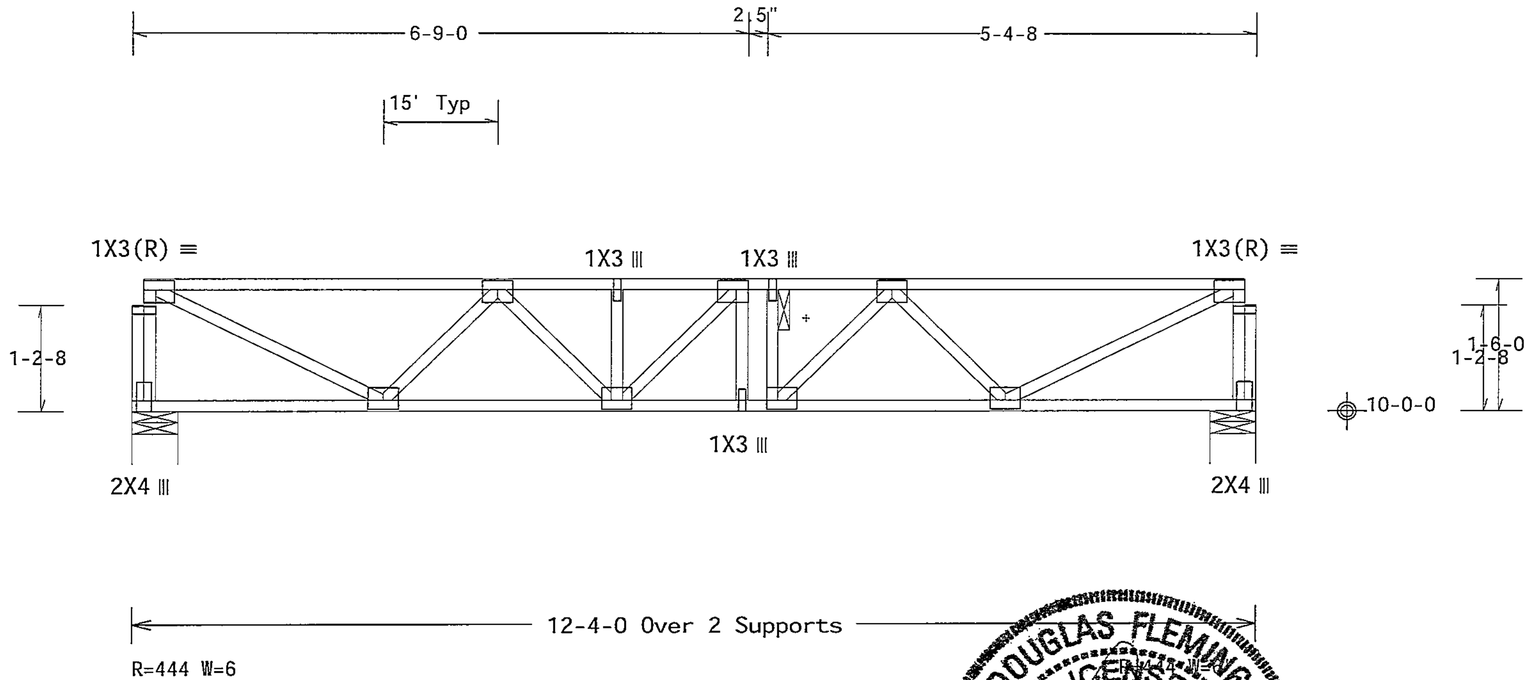

Note: All Plates Are 3X4 Except As Shown

Design Crit FBC2010Res/TPI-2007(STD)
FT/RT=12%(0%)/0(0) 10.03.11.0209.19 QTY 4

PLT TYP. Wave

ALPINE
ITW Building Components Group Inc.
Haines City, FL 33844
FL COA #0 278

WARNING READ AND FOLLOW ALL NOTES ON THIS SHEET!
IMPORTANT FURNISH THIS DESIGN TO ALL CONTRACTORS INCLUDING INSTALLERS

Trusses require extreme care n fabricating handling sh pping install ng and brac ng Refer to and follow the latest edit on of BCSI (Building Component Safety Informat on by TPI and WTCA) for safety practices prior to perform ng these functions Installers shall prov de temporary brac ng per BCSI Unless noted otherwise top chord shall have properly attached structural sheath ng and bottom chord shall have a properly attached rig d ce l ng Locat ons shown for permanent lateral restra nt of webs shall have bracing nstalled per BCSI sect ons B3 B7 or B10 as appl cable

ITW Bu ld ng Components Group Inc (ITWBCG) shall not be responsible for any deviat on from th s design any failure to build the truss n conformance with ANSI/TPI 1 or for handling shipp ng nstallat on & brac ng of trusses Apply plates to each face of truss and position as shown above and on the Jo nt Details unless noted otherwise Refer to drawings 160A-Z for standard plate posit ons A seal on th s draw ng or cover page l st ng th s drawing ndicates acceptance of professional eng neer ng responsibil ty solely for the design shown The suitabil ty and use of this design for any structure s the respons b lity of the Build ng Designer per ANSI/TPI 1 Sec 2 For more informat on see Th s job s general notes page ITW-BCG www itwbcg com TPI www tp nst org WTCA www sbcindustry com ICC www ccsafe org

DOUGLAS FLEMING LICENSE No. 66648 STATE OF FLORIDA PROFESSIONAL ENGINEER
03/25/2013

FL/-/4/-/-/R/- Scale =.5"/Ft.

TC LL	40.0 PSF	REF	R487-- 29542
TC DL	10.0 PSF	DATE	03/25/13
BC DL	5.0 PSF	DRW	HCUSR487 13084002
BC LL	0.0 PSF	HC-ENG	DF/DF
TOT.LD.	55.0 PSF	SEQN-	60597
DUR.FAC	1 00		
SPACING	16 0"	JREF-	1UUR487_Z02

(13-106F--Don Reed Construction Decker House Floor System -- Lake City, FL - F3 20' Floor Truss)

THIS DWG PREPARED FROM COMPUTER INPUT (LOADS & DIMENSIONS) SUBMITTED BY TRUSS MFR

Top chord 4x2 SP_#1_12A
Bot chord 4x2 SP_#1_12A
Webs 4x2 SP_#3__12A

Lumber grades designated with "12A" use design values approved 1/5/2012 by ALSC

Deflection meets L/360 live and L/360 total load Creep increase factor for dead load is 1 50

+ 2x6 continuous strongback See detail STRBRIBR0211 for bracing and bridging recommendations

Maximum panel length exceeds 30" TPI allows non-bearing partition walls to be supported at any point when panels are 30" or less

Trusses to be spaced at 16 0" OC maximum

Truss must be installed as shown with top chord up

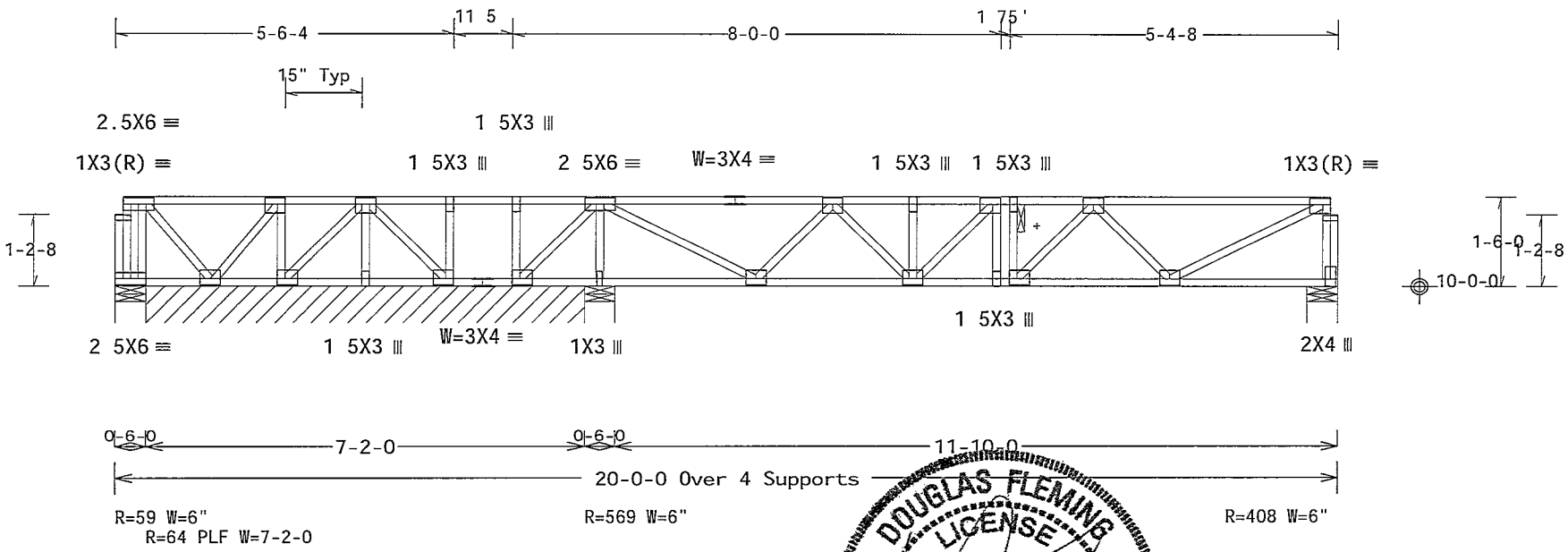

Note. All Plates Are 3X4 Except As Shown.

Design Crit: FBC2010Res/TPI-2007(STD)

PLT TYP Wave FT/RT=12%(0%)/0(0) 10.03.11 0209.19 QTY 1 FL/-/4/-/-/R/- Scale =.375"/Ft.

DOUGLAS FLEMING LICENSE No. 66648 STATE OF FLORIDA PROFESSIONAL ENGINEER 03/25/2013

ALPINE
ITW Building Components Group Inc.
Haines City, FL 33844
FL COA #0 278

WARNING READ AND FOLLOW ALL NOTES ON THIS SHEET!
IMPORTANT FURNISH THIS DESIGN TO ALL CONTRACTORS INCLUDING INSTALLERS

Trusses requ re extreme care n fabricat ng handling shipping installing and bracing Refer to and follow the latest ed tion of BCSI (Building Component Safety Information by TPI and WTCA) for safety practices pr or to performing these funct ons Installers shall prov de temporary bracing per BCSI Unless noted otherw se top chord shall have properly attached structural sheathing and bottom chord shall have a properly attached r g d ceiling Locations shown for permanent lateral restraint of webs shall have brac ng installed per BCSI sections B3 B7 or B10 as applicable

ITW Building Components Group Inc (ITWBCG) shall not be respons ble for any dev ation from this design any fa lure to build the truss in conformance w th ANSI/TPI 1 or for handling sh pping installation & bracing of trusses Apply plates to each face of truss and position as shown above and on the Joint Details unless noted otherw se Refer to drawings 160A-Z for standard plate pos t ons A seal on this drawing or cover page listing this draw ng indicates acceptance of professional engineering respons b l ty solely for the design shown The su tab lity and use of this design for any structure s the respons bility of the Building Designer per ANSI/TPI 1 Sec 2 For more informat on see Th s job s general notes page ITW BCG www itwbcg com TPI www tpinst org WTCA www sbcindustry com ICC www iccsafe org

TC LL	40.0	PSF	REF R487-- 29543
TC DL	10.0	PSF	DATE 03/25/13
BC DL	5.0	PSF	DRW HCUSR487 13084003
BC LL	0.0	PSF	HC-ENG DF/DF
TOT.LD.	55.0	PSF	SEQN- 60674
DUR FAC	1.00		
SPACING	16.0"		JREF- 1UUR487_Z02

(13-106F--Don Reed Construction Decker House Floor System -- Lake City, FL - F4 20' Floor Truss)

Top chord 4x2 SP_#1_12A
Bot chord 4x2 SP_#1_12A
Webs 4x2 SP_#3__12A

Lumber grades designated with "12A" use design values approved 1/5/2012 by ALSC

Deflection meets L/360 live and L/360 total load Creep increase factor for dead load is 1 50

+ 2x6 continuous strongback See detail STRBRIBR0211 for bracing and bridging recommendations

Maximum panel length exceeds 30" TPI allows non-bearing partition walls to be supported at any point when panels are 30" or less

Trusses to be spaced at 16 0" OC maximum

Truss must be installed as shown with top chord up

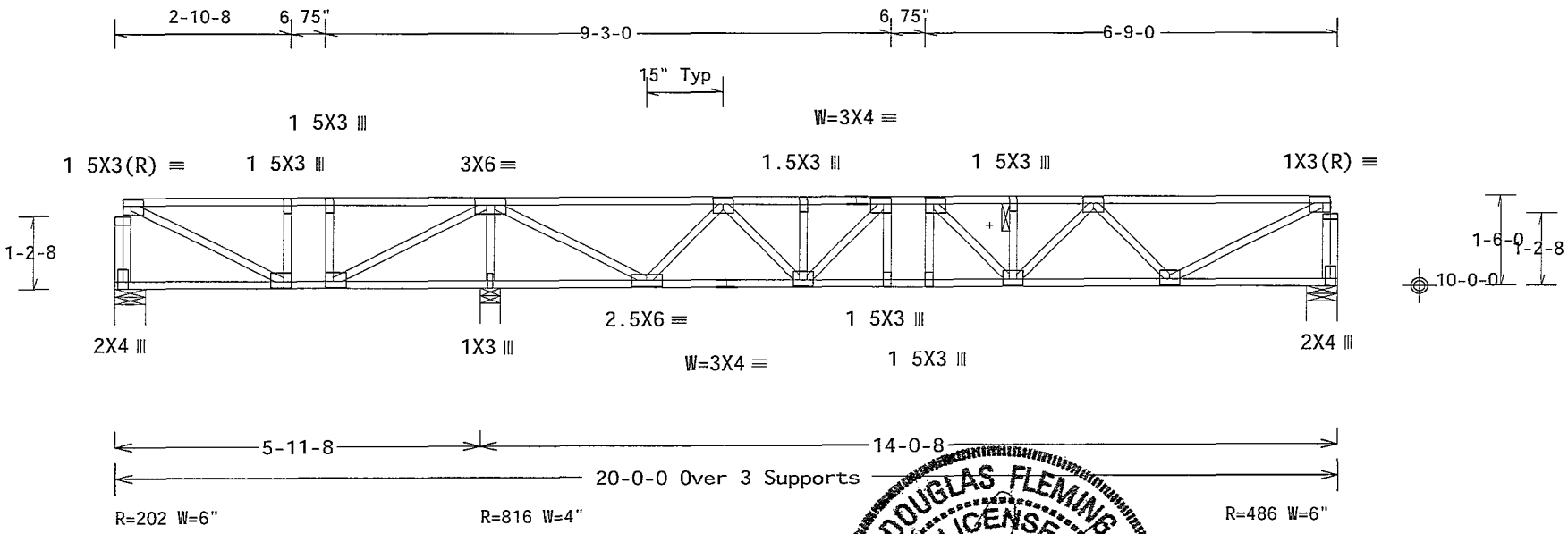

Note· All Plates Are 3X4 Except As Shown.

Design Crit. FBC2010Res/TPI-2007(STD)

PLT TYP. Wave FT/RT=12%(0%)/0(0) 10.03 11.0209.19 /0TY2 FL/-/4/-/-/R/- Scale =.375"/Ft.

DOUGLAS FLEMING LICENSE No. 66648 STATE OF FLORIDA PROFESSIONAL ENGINEER 03/25/2013

ALPINE
ITW Building Components Group Inc.
Haines City FL 33844
FL COA #0 278

WARNING READ AND FOLLOW ALL NOTES ON THIS SHEET!
IMPORTANT FURNISH THIS DESIGN TO ALL CONTRACTORS INCLUDING INSTALLERS

Trusses require extreme care in fabr cat ng handl ng sh pp ng nstalling and bracing Refer to and follow the latest edition of BCSI (Bu ld ng Component Safety Information by TPI and WTCA) for safety pract ces prior to performing these funct ons Installers shall provide temporary bracing per BCSI. Unless noted otherwise top chord shall have properly attached structural sheathing and bottom chord shall have a properly attached rigid ce l ng Locations shown for permanent lateral restraint of webs shall have brac ng nstalled per BCSI sections B3 B7 or B10 as applicable

ITW Building Components Group Inc (ITWBCG) shall not be respons ble for any dev ation from this design any fa lure to bu ld the truss in conformance w th ANSI/TPI 1 or for handl ng sh pping nstallation & bracing of trusses Apply plates to each face of truss and pos t on as shown above and on the Joint Details unless noted otherw se Refer to draw ngs 160A-Z for standard plate pos tions A seal on this drawing or cover page list ng this draw ng nd cates acceptance of professional engineer ng respons b lity solely for the design shown The suitab lity and use of this design for any structure is the responsibility of the Bu lding Dos gner per ANSI/TPI 1 Sec 2 For more informat on see Th s job s general notes page ITW-BCG www itwbcg com TPI www tpinst org WTCA www sbcindustry com ICC www iccsafe org

TC LL	40.0 PSF	REF	R487-- 29544
TC DL	10.0 PSF	DATE	03/25/13
BC DL	5 0 PSF	DRW	HCUSR487 13084004
BC LL	0.0 PSF	HC-ENG	DF/DF
TOT.LD	55 0 PSF	SEQN-	60593
DUR FAC.	1 00		
SPACING	16.0"	JREF-	1UUR487_Z02

THIS DWG PREPARED FROM COMPUTER INPUT (LOADS & DIMENSIONS) SUBMITTED BY TRUSS MFR

(13-106F--Don Reed Construction Decker House Floor System -- Lake City, FL - F5 40'8" Floor Truss)

Top chord 4x2 SP_#1_12A
Bot chord 4x2 SP_#1_12A
Webs 4x2 SP_#3__12A

Lumber grades designated with '12A" use design values approved 1/5/2012 by ALSC

Deflection meets L/360 live and L/360 total load Creep increase factor for dead load is 1 50

+ 2x6 continuous strongback See detail STRBRIBR0211 for bracing and bridging recommendations

Maximum panel length exceeds 30" TPI allows non-bearing partition walls to be supported at any point when panels are 30" or less

Trusses to be spaced at 16 0" OC maximum

Truss must be installed as shown with top chord up

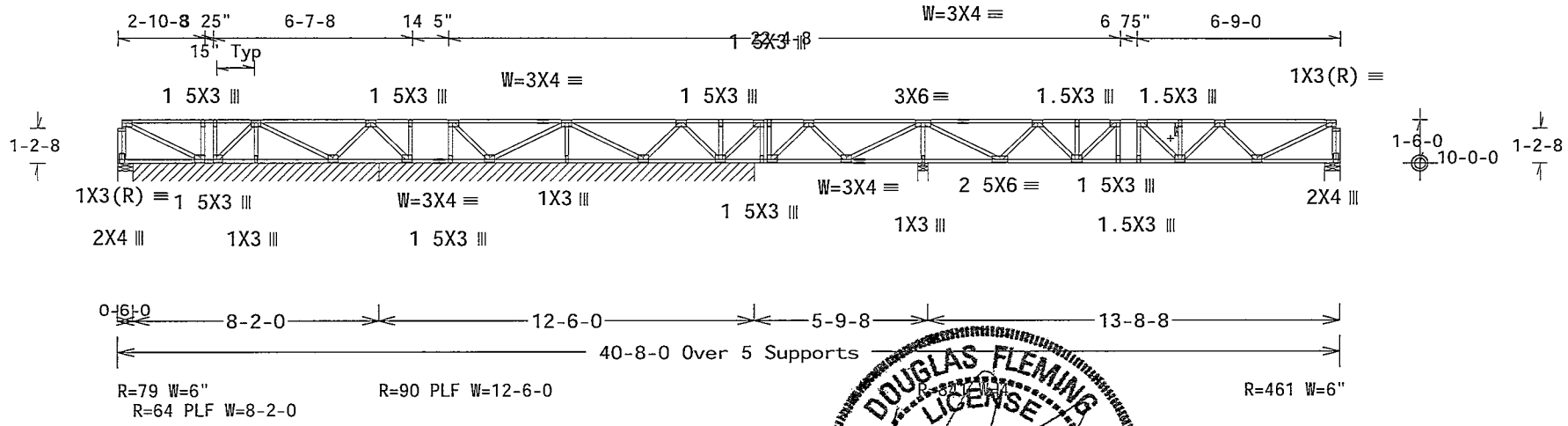

Note All Plates Are 3X4 Except As Shown

Design Crit· FBC2010Res/TPI-2007(STD)

PLT TYP Wave

FT/RT=12%(0%)/0(0) 10 03 11 0209 19 CTY FL/-/4/-/-/R/- Scale =.1875"/Ft.

DOUGLAS FLEMING LICENSE No. 66648 STATE OF FLORIDA PROFESSIONAL ENGINEER 03/25/2013

ALPINE

ITW Building Components Group Inc.

Haines City, FL 33844
FL COA #0 278

WARNING READ AND FOLLOW ALL NOTES ON THIS SHEET!
IMPORTANT FURNISH THIS DESIGN TO ALL CONTRACTORS INCLUDING INSTALLERS

Trusses requ re extreme care n fabricating handling sh pp ng install ng and brac ng Refer to and follow the latest ed t on of BCSI (Bu ld ng Component Safety Informat on by TPI and WTCA) for s ggested practices pr or to perform ng these functions Installers shall prov de temporary brac ng per BCSI Unless noted otherwise top chord shall have properly attached structural sheath ng and bottom chord shall have a properly attached rig d ce ng Locat ons shown for permanent lateral restraint of webs shall have bracing nstalled per BCSI sect ons B3 B7 or B10 as appl cable

ITW Bu ld ng Components Group Inc (ITWBCG) shall not be responsible for any deviat on from th s design, any failure to bu ld the truss n conformance with ANSI/TPI 1 or for handl ng shipp ng nstallat on & brac ng of trusses Apply plates to each face of truss and position as shown above and on the Joint Details unless noted otherwise Refer to drawings 160A-Z for standard plate positions A seal on th s drawing or cover page l sting th s drawing indicates acceptance of professional eng neer ng responsib l ty solely for the design shown The suitabil ty and use of th s design for any structure is the respons b l ty of the Build ng Designer per ANSI/TPI 1 Sec 2 For more information see This job s general notes page ITW-BCG www itwbcg com TPI www tp nst org WTCA www sbc ndustry com ICC www ccsafe org

TC LL	40 0 PSF	REF	R487-- 29545
TC DL	10.0 PSF	DATE	03/25/13
BC DL	5.0 PSF	DRW	HCUSR487 13084005
BC LL	0 0 PSF	HC-ENG	DF/DF
TOT.LD.	55.0 PSF	SEQN-	60650
DUR.FAC.	1.00		
SPACING	16.0"	JREF-	1UUR487_Z02

THIS DWG PREPARED FROM COMPUTER INPUT (LOADS & DIMENSIONS) SUBMITTED BY TRUSS MFR

(13-106F--Don Reed Construction Decker House Floor System -- Lake City, FL - F6 40 8' Floor Truss)

Top chord 4x2 SP_#1_12A
Bot chord 4x2 SP_#1_12A
Webs 4x2 SP_#3__12A

Lumber grades designated with "12A' use design values approved 1/5/2012 by ALSC

Deflection meets L/360 live and L/360 total load Creep increase factor for dead load is 1 50

+ 2x6 continuous strongback See detail STRBRIBR0211 for bracing and bridging recommendations

Maximum panel length exceeds 30' TPI allows non-bearing partition walls to be supported at any point when panels are 30" or less

Trusses to be spaced at 16 0' OC maximum

Truss must be installed as shown with top chord up

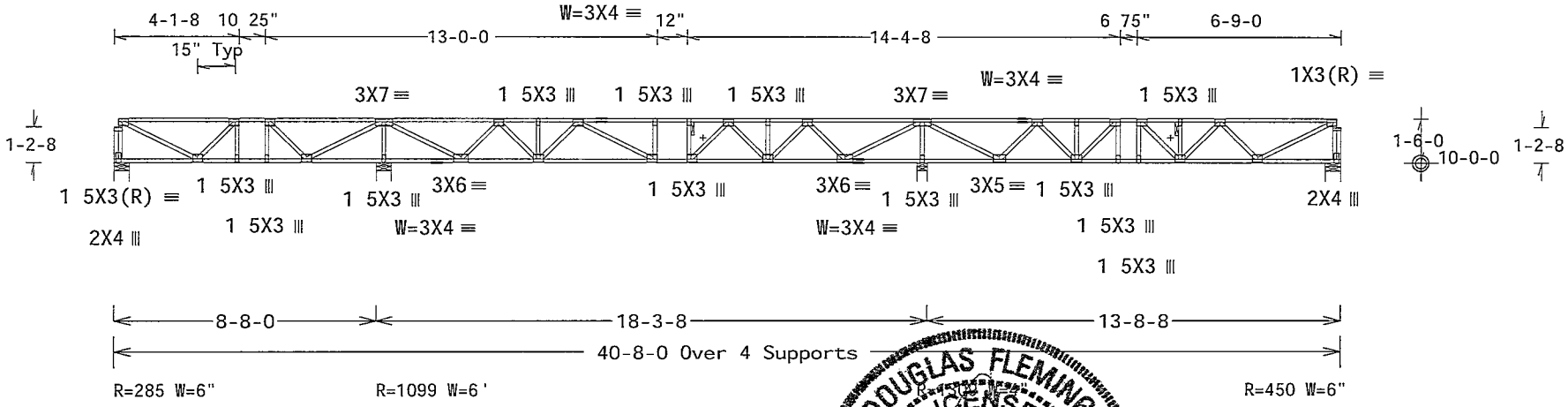

Note All Plates Are 3X4 Except As Shown

Design Crit FBC2010Res/TPI-2007(STD)

PLT TYP. Wave

FT/RT=12%(0%)/0(0) 10 03 11 0209.19 CTY

FL/-/4/-/-/R/-

Scale = 1875"/Ft.

DOUGLAS FLEMING LICENSE No.66648 STATE OF FLORIDA PROFESSIONAL ENGINEER

03/25/2013

ALPINE

ITW Building Components Group Inc.

Haines City FL 33844
FL COA #0 278

WARNING READ AND FOLLOW ALL NOTES ON THIS SHEET!
IMPORTANT FURNISH THIS DESIGN TO ALL CONTRACTORS INCLUDING INSTALLERS

Trusses require extreme care n fabr cating handling sh pp ng install ng and brac ng Refer to and follow the latest edition of BCSI (Bu ilding Component Safety Information by TPI and WTCA) for safety practices prior to performing these funct ons Installers shall prov de temporary brac ng per BCSI Unless noted otherwise top chord shall have properly attached structural sheath ng and bottom chord shall have a properly attached rigid ce l ng Locat ons shown for permanent lateral restraint of webs shall have bracing installed per BCSI sections B3 B7 or B10 as appl cable

ITW Building Components Group Inc (ITWBCG) shall not be responsible for any deviat on from this design, any failure to bu ld the truss n conformance w th ANSI/TPI 1 or for handl ng sh pp ng nstallation & bracing of trusses Apply plates to each face of truss and position as shown above and on the Joint Details unless noted otherw se Refer to draw ngs 160A-Z for standard plate pos tions A seal on this drawing or cover page list ng this draw ng nd cates acceptance of profess onal engineering responsibility solely for the des gn shown The su tability and use of th s des gn for any structure is the responsibility of the Bu lding Des gner per ANSI/TPI 1 Sec 2 For more information see This job s general notes page ITW-BCG www twbcg com TPI www tp nst org WTCA www sbcindustry com ICC www iccsafe org

TC LL	40.0 PSF	REF R487-- 29546
TC DL	10.0 PSF	DATE 03/25/13
BC DL	5 0 PSF	DRW HCUSR487 13084006
BC LL	0.0 PSF	HC-ENG DF/DF
TOT.LD	55.0 PSF	SEQN- 60587
DUR.FAC.	1.00	
SPACING	16.0"	JREF- 1UUR487_Z02

(13-106F--Don Reed Construction Decker House Floor System -- Lake City, FL - F7 40'8" Floor Truss)

Top chord 4x2 SP_#1_12A
Bot chord 4x2 SP_#1_12A
Webs 4x2 SP_#3__12A

Lumber grades designated with "12A" use design values approved 1/5/2012 by ALSC

Deflection meets L/360 live and L/360 total load Creep increase factor for dead load is 1 50

+ 2x6 continuous strongback See detail STRBRIBR0211 for bracing and bridging recommendations

Maximum panel length exceeds 30' TPI allows non-bearing partition walls to be supported at any point when panels are 30" or less

Trusses to be spaced at 16 0" OC maximum

Truss must be installed as shown with top chord up

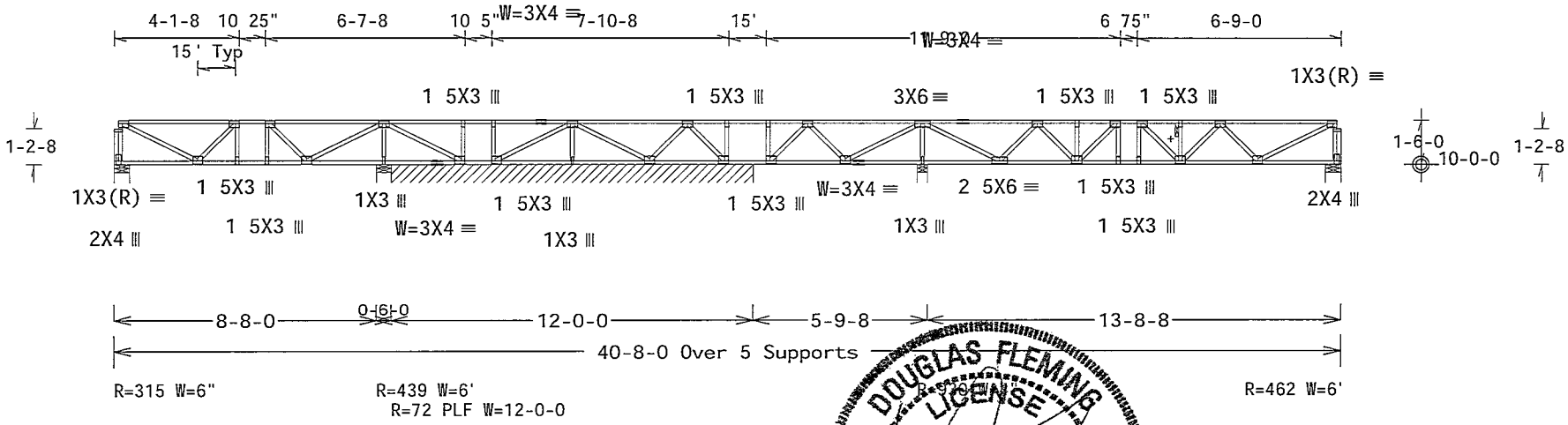

Note All Plates Are 3X4 Except As Shown.

Design Crit FBC2010Res/TPI-2007(STD)

PLT TYP. Wave FT/RT=12%(0%)/0(0) 10.03 11 0208.19 QTY 1 FL/-/4/-/-/R/- Scale =.1875"/Ft.

DOUGLAS FLEMING LICENSE No. 66648 STATE OF FLORIDA PROFESSIONAL ENGINEER 03/25/2013

ALPINE
ITW Building Components Group Inc.
Haines City, FL 33844
FL COA #0 278

WARNING READ AND FOLLOW ALL NOTES ON THIS SHEET!
IMPORTANT FURNISH THIS DESIGN TO ALL CONTRACTORS INCLUDING INSTALLERS

Trusses require extreme care in fabricat ng handl ng shipp ng nstalling and bracing Refer to and follow the latest edition of BCSI (Build ng Component Safety Information by TPI and WTCA) for safety practices prior to performing these funct ons Installers shall provide temporary bracing per BCSI Unless noted otherw se top chord shall have properly attached structural sheath ng and bottom chord shall have a properly attached rigid ceiling Locations shown for permanent lateral restraint of webs shall have brac ng installed per BCSI sections B3 B7 or B10 as applicable

ITW Building Components Group Inc (ITWBCG) shall not be responsible for any deviat on from this des gn any failure to bu ld the truss in conformance w th ANSI/TPI 1 or for handling shipp ng nstallation & bracing of trusses Apply plates to each face of truss and pos tion as shown above and on the Joint Details unless noted otherw se Refer to draw ngs 160A-Z for standard plate pos tions A seal on th s drawing or cover page list ng this drawing nd cates acceptance of profess onal engineer ng responsibility solely for the design shown The su tab lity and use of this des gn for any structure is the responsibil ty of the Building Designer per ANSI/TPI 1 Sec 2 For more information see This job s general notes page ITW-BCG www twbcg com TPI www tpinst org WTCA www sbcindustry com ICC www iccsafe org

TC LL	40 0 PSF	REF R487-- 29547
TC DL	10 0 PSF	DATE 03/25/13
BC DL	5.0 PSF	DRW HCUSR487 13084007
BC LL	0.0 PSF	HC-ENG DF/DF
TOT.LD.	55.0 PSF	SEQN- 60612
DUR.FAC.	1.00	
SPACING	16.0"	JREF- 1UUR487_Z02

(13-106F--Don Reed Construction Decker House Floor System -- Lake City, FL - F8 19'10' Floor Truss)

Top chord 4x2 SP_#1_12A
Bot chord 4x2 SP_#1_12A
Webs 4x2 SP_#3__12A

Lumber grades designated with "12A" use design values approved 1/5/2012 by ALSC

Deflection meets L/360 live and L/360 total load Creep increase factor for dead load is 1 50

+ 2x6 continuous strongback See detail STRBRIBR0211 for bracing and bridging recommendations

Maximum panel length exceeds 30" TPI allows non-bearing partition walls to be supported at any point when panels are 30" or less

Trusses to be spaced at 16 0' OC maximum

Truss must be installed as shown with top chord up

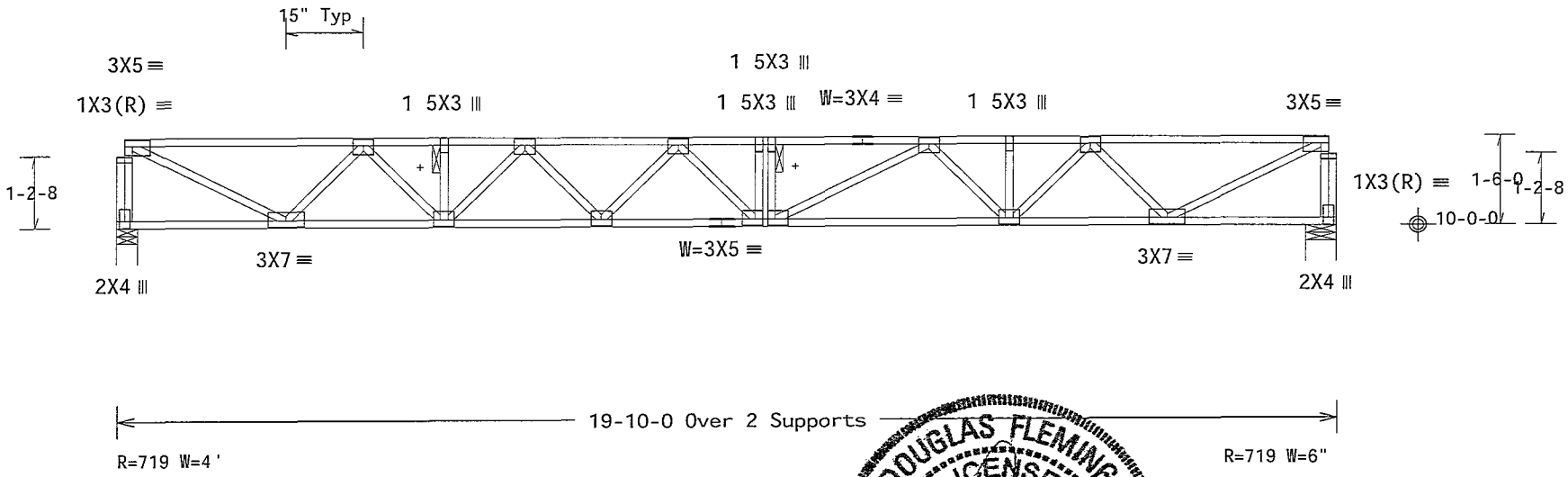

Note· All Plates Are 3X4 Except As Shown

Design Crit FBC2010Res/TPI-2007(STD)

PLT TYP. Wave FT/RT=12%(0%)/0(0) 10 03.11.0209 19 QTY: 10 FL/-/4/-/-/R/- Scale =.375"/Ft.

DOUGLAS FLEMING LICENSE No.66648 STATE OF FLORIDA PROFESSIONAL ENGINEER 03/25/2013

ALPINE
ITW Building Components Group Inc.
Haines City, FL 33844
FL COA #0 278

WARNING READ AND FOLLOW ALL NOTES ON THIS SHEET!
IMPORTANT FURNISH THIS DESIGN TO ALL CONTRACTORS INCLUDING INSTALLERS

Trusses require extreme care in fabricating handling sh pping install ng and brac ng Refer to and follow the latest edition of BCSI (Building Component Safety Informat on by TPI and WTCA) for safety practices prior to performing these functions Installers shall prov de temporary brac ng per BCSI Unless noted otherwise top chord shall have properly attached structural sheathing and bottom chord shall have a properly attached r gid ce ling Locat ons shown for permanent lateral restra nt of webs shall have bracing installed per BCSI sect ons B3 B7 or B10 as appl cable

ITW Build ng Components Group Inc (ITWBCG) shall not be responsible for any deviation from this design any failure to bu ld the truss n conformance w th ANSI/TPI 1 or for handling shipping nstallation & bracing of trusses Apply plates to each face of truss and position as shown above and on the Joint Details unless noted otherw se Refer to draw ngs 160A-Z for standard plate positions A seal on this drawing or cover page list ng th s drawing ndicates acceptance of professional engineer ng responsibility solely for the design shown The suitabil ty and use of th s design for any structure is the responsib l ty of the Build ng Designer per ANSI/TPI 1 Sec 2 For more information see This job s general notes page ITW-BCG www itwbcg com TPI www tp nst org WTCA www sbcindustry com ICC www iccsafe org

TC LL	40.0 PSF	REF	R487-- 29548
TC DL	10.0 PSF	DATE	03/25/13
BC DL	5.0 PSF	DRW	HCUSR487 13084008
BC LL	0.0 PSF	HC-ENG DF/DF	
TOT.LD.	55.0 PSF	SEQN-	60600
DUR.FAC.	1.00		
SPACING	16.0"	JREF-	1UUR487_Z02

(13-106F--Don Reed Construction Decker House Floor System -- Lake City, FL - F9 21'2" Floor Truss)

Top chord 4x2 SP_#1_12A
Bot chord 4x2 SP_#1_12A
Webs 4x2 SP_#3__12A

Lumber grades designated with "12A" use design values approved 1/5/2012 by ALSC

Deflection meets L/360 live and L/360 total load Creep increase factor for dead load is 1 50

+ 2x6 continuous strongback See detail STRBRIBR0211 for bracing and bridging recommendations

Maximum panel length exceeds 30" TPI allows non-bearing partition walls to be supported at any point when panels are 30" or less

Trusses to be spaced at 16 0" OC maximum

Truss must be installed as shown with top chord up

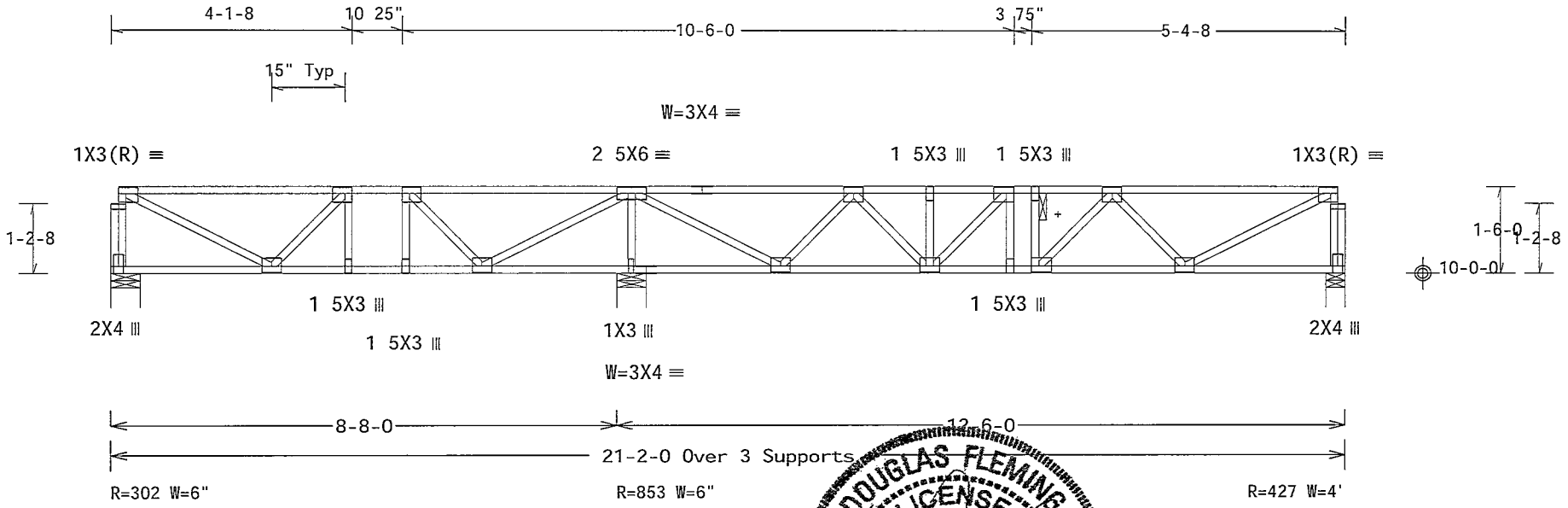

Note: All Plates Are 3X4 Except As Shown.

Design Crit FBC2010Res/TPI-2007(STD)

PLT TYP. Wave FT/RT=12%(0%)/0(0) 10.03.11.0209.19 QTY 3 FL/-/4/-/-/R/- Scale =.375"/Ft

DOUGLAS FLEMING LICENSE No. 66648 STATE OF FLORIDA PROFESSIONAL ENGINEER 03/25/2013

ALPINE
ITW Building Components Group Inc.
Haines City, FL 33844
FL COA #0 278

WARNING READ AND FOLLOW ALL NOTES ON THIS SHEET!
IMPORTANT FURNISH THIS DESIGN TO ALL CONTRACTORS INCLUDING INSTALLERS

Trusses require extreme care in fabricating handl ng shipping nstalling and bracing Refer to BCSI follow the latest edition of BCSI (Building Component Safety Information by TPI and WTCA) for safety practices prior to performing these funct ons Installers shall provide temporary bracing per BCSI Unless noted otherwise top chord shall have properly attached structural sheath ng and bottom chord shall have a properly attached rigid ceiling Locations shown for permanent lateral restraint of webs shall have bracing installed per BCSI sections B3 B7 or B10 as applicable

ITW Building Components Group Inc (ITWBCG) shall not be responsible for any deviat on from this design any failure to bu ld the truss n conformance with ANSI/TPI 1 or for handl ng shipp ng nstallation & bracing of trusses Apply plates to each face of truss and position as shown above and on the Joint Details unless noted otherw se Refer to draw ngs 160A-Z for standard plate pos tions A seal on this drawing or cover page l st ng th s draw ng nd cates acceptance of profess onal engineer ng responsibility solely for the des gn shown The suitabil ty and use of this des gn for any structure is the responsibil ty of the Bu ldng Designer per ANSI/TPI 1 Sec 2 For more nformation see This job s general notes page ITW-BCG www itwbcg com TPI www tp nst org WTCA www sbc ndustry com ICC www iccsafe org

TC LL	40.0 PSF	REF	R487-- 29549
TC DL	10.0 PSF	DATE	03/25/13
BC DL	5.0 PSF	DRW	HCUSR487 13084009
BC LL	0.0 PSF	HC-ENG	DF/DF
TOT.LD	55.0 PSF	SEQN-	60616
DUR FAC.	1.00		
SPACING	16.0"	JREF-	1UUR487_Z02

(13-106F--Don Reed Construction Decker House Floor System -- Lake City, FL - F10 21'2" Floor Truss)

Top chord 4x2 SP_#1_12A
Bot chord 4x2 SP_#1_12A
Webs 4x2 SP_#3__12A

Lumber grades designated with "12A" use design values approved 1/5/2012 by ALSC

Deflection meets L/360 live and L/360 total load Creep increase factor for dead load is 1 50

+ 2x6 continuous strongback See detail STRBRIBR0211 for bracing and bridging recommendations

Maximum panel length exceeds 30" TPI allows non-bearing partition walls to be supported at any point when panels are 30" or less

Trusses to be spaced at 16 0" OC maximum

Truss must be installed as shown with top chord up

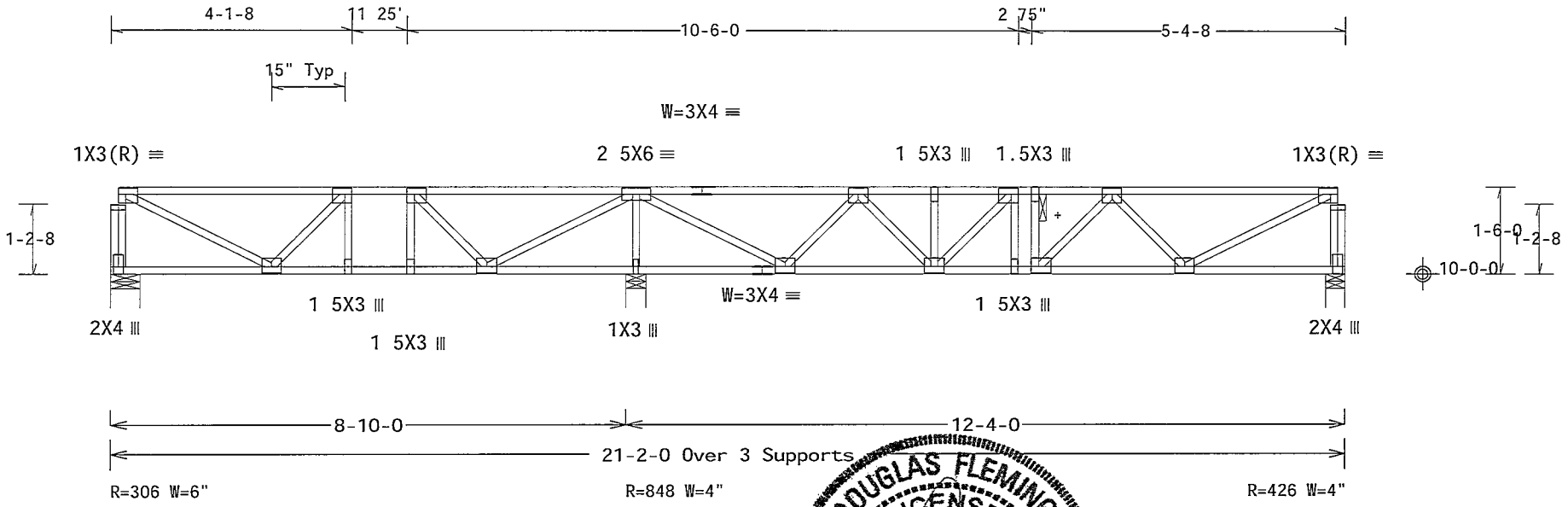

Note: All Plates Are 3X4 Except As Shown.

Design Crit: FBC2010Res/TPI-2007(STD)

PLT TYP. Wave FT/RT=12%(0%)/0(0) 10:03.11.0209 19 QTY. 7 FL/-/4/-/-/R/- Scale =.375"/Ft.

DOUGLAS FLEMING LICENSE No. 66648 STATE OF FLORIDA PROFESSIONAL ENGINEER 03/25/2013

ALPINE
ITW Building Components Group Inc.
Haines City FL 33844
FL COA #0 278

WARNING READ AND FOLLOW ALL NOTES ON THIS SHEET!
IMPORTANT FURNISH THIS DESIGN TO ALL CONTRACTORS INCLUDING INSTALLERS

Trusses require extreme care in fabricat ng handl ng shipping nstalling and bracing Refer to and follow the latest edition of BCSI (Build ng Component Safety Information by TPI and WTCA) for recommended practices pr or to performing these functions Installers shall provide temporary bracing per BCSI Unless noted otherw se top chord shall have properly attached structural sheath ng and bottom chord shall have a properly attached r gid ceiling Locations shown for permanent lateral restraint of webs shall have brac ng nstalled per BCSI sections B3 B7 or B10 as applicable

ITW Bu ldng Components Group Inc (ITWBCG) shall not be respons ble for any dev ation from this design any fa lure to bu ld the truss in conformance with ANSI/TPI 1 or for handling sh pping nstallation bracing of trusses Apply plates to each face of truss and pos t on as shown above and on the Joint Details unless noted otherwise Refer to draw ngs 160A-Z for standard plate pos tions A seal on this drawing or cover page list ng th s draw ng ndicates acceptance of professional engineering respons bility solely for the design shown The su tab lity and use of this design for any structure is the responsibility of the Bu ldng Designer per ANSI/TPI 1 Sec 2 For more informat on see Th s job s general notes page ITW BCG www itwbcg com TPI www tpinst org WTCA www sbcindustry com ICC www iccsafe org

TC LL	40.0 PSF	REF	R487-- 29550
TC DL	10.0 PSF	DATE	03/25/13
BC DL	5.0 PSF	DRW	HCUSR487 13084010
BC LL	0.0 PSF	HC-ENG	DF/DF
TOT.LD.	55.0 PSF	SEQN-	60614
DUR.FAC.	1 00		
SPACING	16 0"	JREF-	1UUR487_Z02

(13-106F--Don Reed Construction Decker House Floor System -- Lake City, FL - F11 12'6" Floor Truss)

Top chord 4x2 SP_#1_12A
Bot chord 4x2 SP_#1_12A
Webs 4x2 SP_#3__12A

Lumber grades designated with "12A" use design values approved 1/5/2012 by ALSC

Deflection meets L/360 live and L/360 total load Creep increase factor for dead load is 1 50

+ 2x6 continuous strongback See detail STRBRIBR0211 for bracing and bridging recommendations

Maximum panel length exceeds 30" TPI allows non-bearing partition walls to be supported at any point when panels are 30" or less

Trusses to be spaced at 16 0" OC maximum

Truss must be installed as shown with top chord up

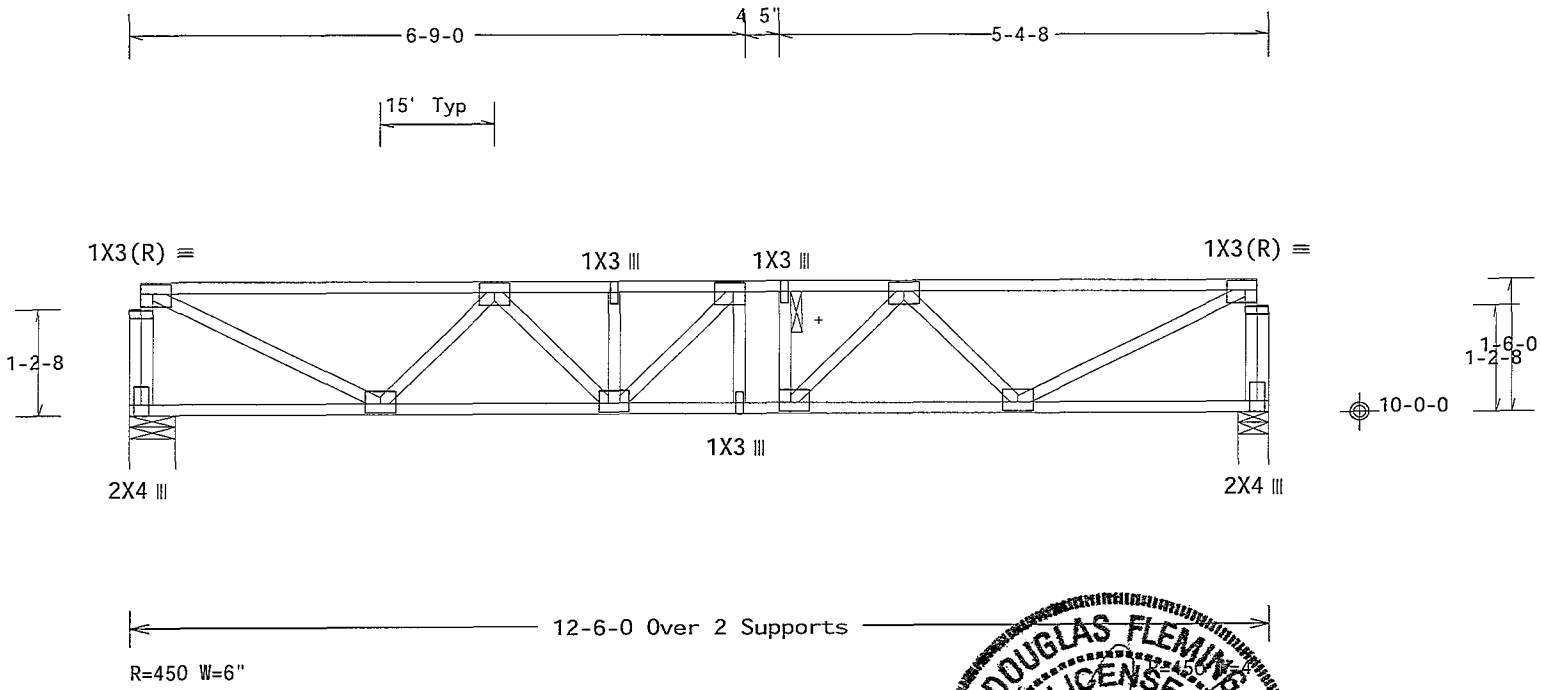

Note All Plates Are 3X4 Except As Shown

Design Crit FBC2010Res/TPI-2007(STD)

PLT TYP. Wave FT/RT=12%(0%)/0(0) 10.03.11.0209.19 QTY:3 FL/-/4/-/-/R/- Scale =.5"/Ft.

ALPINE
ITW Building Components Group Inc.
Haines City, FL 33844
FL COA #0 278

WARNING READ AND FOLLOW ALL NOTES ON THIS SHEET!
IMPORTANT FURNISH THIS DESIGN TO ALL CONTRACTORS INCLUDING INSTALLERS

Trusses require extreme care in fabr cat ng hand l ng sh pp ng nstall ng and bracing Refer to and follow the latest edition of BCSI (Bu ld ng Component Safety Information by TPI and WTCA) for safety pract ces prior to perform ng these funct ons Installers shall provide temporary bracing per BCSI Unless noted otherwise top chord shall have properly attached structural sheath ng and bottom chord shall have a properly attached rigid ce l ng Locat ons shown for permanent lateral restra nt of webs shall have bracing nstalled per BCSI sections B3 B7 or B10 as applicable

ITW Building Components Group Inc (ITWBCG) shall not be responsible for any dev at on from this des g any failure to bu ld the truss n conformance with ANSI/TPI 1 or for handl ng sh pp ng nstallat on & bracing of trusses Apply plates to each face of truss and pos t on as shown above and on the Joint Details unless noted otherw se Refer to draw ngs 160A-Z for standard plate pos tions A seal on this drawing or cover page l st ng this draw ng nd cates acceptance of profess onal engineering responsibility solely for the des gn shown The su tability and use of this des gn for any structure is the responsibil ty of the Bu lding Des gner per ANSI/TPI 1 Sec 2 For more informat on see Th s job s general notes page ITW BCG www itwbcg com TPI www tpinst org WTCA www sbcindustry com ICC www iccsafe org

DOUGLAS FLEMING LICENSE No. 66648 STATE OF FLORIDA PROFESSIONAL ENGINEER 03/25/2013

TC LL	40.0 PSF	REF	R487-- 29551
TC DL	10 0 PSF	DATE	03/25/13
BC DL	5 0 PSF	DRW	HCUSR487 13084011
BC LL	0.0 PSF	HC-ENG	DF/DF
TOT LD.	55.0 PSF	SEQN-	60620
DUR FAC.	1.00		
SPACING	16.0"	JREF-	1UUR487_Z02

THIS DWG PREPARED FROM COMPUTER INPUT (LOADS & DIMENSIONS) SUBMITTED BY TRUSS MFR

(13-106F--Don Reed Construction Decker House Floor System -- Lake City, FL - F12 16'3" Floor Truss)

Top chord 4x2 SP_#1_12A
Bot chord 4x2 SP_#1_12A
Webs 4x2 SP_#3__12A

Lumber grades designated with "12A" use design values approved 1/5/2012 by ALSC

Deflection meets L/360 live and L/360 total load Creep increase factor for dead load is 1 50

+ 2x6 continuous strongback See detail STRBRIBR0211 for bracing and bridging recommendations

Maximum panel length exceeds 30" TPI allows non-bearing partition walls to be supported at any point when panels are 30" or less

Trusses to be spaced at 16 0 OC maximum

Truss must be installed as shown with top chord up

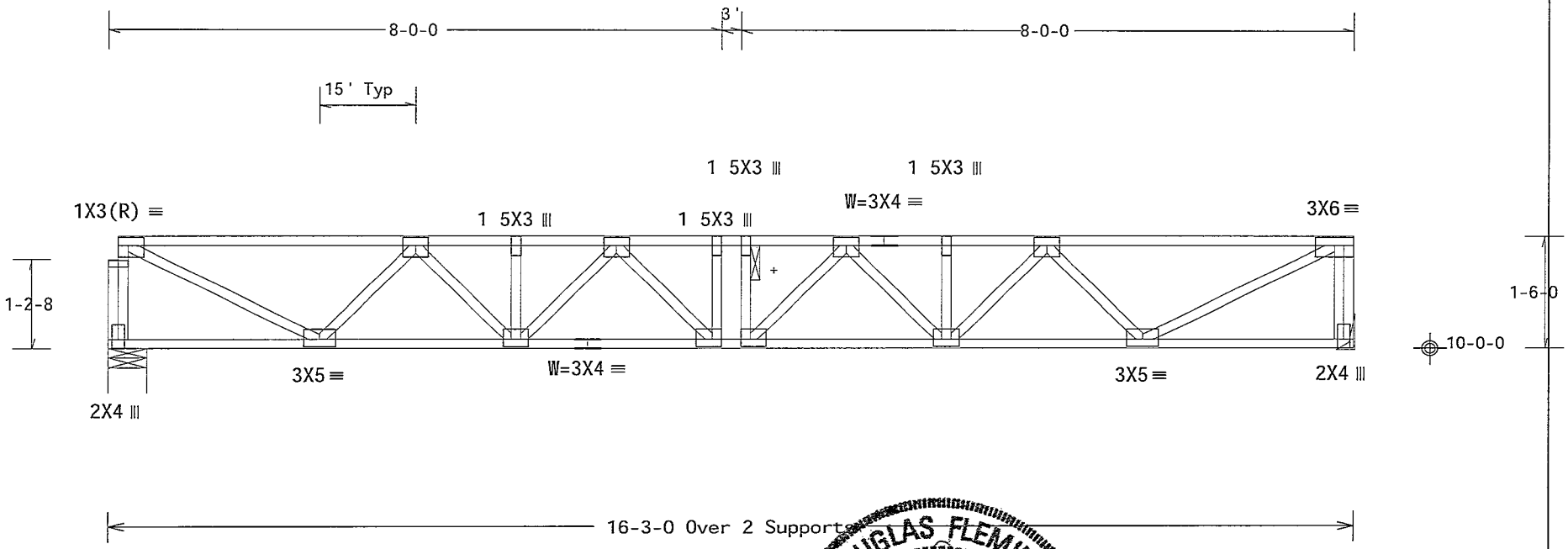

Note All Plates Are 3X4 Except As Shown

Design Crit. FBC2010Res/TPI-2007(STD)

PLT TYP Wave FT/RT=12%(0%)/0(0) 10.03.11.0209.19 QTY 1 FL/-/4/-/-/R/- Scale = 5"/Ft.

DOUGLAS FLEMING LICENSE No. 66648 STATE OF FLORIDA PROFESSIONAL ENGINEER 03/25/2013

ALPINE
ITW Building Components Group Inc.
Haines City, FL 33844
FL COA #0 278

WARNING READ AND FOLLOW ALL NOTES ON THIS SHEET!
IMPORTANT FURNISH THIS DESIGN TO ALL CONTRACTORS INCLUDING INSTALLERS

Trusses require extreme care n fabricating handling sh pp ng install ng and brac ng Refer to all follow the latest edition of BCSI (Build ng Component Safety Informat on by TPI and WTCA) for sa practices prior to perform ng these functions Installers shall prov de temporary brac ng per BCS Unless noted otherwise top chord shall have properly attached structural sheathing and bottom chor shall have a properly attached r g d ce ling Locat ons shown for permanent lateral restra nt of we shall have bracing installed per BCSI sect ons B3 B7 or B10 as appl cable

ITW Bu ld ng Components Group Inc (ITWBCG) shall not be responsible for any dev at on from th s desig any failure to build the truss in conformance with ANSI/TPI 1 or for handling sh pp ng installat on & brac ng of trusses Apply plates to each face of truss and posit on as shown above and on the Jo nt Deta ls unless noted otherwise Refer to drawings 160A-Z for standard plate posit ons A seal on th s draw ng or cover page l sting this drawing indicates acceptance of professional eng neer ng responsib l ty solely for the des gn shown The suitabil ty and use of this design for any structure s the respons b l ty of the Bu ld ng Designer per ANSI/TPI 1 Sec 2 For more informat on see This job s general notes page ITW-BCG www itwbcg com TPI www tpinst org WTCA www sbc ndustry com ICC www ccsafe org

TC LL	40.0 PSF	REF	R487-- 29552
TC DL	10.0 PSF	DATE	03/25/13
BC DL	5.0 PSF	DRW	HCUSR487 13084012
BC LL	0.0 PSF	HC-ENG	DF/DF
TOT LD.	55.0 PSF	SEQN-	60654
DUR FAC	1 00		
SPACING	16 0"	JREF-	1UUR487_Z02

(13-106F--Don Reed Construction Decker House Floor System -- Lake City, FL - F13 16'3" Floor Truss)

Top chord 4x2 SP_#1_12A
Bot chord 4x2 SP_#1_12A
Webs 4x2 SP_#3__12A

Lumber grades designated with "12A' use design values approved 1/5/2012 by ALSC

Deflection meets L/360 live and L/360 total load Creep increase factor for dead load is 1 50

+ 2x6 continuous strongback See detail STRBRIBR0211 for bracing and bridging recommendations

Maximum panel length exceeds 30" TPI allows non-bearing partition walls to be supported at any point when panels are 30" or less

Trusses to be spaced at 16 0" OC maximum

Truss must be installed as shown with top chord up

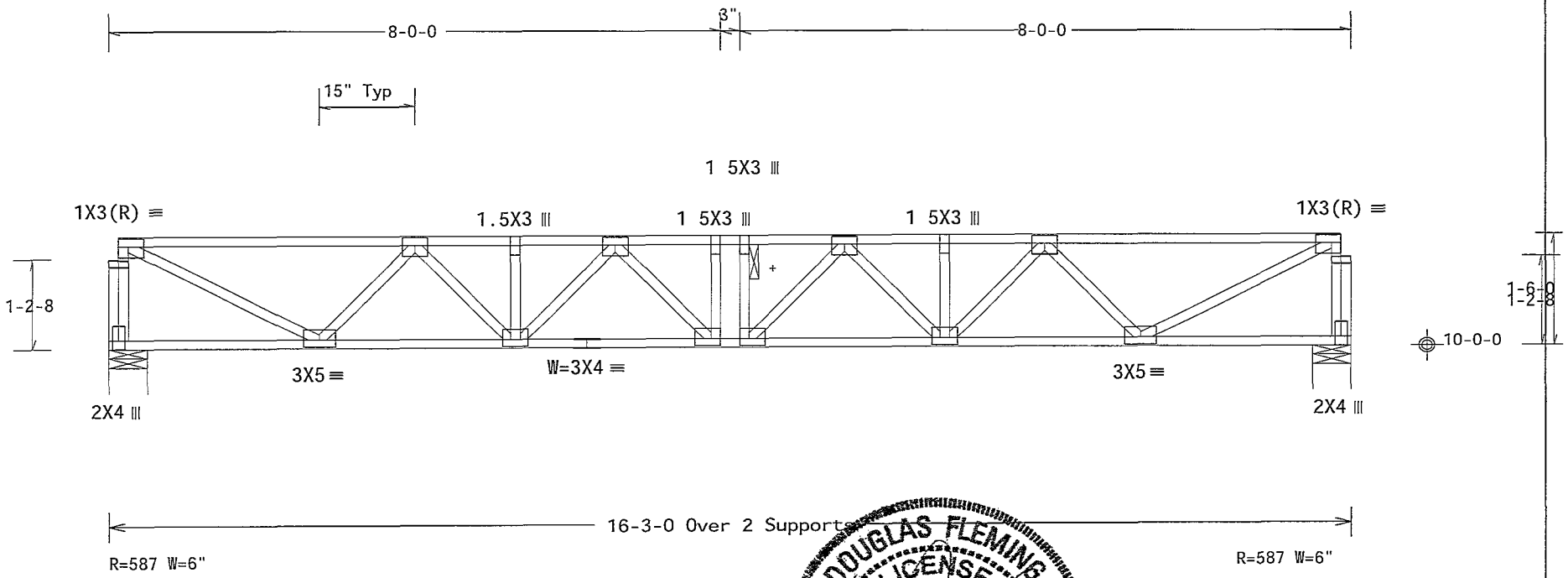

Note All Plates Are 3X4 Except As Shown

Design Crit. FBC2010Res/TPI-2007(STD)

PLT TYP. Wave FT/RT=12%(0%)/0(0) 10 03 11.0209.19 QTY 4 FL/-/4/-/-/R/- Scale = 5"/Ft.

DOUGLAS FLEMING LICENSE No. 66648 STATE OF FLORIDA PROFESSIONAL ENGINEER 03/25/2013

ALPINE
ITW Building Components Group Inc.
Haines City, FL 33844
FL COA #0 278

WARNING READ AND FOLLOW ALL NOTES ON THIS SHEET!
IMPORTANT FURNISH THIS DESIGN TO ALL CONTRACTORS INCLUDING INSTALLERS

Trusses requ re extreme care n fabricat ng handl ng shipping installing and brac ng Refer to and follow the latest ed t on of BCSI (Building Component Safety Information by TPI and WTCA) for safety practices pr or to performing these funct ons Installers shall provide temporary bracing per BCSI Unless noted otherw se top chord shall have properly attached structural sheathing and bottom chord shall have a properly attached r g d ce ling Locations shown for permanent lateral restra nt of webs shall have brac ng installed per BCSI sections B3 B7 or B10 as appl cable

ITW Bu ld ng Components Group Inc (ITWBCG) shall not be respons ble for any dev ation from this des g any fa lure to build the truss n conformance with ANSI/TPI 1 or for handling sh pping installation & bracing of trusses Apply plates to each face of truss and posit on as shown above and on the Joint Deta ls unless noted otherw se Refer to drawings 160A-Z for standard plate pos tions A seal on this draw ng or cover page listing this draw ng indicates acceptance of professional engineering responsibil ty solely for the design shown The suitab lity and use of this design for any structure s the respons b lity of the Building Designer per ANSI/TPI 1 Sec 2 For more informat on see Th s job s general notes page ITW-BCG www itwbcg com TPI www tpinst org WTCA www sbcindustry com ICC www iccsafe org

TC LL	40 0 PSF	REF R487-- 29553
TC DL	10.0 PSF	DATE 03/25/13
BC DL	5 0 PSF	DRW HCUSR487 13084013
BC LL	0 0 PSF	HC-ENG DF/DF
TOT.LD	55 0 PSF	SEQN- 60662
DUR FAC	1.00	
SPACING	16 0"	JREF- 1UUR487_Z02

THIS DWG PREPARED FROM COMPUTER INPUT (LOADS & DIMENSIONS) SUBMITTED BY TRUSS MFR

(13-106F--Don Reed Construction Decker House Floor System -- Lake City, FL - F14 15'5 8 Floor Truss)

Top chord 4x2 SP_#1_12A
Bot chord 4x2 SP_#1_12A
Webs 4x2 SP_#3__12A

Lumber grades designated with 12A" use design values approved 1/5/2012 by ALSC

Deflection meets L/360 live and L/360 total load Creep increase factor for dead load is 1 50

+ 2x6 continuous strongback See detail STRBRIBR0211 for bracing and bridging recommendations

Maximum panel length exceeds 30" TPI allows non-bearing partition walls to be supported at any point when panels are 30" or less

Trusses to be spaced at 16 0' OC maximum

Truss must be installed as shown with top chord up

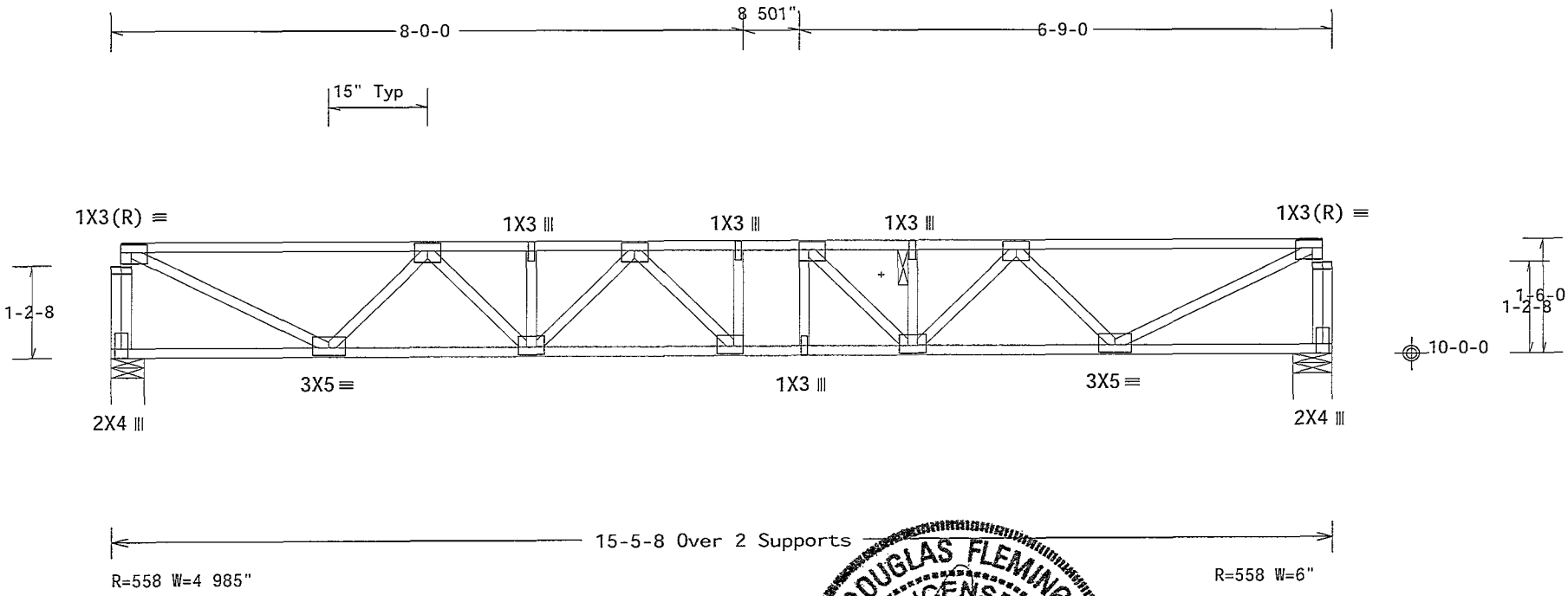

Note All Plates Are 3X4 Except As Shown

Design Crit· FBC2010Res/TPI-2007(STD)

PLT TYP. Wave

FT/RT=12%(0%)/0(0)

10 03 11.0209 19

QTY:

FL/-/4/-/-/R/-

Scale =.5"/Ft

DOUGLAS FLEMING LICENSE No 66648 STATE OF FLORIDA PROFESSIONAL ENGINEER 03/25/2013

ALPINE

ITW Building Components Group Inc.

Haines City, FL 33844
FL COA #0 278

WARNING READ AND FOLLOW ALL NOTES ON THIS SHEET!
IMPORTANT FURNISH THIS DESIGN TO ALL CONTRACTORS INCLUDING INSTALLERS

Trusses requ re extreme care n fabr cating handling sh pp ng install ng and brac ng Re r to ap follow the latest edit on of BCSI (Bu lding Component Safety Informat on by TPI and WTCA) for ge pract ces prior to perform ng these functions Installers shall prov de temporary brac ng per BCSI Unless noted otherwise top chord shall have properly attached structural sheathing and bottom ch shall have a properly attached rigid ce l ng Locat ons shown for permanent lateral restra nt of web shall have bracing installed per BCSI sect ons B3 B7 or B10 as appl cable

ITW Build ng Components Group Inc (ITWBCG) shall not be responsible for any deviat on from th s dr any failure to bu ld the truss n conformance with ANSI/TPI 1 or for handling shipp ng installat on brac ng of trusses Apply plates to each face of truss and position as shown above and on the Jo nt Details unless noted otherw se Refer to drawings 160A-Z for standard plate pos t ons A seal on th s draw ng or cover page l st ng this drawing ndicates acceptance of profess onal eng neer ng responsibility solely for the design shown The suitabil ty and use of th s des gn for any structure is the responsibil ty of the Bu ld ng Designer per ANSI/TPI 1 Sec 2 For more nformation see This job s general notes page ITW-BCG www twbcg com TPI www tp nst org WTCA www sbc ndustry com ICC www ccsafe org

TC LL	40 0 PSF	REF	R487-- 29554
TC DL	10 0 PSF	DATE	03/25/13
BC DL	5.0 PSF	DRW	HCUSR487 13084014
BC LL	0.0 PSF	HC-ENG	DF/DF
TOT.LD.	55.0 PSF	SEQN-	60660
DUR.FAC	1.00		
SPACING	16.0"	JREF-	1UUR487_Z02

(13-106F--Don Reed Construction Decker House Floor System -- Lake City, FL - F15 14'1"8 Floor Truss)

Top chord 4x2 SP_#1_12A
Bot chord 4x2 SP_#1_12A
Webs 4x2 SP_#3__12A

Lumber grades designated with "12A" use design values approved 1/5/2012 by ALSC

Deflection meets L/360 live and L/360 total load Creep increase factor for dead load is 1 50

+ 2x6 continuous strongback See detail STRBRIBR0211 for bracing and bridging recommendations

Maximum panel length exceeds 30 TPI allows non-bearing partition walls to be supported at any point when panels are 30" or less

Trusses to be spaced at 16 0' OC maximum

Truss must be installed as shown with top chord up

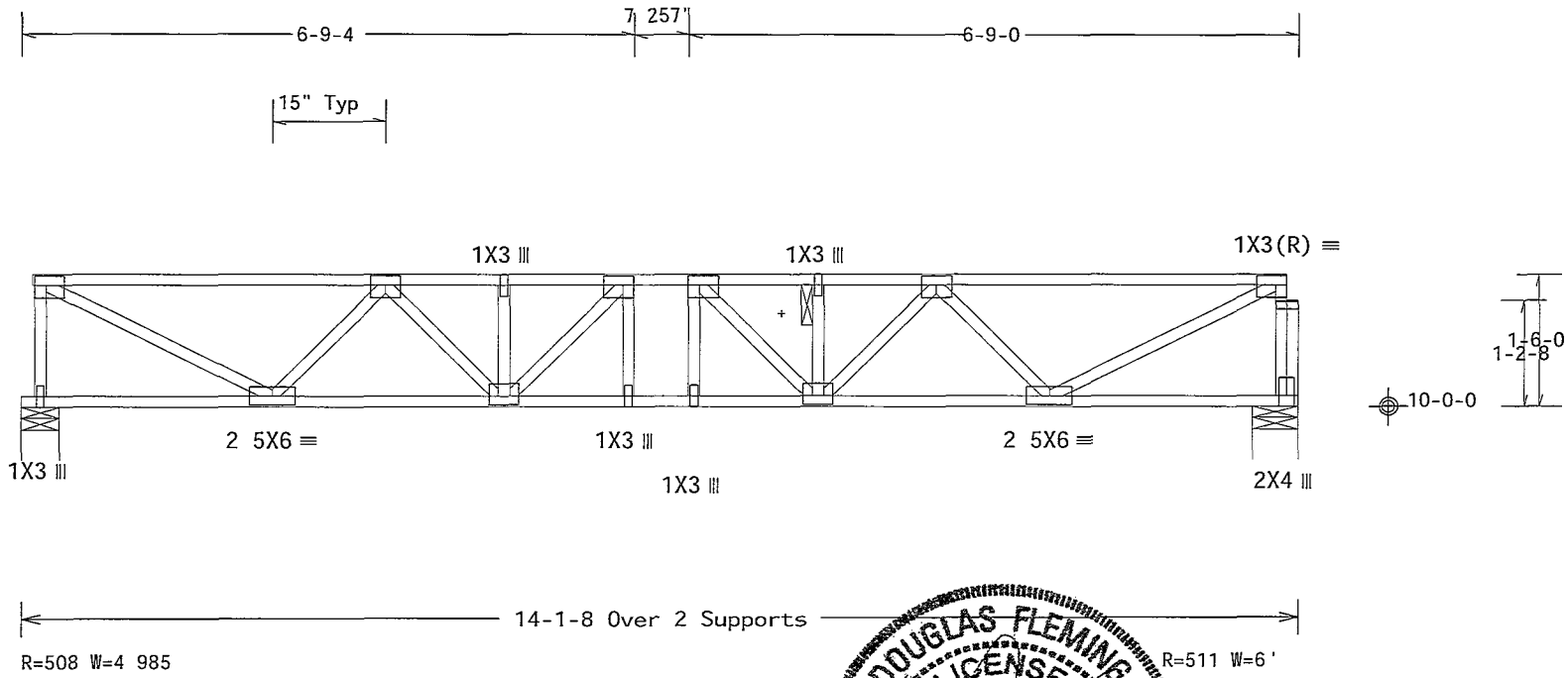

Note All Plates Are 3X4 Except As Shown

Design Crit FBC2010Res/TPI-2007(STD)

PLT TYP. Wave FT/RT=12%(0%)/0(0) 10 03.11 0209.19 /0TY 1 FL/-/4/-/-/R/- Scale =.5"/Ft

DOUGLAS FLEMING LICENSE No. 66648 STATE OF FLORIDA PROFESSIONAL ENGINEER 05/25/2013

ALPINE
ITW Building Components Group Inc.
Haines City, FL 33844
FL COA #0 278

WARNING READ AND FOLLOW ALL NOTES ON THIS SHEET!
IMPORTANT FURNISH THIS DESIGN TO ALL CONTRACTORS INCLUDING INSTALLERS

Trusses requ re extreme care n fabr cating handling shipping installing and brac ng Refer to ... follow the latest ed t on of BCSI (Bu ld ng Component Safety Informat on by TPI and WTCA) for sa ty ... practices prior to perform ng these functions Installers shall prov de temporary brac ng per BCS ... Unless noted otherwise top chord shall have properly attached structural sheath ng and bottom chor ... shall have a properly attached rigid ce l ng Locat ons shown for permanent lateral restra nt of wo ... shall have bracing nstalled per BCSI sect ons B3 B7 or B10 as appl cable

ITW Building Components Group Inc (ITWBCG) shall not be responsible for any deviat on from th s des g ... any failure to bu ld the truss in conformance w th ANSI/TPI 1 or for handl ng sh pp ng nstallation & bracing of trusses Apply plates to each face of truss and pos tion as shown above and on the Joint Details unless noted otherw se Refer to draw ngs 160A-Z for standard plate pos tions A seal on this drawing or cover page listing this draw ng ind cates acceptance of profess onal engineering respons bility solely for the design shown The su tab lity and use of this design for any structure is the responsibility of the Building Des gner per ANSI/TPI 1 Sec 2 For more information see Th s job s general notes page ITW BCG www twbcg com TPI www tpinst org WTCA www sbcindustry com ICC www iccsafe org

TC LL	40.0 PSF	REF	R487-- 29555
TC DL	10.0 PSF	DATE	03/25/13
BC DL	5 0 PSF	DRW	HCUSR487 13084015
BC LL	0.0 PSF	HC-ENG	DF/DF
TOT.LD	55.0 PSF	SEQN-	60658
DUR.FAC.	1.00		
SPACING	16.0"	JREF-	1UUR487_Z02

THIS DWG PREPARED FROM COMPUTER INPUT (LOADS & DIMENSIONS) SUBMITTED BY TRUSS MFR

(13-106F--Don Reed Construction Decker House Floor System -- Lake City, FL - F16 12'11' Gable)

Top chord 4x2 SP_#1_12A
Bot chord 4x2 SP_#1_12A
Webs 4x2 SP_#3__12A

Lumber grades designated with "12A" use design values approved 1/5/2012 by ALSC

Truss must be installed as shown with top chord up

Fasten rated sheathing to one face of this frame

See detail STRBRIBR0211 for bracing and bridging recommendations

Trusses to be spaced at 16 0" OC maximum

Deflection meets L/360 live and L/360 total load Creep increase factor for dead load is 1 50

Sheathing is required for any longitudinal(drag) forces All connections to be designed by the building designer

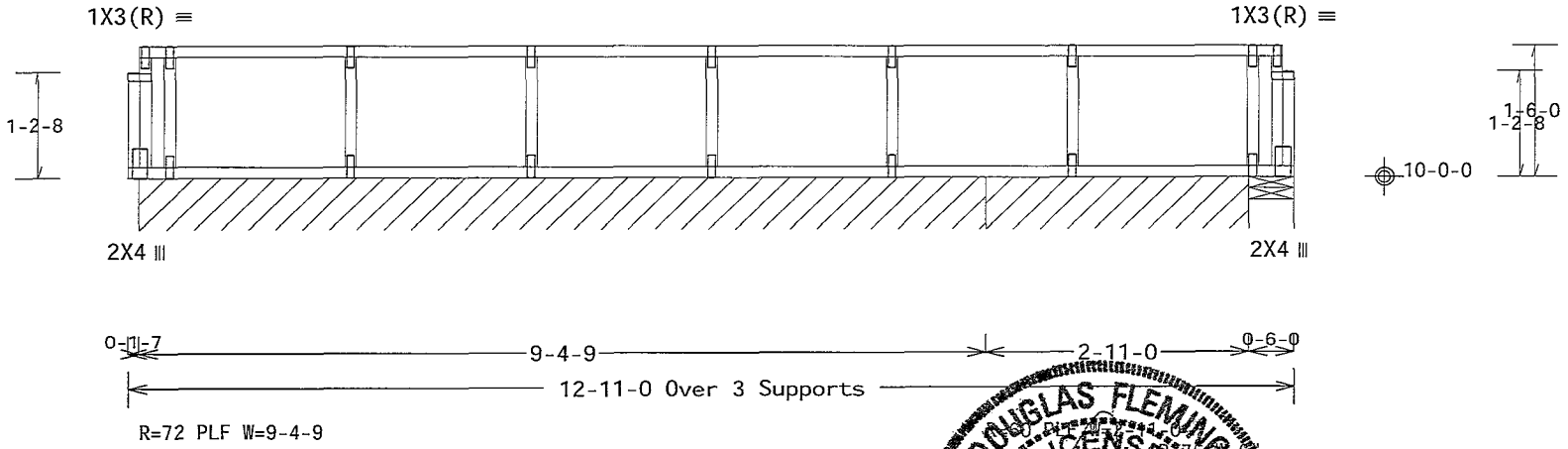

Note· All Plates Are 1X3 Except As Shown

PLT TYP. Wave

Design Crit FBC2010Res/TPI-2007(STD)
FT/RT=12%(0%)/0(0)

10 03 11.0209 19 CTY:1

FL/-/4/-/-/R/-

Scale =.5"/Ft.

DOUGLAS FLEMING LICENSE No.66648 STATE OF FLORIDA PROFESSIONAL ENGINEER 03/25/2013

TC LL	40.0 PSF	REF	R487-- 29556
TC DL	10.0 PSF	DATE	03/25/13
BC DL	5.0 PSF	DRW	HCUSR487 13084016
BC LL	0.0 PSF	HC-ENG	DF/DF
TOT.LD.	55.0 PSF	SEQN-	60656
DUR.FAC.	1.00		
SPACING	16.0"	JREF-	1UUR487_Z02

ALPINE
ITW Building Components Group Inc.
Haines City, FL 33844
FL COA #0 278

WARNING READ AND FOLLOW ALL NOTES ON THIS SHEET!
IMPORTANT FURNISH THIS DESIGN TO ALL CONTRACTORS INCLUDING INSTALLERS

Trusses require extreme care in fabricating handling shipping installing and bracing Refer to and follow the latest edition of BCSI (Building Component Safety Information by TPI and WTCA) for stand practices pr or to perform ng these functions Installers shall provide temporary bracing per BCSI Unless noted otherwise top chord shall have properly attached structural sheathing and bottom chord shall have a properly attached r g d ceiling Locations shown for permanent lateral restraint of shall have bracing installed per BCSI sections B3 B7 or B10 as appl cable

ITW Build ng Components Group Inc (ITWBCG) shall not be responsible for any deviation from this des any failure to build the truss n conformance with ANSI/TPI 1 or for handling shipping installation bracing of trusses Apply plates to each face of truss and position as shown above and on the Joint Details unless noted otherwise Refer to drawings 160A-Z for standard plate positions A seal on this drawing or cover page listing th s drawing indicates acceptance of professional engineering responsibility solely for the design shown The suitability and use of this design for any structure is the responsibility of the Building Designer per ANSI/TPI 1 Sec 2 For more information see This job s general notes page ITW-BCG www twbcg com TPI www tpinst org WTCA www sbcindustry com ICC www iccsafe org

THIS DWG PREPARED FROM COMPUTER INPUT (LOADS & DIMENSIONS) SUBMITTED BY TRUSS MFR

(13-106F--Don Reed Construction Decker House Floor System -- Lake City, FL - F17 12'2" Gable)

Top chord 4x2 SP_#1_12A
Bot chord 4x2 SP_#1_12A
Webs 4x2 SP_#3__12A

Lumber grades designated with "12A" use design values approved 1/5/2012 by ALSC

Truss must be installed as shown with top chord up

Fasten rated sheathing to one face of this frame

See detail STRBRIBR0211 for bracing and bridging recommendations

Trusses to be spaced at 16 0" OC maximum

Deflection meets L/360 live and L/360 total load Creep increase factor for dead load is 1 50

Sheathing is required for any longitudinal(drag) forces All connections to be designed by the building designer

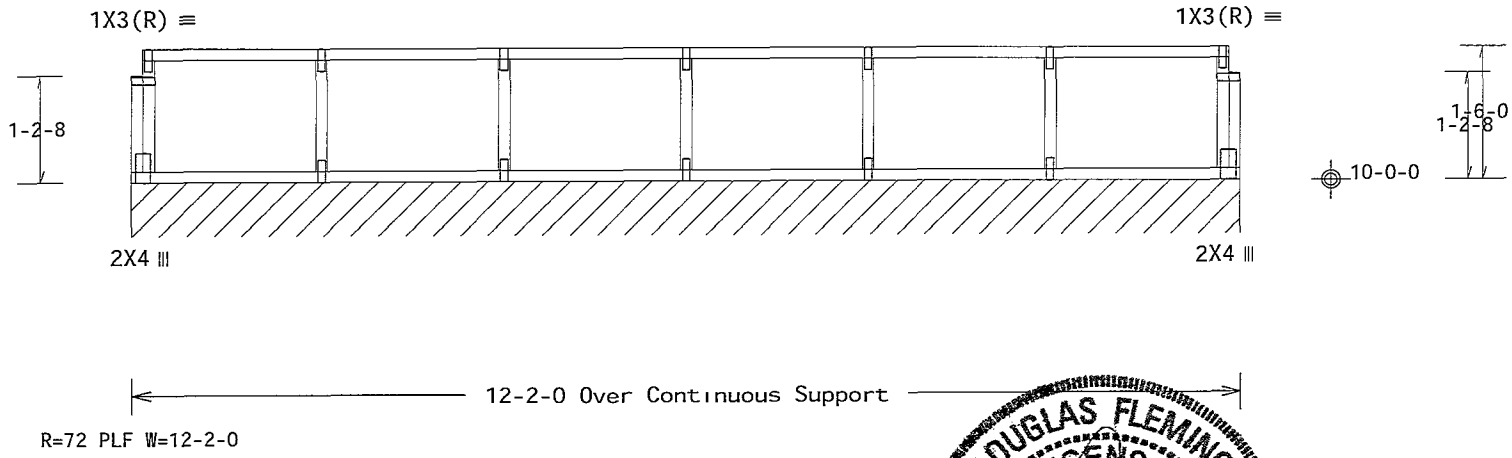

Note All Plates Are 1X3 Except As Shown.

Design Crit. FBC2010Res/TPI-2007(STD)

PLT TYP. Wave

FT/RT=12%(0%)/0(0)

10.03.11-0209 19

QTY:

FL/-/4/-/-/R/-

Scale = 5"/Ft.

DOUGLAS FLEMING LICENSE No 66648 STATE OF FLORIDA PROFESSIONAL ENGINEER 03/25/2013

ALPINE

ITW Building Components Group Inc.

Haines City, FL 33844
FL COA #0 278

WARNING READ AND FOLLOW ALL NOTES ON THIS SHEET!
IMPORTANT FURNISH THIS DESIGN TO ALL CONTRACTORS INCLUDING INSTALLERS

Trusses require extreme care in fabricat ng handling shipping installing and bracing Refer to and follow the latest edition of BCSI (Building Component Safety Information by TPI and WTCA) for safety practices pr or to performing these funct ons Installers shall provide temporary bracing per BCSI Unless noted otherw se top chord shall have properly attached structural sheathing and bottom chord shall have a properly attached rigid ceiling Locations shown for permanent lateral restraint of web shall have brac ng installed per BCSI sections B3 B7 or B10 as applicable

ITW Building Components Group Inc (ITWBCG) shall not be responsible for any deviation from this design any failure to build the truss in conformance with ANSI/TPI 1 or for handling sh pping installation bracing of trusses Apply plates to each face of truss and posit on as shown above and on the Jo nt Details unless noted otherwise Refer to drawings 160A-Z for standard plate positions A seal on this drawing or cover page listing this draw ng indicates acceptance of professional eng neering responsib lity solely for the design shown The suitab lity and use of this design for any structure s the responsibility of the Building Des gner per ANSI/TPI 1 Sec 2 For more informat on see This job s general notes page ITW BCG www itwbcg com TPI www tpinst org WTCA www sbcindustry com ICC www iccsafe org

TC LL	40.0 PSF	REF	R487-- 29557
TC DL	10.0 PSF	DATE	03/25/13
BC DL	5.0 PSF	DRW	HCUSR487 13084017
BC LL	0.0 PSF	HC-ENG	DF/DF
TOT.LD.	55.0 PSF	SEQN-	60621
DUR.FAC.	1.00		
SPACING	16.0"	JREF-	1UUR487_Z02

(13-106F--Don Reed Construction Decker House Floor System -- Lake City, FL - FG1 19'10" Floor Truss Girder)

Top chord 4x2 SP M-30
Bot chord 4x2 SP M-30
Webs 4x2 SP_#3__12A
W4, W15, W16, W18, W19, W20, W21 4x2 SP_#1_12A

Lumber grades designated with "12A" use design values approved 1/5/2012 by ALSC

Max JT VERT DEFL LL 0 42" DL 0 24" recommended camber 3/8"

Trusses to be spaced at 16 0" OC maximum

Truss must be installed as shown with top chord up

DEFLECTION MEETS L/360 LIVE AND L/240 TOTAL LOAD

2 COMPLETE TRUSSES REQUIRED

See DWG CNSY42PL0109 for connection details of 2 ply trusses

+ 2x6 continuous strongback See detail STRBRIBR0211 for bracing and bridging recommendations

Special loads
------(Lumber Dur Fac =1 00 / Plate Dur Fac =1 00)
TC- From 33 plf at 0 13 to 33 plf at 10 13
TC- From 33 plf at 10 13 to 33 plf at 12 13
TC- From 33 plf at 12 13 to 33 plf at 19 71
BC- From 3 plf at 0 00 to 3 plf at 5 83
BC- From 3 plf at 5 83 to 3 plf at 12 83
BC- From 3 plf at 12 83 to 3 plf at 19 83
PLT- 595 93 lb Conc Load at (0 48,11 46), (1 81,11 46), (3 15,11 46) (4 48,11 46), (5 81,11 46), (7 15,11 46), (8 48,11 46), (9 81,11 46) (11 15,11 34), (12 48,10 70), (13 81,10 80), (15 15,10 73), (16 48,10 76) (17 81,10 86), (19 15,10 63)

***(1) 2x6x(8-0-0) TRIMMED TO FIT SP #2__12A OR BETTER SCAB
ATTACH ONE SCAB TO ONE EXTERIOR FACE OF TRUSS WITH 0 135"X 3 5" NAILS @ 6" OC STAGGERED THROUGHOUT, WITHOUT SPLITTING LUMBER

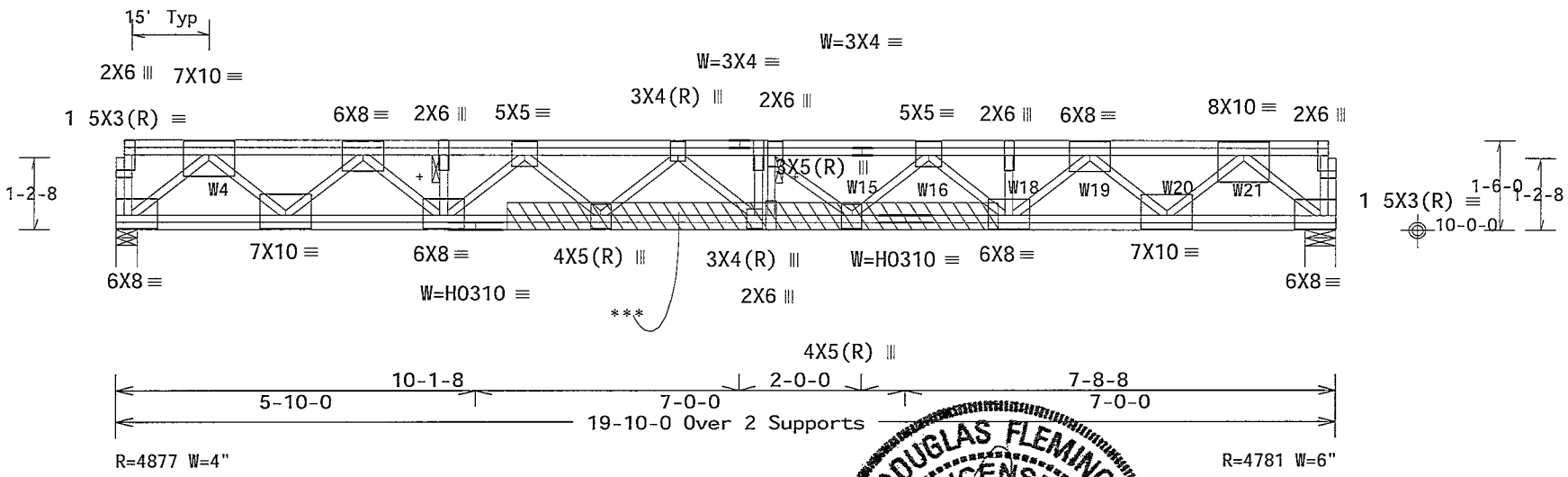

Design Crit: FBC2010Res/TPI-2007(STD)
PLT TYP. 20 Gauge HS,Wave FT/RT=12%(0%)/0(0) 10 03.11.0209.19 QTY:

DOUGLAS FLEMING LICENSE No.66648 STATE OF FLORIDA PROFESSIONAL ENGINEER 03/25/2013

FL/-/4/-/-/R/- Scale =.375"/Ft

TC LL	40.0 PSF	REF	R487-- 29558
TC DL	10.0 PSF	DATE	03/25/13
BC DL	5.0 PSF	DRW	HCUSR487 13084018
BC LL	0.0 PSF	HC-ENG	DF/DF
TOT.LD.	55.0 PSF	SEQN-	60699
DUR.FAC.	1.00		
SPACING	16.0"	JREF-	1UUR487_Z02

ALPINE
ITW Building Components Group Inc.
Haines City, FL 33844
FL COA #0 278

WARNING READ AND FOLLOW ALL NOTES ON THIS SHEET!
IMPORTANT FURNISH THIS DESIGN TO ALL CONTRACTORS INCLUDING INSTALLERS

Trusses require extreme care in fabricat ng handling shipping installing and bracing Refer to and follow the latest edition of BCSI (Build ng Component Safety Information by TPI and WTCA) for recommended practices pr or to performing these funct ons Installers shall provide temporary bracing per BCSI Unless noted otherw se top chord shall have properly attached structural sheathing and bottom chord shall have a properly attached r g d ceiling Locations shown for permanent lateral restraint of webs shall have bracing installed per BCSI sections B3 B7 or B10 as applicable

ITW Building Components Group Inc (ITWBCG) shall not be respons ble for any dev ation from this design any fa lure to build the truss in conformance with ANSI/TPI 1 or for handling sh pping installation and bracing of trusses Apply plates to each face of truss and pos t on as shown above and on the Joint Deta ls unless noted otherw se Refer to draw ngs 160A-Z for standard plate pos tions A seal on this drawing or cover page listing this draw ng indicates acceptance of professional engineering respons b lity solely for the design shown The su tab lity and use of this design for any structure is the responsibility of the Building Designer per ANSI/TPI 1 Sec 2 For more informat on see Th s job s general notes page ITW-BCG www itwbcg com TPI www tpinst org WTCA www sbcindustry com ICC www iccsafe org

STRONGBACK BRIDGING RECOMMENDATIONS

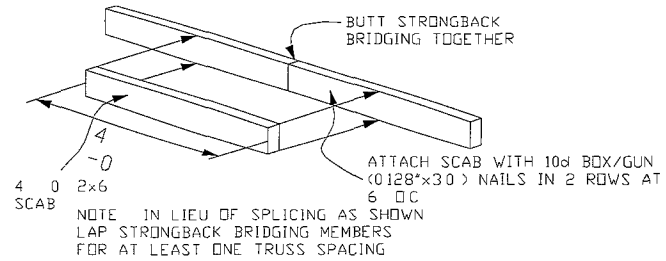

STRONGBACK BRIDGING SPLICE DETAIL

NOTE Details 1 and 2 are the preferred attachment methods

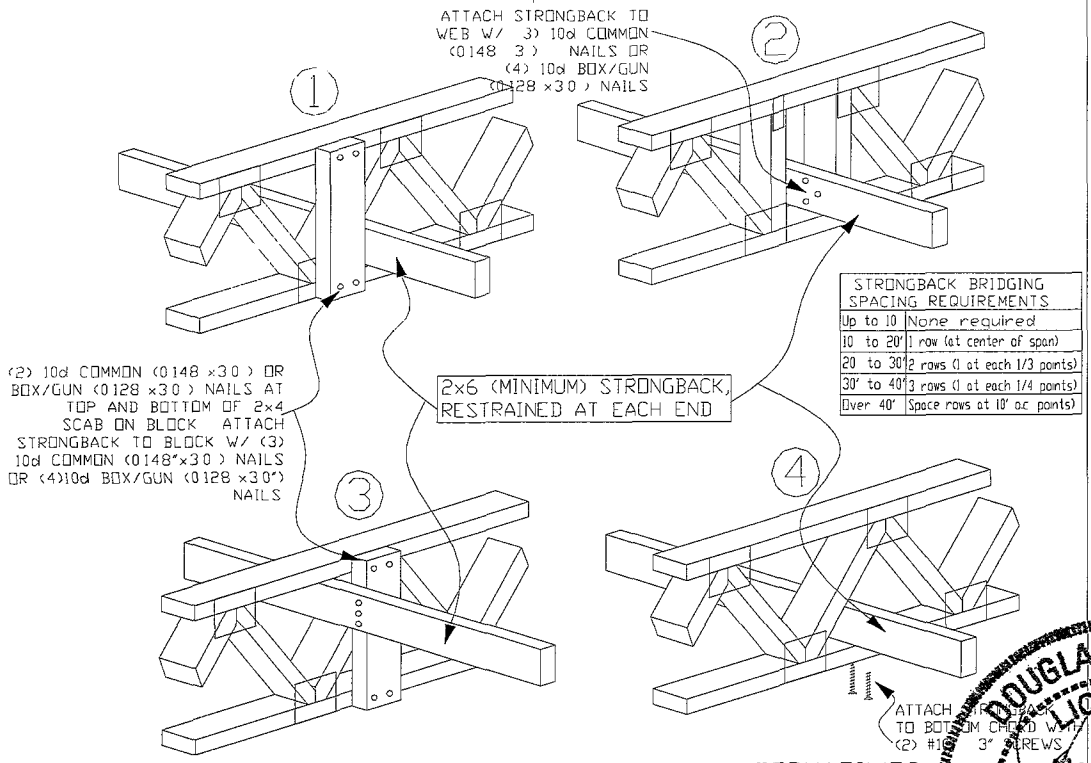

STRONGBACK BRIDGING SPACING REQUIREMENTS	
Up to 10	None required
10 to 20'	1 row (at center of span)
20 to 30'	2 rows (1 at each 1/3 points)
30' to 40'	3 rows (1 at each 1/4 points)
Over 40'	Space rows at 10' oc points)

STRONGBACK BRIDGING ATTACHMENT ALTERNATIVES

- All scab-on blocks shall be a minimum 2x4 stress graded lumber
- All strongback bridging and bracing shall be a minimum 2x6 stress graded lumber
- The purpose of strongback bridging is to develop load sharing between individual trusses resulting in an overall increase in the stiffness of the floor system 2x6 strongback bridging positioned as shown in details is recommended at 10 -0 oc (max)

The terms bridging and bracing are sometimes mistakenly used interchangeably Bracing is an important structural requirement of any floor or roof system Refer to the Truss Design Drawing (TDD) for the bracing requirements for each individual truss component Bridging particularly strongback bridging is a recommendation for a truss system to help control vibration In addition to aiding in the distribution of point loads between adjacent truss strongback bridging serves to reduce bounce or residual vibration resulting from moving point loads such as footsteps

The performance of all floor systems are enhanced by the installation of strongback bridging and therefore is strongly recommended by ITW Building Compents Group Inc

For additional information regarding strongback bridging refer to BCSI (Building Component Safety Information)

ITW Building Components Group Inc.

Earth City MO 63045

WARNING READ AND FOLLOW ALL NOTES ON THIS SHEET
Trusses require extreme care in fabricating handling shipping installing and bracing Refer to and follow BCSI (Building Component Safety Information, by TPI and WTCA) for safety practices prior to performing these functions Installers shall provide temporary bracing per BCSI Unless noted otherwise top chord shall have properly attached structural panels and bottom chord shall have properly attached rigid ceiling Locations shown for permanent lateral restraint of webs shall have bracing installed per BCSI sections B3 & B7 See this job's general notes page for more information

IMPORTANT FURNISH COPY OF THIS DESIGN TO INSTALLATION CONTRACTOR
ITW Building Component Group Inc (ITWBCG) shall not be responsible for any deviation from this design, failure to build the truss in conformance with TPI or fabricating, handling, shipping installing & bracing of trusses ITWBCG connector plates are made of 20/18/16GA (W,H/S/K) ASTM A653 grade 37/40/60 (K/W/H,S) galv steel Apply plates to each face of truss, positioned as shown above and on Joint Details
A seal on this drawing or cover page indicates acceptance and professional engineering responsibility solely for the truss component design shown The suitability and use of this component for any building is the responsibility of the Building Designer per ANSI/TPI 1 Sec 2
ITW BCG www.twbcg.com TPI www.tpinst.com WTCA www.sbcindustry.com ICC www.ccsafe.org

DOUGLAS FLEMING LICENSE No. 66648 STATE OF FLORIDA PROFESSIONAL ENGINEER
03/25/2013

Mar 25 '13

TC LL	PSF	REF STRONGBACK
TC DL	PSF	DATE 2/28/11
BC DL	PSF	DRWG STRBRIBR0211
BC LL	PSF	
TOT LD	PSF	
DUR FAC	1 00	
SPACING		

SYSTEM 42 PLY TO PLY CONNECTION DETAIL

USING SIMPSON 1/4 x 6 STRONG DRIVE SCREWS OR EQUAL

MAX CONCENTRATED LOAD
AS PER CHART BELOW

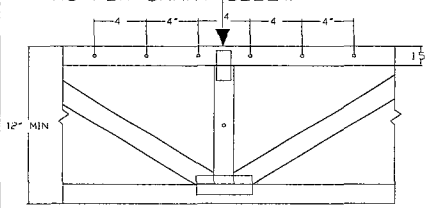

6 SCREWS IN TOP CHORD @ 4 OC
SCREWS IN VERTICAL WEB @ 4 OC
AND 3 END DISTANCE

REFER TO ITWBCG SEALED DRAWING
FOR INDIVIDUAL TRUSS DESIGN

LOAD APPLIED TO THIS PLY

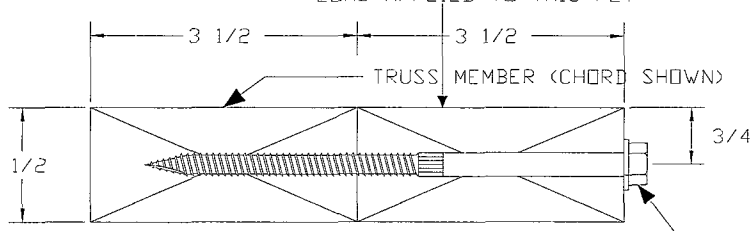

SCREW POSITION IN THE TRUSS

STRONG DRIVE SCREW

MAX UNIFORM LOAD
AS PER CHART BELOW

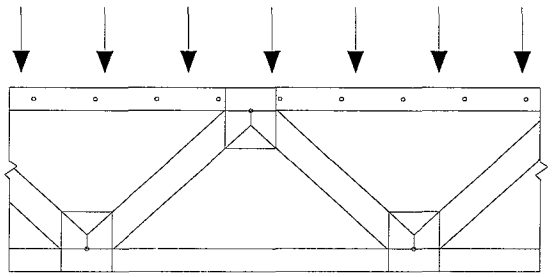

TOP CHORD SCREW SPACING PER CHART BELOW
(FOR SINGLE TOP CHORD ONLY)

FOR DOUBLE TOP CHORDS
USE (4) SCREWS IN UPPER TOP CHORD
USE 2 SCREWS IN LOWER TOP CHORD

MAX CONCENTRATED LOAD
AS PER CHART BELOW

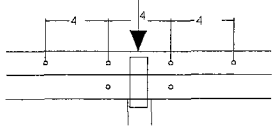

SCREWS CAN BE EQUALLY DIVIDED (ROUND UP TO THE NEAREST WHOLE NUMBER) INTO MULTIPLE VERTICALS USE A MINIMUM OF (1) SCREW PER VERTICAL

GENERAL NOTES

1. SCREWS CENTERED ALONG THE 1.5" DIMENSION OF THE 4x2 MEMBER
2. MINIMUM END DISTANCE OF 3"
3. SCREWS INSTALLED WITH HEAD IN LOADED MEMBER
4. GAP BETWEEN PLIES NOT TO EXCEED 1/8"
5. HOLES NOT ALLOWED THRU A METAL CONNECTOR PLATE
6. SCREW LOCATION MAY BE ADJUSTED UP TO 1" TO AVOID CONFLICT WITH OTHER HARDWARE OR TO AVOID LUMBER DEFECTS
7. DO NOT INSTALL SCREWS IN AREAS WHERE LUMBER WANE EXCEEDS 1/4"
8. CONCENTRATED LOADS TO BE APPLIED AT TRUSS PANEL POINT WITH VERTICAL WEB
9. FLOOR SHEATHING IS ASSUMED TO BE SECURELY FASTENED TO EACH TRUSS TOP CHORD
10. FOR 3x2 MEMBERS USE SIMPSON S 1/4 x4.5" SDS SCREWS OR EQUAL
11. CONTACT ITWBCG FOR SPECIAL CONNECTIONS NOT COVERED BY THIS DETAIL

UNIFORM LOADS

FOR DOUBLE TOP CHORD THE TOP CHORD SCREW OC SPACING MAY BE DOUBLED (BUT MAY NOT EXCEED 24" OC PER CHORD) SCREW SPACING SHALL BE OFFSET BY 1/2 THE OC SPACING IN EACH CHORD

TRUSS DEPTH (INCH)	# OF SCREWS IN VERTICAL WEB	MAXIMUM CONCENTRATED LOAD (LBS)	
		DFL&SP	SPF
12	1	3360	2800
14	2	3840	3200
16	2	3840	3200
18	4	4320	3600
20	4	4320	3600
22	5	4800	4000
24	5	4800	4000

TOP CHORD SCREW OC SPACING (INCH)	MAXIMUM UNIFORM LOAD (PLF) ALONG TOP CHORD (1.00 DF)	
	DFL&SP	SPF
4	1440	1200
6	960	800
8	720	600
10	576	480
12	480	400
14	411	342
16	360	300
18	320	266
20	288	240
22	261	218
24	240	200

DOUGLAS FLEMING
LICENSE
No. 66648
STATE OF
FLORIDA
PROFESSIONAL ENGINEER
03/25/2013

ITW
Building Components Group Inc.
Earth City MO 63045

WARNING READ AND FOLLOW ALL NOTES ON THIS SHEET
Trusses require extreme care in fabricating handling shipping installing and bracing. Refer to and follow BCSI (Building Component Safety Information, by TPI and WTCA) for safety practices prior to performing these functions. Installers shall provide temporary bracing per BCSI. Unless noted otherwise, top chord shall have properly attached structural panels and bottom chord shall have properly attached rigid ceiling. Locations shown for permanent lateral restraint of webs shall have bracing installed per BCSI sections B3 & B7. See the job's general notes page for more information.

IMPORTANT FURNISH COPY OF THIS DESIGN TO INSTALLATION CONTRACTOR
ITW Building Components Group Inc. (ITWBCG) shall not be responsible for any deviation from this design, any failure to build the truss in conformance with TPI or fabricating, handling, shipping, installing & bracing of trusses. ITWBCG connector plates are made of 20/18/16GA (W/H/S/K) ASTM A653 grade 37/40/60 (K/W/H/S) galv steel. Apply plates to each face of truss positioned as shown above and on joint details.
A seal on this drawing or cover page indicates acceptance and professional engineering responsibility solely for the truss component design shown. The suitability and use of this component for any building is the responsibility of the Building Designer per ANSI/TPI Sec. 2.
ITW BCG: www.twbcg.com TPI: www.tpinst.com WTCA: www.sbcindustry.com ICC: www.iccsafe.org

Mar 25 '13

TC LL	PSF	REF	SY42 CONNECTION
TC DL	PSF	DATE	1/1/09
BC DL	PSF	DRWG	CNSY42PL0109
BC LL	PSF		
TOT LD	PSF		
DUR FAC	1.00		
SPACING			

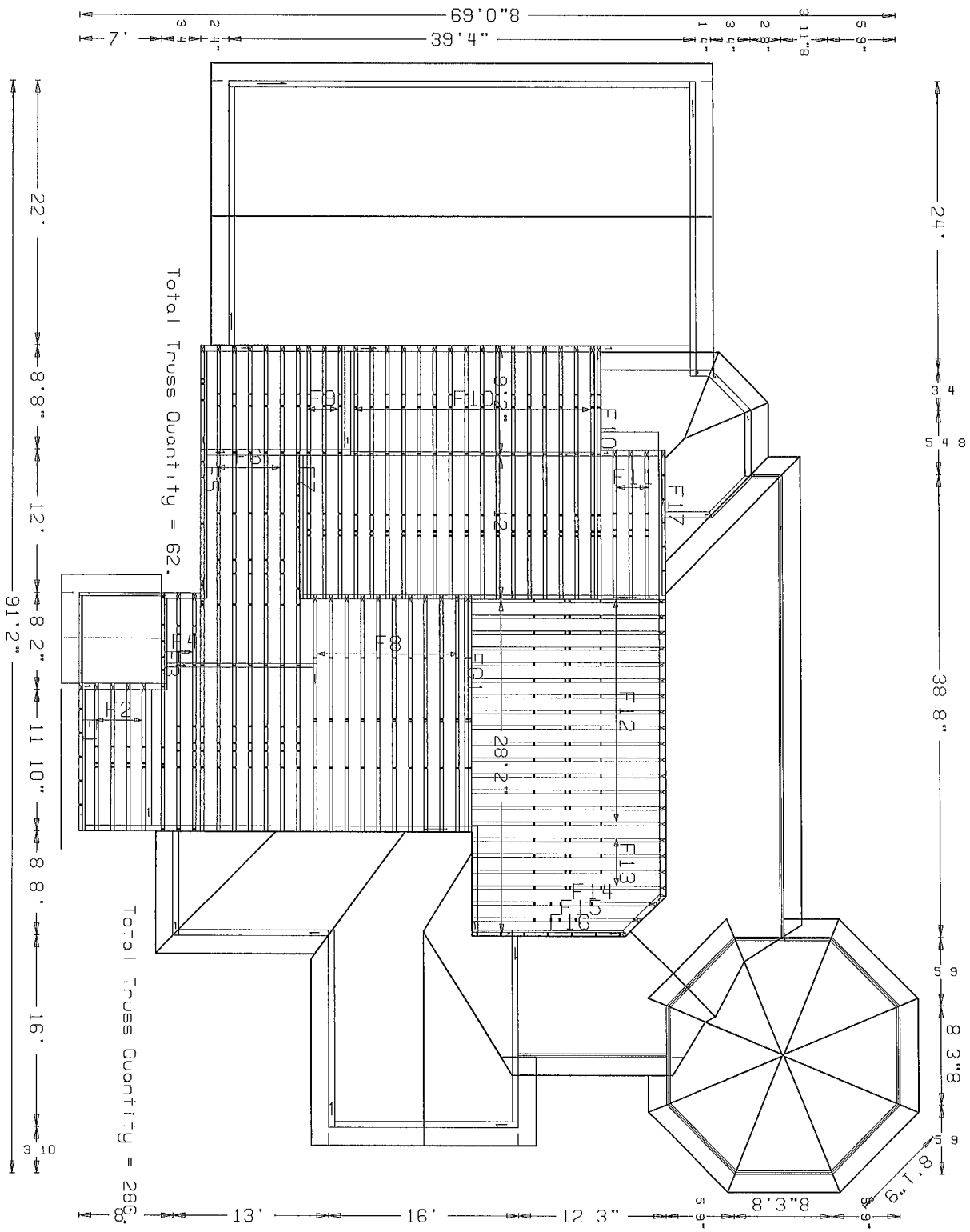

PAGE NO 1 OF 1	JOB NO. 13-106F	ADDRESS. JOB DESCRIPTION Don Reed Construction /. Decker House Floor System JOB # 13 106F DESIGNER Curt V Burlingame SALESMAN Curt V Burlingame

. <Not Found>

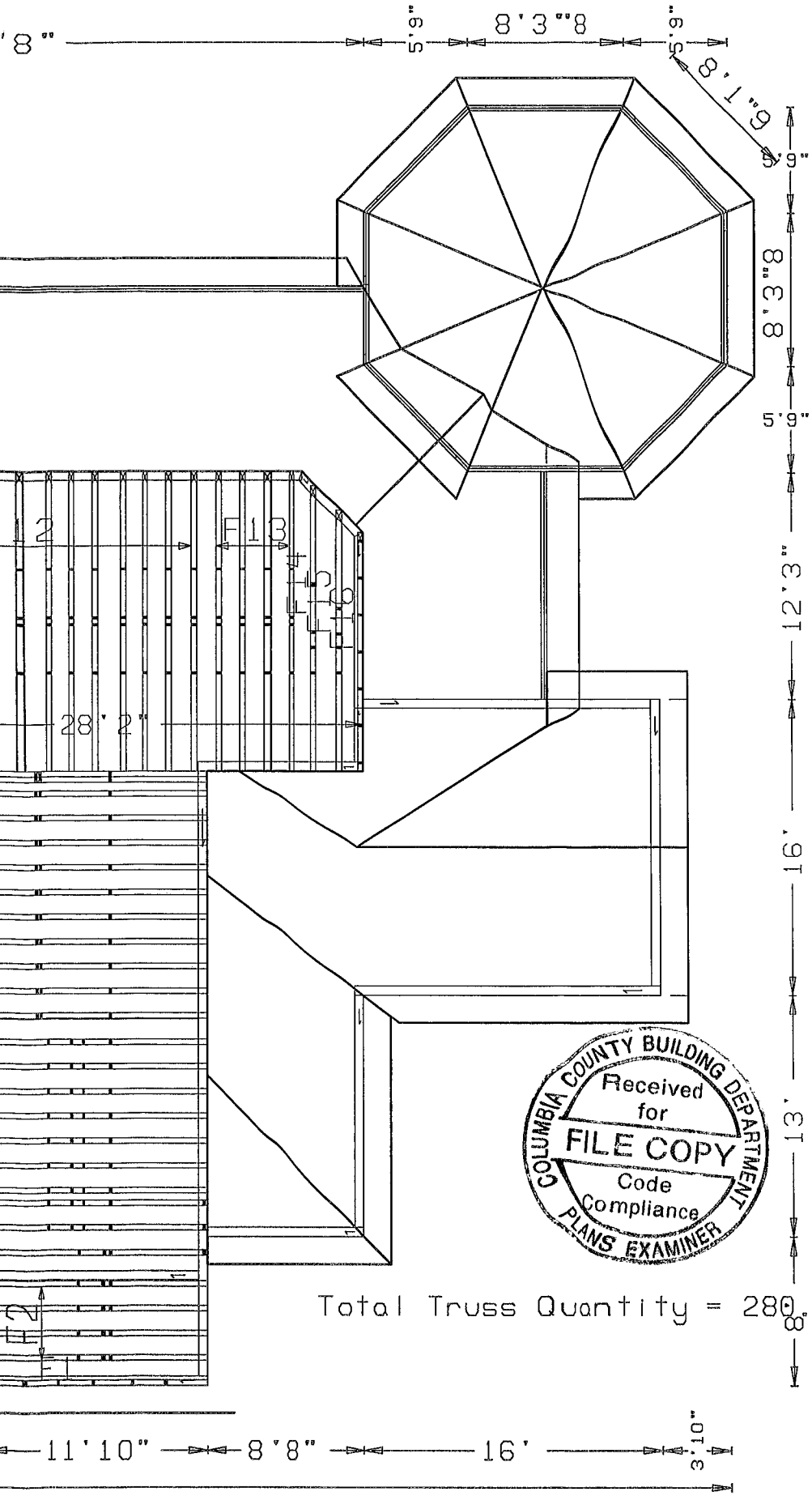

: <Not Found>

JOB DESCRIPTION:: Don Reed Construction
/:: Decker House Floor System
ADDRESS:
JOB #: 13-106F
DESIGNER: Curt V Burlingame
SALESMAN: Curt V Burlingame

JOB NO:
13-106F

PAGE NO:
1 OF 1

ITW Building Components Group, Inc.

1950 Marley Drive Haines City, FL 33844
Florida Engineering Certificate of Authorization Number 0 278
Florida Certificate of Product Approval # FL1999
Page 1 of 1 Document ID 1UUX487-Z0128105318

WALTER P. FINN
LICENSE
No. 22839
STATE OF FLORIDA
PROFESSIONAL ENGINEER
03/28/2013

Truss Fabricator	Anderson Truss Company
Job Identification	13-106--Don Reed Construction Decker House -- Lake City, F
Truss Count	89
Model Code	Florida Building Code 2010
Truss Criteria	FBC2010Res/TPI-2007(STD)
Engineering Software	Alpine Software,Version 10.03.
Structural Engineer of Record	The identity of the structural EOR did not exist as of
Address	the seal date per section 61G15-31.003(5a) of the FAC
Minimum Design Loads	Roof - 37.0 PSF @ 1.25 Duration
	Floor - N/A
	Wind - 120 MPH ASCE 7-10 -Closed

Notes

1. Determination as to the suitability of these truss components for the structure is the responsibility of the building designer/engineer of record, as defined in ANSI/TPI 1
2. The drawing date shown on this index sheet must match the date shown on the individual truss component drawing.
3. As shown on attached drawings; the drawing number is preceded by: HCUSR487

Walter P Finn
-Truss Design Engineer-

1950 Marley Drive
Haines City, FL 33844

Details: BRCLBSUB-12015EC1-GBLLETIN-GABRST10-12030EC1-

#	Ref	Description	Drawing#	Date
1	66590	--A 32 Common	13087017	03/28/13
2	66591	--A1 32 Common	13087051	03/28/13
3	66592	--B 22' Common	13087013	03/28/13
4	66593	- B1 22' Common	13087023	03/28/13
5	66594	-BDG 22 Common G	13087032	03/28/13
6	66595	--BDG1 22 Gable	13087001	03/28/13
7	66596	--CJ1 1' Jack	13087075	03/28/13
8	66597	--CJ1A 1' Jack	13087068	03/28/13
9	66598	--CJ2 2 8 5 Jack	13087054	03/28/13
10	66599	--CJ3 3 Jack	13087008	03/28/13
11	66600	--CJ3A 3 Jack	13087072	03/28/13
12	66601	--CJ5 5 Jack	13087002	03/28/13
13	66602	--CJ51 5 Jack	13087015	03/28/13
14	66603	--CJ5A 5 Jack	13087071	03/28/13
15	66604	--CJ5B 5'10" Jack	13087055	03/28/13
16	66605	--CJ7A 7 Jack	13087064	03/28/13
17	66606	--CJ7B 7 10" Jack	13087009	03/28/13
18	66607	--CJ7C 7 Jack	13087079	03/28/13
19	66608	--CJ9A 9' Jack	13087069	03/28/13
20	66609	--D 19'9"8 Common	13087080	03/28/13
21	66610	-E 20 Stepdown H	13087005	03/28/13
22	66611	-E1 20' Stepdown	13087007	03/28/13
23	66612	-E2 20 Stepdown	13087024	03/28/13
24	66613	-E3 20 Stepdown	13087010	03/28/13
25	66614	-EJ2 3 2'8 End Ja	13087004	03/28/13
26	66615	-EJ2A 3 2 8 End J	13087067	03/28/13
27	66616	--EJ7 7 End Jack	13087027	03/28/13
28	66617	-EJ7G 7' End Jack	13087011	03/28/13
29	66618	-EJ8 8'8' End Jac	13087037	03/28/13
30	66619	-EJ8A 8 8 End Ja	13087057	03/28/13
31	66620	-EJ8B 8 8' End Ja	13087039	03/28/13
32	66621	--EJ9 9' Jack	13087031	03/28/13
33	66622	-F 16 3 Common G	13087018	03/28/13
34	66623	--G 16 Common	13087003	03/28/13
35	66624	-G1 16 Common GI	13087041	03/28/13
36	66625	G2 16' Common	13087034	03/28/13
37	66626	--GDG 16' Gable	13087014	03/28/13
38	66627	-H 12 4" Common	13087050	03/28/13
39	66628	-H1 12 4" Common	13087040	03/28/13
40	66629	-H11A 32' Stepdow	13087020	03/28/13
41	66630	-H11A1 32' Stepdo	13087022	03/28/13
42	66631	-H13A 32' Stepdow	13087021	03/28/13
43	66632	-H13A1 32' Stepdo	13087046	03/28/13
44	66633	-H15A 32' Stepdow	13087049	03/28/13
45	66634	-H15A1 32' Stepdo	13087016	03/28/13
46	66635	-H2 12 4" Common	13087059	03/28/13
47	66636	-H7A 32' Stepdown	13087029	03/28/13
48	66637	-H7A1 32' Stepdow	13087025	03/28/13
49	66638	-H7C 21'7'8 Stepd	13087043	03/28/13
50	66639	-H7D 19'9'8 Commo	13087077	03/28/13
51	66640	-H7F 16 3" Stepdo	13087053	03/28/13
52	66641	-H9A 32' Stepdown	13087019	03/28/13
53	66642	-H9A1 32' Stepdow	13087012	03/28/13
54	66643	-H9C 21'7'8 Stepd	13087042	03/28/13
55	66644	-H9D 19 9 8 Commo	13087073	03/28/13
56	66645	--HDG 12 4 Gable	13087056	03/28/13
57	66646	-HJ10 7 6 15 Hip	13087076	03/28/13
58	66647	-HJ2 4 6 7 Hip Ja	13087006	03/28/13
59	66648	-HJ4 3 3 3 Hip Ja	13087084	03/28/13
60	66649	-HJ4 3'3 3 Hip Ja	13087081	03/28/13
61	66650	-HJ7 9'10 13 Hip	13087028	03/28/13
62	66651	-HJ7A 9 10 13 Hip	13087033	03/28/13
63	66652	-HJ8 12 2 5 Hip J	13087038	03/28/13
64	66653	-HJG 7 6 8 Hip Ja	13087052	03/28/13
65	66654	-HJG1 7 11 7 Hip	13087026	03/28/13
66	66655	--I 7'8 Common	13087044	03/28/13
67	66656	--IDG 7 8 Gable	13087035	03/28/13
68	66657	-IG 7 8 Common G	13087045	03/28/13
69	66658	--J3 2 5 9 Jack	13087062	03/28/13
70	66659	--J3A 2 6 3 Jack	13087063	03/28/13
71	66660	--J4 5'10 2 Mono	13087065	03/28/13
72	66661	--J5 4 10 4 Jack	13087082	03/28/13
73	66662	--J5A 2 6 3 Jack	13087060	03/28/13
74	66663	--J6 6 9 12 Jack	13087078	03/28/13
75	66664	--J7 7' Jack	13087083	03/28/13
76	66665	- J7A 3 6 4 Jack	13087058	03/28/13
77	66666	--J9A 5 6'4 Jack	13087074	03/28/13
78	66667	--M 10 Mono	13087046	03/28/13
79	66668	--M1 10 1 8 Mono	13087001	03/28/13
80	66669	-M10 7 4 Mono GI	13087070	03/28/13
81	66670	--M2 10 Mono	13087047	03/28/13
82	66671	--M3 10 Mono	13087002	03/28/13
83	66672	--M4 11 1 8 Mono	13087003	03/28/13
84	66673	--M5 3'9"8 Mono	13087004	03/28/13
85	66674	--M6 8 8" Mono	13087030	03/28/13
86	66675	--M7 8 8" Mono	13087048	03/28/13
87	66676	--M8 3 11" Mono	13087066	03/28/13
88	66677	--M9 5 2 8 Mono	13087061	03/28/13
89	66678	-MG 13 4 Mono GI	13087005	03/28/13

COLUMBIA COUNTY BUILDING DEPARTMENT
Received for FILE COPY
Code Compliance
PLANS EXAMINER

(13-106--Don Reed Construction Decker House -- Lake City, FL - A 32' Common)

THIS DWG PREPARED FROM COMPUTER INPUT (LOADS & DIMENSIONS) SUBMITTED BY TRUSS MFR

Top chord 2x4 SP_#1_12A
Bot chord 2x4 SP_#1_12A
Webs 2x4 SP_#3__12A

Lumber grades designated with 12A' use design values approved 1/5/2012 by ALSC

Left cantilever is exposed to wind

Truss passed check for 20 psf additional bottom chord live load in areas with 42 -high x 24 -wide clearance

MWFRS loads based on trusses located at least 12 49 ft from roof edge

120 mph wind, 24 97 ft mean hgt, ASCE 7-10, CLOSED bldg, not located within 9 00 ft from roof edge, RISK CAT II, EXP B, wind TC DL=3 5 psf, wind BC DL=5 0 psf GCpi(+/-)=0 18

Wind loads and reactions based on MWFRS with additional C&C member design

(a) Continuous lateral bracing equally spaced on member

Bottom chord checked for 10 00 psf non-concurrent live load

Deflection meets L/240 live and L/180 total load Creep increase factor for dead load is 1 50

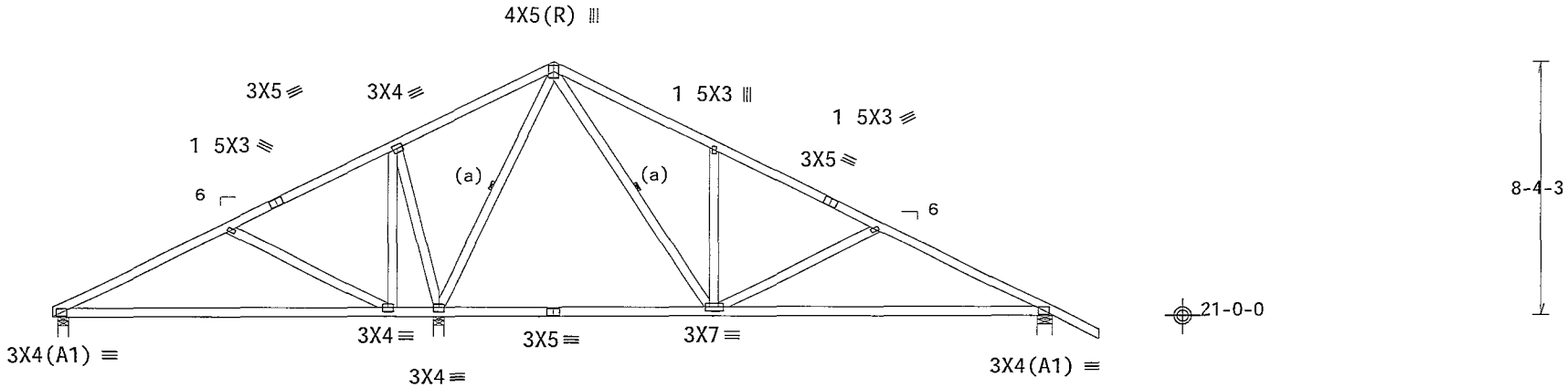

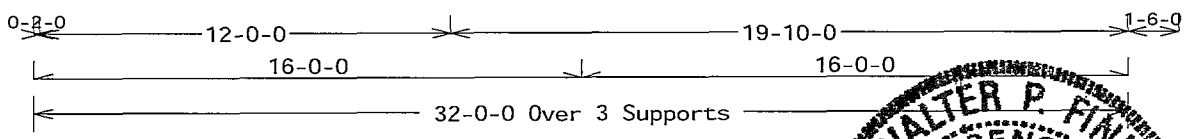

R=379 U=0 W=4"
RL=137/-132

R=1565 U=85 W=4"

Design Crit. FBC2010Res/TPI-2007(STD)
FT/RT=10%(0%)/0(0)

PLT TYP Wave

FL/-/5/-/-/R/-

Scale =.1875"/Ft

TC LL	20.0 PSF	REF	R487-- 66590
TC DL	7 0 PSF	DATE	03/28/13
BC DL	10 0 PSF	DRW	HCUSR487 13087017
BC LL	0.0 PSF	HC-ENG	DF/DF
TOT LD	37 0 PSF	SEQN-	60811
DUR FAC	1 25		
SPACING	24 0"	JREF-	1UUX487_Z01

ALPINE
ITW Building Components Group Inc.
Haines City, FL 33844
FL COA #0 278

WARNING READ AND FOLLOW ALL NOTES ON THIS SHEET!
IMPORTANT FURNISH THIS DESIGN TO ALL CONTRACTORS INCLUDING INSTALLERS

Trusses requ re extreme care n fabricat ng handling shipping nstalling and bracing Re follow the latest edit on of BCSI (Building Component Safety Informat on by TPI and WTCA) for pract ces prior to perform ng these functions Installers shall prov de temporary bracing per B Unless noted otherwise top chord shall have properly attached structural sheathing and bottom ch shall have a properly attached rigid ce l ng Locat ons shown for permanent lateral restra nt of shall have brac ng nstalled per BCSI sections B3 B7 or B10 as appl cable

ITW Bu ld ng Components Group Inc (ITWBCG) shall not be respons ble for any deviat on from th s des any failure to build the truss in conformance w th ANSI/TPI 1 or for handl ng sh pp ng nstallat on & brac ng of trusses Apply plates to each face of truss and pos t on as shown above and on the Joint Deta ls unless noted otherwise Refer to drawings 160A-Z for standard plate pos t ons A seal on this drawing or cover page l sting th s drawing ndicates acceptance of professional eng neering responsib l ty solely for the des gn shown The suitab l ty and use of th s design for any structure is the respons b l ty of the Build ng Des gner per ANSI/TPI 1 Sec 2 For more nformat on see Th s job s general notes page ITW BCG www twbcg com TPI www tp nst org WTCA www sbcindustry com ICC www ccsafe org

WALTER P. FINA
LICENSE
No. 22839
STATE OF FLORIDA
PROFESSIONAL ENGINEER
03/28/2013

THIS DWG PREPARED FROM COMPUTER INPUT (LOADS & DIMENSIONS) SUBMITTED BY TRUSS MFR

(13-106--Don Reed Construction Decker House -- Lake City, FL - A1 32' Common)

Top chord 2x4 SP_#1_12A
Bot chord 2x4 SP_#1_12A
Webs 2x4 SP_#3__12A

Lumber grades designated with '12A use design values approved 1/5/2012 by ALSC

Left cantilever is exposed to wind

Bottom chord checked for 10 00 psf non-concurrent live load

MWFRS loads based on trusses located at least 12 58 ft from roof edge

120 mph wind, 25 16 ft mean hgt, ASCE 7-10, CLOSED bldg, not located within 9 00 ft from roof edge, RISK CAT II, EXP B, wind TC DL=3 5 psf, wind BC DL=5 0 psf GCpi(+/-)=0 18

Wind loads and reactions based on MWFRS with additional C&C member design

(a) Continuous lateral bracing equally spaced on member

Deflection meets L/240 live and L/180 total load Creep increase factor for dead load is 1 50

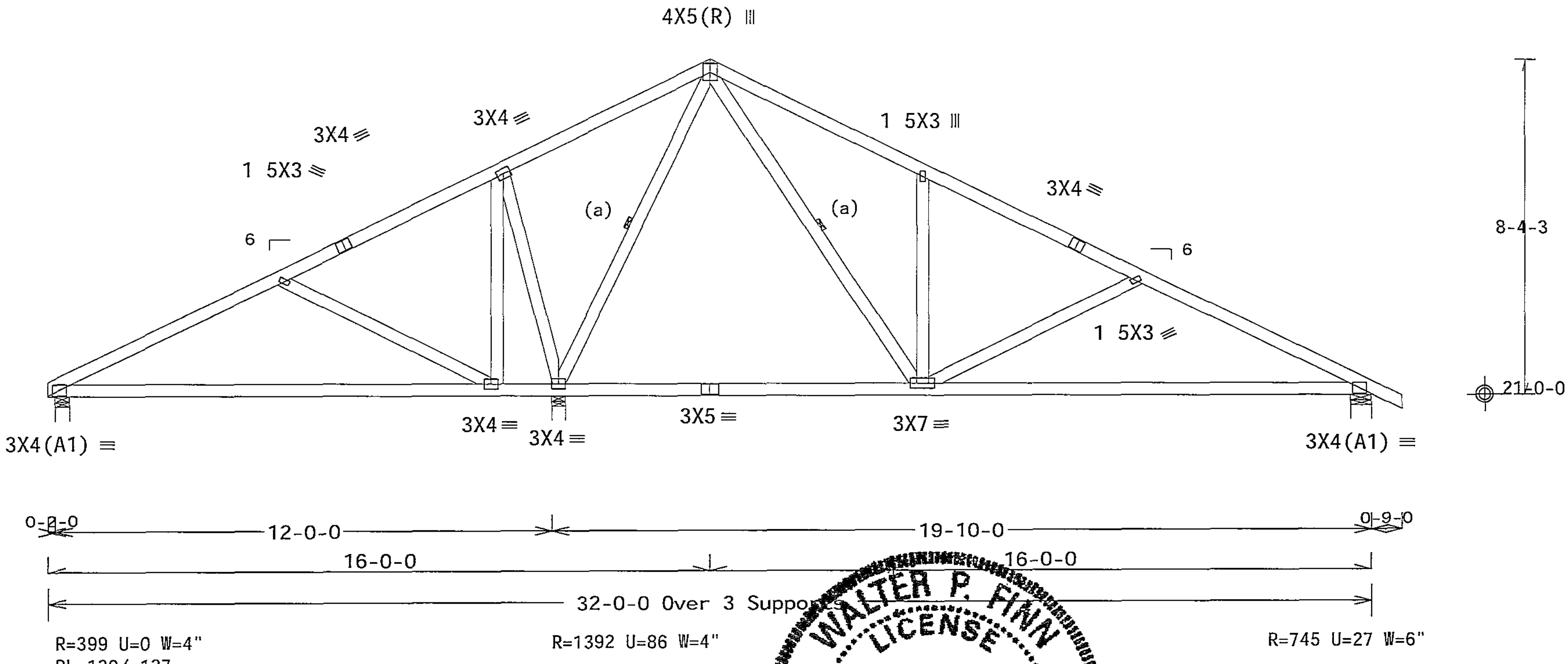

PLT TYP. Wave

Design Crit FBC2010Res/TPI-2007(STD)
FT/RT=10%(0%)/0(0)

0 03 11 0239 19 QTY

FL/-/5/-/-/R/- Scale =.25"/Ft.

TC LL	20 0 PSF	REF	R487-- 66591
TC DL	7 0 PSF	DATE	03/28/13
BC DL	10 0 PSF	DRW	HCUSR487 13087051
BC LL	0 0 PSF	HC-ENG	DF/DF
TOT LD	37 0 PSF	SEQN-	60831
DUR FAC	1 25		
SPACING	24.0"	JREF-	1UUX487_Z01

ALPINE
ITW Building Components Group Inc.
Haines City, FL 33844
FL COA #0 278

WARNING READ AND FOLLOW ALL NOTES ON THIS SHEET!
IMPORTANT FURNISH THIS DESIGN TO ALL CONTRACTORS INCLUDING INSTALLERS

Trusses requ re extreme care n fabr cat ng handl ng shipp ng nstall ng and bracing Refer to and follow the latest ed t on of BCSI (Build ng Component Safety Information by TPI and WTCA) for safety pract ces prior to perform ng these functions Installers shall prov de temporary brac ng per BCSI Unless noted otherwise top chord shall have properly attached structural sheathing and bottom chord shall have a properly attached r g d ce l ng Locations shown for permanent lateral restra nt of webs shall have brac ng nstalled per BCSI sect ons B3 B7 or B10 as applicable

ITW Build ng Components Group Inc (ITWBCG) shall not be respons ble for any deviation from this design any fa lure to bu ld the truss n conformance w th ANSI/TPI 1 or for handling sh pp ng nstallat on & brac ng of trusses Apply plates to each face of truss and pos t on as shown above and on the Jo nt Deta ls unless noted otherw se Refer to draw ngs 160A-Z for standard plate pos t ons A seal on th s draw ng or cover page listing th s draw ng nd cates acceptance of profess onal eng neer ng respons b l ty solely for the des gn shown The su tab l ty and use of th s des gn for any structure s the respons bil ty of the Bu lding Des gner per ANSI/TPI 1 Sec 2 For more informat on see This job s general notes page ITW BCG www itwbcg com TPI www tpinst org WTCA www sbc ndustry com ICC www iccsafe org

WALTER P. FINN LICENSE No.22839 STATE OF FLORIDA PROFESSIONAL ENGINEER

03/28/2013

THIS DWG PREPARED FROM COMPUTER INPUT (LOADS & DIMENSIONS) SUBMITTED BY TRUSS MFR

(13-106--Don Reed Construction Decker House -- Lake City, FL - B 22 Common)

Top chord 2x4 SP_#1_12A
Bot chord 2x4 SP_#1_12A
Webs 2x4 SP_#3__12A
Rt Stub Wedge 2x4 SP_#3__12A

Lumber grades designated with "12A' use design values approved 1/5/2012 by ALSC

Hanger specified assumes connection to supporting chord is located a minimum of five times the depth of the supporting chord from any unsupported end, unless unsupported chord end has 85% plating coverage

Bottom chord checked for 10 00 psf non-concurrent live load

120 mph wind, 15 00 ft mean hgt, ASCE 7-10, CLOSED bldg, Located anywhere in roof, RISK CAT II, EXP B, wind TC DL=3 5 psf, wind BC DL=5 0 psf GCpi(+/-)=0 18

Wind loads and reactions based on MWFRS with additional C&C member design

H = recommended connection based on manufacturer tested capacities and calculations Conditions may exist that require different connections than indicated Refer to manufacturer publication for additional information

Deflection meets L/240 live and L/180 total load Creep increase factor for dead load is 1 50

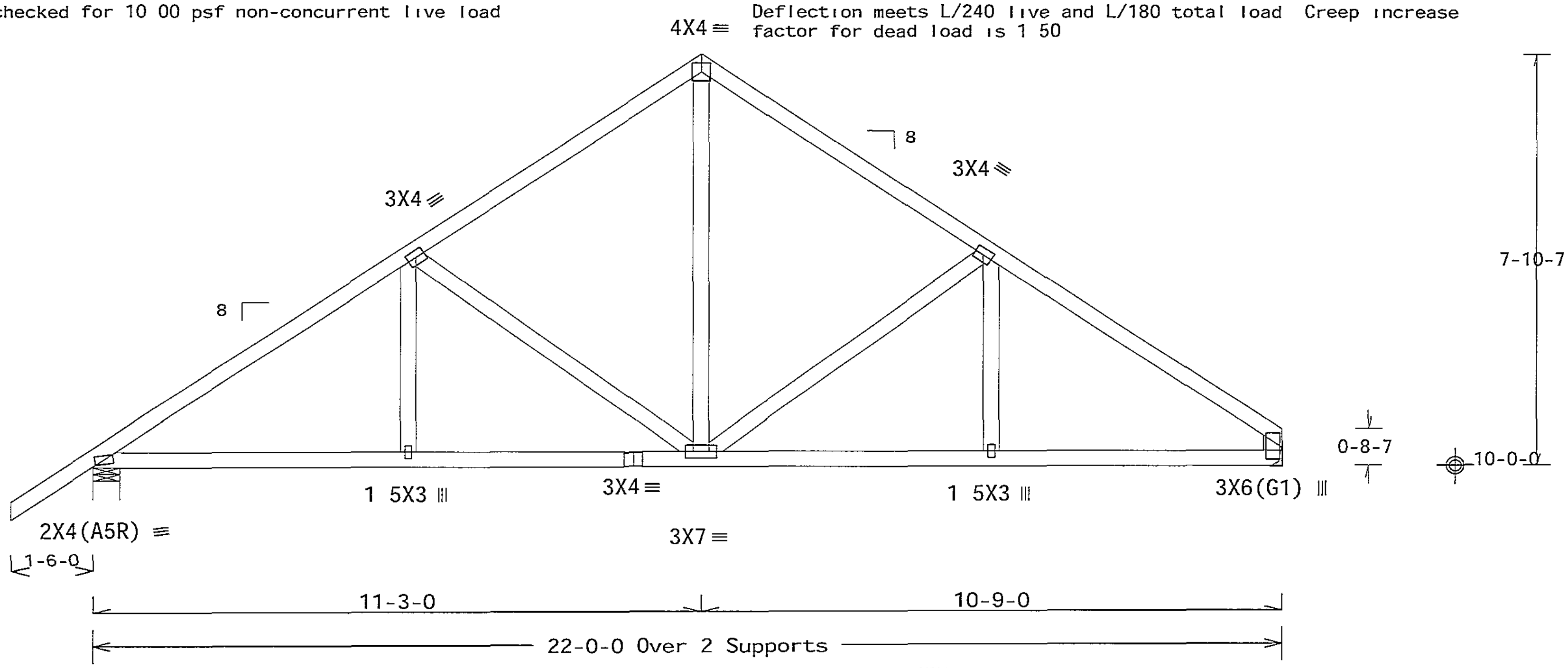

R=947 U=34 W=6
RL=129/-136

R=836 U=20 H=Simpson LUS24
Supported Member Face (2)
Supporting Member Face (4)
Supporting Member (1) 2x6 SP_#2_12A

PLT TYP. Wave

Design Crit FBC2010Res/TPI-2007(STD)
FT/RT=10%(0%)/0(0)

★0 03 1 0369.79 QTY:5 FL/-/5/-/-/R/-

Scale =.3125"/Ft.

WALTER P. FINN LICENSE No.22839 STATE OF FLORIDA PROFESSIONAL ENGINEER

03/28/2013

WARNING READ AND FOLLOW ALL NOTES ON THIS SHEET!
IMPORTANT FURNISH THIS DESIGN TO ALL CONTRACTORS INCLUDING INSTALLERS

Trusses require extreme care in fabricating, handling, shipping, installing and bracing. Refer to and follow the latest edition of BCSI (Building Component Safety Information, by TPI and WTCA) for safety practices prior to performing these functions. Installers shall provide temporary bracing per BCSI. Unless noted otherwise, top chord shall have properly attached structural sheathing and bottom chord shall have a properly attached rigid ceiling. Locations shown for permanent lateral restraint of webs shall have bracing installed per BCSI sections B3, B7 or B10, as applicable.

ITW Building Components Group Inc (ITWBCG) shall not be responsible for any deviation from this design, any failure to build the truss in conformance with ANSI/TPI 1, or for handling, shipping, installation & bracing of trusses. Apply plates to each face of truss and position as shown above and on the Joint Details, unless noted otherwise. Refer to drawings 160A-Z for standard plate positions. A seal on this drawing or cover page listing this drawing, indicates acceptance of professional engineering responsibility solely for the design shown. The suitability and use of this design for any structure is the responsibility of the Building Designer per ANSI/TPI 1 Sec 2. For more information see this job's general notes page, ITW-BCG www itwbcg com, TPI www tpinst org, WTCA www sbcindustry com, ICC www iccsafe org

ALPINE
ITW Building Components Group Inc.
Haines City FL 33844
FL COA #0 278

TC LL	20.0 PSF	REF R487-- 66592
TC DL	7.0 PSF	DATE 03/28/13
BC DL	10.0 PSF	DRW HCUSR487 13087013
BC LL	0.0 PSF	HC-ENG DF/DF
TOT.LD.	37.0 PSF	SEQN- 60889
DUR.FAC.	1.25	
SPACING	24.0"	JREF- 1UUX487_Z01

(13-106--Don Reed Construction Decker House -- Lake City, FL - B1 22' Common)

Top chord 2x4 SP_#1_12A
Bot chord 2x4 SP_#1_12A
Webs 2x4 SP_#3__12A
Rt Stub Wedge 2x4 SP_#3__12A

Lumber grades designated with "12A' use design values approved 1/5/2012 by ALSC

Hanger specified assumes connection to supporting chord is located a minimum of five times the depth of the supporting chord from any unsupported end, unless unsupported chord end has 85% plating coverage

Bottom chord checked for 10 00 psf non-concurrent live load

120 mph wind, 15 00 ft mean hgt, ASCE 7-10, CLOSED bldg, Located anywhere in roof, RISK CAT II, EXP B, wind TC DL=3 5 psf, wind BC DL=5 0 psf GCpi(+/-)=0 18

Wind loads and reactions based on MWFRS with additional C&C member design

H = recommended connection based on manufacturer tested capacities and calculations Conditions may exist that require different connections than indicated Refer to manufacturer publication for additional information

Deflection meets L/240 live and L/180 total load Creep increase factor for dead load is 1 50

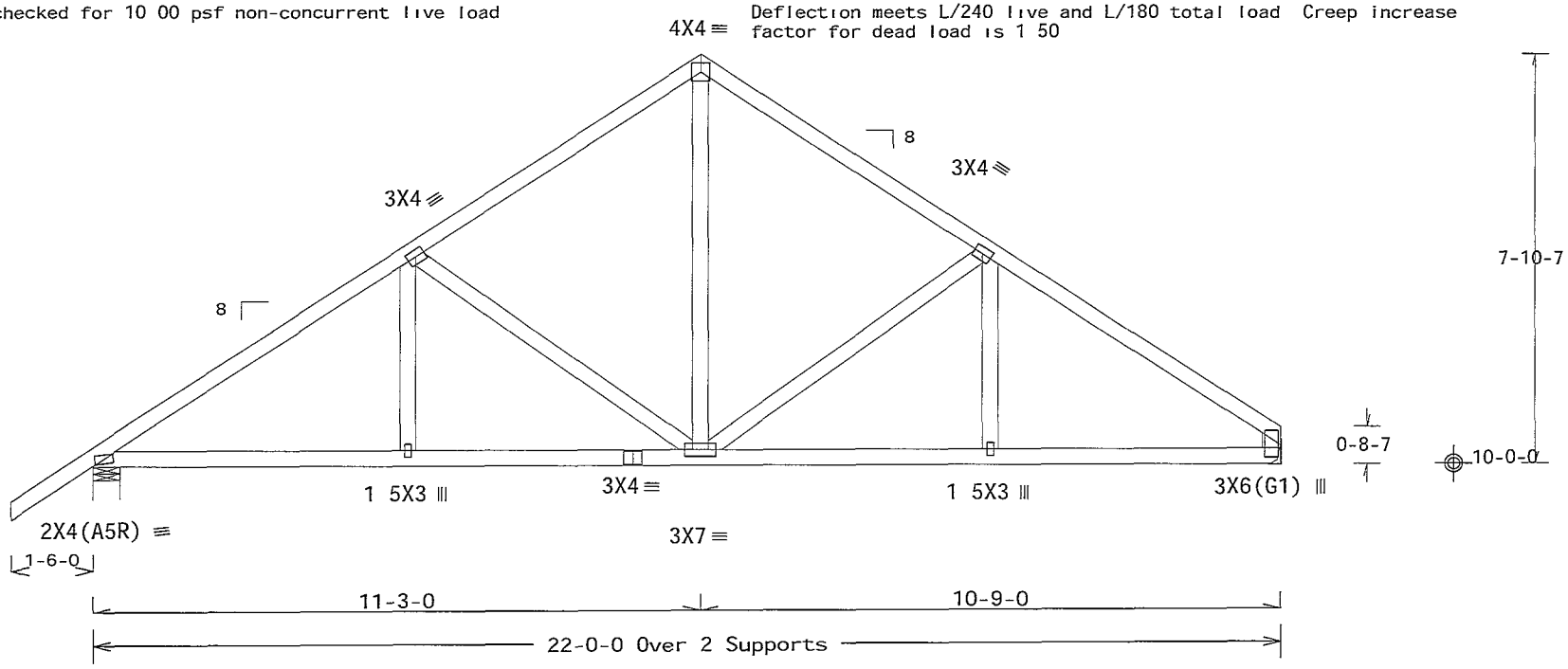

R=947 U=34 W=6"
RL=129/-136

R=836 U=20 H=Simpson LUS24
Supported Member Face (2)
Supporting Member Face (4)
Supporting Member (1) 2x6 SP_#2_12A

Design Crit: FBC2010Res/TPI-2007(STD)
FT/RT=10%(0%)/0(0) 16.03.11.0309.19 OTV

PLT TYP. Wave

FL/-/5/-/-/R/- Scale =.3125"/Ft.

WALTER P. FINN LICENSE No.22839 STATE OF FLORIDA PROFESSIONAL ENGINEER
03/28/2013

ALPINE
ITW Building Components Group Inc.
Haines City FL 33844
FL COA #0 278

WARNING READ AND FOLLOW ALL NOTES ON THIS SHEET!
IMPORTANT FURNISH THIS DESIGN TO ALL CONTRACTORS INCLUDING INSTALLERS

Trusses require extreme care in fabr cat ng handl ng sh pp ng nstall ng and bracing Re[illegible] an[illegible] follow the latest ed tion of BCSI (Build ng Component Safety Information by TPI and WTCA) for [illegible] practices pr or to performing these funct ons Installers shall provide temporary bracing per [illegible] Unless noted otherw se top chord shall have properly attached structural sheath ng and bottom c[illegible] shall have a properly attached r g d ceiling Locations shown for permanent lateral restraint of [illegible] shall have bracing installed per BCSI sections B3 B7 or B10 as applicable

ITW Bu ld ng Components Group Inc (ITWBCG) shall not be respons ble for any dev ation from this do[illegible] any failure to bu ld the truss n conformance with ANSI/TPI 1 or for handling shipping installat on [illegible] bracing of trusses Apply plates to each face of truss and position as shown above and on the Jo nt Details unless noted otherw se Refer to draw ngs 160A-Z for standard plate posit ons A seal on this drawing or cover page l st ng th s drawing ndicates acceptance of profess onal eng neer ng respons bility solely for the des gn shown The suitabil ty and use of th s design for any structure s the responsib l ty of the Build ng Designer per ANSI/TPI 1 Sec 2 For more nformat on see Th s job s general notes page ITW-BCG www twbcg com TPI www tp nst org WTCA www sbc ndustry com ICC www iccsafe org

TC LL	20.0 PSF	REF	R487-- 66593
TC DL	7.0 PSF	DATE	03/28/13
BC DL	10.0 PSF	DRW	HCUSR487 13087023
BC LL	0 0 PSF	HC-ENG	DF/DF
TOT.LD	37 0 PSF	SEQN-	60889
DUR.FAC	1 25		
SPACING	24.0"	JREF-	1UUX487_Z01

(13-106--Don Reed Construction Decker House -- Lake City, FL - BDG 22' Common Girder)

THIS DWG PREPARED FROM COMPUTER INPUT (LOADS & DIMENSIONS) SUBMITTED BY TRUSS MFR

Top chord 2x4 SP_#1_12A
Bot chord 2x4 SP_#1_12A
Webs 2x4 SP_#3__12A
Stack Chord SC1 2x4 SP_#1_12A Stack Chord SC2 2x4 SP_#1_12A

Lumber grades designated with '12A' use design values approved 1/5/2012 by ALSC

Gable end supports 8 max rake overhang

Stacked top chord must NOT be notched or cut in area (NNL) Dropped top chord braced at 24 o c intervals Attach stacked top chord (SC) to dropped top chord in notchable area using 3x4 tie-plates 24 o c Center plate on stacked/dropped chord interface, plate length perpendicular to chord length Splice top chord in notchable area using 3x6

Deflection meets L/240 live and L/180 total load Creep increase factor for dead load is 1 50

120 mph wind, 15 00 ft mean hgt, ASCE 7-10, CLOSED bldg, Located anywhere in roof, RISK CAT II, EXP B, wind TC DL=3 5 psf, wind BC DL=5 0 psf GCpi(+/-)=0 18

Wind loads and reactions based on MWFRS with additional C&C member design

Right end vertical not exposed to wind pressure

See DWGS A12015ENC100212, GBLLETIN0212, & GABRST100212 for more requirements

In lieu of structural panels use purlins to brace TC @ 24 OC

Bottom chord checked for 10 00 psf non-concurrent live load

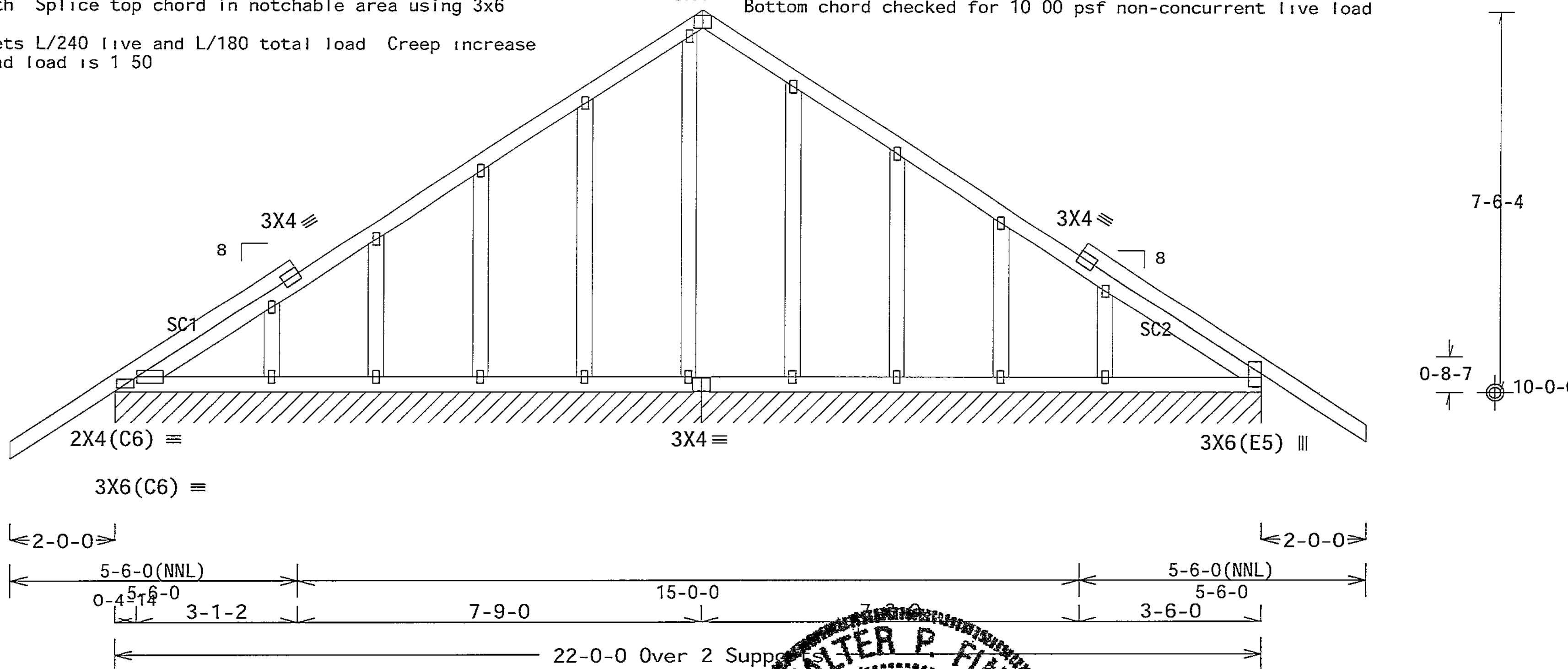

R=195 PLF U=1 PLF W=11-3-0
RL=14/-14 PLF

R=175 PLF U=5 PLF W=10-6-0

Note All Plates Are 1 5X3 Except As Shown

Design Crit FBC2010Res/TPI-2007(STD)
FT/RT=10%(0%)/0(0)

PLT TYP Wave

★ 0.03 11 0809 21 QTY ★

WALTER P. FINN
LICENSE
No. 22839
STATE OF FLORIDA
PROFESSIONAL ENGINEER
03/28/2013

FL/-/5/-/-/R/-

Scale =.3125"/Ft.

ALPINE
ITW Building Components Group Inc.
Haines City, FL 33844
FL COA #0 278

WARNING READ AND FOLLOW ALL NOTES ON THIS SHEET!
IMPORTANT FURNISH THIS DESIGN TO ALL CONTRACTORS INCLUDING INSTALLERS

Trusses requ re extreme care n fabricat ng hand ng sh pping nstall ng and bracing Refer to and follow the latest ed t on of BCSI (Bu ld ng Component Safety Information by TPI and WTCA) for safety practices pr or to perform ng these funct ons Installers shall provide temporary brac ng per BCSI Unless noted otherw se top chord shall have properly attached structural sheath ng and bottom chord shall have a proper y attached r gid ce l ng Locat ons shown for permanent lateral restraint of webs shall have brac ng installed per BCSI sect ons B3 B7 or B10 as appl cable

ITW Bu ld ng Components Group Inc (ITWBCG) shall not be respons ble for any dev at on from this design any fa lure to bu ld the truss in conformance w th ANSI/TPI 1 or for handl ng sh pp ng nstallat on & brac ng of trusses Apply plates to each face of truss and pos t on as shown above and on the Joint Deta ls unless noted otherw se Refer to draw ngs 160A-Z for standard plate pos t ons A seal on th s draw ng or cover page l sting this draw ng nd cates acceptance of profess onal eng neer ng respons b l ty so ely for the des gn shown The su tab l ty and use of th s des gn for any structure s the respons bil ty of the Bu ld ng Des gner per ANSI/TPI 1 Sec 2 For more nformation see This job s general notes page ITW BCG www twbcg com TPI www tp nst org WTCA www sbc ndustry com ICC www iccsafe org

TC LL	20 0	PSF
TC DL	7 0	PSF
BC DL	10 0	PSF
BC LL	0.0	PSF
TOT LD	37.0	PSF
DUR FAC	1 25	
SPACING	24 0"	

REF	R487-- 66594
DATE	03/28/13
DRW	HCUSR487 13087032
HC-ENG	DF/DF
SEQN-	297814
JREF-	1UUX487_Z01

(13-106--Don Reed Construction Decker House -- Lake City, FL - BDG1 22' Gable)

THIS DWG PREPARED FROM COMPUTER INPUT (LOADS & DIMENSIONS) SUBMITTED BY TRUSS MFR

Top chord 2x4 SP_#1_12A
Bot chord 2x4 SP_#1_12A
Webs 2x4 SP_#3__12A
Stack Chord SC1 2x4 SP_#1_12A Stack Chord SC2 2x4 SP_#1_12A

Lumber grades designated with "12A' use design values approved 1/5/2012 by ALSC

Gable end supports 8' max rake overhang

Stacked top chord must NOT be notched or cut in area (NNL) Dropped top chord braced at 24' o c intervals Attach stacked top chord (SC) to dropped top chord in notchable area using 3x4 tie-plates 24' o c Center plate on stacked/dropped chord interface, plate length perpendicular to chord length Splice top chord in notchable area using 3x6

Deflection meets L/240 live and L/180 total load Creep increase factor for dead load is 1 50

120 mph wind, 15 00 ft mean hgt, ASCE 7-10, CLOSED bldg, Located anywhere in roof, RISK CAT II, EXP B, wind TC DL=3 5 psf, wind BC DL=5 0 psf GCpi(+/-)=0 18

Wind loads and reactions based on MWFRS with additional C&C member design

Right end vertical not exposed to wind pressure

See DWGS A12015ENC100212 GBLLETIN0212, & GABRST100212 for more requirements

In lieu of structural panels use purlins to brace TC @ 24' OC

Bottom chord checked for 10 00 psf non-concurrent live load

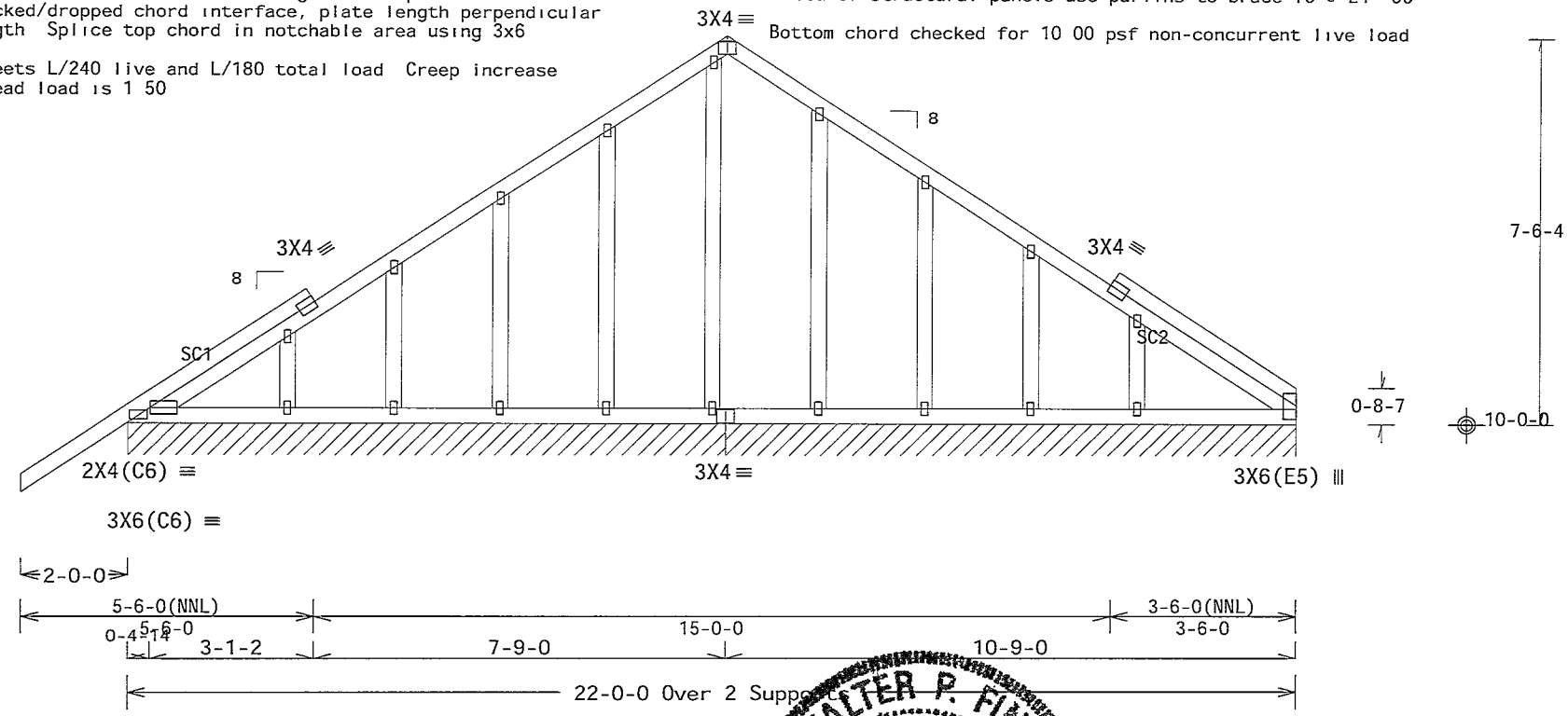

R=195 PLF U=1 PLF W=11-3-0
RL=12/-13 PLF

R=153 PLF U= W=10-9-0

Note All Plates Are 1 5X3 Except As Shown

Design Crit FBC2010Res/TPI-2007(STD)

PLT TYP Wave FT/RT=10%(0%)/0(0) 15 03.11.0209 21 QTY 1 FL/-/5/-/-/R/- Scale =.3125"/Ft.

WALTER P. FINN LICENSE No.22839 STATE OF FLORIDA PROFESSIONAL ENGINEER

03/28/2013

ALPINE
ITW Building Components Group Inc.
Haines City, FL 33844
FL COA #0 278

WARNING READ AND FOLLOW ALL NOTES ON THIS SHEET!
IMPORTANT FURNISH THIS DESIGN TO ALL CONTRACTORS INCLUDING INSTALLERS

Trusses require extreme care n fabr cating handl ng sh pp ng install ng and brac ng [illegible] follow the latest edition of BCSI (Bu ld ng Component Safety informat on by TPI and WTCA) fo[illegible] pract ces prior to perform ng these funct ons Installers shall prov de temporary brac ng per[illegible] Unless noted otherwise top chord shall have properly attached structura sheath ng and bottom [illegible] shall have a properly attached r g d cell ng Locat ons shown for permanent lateral restra nt o[illegible] shall have brac ng nstalled per BCSI sect ons B3 B7 or B10 as appl cable

ITW Bu ld ng Components Group Inc (ITWBCG) shall not be responsible for any deviat on from th s d[illegible] any fa lure to bu ld the truss n conformance w th ANSI/TPI 1 or for handl ng shipp ng nstallat on bracing of trusses Apply plates to each face of truss and pos t on as shown above and on the Joint Details unless noted otherw se Refer to draw ngs 160A-Z for standard plate pos t ons A seal on th s drawing or cover page l st ng this draw ng nd cates acceptance of profess onal eng neer ng respons b lity solely for the des gn shown The su tabil ty and use of th s des gn for any structure s the responsibil ty of the Bu ld ng Des gner per ANSI/TPI 1 Sec 2 For more nformat on see This job s general notes page ITW-BCG www twbcg com TPI www tp nst org WTCA www sbc ndustry com ICC www iccsafe org

TC LL	20 0 PSF	REF	R487-- 66595
TC DL	7.0 PSF	DATE	03/28/13
BC DL	10.0 PSF	DRW	HCUSR487 13087001
BC LL	0.0 PSF	HC-ENG	DF/DF
TOT.LD	37 0 PSF	SEQN-	297818
DUR FAC	1 25		
SPACING	24.0"	JREF-	1UUX487_Z01

(13-106--Don Reed Construction Decker House -- Lake City, FL - CJ1 1' Jack)

Top chord 2x4 SP_#1_12A
Bot chord 2x4 SP_#1_12A

Lumber grades designated with 12A' use design values approved 1/5/2012 by ALSC

Bottom chord checked for 10 00 psf non-concurrent live load

Provide (2) 16d common nails(0 162'x3 5"), toe nailed at Top chord
Provide (2) 16d common nails(0 162'x3 5), toe nailed at Bot chord

120 mph wind, 21 22 ft mean hgt, ASCE 7-10, CLOSED bldg, Located anywhere in roof, RISK CAT II, EXP B, wind TC DL=3 5 psf, wind BC DL=5 0 psf GCpi(+/-)=0 18

Wind loads and reactions based on MWFRS with additional C&C member design

Deflection meets L/240 live and L/180 total load Creep increase factor for dead load is 1 50

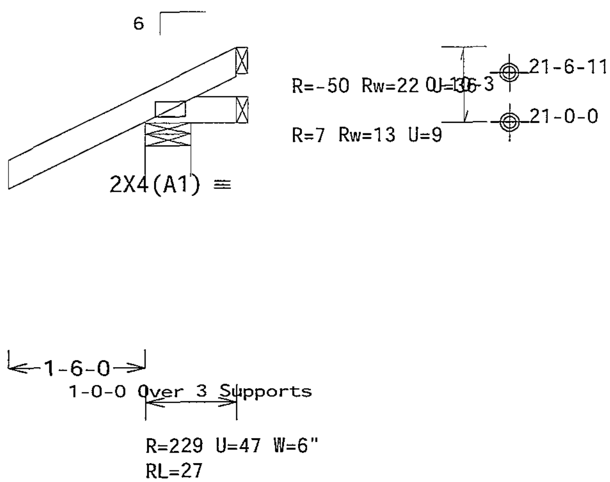

Design Crit. FBC2010Res/TPI-2007(STD)
FT/RT=10%(0%)/0(0) 10.03.11.0209.19 6 FL/-/5/-/-/R/- Scale =.5"/Ft.

PLT TYP Wave

ALPINE
ITW Building Components Group Inc.
Haines City, FL 33844
FL COA #0 278

WARNING READ AND FOLLOW ALL NOTES ON THIS SHEET!
IMPORTANT FURNISH THIS DESIGN TO ALL CONTRACTORS INCLUDING INSTALLERS

Trusses require extreme care in fabricating handling shipping installing and bracing. Refer to and follow the latest edition of BCSI (Building Component Safety Information by TPI and WTCA) for safety practices prior to performing these functions. Installers shall provide temporary bracing per BCSI. Unless noted otherwise top chord shall have properly attached structural sheathing and bottom chord shall have a properly attached rigid ceiling. Locations shown for permanent lateral restraint of webs shall have bracing installed per BCSI sections B3 B7 or B10 as applicable.

ITW Building Components Group Inc (ITWBCG) shall not be responsible for any deviation from this design, any failure to build the truss in conformance with ANSI/TPI 1 or for handling shipping installation & bracing of trusses. Apply plates to each face of truss and position as shown above and on the Joint Details unless noted otherwise. Refer to drawings 160A-Z for standard plate positions. A seal on this drawing or cover page listing this drawing indicates acceptance of professional engineering responsibility solely for the design shown. The suitability and use of this design for any structure is the responsibility of the Building Designer per ANSI/TPI 1 Sec 2. For more information see This job's general notes page ITW BCG www itwbcg com TPI www tpinst org WTCA www sbcindustry com ICC www iccsafe org

WALTER P. FINN LICENSE No.22839 STATE OF FLORIDA PROFESSIONAL ENGINEER
03/28/2013

TC LL	20.0 PSF	REF R487-- 66596
TC DL	7.0 PSF	DATE 03/28/13
BC DL	10.0 PSF	DRW HCUSR487 13087075
BC LL	0.0 PSF	HC-ENG DF/DF
TOT.LD.	37.0 PSF	SEQN- 60801
DUR.FAC.	1.25	
SPACING	24 0"	JREF- 1UUX487_Z01

THIS DWG PREPARED FROM COMPUTER INPUT (LOADS & DIMENSIONS) SUBMITTED BY TRUSS MFR

(13-106--Don Reed Construction Decker House -- Lake City, FL - CJ1A 1' Jack)

Top chord 2x4 SP_#1_12A
Bot chord 2x4 SP_#1_12A

Lumber grades designated with "12A use design values approved 1/5/2012 by ALSC

Bottom chord checked for 10 00 psf non-concurrent live load

Provide (2) 16d common nails(0 162'x3 5'), toe nailed at Top chord
Provide (2) 16d common nails(0 162 x3 5'), toe nailed at Bot chord

120 mph wind, 15 00 ft mean hgt, ASCE 7-10, CLOSED bldg, Located anywhere in roof, RISK CAT II, EXP B, wind TC DL=3 5 psf, wind BC DL=5 0 psf GCpi(+/-)=0 18

Wind loads and reactions based on MWFRS with additional C&C member design

Deflection meets L/240 live and L/180 total load Creep increase factor for dead load is 1 50

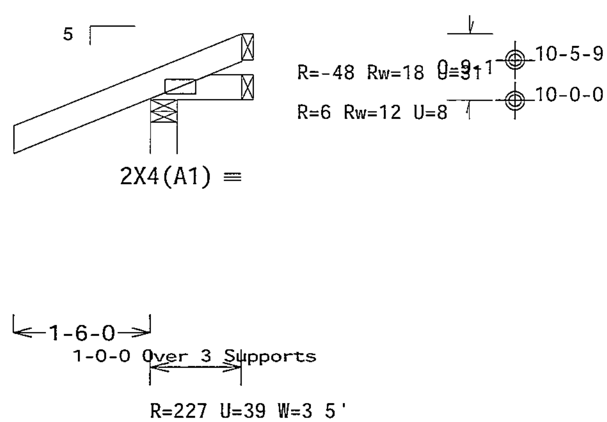

PLT TYP Wave

Design Crit FBC2010Res/TPI-2007(ST)
FT/RT=10%(0%)/0(0) 10.03.11 0309.19 QTY 2 FL/-/5/-/-/R/-

Scale = 5"/Ft.

ALPINE
ITW Building Components Group Inc.
Haines City, FL 33844
FL COA #0 278

WARNING READ AND FOLLOW ALL NOTES ON THIS SHEET!
IMPORTANT FURNISH THIS DESIGN TO ALL CONTRACTORS INCLUDING INSTALLERS

Trusses require extreme care in fabr cat ng handl ng sh pp ng install ng and brac ng Refer to and follow the latest edition of BCSI (Bu ld ng Component Safety Informat on by TPI and WTCA) for safety practices prior to performing these functions Installers shall prov de temporary brac ng per BCSI Unless noted otherwise top chord shall have properly attached structural sheathing and bottom chord shall have a properly attached rigid ce l ng Locat ons shown for permanent lateral restra nt of webs shall have brac ng installed per BCSI sections B3 B7 or B10 as appl cable

ITW Bu ld ng Components Group Inc (ITWBCG) shall not be responsible for any deviat on from th s design any fa lure to build the truss n conformance w th ANSI/TPI 1 or for handl ng sh pp ng nstallat on & brac ng of trusses Apply plates to each face of truss and pos t on as shown above and on the Joint Deta ls unless noted otherw se Refer to draw ngs 160A-Z for standard plate pos tions A seal on th s draw ng or cover page l st ng this draw ng nd cates acceptance of profess onal engineer ng respons b lity solely for the design shown The su tab lity and use of th s des gn for any structure s the responsibility of the Bu lding Des gner per ANSI/TPI 1 Sec 2 For more nformat on see This job s general notes page ITW BCG www twbcg com TPI www tpinst org WTCA www sbc ndustry com ICC www ccsafe org

WALTER P. FINN LICENSE No. 22839 STATE OF FLORIDA PROFESSIONAL ENGINEER

03/28/2013

TC LL	20 0 PSF	REF R487-- 66597
TC DL	7.0 PSF	DATE 03/28/13
BC DL	10.0 PSF	DRW HCUSR487 13087068
BC LL	0.0 PSF	HC-ENG DF/DF
TOT LD	37 0 PSF	SEQN- 60847
DUR FAC	1 25	
SPACING	24.0"	JREF- 1UUX487_Z01

(13-106--Don Reed Construction Decker House -- Lake City, FL - CJ2 2 8 5 Jack)

Top chord 2x4 SP_#1_12A
Bot chord 2x4 SP_#1_12A

Lumber grades designated with 12A use design values approved 1/5/2012 by ALSC

Bottom chord checked for 10 00 psf non-concurrent live load

MWFRS loads based on trusses located at least 10 86 ft from roof edge

Provide (2) 16d common nails(0 162'x3 5'), toe nailed at Top chord
Provide (2) 16d common nails(0 162'x3 5), toe nailed at Bot chord

120 mph wind, 21 72 ft mean hgt, ASCE 7-10, CLOSED bldg, Located anywhere in roof RISK CAT II, EXP B, wind TC DL=3 5 psf, wind BC DL=5 0 psf GCpi(+/-)=0 18

Wind loads and reactions based on MWFRS with additional C&C member design

Deflection meets L/240 live and L/180 total load Creep increase factor for dead load is 1 50

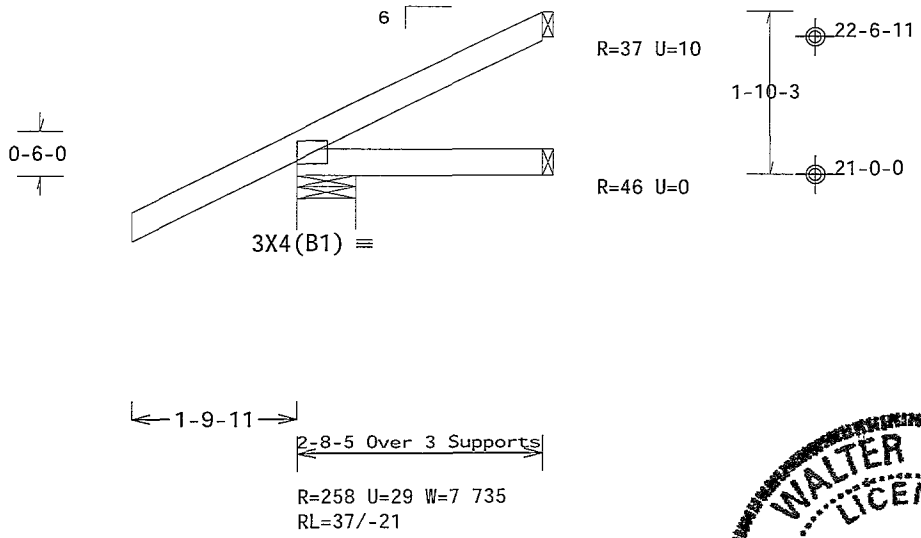

Design Crit FBC2010Res/TPI-2007(STD)
FT/RT=10%(0%)/0(0)

PLT TYP Wave

★ 10 03 11 0209 19 ★ QTY 2 FL/-/5/-/-/R/- Scale = 5"/Ft.

WALTER P. FINN LICENSE No.22839 STATE OF FLORIDA PROFESSIONAL ENGINEER

03/28/2013

ALPINE
ITW Building Components Group Inc.
Haines City FL 33844
FL COA #0 278

WARNING READ AND FOLLOW ALL NOTES ON THIS SHEET!
IMPORTANT FURNISH THIS DESIGN TO ALL CONTRACTORS INCLUDING INSTALLERS

Trusses requ re extreme care n fabr cat ng hand ng sh pping nstall ng and brac ng refer to and follow the latest ed t on of BCSI (Build ng Component Safety Information by TPI and WTCA) for safety pract ces pr or to perform ng these funct ons Installers shall provide temporary bracing per BCSI. Unless noted otherw se top chord shall have properly attached structural sheath ng and bottom chord shall have a properly attached r g d ceiling Locat ons shown for permanent lateral restra nt of webs shall have bracing nstalled per BCSI sections B3 B7 or B10 as applicable

ITW Build ng Components Group Inc (ITWBCG) shall not be respons ble for any dev at on from th s drawing or any failure to build the truss n conformance with ANSI/TPI 1 or for handl ng sh pp ng nstallat on and brac ng of trusses Apply plates to each face of truss and posit on as shown above and on the Joint Deta ls unless noted otherwise Refer to drawings 160A-Z for standard plate pos tions A seal on th s drawing or cover page l sting this drawing indicates acceptance of professional engineering responsibility solely for the design shown The su tab lity and use of this design for any structure is the respons b l ty of the Build ng Designer per ANSI/TPI 1 Sec 2 For more informat on see This job s general notes page ITW-BCG www itwbcg com TPI www tpinst org WTCA www sbcindustry com ICC www ccsafe org

TC LL	20 0 PSF	REF	R487-- 66598
TC DL	7 0 PSF	DATE	03/28/13
BC DL	10 0 PSF	DRW	HCUSR487 13087054
BC LL	0 0 PSF	HC-ENG	DF/DF
TOT LD.	37.0 PSF	SEQN-	60830
DUR.FAC	1 25		
SPACING	24 0"	JREF-	1UUX487_Z01

THIS DWG PREPARED FROM COMPUTER INPUT (LOADS & DIMENSIONS) SUBMITTED BY TRUSS MFR

(13-106--Don Reed Construction Decker House -- Lake City, FL - CJ3 3' Jack)

Top chord 2x4 SP_#1_12A
Bot chord 2x4 SP_#1_12A

Lumber grades designated with 12A use design values approved 1/5/2012 by ALSC

Bottom chord checked for 10 00 psf non-concurrent live load

Provide (2) 16d common nails(0 162'x3 5'), toe nailed at Top chord
Provide (2) 16d common nails(0 162 x3 5), toe nailed at Bot chord

120 mph wind, 21 72 ft mean hgt, ASCE 7-10, CLOSED bldg, Located anywhere in roof RISK CAT II, EXP B, wind TC DL=3 5 psf, wind BC DL=5 0 psf GCpi(+/-)=0 18

Wind loads and reactions based on MWFRS with additional C&C member design

Deflection meets L/240 live and L/180 total load Creep increase factor for dead load is 1 50

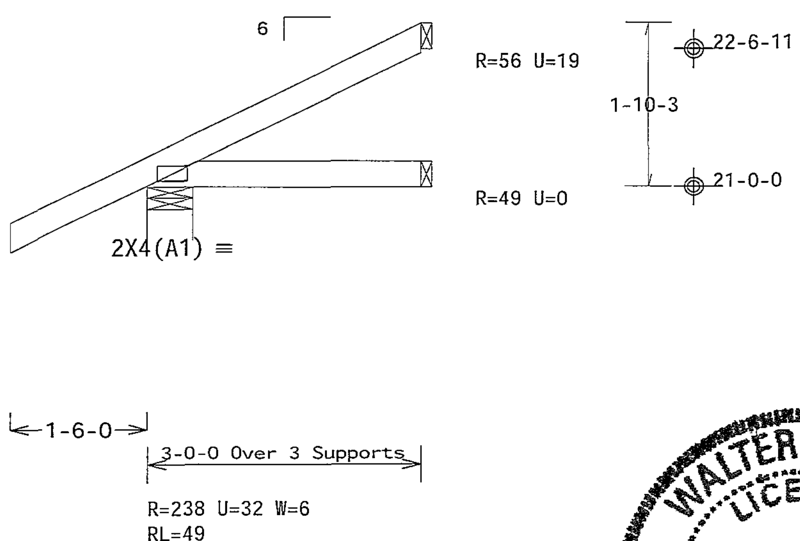

Design Crit· FBC2010Res/TPI-2007(STD)
FT/RT=10%(0%)/0(0)   0 03 11 0369.19   QTY 4 FL/-/5/-/-/R/-   Scale =.5"/Ft

PLT TYP Wave

WARNING READ AND FOLLOW ALL NOTES ON THIS SHEET!
IMPORTANT FURNISH THIS DESIGN TO ALL CONTRACTORS INCLUDING INSTALLERS

Trusses require extreme care in fabricating handling shipping installing and bracing. Refer to and follow the latest edition of BCSI (Building Component Safety Information by TPI and WTCA) for safety practices prior to performing these functions. Installers shall provide temporary bracing per BCSI. Unless noted otherwise top chord shall have properly attached structural sheathing and bottom chord shall have a properly attached rigid ceiling. Locations shown for permanent lateral restraint of webs shall have bracing installed per BCSI sections B3 B7 or B10 as applicable.

ITW Building Components Group Inc (ITWBCG) shall not be responsible for any deviation from this design any failure to build the truss in conformance with ANSI/TPI 1 or for handling shipping installation & bracing of trusses. Apply plates to each face of truss and position as shown above and on the Joint Details unless noted otherwise. Refer to drawings 160A-Z for standard plate positions. A seal on this drawing or cover page listing this drawing indicates acceptance of professional engineering responsibility solely for the design shown. The suitability and use of this design for any structure is the responsibility of the Building Designer per ANSI/TPI 1 Sec 2. For more information see This job s general notes page ITW-BCG www itwbcg com TPI www tpinst org WTCA www sbcindustry com ICC www iccsafe org

WALTER P. FINN LICENSE No.22839 STATE OF FLORIDA PROFESSIONAL ENGINEER

03/28/2013

ALPINE
ITW Building Components Group Inc.
Haines City, FL 33844
FL COA #0 278

TC LL	20 0 PSF	REF	R487-- 66599
TC DL	7.0 PSF	DATE	03/28/13
BC DL	10.0 PSF	DRW	HCUSR487 13087008
BC LL	0.0 PSF	HC-ENG	DF/DF
TOT.LD	37.0 PSF	SEQN-	60810
DUR FAC.	1.25		
SPACING	24.0"	JREF-	1UUX487_Z01

(13-106--Don Reed Construction Decker House -- Lake City, FL - CJ3A 3' Jack)

Top chord 2x4 SP_#1_12A
Bot chord 2x4 SP_#1_12A

Lumber grades designated with 12A use design values approved 1/5/2012 by ALSC

Bottom chord checked for 10 00 psf non-concurrent live load

MWFRS loads based on trusses located at least 7 50 ft from roof edge

Provide (2) 16d common nails(0 162'x3 5), toe nailed at Top chord
Provide (2) 16d common nails(0 162'x3 5'), toe nailed at Bot chord

120 mph wind, 15 00 ft mean hgt, ASCE 7-10, CLOSED bldg, Located anywhere in roof, RISK CAT II, EXP B, wind TC DL=3 5 psf, wind BC DL=5 0 psf GCpi(+/-)=0 18

Wind loads and reactions based on MWFRS with additional C&C member design

Deflection meets L/240 live and L/180 total load Creep increase factor for dead load is 1 50

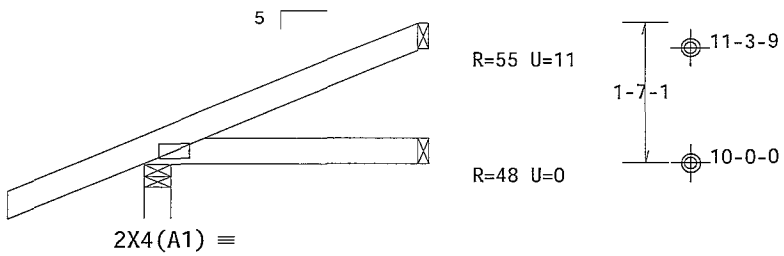

1-6-0

3-0-0 Over 3 Supports

R=236 U=17 W=3 5'
RL=31

Design Crit FBC2010Res/TPI-2007(STD)
FT/RT=10%(0%)/0(0)

10.03.11 0209.19 QTY 1 FL/-/5/-/-/R/- Scale =.5"/Ft

PLT TYP Wave

ALPINE
ITW Building Components Group Inc.
Haines City FL 33844
FL COA #0 278

WARNING READ AND FOLLOW ALL NOTES ON THIS SHEET
IMPORTANT FURNISH THIS DESIGN TO ALL CONTRACTORS INCLUDING INSTALLERS

Trusses requ re extreme care n fabricat ng handl ng shipping nstall ng and brac ng [illegible] follow the latest ed t on of BCSI (Building Component Safety Informat on by TPI and WTCA) for safe pract ces pr or to perform ng those functions Installers shall prov de temporary brac ng per [illegible] Unless noted otherwise top chord shall have properly attached structural sheathing and bottom [illegible] shall have a properly attached r g d ce l ng Locat ons shown for permanent lateral restra nt of [illegible] shall have bracing nstalled per BCSI sect ons B3 B7 or B10 as appl cable

ITW Build ng Components Group Inc (ITWBCG) shall not be respons ble for any dev ation from this design any failure to bu ld the truss n conformance w th ANSI/TPI 1 or for handl ng sh pping nstallat on brac ng of trusses Apply plates to each face of truss and pos t on as shown above and on the Joint Details unless noted otherw se Refer to drawings 160A-Z for standard plate posit ons A seal on this drawing or cover page l sting th s drawing nd cates acceptance of profess onal eng neer ng responsibility solely for the des gn shown The su tabil ty and use of this design for any structure s the responsibil ty of the Bu ld ng Des gner per ANSI/TPI 1 Sec 2 For more nformat on see Th s job s general notes page ITW-BCG www twbcg com TPI www tp nst org WTCA www sbc ndustry com ICC www ccsafe org

WALTER P. FINN
LICENSE
No. 22839
STATE OF FLORIDA
PROFESSIONAL ENGINEER

03/28/2013

TC LL	20.0 PSF	REF	R487-- 66600
TC DL	7 0 PSF	DATE	03/28/13
BC DL	10 0 PSF	DRW	HCUSR487 13087072
BC LL	0.0 PSF	HC-ENG	DF/DF
TOT.LD.	37.0 PSF	SEQN-	60848
DUR FAC	1.25		
SPACING	24 0"	JREF-	1UUX487_Z01

(13-106--Don Reed Construction Decker House -- Lake City, FL - CJ5 5' Jack)

THIS DWG PREPARED FROM COMPUTER INPUT (LOADS & DIMENSIONS) SUBMITTED BY TRUSS MFR

Top chord 2x4 SP_#1_12A
Bot chord 2x4 SP_#1_12A

Lumber grades designated with 12A use design values approved 1/5/2012 by ALSC

Bottom chord checked for 10 00 psf non-concurrent live load

Provide (2) 16d common nails(0 162'x3 5), toe nailed at Top chord
Provide (2) 16d common nails(0 162 x3 5), toe nailed at Bot chord

120 mph wind, 22 22 ft mean hgt, ASCE 7-10, CLOSED bldg, not located within 4 50 ft from roof edge, RISK CAT II, EXP B, wind TC DL=3 5 psf, wind BC DL=5 0 psf GCpi(+/-)=0 18

Wind loads and reactions based on MWFRS with additional C&C member design

Deflection meets L/240 live and L/180 total load Creep increase factor for dead load is 1 50

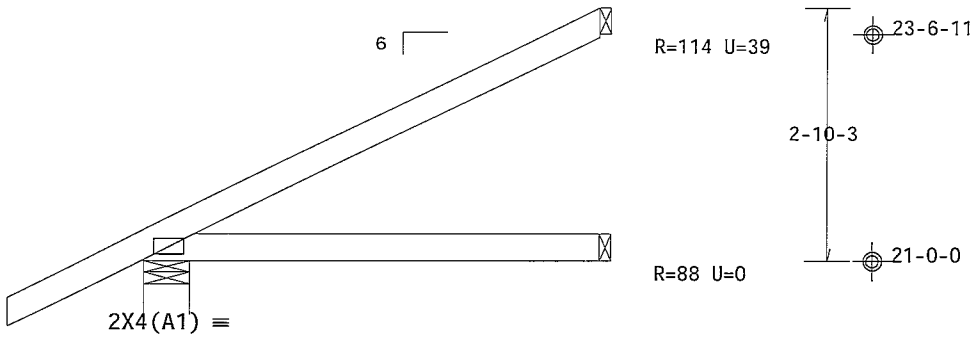

1-6-0

5-0-0 Over 3 Supports

R=302 U=34 W=6
RL=72/-21

Design Crit FBC2010Res/TPI-2007(STD)
FT/RT=10%(0%)/0(0)

PLT TYP Wave

10.03 110209 19 QTY 15 FL/-/5/-/-/R/-

Scale =.5"/Ft.

WALTER P. FINN LICENSE No.22839 STATE OF FLORIDA PROFESSIONAL ENGINEER

03/28/2013

ALPINE
ITW Building Components Group Inc.
Haines City, FL 33844
FL COA #0 278

WARNING READ AND FOLLOW ALL NOTES ON THIS SHEET!
IMPORTANT FURNISH THIS DESIGN TO ALL CONTRACTORS INCLUDING INSTALLERS

Trusses requ re extreme care in fabr cat ng handl ng sh pp ng nstall ng and bracing Refer to and follow the latest ed t on of BCSI (Bu ld ng Component Safety Informat on by TPI and WTCA) for safety practices pr or to performing these funct ons Installers shall provide temporary brac ng per BCSI. Unless noted otherw se top chord shall have properly attached structural sheath ng and bottom chord shall have a properly attached rig d ce l ng Locations shown for permanent lateral restra nt of webs shall have brac ng installed per BCSI sections B3 B7 or B10 as applicable

ITW Bu ld ng Components Group Inc (ITWBCG) shall not be respons ble for any dev at on from th s design, any fa lure to bu ld the truss in conformance w th ANSI/TPI 1 or for handl ng sh pp ng nstallation brac ng of trusses Apply plates to each face of truss and posit on as shown above and on the Joint Data ls unless noted otherwise Refer to draw ngs 160A-Z for standard plate pos tions A seal on this draw ng or cover page listing this draw ng ind cates acceptance of profess onal engineer ng respons b l ty solely for the design shown The su tab lity and use of this des gn for any structure is the respons bil ty of the Bu lding Des gner per ANSI/TPI 1 Sec 2 For more informat on see Th s job s general notes page ITW BCG www itwbcg com TPI www tpinst org WTCA www sbc ndustry com ICC www ccsafe org

TC LL	20 0 PSF	REF	R487-- 66601
TC DL	7 0 PSF	DATE	03/28/13
BC DL	10 0 PSF	DRW	HCUSR487 13087002
BC LL	0.0 PSF	HC-ENG	DF/DF
TOT.LD	37 0 PSF	SEQN-	60813
DUR.FAC.	1 25		
SPACING	24 0"	JREF-	1UUX487_Z01

(13-106--Don Reed Construction Decker House -- Lake City, FL - CJ51 5' Jack)

THIS DWG PREPARED FROM COMPUTER INPUT (LOADS & DIMENSIONS) SUBMITTED BY TRUSS MFR

Top chord 2x4 SP_#1_12A
Bot chord 2x4 SP_#1_12A

Lumber grades designated with 12A use design values approved 1/5/2012 by ALSC

Bottom chord checked for 10 00 psf non-concurrent live load

MWFRS loads based on trusses located at least 11 28 ft from roof edge

Provide (2) 16d common nails(0 162"x3 5'), toe nailed at Top chord
Provide (2) 16d common nails(0 162"x3 5"), toe nailed at Bot chord

120 mph wind, 22 56 ft mean hgt, ASCE 7-10, CLOSED bldg, Located anywhere in roof, RISK CAT II, EXP B, wind TC DL=3 5 psf, wind BC DL=5 0 psf GCpi(+/-)=0 18

Wind loads and reactions based on MWFRS with additional C&C member design

Deflection meets L/240 live and L/180 total load Creep increase factor for dead load is 1 50

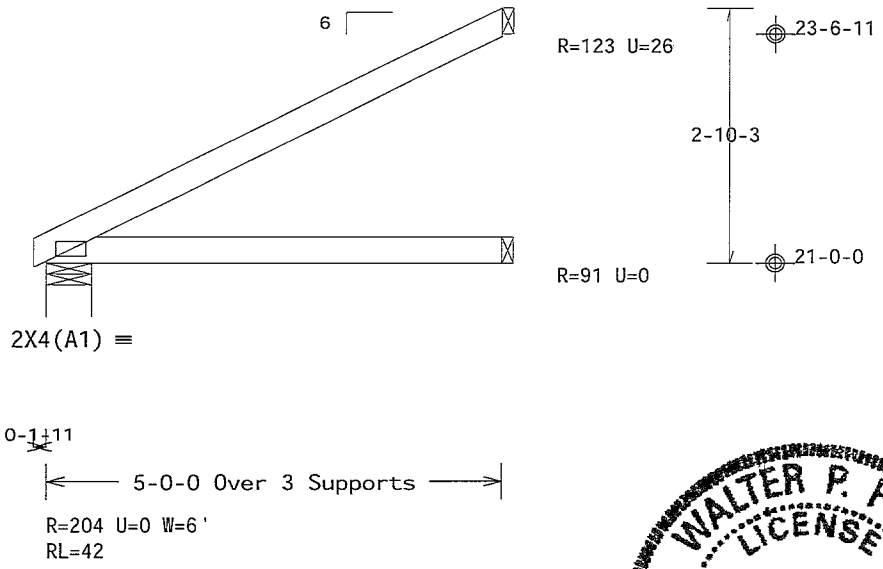

Design Crit FBC2010Res/TPI-2007(STD)
FT/RT=10%(0%)/0(0)

PLT TYP Wave

10.03.11.0209.19 QTY 1

FL/-/5/-/-/R/-

Scale =.5"/Ft.

WALTER P. FINN LICENSE No. 22839 STATE OF FLORIDA PROFESSIONAL ENGINEER

03/28/2013

TC LL	20.0 PSF	REF	R487-- 66602
TC DL	7.0 PSF	DATE	03/28/13
BC DL	10.0 PSF	DRW	HCUSR487 13087015
BC LL	0.0 PSF	HC-ENG	DF/DF
TOT.LD.	37.0 PSF	SEQN-	60806
DUR.FAC.	1.25		
SPACING	24.0"	JREF-	1UUX487_Z01

ALPINE
ITW Building Components Group Inc.
Haines City, FL 33844
FL COA #0 278

WARNING READ AND FOLLOW ALL NOTES ON THIS SHEET!
IMPORTANT FURNISH THIS DESIGN TO ALL CONTRACTORS INCLUDING INSTALLERS

Trusses require extreme care in fabr cat ng handl ng sh pp ng nstall ng and bracing Refer to and follow the latest edition of BCSI (Bu ld ng Component Safety Informat on by TPI and WTCA) for safety practices pr or to performing these funct ons Installers shall provide temporary brac ng per BCSI. Unless noted otherw se top chord shall have properly attached structural sheath ng and bottom chord shall have a properly attached r gid ceil ng Locat ons shown for permanent lateral restra nt of webs shall have brac ng nstalled per BCSI sections B3 B7 or B10 as applicable

ITW Bu lding Components Group Inc (ITWBCG) shall not be responsible for any deviat on from th s design, any fa lure to build the truss in conformance w th ANSI/TPI 1 or for handl ng shipp ng nstallat on or brac ng of trusses Apply plates to each face of truss and pos t on as shown above and on the Joint Deta ls unless noted otherwise Refer to draw ngs 160A-Z for standard plate pos tions A seal on th s drawing or cover page listing this draw ng indicates acceptance of profess onal engineer ng respons b l ty solely for the design shown The su tab lity and use of this des gn for any structure is the respons b lity of the Building Des gner per ANSI/TPI 1 Sec 2 For more nformation see This job s general notes page ITW-BCG www itwbcg com TPI www tpinst org WTCA www sbc ndustry com ICC www ccsafe org

(13-106--Don Reed Construction Decker House -- Lake City, FL - CJ5A 5' Jack)

Top chord 2x4 SP_#1_12A
Bot chord 2x4 SP_#1_12A

Lumber grades designated with "12A' use design values approved 1/5/2012 by ALSC

Bottom chord checked for 10 00 psf non-concurrent live load

MWFRS loads based on trusses located at least 7 50 ft from roof edge

Provide (2) 16d common nails(0 162'x3 5"), toe nailed at Top chord
Provide (2) 16d common nails(0 162"x3 5'), toe nailed at Bot chord

120 mph wind, 15 00 ft mean hgt, ASCE 7-10, CLOSED bldg, Located anywhere in roof, RISK CAT II, EXP B, wind TC DL=3 5 psf, wind BC DL=5 0 psf GCpi(+/-)=0 18

Wind loads and reactions based on MWFRS with additional C&C member design

Deflection meets L/240 live and L/180 total load Creep increase factor for dead load is 1 50

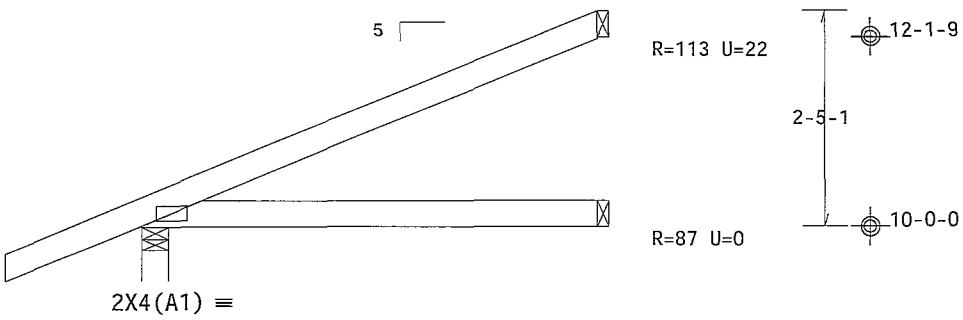

1-6-0

5-0-0 Over 3 Supports

R=299 U=15 W=3 5
RL=44

Design Crit: FBC2010Res/TPI-2007(STD)
FT/RT=10%(0%)/0(0) ★10.03.11.0309.19 ★ FL/-/5/-/-/R/- Scale =.5"/Ft.

PLT TYP Wave

WALTER P. FINN LICENSE No.22839 STATE OF FLORIDA PROFESSIONAL ENGINEER
03/28/2013

ALPINE
ITW Building Components Group Inc.
Haines City, FL 33844
FL COA #0 278

WARNING READ AND FOLLOW ALL NOTES ON THIS SHEET!
IMPORTANT FURNISH THIS DESIGN TO ALL CONTRACTORS INCLUDING INSTALLERS

Trusses requ re extreme care in fabricating handl ng shipp ng nstalling and bracing Re and follow the latest ed t on of BCSI (Building Component Safety Information by TPI and WTCA) for practices pr or to performing these functions Installers shall provide temporary bracing per Unless noted otherwise top chord shall have properly attached structural sheath ng and bottom shall have a properly attached r gid ceiling Locations shown for permanent lateral restraint of shall have bracing nstalled per BCSI sect ons B3 B7 or B10 as applicable

ITW Build ng Components Group Inc (ITWBCG) shall not be respons ble for any dev ation from this des any failure to bu ld the truss n conformance with ANSI/TPI 1 or for handling shipping installation brac ng of trusses Apply plates to each face of truss and position as shown above and on the Joint Details unless noted otherwise Refer to drawings 160A-Z for standard plate pos tions A seal on this draw ng or cover page I sting th s drawing ndicates acceptance of professional eng neering responsibility solely for the des gn shown The suitab lity and use of this design for any structure is the responsib l ty of the Build ng Designer per ANSI/TPI 1 Sec 2 For more informat on see Th s job s general notes page ITW-BCG www twbcg com TPI www tp nst org WTCA www sbcindustry com ICC www iccsafe org

TC LL	20 0 PSF	REF	R487-- 66603
TC DL	7.0 PSF	DATE	03/28/13
BC DL	10.0 PSF	DRW	HCUSR487 13087071
BC LL	0.0 PSF	HC-ENG	DF/DF
TOT.LD	37.0 PSF	SEQN-	60849
DUR.FAC.	1.25		
SPACING	24 0"	JREF-	1UUX487_Z01

THIS DWG PREPARED FROM COMPUTER INPUT (LOADS & DIMENSIONS) SUBMITTED BY TRUSS MFR

(13-106--Don Reed Construction Decker House -- Lake City, FL - CJ5B 5'10" Jack)

Top chord 2x4 SP_#1_12A
Bot chord 2x4 SP_#1_12A

Lumber grades designated with "12A use design values approved 1/5/2012 by ALSC

Bottom chord checked for 10 00 psf non-concurrent live load

MWFRS loads based on trusses located at least 30 00 ft from roof edge

Provide (2) 16d common nails(0 162"x3 5'), toe nailed at Top chord
Provide (2) 16d common nails(0 162'x3 5"), toe nailed at Bot chord

145 mph wind, 15 00 ft mean hgt, ASCE 7-10, CLOSED bldg, Located anywhere in roof, RISK CAT II, EXP B, wind TC DL=3 5 psf, wind BC DL=5 0 psf GCpi(+/-)=0 18

Wind loads and reactions based on MWFRS with additional C&C member design

Deflection meets L/240 live and L/180 total load Creep increase factor for dead load is 1 50

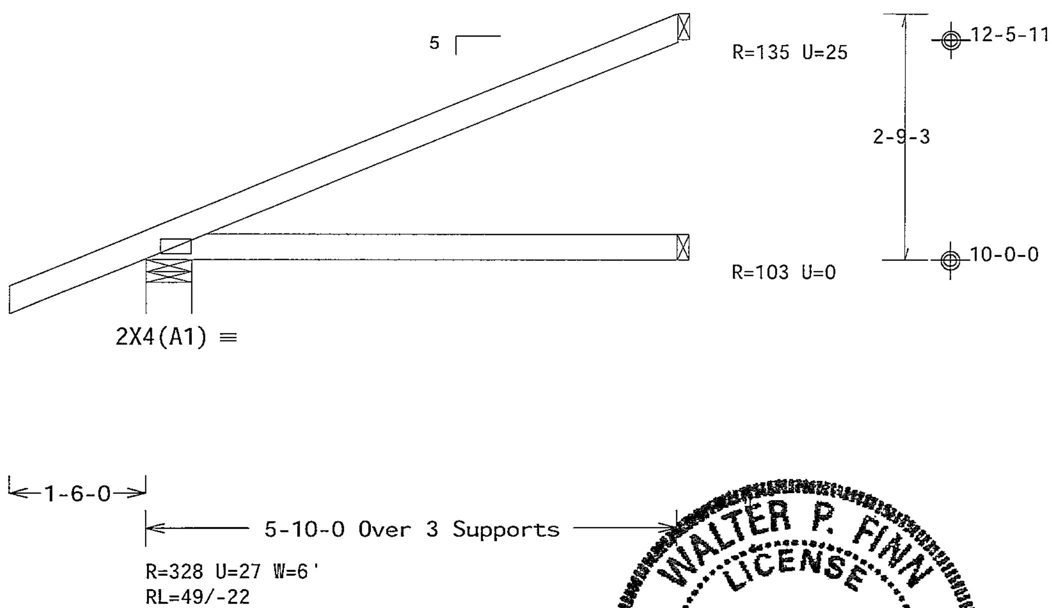

Design Crit: FBC2010Res/TPI-2007(STD)
FT/RT=10%(0%)/0(0)

PLT TYP Wave

FL/-/5/-/-/R/-

Scale =.5"/Ft.

ALPINE
ITW Building Components Group Inc.
Haines City, FL 33844
FL COA #0 278

WARNING READ AND FOLLOW ALL NOTES ON THIS SHEET!
IMPORTANT FURNISH THIS DESIGN TO ALL CONTRACTORS INCLUDING INSTALLERS

Trusses require extreme care in fabricating handling shipping installing and bracing Refer to and follow the latest edition of BCSI (Building Component Safety Information by TPI and WTCA) for safety practices prior to performing these functions Installers shall provide temporary bracing per BCSI Unless noted otherwise top chord shall have properly attached structural sheathing and bottom chord shall have a properly attached rigid ceiling Locations shown for permanent lateral restraint of webs shall have bracing installed per BCSI sections B3 B7 or B10 as applicable

ITW Building Components Group Inc (ITWBCG) shall not be responsible for any deviation from this design any failure to build the truss in conformance with ANSI/TPI 1 or for handling shipping installation & bracing of trusses Apply plates to each face of truss and position as shown above and on the Joint Details unless noted otherwise Refer to drawings 160A-Z for standard plate positions A seal on this drawing or cover page listing this drawing indicates acceptance of professional engineering responsibility solely for the design shown The suitability and use of this design for any structure is the responsibility of the Building Designer per ANSI/TPI 1 Sec 2 For more information see This job s general notes page ITW BCG www itwbcg com TPI www tpinst org WTCA www sbcindustry com ICC www iccsafe org

WALTER P. FINN
LICENSE
No. 22839
STATE OF FLORIDA
PROFESSIONAL ENGINEER

★ 0 03.11 0309.20 ★

03/28/2013

TC LL	20.0 PSF	REF R487-- 66604
TC DL	7.0 PSF	DATE 03/28/13
BC DL	10.0 PSF	DRW HCUSR487 13087055
BC LL	0.0 PSF	HC-ENG DF/DF
TOT LD	37 0 PSF	SEQN- 70771
DUR FAC	1.25	
SPACING	24.0"	JREF- 1UUX487_Z01

THIS DWG PREPARED FROM COMPUTER INPUT (LOADS & DIMENSIONS) SUBMITTED BY TRUSS MFR

(13-106--Don Reed Construction Decker House -- Lake City, FL - CJ7A 7' Jack)

Top chord 2x4 SP_#1_12A
Bot chord 2x4 SP_#1_12A

Lumber grades designated with '12A' use design values approved 1/5/2012 by ALSC

Bottom chord checked for 10 00 psf non-concurrent live load

MWFRS loads based on trusses located at least 15 00 ft from roof edge

Provide (2) 16d common nails(0 162 x3 5), toe nailed at Top chord
Provide (2) 16d common nails(0 162'x3 5), toe nailed at Bot chord

120 mph wind, 15 00 ft mean hgt, ASCE 7-10, CLOSED bldg, Located anywhere in roof, RISK CAT II, EXP B, wind TC DL=3 5 psf, wind BC DL=5 0 psf GCpi(+/-)=0 18

Wind loads and reactions based on MWFRS with additional C&C member design

Deflection meets L/240 live and L/180 total load Creep increase factor for dead load is 1 50

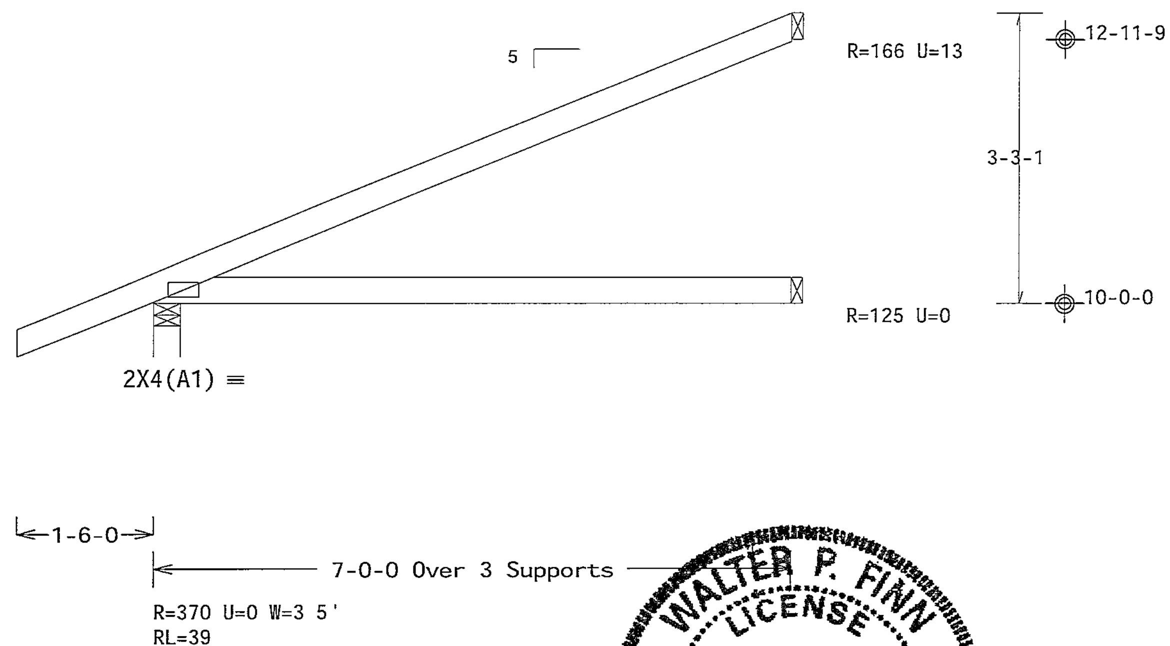

Design Crit. FBC2010Res/TPI-2007(STD)
FT/RT=10%(0%)/0(0) 10 03.11 0209.19 QTY 1 FL/-/5/-/-/R/- Scale =.5"/Ft.

PLT TYP. Wave

ALPINE
ITW Building Components Group Inc.
Haines City, FL 33844
FL COA #0 278

WARNING READ AND FOLLOW ALL NOTES ON THIS SHEET!
IMPORTANT FURNISH THIS DESIGN TO ALL CONTRACTORS INCLUDING INSTALLERS

Trusses require extreme care in fabricating, handling, shipping, installing and bracing. Refer to and follow the latest edition of BCSI (Building Component Safety Information, by TPI and WTCA) for safety practices prior to performing these functions. Installers shall provide temporary bracing per BCSI. Unless noted otherwise, top chord shall have properly attached structural sheathing and bottom chord shall have a properly attached rigid ceiling. Locations shown for permanent lateral restraint of webs shall have bracing installed per BCSI sections B3, B7 or B10, as applicable.

ITW Building Components Group Inc. (ITWBCG) shall not be responsible for any deviation from this design, any failure to build the truss in conformance with ANSI/TPI 1, or for handling, shipping, installation and bracing of trusses. Apply plates to each face of truss and position as shown above and on the Joint Details, unless noted otherwise. Refer to drawings 160A-Z for standard plate positions. A seal on this drawing or cover page listing this drawing indicates acceptance of professional engineering responsibility solely for the design shown. The suitability and use of this design for any structure is the responsibility of the Building Designer per ANSI/TPI 1 Sec 2. For more information see this job's general notes page, ITW-BCG: www.itwbcg.com, TPI: www.tpinst.org, WTCA: www.sbcindustry.com, ICC: www.iccsafe.org

WALTER P. FINN
LICENSE
No. 22839
STATE OF FLORIDA
PROFESSIONAL ENGINEER
03/28/2013

TC LL	20.0 PSF
TC DL	7 0 PSF
BC DL	10.0 PSF
BC LL	0 0 PSF
TOT LD	37 0 PSF
DUR.FAC	1.25
SPACING	24 0"

REF	R487-- 66605
DATE	03/28/13
DRW	HCUSR487 13087064
HC-ENG	DF/DF
SEQN-	60850
JREF-	1UUX487_Z01

(13-106--Don Reed Construction Decker House -- Lake City, FL - CJ7B 7'10" Jack)

THIS DWG PREPARED FROM COMPUTER INPUT (LOADS & DIMENSIONS) SUBMITTED BY TRUSS MFR

Top chord 2x4 SP_#1_12A
Bot chord 2x4 SP_#1_12A
Webs 2x4 SP_#3__12A
Lt Stub Wedge 2x4 SP_#3__12A

Lumber grades designated with "12A" use design values approved 1/5/2012 by ALSC

Deflection meets L/240 live and L/180 total load Creep increase factor for dead load is 1 50

145 mph wind, 15 00 ft mean hgt, ASCE 7-10, CLOSED bldg, not located within 4 50 ft from roof edge, RISK CAT II, EXP B, wind TC DL=3 5 psf, wind BC DL=5 0 psf GCpi(+/-)=0 18

Wind loads and reactions based on MWFRS with additional C&C member design

Bottom chord checked for 10 00 psf non-concurrent live load

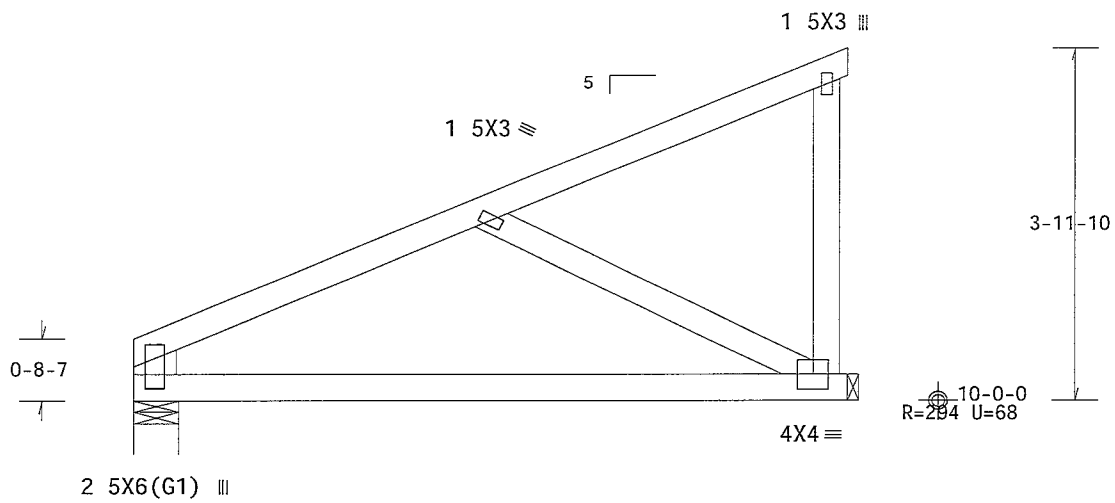

Design Crit FBC2010Res/TPI-2007(STD)
FT/RT=10%(0%)/0(0)

PLT TYP Wave

★ 10 03 11 0209 20 ★ QTY 1

FL/-/5/-/-/R/-

Scale = 5"/Ft.

WALTER P. FINN LICENSE No. 22839 STATE OF FLORIDA PROFESSIONAL ENGINEER

03/28/2013

ALPINE
ITW Building Components Group Inc.
Haines City, FL 33844
FL COA #0 278

WARNING READ AND FOLLOW ALL NOTES ON THIS SHEET!
IMPORTANT FURNISH THIS DESIGN TO ALL CONTRACTORS INCLUDING INSTALLERS

Trusses require extreme care in fabr cat ng handl ng sh pp ng nstall ng and brac ng Refer to and follow the latest ed tion of BCSI (Bu ld ng Component Safety Informat on by TPI and WTCA) for safety pract ces prior to perform ng these funct ons Installers shall prov de temporary brac ng per BCSI. Unless noted otherwise top chord shall have properly attached structural sheath ng and bottom chord shall have a properly attached r g d ce l ng Locat ons shown for permanent lateral restra nt of webs shall have brac ng nstalled per BCSI sect ons B3 B7 or B10 as appl cable

ITW Bu ld ng Components Group Inc (ITWBCG) shall not be respons ble for any dev at on from th s design any fa lure to bu ld the truss n conformance w th ANSI/TPI 1 or for handl ng sh pp ng nstallat on brac ng of trusses Apply plates to each face of truss and pos tion as shown above and on the Jo nt Details unless noted otherw se Refer to draw ngs 160A-Z for standard plate pos t ons A seal on th s drawing or cover page l st ng th s draw ng nd cates acceptance of profess onal eng neer ng respons bility solely for the des gn shown The suitab l ty and use of th s des gn for any structure s the responsib l ty of the Bu ld ng Des gner per ANSI/TPI 1 Sec 2 For more nformat on see Th s job s general notes page ITW BCG www twbcg com TPI www tp nst org WTCA www sbc ndustry com ICC www iccsafe org

TC LL	20 0 PSF	REF	R487-- 66606
TC DL	7.0 PSF	DATE	03/28/13
BC DL	10 0 PSF	DRW	HCUSR487 13087009
BC LL	0 0 PSF	HC-ENG	DF/DF
TOT LD	37 0 PSF	SEQN-	70781
DUR FAC	1 25		
SPACING	24 0"	JREF-	1UUX487_Z01

(13-106--Don Reed Construction Decker House -- Lake City, FL - CJ7C 7 Jack)

THIS DWG PREPARED FROM COMPUTER INPUT (LOADS & DIMENSIONS) SUBMITTED BY TRUSS MFR

Top chord 2x4 SP_#1_12A
Bot chord 2x4 SP_#1_12A

Lumber grades designated with 12A use design values approved 1/5/2012 by ALSC

Bottom chord checked for 10 00 psf non-concurrent live load

MWFRS loads based on trusses located at least 15 00 ft from roof edge

Provide (2) 16d common nails(0 162'x3 5), toe nailed at Top chord
Provide (2) 16d common nails(0 162'x3 5'), toe nailed at Bot chord

145 mph wind, 15 00 ft mean hgt, ASCE 7-10, CLOSED bldg, Located anywhere in roof, RISK CAT II EXP B, wind TC DL=3 5 psf, wind BC DL=5 0 psf GCpi(+/-)=0 18

Wind loads and reactions based on MWFRS with additional C&C member design

Deflection meets L/240 live and L/180 total load Creep increase factor for dead load is 1 50

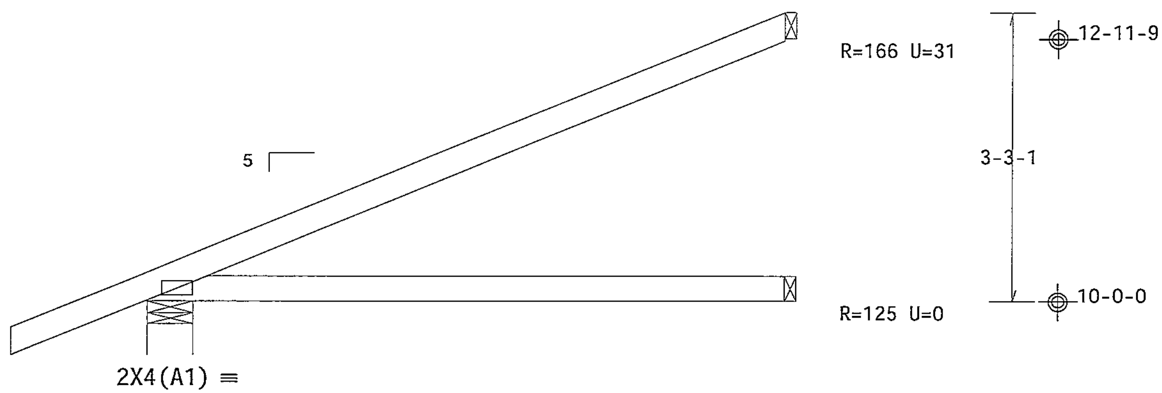

←1-6-0→

7-0-0 Over 3 Supports

R=370 U=24 W=6'
RL=57/-23

PLT TYP. Wave

Design Crit FBC2010Res/TPI-2007(STD)
FT/RT=10%(0%)/0(0)

★0 03 11 0209 20 QT★

WALTER P. FINN LICENSE No. 22839 STATE OF FLORIDA PROFESSIONAL ENGINEER

03/28/2013

FL/-/5/-/-/R/-   Scale =.5"/Ft.

TC LL	20 0 PSF	REF	R487-- 66607
TC DL	7 0 PSF	DATE	03/28/13
BC DL	10 0 PSF	DRW	HCUSR487 13087079
BC LL	0 0 PSF	HC-ENG	DF/DF
TOT LD	37 0 PSF	SEQN-	70772
DUR FAC	1 25		
SPACING	24 0"	JREF-	1UUX487_Z01

WARNING READ AND FOLLOW ALL NOTES ON THIS SHEET
IMPORTANT FURNISH THIS DESIGN TO ALL CONTRACTORS INCLUDING INSTALLERS

Trusses requ re extreme care n fabr cat ng handl ng shipping nstalling and bracing Ro... follow the latest ed t on of BCSI (Building Component Safety Information by TPI and WTCA) for ... pract ces pr or to performing these funct ons Installers shall prov de temporary bracing per B... Unless noted otherw se top chord shall have properly attached structural sheath ng and bottom ch... shall have a properly attached r g d ce l ng Locations shown for permanent lateral restraint of w... shall have bracing nstalled per BCSI sect ons B3 B7 or B10 as appl cable

ITW Build ng Components Group Inc (ITWBCG) shall not be respons ble for any dev ation from this desig... any failure to bu ld the truss n conformance with ANSI/TPI 1 or for handling sh pp ng installat on & brac ng of trusses Apply plates to each face of truss and position as shown above and on the Jo nt Details unless noted otherwise Refer to draw ngs 160A-Z for standard plate posit ons A seal on th s drawing or cover page l st ng th s drawing ndicates acceptance of profess onal eng neer ng responsibility solely for the des gn shown The suitabil ty and use of th s design for any structure s the respons b l ty of the Build ng Designer per ANSI/TPI 1 Sec 2 For more nformat on see Th s job s general notes page ITW-BCG www twbcg com TPI www tp nst org WTCA www sbc ndustry com ICC www ccsafe org

ALPINE
ITW Building Components Group Inc.
Haines City, FL 33844
FL COA #0 278

THIS DWG PREPARED FROM COMPUTER INPUT (LOADS & DIMENSIONS) SUBMITTED BY TRUSS MFR

(13-106--Don Reed Construction Decker House -- Lake City, FL - CJ9A 9 Jack)

Top chord 2x4 SP_#1_12A
Bot chord 2x4 SP_#1_12A
Webs 2x4 SP_#3__12A

Lumber grades designated with '12A use design values approved 1/5/2012 by ALSC

Bottom chord checked for 10 00 psf non-concurrent live load

MWFRS loads based on trusses located at least 15 00 ft from roof edge

120 mph wind, 15 00 ft mean hgt, ASCE 7-10, CLOSED bldg, not located within 9 00 ft from roof edge, RISK CAT II, EXP B, wind TC DL=3 5 psf, wind BC DL=5 0 psf GCpi(+/-)=0 18

Wind loads and reactions based on MWFRS with additional C&C member design

Deflection meets L/240 live and L/180 total load Creep increase factor for dead load is 1 50

Provide (2) 16d common nails(0 162 x3 5), toe nailed at Top chord
Provide (2) 16d common nails(0 162 x3 5), toe nailed at Bot chord

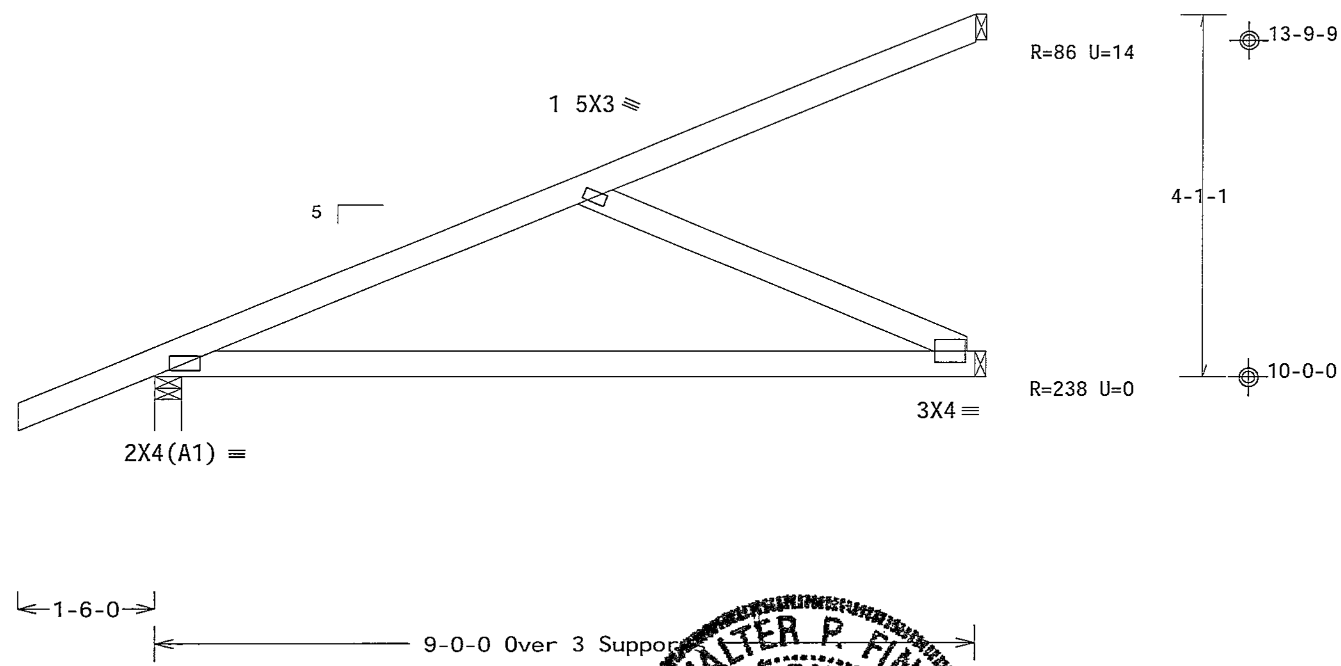

Design Crit FBC2010Res/TPI-2007(STD)
FT/RT=10%(0%)/0(0) 10 03 11 0409 19

PLT TYP Wave

FL/-/5/-/-/R/- Scale = 5"/Ft

ALPINE
ITW Building Components Group Inc.
Haines City, FL 33844
FL COA #0 278

WARNING READ AND FOLLOW ALL NOTES ON THIS SHEET!
IMPORTANT FURNISH THIS DESIGN TO ALL CONTRACTORS INCLUDING INSTALLERS

Trusses require extreme care in fabricating, handling, shipping, installing and bracing. Refer to and follow the latest edition of BCSI (Building Component Safety Information, by TPI and WTCA) for safety practices prior to performing these functions. Installers shall provide temporary bracing per BCSI. Unless noted otherwise, top chord shall have properly attached structural sheathing and bottom chord shall have a properly attached rigid ceiling. Locations shown for permanent lateral restraint of webs shall have bracing installed per BCSI sections B3, B7 or B10, as applicable.

ITW Building Components Group Inc (ITWBCG) shall not be responsible for any deviation from this design, any failure to build the truss in conformance with ANSI/TPI 1, or for handling, shipping, installation & bracing of trusses. Apply plates to each face of truss and position as shown above and on the Joint Details, unless noted otherwise. Refer to drawings 160A-Z for standard plate positions. A seal on this drawing or cover page listing this drawing indicates acceptance of professional engineering responsibility solely for the design shown. The suitability and use of this design for any structure is the responsibility of the Building Designer per ANSI/TPI 1 Sec 2. For more information see this job's general notes page. ITW BCG www itwbcg com TPI www tpinst org WTCA www sbcindustry com ICC www iccsafe org

WALTER P. FINN LICENSE No.22839 STATE OF FLORIDA PROFESSIONAL ENGINEER
03/28/2013

TC LL	20 0 PSF	REF	R487-- 66608
TC DL	7.0 PSF	DATE	03/28/13
BC DL	10 0 PSF	DRW	HCUSR487 13087069
BC LL	0 0 PSF	HC-ENG	DF/DF
TOT.LD	37 0 PSF	SEQN-	60851
DUR.FAC.	1 25		
SPACING	24 0"	JREF-	1UUX487_Z01

(13-106--Don Reed Construction Decker House -- Lake City, FL - D 19 9 8 Common)

THIS DWG PREPARED FROM COMPUTER INPUT (LOADS & DIMENSIONS) SUBMITTED BY TRUSS MFR

Top chord 2x4 SP_#1_12A
Bot chord 2x4 SP_#1_12A
Webs 2x4 SP_#3__12A

Lumber grades designated with 12A use design values approved 1/5/2012 by ALSC

Bottom chord checked for 10 00 psf non-concurrent live load

MWFRS loads based on trusses located at least 7 50 ft from roof edge

120 mph wind, 15 00 ft mean hgt, ASCE 7-10, CLOSED bldg, not located within 9 00 ft from roof edge, RISK CAT II, EXP B, wind TC DL=3 5 psf, wind BC DL=5 0 psf GCpi(+/-)=0 18

Wind loads and reactions based on MWFRS with additional C&C member design

Deflection meets L/240 live and L/180 total load Creep increase factor for dead load is 1 50

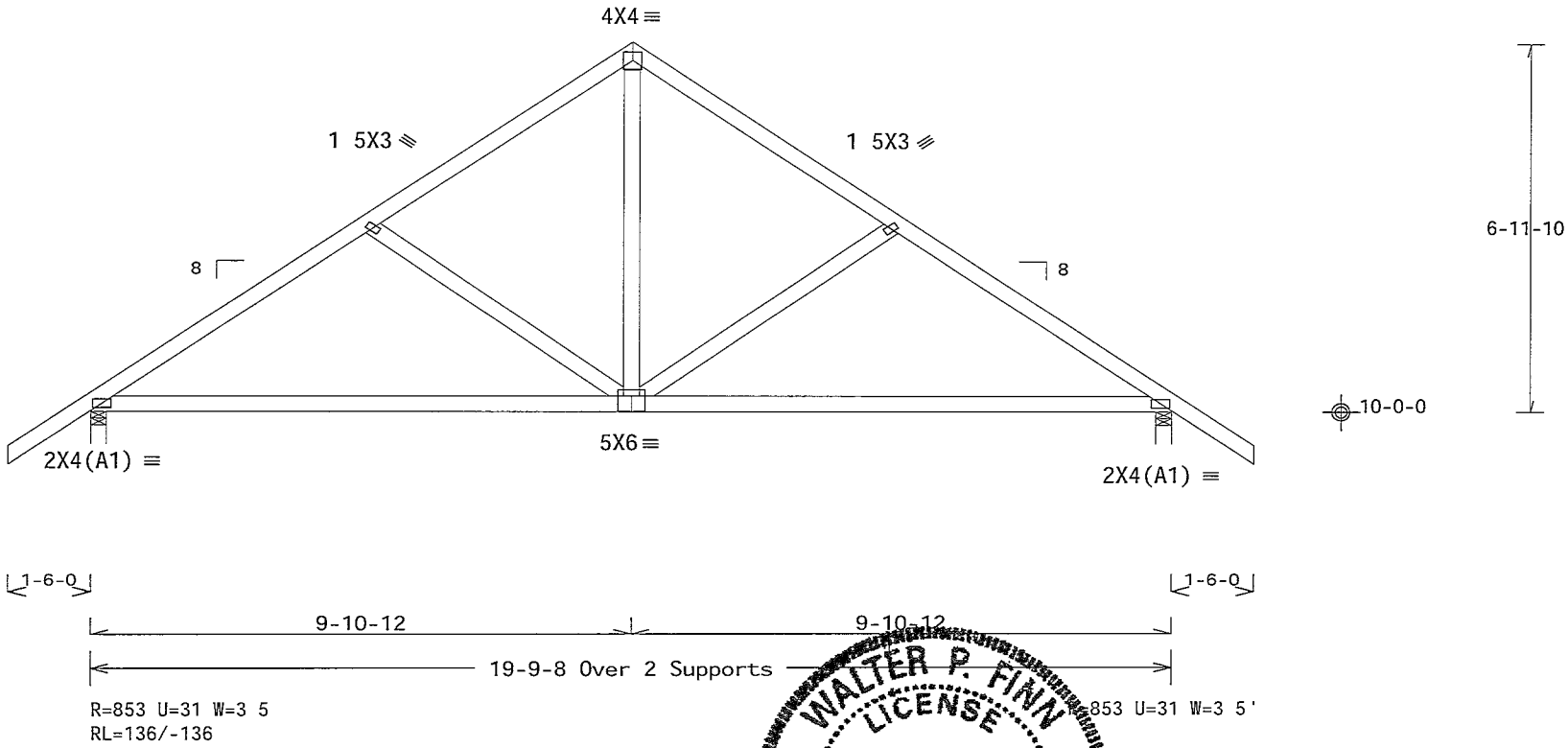

Design Crit FBC2010Res/TPI-2007(STD)
FT/RT=10%(0%)/0(0) 19 03 11 0209 19 QTY 1 FL/-/5/-/-/R/- Scale =.3125"/Ft

PLT TYP Wave

ALPINE
ITW Building Components Group Inc.
Haines City FL 33844
FL COA #0 278

WARNING READ AND FOLLOW ALL NOTES ON THIS SHEET!
IMPORTANT FURNISH THIS DESIGN TO ALL CONTRACTORS INCLUDING INSTALLERS

Trusses requ re extreme care in fabr cat ng handl ng sh pp ng nstall ng and brac ng Refer to and follow the latest ed tion of BCSI (Bu ld ng Component Safety Informat on by TPI and WTCA) for standard practices pr or to performing these funct ons Installers shall provide temporary brac ng per BCSI. Unless noted otherw se top chord shall have properly attached structural sheath ng and bottom chord shall have a properly attached r g d ceil ng Locat ons shown for permanent lateral restra nt of webs shall have brac ng installed per BCSI sections B3 B7 or B10 as applicable

ITW Bu ld ng Components Group Inc (ITWBCG) shall not be respons ble for any dev at on from th s design or any fa lure to build the truss in conformance w th ANSI/TPI 1 or for handl ng sh pp ng nstallat on and brac ng of trusses Apply plates to each face of truss and pos t on as shown above and on the Joint Deta ls unless noted otherw se Refer to draw ngs 160A-Z for standard plate pos tions A seal on th s draw ng or cover page l sting this draw ng ind cates acceptance of profess onal engineer ng respons b l ty solely for the design shown The su tab lity and use of this des gn for any structure is the respons bility of the Bu lding Designer per ANSI/TPI 1 Sec 2 For more information see This job s general notes page ITW BCG www itwbcg com TPI www tp nst org WTCA www sbc ndustry com ICC www ccsafe org

WALTER P. FINN LICENSE No.22839 STATE OF FLORIDA PROFESSIONAL ENGINEER
03/28/2013

TC LL	20.0 PSF	REF	R487-- 66609
TC DL	7.0 PSF	DATE	03/28/13
BC DL	10.0 PSF	DRW	HCUSR487 13087080
BC LL	0 0 PSF	HC-ENG	DF/DF
TOT LD	37 0 PSF	SEQN-	60858
DUR FAC.	1.25		
SPACING	24.0"	JREF-	1UUX487_Z01

(13-106--Don Reed Construction Decker House -- Lake City, FL - E 20 Stepdown Hip)

THIS DWG PREPARED FROM COMPUTER INPUT (LOADS & DIMENSIONS) SUBMITTED BY TRUSS MFR

Top chord 2x4 SP_#1_12A
Bot chord 2x4 SP_#1_12A
Webs 2x4 SP_#3__12A

Lumber grades designated with 12A use design values approved 1/5/2012 by ALSC

(H1) = (J) Hanger not calculated (1)2x4 SP_#1_12A supporting member

Bottom chord checked for 10 00 psf non-concurrent live load

MWFRS loads based on trusses located at least 11 64 ft from roof edge

145 mph wind 23 27 ft mean hgt ASCE 7-10 CLOSED bldg not located within 9 00 ft from roof edge RISK CAT II EXP B wind TC DL=3 5 psf wind BC DL=5 0 psf GCpi(+/-)=0 18

Wind loads and reactions based on MWFRS with additional C&C member design

Right end vertical not exposed to wind pressure

In lieu of structural panels use purlins to brace all flat TC @ 24 OC

Deflection meets L/240 live and L/180 total load Creep increase factor for dead load is 1 50

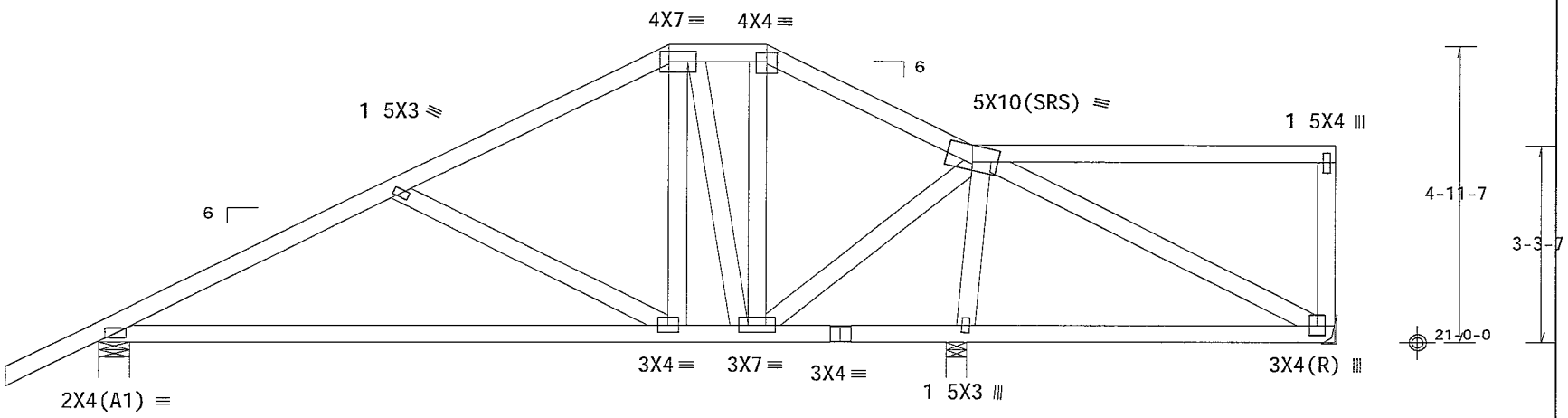

1-6-0 | 13-8-8 | 6-3-8

9-2-8 | 1-7-0 | 3-4-0 | 5-10-8

20-0-0 Over 3 Supports

R=613 U=100 W=6
RL=103/-68

R=1320 U=154 W=4

R=199 U=58
H=H1

Design Crit FBC2010Res/TPI-2007(STD)
FT/RT=10%(0%)/0(0) 10.03 11.0209.20 OTY 1

PLT TYP Wave

FL/-/5/-/-/R/-

Scale =.375"/Ft

WALTER P. FINN LICENSE No.22839 STATE OF FLORIDA PROFESSIONAL ENGINEER

03/28/2013

ALPINE
ITW Building Components Group Inc.
Haines City, FL 33844
FL COA #0 278

WARNING READ AND FOLLOW ALL NOTES ON THIS SHEET!
IMPORTANT FURNISH THIS DESIGN TO ALL CONTRACTORS INCLUDING INSTALLERS

Trusses requ re extreme care n fabricating handling shipping installing and brac ng refer to and follow the latest edition of BCSI (Bu ldng Component Safety Informat on by TPI and WTCA) for safety pract ces prior to perform ng these functions Installers shall provide temporary bracing per BCSI Unless noted otherwise top chord shall have properly attached structural sheathing and bottom chord shall have a properly attached r g d ceiling Locations shown for permanent lateral restraint of webs shall have brac ng nstalled per BCSI sect ons B3 B7 or B10 as applicable

ITW Building Components Group Inc (ITWBCG) shall not be respons ble for any dev ation from th s drawing any failure to bu ld the truss n conformance with ANSI/TPI 1 or for handling sh pp ng installation bracing of trusses Apply plates to each face of truss and posit on as shown above and on the Joint Details unless noted otherw se Refer to drawings 160A-Z for standard plate posit ons A seal on this drawing or cover page l st ng th s drawing indicates acceptance of professional eng neering respons bility solely for the des gn shown The suitabil ty and use of this design for any structure is the responsibility of the Build ng Designer per ANSI/TPI 1 Sec 2 For more nformat on see Th s job s general notes page ITW-BCG www twbcg com TPI www tp nst org WTCA www sbcindustry com ICC www iccsafe org

TC LL	20 0 PSF	REF	R487-- 66610
TC DL	7 0 PSF	DATE	03/28/13
BC DL	10 0 PSF	DRW	HCUSR487 13087005
BC LL	0.0 PSF	HC-ENG	DF/DF
TOT.LD.	37.0 PSF	SEQN-	70758
DUR.FAC.	1.25		
SPACING	24.0"	JREF-	1UUX487_Z01

THIS DWG PREPARED FROM COMPUTER INPUT (LOADS & DIMENSIONS) SUBMITTED BY TRUSS MFR

(13-106--Don Reed Construction Decker House -- Lake City, FL - E1 20' Stepdown Hip)

Top chord 2x4 SP_#1_12A
Bot chord 2x4 SP_#1_12A
Webs 2x4 SP_#3__12A

Lumber grades designated with 12A use design values approved 1/5/2012 by ALSC

(H1) = (J) Hanger not calculated (1)2x4 SP_#1_12A supporting member

Bottom chord checked for 10 00 psf non-concurrent live load

MWFRS loads based on trusses located at least 11 39 ft from roof edge

145 mph wind 22 77 ft mean hgt ASCE 7-10 CLOSED bldg not located within 9 00 ft from roof edge RISK CAT II EXP B wind TC DL=3 5 psf wind BC DL=5 0 psf GCpi(+/-)=0 18

Wind loads and reactions based on MWFRS with additional C&C member design

Right end vertical not exposed to wind pressure

In lieu of structural panels use purlins to brace all flat TC @ 24 OC

Deflection meets L/240 live and L/180 total load Creep increase factor for dead load is 1 50

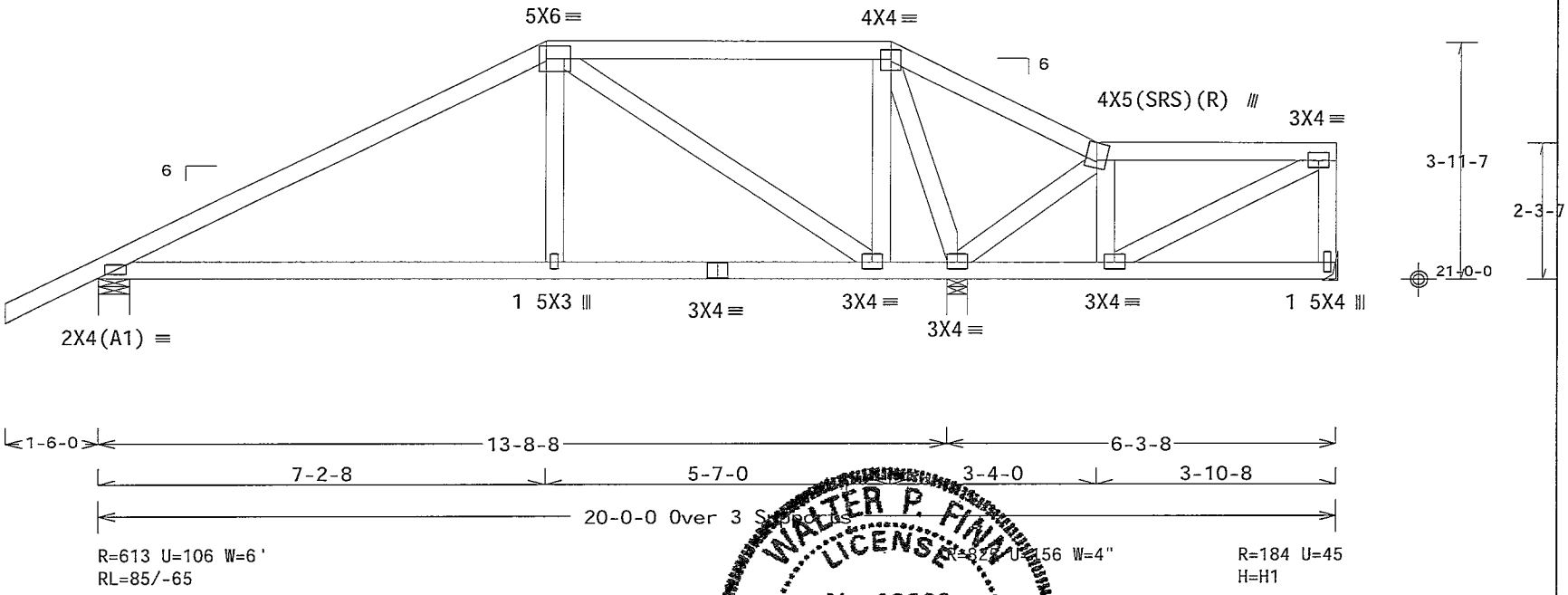

Design Crit FBC2010Res/TPI-2007(STD)
FT/RT=10%(0%)/0(0)

PLT TYP. Wave

FL/-/5/-/-/R/-

Scale =.375"/Ft

TC LL	20.0 PSF
TC DL	7.0 PSF
BC DL	10.0 PSF
BC LL	0.0 PSF
TOT.LD.	37.0 PSF
DUR.FAC.	1 25
SPACING	24.0"

REF	R487-- 66611
DATE	03/28/13
DRW	HCUSR487 13087007
HC-ENG	DF/DF
SEQN-	70760
JREF-	1UUX487_Z01

WALTER P. FINN LICENSE No.22839 STATE OF FLORIDA PROFESSIONAL ENGINEER

03/28/2013

ALPINE
ITW Building Components Group Inc.
Haines City, FL 33844
FL COA #0 278

WARNING READ AND FOLLOW ALL NOTES ON THIS SHEET!
IMPORTANT FURNISH THIS DESIGN TO ALL CONTRACTORS INCLUDING INSTALLERS

Trusses require extreme care in fabr cat ng handl ng sh pp ng nstall ng and bracing Refer to and follow the latest ed tion of BCSI (Bu ld ng Component Safety Information by TPI and WTCA) for standard practices pr or to performing these funct ons Installers shall provide temporary bracing per BCSI. Unless noted otherw se top chord shall have properly attached structural sheath ng and bottom chord shall have a properly attached rigid ceil ng Locat ons shown for permanent lateral restraint of webs shall have brac ng installed per BCSI sections B3 B7 or B10 as appl cable

ITW Bu lding Components Group Inc (ITWBCG) shall not be respons ble for any dev at on from th s design, any failure to build the truss in conformance w th ANSI/TPI 1 or for handl ng sh pp ng nstallat on & brac ng of trusses Apply plates to each face of truss and pos t on as shown above and on the Joint Deta ls unless noted otherwise Refer to drawings 160A-Z for standard plate pos tions A seal on this draw ng or cover page listing this draw ng nd cates acceptance of profess onal engineer ng responsib l ty solely for the design shown The su tab lity and use of this des gn for any structure is the responsibility of the Bu lding Des gner per ANSI/TPI 1 Sec 2 For more information see This job s general notes page ITW BCG www itwbcg com TPI www tpinst org WTCA www sbcindustry com ICC www ccsafe org

(13-106--Don Reed Construction Decker House -- Lake City, FL - E2 20 Stepdown Hip)

THIS DWG PREPARED FROM COMPUTER INPUT (LOADS & DIMENSIONS) SUBMITTED BY TRUSS MFR

Top chord 2x4 SP_#1_12A
Bot chord 2x4 SP_#1_12A
Webs 2x4 SP_#3__12A

Lumber grades designated with 12A use design values approved 1/5/2012 by ALSC

(H1) = (J) Hanger not calculated (1)2x4 SP_#1_12A supporting member

Deflection meets L/240 live and L/180 total load Creep increase factor for dead load is 1 50

145 mph wind 22 51 ft mean hgt ASCE 7-10 CLOSED bldg not located within 9 00 ft from roof edge RISK CAT II EXP B wind TC DL=3 5 psf wind BC DL=5 0 psf GCpi(+/-)=0 18

Wind loads and reactions based on MWFRS with additional C&C member design

In lieu of structural panels use purlins to brace all flat TC @ 24 OC

Bottom chord checked for 10 00 psf non-concurrent live load

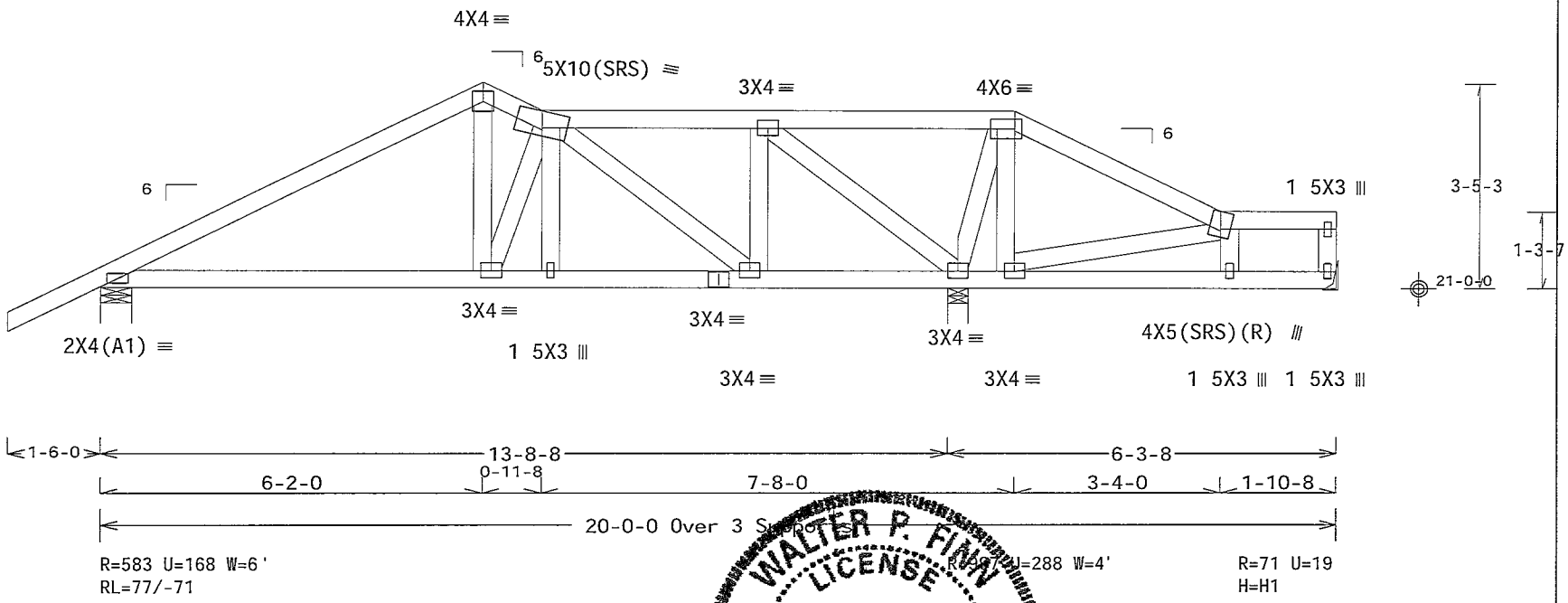

Design Crit FBC2010Res/TPI-2007(STD)
FT/RT=10%(0%)/0(0)

PLT TYP. Wave

10 03.11.0209.20 QTY 1 FL/-/5/-/-/R/- Scale =.375"/Ft.

WALTER P. FINNEY LICENSE No. 22839 STATE OF FLORIDA PROFESSIONAL ENGINEER

03/28/2013

ALPINE
ITW Building Components Group Inc.
Haines City, FL 33844
FL COA #0 278

WARNING READ AND FOLLOW ALL NOTES ON THIS SHEET!
IMPORTANT FURNISH THIS DESIGN TO ALL CONTRACTORS INCLUDING INSTALLERS

Trusses require extreme care in fabr cat ng handl ng sh pp ng nstall ng and brac ng Refer to and follow the latest ed tion of BCSI (Bu ld ng Component Safety Information by TPI and WTCA) for safety practices pr or to performing these funct ons Installers shall prov de temporary brac ng per BCSI. Unless noted otherw se top chord shall have properly attached structural sheath ng and bottom chord shall have a properly attached rigid ce l ng Locat ons shown for permanent lateral restra nt of webs shall have brac ng installed per BCSI sections B3 B7 or B10 as applicable

ITW Bu lding Components Group Inc (ITWBCG) shall not be responsible for any deviat on from th s draw ng or any fa lure to build the truss in conformance w th ANSI/TPI 1 or for handl ng shipp ng nstallat on and brac ng of trusses Apply plates to each face of truss and pos t on as shown above and on the Joint Deta ls unless noted otherwise Refer to draw ngs 160A-Z for standard plate pos tions A seal on th s draw ng or cover page listing this draw ng nd cates acceptance of profess onal eng neer ng responsib l ty solely for the design shown The su tab l ty and use of th s des gn for any structure is the respons bility of the Bu ld ng Des gner per ANSI/TPI 1 Sec 2 For more nformation see This job s general notes page ITW BCG www itwbcg com TPI www tp nst org WTCA www sbc ndustry com ICC www iccsafe org

TC LL	20.0 PSF	REF	R487-- 66612
TC DL	7.0 PSF	DATE	03/28/13
BC DL	10 0 PSF	DRW	HCUSR487 13087024
BC LL	0.0 PSF	HC-ENG	DF/DF
TOT.LD.	37.0 PSF	SEQN-	70762
DUR FAC	1.25		
SPACING	24.0"	JREF-	1UUX487_Z01

(13-106--Don Reed Construction Decker House -- Lake City, FL - E3 20' Stepdown Hip Girder)

THIS DWG PREPARED FROM COMPUTER INPUT (LOADS & DIMENSIONS) SUBMITTED BY TRUSS MFR

Top chord 2x4 SP_#1_12A
Bot chord 2x4 SP_#1_12A
Webs 2x4 SP_#3__12A

Lumber grades designated with "12A" use design values approved 1/5/2012 by ALSC

145 mph wind, 22 51 ft mean hgt, ASCE 7-10, CLOSED bldg, not located within 9 00 ft from roof edge, RISK CAT II, EXP B, wind TC DL=3 5 psf, wind BC DL=5 0 psf GCpi(+/-)=0 18

Wind loads and reactions based on MWFRS

In lieu of structural panels use purlins to brace all flat TC @ 24 OC

Bottom chord checked for 10 00 psf non-concurrent live load

Deflection meets L/240 live and L/180 total load Creep increase factor for dead load is 1 50

Special loads
------(Lumber Dur Fac =1 25 / Plate Dur Fac =1 25)
TC- From 56 plf at -1 50 to 56 plf at 6 17
TC- From 56 plf at 6 17 to 56 plf at 9 13
TC- From 56 plf at 9 13 to 56 plf at 12 40
TC- From 28 plf at 12 40 to 28 plf at 16 79
TC- From 56 plf at 16 79 to 56 plf at 20 00
BC- From 4 plf at -1 50 to 4 plf at 0 00
BC- From 20 plf at 0 00 to 20 plf at 12 40
BC- From 10 plf at 12 40 to 10 plf at 16 76
BC- From 20 plf at 16 76 to 20 plf at 20 00
TC- 97 98 lb Conc Load at 12 40
TC- 62 19 lb Conc Load at 12 73,14 73
TC- 96 41 lb Conc Load at 16 76
BC- 259 76 lb Conc Load at 12 40
BC- 53 46 lb Conc Load at 12 73,14 73
BC- 128 41 lb Conc Load at 16 76

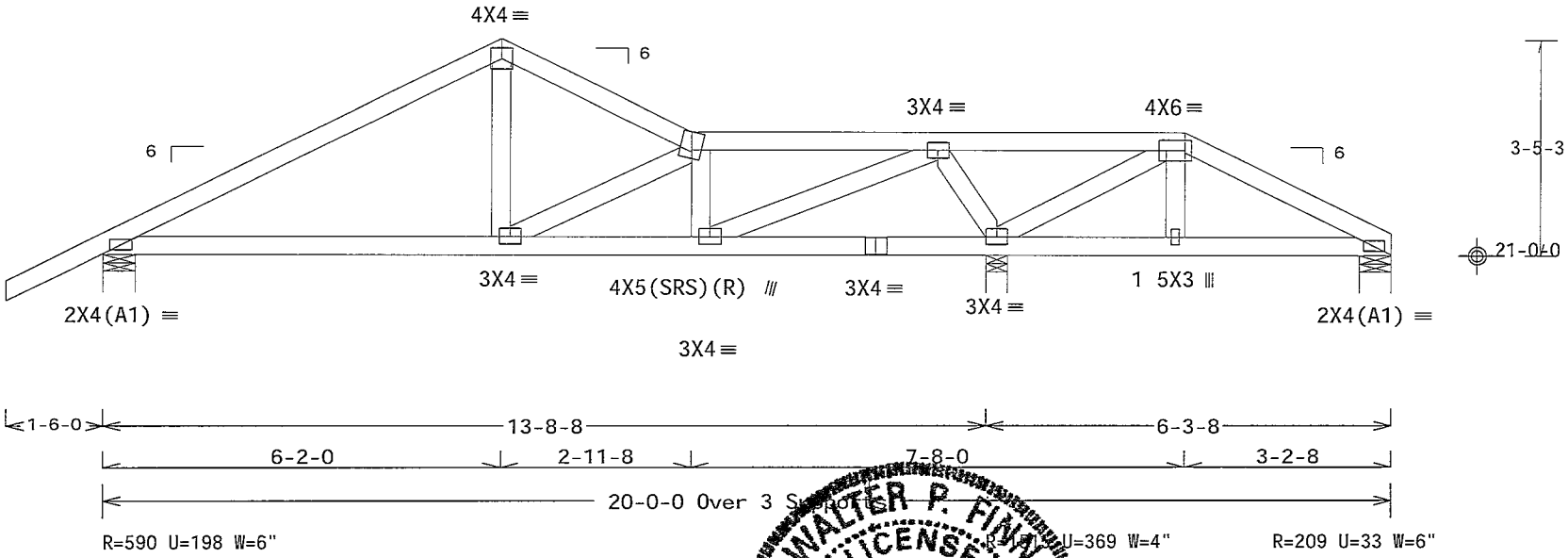

Design Crit FBC2010Res/TPI-2007(STD)
FT/RT=10%(0%)/0(0) 10.03.11.0209.20 QTY 1

PLT TYP. Wave

FL/-/5/-/-/R/- Scale =.375"/Ft.

ALPINE
ITW Building Components Group Inc.
Haines City, FL 33844
FL COA #0 278

WARNING READ AND FOLLOW ALL NOTES ON THIS SHEET!
IMPORTANT FURNISH THIS DESIGN TO ALL CONTRACTORS INCLUDING INSTALLERS

Trusses requ re extreme care n fabricating handling shipping nstall ng and bracing Refer to and follow the latest ed t on of BCSI (Building Component Safety Information by TPI and WTCA) for general pract ces pr or to perform ng these functions Installers shall prov de temporary bracing per the Unless noted otherwise top chord shall have properly attached structural sheath ng and bottom chord shall have a properly attached r g d ce ling Locations shown for permanent lateral restraint of webs shall have bracing installed per BCSI sect ons B3 B7 or B10 as applicable

ITW Bu ld ng Components Group Inc (ITWBCG) shall not be respons ble for any dev ation from this design any failure to bu ld the truss n conformance with ANSI/TPI 1 or for handling sh pping installation bracing of trusses Apply plates to each face of truss and position as shown above and on the Jo nt Details unless noted otherwise Refer to draw ngs 160A-Z for standard plate posit ons A seal on th s drawing or cover page I st ng th s drawing ndicates acceptance of profess onal eng neer ng responsibility solely for the des gn shown The su tabil ty and use of th s des gn for any structure s the respons b l ty of the Build ng Designer per ANSI/TPI 1 Sec 2 For more informat on see Th s job s general notes page ITW-BCG www twbcg com TPI www tp nst org WTCA www sbcindustry com ICC www ccsafe org

WALTER P. FINN LICENSE No.22839 STATE OF FLORIDA PROFESSIONAL ENGINEER
03/28/2013

TC LL	20.0 PSF	REF	R487-- 66613
TC DL	7 0 PSF	DATE	03/28/13
BC DL	10 0 PSF	DRW	HCUSR487 13087010
BC LL	0.0 PSF	HC-ENG	DF/DF
TOT LD.	37 0 PSF	SEQN-	70778
DUR FAC	1 25		
SPACING	24 0"	JREF-	1UUX487_Z01

(13-106--Don Reed Construction Decker House -- Lake City, FL - EJ2 3'2"8 End Jack)

Top chord 2x4 SP_#1_12A
Bot chord 2x4 SP_#1_12A

Lumber grades designated with 12A use design values approved 1/5/2012 by ALSC

Bottom chord checked for 10 00 psf non-concurrent live load

MWFRS loads based on trusses located at least 10 89 ft from roof edge

Provide (2) 16d common nails(0 162"x3 5'), toe nailed at Top chord
Provide (2) 16d common nails(0 162"x3 5"), toe nailed at Bot chord

120 mph wind, 21 77 ft mean hgt, ASCE 7-10, CLOSED bldg, Located anywhere in roof, RISK CAT II, EXP B, wind TC DL=3 5 psf, wind BC DL=5 0 psf GCpi(+/-)=0 18

Wind loads and reactions based on MWFRS with additional C&C member design

Deflection meets L/240 live and L/180 total load Creep increase factor for dead load is 1 50

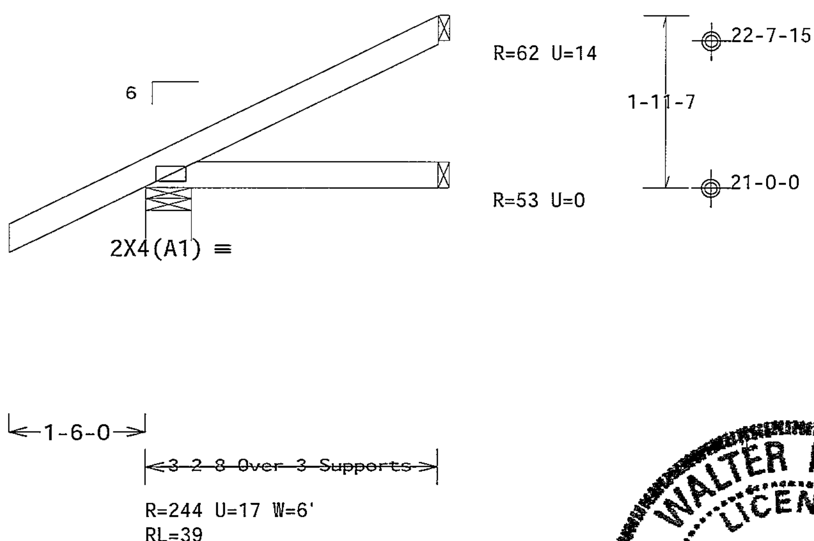

Design Crit. FBC2010Res/TPI-2007(STD)
FT/RT=10%(0%)/0(0) 10 03.11.0209 19 QTY FL/-/5/-/-/R/- Scale =.5"/Ft.

PLT TYP Wave

ALPINE
ITW Building Components Group Inc.
Haines City FL 33844
FL COA #0 278

WARNING READ AND FOLLOW ALL NOTES ON THIS SHEET!
IMPORTANT FURNISH THIS DESIGN TO ALL CONTRACTORS INCLUDING INSTALLERS

Trusses require extreme care in fabricating handling shipping installing and bracing Refer to and follow the latest edition of BCSI (Building Component Safety Information by TPI and WTCA) for safety practices prior to performing these functions Installers shall provide temporary bracing per BCSI Unless noted otherwise top chord shall have properly attached structural sheathing and bottom chord shall have a properly attached rigid ceiling Locations shown for permanent lateral restraint of webs shall have bracing installed per BCSI sections B3 B7 or B10 as applicable

ITW Building Components Group Inc (ITWBCG) shall not be responsible for any deviation from this design any failure to build the truss in conformance with ANSI/TPI 1 or for handling shipping installation & bracing of trusses Apply plates to each face of truss and position as shown above and on the Joint Details unless noted otherwise Refer to drawings 160A-Z for standard plate positions A seal on this drawing or cover page listing this drawing indicates acceptance of professional engineering responsibility solely for the design shown The suitability and use of this design for any structure is the responsibility of the Building Designer per ANSI/TPI 1 Sec 2 For more information see This job's general notes page ITW-BCG www itwbcg com TPI www tpinst org WTCA www sbcindustry com ICC www iccsafe org

WALTER P. FINN LICENSE No. 22839 STATE OF FLORIDA PROFESSIONAL ENGINEER
03/28/2013

TC LL	20 0 PSF	REF R487-- 66614
TC DL	7 0 PSF	DATE 03/28/13
BC DL	10 0 PSF	DRW HCUSR487 13087004
BC LL	0.0 PSF	HC-ENG DF/DF
TOT.LD	37 0 PSF	SEQN- 60809
DUR.FAC	1.25	
SPACING	24 0"	JREF- 1UUX487_Z01

(13-106--Don Reed Construction Decker House -- Lake City, FL - EJ2A 3'2"8 End Jack Girder)

THIS DWG PREPARED FROM COMPUTER INPUT (LOADS & DIMENSIONS) SUBMITTED BY TRUSS MFR

Top chord 2x4 SP_#1_12A
Bot chord 2x4 SP_#1_12A

Lumber grades designated with 12A use design values approved 1/5/2012 by ALSC

145 mph wind, 21 77 ft mean hgt, ASCE 7-10, CLOSED bldg, Located anywhere in roof, RISK CAT II, EXP B, wind TC DL=3 5 psf, wind BC DL=5 0 psf GCpi(+/-)=0 18

Deflection meets L/240 live and L/180 total load Creep increase factor for dead load is 1 50

Special loads
------(Lumber Dur Fac =1 25 / Plate Dur Fac =1 25)
TC- From 56 plf at -1 50 to 56 plf at 3 21
BC- From 4 plf at -1 50 to 4 plf at 0 00
BC- From 20 plf at 0 00 to 20 plf at 3 21
BC- 459 02 lb Conc Load at 1 94

Wind loads and reactions based on MWFRS

Bottom chord checked for 10 00 psf non-concurrent live load

Provide (2) 16d common nails(0 162'x3 5), toe nailed at Top chord
Provide (2) 16d common nails(0 162'x3 5') toe nailed at Bot chord

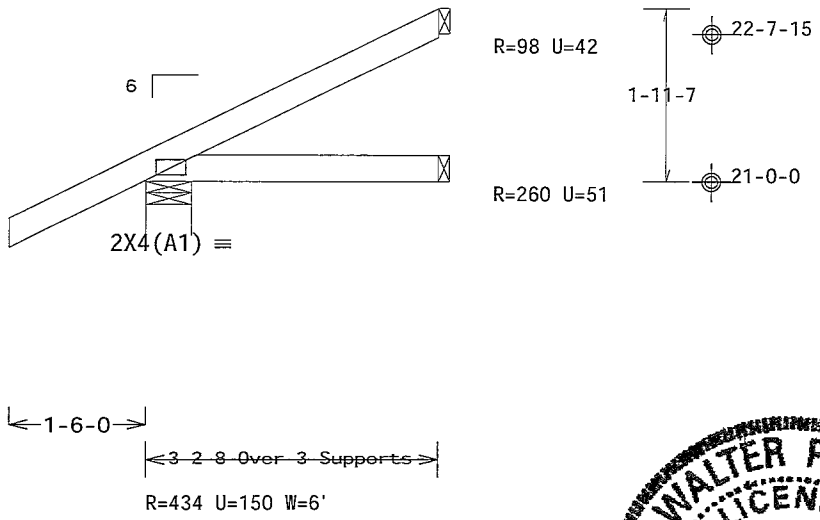

Design Crit· FBC2010Res/TPI-2007(STD)
FT/RT=10%(0%)/0(0)

PLT TYP Wave

10.03.11.0209.20 QTY 1

FL/-/5/-/-/R/- Scale = 5"/Ft.

ALPINE
ITW Building Components Group Inc.
Haines City FL 33844
FL COA #0 278

WARNING READ AND FOLLOW ALL NOTES ON THIS SHEET!
IMPORTANT FURNISH THIS DESIGN TO ALL CONTRACTORS INCLUDING INSTALLERS

Trusses requ re extreme care n fabricating handling shipping installing and brac ng Refer to and follow the latest edit on of BCSI (Bu ld ng Component Safety Informat on by TPI and WTCA) for general pract ces prior to perform ng these functions Installers shall prov de temporary brac ng per Unless noted otherwise top chord shall have properly attached structural sheath ng and bottom shall have a properly attached r g d ce l ng Locat ons shown for permanent lateral restraint of shall have brac ng nstalled per BCSI sect ons B3 B7 or B10 as appl cable

ITW Building Components Group Inc (ITWBCG) shall not be respons ble for any dev ation from this design any failure to bu ld the truss n conformance with ANSI/TPI 1 or for handling sh pping installation bracing of trusses Apply plates to each face of truss and posit on as shown above and on the Joint Details unless noted otherw se Refer to drawings 160A-Z for standard plate pos t ons A seal on this drawing or cover page l st ng th s drawing ndicates acceptance of professional eng neer ng responsibil ty solely for the des gn shown The suitabil ty and use of th s design for any structure s the respons b l ty of the Build ng Designer per ANSI/TPI 1 Sec 2 For more nformat on see Th s job s general notes page ITW-BCG www twbcg com TPI www tpinst org WTCA www sbcindustry com ICC www ccsafe org

WALTER P. FINN LICENSE No.22839 STATE OF FLORIDA PROFESSIONAL ENGINEER
03/28/2013

TC LL	20 0 PSF	REF	R487-- 66615
TC DL	7.0 PSF	DATE	03/28/13
BC DL	10.0 PSF	DRW	HCUSR487 13087067
BC LL	0 0 PSF	HC-ENG	DF/DF
TOT.LD.	37 0 PSF	SEQN-	70773
DUR FAC.	1.25		
SPACING	24 0"	JREF-	1UUX487_Z01

(13-106--Don Reed Construction Decker House -- Lake City, FL - EJ7 7 End Jack)

THIS DWG PREPARED FROM COMPUTER INPUT (LOADS & DIMENSIONS) SUBMITTED BY TRUSS MFR

Top chord 2x4 SP_#1_12A
Bot chord 2x4 SP_#1_12A

Lumber grades designated with 12A use design values approved 1/5/2012 by ALSC

Bottom chord checked for 10 00 psf non-concurrent live load

Provide (2) 16d common nails(0 162 x3 5), toe nailed at Top chord
Provide (2) 16d common nails(0 162 x3 5), toe nailed at Bot chord

120 mph wind, 22 72 ft mean hgt, ASCE 7-10, CLOSED bldg, not located within 4 50 ft from roof edge, RISK CAT II, EXP B, wind TC DL=3 5 psf, wind BC DL=5 0 psf GCpi(+/-)=0 18

Wind loads and reactions based on MWFRS with additional C&C member design

Deflection meets L/240 live and L/180 total load Creep increase factor for dead load is 1 50

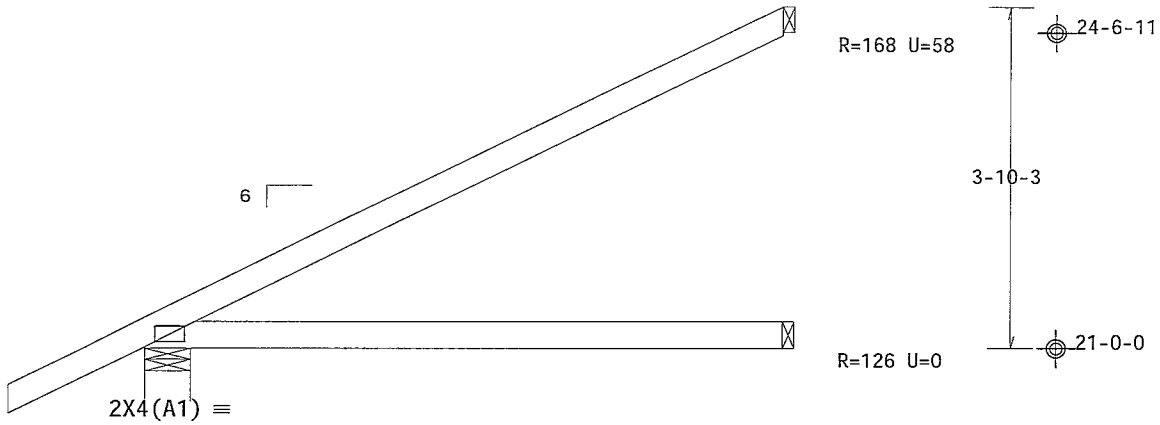

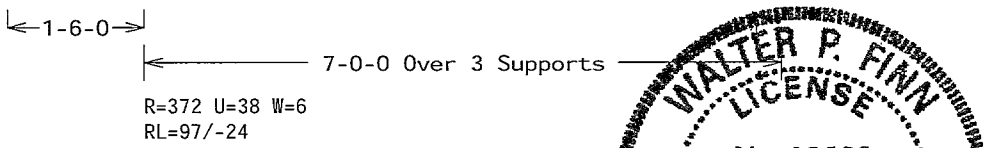

R=372 U=38 W=6
RL=97/-24

Design Crit FBC2010Res/TPI-2007(STD) 10 03 11 0289 79 QTY 23 FL/-/5/-/-/R/-

FT/RT=10%(0%)/0(0)

PLT TYP. Wave

Scale = 5"/Ft

WALTER P. FINN LICENSE No.22839 STATE OF FLORIDA PROFESSIONAL ENGINEER

03/28/2013

ALPINE
ITW Building Components Group Inc.
Haines City, FL 33844
FL COA #0 278

WARNING READ AND FOLLOW ALL NOTES ON THIS SHEET!
IMPORTANT FURNISH THIS DESIGN TO ALL CONTRACTORS INCLUDING INSTALLERS

Trusses requ re extreme care in fabr cat ng hand ng sh pp ng nstall ng and brac ng Ref to ng follow the latest ed t on of BCSI (Bu ld ng Component Safety Informat on by TPI and WTCA) for s practices pr or to perform ng those funct ons Installers shall prov de temporary brac ng per BC Unless noted otherw se top chord shall have properly attached structural sheath ng and bottom cho shall have a properly attached r gid ce l ng Locat ons shown for permanent lateral restra nt of w shall have brac ng installed per BCSI sect ons B3 B7 or B10 as appl cable

ITW Bu ld ng Components Group Inc (ITWBCG) shall not be respons ble for any dev at on from th s des gn any fa lure to build the truss in conformance w th ANSI/TPI 1 or for handl ng sh pp ng nstallat on & brac ng of trusses Apply plates to each face of truss and pos t on as shown above and on the Joint Data ls unless noted otherwise Refer to draw ngs 160A-Z for standard plate pos t ons A seal on th s draw ng or cover page l sting this draw ng nd cates acceptance of profess onal eng neer ng respons b l ty solely for the design shown The su tab l ty and use of th s des gn for any structure s the respons b lity of the Bu lding Des gner per ANSI/TPI 1 Sec 2 For more nformat on see Th s job s general notes page ITW BCG www itwbcg com TPI www tp nst org WTCA www sbc ndustry com ICC www ccsafe org

TC LL	20 0 PSF	REF	R487-- 66616
TC DL	7.0 PSF	DATE	03/28/13
BC DL	10.0 PSF	DRW	HCUSR487 13087027
BC LL	0.0 PSF	HC-ENG	DF/DF
TOT LD.	37.0 PSF	SEQN-	60815
DUR.FAC	1 25		
SPACING	24 0"	JREF-	1UUX487_Z01

(13-106--Don Reed Construction Decker House -- Lake City, FL - EJ7G 7 End Jack Girder)

Top chord 2x4 SP_#1_12A
Bot chord 2x4 SP_#1_12A
Webs 2x4 SP_#3__12A

Lumber grades designated with '12A" use design values approved 1/5/2012 by ALSC

145 mph wind, 22 72 ft mean hgt, ASCE 7-10 CLOSED bldg, Located anywhere in roof RISK CAT II EXP B, wind TC DL=3 5 psf wind BC DL=5 0 psf GCpi(+/-)=0 18

Bottom chord checked for 10 00 psf non-concurrent live load

Provide (3)16d (0 162'x3 5) nails toe-nailed at top chord
Provide (3)16d (0 162"x3 5') nails toe-nailed at bottom chord

Special loads
------(Lumber Dur Fac =1 25 / Plate Dur Fac =1 25)
TC- From 56 plf at -1 50 to 56 plf at 1 94
TC- From 28 plf at 1 94 to 28 plf at 7 00
BC- From 4 plf at -1 50 to 4 plf at 0 00
BC- From 10 plf at 0 00 to 10 plf at 7 00
BC- 70 81 lb Conc Load at 1 94
BC- 183 81 lb Conc Load at 3 94
BC- 199 46 lb Conc Load at 5 94

Wind loads and reactions based on MWFRS

Deflection meets L/240 live and L/180 total load Creep increase factor for dead load is 1 50

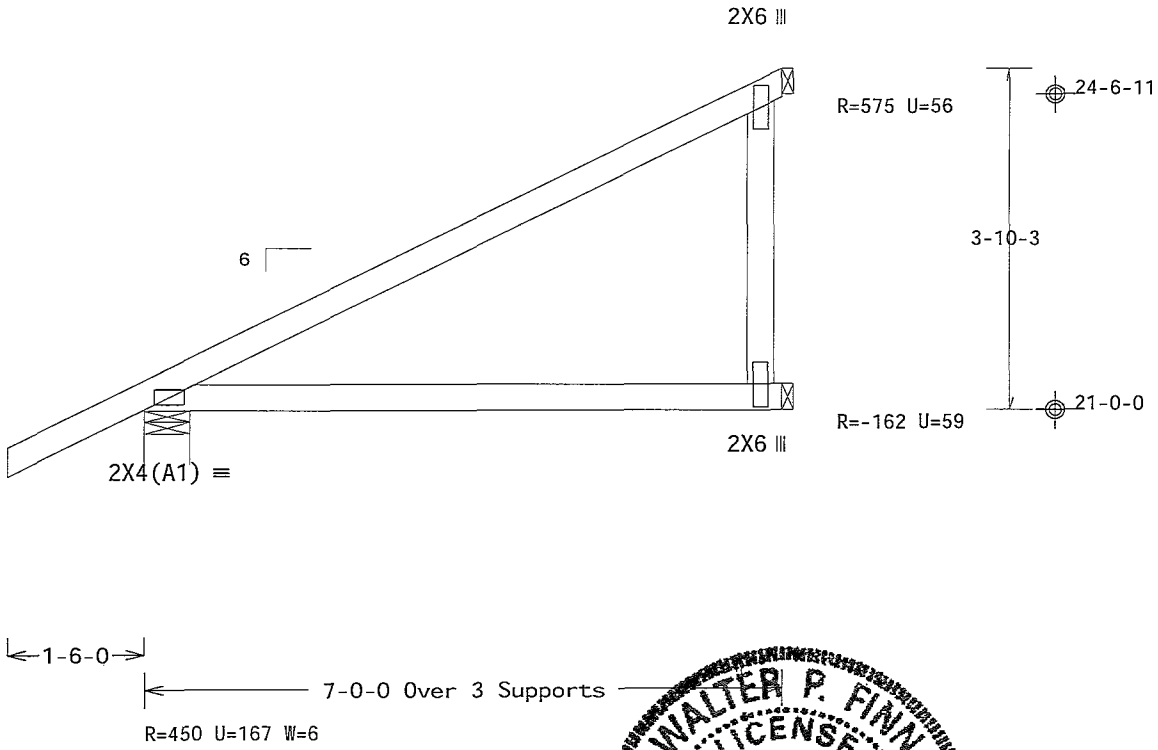

Design Crit FBC2010Res/TPI-2007(STD)
FT/RT=10%(0%)/0(0) 10 03 11 0209 20 QTY 1 FL/-/5/-/-/R/- Scale =.5"/Ft.

PLT TYP Wave

ALPINE
ITW Building Components Group Inc.
Haines City FL 33844
FL COA #0 278

WARNING READ AND FOLLOW ALL NOTES ON THIS SHEET!
IMPORTANT FURNISH THIS DESIGN TO ALL CONTRACTORS INCLUDING INSTALLERS

Trusses require extreme care in fabr cat ng handl ng sh pp ng nstall ng and brac ng [illegible] and follow the latest edition of BCSI (Bu ld ng Component Safety Informat on by TPI and WTCA) for safety practices pr or to performing these funct ons Installers shall prov de temporary brac ng per BCSI. Unless noted otherw se top chord shall have properly attached structural sheath ng and bottom chord shall have a properly attached r g d ceiling Locat ons shown for permanent lateral restraint of webs shall have bracing nstalled per BCSI sect ons B3 B7 or B10 as applicable

ITW Bu ld ng Components Group Inc (ITWBCG) shall not be respons ble for any dev at on from this design any failure to bu ld the truss in conformance w th ANSI/TPI 1 or for handl ng sh pping nstallation brac ng of trusses Apply plates to each face of truss and pos t on as shown above and on the Joint Deta ls unless noted otherwise Refer to drawings 160A-Z for standard plate pos t ons A seal on this draw ng or cover page l sting th s drawing indicates acceptance of professional engineering responsib l ty solely for the des gn shown The su tab lity and use of this design for any structure is the respons b l ty of the Building Designer per ANSI/TPI 1 Sec 2 For more informat on see Th s job s general notes page ITW-BCG www itwbcg com TPI www tpinst org WTCA www sbcindustry com ICC www ccsafe org

WALTER P. FINN
LICENSE
No. 22839
STATE OF FLORIDA
PROFESSIONAL ENGINEER
03/28/2013

TC LL	20 0 PSF	REF	R487-- 66617
TC DL	7.0 PSF	DATE	03/28/13
BC DL	10 0 PSF	DRW	HCUSR487 13087011
BC LL	0 0 PSF	HC-ENG	DF/DF
TOT LD	37.0 PSF	SEQN-	70785
DUR FAC	1 25		
SPACING	24 0"	JREF-	1UUX487_Z01

(13-106--Don Reed Construction Decker House -- Lake City FL - EJ8 8 8 End Jack)

Top chord 2x4 SP_#1_12A
Bot chord 2x4 SP_#1_12A
Webs 2x4 SP_#3__12A

Lumber grades designated with '12A' use design values approved 1/5/2012 by ALSC

Bottom chord checked for 10 00 psf non-concurrent live load

MWFRS loads based on trusses located at least 7 50 ft from roof edge

120 mph wind, 15 00 ft mean hgt, ASCE 7-10, CLOSED bldg, Located anywhere in roof, RISK CAT II, EXP B, wind TC DL=3 5 psf, wind BC DL=5 0 psf GCpi(+/-)=0 18

Wind loads and reactions based on MWFRS with additional C&C member design

Deflection meets L/240 live and L/180 total load Creep increase factor for dead load is 1 50

Provide (2) 16d common nails(0 162"x3 5'), toe nailed at Top chord
Provide (2) 16d common nails(0 162"x3 5"), toe nailed at Bot chord

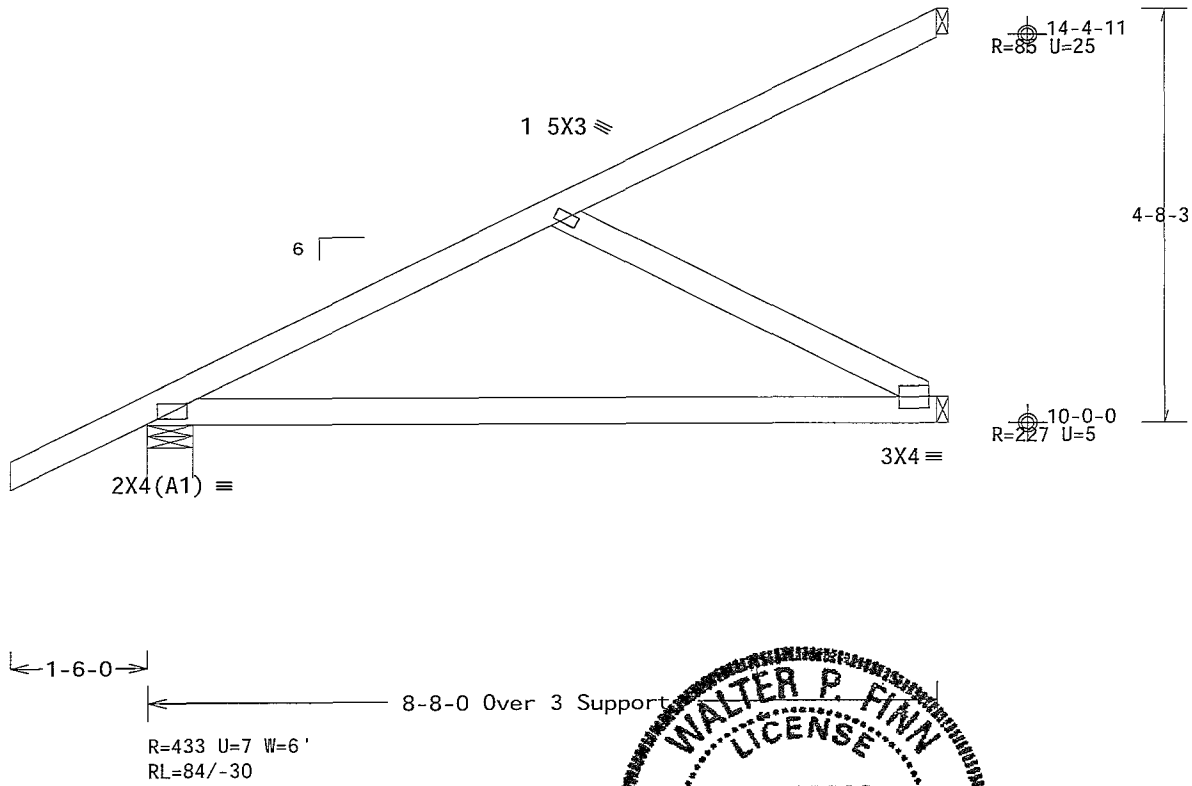

Design Crit FBC2010Res/TPI-2007(STD)
FT/RT=10%(0%)/0(0)

PLT TYP. Wave

FL/-/5/-/-/R/- Scale =.5"/Ft

TC LL	20 0 PSF	REF	R487-- 66618
TC DL	7.0 PSF	DATE	03/28/13
BC DL	10 0 PSF	DRW	HCUSR487 13087037
BC LL	0.0 PSF	HC-ENG	DF/DF
TOT.LD.	37.0 PSF	SEQN-	60822
DUR.FAC.	1.25		
SPACING	24.0"	JREF-	1UUX487_Z01

ALPINE
ITW Building Components Group Inc.
Haines City, FL 33844
FL COA #0 278

WARNING READ AND FOLLOW ALL NOTES ON THIS SHEET!
IMPORTANT FURNISH THIS DESIGN TO ALL CONTRACTORS INCLUDING INSTALLERS

Trusses require extreme care n fabr cating handling shipp ng installing and brac ng Ref to and follow the latest edit on of BCSI (Bu ld ng Component Safety Informat on by TPI and WTCA) for g d pract ces prior to perform ng these functions Installers shall prov de temporary bracing per BC Unless noted otherwise top chord shall have properly attached structural sheathing and bottom chd shall have a properly attached rigid ce l ng Locat ons shown for permanent lateral restra nt of w shall have brac ng nstalled per BCSI sect ons B3 B7 or B10 as appl cable

ITW Bu lding Components Group Inc (ITWBCG) shall not be responsible for any deviation from th s desig any fa lure to build the truss in conformance w th ANSI/TPI 1 or for handl ng shipp ng nstallat on & brac ng of trusses Apply plates to each face of truss and pos t on as shown above and on the Jo nt Details unless noted otherw se Refer to draw ngs 160A-Z for standard plate pos t ons A seal on th s draw ng or cover page list ng this drawing nd cates acceptance of profess onal eng neer ng respons bility solely for the des gn shown The su tabil ty and use of th s design for any structure s the responsibil ty of the Bu ld ng Des gner per ANSI/TPI 1 Sec 2 For more informat on see Th s job s general notes page ITW-BCG www twbcg com TPI www tp nst org WTCA www sbc ndustry com ICC www iccsafe org

WALTER P. FINN
LICENSE
No.22839
STATE OF FLORIDA
PROFESSIONAL ENGINEER
03/28/2013

THIS DWG PREPARED FROM COMPUTER INPUT (LOADS & DIMENSIONS) SUBMITTED BY TRUSS MFR

(13-106--Don Reed Construction Decker House -- Lake City, FL - EJ8A 8'8" End Jack)

Top chord 2x4 SP_#1_12A
Bot chord 2x4 SP_#1_12A
Webs 2x4 SP_#3__12A

Lumber grades designated with '12A' use design values approved 1/5/2012 by ALSC

Bottom chord checked for 10 00 psf non-concurrent live load

MWFRS loads based on trusses located at least 7 50 ft from roof edge

120 mph wind, 15 00 ft mean hgt, ASCE 7-10, CLOSED bldg, Located anywhere in roof, RISK CAT II, EXP B, wind TC DL=3 5 psf, wind BC DL=5 0 psf GCpi(+/-)=0 18

Wind loads and reactions based on MWFRS with additional C&C member design

Deflection meets L/240 live and L/180 total load Creep increase factor for dead load is 1 50

Provide (2) 16d common nails(0 162"x3 5'), toe nailed at Top chord
Provide (2) 16d common nails(0 162"x3 5"), toe nailed at Bot chord

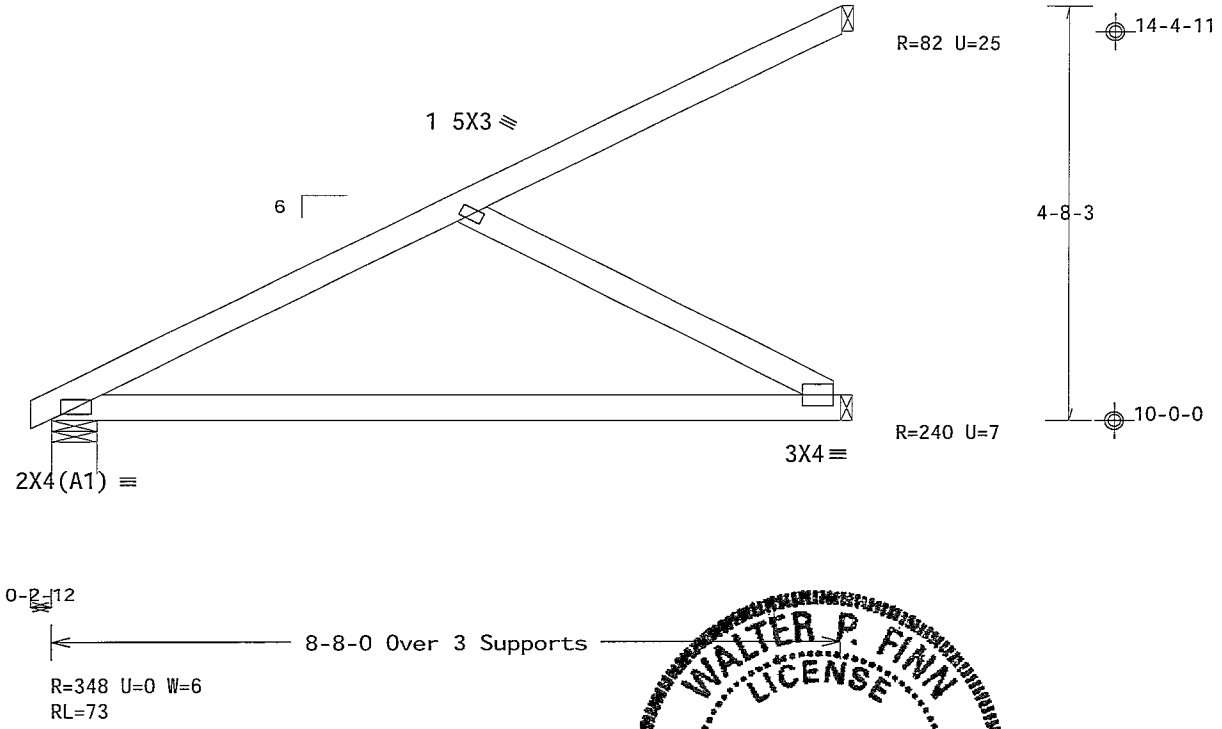

Design Crit: FBC2010Res/TPI-2007(STD)
FT/RT=10%(0%)/0(0)

PLT TYP Wave

FL/-/5/-/-/R/-

Scale =.5"/Ft.

WALTER P. FINN LICENSE No.22839 STATE OF FLORIDA PROFESSIONAL ENGINEER

03/28/2013

ALPINE
ITW Building Components Group Inc.
Haines City, FL 33844
FL COA #0 278

WARNING READ AND FOLLOW ALL NOTES ON THIS SHEET!
IMPORTANT FURNISH THIS DESIGN TO ALL CONTRACTORS INCLUDING INSTALLERS

Trusses requ re extreme care n fabricat ng handl ng shipp ng nstalling and bracing Re follow the latest ed t on of BCSI (Build ng Component Safety Information by TPI and WTCA) for practices pr or to performing these funct ons Installers shall provide temporary bracing per Unless noted otherw se top chord shall have properly attached structural sheath ng and bottom ch shall have a properly attached r gid ceil ng Locat ons shown for permanent lateral restraint of shall have brac ng installed per BCSI sections B3 B7 or B10 as applicable

ITW Bu ld ng Components Group Inc (ITWBCG) shall not be responsible for any deviat on from th s des any fa lure to build the truss in conformance w th ANSI/TPI 1 or for handl ng sh pp ng nstallat on & brac ng of trusses Apply plates to each face of truss and pos t on as shown above and on the Jo nt Deta ls unless noted otherwise Refer to draw ngs 160A-Z for standard plate pos t ons A seal on th s draw ng or cover page listing this draw ng nd cates acceptance of profess onal engineer ng respons b l ty solely for the design shown The su tab l ty and use of this des gn for any structure is the responsibility of the Bu lding Des gner per ANSI/TPI 1 Sec 2 For more information see This job s general notes page ITW BCG www twbcg com TPI www tp nst org WTCA www sbc ndustry com ICC www ccsafe org

TC LL	20.0 PSF	REF	R487-- 66619
TC DL	7.0 PSF	DATE	03/28/13
BC DL	10 0 PSF	DRW	HCUSR487 13087057
BC LL	0.0 PSF	HC-ENG	DF/DF
TOT.LD.	37 0 PSF	SEQN-	60832
DUR.FAC	1 25		
SPACING	24.0"	JREF-	1UUX487_Z01

THIS DWG PREPARED FROM COMPUTER INPUT (LOADS & DIMENSIONS) SUBMITTED BY TRUSS MFR

(13-106--Don Reed Construction Decker House -- Lake City, FL - EJ8B 8'8' End Jack)

Top chord 2x4 SP_#1_12A
Bot chord 2x4 SP_#1_12A
Webs 2x4 SP_#3__12A

Lumber grades designated with 12A use design values approved 1/5/2012 by ALSC

H = recommended connection based on manufacturer tested capacities and calculations Conditions may exist that require different connections than indicated Refer to manufacturer publication for additional information

Bottom chord checked for 10 00 psf non-concurrent live load

MWFRS loads based on trusses located at least 15 00 ft from roof edge

Provide (2) 16d common nails(0 162'x3 5), toe nailed at Top chord
Provide (2) 16d common nails(0 162'x3 5') toe nailed at Bot chord

120 mph wind, 15 00 ft mean hgt, ASCE 7-10, CLOSED bldg, Located anywhere in roof, RISK CAT II, EXP B, wind TC DL=3 5 psf, wind BC DL=5 0 psf GCpi(+/-)=0 18

Wind loads and reactions based on MWFRS with additional C&C member design

Hanger specified assumes connection to supporting chord is located a minimum of five times the depth of the supporting chord from any unsupported end, unless unsupported chord end has 85% plating coverage

Deflection meets L/240 live and L/180 total load Creep increase factor for dead load is 1 50

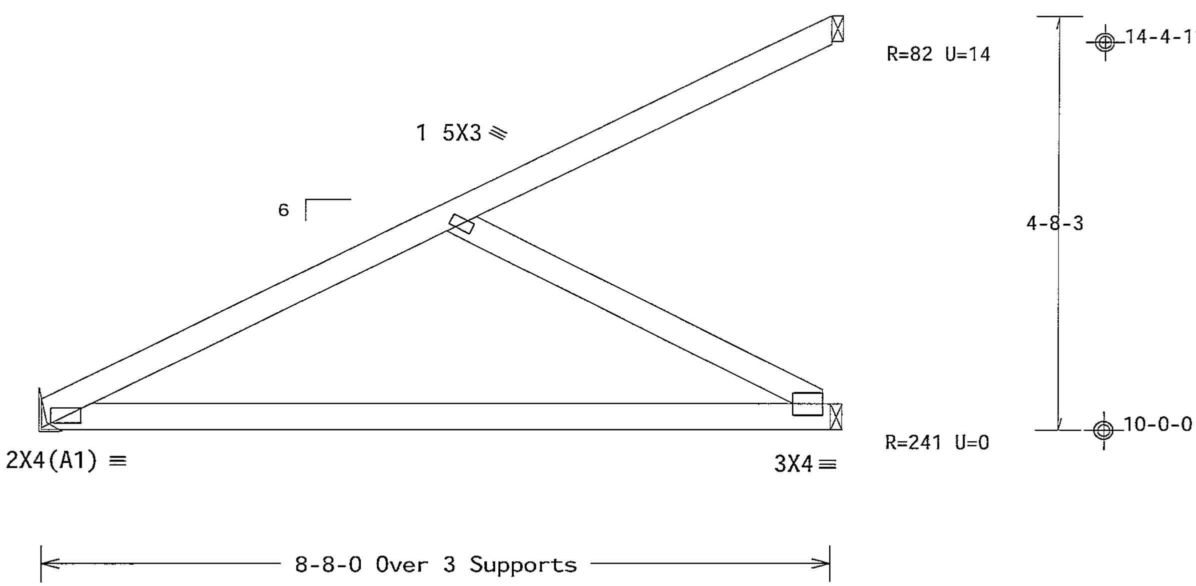

R=333 U=0
RL=47 H=Simpson LUS24
Supported Member Face (2) 0 148'x3' nails
Supporting Member Face (4) 0 148"x3 nails
Supporting Member (1) 2x4 SP_#1_12A

PLT TYP Wave

Design Crit: FBC2010Res/TPI-2007(STD)
FT/RT=10%(0%)/0(0)

03 11.0269.19 QTY: FL/-/5/-/-/R/-

Scale = 5"/Ft.

WALTER P. FINN LICENSE No.22839 STATE OF FLORIDA PROFESSIONAL ENGINEER

03/28/2013

TC LL	20 0 PSF
TC DL	7.0 PSF
BC DL	10 0 PSF
BC LL	0.0 PSF
TOT.LD	37.0 PSF
DUR FAC	1 25
SPACING	24 0"

REF	R487-- 66620
DATE	03/28/13
DRW	HCUSR487 13087039
HC-ENG	DF/DF
SEQN-	60821
JREF-	1UUX487_Z01

ALPINE
ITW Building Components Group Inc.
Haines City FL 33844
FL COA #0 278

WARNING READ AND FOLLOW ALL NOTES ON THIS SHEET!
IMPORTANT FURNISH THIS DESIGN TO ALL CONTRACTORS INCLUDING INSTALLERS

Trusses requ re extreme care n fabr cat ng handl ng sh pp ng nstall ng and bracing Refer to and follow the latest ed tion of BCSI (Build ng Component Safety Information by TPI and WTCA) for safety practices pr or to performing these funct ons Installers shall prov de temporary bracing per BCSI Unless noted otherw se top chord shall have properly attached structural sheath ng and bottom chord shall have a properly attached r g d ce l ng Locat ons shown for permanent lateral restra nt of webs shall have brac ng nstalled per BCSI sections B3 B7 or B10 as applicable

ITW Bu ld ng Components Group Inc (ITWBCG) shall not be respons ble for any dev at on from th s design any fa lure to build the truss n conformance w th ANSI/TPI 1 or for handl ng sh pping nstallat on & brac ng of trusses Apply plates to each face of truss and pos t on as shown above and on the Joint Deta ls unless noted otherwise Refer to drawings 160A-Z for standard plate pos t ons A seal on th s draw ng or cover page listing this draw ng indicates acceptance of professional eng neering respons b l ty solely for the design shown The su tab l ty and use of this des gn for any structure is the respons b lity of the Bu ld ng Des gner per ANSI/TPI 1 Sec 2 For more informat on see Th s job s general notes page ITW BCG www itwbcg com TPI www tpinst org WTCA www sbc ndustry com ICC www ccsafe org

THIS DWG PREPARED FROM COMPUTER INPUT (LOADS & DIMENSIONS) SUBMITTED BY TRUSS MFR

(13-106--Don Reed Construction Decker House -- Lake City, FL - EJ9 9 Jack)

Top chord 2x4 SP_#1_12A
Bot chord 2x4 SP_#1_12A
Webs 2x4 SP_#3__12A
Lt Stub Wedge 2x4 SP_#3__12A

Lumber grades designated with "12A use design values approved 1/5/2012 by ALSC

Deflection meets L/240 live and L/180 total load Creep increase factor for dead load is 1 50

120 mph wind, 15 00 ft mean hgt, ASCE 7-10, CLOSED bldg, not located within 4 50 ft from roof edge, RISK CAT II, EXP B, wind TC DL=3 5 psf, wind BC DL=5 0 psf GCpi(+/-)=0 18

Wind loads and reactions based on MWFRS with additional C&C member design

Bottom chord checked for 10 00 psf non-concurrent live load

MWFRS loads based on trusses located at least 7 50 ft from roof edge

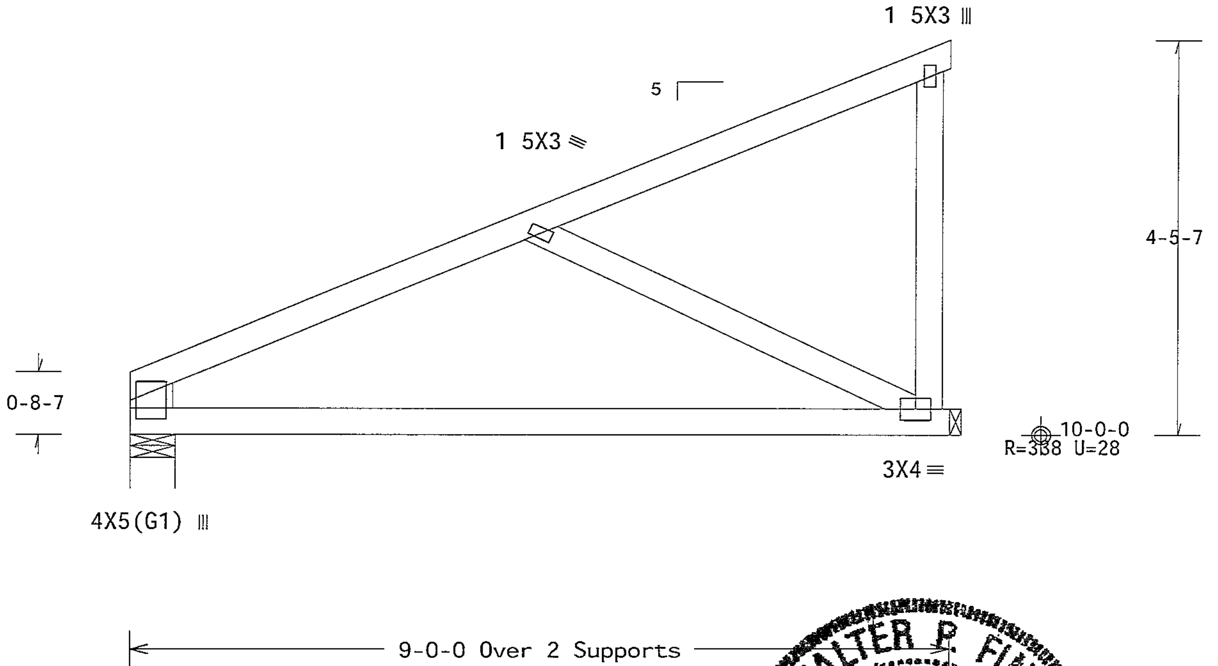

Design Crit FBC2010Res/TPI-2007(STD)
FT/RT=10%(0%)/0(0)

PLT TYP Wave

10.03.11.0209.19 QTY: FL/-/5/-/-/R/- Scale =.5"/Ft.

WALTER P. FINN LICENSE No.22839 STATE OF FLORIDA PROFESSIONAL ENGINEER

03/28/2013

ALPINE
ITW Building Components Group Inc.
Haines City, FL 33844
FL COA #0 278

WARNING READ AND FOLLOW ALL NOTES ON THIS SHEET!
IMPORTANT FURNISH THIS DESIGN TO ALL CONTRACTORS INCLUDING INSTALLERS

Trusses require extreme care in fabricating, handling, shipping, installing and bracing. Refer to and follow the latest edition of BCSI (Building Component Safety Information, by TPI and WTCA) for safety practices prior to performing these functions. Installers shall provide temporary bracing per BCSI. Unless noted otherwise, top chord shall have properly attached structural sheathing and bottom chord shall have a properly attached rigid ceiling. Locations shown for permanent lateral restraint of webs shall have bracing installed per BCSI sections B3, B7 or B10, as applicable.

ITW Building Components Group Inc. (ITWBCG) shall not be responsible for any deviation from this design, any failure to build the truss in conformance with ANSI/TPI 1, or for handling, shipping, installation & bracing of trusses. Apply plates to each face of truss and position as shown above and on the Joint Details, unless noted otherwise. Refer to drawings 160A-Z for standard plate positions. A seal on this drawing or cover page listing this drawing, indicates acceptance of professional engineering responsibility solely for the design shown. The suitability and use of this design for any structure is the responsibility of the Building Designer per ANSI/TPI 1 Sec 2. For more information see This job's general notes page ITW-BCG www twbcg com TPI www tpinst org WTCA www sbcindustry com ICC www iccsafe org

TC LL	20 0	PSF
TC DL	7 0	PSF
BC DL	10.0	PSF
BC LL	0.0	PSF
TOT.LD.	37.0	PSF
DUR.FAC	1 25	
SPACING	24 0"	

REF	R487-- 66621
DATE	03/28/13
DRW	HCUSR487 13087031
HC-ENG	DF/DF
SEQN-	60857
JREF-	1UUX487_Z01

(13-106--Don Reed Construction Decker House -- Lake City, FL - F 16'3" Common Girder)

Top chord 2x4 SP M-30 T2 2x4 SP_#1_12A
Bot chord 2x6 SP M-26
Webs 2x4 SP_#3__12A W2 2x4 SP_#1_12A

Lumber grades designated with 12A' use design values approved 1/5/2012 by ALSC

Special loads
------(Lumber Dur Fac =1 25 / Plate Dur Fac =1 25)
TC- From 56 plf at 0 00 to 56 plf at 8 13
TC- From 56 plf at 8 13 to 56 plf at 17 75
BC- From 10 plf at 0 00 to 10 plf at 8 13
BC- From 20 plf at 8 13 to 20 plf at 16 25
BC- From 4 plf at 16 25 to 4 plf at 17 75
BC- 706 36 lb Conc Load at 1 19
BC- 688 97 lb Conc Load at 3 19
BC- 687 03 lb Conc Load at 5 19
BC- 669 61 lb Conc Load at 7 19
BC- 1565 52 lb Conc Load at 9 19

MWFRS loads based on trusses located at least 11 50 ft from roof edge

2 COMPLETE TRUSSES REQUIRED

Nail Schedule 0 131 x3', min nails
Top Chord 1 Row @12 00 o c
Bot Chord 1 Row @ 5 75 o c
Webs 1 Row @ 4" o c
Use equal spacing between rows and stagger nails in each row to avoid splitting

120 mph wind, 23 00 ft mean hgt, ASCE 7-10, CLOSED bldg, not located within 9 00 ft from roof edge, RISK CAT II, EXP B, wind TC DL=3 5 psf, wind BC DL=5 0 psf GCpi(+/-)=0 18

Wind loads and reactions based on MWFRS

Bottom chord checked for 10 00 psf non-concurrent live load

Deflection meets L/240 live and L/180 total load Creep increase factor for dead load is 1 50

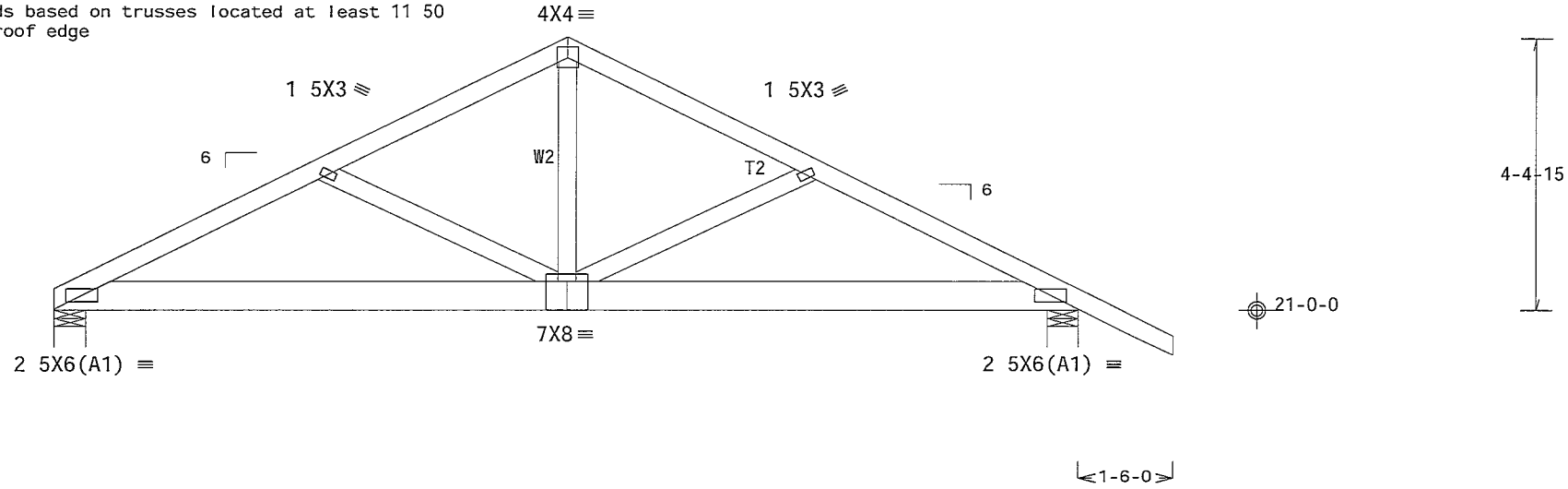

R=3289 U=349 W=6'
RL=75/-70

Design Crit. FBC2010Res/TPI-2007(STD)
PLT TYP. Wave FT/RT=10%(0%)/0(0) ★16 03 11 0209.20 QTY 1 FL/-/5/-/-/R/- Scale =.375"/Ft

WALTER P. FINN LICENSE No.22839 STATE OF FLORIDA PROFESSIONAL ENGINEER
03/28/2013

ALPINE
ITW Building Components Group Inc.
Haines City, FL 33844
FL COA #0 278

WARNING READ AND FOLLOW ALL NOTES ON THIS SHEET!
IMPORTANT FURNISH THIS DESIGN TO ALL CONTRACTORS INCLUDING INSTALLERS

Trusses requ re extreme care n fabr cat ng hand ng sh pp ng nstall ng and brac ng Re[illegible] follow the latest ed t on of BCSI (Build ng Component Safety Information by TPI and WTCA) fo[illegible] practices pr or to performing these funct ons Installers shall provide temporary brac ng per [illegible] Unless noted otherw se top chord shall have properly attached structural sheath ng and bottom c[illegible] shall have a properly attached r gid ceil ng Locations shown for permanent lateral restra nt of [illegible] shall have bracing installed per BCSI sections B3 B7 or B10 as applicable

ITW Build ng Components Group Inc (ITWBCG) shall not be respons ble for any deviat on from this des[illegible] any fa lure to build the truss in conformance w th ANSI/TPI 1 or for handl ng shipp ng nstallat on a[illegible] bracing of trusses Apply plates to each face of truss and pos t on as shown above and on the Joint Deta ls unless noted otherwise Refer to draw ngs 160A-Z for standard plate posit ons A seal on th s draw ng or cover page listing this draw ng nd cates acceptance of profess onal eng neer ng respons b l ty solely for the design shown The su tab l ty and use of th s des gn for any structure s the responsibility of the Bu ld ng Des gner per ANSI/TPI 1 Sec 2 For more informat on see Th s job s general notes page ITW BCG www twbcg com TPI www tp nst org WTCA www sbc ndustry com ICC www iccsafe org

TC LL	20 0 PSF	REF	R487-- 66622
TC DL	7 0 PSF	DATE	03/28/13
BC DL	10.0 PSF	DRW	HCUSR487 13087018
BC LL	0.0 PSF	HC-ENG	DF/DF
TOT LD.	37.0 PSF	SEQN-	70774
DUR.FAC.	1 25		
SPACING	24.0"	JREF-	1UUX487_Z01

(13-106--Don Reed Construction Decker House -- Lake City, FL - G 16' Common)

Top chord 2x4 SP_#1_12A
Bot chord 2x4 SP_#1_12A
Webs 2x4 SP_#3__12A W2, W4 2x4 SP_#1_12A

Lumber grades designated with "12A" use design values approved 1/5/2012 by ALSC

Calculated horizontal deflection is 0 16' due to live load and 0 21' due to dead load

Deflection meets L/240 live and L/180 total load Creep increase factor for dead load is 1 50

(++) - This plate works for both joints covered

145 mph wind, 15 00 ft mean hgt, ASCE 7-10, CLOSED bldg, not located within 4 50 ft from roof edge, RISK CAT II, EXP B, wind TC DL=3 5 psf, wind BC DL=5 0 psf GCpi(+/-)=0 18

Wind loads and reactions based on MWFRS with additional C&C member design

Bottom chord checked for 10 00 psf non-concurrent live load

MWFRS loads based on trusses located at least 7 50 ft from roof edge

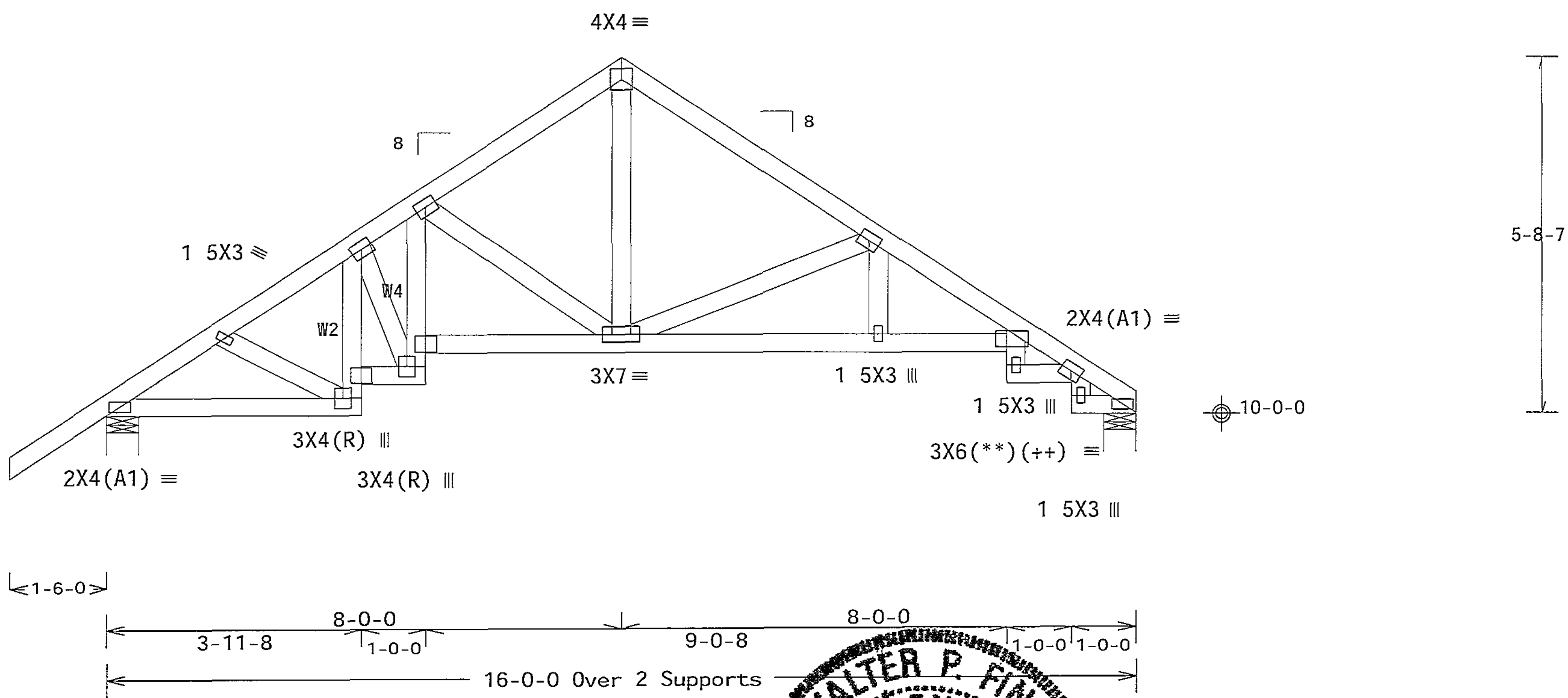

R=712 U=112 W=6
RL=140/-153

R=[illegible] U=84 W=6'

Note: All Plates Are 3X4 Except As Shown

Design Crit: FBC2010Res/TPI-2007(STD)
FT/RT=10%(0%)/0(0)

PLT TYP Wave

WARNING READ AND FOLLOW ALL NOTES ON THIS SHEET!
IMPORTANT FURNISH THIS DESIGN TO ALL CONTRACTORS INCLUDING INSTALLERS

Trusses require extreme care in fabricating, handling, shipping, installing and bracing. Refer to and follow the latest edition of BCSI (Building Component Safety Information by TPI and WTCA) for safety practices prior to performing these functions. Installers shall provide temporary bracing per BCSI. Unless noted otherwise top chord shall have properly attached structural sheathing and bottom chord shall have a properly attached rigid ceiling. Locations shown for permanent lateral restraint of webs shall have bracing installed per BCSI sections B3, B7 or B10 as applicable.

ITW Building Components Group Inc (ITWBCG) shall not be responsible for any deviation from this design, any failure to build the truss in conformance with ANSI/TPI 1, or for handling, shipping, installation & bracing of trusses. Apply plates to each face of truss and position as shown above and on the Joint Details, unless noted otherwise. Refer to drawings 160A-Z for standard plate positions. A seal on this drawing or cover page listing this drawing indicates acceptance of professional engineering responsibility solely for the design shown. The suitability and use of this design for any structure is the responsibility of the Building Designer per ANSI/TPI 1 Sec 2. For more information see this job's general notes page. ITW BCG www itwbcg com TPI www tpinst org WTCA www sbcindustry com ICC www iccsafe org

ALPINE
ITW Building Components Group Inc.
Haines City FL 33844
FL COA #0 278

WALTER P. FINN LICENSE No.22839 STATE OF FLORIDA PROFESSIONAL ENGINEER
03/28/2013

10.03.1[illegible] 0[illegible]09.20 QTY:

FL/-/5/-/-/R/-

TC LL	20 0 PSF
TC DL	7.0 PSF
BC DL	10.0 PSF
BC LL	0.0 PSF
TOT.LD.	37 0 PSF
DUR.FAC	1 25
SPACING	24 0"

Scale = 375"/Ft

REF	R487-- 66623
DATE	03/28/13
DRW	HCUSR487 13087003
HC-ENG	DF/DF
SEQN-	70745
JREF-	1UUX487_Z01

(13-106--Don Reed Construction Decker House -- Lake City, FL - G1 16' Common Girder)

THIS DWG PREPARED FROM COMPUTER INPUT (LOADS & DIMENSIONS) SUBMITTED BY TRUSS MFR

Top chord 2x4 SP_#1_12A
Bot chord 2x4 SP_#1_12A
Webs 2x4 SP_#3__12A

Lumber grades designated with '12A" use design values approved 1/5/2012 by ALSC

120 mph wind, 15 00 ft mean hgt, ASCE 7-10, CLOSED bldg, Located anywhere in roof, RISK CAT II, EXP B, wind TC DL=3 5 psf, wind BC DL=5 0 psf GCpi(+/-)=0 18

Bottom chord checked for 10 00 psf non-concurrent live load

Special loads
------(Lumber Dur Fac =1 25 / Plate Dur Fac =1 25)
TC- From 57 plf at 0 00 to 57 plf at 8 00
TC- From 57 plf at 8 00 to 57 plf at 16 00
BC- From 10 plf at 0 00 to 10 plf at 12 02
BC- From 20 plf at 12 02 to 20 plf at 16 00
BC- 332 62 lb Conc Load at 1 73, 3 73, 5 73, 7 73 9 73,11 73,12 02

Wind loads and reactions based on MWFRS

Deflection meets L/240 live and L/180 total load Creep increase factor for dead load is 1 50

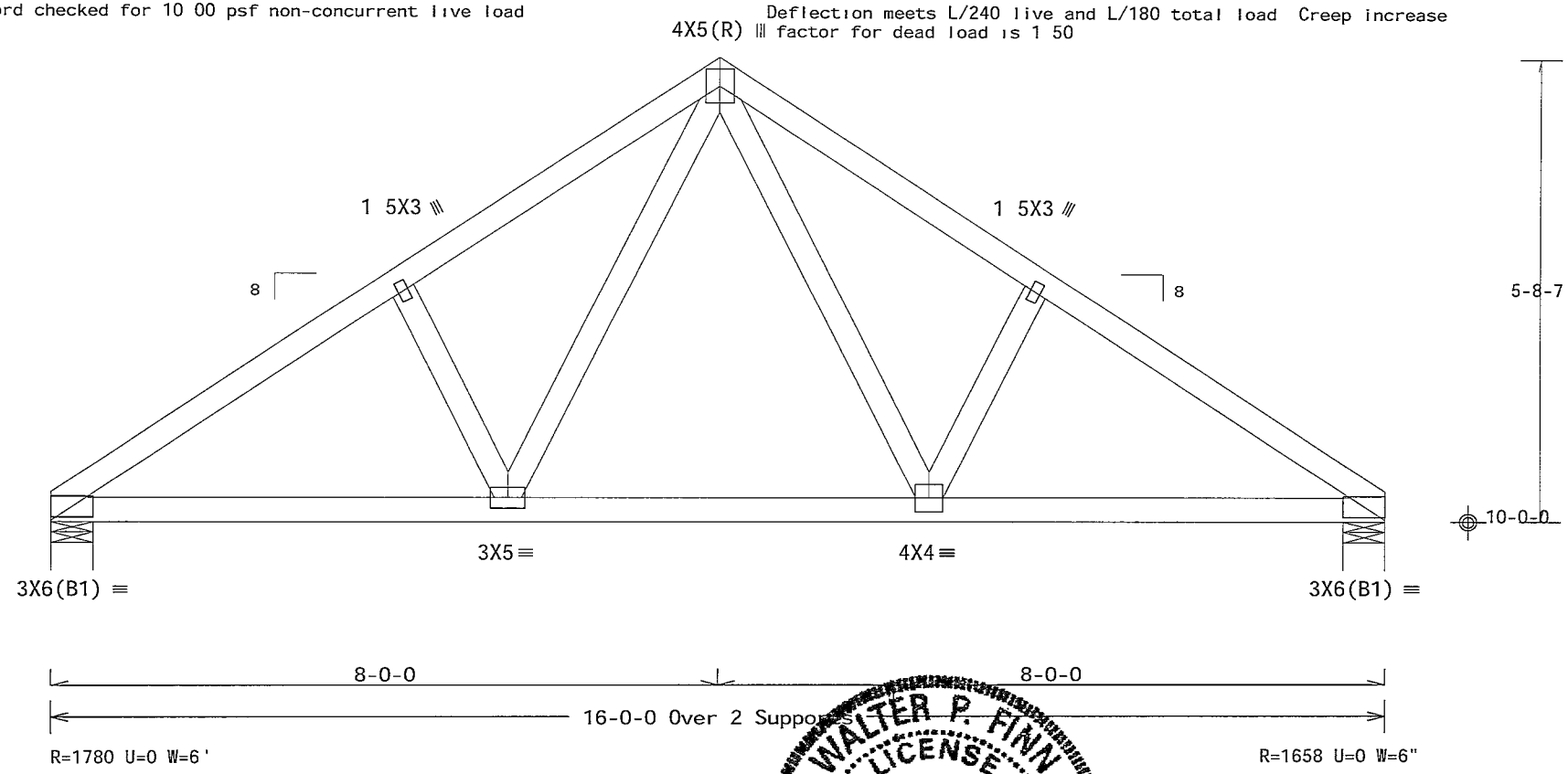

Design Crit FBC2010Res/TPI-2007(STD)
FT/RT=10%(0%)/0(0) ★16.03.11.0309.19 ★

PLT TYP. Wave

FL/-/5/-/-/R/- Scale =.5"/Ft.

WALTER P. FINN LICENSE No.22839 STATE OF FLORIDA PROFESSIONAL ENGINEER
03/28/2013

ALPINE
ITW Building Components Group Inc.
Haines City, FL 33844
FL COA #0 278

WARNING READ AND FOLLOW ALL NOTES ON THIS SHEET!
IMPORTANT FURNISH THIS DESIGN TO ALL CONTRACTORS INCLUDING INSTALLERS

Trusses requ re extreme care n fabricat ng handling shipping nstalling and bracing Re [illegible] and follow the latest ed t on of BCSI (Building Component Safety Information by TPI and WTCA) for [illegible] pract ces prior to performing these functions Installers shall provide temporary bracing per [illegible] Unless noted otherw se top chord shall have properly attached structural sheathing and bottom c[illegible] shall have a properly attached r g d ceiling Locations shown for permanent lateral restraint of [illegible] shall have bracing nstalled per BCSI sect ons B3 B7 or B10 as applicable

ITW Build ng Components Group Inc (ITWBCG) shall not be respons ble for any dev ation from this des[illegible] any failure to bu ld the truss n conformance with ANSI/TPI 1 or for handling sh pping installation & bracing of trusses Apply plates to each face of truss and pos t on as shown above and on the Joint Details unless noted otherw se Refer to drawings 160A-Z for standard plate pos t ons A seal on this drawing or cover page l st ng th s drawing ndicates acceptance of professional eng neering responsibility solely for the des gn shown The su tab l ty and use of this design for any structure s the respons bil ty of the Bu ld ng Designer per ANSI/TPI 1 Sec 2 For more nformat on see Th s job s general notes page ITW-BCG www twbcg com TPI www tp nst org WTCA www sbc ndustry com ICC www ccsafe org

TC LL	20.0 PSF	REF	R487-- 66624
TC DL	7 0 PSF	DATE	03/28/13
BC DL	10.0 PSF	DRW	HCUSR487 13087041
BC LL	0.0 PSF	HC-ENG	DF/DF
TOT LD	37 0 PSF	SEQN-	60874
DUR FAC	1 25		
SPACING	24 0"	JREF-	1UUX487_Z01

THIS DWG PREPARED FROM COMPUTER INPUT (LOADS & DIMENSIONS) SUBMITTED BY TRUSS MFR

(13-106--Don Reed Construction Decker House -- Lake City, FL - G2 16' Common)

Top chord 2x4 SP_#1_12A
Bot chord 2x4 SP_#1_12A
Webs 2x4 SP_#3__12A W2, W4 2x4 SP_#1_12A

Lumber grades designated with 12A use design values approved 1/5/2012 by ALSC

Calculated horizontal deflection is 0 17" due to live load and 0 22" due to dead load

Deflection meets L/240 live and L/180 total load Creep increase factor for dead load is 1 50

(++) - This plate works for both joints covered

145 mph wind, 15 00 ft mean hgt, ASCE 7-10, CLOSED bldg, Located anywhere in roof, RISK CAT II, EXP B, wind TC DL=3 5 psf, wind BC DL=5 0 psf GCpi(+/-)=0 18

Wind loads and reactions based on MWFRS with additional C&C member design

Bottom chord checked for 10 00 psf non-concurrent live load

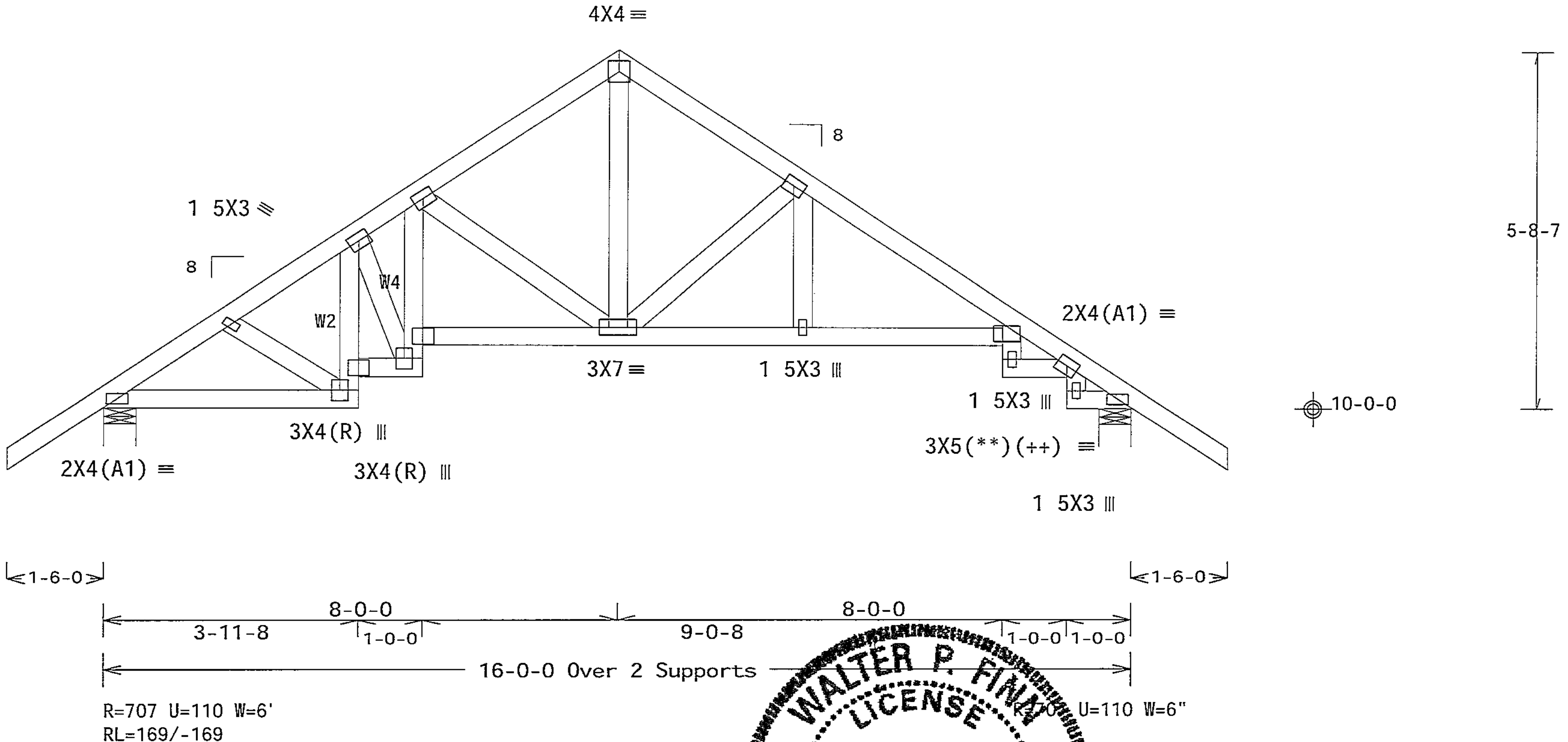

Note All Plates Are 3X4 Except As Shown

Design Crit FBC2010Res/TPI-2007(ST)

FT/RT=10%(0%)/0(0) 10 03.11 0209.20

PLT TYP Wave

FL/-/5/-/-/R/-

Scale =.375"/Ft.

ALPINE
ITW Building Components Group Inc.
Haines City, FL 33844
FL COA #0 278

WARNING READ AND FOLLOW ALL NOTES ON THIS SHEET!
IMPORTANT FURNISH THIS DESIGN TO ALL CONTRACTORS INCLUDING INSTALLERS

Trusses require extreme care in fabricating handling shipping installing and bracing Refer to and follow the latest edition of BCSI (Building Component Safety Information by TPI and WTCA) for safety practices prior to performing these functions Installers shall provide temporary bracing per BCSI Unless noted otherwise top chord shall have properly attached structural sheathing and bottom chord shall have a properly attached rigid ceiling Locations shown for permanent lateral restraint of webs shall have bracing installed per BCSI sections B3 B7 or B10 as applicable

ITW Building Components Group Inc (ITWBCG) shall not be responsible for any deviation from this design any failure to build the truss in conformance with ANSI/TPI 1 or for handling shipping installation & bracing of trusses Apply plates to each face of truss and position as shown above and on the Joint Details unless noted otherwise Refer to drawings 160A-Z for standard plate positions A seal on this drawing or cover page listing this drawing indicates acceptance of professional engineering responsibility solely for the design shown The suitability and use of this design for any structure is the responsibility of the Building Designer per ANSI/TPI 1 Sec 2 For more information see This job's general notes page ITW BCG www twbcg com TPI www tpinst org WTCA www sbcindustry com ICC www iccsafe org

WALTER P. FINN LICENSE No. 22839 STATE OF FLORIDA PROFESSIONAL ENGINEER

03/28/2013

TC LL	20 0 PSF	REF R487-- 66625
TC DL	7.0 PSF	DATE 03/28/13
BC DL	10 0 PSF	DRW HCUSR487 13087034
BC LL	0 0 PSF	HC-ENG DF/DF
TOT LD.	37 0 PSF	SEQN- 70755
DUR FAC	1 25	
SPACING	24 0"	JREF- 1UUX487_Z01

(13-106--Don Reed Construction Decker House -- Lake City, FL - GDG 16' Gable)

THIS DWG PREPARED FROM COMPUTER INPUT (LOADS & DIMENSIONS) SUBMITTED BY TRUSS MFR

Top chord 2x4 SP_#1_12A
Bot chord 2x4 SP_#1_12A
Webs 2x4 SP_#3__12A
Stack Chord SC1 2x4 SP_#1_12A Stack Chord SC2 2x4 SP_#1_12A

Lumber grades designated with "12A' use design values approved 1/5/2012 by ALSC

Stacked top chord must NOT be notched or cut in area (NNL) Dropped top chord braced at 24 o c intervals Attach stacked top chord (SC) to dropped top chord in notchable area using 3x4 tie-plates 24 o c Center plate on stacked/dropped chord interface, plate length perpendicular to chord length Splice top chord in notchable area using 3x6

Deflection meets L/240 live and L/180 total load Creep increase factor for dead load is 1 50

120 mph wind, 15 00 ft mean hgt, ASCE 7-10, CLOSED bldg, Located anywhere in roof, RISK CAT II, EXP B, wind TC DL=3 5 psf, wind BC DL=5 0 psf GCpi(+/-)=0 18

Wind loads and reactions based on MWFRS with additional C&C member design

See DWGS A12015ENC100212, GBLLETIN0212, & GABRST100212 for more requirements

In lieu of structural panels use purlins to brace TC @ 24" OC

Bottom chord checked for 10 00 psf non-concurrent live load

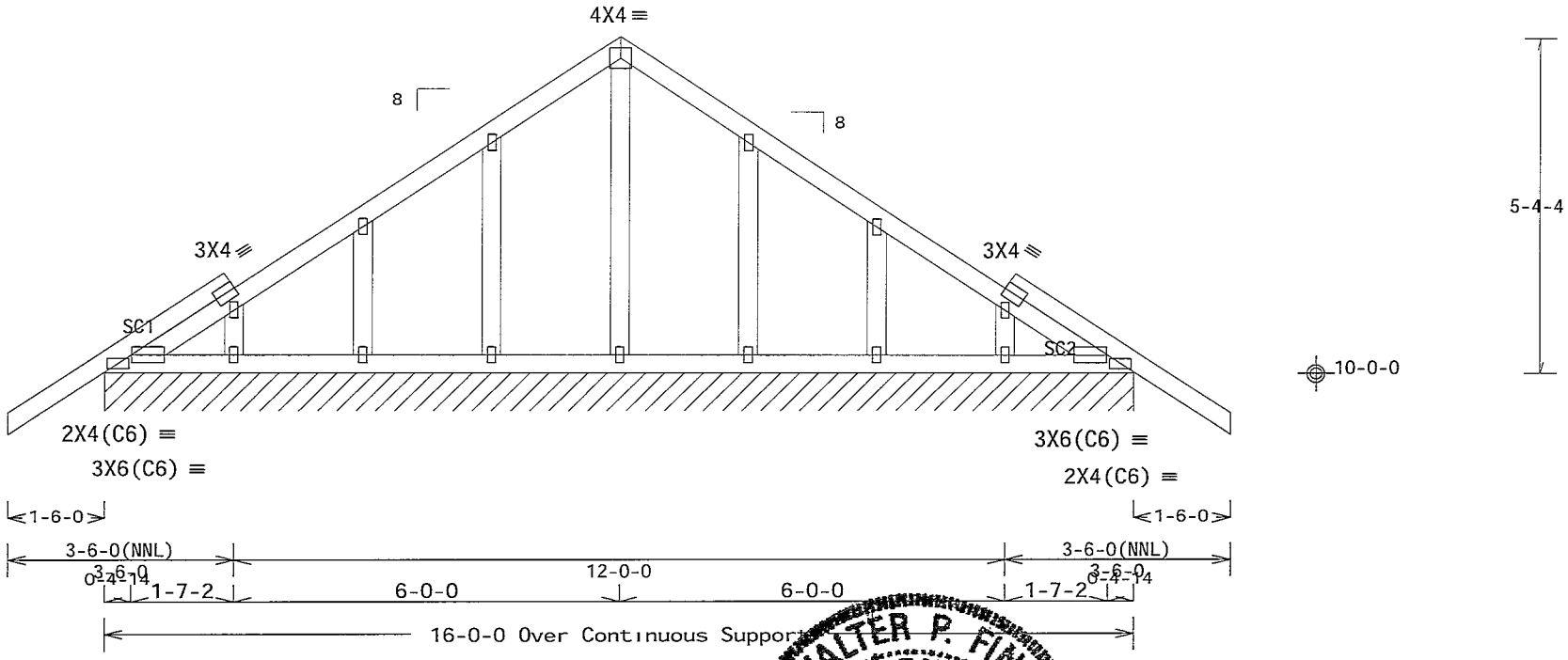

R=174 PLF U=3 PLF W=16-0-0
RL=7/-7 PLF

Note All Plates Are 1.5X3 Except As Shown

Design Crit FBC2010Res/TPI-2007(STD)

PLT TYP Wave FT/RT=10%(0%)/0(0) 10 03 11 0309.21 QTY 1 FL/-/5/-/-/R/- Scale = 375"/Ft

WALTER P. FINN LICENSE No.22839 STATE OF FLORIDA PROFESSIONAL ENGINEER

03/28/2013

ALPINE
ITW Building Components Group Inc.
Haines City, FL 33844
FL COA #0 278

WARNING READ AND FOLLOW ALL NOTES ON THIS SHEET!
IMPORTANT FURNISH THIS DESIGN TO ALL CONTRACTORS INCLUDING INSTALLERS

Trusses require extreme care in fabr cat ng handling sh pp ng nstall ng and brac ng Refer to and follow the latest edition of BCSI (Bu ld ng Component Safety Informat on by TPI and WTCA) for recommended pract ces prior to perform ng these funct ons Installers shall prov de temporary brac ng per BCSI. Unless noted otherwise top chord shall have properly attached structural sheath ng and bottom chord shall have a properly attached rig d ce l ng Locations shown for permanent lateral restra nt of webs shall have bracing nstalled per BCSI sect ons B3 B7 or B10 as appl cable

ITW Bu ld ng Components Group Inc (ITWBCG) shall not be respons ble for any dev at on from th s design, any fa lure to build the truss n conformance w th ANSI/TPI 1 or for handl ng sh pp ng nstallat on and bracing of trusses Apply plates to each face of truss and pos t on as shown above and on the Jo nt Details unless noted otherw se Refer to draw ngs 160A-Z for standard plate pos t ons A seal on th s drawing or cover page list ng this draw ng nd cates acceptance of profess onal eng neer ng respons b lity solely for the des gn shown The su tab l ty and use of th s des gn for any structure s the responsibility of the Bu ld ng Des gner per ANSI/TPI 1 Sec 2 For more nformat on see This job s general notes page ITW BCG www twbcg com TPI www tp nst org WTCA www sbc ndustry com ICC www ecsafe org

TC LL	20 0 PSF	REF	R487-- 66626
TC DL	7 0 PSF	DATE	03/28/13
BC DL	10 0 PSF	DRW	HCUSR487 13087014
BC LL	0 0 PSF	HC-ENG DF/DF	
TOT LD	37 0 PSF	SEQN-	297831
DUR FAC	1 25		
SPACING	24 0"	JREF-	1UUX487_Z01

THIS DWG PREPARED FROM COMPUTER INPUT (LOADS & DIMENSIONS) SUBMITTED BY TRUSS MFR

(13-106--Don Reed Construction Decker House -- Lake City, FL - H 12'4' Common)

Top chord 2x4 SP_#1_12A
Bot chord 2x4 SP_#1_12A
Webs 2x4 SP_#3__12A

Lumber grades designated with 12A use design values approved 1/5/2012 by ALSC

Bottom chord checked for 10 00 psf non-concurrent live load

120 mph wind, 22 51 ft mean hgt, ASCE 7-10, CLOSED bldg, Located anywhere in roof, RISK CAT II, EXP B, wind TC DL=3 5 psf, wind BC DL=5 0 psf GCpi(+/-)=0 18

Wind loads and reactions based on MWFRS with additional C&C member design

Deflection meets L/240 live and L/180 total load Creep increase factor for dead load is 1 50

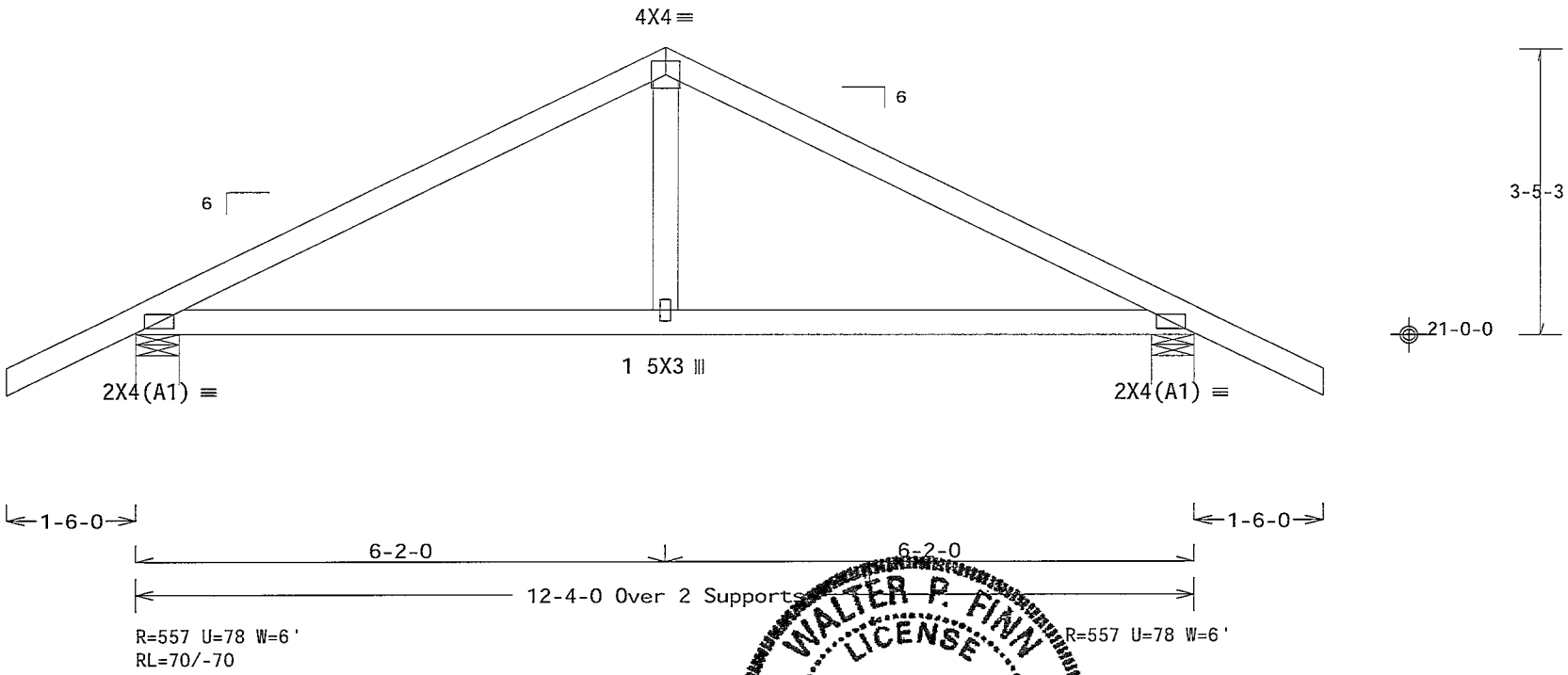

Design Crit FBC2010Res/TPI-2007(STD)
FT/RT=10%(0%)/0(0) 10.03 11 0209.19 QTY 2 FL/-/5/-/-/R/-

PLT TYP Wave

Scale = 5"/Ft

WALTER P. FINN LICENSE No.22839 STATE OF FLORIDA PROFESSIONAL ENGINEER

03/28/2013

ALPINE
ITW Building Components Group Inc.
Haines City, FL 33844
FL COA #0 278

WARNING READ AND FOLLOW ALL NOTES ON THIS SHEET!
IMPORTANT FURNISH THIS DESIGN TO ALL CONTRACTORS INCLUDING INSTALLERS

Trusses requ re extreme care n fabricating hand ng sh pping nstall ng and bracing [illegible] and follow the latest ed t on of BCSI (Build ng Component Safety Informat on by TPI and WTCA) [illegible] pract ces pr or to perform ng these funct ons Installers shall prov de temporary bracing per [illegible] Unless noted otherw se top chord shall have properly attached structural sheath ng and bottom [illegible] shall have a properly attached r g d ce l ng Locations shown for permanent lateral restraint [illegible] shall have bracing nstalled per BCSI sect ons B3 B7 or B10 as applicable

ITW Bu ld ng Components Group Inc (ITWBCG) shall not be respons ble for any dev at on from this design any fa lure to build the truss n conformance w th ANSI/TPI 1 or for handl ng sh pp ng nstallation brac ng of trusses Apply plates to each face of truss and pos t on as shown above and on the Joint Deta ls unless noted otherwise Refer to draw ngs 160A-Z for standard plate pos t ons A seal on th s draw ng or cover page listing this draw ng nd cates acceptance of profess onal engineer ng respons b l ty solely for the design shown The su tab l ty and use of th s des gn for any structure s the respons b lity of the Bu lding Des gner per ANSI/TPI 1 Sec 2 For more nformat on see This job s general notes page ITW BCG www twbcg com TPI www tp nst org WTCA www sbc ndustry com ICC www iccsafe org

TC LL	20 0 PSF	REF	R487-- 66627
TC DL	7 0 PSF	DATE	03/28/13
BC DL	10 0 PSF	DRW	HCUSR487 13087050
BC LL	0 0 PSF	HC-ENG	DF/DF
TOT LD	37 0 PSF	SEQN-	60803
DUR FAC	1 25		
SPACING	24 0"	JREF-	1UUX487_Z01

THIS DWG PREPARED FROM COMPUTER INPUT (LOADS & DIMENSIONS) SUBMITTED BY TRUSS MFR

(13-106--Don Reed Construction Decker House -- Lake City, FL - H1 12'4" Common)

Top chord 2x4 SP_#1_12A
Bot chord 2x4 SP_#1_12A
Webs 2x4 SP_#3__12A

Lumber grades designated with "12A use design values approved 1/5/2012 by ALSC

Bottom chord checked for 10 00 psf non-concurrent live load

145 mph wind 22 51 ft mean hgt, ASCE 7-10, CLOSED bldg, not located within 9 00 ft from roof edge RISK CAT II, EXP B, wind TC DL=3 5 psf, wind BC DL=5 0 psf GCpi(+/-)=0 18

Wind loads and reactions based on MWFRS with additional C&C member design

Deflection meets L/240 live and L/180 total load Creep increase factor for dead load is 1 50

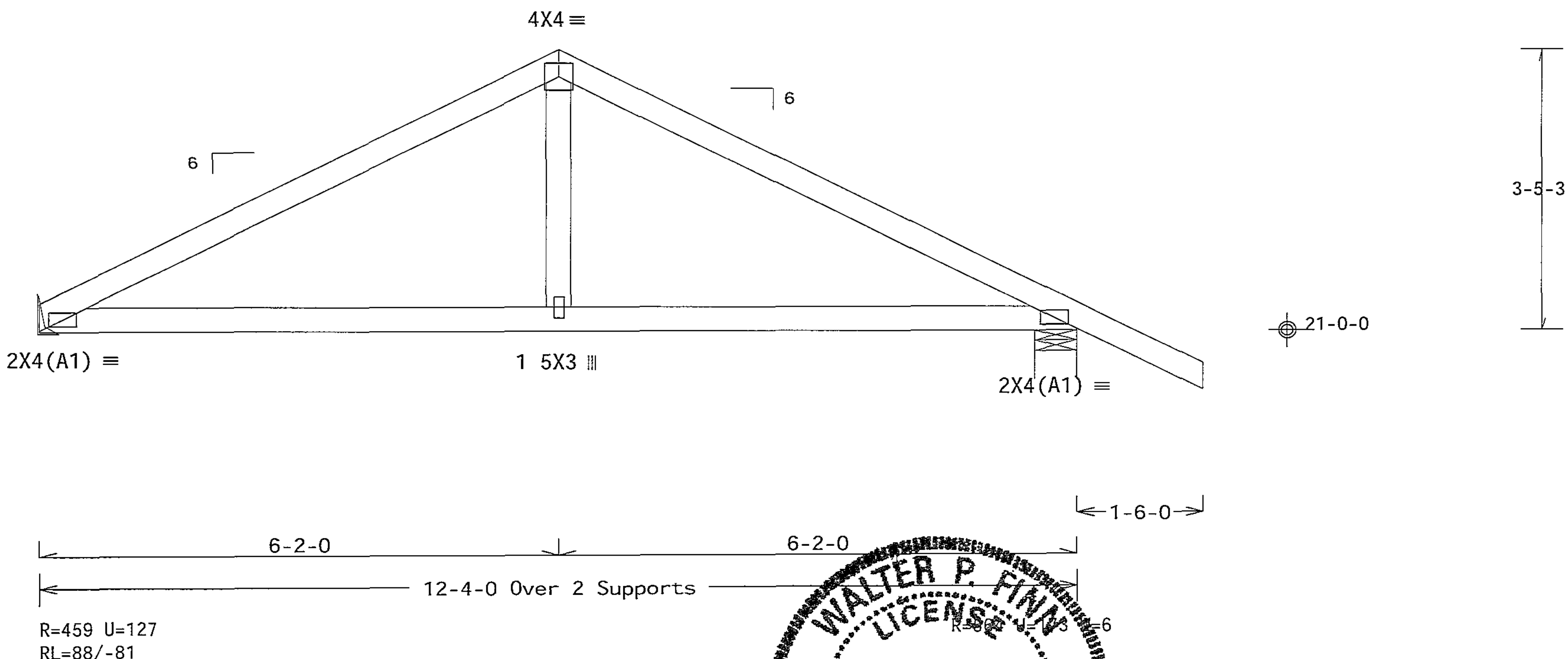

Design Crit FBC2010Res/TPI-2007(STD) FT/RT=10%(0%)/0(0)

PLT TYP Wave

IMPORTANT **WARNING** READ AND FOLLOW ALL NOTES ON THIS SHEET! FURNISH THIS DESIGN TO ALL CONTRACTORS INCLUDING INSTALLERS

Trusses require extreme care in fabricating, handling, shipping, installing and bracing. Refer to and follow the latest edition of BCSI (Building Component Safety Information, by TPI and WTCA) for safety practices prior to performing these functions. Installers shall provide temporary bracing per BCSI. Unless noted otherwise, top chord shall have properly attached structural sheathing and bottom chord shall have a properly attached rigid ceiling. Locations shown for permanent lateral restraint of webs shall have bracing installed per BCSI sections B3, B7 or B10, as applicable.

ITW Building Components Group Inc. (ITWBCG) shall not be responsible for any deviation from this design, any failure to build the truss in conformance with ANSI/TPI 1, or for handling, shipping, installation & bracing of trusses. Apply plates to each face of truss and position as shown above and on the Joint Details, unless noted otherwise. Refer to drawings 160A-Z for standard plate positions. A seal on this drawing or cover page listing this drawing indicates acceptance of professional engineering responsibility solely for the design shown. The suitability and use of this design for any structure is the responsibility of the Building Designer per ANSI/TPI 1 Sec 2. For more information see This job's general notes page. ITW-BCG www itwbcg com TPI www tpinst org WTCA www sbcindustry com ICC www iccsafe org

ALPINE
ITW Building Components Group Inc.
Haines City FL 33844
FL COA #0 278

WALTER P. FINN LICENSE No. 22839 STATE OF FLORIDA PROFESSIONAL ENGINEER
03/28/2013

FL/-/5/-/-/R/-   Scale = 5"/Ft.

TC LL	20 0 PSF	REF R487-- 66628
TC DL	7 0 PSF	DATE 03/28/13
BC DL	10 0 PSF	DRW HCUSR487 13087040
BC LL	0 0 PSF	HC-ENG DF/DF
TOT LD.	37 0 PSF	SEQN- 70756
DUR FAC	1 25	
SPACING	24 0"	JREF- 1UUX487_Z01

(13-106--Don Reed Construction Decker House -- Lake City, FL - H11A 32 Stepdown Hip)

THIS DWG PREPARED FROM COMPUTER INPUT (LOADS & DIMENSIONS) SUBMITTED BY TRUSS MFR

Top chord 2x4 SP_#1_12A
Bot chord 2x4 SP_#1_12A
Webs 2x4 SP_#3__12A

Lumber grades designated with '12A use design values approved 1/5/2012 by ALSC

Left cantilever is exposed to wind

Hanger specified assumes connection to supporting chord is located a minimum of five times the depth of the supporting chord from any unsupported end, unless unsupported chord end has 85% plating coverage

Bottom chord checked for 10 00 psf non-concurrent live load

Deflection meets L/240 live and L/180 total load Creep increase factor for dead load is 1 50

120 mph wind, 24 10 ft mean hgt, ASCE 7-10, CLOSED bldg, not located within 9 00 ft from roof edge RISK CAT II, EXP B, wind TC DL=3 5 psf, wind BC DL=5 0 psf GCpi(+/-)=0 18

Wind loads and reactions based on MWFRS with additional C&C member design

H = recommended connection based on manufacturer tested capacities and calculations Conditions may exist that require different connections than indicated Refer to manufacturer publication for additional information

In lieu of structural panels use purlins to brace all flat TC @ 24" OC

MWFRS loads based on trusses located at least 12 05 ft from roof edge

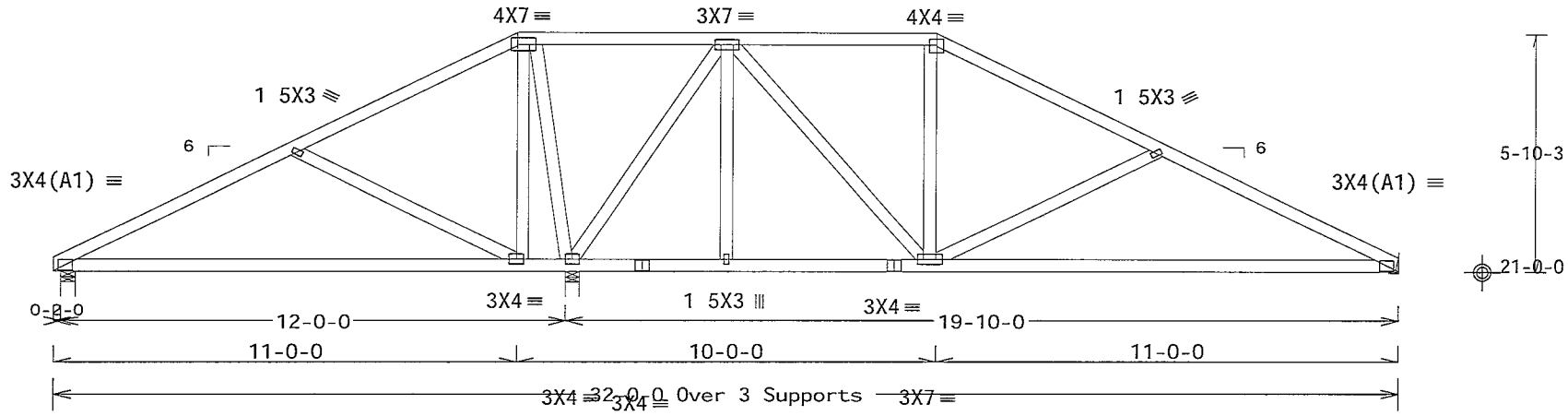

R=411 U=0 W=4
RL=84/-84

R=1408 U=95 W=4

R=687 U=21 H=Simpson LUS24
Supported Member Face (2) 0 148'x3" nails
Supporting Member Face (4) 0 148"x3" nails
Supporting Member (1) 2x4 SP M-30

Design Crit FBC2010Res/TPI-2007(STD)
FT/RT=10%(0%)/0(0) ★IG 03 11 0509.19 DT★

PLT TYP Wave

FL/-/5/-/-/R/- Scale =.25"/Ft.

WALTER P. FINN LICENSE No.22839 STATE OF FLORIDA PROFESSIONAL ENGINEER
03/28/2013

ALPINE
ITW Building Components Group Inc.
Haines City, FL 33844
FL COA #0 278

WARNING READ AND FOLLOW ALL NOTES ON THIS SHEET!
IMPORTANT FURNISH THIS DESIGN TO ALL CONTRACTORS INCLUDING INSTALLERS

Trusses requ re extreme care in fabricat ng hand ng shipp ng nstall ng and brac ng Re[illegible] and follow the latest ed t on of BCSI (Bu ld ng Component Safety Information by TPI and WTCA) for [illegible] practices pr or to performing these funct ons Installers shall provide temporary bracing per [illegible] Unless noted otherw se top chord shall have properly attached structural sheath ng and bottom c[illegible] shall have a properly attached r g d ceiling Locations shown for permanent lateral restraint of [illegible] shall have bracing installed per BCSI sect ons B3 B7 or B10 as applicable

ITW Bu ld ng Components Group Inc (ITWBCG) shall not be respons ble for any dev at on from this des[illegible] any failure to build the truss in conformance with ANSI/TPI 1 or for handling sh pping installation & brac ng of trusses Apply plates to each face of truss and pos t on as shown above and on the Joint Details unless noted otherwise Refer to drawings 160A-Z for standard plate pos tions A seal on this draw ng or cover page l sting th s drawing indicates acceptance of professional engineering responsibil ty solely for the des gn shown The suitability and use of this design for any structure is the respons b l ty of the Build ng Designer per ANSI/TPI 1 Sec 2 For more informat on see Th s job s general notes page ITW-BCG www twbcg com TPI www tp nst org WTCA www sbcindustry com ICC www ccsafe org

TC LL	20 0 PSF	REF	R487-- 66629
TC DL	7 0 PSF	DATE	03/28/13
BC DL	10.0 PSF	DRW	HCUSR487 13087020
BC LL	0.0 PSF	HC-ENG	DF/DF
TOT LD.	37 0 PSF	SEQN-	60837
DUR.FAC.	1.25		
SPACING	24.0"	JREF-	1UUX487_Z01

THIS DWG PREPARED FROM COMPUTER INPUT (LOADS & DIMENSIONS) SUBMITTED BY TRUSS MFR

(13-106--Don Reed Construction Decker House -- Lake City, FL - H11A1 32 Stepdown Hip)

Top chord 2x4 SP_#1_12A
Bot chord 2x4 SP_#1_12A
Webs 2x4 SP_#3__12A

Lumber grades designated with '12A' use design values approved 1/5/2012 by ALSC

In lieu of structural panels use purlins to brace all flat TC @ 24" OC

Deflection meets L/240 live and L/180 total load Creep increase factor for dead load is 1 50

120 mph wind 23 72 ft mean hgt, ASCE 7-10, CLOSED bldg, not located within 9 00 ft from roof edge RISK CAT II, EXP B, wind TC DL=3 5 psf, wind BC DL=5 0 psf GCpi(+/-)=0 18

Wind loads and reactions based on MWFRS with additional C&C member design

Bottom chord checked for 10 00 psf non-concurrent live load

MWFRS loads based on trusses located at least 11 86 ft from roof edge

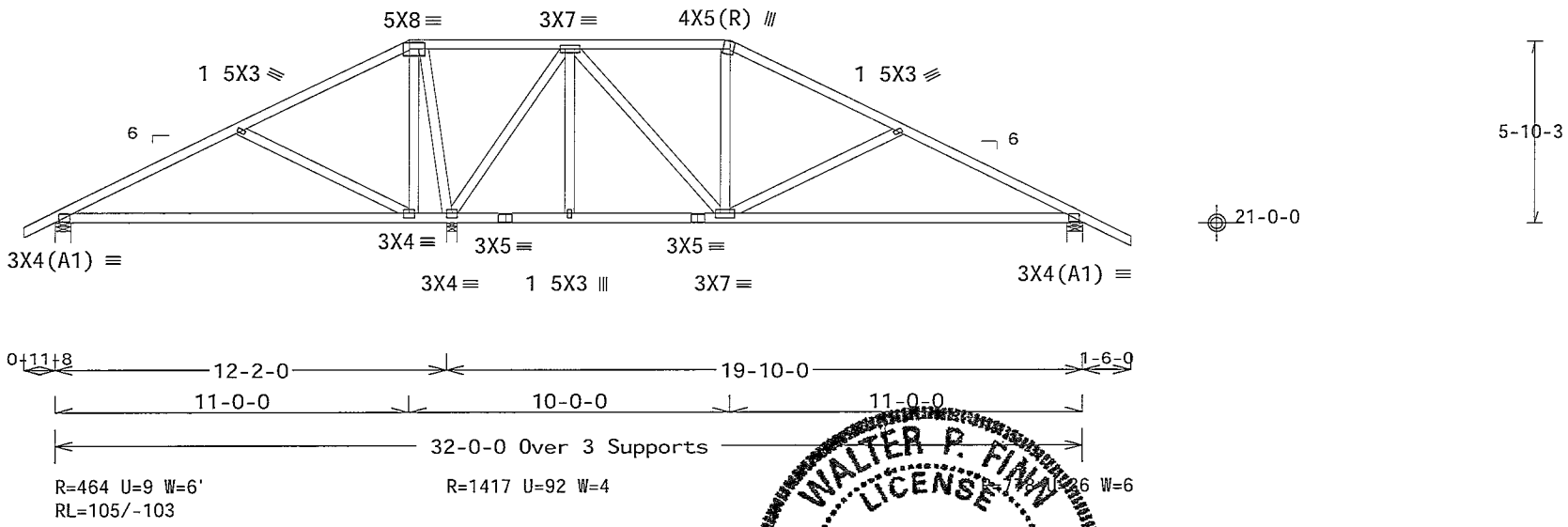

Design Crit FBC2010Res/TPI-2007(STD)
FT/RT=10%(0%)/0(0)

PLT TYP Wave

10.03.11 0209.19 QTY 1

FL/-/5/-/-/R/- Scale =.1875"/Ft.

TC LL	20.0 PSF	REF	R487-- 66630
TC DL	7 0 PSF	DATE	03/28/13
BC DL	10.0 PSF	DRW	HCUSR487 13087022
BC LL	0.0 PSF	HC-ENG	DF/DF
TOT.LD.	37.0 PSF	SEQN-	60819
DUR.FAC.	1.25		
SPACING	24.0"	JREF-	1UUX487_Z01

ALPINE
ITW Building Components Group Inc.
Haines City FL 33844
FL COA #0 278

WARNING READ AND FOLLOW ALL NOTES ON THIS SHEET!
IMPORTANT FURNISH THIS DESIGN TO ALL CONTRACTORS INCLUDING INSTALLERS

Trusses require extreme care n fabricating handling shipping installing and brac ng Refer to and follow the latest edit on of BCSI (Bu ld ng Component Safety Informat on by TPI and WTCA) for general pract ces prior to perform ng these functions Installers shall prov de temporary bracing per the Unless noted otherw se top chord shall have properly attached structural sheath ng and bottom chord shall have a properly attached r g d ceiling Locations shown for permanent lateral restraint of webs shall have bracing nstalled per BCSI sect ons B3 B7 or B10 as applicable

ITW Build ng Components Group Inc (ITWBCG) shall not be respons ble for any dev ation from this design any failure to bu ld the truss n conformance with ANSI/TPI 1 or for handling sh pping installation bracing of trusses Apply plates to each face of truss and position as shown above and on the Joint Details unless noted otherwise Refer to drawings 160A-Z for standard plate positions A seal on this drawing or cover page l sting th s drawing indicates acceptance of professional engineering responsibility solely for the des gn shown The suitab lity and use of this design for any structure is the respons b l ty of the Build ng Des gner per ANSI/TPI 1 Sec 2 For more information see Th s job s general notes page ITW-BCG www itwbcg com TPI www tpinst org WTCA www sbcindustry com ICC www ccsafe org

WALTER P. FINN
LICENSE
No. 22839
STATE OF FLORIDA
PROFESSIONAL ENGINEER
03/28/2013

(13-106--Don Reed Construction Decker House -- Lake City, FL - H13A 32' Stepdown Hip)

Top chord 2x4 SP_#1_12A
Bot chord 2x4 SP_#1_12A
Webs 2x4 SP_#3__12A

Lumber grades designated with "12A use design values approved 1/5/2012 by ALSC

Left cantilever is exposed to wind

Hanger specified assumes connection to supporting chord is located a minimum of five times the depth of the supporting chord from any unsupported end, unless unsupported chord end has 85% plating coverage

In lieu of structural panels use purlins to brace all flat TC @ 24" OC

Bottom chord checked for 10 00 psf non-concurrent live load

MWFRS loads based on trusses located at least 12 30 ft from roof edge

120 mph wind, 24 60 ft mean hgt, ASCE 7-10, CLOSED bldg, not located within 9 00 ft from roof edge, RISK CAT II, EXP B, wind TC DL=3 5 psf, wind BC DL=5 0 psf GCpi(+/-)=0 18

Wind loads and reactions based on MWFRS with additional C&C member design

H = recommended connection based on manufacturer tested capacities and calculations Conditions may exist that require different connections than indicated Refer to manufacturer publication for additional information

(a) 1x4 #3SRB SPF-S or better "T" brace 80% length of web member Attach with 8d Box or Gun (0 113"x2 5",min)nails @ 6" OC

Deflection meets L/240 live and L/180 total load Creep increase factor for dead load is 1 50

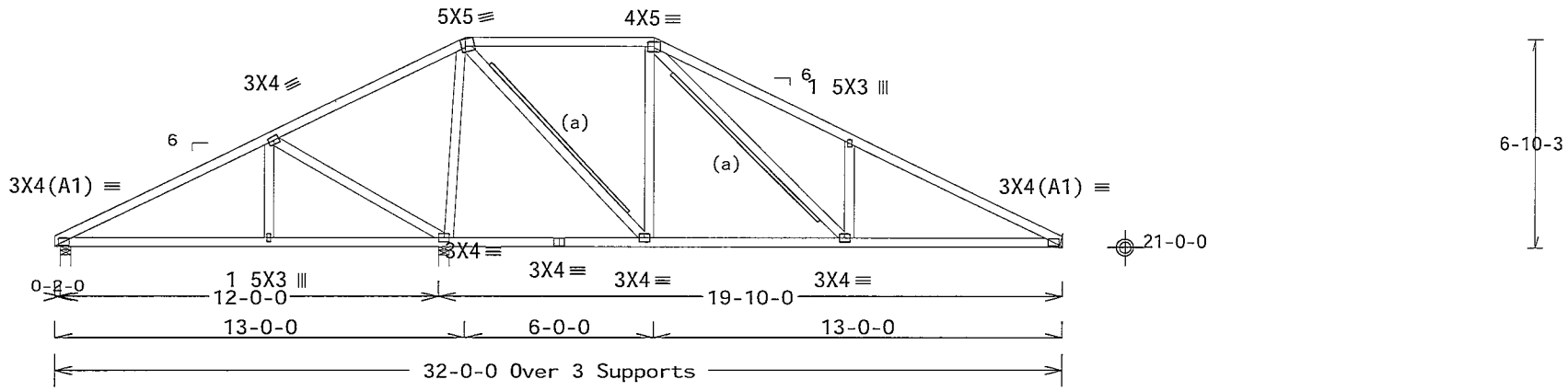

R=386 U=19 W=4"
RL=99/-99

R=1396 U=59 W=4'

R=668 U=33 H=Simpson LUS24
Supporting Member Face (2) 0 148"x3" nails
Supporting Member Face (4) 0 148"x3" nails
Supporting Member (1) 2x4 SP M-30

Design Crit FBC2010Res/TPI-2007(STD)
FT/RT=10%(0%)/0(0) ★16.03.11.0309.19 07★

PLT TYP. Wave

FL/-/5/-/-/R/- Scale =.1875"/Ft.

WALTER P. FINN LICENSED No.22839 STATE OF FLORIDA PROFESSIONAL ENGINEER
03/28/2013

ALPINE
ITW Building Components Group Inc.
Haines City FL 33844
FL COA #0 278

WARNING READ AND FOLLOW ALL NOTES ON THIS SHEET!
IMPORTANT FURNISH THIS DESIGN TO ALL CONTRACTORS INCLUDING INSTALLERS

Trusses requ re extreme care n fabricat ng handling shipping nstalling and bracing Re and follow the latest ed tion of BCSI (Building Component Safety Information by TPI and WTCA) for safety practices pr or to performing these functions Installers shall provide temporary bracing per BCSI Unless noted otherw se top chord shall have properly attached structural sheathing and bottom chord shall have a properly attached r g d ceiling Locations shown for permanent lateral restraint of webs shall have bracing nstalled per BCSI sect ons B3 B7 or B10 as applicable

ITW Build ng Components Group Inc (ITWBCG) shall not be responsible for any dev ation from this design any failure to bu ld the truss n conformance with ANSI/TPI 1 or for handling sh pping installation & bracing of trusses Apply plates to each face of truss and posit on as shown above and on the Joint Deta ls unless noted otherwise Refer to drawings 160A-Z for standard plate posit ons A seal on this draw ng or cover page l st ng th s drawing indicates acceptance of professional eng neering responsibility solely for the des gn shown The suitab l ty and use of this design for any structure is the respons b l ty of the Build ng Designer per ANSI/TPI 1 Sec 2 For more information see This job s general notes page ITW-BCG www twbcg com TPI www tpinst org WTCA www sbcindustry com ICC www ccsafe org

TC LL	20.0 PSF	REF	R487-- 66631
TC DL	7.0 PSF	DATE	03/28/13
BC DL	10.0 PSF	DRW	HCUSR487 13087021
BC LL	0.0 PSF	HC-ENG	DF/DF
TOT.LD.	37.0 PSF	SEQN-	60836
DUR.FAC	1.25		
SPACING	24.0"	JREF-	1UUX487_Z01

(13-106--Don Reed Construction Decker House -- Lake City, FL - H13A1 32 Stepdown Hip)

THIS DWG PREPARED FROM COMPUTER INPUT (LOADS & DIMENSIONS) SUBMITTED BY TRUSS MFR

Top chord 2x4 SP_#1_12A
Bot chord 2x4 SP_#1_12A
Webs 2x4 SP_#3__12A

Lumber grades designated with "12A" use design values approved 1/5/2012 by ALSC

Left cantilever is exposed to wind

In lieu of structural panels use purlins to brace all flat TC @ 24" OC

Deflection meets L/240 live and L/180 total load Creep increase factor for dead load is 1 50

120 mph wind, 24 22 ft mean hgt, ASCE 7-10, CLOSED bldg, not located within 9 00 ft from roof edge, RISK CAT II, EXP B, wind TC DL=3 5 psf, wind BC DL=5 0 psf GCpi(+/-)=0 18

Wind loads and reactions based on MWFRS with additional C&C member design

(a) 1x4 #3SRB SPF-S or better "T" brace 80% length of web member Attach with 8d Box or Gun (0 113'x2 5",min)nails @ 6" OC

Bottom chord checked for 10 00 psf non-concurrent live load

MWFRS loads based on trusses located at least 12 11 ft from roof edge

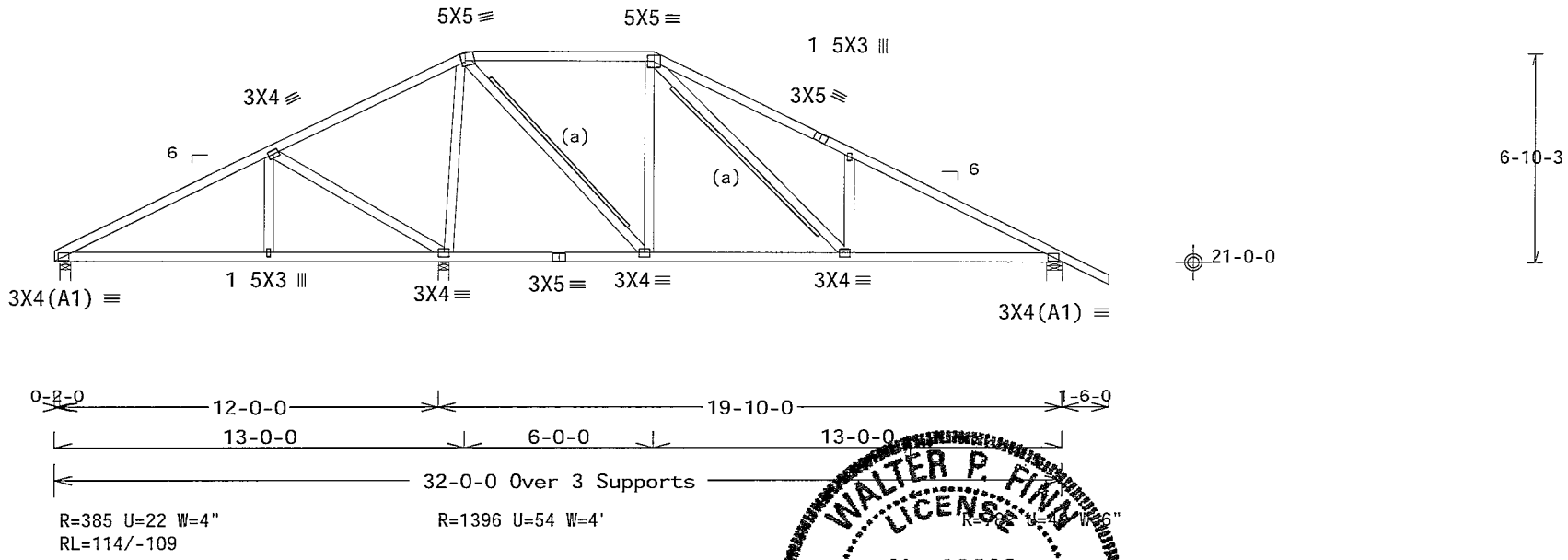

Design Crit FBC2010Res/TPI-2007(STD)
FT/RT=10%(0%)/0(0)

PLT TYP. Wave

WALTER P. FINN LICENSE No.22839 STATE OF FLORIDA PROFESSIONAL ENGINEER
03/28/2013

FL/-/5/-/-/R/-

Scale =.1875"/Ft.

TC LL	20.0 PSF	REF	R487-- 66632
TC DL	7.0 PSF	DATE	03/28/13
BC DL	10.0 PSF	DRW	HCUSR487 13087036
BC LL	0 0 PSF	HC-ENG	DF/DF
TOT LD	37 0 PSF	SEQN-	60825
DUR FAC.	1.25		
SPACING	24 0"	JREF-	1UUX487_Z01

ALPINE
ITW Building Components Group Inc.
Haines City, FL 33844
FL COA #0 278

WARNING READ AND FOLLOW ALL NOTES ON THIS SHEET!
IMPORTANT FURNISH THIS DESIGN TO ALL CONTRACTORS INCLUDING INSTALLERS

Trusses requ re extreme care in fabricat ng handling shipping nstalling and bracing Refer to and follow the latest ed t on of BCSI (Building Component Safety Information by TPI and WTCA) for g pract ces pr or to perform ng these functions Installers shall provide temporary bracing per BCSI Unless noted otherw se top chord shall have properly attached structural sheathing and bottom chord shall have a properly attached r g d ceiling Locations shown for permanent lateral restraint of webs shall have bracing nstalled per BCSI sect ons B3 B7 or B10 as applicable

ITW Building Components Group Inc (ITWBCG) shall not be responsible for any dev ation from this design any fa lure to bu ld the truss n conformance with ANSI/TPI 1 or for handling sh pp ng installation & bracing of trusses Apply plates to each face of truss and position as shown above and on the Jo nt Details unless noted otherwise Refer to drawings 160A-Z for standard plate posit ons A seal on th s drawing or cover page l st ng th s drawing nd cates acceptance of profess onal eng neering respons b l ty solely for the des gn shown The su tabil ty and use of th s design for any structure s the responsibil ty of the Bu ld ng Designer per ANSI/TPI 1 Sec 2 For more nformat on see Th s job s general notes page ITW-BCG www twbcg com TPI www tpinst org WTCA www sbcindustry com ICC www iccsafe org

THIS DWG PREPARED FROM COMPUTER INPUT (LOADS & DIMENSIONS) SUBMITTED BY TRUSS MFR

(13-106--Don Reed Construction Decker House -- Lake City, FL - H15A 32' Stepdown Hip)

Top chord 2x4 SP_#1_12A
Bot chord 2x4 SP_#1_12A
Webs 2x4 SP_#3__12A

Lumber grades designated with "12A" use design values approved 1/5/2012 by ALSC

Left cantilever is exposed to wind

Hanger specified assumes connection to supporting chord is located a minimum of five times the depth of the supporting chord from any unsupported end, unless unsupported chord end has 85% plating coverage

In lieu of structural panels use purlins to brace all flat TC @ 24 OC

Bottom chord checked for 10 00 psf non-concurrent live load

MWFRS loads based on trusses located at least 25 10 ft from roof edge

120 mph wind, 25 10 ft mean hgt, ASCE 7-10, CLOSED bldg, not located within 9 00 ft from roof edge, RISK CAT II, EXP B, wind TC DL=3 5 psf, wind BC DL=5 0 psf GCpi(+/-)=0 18

Wind loads and reactions based on MWFRS with additional C&C member design

H = recommended connection based on manufacturer tested capacities and calculations Conditions may exist that require different connections than indicated Refer to manufacturer publication for additional information

(a) 1x4 #3SRB SPF-S or better 'T brace 80% length of web member Attach with 8d Box or Gun (0 113"x2 5",min)nails @ 6" OC

Deflection meets L/240 live and L/180 total load Creep increase factor for dead load is 1 50

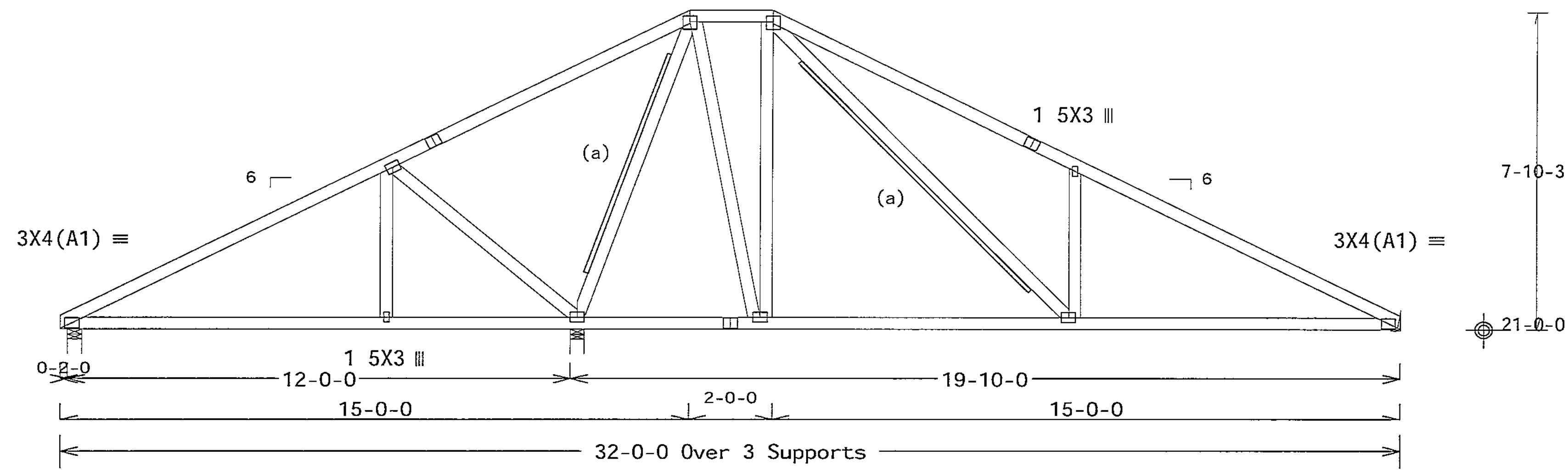

R=423 U=0 W=4'
RL=115/-115

R=1327 U=0 W=4"

R=706 U=0 H=Simpson LUS24
Supported Member Face (2) 0 148"x3" nails
Supporting Member Face (4) 0 148"x3" nails
Supporting Member (1) 2x4 SP M-30

Note All Plates Are 3X4 Except As Shown

Design Crit FBC2010Res/TPI-2007(STD)
FT/RT=10%(0%)/0(0)

PLT TYP. Wave

0 03 11 0289 19 QTY:

FL/-/5/-/-/R/- Scale =.25"/Ft.

WALTER P. FINN LICENSE No.22839 STATE OF FLORIDA PROFESSIONAL ENGINEER
03/28/2013

ALPINE
ITW Building Components Group Inc.
Haines City, FL 33844
FL COA #0 278

WARNING READ AND FOLLOW ALL NOTES ON THIS SHEET!
IMPORTANT FURNISH THIS DESIGN TO ALL CONTRACTORS INCLUDING INSTALLERS

Trusses require extreme care n fabr cating handling sh pp ng install ng and brac ng Ref to and follow the latest edit on of BCSI (Bu lding Component Safety Informat on by TPI and WTCA) for safety pract ces pr or to perform ng these funct ons Installers shall prov de temporary brac ng per BCSI Unless noted otherwise top chord shall have properly attached structural sheathing and bottom chord shall have a properly attached rig d ce l ng Locat ons shown for permanent lateral restra nt of webs shall have brac ng nstalled per BCSI sect ons B3 B7 or B10 as appl cable

ITW Building Components Group Inc (ITWBCG) shall not be respons ble for any dev ation from th s design any failure to bu ld the truss n conformance w th ANSI/TPI 1 or for handling shipp ng installat on & bracing of trusses Apply plates to each face of truss and position as shown above and on the Jo nt Details unless noted otherw se Refer to draw ngs 160A-Z for standard plate posit ons A seal on th s drawing or cover page l st ng th s drawing nd cates acceptance of profess onal eng neer ng responsibility solely for the des gn shown The suitabil ty and use of th s design for any structure s the responsib l ty of the Bu ld ng Des gner per ANSI/TPI 1 Sec 2 For more nformat on see Th s job s general notes page ITW-BCG www twbcg com TPI www tp nst org WTCA www sbc ndustry com ICC www iccsafe org

TC LL	20.0 PSF	REF	R487-- 66633
TC DL	7 0 PSF	DATE	03/28/13
BC DL	10.0 PSF	DRW	HCUSR487 13087049
BC LL	0.0 PSF	HC-ENG	DF/DF
TOT LD	37 0 PSF	SEQN-	60835
DUR.FAC.	1 25		
SPACING	24.0"	JREF-	1UUX487_Z01

(13-106--Don Reed Construction Decker House -- Lake City, FL - H15A1 32' Stepdown Hip)

THIS DWG PREPARED FROM COMPUTER INPUT (LOADS & DIMENSIONS) SUBMITTED BY TRUSS MFR

Top chord 2x4 SP_#1_12A
Bot chord 2x4 SP_#1_12A
Webs 2x4 SP_#3__12A

Lumber grades designated with '12A' use design values approved 1/5/2012 by ALSC

Left cantilever is exposed to wind

In lieu of structural panels use purlins to brace all flat TC @ 24 OC

Deflection meets L/240 live and L/180 total load Creep increase factor for dead load is 1 50

120 mph wind, 24 72 ft mean hgt, ASCE 7-10, CLOSED bldg, not located within 9 00 ft from roof edge, RISK CAT II, EXP B, wind TC DL=3 5 psf, wind BC DL=5 0 psf GCpi(+/-)=0 18

Wind loads and reactions based on MWFRS with additional C&C member design

(a) 1x4 #3SRB SPF-S or better T' brace 80% length of web member Attach with 8d Box or Gun (0 113'x2 5 ,min)nails @ 6' OC

Bottom chord checked for 10 00 psf non-concurrent live load

MWFRS loads based on trusses located at least 12 36 ft from roof edge

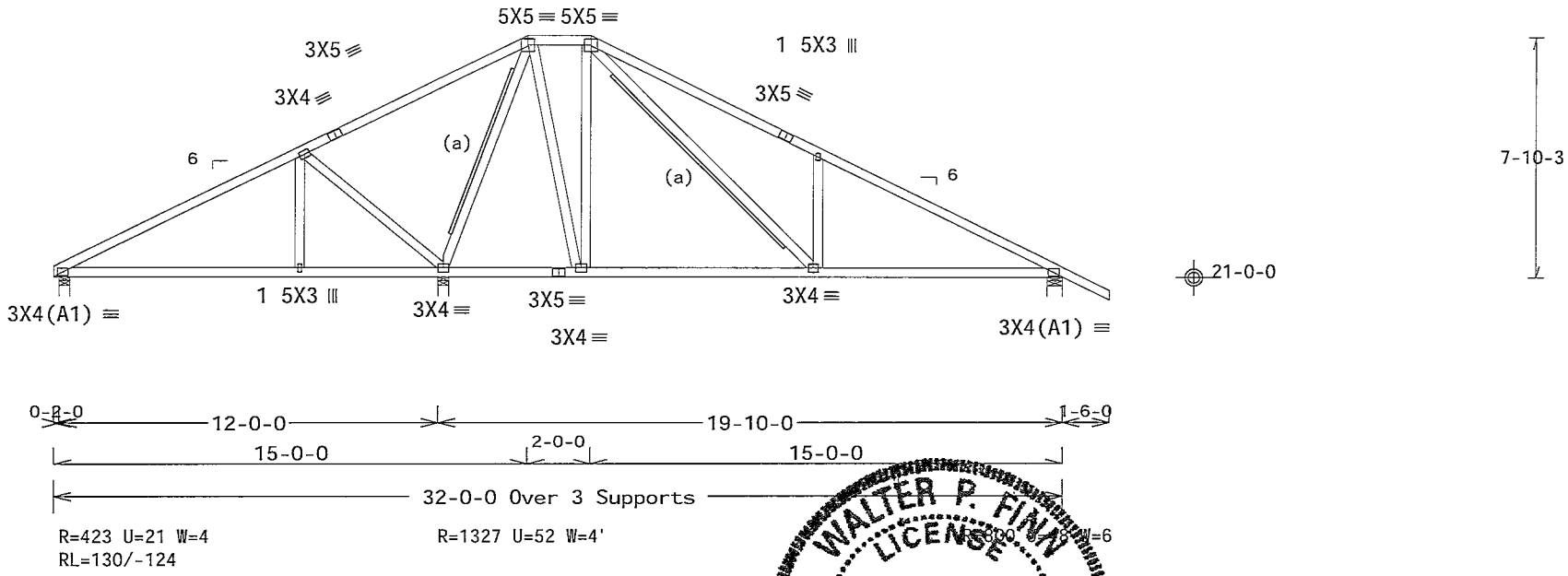

Design Crit: FBC2010Res/TPI-2007(STD)
FT/RT=10%(0%)/0(0)

PLT TYP. Wave

10 03.11 0209.19 QTY 1

FL/-/5/-/-/R/-

Scale =.1875"/Ft.

WALTER P. FINN LICENSE No.22839 STATE OF FLORIDA PROFESSIONAL ENGINEER

03/28/2013

ALPINE
ITW Building Components Group Inc.
Haines City, FL 33844
FL COA #0 278

WARNING READ AND FOLLOW ALL NOTES ON THIS SHEET!
IMPORTANT FURNISH THIS DESIGN TO ALL CONTRACTORS INCLUDING INSTALLERS

Trusses require extreme care n fabr cating handling shipping install ng and brac ng [illegible] and follow the latest edition of BCSI (Bu lding Component Safety Informat on by TPI and WTCA) for safety pract ces pr or to perform ng these funct ons Installers shall prov de temporary brac ng per [illegible] Unless noted otherwise top chord shall have properly attached structural sheathing and bottom [illegible] shall have a properly attached r gid ce l ng Locations shown for permanent lateral restra nt of [illegible] shall have brac ng nstalled per BCSI sect ons B3 B7 or B10 as appl cable

ITW Bu lding Components Group Inc (ITWBCG) shall not be respons ble for any dev ation from th s d[illegible] any fa lure to bu ld the truss n conformance w th ANSI/TPI 1 or for handling sh pp ng nstallat on bracing of trusses Apply plates to each face of truss and position as shown above and on the Jo nt Details unless noted otherw se Refer to draw ngs 160A-Z for standard plate posit ons A seal on this drawing or cover page l st ng th s drawing nd cates acceptance of profess onal eng neering respons bility solely for the des gn shown The suitab l ty and use of th s design for any structure s the responsib l ty of the Bu ld ng Des gner per ANSI/TPI 1 Sec 2 For more informat on see Th s job s general notes page ITW-BCG www twbcg com TPI www tp nst org WTCA www sbc ndustry com ICC www ccsafe org

TC LL	20.0 PSF	REF	R487-- 66634
TC DL	7.0 PSF	DATE	03/28/13
BC DL	10.0 PSF	DRW	HCUSR487 13087016
BC LL	0 0 PSF	HC-ENG	DF/DF
TOT.LD	37 0 PSF	SEQN-	60812
DUR.FAC.	1.25		
SPACING	24 0"	JREF-	1UUX487_Z01

(13-106--Don Reed Construction Decker House -- Lake City, FL - H2 12'4' Common)

Top chord 2x4 SP_#1_12A
Bot chord 2x4 SP_#1_12A
Webs 2x4 SP_#3__12A

Lumber grades designated with "12A' use design values approved 1/5/2012 by ALSC

Bottom chord checked for 10 00 psf non-concurrent live load

120 mph wind, 22 51 ft mean hgt, ASCE 7-10, CLOSED bldg, not located within 4 50 ft from roof edge, RISK CAT II, EXP B, wind TC DL=3 5 psf, wind BC DL=5 0 psf GCpi(+/-)=0 18

Wind loads and reactions based on MWFRS with additional C&C member design

Deflection meets L/240 live and L/180 total load Creep increase factor for dead load is 1 50

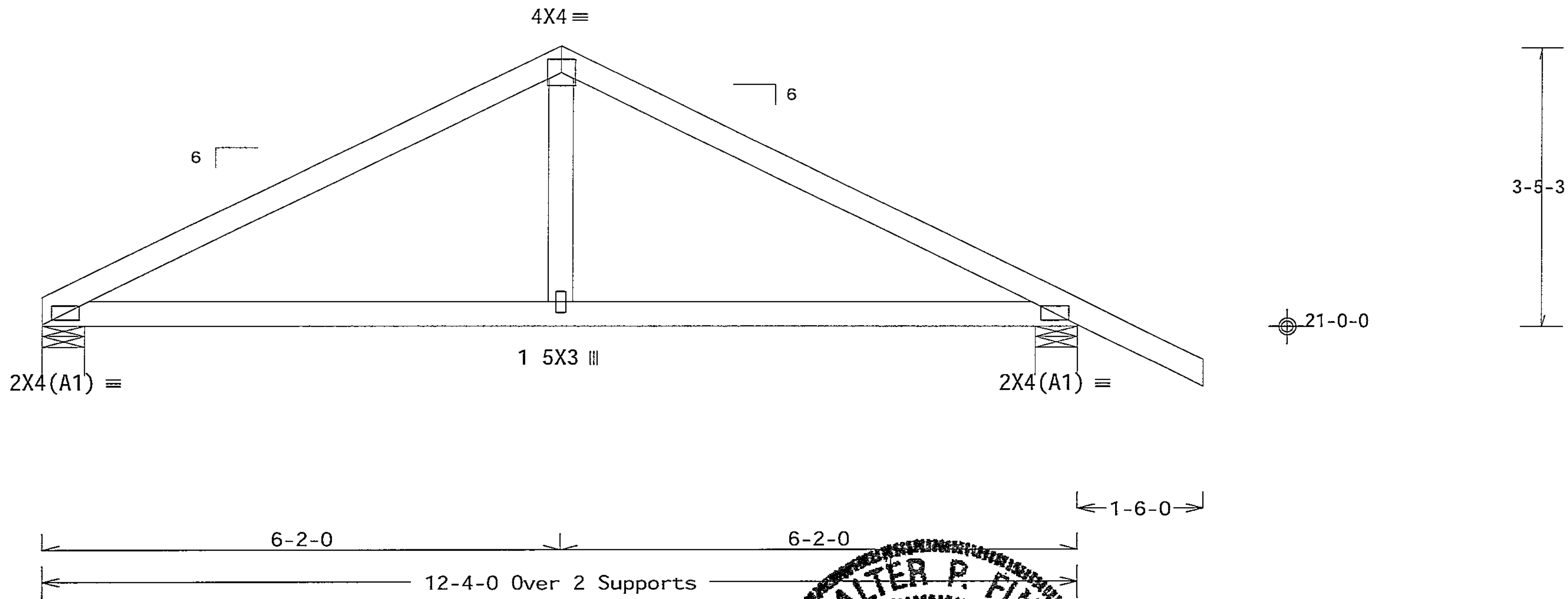

R=460 U=53 W=6'
RL=61/-55

R=460 U=53 W=6

PLT TYP Wave

Design Crit FBC2010Res/TPI-2007(ST?)
FT/RT=10%(0%)/0(0) 10 03 11 0309 19 QTY 2 FL/-/5/-/-/R/- Scale =.5"/Ft.

ALPINE
ITW Building Components Group Inc.
Haines City FL 33844
FL COA #0 278

WARNING READ AND FOLLOW ALL NOTES ON THIS SHEET!
IMPORTANT FURNISH THIS DESIGN TO ALL CONTRACTORS INCLUDING INSTALLERS

Trusses require extreme care n fabr cat ng handling sh pp ng nstall ng and brac ng Refer to and follow the latest edition of BCSI (Bu ld ng Component Safety Informat on by TPI and WTCA) for safety pract ces pr or to perform ng these funct ons Installers shall prov de temporary brac ng per BCSI Unless noted otherwise top chord shall have properly attached structural sheath ng and bottom chord shall have a properly attached rig d ce l ng Locat ons shown for permanent lateral restra nt of webs shall have brac ng nstalled per BCSI sect ons B3 B7 or B10 as appl cable

ITW Bu ld ng Components Group Inc (ITWBCG) shall not be respons ble for any dev at on from th s design any fa lure to bu ld the truss n conformance w th ANSI/TPI 1 or for handl ng sh pp ng nstallat on & bracing of trusses Apply plates to each face of truss and pos t on as shown above and on the Jo nt Details unless noted otherw se Refer to draw ngs 160A-Z for standard plate pos t ons A seal on th s drawing or cover page l st ng th s draw ng nd cates acceptance of profess onal eng neer ng respons bility solely for the des gn shown The su tabil ty and use of th s design for any structure s the responsib l ty of the Bu ld ng Des gner per ANSI/TPI 1 Sec 2 For more nformat on see Th s job s general notes page ITW-BCG www twbcg com TPI www tp nst org WTCA www sbc ndustry com ICC www iccsafe org

WALTER P. FINN
LICENSE
No. 22839
STATE OF FLORIDA
PROFESSIONAL ENGINEER
03/28/2013

TC LL	20.0 PSF	REF	R487-- 66635
TC DL	7 0 PSF	DATE	03/28/13
BC DL	10 0 PSF	DRW	HCUSR487 13087059
BC LL	0 0 PSF	HC-ENG	DF/DF
TOT.LD	37 0 PSF	SEQN-	60802
DUR FAC	1 25		
SPACING	24 0"	JREF-	1UUX487_Z01

(13-106--Don Reed Construction Decker House -- Lake City, FL - H7A 32 Stepdown Hip Girder)

THIS DWG PREPARED FROM COMPUTER INPUT (LOADS & DIMENSIONS) SUBMITTED BY TRUSS MFR

Top chord 2x4 SP_#1_12A
Bot chord 2x4 SP_#1_12A
Webs 2x4 SP_#3__12A W4 2x4 SP_#1_12A

Lumber grades designated with 12A use design values approved 1/5/2012 by ALSC

145 mph wind 23 10 ft mean hgt ASCE 7-10 CLOSED bldg not located within 9 00 ft from roof edge RISK CAT II EXP B wind TC DL=3 5 psf wind BC DL=5 0 psf GCpi(+/-)=0 18

Wind loads and reactions based on MWFRS

Left cantilever is exposed to wind

(H1) = (J) Hanger not calculated (2)2x6 SP M-26 supporting member

In lieu of structural panels use purlins to brace all flat TC @ 24 OC

Deflection meets L/240 live and L/180 total load Creep increase factor for dead load is 1 50

Special loads
------(Lumber Dur Fac =1 25 / Plate Dur Fac =1 25)
TC- From 56 plf at 0 00 to 56 plf at 7 00
TC- From 28 plf at 7 00 to 28 plf at 32 00
BC- From 20 plf at 0 00 to 20 plf at 7 03
BC- From 10 plf at 7 03 to 10 plf at 32 00
TC- 244 84 lb Conc Load at 7 03
TC- 167 95 lb Conc Load at 9 06 11 06 13 06 15 06 16 94 18 94 20 94 22 94 24 97 26 94 28 94 30 94
BC- 448 85 lb Conc Load at 7 03
BC- 126 35 lb Conc Load at 9 06 11 06 13 06 15 06 16 94 18 94 20 94 22 94 24 97 26 94 28 94 30 94

Right end vertical not exposed to wind pressure

(a) 2x4 #3 or better T brace 80% length of web member Attach with 16d Box or Gun (0 135 x3 5 min)nails @ 6 OC

Bottom chord checked for 10 00 psf non-concurrent live load

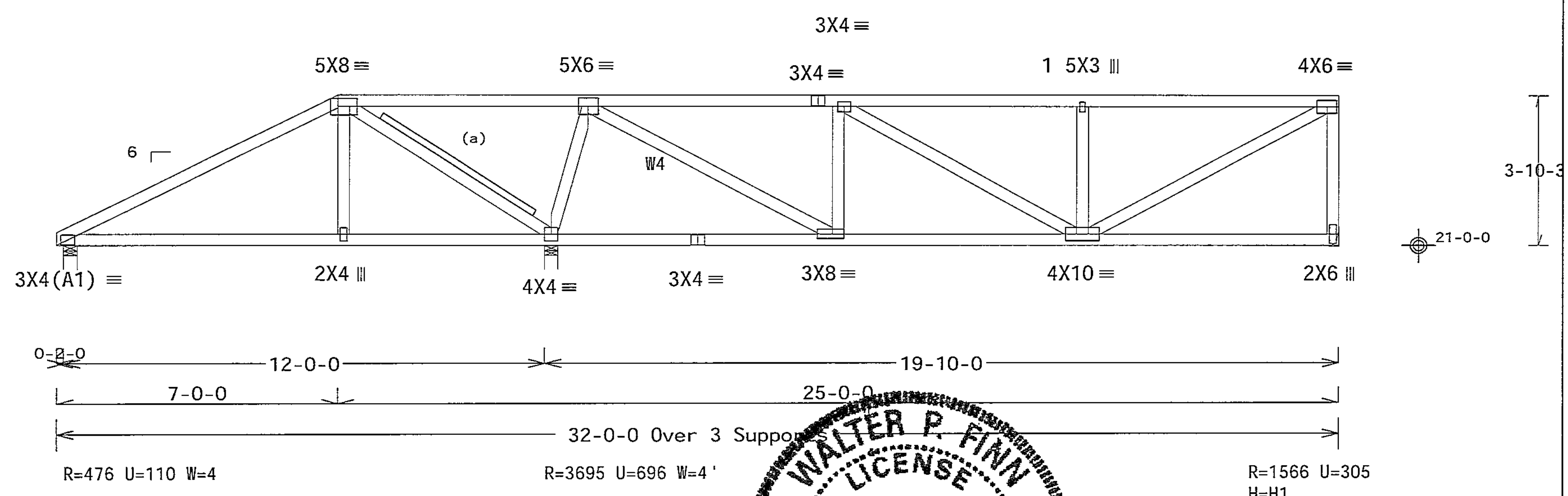

PLT TYP Wave

Design Crit FBC2010Res/TPI-2007(STD)
FT/RT=10%(0%)/0(0) 10 03 11 0309.20

FL/-/5/-/-/R/-

Scale =.25"/Ft.

ALPINE
ITW Building Components Group Inc.
Haines City, FL 33844
FL COA #0 278

WARNING READ AND FOLLOW ALL NOTES ON THIS SHEET!
IMPORTANT FURNISH THIS DESIGN TO ALL CONTRACTORS INCLUDING INSTALLERS

Trusses require extreme care in fabricating handling shipping installing and bracing Refer to and follow the latest edition of BCSI (Building Component Safety Information by TPI and WTCA) for safety practices prior to performing these functions Installers shall provide temporary bracing per BCSI Unless noted otherwise top chord shall have properly attached structural sheathing and bottom chord shall have a properly attached rigid ceiling Locations shown for permanent lateral restraint of webs shall have bracing installed per BCSI sections B3 B7 or B10 as applicable

ITW Building Components Group Inc (ITWBCG) shall not be responsible for any deviation from this design any failure to build the truss in conformance with ANSI/TPI 1 or for handling shipping installation & bracing of trusses Apply plates to each face of truss and position as shown above and on the Joint Details unless noted otherwise Refer to drawings 160A-Z for standard plate positions A seal on this drawing or cover page listing this drawing indicates acceptance of professional engineering responsibility solely for the design shown The suitability and use of this design for any structure is the responsibility of the Building Designer per ANSI/TPI 1 Sec 2 For more information see This job's general notes page ITW-BCG www itwbcg com TPI www tpinst org WTCA www sbcindustry com ICC www iccsafe org

WALTER P. FINN LICENSE No. 22839 STATE OF FLORIDA PROFESSIONAL ENGINEER
03/28/2013

TC LL	20.0 PSF
TC DL	7 0 PSF
BC DL	10.0 PSF
BC LL	0 0 PSF
TOT.LD	37 0 PSF
DUR.FAC.	1.25
SPACING	24 0"

REF	R487-- 66636
DATE	03/28/13
DRW	HCUSR487 13087029
HC-ENG	DF/DF
SEQN-	70767
JREF-	1UUX487_Z01

THIS DWG PREPARED FROM COMPUTER INPUT (LOADS & DIMENSIONS) SUBMITTED BY TRUSS MFR

(13-106--Don Reed Construction Decker House -- Lake City, FL - H7A1 32' Stepdown Hip Girder)

Top chord 2x4 SP_#1_12A
Bot chord 2x4 SP_#1_12A
Webs 2x4 SP_#3__12A

Lumber grades designated with 12A use design values approved 1/5/2012 by ALSC

145 mph wind, 23 47 ft mean hgt, ASCE 7-10, CLOSED bldg, not located within 9 00 ft from roof edge, RISK CAT II, EXP B, wind TC DL=3 5 psf, wind BC DL=5 0 psf GCpi(+/-)=0 18

Wind loads and reactions based on MWFRS

(a) Continuous lateral bracing equally spaced on member

In lieu of structural panels use purlins to brace all flat TC @ 24" OC

Bottom chord checked for 10 00 psf non-concurrent live load

Special loads
------(Lumber Dur Fac =1 25 / Plate Dur Fac =1 25)
TC- From 56 plf at -1 50 to 56 plf at 7 00
TC- From 28 plf at 7 00 to 28 plf at 11 94
TC- From 56 plf at 11 94 to 56 plf at 19 00
TC- From 56 plf at 19 00 to 56 plf at 22 00
TC- From 56 plf at 22 00 to 56 plf at 33 50
BC- From 4 plf at -1 50 to 4 plf at 0 00
BC- From 20 plf at 0 00 to 20 plf at 7 02
BC- From 10 plf at 7 02 to 10 plf at 11 94
BC- From 20 plf at 11 94 to 20 plf at 32 00
BC- From 4 plf at 32 00 to 4 plf at 33 50
TC- 242 01 lb Conc Load at 7 02
TC- 167 95 lb Conc Load at 9 06,11 06
TC- 574 82 lb Conc Load at 11 94
BC- 443 53 lb Conc Load at 7 02
BC- 126 35 lb Conc Load at 9 06,11 06
BC- -33 19 lb Conc Load at 11 94

Deflection meets L/240 live and L/180 total load Creep increase factor for dead load is 1 50

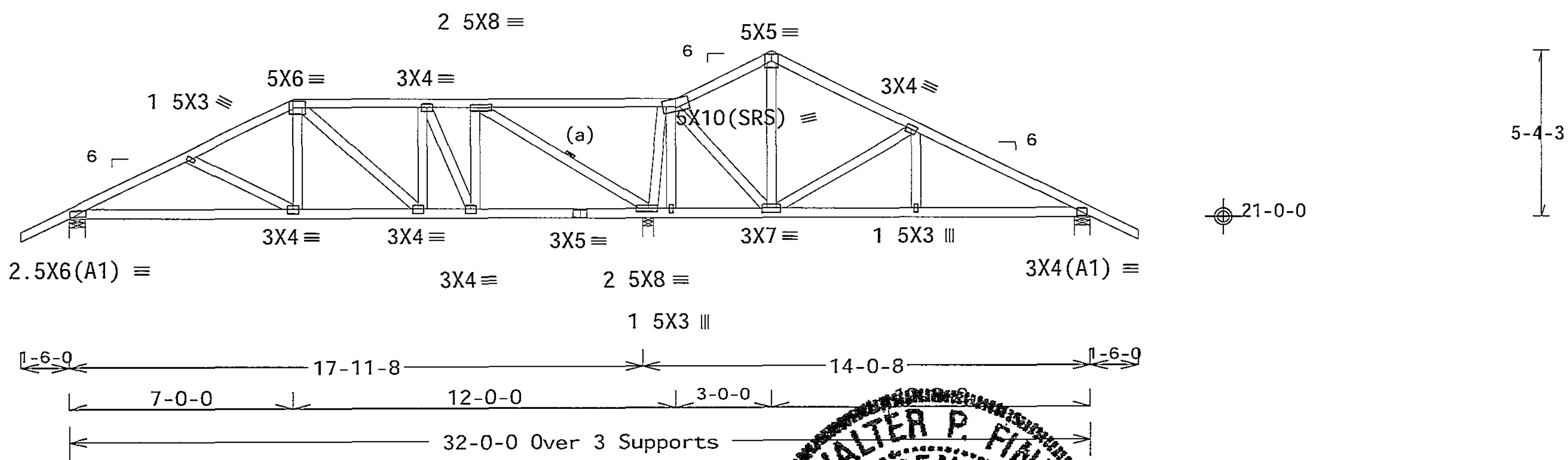

Design Crit FBC2010Res/TPI-2007(STD) FT/RT=10%(0%)/0(0)

PLT TYP Wave

FL/-/5/-/-/R/-

Scale =.1875"/Ft.

WARNING READ AND FOLLOW ALL NOTES ON THIS SHEET!
IMPORTANT FURNISH THIS DESIGN TO ALL CONTRACTORS INCLUDING INSTALLERS

Trusses require extreme care in fabricating, handling, shipping, installing and bracing. Refer to and follow the latest edition of BCSI (Building Component Safety Information by TPI and WTCA) for safety practices prior to performing these functions. Installers shall provide temporary bracing per BCSI. Unless noted otherwise, top chord shall have properly attached structural sheathing and bottom chord shall have a properly attached rigid ceiling. Locations shown for permanent lateral restraint of webs shall have bracing installed per BCSI sections B3, B7 or B10, as applicable.

ITW Building Components Group Inc. (ITWBCG) shall not be responsible for any deviation from this design, any failure to build the truss in conformance with ANSI/TPI 1, or for handling, shipping, installation & bracing of trusses. Apply plates to each face of truss and position as shown above and on the Joint Details, unless noted otherwise. Refer to drawings 160A-Z for standard plate positions. A seal on this drawing or cover page listing this drawing indicates acceptance of professional engineering responsibility solely for the design shown. The suitability and use of this design for any structure is the responsibility of the Building Designer per ANSI/TPI 1 Sec 2. For more information see this job's general notes page. ITW-BCG www itwbcg com TPI www tpinst org WTCA www sbcindustry com ICC www iccsafe org

ALPINE
ITW Building Components Group Inc.
Haines City, FL 33844
FL COA #0 278

WALTER P. FINN LICENSE No. 22839 STATE OF FLORIDA PROFESSIONAL ENGINEER
03/28/2013

TC LL	20 0 PSF	REF	R487-- 66637
TC DL	7.0 PSF	DATE	03/28/13
BC DL	10.0 PSF	DRW	HCUSR487 13087025
BC LL	0 0 PSF	HC-ENG	DF/DF
TOT.LD.	37.0 PSF	SEQN-	70814
DUR.FAC.	1.25		
SPACING	24.0"	JREF-	1UUX487_Z01

(13-106--Don Reed Construction Decker House -- Lake City, FL - H7C 21'7 8 Stepdown Hip Girder)

Top chord 2x4 SP_#1_12A
Bot chord 2x4 SP_#1_12A
Webs 2x4 SP_#3__12A

Lumber grades designated with '12A' use design values approved 1/5/2012 by ALSC

120 mph wind, 22 72 ft mean hgt, ASCE 7-10, CLOSED bldg, Located anywhere in roof, RISK CAT II, EXP B, wind TC DL=3 5 psf, wind BC DL=5 0 psf GCpi(+/-)=0 18

Wind loads and reactions based on MWFRS

In lieu of structural panels use purlins to brace all flat TC @ 24" OC

Bottom chord checked for 10 00 psf non-concurrent live load

Special loads
------(Lumber Dur Fac =1 25 / Plate Dur Fac =1 25)
TC- From 56 plf at -1 50 to 56 plf at 7 00
TC- From 28 plf at 7 00 to 28 plf at 14 63
TC- From 56 plf at 14 63 to 56 plf at 23 13
BC- From 4 plf at -1 50 to 4 plf at 0 00
BC- From 20 plf at 0 00 to 20 plf at 7 03
BC- From 10 plf at 7 03 to 10 plf at 10 00
BC- From 10 plf at 10 00 to 10 plf at 14 59
BC- From 20 plf at 14 59 to 20 plf at 21 63
BC- From 4 plf at 21 63 to 4 plf at 23 13
TC- 242 01 lb Conc Load at 7 03,14 59
TC- 167 95 lb Conc Load at 9 06,10 81,12 56
BC- 443 53 lb Conc Load at 7 03,14 59
BC- 126 35 lb Conc Load at 9 06,10 81,12 56

Deflection meets L/240 live and L/180 total load Creep increase factor for dead load is 1 50

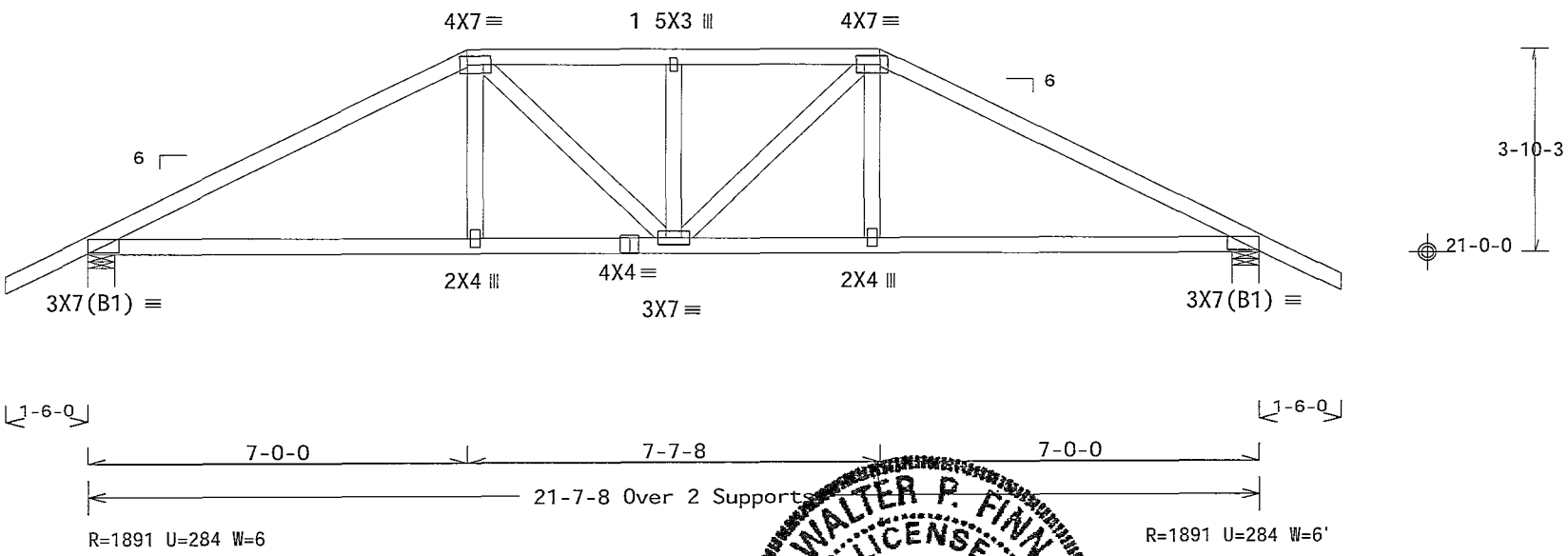

Design Crit FBC2010Res/TPI-2007(STD)
PLT TYP. Wave FT/RT=10%(0%)/0(0) 10.03.11 0209.19 QTY 1 FL/-/5/-/-/R/- Scale =.3125"/Ft.

WALTER P. FINN LICENSE No.22839 STATE OF FLORIDA PROFESSIONAL ENGINEER
03/28/2013

ALPINE
ITW Building Components Group Inc.
Haines City, FL 33844
FL COA #0 278

WARNING READ AND FOLLOW ALL NOTES ON THIS SHEET!
IMPORTANT FURNISH THIS DESIGN TO ALL CONTRACTORS INCLUDING INSTALLERS

Trusses requ re extreme care n fabricat ng handl ng shipp ng nstalling and bracing refer to and follow the latest ed t on of BCSI (Building Component Safety Information by TPI and WTCA) for safety practices prior to performing these funct ons Installers shall provide temporary bracing per BCSI. Unless noted otherw se top chord shall have properly attached structural sheath ng and bottom chord shall have a properly attached r g d ceiling Locations shown for permanent lateral restraint of webs shall have bracing nstalled per BCSI sect ons B3 B7 or B10 as applicable

ITW Build ng Components Group Inc (ITWBCG) shall not be respons ble for any dev ation from this design, any failure to bu ld the truss in conformance with ANSI/TPI 1 or for handling sh pping installation and brac ng of trusses Apply plates to each face of truss and posit on as shown above and on the Joint Details unless noted otherwise Refer to drawings 160A-Z for standard plate posit ons A seal on this drawing or cover page l st ng th s drawing ndicates acceptance of professional eng neering responsibility solely for the des gn shown The suitabil ty and use of this design for any structure is the responsib l ty of the Build ng Designer per ANSI/TPI 1 Sec 2 For more informat on see Th s job s general notes page ITW-BCG www itwbcg com TPI www tpinst org WTCA www sbcindustry com ICC www iccsafe org

TC LL	20.0 PSF	REF	R487-- 66638
TC DL	7 0 PSF	DATE	03/28/13
BC DL	10 0 PSF	DRW	HCUSR487 13087043
BC LL	0.0 PSF	HC-ENG	DF/DF
TOT LD.	37.0 PSF	SEQN-	60878
DUR.FAC.	1.25		
SPACING	24.0"	JREF-	1UUX487_Z01

(13-106--Don Reed Construction Decker House -- Lake City, FL - H7D 19 9 8 Common Girder)

THIS DWG PREPARED FROM COMPUTER INPUT (LOADS & DIMENSIONS) SUBMITTED BY TRUSS MFR

Top chord 2x4 SP_#1_12A
Bot chord 2x4 SP_#1_12A
Webs 2x4 SP_#3__12A

Lumber grades designated with "12A' use design values approved 1/5/2012 by ALSC

120 mph wind, 15 00 ft mean hgt, ASCE 7-10, CLOSED bldg, not located within 9 00 ft from roof edge, RISK CAT II, EXP B, wind TC DL=3 5 psf, wind BC DL=5 0 psf GCpi(+/-)=0 18

Wind loads and reactions based on MWFRS

In lieu of structural panels use purlins to brace all flat TC @ 24' OC

Bottom chord checked for 10 00 psf non-concurrent live load

Deflection meets L/240 live and L/180 total load Creep increase factor for dead load is 1 50

Special loads
------(Lumber Dur Fac =1 25 / Plate Dur Fac =1 25)
TC- From 57 plf at -1 50 to 57 plf at 3 02
TC- From 55 plf at 3 02 to 55 plf at 8 65
TC- From 55 plf at 8 65 to 55 plf at 11 14
TC- From 55 plf at 11 14 to 55 plf at 16 77
TC- From 57 plf at 16 77 to 57 plf at 21 29
BC- From 5 plf at -1 50 to 5 plf at 0 00
BC- From 20 plf at 0 00 to 20 plf at 10 00
BC- From 20 plf at 10 00 to 20 plf at 19 79
BC- From 5 plf at 19 79 to 5 plf at 21 29
TC- 186 13 lb Conc Load at 3 02
TC- 112 97 lb Conc Load at 5 62,14 17
TC- 166 76 lb Conc Load at 8 38,11 41
TC- 381 85 lb Conc Load at 8 67,11 00
TC- 171 85 lb Conc Load at 9 90
TC- 93 06 lb Conc Load at 16 77
BC- 117 32 lb Conc Load at 3 02
BC- 87 05 lb Conc Load at 5 62,14 17
BC- 124 73 lb Conc Load at 8 38,11 41
BC- 266 75 lb Conc Load at 8 67,11 00
BC- 128 35 lb Conc Load at 9 90
BC- 58 66 lb Conc Load at 16 77

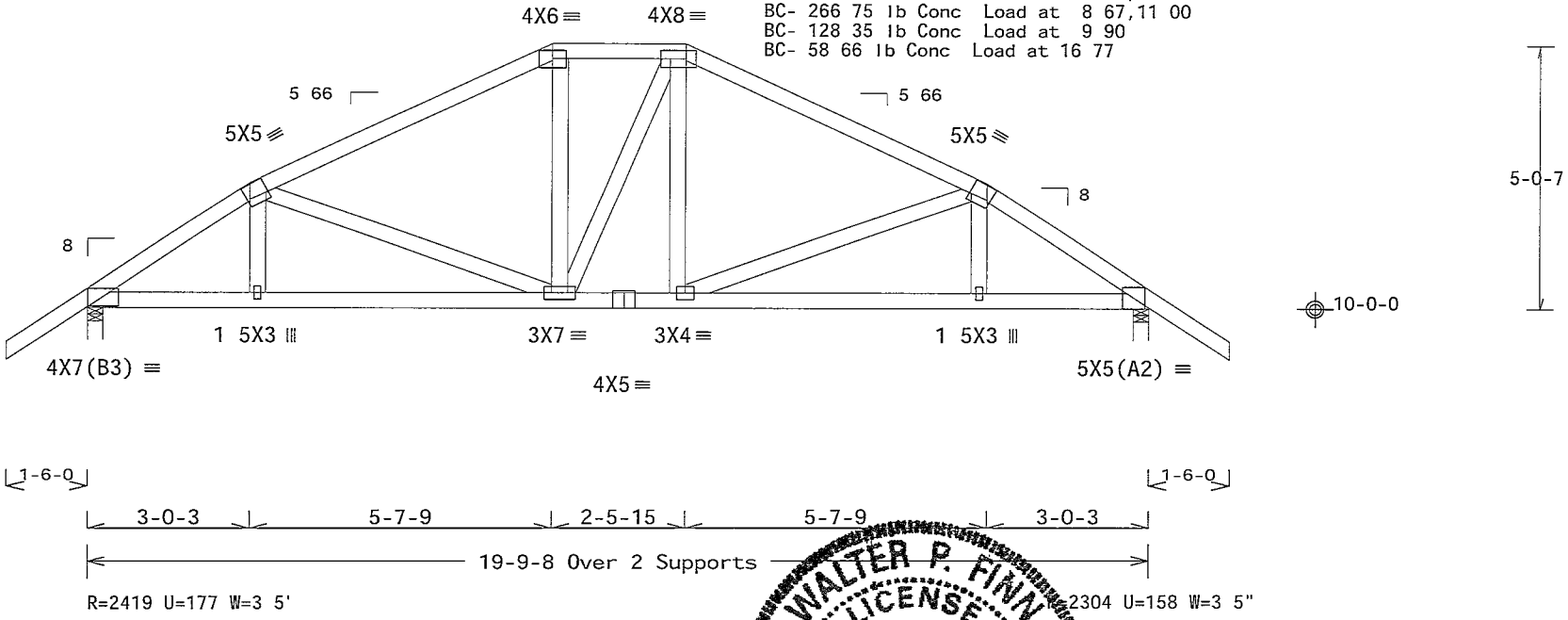

Design Crit FBC2010Res/TPI-2007(STD)
FT/RT=10%(0%)/0(0) 10.03.11.0209.19 QTY 2 FL/-/5/-/-/R/- Scale =.3125"/Ft.

PLT TYP. Wave

WALTER P. FINN LICENSE No.22839 STATE OF FLORIDA PROFESSIONAL ENGINEER
03/28/2013

ALPINE
ITW Building Components Group Inc.
Haines City, FL 33844
FL COA #0 278

WARNING READ AND FOLLOW ALL NOTES ON THIS SHEET!
IMPORTANT FURNISH THIS DESIGN TO ALL CONTRACTORS INCLUDING INSTALLERS

Trusses require extreme care in fabr cat ng handling sh pp ng install ng and brac ng Refer to and follow the latest edition of BCSI (Bu ld ng Component Safety Informat on by TPI and WTCA) for safety pract ces prior to perform ng these funct ons Installers shall prov de temporary brac ng per BCSI. Unless noted otherwise top chord shall have properly attached structural sheathing and bottom chord shall have a properly attached rigid ce l ng Locat ons shown for permanent lateral restra nt of webs shall have brac ng nstalled per BCSI sections B3 B7 or B10 as applicable

ITW Bu lding Components Group Inc (ITWBCG) shall not be responsible for any deviat on from th s design, any fa lure to bu ld the truss in conformance w th ANSI/TPI 1 or for handl ng shipp ng nstallat on brac ng of trusses Apply plates to each face of truss and pos t on as shown above and on the Joint Deta ls unless noted otherw se Refer to draw ngs 160A-Z for standard plate pos t ons A seal on th s drawing or cover page l st ng th s draw ng nd cates acceptance of profess onal eng neering respons bility solely for the design shown The suitabil ty and use of th s des gn for any structure is the responsibility of the Bu lding Des gner per ANSI/TPI 1 Sec 2 For more nformation see This job s general notes page ITW BCG www twbcg com TPI www tpinst org WTCA www sbc ndustry com ICC www iccsafe org

TC LL	20.0 PSF	REF	R487-- 66639
TC DL	7.0 PSF	DATE	03/28/13
BC DL	10.0 PSF	DRW	HCUSR487 13087077
BC LL	0.0 PSF	HC-ENG	DF/DF
TOT LD.	37.0 PSF	SEQN-	60915
DUR.FAC.	1.25		
SPACING	24.0"	JREF-	1UUX487_Z01

(13-106--Don Reed Construction Decker House -- Lake City, FL - H7F 16'3" Stepdown Hip Girder)

THIS DWG PREPARED FROM COMPUTER INPUT (LOADS & DIMENSIONS) SUBMITTED BY TRUSS MFR

Top chord 2x4 SP_#1_12A
Bot chord 2x4 SP_#1_12A
Webs 2x4 SP_#3__12A

Lumber grades designated with '12A" use design values approved 1/5/2012 by ALSC

120 mph wind, 22 72 ft mean hgt, ASCE 7-10, CLOSED bldg, Located anywhere in roof, RISK CAT II, EXP B, wind TC DL=3 5 psf, wind BC DL=5 0 psf GCpi(+/-)=0 18

Wind loads and reactions based on MWFRS

In lieu of structural panels use purlins to brace all flat TC @ 24' OC

Bottom chord checked for 10 00 psf non-concurrent live load

Special loads
------(Lumber Dur Fac =1 25 / Plate Dur Fac =1 25)
TC- From 56 plf at -1 50 to 56 plf at 7 00
TC- From 28 plf at 7 00 to 28 plf at 9 25
TC- From 56 plf at 9 25 to 56 plf at 17 75
BC- From 4 plf at -1 50 to 4 plf at 0 00
BC- From 20 plf at 0 00 to 20 plf at 7 29
BC- From 20 plf at 7 29 to 20 plf at 16 25
BC- From 4 plf at 16 25 to 4 plf at 17 75
TC- 242 01 lb Conc Load at 7 03
TC- 167 95 lb Conc Load at 8 13
TC- 223 63 lb Conc Load at 9 23
BC- 443 53 lb Conc Load at 7 03
BC- 126 35 lb Conc Load at 8 13
BC- 381 94 lb Conc Load at 9 23

Deflection meets L/240 live and L/180 total load Creep increase factor for dead load is 1 50

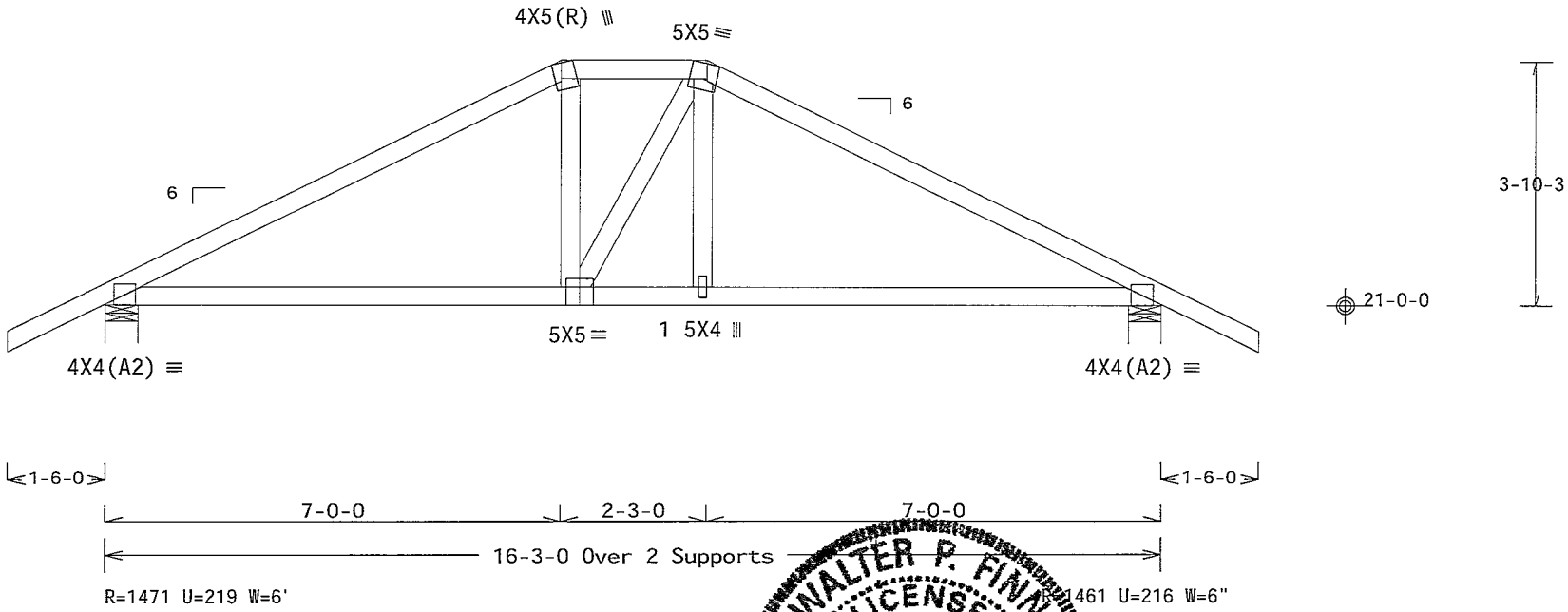

Design Crit FBC2010Res/TPI-2007(STD)
FT/RT=10%(0%)/0(0) 10.03.11.0209.19 QTY 1 FL/-/5/-/-/R/-

PLT TYP. Wave

Scale =.375"/Ft.

WALTER P. FINN LICENSE No.22839 STATE OF FLORIDA PROFESSIONAL ENGINEER
03/28/2013

ALPINE
ITW Building Components Group Inc.
Haines City, FL 33844
FL COA #0 278

WARNING READ AND FOLLOW ALL NOTES ON THIS SHEET!
IMPORTANT FURNISH THIS DESIGN TO ALL CONTRACTORS INCLUDING INSTALLERS

Trusses require extreme care in fabr cating hand ng sh pp ng install ng and brac ng refer to and follow the latest edition of BCSI (Bu ld ng Component Safety Informat on by TPI and WTCA) for safety pract ces prior to performing these functions Installers shall prov de temporary bracing per BCSI. Unless noted otherwise top chord shall have properly attached structural sheathing and bottom chord shall have a properly attached rig d ce l ng Locations shown for permanent lateral restra nt of webs shall have brac ng nstalled per BCSI sect ons B3 B7 or B10 as appl cable

ITW Building Components Group Inc (ITWBCG) shall not be respons ble for any dev at on from this design, any fa lure to bu ld the truss n conformance w th ANSI/TPI 1 or for handling shipping installation and brac ng of trusses Apply plates to each face of truss and pos tion as shown above and on the Joint Details unless noted otherw se Refer to drawings 160A-Z for standard plate posit ons A seal on this drawing or cover page I st ng th s draw ng nd cates acceptance of profess onal eng neer ng respons b l ty solely for the des gn shown The su tabil ty and use of th s design for any structure s the responsibility of the Bu ld ng Des gner per ANSI/TPI 1 Sec 2 For more nformat on see Th s job s general notes page ITW BCG www twbcg com TPI www tp nst org WTCA www sbc ndustry com ICC www iccsafe org

TC LL	20.0 PSF	REF	R487-- 66640
TC DL	7 0 PSF	DATE	03/28/13
BC DL	10 0 PSF	DRW	HCUSR487 13087053
BC LL	0 0 PSF	HC-ENG	DF/DF
TOT.LD.	37.0 PSF	SEQN-	60877
DUR FAC.	1.25		
SPACING	24.0"	JREF-	1UUX487_Z01

THIS DWG PREPARED FROM COMPUTER INPUT (LOADS & DIMENSIONS) SUBMITTED BY TRUSS MFR

(13-106--Don Reed Construction Decker House -- Lake City, FL - H9A 32' Stepdown Hip)

Top chord 2x4 SP_#1_12A
Bot chord 2x4 SP_#1_12A
Webs 2x4 SP_#3__12A

Lumber grades designated with '12A' use design values approved 1/5/2012 by ALSC

Left cantilever is exposed to wind

In lieu of structural panels use purlins to brace all flat TC @ 24' OC

Deflection meets L/240 live and L/180 total load Creep increase factor for dead load is 1 50

145 mph wind, 23 60 ft mean hgt, ASCE 7-10, CLOSED bldg, not located within 9 00 ft from roof edge, RISK CAT II, EXP B, wind TC DL=3 5 psf, wind BC DL=5 0 psf GCpi(+/-)=0 18

Wind loads and reactions based on MWFRS with additional C&C member design

(a) 1x4 #3SRB SPF-S or better T' brace 80% length of web member Attach with 8d Box or Gun (0 113"x2 5",min)nails @ 6" OC

Bottom chord checked for 10 00 psf non-concurrent live load

MWFRS loads based on trusses located at least 11 80 ft from roof edge

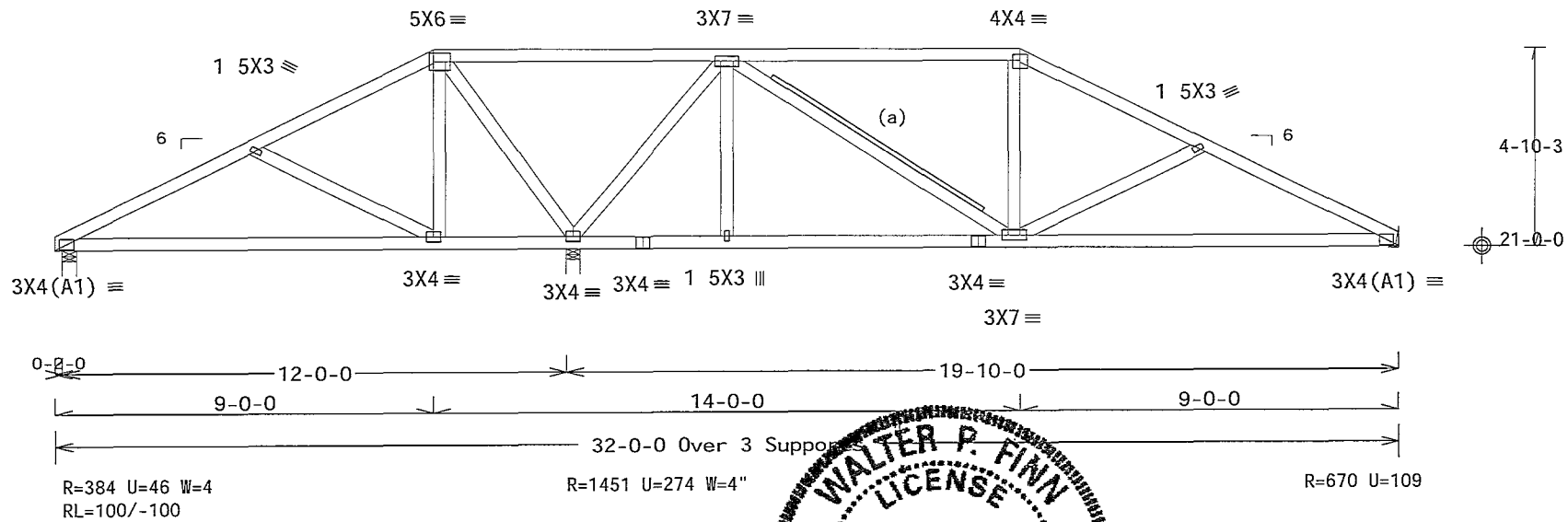

Design Crit. FBC2010Res/TPI-2007(STD)
FT/RT=10%(0%)/0(0)

PLT TYP Wave

10.03 11 0209.20 QTY 1

FL/-/5/-/-/R/-

Scale =.25"/Ft

WALTER P. FINN LICENSE No.22839 STATE OF FLORIDA PROFESSIONAL ENGINEER

03/28/2013

ALPINE
ITW Building Components Group Inc.
Haines City, FL 33844
FL COA #0 278

WARNING READ AND FOLLOW ALL NOTES ON THIS SHEET!
IMPORTANT FURNISH THIS DESIGN TO ALL CONTRACTORS INCLUDING INSTALLERS

Trusses require extreme care in fabr cat ng hand ng sh pp ng nstall ng and brac ng [illegible] follow the latest ed tion of BCSI (Bu ld ng Component Safety Informat on by TPI and WTCA) for safety practices pr or to performing these funct ons Installers shall provide temporary brac ng per [illegible] Unless noted otherw se top chord shall have properly attached structural sheath ng and bottom [illegible] shall have a properly attached rigid ce l ng Locations shown for permanent lateral restra nt of webs shall have brac ng installed per BCSI sections B3 B7 or B10 as appl cable

ITW Bu ld ng Components Group Inc (ITWBCG) shall not be responsible for any deviat on from th s design, any fa lure to bu ld the truss in conformance w th ANSI/TPI 1 or for handl ng shipp ng nstallat on or bracing of trusses Apply plates to each face of truss and pos t on as shown above and on the Jo nt Deta ls unless noted otherw se Refer to draw ngs 160A-Z for standard plate posit ons A seal on th s drawing or cover page l st ng th s draw ng nd cates acceptance of profess onal eng neer ng respons b lity solely for the des gn shown The su tabil ty and use of th s des gn for any structure is the respons bil ty of the Bu ld ng Des gner per ANSI/TPI 1 Sec 2 For more nformation see This job s general notes page ITW BCG www twbcg com TPI www tp nst org WTCA www sbc ndustry com ICC www iccsafe org

TC LL	20.0 PSF	REF	R487-- 66641
TC DL	7 0 PSF	DATE	03/28/13
BC DL	10.0 PSF	DRW	HCUSR487 13087019
BC LL	0.0 PSF	HC-ENG	DF/DF
TOT.LD	37 0 PSF	SEQN-	70765
DUR FAC	1 25		
SPACING	24 0"	JREF-	1UUX487_Z01

(13-106--Don Reed Construction Decker House -- Lake City, FL - H9A1 32' Stepdown Hip)

THIS DWG PREPARED FROM COMPUTER INPUT (LOADS & DIMENSIONS) SUBMITTED BY TRUSS MFR

Top chord 2x4 SP_#1_12A
Bot chord 2x4 SP_#1_12A
Webs 2x4 SP_#3__12A

Lumber grades designated with '12A' use design values approved 1/5/2012 by ALSC

In lieu of structural panels use purlins to brace all flat TC @ 24" OC

Deflection meets L/240 live and L/180 total load Creep increase factor for dead load is 1 50

120 mph wind, 23 22 ft mean hgt, ASCE 7-10, CLOSED bldg, not located within 9 00 ft from roof edge, RISK CAT II, EXP B, wind TC DL=3 5 psf, wind BC DL=5 0 psf GCpi(+/-)=0 18

Wind loads and reactions based on MWFRS with additional C&C member design

Bottom chord checked for 10 00 psf non-concurrent live load

MWFRS loads based on trusses located at least 11 61 ft from roof edge

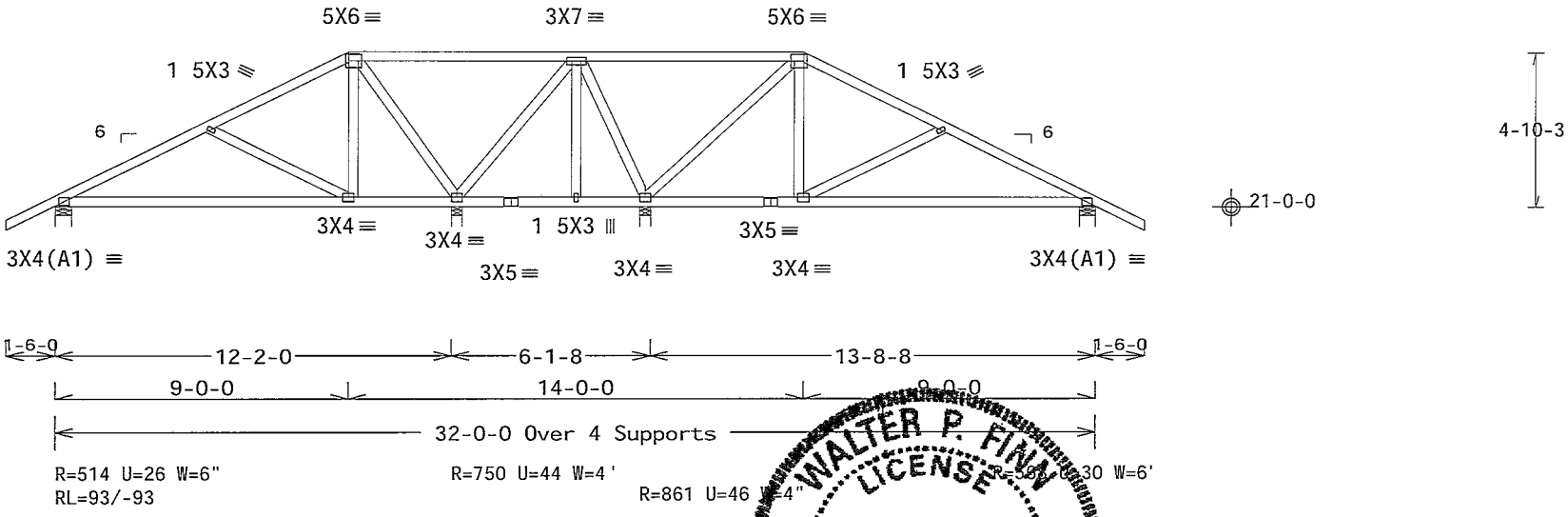

Design Crit FBC2010Res/TPI-2007(STD)
FT/RT=10%(0%)/0(0) ★16.03 11 0209.19 QTY 1

PLT TYP. Wave

FL/-/5/-/-/R/-

Scale =.1875"/Ft.

WALTER P. FINN LICENSE No.22839 STATE OF FLORIDA PROFESSIONAL ENGINEER
03/28/2013

ALPINE
ITW Building Components Group Inc.
Haines City, FL 33844
FL COA #0 278

WARNING READ AND FOLLOW ALL NOTES ON THIS SHEET!
IMPORTANT FURNISH THIS DESIGN TO ALL CONTRACTORS INCLUDING INSTALLERS

Trusses requ re extreme care n fabr cat ng hand ng sh pp ng nstall ng and brac ng Re [illegible] and follow the latest ed t on of BCSI (Bu ld ng Component Safety Informat on by TPI and WTCA) for [illegible] practices pr or to performing these funct ons Installers shall prov de temporary brac ng per [illegible] Unless noted otherw se top chord shall have properly attached structural sheath ng and bottom c[illegible] shall have a properly attached rigid ce l ng Locat ons shown for permanent lateral restra nt of [illegible] shall have brac ng installed per BCSI sect ons B3 B7 or B10 as appl cable

ITW Bu ld ng Components Group Inc (ITWBCG) shall not be respons ble for any deviat on from th s dos[illegible] any failure to build the truss in conformance w th ANSI/TPI 1 or for handl ng sh pp ng nstallat on [illegible] brac ng of trusses Apply plates to each face of truss and pos t on as shown above and on the Jo nt Deta ls unless noted otherw se Refer to draw ngs 160A-Z for standard plate pos tions A seal on th s draw ng or cover page list ng this draw ng ndicates acceptance of profess ona eng neer ng respons b l ty solely for the des gn shown The su tab l ty and use of th s des gn for any structure s the respons b lity of the Bu ld ng Des gner per ANSI/TPI 1 Sec 2 For more nformation see This job s general notes page ITW BCG www twbcg com TPI www tpinst org WTCA www sbc ndustry com ICC www ccsafe org

TC LL	20 0 PSF	REF	R487-- 66642
TC DL	7 0 PSF	DATE	03/28/13
BC DL	10 0 PSF	DRW	HCUSR487 13087012
BC LL	0 0 PSF	HC-ENG	DF/DF
TOT LD	37 0 PSF	SEQN-	60807
DUR FAC	1 25		
SPACING	24 0"	JREF-	1UUX487_Z01

THIS DWG PREPARED FROM COMPUTER INPUT (LOADS & DIMENSIONS) SUBMITTED BY TRUSS MFR

(13-106--Don Reed Construction Decker House -- Lake City, FL - H9C 21'7"8 Stepdown Hip)

Top chord 2x4 SP_#1_12A
Bot chord 2x4 SP_#1_12A
Webs 2x4 SP_#3__12A

Lumber grades designated with 12A use design values approved 1/5/2012 by ALSC

In lieu of structural panels use purlins to brace all flat TC @ 24" OC

Deflection meets L/240 live and L/180 total load Creep increase factor for dead load is 1 50

120 mph wind, 23 48 ft mean hgt, ASCE 7-10, CLOSED bldg, not located within 9 00 ft from roof edge, RISK CAT II, EXP B, wind TC DL=3 5 psf, wind BC DL=5 0 psf GCpi(+/-)=0 18

Wind loads and reactions based on MWFRS with additional C&C member design

Bottom chord checked for 10 00 psf non-concurrent live load

MWFRS loads based on trusses located at least 23 48 ft from roof edge

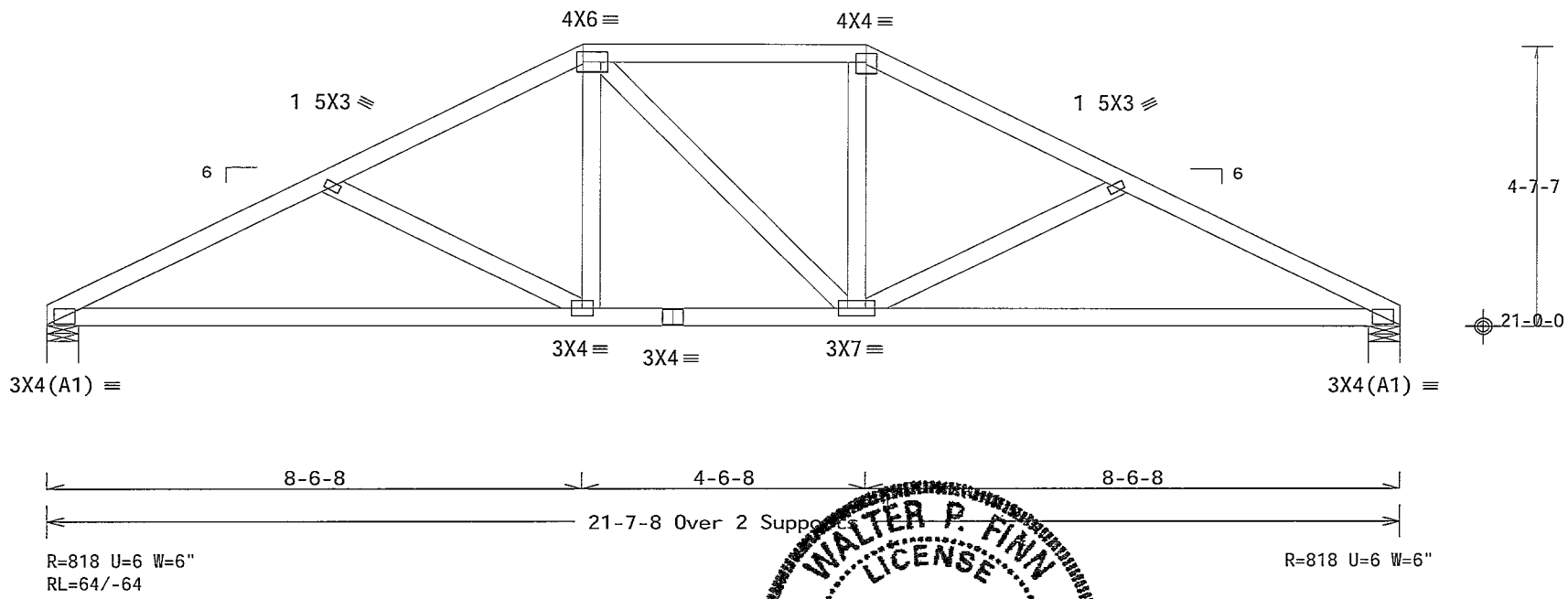

Design Crit FBC2010Res/TPI-2007(STD)
FT/RT=10%(0%)/0(0) ★10 03 11 0209 19 OTY★

PLT TYP Wave

FL/-/5/-/-/R/- Scale = 375"/Ft

ALPINE
ITW Building Components Group Inc.
Haines City, FL 33844
FL COA #0 278

WARNING READ AND FOLLOW ALL NOTES ON THIS SHEET!
IMPORTANT FURNISH THIS DESIGN TO ALL CONTRACTORS INCLUDING INSTALLERS

Trusses requ re extreme care in fabricat ng handl ng sh pp ng nstall ng and brac ng [illegible] follow the latest ed t on of BCSI (Bu ld ng Component Safety Informat on by TPI and WTCA) fo[illegible] pract ces pr or to performing these funct ons Installers shall prov de temporary brac ng per [illegible] Unless noted otherw se top chord shall have properly attached structural sheath ng and bottom [illegible] shall have a properly attached rigid ce l ng Locat ons shown for permanent lateral restra nt o[illegible] shall have brac ng installed per BCSI sections B3 B7 or B10 as applicable

ITW Bu ld ng Components Group Inc (ITWBCG) shall not be respons ble for any dev at on from th s dr[illegible] any fa lure to build the truss in conformance w th ANSI/TPI 1 or for handl ng sh pp ng nstallat on [illegible] brac ng of trusses Apply plates to each face of truss and pos t on as shown above and on the Joint Deta ls unless noted otherw se Refer to draw ngs 160A-Z for standard plate posit ons A seal on th s draw ng or cover page listing this draw ng nd cates acceptance of profess ona eng neer ng respons bil ty solely for the design shown The su tab l ty and use of this des gn for any structure s the respons bility of the Bu ld ng Des gner per ANSI/TPI 1 Sec 2 For more nformat on see This job s general notes page ITW BCG www itwbcg com TPI www tpinst org WTCA www sbc ndustry com ICC www ccsafe org

WALTER P. FINN
LICENSE
No.22839
STATE OF FLORIDA
PROFESSIONAL ENGINEER
03/28/2013

TC LL	20 0 PSF	REF	R487-- 66643
TC DL	7 0 PSF	DATE	03/28/13
BC DL	10.0 PSF	DRW	HCUSR487 13087042
BC LL	0 0 PSF	HC-ENG	DF/DF
TOT LD	37 0 PSF	SEQN-	60824
DUR FAC	1 25		
SPACING	24 0"	JREF-	1UUX487_Z01

THIS DWG PREPARED FROM COMPUTER INPUT (LOADS & DIMENSIONS) SUBMITTED BY TRUSS MFR

(13-106--Don Reed Construction Decker House -- Lake City, FL - H9D 19'9 8 Common)

Top chord 2x4 SP_#1_12A
Bot chord 2x4 SP_#1_12A
Webs 2x4 SP_#3__12A

Lumber grades designated with '12A' use design values approved 1/5/2012 by ALSC

Truss passed check for 20 psf additional bottom chord live load in areas with 42'-high x 24'-wide clearance

MWFRS loads based on trusses located at least 7 50 ft from roof edge

120 mph wind, 15 00 ft mean hgt, ASCE 7-10, CLOSED bldg, not located within 9 00 ft from roof edge, RISK CAT II, EXP B, wind TC DL=3 5 psf, wind BC DL=5 0 psf GCpi(+/-)=0 18

Wind loads and reactions based on MWFRS with additional C&C member design

Bottom chord checked for 10 00 psf non-concurrent live load

Deflection meets L/240 live and L/180 total load Creep increase factor for dead load is 1 50

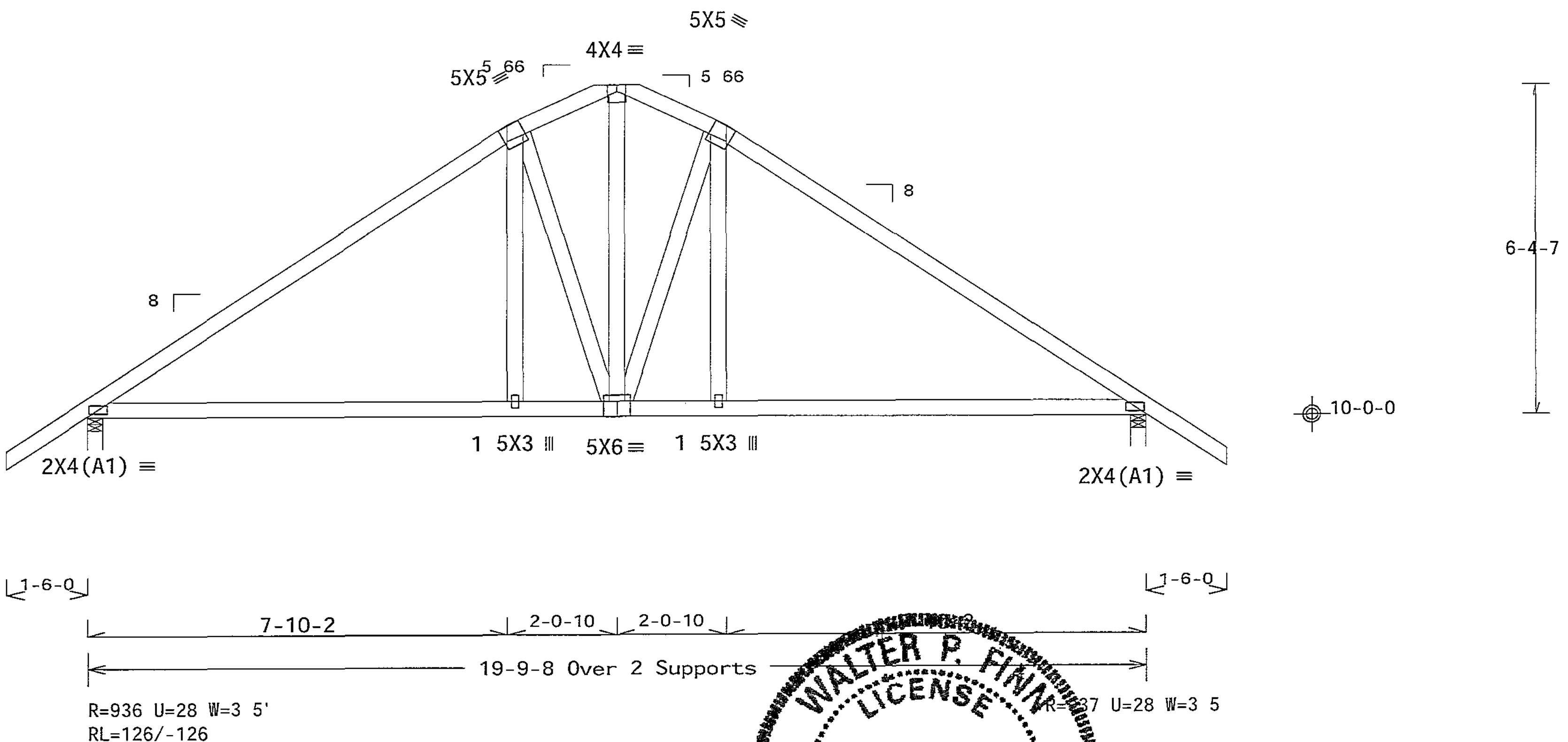

Design Crit FBC2010Res/TPI-2007(STD)
FT/RT=10%(0%)/0(0)

PLT TYP Wave

03 11.0289.19 QTY

FL/-/5/-/-/R/-

Scale =.3125"/Ft

TC LL	20 0 PSF	REF	R487-- 66644
TC DL	7 0 PSF	DATE	03/28/13
BC DL	10 0 PSF	DRW	HCUSR487 13087073
BC LL	0.0 PSF	HC-ENG	DF/DF
TOT LD.	37.0 PSF	SEQN-	60863
DUR FAC.	1 25		
SPACING	24 0"	JREF-	1UUX487_Z01

WARNING READ AND FOLLOW ALL NOTES ON THIS SHEET!
IMPORTANT FURNISH THIS DESIGN TO ALL CONTRACTORS INCLUDING INSTALLERS

Trusses require extreme care in fabr cating handling sh pp ng install ng and brac ng Refer to and follow the latest edit on of BCSI (Bu ld ng Component Safety Informat on by TPI and WTCA) for safety pract ces prior to perform ng these funct ons Installers shall prov de temporary brac ng per BCSI Unless noted otherwise top chord shall have properly attached structural sheathing and bottom chord shall have a properly attached rig d ce l ng Locat ons shown for permanent lateral restra nt of webs shall have brac ng nstalled per BCSI sect ons B3 B7 or B10 as appl cable

ITW Bu lding Components Group Inc (ITWBCG) shall not be responsible for any deviat on from th s design any fa lure to bu ld the truss in conformance w th ANSI/TPI 1 or for handl ng sh pp ng nstallat on & brac ng of trusses Apply plates to each face of truss and pos t on as shown above and on the Jo nt Deta ls unless noted otherw se Refer to draw ngs 160A-Z for standard plate pos t ons A seal on th s draw ng or cover page l st ng this draw ng nd cates acceptance of profess onal eng neer ng respons b l ty solely for the des gn shown The su tab l ty and use of th s des gn for any structure s the responsibility of the Bu lding Des gner per ANSI/TPI 1 Sec 2 For more nformat on see This job s general notes page ITW BCG www twbcg com TPI www tp nst org WTCA www sbc ndustry com ICC www iccsafe org

ALPINE
ITW Building Components Group Inc.
Haines City, FL 33844
FL COA #0 278

WALTER P. FINN
LICENSE
No. 22839
STATE OF FLORIDA
PROFESSIONAL ENGINEER
03/28/2013

THIS DWG PREPARED FROM COMPUTER INPUT (LOADS & DIMENSIONS) SUBMITTED BY TRUSS MFR

(13-106--Don Reed Construction Decker House -- Lake City, FL - HDG 12'4' Gable)

Top chord 2x4 SP_#1_12A
Bot chord 2x4 SP_#1_12A
Webs 2x4 SP_#3__12A
Stack Chord SC1 2x4 SP_#1_12A Stack Chord SC2 2x4 SP_#1_12A

Lumber grades designated with '12A" use design values approved 1/5/2012 by ALSC

Stacked top chord must NOT be notched or cut in area (NNL) Dropped top chord braced at 24 o c intervals Attach stacked top chord (SC) to dropped top chord in notchable area using 3x4 tie-plates 24' o c Center plate on stacked/dropped chord interface, plate length perpendicular to chord length Splice top chord in notchable area using 3x6

Deflection meets L/240 live and L/180 total load Creep increase factor for dead load is 1 50

120 mph wind, 22 35 ft mean hgt, ASCE 7-10, CLOSED bldg, Located anywhere in roof, RISK CAT II, EXP B, wind TC DL=3 5 psf, wind BC DL=5 0 psf GCpi(+/-)=0 18

Wind loads and reactions based on MWFRS with additional C&C member design

See DWGS A12030ENC100212, GBLLETIN0212, & GABRST100212 for more requirements

In lieu of structural panels use purlins to brace TC @ 24" OC

Bottom chord checked for 10 00 psf non-concurrent live load

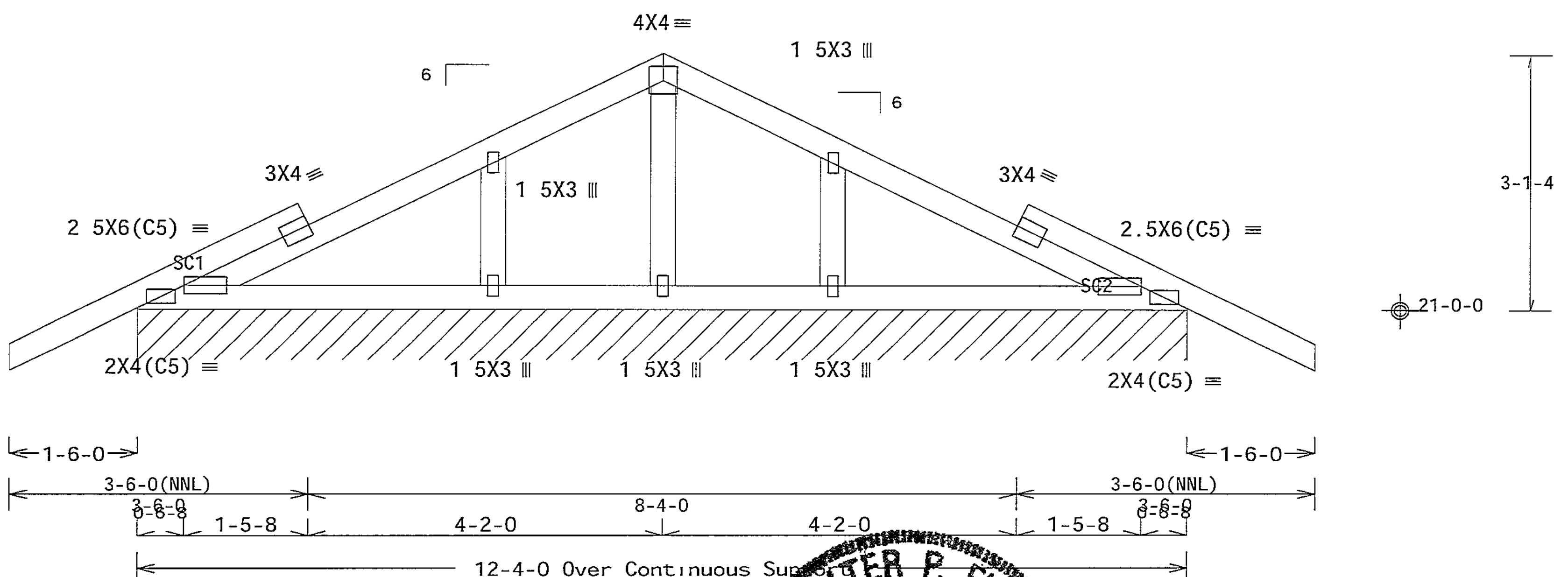

R=167 PLF U=12 PLF W=12-4-0
RL=6/-6 PLF

PLT TYP. Wave

Design Crit FBC2010Res/TPI-2007(STD)
FT/RT=10%(0%)/0(0) 10 03 11 0209 21 QTY 1 FL/-/5/-/-/R/- Scale =.5"/Ft.

ALPINE
ITW Building Components Group Inc.
Haines City, FL 33844
FL COA #0 278

WARNING READ AND FOLLOW ALL NOTES ON THIS SHEET!
IMPORTANT FURNISH THIS DESIGN TO ALL CONTRACTORS INCLUDING INSTALLERS

Trusses require extreme care in fabricating, handling, shipping, installing and bracing. Refer to and follow the latest edition of BCSI (Building Component Safety Information, by TPI and WTCA) for safety practices prior to performing these functions. Installers shall provide temporary bracing per BCSI. Unless noted otherwise, top chord shall have properly attached structural sheathing and bottom chord shall have a properly attached rigid ceiling. Locations shown for permanent lateral restraint of webs shall have bracing installed per BCSI sections B3, B7 or B10, as applicable.

ITW Building Components Group Inc. (ITWBCG) shall not be responsible for any deviation from this design, any failure to build the truss in conformance with ANSI/TPI 1, or for handling, shipping, installation or bracing of trusses. Apply plates to each face of truss and position as shown above and on the Joint Details, unless noted otherwise. Refer to drawings 160A-Z for standard plate positions. A seal on this drawing or cover page listing this drawing indicates acceptance of professional engineering responsibility solely for the design shown. The suitability and use of this design for any structure is the responsibility of the Building Designer per ANSI/TPI 1 Sec 2. For more information see this job's general notes page. ITW BCG www twbcg com TPI www tpinst org WTCA www sbcindustry com ICC www iccsafe org

WALTER P. FINN LICENSE No. 22839 STATE OF FLORIDA PROFESSIONAL ENGINEER
03/28/2013

TC LL	20 0 PSF	REF	R487-- 66645
TC DL	7 0 PSF	DATE	03/28/13
BC DL	10 0 PSF	DRW	HCUSR487 13087056
BC LL	0 0 PSF	HC-ENG	DF/DF
TOT LD	37.0 PSF	SEQN-	297827
DUR.FAC	1 25		
SPACING	24 0"	JREF-	1UUX487_Z01

THIS DWG PREPARED FROM COMPUTER INPUT (LOADS & DIMENSIONS) SUBMITTED BY TRUSS MFR

(13-106--Don Reed Construction Decker House -- Lake City, FL - HJ10 7'6 15 Hip Jack Girder)

Top chord 2x4 SP_#1_12A
Bot chord 2x4 SP_#1_12A

Lumber grades designated with 12A use design values approved 1/5/2012 by ALSC

120 mph wind, 15 00 ft mean hgt, ASCE 7-10, CLOSED bldg, Located anywhere in roof, RISK CAT II, EXP B, wind TC DL=3 5 psf, wind BC DL=5 0 psf GCpi(+/-)=0 18

Bottom chord checked for 10 00 psf non-concurrent live load

Provide (2) 16d common nails(0 162'x3 5"), toe nailed at Top chord
Provide (2) 16d common nails(0 162"x3 5'), toe nailed at Bot chord

Special loads
------(Lumber Dur Fac =1 25 / Plate Dur Fac =1 25)
TC- From 56 plf at -1 62 to 56 plf at 7 58
BC- From 5 plf at -1 62 to 5 plf at 0 00
BC- From 20 plf at 0 00 to 20 plf at 7 58
TC- 75 16 lb Conc Load at 2 69
BC- 79 61 lb Conc Load at 2 69

Wind loads and reactions based on MWFRS

Deflection meets L/240 live and L/180 total load Creep increase factor for dead load is 1 50

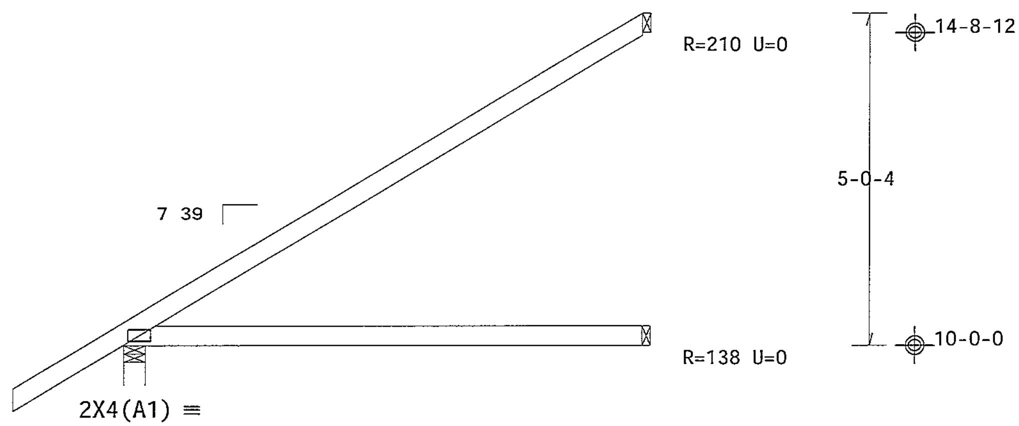

1-7-8

7-6-15 Over 3 Supports

R=509 U=9 W=3 788

PLT TYP Wave

Design Crit FBC2010Res/TPI-2007(STD)
FT/RT=10%(0%)/0(0)

★0 03 11 0269 79 QTY:★

FL/-/5/-/-/R/-

Scale =.375"/Ft.

TC LL	20 0 PSF	REF	R487-- 66646
TC DL	7.0 PSF	DATE	03/28/13
BC DL	10.0 PSF	DRW	HCUSR487 13087076
BC LL	0.0 PSF	HC-ENG	DF/DF
TOT.LD.	37.0 PSF	SEQN-	60902
DUR.FAC.	1.25		
SPACING	24.0"	JREF-	1UUX487_Z01

WALTER P. FINN LICENSE No.22839 STATE OF FLORIDA PROFESSIONAL ENGINEER

03/28/2013

WARNING READ AND FOLLOW ALL NOTES ON THIS SHEET!
IMPORTANT FURNISH THIS DESIGN TO ALL CONTRACTORS INCLUDING INSTALLERS

Trusses requ re extreme care n fabricat ng handl ng shipp ng nstall ng and brac ng Refer to and follow the latest ed t on of BCSI (Building Component Safety Information by TPI and WTCA) for safety practices pr or to performing these funct ons Installers shall provide temporary brac ng per BCSI Unless noted otherw se top chord shall have properly attached structural sheath ng and bottom chord shall have a properly attached r g d ceil ng Locations shown for permanent lateral restra nt of webs shall have brac ng installed per BCSI sections B3 B7 or B10 as applicable

ITW Bu ld ng Components Group Inc (ITWBCG) shall not be responsible for any deviat on from th s design any failure to build the truss in conformance w th ANSI/TPI 1 or for handl ng sh pp ng nstallat on & brac ng of trusses Apply plates to each face of truss and pos t on as shown above and on the Joint Deta ls unless noted otherwise Refer to draw ngs 160A-Z for standard plate pos tions A seal on th s draw ng or cover page listing this draw ng ndicates acceptance of profess onal engineer ng responsib l ty solely for the design shown The su tab lity and use of this des gn for any structure s the respons bility of the Bu lding Des gner per ANSI/TPI 1 Sec 2 For more nformat on see This job s general notes page ITW BCG www twbcg com TPI www tp nst org WTCA www sbc ndustry com ICC www ccsafe org

ALPINE
ITW Building Components Group Inc.
Haines City, FL 33844
FL COA #0 278

(13-106--Don Reed Construction Decker House -- Lake City, FL - HJ2 4'6'7 Hip Jack Girder)

Top chord 2x4 SP_#1_12A
Bot chord 2x4 SP_#1_12A

Lumber grades designated with 12A use design values approved 1/5/2012 by ALSC

120 mph wind, 21 75 ft mean hgt, ASCE 7-10, CLOSED bldg, Located anywhere in roof, RISK CAT II, EXP B, wind TC DL=3 5 psf, wind BC DL=5 0 psf GCpi(+/-)=0 18

Wind loads and reactions based on MWFRS

Provide (2) 16d common nails(0 162'x3 5'), toe nailed at Top chord
Provide (2) 16d common nails(0 162"x3 5"), toe nailed at Bot chord

Special loads
------(Lumber Dur Fac =1 25 / Plate Dur Fac =1 25)
TC- From 0 plf at -2 12 to 55 plf at 0 00
TC- From 2 plf at 0 00 to 2 plf at 4 54
BC- From 0 plf at -2 12 to 4 plf at 0 00
BC- From 2 plf at 0 00 to 2 plf at 4 54
TC- -31 37 lb Conc Load at 1 48
BC- 14 23 lb Conc Load at 1 48

Bottom chord checked for 10 00 psf non-concurrent live load

Deflection meets L/240 live and L/180 total load Creep increase factor for dead load is 1 50

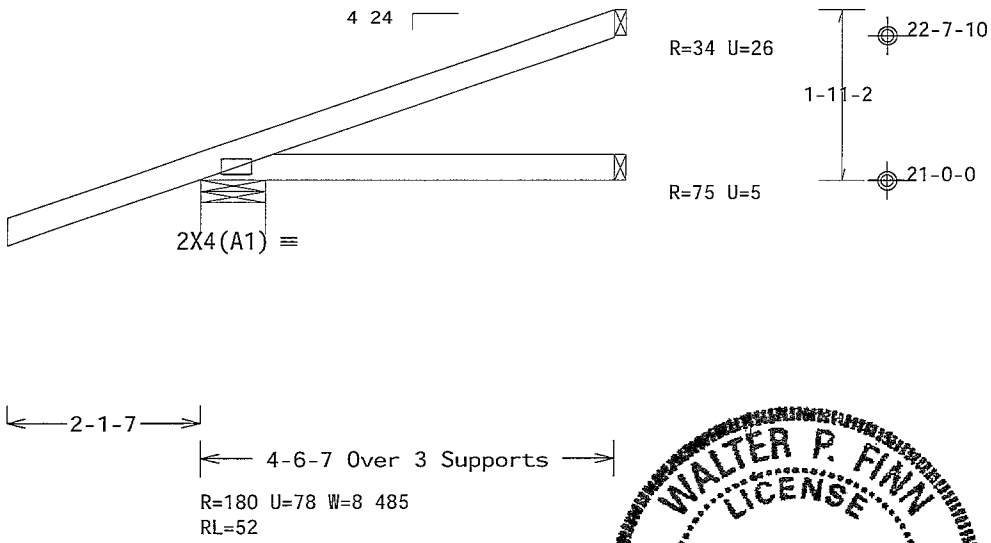

Design Crit FBC2010Res/TPI-2007(STD)
FT/RT=10%(0%)/0(0)

PLT TYP. Wave

FL/-/5/-/-/R/-

Scale =.5"/Ft.

TC LL	20.0 PSF	REF	R487-- 66647
TC DL	7.0 PSF	DATE	03/28/13
BC DL	10.0 PSF	DRW	HCUSR487 13087006
BC LL	0.0 PSF	HC-ENG	DF/DF
TOT.LD.	37.0 PSF	SEQN-	70763
DUR.FAC.	1.25		
SPACING	24.0"	JREF-	1UUX487_Z01

ALPINE
ITW Building Components Group Inc.
Haines City, FL 33844
FL COA #0 278

WARNING READ AND FOLLOW ALL NOTES ON THIS SHEET!
IMPORTANT FURNISH THIS DESIGN TO ALL CONTRACTORS INCLUDING INSTALLERS

Trusses requ re extreme care n fabricat ng handl ng shipp ng nstall ng and bracing Re follow the latest ed t on of BCSI (Build ng Component Safety Information by TPI and WTCA) for practices pr or to performing these funct ons Installers shall provide temporary bracing per B Unless noted otherw se top chord shall have properly attached structural sheath ng and bottom ch shall have a properly attached r gid ceiling Locations shown for permanent lateral restraint of shall have bracing installed per BCSI sections B3 B7 or B10 as applicable

ITW Bu ld ng Components Group Inc (ITWBCG) shall not be respons ble for any deviat on from this desi any failure to build the truss in conformance w th ANSI/TPI 1 or for handl ng sh pping nstallat on & brac ng of trusses Apply plates to each face of truss and pos t on as shown above and on the Joint Deta ls unless noted otherwise Refer to drawings 160A-Z for standard plate pos tions A seal on th s draw ng or cover page l sting this drawing ind cates acceptance of profess onal engineering respons b l ty solely for the design shown The su tability and use of this des gn for any structure is the responsibility of the Bu lding Des gner per ANSI/TPI 1 Sec 2 For more information see This job s general notes page ITW BCG www itwbcg com TPI www tpinst org WTCA www sbc ndustry com ICC www iccsafe org

WALTER P. FINN
LICENSE
No.22839
STATE OF FLORIDA
PROFESSIONAL ENGINEER
03/28/2013

THIS DWG PREPARED FROM COMPUTER INPUT (LOADS & DIMENSIONS) SUBMITTED BY TRUSS MFR

(13-106--Don Reed Construction Decker House -- Lake City, FL - HJ4 3'3'3 Hip Jack Girder)

Top chord 2x4 SP_#1_12A
Bot chord 2x4 SP_#1_12A

Lumber grades designated with 12A use design values approved 1/5/2012 by ALSC

Bottom chord checked for 10 00 psf non-concurrent live load

Provide (2) 16d common nails(0 162 x3 5), toe nailed at Top chord
Provide (2) 16d common nails(0 162 x3 5") toe nailed at Bot chord

120 mph wind, 15 00 ft mean hgt, ASCE 7-10, CLOSED bldg, Located anywhere in roof RISK CAT II, EXP B, wind TC DL=3 5 psf, wind BC DL=5 0 psf GCpi(+/-)=0 18

Wind loads and reactions based on MWFRS with additional C&C member design

Deflection meets L/240 live and L/180 total load Creep increase factor for dead load is 1 50

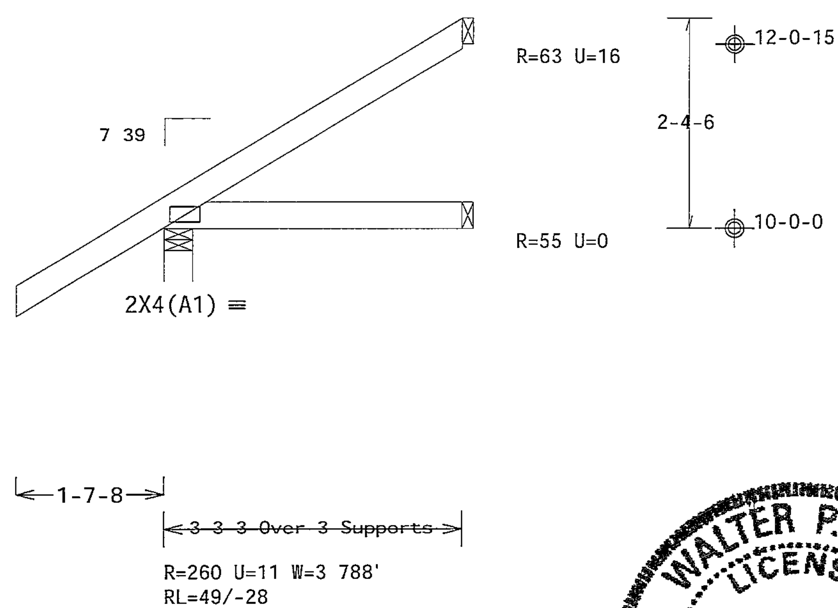

Design Crit FBC2010Res/TPI-2007(ST) FT/RT=10%(0%)/0(0) 10.03.11.0309.19

PLT TYP Wave

FL/-/5/-/-/R/- Scale =.5"/Ft.

ALPINE
ITW Building Components Group Inc.
Hanes City, FL 33844
FL COA #0 278

WARNING READ AND FOLLOW ALL NOTES ON THIS SHEET!
IMPORTANT FURNISH THIS DESIGN TO ALL CONTRACTORS INCLUDING INSTALLERS

Trusses require extreme care in fabricating, handling, shipping, installing and bracing. Refer to and follow the latest edition of BCSI (Building Component Safety Information, by TPI and WTCA) for safety practices prior to performing these functions. Installers shall provide temporary bracing per BCSI. Unless noted otherwise, top chord shall have properly attached structural sheathing and bottom chord shall have a properly attached rigid ceiling. Locations shown for permanent lateral restraint of webs shall have bracing installed per BCSI sections B3, B7 or B10, as applicable.

ITW Building Components Group Inc. (ITWBCG) shall not be responsible for any deviation from this design, any failure to build the truss in conformance with ANSI/TPI 1, or for handling, shipping, installation & bracing of trusses. Apply plates to each face of truss and position as shown above and on the Joint Details, unless noted otherwise. Refer to drawings 160A-Z for standard plate positions. A seal on this drawing or cover page listing this drawing indicates acceptance of professional engineering responsibility solely for the design shown. The suitability and use of this design for any structure is the responsibility of the Building Designer per ANSI/TPI 1 Sec 2. For more information see This job's general notes page. ITW-BCG www.itwbcg.com TPI www.tpinst.org WTCA www.sbcindustry.com ICC www.iccsafe.org

WALTER P. FINN LICENSE No. 22839 STATE OF FLORIDA PROFESSIONAL ENGINEER
03/28/2013

TC LL	20.0	PSF
TC DL	7 0	PSF
BC DL	10.0	PSF
BC LL	0.0	PSF
TOT LD	37.0	PSF
DUR FAC.	1 25	
SPACING	24.0"	

REF	R487-- 66648
DATE	03/28/13
DRW	HCUSR487 13087084
HC-ENG	DF/DF
SEQN-	60917
JREF-	1UUX487_Z01

(13-106--Don Reed Construction Decker House -- Lake City, FL - HJ4 3'3"3 Hip Jack Girder)

Top chord 2x4 SP_#1_12A
Bot chord 2x4 SP_#1_12A

Lumber grades designated with 12A use design values approved 1/5/2012 by ALSC

120 mph wind, 15 00 ft mean hgt, ASCE 7-10, CLOSED bldg, Located anywhere in roof, RISK CAT II, EXP B, wind TC DL=3 5 psf, wind BC DL=5 0 psf GCpi(+/-)=0 18

Bottom chord checked for 10 00 psf non-concurrent live load

Provide (2) 16d common nails(0 162'x3 5), toe nailed at Top chord
Provide (2) 16d common nails(0 162'x3 5'), toe nailed at Bot chord

Special loads
------(Lumber Dur Fac =1 25 / Plate Dur Fac =1 25)
TC- From 56 plf at -1 62 to 56 plf at 3 27
BC- From 5 plf at -1 62 to 5 plf at 0 00
BC- From 20 plf at 0 00 to 20 plf at 3 27
TC- 37 58 lb Conc Load at 2 69
BC- 39 80 lb Conc Load at 2 69

Wind loads and reactions based on MWFRS

Deflection meets L/240 live and L/180 total load Creep increase factor for dead load is 1 50

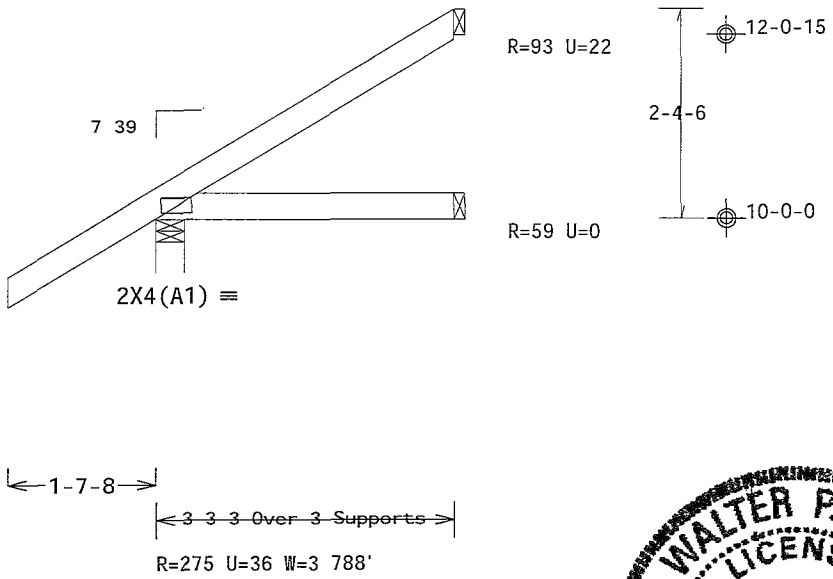

Design Crit FBC2010Res/TPI-2007(STD)
FT/RT=10%(0%)/0(0)

PLT TYP. Wave

FL/-/5/-/-/R/- Scale =.5"/Ft.

TC LL	20 0 PSF	REF	R487-- 66649
TC DL	7.0 PSF	DATE	03/28/13
BC DL	10 0 PSF	DRW	HCUSR487 13087081
BC LL	0.0 PSF	HC-ENG	DF/DF
TOT.LD.	37 0 PSF	SEQN-	60916
DUR FAC	1 25		
SPACING	24.0"	JREF-	1UUX487_Z01

ALPINE
ITW Building Components Group Inc.
Haines City FL 33844
FL COA #0 278

WARNING READ AND FOLLOW ALL NOTES ON THIS SHEET!
IMPORTANT FURNISH THIS DESIGN TO ALL CONTRACTORS INCLUDING INSTALLERS

Trusses require extreme care in fabr cat ng handl ng sh pping install ng and brac ng Refer to and follow the latest edition of BCSI (Bu ld ng Component Safety Informat on by TPI and WTCA) for pract ces pr or to perform ng these funct ons Installers shall prov de temporary brac ng per BCSI. Unless noted otherw se top chord shall have properly attached structural sheathing and bottom chord shall have a properly attached rigid ce l ng Locat ons shown for permanent lateral restra nt of webs shall have brac ng nstalled per BCSI sect ons B3 B7 or B10 as appl cable

ITW Bu ld ng Components Group Inc (ITWBCG) shall not be responsible for any deviat on from th s design, any failure to build the truss in conformance w th ANSI/TPI 1 or for handl ng sh pp ng nstallat on & brac ng of trusses Apply plates to each face of truss and pos t on as shown above and on the Joint Deta ls unless noted otherwise Refer to draw ngs 160A-Z for standard plate pos tions A seal on this draw ng or cover page listing this draw ng indicates acceptance of professional engineer ng respons b l ty solely for the design shown The su tab l ty and use of this des gn for any structure is the respons b lity of the Build ng Des gner per ANSI/TPI 1 Sec 2 For more nformat on see This job s general notes page ITW-BCG www itwbcg com TPI www tpinst org WTCA www sbc ndustry com ICC www ccsafe org

WALTER P. FINN
LICENSE
No.22839
STATE OF FLORIDA
PROFESSIONAL ENGINEER
03/28/2013

THIS DWG PREPARED FROM COMPUTER INPUT (LOADS & DIMENSIONS) SUBMITTED BY TRUSS MFR

(13-106--Don Reed Construction Decker House -- Lake City, FL - HJ7 9'10"13 Hip Jack Girder)

Top chord 2x4 SP_#1_12A
Bot chord 2x4 SP_#1_12A
Webs 2x4 SP_#3__12A

Lumber grades designated with "12A" use design values approved 1/5/2012 by ALSC

120 mph wind, 22 70 ft mean hgt, ASCE 7-10, CLOSED bldg, Located anywhere in roof, RISK CAT II, EXP B, wind TC DL=3 5 psf, wind BC DL=5 0 psf GCpi(+/-)=0 18

Wind loads and reactions based on MWFRS

Bottom chord checked for 10 00 psf non-concurrent live load

Provide (2) 16d common nails(0 162'x3 5'), toe nailed at Top chord
Provide (3) 16d common nails(0 162'x3 5'), toe nailed at Bot chord

Special loads
------(Lumber Dur Fac =1 25 / Plate Dur Fac =1 25)
TC- From 0 plf at -2 12 to 55 plf at 0 00
TC- From 2 plf at 0 00 to 2 plf at 9 90
BC- From 0 plf at -2 12 to 4 plf at 0 00
BC- From 2 plf at 0 00 to 2 plf at 9 90
TC- -31 37 lb Conc Load at 1 48
TC- 111 08 lb Conc Load at 4 31
TC- 228 42 lb Conc Load at 7 13
BC- 14 23 lb Conc Load at 1 48
BC- 98 68 lb Conc Load at 4 31
BC- 176 50 lb Conc Load at 7 13

Deflection meets L/240 live and L/180 total load Creep increase factor for dead load is 1 50

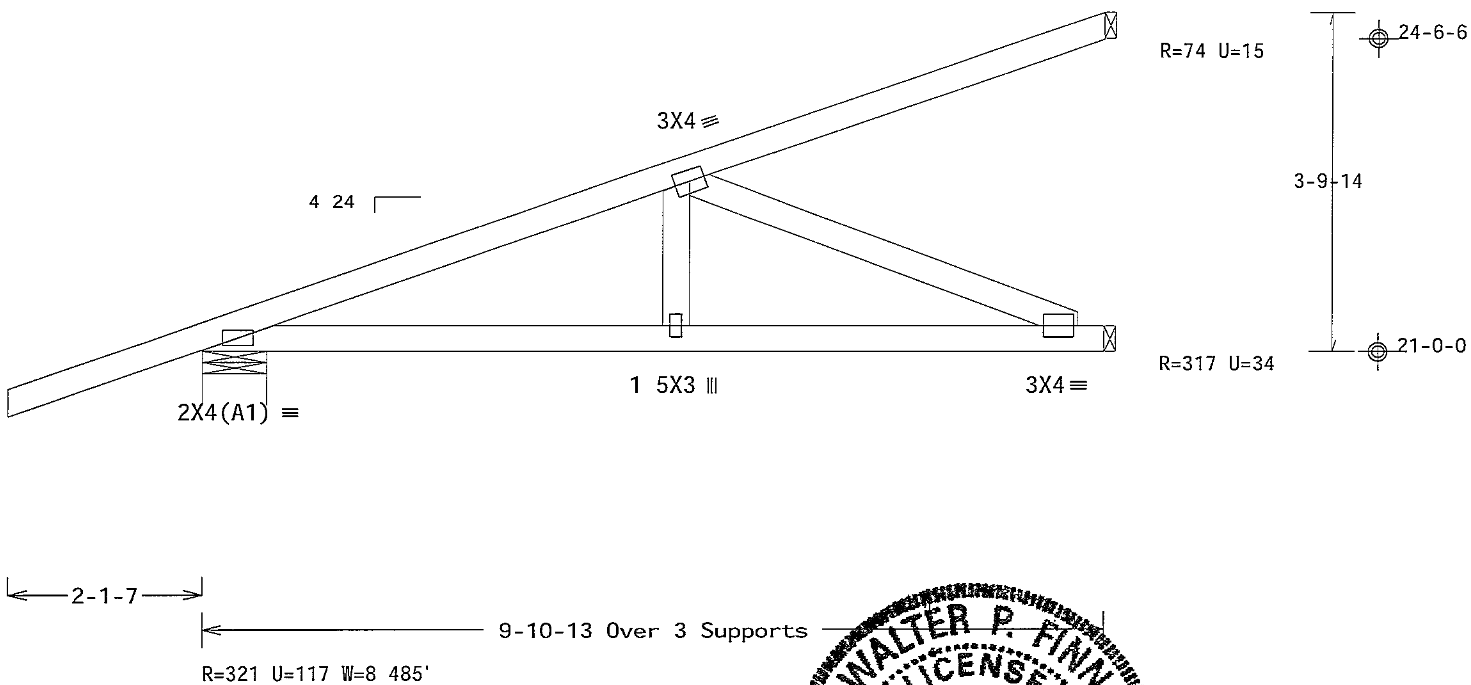

PLT TYP Wave

Design Crit FBC2010Res/TPI-2007(STD)
FT/RT=10%(0%)/0(0) 10.03 11 0309.19 QTY FL/-/5/-/-/R/- Scale =.5"/Ft.

ALPINE
ITW Building Components Group Inc.
Haines City, FL 33844
FL COA #0 278

WARNING READ AND FOLLOW ALL NOTES ON THIS SHEET!
IMPORTANT FURNISH THIS DESIGN TO ALL CONTRACTORS INCLUDING INSTALLERS

Trusses require extreme care in fabricating, handling, shipping, installing and bracing. Refer to and follow the latest edition of BCSI (Building Component Safety Information, by TPI and WTCA) for safety practices prior to performing these functions. Installers shall provide temporary bracing per BCSI. Unless noted otherwise, top chord shall have properly attached structural sheathing and bottom chord shall have a properly attached rigid ceiling. Locations shown for permanent lateral restraint of webs shall have bracing installed per BCSI sections B3, B7 or B10, as applicable.

ITW Building Components Group Inc (ITWBCG) shall not be responsible for any deviation from this design, any failure to build the truss in conformance with ANSI/TPI 1, or for handling, shipping, installation & bracing of trusses. Apply plates to each face of truss and position as shown above and on the Joint Details, unless noted otherwise. Refer to drawings 160A-Z for standard plate positions. A seal on this drawing or cover page listing this drawing indicates acceptance of professional engineering responsibility solely for the design shown. The suitability and use of this design for any structure is the responsibility of the Building Designer per ANSI/TPI 1 Sec 2. For more information see this job's general notes page. ITW BCG www twbcg com TPI www tpinst org WTCA www sbc ndustry com ICC www iccsafe org

WALTER P. FINN LICENSE No. 22839 STATE OF FLORIDA PROFESSIONAL ENGINEER
03/28/2013

TC LL	20.0 PSF	REF R487-- 66650
TC DL	7 0 PSF	DATE 03/28/13
BC DL	10.0 PSF	DRW HCUSR487 13087028
BC LL	0 0 PSF	HC-ENG DF/DF
TOT LD.	37.0 PSF	SEQN- 60870
DUR.FAC	1.25	
SPACING	24 0"	JREF- 1UUX487_Z01

THIS DWG PREPARED FROM COMPUTER INPUT (LOADS & DIMENSIONS) SUBMITTED BY TRUSS MFR

(13-106--Don Reed Construction Decker House -- Lake City, FL - HJ7A 9'10"13 Hip Jack Girder)

Top chord 2x4 SP_#1_12A
Bot chord 2x4 SP_#1_12A
Webs 2x4 SP_#3__12A

Lumber grades designated with "12A" use design values approved 1/5/2012 by ALSC

120 mph wind, 22 70 ft mean hgt, ASCE 7-10, CLOSED bldg, Located anywhere in roof, RISK CAT II, EXP B, wind TC DL=3 5 psf, wind BC DL=5 0 psf GCpi(+/-)=0 18

Wind loads and reactions based on MWFRS

Bottom chord checked for 10 00 psf non-concurrent live load

Provide (2) 16d common nails(0 162 x3 5), toe nailed at Top chord
Provide (3) 16d common nails(0 162 x3 5), toe nailed at Bot chord

Special loads
------(Lumber Dur Fac =1 25 / Plate Dur Fac =1 25)
TC- From 0 plf at -2 12 to 55 plf at 0 00
TC- From 2 plf at 0 00 to 2 plf at 9 90
BC- From 0 plf at -2 12 to 4 plf at 0 00
BC- From 2 plf at 0 00 to 2 plf at 9 90
TC- -31 37 lb Conc Load at 1 48
TC- 111 08 lb Conc Load at 4 31
TC- 237 34 lb Conc Load at 7 13
BC- 14 23 lb Conc Load at 1 48
BC- 98 68 lb Conc Load at 4 31
BC- 178 96 lb Conc Load at 7 13

Deflection meets L/240 live and L/180 total load Creep increase factor for dead load is 1 50

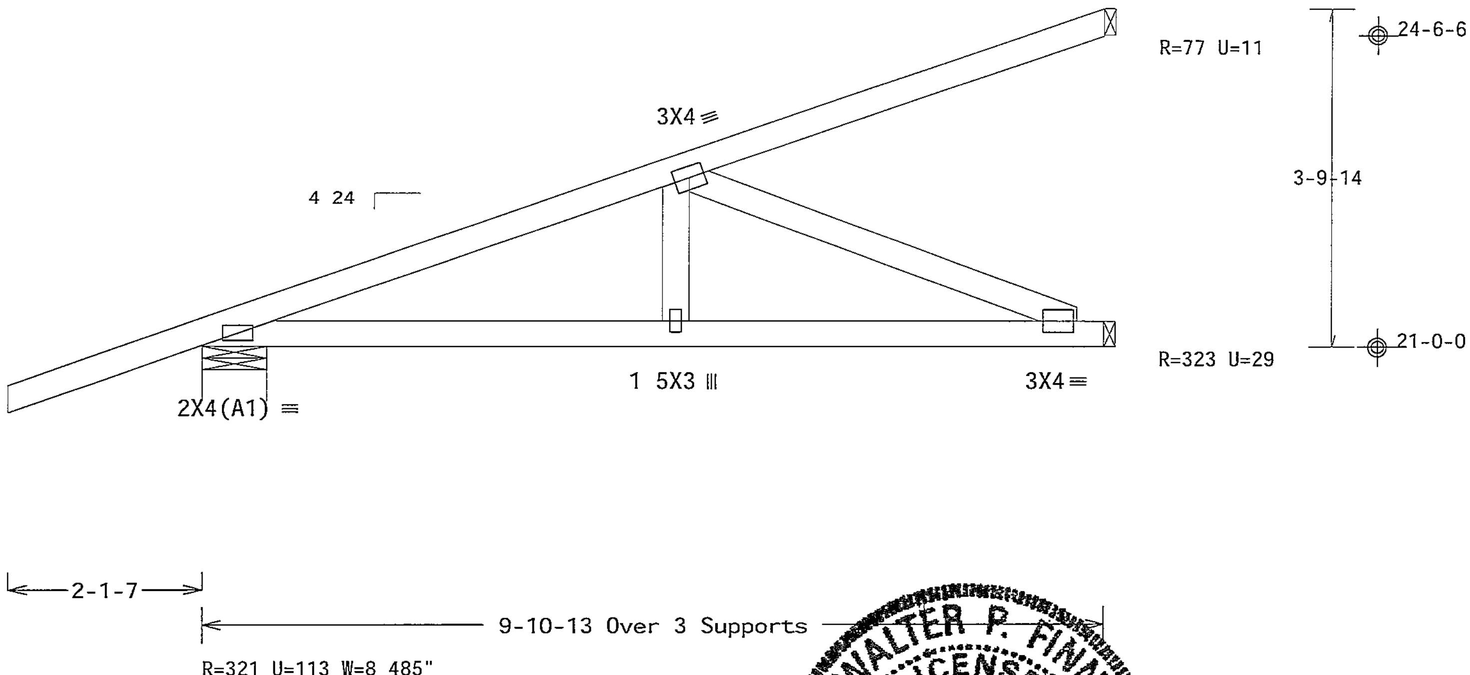

Design Crit. FBC2010Res/TPI-2007(STD)
FT/RT=10%(0%)/0(0) 10.03 11 0209.19 QTY 1 FL/-/5/-/-/R/- Scale =.5"/Ft.

PLT TYP. Wave

ALPINE
ITW Building Components Group Inc.
Haines City, FL 33844
FL COA #0 278

WARNING READ AND FOLLOW ALL NOTES ON THIS SHEET!
IMPORTANT FURNISH THIS DESIGN TO ALL CONTRACTORS INCLUDING INSTALLERS

Trusses require extreme care in fabricating, handling, shipping, installing and bracing. Refer to and follow the latest edition of BCSI (Building Component Safety Information, by TPI and WTCA) for safety practices prior to performing these functions. Installers shall provide temporary bracing per BCSI. Unless noted otherwise, top chord shall have properly attached structural sheathing and bottom chord shall have a properly attached rigid ceiling. Locations shown for permanent lateral restraint of webs shall have bracing installed per BCSI sections B3, B7 or B10, as applicable.

ITW Building Components Group Inc. (ITWBCG) shall not be responsible for any deviation from this drawing, any failure to build the truss in conformance with ANSI/TPI 1, or for handling, shipping, installation and bracing of trusses. Apply plates to each face of truss and position as shown above and on the Joint Details, unless noted otherwise. Refer to drawings 160A-Z for standard plate positions. A seal on this drawing or cover page listing this drawing indicates acceptance of professional engineering responsibility solely for the design shown. The suitability and use of this design for any structure is the responsibility of the Building Designer per ANSI/TPI 1 Sec 2. For more information see This job's general notes page, ITW BCG www.itwbcg.com, TPI www.tpinst.org, WTCA www.sbcindustry.com, ICC www.iccsafe.org

WALTER P. FINN LICENSE No. 22839 STATE OF FLORIDA PROFESSIONAL ENGINEER
03/28/2013

TC LL	20.0 PSF	REF	R487-- 66651
TC DL	7 0 PSF	DATE	03/28/13
BC DL	10 0 PSF	DRW	HCUSR487 13087033
BC LL	0 0 PSF	HC-ENG	DF/DF
TOT.LD.	37 0 PSF	SEQN-	60872
DUR FAC	1 25		
SPACING	24 0"	JREF-	1UUX487_Z01

(13-106--Don Reed Construction Decker House -- Lake City, FL - HJ8 12'2'5 Hip Jack Girder)

THIS DWG PREPARED FROM COMPUTER INPUT (LOADS & DIMENSIONS) SUBMITTED BY TRUSS MFR

Top chord 2x4 SP_#1_12A
Bot chord 2x4 SP_#1_12A
Webs 2x4 SP_#3__12A

Lumber grades designated with 12A use design values approved 1/5/2012 by ALSC

120 mph wind, 15 00 ft mean hgt, ASCE 7-10, CLOSED bldg, Located anywhere in roof, RISK CAT II, EXP B, wind TC DL=3 5 psf, wind BC DL=5 0 psf GCpi(+/-)=0 18

Wind loads and reactions based on MWFRS

Bottom chord checked for 10 00 psf non-concurrent live load

Deflection meets L/240 live and L/180 total load Creep increase factor for dead load is 1 50

Provide (3)16d (0 162 x3 5") nails toe-nailed at top chord
Provide (3)16d (0 162'x3 5) nails toe-nailed at bottom chord

Special loads
------(Lumber Dur Fac =1 25 / Plate Dur Fac =1 25)
TC- From 0 plf at -2 12 to 55 plf at 0 00
TC- From 2 plf at 0 00 to 2 plf at 12 19
BC- From 0 plf at -2 12 to 4 plf at 0 00
BC- From 2 plf at 0 00 to 2 plf at 12 19
TC- -31 37 lb Conc Load at 1 48
TC- 111 08 lb Conc Load at 4 31
TC- 228 42 lb Conc Load at 7 13
TC- 335 91 lb Conc Load at 9 96
BC- 14 23 lb Conc Load at 1 48
BC- 98 68 lb Conc Load at 4 31
BC- 176 50 lb Conc Load at 7 13
BC- 252 70 lb Conc Load at 9 96

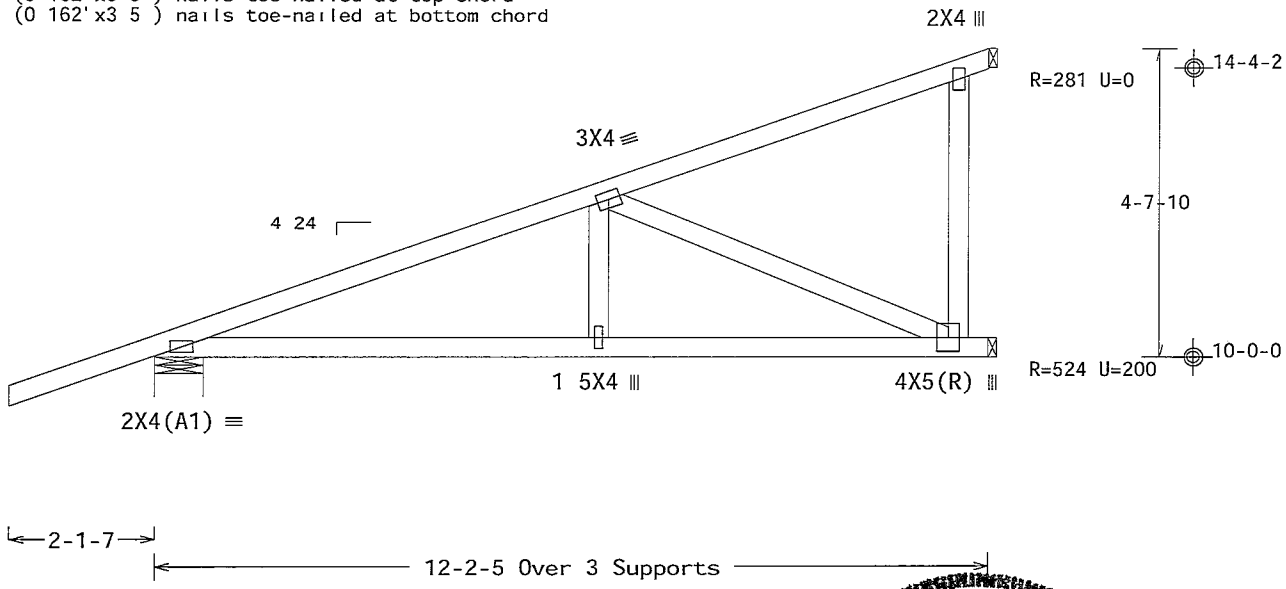

Design Crit FBC2010Res/TPI-2007(STD)
FT/RT=10%(0%)/0(0) ★10 03 11 0309 19 QTY 2

PLT TYP Wave

FL/-/5/-/-/R/- Scale = 375"/Ft

ALPINE
ITW Building Components Group Inc.
Haines City, FL 33844
FL COA #0 278

WARNING READ AND FOLLOW ALL NOTES ON THIS SHEET!
IMPORTANT FURNISH THIS DESIGN TO ALL CONTRACTORS INCLUDING INSTALLERS

Trusses require extreme care n fabr cat ng handl ng sh pp ng nstall ng and brac ng Re[illegible] and follow the latest edition of BCSI (Bu ld ng Component Safety Informat on by TPI and WTCA) for [illegible] pract ces prior to perform ng these funct ons Installers shall prov de temporary brac ng per [illegible] Unless noted otherwise top chord shall have properly attached structural sheath ng and bottom [illegible] shall have a proper y attached r gid ce l ng Locat ons shown for permanent atera rostra nt of [illegible] shall have brac ng nstalled per BCSI sect ons B3 B7 or B10 as appl cable

ITW Building Components Group Inc (ITWBCG) shall not be respons ble for any dev ation from this des[illegible] any fa lure to bu ld the truss n conformance w th ANSI/TPI 1 or for handl ng shipp ng installation [illegible] brac ng of trusses Apply plates to each face of truss and posit on as shown above and on the Jo nt Deta ls unless noted otherw se Refer to draw ngs 160A-Z for standard plate pos t ons A seal on th s draw ng or cover page list ng th s draw ng nd cates acceptance of profess onal eng neer ng respons bility solely for the design shown The su tabil ty and use of th s design for any structure s the respons bil ty of the Bu ld ng Des gner per ANSI/TPI 1 Sec 2 For more nformat on see Th s job s general notes page ITW-BCG www twbcg com TPI www tp nst org WTCA www sbc ndustry com ICC www ccsafe org

WALTER P. FINN LICENSE No.22839 STATE OF FLORIDA PROFESSIONAL ENGINEER
03/28/2013

TC LL	20.0 PSF	REF	R487-- 66652
TC DL	7 0 PSF	DATE	03/28/13
BC DL	10 0 PSF	DRW	HCUSR487 13087038
BC LL	0.0 PSF	HC-ENG	DF/DF
TOT LD	37 0 PSF	SEQN-	60873
DUR FAC	1 25		
SPACING	24.0"	JREF-	1UUX487_Z01

THIS DWG PREPARED FROM COMPUTER INPUT (LOADS & DIMENSIONS) SUBMITTED BY TRUSS MFR

(13-106--Don Reed Construction Decker House -- Lake City, FL - HJG 7 6 8 Hip Jack Girder)

Top chord 2x4 SP_#1_12A
Bot chord 2x4 SP_#1_12A
Webs 2x4 SP_#3__12A

Lumber grades designated with '12A' use design values approved 1/5/2012 by ALSC

120 mph wind, 23 23 ft mean hgt, ASCE 7-10, CLOSED bldg, Located anywhere in roof, RISK CAT II, EXP B, wind TC DL=3 5 psf, wind BC DL=5 0 psf GCpi(+/-)=0 18

Wind loads and reactions based on MWFRS

Deflection meets L/240 live and L/180 total load Creep increase factor for dead load is 1 50

Special loads
------(Lumber Dur Fac =1 25 / Plate Dur Fac =1 25)
TC- From 0 plf at -1 50 to 55 plf at 0 00
TC- From 2 plf at 0 00 to 2 plf at 7 54
BC- From 0 plf at -1 50 to 4 plf at 0 00
BC- From 2 plf at 0 00 to 2 plf at 7 54
TC- 73 08 lb Conc Load at 1 95
TC- 228 42 lb Conc Load at 4 78
BC- 92 13 lb Conc Load at 1 95
BC- 176 50 lb Conc Load at 4 78

Bottom chord checked for 10 00 psf non-concurrent live load

Provide (2) 16d common nails(0 162 x3 5"), toe nailed at Top chord
Provide (2) 16d common nails(0 162"x3 5), toe nailed at Bot chord

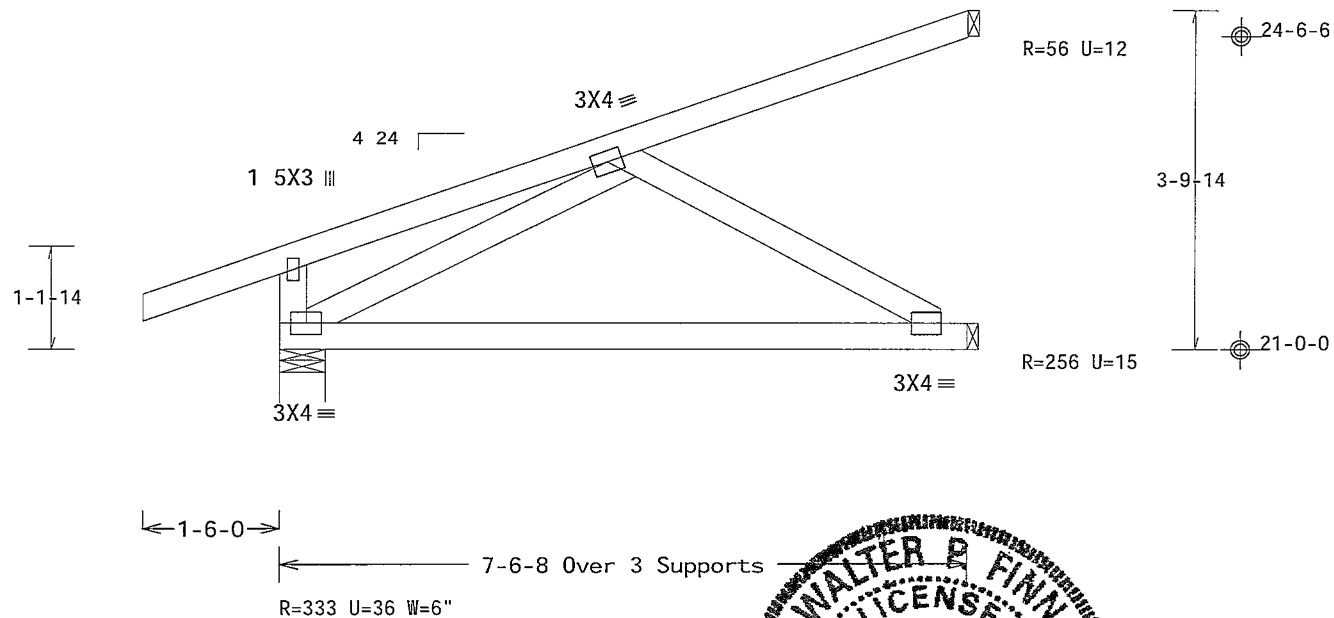

Design Crit FBC2010Res/TPI-2007(STD)
FT/RT=10%(0%)/0(0) 10 03 11.0109.19

PLT TYP Wave

FL/-/5/-/-/R/- Scale =.5"/Ft

ALPINE
ITW Building Components Group Inc.
Haines City, FL 33844
FL COA #0 278

WARNING READ AND FOLLOW ALL NOTES ON THIS SHEET!
IMPORTANT FURNISH THIS DESIGN TO ALL CONTRACTORS INCLUDING INSTALLERS

Trusses require extreme care in fabricating handling shipping installing and bracing Refer to and follow the latest edition of BCSI (Building Component Safety Information by TPI and WTCA) for safety practices prior to performing these functions Installers shall provide temporary bracing per BCSI Unless noted otherwise top chord shall have properly attached structural sheathing and bottom chord shall have a properly attached rigid ceiling Locations shown for permanent lateral restraint of webs shall have bracing installed per BCSI sections B3 B7 or B10 as applicable

ITW Building Components Group Inc (ITWBCG) shall not be responsible for any deviation from this design any failure to build the truss in conformance with ANSI/TPI 1 or for handling shipping installation & bracing of trusses Apply plates to each face of truss and position as shown above and on the Joint Details unless noted otherwise Refer to drawings 160A-Z for standard plate positions A seal on this drawing or cover page listing this drawing indicates acceptance of professional engineering responsibility solely for the design shown The suitability and use of this design for any structure is the responsibility of the Building Designer per ANSI/TPI 1 Sec 2 For more information on see This job s general notes page ITW-BCG www twbcg com TPI www tpinst org WTCA www sbcindustry com ICC www iccsafe org

WALTER P FINN LICENSE No.22839 STATE OF FLORIDA PROFESSIONAL ENGINEER
03/28/2013

TC LL	20.0 PSF
TC DL	7 0 PSF
BC DL	10 0 PSF
BC LL	0 0 PSF
TOT LD	37 0 PSF
DUR FAC	1 25
SPACING	24 0"

REF	R487-- 66653
DATE	03/28/13
DRW	HCUSR487 13087052
HC-ENG	DF/DF
SEQN-	60875
JREF-	1UUX487_Z01

THIS DWG PREPARED FROM COMPUTER INPUT (LOADS & DIMENSIONS) SUBMITTED BY TRUSS MFR

(13-106--Don Reed Construction Decker House -- Lake City, FL - HJG1 7'11'7 Hip Jack Girder)

Top chord 2x4 SP_#1_12A
Bot chord 2x4 SP_#1_12A
Webs 2x4 SP_#3__12A

Lumber grades designated with 12A' use design values approved 1/5/2012 by ALSC

145 mph wind, 15 00 ft mean hgt, ASCE 7-10, CLOSED bldg, Located anywhere in roof, RISK CAT II, EXP B, wind TC DL=3 5 psf, wind BC DL=5 0 psf GCpi(+/-)=0 18

Wind loads and reactions based on MWFRS

Bottom chord checked for 10 00 psf non-concurrent live load

Could Not Nail Top
Could Not Nail Bot

Special loads
------(Lumber Dur Fac =1 25 / Plate Dur Fac =1 25)
TC- From 0 plf at -1 50 to 55 plf at 0 00
TC- From 2 plf at 0 00 to 2 plf at 7 95
BC- From 0 plf at -1 50 to 4 plf at 0 00
BC- From 20 plf at 0 00 to 20 plf at 5 40
BC- From 2 plf at 5 40 to 2 plf at 7 95
TC- 135 31 lb Conc Load at 5 96
TC- 166 13 lb Conc Load at 7 61
BC- 394 82 lb Conc Load at 5 40
BC- 397 56 lb Conc Load at 5 96
BC- 463 48 lb Conc Load at 7 61

Deflection meets L/240 live and L/180 total load Creep increase factor for dead load is 1 50

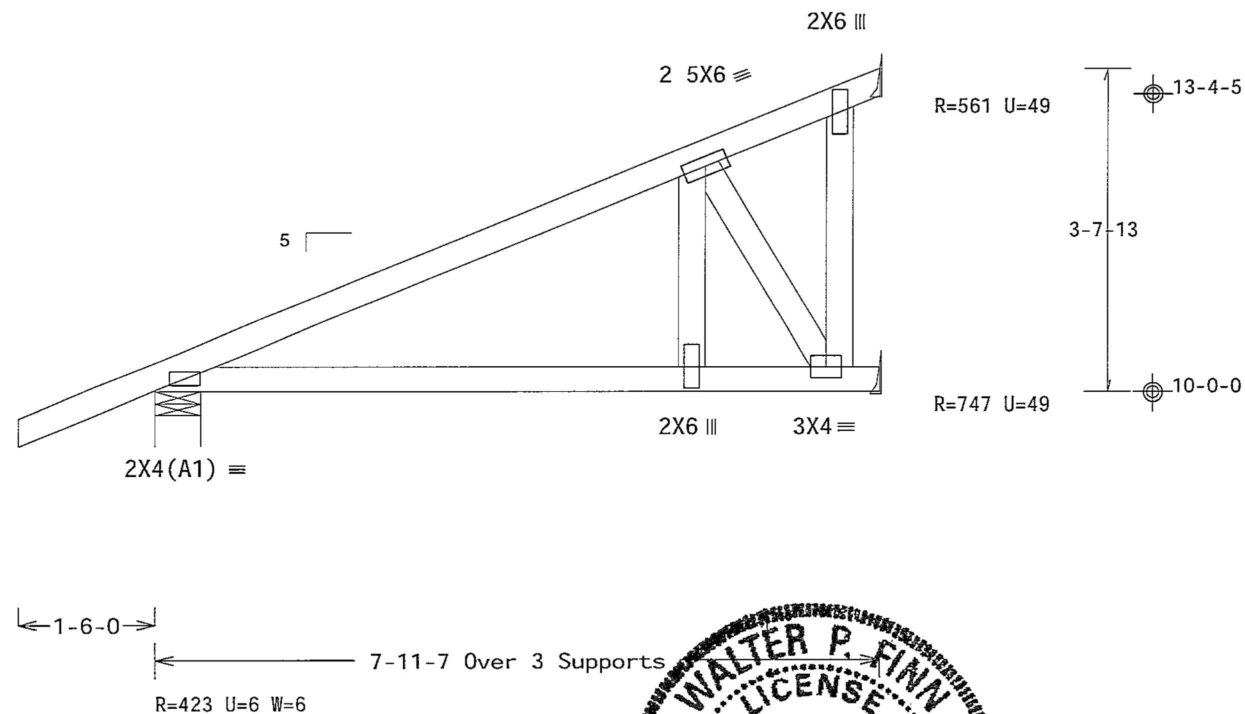

Design Crit. FBC2010Res/TPI-2007(STD)
FT/RT=10%(0%)/0(0)   10 03 11.0289 20   QTY

PLT TYP Wave

FL/-/5/-/-/R/-   Scale =.5"/Ft.

ALPINE
ITW Building Components Group Inc.
Haines City, FL 33844
FL COA #0 278

WARNING READ AND FOLLOW ALL NOTES ON THIS SHEET
IMPORTANT FURNISH THIS DESIGN TO ALL CONTRACTORS INCLUDING INSTALLERS

Trusses require extreme care in fabricating handling shipping installing and bracing Refer to and follow the latest edition of BCSI (Building Component Safety Information by TPI and WTCA) for safety practices prior to performing these functions Installers shall provide temporary bracing per BCSI Unless noted otherwise top chord shall have properly attached structural sheathing and bottom chord shall have a properly attached rigid ceiling Locations shown for permanent lateral restraint of webs shall have bracing installed per BCSI sections B3 B7 or B10 as applicable

ITW Building Components Group Inc (ITWBCG) shall not be responsible for any deviation from this design any failure to build the truss in conformance with ANSI/TPI 1 or for handling shipping installation & bracing of trusses Apply plates to each face of truss and position as shown above and on the Joint Details unless noted otherwise Refer to drawings 160A-Z for standard plate positions A seal on this drawing or cover page listing this drawing indicates acceptance of professional engineering responsibility solely for the design shown The suitability and use of this design for any structure is the responsibility of the Building Designer per ANSI/TPI 1 Sec 2 For more information see This job s general notes page ITW BCG www itwbcg com TPI www tpinst org WTCA www sbcindustry com ICC www iccsafe org

WALTER P. FINN LICENSE No.22839 STATE OF FLORIDA PROFESSIONAL ENGINEER
03/28/2013

TC LL	20 0 PSF	REF	R487-- 66654
TC DL	7 0 PSF	DATE	03/28/13
BC DL	10 0 PSF	DRW	HCUSR487 13087026
BC LL	0.0 PSF	HC-ENG	DF/DF
TOT.LD	37 0 PSF	SEQN-	70793
DUR.FAC.	1 25		
SPACING	24 0"	JREF-	1UUX487_Z01

THIS DWG PREPARED FROM COMPUTER INPUT (LOADS & DIMENSIONS) SUBMITTED BY TRUSS MFR

(13-106--Don Reed Construction Decker House -- Lake City, FL - I 7 8 Common)

Top chord 2x4 SP_#1_12A
Bot chord 2x4 SP_#1_12A

Lumber grades designated with 12A use design values approved 1/5/2012 by ALSC

H = recommended connection based on manufacturer tested capacities and calculations Conditions may exist that require different connections than indicated Refer to manufacturer publication for additional information

Bottom chord checked for 10 00 psf non-concurrent live load

Deflection meets L/240 live and L/180 total load Creep increase factor for dead load is 1 50

120 mph wind, 15 00 ft mean hgt, ASCE 7-10, CLOSED bldg, Located anywhere in roof, RISK CAT II, EXP B, wind TC DL=3 5 psf, wind BC DL=5 0 psf GCpi(+/-)=0 18

Wind loads and reactions based on MWFRS with additional C&C member design

Hanger specified assumes connection to supporting chord is located a minimum of five times the depth of the supporting chord from any unsupported end, unless unsupported chord end has 85% plating coverage

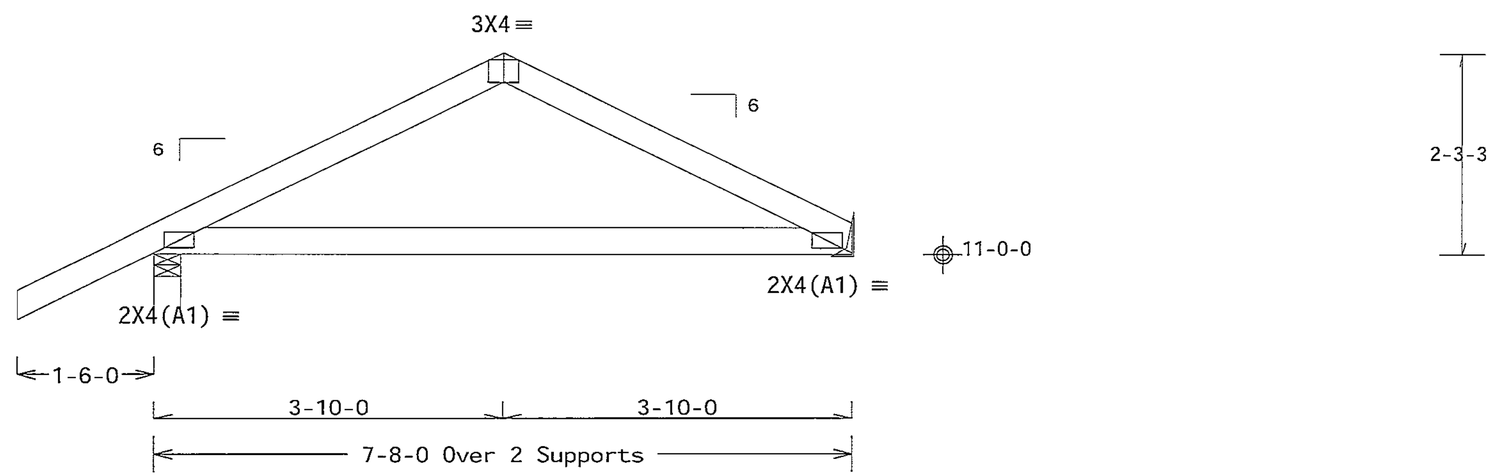

R=392 U=24 W=3 5
RL=36/-42

R=278 U=6 W=3 Simpson LUS24
Supported Member Face (2) 0 148'x3 nails
Supporting Member Face (4) 0 148"x3' nails
Supporting Member (1) 2x6 SP_#2_12A

Design Crit FBC2010Res/TPI-2007(STD)
FT/RT=10%(0%)/0(0) 10 03 (1) 0209 19 QTY 3 FL/-/5/-/-/R/- Scale =.5"/Ft.

PLT TYP Wave

ALPINE
ITW Building Components Group Inc.
Hanes City, FL 33844
FL COA #0 278

WARNING READ AND FOLLOW ALL NOTES ON THIS SHEET!
IMPORTANT FURNISH THIS DESIGN TO ALL CONTRACTORS INCLUDING INSTALLERS

Trusses require extreme care in fabricating, handling, shipping, installing and bracing. Refer to and follow the latest edition of BCSI (Building Component Safety Information, by TPI and WTCA) for safety practices prior to performing these functions. Installers shall provide temporary bracing per BCSI. Unless noted otherwise, top chord shall have properly attached structural sheathing and bottom chord shall have a properly attached rigid ceiling. Locations shown for permanent lateral restraint of webs shall have bracing installed per BCSI sections B3, B7 or B10, as applicable.

ITW Building Components Group Inc. (ITWBCG) shall not be responsible for any deviation from this drawing, any failure to build the truss in conformance with ANSI/TPI 1, or for handling, shipping, installation and bracing of trusses. Apply plates to each face of truss and position as shown above and on the Joint Details, unless noted otherwise. Refer to drawings 160A-Z for standard plate positions. A seal on this drawing or cover page listing this drawing indicates acceptance of professional engineering responsibility solely for the design shown. The suitability and use of this design for any structure is the responsibility of the Building Designer per ANSI/TPI 1 Sec 2. For more information see this job's general notes page. ITW BCG: www.itwbcg.com; TPI: www.tpinst.org; WTCA: www.sbcindustry.com; ICC: www.iccsafe.org

WALTER P. FINN LICENSE No. 22839 STATE OF FLORIDA PROFESSIONAL ENGINEER
03/28/2013

TC LL	20.0 PSF	REF	R487-- 66655
TC DL	7 0 PSF	DATE	03/28/13
BC DL	10 0 PSF	DRW	HCUSR487 13087044
BC LL	0.0 PSF	HC-ENG	DF/DF
TOT.LD.	37.0 PSF	SEQN-	60897
DUR.FAC.	1 25		
SPACING	24.0"	JREF-	1UUX487_Z01

(13-106--Don Reed Construction Decker House -- Lake City, FL - IDG 7 8' Gable)

Top chord 2x4 SP_#1_12A
Bot chord 2x4 SP_#1_12A
Webs 2x4 SP_#3__12A
Stack Chord SC1 2x4 SP_#1_12A Stack Chord SC2 2x4 SP_#1_12A

Lumber grades designated with "12A" use design values approved 1/5/2012 by ALSC

Stacked top chord must NOT be notched or cut in area (NNL) Dropped top chord braced at 24" o c intervals Attach stacked top chord (SC) to dropped top chord in notchable area using 3x4 tie-plates 24 o c Center plate on stacked/dropped chord interface, plate length perpendicular to chord length Splice top chord in notchable area using 3x6

120 mph wind, 15 00 ft mean hgt, ASCE 7-10, CLOSED bldg, Located anywhere in roof, RISK CAT II, EXP B, wind TC DL=3 5 psf, wind BC DL=5 0 psf GCpi(+/-)=0 18

Wind loads and reactions based on MWFRS with additional C&C member design

See DWGS A12015ENC100212, GBLLETIN0212, & GABRST100212 for more requirements

Bottom chord checked for 10 00 psf non-concurrent live load

Deflection meets L/240 live and L/180 total load Creep increase factor for dead load is 1 50

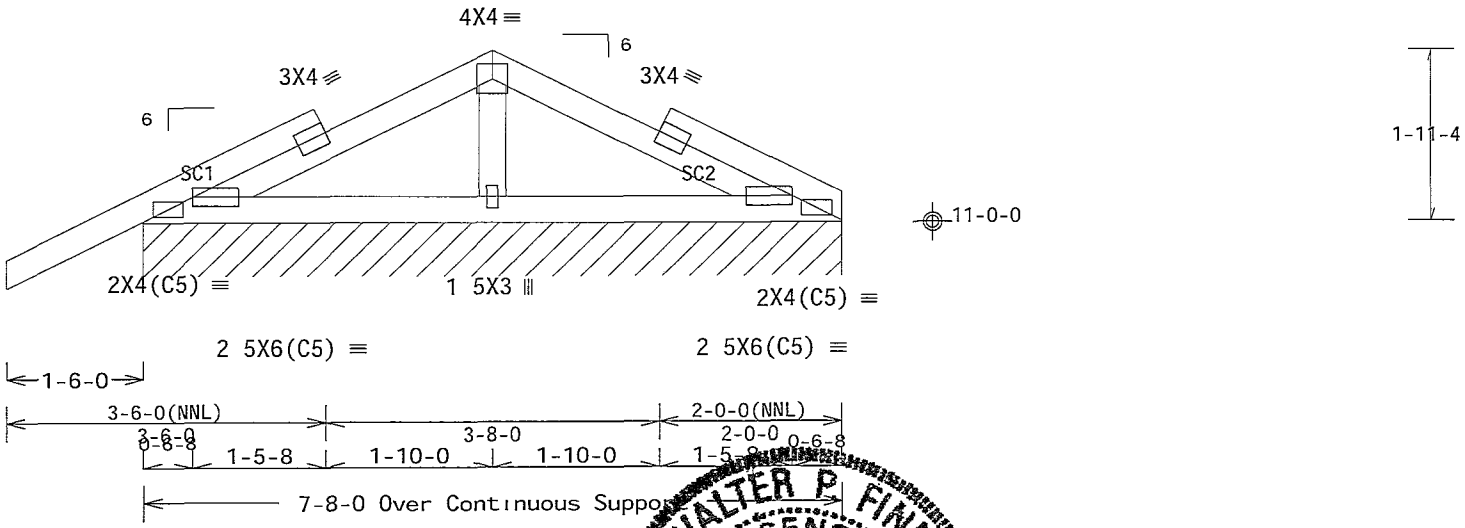

R=155 PLF U=3 PLF W=7-8-0
RL=5/-5 PLF

Design Crit FBC2010Res/TPI-2007(STD)
FT/RT=10%(0%)/0(0)

PLT TYP Wave

WALTER P. FINN LICENSE No.22839 STATE OF FLORIDA PROFESSIONAL ENGINEER
03/28/2013

FL/-/5/-/-/R/- Scale =.5"/Ft.

TC LL	20.0 PSF	REF	R487-- 66656
TC DL	7.0 PSF	DATE	03/28/13
BC DL	10.0 PSF	DRW	HCUSR487 13087035
BC LL	0.0 PSF	HC-ENG	DF/DF
TOT.LD.	37.0 PSF	SEQN-	297846
DUR.FAC.	1.25		
SPACING	24 0"	JREF-	1UUX487_Z01

ALPINE
ITW Building Components Group Inc.
Haines City, FL 33844
FL COA #0 278

WARNING READ AND FOLLOW ALL NOTES ON THIS SHEET!
IMPORTANT FURNISH THIS DESIGN TO ALL CONTRACTORS INCLUDING INSTALLERS

Trusses require extreme care in fabr cat ng handling sh pping install ng and brac ng Refer to and follow the latest edition of BCSI (Bu ld ng Component Safety Informat on by TPI and WTCA) for additional practices prior to performing these functions Installers shall prov de temporary brac ng per BCSI. Unless noted otherwise top chord shall have properly attached structural sheathing and bottom chord shall have a properly attached rigid ce l ng Locat ons shown for permanent lateral restra nt of webs shall have brac ng nstalled per BCSI sect ons B3 B7 or B10 as appl cable

ITW Building Components Group Inc (ITWBCG) shall not be responsible for any deviat on from this design, any fa lure to bu ld the truss in conformance with ANSI/TPI 1 or for handl ng shipp ng installation & brac ng of trusses Apply plates to each face of truss and pos t on as shown above and on the Joint Deta ls unless noted otherw se Refer to draw ngs 160A-Z for standard plate pos t ons A seal on th s draw ng or cover page listing this draw ng ind cates acceptance of profess onal eng neer ng respons b lity solely for the design shown The su tab lity and use of th s des gn for any structure s the responsibility of the Bu lding Des gner per ANSI/TPI 1 Sec 2 For more information see This job s general notes page ITW BCG www twbcg com TPI www tp nst org WTCA www sbc ndustry com ICC www iccsafe org

THIS DWG PREPARED FROM COMPUTER INPUT (LOADS & DIMENSIONS) SUBMITTED BY TRUSS MFR

(13-106--Don Reed Construction Decker House -- Lake City, FL - IG 7'8" Common Girder)

Top chord 2x4 SP_#1_12A
Bot chord 2x4 SP_#1_12A

Lumber grades designated with '12A' use design values approved 1/5/2012 by ALSC

H = recommended connection based on manufacturer tested capacities and calculations Conditions may exist that require different connections than indicated Refer to manufacturer publication for additional information

Bottom chord checked for 10 00 psf non-concurrent live load

Deflection meets L/240 live and L/180 total load Creep increase factor for dead load is 1 50

120 mph wind, 15 00 ft mean hgt, ASCE 7-10, CLOSED bldg, Located anywhere in roof, RISK CAT II, EXP B, wind TC DL=3 5 psf, wind BC DL=5 0 psf GCpi(+/-)=0 18

Wind loads and reactions based on MWFRS with additional C&C member design

Hanger specified assumes connection to supporting chord is located a minimum of five times the depth of the supporting chord from any unsupported end, unless unsupported chord end has 85% plating coverage

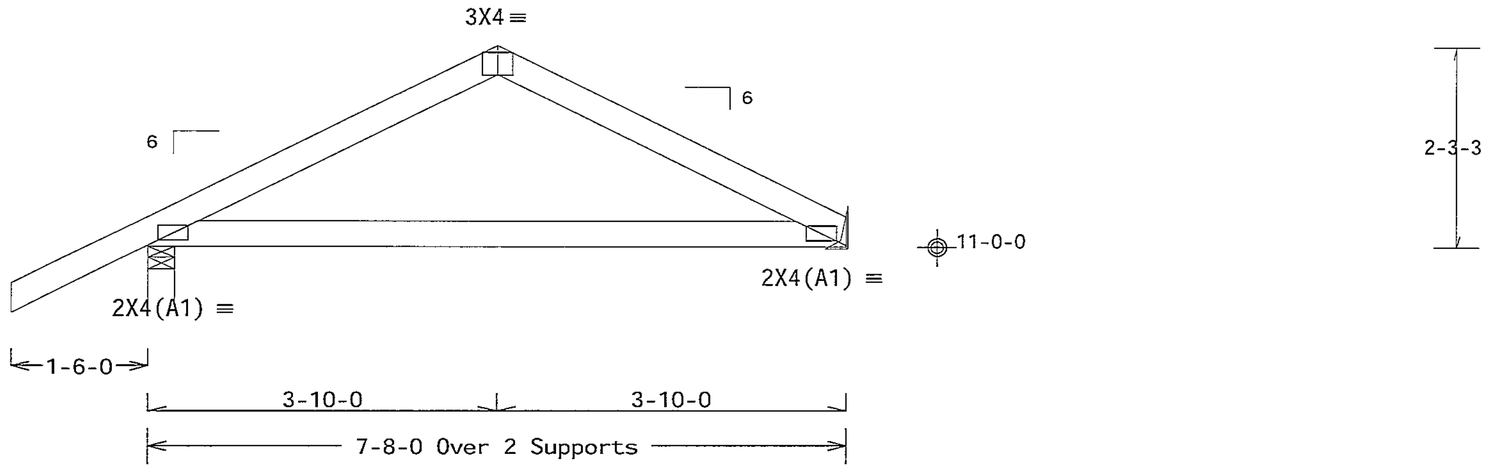

R=392 U=24 W=3 5"
RL=36/-42

R=278 U=6 W=Simpson LUS24
Supported Member Face (2) 0 148"x3 nails
Supporting Member Face (4) 0 148"x3" nails
Supporting Member (1) 2x4 SP_#3__12A

Design Crit: FBC2010Res/TPI-2007(STD)
FT/RT=10%(0%)/0(0) 10.03.11.0209.20 QTY:1 FL/-/5/-/-/R/- Scale =.5"/Ft.

PLT TYP Wave

ALPINE
ITW Building Components Group Inc.
Haines City, FL 33844
FL COA #0 278

IMPORTANT **WARNING** READ AND FOLLOW ALL NOTES ON THIS SHEET! FURNISH THIS DESIGN TO ALL CONTRACTORS INCLUDING INSTALLERS

Trusses require extreme care in fabricating handling shipping installing and bracing Refer to and follow the latest edition of BCSI (Building Component Safety Information by TPI and WTCA) for safety practices prior to performing these functions Installers shall provide temporary bracing per BCSI Unless noted otherwise top chord shall have properly attached structural sheathing and bottom chord shall have a properly attached rigid ceiling Locations shown for permanent lateral restraint of webs shall have bracing installed per BCSI sections B3 B7 or B10 as applicable

ITW Building Components Group Inc (ITWBCG) shall not be responsible for any deviation from this drawing any failure to build the truss in conformance with ANSI/TPI 1 or for handling shipping installation bracing of trusses Apply plates to each face of truss and position as shown above and on the Joint Details unless noted otherwise Refer to drawings 160A-Z for standard plate positions A seal on this drawing or cover page listing this drawing indicates acceptance of professional engineering responsibility solely for the design shown The suitability and use of this design for any structure is the responsibility of the Building Designer per ANSI/TPI 1 Sec 2 For more information see This job s general notes page ITW-BCG www itwbcg com TPI www tpinst org WTCA www sbcindustry com ICC www iccsafe org

WALTER P. FINN LICENSE No. 22839 STATE OF FLORIDA PROFESSIONAL ENGINEER
03/28/2013

TC LL	20.0 PSF
TC DL	7 0 PSF
BC DL	10.0 PSF
BC LL	0.0 PSF
TOT LD.	37 0 PSF
DUR.FAC.	1 25
SPACING	24 0"

REF	R487-- 66657
DATE	03/28/13
DRW	HCUSR487 13087045
HC-ENG	DF/DF
SEQN-	70805
JREF-	1UUX487_Z01

THIS DWG PREPARED FROM COMPUTER INPUT (LOADS & DIMENSIONS) SUBMITTED BY TRUSS MFR

(13-106--Don Reed Construction Decker House -- Lake City, FL - J3 2'5'9 Jack)

Top chord 2x4 SP_#1_12A
Bot chord 2x4 SP_#1_12A

Lumber grades designated with 12A use design values approved 1/5/2012 by ALSC

Bottom chord checked for 10 00 psf non-concurrent live load

Provide (2) 16d common nails(0 162'x3 5'), toe nailed at Top chord
Provide (2) 16d common nails(0 162 x3 5), toe nailed at Bot chord

120 mph wind, 15 00 ft mean hgt, ASCE 7-10, CLOSED bldg, Located anywhere in roof, RISK CAT II, EXP B, wind TC DL=3 5 psf, wind BC DL=5 0 psf GCpi(+/-)=0 18

Wind loads and reactions based on MWFRS with additional C&C member design

Deflection meets L/240 live and L/180 total load Creep increase factor for dead load is 1 50

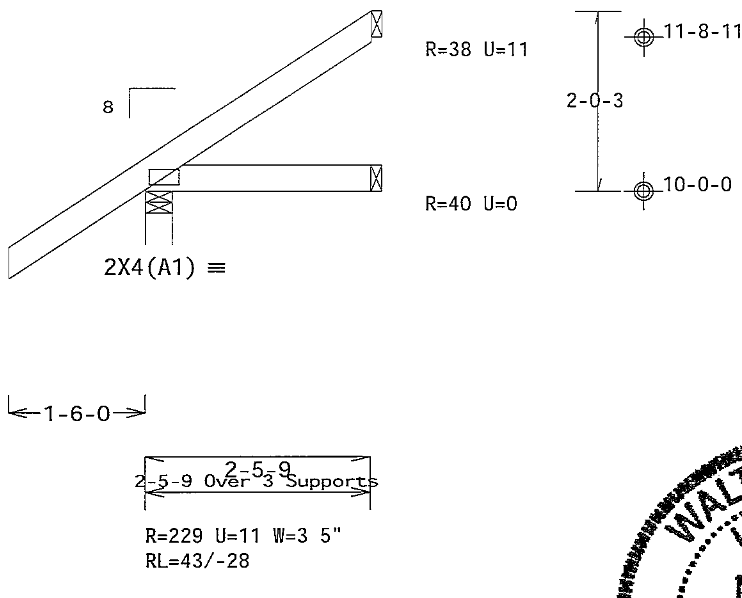

Design Crit: FBC2010Res/TPI-2007(STD)
FT/RT=10%(0%)/0(0) 10 03 11 0269.19 QTY:2 FL/-/5/-/-/R/- Scale = 5"/Ft.

PLT TYP Wave

WARNING READ AND FOLLOW ALL NOTES ON THIS SHEET!
IMPORTANT FURNISH THIS DESIGN TO ALL CONTRACTORS INCLUDING INSTALLERS

Trusses require extreme care in fabricating handling shipping installing and bracing Refer to and follow the latest edition of BCSI (Building Component Safety Information by TPI and WTCA) for safety practices prior to performing these functions Installers shall provide temporary bracing per BCSI Unless noted otherwise top chord shall have properly attached structural sheathing and bottom chord shall have a properly attached rigid ceiling Locations shown for permanent lateral restraint of webs shall have bracing installed per BCSI sections B3 B7 or B10 as applicable

ITW Building Components Group Inc (ITWBCG) shall not be responsible for any deviation from this design any failure to build the truss in conformance with ANSI/TPI 1 or for handling shipping installation & bracing of trusses Apply plates to each face of truss and position as shown above and on the Joint Details unless noted otherwise Refer to drawings 160A-Z for standard plate positions A seal on this drawing or cover page listing this drawing indicates acceptance of professional engineering responsibility solely for the design shown The suitability and use of this design for any structure is the responsibility of the Building Designer per ANSI/TPI 1 Sec 2 For more information see This job s general notes page ITW BCG www twbcg com TPI www tpinst org WTCA www sbcindustry com ICC www iccsafe org

ALPINE
ITW Building Components Group Inc.
Haines City FL 33844
FL COA #0 278

WALTER P. FINN LICENSE No. 22839 STATE OF FLORIDA PROFESSIONAL ENGINEER
03/28/2013

TC LL	20.0 PSF	REF R487-- 66658
TC DL	7.0 PSF	DATE 03/28/13
BC DL	10.0 PSF	DRW HCUSR487 13087062
BC LL	0.0 PSF	HC-ENG DF/DF
TOT.LD	37.0 PSF	SEQN- 60860
DUR FAC	1 25	
SPACING	24 0"	JREF- 1UUX487_Z01

(13-106--Don Reed Construction Decker House -- Lake City, FL - J3A 2'6"3 Jack)

THIS DWG PREPARED FROM COMPUTER INPUT (LOADS & DIMENSIONS) SUBMITTED BY TRUSS MFR

Top chord 2x4 SP_#1_12A
Bot chord 2x4 SP_#1_12A

Lumber grades designated with 12A" use design values approved 1/5/2012 by ALSC

Bottom chord checked for 10 00 psf non-concurrent live load

Provide (2) 16d common nails(0 162'x3 5"), toe nailed at Top chord
Provide (2) 16d common nails(0 162 x3 5'), toe nailed at Bot chord

120 mph wind, 15 00 ft mean hgt, ASCE 7-10, CLOSED bldg, Located anywhere in roof, RISK CAT II, EXP B, wind TC DL=3 5 psf, wind BC DL=5 0 psf GCpi(+/-)=0 18

Wind loads and reactions based on MWFRS with additional C&C member design

Deflection meets L/240 live and L/180 total load Creep increase factor for dead load is 1 50

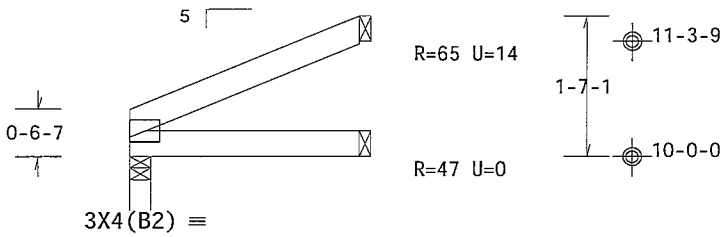

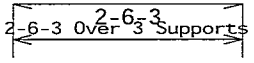

R=98 U=0 W=2 75"

Design Crit· FBC2010Res/TPI-2007(STD)
FT/RT=10%(0%)/0(0)

PLT TYP Wave

10 03 11 0209 19 QTY 1

FL/-/5/-/-/R/-

Scale =.5"/Ft.

WALTER P. FINN LICENSE No.22839 STATE OF FLORIDA PROFESSIONAL ENGINEER

03/28/2013

ALPINE
ITW Building Components Group Inc.
Haines City FL 33844
FL COA #0 278

WARNING READ AND FOLLOW ALL NOTES ON THIS SHEET!
IMPORTANT FURNISH THIS DESIGN TO ALL CONTRACTORS INCLUDING INSTALLERS

Trusses require extreme care in fabr cating handling sh pping installing and brac ng refer to and follow the latest edition of BCSI (Bu lding Component Safety Informat on by TPI and WTCA) for safety pract ces prior to perform ng these functions Installers shall prov de temporary brac ng per BCSI Unless noted otherwise top chord shall have properly attached structural sheathing and bottom chord shall have a properly attached rig d ce l ng Locat ons shown for permanent lateral restra nt of webs shall have brac ng nstalled per BCSI sect ons B3 B7 or B10 as appl cable

ITW Build ng Components Group Inc (ITWBCG) shall not be respons ble for any deviat on from th s design any fa lure to bu ld the truss n conformance w th ANSI/TPI 1 or for handling shipp ng installat on and bracing of trusses Apply plates to each face of truss and position as shown above and on the Jo nt Details unless noted otherw se Refer to draw ngs 160A-Z for standard plate posit ons A seal on th s drawing or cover page l st ng th s draw ng nd cates acceptance of profess onal eng neer ng respons bility solely for the des gn shown The su tabil ty and use of th s des gn for any structure s the responsib l ty of the Bu ld ng Des gner per ANSI/TPI 1 Sec 2 For more nformat on see Th s job s general notes page ITW-BCG www twbcg com TPI www tp nst org WTCA www sbc ndustry com ICC www ccsafe org

TC LL	20.0 PSF	REF	R487-- 66659
TC DL	7 0 PSF	DATE	03/28/13
BC DL	10.0 PSF	DRW	HCUSR487 13087063
BC LL	0 0 PSF	HC-ENG	DF/DF
TOT LD	37 0 PSF	SEQN-	60852
DUR.FAC	1 25		
SPACING	24 0"	JREF-	1UUX487_Z01

(13-106--Don Reed Construction Decker House -- Lake City, FL - J4 5'10'2 Mono)

THIS DWG PREPARED FROM COMPUTER INPUT (LOADS & DIMENSIONS) SUBMITTED BY TRUSS MFR

Top chord 2x4 SP_#1_12A
Bot chord 2x4 SP_#1_12A
Webs 2x4 SP_#3__12A

Lumber grades designated with 12A use design values approved 1/5/2012 by ALSC

Bottom chord checked for 10 00 psf non-concurrent live load

Deflection meets L/240 live and L/180 total load Creep increase factor for dead load is 1 50

120 mph wind, 15 00 ft mean hgt, ASCE 7-10, CLOSED bldg, not located within 4 50 ft from roof edge, RISK CAT II, EXP B, wind TC DL=3 5 psf, wind BC DL=5 0 psf GCpi(+/-)=0 18

Wind loads and reactions based on MWFRS with additional C&C member design

Right end vertical not exposed to wind pressure

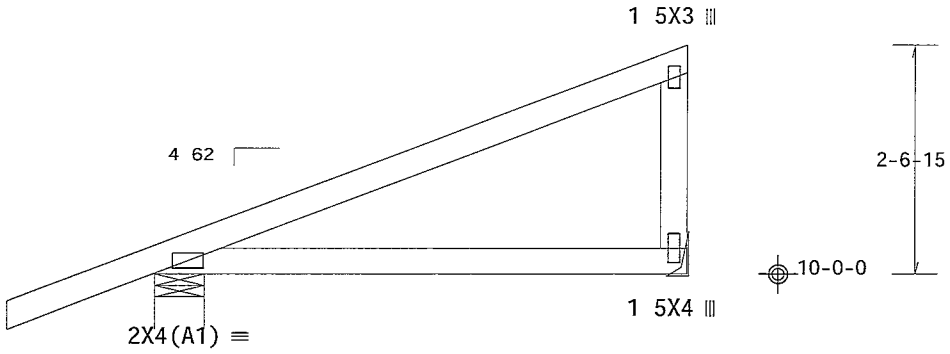

1-7-8

5-10-2 Over 2 Supports

R=337 U=18 W=6 494
RL=47

R=197

Design Crit FBC2010Res/TPI-2007(STD)
FT/RT=10%(0%)/0(0) ★10 03 11 0309 20 QTY 2

PLT TYP Wave

FL/-/5/-/-/R/-

Scale =.5"/Ft.

WALTER P. FINN LICENSE No.22839 STATE OF FLORIDA PROFESSIONAL ENGINEER

03/28/2013

ALPINE
ITW Building Components Group Inc.
Haines City, FL 33844
FL COA #0 278

WARNING READ AND FOLLOW ALL NOTES ON THIS SHEET!
IMPORTANT FURNISH THIS DESIGN TO ALL CONTRACTORS INCLUDING INSTALLERS

Trusses requ re extreme care in fabricat ng handl ng sh pping nstalling and brac ng Re[illegible] and follow the latest ed t on of BCSI (Building Component Safety Information by TPI and WTCA) for [illegible] pract ces pr or to perform ng these funct ons Installers shall provide temporary bracing per [illegible] Unless noted otherw se top chord shall have properly attached structural sheath ng and bottom c[illegible] shall have a properly attached r g d ceiling Locat ons shown for permanent lateral restra nt of [illegible] shall have brac ng installed per BCSI sections B3 B7 or B10 as appl cable

ITW Bu ld ng Components Group Inc (ITWBCG) shall not be respons ble for any dev at on from this des[illegible] any fa lure to build the truss n conformance w th ANSI/TPI 1 or for handl ng sh pp ng nstallat on [illegible] brac ng of trusses Apply plates to each face of truss and pos t on as shown above and on the Jo nt Deta ls unless noted otherwise Refer to draw ngs 160A-Z for standard plate pos t ons A seal on th s draw ng or cover page l sting this draw ng ind cates acceptance of profess onal eng neer ng respons bil ty solely for the design shown The su tab l ty and use of this des gn for any structure s the respons b lity of the Bu ld ng Des gner per ANSI/TPI 1 Sec 2 For more nformat on see This job s general notes page ITW BCG www itwbcg com TPI www tp nst org WTCA www sbc ndustry com ICC www ccsafe org

TC LL	20 0 PSF	REF	R487-- 66660
TC DL	7 0 PSF	DATE	03/28/13
BC DL	10.0 PSF	DRW	HCUSR487 13087065
BC LL	0 0 PSF	HC-ENG DF/DF	
TOT LD	37 0 PSF	SEQN-	70770
DUR FAC	1 25		
SPACING	24 0"	JREF-	1UUX487_Z01

(13-106--Don Reed Construction Decker House -- Lake City, FL - J5 4 10'4 Jack)

THIS DWG PREPARED FROM COMPUTER INPUT (LOADS & DIMENSIONS) SUBMITTED BY TRUSS MFR

Top chord 2x4 SP_#1_12A
Bot chord 2x4 SP_#1_12A

Lumber grades designated with 12A' use design values approved 1/5/2012 by ALSC

Bottom chord checked for 10 00 psf non-concurrent live load

Provide (2) 16d common nails(0 162 x3 5), toe nailed at Top chord
Provide (2) 16d common nails(0 162 x3 5), toe nailed at Bot chord

120 mph wind, 15 00 ft mean hgt, ASCE 7-10, CLOSED bldg, not located within 4 50 ft from roof edge, RISK CAT II, EXP B, wind TC DL=3 5 psf, wind BC DL=5 0 psf GCpi(+/-)=0 18

Wind loads and reactions based on MWFRS with additional C&C member design

Deflection meets L/240 live and L/180 total load Creep increase factor for dead load is 1 50

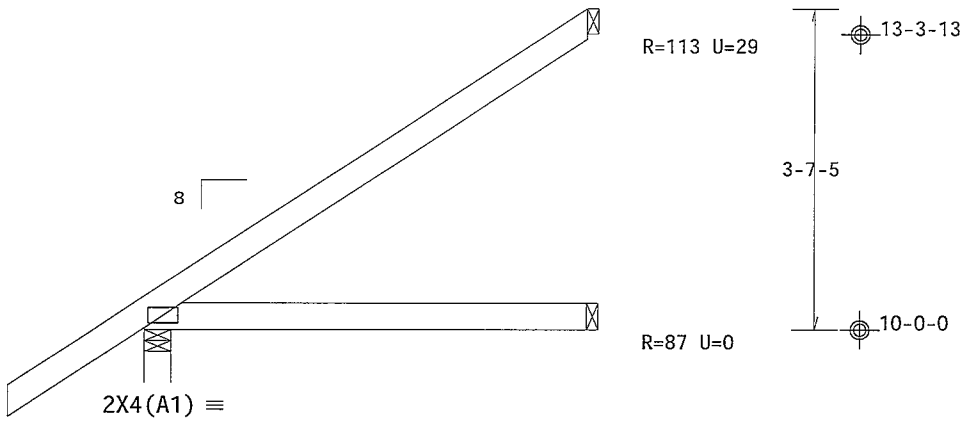

1-6-0

4-10-4 Over 3 Supports

R=302 U=0 W=3 5'
RL=69/-36

Design Crit FBC2010Res/TPI-2007(STD)
FT/RT=10%(0%)/0(0)

PLT TYP Wave

WALTER P. FINN LICENSE No.22839 STATE OF FLORIDA PROFESSIONAL ENGINEER
03/28/2013

FL/-/5/-/-/R/- Scale =.5"/Ft.

TC LL	20 0 PSF	REF	R487-- 66661
TC DL	7 0 PSF	DATE	03/28/13
BC DL	10.0 PSF	DRW	HCUSR487 13087082
BC LL	0 0 PSF	HC-ENG	DF/DF
TOT LD	37 0 PSF	SEQN-	60861
DUR FAC	1 25		
SPACING	24.0"	JREF-	1UUX487_Z01

ALPINE
ITW Building Components Group Inc.
Haines City FL 33844
FL COA #0 278

WARNING READ AND FOLLOW ALL NOTES ON THIS SHEET!
IMPORTANT FURNISH THIS DESIGN TO ALL CONTRACTORS INCLUDING INSTALLERS

Trusses requ re extreme care n fabr cat ng handling shipping nstall ng and brac ng Re follow the latest ed t on of BCSI (Bu ld ng Component Safety Informat on by TPI and WTCA) for pract ces prior to perform ng these functions Installers shall prov de temporary brac ng per B Unless noted otherwise top chord shall have properly attached structural sheathing and bottom ch shall have a properly attached r g d ce l ng Locat ons shown for permanent lateral restra nt of shall have bracing nstalled per BCSI sect ons B3 B7 or B10 as appl cable

ITW Build ng Components Group Inc (ITWBCG) shall not be respons ble for any dev at on from th s desi any fa lure to bu ld the truss n conformance w th ANSI/TPI 1 or for handl ng sh pp ng nstallat on & bracing of trusses Apply plates to each face of truss and pos t on as shown above and on the Jo nt Details unless noted otherw se Refer to draw ngs 160A-Z for standard plate posit ons A seal on th s drawing or cover page l sting th s draw ng nd cates acceptance of profess onal eng neer ng respons b l ty solely for the des gn shown The su tabil ty and use of th s design for any structure s the responsibility of the Bu ld ng Des gner per ANSI/TPI 1 Sec 2 For more nformation see Th s job s general notes page ITW-BCG www twbcg com TPI www tp nst org WTCA www sbc ndustry com ICC www iccsafe org

(13-106--Don Reed Construction Decker House -- Lake City, FL - J5A 2'6'3 Jack)

THIS DWG PREPARED FROM COMPUTER INPUT (LOADS & DIMENSIONS) SUBMITTED BY TRUSS MFR

Top chord 2x4 SP_#1_12A
Bot chord 2x4 SP_#1_12A
Webs 2x4 SP_#3__12A

Lumber grades designated with '12A" use design values approved 1/5/2012 by ALSC

Bottom chord checked for 10 00 psf non-concurrent live load

Provide (2) 16d common nails(0 162 x3 5), toe nailed at Top chord
Provide (2) 16d common nails(0 162'x3 5'), toe nailed at Bot chord

120 mph wind, 15 00 ft mean hgt, ASCE 7-10, CLOSED bldg, Located anywhere in roof RISK CAT II, EXP B, wind TC DL=3 5 psf, wind BC DL=5 0 psf GCpi(+/-)=0 18

Wind loads and reactions based on MWFRS with additional C&C member design

Deflection meets L/240 live and L/180 total load Creep increase factor for dead load is 1 50

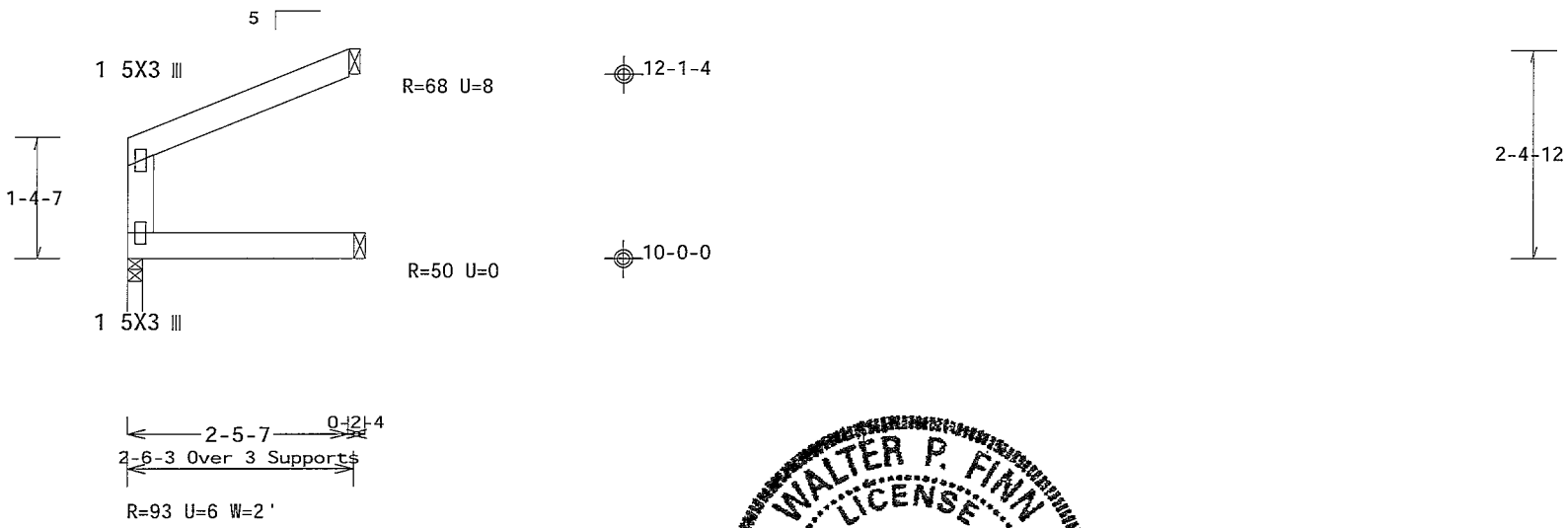

Design Crit FBC2010Res/TPI-2007(STD)
FT/RT=10%(0%)/0(0)

PLT TYP. Wave

FL/-/5/-/-/R/-

Scale = 5"/Ft.

TC LL	20 0 PSF	REF	R487-- 66662
TC DL	7 0 PSF	DATE	03/28/13
BC DL	10 0 PSF	DRW	HCUSR487 13087060
BC LL	0 0 PSF	HC-ENG	DF/DF
TOT LD	37.0 PSF	SEQN-	60853
DUR FAC	1 25		
SPACING	24 0"	JREF-	1UUX487_Z01

WALTER P. FINN LICENSE No.22839 STATE OF FLORIDA PROFESSIONAL ENGINEER
03/28/2013

ALPINE
ITW Building Components Group Inc.
Haines City, FL 33844
FL COA #0 278

WARNING READ AND FOLLOW ALL NOTES ON THIS SHEET!
IMPORTANT FURNISH THIS DESIGN TO ALL CONTRACTORS INCLUDING INSTALLERS

Trusses requ re extreme care n fabricat ng hand ng shipping nstalling and brac ng Ro follow the latest ed t on of BCSI (Building Component Safety Information by TPI and WTCA) for pract ces pr or to performing these functions installers shall provide temporary bracing per BC Unless noted otherw se top chord shall have properly attached structural sheath ng and bottom ch shall have a properly attached r g d ceiling Locations shown for permanent lateral restraint of w shall have bracing nstalled per BCSI sect ons B3 B7 or B10 as applicable

ITW Bu ld ng Components Group Inc (ITWBCG) shall not be respons ble for any dev ation from this des g any failure to bu ld the truss n conformance with ANSI/TPI 1 or for handling sh pping nstallation & bracing of trusses Apply plates to each face of truss and pos t on as shown above and on the Joint Details unless noted otherwise Refer to drawings 160A-Z for standard plate pos tions A seal on this drawing or cover page l st ng th s drawing indicates acceptance of professional engineering respons bility solely for the des gn shown The suitability and use of this design for any structure is the responsib l ty of the Build ng Designer per ANSI/TPI 1 Sec 2 For more informat on see Th s job s general notes page ITW-BCG www itwbcg com TPI www tpinst org WTCA www sbcindustry com ICC www iccsafe org

THIS DWG PREPARED FROM COMPUTER INPUT (LOADS & DIMENSIONS) SUBMITTED BY TRUSS MFR

(13-106--Don Reed Construction Decker House -- Lake City, FL - J6 6'9'12 Jack)

Top chord 2x4 SP_#1_12A
Bot chord 2x4 SP_#1_12A

Lumber grades designated with 12A use design values approved 1/5/2012 by ALSC

Bottom chord checked for 10 00 psf non-concurrent live load

Provide (2) 16d common nails(0 162"x3 5), toe nailed at Top chord
Provide (2) 16d common nails(0 162 x3 5"), toe nailed at Bot chord

120 mph wind, 15 00 ft mean hgt, ASCE 7-10, CLOSED bldg, not located within 4 50 ft from roof edge RISK CAT II, EXP B, wind TC DL=3 5 psf, wind BC DL=5 0 psf GCpi(+/-)=0 18

Wind loads and reactions based on MWFRS with additional C&C member design

Deflection meets L/240 live and L/180 total load Creep increase factor for dead load is 1 50

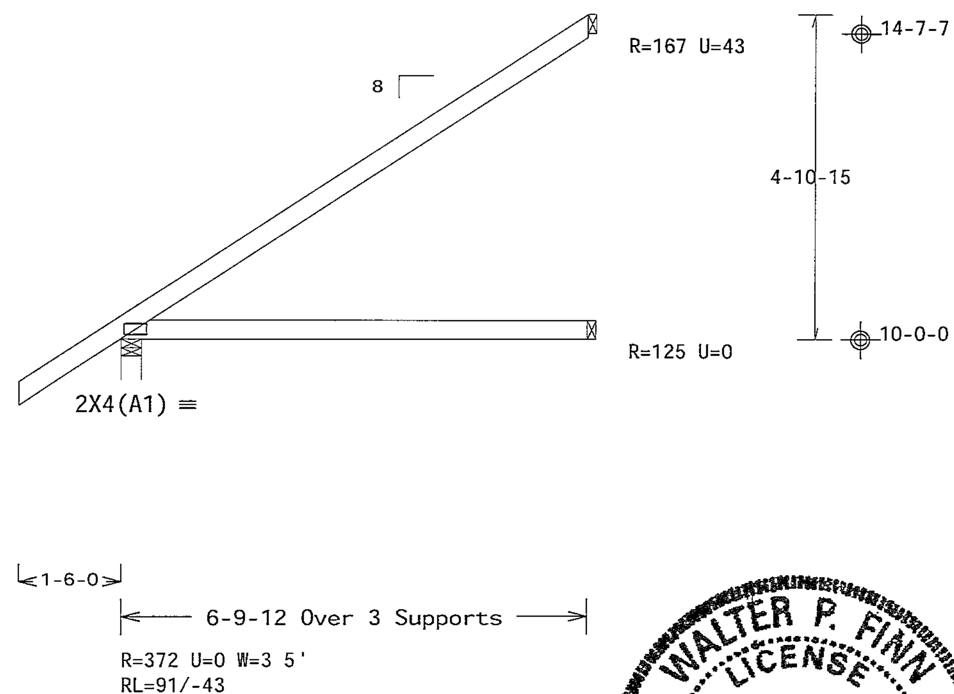

Design Crit FBC2010Res/TPI-2007(STD)
FT/RT=10%(0%)/0(0) 10.03 11 0209.19 QTY 4 FL/-/5/-/-/R/- Scale =.375"/Ft.

PLT TYP. Wave

ALPINE
ITW Building Components Group Inc.
Haines City, FL 33844
FL COA #0 278

WARNING READ AND FOLLOW ALL NOTES ON THIS SHEET!
IMPORTANT FURNISH THIS DESIGN TO ALL CONTRACTORS INCLUDING INSTALLERS

Trusses require extreme care in fabricating handling shipping installing and bracing. Refer to and follow the latest edition of BCSI (Building Component Safety Information by TPI and WTCA) for safety practices prior to performing these functions. Installers shall provide temporary bracing per BCSI. Unless noted otherwise top chord shall have properly attached structural sheathing and bottom chord shall have a properly attached rigid ceiling. Locations shown for permanent lateral restraint of webs shall have bracing installed per BCSI sections B3 B7 or B10 as applicable.

ITW Building Components Group Inc (ITWBCG) shall not be responsible for any deviation from this design, any failure to build the truss in conformance with ANSI/TPI 1 or for handling shipping installation bracing of trusses. Apply plates to each face of truss and position as shown above and on the Joint Details unless noted otherwise. Refer to drawings 160A-Z for standard plate positions. A seal on this drawing or cover page listing this drawing indicates acceptance of professional engineering responsibility solely for the design shown. The suitability and use of this design for any structure is the responsibility of the Building Designer per ANSI/TPI 1 Sec 2. For more information see This job's general notes page ITW BCG www itwbcg com TPI www tpinst org WTCA www sbcindustry com ICC www iccsafe org

WALTER P. FINN LICENSE No. 22839 STATE OF FLORIDA PROFESSIONAL ENGINEER
03/28/2013

TC LL	20.0 PSF	REF	R487-- 66663
TC DL	7.0 PSF	DATE	03/28/13
BC DL	10.0 PSF	DRW	HCUSR487 13087078
BC LL	0.0 PSF	HC-ENG	DF/DF
TOT.LD.	37.0 PSF	SEQN-	60862
DUR.FAC.	1.25		
SPACING	24.0"	JREF-	1UUX487_Z01

(13-106--Don Reed Construction Decker House -- Lake City FL - J7 7 Jack)

THIS DWG PREPARED FROM COMPUTER INPUT (LOADS & DIMENSIONS) SUBMITTED BY TRUSS MFR

Top chord 2x4 SP_#1_12A
Bot chord 2x4 SP_#1_12A

Lumber grades designated with "12A' use design values approved 1/5/2012 by ALSC

Bottom chord checked for 10 00 psf non-concurrent live load

MWFRS loads based on trusses located at least 7 50 ft from roof edge

Provide (2) 16d common nails(0 162"x3 5"), toe nailed at Top chord
Provide (2) 16d common nails(0 162 x3 5"), toe nailed at Bot chord

120 mph wind, 15 00 ft mean hgt, ASCE 7-10, CLOSED bldg, not located within 4 50 ft from roof edge, RISK CAT II, EXP B, wind TC DL=3 5 psf, wind BC DL=5 0 psf GCpi(+/-)=0 18

Wind loads and reactions based on MWFRS with additional C&C member design

Deflection meets L/240 live and L/180 total load Creep increase factor for dead load is 1 50

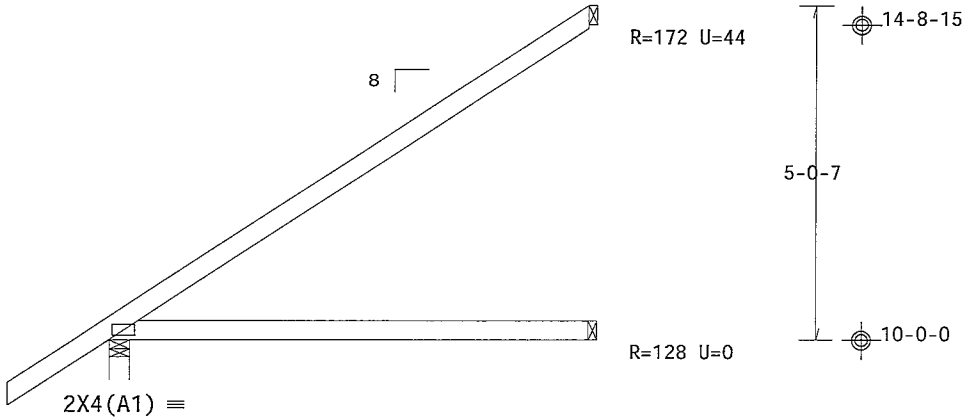

1-6-0

7-0-0 Over 3 Supports

R=379 U=0 W=3 5"
RL=93/-43

Design Crit FBC2010Res/TPI-2007(STD)
FT/RT=10%(0%)/0(0)

PLT TYP Wave

WALTER P. FINN LICENSE No.22839 STATE OF FLORIDA PROFESSIONAL ENGINEER
03/28/2013

FL/-/5/-/-/R/- Scale = 375"/Ft.

TC LL	20.0 PSF	REF	R487-- 66664
TC DL	7.0 PSF	DATE	03/28/13
BC DL	10.0 PSF	DRW	HCUSR487 13087083
BC LL	0.0 PSF	HC-ENG	DF/DF
TOT.LD.	37.0 PSF	SEQN-	60859
DUR FAC.	1.25		
SPACING	24.0"	JREF-	1UUX487_Z01

ALPINE
ITW Building Components Group Inc.
Haines City, FL 33844
FL COA #0 278

WARNING READ AND FOLLOW ALL NOTES ON THIS SHEET!
IMPORTANT FURNISH THIS DESIGN TO ALL CONTRACTORS INCLUDING INSTALLERS

Trusses requ re extreme care in fabr cat ng handling sh pp ng nstall ng and brac ng Re and follow the latest edition of BCSI (Bu ld ng Component Safety Informat on by TPI and WTCA) for practices prior to performing these funct ons Installers shall prov de temporary brac ng per Unless noted otherwise top chord shall have properly attached structural sheathing and bottom shall have a properly attached rigid ce l ng Locat ons shown for permanent lateral restra nt of shall have brac ng installed per BCSI sections B3 B7 or B10 as appl cable

ITW Bu lding Components Group Inc (ITWBCG) shall not be responsible for any deviat on from th s des any fa lure to build the truss in conformance w th ANSI/TPI 1 or for handl ng shipp ng nstallat on brac ng of trusses Apply plates to each face of truss and pos tion as shown above and on the Jo nt Details unless noted otherwise Refer to draw ngs 160A-Z for standard plate posit ons A seal on th s draw ng or cover page listing this draw ng nd cates acceptance of profess onal eng neer ng respons b l ty solely for the design shown The su tabil ty and use of th s des gn for any structure s the respons bility of the Bu lding Des gner per ANSI/TPI 1 Sec 2 For more nformat on see Th s job s general notes page ITW-BCG www twbcg com TPI www tp nst org WTCA www sbc ndustry com ICC www iccsafe org

(13-106--Don Reed Construction Decker House -- Lake City, FL - J7A 3'6"4 Jack)

THIS DWG PREPARED FROM COMPUTER INPUT (LOADS & DIMENSIONS) SUBMITTED BY TRUSS MFR

Top chord 2x4 SP_#1_12A
Bot chord 2x4 SP_#1_12A
Webs 2x4 SP_#3__12A

Lumber grades designated with 12A" use design values approved 1/5/2012 by ALSC

Bottom chord checked for 10 00 psf non-concurrent live load

MWFRS loads based on trusses located at least 7 50 ft from roof edge

120 mph wind, 15 00 ft mean hgt, ASCE 7-10, CLOSED bldg, Located anywhere in roof, RISK CAT II, EXP B, wind TC DL=3 5 psf, wind BC DL=5 0 psf GCpi(+/-)=0 18

Wind loads and reactions based on MWFRS with additional C&C member design

Deflection meets L/240 live and L/180 total load Creep increase factor for dead load is 1 50

Provide (2) 16d common nails(0 162"x3 5"), toe nailed at Top chord
Provide (2) 16d common nails(0 162"x3 5'), toe nailed at Bot chord

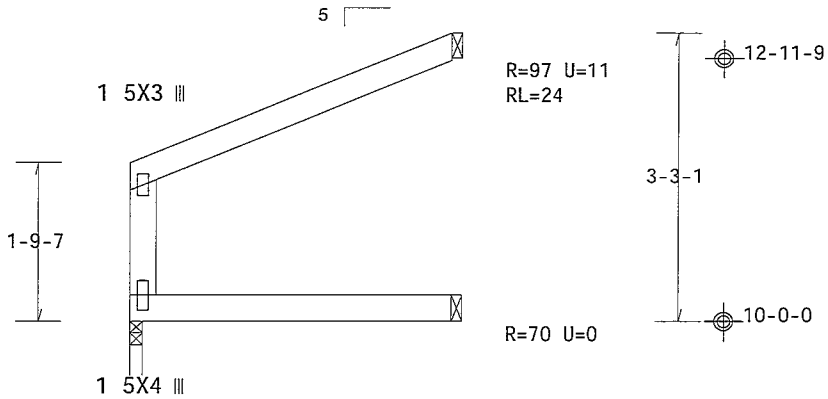

<3-6-4 Over 3 Supports>

R=132 U=9 W=1 725'

Design Crit: FBC2010Res/TPI-2007(STD)
FT/RT=10%(0%)/0(0) 10.03.11.0209.19 QTY 1

PLT TYP Wave

FL/-/5/-/-/R/- Scale =.5"/Ft

ALPINE
ITW Building Components Group Inc.
Haines City, FL 33844
FL COA #0 278

WARNING READ AND FOLLOW ALL NOTES ON THIS SHEET!
IMPORTANT FURNISH THIS DESIGN TO ALL CONTRACTORS INCLUDING INSTALLERS

Trusses requ re extreme care n fabricat ng handling shipping nstalling and bracing refer to and follow the latest ed t on of BCSI (Building Component Safety Information by TPI and WTCA) for safety practices pr or to performing these funct ons Installers shall provide temporary bracing per BCSI. Unless noted otherw se top chord shall have properly attached structural sheath ng and bottom chord shall have a properly attached r g d ceiling Locations shown for permanent lateral restraint of webs shall have bracing installed per BCSI sect ons B3 B7 or B10 as applicable

ITW Build ng Components Group Inc (ITWBCG) shall not be respons ble for any dev ation from this design any failure to bu ld the truss n conformance with ANSI/TPI 1 or for handling sh pping installation brac ng of trusses Apply plates to each face of truss and pos t on as shown above and on the Joint Deta ls unless noted otherwise Refer to drawings 160A-Z for standard plate posit ons A seal on this draw ng or cover page l sting th s drawing indicates acceptance of professional engineering responsibil ty solely for the design shown The suitab lity and use of this design for any structure is the respons b l ty of the Build ng Designer per ANSI/TPI 1 Sec 2 For more information see Th s job s general notes page ITW-BCG www itwbcg com TPI www tpinst org WTCA www sbcindustry com ICC www ccsafe org

WALTER P. FINN LICENSE No.22839 STATE OF FLORIDA PROFESSIONAL ENGINEER
03/28/2013

TC LL	20.0 PSF	REF	R487-- 66665
TC DL	7.0 PSF	DATE	03/28/13
BC DL	10.0 PSF	DRW	HCUSR487 13087058
BC LL	0 0 PSF	HC-ENG	DF/DF
TOT LD.	37 0 PSF	SEQN-	60854
DUR.FAC.	1.25		
SPACING	24 0"	JREF-	1UUX487_Z01

(13-106--Don Reed Construction Decker House -- Lake City, FL - J9A 5'6"4 Jack)

THIS DWG PREPARED FROM COMPUTER INPUT (LOADS & DIMENSIONS) SUBMITTED BY TRUSS MFR

Top chord 2x4 SP_#1_12A
Bot chord 2x4 SP_#1_12A
Webs 2x4 SP_#3__12A

Lumber grades designated with "12A" use design values approved 1/5/2012 by ALSC

Bottom chord checked for 10 00 psf non-concurrent live load

MWFRS loads based on trusses located at least 7 50 ft from roof edge

120 mph wind, 15 00 ft mean hgt, ASCE 7-10, CLOSED bldg, Located anywhere in roof, RISK CAT II, EXP B, wind TC DL=3 5 psf, wind BC DL=5 0 psf GCpi(+/-)=0 18

Wind loads and reactions based on MWFRS with additional C&C member design

Deflection meets L/240 live and L/180 total load Creep increase factor for dead load is 1 50

Provide (2) 16d common nails(0 162"x3 5"), toe nailed at Top chord
Provide (2) 16d common nails(0 162"x3 5"), toe nailed at Bot chord

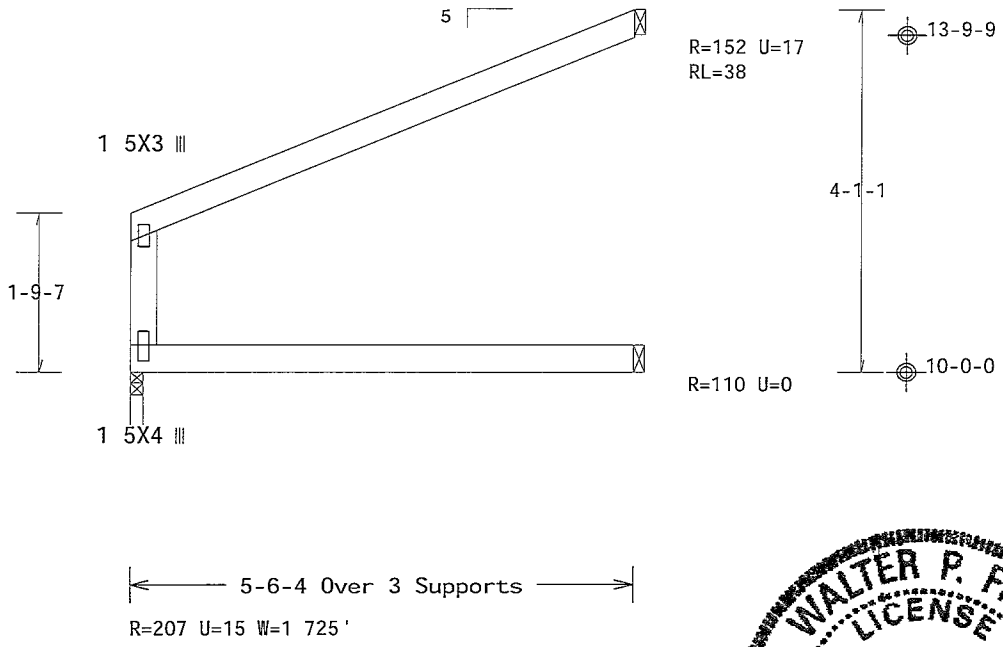

Design Crit· FBC2010Res/TPI-2007(STD)
FT/RT=10%(0%)/0(0)

10 03 11 0289 79 GTK

PLT TYP Wave

FL/-/5/-/-/R/-

Scale = 5"/Ft

WALTER P. FINN
LICENSE
No.22839
STATE OF FLORIDA
PROFESSIONAL ENGINEER
03/28/2013

ALPINE
ITW Building Components Group Inc.
Haines City, FL 33844
FL COA #0 278

WARNING READ AND FOLLOW ALL NOTES ON THIS SHEET!
IMPORTANT FURNISH THIS DESIGN TO ALL CONTRACTORS INCLUDING INSTALLERS

Trusses requ re extreme care n fabr cat ng handling shipping installing and brac ng Ref to and follow the latest edit on of BCSI (Bu ding Component Safety Informat on by TPI and WTCA) for s pract ces prior to perform ng these functions Installers shall prov de temporary brac ng per BC Unless noted otherwise top chord shall have properly attached structural sheathing and bottom cho shall have a properly attached r g d ce l ng Locat ons shown for permanent lateral restra nt of w shall have bracing nstalled per BCSI sect ons B3 B7 or B10 as appl cable

ITW Build ng Components Group Inc (ITWBCG) shall not be respons ble for any dev ation from this design any failure to bu ld the truss n conformance w th ANSI/TPI 1 or for handling sh pping installation & bracing of trusses Apply plates to each face of truss and posit on as shown above and on the Joint Data ls unless noted otherwise Refer to drawings 160A-Z for standard plate pos t ons A seal on this drawing or cover page list ng th s drawing ndicates acceptance of professional eng neering respons bility solely for the des gn shown The suitab l ty and use of this design for any structure is the respons b l ty of the Build ng Designer per ANSI/TPI 1 Sec 2 For more informat on see Th s job s general notes page ITW-BCG www twbcg com TPI www tp nst org WTCA www sbcindustry com ICC www ccsafe org

TC LL	20 0 PSF	REF	R487-- 66666
TC DL	7 0 PSF	DATE	03/28/13
BC DL	10.0 PSF	DRW	HCUSR487 13087074
BC LL	0 0 PSF	HC-ENG	DF/DF
TOT.LD.	37.0 PSF	SEQN-	60855
DUR.FAC	1 25		
SPACING	24.0"	JREF-	1UUX487_Z01

THIS DWG PREPARED FROM COMPUTER INPUT (LOADS & DIMENSIONS) SUBMITTED BY TRUSS MFR

(13-106--Don Reed Construction Decker House -- Lake City, FL - M 10' Mono)

Top chord 2x4 SP_#1_12A
Bot chord 2x4 SP_#1_12A
Webs 2x4 SP_#3__12A

Lumber grades designated with '12A use design values approved 1/5/2012 by ALSC

H = recommended connection based on manufacturer tested capacities and calculations Conditions may exist that require different connections than indicated Refer to manufacturer publication for additional information

Bottom chord checked for 10 00 psf non-concurrent live load

Deflection meets L/240 live and L/180 total load Creep increase factor for dead load is 1 50

120 mph wind, 15 00 ft mean hgt, ASCE 7-10, CLOSED bldg, not located within 9 00 ft from roof edge, RISK CAT II, EXP B, wind TC DL=3 5 psf, wind BC DL=5 0 psf GCpi(+/-)=0 18

Wind loads and reactions based on MWFRS with additional C&C member design

Right end vertical not exposed to wind pressure

Hanger specified assumes connection to supporting chord is located a minimum of five times the depth of the supporting chord from any unsupported end, unless unsupported chord end has 85% plating coverage

MWFRS loads based on trusses located at least 15 00 ft from roof edge

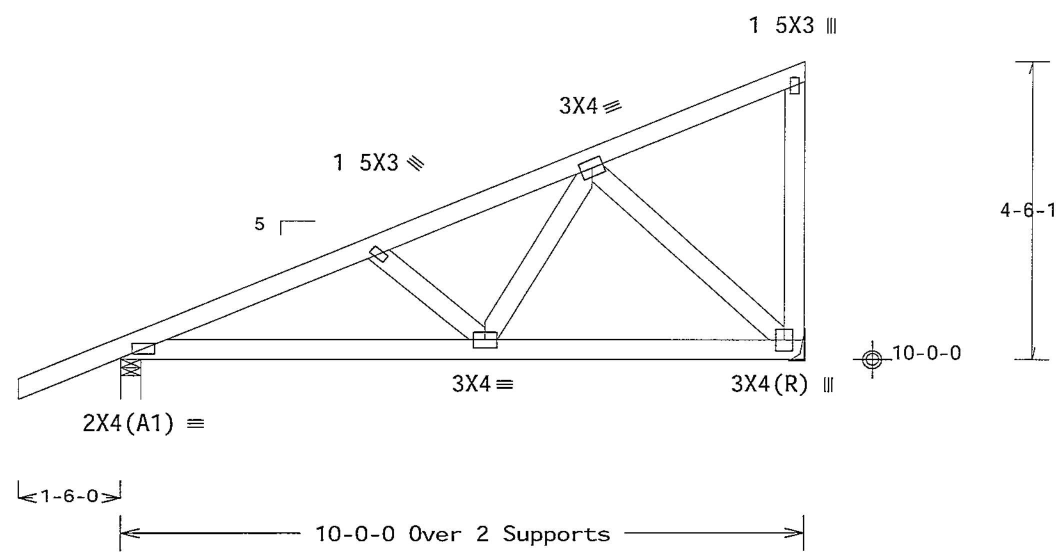

R=479 U=0 W=3 5
RL=53

Supported Member Face (2) 0 148'x3" nails
Supporting Member Face (4) 0 148"x3 nails
Supporting Member (1) 2x6 SP_#2_12A

Design Crit FBC2010Res/TPI-2007(STD)
FT/RT=10%(0%)/0(0)

PLT TYP. Wave

10.03.1 0809 19 QTY:4 FL/-/5/-/-/R/-

Scale =.375"/Ft

TC LL	20.0 PSF	REF	R487-- 66667
TC DL	7 0 PSF	DATE	03/28/13
BC DL	10 0 PSF	DRW	HCUSR487 13087046
BC LL	0 0 PSF	HC-ENG	DF/DF
TOT LD.	37.0 PSF	SEQN-	60893
DUR.FAC	1 25		
SPACING	24 0"	JREF-	1UUX487_Z01

WARNING READ AND FOLLOW ALL NOTES ON THIS SHEET!
IMPORTANT FURNISH THIS DESIGN TO ALL CONTRACTORS INCLUDING INSTALLERS

Trusses require extreme care in fabricating handling shipping installing and bracing Refer to and follow the latest edition of BCSI (Building Component Safety Information by TPI and WTCA) for safety practices prior to performing these functions Installers shall provide temporary bracing per BCSI Unless noted otherwise top chord shall have properly attached structural sheathing and bottom chord shall have a properly attached rigid ceiling Locations shown for permanent lateral restraint of webs shall have bracing installed per BCSI sections B3 B7 or B10 as applicable

ITW Building Components Group Inc (ITWBCG) shall not be responsible for any deviation from this design any failure to build the truss in conformance with ANSI/TPI 1 or for handling shipping installation & bracing of trusses Apply plates to each face of truss and position as shown above and on the Joint Details unless noted otherwise Refer to drawings 160A-Z for standard plate positions A seal on this drawing or cover page listing this drawing indicates acceptance of professional engineering responsibility solely for the design shown The suitability and use of this design for any structure is the responsibility of the Building Designer per ANSI/TPI 1 Sec 2 For more information see This job s general notes page ITW-BCG www itwbcg com TPI www tpinst org WTCA www sbcindustry com ICC www iccsafe org

WALTER P. FINN LICENSE No. 22839 STATE OF FLORIDA PROFESSIONAL ENGINEER

03/28/2013

ALPINE
ITW Building Components Group Inc.
Haines City, FL 33844
FL COA #0 278

THIS DWG PREPARED FROM COMPUTER INPUT (LOADS & DIMENSIONS) SUBMITTED BY TRUSS MFR

(13-106--Don Reed Construction Decker House -- Lake City, FL - M1 10'1'8 Mono)

Top chord 2x4 SP_#1_12A
Bot chord 2x4 SP_#1_12A
Webs 2x4 SP_#3__12A

Lumber grades designated with '12A use design values approved 1/5/2012 by ALSC

Bottom chord checked for 10 00 psf non-concurrent live load

Deflection meets L/240 live and L/180 total load Creep increase factor for dead load is 1 50

120 mph wind, 15 00 ft mean hgt, ASCE 7-10, CLOSED bldg, not located within 9 00 ft from roof edge, RISK CAT II, EXP B, wind TC DL=3 5 psf, wind BC DL=5 0 psf GCpi(+/-)=0 18

Wind loads and reactions based on MWFRS with additional C&C member design

Right end vertical not exposed to wind pressure

MWFRS loads based on trusses located at least 15 00 ft from roof edge

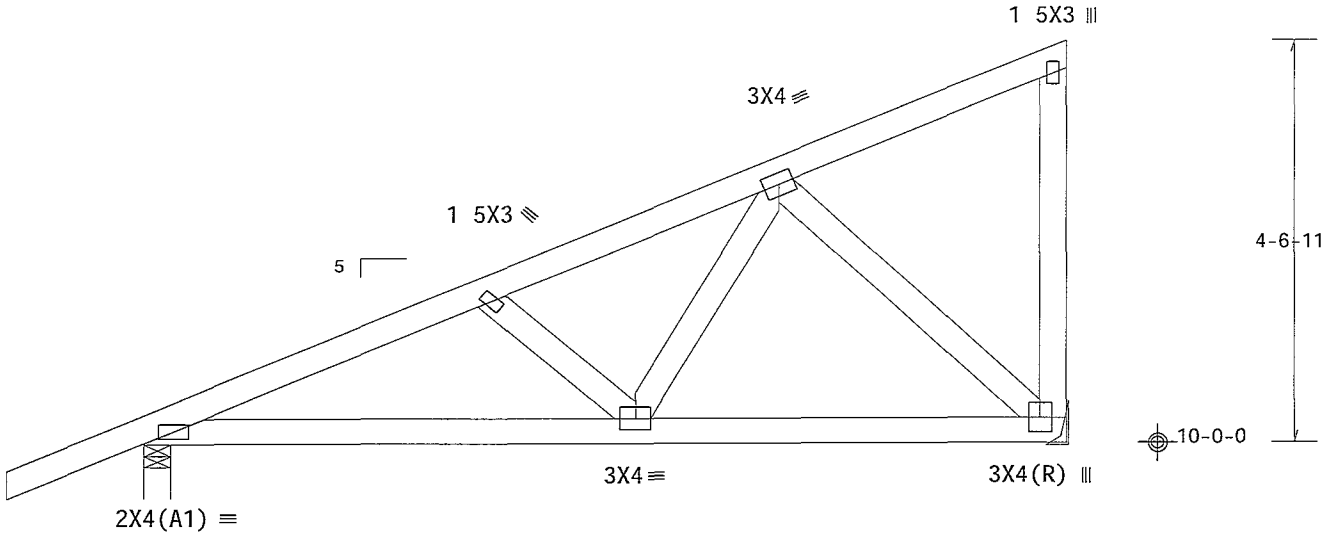

R=367 U=0
H=H1

1-6-0

10-1-8 Over 2 Supports

R=483 U=0 W=3 5"
RL=53

Design Crit FBC2010Res/TPI-2007(STD)
FT/RT=10%(0%)/0(0) 10 03 11 0209 20 QTY 5

PLT TYP Wave

FL/-/5/-/-/R/- Scale = 5"/Ft

WALTER P. FINN LICENSE No.22839 STATE OF FLORIDA PROFESSIONAL ENGINEER

03/28/2013

ALPINE
ITW Building Components Group Inc.
Hames City, FL 33844
FL COA #0 278

WARNING READ AND FOLLOW ALL NOTES ON THIS SHEET!
IMPORTANT FURNISH THIS DESIGN TO ALL CONTRACTORS INCLUDING INSTALLERS

Trusses requ re extreme care n fabr cating handl ng sh pp ng nstall ng and brac ng [illegible] follow the latest ed tion of BCSI (Bu ld ng Component Safety Informat on by TPI and WTCA) fo[illegible] practices pr or to performing these funct ons Installers shall prov de temporary brac ng per[illegible] Unless noted otherw se top chord shall have properly attached structural sheath ng and bottom [illegible] shall have a properly attached rigid ce l ng Locat ons shown for permanent lateral restra nt o[illegible] shall have brac ng nstalled per BCSI sect ons B3 B7 or B10 as appl cable

ITW Bu ld ng Components Group Inc (ITWBCG) shall not be responsible for any deviat on from th s do[illegible] any fa lure to build the truss n conformance w th ANSI/TPI 1 or for handl ng sh pp ng nstallat on [illegible] brac ng of trusses Apply plates to each face of truss and pos t on as shown above and on the Joint Deta ls unless noted otherw se Refer to draw ngs 160A-Z for standard plate pos tions A seal on th s draw ng or cover page listing this draw ng ind cates acceptance of profess onal engineer ng responsibility solely for the design shown The su tab l ty and use of th s des gn for any structure s the respons bility of the Bu ld ng Des gner per ANSI/TPI 1 Sec 2 For more nformation see This job s general notes page ITW BCG www itwbcg com TPI www tpinst org WTCA www sbc ndustry com ICC www ccsafe org

TC LL	20 0 PSF	REF	R487-- 66668
TC DL	7 0 PSF	DATE	03/28/13
BC DL	10.0 PSF	DRW	HCUSR487 13087001
BC LL	0.0 PSF	HC-ENG	JB/WPF
TOT.LD	37 0 PSF	SEQN-	72456
DUR FAC.	1.25		
SPACING	24 0"	JREF-	1UUX487_Z01

THIS DWG PREPARED FROM COMPUTER INPUT (LOADS & DIMENSIONS) SUBMITTED BY TRUSS MFR

(13-106--Don Reed Construction Decker House -- Lake City, FL - M10 7'4" Mono Girder)

Top chord 2x4 SP_#1_12A
Bot chord 2x4 SP_#1_12A
Webs 2x4 SP_#3__12A

Lumber grades designated with '12A use design values approved 1/5/2012 by ALSC

Bottom chord checked for 10 00 psf non-concurrent live load

Deflection meets L/240 live and L/180 total load Creep increase factor for dead load is 1 50

120 mph wind 15 00 ft mean hgt, ASCE 7-10, CLOSED bldg, Located anywhere in roof RISK CAT II, EXP B, wind TC DL=3 5 psf, wind BC DL=5 0 psf GCpi(+/-)=0 18

Wind loads and reactions based on MWFRS with additional C&C member design

Right end vertical not exposed to wind pressure

MWFRS loads based on trusses located at least 15 00 ft from roof edge

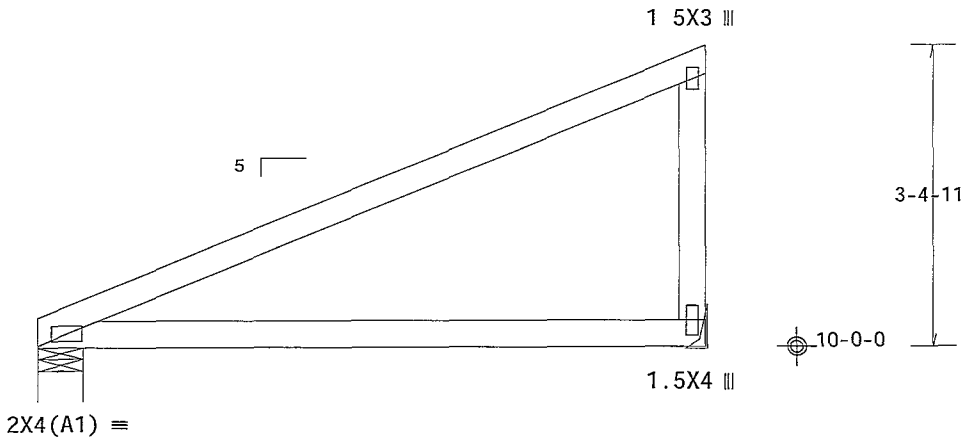

7-4-0 Over 2 Supports

R=281 U=0 W=6"
RL=33

R=270
H=H1

Design Crit FBC2010Res/TPI-2007(STD)
FT/RT=10%(0%)/0(0) 10 03 11 0209 19 QTY 1 FL/-/5/-/-/R/- Scale =.5"/Ft.

PLT TYP Wave

ALPINE
ITW Building Components Group Inc.
Haines City, FL 33844
FL COA #0 278

WARNING READ AND FOLLOW ALL NOTES ON THIS SHEET!
IMPORTANT FURNISH THIS DESIGN TO ALL CONTRACTORS INCLUDING INSTALLERS

Trusses requ re extreme care n fabr cating handling shipping installing and brac ng refer to and follow the latest edit on of BCSI (Bu ld ng Component Safety Informat on by TPI and WTCA) r sa y pract ces prior to perform ng those functions Installers shall prov de temporary brac ng pe BCSI Unless noted otherwise top chord shall have properly attached structural sheathing and bottom shall have a properly attached rig d ce l ng Locat ons shown for permanent lateral restra nt shall have bracing nstalled per BCSI sect ons B3 B7 or B10 as appl cable

ITW Bu ld ng Components Group Inc (ITWBCG) shall not be responsible for any deviat on from th s any fa lure to bu ld the truss n conformance w th ANSI/TPI 1 or for handl ng shipp ng nstallat on brac ng of trusses Apply plates to each face of truss and pos t on as shown above and on the Joint Deta ls unless noted otherw se Refer to draw ngs 160A-Z for standard plate pos tions A seal on th s draw ng or cover page listing this draw ng nd cates acceptance of profess onal engineer ng respons b l ty solely for the design shown The su tab lity and use of th s des gn for any structure is the respons b l ty of the Build ng Des gner per ANSI/TPI 1 Sec 2 For more nformat on see This job s general notes page ITW-BCG www itwbcg com TPI www tpinst org WTCA www sbc ndustry com ICC www ccsafe org

WALTER P. FINN
LICENSE
No.22839
STATE OF FLORIDA
PROFESSIONAL ENGINEER
03/28/2013

TC LL	20 0 PSF	REF	R487-- 66669
TC DL	7.0 PSF	DATE	03/28/13
BC DL	10 0 PSF	DRW	HCUSR487 13087070
BC LL	0.0 PSF	HC-ENG	DF/DF
TOT.LD.	37 0 PSF	SEQN-	60911
DUR.FAC	1 25		
SPACING	24.0"	JREF-	1UUX487_Z01

THIS DWG PREPARED FROM COMPUTER INPUT (LOADS & DIMENSIONS) SUBMITTED BY TRUSS MFR

(13-106--Don Reed Construction Decker House -- Lake City, FL - M2 10 Mono)

Top chord 2x4 SP_#1_12A
Bot chord 2x4 SP_#1_12A
Webs 2x4 SP_#3__12A

Lumber grades designated with '12A' use design values approved 1/5/2012 by ALSC

H = recommended connection based on manufacturer tested capacities and calculations Conditions may exist that require different connections than indicated Refer to manufacturer publication for additional information

Bottom chord checked for 10 00 psf non-concurrent live load

Deflection meets L/240 live and L/180 total load Creep increase factor for dead load is 1 50

120 mph wind, 15 00 ft mean hgt, ASCE 7-10, CLOSED bldg, not located within 9 00 ft from roof edge, RISK CAT II, EXP B wind TC DL=3 5 psf, wind BC DL=5 0 psf GCpi(+/-)=0 18

Wind loads and reactions based on MWFRS with additional C&C member design

Right end vertical not exposed to wind pressure

Hanger specified assumes connection to supporting chord is located a minimum of five times the depth of the supporting chord from any unsupported end, unless unsupported chord end has 85% plating coverage

MWFRS loads based on trusses located at least 15 00 ft from roof edge

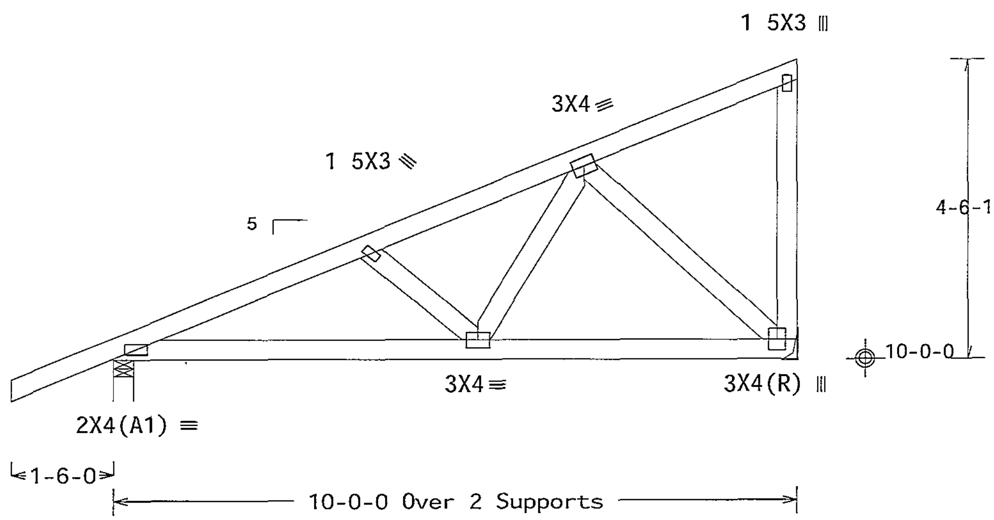

R=479 U=0 W=3 5
RL=53

R=367 U=0 H=Simpson LUS24
Supporting Member Face (2) 0 148 x3" nails
Supporting Member Face (4) 0 148 x3' nails
Supporting Member ( ) 2x4 SP_#1_12A

Design Crit FBC2010Res/TPI-2007(STD)
FT/RT=10%(0%)/0(0) 10.03 11 0309.19 QTY

PLT TYP Wave

ALPINE
ITW Building Components Group Inc.
Haines City, FL 33844
FL COA #0 278

WARNING READ AND FOLLOW ALL NOTES ON THIS SHEET!
IMPORTANT FURNISH THIS DESIGN TO ALL CONTRACTORS INCLUDING INSTALLERS

Trusses require extreme care in fabricating handling shipping installing and bracing Refer to and follow the latest edition of BCSI (Building Component Safety Information by TPI and WTCA) for safety practices prior to performing these functions Installers shall provide temporary bracing per BCSI Unless noted otherwise top chord shall have properly attached structural sheathing and bottom chord shall have a properly attached rigid ceiling Locations shown for permanent lateral restraint of webs shall have bracing installed per BCSI sections B3 B7 or B10 as applicable

ITW Building Components Group Inc (ITWBCG) shall not be responsible for any deviation from this design any failure to build the truss in conformance with ANSI/TPI 1 or for handling shipping installation & bracing of trusses Apply plates to each face of truss and position as shown above and on the Joint Details unless noted otherwise Refer to drawings 160A-Z for standard plate positions A seal on this drawing or cover page listing this drawing indicates acceptance of professional engineering responsibility solely for the design shown The suitability and use of this design for any structure is the responsibility of the Building Designer per ANSI/TPI 1 Sec 2 For more information see This job s general notes page ITW BCG www twbcg com TPI www tpinst org WTCA www sbcindustry com ICC www iccsafe org

WALTER P FINN LICENSE No.22839 STATE OF FLORIDA PROFESSIONAL ENGINEER
03/28/2013

FL/-/5/-/-/R/-

TC LL	20.0 PSF
TC DL	7 0 PSF
BC DL	10 0 PSF
BC LL	0.0 PSF
TOT LD	37.0 PSF
DUR FAC	1 25
SPACING	24 0"

Scale = 375"/Ft.

REF	R487-- 66670
DATE	03/28/13
DRW	HCUSR487 13087047
HC-ENG	DF/DF
SEQN-	60846
JREF-	1UUX487_Z01

(13-106--Don Reed Construction Decker House -- Lake City, FL - M3 10' Mono)

Top chord 2x4 SP_#1_12A
Bot chord 2x4 SP_#1_12A
Webs 2x4 SP_#3__12A

Lumber grades designated with '12A' use design values approved 1/5/2012 by ALSC

H = recommended connection based on manufacturer tested capacities and calculations Conditions may exist that require different connections than indicated Refer to manufacturer publication for additional information

(H1) = (J) Hanger not calculated (1)2x4 SP_#1_12A supporting member

Deflection meets L/240 live and L/180 total load Creep increase factor for dead load is 1 50

120 mph wind, 15 00 ft mean hgt, ASCE 7-10, CLOSED bldg, not located within 9 00 ft from roof edge, RISK CAT II, EXP B, wind TC DL=3 5 psf, wind BC DL=5 0 psf GCpi(+/-)=0 18

Wind loads and reactions based on MWFRS with additional C&C member design

Right end vertical not exposed to wind pressure

Hanger specified assumes connection to supporting chord is located a minimum of five times the depth of the supporting chord from any unsupported end, unless unsupported chord end has 85% plating coverage

Bottom chord checked for 10 00 psf non-concurrent live load

MWFRS loads based on trusses located at least 15 00 ft from roof edge

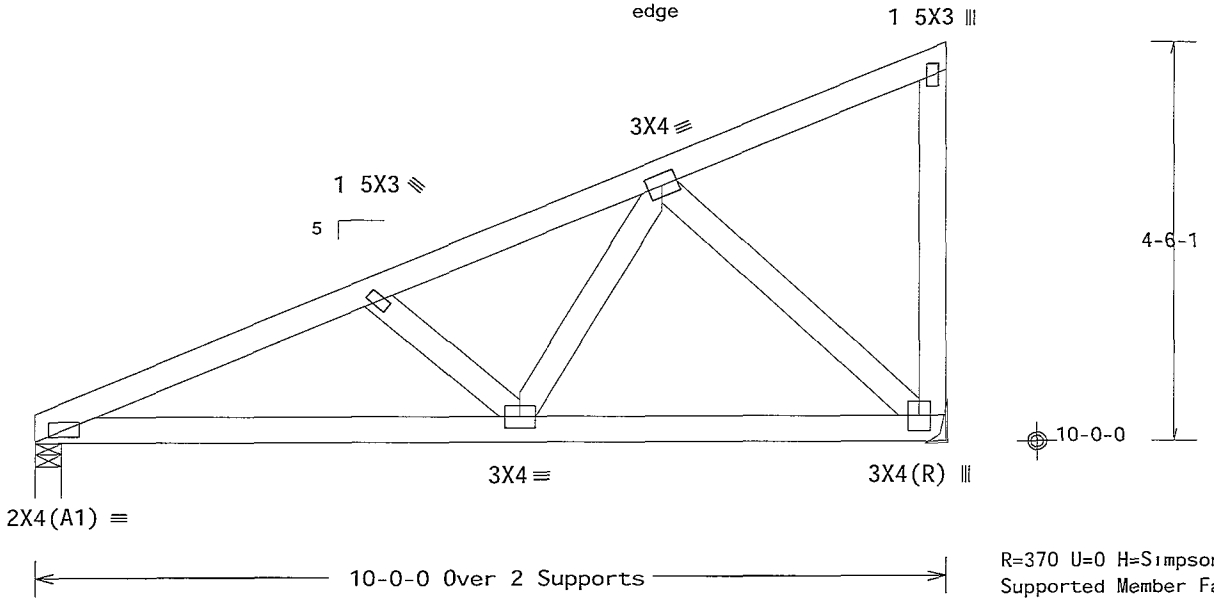

R=370 U=0 H=Simpson LUS24
Supported Member Face (2) 0 148"x3" nails
Supporting Member Face (4) 0 148"x3" nails
Supporting Member (1) 2x4 SP_#1_12A

R=381 U=0 W=3 5
RL=46

Design Crit FBC2010Res/TPI-2007(STD)
FT/RT=10%(0%)/0(0)

PLT TYP Wave

FL/-/5/-/-/R/- Scale =.5"/Ft.

TC LL	20 0 PSF	REF	R487-- 66671
TC DL	7 0 PSF	DATE	03/28/13
BC DL	10.0 PSF	DRW	HCUSR487 13087002
BC LL	0.0 PSF	HC-ENG	JB/WPF
TOT LD.	37.0 PSF	SEQN-	60845
DUR.FAC.	1 25		
SPACING	24 0"	JREF-	1UUX487_Z01

ALPINE
ITW Building Components Group Inc.
Haines City, FL 33844
FL COA #0 278

WARNING READ AND FOLLOW ALL NOTES ON THIS SHEET
IMPORTANT FURNISH THIS DESIGN TO ALL CONTRACTORS INCLUDING INSTALLERS

Trusses require extreme care n fabr cating handling sh pping install ng and brac ng R[illegible] follow the latest edit on of BCSI (Bu ld ng Component Safety Informat on by TPI and WTCA) for [illegible] pract ces prior to perform ng these funct ons Installers shall prov de temporary brac ng per [illegible] Unless noted otherwise top chord shall have properly attached structural sheathing and bottom c[illegible] shall have a properly attached rigid ce l ng Locat ons shown for permanent lateral restra nt of [illegible] shall have brac ng installed per BCSI sections B3 B7 or B10 as applicable

ITW Bu lding Components Group Inc (ITWBCG) shall not be responsible for any deviat on from th s dos[illegible] any fa lure to build the truss in conformance w th ANSI/TPI 1 or for handl ng sh pp ng nstallat on & brac ng of trusses Apply plates to each face of truss and pos t on as shown above and on the Joint Data Is unless noted otherwise Refer to drawings 160A-Z for standard plate pos tions A seal on this draw ng or cover page listing this draw ng indicates acceptance of professional engineering responsibil ty solely for the design shown The su tab lity and use of this des gn for any structure is the respons b l ty of the Build ng Designer per ANSI/TPI 1 Sec 2 For more informat on see This job s general notes page ITW-BCG www itwbcg com TPI www tpinst org WTCA www sbcindustry com ICC www iccsafe org

WALTER P. FINN
LICENSE
No. 22839
STATE OF FLORIDA
PROFESSIONAL ENGINEER
03/28/2013

THIS DWG PREPARED FROM COMPUTER INPUT (LOADS & DIMENSIONS) SUBMITTED BY TRUSS MFR

(13-106--Don Reed Construction Decker House -- Lake City, FL - M4 11 1"8 Mono)

Top chord 2x4 SP_#1_12A
Bot chord 2x4 SP_#1_12A
Webs 2x4 SP_#3__12A

Lumber grades designated with 12A' use design values approved 1/5/2012 by ALSC

Bottom chord checked for 10 00 psf non-concurrent live load

Deflection meets L/240 live and L/180 total load Creep increase factor for dead load is 1 50

120 mph wind, 15 00 ft mean hgt, ASCE 7-10, CLOSED bldg, not located within 9 00 ft from roof edge, RISK CAT II, EXP B wind TC DL=3 5 psf, wind BC DL=5 0 psf GCpi(+/-)=0 18

Wind loads and reactions based on MWFRS with additional C&C member design

Right end vertical not exposed to wind pressure

MWFRS loads based on trusses located at least 15 00 ft from roof edge

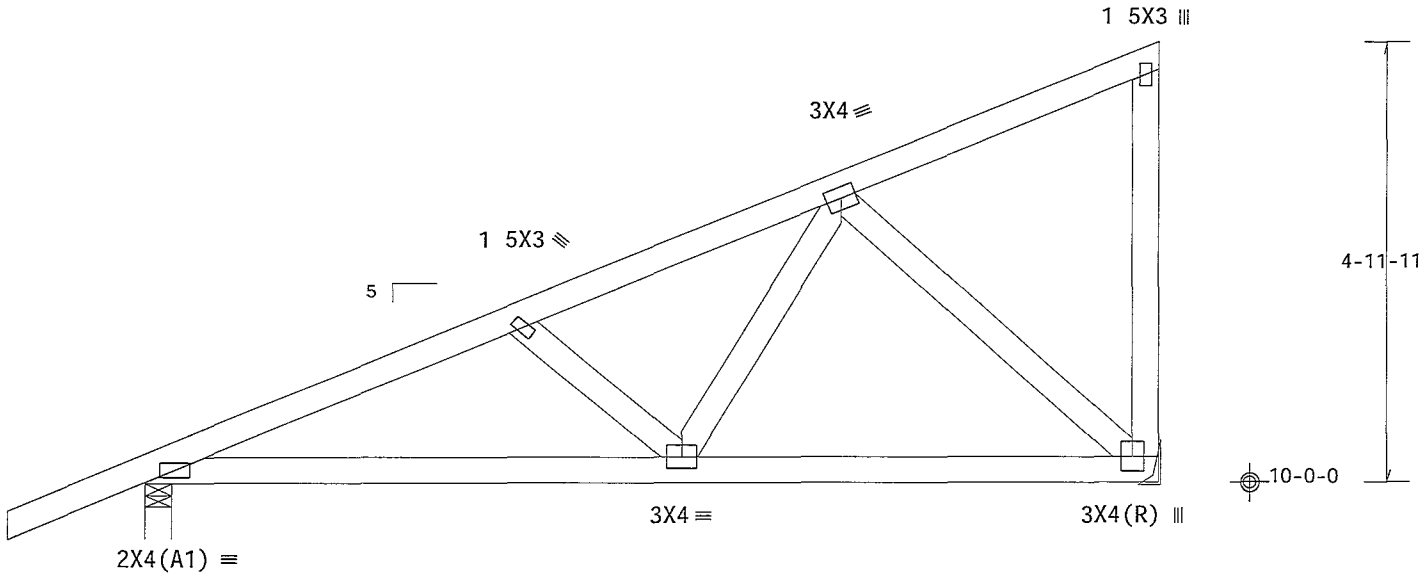

R=405 U=0
H=H1

1-6-0

11-1-8 Over 2 Supports

R=520 U=0 W=3 5'
RL=58

Design Crit FBC2010Res/TPI-2007(STD)
FT/RT=10%(0%)/0(0) 10 03 11 0209.20 QTY 1

PLT TYP Wave

FL/-/5/-/-/R/- Scale =.5"/Ft.

TC LL	20.0 PSF	REF	R487-- 66672
TC DL	7 0 PSF	DATE	03/28/13
BC DL	10.0 PSF	DRW	HCUSR487 13087003
BC LL	0.0 PSF	HC-ENG	JB/WPF
TOT.LD.	37.0 PSF	SEQN-	72459
DUR.FAC	1.25		
SPACING	24 0"	JREF-	1UUX487_Z01

ALPINE
ITW Building Components Group Inc.
Haines City FL 33844
FL COA #0 278

WARNING READ AND FOLLOW ALL NOTES ON THIS SHEET!
IMPORTANT FURNISH THIS DESIGN TO ALL CONTRACTORS INCLUDING INSTALLERS

Trusses requ re extreme care in fabr cat ng hand l ng sh pp ng nstall ng and brac ng [illegible] follow the latest ed tion of BCSI (Build ng Component Safety Information by TPI and WTCA) for safety practices pr or to performing these funct ons Installers shall provide temporary bracing per BCSI. Unless noted otherw se top chord shall have properly attached structural sheath ng and bottom chord shall have a properly attached r g d ceiling Locat ons shown for permanent lateral restraint of webs shall have bracing installed per BCSI sect ons B3 B7 or B10 as applicable

ITW Build ng Components Group Inc (ITWBCG) shall not be respons ble for any dev ation from this design any failure to bu ld the truss in conformance with ANSI/TPI 1 or for handling sh pping installation bracing of trusses Apply plates to each face of truss and posit on as shown above and on the Joint Data is unless noted otherw se Refer to drawings 160A-Z for standard plate pos t ons A seal on this drawing or cover page l st ng th s drawing nd cates acceptance of professional eng neer ng responsibility solely for the des gn shown The suitabil ty and use of this design for any structure is the responsib l ty of the Bu ld ng Designer per ANSI/TPI 1 Sec 2 For more informat on see Th s job s general notes page ITW-BCG www twbcg com TPI www tp nst org WTCA www sbcindustry com ICC www iccsafe org

WALTER P. FINN
LICENSE
No. 22839
STATE OF FLORIDA
PROFESSIONAL ENGINEER
03/28/2013

(13-106--Don Reed Construction Decker House -- Lake City, FL - M5 3 9"8 Mono)

Top chord 2x4 SP_#1_12A
Bot chord 2x4 SP_#1_12A
Webs 2x4 SP_#3__12A

Lumber grades designated with '12A' use design values approved 1/5/2012 by ALSC

End verticals not exposed to wind pressure

Hanger specified assumes connection to supporting chord is located a minimum of five times the depth of the supporting chord from any unsupported end, unless unsupported chord end has 85% plating coverage

In lieu of structural panels use purlins to brace all flat TC @ 24' OC

Deflection meets L/240 live and L/180 total load Creep increase factor for dead load is 1 50

145 mph wind, 15 00 ft mean hgt, ASCE 7-10, CLOSED bldg, Located anywhere in roof, RISK CAT II, EXP B, wind TC DL=3 5 psf, wind BC DL=5 0 psf GCpi(+/-)=0 18

Wind loads and reactions based on MWFRS with additional C&C member design

H = recommended connection based on manufacturer tested capacities and calculations Conditions may exist that require different connections than indicated Refer to manufacturer publication for additional information

(H1) = (J) Hanger not calculated (1)2x4 SP_#1_12A supporting member

Bottom chord checked for 10 00 psf non-concurrent live load

MWFRS loads based on trusses located at least 15 00 ft from roof edge

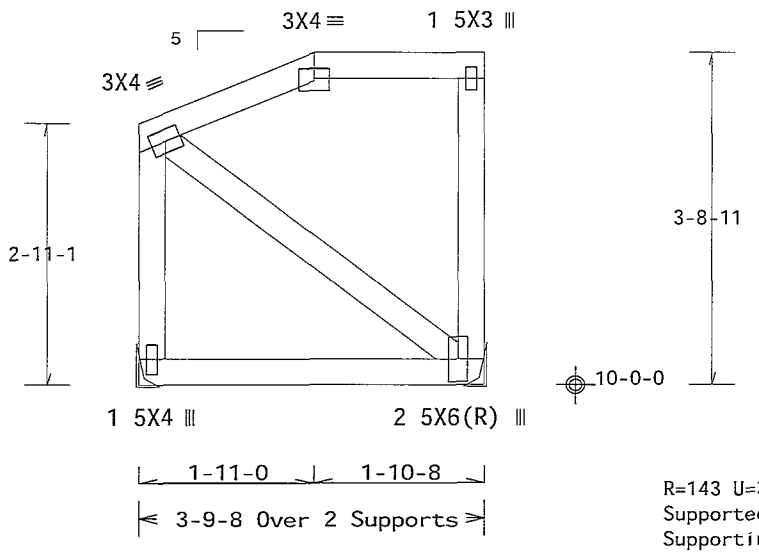

R=143 U=30 H=Simpson LUS24
Supported Member Face (2) 0 148'x3" nails
Supporting Member Face (4) 0 148'x3' nails
Supporting Member 2x4 SP_#1_12A

R=143 U=1

Design Crit FBC2010Res/TPI-2007(STD)
FT/RT=10%(0%)/0(0) 10 03 11 0209.20 QTY 1 FL/-/5/-/-/R/- Scale =.5"/Ft.

PLT TYP Wave

WALTER P. FINN LICENSE No.22839 STATE OF FLORIDA PROFESSIONAL ENGINEER
03/28/2013

ALPINE
ITW Building Components Group Inc.
Hames City FL 33844
FL COA #0 278

WARNING READ AND FOLLOW ALL NOTES ON THIS SHEET!
IMPORTANT FURNISH THIS DESIGN TO ALL CONTRACTORS INCLUDING INSTALLERS

Trusses requ re extreme care in fabr cat ng handl ng sh pp ng nstall ng and bracing Refer to and follow the latest ed t on of BCSI (Build ng Component Safety Information by TPI and WTCA) for safety practices pr or to perform ng these funct ons Installers shall provide temporary bracing per BCSI. Unless noted otherw se top chord shall have properly attached structural sheath ng and bottom chord shall have a properly attached r g d ceiling Locations shown for permanent lateral restraint of webs shall have bracing installed per BCSI sections B3 B7 or B10 as applicable

ITW Bu ld ng Components Group Inc (ITWBCG) shall not be respons ble for any dev at on from th s design, any fa lure to bu ld the truss n conformance w th ANSI/TPI 1 or for handl ng sh pp ng nstallat on and bracing of trusses Apply plates to each face of truss and pos tion as shown above and on the Jo nt Details unless noted otherw se Refer to draw ngs 160A-Z for standard plate pos t ons A sea on th s drawing or cover page I st ng th s draw ng nd cates acceptance of profess onal eng neer ng respons b lity solely for the des gn shown The su tabil ty and use of th s des gn for any structure s the responsibil ty of the Bu lding Des gner per ANSI/TPI 1 Sec 2 For more nformat on see Th s job s general notes page ITW BCG www twbcg com TPI www tp nst org WTCA www sbc ndustry com ICC www iccsafe org

TC LL	20.0 PSF	REF	R487-- 66673
TC DL	7 0 PSF	DATE	03/28/13
BC DL	10 0 PSF	DRW	HCUSR487 13087004
BC LL	0 0 PSF	HC-ENG	JB/WPF
TOT LD.	37 0 PSF	SEQN-	72477
DUR FAC.	1 25		
SPACING	24 0"	JREF-	1UUX487_Z01

THIS DWG PREPARED FROM COMPUTER INPUT (LOADS & DIMENSIONS) SUBMITTED BY TRUSS MFR

(13-106--Don Reed Construction Decker House -- Lake City, FL - M6 8 8 Mono)

Top chord 2x4 SP_#1_12A
Bot chord 2x4 SP_#1_12A
Webs 2x4 SP_#3__12A
Lt Stub Wedge 2x4 SP_#3__12A

Lumber grades designated with "12A' use design values approved 1/5/2012 by ALSC

H = recommended connection based on manufacturer tested capacities and calculations Conditions may exist that require different connections than indicated Refer to manufacturer publication for additional information

Bottom chord checked for 10 00 psf non-concurrent live load

Deflection meets L/240 live and L/180 total load Creep increase factor for dead load is 1 50

120 mph wind, 15 00 ft mean hgt, ASCE 7-10, CLOSED bldg, Located anywhere in roof, RISK CAT II, EXP B, wind TC DL=3 5 psf, wind BC DL=5 0 psf GCpi(+/-)=0 18

Wind loads and reactions based on MWFRS with additional C&C member design

Right end vertical not exposed to wind pressure

Hanger specified assumes connection to supporting chord is located a minimum of five times the depth of the supporting chord from any unsupported end unless unsupported chord end has 85% plating coverage

MWFRS loads based on trusses located at least 7 50 ft from roof edge

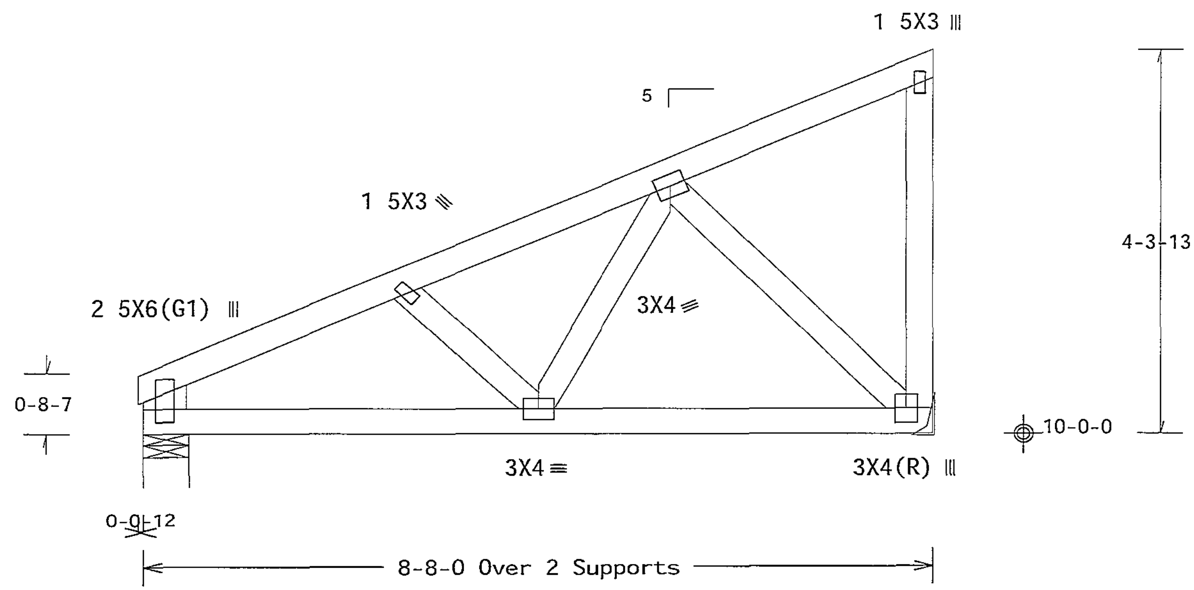

R=326 U=0 W=6
RL=59

R=326 U=27 H=Simpson US24
Supported Member Face (2) 0 148"x3" nails
Supporting Member Face (4) 0 148'x3" nails
Supporting Member (1) 2x4 SP_#3__12A

Design Crit FBC2010Res/TPI-2007(STD)
FT/RT=10%(0%)/0(0) 0 03 1 0209.20 QTY

PLT TYP Wave

FL/-/5/-/-/R/- Scale = 5"/Ft

TC LL	20 0 PSF	REF	R487-- 66674
TC DL	7 0 PSF	DATE	03/28/13
BC DL	10.0 PSF	DRW	HCUSR487 13087030
BC LL	0 0 PSF	HC-ENG	DF/DF
TOT.LD	37 0 PSF	SEQN-	70799
DUR FAC	1 25		
SPACING	24.0"	JREF-	1UUX487_Z01

WARNING READ AND FOLLOW ALL NOTES ON THIS SHEET!
IMPORTANT FURNISH THIS DESIGN TO ALL CONTRACTORS INCLUDING INSTALLERS

Trusses require extreme care in fabricating handling shipping installing and bracing Refer to and follow the latest edition of BCSI (Building Component Safety Information by TPI and WTCA) for safety practices prior to performing these functions Installers shall provide temporary bracing per BCSI Unless noted otherwise top chord shall have properly attached structural sheathing and bottom chord shall have a properly attached rigid ceiling Locations shown for permanent lateral restraint of webs shall have bracing installed per BCSI sections B3 B7 or B10 as applicable

ITW Building Components Group Inc (ITWBCG) shall not be responsible for any deviation from this design any failure to build the truss in conformance with ANSI/TPI 1 or for handling shipping installation & bracing of trusses Apply plates to each face of truss and position as shown above and on the Joint Details unless noted otherwise Refer to drawings 160A-Z for standard plate positions A seal on this drawing or cover page listing this drawing indicates acceptance of professional engineering responsibility solely for the design shown The suitability and use of this design for any structure is the responsibility of the Building Designer per ANSI/TPI 1 Sec 2 For more information see This job's general notes page ITW BCG www twbcg com TPI www tpinst org WTCA www sbcindustry com ICC www iccsafe org

ALPINE
ITW Building Components Group Inc.
Haines City, FL 33844
FL COA #0 278

WALTER P. FINN
LICENSE
No. 22839
STATE OF FLORIDA
PROFESSIONAL ENGINEER

03/28/2013

THIS DWG PREPARED FROM COMPUTER INPUT (LOADS & DIMENSIONS) SUBMITTED BY TRUSS MFR

(13-106--Don Reed Construction Decker House -- Lake City, FL - M7 8'8' Mono)

Top chord 2x4 SP_#1_12A
Bot chord 2x4 SP_#1_12A
Webs 2x4 SP_#3__12A
Lt Stub Wedge 2x4 SP_#3__12A

Lumber grades designated with "12A" use design values approved 1/5/2012 by ALSC

H = recommended connection based on manufacturer tested capacities and calculations Conditions may exist that require different connections than indicated Refer to manufacturer publication for additional information

Bottom chord checked for 10 00 psf non-concurrent live load

Deflection meets L/240 live and L/180 total load Creep increase factor for dead load is 1 50

120 mph wind, 15 00 ft mean hgt, ASCE 7-10, CLOSED bldg, not located within 4 50 ft from roof edge, RISK CAT II, EXP B, wind TC DL=3 5 psf, wind BC DL=5 0 psf GCpi(+/-)=0 18

Wind loads and reactions based on MWFRS with additional C&C member design

Right end vertical not exposed to wind pressure

Hanger specified assumes connection to supporting chord is located a minimum of five times the depth of the supporting chord from any unsupported end, unless unsupported chord end has 85% plating coverage

MWFRS loads based on trusses located at least 7 50 ft from roof edge

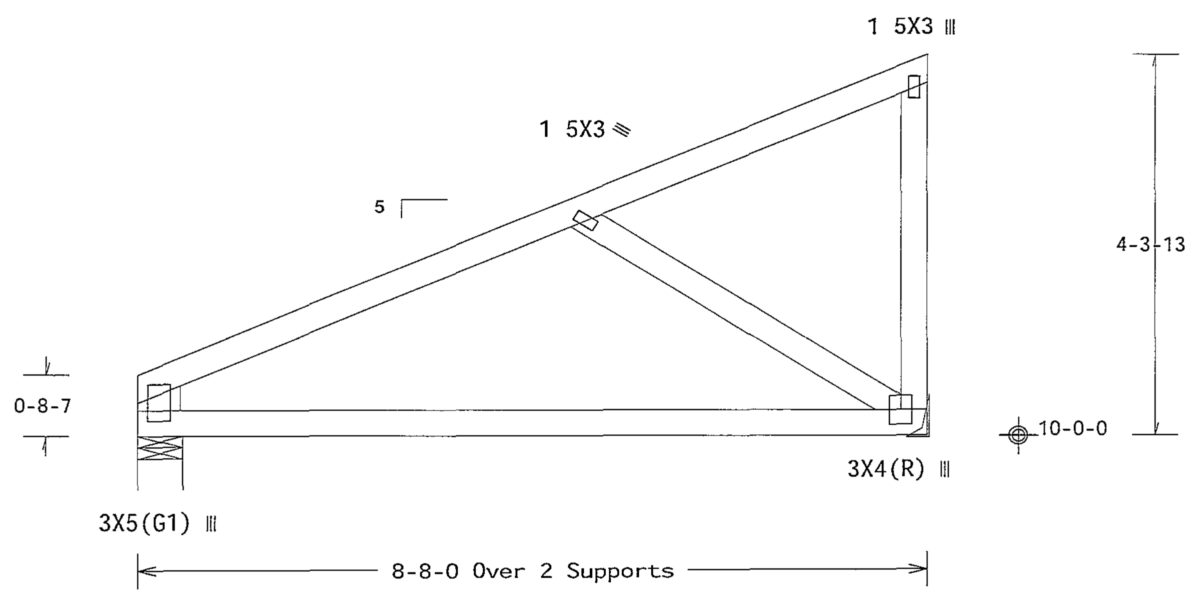

R=326 U=0 W=6"
RL=59

... U=37 H=Simpson HUS24
Supported Member Face (2) 0 148"x3' nails
Supporting Member Face (4) 0 148"x3' nails
Supporting Member (1) 2x6 SP_#2_12A

Design Crit: FBC2010Res/TPI-2007(STD)
FT/RT=10%(0%)/0(0) 10.03.11.0909.19

PLT TYP Wave

ALPINE
ITW Building Components Group Inc.
Haines City FL 33844
FL COA #0 278

WARNING READ AND FOLLOW ALL NOTES ON THIS SHEET!
IMPORTANT FURNISH THIS DESIGN TO ALL CONTRACTORS INCLUDING INSTALLERS

Trusses require extreme care in fabricating, handling, shipping, installing and bracing. Refer to and follow the latest edition of BCSI (Building Component Safety Information, by TPI and WTCA) for safety practices prior to performing these functions. Installers shall provide temporary bracing per BCSI. Unless noted otherwise, top chord shall have properly attached structural sheathing and bottom chord shall have a properly attached rigid ceiling. Locations shown for permanent lateral restraint of webs shall have bracing installed per BCSI sections B3, B7 or B10, as applicable.

ITW Building Components Group Inc. (ITWBCG) shall not be responsible for any deviation from this design, any failure to build the truss in conformance with ANSI/TPI 1, or for handling, shipping, installation & bracing of trusses. Apply plates to each face of truss and position as shown above and on the Joint Details, unless noted otherwise. Refer to drawings 160A-Z for standard plate positions. A seal on this drawing or cover page listing this drawing indicates acceptance of professional engineering responsibility solely for the design shown. The suitability and use of this design for any structure is the responsibility of the Building Designer per ANSI/TPI 1 Sec 2. For more information see this job's general notes page, ITW-BCG www itwbcg com, TPI www tpinst org, WTCA www sbcindustry com, ICC www iccsafe org

WALTER P. FINN LICENSE No. 22839 STATE OF FLORIDA PROFESSIONAL ENGINEER
03/28/2013

FL/-/5/-/-/R/-		Scale = 5"/Ft
TC LL	20 0 PSF	REF R487-- 66675
TC DL	7.0 PSF	DATE 03/28/13
BC DL	10.0 PSF	DRW HCUSR487 13087048
BC LL	0.0 PSF	HC-ENG DF/DF
TOT.LD.	37.0 PSF	SEQN- 60856
DUR.FAC.	1.25	
SPACING	24 0"	JREF- 1UUX487_Z01

THIS DWG PREPARED FROM COMPUTER INPUT (LOADS & DIMENSIONS) SUBMITTED BY TRUSS MFR

(13-106--Don Reed Construction Decker House -- Lake City, FL - M8 3'11' Mono)

Top chord 2x4 SP_#1_12A
Bot chord 2x4 SP_#1_12A
Webs 2x4 SP_#3__12A

Lumber grades designated with "12A" use design values approved 1/5/2012 by ALSC

Bottom chord checked for 10 00 psf non-concurrent live load

Deflection meets L/240 live and L/180 total load Creep increase factor for dead load is 1 50

120 mph wind, 15 00 ft mean hgt, ASCE 7-10, CLOSED bldg, Located anywhere in roof, RISK CAT II, EXP B, wind TC DL=3 5 psf, wind BC DL=5 0 psf GCpi(+/-)=0 18

Wind loads and reactions based on MWFRS with additional C&C member design

Right end vertical not exposed to wind pressure

MWFRS loads based on trusses located at least 30 00 ft from roof edge

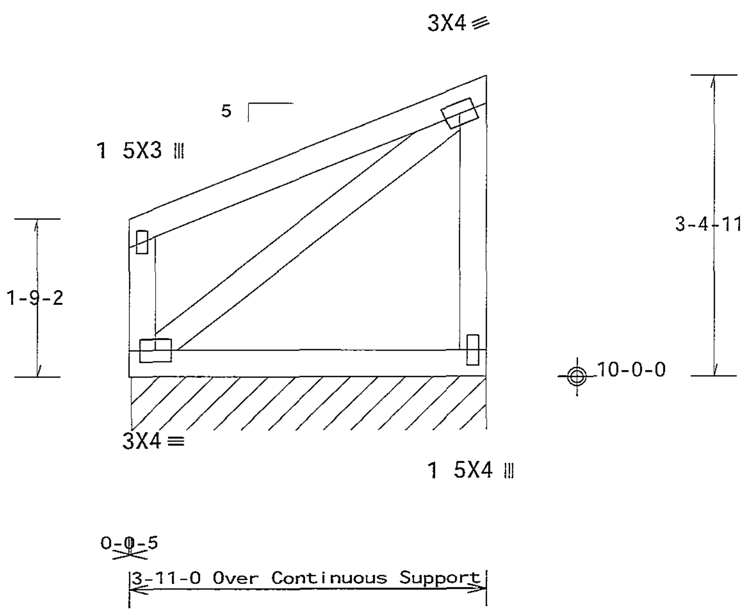

R=76 PLF U=0 PLF W=3-10-11

Design Crit FBC2010Res/TPI-2007(STD)
FT/RT=10%(0%)/0(0)

PLT TYP Wave

10 03 11.0289.19 QTY:

FL/-/5/-/-/R/- Scale = 5"/Ft.

WALTER P. FINN LICENSE No. 22839 STATE OF FLORIDA PROFESSIONAL ENGINEER

03/28/2013

ALPINE
ITW Building Components Group Inc.
Haines City FL 33844
FL COA #0 278

WARNING READ AND FOLLOW ALL NOTES ON THIS SHEET!
IMPORTANT FURNISH THIS DESIGN TO ALL CONTRACTORS INCLUDING INSTALLERS

Trusses require extreme care in fabricating handling shipping installing and bracing Refer to and follow the latest edition of BCSI (Building Component Safety Information by TPI and WTCA) for safety practices prior to performing these functions Installers shall provide temporary bracing per BCSI Unless noted otherwise top chord shall have properly attached structural sheathing and bottom chord shall have a properly attached rigid ceiling Locations shown for permanent lateral restraint of webs shall have bracing installed per BCSI sections B3 B7 or B10 as applicable

ITW Building Components Group Inc (ITWBCG) shall not be responsible for any deviation from this design any failure to build the truss in conformance with ANSI/TPI 1 or for handling shipping installation & bracing of trusses Apply plates to each face of truss and position as shown above and on the Joint Details unless noted otherwise Refer to drawings 160A-Z for standard plate positions A seal on this drawing or cover page listing this drawing indicates acceptance of professional engineering responsibility solely for the design shown The suitability and use of this design for any structure is the responsibility of the Building Designer per ANSI/TPI 1 Sec 2 For more information see This job's general notes page ITW-BCG www itwbcg com TPI www tpinst org WTCA www sbcindustry com ICC www iccsafe org

TC LL	20.0	PSF
TC DL	7.0	PSF
BC DL	10.0	PSF
BC LL	0.0	PSF
TOT LD.	37.0	PSF
DUR FAC	1.25	
SPACING	24.0"	

REF	R487-- 66676
DATE	03/28/13
DRW	HCUSR487 13087066
HC-ENG	DF/DF
SEQN-	60843
JREF-	1UUX487_Z01

(13-106--Don Reed Construction Decker House -- Lake City, FL - M9 5 2"8 Mono)

Top chord 2x4 SP_#1_12A
Bot chord 2x4 SP_#1_12A
Webs 2x4 SP_#3__12A

Lumber grades designated with 12A' use design values approved 1/5/2012 by ALSC

H = recommended connection based on manufacturer tested capacities and calculations Conditions may exist that require different connections than indicated Refer to manufacturer publication for additional information

Bottom chord checked for 10 00 psf non-concurrent live load

Deflection meets L/240 live and L/180 total load Creep increase factor for dead load is 1 50

120 mph wind 15 00 ft mean hgt, ASCE 7-10, CLOSED bldg, Located anywhere in roof, RISK CAT II, EXP B, wind TC DL=3 5 psf, wind BC DL=5 0 psf GCpi(+/-)=0 18

Wind loads and reactions based on MWFRS with additional C&C member design

Right end vertical not exposed to wind pressure

Hanger specified assumes connection to supporting chord is located a minimum of five times the depth of the supporting chord from any unsupported end, unless unsupported chord end has 85% plating coverage

MWFRS loads based on trusses located at least 30 00 ft from roof edge

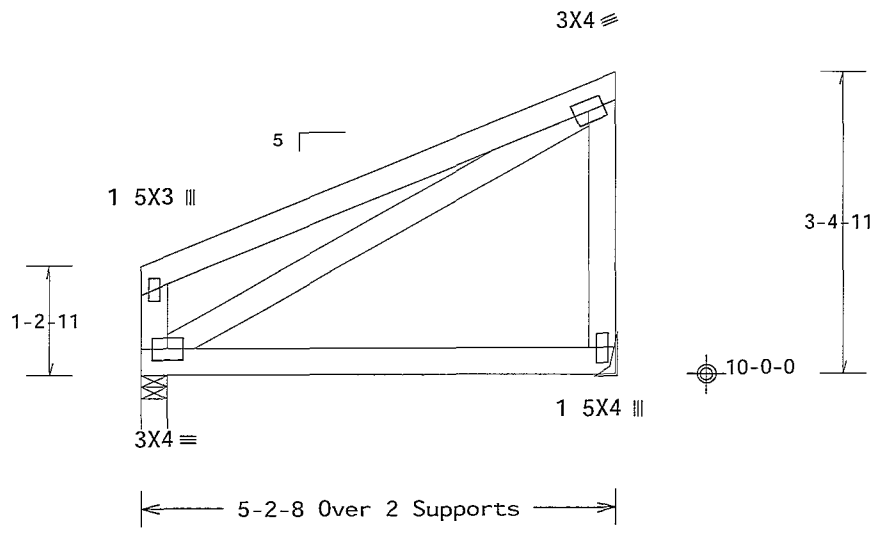

R=196 U=0 W=3 485
RL=24

R=196 U=2 H=Simpson LUS24
Supported Member Face (1) 0 148" x3" nails
Supporting Member Face (1) 0 148" x3" nails
Supporting Member (1) 2x8 SP_#2_12A

Design Crit FBC2010Res/TPI-2007(STD)
FT/RT=10%(0%)/0(0)

PLT TYP Wave

10 03 11 0209 19 QTY 1 FL/-/5/-/-/R/- Scale = 5"/Ft

ALPINE
ITW Building Components Group Inc.
Haines City FL 33844
FL COA #0 278

WARNING READ AND FOLLOW ALL NOTES ON THIS SHEET!
IMPORTANT FURNISH THIS DESIGN TO ALL CONTRACTORS INCLUDING INSTALLERS

Trusses require extreme care in fabr cating handl ng sh pp ng install ng and brac ng refer to and follow the latest edition of BCSI (Bu ld ng Component Safety Informat on by TPI and WTCA) for safety pract ces prior to perform ng these funct ons Installers shall prov de temporary brac ng per BCSI. Unless noted otherwise top chord shall have properly attached structural sheathing and bottom chord shall have a properly attached rig d ce l ng Locat ons shown for permanent lateral restra nt of webs shall have brac ng nstalled per BCSI sect ons B3 B7 or B10 as appl cable

ITW Bu lding Components Group Inc (ITWBCG) shall not be respons ble for any deviat on from th s draw ng any fa lure to build the truss n conformance w th ANSI/TPI 1 or for handl ng sh pp ng nstallat on and brac ng of trusses Apply plates to each face of truss and pos t on as shown above and on the Joint Deta ls unless noted otherw se Refer to draw ngs 160A-Z for standard plate pos t ons A seal on th s drawing or cover page list ng th s draw ng nd cates acceptance of profess onal eng neer ng respons b lity solely for the des gn shown The su tab l ty and use of th s des gn for any structure s the responsibil ty of the Bu ld ng Des gner per ANSI/TPI 1 Sec 2 For more nformat on see This job s general notes page ITW BCG www twbcg com TPI www tp nst org WTCA www sbc ndustry com ICC www iccsafe org

WALTER P. FINN
LICENSE
No. 22839
STATE OF FLORIDA
PROFESSIONAL ENGINEER
03/28/2013

TC LL	20 0 PSF	REF	R487-- 66677
TC DL	7.0 PSF	DATE	03/28/13
BC DL	10 0 PSF	DRW	HCUSR487 13087061
BC LL	0.0 PSF	HC-ENG	DF/DF
TOT LD	37 0 PSF	SEQN-	60927
DUR FAC	1 25		
SPACING	24 0"	JREF-	1UUX487_Z01

(13-106--Don Reed Construction Decker House -- Lake City, FL - MG 13'4' Mono Girder)

Top chord 2x4 SP_#1_12A
Bot chord 2x4 SP_#1_12A
Webs 2x4 SP_#3__12A

Lumber grades designated with 12A use design values approved 1/5/2012 by ALSC

120 mph wind, 15 00 ft mean hgt, ASCE 7-10, CLOSED bldg not located within 9 00 ft from roof edge, RISK CAT II, EXP B, wind TC DL=3 5 psf, wind BC DL=5 0 psf GCpi(+/-)=0 18

Wind loads and reactions based on MWFRS

In lieu of structural panels use purlins to brace all flat TC @ 24 OC

Bottom chord checked for 10 00 psf non-concurrent live load

MWFRS loads based on trusses located at least 15 00 ft from roof edge

IT IS THE RESPONSIBILITY OF THE BUILDING DESIGNER AND TRUSS FABRICATOR TO REVIEW THIS DWG PRIOR TO CUTTING LUMBER TO VERIFY THAT ALL DATA, INCLUDING DIMENSIONS AND LOADS, CONFORM TO THE ARCHITECTURAL PLANS/ SPECIFICATIONS AND FABRICATOR'S TRUSS LAYOUT

Special loads
------(Lumber Dur Fac =1 25 / Plate Dur Fac =1 25)
TC- From 55 plf at 0 00 to 55 plf at 3 24
TC- From 28 plf at 3 24 to 28 plf at 10 00
TC- From 28 plf at 10 00 to 28 plf at 13 33
BC- From 10 plf at 0 00 to 10 plf at 13 33
TC- 39 80 lb Conc Load at 3 24
BC- 379 14 lb Conc Load at 0 19, 1 24
BC- 509 04 lb Conc Load at 4 32
BC- 228 79 lb Conc Load at 5 10
BC- 142 50 lb Conc Load at 8 19
BC- 370 27 lb Conc Load at 10 19
BC- 362 16 lb Conc Load at 12 19

Right end vertical not exposed to wind pressure

Deflection meets L/240 live and L/180 total load Creep increase factor for dead load is 1 50

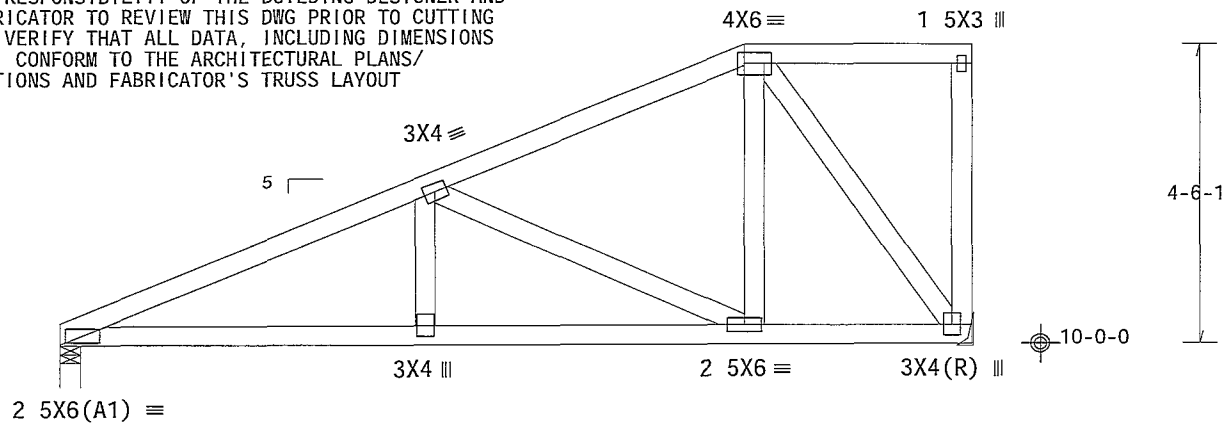

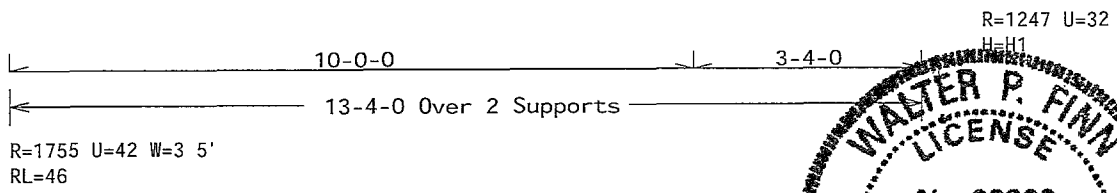

Design Crit FBC2010Res/TPI-2007(STD)
FT/RT=10%(0%)/0(0)

PLT TYP Wave

WALTER P. FINN LICENSE No.22839 STATE OF FLORIDA PROFESSIONAL ENGINEER
03/28/2013

FL/-/5/-/-/R/-

Scale =.375"/Ft

TC LL	20 0 PSF	REF	R487-- 66678
TC DL	7 0 PSF	DATE	03/28/13
BC DL	10 0 PSF	DRW	HCUSR487 13087005
BC LL	0 0 PSF	HC-ENG	JB/WPF
TOT LD	37.0 PSF	SEQN-	72479
DUR FAC	1 25		
SPACING	24.0"	JREF-	1UUX487_Z01

ALPINE
ITW Building Components Group Inc.
Haines City FL 33844
FL COA #0 278

WARNING READ AND FOLLOW ALL NOTES ON THIS SHEET!
IMPORTANT FURNISH THIS DESIGN TO ALL CONTRACTORS INCLUDING INSTALLERS

Trusses requ re extreme care in fabr cat ng handl ng sh pp ng nstall ng and brac ng Ref to code follow the latest ed t on of BCSI (Bu ld ng Component Safety Information by TPI and WTCA) for pract ces pr or to perform ng these funct ons Installers shall prov de temporary brac ng per BCSI Unless noted otherw se top chord shall have properly attached structural sheath ng and bottom chord shall have a properly attached rigid ce l ng Locat ons shown for permanent lateral restra nt of w shall have brac ng nstalled per BCSI sections B3 B7 or B10 as appl cable

ITW Bu ld ng Components Group Inc (ITWBCG) shall not be respons ble for any deviat on from this des gn any fa lure to bu ld the truss in conformance w th ANSI/TPI 1 or for handl ng sh pp ng nstallat on & brac ng of trusses Apply plates to each face of truss and pos t on as shown above and on the Joint Deta ls unless noted otherwise Refer to draw ngs 160A-Z for standard plate pos tions A seal on th s draw ng or cover page listing th s drawing nd cates acceptance of profess onal eng neer ng respons b l ty solely for the design shown The su tab lity and use of th s des gn for any structure is the respons b l ty of the Bu lding Designer per ANSI/TPI 1 Sec 2 For more nformation see This job s general notes page ITW BCG www twbcg com TPI www tpinst org WTCA www sbc ndustry com ICC www ccsafe org

CLB WEB BRACE SUBSTITUTION

THIS DETAIL IS TO BE USED WHEN CONTINUOUS LATERAL BRACING (CLB) IS SPECIFIED ON A TRUSS DESIGN BUT AN ALTERNATIVE WEB BRACING METHOD IS DESIRED

NOTES

THIS DETAIL IS ONLY APPLICABLE FOR CHANGING THE SPECIFIED CLB SHOWN ON SINGLE PLY SEALED DESIGNS TO T BRACING OR SCAB BRACING

ALTERNATIVE BRACING SPECIFIED IN CHART BELOW MAY BE CONSERVATIVE FOR MINIMUM ALTERNATIVE BRACING RE RUN DESIGN WITH APPROPRIATE BRACING

WEB MEMBER SIZE	SPECIFIED CLB BRACING	ALTERNATIVE BRACING T OR L BRACE	SCAB BRACE
X3 OR 2X4	1 ROW	2X4	1 2X4
X3 OR X4	2 ROW	X6	2 2X4
2X6	1 ROW	2X4	1 X6
X6	2 ROW	X6	2 2X4(*)
X8	1 ROW	2X6	1 2X8
2X8	2 ROW	X6	2 2X6 (*)

T BRACE L BRACE AND SCAB BRACE TO BE SAME SPECIES AND GRADE OR BETTER THAN WEB MEMBER UNLESS SPECIFIED OTHERWISE ON ENGINEER'S SEALED DESIGN

(*) CENTER SCAB ON WIDE FACE OF WEB APPLY (1) SCAB TO EACH FACE OF WEB

T-BRACING OR L-BRACING

APPLY TO EITHER SIDE OF WEB NARROW FACE
ATTACH WITH 10d BOX OR GUN
(0.128"x 3" MIN) NAILS
AT 6" OC
BRACE IS A
MINIMUM 80% OF WEB
MEMBER LENGTH

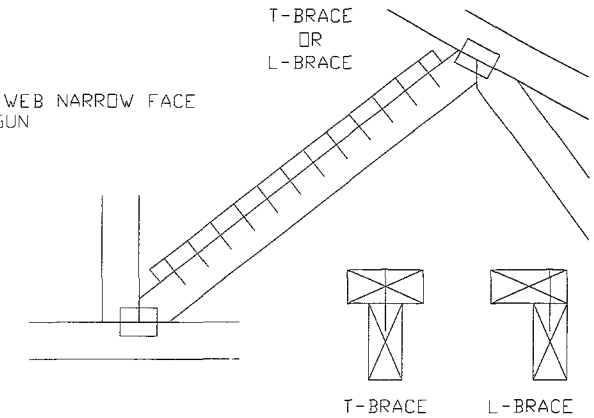

SCAB BRACING

APPLY SCAB(S) TO WIDE FACE OF WEB
NO MORE THAN (1) SCAB PER FACE
ATTACH WITH 10d BOX OR GUN
(0.128" x 3" MIN) NAILS
AT 6" OC
BRACE IS A MINIMUM
80% OF WEB MEMBER LENGTH

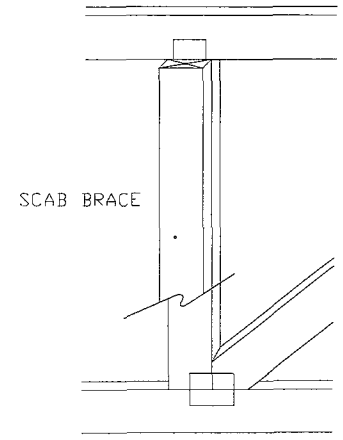

WALTER P. FINN
LICENSE
No. 22839
STATE OF FLORIDA
PROFESSIONAL ENGINEER

03/28/2013
Mar 28 '13

TW
Building Components Group Inc.
Earth City MO 63045

WARNING READ AND FOLLOW ALL NOTES ON THIS SHEET
Truss es r quir xtreme care in fab icating handling shipping installing and bracing. Refer to and follow BCSI (Building Componen Safety Information by TPI and WTCA) or safety practices ior to performing the functons. Instalers shal provide temporary bracing per BCSI Unless n d otherwise top chord sha have properly attached structura pane s and botton chord sha properly attached rigid ce ng. Locations shown for permanent lateral restraint of webs sh bracing installed per BCSI sec ions B3 & B7 See his jobs genera notes page for more inf

IMPORTANT FURNISH COPY OF HIS DESIGN TO INSTALLATION CONTRAC OR
ITW Building Component Group Inc (ITWBCG) shal not be responsible for any deviation from this de ign any fa ure to bu d the truss in conformance with TPI or abricating, hand ng, shipping, nstalling & bracing of trusses. ITWBCG connec or p ates are made o 20/18/16GA (W H/S/K) ASTM A653 g ade 37/40/60 (K/W/H,S) galv steel Apply plates to each face of truss, pos tioned as shown above and on J int De als
A sea on this drawing or cover page indica es acc ptance and pro essiona engineering responsibi ty solely for the truss component design shown The sui abi ty and use of this component for any bu ding is the espon ibi ty of the Bu ding Designer per ANSI/TPI 1 Sec 2
ITW BCG www twbcg.com, TPI www tpinst.com WTCA www sbcindustry.com CC www iccsafe.org

TC LL	PSF	REF CLB SUBST
TC DL	PSF	DATE 1/1/09
BC DL	PSF	DRWG BRCLBSUB0109
BC LL	PSF	
TOT LD	PSF	
DUR FAC		
SPACING		

Gable Stud Reinforcement Detail

A CE 7-10 120 mph Wind Speed 15' Mean Height, Enclosed Exposure C, Kzt = 100

Or 100 mph W nd Speed 15 Mean He ght Partially Enc osed Exposure C Kzt 100
Or 100 mph W nd Speed 15 Mean He ght Enclosed Exposure D Kzt = 100

2x4 Gable Vertical Spacing	Species	Brace / Grade	No Braces	(1) 1x4 L Brace * Group A	(1) 1x4 L Brace * Group B	(1) 2x4 L Brace * Group A	(1) 2x4 L Brace * Group B	(2) 2x4 "L" Brace ** Group A	(2) 2x4 "L" Brace ** Group B	(1) 2x6 L" Brace * Group A	(1) 2x6 L" Brace * Group B	(2) 2x6 "L" Brace ** Group A	(2) 2x6 "L" Brace ** Group B
24" o.c.	SPF HF	#1 / #2	4 10	8 ?	8 6	9 8	10 1"	11 6	12 0"	14 0	14 0"	14 0"	14 0
		#3	4 7	7 9	8 3	9 7	9 11	11 5	11 10	14 0	14 0	14 0"	14 0
		Stud	4 7	8 1	8 4	9 7"	9 11	11 5"	11 10"	14 0	14 0	14 0"	14 0"
		tanda d	4 7	8 1	8 4"	9 7	9 11	11 5	11 10"	14 0"	14 0	14 0	14 0
	SP DFL	#1	4 11	8 3	8 7	9 9"	10 1	11 7"	12 1"	14 0"	14 0"	14 0"	14 0
		#2	4 10	8 2	8 6	9 8	10 1	11 6"	12 0"	14 0"	14 0"	14 0"	14 0
		#3	4 7	6 11	7 4"	9 3	9 10"	11 5	11 10	14 0"	14 0"	14 0	14 0
		Stud	4 7	6 11	7 4	9 3	9 10	11 5"	11 10"	14 0"	14 0	14 0"	14 0
		ta d d	4 7	6 0	6 4	8 0	8 6	10 10	11 7	12 6"	13 5"	14 0	14 0
16" o.c.	SPF HF	#1 / #2	5 6	9 5	9 9	11 1	11 6	13 2	13 9	14 0	14 0	14 0	14 0
		#3	5 3	9 3	9 9	10 11	11 4	13 0	13 7	14 0	14 0	14 0"	14 0
		Stud	5 3	9 3	9 7	10 11	11 4	13 0	13 7	14 0	14 0	14 0	14 0"
		Standard	5 3	9 3	9 7	10 11"	11 4"	13 0	13 7	14 0	14 0"	14 0"	14 0
	SP DFL	#1	5 8	5	10	11 2	11 7	13 3	13 10	14 0	14 0"	14 0	14 0
		#2	[illegible]	9 5	9 9	11 1	1 6	13 2	13 9	14 0	14 0	14 0	14 0
		#3	3	8	9 0	10 11	11 4	13 0	13 7	14 0	14 0"	14 0	14)
		tud	3	8 6	) 0	10 11	11 4	13 0	13 7	14 0	14 0	14 0	14 0
		ta da d	5 3	7 4	7 10	9 9	10 5	13 0	13 7	14 0	14 0	14 0"	14 0
12" o.c.	SPF HF	#1 / #2	6 1	10 4	10 8	12 2	12 8	13 2"	14 0	14 0	14 0	14 0	14 0
		#3	5 9	10 2	10 7	12 0	12 6	14 0"	14 0	14 0	14 0"	14 0	14 0
		tud	5 9	10	10 7	12 0	12 6	14 0	14 0	14 0	14 0	14 0	14 0
		tandard	9	10 2	10 7	12 0	12 6	14 0	14 0	14 0	14 0	14 0"	14 0
	SP DFL	#1	6 2	10 5	10 9	12 3	12 9	14 0	14 0	14 0	14 0	14 0	14 0"
		#	6 1	10 4	10 8	12 2	12 8	14 0	14 0	14 0	14 0	14 0	14 0
		#	5 9	9 9	10 5	12 0	12 6	14 0"	14 0"	14 0"	14 0	14 0"	14 0"
		tud	5 9	9 9	10 5	12 0	12 6	14 0	14 0	14 0"	14 0"	14 0	14 0
		tar dard	5 9	8 6	9 0	11 3	12 1	14 0	14 0"	14 0"	14 0"	14 0"	14 0"

Bracing Group Spec es and Grades

Group A

Spruce P ne F r	
#1 / #2	Standard
#3	Stud

Hem-F r	
#2	Stud
#3	Standard

Douglas F r Larch
#3
Stud
Standard

Southern Pine***
#3
Stud
Standard

Group B

Hem-F r
#1 & Btr
#1

Douglas F r Larch
#1
#2

Southern Pine***
#1
#2

1x4 B aces shall be SRB (S ress Rated Board)
***For 1x4 So Pine use only Industr al 55 or Industrial 45 Stress Rated Boards Group B va ues may be used with these grades

Gable Truss Deta l Notes

Wind Load deflect on criter on s L/240

Prov de upl f t connections for 35 plf over cont nuous bear ng (5 psf TC Dead Load).

Gable end supports load from 4 0 out ookers w th 2 0" overhang or 12" p ywood overhang

So P ne umber des gn values based on the ALSC January 2012 ru n

Attach L braces w th 10d (0.128 x3.0" m n) nails

※ For (1) L brace space nails at 2 o.c n 18 end zones and 4 o c between zones

※※For (2) L braces space na ls at 3" o c n 18" end zones and 6" o c between zones

L brac ng must be a m n mum of 80% of web member length

Gable Vert cal Plate Sizes	
Vert cal Length	No Spl ce
Less than 4 0	1X4 or 2X3
Greater than 4 0 but ess than 11 6	2X4
Greather than 11 6	2.5X4

\+ Refer to common truss design for peak spl ce and heel plates

Refer o the Bu lding Des gner for cond t ons not addressed by th s deta

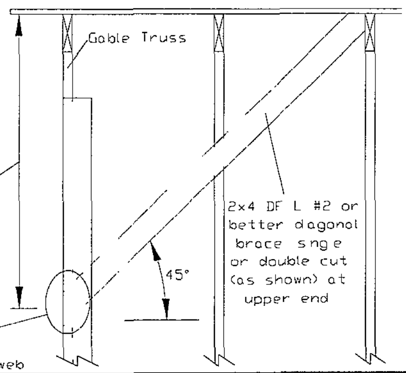

Dago a brace option v rt ca ength may be ioul ed wh n d agona b a s u ed Con ect d a l b ace fo 335# at a h end Max web to l ng h 14

V rt cal l ngth shown n tabl above

Co nect d agonal at m dpo t of vert ca web

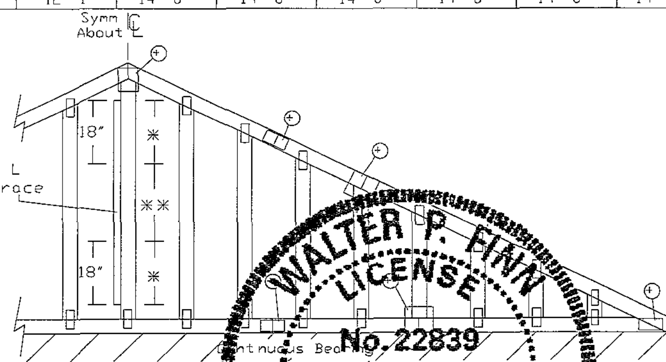

Refer to chart above for max gable vertical length

WARNING READ AND FOLLOW ALL NOTES ON THIS DRAWING!
IMPORTANT FURN SH TH S DRAWING TO ALL CONTRACTORS INCLUDING THE INSTALLERS

Trusses require ex reme care in abricating hand ng, shipping nsta ling and bracing Refer to and follow he atest edit on of BCSI (Bu ding Component Safety Information by TPI and WTCA) for safety practices prior to performing these functions Insta lers sha provide temporary brac ng per BCSI Unless no ed otherwise top chord sha l have properly at ached structura sheathing and bottom chord shall have a proper y attached rigid ceiling Locations shown for permanent lateral restraint of webs sha have brac ng nstal ed per BCSI sect ons B3 B7 or B10 as applicable Apply plates to ea h face of truss and posit on as shown above and on the Joint Deta ls unless noted otherwise Refer to drawings 160A Z for standard pla e po tions

ITW Bu lding Componen Group Inc sha l not b responsib e for any deviation from th s drawing, any failure to bu ld the truss in conformance w th ANSI/TPI 1 or for handling shipping, instal ation & b ac g o tru es A sea on this drawing or cover page sting this drawing indicates acceptance of pro essional engineer ng re ponsibil ty sole y for th de ign shown The suitability and use of this drawing for any tructure the e ponsib ty of the Bu ding Des gner per ANSI/TPI 1 Sec 2 F more n ormator ee h job s genera notes page and these web s tes ITWBCG www wbcg.com TPI www tpins org WTCA www sbc dustry org ICC www icc safe org

ITW Building Components Group Inc.
Earth City MO 63045

WALTER P. FINN LICENSE No. 22839 STATE OF FLORIDA PROFESSIONAL ENGINEER

03/28/2013

Mar 28 '13

MAX TOT LD 60 PSF

MAX SPACING 24 0

REF ASCE7-10-GAB12015
DATE 2/14/12
DRWG A12015ENC100212

Gable Detail

For L t n Vert als

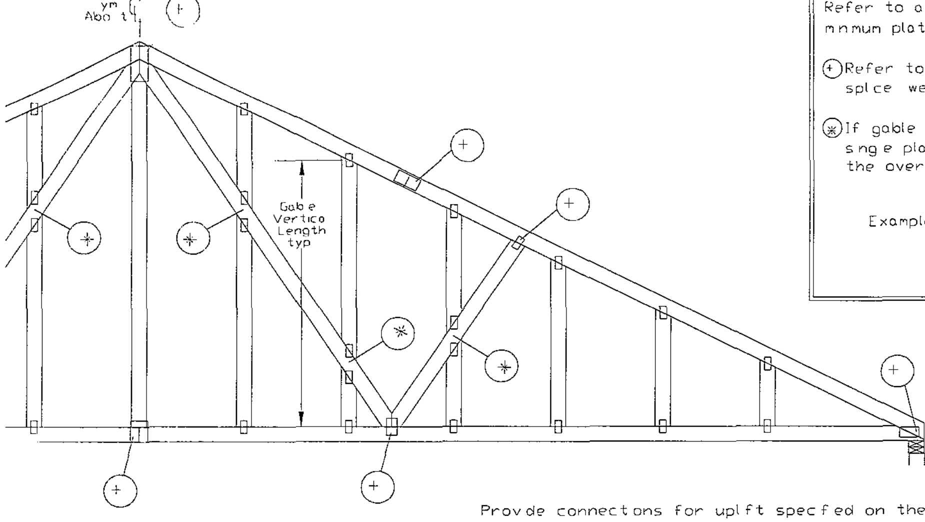

Gable Truss Plate S zes

Refer to appropriate ITW gable deta l for m n mum plate s zes for vertical studs

(+) Refer to Engineered truss des gn for peak spl ce web and hee plates

(*) If gable vert cal plates overlap use a s ng e plate that covers the total area of the overlapped p ates to span the web

Example

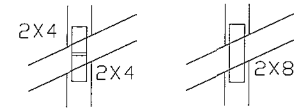

T" Re nforcement Attachment Detail

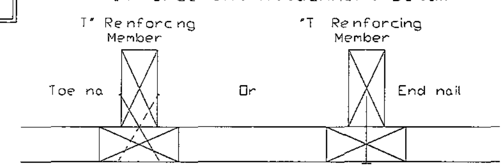

Prov de connect ons for upl ft spec f ed on the engineered truss des gn

Attach each "T" re nforc ng member w th

End Dr ven Na s
10d Common (0 148 x 3 m n) Na ls at 4" o c plus
(4) nails n the top and bottom chords

Toenailed Na ls
10d Common (0 148 x3" m n) Toenails at 4" o c plus
(4) toena ls n the top and bottom chords

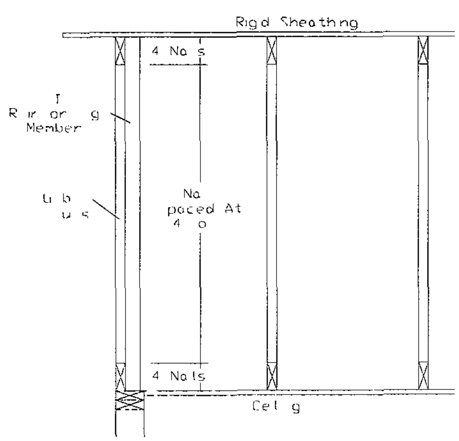

Th s deta l to be used with the appropr ate ITW gab e deta l for ASCE w nd load

ASCE 7 98 Gable Detail Draw ngs
A13015980109 A12015980109 A11015980109 A10015980109
A13030980109 A12030980109 A11030980109 A10030980109

ASCE 7 02 Gable Deta l Drawings
A13015020109 A12015020109 A11015020109 A10015020109 A14015020109
A13030020109 A12030020109 A11030020109 A10030020109 A14030020109

A CE 7-05 G ble Deta Draw ngs
A13015050109 A12015050109 A11015050109 A10015050109
A13030050109 A12030050109 A11030050109 A10030050109 A14030050109

A E 7-10 Gable Deta Draw ngs
A11515ENC100212 A12015ENC100212 A14015ENC100212
A18015ENC100212 A20015ENC100212 A20015ENC100212 A20015PE 100212
A11530ENC100212 A12030EN 100212 A14030ENC100212 A16030ENC100212
A18030ENC100212 A20030ENC100212 A20030ENC100212 A20030PEN100212

Se appropr ate ITW gable deta l for max mum unre nforced gable vert cal length

To convert from L" to T reinforc ng members mult ply "T" ncrease by length (based on appropr ate ITW gable detail)

Max mum allowab e T reinforced gable vert cal length is 14 from top to bottom chord

"T" reinforcing member mater al must match size spec e and grade of the "L" re nforcing member

Web Length Increase w/ T Brace

T Reinf Mbr S ze	"T Increase
2x4	30 %
2x6	20 %

Example
ASCE 7 10 W nd Speed = 120 mph
Mean Roof He ght 30 ft Kzt = 1 00
Gable Vert cal 24 o c SP #3
T Re nforcing Member S ze 2x4
T Brace In ease (From Above) 30% 1 30
(1) 2x4 L Brace Length 8 7
Max m m T Reinforced Gable Vert cal Length
1 30 x 8 7" 11 2

Building Components Group Inc.

Earth City MO 63045

**WARNING ** READ AND FOLLOW ALL NOTES ON THIS DRAWING!
**IMPORTAN ** FURNISH THIS DRAWING TO ALL CONTRACTORS IN LUDING HE INSTALLERS

Trusses requ r extreme care in fabr cating handl ng shipping nsta l ng and bracing Refer to and f ow the atest edition of BCSI Building Component Sa ety Information by TPI and WTCA) for safety practices prior to performing these functions Instal ers shall provide temporary bracing per BCSI Unle s noted otherwise top chord shal have proper y attached tructural sheathing and bottom chord sha have a proper y at ached r gid ce l ng. Locations shown for permanent atera restraint o webs shall have bracing in ta led per BCSI sect ons B3, B7 o B10 as applicab e Apply plates to each face o truss and po t on as shown above and on the Joint Details unless noted otherwise Refer to drawings 160A Z for standard plate positions

ITW Bu ding Components Group Inc shal not be responsible for any devation from this drawing, any fa ure to build the trus in conformance w th ANSI/TPI 1 or for handling shipping, insta lation & bracing of trusses A seal on this drawing or cover page st ng this drawing, indicates acceptance of professiona engineering responsibil ty so e y for the design shown. The suitab ty and use of this drawing for any structure is the responsib ty of the Bu lding Designer per ANSI/TPI 1 Sec.2 For more nformat on see this job s general notes page and these web sites: ITWBCG www twbcg.com TPI w tpinst.org WTCA www.sbcindustry.org ICC www.iccsa e.or

WALTER P. FINN LICENSE No. 22839 STATE OF FLORIDA PROFESSIONAL ENGINEER

03/28/2013

Mar 28 '13

REF	LET-IN VERT
DATE	2/16/12
DRWG	GBLLETIN0212

MAX TOT LD	60 PSF
DUR FAC	ANY
MAX SPACING	24 0

ASCE 7-10 120 mph, 30' Mean Height, Closed Exposure C
Common Residential Gable End Wind Bracing Requirements - Stiffeners

120 mph 30ft Mean Hgt ASCE 7 10 Enclosed Exp C or
100 mph 30ft Mean Hgt ASCE 7-10 Enclosed Exp D or
100 mph, 30ft Mean Hgt ASCE 7 10 Part Enclosed Exp C
Kzt = 1 00 Wind TC DL=5 0 psf, Wind BC DL=5 0 psf

Lateral chord bracing requirements
Top Continuous roof sheathing
Bot Continuous ceiling diaphragm

The Engineer's sealed design referencing this detail for lumber plates and other information not shown on this detail

Nail 10d box or gun (0 128 x3 min) nails

H Less than 4 6 - no stud bracing required

H Greater than 4 6 to 7 6 in length
provide a 2x6 stiffback at mid-height and brace stiffback to roof diaphragm every 6 0 (see detail below or refer to DRWG A12030ENC10)

H Greater than 7 6 to 12 0 max
provide a 2x6 stiffback at mid-height and brace to roof diaphragm every 4 0 (see detail below or refer to DRWG A12030ENC10)

✳ Optional 2x L-reinforcement attached to stiffback with 10d box or gun (0 128 x 3 min) nails @ 6 oc

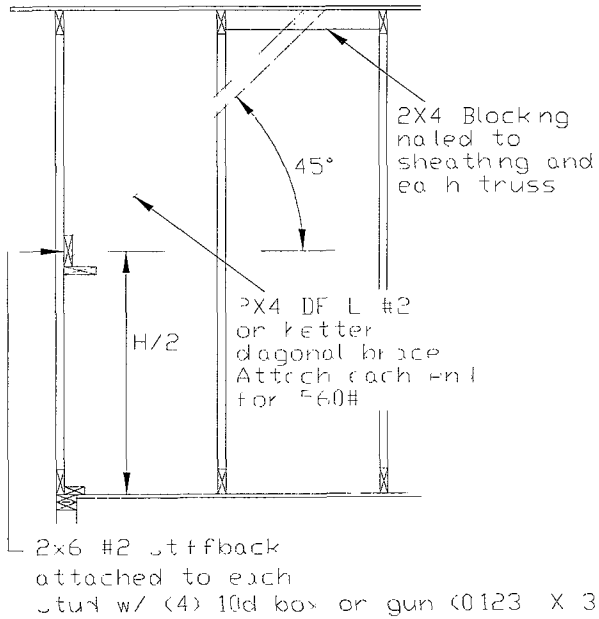

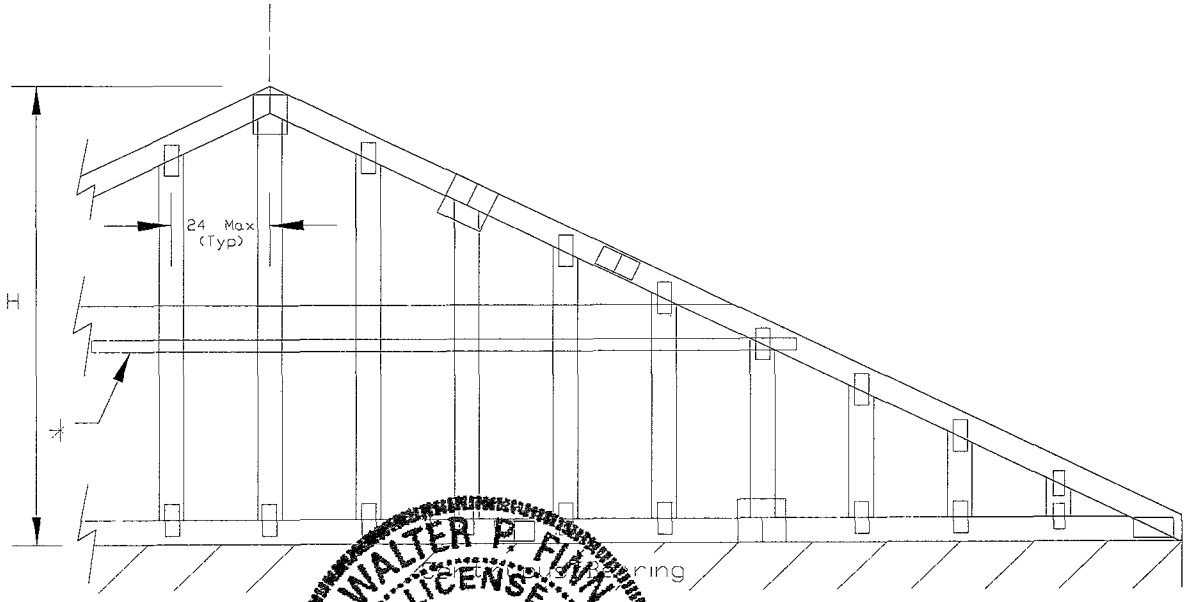

WALTER P. FINN
LICENSE
No. 22839
STATE OF FLORIDA
PROFESSIONAL ENGINEER
03/28/2013

TW Building Components Group Inc.

Earth City MO 63045

**WARNING * READ AND FOLLOW ALL NOTES ON THIS DRAWING!
**IMPORTANT * FURNISH THIS DRAWING TO ALL CONTRACTORS INCLUDING THE INSTALLERS.

Trusses require extreme care in fabricating handling, shipping installing and bracing Refer to BCSI and follow the latest edition of BCSI (Building Component Safety Information by TPI and WTCA) for recommended practices prior to performing these functions Installers shall provide temporary bracing per BCSI Unless noted otherwise top chord shall have properly attached structural sheathing and bottom chord shall have a properly attached rigid ceiling Locations shown for permanent lateral restraint of webs have bracing installed per BCSI sections B3 B7 or B10 as applicable Apply plates to each face of truss and position as shown above and on the Joint Details unless noted otherwise Refer to drawings 160A Z for standard plate positions

TW Building Component Group Inc shall not be responsible for any deviation from this drawing, any failure to build the truss in conformance with ANSI/TPI 1 or for handling shipping, installation & bracing of trusses A seal on this drawing or cover page listing this drawing indicates acceptance of professional engineering responsibility solely for the design shown. The suitability and use of this drawing for any structure is the responsibility of the Building Designer per ANSI/TPI 1 Sec 2
For more information see this job's general notes page and these web sites:
TWBCG www twbcg com TPI www tpinst org WTCA www sbcindustry org ICC www iccsafe or

Mar 28 '13

MAX TOT LD 60 PSF

MAX SPACING

REF	GE WHALER
DATE	2/14/12
DRWG	GABRST100212

Gable Stud Reinforcement Detail

ASCE 7-10 110 mph Wind Speed 30' Mean Height, Enclosed Exposure C Kzt = 1.00

Or 100 Mph Wind Speed 30' Mean Height Partially Enclosed Exposure C Kzt = 1.00

Or 100 mph Wind Speed 30' Mean Height Enclosed Exposure D Kzt = 1.00

Vertical Length (ft)

2x4 Gable Vertical Spacing	Species	Grade \ Brace	No Braces	(1) 1x4 "L" Brace * Group A	(1) 1x4 "L" Brace * Group B	(1) 2x4 "L" Brace * Group A	(1) 2x4 "L" Brace * Group B	(2) 2x4 "L" Brace ** Group A	(2) 2x4 "L" Brace ** Group B	(1) 2x6 "L" Brace * Group A	(1) 2x6 "L" Brace * Group B	(2) 2x6 "L" Brace ** Group A	(2) 2x6 "L" Brace ** Group B
24" O.C.	SPF HF	#1 / #2	4'-7"	7'-10"	8'-1"	9'-3"	9'-7"	11'-0"	11'-5"	14'-0"	14'-0"	14'-0"	14'-0"
		#3	4'-4"	7'-2"	7'-8"	9'-1"	9'-5"	10'-10"	11'-4"	14'-0"	14'-0"	14'-0"	14'-0"
		Stud	4'-4"	7'-8"	8'-0"	9'-1"	9'-5"	10'-10"	11'-4"	14'-0"	14'-0"	14'-0"	14'-0"
		Standard	4'-4"	7'-6"	8'-0"	9'-1"	9'-5"	10'-10"	11'-4"	14'-0"	14'-0"	14'-0"	14'-0"
	SP DFL	#1	4'-8"	7'-10"	8'-2"	9'-3"	9'-8"	11'-0"	11'-6"	14'-0"	14'-0"	14'-0"	14'-0"
		#2	4'-7"	7'-10"	8'-1"	9'-3"	9'-7"	11'-0"	11'-5"	14'-0"	14'-0"	14'-0"	14'-0"
		#3	4'-4"	6'-5"	6'-10"	8'-7"	9'-2"	10'-10"	11'-4"	13'-5"	14'-0"	14'-0"	14'-0"
		Stud	4'-4"	6'-5"	6'-10"	8'-7"	9'-2"	10'-10"	11'-4"	13'-5"	14'-0"	14'-0"	14'-0"
		Standard	4'-3"	5'-7"	5'-11"	7'-5"	7'-11"	10'-0"	10'-9"	11'-8"	12'-5"	14'-0"	14'-0"
16" O.C.	SPF HF	#1 / #2	5'-3"	8'-11"	9'-3"	10'-7"	11'-0"	12'-7"	13'-1"	14'-0"	14'-0"	14'-0"	14'-0"
		#3	5'-0"	8'-10"	9'-3"	10'-5"	10'-10"	12'-5"	12'-11"	14'-0"	14'-0"	14'-0"	14'-0"
		Stud	5'-0"	8'-10"	9'-2"	10'-5"	10'-10"	12'-5"	12'-11"	14'-0"	14'-0"	14'-0"	14'-0"
		Standard	5'-0"	8'-10"	9'-2"	10'-5"	10'-10"	12'-5"	12'-11"	14'-0"	14'-0"	14'-0"	14'-0"
	SP DFL	#1	5'-4"	9'-0"	9'-4"	10'-7"	11'-0"	12'-8"	13'-2"	14'-0"	14'-0"	14'-0"	14'-0"
		#2	5'-3"	8'-11"	9'-3"	10'-7"	11'-0"	12'-7"	13'-1"	14'-0"	14'-0"	14'-0"	14'-0"
		#3	5'-0"	7'-10"	8'-4"	10'-5"	10'-10"	12'-5"	12'-11"	14'-0"	14'-0"	14'-0"	14'-0"
		Stud	5'-0"	7'-10"	8'-4"	10'-5"	10'-10"	12'-5"	12'-11"	14'-0"	14'-0"	14'-0"	14'-0"
		Standard	5'-0"	6'-10"	7'-3"	9'-1"	9'-8"	12'-4"	12'-11"	14'-0"	14'-0"	14'-0"	14'-0"
12" O.C.	SPF HF	#1 / #2	5'-9"	9'-10"	10'-2"	11'-7"	12'-1"	12'-7"	14'-0"	14'-0"	14'-0"	14'-0"	14'-0"
		#3	5'-6"	9'-8"	10'-1"	11'-6"	11'-11"	13'-8"	14'-0"	14'-0"	14'-0"	14'-0"	14'-0"
		Stud	5'-6"	9'-8"	10'-1"	11'-6"	11'-11"	13'-8"	14'-0"	14'-0"	14'-0"	14'-0"	14'-0"
		Standard	5'-6"	9'-8"	10'-1"	11'-6"	11'-11"	13'-8"	14'-0"	14'-0"	14'-0"	14'-0"	14'-0"
	SP DFL	#1	5'-11"	9'-11"	10'-3"	11'-8"	12'-2"	13'-11"	14'-0"	14'-0"	14'-0"	14'-0"	14'-0"
		#2	5'-9"	9'-10"	10'-2"	11'-7"	12'-1"	13'-10"	14'-0"	14'-0"	14'-0"	14'-0"	14'-0"
		#3	5'-6"	9'-1"	9'-8"	11'-6"	11'-11"	13'-8"	14'-0"	14'-0"	14'-0"	14'-0"	14'-0"
		Stud	5'-6"	9'-1"	9'-8"	11'-6"	11'-11"	13'-8"	14'-0"	14'-0"	14'-0"	14'-0"	14'-0"
		Standard	5'-6"	7'-10"	8'-4"	10'-6"	11'-3"	13'-8"	14'-0"	14'-0"	14'-0"	14'-0"	14'-0"

Bracing Group Species and Grades

Group A

Spruce Pine Fir		Hem Fir	
#1 / #2	Standard	#2	Stud
#3	Stud	#3	Standard

Douglas Fir Larch	Southern Pine***
#3	#3
Stud	Stud
Standard	Standard

Group B

Hem Fir
#1 & Btr
#1

Douglas Fir Larch	Southern Pine***
#1	#1
#2	#2

1x4 Braces shall be SRB (Stress Rated Board)

***For 1x4 So. Pine use only Industrial 55 or Industrial 45 Stress Rated Boards. Group B values may be used with these grades

Gable Truss Detail Notes

Wind Load deflection criterion is L/240

Provide uplift connections for 70 plf over continuous bearing (5 psf TC Dead Load)

Gable end supports load from 4'-0" outlookers with 2'-0" overhang or 12" plywood overhang

Southern Pine lumber design values based on the AISC January 2012 ruling

Attach L braces with 10d (0.128"x3.0" min) nails

* For (1) L brace space nails at 2" o.c. in 18" end zones and 4" o.c. between zones

**For (2) L braces space nails at 3" o.c. in 18" end zones and 6" o.c. between zones

L bracing must be a minimum of 80% of web member length

Gable Vertical Plate Sizes	
Vertical Length	No Splice
Less than 4'-0"	1X4 or 2X3
Greater than 4'-0" but less than 11'-6"	2X4
Greather than 11'-6"	2.5X4

+ Refer to common truss design for peak splice and heel plates

Refer to the Building Designer for conditions not addressed by this detail

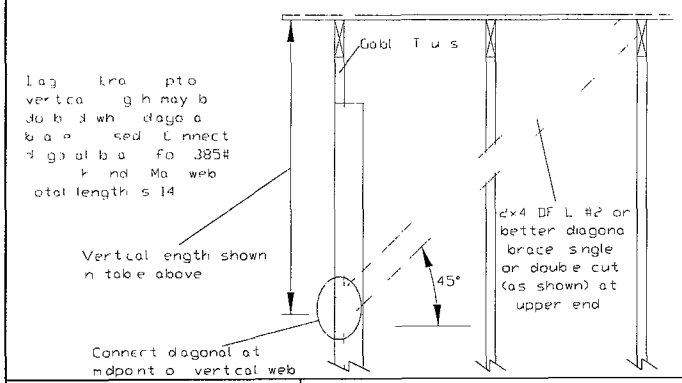

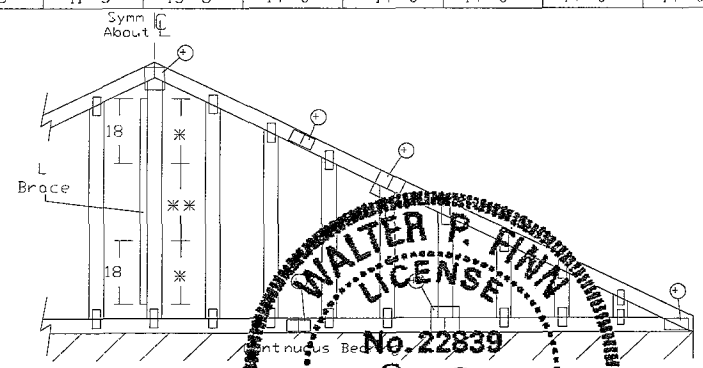

WALTER P. FINN LICENSE No. 22839 STATE OF FLORIDA PROFESSIONAL ENGINEER

03/28/2013

Mar 28 '13

TW Building Components Group Inc.

Earth City MO 63045

**WARNING * READ AND FOLLOW ALL NOTES ON THIS DRAWING!
IMPORTANT FURNISH THIS DRAWING TO ALL CONTRACTORS INCLUDING THE INSTALLERS

Trusses require extreme care in fabricating, handling, shipping, installing and bracing. Refer to and follow the latest edition of BCSI (Building Component Safety Information by TPI and WTCA) for recommended practices prior to performing these functions. Installers shall provide temporary bracing per BCSI. Unless noted otherwise, top chord shall have properly attached structural sheathing and bottom chord shall have a properly attached rigid ceiling. Locations shown for permanent lateral restraint of webs shall have bracing installed per BCSI sections B3, B7 or B10 as applicable. Apply plates to each face of truss and position as shown above and on the Joint Details unless noted otherwise. Refer to drawings 160A Z for standard plate positions.

ITW Building Components Group Inc. shall not be responsible for any deviation from this drawing, any failure to build the truss in conformance with ANSI/TPI 1 or for handling, shipping, installation & bracing of trusses. A seal on this drawing or cover page listing this drawing indicates acceptance of professional engineering responsibility solely for the design shown. The suitability and use of this drawing for any structure is the responsibility of the Building Designer per ANSI/TPI 1 Sec 2.
For more information see this job's general notes page and these web sites:
ITWBCG www.wbcg.com TPI www.tpinst.org WTCA: www.sbcindustry.org ICC www.iccsafe.org

MAX TOT LD 60 PSF

MAX SPACING 24.0"

REF	ASCE7-10-GABL12030
DATE	2/14/12
DRWG	A12030ENC100212