DATE 10/28/2010

Columbia County Building Permit

This Permit Must Be Prominently Posted on Premises During Construction

PERMIT
000028963

APPLICANT ERIN B.JOHNSON PHONE 352.317.1254

ADDRESS 5600 NE 60TH AVENUE HIGH SPRINGS FL 32643

OWNER ROBERT & JOAN DUCKETT PHONE 386.454.7568

ADDRESS 607 SW HEFLIN AVENUE FT. WHITE FL 32038

CONTRACTOR ROBERT A. JOHNSON PHONE 386.454.3234

LOCATION OF PROPERTY 47-S TO US 27,TL TO C-138,TR TO HEFLIN AVE.TL & PROPERTY IS ON THE L.(JUST PAST SW MAGNOLIA LN)

TYPE DEVELOPMENT SFD/ADDITION ESTIMATED COST OF CONSTRUCTION 33600.00

HEATED FLOOR AREA 672.00 TOTAL AREA 672.00 HEIGHT 17.00 STORIES 1

FOUNDATION CONC WALLS FRAMED ROOF PITCH 3'12 FLOOR CONC

LAND USE & ZONING A-3 MAX. HEIGHT 35

Minimum Set Back Requirments: STREET-FRONT 30.00 REAR 25.00 SIDE 25.00

NO. EX.D.U. 1 FLOOD ZONE X DEVELOPMENT PERMIT NO.

PARCEL ID 29-7S-17-10058-022 SUBDIVISION SANTA FE RIVER PLANTATIONS

LOT 2 BLOCK PHASE UNIT TOTAL ACRES 5.00

Culvert Permit No.	Culvert Waiver	Contractor's License Number	Applicant/Owner/Contractor	
		CBC022214		
EXISTING	10-0448	BLK	TC	N
Driveway Connection	Septic Tank Number	LU & Zoning checked by	Approved for Issuance	New Resident

COMMENTS: ADDITION TO EXISTING STRUCTURE.

Check # or Cash 18737

FOR BUILDING & ZONING DEPARTMENT ONLY

(footer/Slab)

Temporary Power _____ date/app. by Foundation _____ date/app. by Monolithic _____ date/app. by

Under slab rough-in plumbing _____ date/app. by Slab _____ date/app. by Sheathing/Nailing _____ date/app. by

Framing _____ date/app. by Insulation _____ date/app. by

Rough-in plumbing above slab and below wood floor _____ date/app. by Electrical rough-in _____ date/app. by

Heat & Air Duct _____ date/app. by Peri. beam (Lintel) _____ date/app. by Pool _____ date/app. by

Permanent power _____ date/app. by C.O. Final _____ date/app. by Culvert _____ date/app. by

Pump pole _____ date/app. by Utility Pole _____ date/app. by M/H tie downs, blocking, electricity and plumbing _____ date/app. by

Reconnection _____ date/app. by RV _____ date/app. by Re-roof _____ date/app. by

BUILDING PERMIT FEE $ 170.00 CERTIFICATION FEE $ 3.36 SURCHARGE FEE $ 3.36

MISC. FEES $ 0.00 ZONING CERT. FEE $ 50.00 FIRE FEE $ 0.00 WASTE FEE $

FLOOD DEVELOPMENT FEE $ FLOOD ZONE FEE $ 25.00 CULVERT FEE $ **TOTAL FEE** 251.72

INSPECTORS OFFICE CLERKS OFFICE

NOTICE: IN ADDITION TO THE REQUIREMENTS OF THIS PERMIT, THERE MAY BE ADDITIONAL RESTRICTIONS APPLICABLE TO THIS PROPERTY THAT MAY BE FOUND IN THE PUBLIC RECORDS OF THIS COUNTY. AND THERE MAY BE ADDITIONAL PERMITS REQUIRED FROM OTHER GOVERNMENTAL ENTITIES SUCH AS WATER MANAGEMENT DISTRICTS, STATE AGENCIES, OR FEDERAL AGENCIES.

"WARNING TO OWNER: YOUR FAILURE TO RECORD A NOTICE OF COMMENCEMENT MAY RESULT IN YOUR PAYING TWICE FOR IMPROVEMENTS TO YOUR PROPERTY. IF YOU INTEND TO OBTAIN FINANCING, CONSULT WITH YOUR LENDER OR AN ATTORNEY BEFORE RECORDING YOUR NOTICE OF COMMENCEMENT."

EVERY PERMIT ISSUED SHALL BECOME INVALID UNLESS THE WORK AUTHORIZED BY SUCH PERMIT IS COMMENCED WITHIN 180 DAYS AFTER ITS ISSUANCE, OR IF THE WORK AUTHORIZED BY SUCH PERMIT IS SUSPENDED OR ABANDONED FOR A PERIOD OF 180 DAYS AFTER THE TIME THE WORK IS COMMENCED. A VALID PERMIT RECIEVES AN APPROVED INSPECTION EVERY 180 DAYS. WORK SHALL BE CONSIDERED NOT SUSPENDED, ABANDONED OR INVALID WHEN THE PERMIT HAS RECIEVED AN APPROVED INSPECTION WITHIN 180 DAYS OT THE PREVIOUS INSPECTION.

The Issuance of this Permit Does Not Waive Compliance by Permittee with Deed Restrictions.

Notice of Treatment

Applicator: Florida Pest Control & Chemical Co. (www.flapest .com)
Address: 116 NW 16 AVE
City Gville Phone 374-2661

Site Location: Subdivision
Lot # Block# Permit # 28963
Address 607 Hellen AVE Springs

Product used	Active Ingredient	% Concentration
☑ Premise	Imidacloprid	0.1%
☐ Termidor	Fipronil	0.12%
☐ Bora-Care	Disodium Octaborate Tetrahydrate	23.0%

Type treatment: ☑ Soil ☐ Wood

Area Treated	Square feet	Linear feet	Gallons Applied
Add	672	116	33.8
			34

As per Florida Building Code 104.2.6 – If soil chemical barrier method for termite prevention is used, final exterior treatment shall be completed prior to final building approval.

If this notice is for the final exterior treatment, initial this line _____.

11/10 Date 12:00 Time Edwin Print Technician's Name

Remarks:

Applicator - White Permit File - Canary Permit Holder - Pink

CBC 1813752

Columbia County Building Permit Application ☑ E. Johnson Barker License

For Office Use Only Application # 1010-33 Date Received 10/21 By JW Permit # 28963

Zoning Official BLK Date 26.10.10 Flood Zone X Land Use A-3 Zoning A-3

FEMA Map # N/A Elevation N/A MFE N/A River N/A Plans Examiner T.C. Date 10-25-10

Comments

☐ NOC ☑ EH ☑ Deed or PA ☑ Site Plan ☐ State Road Info ☐ Parent Parcel #

☐ Dev Permit # ☐ In Floodway ☑ Letter of Auth. from Contractor ☐ F W Comp. letter

IMPACT FEES: EMS Fire Corr Road/Code

School = TOTAL Ø SUSPENDED addition to existing dwelling

Septic Permit No. # 10-0448 Fax 386-454-1796

Name Authorized Person Signing Permit ERIN JOHNSON BARKER Phone 352 317 1254

Address 5600 NE 60th AVE HIGH SPRINGS, FL 32643

Owners Name ROBERT & JOAN DUCKETT Phone 386 454 7568

911 Address 607 SW HEFLIN AVE FORT WHITE, FL 32038

Contractors Name ROBERT A. JOHNSON CONSTRUCTION LC Phone 386 454 3234

Address 5600 NE 60th AVE HIGH SPRINGS, FL 32643

Fee Simple Owner Name & Address ROBERT T. DUCKETT

Bonding Co. Name & Address N/A

Architect/Engineer Name & Address SCHAFER ENGINEERING 386-462-1340 7104 NW 42nd LN Gainesville 32606

Mortgage Lenders Name & Address N/A

Circle the correct power company – FL Power & Light – Clay Elec. – Suwannee Valley Elec. – Progress Energy

Property ID Number 29-7S-17-10058-022 Estimated Cost of Construction 45,000 (as per Erin 10-27-10)

Subdivision Name SANTA FE RIVER PLANTATIONS Lot 2 Block Unit Phase

Driving Directions I-75 to Hwy 27 TL To C-138 TR to Heflin Ave TL go 1/4 mi (Proposed driveway is on L (Past Magnolia Ln)

Number of Existing Dwellings on Property 1

Construction of Residential Addition Total Acreage 5 Lot Size

Do you need a - Culvert Permit or Culvert Waiver or Have an Existing Drive Total Building Height (New) 17'

Actual Distance of Structure from Property Lines - Front 193' Side 193' Side 133' Rear 372'

Number of Stories 2 Heated Floor Area (New) 672 SF Total Floor Area 672 Roof Pitch 3/12 New

Application is hereby made to obtain a permit to do work and installations as indicated. I certify that no work or installation has commenced prior to the issuance of a permit and that all work be performed to meet the standards of all laws regulating construction in this jurisdiction.

JW Left MESSAGE for ERIN 10-27-10 (She RET. Call)

TIME LIMITATIONS OF APPLICATION : An application for a permit for any proposed work shall be deemed to have been abandoned 180 days after the date of filing, unless such application has been pursued in good faith or a permit has been issued; except that the building official is authorized to grant one or more extensions of time for additional periods not exceeding 90 days each. The extension shall be requested in writing and justifiable cause demonstrated.

TIME LIMITATIONS OF PERMITS: Every permit issued shall become invalid unless the work authorized by such permit is commenced within 180 days after its issuance, or if the work authorized by such permit is suspended or abandoned for a period of 180 days after the time work is commenced. A valid permit receives an approved inspection every 180 days. Work shall be considered not suspended, abandoned or invalid when the permit has received an approved inspection within 180 days of the previous approved inspection.

FLORIDA'S CONSTRUCTION LIEN LAW: Protect Yourself and Your Investment: According to Florida Law, those who work on your property or provide materials, and are not paid-in-full, have a right to enforce their claim for payment against your property. This claim is known as a construction lien. If your contractor fails to pay subcontractors or material suppliers or neglects to make other legally required payments, the people who are owed money may look to your property for payment, even if you have paid your contractor in full.
This means if a lien is filed against your property, it could be sold against your will to pay for labor, materials or other services which your contractor may have failed to pay.

NOTICE OF RESPONSIBILITY TO BUILDING PERMITEE: ***YOU ARE HEREBY NOTIFIED*** as the recipient of a building permit from Columbia County, Florida, you will be held responsible to the County for any damage to sidewalks and/or road curbs and gutters, concrete features and structures, together with damage to drainage facilities, removal of sod, major changes to lot grades that result in ponding of water, or other damage to roadway and other public infrastructure facilities caused by you or your contractor, subcontractors, agents or representatives in the construction and/or improvement of the building and lot for which this permit is issued. No certificate of occupancy will be issued until all corrective work to these public infrastructures and facilities has been corrected.

WARNING TO OWNER: YOUR FAILURE TO RECORD A NOTICE OF COMMENCMENT MAY RESULT IN YOU PAYING TWICE FOR IMPROVEMENTS TO YOUR PROPERTY. A NOTICE OF COMMENCEMENT MUST BE RECORDED AND POSTED ON THE JOB SITE BEFORE THE FIRST INSPECTION. IF YOU INTEND TO OBTAIN FINANCING, CONSULT WITH YOUR LENDER OR ATTORNEY BEFORE RECORDING YOUR NOTICE OF COMMENCEMENT.

OWNERS CERTIFICATION: I CERTIFY THAT ALL THE FOREGOING INFORMATION IS ACCURATE AND THAT ALL WORK WILL BE DONE IN COMPLIANCE WITH ALL APPLICABLE LAWS REGULATING CONSTRUCTION AND ZONING.

NOTICE TO OWNER: There are some properties that may have deed restrictions recorded upon them. These restrictions may limit or prohibit the work applied for in your building permit. It may be to your advantage to check and see if your property is encumbered by any restrictions.

(Owners Must Sign All Applications Before Permit Issuance.)

Robert T. Durbin

Owners Signature ****OWNER BUILDERS MUST PERSONALLY APPEAR AND SIGN THE BUILDING PERMIT.**

CONTRACTORS AFFIDAVIT: By my signature I understand and agree that I have informed and provided this written statement to the owner of all the above written responsibilities in Columbia County for obtaining this Building Permit including all application and permit time limitations.

Robert A Johnson

Contractor's Signature (Permitee)

Contractor's License Number CBC022214
Columbia County
Competency Card Number_____

Affirmed under penalty of perjury to by the Contractor and subscribed before me this 19th **day of** Oct **20**10.

Personally known ___ **or Produced Identification**_____

SEAL:

State of Florida Notary Signature (For the Contractor)

NANCY TAYLOR
MY COMMISSION # DD 839056
EXPIRES: November 26, 2012
Bonded Thru Notary Public Underwriters

Permit No.
Tax folio No. R10058-022-29-7S-170100/0100

#28963

NOTICE OF COMMENCEMENT

State of Florida
County of Alachua

Inst:201012017031 Date:10/20/2010 Time:12:10 PM
DC,P.DeWitt Cason,Columbia County Page 1 of 1 B:1203 P:1173

The undersigned hereby gives notice that improvement(s) will be made to certain real property, and in accordance with Chapter 713, Florida Statutes, the following information is provided in the Notice of Commencement.

1. Legal Description of Property:
   Lot # 2 Santa Fe River Plantations Subdivision
   911 Address: 607 SW Heflin Avenue, Ft. White, FL 32038

2. General description of improvements(s):
   Single Family Residences Addition

3. Owner information:
   a. Name and address of owner of site of improvements(s):

      Robert T. Duckett and Joan C. Duckett
      607 SW Heflin Avenue
      Ft. White, Florida 32038

   b. Interest in property: fee simple

   c. Name and address of fee simple title holder, if other than Owner: N/A

4. Contractor:
   Robert A. Johnson Construction LC
   5600 NE 60th Avenue
   High Springs, Florida 32643

5. Surety:
   a. Name and address: NA
   b. Amount of bond $

6. Lender: (name and address)
   None

7. Person within the State of Florida designed by Owner upon whom notices or other documents may be served as provided by Section 713.13(1)(a) 7., Florida Statutes:

8. Expiration date of notice of commencement (the expiration date is 1 year from the date of recording unless a different date is specified)_____

Robert T. Duckett

Robert T. Duckett

Joan C. Duckett

Joan C. Duckett

Sworn to and subscribed before me this 23rd day of September, 2010. Said persons are personally known to me or have produced the following identification FL Driver's License

Jessica Ashley Singleton

Notary Public
My commission expires:

JESSICA ASHLEY SINGLETON
Notary Public, State of Florida
Commission# EE 20438
My comm. expires Sept. 13, 2014

FLORIDA ENERGY EFFICIENCY CODE FOR BUILDING CONSTRUCTION

FORM 600C-01 — **Residential Limited Applications Prescriptive Method C** — **CENTRAL 4 5 6**

Small Additions, Renovations & Building Systems

Compliance with Method C of Chapter 6 of the Florida Energy Efficiency Code may be demonstrated by the use of Form 600C-01 for additions of 600 square feet or less, site- installed components of manufactured homes, and renovations to single and multifamily residences. Alternative methods are provided for additions by use of Form 600B-01 or 600A-01.

PROJECT NAME: AND ADDRESS:	DUCKETT RES. 607 HEFLIN AVE FORT WHITE, FL 32038	**BUILDER:** Robert Johnson Construction	
		PERMITTING OFFICE: Columbia	**CLIMATE ZONE:** 4 ☐ 5 ☐ 6 ☐
OWNER: ROBERT DUCKETT		**PERMIT NO.:**	**JURISDICTION NO.:** 22 0000

SMALL ADDITIONS TO EXISTING RESIDENCES (600 Square feet or less of conditioned area). Prescriptive requirements in Tables 6C-1, 6C-2 and 6C-3 apply only to the components of the addition, not to the existing building. Space heating, cooling, and water heating equipment efficiency levels must be met only when equipment is installed specifically to serve the addition or is being installed in conjunction with the addition construction. Components separating unconditioned spaces from conditioned spaces must meet the prescribed minimum insulation levels. RENOVATIONS (Residential buildings undergoing renovations costing more than 30% of the assessed value of the building). Prescriptive requirements in Tables 6C-1 and 6C-2 apply only to the components and equipment being renovated or replaced. MANUFACTURED HOMES AND BUILDINGS. Only site-installed components and features are covered by this form. BUILDING SYSTEMS Comply when complete new system is installed.

	Please Print		CK
1. Renovation, Addition, New System or Manufactured Home	1. Addition		
2. Single family detached or Multifamily attached	2. Single Family		
3. If Multifamily—No. of units covered by this submission	3.		
4. Conditioned floor area (sq. ft.)	4. 672		
5. Predominant eave overhang (ft.)	5. 1'6"		
6. Glass area and type:	Single Pane	Double Pane	
a. Clear glass	6a. sq. ft.	13 sq. ft.	
b. Tint, film or solar screen	6b. sq. ft.	132 sq. ft.	
7. Percentage of glass to floor area	7. .19 %		
8. Floor type and insulation:			
a. Slab-on-grade (R-value)	8a. R= 0	74 lin. ft.	
b. Wood, raised (R-value)	8b. R=	sq. ft.	
c. Wood, common (R-value)	8c. R=	sq. ft.	
d. Concrete, raised (R-value)	8d. R=	sq. ft.	
e. Concrete, common (R-value)	8e. R=	sq. ft.	
9. Wall type and insulation:			
a. Exterior:			
1. Masonry (Insulation R-value)	9a-1 R=	sq. ft.	
2. Wood frame (Insulation R-value)	9a-2 R= 13	888 sq. ft.	
b. Adjacent:			
1. Masonry (Insulation R-value)	9b-1 R=	sq. ft.	
2. Wood frame (Insulation R-value)	9b-2 R=	sq. ft.	
c. Marriage Walls of Multiple Units* (Yes/No)	9c		
10. Ceiling type and insulation:			
a. Under attic (Insulation R-value)	10a. R= 30	672 sq. ft.	
b. Single assembly (Insulation R-value)	10b. R=	sq. ft.	
11. Cooling system* (Types: central, room unit, package terminal A.C., gas, existing, none)	11. Type: EXISTING UNIT		
	SEER/EER: 13		
12. Heating system*: (Types: heat pump, elec. strip, natural gas, L.P. gas, gas h.p., room or PTAC, existing, none)	12. Type: Heat Pump Elec.		
	HSPF/COP/AFUE: 8		
13. Air Distribution System*:			
a. Backflow damper or single package systems* (Yes/No)	13a. N/A		
b. Ducts on marriage walls adequately sealed* (Yes/No)	13b. N/A		
14. Hot water system: (Types: elec., natural gas, other, existing, none)	14. Type: Electric		
	EF: .89		

* Pertains to manufactured homes with site installed components.

I hereby certify that the plans and specifications covered by the calculation are in compliance with the Florida Energy Code.

PREPARED BY: [signature] DATE: 10/19/10

I hereby certify that this building is in compliance with the Florida Energy Code

OWNER AGENT: Robert A. Johnson DATE 10/19/10

Review of plans and specifications covered by this calculation indicates compliance with the Florida Energy Code. Before construction is completed, this building will be inspected for compliance in accordance with Section 553.908, F.S.

BUILDING OFFICIAL: _____

DATE: _____

Columbia County Property Appraiser

DB Last Updated: 10/14/2010

2009 Tax Roll Year

Tax Collector | Tax Estimator | Property Card | Parcel List Generator | Interactive GIS Map | Print

Parcel: 29-7S-17-10058-022

<< Next Lower Parcel | Next Higher Parcel >>

Search Result: 1 of 1

Owner & Property Info

Owner's Name	DUCKETT ROBERT T		
Mailing Address	607 SW HEFLIN AVE FT WHITE, FL 32038		
Site Address	607 SW HEFLIN AVE		
Use Desc. (code)	SINGLE FAM (000100)		
Tax District	3 (County)	**Neighborhood**	29717
Land Area	5.000 ACRES	**Market Area**	02
Description	NOTE: This description is not to be used as the Legal Description for this parcel in any legal transaction.		
LOT 2 SANTA FE RIVER PLANTATIONS.			

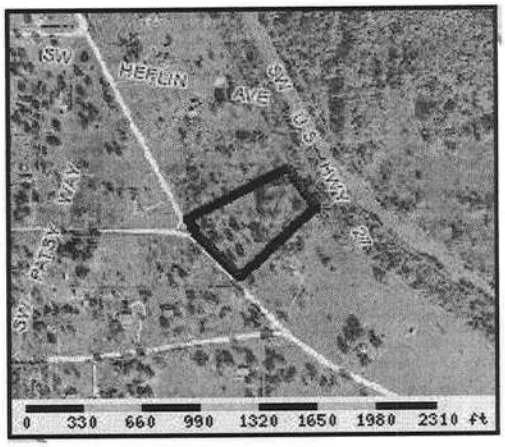

Property & Assessment Values

2009 Certified Values		
Mkt Land Value	cnt: (0)	$91,125.00
Ag Land Value	cnt: (1)	$0.00
Building Value	cnt: (1)	$48,316.00
XFOB Value	cnt: (1)	$1,200.00
Total Appraised Value		$140,641.00
Just Value		$140,641.00
Class Value		$0.00
Assessed Value		$62,333.00
Exempt Value	(code: HX)	$37,333.00
Total Taxable Value		Cnty: $25,000 Other: $25,000 | Schl: $37,333

2010 Working Values

NOTE:
2010 Working Values are NOT certified values and therefore are subject to change before being finalized for ad valorem assessment purposes.

Show Working Values

Sales History

Show Similar Sales within 1/2 mile

Sale Date	OR Book/Page	OR Code	Vacant / Improved	Qualified Sale	Sale RCode	Sale Price
3/1/1983	510/32	WD	V	Q		$12,000.00

Building Characteristics

Bldg Item	Bldg Desc	Year Blt	Ext. Walls	Heated S.F.	Actual S.F.	Bldg Value
1	SINGLE FAM (000100)	1995	WD ON PLY (08)	1068	1320	$46,602.00
	Note: All S.F. calculations are based on exterior building dimensions.					

Extra Features & Out Buildings

Code	Desc	Year Blt	Value	Units	Dims	Condition (% Good)
0040	BARN,POLE	1995	$1,200.00	0000480.000	20 x 24 x 0	(000.00)

Land Breakdown

Lnd Code	Desc	Units	Adjustments	Eff Rate	Lnd Value
000100	SFR (MKT)	5 AC	1.00/1.00/0.75/1.00	$16,402.40	$82,012.00

WARRANTY DEED

(Statutory Form – §689.02 F.S.)

Rec. 9.00
Doc. Stamps 54.00
Int. Tax
Surtax
Total 63.00

Prepared By:
JAMES L. PENDLAND, JR., ESQ.
1240 N.W. 11th Avenue
Gainesville, Florida 32601

THIS INDENTURE, Made and entered into on this 18th day of March A.D. 19 83, by and between HOWARD W. O'STEEN

BOOK 510 PAGE 32
OFFICIAL RECORDS

of the County of Alachua, State of Florida, as Grantor*

and ROBERT T. DUCKETT
10723 LaPlacida, Unit #1
Coral Springs, Florida 33065

of the County of , State of Florida, as Grantee*

WITNESSETH, That said grantor, for and in consideration of the sum of Ten Dollars ($10.00)---------- and other good and valuable considerations to said grantor in hand paid by said grantee, the receipt whereof is hereby acknowledged, has granted, bargained and sold to the said grantee, and grantee's heirs and assigns forever, the following described land, situated, lying and being in Columbia County, Florida, to-wit:

Lot Two (2) of SANTA FE RIVER PLANTATIONS, a subdivision, as per plat thereof recorded in Plat Book 4, page 55, 55A and 55B of the Public Records of Columbia County, Florida.

SUBJECT TO: Declaration of Restrictive Covenants for SANTA FE RIVER PLANTATIONS, dated August 19, 1977 and recorded in Official Records Book 385, page 93, et seq., of the Public Records of Columbia County, Florida.

ALSO, SUBJECT TO: taxes for the year 1983 and all subsequent years.

COLUMBIA COUNTY FLORIDA
DOCUMENTARY STAMP
PAID 54.00
DATE 4-11-83
MARY E. CHILDS, CLERK
BY L Powell
D.C.

'83 APR 11 AM 10:02

510 32-33

8302937

and said grantor does hereby fully warrant the title to said land, and will defend the same against the lawful claims of all persons whomsoever.

*"Grantor" and "grantee" are used for singular or plural, as context requires.

IN WITNESS WHEREOF, the Grantor has executed this deed under seal on the day and year first above written.

of the County of , State of Florida , as Grantee

WITNESSETH, That said grantor, for and in consideration of the sum of Ten Dollars ($10.00)---------- and other good and valuable considerations to said grantor in hand paid by said grantee, the receipt whereof hereby acknowledged, has granted, bargained and sold to the said grantee, and grantee's heirs and assigns forever the following described land, situated, lying and being in Columbia County, Florida, to-wit:

Lot Two (2) of SANTA FE RIVER PLANTATIONS, a subdivision, as per plat thereof recorded in Plat Book 4, page 55, 55A and 55B of the Public Records of Columbia County, Florida.

SUBJECT TO: Declaration of Restrictive Covenants for SANTA FE RIVER PLANTATIONS, dated August 19, 1977 and recorded in Official Records Book 385, page 93, et seq., of the Public Records of Columbia County, Florida.

ALSO, SUBJECT TO: taxes for the year 1983 and all subsequent years.

COLUMBIA COUNTY FLORIDA DOCUMENTARY STAMP PAID $4.00 DATE 4-14-83 MARY E. CHILDS, CLERK BY L Powell

510 32-33 00029937

and said grantor does hereby fully warrant the title to said land, and will defend the same against the lawful claims of all persons whomsoever.

*"Grantor" and "grantee" are used for singular or plural, as context requires.

IN WITNESS WHEREOF, the Grantor has executed this deed under seal on the day and year first above written.

Signed, sealed and delivered in our presence as witnesses:

Witness

Witness

Witness

Witness

HOWARD W. O'STEEN (Seal)

(Seal)

(Seal)

(Seal)

ACKNOWLEDGEMENT FOR AN INDIVIDUAL

State of Florida

County of Alachua

The foregoing warranty deed was acknowledged before me this 18th day of March, 1983, by Howard W. O'Steen.

(Affix Notary Seal)

Susan Whitted

Notary Public, State of Florida at Large
My Commission Expires:

ACKNOWLEDGEMENT FOR A CORPORATION

State of _____

County of _____

The foregoing instrument was acknowledged before me this _____ day of _____, 19____, by _____ of _____ a _____ corporation, on behalf of the corporation.

(Affix Notary Seal)

Notary Public, State of Florida at Large
My Commission Expires:

BOOK 510 PAGE 33
OFFICIAL RECORDS

County of _____

The foregoing instrument was acknowledged before me this _____ day of _____, 19____, by _____ of _____ a _____ corporation, on behalf of the corporation.

(Affix Notary Seal)

_____
Notary Public, State of Florida at Large
My Commission Expires:

BOOK 510 PAGE 33
OFFICIAL RECORDS

CHARLES I. HOLDEN, JR., P.A.
1240 N.W. 11th Avenue
Gainesville, Florida 32601
(904) 373-7536

RETURN TO
JAMES L. PENDLAND, JR.
P.O. BOX 1560
HIGH SPRINGS, FL 32643

1M-381-44988

STATE OF FLORIDA
DEPARTMENT OF HEALTH
APPLICATION FOR CONSTRUCTION PERMIT

Permit Application Number 10-0448

---------- PART II - SITEPLAN ----------

Scale: Each block represents 10 feet and 1 inch = 40 feet.

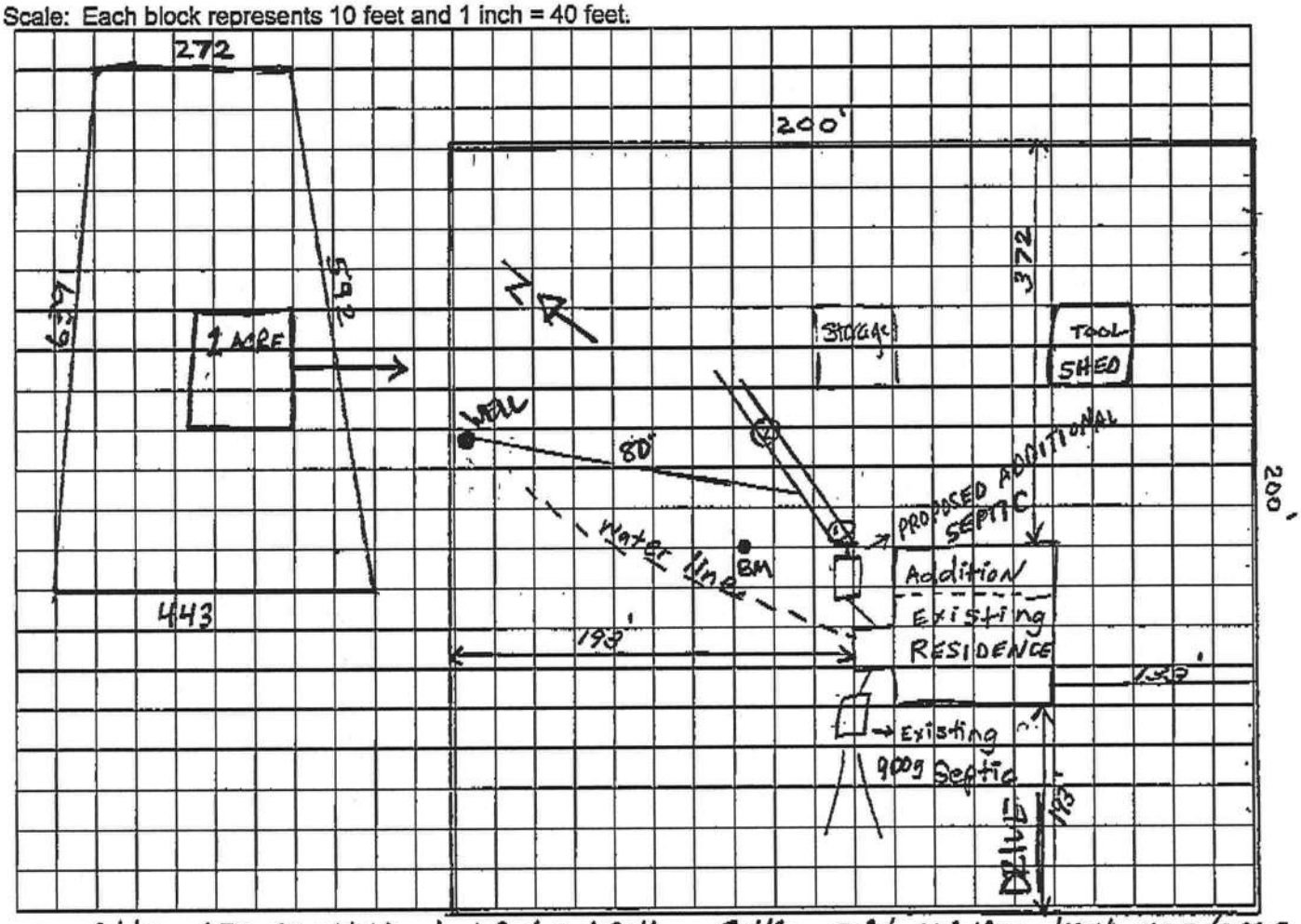

Notes: Adding 672 SF Additional 1 Bed & 1 Bath. Sallie said existing tank was large enough, but fall is not sufficient. Kitchen and new bathroom will be serviced by new system.

Site Plan submitted by: [signature]

Plan Approved X Not Approved ____ Date 10/13/10

By [signature] Columbia CHD County Health Department

ALL CHANGES MUST BE APPROVED BY THE COUNTY HEALTH DEPARTMENT

386 454-1[illegible]

[illegible] 9/29

10-0448

STATE OF FLORIDA
DEPARTMENT OF HEALTH
ONSITE SEWAGE TREATMENT AND DISPOSAL SYSTEM
APPLICATION FOR CONSTRUCTION PERMIT

PERMIT NO. 979808
DATE PAID: 09/29/10
FEE PAID: 425.00
RECEIPT #: 1497185

APPLICATION FOR:
[X] New System [ ] Existing System [ ] Holding Tank [ ] Innovative
[ ] Repair [ ] Abandonment [ ] Temporary [ ] _____

APPLICANT: ROBERT & JOAN DUCKETT

AGENT: ROBERT A. JOHNSON CONSTRUCTION LC TELEPHONE: 386-454-3234

MAILING ADDRESS: 5600 NE 60th AVE HIGH SPRINGS, FL 32643

TO BE COMPLETED BY APPLICANT OR APPLICANT'S AUTHORIZED AGENT. SYSTEMS MUST BE CONSTRUCTED BY A PERSON LICENSED PURSUANT TO 489.105(3)(m) OR 489.552, FLORIDA STATUTES. IT IS THE APPLICANT'S RESPONSIBILITY TO PROVIDE DOCUMENTATION OF THE DATE THE LOT WAS CREATED OR PLATTED (MM/DD/YY) IF REQUESTING CONSIDERATION OF STATUTORY GRANDFATHER PROVISIONS.

PROPERTY INFORMATION

LOT: 2 BLOCK: ____ SUBDIVISION: SANTE FE RIVER PLANTATION PLATTED: 1977 YES

PROPERTY ID #: 29-7S-17-10058-022 ZONING: RES I/M OR EQUIVALENT: [Y / N]

PROPERTY SIZE: 5 ACRES WATER SUPPLY: [X] PRIVATE PUBLIC [ ]<=2000GPD [ ]>2000GPD

IS SEWER AVAILABLE AS PER 381.0065, FS? [Y / (N)] ~~DISTANCE TO SEWER~~: ____ FT

PROPERTY ADDRESS: 607 SW HEFLIN AVE FORT WHITE, FL 32038

DIRECTIONS TO PROPERTY: From HIGH SPRINGS, take 27 North over River to first entrance on left into Santa Fe Plantations, then take next right. Property is 1/4 mi on right.

BUILDING INFORMATION [X] RESIDENTIAL [ ] COMMERCIAL

Unit No	Type of Establishment	No. of Bedrooms	Building Area Sqft	Commercial/Institutional System Design Table 1, Chapter 64E-6, FAC
1	Single Family Res	3	2128	
2				
3				
4				

[ ] Floor/Equipment Drains [ ] Other (Specify) _____

SIGNATURE: Robert A. Johnson DATE: 9/23/10

DH 4015, 08/09 (Obsoletes previous editions which may not be used)
Incorporated 64E-6.001, FAC

EXISTING UPPER FLOOR PLAN

Scale 1/4" = 1-0"

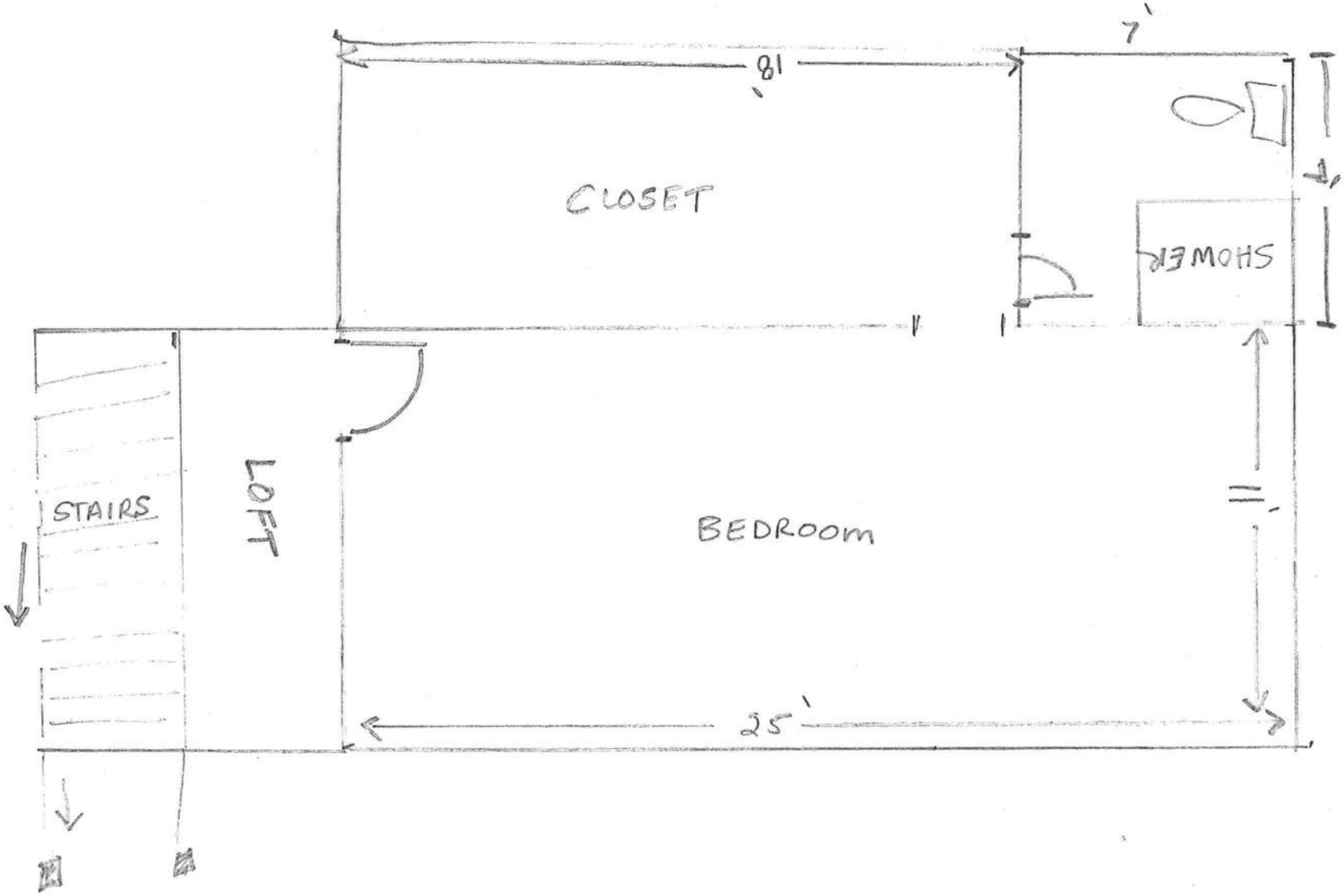

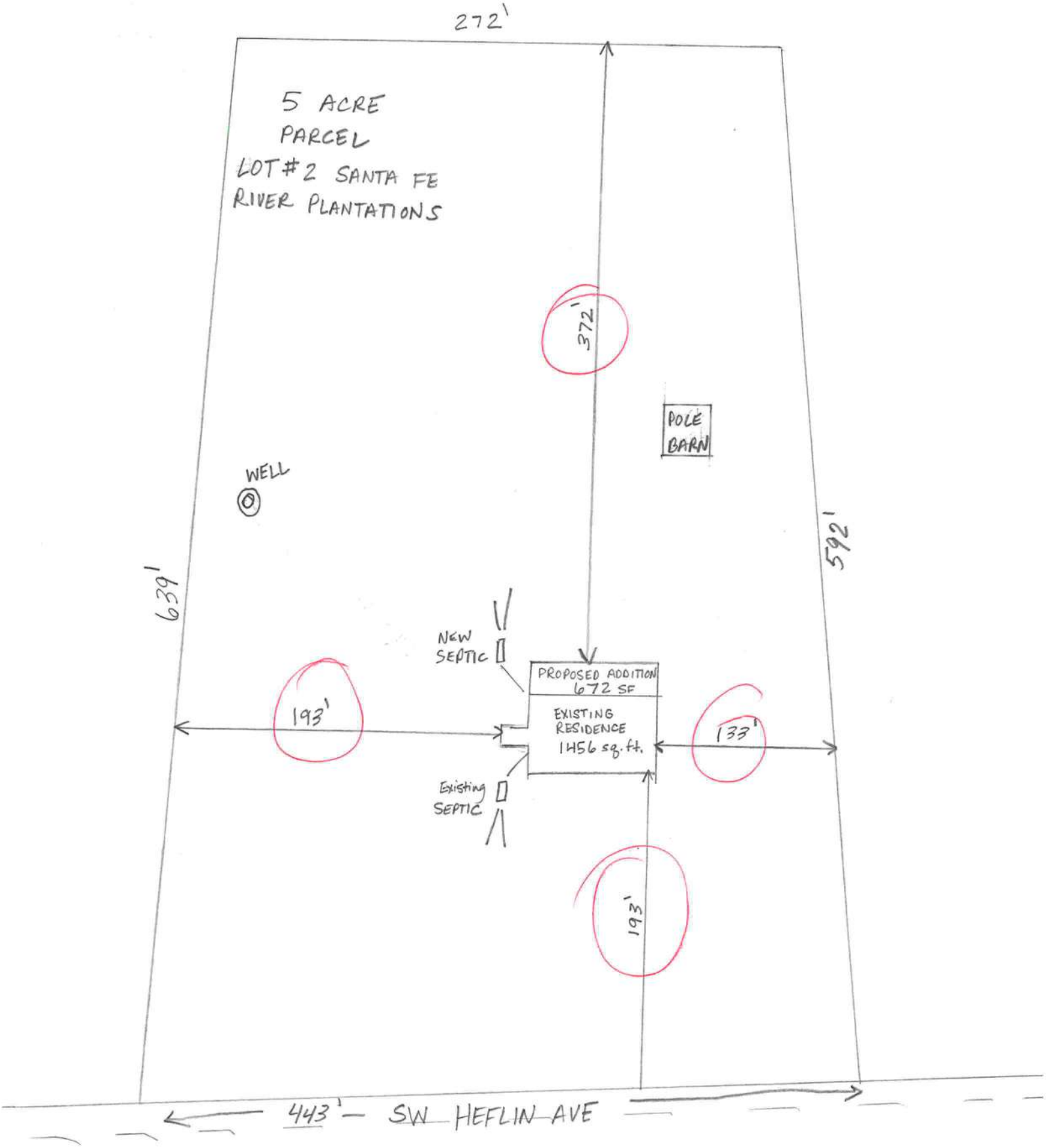
272'
5 ACRE
PARCEL
LOT #2 SANTA FE
RIVER PLANTATIONS
372'
POLE
BARN
WELL
592'
639'
NEW
SEPTIC
PROPOSED ADDITION
672 SF
EXISTING
RESIDENCE
1456 sq. ft.
193'
133'
Existing
SEPTIC
193'
443' — SW HEFLIN AVE

SUBCONTRACTOR VERIFICATION FORM

APPLICATION NUMBER 1010-33 CONTRACTOR ROBERT JOHNSON PHONE 352 538 0335

THIS FORM MUST BE SUBMITTED PRIOR TO THE ISSUANCE OF A PERMIT

In Columbia County one permit will cover all trades doing work at the permitted site. It is REQUIRED that we have records of the subcontractors who actually did the trade specific work under the permit. Per Florida Statute 440 and Ordinance 89-6, a contractor shall require all subcontractors to provide evidence of workers' compensation or exemption, general liability insurance and a valid Certificate of Competency license in Columbia County.

Any changes, the permitted contractor is responsible for the corrected form being submitted to this office prior to the start of that subcontractor beginning any work. Violations will result in stop work orders and/or fines.

ELECTRICAL 435 ✓	Print Name CLARK ELECTRIC License #: EC13003577	Signature [illegible] Phone #: 352 316 2563
MECHANICAL/ A/C "A" 903 ✓	Print Name HIGH SPRINGS PLUMBING & ~~ELECTRIC~~ License #: CA C1816529	Signature [illegible] Phone #: 386 623 3487
PLUMBING/ GAS 441 ✓	Print Name HIGH SPRINGS PLUMBING & ELECTRIC License #: CFC 057304	Signature [illegible] Phone #: 386 623 3487
ROOFING 485 ✓	Print Name ROBERT A. JOHNSON CONST. License #: CBC 022214	Signature Robert A. Johnson Phone #: 352 538 0335
~~**SHEET METAL**~~	Print Name License #:	Signature Phone #:
~~**FIRE SYSTEM/ SPRINKLER**~~	Print Name License#:	Signature Phone #:
~~**SOLAR**~~	Print Name License #:	Signature Phone #:

Specialty License	License Number	Sub-Contractors Printed Name	Sub-Contractors Signature
MASON	—	—	—
CONCRETE FINISHER	805	JOHNSON RESTORATION, INC.	[illegible]
FRAMING	CGC1517145	DWC Contracting	Jeff Scher
INSULATION 485 ✓	CBC022214	ROBERT JOHNSON CONST.	Robert A. Johnson
STUCCO	—		
DRYWALL 485 ✓	CBC022214	ROBERT JOHNSON CONSTRUCTION	Robert A. Johnson
PLASTER 485 ✓			
CABINET INSTALLER 485			
PAINTING ✓	CBC1253846	E JOHNSON CONST.	[illegible]
ACOUSTICAL CEILING	—		
GLASS	—		
CERAMIC TILE 485	CBC022214	ROBERT JOHNSON CONSTRUCTION	SIGNATURE UP [illegible]
FLOOR COVERING 485			
ALUM/VINYL SIDING 485			
GARAGE DOOR	—		
METAL BLDG ERECTOR	—		

F. S. 440.103 Building permits; identification of minimum premium policy.--Every employer shall, as a condition to applying for and receiving a building permit, show proof and certify to the permit issuer that it has secured compensation for its employees under this chapter as provided in ss. 440.10 and 440.38, and shall be presented each time the employer applies for a building permit.

COLUMBIA COUNTY BUILDING DEPARTMENT 6-25-09
RESIDENTIAL CHECK LIST REQUIRMENTS

MINIMUM PLAN REQUIREMENTS FOR THE FLORIDA BUILDING CODE RESIDENTIAL 2007 EFFECTIVE 1 MARCH 2009 & 2009 SUPPLEMENTS EFFECTIVE 1 MARCH 2009, ONE (1) AND TWO (2) FAMILY DWELLINGS with Supplements and Revision, OF THE NATIONAL ELECTRICAL 2008

ALL REQUIREMENTS ARE SUBJECT TO CHANGE

ALL BUILDING PLANS MUST INDICATE COMPLIANCE with the Current 2007 FLORIDA BUILDING CODES RESIDENTIAL EFFECTIVE 1 MARCH 2009 & 2009 SUPPLEMENTS EFFECTIVE 1 MARCH 2009. ALL PLANS OR DRAWINGS SHALL PROVIDE CALCULATIONS AND DETAILS THAT HAVE THE SEAL AND SIGNATURE OF A CERTIFIED ARCHITECT OR ENGINEER REGISTERED IN THE STATE OF FLORIDA, OR ALTERNATE METHODOLOGIES, APPROVED BY THE STATE OF FLORIDA BUILDING COMMISSION FOR ONE-AND-TWO FAMILY DWELLINGS.

FOR DESIGN PURPOSES THE FOLLOWING BASIC WIND SPEEDS ARE PER FIGURE R301.2(4) of the FLORIDA BUILDING CODES RESIDENTIAL (Florida Wind speed map) **SHALL BE USED.**

WIND SPEED LINE SHALL BE DEFINED AS FOLLOWS: THE CENTERLINE OF INTERSTATE 75.

ALL BUILDINGS CONSTRUCTED EAST OF SAID LINE SHALL BE -------- 100 MPH
ALL BUILDINGS CONSTRUCTED WEST OF SAID LINE SHALL BE --------110 MPH
NO AREA IN COLUMBIA COUNTY IS IN A WIND BORNE DEBRIS REGION

	GENERAL REQUIREMENTS: APPLICANT – PLEASE CHECK ALL APPLICABLE BOXES BEFORE SUBMITTAL			Items to Include- Each Box shall be Circled as Applicable		
				Yes	No	N/A
1	Two (2) complete sets of plans containing the following:			✓		
2	All drawings must be clear, concise, drawn to scale, details ~~that are~~ not used shall be marked void					
3	Condition space (Sq. Ft.)	672 addition	Total (Sq. Ft.) under roof (672 -) 2380	IIIIIIII	IIIIIIII	IIIII

2128 total

Designers name and signature shall be on all documents and a licensed architect or engineer, signature and official embossed seal shall be affixed to the plans and documents as per the FLORIDA BUILDING CODES RESIDENTIAL R101.2.1

Site Plan information including:

4	Dimensions of lot or parcel of land	✓		
5	Dimensions of all building set backs	✓		
6	Location of all other structures (include square footage of structures) on parcel, existing or proposed well and septic tank and all utility easements.	✓		
7	Provide a full legal description of property.	✓		

Wind-load Engineering Summary, calculations and any details required

	GENERAL REQUIREMENTS: APPLICANT – PLEASE CHECK ALL APPLICABLE BOXES BEFORE SUBMITTAL	Items to Include- Each Box shall be Circled as Applicable		
8	**Plans or specifications must show compliance with FBCR Chapter 3**	**IIIIII**	**IIIII**	**IIIIII**
		YES	**NO**	**N/A**
9	Basic wind speed (3-second gust), miles per hour	✓		
10	(Wind exposure – if more than one wind exposure is used, the wind exposure and applicable wind direction shall be indicated)	✓		
11	Wind importance factor and nature of occupancy	✓		
12	The applicable internal pressure coefficient, Components and Cladding	✓		
13	The design wind pressure in terms of psf (kN/m²), to be used for the design of exterior component, cladding materials not specifally designed by the registered design professional.	✓		

Elevations Drawing including:

14	All side views of the structure	✓		
15	Roof pitch	✓		
16	Overhang dimensions and detail with attic ventilation	✓		
17	Location, size and height above roof of chimneys			✓
18	Location and size of skylights with Florida Product Approval			✓
18	Number of stories	✓		
20A	Building height from the established grade to the roofs highest peak	✓		

Floor Plan including:

20	Dimensioned area plan showing rooms, attached garage, breeze ways, covered porches, deck, balconies	✓		
21	Raised floor surfaces located more than 30 inches above the floor or grade	✓		
22	All exterior and interior shear walls indicated	✓		
23	Shear wall opening shown (Windows, Doors and Garage doors)	✓		
24	Show compliance with Section FBCR 310 Emergency escape and rescue opening shown in each bedroom (net clear opening shown) and Show compliance with Section FBCR 613.2 where the opening of an operable window is located more than 72 inches above the finished grade or surface below, the lowest part of the clear opening of the window shall be a minimum of 24 inches above the finished floor of the room in which the window is located. Glazing between the floor and 24 inches shall be fixed or have openings through which a 4-inch-diameter sphere cannot pass.	✓		
25	Safety glazing of glass where needed	✓		
26	Fireplaces types (gas appliance) (vented or non-vented) or wood burning with Hearth (see chapter 10 of FBCR)			✓
27	Show stairs with dimensions (width, tread and riser and total run) details of guardrails, Handrails			✓
28	Identify accessibility of bathroom (see FBCR SECTION 322)	✓		

All materials placed within opening or onto/into exterior walls, soffits or roofs shall have Florida product approval number and mfg. installation information submitted with the plans (see Florida product approval form)

GENERAL REQUIREMENTS: APPLICANT – PLEASE CHECK ALL APPLICABLE BOXES BEFORE SUBMITTAL	Items to Include- Each Box shall be Circled as Applicable

FBCR 403: Foundation Plans

		YES	NO	N/A
29	Location of all load-bearing walls footings indicated as standard, monolithic, dimensions, size and type of reinforcing.	✓		
30	All posts and/or column footing including size and reinforcing			✓
31	Any special support required by soil analysis such as piling.			✓
32	Assumed load-bearing valve of soil 2,500 Pound Per Square Foot	✓		
33	Location of horizontal and vertical steel, for foundation or walls (include # size and type) **For** structures with foundation which establish new electrical utility companies service connection a Concrete Encased Electrode will be required within the foundation to serve as an grounding electrode system. Per the National Electrical Code article 250.52.3	✓		

FBCR 506: CONCRETE SLAB ON GRADE

34	Show Vapor retarder (6mil. Polyethylene with joints lapped 6 inches and sealed)	✓		
35	Show control joints, synthetic fiber reinforcement or welded fire fabric reinforcement and Supports	✓		

FBCR 320: PROTECTION AGAINST TERMITES

36	Indicate on the foundation plan if soil treatment is used for subterranean termite prevention or Sub mit other approved termite protection methods. **Protection shall be provided by registered termiticides**	✓		

FBCR 606: Masonry Walls and Stem walls (load bearing & shear Walls)

37	Show all materials making up walls, wall height, and Block size, mortar type	✓		✓
38	Show all Lintel sizes, type, spans and tie-beam sizes and spacing of reinforcement			✓

Metal frame shear wall and roof systems shall be designed, signed and sealed by Florida Prof. Engineer or Architect

Floor Framing System: First and/or second story

39	Floor truss package shall including layout and details, signed and sealed by Florida Registered Professional Engineer	✓		
40	Show conventional floor joist type, size, span, spacing and attachment to load bearing walls, stem walls and/or priers			✓
41	Girder type, size and spacing to load bearing walls, stem wall and/or priers	✓		
42	Attachment of joist to girder	✓		
43	Wind load requirements where applicable	✓		
44	Show required under-floor crawl space			✓

45	Show required amount of ventilation opening for under-floor spaces			✓
46	Show required covering of ventilation opening			✓
47	Show the required access opening to access to under-floor spaces			✓
48	Show the sub-floor structural panel sheathing type, thickness and fastener schedule on the edges & inter of the areas structural panel sheathing			✓
49	Show Draftstopping, Fire caulking and Fire blocking			✓
50	Show fireproofing requirements for garages attached to living spaces, per FBCR section 309			✓
51	Provide live and dead load rating of floor framing systems (psf).			✓

FBCR CHAPTER 6 WOOD WALL FRAMING CONSTRUCTION

	GENERAL REQUIREMENTS: APPLICANT – PLEASE CHECK ALL APPLICABLE BOXES BEFORE SUBMITTAL	Items to Include- Each Box shall be Circled as Applicable		
		YES	NO	N/A
52	Stud type, grade, size, wall height and oc spacing for all load bearing or shear walls	✓		
53	Fastener schedule for structural members per table FBCR 602.3 are to be shown	✓		
54	Show Wood structural panel's sheathing attachment to studs, joist, trusses, rafters and structural members, showing fastener schedule attachment on the edges & intermediate of the areas structural panel sheathing	✓		
55	Show all required connectors with a max uplift rating and required number of connectors and oc spacing for continuous connection of structural walls to foundation and roof trusses or rafter systems	✓		
56	Show sizes, type, span lengths and required number of support jack studs, king studs for shear wall opening and girder or header per FBCR Table 502.5 (1)	✓		
57	Indicate where pressure treated wood will be placed	✓		
58	Show all wall structural panel sheathing, grade, thickness and show fastener schedule for structural panel sheathing edges & intermediate areas	✓		
59	A detail showing gable truss bracing, wall balloon framing details or/ and wall hinge bracing detail	✓		

FBCR :ROOF SYSTEMS:

60	Truss design drawing shall meet section FBCR 802.10 Wood trusses	✓		
61	Include a layout and truss details, signed and sealed by Florida Professional Engineer	✓		
62	Show types of connector's assemblies' and resistance uplift rating for all trusses and rafters	✓		
63	Show gable ends with rake beams showing reinforcement or gable truss and wall bracing details	✓		
64	Provide dead load rating of trusses	✓		

FBCR 802:Conventional Roof Framing Layout

65	Rafter and ridge beams sizes, span, species and spacing			✓
66	Connectors to wall assemblies' include assemblies' resistance to uplift rating	✓		
67	Valley framing and support details			✓
68	Provide dead load rating of rafter system			✓

FBCR Table 602,3(2) & FBCR 803 ROOF SHEATHING

69	Include all materials which will make up the roof decking, identification of structural panel sheathing, grade, thickness	✓		
70	Show fastener Size and schedule for structural panel sheathing on the edges & intermediate areas	✓		

FBCR ROOF ASSEMBLIES FRC Chapter 9

71	Include all materials which will make up the roof assembles covering	✓		
72	Submit Florida Product Approval numbers for each component of the roof assembles covering	✓		

FBCR Chapter 11 Energy Efficiency Code for residential building

Residential construction shall comply with this code by using the following compliance methods in the FBCR chapter11 Residential buildings compliance methods. **Two of the required forms are to be submitted**, *N1100.1.1.1 As an alternative to the computerized Compliance Method A, the Alternate Residential Point System Method hand calculation, Alternate Form 600A, may be used. All requirements specific to this calculation are located in Sub appendix C to Appendix G. Buildings complying by this alternative shall meet all mandatory requirements of this chapter. Computerized versions of the Alternate Residential Point System Method shall not be acceptable for code compliance.*

	GENERAL REQUIREMENTS: APPLICANT – PLEASE CHECK ALL APPLICABLE BOXES BEFORE SUBMITTAL	Items to Include- Each Box shall be Circled as Applicable		
		YES	**NO**	**N/A**
73	Show the insulation R value for the following areas of the structure	✓		
74	Attic space	✓		
75	Exterior wall cavity	✓		
76	Crawl space			✓

HVAC information

Using existing unit

77	Submit two copies of a Manual J sizing equipment or equivalent computation study			✓
78	Exhaust fans shown in bathrooms **Mechanical exhaust capacity of 50 cfm intermittent or 20 cfm continuous required**	✓		
79	Show clothes dryer route and total run of exhaust duct			✓

Plumbing Fixture layout shown

80	All fixtures waste water lines shall be shown on the foundation plan	✓		
81	Show the location of water heater			✓

Private Potable Water

82	Pump motor horse power			✓
83	Reservoir pressure tank gallon capacity			✓
84	Rating of cycle stop valve if used			✓

Use existing

Electrical layout shown including

85	Show Switches, receptacles outlets, lighting fixtures and Ceiling fans	✓		
86	Show all 120-volt, single phase, 15- and 20-ampere branch circuits outlets required to be protected by **Ground-Fault Circuit Interrupter (GFCI) Article 210.8 A**	✓		
87	Show the location of smoke detectors & Carbon monoxide detectors	✓		
88	Show service panel, sub-panel, location(s) and total ampere ratings	✓		
89	On the electrical plans identify the electrical service overcurrent protection device for the main electrical service. This device shall be installed on the exterior of structures to serve as a disconnecting means for the utility company electrical service. Conductors used from the exterior disconnecting means to a panel or sub panel shall have four-wire conductors, of which one conductor shall be used as an equipment ground. Indicate if the utility company service entrance cable will be of the overhead or underground type. **For structures** with foundation which establish new electrical utility companies service connection a Concrete Encased Electrode will be required within the foundation to serve as an Grounding electrode system. Per the National Electrical Code article 250.52.3	✓		
90	Appliances and HVAC equipment and disconnects	✓		
91	Show all 120-volt, single phase, 15- and 20-ampere branch circuits supplying outlets installed in dwelling unit family rooms, dining rooms, living rooms, parlors, libraries, dens, bedrooms, sunrooms, recreation rooms, closets, hallways, or similar rooms or areas shall be protected by a listed **Combination arc-fault circuit interrupter,** Protection device.	✓		

Disclosure Statement for Owner Builders *If you as the applicant will be acting as an owner/builder under section 489.103(7) of the Florida Statutes, submit the required owner builder disclosure statement form.*

Notice Of Commencement

A notice of commencement form **recorded** in the Columbia County Clerk Office is required to be filed with the building department Before Any Inspections can be preformed.

GENERAL REQUIREMENTS: APPLICANT – PLEASE CHECK ALL APPLICABLE BOXES BEFORE SUBMITTAL	Items to Include- Each Box shall be Circled as Applicable

THE FOLLOWING ITEMS MUST BE SUBMITTED WITH BUILDING PLANS

		YES	NO	N/A
92	**Building Permit Application** A current Building Permit Application form is to be completed and submitted for all residential projects	✓		
93	**Parcel Number** The parcel number (Tax ID number) from the Property Appraiser (386) 758-1084 is required. A copy of property deed is also requested	✓		
94	**Environmental Health Permit or Sewer Tap Approval** A copy of a approved Columbia County Environmental Health (386) 758-1058	✓		
95	**City of Lake City** A permit showing an approved waste water sewer tap			✓
96	**Toilet facilities shall be provided for all construction sites**	✓		
97	**Town of Fort White** (386) 497-2321 If the parcel in the application for building permit is within the Corporate city limits of Fort White an approval land use development letter issued by the Town of Fort is required to be submitted with the application for a building permit.			✓

98	**Flood Information:** All projects within the Floodway of the Suwannee or Santa Fe Rivers shall require permitting through the Suwannee River Water Management District, before submitting a application to this office. Any project located within a flood zone where the base flood elevation (100 year flood) has been established shall meet the requirements of Section 8.5.2 of the Columbia County Land Development Regulations. Any project located within a flood zone where the base flood elevation has not been established (Zone A) shall meet the requirements of Section 8.5.3 of the Columbia County Land Development Regulations			✓
99	CERTIFIED FINISHED FLOOR ELEVATIONS will be required on any project where the base flood elevation (100 year flood) has been established			✓
100	A development permit will also be required. Development permit cost is **$50.00**			✓
101	**Driveway Connection:** If the property does not have an existing access to a public road, then an application for a culvert permit (**$25.00**) must be made. If the applicant feels that a culvert is not needed, they may apply for a culvert waiver (**$50.00**). All culvert waivers are sent to the Columbia County Public Works Department for approval or denial.			✓
102	**911 Address:** If the project is located in an area where a 911 address has not been issued, then application for a 911address must be applied for and **received** through the Columbia County Emergency Management Office of 911 Addressing Department (386) 758-1125			✓

Section R101.2.1 of the Florida Building Code Residential:

The provisions of Chapter 1, Florida Building Code, Building shall govern the administration and enforcement of the Florida Building Code, Residential.

Section 105 of the Florida Building Code defines the:

Time limitation of application.

An application for a permit for any proposed work shall be deemed to have been abandoned 180 days after the date of filing, unless such application has been pursued in good faith or a permit has been issued; except that the building official is authorized to grant one or more extensions of time for additional periods not exceeding 90 days each. The extension shall be requested in writing and justifiable cause demonstrated.

Single-family residential dwelling.

Section 105.3.4 A building permit for a single-family residential dwelling must be issued within 30 working days of application therefor unless unusual circumstances require a longer time for processing the application or unless the permit application fails to satisfy the Florida Building Code or the enforcing agency's laws or ordinances.

Permit intent.

Section 105.4.1: A permit issued shall be constructed to be a license to proceed with the work and not as authority to violate, cancel, alter or set aside any of the provisions of the technical codes, nor shall issuance of a permit prevent the building official from thereafter requiring a correction of errors in plans, construction or violations of this code. Every permit issued shall become invalid unless the work authorized by such permit is commenced within six months after its issuance, or if the work authorized by such permit is suspended or abandoned for a period of six months after the time the work is commenced.

If work has commenced.

Section 105.4.1.1: If work has commenced and the permit is revoked, becomes null and void, or expires because of lack of progress or abandonment, a new permit covering the proposed construction shall be obtained before proceeding with the work.

New Permit.

Section 105.4.1.2: If a new permit is not obtained within 180 days from the date the initial permit became null and void, the building official is authorized to require that any work which has been commenced or completed be removed from the building site. Alternately, a new permit may be issued on application, providing the work in place and required to complete the structure meets all applicable regulations in effect at the time the initial permit became null and void and any regulations which may have become effective between the date of expiration and the date if issuance of the new permit.

Work Shall Be:

Section 105.4.1.3: Work shall be considered to be in active progress when the permit has received an approved inspection within 180 days. This provision shall not be applicable in case of civil commotion or strike or when the building work is halted due directly to judicial injunction, order or similar process.

The Fee:

Section 105.4.1.4: The fee for renewal reissuance and extension of a permit shall be set forth by the administrative authority.

When the submitted application is approved for permitting the applicant will be notified by phone as to the date and time a building permit will be prepared and issued by the Columbia County Building & Zoning Department

EXISTING UPPER FLOOR PLAN

Scale 1/4" = 1-0'

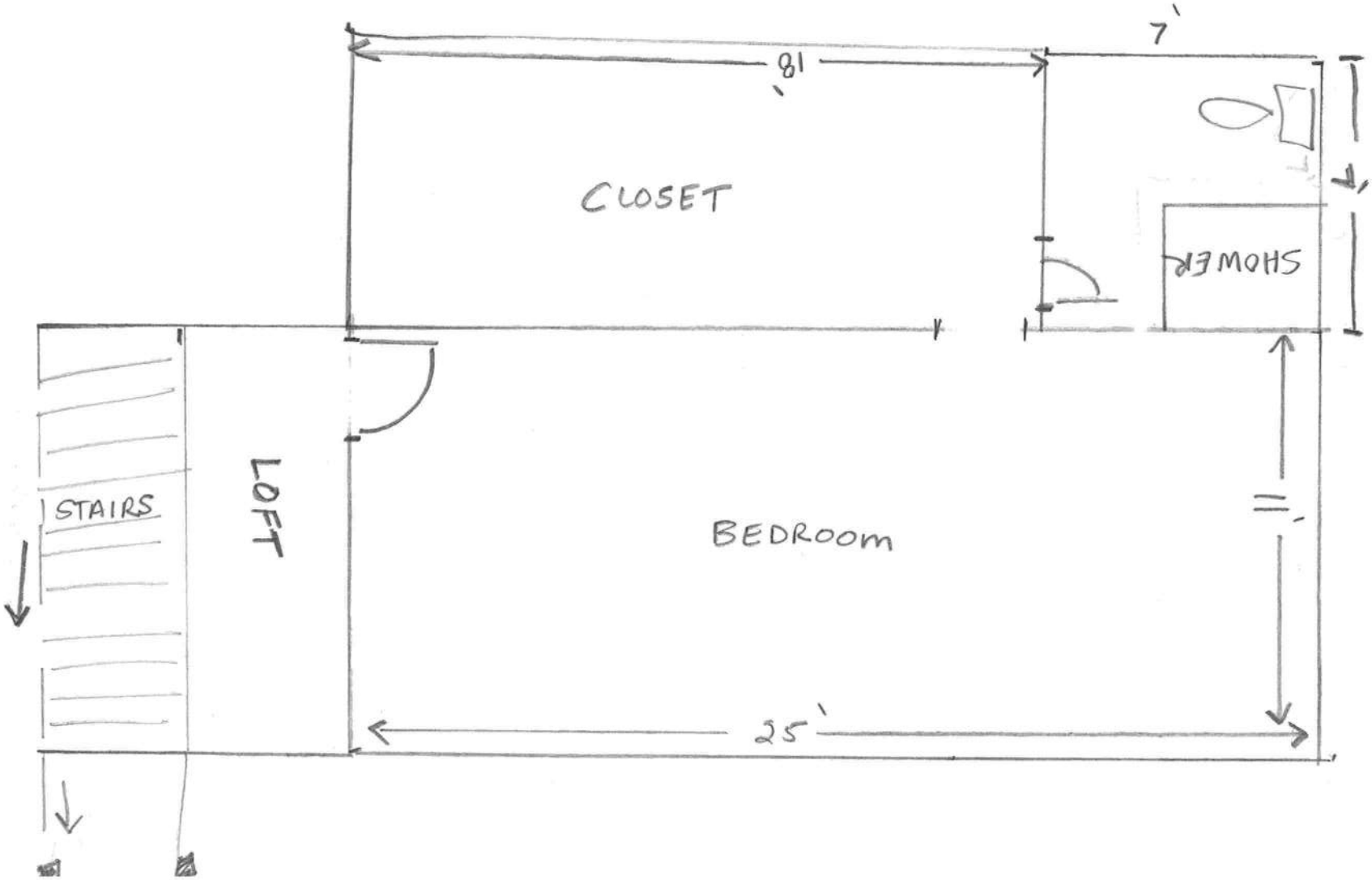

ITW Building Components Group, Inc.

1950 Marley Drive Haines City, FL 33844
Florida Engineering Certificate of Authorization Number: 0 278
Florida Certificate of Product Approval # FL1999
 Document ID:1U5G215-Z0223080738

Truss Fabricator: W.B. Howland
Job Identification: 6957-/DUCKETT ADDITION /ERIN JOHNSON CONSTRUCTION -- HIgh Springs, FL
Truss Count: 2
Model Code: Florida Building Code 2007 and 2009 Supplement
Truss Criteria: FBC2007Res/TPI-2002(STD)
Engineering Software: Alpine Software,Version 10.01.
Structural Engineer of Record: The identity of the structural EOR did not exist as of
Address: the seal date per section 61G15-31.003(5a) of the FAC
Minimum Design Loads: Roof - 40.0 PSF @ 1.25 Duration
Floor - N/A
Wind - 110 MPH ASCE 7-05 -Closed

Seal Date: 09/23/2010

-Truss Design Engineer-
Doug Fleming
Florida License Number: 66648
1950 Marley Drive
Haines City, FL 33844

Notes:

1. Determination as to the suitability of these truss components for the structure is the responsibility of the building designer/engineer of record, as defined in ANSI/TPI 1
2. The drawing date shown on this index sheet must match the date shown on the individual truss component drawing.
3. As shown on attached drawings; the drawing number is preceded by: HCUSR215

Details: A1101505-GBLLETIN-

#	Ref	Description	Drawing#	Date
1	45873--A1		10266009	09/23/10
2	45874--A2		10266010	09/23/10

COLUMBIA COUNTY BUILDING DEPARTMENT
Received for
FILE COPY
Code Compliance
PLANS EXAMINER

Top chord 2x4 SP #2 N
Bot chord 2x4 SP #2 N
Webs 2x4 SP #2 N
:Stack Chord SC1 2x4 SP #2 N:

Roof overhang supports 2.00 psf soffit load.

Truss spaced at 24.0" OC designed to support 2-0-0 top chord outlookers. Cladding load shall not exceed 0.00 PSF. Top chord must not be cut or notched.

Stacked top chord must NOT be notched or cut in area (NNL). Attach stacked top chord (SC) to dropped top chord in notchable area using 3x4 tie plates 24" o.c. Center plate on stacked/dropped chord interface, plate length perpendicular to chord length. Splice top chord in notchable area using 3x6.

110 mph wind, 15.00 ft mean hgt, ASCE 7-05, CLOSED bldg, Located anywhere in roof, CAT II, EXP C, wind TC DL=5.0 psf, wind BC DL=5.0 psf. Iw=1.00 GCpi(+/-)=0.18

Wind reactions based on MWFRS pressures.

Right end vertical not exposed to wind pressure.

See DWGS A11015050109 & GBLLETIN0109 for more requirements.

Bottom chord checked for 10.00 psf non-concurrent live load.

Deflection meets L/180 live and L/120 total load.

The overall height of this truss excluding overhang is 4-0-4.

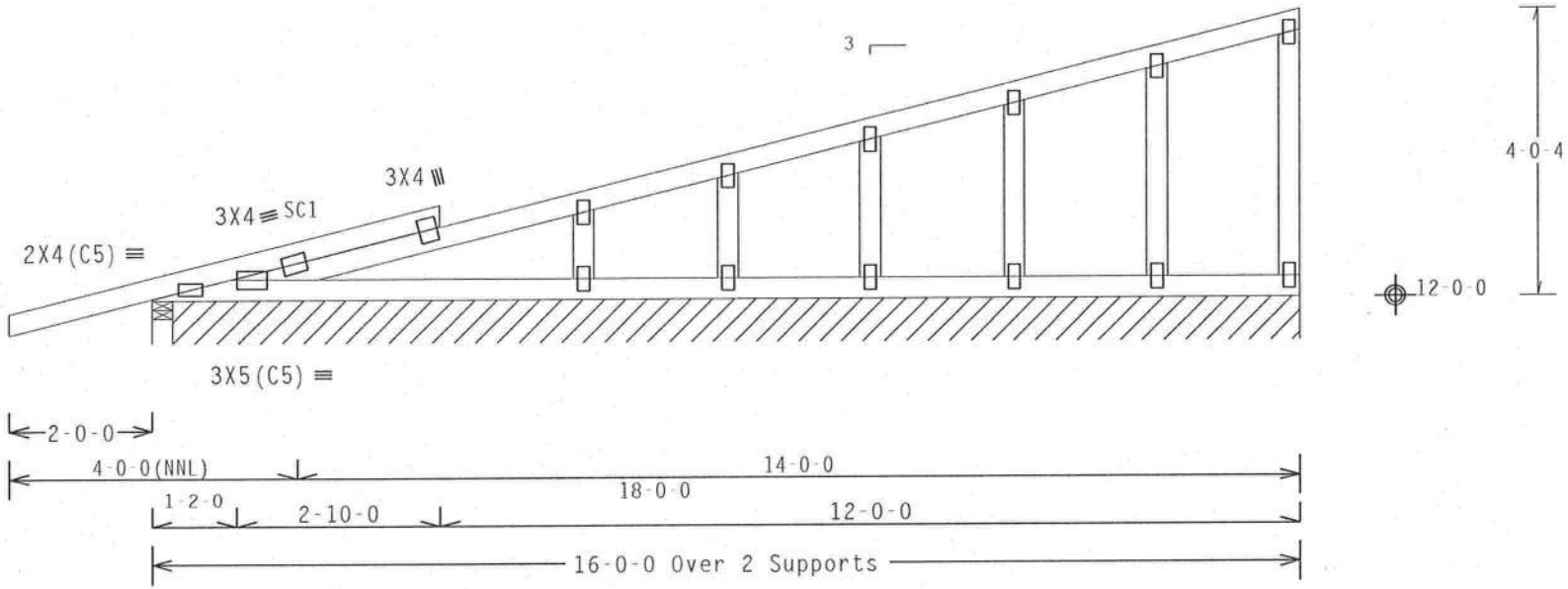

Note: All Plates Are 2X4 Except As Shown.

Design Crit: FBC2007Res/TPI-2002(STD)

PLT TYP. Wave FT/RT=20%(0%)/10(0) 10.01.0 QTY:2 FL/-/5/-/-/R/- Scale =.375"/Ft.

ALPINE
ITW Building Components Group Inc.
Haines City, FL 33844
FL COA #0 278

WARNING READ AND FOLLOW ALL NOTES ON THIS SHEET!
IMPORTANT FURNISH THIS DESIGN TO ALL CONTRACTORS INCLUDING INSTALLERS.

Trusses require extreme care in fabricating, handling, shipping, installing and bracing. Refer to and follow the latest edition of BCSI (Building Component Safety Information, by TPI and WTCA) for safety practices prior to performing these functions. Installers shall provide temporary bracing per BCSI. Unless noted otherwise, top chord shall have properly attached structural sheathing and bottom chord shall have a properly attached rigid ceiling. Locations shown for permanent lateral restraint of webs shall have bracing installed per BCSI sections B3, B7 or B10, as applicable.

ITW Building Components Group Inc. (ITWBCG) shall not be responsible for any deviation from this design, any failure to build the truss in conformance with ANSI/TPI 1, or for handling, shipping, installation & bracing of trusses. Apply plates to each face of truss and position as shown above and on the Joint Details, unless noted otherwise. Refer to drawings 160A-Z for standard plate positions. A seal on this drawing or cover page listing this drawing, indicates acceptance of professional engineering responsibility solely for the design shown. The suitability and use of this design for any structure is the responsibility of the Building Designer per ANSI/TPI 1 Sec.2. For more information see: This job's general notes page; ITW-BCG: www.itwbcg.com; TPI: www.tpinst.org; WTCA: www.sbcindustry.com; ICC: www.iccsafe.org

DOUGLAS FLEMING LICENSE No.66648 STATE OF FLORIDA PROFESSIONAL ENGINEER
Sep 23 '10

TC LL	20.0 PSF	REF R215-- 45873
TC DL	10.0 PSF	DATE 09/23/10
BC DL	10.0 PSF	DRW HCUSR215 10266009
BC LL	0.0 PSF	HC-ENG JB/DF
TOT.LD.	40.0 PSF	SEQN- 277382
DUR.FAC.	1.25	FROM CDM
SPACING	24.0"	JREF- 1U5G215_Z02

Top chord 2x4 SP #2 N
Bot chord 2x4 SP #2 N
Webs 2x4 SP #2 N

Roof overhang supports 2.00 psf soffit load.

Bottom chord checked for 10.00 psf non-concurrent live load.

Deflection meets L/240 live and L/180 total load.

110 mph wind, 15.00 ft mean hgt, ASCE 7-05, CLOSED bldg, Located anywhere in roof, CAT II, EXP C, wind TC DL=5.0 psf, wind BC DL=5.0 psf. Iw=1.00 GCpi(+/-)=0.18

Wind reactions based on MWFRS pressures.

Right end vertical not exposed to wind pressure.

The overall height of this truss excluding overhang is 5-0-14.

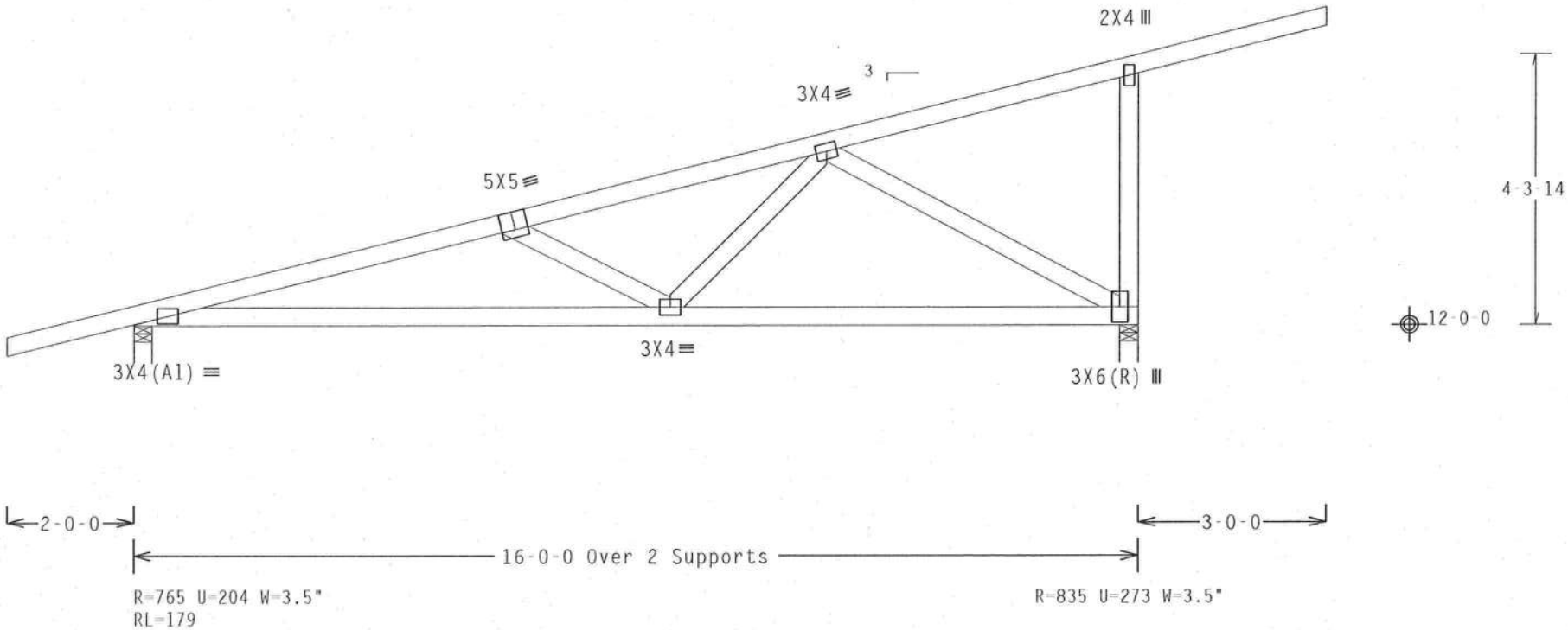

Design Crit: FBC2007Res/TPI-2002(STD)

PLT TYP. Wave FT/RT=20%(0%)/10(0) 10.01.0 QTY:20 FL/-/5/-/-/R/- Scale =.375"/Ft.

ALPINE
ITW Building Components Group Inc.
Haines City, FL 33844
FL COA #0 278

WARNING READ AND FOLLOW ALL NOTES ON THIS SHEET!
IMPORTANT FURNISH THIS DESIGN TO ALL CONTRACTORS INCLUDING INSTALLERS.

Trusses require extreme care in fabricating, handling, shipping, installing and bracing. Refer to and follow the latest edition of BCSI (Building Component Safety Information, by TPI and WTCA) for safety practices prior to performing these functions. Installers shall provide temporary bracing per BCSI. Unless noted otherwise, top chord shall have properly attached structural sheathing and bottom chord shall have a properly attached rigid ceiling. Locations shown for permanent lateral restraint of webs shall have bracing installed per BCSI sections B3, B7 or B10, as applicable.

ITW Building Components Group Inc. (ITWBCG) shall not be responsible for any deviation from this design, any failure to build the truss in conformance with ANSI/TPI 1, or for handling, shipping, installation & bracing of trusses. Apply plates to each face of truss and position as shown above and on the Joint Details, unless noted otherwise. Refer to drawings 160A-Z for standard plate positions. A seal on this drawing or cover page listing this drawing, indicates acceptance of professional engineering responsibility solely for the design shown. The suitability and use of this design for any structure is the responsibility of the Building Designer per ANSI/TPI 1 Sec.2. For more information see: This job's general notes page; ITW-BCG: www.itwbcg.com; TPI: www.tpinst.org; WTCA: www.sbcindustry.com; ICC: www.iccsafe.org

DOUGLAS FLEMING LICENSE No. 66648 STATE OF FLORIDA PROFESSIONAL ENGINEER
p 23 '10

TC LL	20.0 PSF	REF	R215-- 45874
TC DL	10.0 PSF	DATE	09/23/10
BC DL	10.0 PSF	DRW	HCUSR215 10266010
BC LL	0.0 PSF	HC-ENG	JB/DF
TOT.LD.	40.0 PSF	SEQN-	274643
DUR.FAC.	1.25	FROM	CDM
SPACING	24.0"	JREF-	1U5G215_Z02

GABLE STUD REINFORCEMENT DETAIL

ASCE 7-05: 110 MPH WIND SPEED, 15' MEAN HEIGHT, ENCLOSED, I = 1.00, EXPOSURE C, Kzt = 1.00

MAX GABLE VERTICAL LENGTH

2X4 GABLE VERTICAL SPACING	SPECIES	BRACE GRADE	NO BRACES	(1) 1X4 "L" BRACE * GROUP A	(1) 1X4 "L" BRACE * GROUP B	(1) 2X4 "L" BRACE * GROUP A	(1) 2X4 "L" BRACE * GROUP B	(2) 2X4 "L" BRACE ** GROUP A	(2) 2X4 "L" BRACE ** GROUP B	(1) 2X6 "L" BRACE * GROUP A	(1) 2X6 "L" BRACE * GROUP B	(2) 2X6 "L" BRACE ** GROUP A	(2) 2X6 "L" BRACE ** GROUP B
24" O.C.	SPF HF	#1 / #2	3' 10"	6' 8"	6' 10"	7' 11"	8' 1"	9' 5"	9' 8"	12' 5"	12' 9"	14' 0"	14' 0"
		#3	3' 9"	6' 0"	6' 0"	7' 11"	7' 11"	9' 5"	9' 5"	12' 4"	12' 4"	14' 0"	14' 0"
		STUD	3' 9"	6' 0"	6' 0"	7' 11"	7' 11"	9' 5"	9' 5"	12' 3"	12' 3"	14' 0"	14' 0"
		STANDARD	3' 9"	5' 2"	5' 2"	6' 9"	6' 9"	9' 1"	9' 1"	10' 7"	10' 7"	14' 0"	14' 0"
	SP DFL	#1	4' 3"	6' 8"	7' 2"	7' 11"	8' 6"	9' 5"	10' 2"	12' 5"	13' 5"	14' 0"	14' 0"
		#2	4' 2"	6' 8"	7' 2"	7' 11"	8' 6"	9' 5"	10' 2"	12' 5"	13' 5"	14' 0"	14' 0"
		#3	4' 0"	6' 2"	6' 2"	7' 11"	8' 1"	9' 5"	9' 11"	12' 5"	12' 8"	14' 0"	14' 0"
		STUD	4' 0"	6' 1"	6' 1"	7' 11"	8' 0"	9' 5"	9' 11"	12' 5"	12' 6"	14' 0"	14' 0"
		STANDARD	3' 10"	5' 3"	5' 3"	6' 11"	6' 11"	9' 4"	9' 4"	10' 10"	10' 10"	14' 0"	14' 0"
16" O.C.	SPF HF	#1 / #2	4' 5"	7' 8"	7' 10"	9' 1"	9' 4"	10' 10"	11' 1"	14' 0"	14' 0"	14' 0"	14' 0"
		#3	4' 4"	7' 4"	7' 4"	9' 1"	9' 1"	10' 10"	10' 10"	14' 0"	14' 0"	14' 0"	14' 0"
		STUD	4' 4"	7' 4"	7' 4"	9' 1"	9' 1"	10' 10"	10' 10"	14' 0"	14' 0"	14' 0"	14' 0"
		STANDARD	4' 4"	6' 4"	6' 4"	8' 4"	8' 4"	10' 10"	10' 10"	12' 11"	12' 11"	14' 0"	14' 0"
	SP DFL	#1	4' 10"	7' 8"	8' 3"	9' 1"	9' 9"	10' 10"	11' 8"	14' 0"	14' 0"	14' 0"	14' 0"
		#2	4' 9"	7' 8"	8' 3"	9' 1"	9' 9"	10' 10"	11' 8"	14' 0"	14' 0"	14' 0"	14' 0"
		#3	4' 6"	7' 7"	7' 7"	9' 1"	9' 6"	10' 10"	11' 4"	14' 0"	14' 0"	14' 0"	14' 0"
		STUD	4' 6"	7' 6"	7' 6"	9' 1"	9' 6"	10' 10"	11' 4"	14' 0"	14' 0"	14' 0"	14' 0"
		STANDARD	4' 5"	6' 5"	6' 5"	8' 6"	8' 6"	10' 10"	11' 1"	13' 3"	13' 3"	14' 0"	14' 0"
12" O.C.	SPF HF	#1 / #2	4' 11"	8' 5"	8' 8"	10' 0"	10' 3"	11' 11"	12' 3"	14' 0"	14' 0"	14' 0"	14' 0"
		#3	4' 9"	8' 5"	8' 5"	10' 0"	10' 0"	11' 11"	11' 11"	14' 0"	14' 0"	14' 0"	14' 0"
		STUD	4' 9"	8' 5"	8' 5"	10' 0"	10' 0"	11' 11"	11' 11"	14' 0"	14' 0"	14' 0"	14' 0"
		STANDARD	4' 9"	7' 3"	7' 3"	9' 7"	9' 7"	11' 11"	11' 11"	14' 0"	14' 0"	14' 0"	14' 0"
	SP DFL	#1	5' 4"	8' 5"	9' 1"	10' 0"	10' 9"	11' 11"	12' 10"	14' 0"	14' 0"	14' 0"	14' 0"
		#2	5' 3"	8' 5"	9' 1"	10' 0"	10' 9"	11' 11"	12' 10"	14' 0"	14' 0"	14' 0"	14' 0"
		#3	5' 0"	8' 5"	8' 5"	10' 0"	10' 6"	11' 11"	12' 6"	14' 0"	14' 0"	14' 0"	14' 0"
		STUD	5' 0"	8' 5"	8' 7"	10' 0"	10' 6"	11' 11"	12' 6"	14' 0"	14' 0"	14' 0"	14' 0"
		STANDARD	4' 11"	7' 5"	7' 5"	9' 10"	9' 10"	11' 11"	12' 3"	14' 0"	14' 0"	14' 0"	14' 0"

BRACING GROUP SPECIES AND GRADES:

GROUP A:

SPRUCE-PINE-FIR		HEM-FIR	
#1 / #2	STANDARD	#2	STUD
#3	STUD	#3	STANDARD

DOUGLAS FIR-LARCH	SOUTHERN PINE
#3	#3
STUD	STUD
STANDARD	STANDARD

GROUP B:

HEM-FIR
#1 & BTR
#1

SOUTHERN PINE	DOUGLAS FIR-LARCH
#1	#1
#2	#2

GABLE TRUSS DETAIL NOTES:

LIVE LOAD DEFLECTION CRITERIA IS L/240.

PROVIDE UPLIFT CONNECTIONS FOR 80 PLF OVER CONTINUOUS BEARING (5 PSF TC DEAD LOAD).

GABLE END SUPPORTS LOAD FROM 4' 0" OUTLOOKERS WITH 2' 0" OVERHANG, OR 12" PLYWOOD OVERHANG.

ATTACH EACH "L" BRACE WITH 10d NAILS. (0.128"x3" min)

* FOR (1) "L" BRACE: SPACE NAILS AT 2" O.C. IN 18" END ZONES AND 4" O.C. BETWEEN ZONES.

** FOR (2) "L" BRACES: SPACE NAILS AT 3" O.C. IN 18" END ZONES AND 6" O.C. BETWEEN ZONES.

"L" BRACING MUST BE A MINIMUM OF 80% OF WEB MEMBER LENGTH.

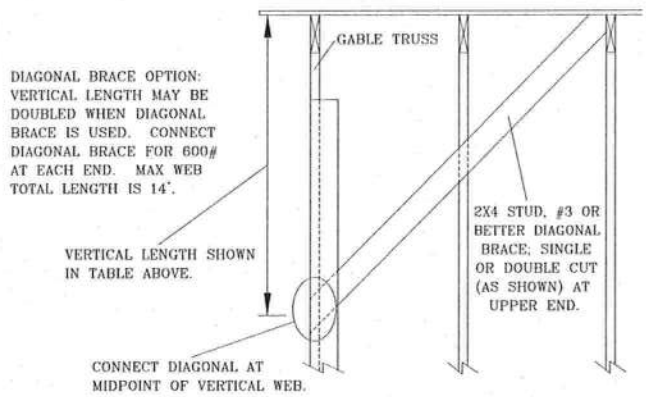

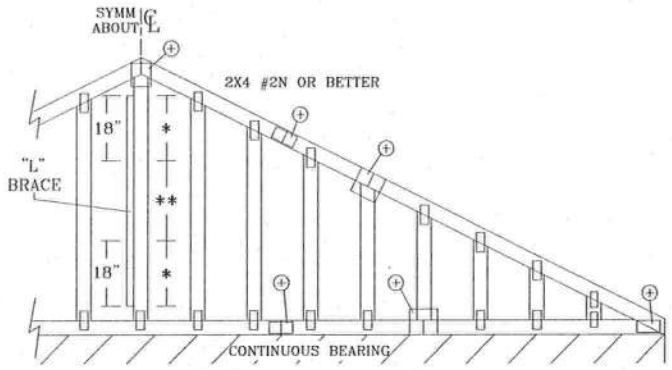

REFER TO CHART ABOVE FOR MAX GABLE VERTICAL LENGTH.

GABLE VERTICAL PLATE SIZES

VERTICAL LENGTH	NO SPLICE
LESS THAN 4' 0"	1X4 OR 2X3
GREATER THAN 4' 0", BUT LESS THAN 11' 6"	2.5X4
GREATER THAN 11' 6"	3X4

+ REFER TO COMMON TRUSS DESIGN FOR PEAK, SPLICE, AND HEEL PLATES.

ITW Building Components Group Inc.

Earth City, MO 63045

WARNING READ AND FOLLOW ALL NOTES ON THIS SHEET!
Trusses require extreme care in fabricating, handling, shipping, installing and bracing. Refer to and follow BCSI (Building Component Safety Information, by TPI and WTCA) for safety practices prior to performing these functions. Installers shall provide temporary bracing per BCSI. Unless noted otherwise, top chord shall have properly attached structural panels and bottom chord shall have a properly attached rigid ceiling. Locations shown for permanent lateral restraint of webs shall have bracing installed per BCSI sections B3 & B7. See this job's general notes page for more information.

IMPORTANT FURNISH COPY OF THIS DESIGN TO INSTALLATION CONTRACTOR.
ITW Building Components Group Inc. (ITWBCG) shall not be responsible for any deviation from this design, any failure to build the truss in conformance with TPI, or fabricating, handling, shipping, installing & bracing of trusses. ITWBCG connector plates are made of 20/18/16GA (W,H/S/K) ASTM A653 grade 37/40/60 (K/W/H,S) galv. steel. Apply plates to each face of truss, positioned as shown above and on Joint Details. A seal on this drawing or cover page indicates acceptance and professional engineering responsibility solely for the truss component design shown. The suitability and use of this component for any building is the responsibility of the Building Designer per ANST/TPI 1 Sec. 2.
ITW-BCG: www.itwbcg.com; TPI: www.tpinst.com; WTCA: www.sbcindustry.com; ICC: www.iccsafe.org

DOUGLAS FLEMING LICENSE No. 66648 STATE OF FLORIDA PROFESSIONAL ENGINEER
Sep 23 '10

MAX. TOT. LD. 60 PSF

MAX. SPACING 24.0"

REF	ASCE7-05-GAB11015
DATE	1/1/09
DRWG	A11015050109

GABLE DETAIL
FOR LET-IN VERTICALS

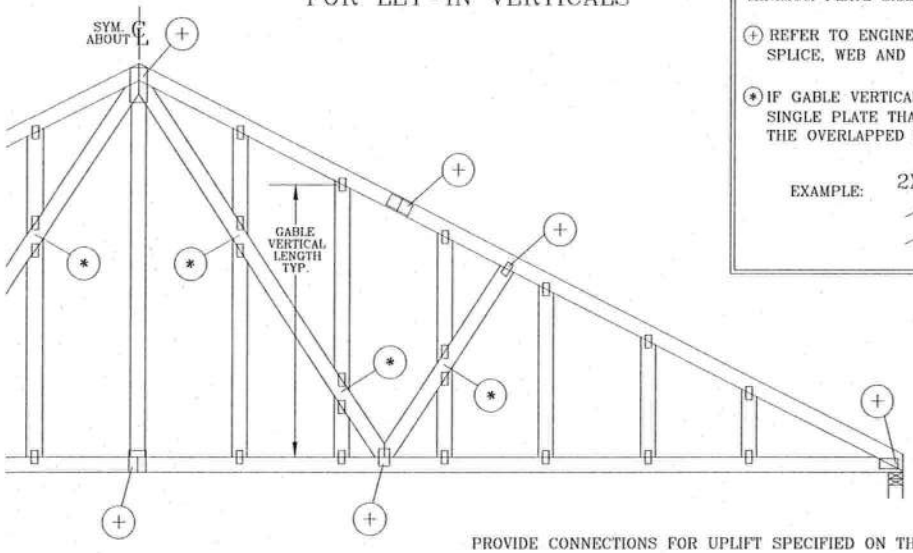

GABLE TRUSS PLATE SIZES

REFER TO APPROPRIATE ITW GABLE DETAIL FOR MINIMUM PLATE SIZES FOR VERTICAL STUDS.

(+) REFER TO ENGINEERED TRUSS DESIGN FOR PEAK, SPLICE, WEB AND HEEL PLATES.

(*) IF GABLE VERTICAL PLATES OVERLAP, USE A SINGLE PLATE THAT COVERS THE TOTAL AREA OF THE OVERLAPPED PLATES TO SPAN THE WEB.

EXAMPLE:

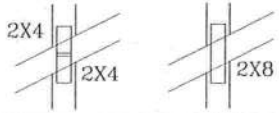

"T" REINFORCEMENT ATTACHMENT DETAIL

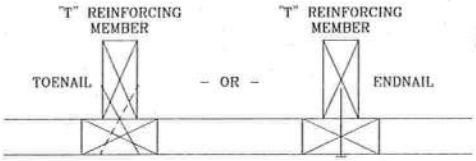

TO CONVERT FROM "L" TO "T" REINFORCING MEMBERS, MULTIPLY "T" INCREASE BY LENGTH (BASED ON APPROPRIATE ITW GABLE DETAIL).

MAXIMUM ALLOWABLE "T" REINFORCED GABLE VERTICAL LENGTH IS 14' FROM TOP TO BOTTOM CHORD.

WEB LENGTH INCREASE W/ "T" BRACE

WIND SPEED AND MRH	"T" REINF. MBR. SIZE	"T" INCREASE
140 MPH	2x4	10 %
15 FT	2x6	50 %
140 MPH	2x4	10 %
30 FT	2x6	50 %
130 MPH	2x4	10 %
15 FT	2x6	50 %
130 MPH	2x4	10 %
30 FT	2x6	50 %
120 MPH	2x4	10 %
15 FT	2x6	50 %
120 MPH	2x4	10 %
30 FT	2x6	40 %
110 MPH	2x4	10 %
15 FT	2x6	40 %
110 MPH	2x4	10 %
30 FT	2x6	50 %
100 MPH	2x4	20 %
15 FT	2x6	30 %
100 MPH	2x4	10 %
30 FT	2x6	40 %
90 MPH	2x4	20 %
15 FT	2x6	20 %
90 MPH	2x4	20 %
30 FT	2x6	30 %

EXAMPLE:
ASCE WIND SPEED = 100 MPH
MEAN ROOF HEIGHT = 30 FT, Kzt = 1.00
GABLE VERTICAL = 24" O.C. SP #3
"T" REINFORCING MEMBER SIZE = 2X4
"T" BRACE INCREASE (FROM ABOVE) = 10% = 1.10
(1) 2X4 "L" BRACE LENGTH = 6' 7"
MAXIMUM "T" REINFORCED GABLE VERTICAL LENGTH
1.10 x 6' 7" = 7' 3"

PROVIDE CONNECTIONS FOR UPLIFT SPECIFIED ON THE ENGINEERED TRUSS DESIGN.

ATTACH EACH "T" REINFORCING MEMBER WITH
END DRIVEN NAILS:
10d COMMON (0.148"X 3.",MIN) NAILS AT 4" O.C. PLUS
(4) NAILS IN TOP AND BOTTOM CHORD.

TOENAILED NAILS:
10d COMMON (0.148"x3",MIN) TOENAILS AT 4" O.C. PLUS
(4) TOENAILS IN TOP AND BOTTOM CHORD.

THIS DETAIL TO BE USED WITH THE APPROPRIATE ITW GABLE DETAIL FOR ASCE WIND LOAD.
ASCE 7-98 GABLE DETAIL DRAWINGS
A13015980109, A12015980109, A11015980109, A10015980109,
A13030980109, A12030980109, A11030980109, A10030980109
ASCE 7-02 GABLE DETAIL DRAWINGS
A13015020109, A12015020109, A11015020109, A10015020109, A14015020109,
A13030020109, A12030020109, A11030020109, A10030020109, A14030020109
ASCE 7-05 GABLE DETAIL DRAWINGS
A13015050109, A12015050109, A11015050109, A10015050109, A14015050109,
A13030050109, A12030050109, A11030050109, A10030050109, A14030050109

SEE APPROPRIATE ITW GABLE DETAIL FOR MAXIMUM UNREINFORCED GABLE VERTICAL LENGTH.

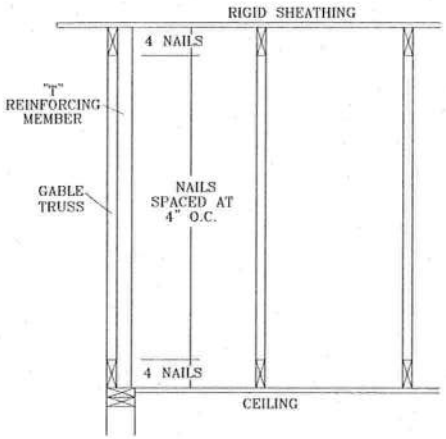

TW
Building Components Group Inc.
Earth City, MO 63045

WARNING READ AND FOLLOW ALL NOTES ON THIS SHEET!
Trusses require extreme care in fabricating, handling, shipping, installing and bracing. Refer to and follow BCSI (Building Component Safety Information, by TPI and WTCA) for safety practices prior to performing these functions. Installers shall provide temporary bracing per BCSI. Unless noted otherwise, top chord shall have properly attached structural panels and bottom chord shall have a properly attached rigid ceiling. Locations shown for permanent lateral restraint of webs shall have bracing installed per BCSI sections B3 & B7. See this job's general notes page for more information.

IMPORTANT FURNISH COPY OF THIS DESIGN TO INSTALLATION CONTRACTOR.
ITW Building Components Group Inc. (ITWBCG) shall not be responsible for any deviation from this design, any failure to build the truss in conformance with TPI, or fabricating, handling, shipping, installing & bracing of trusses. ITWBCG connector plates are made of 20/18/16GA (W,H/S/K) ASTM A653 grade 37/40/60 (K/W/H,S) galv. steel. Apply plates to each face of truss, positioned as shown above and on Joint Details. A seal on this drawing or cover page indicates acceptance and professional engineering responsibility solely for the truss component design shown. The suitability and use of this component for any building is the responsibility of the Building Designer per ANST/TPI 1 Sec. 2.
ITW-BCG: www.itwbcg.com; TPI: www.tpinst.com; WTCA: www.sbcindustry.com; ICC: www.icesafe.org

DOUGLAS FLEMING LICENSE No. 66648 STATE OF FLORIDA PROFESSIONAL ENGINEER
Sep 23 '10

MAX TOT. LD. 60 PSF
DUR. FAC. ANY
MAX SPACING 24.0"

REF	LET-IN VERT
DATE	1/1/09
DRWG	GBLLETIN0109

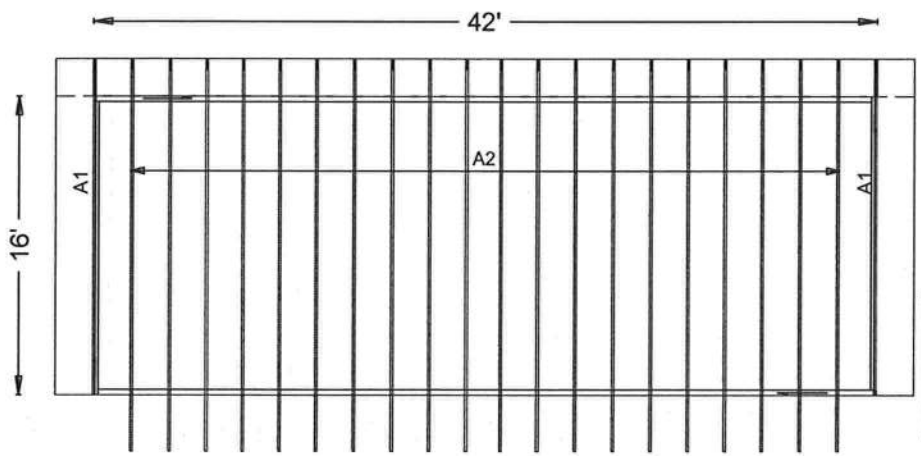

W.B. Howland Truss Co.
P.O. Box 700
Live Oak, FL 32064
(386) 362-1235
(386) 362-7124 (fax)

ROOF PITCH: 3/12
CLG PITCH: FLAT
LOADING: 40
WIND LOAD: 110
EXT WALLS: 2X4X12
DATE: 8/20/2010

Roof Plane Sheathing Area = 853 sq. ft
Gable Sheathing Area = 65 sq. ft
Total Sheathing Area = 918 sq. ft
Fascia Material = 83 linear ft
Valley Flashing Material = 0 linear ft

COLUMBIA COUNTY BUILDING DEPT.
Received for
FILE COPY
Code Compliance
PLANS EXAMINER

Job Name: DUCKETT ADDITION
Customer: ERIN JOHNSON CONSTRUCTION
Designer: Cynthia Gude-Newsome

JOB NO:
6957

PAGE NO:
1 OF 1

Schafer Engineering, LLC

14705 Main St. Alachua FL 32615

COLUMBIA COUNTY BUILDING DEPARTMENT
Received for
FILE COPY
Code Compliance
PLANS EXAMINER

Prepared for:

THE DUCKETT ADDITION
607 SW HEFLIN AVE.
FORT WHITE, FLORIDA

By:

Schafer Engineering, LLC

386-462-1340 / 352-375-6329

NO COPIES ARE TO BE PERMITTED

SCHAFER ENGINEERING, LLC

7104 NW 42ND LANE \ GAINESVILLE FL. 32606
PHONE: 386-462-1340 \ 352-375-6329

Trusses: Pre-engineered, pre-fabracated with the manufacturers required bracing system installed.

Roof Sheathing: Type: OSB Size: 7/16 Fastener type nails: 8d / .113 Ring Shank

Interior zone spacing: Interior: 6" Periphery: 3

Edge and end zone spacing: Interior: 6" Periphery: 3

Double Top Plate: Type: Spruce Grade: #1 #2 Size: 2 x 4 Nail Spacing: 7 in

Stud Type: Spruce Grade: #1 #2 Size: 2 x 4

Interior stud spacing: 16" End stud spacing: 16"

Shear Wall Siding: Type: OSB Thickness: 7/16

19 ft Trans: Fastener 8d/131 Spacing: Int: 8 Edge: 3

26 ft Trans: Fastener 8d/131 Spacing: Int: 8 Edge: 3

Allowable Unit Shear on Shear Walls: 418 pounds per linear foot

Unit Shear Transferred from Diaphragm: Trans: 304 Long: 83

Wall Tension Transferred by: Siding Nails: 8d/131 @ 3 O.C. Edges

Foundation Anchor Bolts: Concrete Strength: 3000 psi Size: 1/2"

Washer: 2" Embedment: 7" Location of first anchor bolt from corner: 8"

Anchor Bolts @ 48" o.c. Model: A307 Loc. from corner: 8"

Type of Foundation: (1) - #5 rebar continuous required in bond beam.

Floor Slab: 4" Cmu size: 8" x 16" Height: 24" Rein.: #5 at 72" o.c.

Monolithic Footing: Depth: 20" Bottom Width: 12 Rein.: 2 #5 rebars

Stemwall Footing: Width: 20 Depth: 10 Rein.: 2 #5 rebar

Interior Footings 16" Wide X 10" Deep with 2-#5 rebar continuous

Porch Columns: — Column Fasteners: —

Special Comments: Install (2) ply 2X12 syp with 7/16 OSB Flitch for all window & door headers.

Drill & epoxy w/ 7" min. embedment #5 rebar each way tying existing foundation into New footing.

Notes:
1. Balloon frame all gable ends unless accompanied by gable end detail
2. All trusses must bear on exterior walls and porch beams.
3. All walls to be nailed with same nailing pattern as the shear walls.
4. This is a wind load ONLY not a structural analysis.
5. This wind load is not valid without a raised, embossed seal.
6. It is assumed that ideal soil conditions and pad preparations are provided.
7. Fiber mesh or WWM may be used in concrete slab.
8. Trusses must be installed and anchored in accordance to the truss engineering.
9. All headers spanning over 12' must be pre-engineered.
10. The foundatioin and walls are minimum design use, and may be increased.
11. Wind load is for one use only \ FBC-2007 \ No copies permitted

8-2-10

Bruce Schafer, P. E. #48984
7104 NW 42ND LN
GAINESVILLE, FL. 32606

SCHAFER ENGINEERING, LLC

7104 NW 42ND LANE \ GAINESVILLE FL. 32606
PHONE: 386-462-1340 \ 352-375-6329

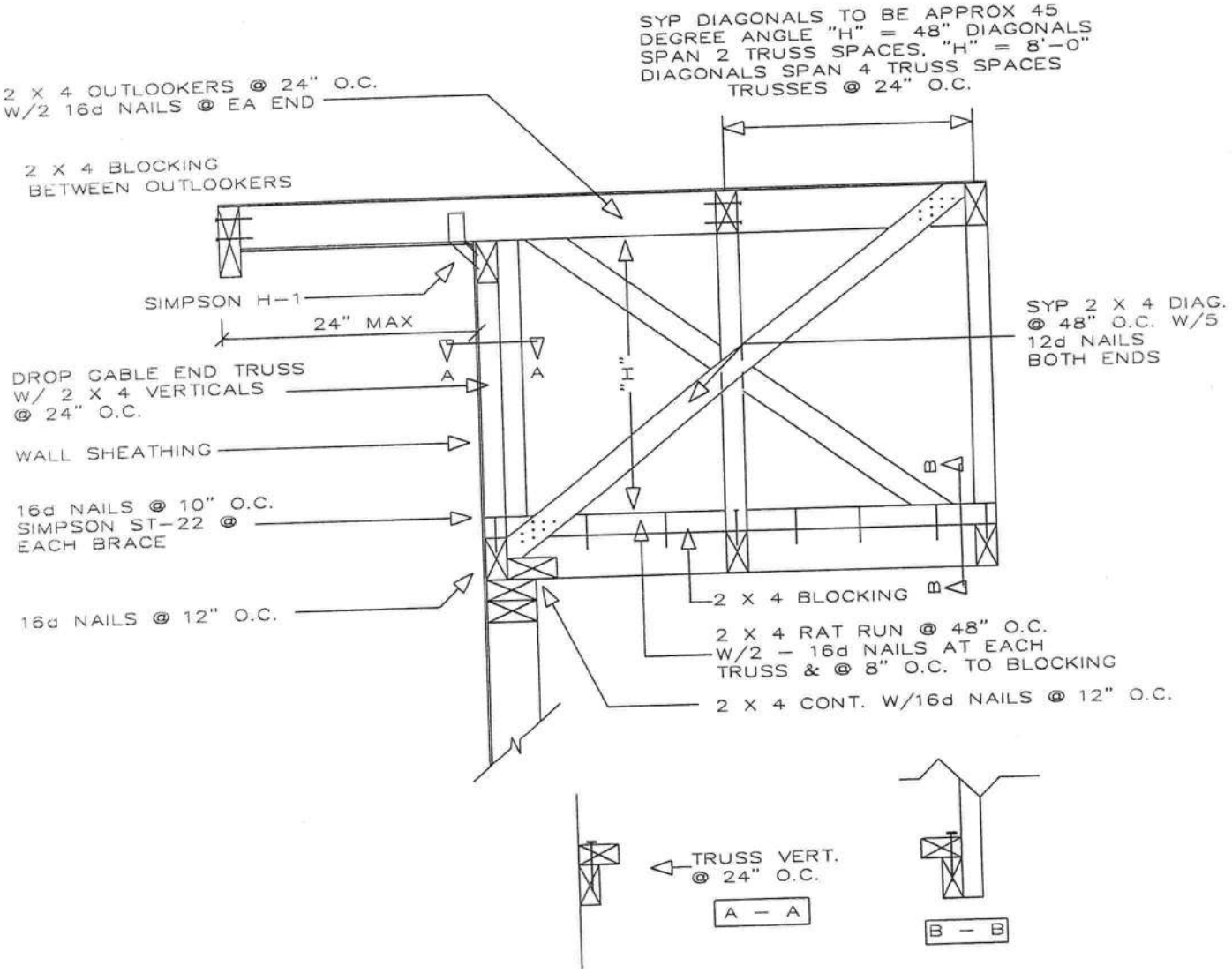

TYPICAL GABLE END BRACING

8-3-10

DETAIL MAY BE USED WITH INTERIOR CATH. CEILING BY INSTALLING A SYP 2 X 4 LEDGER IN PLANE WITH THE INTERIOR CEILING USING 2 - 16d NAILS ON EACH POINT WHERE THE LEDGER CROSSES THE GABLE END TRUSS VERTICALS

Bruce Schafer, P. E. #48984
7104 NW 42ND LN
GAINESVILLE, FL. 32606

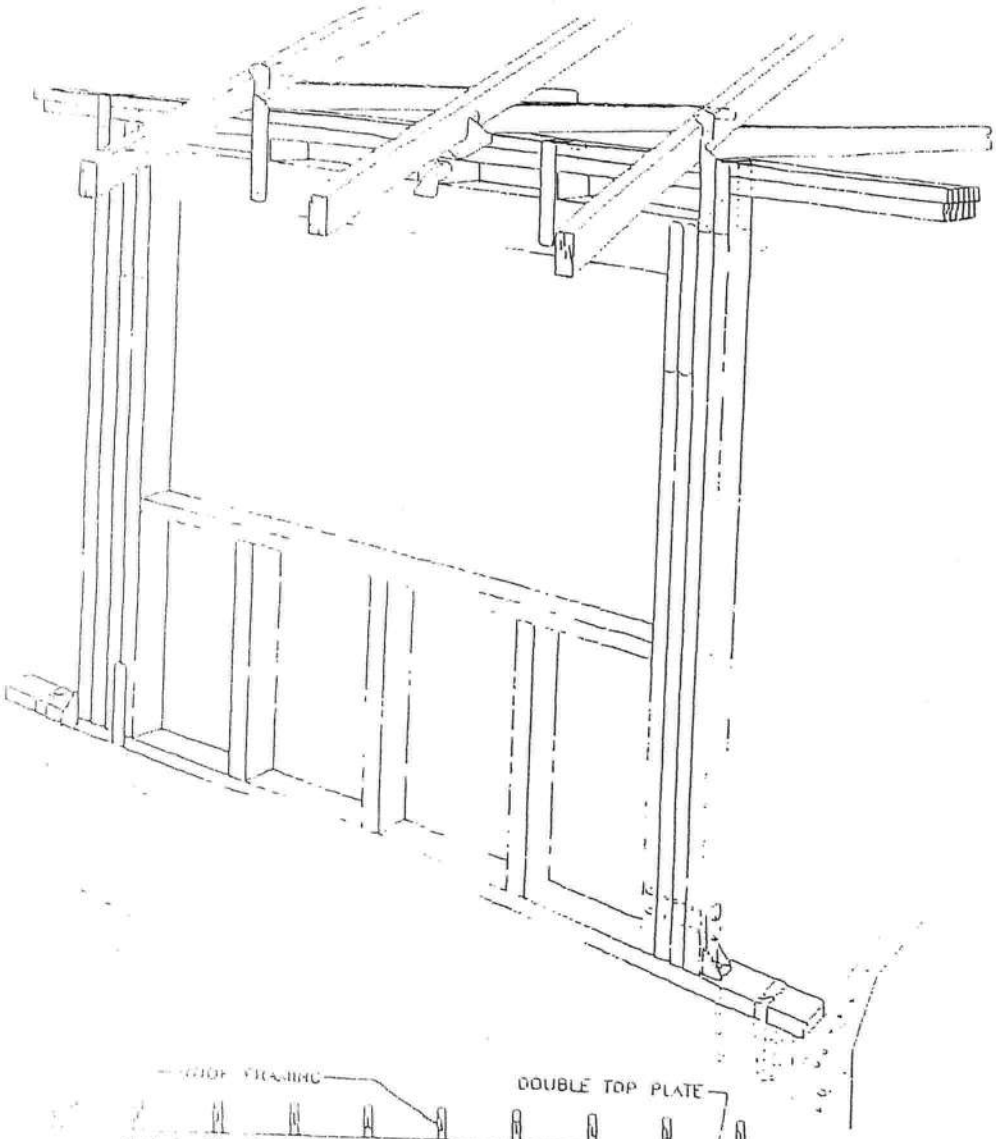

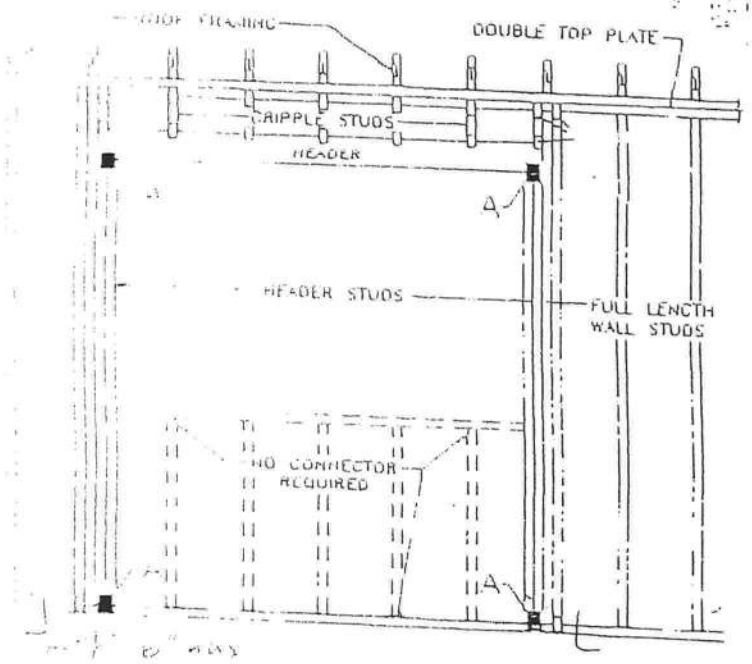

Total each truss uplift on the header divide by 2 for header anchorage

SCHAFER ENGINEERING, LLC

7104 NW 42ND LANE \ GAINESVILLE FL. 32606
PHONE: 386-462-1340 \ 352-375-6329

HEADER STRAPPING				
Uplift Lbs	Top Connector	Rating Lbs	Bottom Connector	Rating Lbs
to 455	LSTA19	635	H3	320
to 910	LSTA12	795	2-H3	640
to 1265	LSTA18	1110	LTT19	1305
to 1750	2-LSTA12	1810	LTT20	1750
to 2530	2-LSTA18	2530	HD2A-2.5	2165
to 2865	3-LSTA18	3255	HD2A-3.5	2865
to 3700	3-LSTA24	3880	HD5A-3	3130

Total the uplift for each truss sitting on the header and divide by 2 to determine the uplift on the header. Use proper bolt anchors sufficient to support required uplift loads.

TRUSSES \ GIRDERS			
Uplift Lbs	Top Connector	Bottom Connector	Rating Lbs
to 535	H2.5A	NA	
to 1015	H10A	NA	
to 1215	TS22	LTT19	1305
to 1750	2-TS22	LTT20	1750
to 2570	2-TS22	HD2A	2775
to 3665	3-TS22	HD5A	4010
to 5420	2-MST37	HTT22	5250
to 9660	2-MST60	HD10A	9540

Two 12d common toenials are required per truss for each bearing point into top plate.
It is the contractors responsibility to provide a continuous load path from truss to foundation.

	TOP CONNECTOR	RATING LBS	BOTTOM CONNECTOR	RATING LBS
BEAM SEATS	LSTA18	1110	LTT19	1305
POSTS	2-LSTA18	2220	ABU44	2300

1. Simpson or equivient hardware may be used. For nailing into spruce members, multiply table values by .86
2. See truss engineering for anchor uplift values.
3. This schedule is not meant to be a replacement to the specified values of any manufactures values.

ASCE 7-05

User Input Data		
Structure Type	Building	
Basic Wind Speed (V)	110	mph
Structural Category	II	
Exposure	B	
Struc Nat Frequency (n1)	1	Hz
Slope of Roof (Theta)	14	Deg
Type of Roof	Gabled	
Eave Height (Eht)	12.00	ft
Ridge Height (RHt)	22.67	ft
Mean Roof Height (Ht)	17.34	ft
Width Perp. to Wind (B)	16.00	ft
Width Parallel to Wind (L)	42.00	ft
Damping Ratio (beta)	0.01	

Red values should be changed only through "Main Menu"

Calculated Parameters	
Type of Structure	
Height/Least Horizontal Dim	1.08
Flexible Structure	No

Calculated Parameters		
Importance Factor	1	
Hurricane Prone Region (V>100 mph)		
Table C6-4 Values		
Alpha =	7.000	
zg =	1200.000	
At =	0.143	
Bt =	0.840	
Am =	0.250	
Bm =	0.450	
Cc =	0.300	
l =	320.00	ft
Epsilon =	0.333	
Zmin =	30.00	ft

Gust Factor Category I: Rigid Structures - Simplified Method			
Gust1	For rigid structures (Nat Freq > 1 Hz) use 0.85	0.85	
Gust Factor Category II: Rigid Structures - Complete Analysis			
Zm	Zmin	30.00	ft
Izm	Cc * (33/z)^0.167	0.3048	
Lzm	l*(zm/33)^Epsilon	309.99	ft
Q	(1/(1+0.63*((B+Ht)/Lzm)^0.63))^0.5	0.9306	
Gust2	0.925*((1+1.7*Izm*3.4*Q)/(1+1.7*3.4*Izm))	0.8841	
Gust Factor Category III: Flexible or Dynamically Sensitive Structures			
Vhref	V*(5280/3600)	161.33	ft/s
Vzm	bm*(zm/33)^Am*Vhref	70.89	ft/s
NF1	NatFreq*Lzm/Vzm	4.37	Hz
Rn	(7.47*NF1)/(1+10.302*NF1)^1.667	0.0552	
Nh	4.6*NatFreq*Ht/Vzm	1.13	
Nb	4.6*NatFreq*B/Vzm	1.04	
Nd	15.4*NatFreq*Depth/Vzm	9.12	
Rh	1/Nh-(1/(2*Nh^2)*(1-Exp(-2*Nh)))	0.5354	
Rb	1/Nb-(1/(2*Nb^2)*(1-Exp(-2*Nb)))	0.5575	
Rd	1/Nd-(1/(2*Nd^2)*(1-Exp(-2*Nd)))	0.1036	
RR	((1/Beta)*Rn*Rh*Rb*(0.53+0.47*Rd))^0.5	0.9763	
gg	+(2*LN(3600*n1))^0.5+0.577/(2*LN(3600*n1))^0.5	4.19	
Gust3	0.925*((1+1.7*Izm*(3.4^2*Q^2+GG^2*RR^2)^0.5)/(1+1.7*3.4*Izm))	1.23	

Gust Factor Summary			
Main Wind-force resisting system:		**Components and Cladding:**	
Gust Factor Category:	I	Gust Factor Category:	I
Gust Factor (G)	0.88	Gust Factor (G)	0.88

ASCE 7-05

6.5.12.2.1 Design Wind Pressure - Buildings of All Heights (Non-flexible)

Elev.	Kz	Kzt	Kd	qz	Pressure (lb/ft^2)	
					Windward Wall*	
ft			1.00	lb/ft^2	+GCpi	-GCpi
22.67	0.70	1.00	1.00	21.70	12.01	18.69
20	0.70	1.00	1.00	21.70	12.01	18.69
17.34	0.70	1.00	1.00	21.70	12.01	18.69
15	0.70	1.00	1.00	21.70	12.01	18.69

Figure 6-3 - External Pressure Coefficients, Cp

Loads on Main Wind-Force Resisting Systems

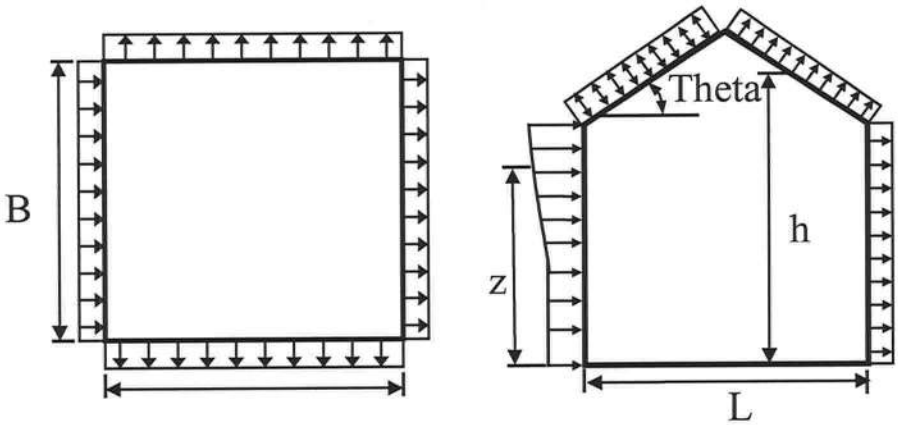

Variable	Formula	Value	Units
Kh	2.01*(Ht/zg)^(2/Alpha)	0.60	
Kht	Topographic factor (Fig 6-2)	1.00	
Qh	.00256*(V)^2*ImpFac*Kh*Kht*Kd	18.56	psf

Wall Pressure Coefficients, Cp	
Surface	**Cp**
Windward Wall (See Figure 6.5.12.2.1 for Pressures)	0.80

Roof Pressure Coefficients, Cp	
Roof Area (sq. ft.)	-
Reduction Factor	1.00

Description	Cp	Pressure (psf) +GCpi	Pressure (psf) -GCpi
Leeward Walls (Wind Dir Parallel to 16 ft wall)	-0.27	-7.75	-1.07
Leeward Walls (Wind Dir Parallel to 42 ft wall)	-0.50	-11.54	-4.86
Side Walls	-0.70	-14.82	-8.14
Roof - Normal to Ridge (Theta>=10)			
Windward - Max Negative	-0.67	-14.34	-7.66
Windward - Max Positive	0.00	0.00	0.00
Leeward Normal to Ridge	-0.49	-11.31	-4.63
Overhang Top	-0.67	-11.00	-11.00
Overhang Bottom	0.80	0.71	0.71
Roof - Parallel to Ridge (All Theta)			
Dist from Windward Edge: 0 ft to 8.67 ft	-0.90	-18.10	-11.42

ASCE 7-05

Dist from Windward Edge: 8.67 ft to 17.34 ft	-0.90	-18.10	-11.42
Dist from Windward Edge: 17.34 ft to 34.68 ft	-0.50	-11.54	-4.86
Dist from Windward Edge: > 34.68 ft	-0.30	-8.26	-1.58

* Horizontal distance from windward edge

Figure 6-4 - External Pressure Coefficients, GCpf

Loads on Main Wind-Force Resisting Systems w/ Ht <= 60 ft

Kh =	2.01*(Ht/zg)^(2/Alpha)	=	0.60
Kht =	Topographic factor (Fig 6-2)	=	1.00
Qh =	0.00256*(V)^2*ImpFac*Kh*Kht*Kd	=	18.56

Case A						
Surface	GCpf	+GCpi	-GCpi	qh (psf)	Min P (psf)	Max P (psf)
1	0.48	0.18	-0.18	21.70	6.47	14.28
2	-0.69	0.18	-0.18	21.70	-18.88	-11.07
3	-0.44	0.18	-0.18	21.70	-13.37	-5.56
4	-0.37	0.18	-0.18	21.70	-12.02	-4.21
5	0.00	0.18	-0.18	21.70	-3.91	3.91
6	0.00	0.18	-0.18	21.70	-3.91	3.91
1E	0.72	0.18	-0.18	21.70	11.81	19.62
2E	-1.07	0.18	-0.18	21.70	-27.13	-19.31
3E	-0.63	0.18	-0.18	21.70	-17.49	-9.68
4E	-0.56	0.18	-0.18	21.70	-15.97	-8.16
5E	0.00	0.18	-0.18	21.70	-3.91	3.91
6E	0.00	0.18	-0.18	21.70	-3.91	3.91

* p = qh * (GCpf - GCpi)

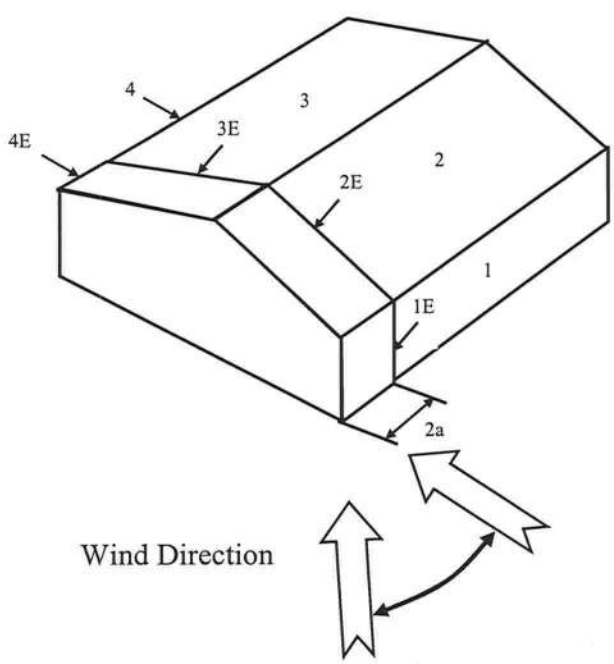

ASCE 7-05

Figure 6-4 - External Pressure Coefficients, GCpf

Loads on Main Wind-Force Resisting Systems w/ Ht <= 60 ft

Kh =	2.01*(Ht/zg)^(2/Alpha)	=	0.60
Kht =	Topographic factor (Fig 6-2)	=	1.00
Qh =	0.00256*(V)^2*ImpFac*Kh*Kht*Kd	=	18.56

Case B						
Surface	GCpf	+GCpi	-GCpi	qh (psf)	Min P (psf)	Max P (psf)
1	-0.45	0.18	-0.18	21.70	-13.67	-5.86
2	-0.69	0.18	-0.18	21.70	-18.88	-11.07
3	-0.37	0.18	-0.18	21.70	-11.94	-4.12
4	-0.45	0.18	-0.18	21.70	-13.67	-5.86
5	0.40	0.18	-0.18	21.70	4.77	12.59
6	-0.29	0.18	-0.18	21.70	-10.20	-2.39
1E	-0.48	0.18	-0.18	21.70	-14.32	-6.51
2E	-1.07	0.18	-0.18	21.70	-27.13	-19.31
3E	-0.53	0.18	-0.18	21.70	-15.41	-7.60
4E	-0.48	0.18	-0.18	21.70	-14.32	-6.51
5E	0.61	0.18	-0.18	21.70	9.33	17.14
6E	-0.43	0.18	-0.18	21.70	-13.24	-5.43

* p = qh * (GCpf - GCpi)

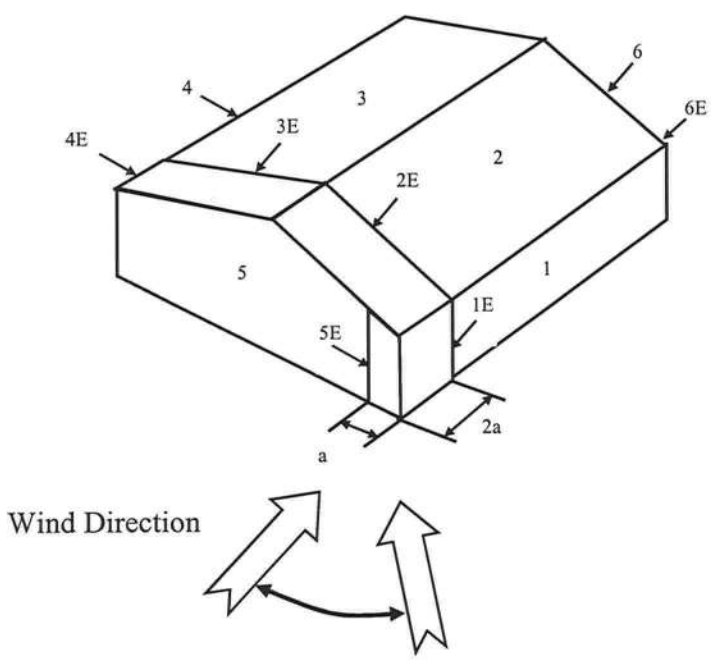

ASCE 7-05

Figure 6-5 - External Pressure Coefficients, GCp

Loads on Components and Cladding for Buildings w/ Ht <= 60 ft

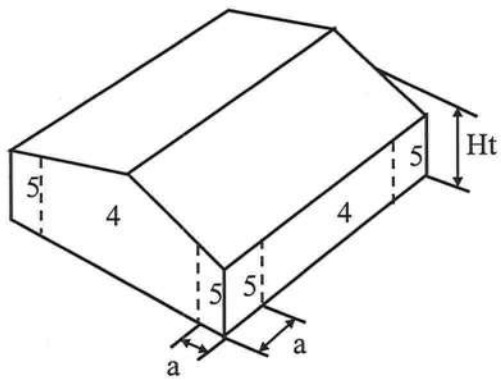

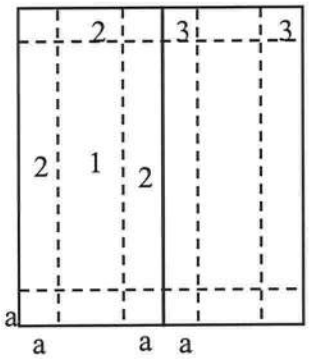

Gabled Roof

10 < Theta <= 45

a = 1.6 ==> 3.00 ft

Component	Width (ft)	Length (ft)	Area (ft^2)	Zone	GCp Max	GCp Min	Wind Press (lb/ft^2) Max	Wind Press (lb/ft^2) Min
	16	7	112.00	5	0.81	-1.03	18.46	-22.44
	0	0	0.00					
	0	0	0.00					
	0	0	0.00					
	0	0	0.00					
	0	0	0.00					
	0	0	0.00					
	0	0	0.00					
	0	0	0.00					
	0	0	0.00					
	0	0	0.00					
	0	0	0.00					
	0	0	0.00					
	0	0	0.00					
	0	0	0.00					
	0	0	0.00					
	0	0	0.00					
	0	0	0.00					
	0	0	0.00					
	0	0	0.00					
	0	0	0.00					
	0	0	0.00					
	0	0	0.00					
	0	0	0.00					
	0	0	0.00					

Note: * Enter Zone 1 through 5, or 1H through 3H for overhangs.

Table 6-7 Internal Pressure Coefficients for Buildings, Gcpi

ASCE 7-05

Condition	Gcpi	
	Max +	Max -
Open Buildings	0.00	0.00
Partially Enclosed Buildings	0.55	-0.55
Enclosed Buildings	0.18	-0.18
Enclosed Buildings	**0.18**	**-0.18**

Table 6-8 External Pressure Coefficients for Arched Roofs, Cp

r (Rise-to-Span Ratio) = 0.3

Condition	Variable	Cp		
		Windward Quarter	Center Half	Leeward Quarter
Roof on Elevated Structure	Cp	0.13	-1	-0.5
	P (+GCpi) - psf	-1.29	-19.74	-11.54
	P (-GCpi) -psf	5.39	-13.06	-4.86
Roof Springing from Ground	Cp	0.42	-1	-0.5
	P (+GCpi) - psf	3.55	-19.74	-11.54
	P (-GCpi) -psf	3.55	-19.74	-11.54

Table 6-9 Force Coefficients for Monoslope Roofs over Open Buildings, Cf

Variable	Description	Value	
L	Roof dimension normal to wind direction	42.00	ft
B	Roof dimension parallel to wind direction	16.00	ft
L/B	Ratio of L to B	2.625	
Theta	Slope of Roof	14	Deg
Cf	Force Coefficient	0.43	
X	Distance to center of pressure from windward edge	0.33	ft

Masonite

SIDE-HINGED FIBERGLASS DOOR UNIT (excluding Barrington)
6'-8" GLAZED DOUBLE DOOR WITH / WITHOUT SIDELITES

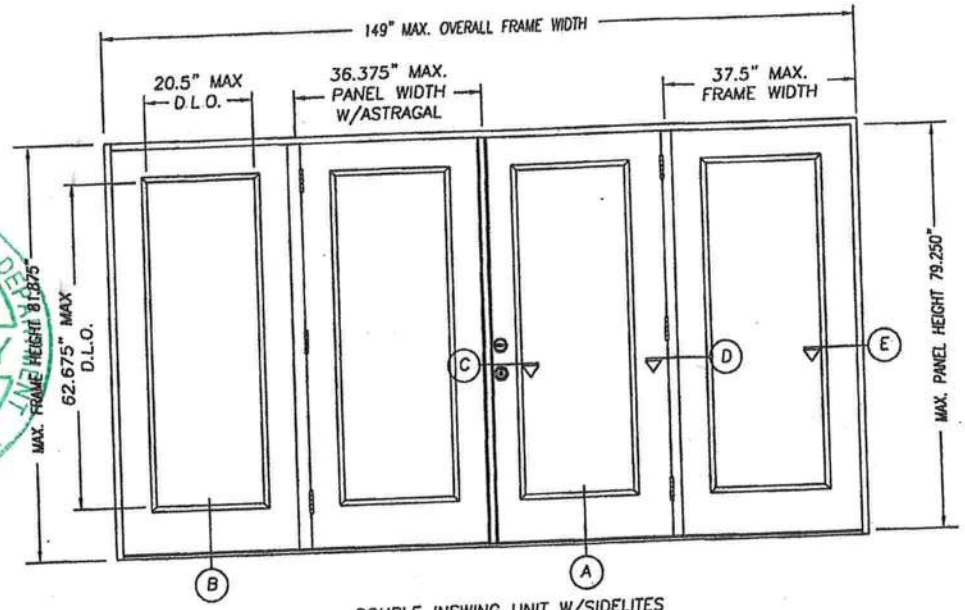

DOUBLE INSWING UNIT W/SIDELITES

COLUMBIA COUNTY BUILDING DEPT. Received for FILE COPY Code Compliance PLANS EXAMINER

GENERAL NOTES

1. EVALUATED FOR USE IN LOCATIONS ADHERING TO THE FLORIDA BUILDING CODE AND WHERE PRESSURE REQUIREMENTS AS DETERMINED BY ASCE 7, MINIMUM DESIGN LOADS FOR BUILDINGS AND OTHER STRUCTURES DOES NOT EXCEED THE DESIGN PRESSURES LISTED.
2. THIS PRODUCT DOES NOT REQUIRE THE USE OF A HURRICANE PROTECTIVE DEVICE (SHUTTERS)
3. PLASTICS TESTING OF LAMINATE GLASS INTERLAYER CONFIRMED PER DADE NOA 03-0827 08
4. POLYURETHANE CORE FLAME SPREAD INDEX OF 50 AND SMOKE DEVELOPED INDEX OF 60 PER ASTM E84
5. PLASTICS TESTING OF FIBERGLASS FACING:

TEST DESCRIPTION	DESIGNATION	RESULT
SELF IGNITION TEMP	ASTM D1929	803 °F > 650 °F
RATE OF BURNING	ASTM D635	0.79 IN/MIN (C-1)
SMOKE DENSITY	ASTM D2843	48.9%
TENSILE STRENGTH*	ASTM D638	-7.3% DIFF

* COMPARATIVE TENSILE STRENGTH AFTER WEATHERING 4500 HOURS XENON ARC METHOD 1

Addendum to HAMI
Certification No.: NI 005930
Reviewed By:
Date Reviewed: 4-26-05

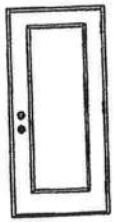

SINGLE DOOR UNIT

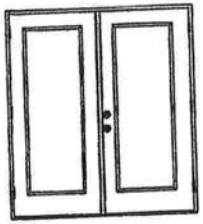

DOUBLE DOOR UNIT

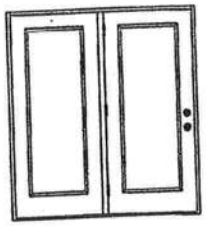

SINGLE DOOR UNIT WITH SIDELITE

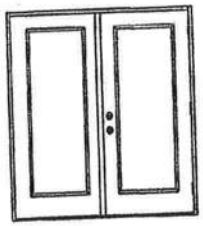

SINGLE DOOR UNIT WITH SIDELITE

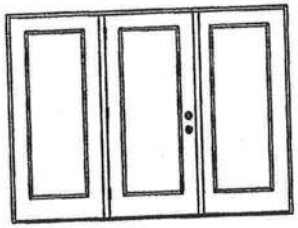

SINGLE DOOR UNIT W/SIDELITES

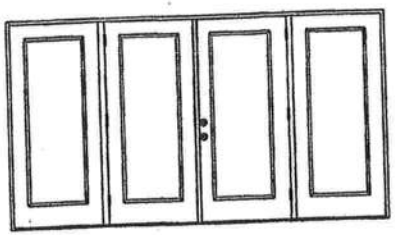

DOUBLE DOOR UNIT W/SIDELITES

CONFIG	MAX WIDTH	DESIGN PRESSURE RATING INSWING	DESIGN PRESSURE RATING OUTSWING	WHERE WATER INFILTRATION PERFORMANCE IS REQUIRED TO BE 15% OF DESIGN PRESSURE INSWING	OUTSWING	OUTSWING*
X	37.5"	+60.0 / -60.0	+60.0 / -60.0	+19.0 / -19.0	+40.0 / -40.0	+60.0 / -60.0
XX	74"	+60.0 / -60.0	+60.0 / -60.0	+19.0 / -19.0	+40.0 / -40.0	+60.0 / -60.0
OX or XO	75"	+60.0 / -60.0	+60.0 / -60.0	+19.0 / -19.0	+40.0 / -40.0	+60.0 / -60.0
OXO	112.5"	+60.0 / -60.0	+60.0 / -60.0	+19.0 / -19.0	+40.0 / -40.0	+60.0 / -60.0
OXXO	149"	+60.0 / -60.0	+60.0 / -60.0	+19.0 / -19.0	+40.0 / -40.0	+60.0 / -60.0

* High Dam Threshold Design

TABLE OF CONTENTS

SHEET #	DESCRIPTION
1	TYPICAL ELEVATIONS & GENERAL NOTES
2	CROSS SECTIONS
3	ANCHORING LOCATIONS & DETAILS
4	ANCHORING LOCATIONS & DETAILS
5	UNIT COMPONENTS

MASONITE INTERNATIONAL CORP.
7300 REAMES RD.
CHARLOTTE, NC 28216

PRODUCT: "EXTERIOR DOOR PRODUCT" DOUBLE 6'8" GLAZED FIBERGLASS DOOR

PART OR ASSEMBLY: TYPICAL ELEVATIONS & GENERAL NOTES

NO.	DATE	REVISIONS	BY
C	4/25/05	ANCHORS & PLASTICS	SWS
B	3/1/05	FLORIDA CHANGES	SWS
A	2/22/05	ADDED GLASS DETAIL	SWS

DATE: 2/11/05
SCALE: N.T.S.
DWG. BY: SWS
CHK. BY:
DRAWING NO.: DWG-MA-FL0122-05
SHEET 1 OF 5

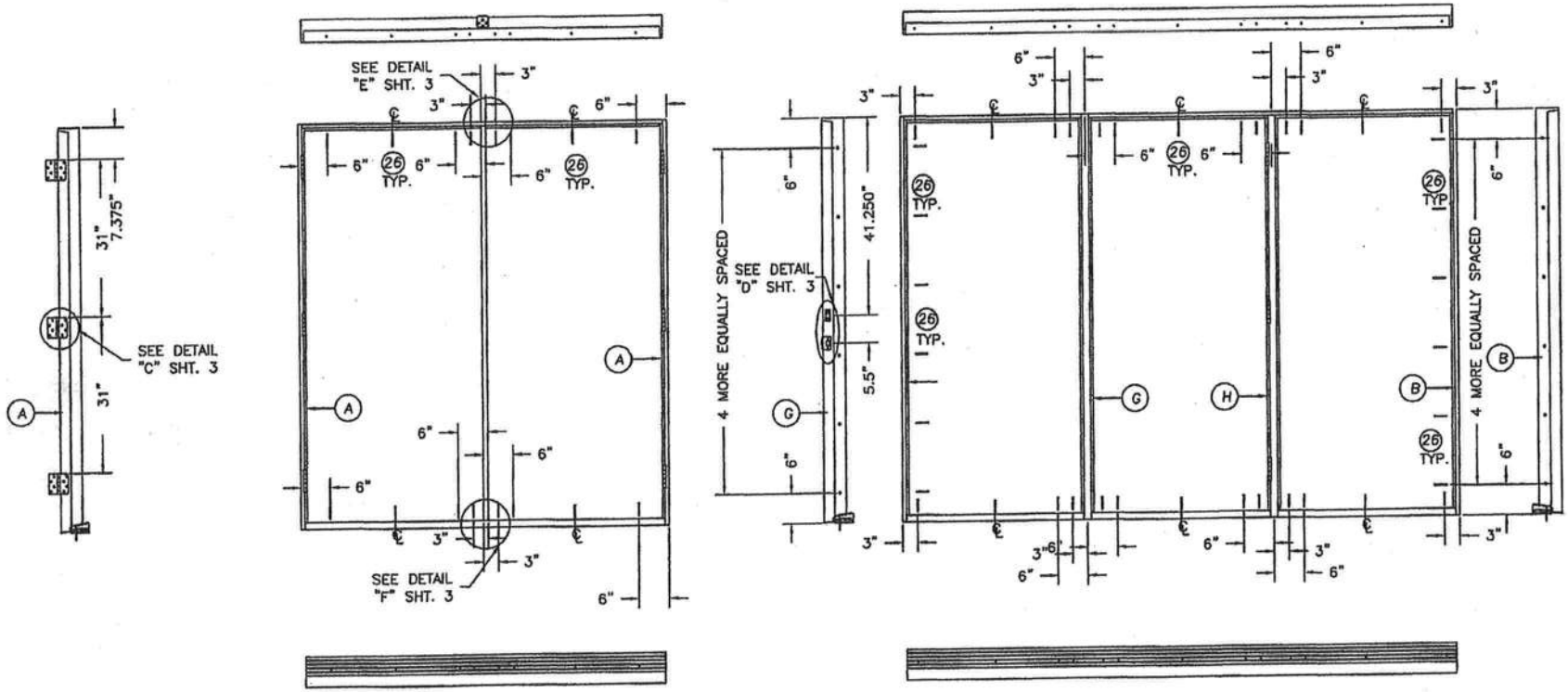

ATTACHMENT DETAIL

1. ANCHOR ANALYSIS FOR LOADING CONDITIONS PREPARED, SIGNED AND SEALED BY HAROLD E. RUPP, PE (FLORIDA #15935) WITH THE LOWEST (LEAST) FASTENER RATING FROM THE DIFFERENT FASTENERS BEING CONSIDERED FOR USE. JAMB, HEAD, AND THRESHOLD FASTENERS ANALYZED FOR THIS UNIT INCLUDE #10 WOOD SCREWS OR 3/16" TAPCONS. A PHYSICAL SHIM MUST BE PLACED IN SHIM SPACE AT EACH ANCHOR LOCATION.
2. THE WOOD SCREW SINGLE SHEAR DESIGN VALUES COME FROM ANSI/AF&PA NDA FOR SOUTHERN PINE LUMBER AND ACHEIVEMENT OF 1-1/2" MINIMUM EMBEDMENT. THE TAPCON MUST ACHIEVE MINIMUM EMBEDMENT OF 1-1/4".
3. WOOD BUCKS BY OTHERS MUST BE ANCHORED PROPERLY TO TRANSFER LOADS TO STRUCTURE.
4. MINIMUM DESIGN VALUE STRENGTH OF ANCHORS 171 LBS.

Addendum to NAMI
Certification No.: NI 005930
Reviewed By:
Date Reviewed: 4-26-05

MASONITE INTERNATIONAL CORP.
7300 REAMES RD.
CHARLOTTE, NC 28216

PRODUCT: "EXTERIOR DOOR PRODUCT 6'-8" FIBERGLASS GLAZED DOUBLE DOOR UNIT"
PART OR ASSEMBLY: ANCHORING LOCATIONS & DETAILS

NO.	DATE	REVISIONS	BY
C	4/25/05	ANCHORS & PLASTICS	SWS
B	3/1/05	FLORIDA CHANGES	SWS
A	2/22/05	ADDED GLASS DETAIL	SWS

DATE: 2/11/05
SCALE: N.T.S.
DWG. BY: SWS
CHK. BY:
DRAWING NO.: DWG-MA-FL0122-05
SHEET 4 OF 5

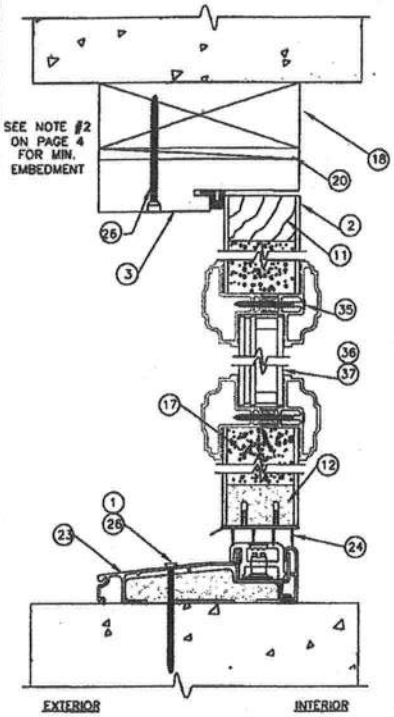

(A) VERTICAL CROSS SECTION INSWING DOOR UNIT

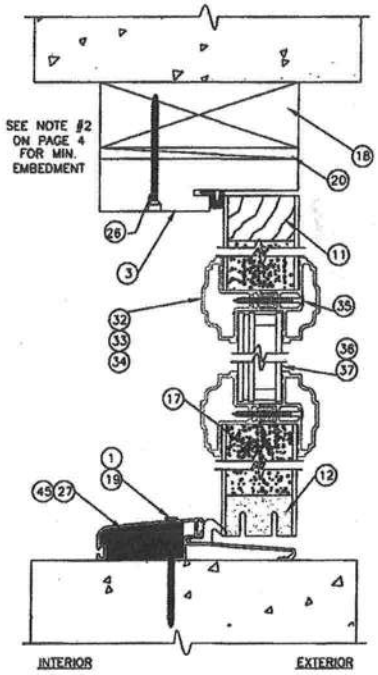

(A) VERTICAL CROSS SECTION OUTSWING DOOR UNIT

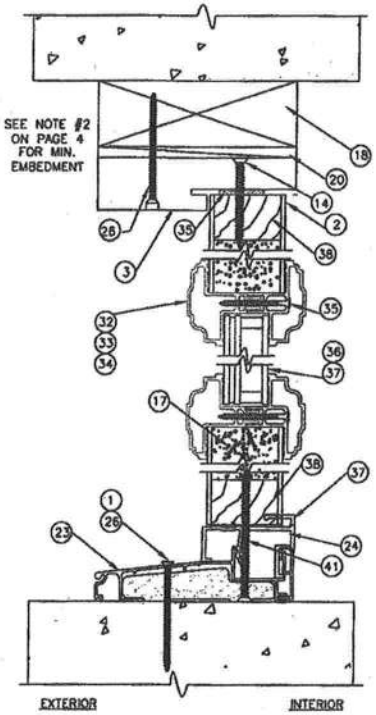

(A) VERTICAL CROSS SECTION INSWING SIDELITE

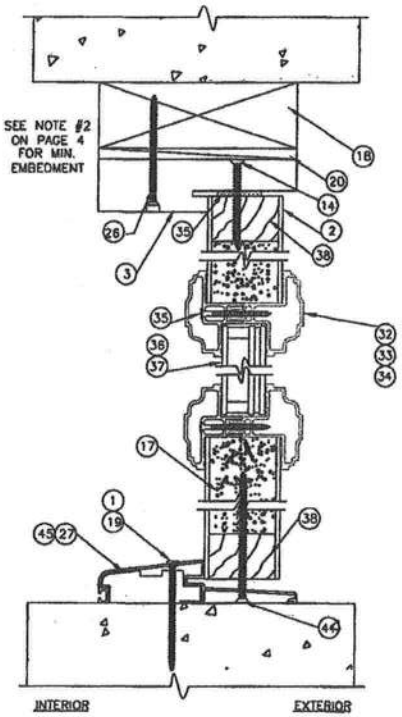

(A) VERTICAL CROSS SECTION OUTSWING SIDELITE

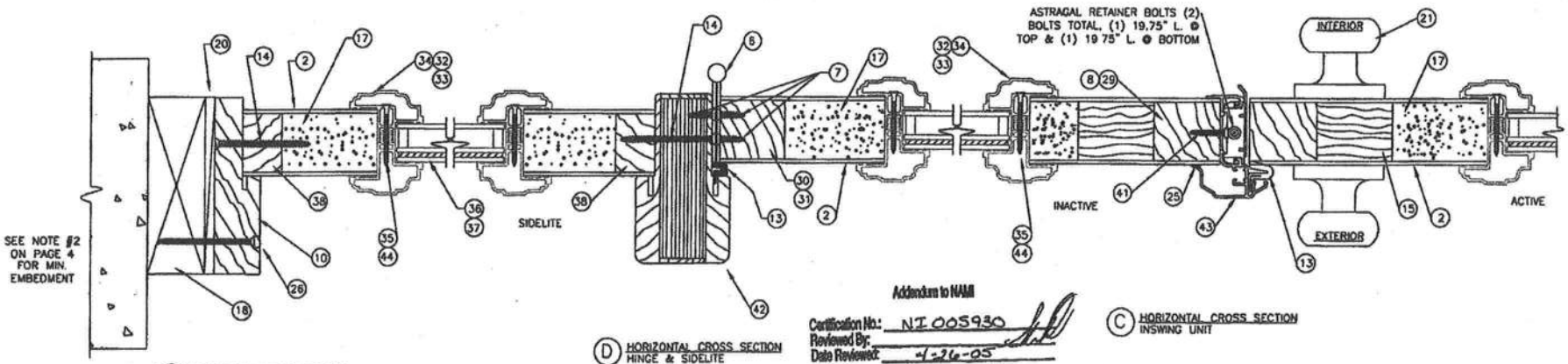

(E) HORIZONTAL CROSS SECTION SIDELITE JAMB TO BUCK

(D) HORIZONTAL CROSS SECTION HINGE & SIDELITE

(C) HORIZONTAL CROSS SECTION INSWING UNIT

Addendum to NAMI
Certification No.: NI 005930
Reviewed By:
Date Reviewed: 4-26-05

MASONITE INTERNATIONAL CORP.
7300 REAMES RD.
CHARLOTTE, NC 28216

PRODUCT: "EXTERIOR DOOR PRODUCT" 6'-8" FIBERGLASS GLAZED DOUBLE DOOR

PART OR ASSEMBLY: CROSS SECTIONS

NO.	DATE	REVISIONS	BY
C	4/25/05	ANCHORS & PLASTICS	SWS
B	3/1/05	FLORIDA CHANGES	SWS
A	2/22/05	ADDED GLASS DETAIL	SWS

DATE: 2/11/05
SCALE: N.T.S.
DWG. BY: SWS
CHK. BY:
DRAWING NO.: DWG-MA-FL0122-05
SHEET 2 OF 5

PRODUCT APPROVAL SPECIFICATION SHEET

Location: 607 HEFLIN AVE **Project Name:** DUCKETT

As required by Florida Statute 553.842 and Florida Administrative Code 9B-72, please provide the information and the product approval number(s) on the building components listed below if they will be utilized on the construction project for which you are **applying for a building permit on or after April 1, 2004**. We recommend you contact your local product supplier should you not know the product approval number for any of the applicable listed products. More information about statewide product approval can be obtained at www.floridabuilding.org

Category/Subcategory	Manufacturer	Product Description	Approval Number(s)
A. EXTERIOR DOORS			
1. Swinging	Masonite	Steel Prehung	4904.3
2. Sliding			
3. Sectional			
4. Roll up			
5. Automatic			
6. Other			
B. WINDOWS			
1. Single hung	Better Bilt	Aluminum SH IG	6663
2. Horizontal Slider			
3. Casement			
4. Double Hung			
5. Fixed			
6. Awning			
7. Pass -through			
8. Projected			
9. Mullion			
10. Wind Breaker			
11 Dual Action			
12. Other			
C. PANEL WALL			
1. Siding		RB&B	
2. Soffits	Variform	Vinyl Soffit	2224
3. EIFS			
4. Storefronts			
5. Curtain walls			
6. Wall louver			
7. Glass block			
8. Membrane			
9. Greenhouse			
10. Other	Ludlow	House Wrap	2841
D. ROOFING PRODUCTS			
1. Asphalt Shingles	Tampo	Shingles 25/30yr Arch	673
2. Underlayments	Woodland	Felt Paper	1814
3. Roofing Fasteners			
4. Non-structural Metal			
Rf 5. Built-Up Roofing			
6. Modified Bitumen			
7. Single Ply Roofing Sys			
8. Roofing Tiles			
9. Roofing Insulation			
10. Waterproofing			
11. Wood shingles /shakes			
12. Roofing Slate			

COLUMBIA COUNTY BUILDING DEPARTMENT
Received for FILE COPY
Code Compliance
PLANS EXAMINER

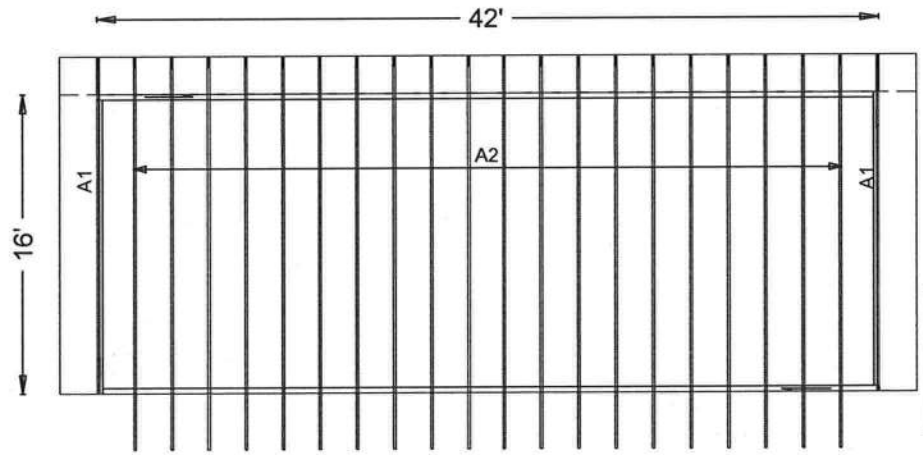

W.B. Howland Truss Co.
P.O. Box 700
Live Oak, FL 32064
(386) 362-1235
(386) 362-7124 (fax)

ROOF PITCH: 3/12
CLG PITCH: FLAT
LOADING: 40
WIND LOAD: 110
EXT WALLS: 2X4X12
DATE: 8/20/2010

Roof Plane Sheathing Area = 853 sq. ft
Gable Sheathing Area = 65 sq. ft
Total Sheathing Area = 918 sq. ft
Fascia Material = 83 linear ft
Valley Flashing Material = 0 linear ft

COLUMBIA COUNTY BUILDING DEPARTMENT
Received for FILE COPY Code Compliance
PLANS EXAMINER

Job Name: DUCKETT ADDITION
Customer: ERIN JOHNSON CONSTRUCTION
Designer: Cynthia Gude-Newsome

JOB NO:
6957

PAGE NO:
1 OF 1

Masonite

SIDE-HINGED FIBERGLASS DOOR UNIT (excluding Barrington)
6'-8" GLAZED DOUBLE DOOR WITH / WITHOUT SIDELITES

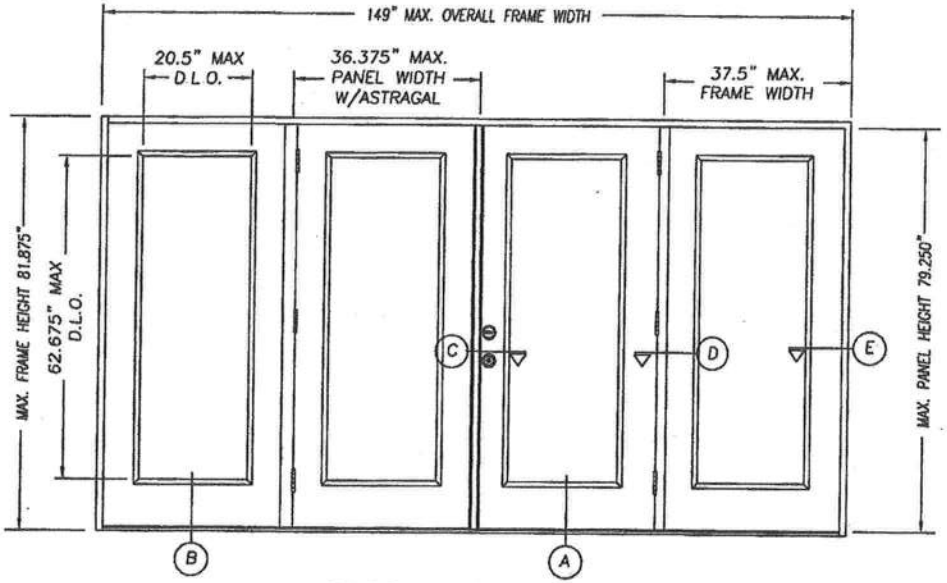

DOUBLE INSWING UNIT W/SIDELITES

COLUMBIA COUNTY BUILDING DEPARTMENT
Received for Code Compliance
FILE COPY
PLANS EXAMINER

GENERAL NOTES

1. EVALUATED FOR USE IN LOCATIONS ADHERING TO THE FLORIDA BUILDING CODE AND WHERE PRESSURE REQUIREMENTS AS DETERMINED BY ASCE 7, MINIMUM DESIGN LOADS FOR BUILDINGS AND OTHER STRUCTURES DOES NOT EXCEED THE DESIGN PRESSURES LISTED.
2. THIS PRODUCT DOES NOT REQUIRE THE USE OF A HURRICANE PROTECTIVE DEVICE (SHUTTERS)
3. PLASTICS TESTING OF LAMINATE GLASS INTERLAYER CONFIRMED PER DADE NOA 03-0827 08
4. POLYURETHANE CORE FLAME SPREAD INDEX OF 50 AND SMOKE DEVELOPED INDEX OF 60 PER ASTM E84
5. PLASTICS TESTING OF FIBERGLASS FACING:

TEST DESCRIPTION	DESIGNATION	RESULT
SELF IGNITION TEMP	ASTM D1929	803 °F > 650 °F
RATE OF BURNING	ASTM D635	0.79 IN/MIN (C-1)
SMOKE DENSITY	ASTM D2843	48.9%
TENSILE STRENGTH*	ASTM D638	-7.3% DIFF

* COMPARATIVE TENSILE STRENGTH AFTER WEATHERING 4500 HOURS XENON ARC METHOD 1

Addendum to NAMI
Certification No.: NI 005930
Reviewed By:
Date Reviewed: 4-26-05

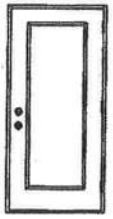

SINGLE DOOR UNIT

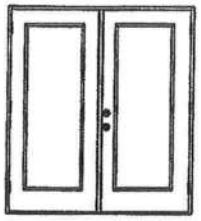

DOUBLE DOOR UNIT

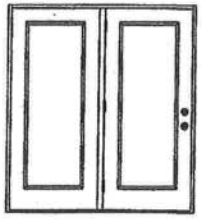

SINGLE DOOR UNIT WITH SIDELITE

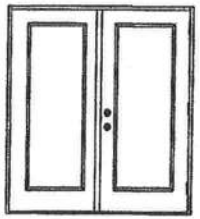

SINGLE DOOR UNIT WITH SIDELITE

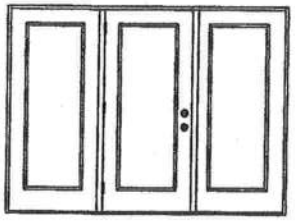

SINGLE DOOR UNIT W/SIDELITES

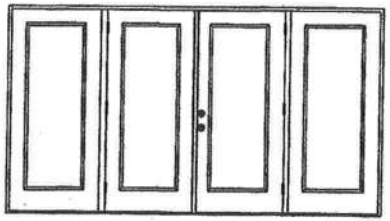

DOUBLE DOOR UNIT W/SIDELITES

TABLE OF CONTENTS

SHEET #	DESCRIPTION
1	TYPICAL ELEVATIONS & GENERAL NOTES
2	CROSS SECTIONS
3	ANCHORING LOCATIONS & DETAILS
4	ANCHORING LOCATIONS & DETAILS
5	UNIT COMPONENTS

CONFIG	MAX WIDTH	DESIGN PRESSURE RATING		WHERE WATER INFILTRATION PERFORMANCE IS REQUIRED TO BE 15% OF DESIGN PRESSURE		
		INSWING	OUTSWING	INSWING	OUTSWING	OUTSWING*
X	37.5"	+60.0 / -60.0	+60.0 / -60.0	+19.0 / -19.0	+40.0 / -40.0	+60.0 / -60.0
XX	74"	+60.0 / -60.0	+60.0 / -60.0	+19.0 / -19.0	+40.0 / -40.0	+60.0 / -60.0
OX or XO	75"	+60.0 / -60.0	+60.0 / -60.0	+19.0 / -19.0	+40.0 / -40.0	+60.0 / -60.0
OXO	112.5"	+60.0 / -60.0	+60.0 / -60.0	+19.0 / -19.0	+40.0 / -40.0	+60.0 / -60.0
OXXO	149"	+60.0 / -60.0	+60.0 / -60.0	+19.0 / -19.0	+40.0 / -40.0	+60.0 / -60.0

* High Dam Threshold Design

MASONITE INTERNATIONAL CORP.
7300 REAMES RD.
CHARLOTTE, NC 28216

PRODUCT: "EXTERIOR DOOR PRODUCT" DOUBLE 6'8" GLAZED FIBERGLASS DOOR

PART OR ASSEMBLY: TYPICAL ELEVATIONS & GENERAL NOTES

NO.	DATE	REVISIONS	BY
C	4/25/05	ANCHORS & PLASTICS	SWS
B	3/1/05	FLORIDA CHANGES	SWS
A	2/22/05	ADDED GLASS DETAIL	SWS

DATE: 2/11/05
SCALE: N.T.S.
DWG. BY: SWS
CHK. BY:
DRAWING NO.: DWG-MA-FL0122-05
SHEET 1 OF 5

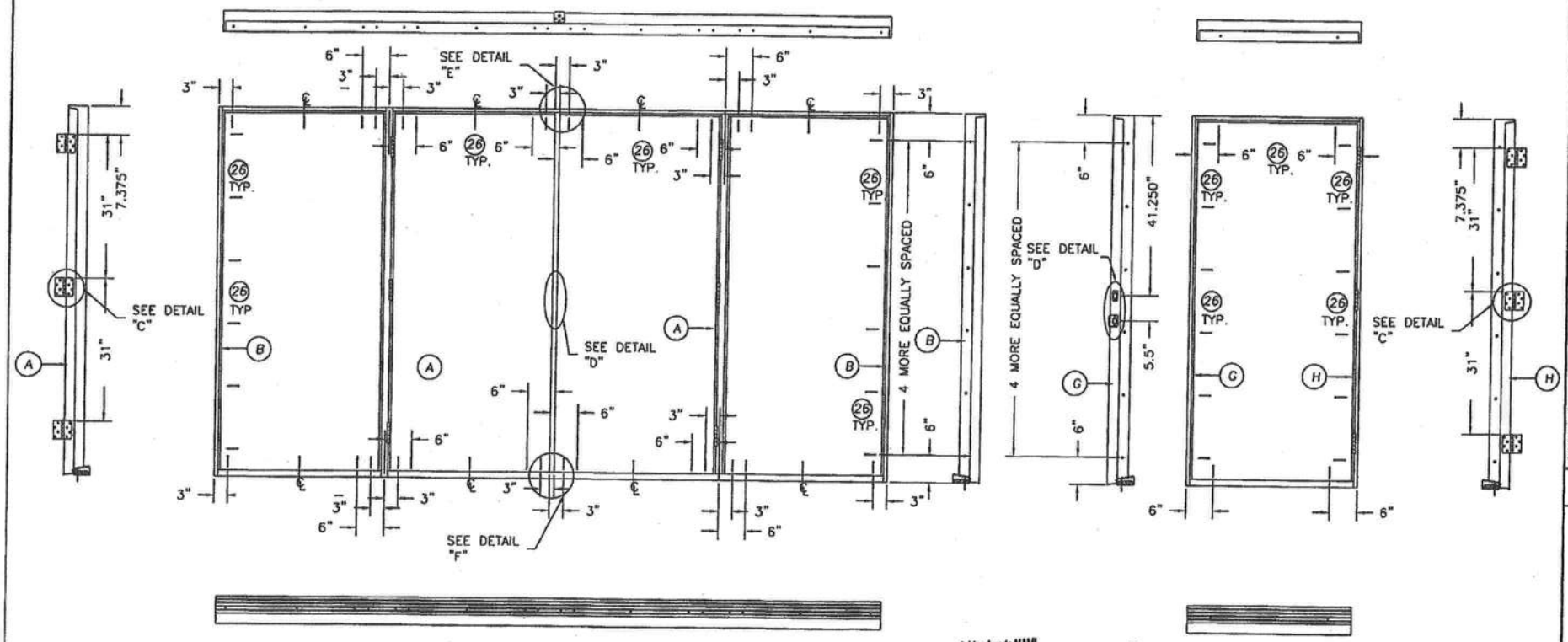

Addendum to NAMI
Certification No.: NI 005930
Reviewed By:
Date Reviewed: 4-26-05

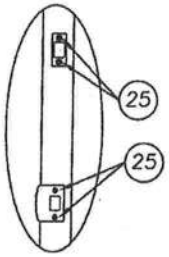

DETAIL "D"

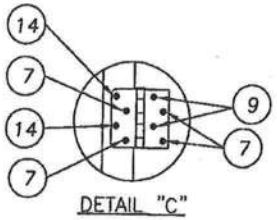

DETAIL "C"

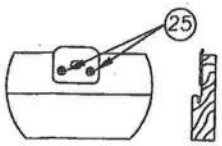

DETAIL "E" ASTRAGAL

ATTACH ASTRAGAL RETAINER BOLT STRIKE PLATE TO FRAME AS SHOWN.

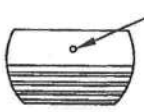

ASTRAGAL RETAINER BOLT HOLE MUST BE DRILLED THROUGH THE THRESHOLD & INTO THE STRUCTURE DEEP ENOUGH FOR A 1.375" THROW

DETAIL "F" ASTRAGAL

MASONITE INTERNATIONAL CORP.
7300 REAMES RD.
CHARLOTTE, NC 28216

PRODUCT: "EXTERIOR DOOR PRODUCT" 6'-8" FIBERGLASS GLAZED DOUBLE DOOR UNIT

PART OR ASSEMBLY: ANCHORING LOCATIONS & DETAILS

NO.	DATE	REVISIONS	BY
C	4/25/05	ANCHORS & PLASTICS	SWS
B	3/1/05	FLORIDA CHANGES	SWS
A	2/22/05	ADDED GLASS DETAIL	SWS

DATE: 2/11/05
SCALE: N.T.S.
DWG. BY: SWS
CHK. BY:
DRAWING NO.: DWG-MA-FL0122-05
SHEET 3 OF 5

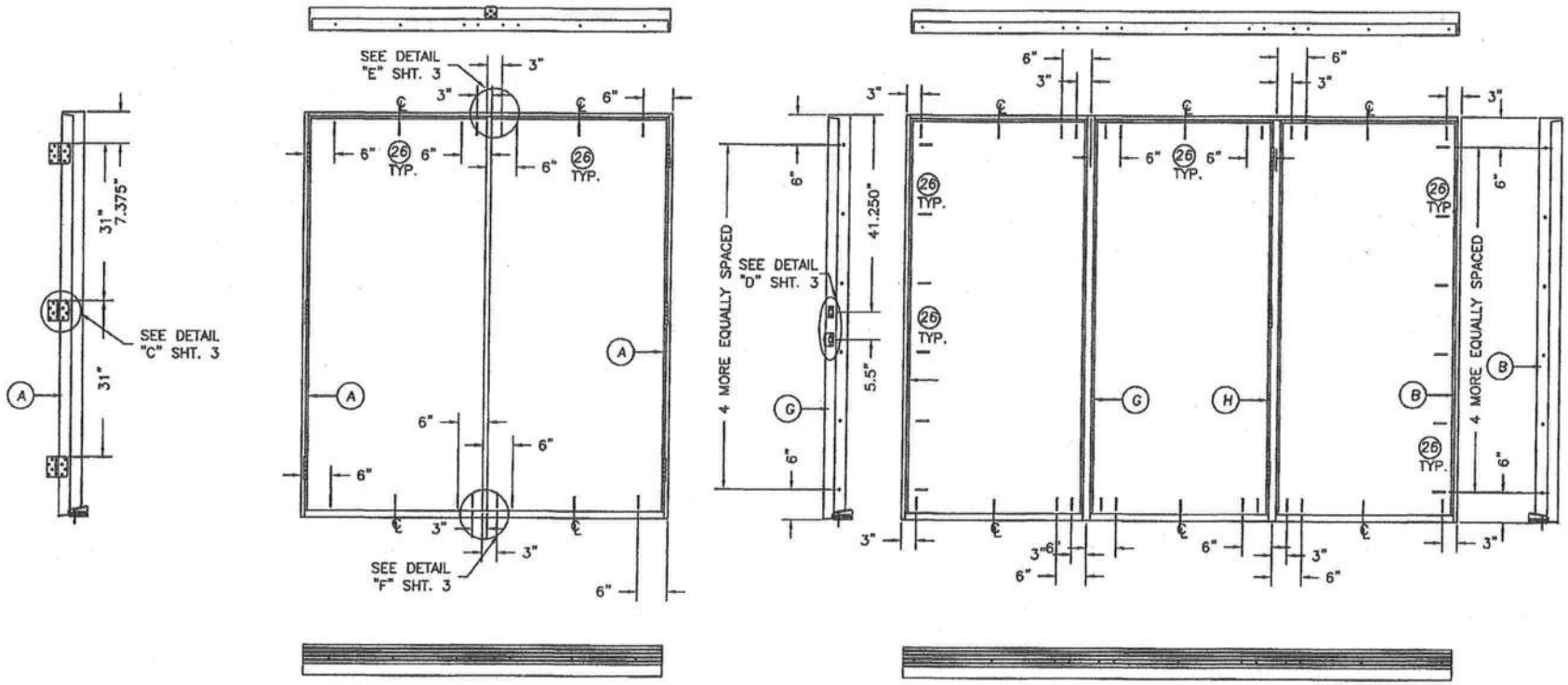

ATTACHMENT DETAIL

1. ANCHOR ANALYSIS FOR LOADING CONDITIONS PREPARED, SIGNED AND SEALED BY HAROLD E. RUPP, PE (FLORIDA #15935) WITH THE LOWEST (LEAST) FASTENER RATING FROM THE DIFFERENT FASTENERS BEING CONSIDERED FOR USE. JAMB, HEAD, AND THRESHOLD FASTENERS ANALYZED FOR THIS UNIT INCLUDE #10 WOOD SCREWS OR 3/16" TAPCONS. A PHYSICAL SHIM MUST BE PLACED IN SHIM SPACE AT EACH ANCHOR LOCATION.

2. THE WOOD SCREW SINGLE SHEAR DESIGN VALUES COME FROM ANSI/AF&PA NDA FOR SOUTHERN PINE LUMBER AND ACHEIVEMENT OF 1-1/2" MINIMUM EMBEDMENT. THE TAPCON MUST ACHIEVE MINIMUM EMBEDMENT OF 1-1/4".

3. WOOD BUCKS BY OTHERS MUST BE ANCHORED PROPERLY TO TRANSFER LOADS TO STRUCTURE.

4. MINIMUM DESIGN VALUE STRENGTH OF ANCHORS 171 LBS.

Addendum to NAMI
Certification No.: NI 005930
Reviewed By:
Date Reviewed: 4-26-05

MASONITE INTERNATIONAL CORP.
7300 REAMES RD.
CHARLOTTE, NC 28216

PRODUCT: "EXTERIOR DOOR PRODUCT" 6'-8" FIBERGLASS GLAZED DOUBLE DOOR UNIT

PART OR ASSEMBLY: ANCHORING LOCATIONS & DETAILS

NO.	DATE	REVISIONS	BY
C	4/25/05	ANCHORS & PLASTICS	SWS
B	3/1/05	FLORIDA CHANGES	SWS
A	2/22/05	ADDED GLASS DETAIL	SWS

DATE: 2/11/05
SCALE: N.T.S.
DWG. BY: SWS
CHK. BY:
DRAWING NO.: DWG-MA-FL0122-05
SHEET 4 OF 5

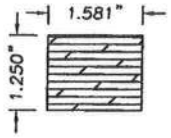

(8) LATCH STILE LAMINATED LUMBER

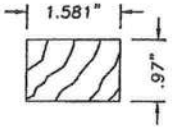

(11) WOOD DOOR TOP RAIL

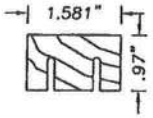

(12) DOOR BOTTOM RAIL WOOD COMPOSITE

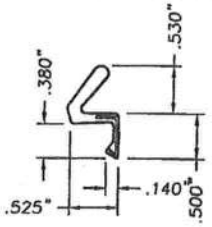

(13) WEATHERSRTIP

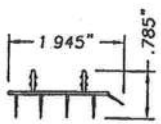

(24) DOOR SWEEP

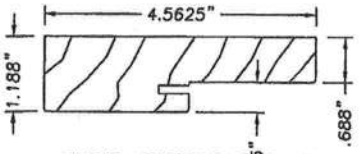

FINGER JOINTED PINE 5" FRAME

(3) (4) (5)

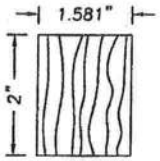

(15) LOCK BLOCK

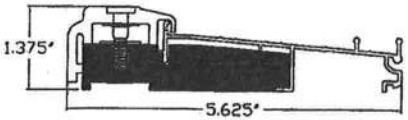

(23) INSWING ADJUSTABLE THRESHOLD ALUMINUM

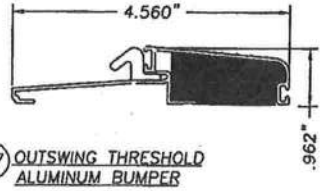

(27) OUTSWING THRESHOLD ALUMINUM BUMPER

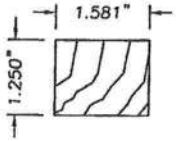

(29) LATCH STILE FINGERJOINTED PINE

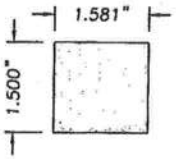

(30) HINGE STILE MDF

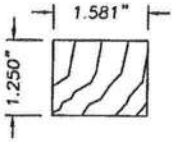

(31) HINGE STILE FINGERJOINTED PINE

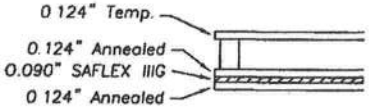

(36) 1" IMPACT GLASS
TEMP PANE TO INT FOR #34;
INT OR EXT FOR #32

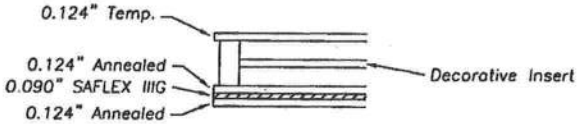

(37) 1-1/4" IMPACT GLASS
TEMP PANE TO INT OR EXT FOR #33

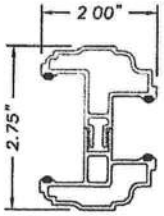

(32) 1" GLASS FRAME (SPECIALTY)

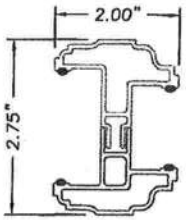

(33) 1-1/4" GLASS FRAME (SPECIALTY)

Addendum to NAMI
Certification No.: NI 005930
Reviewed By: 5-19-05
Date Reviewed:

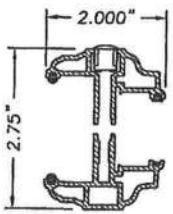

(34) 1" GLASS FRAME (ODL)

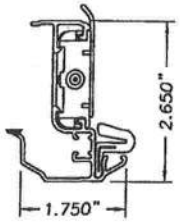

(43) ASTRAGAL

ITEM	DESCRIPTION	MATERIAL
1	3/16" TAPCON	
2	REINFORCED FIBERGLASS DOOR FACING 0.075" THK.	FIBERGLASS
3	HEAD JAMB (1 3/16" x 4 9/16")	WOOD
4	HINGE JAMB (1 3/16" x 4 9/16")	WOOD
5	STRIKE JAMB (1 3/16" X 4 9/16")	WOOD
6	4" x 4" BUTT HINGE	STEEL
7	#10 X 3/4" PFH WOOD SCREW (HINGE TO DOOR)	STEEL
8	DOOR LATCH SIDE STILE (1.581" W x 1.250"H)	LAM. LUMBER
9	#10 X 1 1/4" PFH WOOD SCREW	STEEL
10	BLANK JAMB (1-3/16" x 4-9/16")	WOOD
11	DOOR TOP RAIL (1.581" W x 1.97"H)	WOOD
12	DOOR BOTTOM RAIL (1.581" W x .97")	COMPOSITE
13	COMPRESSION WEATHERSTRIP	FOAM
14	#10 x 2" PFH WOOD SCREW	STEEL
15	LOCK BLOCK (1.581" W x 2.5" H)	WOOD
16	#8 x 1 3/4" PFH WOOD SCREW	STEEL
17	POLYURETHANE FOAM CORE	FOAM
18	2X BUCK BY OTHERS (SOUTHERN PINE OR EQUAL)	WOOD
19	#10 x 3" PFH WOOD SCREW	STEEL
20	SHIM MATERIAL (.25" MAX. THK.)	–
21	KWIKSET 400 SERIES KNOB OR EQUAL	–
22	KWIKSET 970 SERIES DEADBOLT OR EQUAL	–
23	INSWING ADJUSTABLE THRESHOLD (.050" WALL)	ALUMINUM
24	INSWING DOOR BOTTOM SWEEP	PVC
25	#8 x 2-1/2" PFH WOOD SCREW	STEEL
26	#10 x 2 3/4" PFH WOOD SCREW	STEEL
27	OUTSWING THRESHOLD (BUMPER)	ALUMINUM
28	DOW 832 SEALANT OR EQUAL (@ GLASS FRAME)	–
29	DOOR LATCH SIDE STILE	WOOD
30	DOOR HINGE SIDE STILE	MDF
31	DOOR HINGE SIDE STILE	WOOD
32	GLASS FRAME SURROUND (SPECIALTY 1" I.G.)	ALUMINUM
33	GLASS FRAME SURROUND (SPECIALTY 1-1/4" I.G.)	ALUMINUM
34	GLASS FRAME SURROUND (ODL 1" I.G.)	ALUMINUM
35	#10 x 1-3/4" PFH SCREW	STEEL
36	1" LAMINATED IMPACT GLASS	GLASS
37	1-1/4" LAMINATED IMPACT GLASS	GLASS
38	SIDELITE STILE/RAIL	MDF
39	SIDELITE SPACER	VINYL
40	PAK WIK SPACER	–
41	#10 x 3" PFH WOOD SCREW	STEEL
42	MULLION (2-1/2 x 4-3/8 LAMINATED LUMBER)	LAM. LUMBER
43	ASTRAGAL EXTRUDED ALUM. (ULTIMATE BY ENDURA)	ALUMINUM
44	#6 x 1-1/2" PAN HEAD SCREW	STEEL
45	OUTSWING THRESHOLD (HIGH DAM)	ALUMINUM

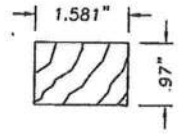

(38) SIDELITE STILE/RAIL

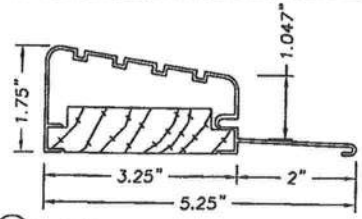

(45) OUTSWING BUMPER FACE ALUMINUM THRESHOLD

MASONITE INTERNATIONAL CORP.
7300 REAMES RD.
CHARLOTTE, NC 28216

PRODUCT: "EXTERIOR DOOR PRODUCT" 6'-8" GLAZED FIBERGLASS DOUBLE DOOR

PART OR ASSEMBLY: UNIT COMPONENTS & BILL OF MATERIALS

NO.	DATE	REVISIONS	BY
C	4/25/05	ANCHORS & PLASTICS	SWS
B	3/1/05	FLORIDA CHANGES	SWS
A	2/22/05	ADDED GLASS DETAIL	SWS

DATE: 2/11/05
SCALE: N.T.S.
DWG. BY: SWS
CHK. BY:
DRAWING NO.: DWG-MA-FL0122-05
SHEET 5 OF 5

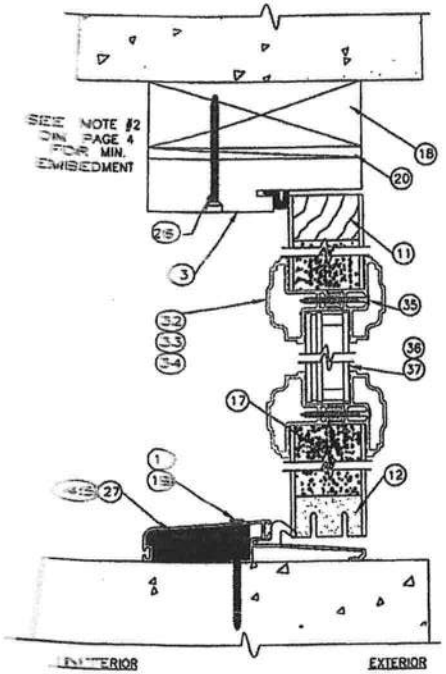

A VERTICAL CROSS SECTION OUTSWING DOOR UNIT

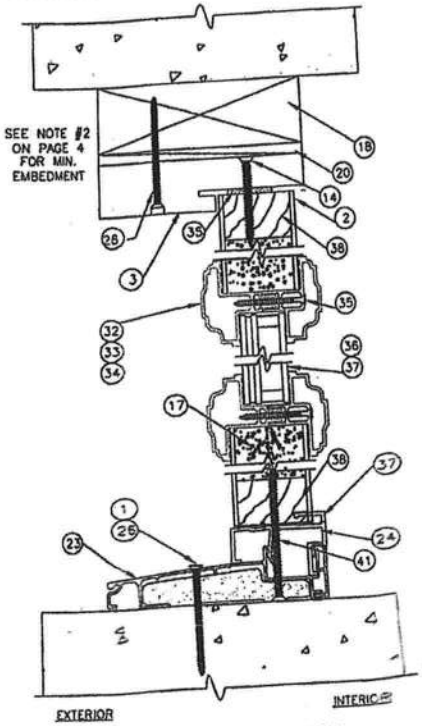

A VERTICAL CROSS SECTION INSWING SIDELITE

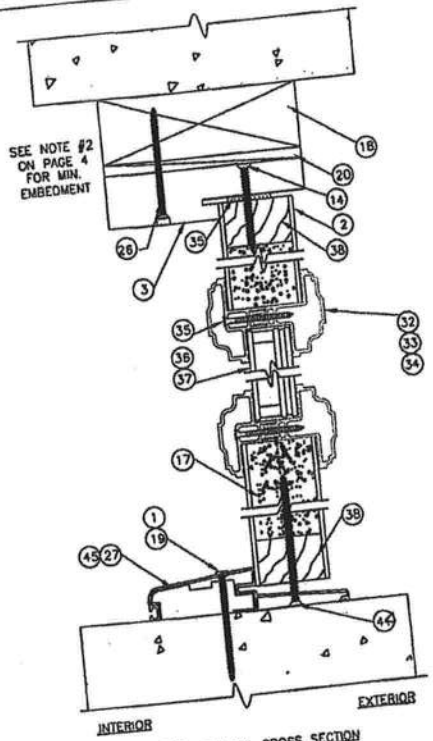

A VERTICAL CROSS SECTION OUTSWING SIDELITE

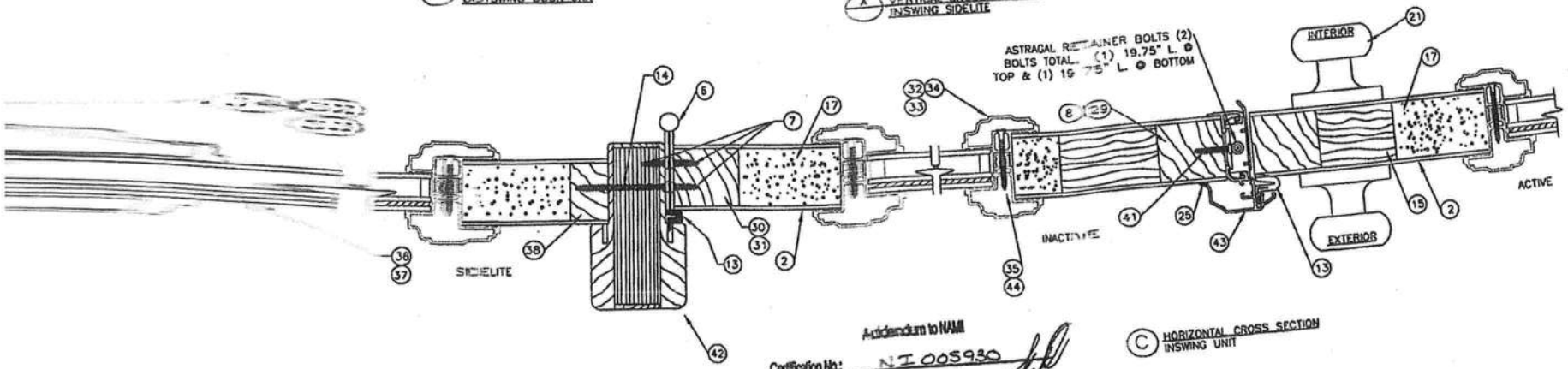

D HORIZONTAL CROSS SECTION HINGE & SIDELITE

C HORIZONTAL CROSS SECTION INSWING UNIT

Addendum to NAMI
Certification No.: NI 005930
Reviewed By:
Date Reviewed: 4-26-05

MASONITE INTERNATIONAL CORP.
7300 REAMES RD.
CHARLOTTE, NC 28216

PRODUCT: "EXTERIOR DOOR PRODUCT" 6'-8" FIBERGLASS GLAZED DOUBLE DOOR

PART OR ASSEMBLY: CROSS SECTIONS

NO.	DATE	REVISIONS	BY
C	4/25/05	ANCHORS & PLASTICS	SWS
B	3/1/05	FLORIDA CHANGES	SWS
A	2/22/05	ADDED GLASS DETAIL	SWS

DATE: 2/11/05
SCALE: N.T.S.
DWG. BY: SWS
CHK. BY:
DRAWING NO.: DWG-MA-FL0122-05
SHEET 2 OF 5

CERTIFICATE OF

OCCUPANCY

COLUMBIA COUNTY, FLORIDA

Department of Building and Zoning Inspection

This Certificate of Occupancy is issued to the below named permit holder for the building and premises at the below named location, and certifies that the work has been completed in accordance with the Columbia County Building Code.

Parcel Number 29-7S-17-10058-022 **Building permit No.** 000028963

Use Classification SFD/ADDITION **Fire:** 0.00

Permit Holder ROBERT A. JOHNSON **Waste:**

Owner of Building ROBERT & JOAN DUCKETT **Total:** 0.00

Location: 607 SW HEFLIN AVE, FORT WHITE, FL 32038

Date: 12/13/2010

Building Inspector

POST IN A CONSPICUOUS PLACE
(Business Places Only)