DATE 02/16/2006

Columbia County Building Permit

This Permit Expires One Year From the Date of Issue

PERMIT
000024140

APPLICANT SUSAN FAIR PHONE 752-1711

ADDRESS 224 SW VERNON WAY LAKE CITY FL 32025

OWNER CORNERSTONE DEVELOPERS PHONE 752-1711

ADDRESS 330 SE GREGORY GLEN LAKE CITY FL 32025

CONTRACTOR BRYAN ZECHER PHONE 752-8653

LOCATION OF PROPERTY BAYA, TR ON OLD COUNTRY CLUB RD, TL ON GREGORY GLEN, RIGHT OF CUL-DE-SAC

TYPE DEVELOPMENT SFD,UTILITY ESTIMATED COST OF CONSTRUCTION 75000.00

HEATED FLOOR AREA 1500.00 TOTAL AREA 1974.00 HEIGHT ____ STORIES 1

FOUNDATION CONC WALLS FRAMED ROOF PITCH 6/12 FLOOR SLAB

LAND USE & ZONING RSF-2 MAX. HEIGHT 18

Minimum Set Back Requirments: STREET-FRONT 25.00 REAR 15.00 SIDE 10.00

NO. EX.D.U. 0 FLOOD ZONE X PP DEVELOPMENT PERMIT NO. ____

PARCEL ID 15-4S-17-08359-124 SUBDIVISION COUNTRY SIDE ESTATES

LOT 24 BLOCK ____ PHASE ____ UNIT ____ TOTAL ACRES 0.50

Culvert Permit No.	Culvert Waiver	Contractor's License Number	Applicant/Owner/Contractor	
000000970		CBC054575	Susan Fair	
Driveway Connection	**Septic Tank Number**	**LU & Zoning checked by**	**Approved for Issuance**	**New Resident**
CULVERT	05-1199-N	BK	JH	Y

COMMENTS: ONE FOOT ABOVE THE ROAD,

Check # or Cash 2254

FOR BUILDING & ZONING DEPARTMENT ONLY

(footer/Slab)

Temporary Power ____ date/app. by Foundation ____ date/app. by Monolithic ____ date/app. by

Under slab rough-in plumbing ____ date/app. by Slab ____ date/app. by Sheathing/Nailing ____ date/app. by

Framing ____ date/app. by Rough-in plumbing above slab and below wood floor ____ date/app. by

Electrical rough-in ____ date/app. by Heat & Air Duct ____ date/app. by Peri. beam (Lintel) ____ date/app. by

Permanent power ____ date/app. by C.O. Final ____ date/app. by Culvert ____ date/app. by

M/H tie downs, blocking, electricity and plumbing 02/14/2006 HD date/app. by Pool ____ date/app. by

Reconnection ____ date/app. by Pump pole ____ date/app. by Utility Pole ____ date/app. by

M/H Pole ____ date/app. by Travel Trailer ____ date/app. by Re-roof ____ date/app. by

BUILDING PERMIT FEE $ 375.00 CERTIFICATION FEE $ 9.87 SURCHARGE FEE $ 9.87

MISC. FEES $ 0.00 ZONING CERT. FEE $ 50.00 FIRE FEE $ 0.00 WASTE FEE $ ____

FLOOD DEVELOPMENT FEE $ ____ FLOOD ZONE FEE $ 25.00 CULVERT FEE $ 25.00 **TOTAL FEE** 494.74

INSPECTORS OFFICE ____ CLERKS OFFICE CH

NOTICE: IN ADDITION TO THE REQUIREMENTS OF THIS PERMIT, THERE MAY BE ADDITIONAL RESTRICTIONS APPLICABLE TO THIS PROPERTY THAT MAY BE FOUND IN THE PUBLIC RECORDS OF THIS COUNTY. AND THERE MAY BE ADDITIONAL PERMITS REQUIRED FROM OTHER GOVERNMENTAL ENTITIES SUCH AS WATER MANAGEMENT DISTRICTS, STATE AGENCIES, OR FEDERAL AGENCIES.

"WARNING TO OWNER: YOUR FAILURE TO RECORD A NOTICE OF COMMENCEMENT MAY RESULT IN YOUR PAYING TWICE FOR IMPROVEMENTS TO YOUR PROPERTY. IF YOU INTEND TO OBTAIN FINANCING, CONSULT WITH YOUR LENDER OR AN ATTORNEY BEFORE RECORDING YOUR NOTICE OF COMMENCEMENT."

This Permit Must Be Prominently Posted on Premises During Construction

PLEASE NOTIFY THE COLUMBIA COUNTY BUILDING DEPARTMENT AT LEAST 24 HOURS IN ADVANCE OF EACH INSPECTION, IN ORDER THAT IT MAY BE MADE WITHOUT DELAY OR INCONVIENCE, PHONE 758-1008. THIS PERMIT IS NOT VALID UNLESS THE WORK AUTHORIZED BY IT IS COMMENCED WITHIN 6 MONTHS AFTER ISSUANCE.

The Issuance of this Permit Does Not Waive Compliance by Permittee with Deed Restrictions.

Columbia County Building Permit Application

Revised 9-23-04

For Office Use Only Application # 0602-37 Date Received 2-10-06 By G Permit # 24140 / 970

Application Approved by - Zoning Official BLK Date 15.02.06 Plans Examiner OK JTH Date 2-15-06

Flood Zone X Per PLAT Development Permit N/A Zoning RSF-2 Land Use Plan Map Category RES. LOW DEN.

Comments ~~[illegible]~~ + NOC

Applicants Name SUSAN FAIR Phone 386-752-1711

Address 224 SW VERNON WAY, LAKE CITY FL 32024

Owners Name CORNERSTONE DEVELOPERS Phone 386-752-1711

911 Address 330 SE GREGORY GLEN LAKE CITY, FL. 32025

Contractors Name BRYAN ZECHER Phone 386-752-8653

Address PO BOX 815 LAKE CITY FL 32056

Fee Simple Owner Name & Address NA

Bonding Co. Name & Address NA

Architect/Engineer Name & Address MARK DISOSWAY PO BOX 868 LAKE CITY FL 32056

Mortgage Lenders Name & Address NA

Circle the correct power company - FL Power & Light - (Clay Elec.) - Suwannee Valley Elec. - Progressive Energy

Property ID Number 15-4S-17-08359-124 Estimated Cost of Construction 70,000.00

Subdivision Name COUNTRY SIDE ESTATES Lot 24 Block ___ Unit ___ Phase ___

Driving Directions TAKE BAYA TO OLD COUNTRY CLUB RD. GO RIGHT. GO 3 MILES TO SE GREGORY GLN. TURN LEFT + GO TO END OF CULTABAC. HOUSE ON RIGHT.

Type of Construction FRAME + HARDI Number of Existing Dwellings on Property 0

Total Acreage 40 + Lot Size 1/2 ACRE Do you need a (Culvert Permit) or Culvert Waiver or Have an Existing Drive

Actual Distance of Structure from Property Lines - Front 27' Side 50' Side 50' Rear 50'

Total Building Height 18' 9" Number of Stories 1 Heated Floor Area 1500 SQ Roof Pitch 6/12

PORCH 44 GARAGE 430 PT TOTAL 1974

Application is hereby made to obtain a permit to do work and installations as indicated. I certify that no work or installation has commenced prior to the issuance of a permit and that all work be performed to meet the standards of all laws regulating construction in this jurisdiction.

OWNERS AFFIDAVIT: I hereby certify that all the foregoing information is accurate and all work will be done in compliance with all applicable laws and regulating construction and zoning.

WARNING TO OWNER: YOUR FAILURE TO RECORD A NOTICE OF COMMENCMENT MAY RESULT IN YOU PAYING TWICE FOR IMPROVEMENTS TO YOUR PROPERTY. IF YOU INTEND TO OBTAIN FINANCING, CONSULT WITH YOUR LENDER OR ATTORNEY BEFORE RECORDING YOUR NOTICE OF COMMENCEMENT.

Owner Builder or Agent (Including Contractor)

Contractor Signature

Contractors License Number CBC054575

Competency Card Number

NOTARY STAMP/SEAL

STATE OF FLORIDA
COUNTY OF COLUMBIA

Sworn to (or affirmed) and subscribed before me this 10 day of February 2006.

Personally known ✓ or Produced Identification ___

Notary Signature

SHARON D. JOHNSON
MY COMMISSION #DD366021
EXPIRES: OCT 26, 2008
Bonded through 1st State Insurance

Notice of Treatment 11873

Applicator: Florida Pest Control & Chemical Co. (www.flapest .com)
Address: BAYARD
City Lake City Phone 752-1703

Site Location: Subdivision Countryside EST
Lot # 24 Block# Permit # 24140
Address 330 SE Gregory Gln

Product used	Active Ingredient	% Concentration
☐ Premise	Imidacloprid	0.1%
☐ Termidor	Fipronil	0.12%
☑ Bora-Care	Disodium Octaborate Tetrahydrate	23.0%

Type treatment: ☐ Soil ☑ Wood

Area Treated	Square feet	Linear feet	Gallons Applied
Dwelling	1974	658	4

As per Florida Building Code 104.2.6 – If soil chemical barrier method for termite prevention is used, final exterior treatment shall be completed prior to final building approval.

If this notice is for the final exterior treatment, initial this line _____.

4/4/06	1600	F254
Date	Time	Print Technician's Name

Remarks: _____

Applicator - White Permit File - Canary Permit Holder - Pink

10/05 ©

FORM 600A-2004 EnergyGauge® 4.1

FLORIDA ENERGY EFFICIENCY CODE FOR BUILDING CONSTRUCTION

Florida Department of Community Affairs

Residential Whole Building Performance Method A

Project Name:	**TheSamuelModel601182**	Builder:	**Bryan Zecher Construction**
Address:	**Lot: 24, Sub: CSE, Plat:**	Permitting Office:	Columbia
City, State:	**Lake City, FL**	Permit Number:	24140
Owner:	**Model Home**	Jurisdiction Number:	221060
Climate Zone:	**North**		

1. New construction or existing	New	
2. Single family or multi-family	Single family	
3. Number of units, if multi-family	1	
4. Number of Bedrooms	3	
5. Is this a worst case?	Yes	
6. Conditioned floor area (ft²)	1500 ft²	
7. Glass type[1] and area: (Label reqd. by 13-104.4.5 if not default)		
a. U-factor: (or Single or Double DEFAULT) 7a.	Description Area (Dble Default) 190.0 ft²	
b. SHGC: (or Clear or Tint DEFAULT) 7b.	(Clear) 190.0 ft²	
8. Floor types		
a. Slab-On-Grade Edge Insulation	R=0.0, 205.0(p) ft	
b. N/A		
c. N/A		
9. Wall types		
a. Frame, Wood, Adjacent	R=13.0, 152.0 ft²	
b. Frame, Wood, Exterior	R=13.0, 1238.0 ft²	
c. N/A		
d. N/A		
e. N/A		
10. Ceiling types		
a. Under Attic	R=30.0, 1754.0 ft²	
b. N/A		
c. N/A		
11. Ducts		
a. Sup: Unc. Ret: Unc. AH: Garage	Sup. R=6.0, 150.0 ft	
b. N/A		

12. Cooling systems		
a. Central Unit	Cap: 36.0 kBtu/hr	
	SEER: 13.00	
b. N/A		
c. N/A		
13. Heating systems		
a. Electric Heat Pump	Cap: 36.0 kBtu/hr	
	HSPF: 7.90	
b. N/A		
c. N/A		
14. Hot water systems		
a. Electric Resistance	Cap: 40.0 gallons	
	EF: 0.93	
b. N/A		
c. Conservation credits (HR-Heat recovery, Solar DHP-Dedicated heat pump)		
15. HVAC credits (CF-Ceiling fan, CV-Cross ventilation, HF-Whole house fan, PT-Programmable Thermostat, MZ-C-Multizone cooling, MZ-H-Multizone heating)		

Glass/Floor Area: 0.13

Total as-built points: 22409
Total base points: 23850

PASS

I hereby certify that the plans and specifications covered by this calculation are in compliance with the Florida Energy Code.

PREPARED BY: Ben Summer

DATE: 1-23-06

I hereby certify that this building, as designed, is in compliance with the Florida Energy Code.

OWNER/AGENT: Chris W. Cer

DATE: 2-9-06

Review of the plans and specifications covered by this calculation indicates compliance with the Florida Energy Code. Before construction is completed this building will be inspected for compliance with Section 553.908 Florida Statutes.

GREAT SEAL OF THE STATE OF FLORIDA · IN GOD WE TRUST

BUILDING OFFICIAL: _____

DATE: _____

1 Predominant glass type. For actual glass type and areas, see Summer & Winter Glass output on pages 2&4.

SUMMER CALCULATIONS

Residential Whole Building Performance Method A - Details

ADDRESS: **Lot: 24, Sub: CSE, Plat: , Lake City, FL,** PERMIT #:

BASE				AS-BUILT							
GLASS TYPES .18 X Conditioned Floor Area	X BSPM	= Points		Type/SC	Overhang Ornt	Len	Hgt	Area X	SPM X	SOF	= Points
.18	1500.0	20.04	5410.8	Double, Clear	SE	2.0	5.5	45.0	42.75	0.77	1488.9
				Double, Clear	S	14.5	7.0	15.0	35.87	0.45	241.7
				Double, Clear	SE	12.0	5.3	45.0	42.75	0.39	759.0
				Double, Clear	E	8.5	7.0	10.0	42.06	0.47	196.6
				Double, Clear	SW	2.0	1.5	6.0	40.16	0.44	106.0
				Double, Clear	NW	9.5	7.5	6.0	25.97	0.60	93.2
				Double, Clear	NW	2.0	5.5	30.0	25.97	0.86	666.7
				Double, Clear	NW	2.0	8.0	30.0	25.97	0.93	721.1
				Double, Clear	NE	1.5	3.5	3.0	29.56	0.80	71.0
				As-Built Total:				**190.0**			**4344.3**

WALL TYPES	Area X	BSPM =	Points	Type	R-Value	Area X	SPM =	Points
Adjacent	152.0	0.70	106.4	Frame, Wood, Adjacent	13.0	152.0	0.60	91.2
Exterior	1238.0	1.70	2104.6	Frame, Wood, Exterior	13.0	1238.0	1.50	1857.0
Base Total:	**1390.0**		**2211.0**	**As-Built Total:**		**1390.0**		**1948.2**

DOOR TYPES	Area X	BSPM =	Points	Type	Area X	SPM =	Points
Adjacent	20.0	1.60	32.0	Exterior Insulated	20.0	4.10	82.0
Exterior	40.0	4.10	164.0	Exterior Insulated	20.0	4.10	82.0
				Adjacent Insulated	20.0	1.60	32.0
Base Total:	**60.0**		**196.0**	**As-Built Total:**	**60.0**		**196.0**

CEILING TYPES	Area X	BSPM =	Points	Type	R-Value	Area X	SPM X SCM =	Points
Under Attic	1500.0	1.73	2595.0	Under Attic	30.0	1754.0	1.73 X 1.00	3034.4
Base Total:	**1500.0**		**2595.0**	**As-Built Total:**		**1754.0**		**3034.4**

FLOOR TYPES	Area X	BSPM =	Points	Type	R-Value	Area X	SPM =	Points
Slab	205.0(p)	-37.0	-7585.0	Slab-On-Grade Edge Insulation	0.0	205.0(p	-41.20	-8446.0
Raised	0.0	0.00	0.0					
Base Total:			**-7585.0**	**As-Built Total:**		**205.0**		**-8446.0**

INFILTRATION	Area X	BSPM =	Points	Area X	SPM =	Points
	1500.0	10.21	15315.0	1500.0	10.21	15315.0

SUMMER CALCULATIONS

Residential Whole Building Performance Method A - Details

ADDRESS: **Lot: 24, Sub: CSE, Plat: , Lake City, FL,** PERMIT #:

BASE				AS-BUILT							
Summer Base Points: 18142.8				**Summer As-Built Points:**							**16391.9**
Total Summer Points	X System Multiplier	= Cooling Points		Total Component (System - Points)	X Cap Ratio	X Duct Multiplier (DM x DSM x AHU)	X System Multiplier	X Credit Multiplier	= Cooling Points		
				(sys 1: Central Unit 36000 btuh ,SEER/EFF(13.0) Ducts:Unc(S),Unc(R),Gar(AH),R6.0(INS)							
				16392	1.00	(1.09 x 1.147 x 1.00)	0.263	1.000	5380.4		
18142.8	**0.4266**	**7739.7**		**16391.9**	**1.00**	**1.250**	**0.263**	**1.000**	**5380.4**		

WINTER CALCULATIONS

Residential Whole Building Performance Method A - Details

ADDRESS: **Lot: 24, Sub: CSE, Plat: , Lake City, FL,** PERMIT #:

BASE

GLASS TYPES .18 X Conditioned Floor Area	X BWPM	= Points
.18 1500.0	12.74	3439.8

AS-BUILT

Type/SC	Overhang Ornt	Len	Hgt	Area X	WPM X	WOF =	Points
Double, Clear	SE	2.0	5.5	45.0	14.71	1.21	798.3
Double, Clear	S	14.5	7.0	15.0	13.30	3.52	702.2
Double, Clear	SE	12.0	5.3	45.0	14.71	2.54	1682.8
Double, Clear	E	8.5	7.0	10.0	18.79	1.34	252.1
Double, Clear	SW	2.0	1.5	6.0	16.74	1.76	176.3
Double, Clear	NW	9.5	7.5	6.0	24.30	1.03	149.9
Double, Clear	NW	2.0	5.5	30.0	24.30	1.01	734.7
Double, Clear	NW	2.0	8.0	30.0	24.30	1.00	731.2
Double, Clear	NE	1.5	3.5	3.0	23.57	1.02	72.1
As-Built Total:				**190.0**			**5299.6**

WALL TYPES	Area X	BWPM =	Points
Adjacent	152.0	3.60	547.2
Exterior	1238.0	3.70	4580.6
Base Total:	**1390.0**		**5127.8**

Type	R-Value	Area X	WPM =	Points
Frame, Wood, Adjacent	13.0	152.0	3.30	501.6
Frame, Wood, Exterior	13.0	1238.0	3.40	4209.2
As-Built Total:		**1390.0**		**4710.8**

DOOR TYPES	Area X	BWPM =	Points
Adjacent	20.0	8.00	160.0
Exterior	40.0	8.40	336.0
Base Total:	**60.0**		**496.0**

Type	Area X	WPM =	Points
Exterior Insulated	20.0	8.40	168.0
Exterior Insulated	20.0	8.40	168.0
Adjacent Insulated	20.0	8.00	160.0
As-Built Total:	**60.0**		**496.0**

CEILING TYPES	Area X	BWPM =	Points
Under Attic	1500.0	2.05	3075.0
Base Total:	**1500.0**		**3075.0**

Type	R-Value	Area X	WPM X WCM =	Points
Under Attic	30.0	1754.0	2.05 X 1.00	3595.7
As-Built Total:		**1754.0**		**3595.7**

FLOOR TYPES	Area X	BWPM =	Points
Slab	205.0(p)	8.9	1824.5
Raised	0.0	0.00	0.0
Base Total:			**1824.5**

Type	R-Value	Area X	WPM =	Points
Slab-On-Grade Edge Insulation	0.0	205.0(p	18.80	3854.0
As-Built Total:		**205.0**		**3854.0**

INFILTRATION	Area X	BWPM =	Points
	1500.0	-0.59	-885.0

	Area X	WPM =	Points
	1500.0	-0.59	-885.0

WINTER CALCULATIONS

Residential Whole Building Performance Method A - Details

ADDRESS: **Lot: 24, Sub: CSE, Plat: , Lake City, FL,** PERMIT #:

BASE				AS-BUILT							
Winter Base Points:			**13078.1**	**Winter As-Built Points:**							**17071.1**
Total Winter Points	X	System Multiplier	= Heating Points	Total Component (System - Points)	X	Cap Ratio	X Duct Multiplier (DM x DSM x AHU)	X System Multiplier	X	Credit Multiplier	= Heating Points
				(sys 1: Electric Heat Pump 36000 btuh ,EFF(7.9) Ducts:Unc(S),Unc(R),Gar(AH),R6.0							
				17071.1		1.000	(1.069 x 1.169 x 1.00)	0.432		1.000	9208.3
13078.1		**0.6274**	**8205.2**	**17071.1**		**1.00**	**1.250**	**0.432**		**1.000**	**9208.3**

WATER HEATING & CODE COMPLIANCE STATUS

Residential Whole Building Performance Method A - Details

ADDRESS: **Lot: 24, Sub: CSE, Plat: , Lake City, FL,** PERMIT #:

BASE					AS-BUILT							
WATER HEATING												
Number of Bedrooms	X	Multiplier	=	Total	Tank Volume	EF	Number of Bedrooms	X	Tank Ratio	X Multiplier	X Credit Multiplier	= Total
3		2635.00		7905.0	40.0	0.93	3		1.00	2606.67	1.00	7820.0
					As-Built Total:							**7820.0**

CODE COMPLIANCE STATUS

BASE				AS-BUILT			
Cooling Points +	Heating Points +	Hot Water Points =	Total Points	Cooling Points +	Heating Points +	Hot Water Points =	Total Points
7740	**8205**	**7905**	**23850**	**5380**	**9208**	**7820**	**22409**

PASS

Code Compliance Checklist

Residential Whole Building Performance Method A - Details

ADDRESS: **Lot: 24, Sub: CSE, Plat: , Lake City, FL,** PERMIT #:

6A-21 INFILTRATION REDUCTION COMPLIANCE CHECKLIST

COMPONENTS	SECTION	REQUIREMENTS FOR EACH PRACTICE	CHECK
Exterior Windows & Doors	606.1.ABC.1.1	Maximum:.3 cfm/sq.ft. window area; .5 cfm/sq.ft. door area.	
Exterior & Adjacent Walls	606.1.ABC.1.2.1	Caulk, gasket, weatherstrip or seal between: windows/doors & frames, surrounding wall; foundation & wall sole or sill plate; joints between exterior wall panels at corners; utility penetrations; between wall panels & top/bottom plates; between walls and floor. EXCEPTION: Frame walls where a continuous infiltration barrier is installed that extends from, and is sealed to, the foundation to the top plate.	
Floors	606.1.ABC.1.2.2	Penetrations/openings >1/8" sealed unless backed by truss or joint members. EXCEPTION: Frame floors where a continuous infiltration barrier is installed that is sealed to the perimeter, penetrations and seams.	
Ceilings	606.1.ABC.1.2.3	Between walls & ceilings; penetrations of ceiling plane of top floor; around shafts, chases, soffits, chimneys, cabinets sealed to continuous air barrier; gaps in gyp board & top plate; attic access. EXCEPTION: Frame ceilings where a continuous infiltration barrier is installed that is sealed at the perimeter, at penetrations and seams.	
Recessed Lighting Fixtures	606.1.ABC.1.2.4	Type IC rated with no penetrations, sealed; or Type IC or non-IC rated, installed inside a sealed box with 1/2" clearance & 3" from insulation; or Type IC rated with < 2.0 cfm from conditioned space, tested.	
Multi-story Houses	606.1.ABC.1.2.5	Air barrier on perimeter of floor cavity between floors.	
Additional Infiltration reqts	606.1.ABC.1.3	Exhaust fans vented to outdoors, dampers; combustion space heaters comply with NFPA, have combustion air.	

6A-22 OTHER PRESCRIPTIVE MEASURES (must be met or exceeded by all residences.)

COMPONENTS	SECTION	REQUIREMENTS	CHECK
Water Heaters	612.1	Comply with efficiency requirements in Table 612.1.ABC.3.2. Switch or clearly marked circuit breaker (electric) or cutoff (gas) must be provided. External or built-in heat trap required.	
Swimming Pools & Spas	612.1	Spas & heated pools must have covers (except solar heated). Non-commercial pools must have a pump timer. Gas spa & pool heaters must have a minimum thermal efficiency of 78%.	
Shower heads	612.1	Water flow must be restricted to no more than 2.5 gallons per minute at 80 PSIG.	
Air Distribution Systems	610.1	All ducts, fittings, mechanical equipment and plenum chambers shall be mechanically attached, sealed, insulated, and installed in accordance with the criteria of Section 610. Ducts in unconditioned attics: R-6 min. insulation.	
HVAC Controls	607.1	Separate readily accessible manual or automatic thermostat for each system.	
Insulation	604.1, 602.1	Ceilings-Min. R-19. Common walls-Frame R-11 or CBS R-3 both sides. Common ceiling & floors R-11.	

ENERGY PERFORMANCE LEVEL (EPL) DISPLAY CARD

ESTIMATED ENERGY PERFORMANCE SCORE* = 84.4

The higher the score, the more efficient the home.

Model Home, Lot: 24, Sub: CSE, Plat: , Lake City, FL,

1. New construction or existing	New	
2. Single family or multi-family	Single family	
3. Number of units, if multi-family	1	
4. Number of Bedrooms	3	
5. Is this a worst case?	Yes	
6. Conditioned floor area (ft²)	1500 ft²	
7. Glass type[1] and area: (Label reqd. by 13-104.4.5 if not default)		
a. U-factor: (or Single or Double DEFAULT) 7a.	Description Area (Dble Default) 190.0 ft²	
b. SHGC: (or Clear or Tint DEFAULT) 7b.	(Clear) 190.0 ft²	
8. Floor types		
a. Slab-On-Grade Edge Insulation	R=0.0, 205.0(p) ft	
b. N/A		
c. N/A		
9. Wall types		
a. Frame, Wood, Adjacent	R=13.0, 152.0 ft²	
b. Frame, Wood, Exterior	R=13.0, 1238.0 ft²	
c. N/A		
d. N/A		
e. N/A		
10. Ceiling types		
a. Under Attic	R=30.0, 1754.0 ft²	
b. N/A		
c. N/A		
11. Ducts		
a. Sup: Unc. Ret: Unc. AH: Garage	Sup. R=6.0, 150.0 ft	
b. N/A		
12. Cooling systems		
a. Central Unit	Cap: 36.0 kBtu/hr	
	SEER: 13.00	
b. N/A		
c. N/A		
13. Heating systems		
a. Electric Heat Pump	Cap: 36.0 kBtu/hr	
	HSPF: 7.90	
b. N/A		
c. N/A		
14. Hot water systems		
a. Electric Resistance	Cap: 40.0 gallons	
	EF: 0.93	
b. N/A		
c. Conservation credits (HR-Heat recovery, Solar DHP-Dedicated heat pump)		
15. HVAC credits (CF-Ceiling fan, CV-Cross ventilation, HF-Whole house fan, PT-Programmable Thermostat, MZ-C-Multizone cooling, MZ-H-Multizone heating)		

I certify that this home has complied with the Florida Energy Efficiency Code For Building Construction through the above energy saving features which will be installed (or exceeded) in this home before final inspection. Otherwise, a new EPL Display Card will be completed based on installed Code compliant features.

Builder Signature: Chris W. Cy Date: 2-9-06

Address of New Home: 330 SE GREGORY GLN. City/FL Zip: LAKE CITY, FL 32025

**NOTE: The home's estimated energy performance score is only available through the FLA/RES computer program. This is not a Building Energy Rating. If your score is 80 or greater (or 86 for a US EPA/DOE EnergyStar™ designation), your home may qualify for energy efficiency mortgage (EEM) incentives if you obtain a Florida Energy Gauge Rating. Contact the Energy Gauge Hotline at 321/638-1492 or see the Energy Gauge web site at www.fsec.ucf.edu for information and a list of certified Raters. For information about Florida's Energy Efficiency Code For Building Construction, contact the Department of Community Affairs at 850/487-1824.*

1 Predominant glass type. For actual glass type and areas, see Summer & Winter Glass output on pages 2&4.

STATE OF FLORIDA
DEPARTMENT OF HEALTH
APPLICATION FOR ONSITE SEWAGE DISPOSAL SYSTEM CONSTRUCTION PERMIT

Permit Application Number 05-1199

---------- PART II - SITEPLAN ----------

Scale: 1 inch = 50 feet.

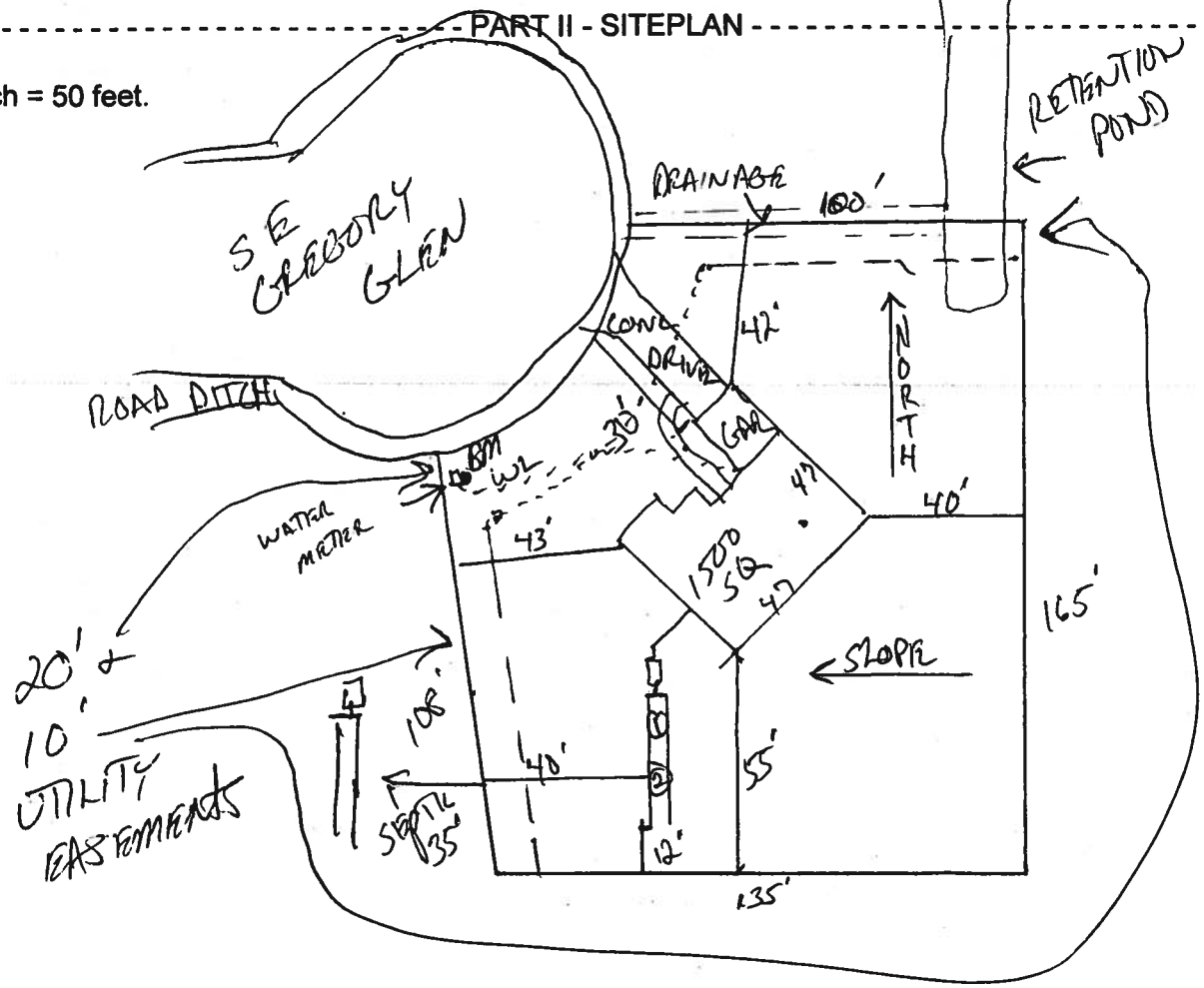

Notes: _____

Site Plan submitted by: Rocky D Z—O

MASTER CONTRACTOR

Plan Approved_____ Not Approved_____

Date 12-5-05

By Mark S Zander

County Health Department

ALL CHANGES MUST BE APPROVED BY THE COUNTY HEALTH DEPARTMENT

1)

Rec. 15.00
Doc. 1,435.00

THIS INSTRUMENT WAS PREPARED BY:

TERRY McDAVID
POST OFFICE BOX 1328
LAKE CITY, FL 32056-1328

RETURN TO:

TERRY McDAVID
POST OFFICE BOX 1328
LAKE CITY, FL 32056-1328

File No. 04-119

Property Appraiser's
Parcel Identification No.
15-4S-17-08359-016

Inst:2004008036 Date:04/08/2004 Time:12:28
Doc Stamp-Deed : 1435.00
DC,P.DeWitt Cason,Columbia County B:1012 P:49

WARRANTY DEED

THIS INDENTURE, made this 8th day of April 2004, BETWEEN ROLAND L. TARDIF and his wife, LOUISE TARDIF, whose post office address is 4078 SE Country Club Road, Lake City, Florida 32025, of the County of Columbia, State of Florida, grantor*, and CORNERSTONE DEVELOPMENT GROUP, LLC, a Florida Limited Liability Company, whose post office address is 180 NW Amenity Court, Lake City, Florida 32025, of the County of Columbia, State of Florida, grantee*.

WITNESSETH: that said grantor, for and in consideration of the sum of Ten Dollars ($10.00), and other good and valuable considerations to said grantor in hand paid by said grantee, the receipt whereof is hereby acknowledged, has granted, bargained and sold to the said grantee, and grantee's successors and assigns forever, the following described land, situate, lying and being in Columbia County, Florida, to-wit:

PARCEL NO. 1:

TOWNSHIP 4 SOUTH - RANGE 17 EAST

SECTION 15: Begin at the Southeast corner of the Northwest 1/4 of Section 15, Township 4 South, Range 17 East, Columbia County, Florida, and run N 1°11'01"W, along the East line of said Northwest 1/4 a distance of 679.28 feet to the POINT OF BEGINNING; thence S 88°41'16"W, 1296.02 feet to the East right-of-way line of State Road No. S-133; thence N 1°14'10"W, along said West right-of-way line 336.70 feet; thence N 88°41'16"E, 1296.33 feet to said East line of the Northwest 1/4, Section 15; thence S 1°11'01"E, along said East line 336.70 feet to the POINT OF BEGINNING. COLUMBIA COUNTY, FLORIDA.

PARCEL NO. 2:

TOWNSHIP 4 SOUTH - RANGE 17 EAST

SECTION 15: Commence at the Southeast corner of the Northwest 1/4 of Section 15, Township 4 South, Range 17 East, Columbia County, Florida, and run N 01°11'01"W, along the East line of said Northwest 1/4 a distance of 343.13 feet to the POINT OF BEGINNING; thence S 88°41'16"W, 1295.71 feet to a point on the East right-of-way line of State Road No. S-133; thence N 01°14'10"W, along said

Easterly right-of-way line 336.15 feet; thence N 88°41'16"E, 1296.02 feet to a point on the East line of said Northwest 1/4 of Section 15; thence S 01°11'01"E, along said East line 336.15 feet to the POINT OF BEGINNING. COLUMBIA COUNTY, FLORIDA.

SUBJECT TO: Restrictions, easements and outstanding mineral rights of record, if any, and taxes for the current year, & Restrictions shown on Schedule "A" attached hereto.
and said grantor does hereby fully warrant the title to said land, and will defend the same against the lawful claims of all persons whomsoever.

*"Grantor" and "grantee" are used for singular or plural, as context requires.

IN WITNESS WHEREOF, grantor has hereunto set grantor's hand and seal the day and year first above written.

Signed, sealed and delivered
in our presence:

(First Witness)
Terry McDavid
Printed Name

(Second Witness)
Myrtle Ann McElroy
Printed Name

Roland L. Tardif (SEAL)
Roland L. Tardif

Louise Tardif (SEAL)
Louise Tardif

STATE OF FLORIDA
COUNTY OF COLUMBIA

The foregoing instrument was acknowledged before me this 8th day of April 2004, by ROLAND L. TARDIF and his wife, LOUISE TARDIF, who are personally known to me and who did not take an oath.

Notary Public
My Commission Expires:

SCHEDULE "A" ATTACHED TO WARRANTY DEED
DATED APRIL 8, 2004 FROM
ROLAND L. TARDIF & his wife, LOUISE TARDIF
TO
CORNERSTONE DEVELOPMENT GROUP, LLC

For the period of time ending twenty (20) years from this date, the property described herein shall be subject to the following restrictions:

1. No mobile homes may be placed on the property.

2. Any home built on the property shall be a single family residence having not less than 1,100 square feet of heated living area.

Inst:2004008036 Date:04/08/2004 Time:12:28
Doc Stamp-Deed : 1435.00
DC,P.DeWitt Cason,Columbia County B:1012 P:51

COUNTRYSIDE ESTATES
LOT 24 SITE PLAN

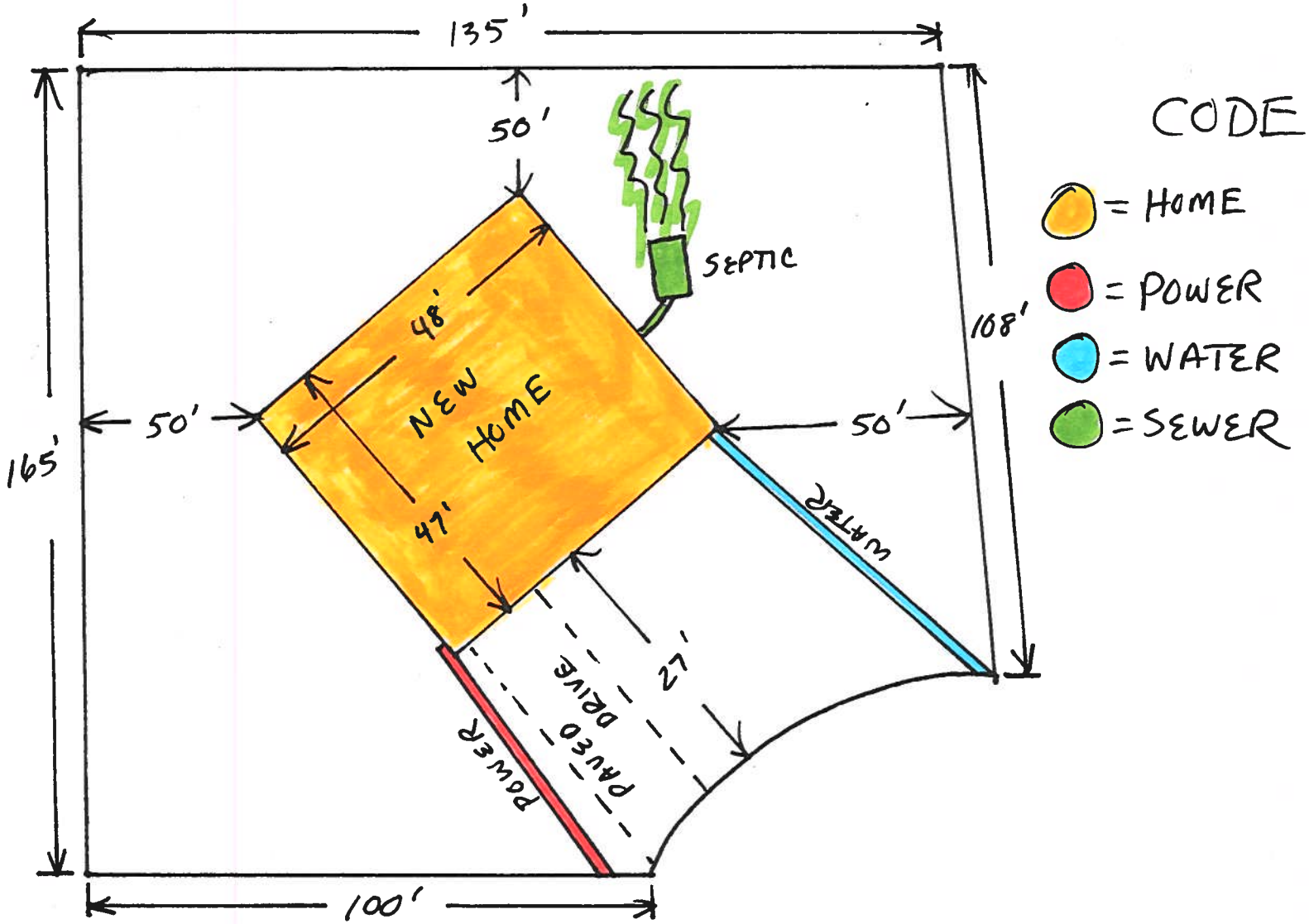

SE GREGORY GLEN

COLUMBIA COUNTY 9-1-1 ADDRESSING

263 NW Lake City Ave. * P. O. Box 2949 * Lake City, FL 32056-2949
PHONE: (386) 752-8787 * FAX (386) 758-1365 * Email: ron_croft@columbiacountyfla.com

32025

Addresses for Country Side Estates Subdivision:

Lot #:	Address Assigned:
1	165 SE Victoria Glen
2	195 SE Victoria Glen
3	223 SE Victoria Glen
4	251 SE Victoria Glen
5	281 SE Victoria Glen
6	311 SE Victoria Glen
7	329 SE Victoria Glen
8	328 SE Victoria Glen
9	306 SE Victoria Glen
10	274 SE Victoria Glen
11	244 SE Victoria Glen
12	214 SE Victoria Glen
13	182 SE Victoria Glen
14	152 SE Victoria Glen
15	122 SE Victoria Glen

Lot #:	Address Assigned:
16	123 SE Gregory Glen
17	153 SE Gregory Glen
18	183 SE Gregory Glen
19	215 SE Gregory Glen
20	245 SE Gregory Glen
21	275 SE Gregory Glen
22	309 SE Gregory Glen
23	329 SE Gregory Glen
24	330 SE Gregory Glen
25	308 SE Gregory Glen
26	276 SE Gregory Glen
27	246 SE Gregory Glen
28	216 SE Gregory Glen
29	184 SE Gregory Glen
30	154 SE Gregory Glen
31	~~3239 SE Country Club Rd~~ 124 SE Gregory Glen

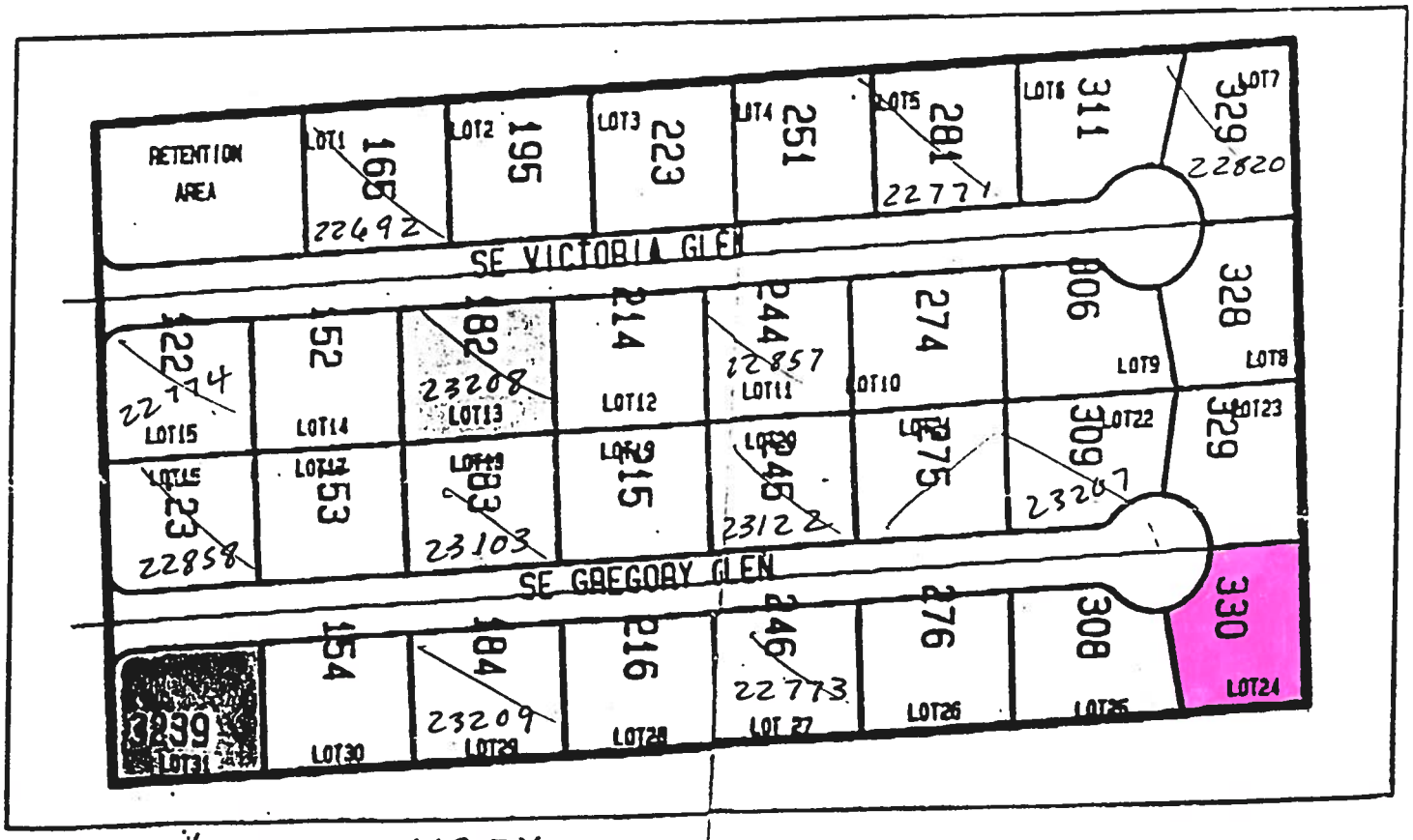

1500/1974 - 469.74
1200/1665 - 391.64

STATE OF FLORIDA
DEPARTMENT OF HEALTH
APPLICATION FOR ONSITE SEWAGE DISPOSAL SYSTEM CONSTRUCTION PERMIT

Permit Application Number_____

PART II - SITEPLAN

Scale: 1 inch = 50 feet.

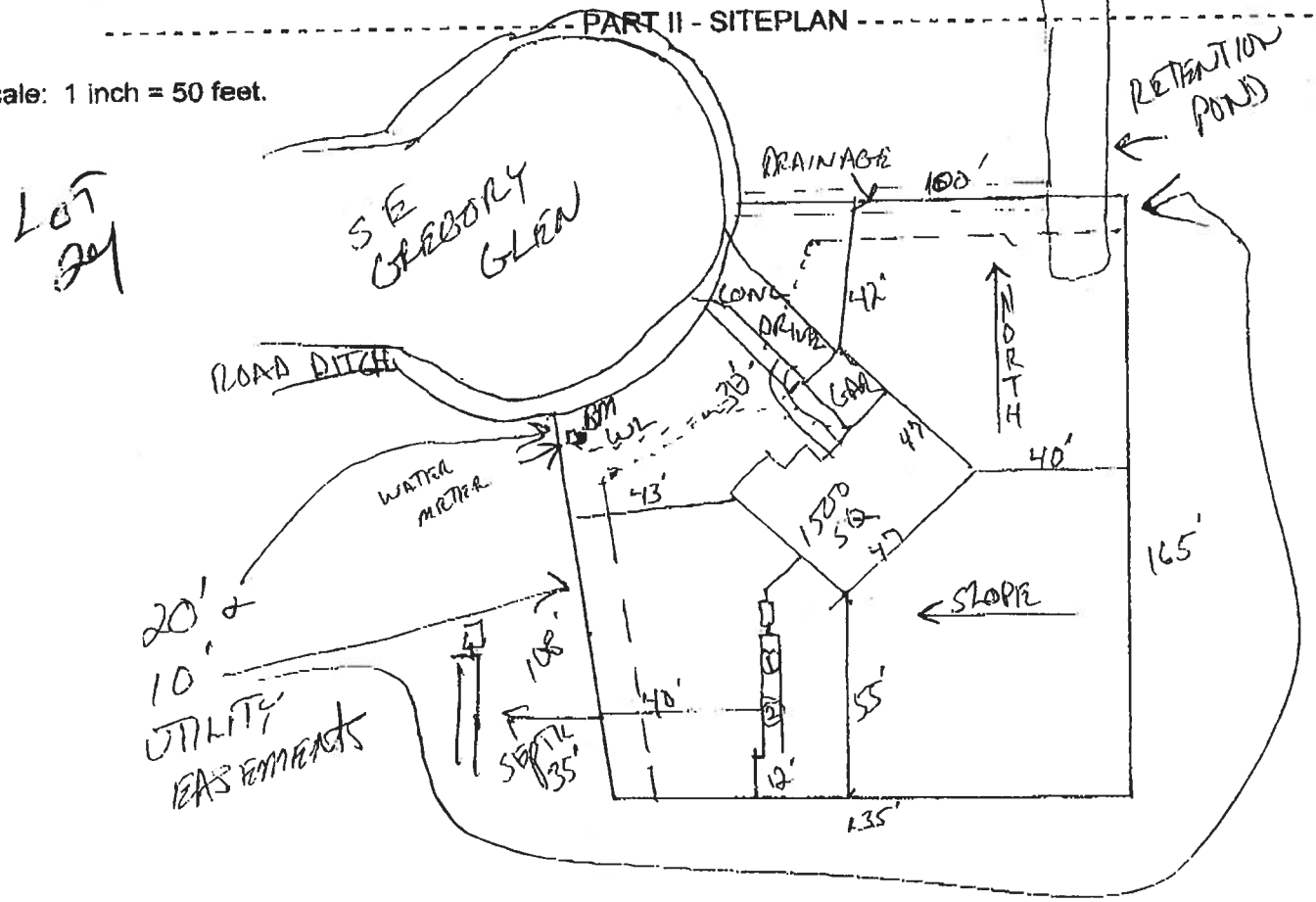

Notes: _____

Site Plan submitted by: Rocky D. [illegible] MASTER CONTRACTOR

Plan Approved_____ Not Approved_____ Date_____

By_____ County Health Department

ALL CHANGES MUST BE APPROVED BY THE COUNTY HEALTH DEPARTMENT

DH 4015, 10/96 (Replaces HRS-H Form 4016 which may be used)
(Stock Number: 5744-002-4015-6)

Columbia County Building Department
Culvert Permit

Culvert Permit No.
000000970

DATE 02/16/2006 PARCEL ID # 15-4S-17-08359-124

APPLICANT SUSAN FAIR PHONE 752-1711

ADDRESS 224 SW VERNON WAY LAKE CITY FL 32025RNERS

OWNER CORNERSTONE DEVELOPERS PHONE 752-1711

ADDRESS 330 SE GREGORY GLEN LAKE CITY FL 32025

CONTRACTOR BRYAN ZECHER PHONE 752-8653

LOCATION OF PROPERTY BAYA, TR ON OLD COUNTRY CLUB RD, TL ON GREGORY GLEN, TO THE END OF CUL-DE-SAC ON RIGHT

SUBDIVISION/LOT/BLOCK/PHASE/UNIT COUNTRY SIDE ESTATES 24

SIGNATURE Susan Fair

INSTALLATION REQUIREMENTS

[X] Culvert size will be 18 inches in diameter with a total lenght of 32 feet, leaving 24 feet of driving surface. Both ends will be mitered 4 foot with a 4 : 1 slope and poured with a 4 inch thick reinforced concrete slab.

INSTALLATION NOTE: Turnouts will be required as follows:
a) a majority of the current and existing driveway turnouts are paved, or;
b) the driveway to be served will be paved or formed with concrete.
Turnouts shall be concrete or paved a minimum of 12 feet wide or the width of the concrete or paved driveway, whichever is greater. The width shall conform to the current and existing paved or concreted turnouts.

[ ] Culvert installation shall conform to the approved site plan standards.

[ ] Department of Transportation Permit installation approved standards.

[ ] Other _____

ALL PROPER SAFETY REQUIREMENTS SHOULD BE FOLLOWED DURING THE INSTALATION OF THE CULVERT.

135 NE Hernando Ave., Suite B-21
Lake City, FL 32055
Phone: 386-758-1008 Fax: 386-758-2160

Amount Paid 25.00

COLUMBIA COUNTY · GATEWAY TO FLORIDA ·

CERTIFICATE OF OCCUPANCY

COLUMBIA COUNTY, FLORIDA

Department of Building and Zoning Inspection

This Certificate of Occupancy is issued to the below named permit holder for the building and premises at the below named location, and certifies that the work has been completed in accordance with the Columbia County Building Code.

Parcel Number 15-4S-17-08359-124 **Building permit No.** 000024140

Use Classification SFD,UTILITY **Fire:** 29.60

Permit Holder BRYAN ZECHER **Waste:** 61.25

Owner of Building CORNERSTONE DEVELOPERS **Total:** 90.85

Location: 330 SE GREGORY GLEN(COUNTRY SIDE EST.,LOT 24)

Date: 05/30/2006

Randy Jones 64G

Building Inspector

POST IN A CONSPICUOUS PLACE
(Business Places Only)

LOT 24

NOTICE OF COMMENCEMENT FORM
COLUMBIA COUNTY, FLORIDA

THE UNDERSIGNED hereby gives notice that improvement will be made to certain real property, and in accordance with Chapter 713, Florida Statutes, the following information is provided in this Notice of Commencement.

Tax Parcel ID Number 15-4S-17-08359-124

1. Description of property: (legal description of the property and street address or 911 address)
   330 SE Gregory Glenn
   Lake City, Fl 32025

2. General description of improvement: new home

3. Owner Name & Address Cornerstone Development Group LLC
   180 NW Amenity Ct, Lake City, Fl Interest in Property Fee Simple

4. Name & Address of Fee Simple Owner (if other than owner):

5. Contractor Name Bryan Zicher Construction Phone Number 386-752-8653
   Address P.O. Box 815, Lake City, Fl 32056

6. Surety Holders Name N/A Phone Number
   Address
   Amount of Bond N/A

Inst:2006003299 Date:02/10/2006 Time:12:31
MK DC,P.DeWitt Cason,Columbia County B:1073 P:1967

7. Lender Name N/A
   Address

8. Persons within the State of Florida designated by the Owner upon whom notices or other documents may be served as provided by section 718.13 (1)(a) 7; Florida Statutes:
   Name N/A Phone Number
   Address

9. In addition to himself/herself the owner designates N/A of
   to receive a copy of the Lienor's Notice as provided in Section 713.13 (1) - (a) 7. Phone Number of the designee N/A

10. Expiration date of the Notice of Commencement (the expiration date is 1 (one) year from the date of recording, (Unless a different date is specified) N/A

NOTICE AS PER CHAPTER 713, Florida Statutes:
The owner must sign the notice of commencement and no one else may be permitted to sign in his/her stead.

Signature of Owner

Sworn to (or affirmed) and subscribed before day of Feb 10th, 2006

NOTARY STAMP/SEAL

SHARON D. JOHNSON
MY COMMISSION #DD366021
EXPIRES: OCT 26, 2008
Bonded through 1st State Insurance

Sharon D. Johnson
Signature of Notary

Residential System Sizing Calculation

Summary

Model Home

Lake City, FL

Project Title:
TheSamuelModel601182

Class 3 Rating
Registration No. 0
Climate: North

1/23/2006

Location for weather data: Gainesville - Defaults: Latitude(29) Altitude(152 ft.) Temp Range(M)
Humidity data: Interior RH (50%) Outdoor wet bulb (77F) Humidity difference(54gr.)

Winter design temperature	33	F	Summer design temperature	92	F
Winter setpoint	70	F	Summer setpoint	75	F
Winter temperature difference	37	F	Summer temperature difference	17	F
Total heating load calculation	**30090**	**Btuh**	**Total cooling load calculation**	**21658**	**Btuh**
Submitted heating capacity	% of calc	Btuh	Submitted cooling capacity	% of calc	Btuh
Total (Electric Heat Pump)	119.6	36000	Sensible (SHR = 0.75)	149.4	27000
Heat Pump + Auxiliary(0.0kW)	119.6	36000	Latent	251.3	9000
			Total (Electric Heat Pump)	166.2	36000

WINTER CALCULATIONS

Winter Heating Load (for 1500 sqft)

Load component			Load	
Window total	190	sqft	6116	Btuh
Wall total	1390	sqft	4565	Btuh
Door total	60	sqft	777	Btuh
Ceiling total	1754	sqft	2067	Btuh
Floor total	205	sqft	8950	Btuh
Infiltration	188	cfm	7615	Btuh
Duct loss			0	Btuh
Subtotal			**30090**	**Btuh**
Ventilation	0	cfm	0	Btuh
TOTAL HEAT LOSS			**30090**	**Btuh**

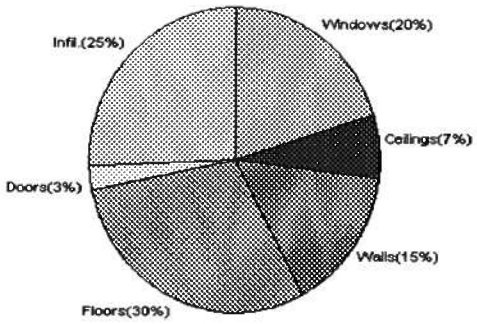

SUMMER CALCULATIONS

Summer Cooling Load (for 1500 sqft)

Load component			Load	
Window total	190	sqft	9948	Btuh
Wall total	1390	sqft	2812	Btuh
Door total	60	sqft	588	Btuh
Ceiling total	1754	sqft	2905	Btuh
Floor total			0	Btuh
Infiltration	98	cfm	1824	Btuh
Internal gain			0	Btuh
Duct gain			0	Btuh
Sens. Ventilation	0	cfm	0	Btuh
Total sensible gain			**18077**	**Btuh**
Latent gain(ducts)			0	Btuh
Latent gain(infiltration)			3581	Btuh
Latent gain(ventilation)			0	Btuh
Latent gain(internal/occupants/other)			0	Btuh
Total latent gain			**3581**	**Btuh**
TOTAL HEAT GAIN			**21658**	**Btuh**

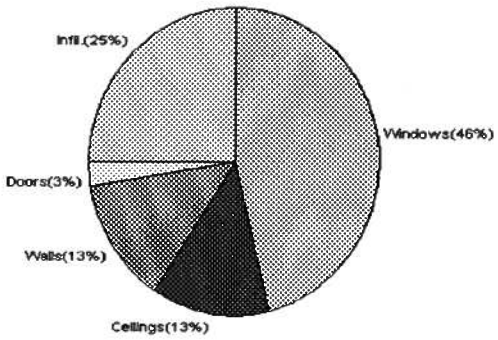

For Florida residences only

EnergyGauge® System Sizing
PREPARED BY: _____
DATE: _____

System Sizing Calculations - Winter

Residential Load - Whole House Component Details

Model Home
Lake City, FL

Project Title:
TheSamuelModel601182

Class 3 Rating
Registration No. 0
Climate: North

Reference City: Gainesville (Defaults) Winter Temperature Difference: 37.0 F

1/23/2006

This calculation is for Worst Case. The house has been rotated 315 degrees.

Component Loads for Whole House

Window	Panes/SHGC/Frame/U	Orientation	Area(sqft) X	HTM=	Load
1	2, Clear, Metal, 0.87	NW	45.0	32.2	1449 Btuh
2	2, Clear, Metal, 0.87	N	15.0	32.2	483 Btuh
3	2, Clear, Metal, 0.87	NW	45.0	32.2	1449 Btuh
4	2, Clear, Metal, 0.87	W	10.0	32.2	322 Btuh
5	2, Clear, Metal, 0.87	NE	6.0	32.2	193 Btuh
6	2, Clear, Metal, 0.87	SE	6.0	32.2	193 Btuh
7	2, Clear, Metal, 0.87	SE	30.0	32.2	966 Btuh
8	2, Clear, Metal, 0.87	SE	30.0	32.2	966 Btuh
9	2, Clear, Metal, 0.87	SW	3.0	32.2	97 Btuh
	Window Total		190(sqft)		6116 Btuh
Walls	Type	R-Value	Area X	HTM=	Load
1	Frame - Wood - Adj(0.09)	13.0	152	3.3	499 Btuh
2	Frame - Wood - Ext(0.09)	13.0	1238	3.3	4066 Btuh
	Wall Total		1390		4565 Btuh
Doors	Type		Area X	HTM=	Load
1	Insulated - Adjacent		20	12.9	259 Btuh
2	Insulated - Exterior		20	12.9	259 Btuh
3	Insulated - Exterior		20	12.9	259 Btuh
	Door Total		60		777Btuh
Ceilings	Type/Color/Surface	R-Value	Area X	HTM=	Load
1	Vented Attic/D/Shin)	30.0	1754	1.2	2067 Btuh
	Ceiling Total		1754		2067Btuh
Floors	Type	R-Value	Size X	HTM=	Load
1	Slab On Grade	0	205.0 ft(p)	43.7	8950 Btuh
	Floor Total		205		8950 Btuh
			Zone Envelope Subtotal:		22475 Btuh
Infiltration	Type	ACH X	Zone Volume	CFM=	
	Natural	0.94	12000	188.0	7615 Btuh
Ductload	Average sealed, R6.0, Supply(Attic), Return(Attic)			(DLM of 0.00)	0 Btuh
Zone #1			**Sensible Zone Subtotal**		**30090 Btuh**

Manual J Winter Calculations

Residential Load - Component Details (continued)

Model Home

Lake City, FL

Project Title:
TheSamuelModel601182

Class 3 Rating
Registration No. 0
Climate: North

1/23/2006

WHOLE HOUSE TOTALS

	Subtotal Sensible	30090 Btuh
	Ventilation Sensible	0 Btuh
	Total Btuh Loss	30090 Btuh

Key: Window types (SHGC - Shading coefficient of glass as SHGC numerical value or as clear or tint)
(Frame types - metal, wood or insulated metal)
(U - Window U-Factor or 'DEF' for default)
(HTM - ManualJ Heat Transfer Multiplier)
Key: Floor size (perimeter(p) for slab-on-grade or area for all other floor types)

For Florida residences only

System Sizing Calculations - Winter

Residential Load - Room by Room Component Details

Model Home
Lake City, FL

Project Title:
TheSamuelModel601182

Class 3 Rating
Registration No. 0
Climate: North

Reference City: Gainesville (Defaults) Winter Temperature Difference: 37.0 F

1/23/2006

This calculation is for Worst Case. The house has been rotated 315 degrees.

Component Loads for Zone #1: Main

Window	Panes/SHGC/Frame/U	Orientation	Area(sqft) X	HTM=	Load
1	2, Clear, Metal, 0.87	NW	45.0	32.2	1449 Btuh
2	2, Clear, Metal, 0.87	N	15.0	32.2	483 Btuh
3	2, Clear, Metal, 0.87	NW	45.0	32.2	1449 Btuh
4	2, Clear, Metal, 0.87	W	10.0	32.2	322 Btuh
5	2, Clear, Metal, 0.87	NE	6.0	32.2	193 Btuh
6	2, Clear, Metal, 0.87	SE	6.0	32.2	193 Btuh
7	2, Clear, Metal, 0.87	SE	30.0	32.2	966 Btuh
8	2, Clear, Metal, 0.87	SE	30.0	32.2	966 Btuh
9	2, Clear, Metal, 0.87	SW	3.0	32.2	97 Btuh
	Window Total		190(sqft)		6116 Btuh
Walls	Type	R-Value	Area X	HTM=	Load
1	Frame - Wood - Adj(0.09)	13.0	152	3.3	499 Btuh
2	Frame - Wood - Ext(0.09)	13.0	1238	3.3	4066 Btuh
	Wall Total		1390		4565 Btuh
Doors	Type		Area X	HTM=	Load
1	Insulated - Adjacent		20	12.9	259 Btuh
2	Insulated - Exterior		20	12.9	259 Btuh
3	Insulated - Exterior		20	12.9	259 Btuh
	Door Total		60		777Btuh
Ceilings	Type/Color/Surface	R-Value	Area X	HTM=	Load
1	Vented Attic/D/Shin)	30.0	1754	1.2	2067 Btuh
	Ceiling Total		1754		2067Btuh
Floors	Type	R-Value	Size X	HTM=	Load
1	Slab On Grade	0	205.0 ft(p)	43.7	8950 Btuh
	Floor Total		205		8950 Btuh
			Zone Envelope Subtotal:		22475 Btuh
Infiltration	Type	ACH X	Zone Volume	CFM=	
	Natural	0.94	12000	188.0	7615 Btuh
Ductload	Average sealed, R6.0, Supply(Attic), Return(Attic)			(DLM of 0.00)	0 Btuh
Zone #1			**Sensible Zone Subtotal**		**30090 Btuh**

Manual J Winter Calculations

Residential Load - Component Details (continued)

Model Home

Lake City, FL

Project Title:
TheSamuelModel601182

Class 3 Rating
Registration No. 0
Climate: North

1/23/2006

WHOLE HOUSE TOTALS

	Subtotal Sensible	30090 Btuh
	Ventilation Sensible	0 Btuh
	Total Btuh Loss	30090 Btuh

Key: Window types (SHGC - Shading coefficient of glass as SHGC numerical value or as clear or tint)
(Frame types - metal, wood or insulated metal)
(U - Window U-Factor or 'DEF' for default)
(HTM - ManualJ Heat Transfer Multiplier)
Key: Floor size (perimeter(p) for slab-on-grade or area for all other floor types)

For Florida residences only

System Sizing Calculations - Summer

Residential Load - Whole House Component Details

Model Home | Project Title: TheSamuelModel601182 | Class 3 Rating
Registration No. 0
Lake City, FL | Climate: North

Reference City: Gainesville (Defaults) Summer Temperature Difference: 17.0 F 1/23/2006

This calculation is for Worst Case. The house has been rotated 315 degrees.

Component Loads for Whole House

Window	Type* Pn/SHGC/U/InSh/ExSh/IS	Ornt	Overhang Len	Overhang Hgt	Window Area(sqft) Gross	Shaded	Unshaded	HTM Shaded	HTM Unshaded	Load
1	2, Clear, 0.87, None,N,N	NW	2ft.	5.5ft.	45.0	0.0	45.0	29	60	2702 Btuh
2	2, Clear, 0.87, None,N,N	N	14.5f	7ft.	15.0	0.0	15.0	29	29	434 Btuh
3	2, Clear, 0.87, None,N,N	NW	12ft.	5.25f	45.0	0.0	45.0	29	60	2702 Btuh
4	2, Clear, 0.87, None,N,N	W	8.5ft.	7ft.	10.0	10.0	0.0	29	80	290 Btuh
5	2, Clear, 0.87, None,N,N	NE	2ft.	1.5ft.	6.0	0.0	6.0	29	60	360 Btuh
6	2, Clear, 0.87, None,N,N	SE	9.5ft.	7.5ft.	6.0	6.0	0.0	29	63	174 Btuh
7	2, Clear, 0.87, None,N,N	SE	2ft.	5.5ft.	30.0	17.2	12.8	29	63	1299 Btuh
8	2, Clear, 0.87, None,N,N	SE	2ft.	8ft.	30.0	2.2	27.8	29	63	1803 Btuh
9	2, Clear, 0.87, None,N,N	SW	1.5ft.	3.5ft.	3.0	0.1	2.9	29	63	185 Btuh
	Window Total				190 (sqft)					9948 Btuh

Walls	Type	R-Value/U-Value	Area(sqft)	HTM	Load
1	Frame - Wood - Adj	13.0/0.09	152.0	1.5	229 Btuh
2	Frame - Wood - Ext	13.0/0.09	1238.0	2.1	2582 Btuh
	Wall Total		1390 (sqft)		2812 Btuh

Doors	Type	Area (sqft)	HTM	Load
1	Insulated - Adjacent	20.0	9.8	196 Btuh
2	Insulated - Exterior	20.0	9.8	196 Btuh
3	Insulated - Exterior	20.0	9.8	196 Btuh
	Door Total	60 (sqft)		588 Btuh

Ceilings	Type/Color/Surface	R-Value	Area(sqft)	HTM	Load
1	Vented Attic/DarkShingle	30.0	1754.0	1.7	2905 Btuh
	Ceiling Total		1754 (sqft)		2905 Btuh

Floors	Type	R-Value	Size	HTM	Load
1	Slab On Grade	0.0	205 (ft(p))	0.0	0 Btuh
	Floor Total		205.0 (sqft)		0 Btuh

	Zone Envelope Subtotal:	16253 Btuh

Infiltration	Type	ACH	Volume(cuft)	CFM=	Load
	SensibleNatural	0.49	12000	98.0	1824 Btuh

Internal gain	Occupants	Btuh/occupant		Appliance	Load
	0	X 230	+	0	0 Btuh

Duct load	Average sealed, R6.0, Supply(Attic), Return(Attic)	DGM = 0.00	0.0 Btuh
	Sensible Zone Load		**18077 Btuh**

Manual J Summer Calculations

Residential Load - Component Details (continued)

Model Home

Lake City, FL

Project Title:
TheSamuelModel601182

Class 3 Rating
Registration No. 0
Climate: North

1/23/2006

WHOLE HOUSE TOTALS

	Sensible Envelope Load All Zones	**18077 Btuh**
	Sensible Duct Load	0 Btuh
	Total Sensible Zone Loads	**18077 Btuh**
	Sensible ventilation	0 Btuh
	Blower	0 Btuh
Whole House	**Total sensible gain**	**18077 Btuh**
Totals for Cooling	Latent infiltration gain (for 54 gr. humidity difference)	3581 Btuh
	Latent ventilation gain	0 Btuh
	Latent duct gain	0 Btuh
	Latent occupant gain (0 people @ 200 Btuh per person)	0 Btuh
	Latent other gain	0 Btuh
	Latent total gain	**3581 Btuh**
	TOTAL GAIN	**21658 Btuh**

*Key: Window types (Pn - Number of panes of glass)
(SHGC - Shading coefficient of glass as SHGC numerical value or as clear or tint)
(U - Window U-Factor or 'DEF' for default)
(InSh - Interior shading device: none(N), Blinds(B), Draperies(D) or Roller Shades(R))
(ExSh - Exterior shading device: none(N) or numerical value)
(BS - Insect screen: none(N), Full(F) or Half(H))
(Ornt - compass orientation)

For Florida residences only

System Sizing Calculations - Summer

Residential Load - Room by Room Component Details

Model Home | Project Title: TheSamuelModel601182 | Class 3 Rating
Registration No. 0
Lake City, FL | Climate: North

Reference City: Gainesville (Defaults) Summer Temperature Difference: 17.0 F 1/23/2006

This calculation is for Worst Case. The house has been rotated 315 degrees.

Component Loads for Zone #1: Main

Window	Type* Pn/SHGC/U/InSh/ExSh/IS	Ornt	Overhang Len	Overhang Hgt	Window Area(sqft) Gross	Shaded	Unshaded	HTM Shaded	HTM Unshaded	Load
1	2, Clear, 0.87, None,N,N	NW	2ft.	5.5ft.	45.0	0.0	45.0	29	60	2702 Btuh
2	2, Clear, 0.87, None,N,N	N	14.5f	7ft.	15.0	0.0	15.0	29	29	434 Btuh
3	2, Clear, 0.87, None,N,N	NW	12ft.	5.25f	45.0	0.0	45.0	29	60	2702 Btuh
4	2, Clear, 0.87, None,N,N	W	8.5ft.	7ft.	10.0	10.0	0.0	29	80	290 Btuh
5	2, Clear, 0.87, None,N,N	NE	2ft.	1.5ft.	6.0	0.0	6.0	29	60	360 Btuh
6	2, Clear, 0.87, None,N,N	SE	9.5ft.	7.5ft.	6.0	6.0	0.0	29	63	174 Btuh
7	2, Clear, 0.87, None,N,N	SE	2ft.	5.5ft.	30.0	17.2	12.8	29	63	1299 Btuh
8	2, Clear, 0.87, None,N,N	SE	2ft.	8ft.	30.0	2.2	27.8	29	63	1803 Btuh
9	2, Clear, 0.87, None,N,N	SW	1.5ft.	3.5ft.	3.0	0.1	2.9	29	63	185 Btuh
	Window Total				190 (sqft)					9948 Btuh

Walls	Type	R-Value/U-Value	Area(sqft)	HTM	Load
1	Frame - Wood - Adj	13.0/0.09	152.0	1.5	229 Btuh
2	Frame - Wood - Ext	13.0/0.09	1238.0	2.1	2582 Btuh
	Wall Total		1390 (sqft)		2812 Btuh

Doors	Type	Area (sqft)	HTM	Load
1	Insulated - Adjacent	20.0	9.8	196 Btuh
2	Insulated - Exterior	20.0	9.8	196 Btuh
3	Insulated - Exterior	20.0	9.8	196 Btuh
	Door Total	60 (sqft)		588 Btuh

Ceilings	Type/Color/Surface	R-Value	Area(sqft)	HTM	Load
1	Vented Attic/DarkShingle	30.0	1754.0	1.7	2905 Btuh
	Ceiling Total		1754 (sqft)		2905 Btuh

Floors	Type	R-Value	Size	HTM	Load
1	Slab On Grade	0.0	205 (ft(p))	0.0	0 Btuh
	Floor Total		205.0 (sqft)		0 Btuh

	Zone Envelope Subtotal:	16253 Btuh

Infiltration	Type	ACH	Volume(cuft)	CFM=	Load
	SensibleNatural	0.49	12000	98.0	1824 Btuh

Internal gain	Occupants	Btuh/occupant	Appliance	Load
	0	X 230 +	0	0 Btuh

Duct load	Average sealed, R6.0, Supply(Attic), Return(Attic) DGM = 0.00	0.0 Btuh
	Sensible Zone Load	**18077 Btuh**

Manual J Summer Calculations

Residential Load - Component Details (continued)

Model Home

Lake City, FL

Project Title:
TheSamuelModel601182

Class 3 Rating
Registration No. 0
Climate: North

1/23/2006

WHOLE HOUSE TOTALS

Whole House Totals for Cooling	**Sensible Envelope Load All Zones**	**18077 Btuh**
	Sensible Duct Load	0 Btuh
	Total Sensible Zone Loads	**18077 Btuh**
	Sensible ventilation	0 Btuh
	Blower	0 Btuh
	Total sensible gain	**18077 Btuh**
	Latent infiltration gain (for 54 gr. humidity difference)	3581 Btuh
	Latent ventilation gain	0 Btuh
	Latent duct gain	0 Btuh
	Latent occupant gain (0 people @ 200 Btuh per person)	0 Btuh
	Latent other gain	0 Btuh
	Latent total gain	**3581 Btuh**
	TOTAL GAIN	**21658 Btuh**

*Key: Window types (Pn - Number of panes of glass)
(SHGC - Shading coefficient of glass as SHGC numerical value or as clear or tint)
(U - Window U-Factor or 'DEF' for default)
(InSh - Interior shading device: none(N), Blinds(B), Draperies(D) or Roller Shades(R))
(ExSh - Exterior shading device: none(N) or numerical value)
(BS - Insect screen: none(N), Full(F) or Half(H))
(Ornt - compass orientation)

For Florida residences only

Residential Window Diversity

MidSummer

Model Home

Lake City, FL

Project Title:
TheSamuelModel601182

Class 3 Rating
Registration No. 0
Climate: North

1/23/2006

Weather data for: Gainesville - Defaults

Summer design temperature	92 F	Average window load for July	7946 Btuh
Summer setpoint	75 F	Peak window load for July	11491 Btu
Summer temperature difference	17 F	Excusion limit(130% of Ave.)	10329 Btu
Latitude	29 North	Window excursion (July)	1161 Btuh

WINDOW Average and Peak Loads

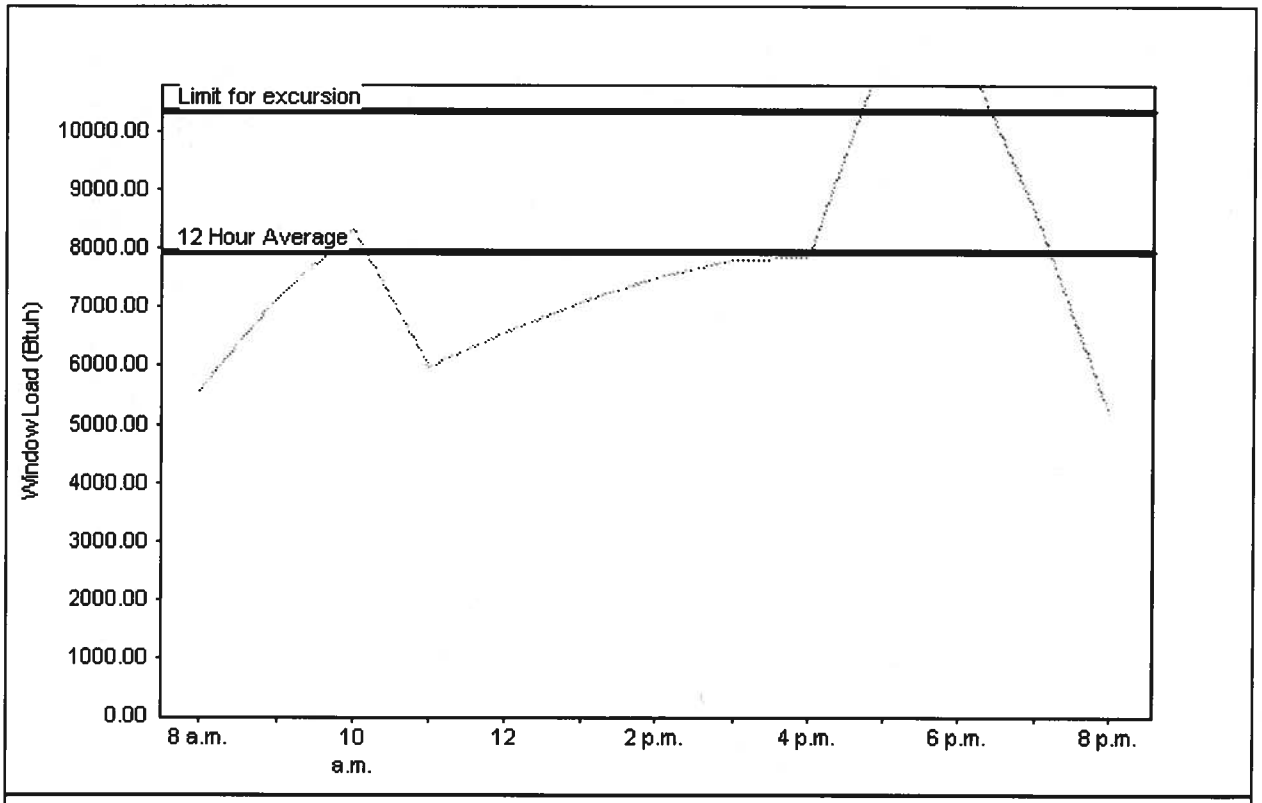

Total July Window Load(Radiation and conduction)

Warning: This application has glass areas that produce relatively large heat gains for part of the day. Variable air volume devices may be required to overcome spikes in solar gain for one or more rooms. A zoned system may be required or some rooms may require zone control.

EnergyGauge® System Sizing for Florida residences only
PREPARED BY: _____
DATE: _____

Project Information for:	L139397		
Builder:	CORNERSTONE DEV.	Date:	1/16/2006
Lot:	LOT 24 COUNTRY SIDE	Start Number:	**1126**
Subdivision:	N/A		
County or City:	COLUMBIA COUNTY		
Truss Page Count:	29		

Truss Design Load Information (UNO) Design Program: MiTek 5.2 / 6.2

Gravity		**Wind**		**Building Code:**	**FBC2004**
Roof (psf):	**42**	Wind Standard:	**ASCE 7-02**		
Floor (psf):	55	Wind Speed (mph):	**110**		

Note: See individual truss drawings for special loading conditions

Building Designer, responsible for Structural Engineering: (See attached)

ZECHER, BRYAN C. CBC 054575

Address: PO BOX 815

ALACHUA,FL 32615 Designer: **143**

Truss Design Engineer: Thomas, E. Miller, P.E., 56877 - Byron K. Anderson, PE FL 60987

Company: Structural Engineering and Inspections, Inc. EB 9196

Address 16105 N. Florida Ave, Ste B, Lutz, FL 33549

Notes:

1. Truss Design Engineer is responsible for the individual trusses as components only.
2. Determination as to the suitability and use of these truss components for the structure is the responsibility of the Building Designer of Record, as defined in ANSI/TPI
3. The seal date shown on the individual truss component drawings must match the seal date on this index sheet.
4. Trusses designed for veritcal loads only, unless noted otherwise.

#	Truss ID	Dwg. #	Seal Date	#	Truss ID	Dwg. #	Seal Date
1	CJ1	116061126	1/16/2006				
2	CJ3	116061127	1/16/2006				
3	CJ3A	116061128	1/16/2006				
4	CJ5	116061129	1/16/2006				
5	CJ5A	116061130	1/16/2006				
6	EJ7	116061131	1/16/2006				
7	EJ7A	116061132	1/16/2006				
8	HJ7	116061133	1/16/2006				
9	HJ7A	116061134	1/16/2006				
10	T01	116061135	1/16/2006				
11	T01G	116061136	1/16/2006				
12	T02	116061137	1/16/2006				
13	T03T	116061138	1/16/2006				
14	T04T	116061139	1/16/2006				
15	T05T	116061140	1/16/2006				
16	T06T	116061141	1/16/2006				
17	T07T	116061142	1/16/2006				
18	T08	116061143	1/16/2006				
19	T09	116061144	1/16/2006				
20	T10	116061145	1/16/2006				
21	T11	116061146	1/16/2006				
22	T12	116061147	1/16/2006				
23	T13	116061148	1/16/2006				
24	T14	116061149	1/16/2006				
25	T15	116061150	1/16/2006				
26	T16	116061151	1/16/2006				
27	T17	116061152	1/16/2006				
28	T18	116061153	1/16/2006				
29	T18G	116061154	1/16/2006				

JAN 1 6 2006

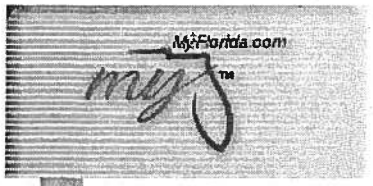

10:00:13 AM

Licensee Details

Licensee Information

Name:	**ZECHER, BRYAN CHRISTIAN (Primary Name)** **BRYAN ZECHER CONSTRUCTION INC (DBA**
Main Address:	**P O BOX 815** **LAKE CITY, Florida 32056**
Lic. Location:	**465 NW ORANGE ST** **LAKE CITY, FL 32055 United States** **Columbia**

License Information

License Type:	**Certified Building Contractor**
Rank:	**Cert Building**
License Number:	**CBC054575**
Status:	**Current, Active**
Licensure Date:	**12/05/1991**
Expires:	**08/31/2006**

Special Qualifications	Effective Date
Bldg Code Core Course Credit	
Qualified Business License Required	04/13/2004

View Related License Information

View License Complaint

New Search

JANUARY 16, 2006 TRUSS DESIGN ENGINEER:
THOMAS E. MILLER PE 56877, BYRON K. ANDERSON PE 60987
STRUCTURAL ENGINEERING AND INSPECTIONS INC. EB 9196
16105 N. FLORIDA AVE. STE B, LUTZ, FL 33549

Dwg.#0116061126

Job	Truss	Truss Type	Qty	Ply	BRYAN ZECHER- LOT 24 CSE
L139397	CJ1	MONO TRUSS	2	1	Job Reference (optional)

Builders FirstSource, Lake City, Fl 32055 — 6.200 s Jul 13 2005 MiTek Industries, Inc. Fri Jan 13 09:16:31 2006 Page 1

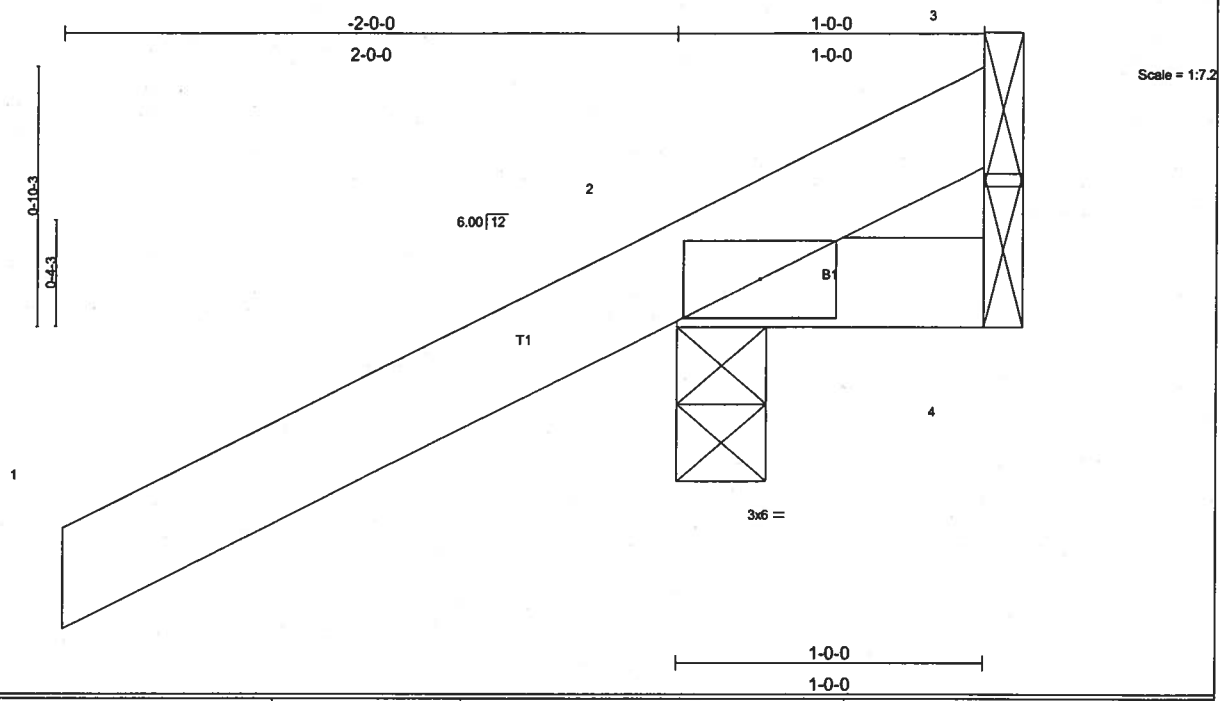

LOADING (psf)		SPACING	2-0-0	CSI		DEFL	in	(loc)	l/defl	L/d	PLATES	GRIP
TCLL	20.0	Plates Increase	1.25	TC	0.28	Vert(LL)	-0.00	2	>999	240	MT20	244/190
TCDL	7.0	Lumber Increase	1.25	BC	0.01	Vert(TL)	-0.00	2	>999	180		
BCLL	10.0	Rep Stress Incr	YES	WB	0.00	Horz(TL)	0.00	3	n/a	n/a		
BCDL	5.0	Code FBC2004/TPI2002		(Matrix)							Weight: 7 lb	

LUMBER
TOP CHORD 2 X 4 SYP No.2
BOT CHORD 2 X 4 SYP No.2

BRACING
TOP CHORD Structural wood sheathing directly applied or 1-0-0 oc purlins.
BOT CHORD Rigid ceiling directly applied or 10-0-0 oc bracing.

REACTIONS (lb/size) 2=266/0-3-8, 4=14/Mechanical, 3=-90/Mechanical
Max Horz 2=87(load case 5)
Max Uplift2=-274(load case 5), 3=-90(load case 1)
Max Grav 2=266(load case 1), 4=14(load case 1), 3=127(load case 5)

FORCES (lb) - Maximum Compression/Maximum Tension
TOP CHORD 1-2=0/47, 2-3=-69/75
BOT CHORD 2-4=0/0

NOTES
1) Wind: ASCE 7-02; 110mph (3-second gust); h=20ft; TCDL=4.2psf; BCDL=3.0psf; Category II; Exp B; enclosed; MWFRS gable end zone and C-C Exterior(2) zone; Lumber DOL=1.60 plate grip DOL=1.60. This truss is designed for C-C for members and forces, and for MWFRS for reactions specified.
2) Refer to girder(s) for truss to truss connections.
3) Provide mechanical connection (by others) of truss to bearing plate capable of withstanding 274 lb uplift at joint 2 and 90 lb uplift at joint 3.

LOAD CASE(S) Standard

JANUARY 16, 2006 TRUSS DESIGN ENGINEER:
THOMAS E. MILLER PE 56877, BYRON K. ANDERSON PE 60987
STRUCTURAL ENGINEERING AND INSPECTIONS, INC. EB 9196
16105 N. FLORIDA AVE. STE B, LUTZ, FL 33549

Dwg.#0116061127

Job	Truss	Truss Type	Qty	Ply	BRYAN ZECHER- LOT 24 CSE
L139397	CJ3	MONO TRUSS	2	1	Job Reference (optional)

Builders FirstSource, Lake City, Fl 32055 — 6.200 s Jul 13 2005 MiTek Industries, Inc. Fri Jan 13 09:16:32 2006 Page 1

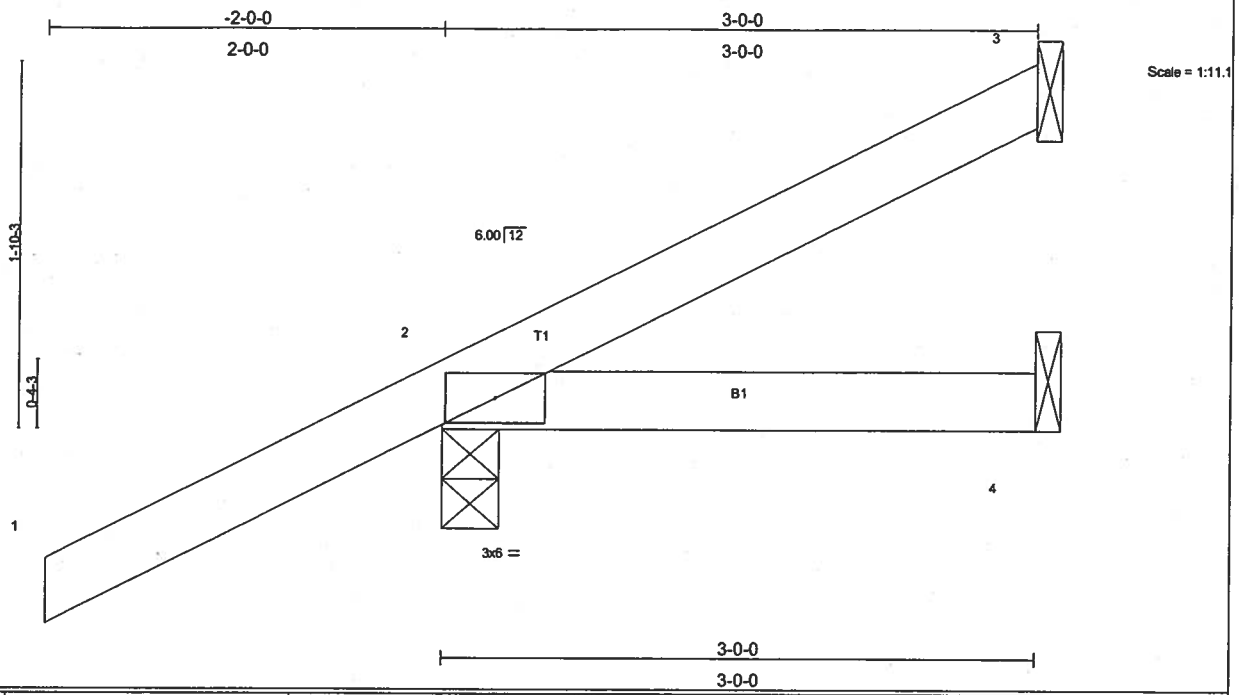

LOADING (psf)		SPACING	2-0-0	CSI		DEFL	in	(loc)	l/defl	L/d	PLATES	GRIP
TCLL	20.0	Plates Increase	1.25	TC	0.29	Vert(LL)	-0.00	2-4	>999	240	MT20	244/190
TCDL	7.0	Lumber Increase	1.25	BC	0.06	Vert(TL)	-0.01	2-4	>999	180		
BCLL	10.0	Rep Stress Incr	YES	WB	0.00	Horz(TL)	-0.00	3	n/a	n/a		
BCDL	5.0	Code FBC2004/TPI2002		(Matrix)							Weight: 13 lb	

LUMBER
TOP CHORD 2 X 4 SYP No.2
BOT CHORD 2 X 4 SYP No.2

BRACING
TOP CHORD Structural wood sheathing directly applied or 3-0-0 oc purlins.
BOT CHORD Rigid ceiling directly applied or 10-0-0 oc bracing.

REACTIONS (lb/size) 3=31/Mechanical, 2=278/0-3-8, 4=42/Mechanical
Max Horz 2=132(load case 5)
Max Uplift3=-28(load case 6), 2=-203(load case 5)

FORCES (lb) - Maximum Compression/Maximum Tension
TOP CHORD 1-2=0/47, 2-3=-57/7
BOT CHORD 2-4=0/0

NOTES
1) Wind: ASCE 7-02; 110mph (3-second gust); h=20ft; TCDL=4.2psf; BCDL=3.0psf; Category II; Exp B; enclosed; MWFRS gable end zone and C-C Exterior(2) zone; Lumber DOL=1.60 plate grip DOL=1.60. This truss is designed for C-C for members and forces, and for MWFRS for reactions specified.
2) Refer to girder(s) for truss to truss connections.
3) Provide mechanical connection (by others) of truss to bearing plate capable of withstanding 28 lb uplift at joint 3 and 203 lb uplift at joint 2.

LOAD CASE(S) Standard

JANUARY 16, 2006 TRUSS DESIGN ENGINEER:
THOMAS E. MILLER PE 56877, BYRON K. ANDERSON PE 60987
STRUCTURAL ENGINEERING AND INSPECTIONS, INC. EB 9196
16105 N. FLORIDA AVE. STE B, LUTZ, FL 33549

Dwg.#0116061128

Job	Truss	Truss Type	Qty	Ply	BRYAN ZECHER- LOT 24 CSE
L139397	CJ3A	MONO SCISSOR	4	1	Job Reference (optional)

Builders FirstSource, Lake City, Fl 32055 — 6.200 s Jul 13 2005 MiTek Industries, Inc. Fri Jan 13 09:16:32 2006 Page 1

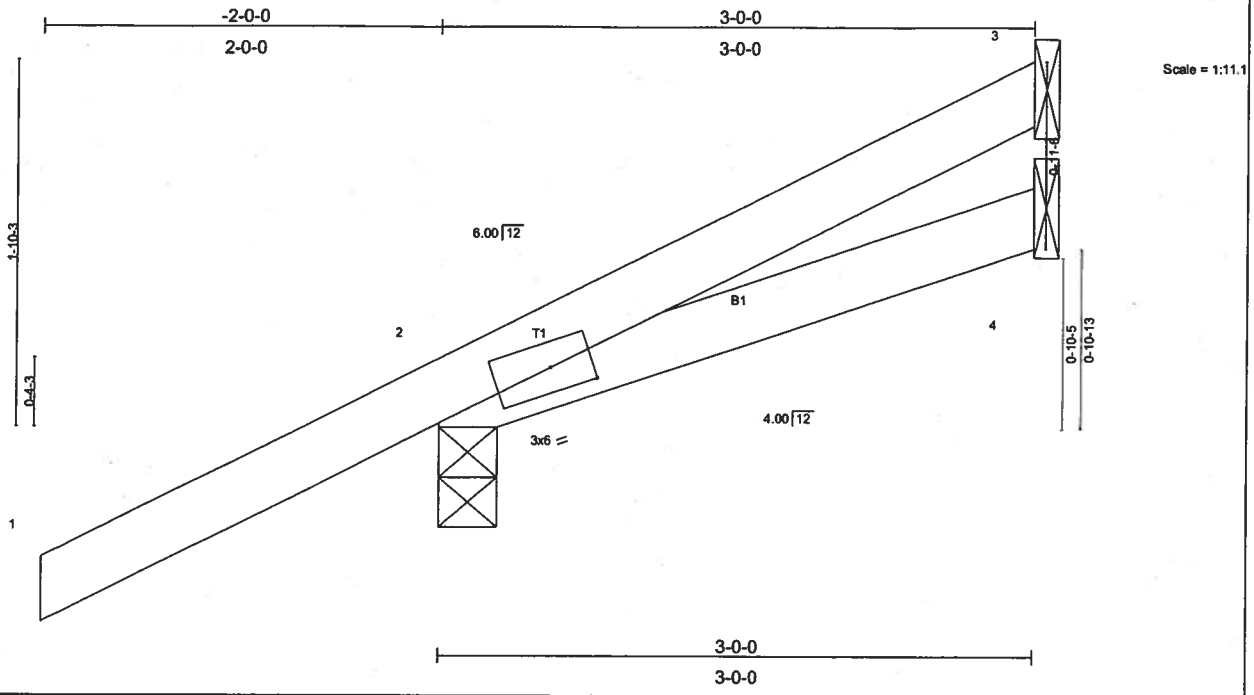

Plate Offsets (X,Y): [2:0-2-8,0-1-8]

LOADING (psf)		SPACING	2-0-0	CSI		DEFL	in	(loc)	l/defl	L/d	PLATES	GRIP
TCLL	20.0	Plates Increase	1.25	TC	0.29	Vert(LL)	-0.00	2-4	>999	240	MT20	244/190
TCDL	7.0	Lumber Increase	1.25	BC	0.06	Vert(TL)	-0.01	2-4	>999	180		
BCLL	10.0	Rep Stress Incr	YES	WB	0.00	Horz(TL)	-0.00	3	n/a	n/a		
BCDL	5.0	Code FBC2004/TPI2002		(Matrix)							Weight: 13 lb	

LUMBER
TOP CHORD 2 X 4 SYP No.2
BOT CHORD 2 X 4 SYP No.2

BRACING
TOP CHORD Structural wood sheathing directly applied or 3-0-0 oc purlins.
BOT CHORD Rigid ceiling directly applied or 10-0-0 oc bracing.

REACTIONS (lb/size) 3=31/Mechanical, 2=278/0-3-8, 4=42/Mechanical
Max Horz 2=131(load case 5)
Max Uplift3=-29(load case 6), 2=-201(load case 5)

FORCES (lb) - Maximum Compression/Maximum Tension
TOP CHORD 1-2=0/46, 2-3=-58/8
BOT CHORD 2-4=-11/11

NOTES
1) Wind: ASCE 7-02; 110mph (3-second gust); h=20ft; TCDL=4.2psf; BCDL=3.0psf; Category II; Exp B; enclosed; MWFRS gable end zone and C-C Exterior(2) zone; Lumber DOL=1.60 plate grip DOL=1.60. This truss is designed for C-C for members and forces, and for MWFRS for reactions specified.
2) Refer to girder(s) for truss to truss connections.
3) Bearing at joint(s) 2 considers parallel to grain value using ANSI/TPI 1 angle to grain formula. Building designer should verify capacity of bearing surface.
4) Provide mechanical connection (by others) of truss to bearing plate capable of withstanding 29 lb uplift at joint 3 and 201 lb uplift at joint 2.

LOAD CASE(S) Standard

JANUARY 16, 2006 TRUSS DESIGN ENGINEER:
THOMAS E. MILLER PE 56877, BYRON K. ANDERSON PE 60987
STRUCTURAL ENGINEERING AND INSPECTIONS, INC. EB 9196
16105 N. FLORIDA AVE. STE B, LUTZ, FL 33549

Dwg.#0116061129

Job	Truss	Truss Type	Qty	Ply	BRYAN ZECHER- LOT 24 CSE
L189397	CJ5	MONO TRUSS	2	1	Job Reference (optional)

Builders FirstSource, Lake City, Fl 32055 — 6.200 s Jul 13 2005 MiTek Industries, Inc. Fri Jan 13 09:16:32 2006 Page 1

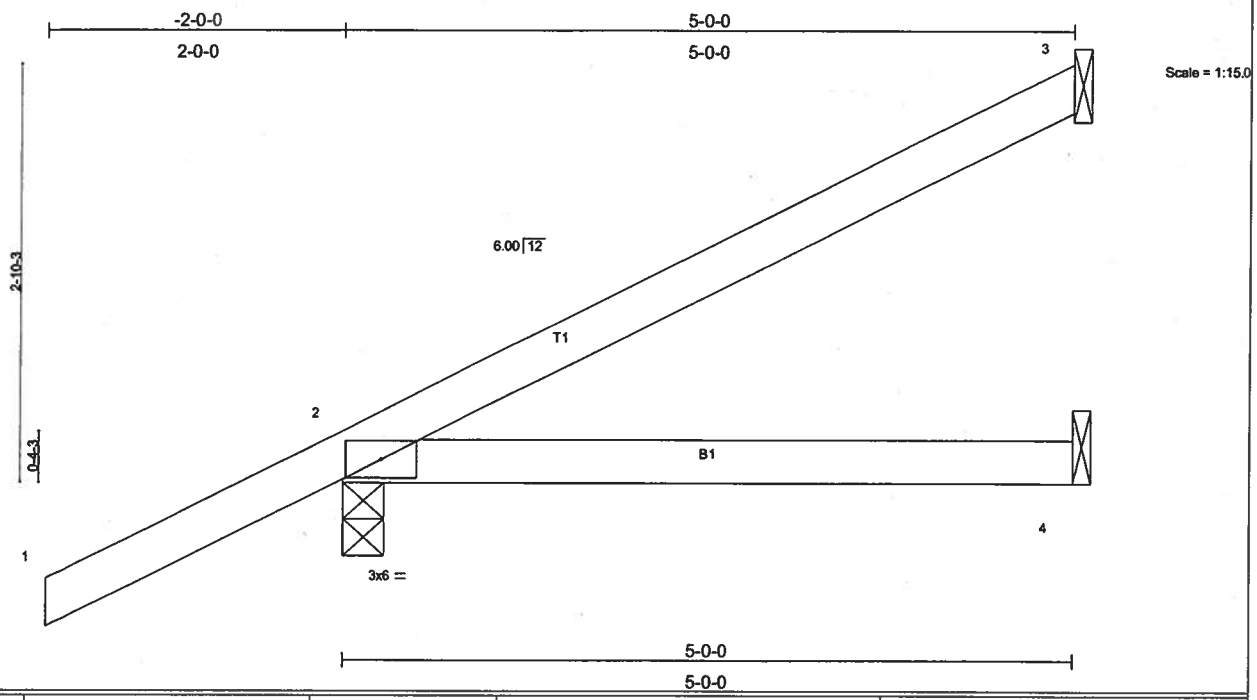

LOADING (psf)		SPACING 2-0-0		CSI		DEFL	in	(loc)	l/defl	L/d	PLATES	GRIP
TCLL	20.0	Plates Increase	1.25	TC	0.29	Vert(LL)	-0.03	2-4	>999	240	MT20	244/190
TCDL	7.0	Lumber Increase	1.25	BC	0.16	Vert(TL)	-0.05	2-4	>999	180		
BCLL	10.0	Rep Stress Incr	YES	WB	0.00	Horz(TL)	-0.00	3	n/a	n/a		
BCDL	5.0	Code FBC2004/TPI2002		(Matrix)							Weight: 19 lb	

LUMBER
TOP CHORD 2 X 4 SYP No.2
BOT CHORD 2 X 4 SYP No.2

BRACING
TOP CHORD Structural wood sheathing directly applied or 5-0-0 oc purlins.
BOT CHORD Rigid ceiling directly applied or 10-0-0 oc bracing.

REACTIONS (lb/size) 3=103/Mechanical, 2=343/0-3-8, 4=72/Mechanical
Max Horz 2=178(load case 5)
Max Uplift3=-87(load case 5), 2=-199(load case 5)

FORCES (lb) - Maximum Compression/Maximum Tension
TOP CHORD 1-2=0/47, 2-3=-88/36
BOT CHORD 2-4=0/0

NOTES
1) Wind: ASCE 7-02; 110mph (3-second gust); h=20ft; TCDL=4.2psf; BCDL=3.0psf; Category II; Exp B; enclosed; MWFRS gable end zone and C-C Exterior(2) zone; Lumber DOL=1.60 plate grip DOL=1.60. This truss is designed for C-C for members and forces, and for MWFRS for reactions specified.
2) Refer to girder(s) for truss to truss connections.
3) Provide mechanical connection (by others) of truss to bearing plate capable of withstanding 87 lb uplift at joint 3 and 199 lb uplift at joint 2.

LOAD CASE(S) Standard

JANUARY 16, 2006 TRUSS DESIGN ENGINEER:
THOMAS E. MILLER PE 56877, BYRON K. ANDERSON PE 60987
STRUCTURAL ENGINEERING AND INSPECTIONS, INC. EB 9196
16105 N. FLORIDA AVE. STE B, LUTZ, FL 33549

Dwg.#0116061130

Job	Truss	Truss Type	Qty	Ply	BRYAN ZECHER- LOT 24 CSE
L139397	CJ5A	MONO SCISSOR	2	1	Job Reference (optional)

Builders FirstSource, Lake City, Fl 32055

6.200 s Jul 13 2005 MiTek Industries, Inc. Fri Jan 13 09:16:33 2006 Page 1

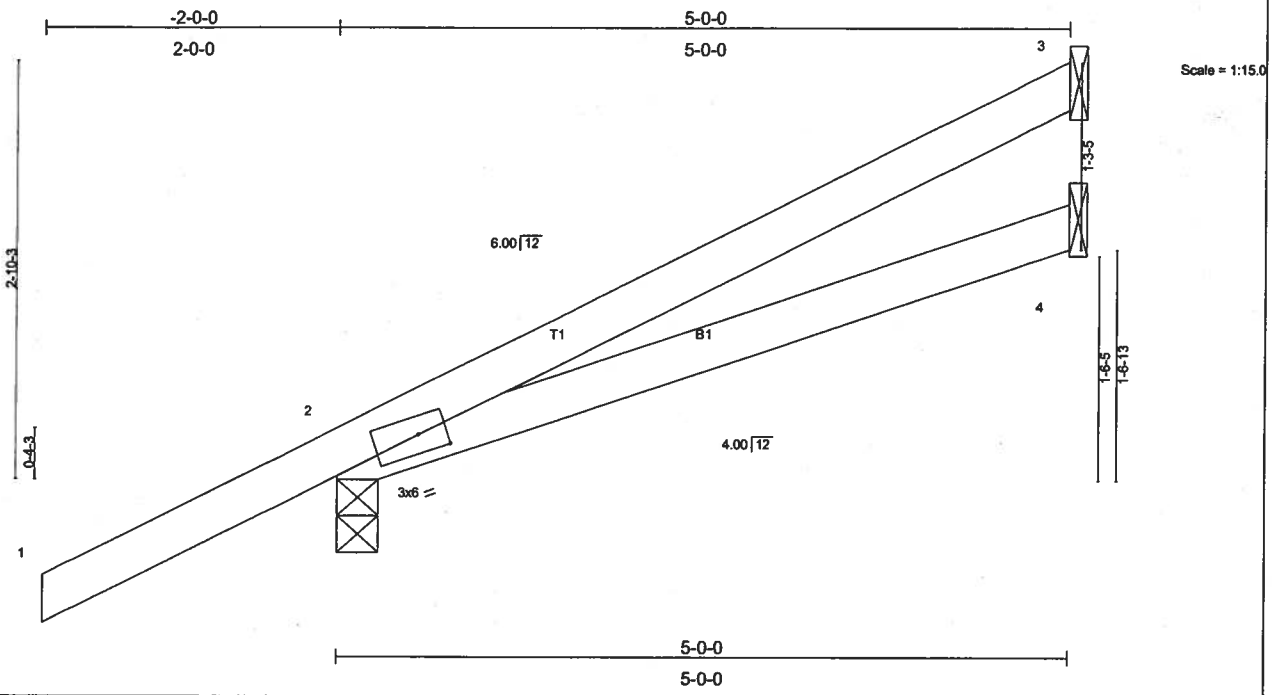

Plate Offsets (X,Y): [2:0-2-4,0-1-8]

LOADING (psf)		SPACING	2-0-0	CSI		DEFL	in	(loc)	l/defl	L/d	PLATES	GRIP
TCLL	20.0	Plates Increase	1.25	TC	0.29	Vert(LL)	-0.03	2-4	>999	240	MT20	244/190
TCDL	7.0	Lumber Increase	1.25	BC	0.16	Vert(TL)	-0.05	2-4	>999	180		
BCLL	10.0	Rep Stress Incr	YES	WB	0.00	Horz(TL)	-0.00	3	n/a	n/a		
BCDL	5.0	Code FBC2004/TPI2002		(Matrix)							Weight: 20 lb	

LUMBER
TOP CHORD 2 X 4 SYP No.2
BOT CHORD 2 X 4 SYP No.2

BRACING
TOP CHORD Structural wood sheathing directly applied or 5-0-0 oc purlins.
BOT CHORD Rigid ceiling directly applied or 10-0-0 oc bracing.

REACTIONS (lb/size) 3=103/Mechanical, 2=343/0-3-8, 4=72/Mechanical
Max Horz 2=177(load case 5)
Max Uplift3=-89(load case 5), 2=-198(load case 5)

FORCES (lb) - Maximum Compression/Maximum Tension
TOP CHORD 1-2=0/46, 2-3=-90/36
BOT CHORD 2-4=-18/18

NOTES
1) Wind: ASCE 7-02; 110mph (3-second gust); h=20ft; TCDL=4.2psf; BCDL=3.0psf; Category II; Exp B; enclosed; MWFRS gable end zone and C-C Exterior(2) zone; Lumber DOL=1.60 plate grip DOL=1.60. This truss is designed for C-C for members and forces, and for MWFRS for reactions specified.
2) Refer to girder(s) for truss to truss connections.
3) Bearing at joint(s) 2 considers parallel to grain value using ANSI/TPI 1 angle to grain formula. Building designer should verify capacity of bearing surface.
4) Provide mechanical connection (by others) of truss to bearing plate capable of withstanding 89 lb uplift at joint 3 and 198 lb uplift at joint 2.

LOAD CASE(S) Standard

JANUARY 16, 2006 TRUSS DESIGN ENGINEER:
THOMAS E. MILLER PE 56877, BYRON K. ANDERSON PE 60987
STRUCTURAL ENGINEERING AND INSPECTIONS, INC. EB 9196
16105 N. FLORIDA AVE. STE B, LUTZ, FL 33549

Dwg.#0116061131

Job	Truss	Truss Type	Qty	Ply	BRYAN ZECHER- LOT 24 CSE
L139397	EJ7	MONO TRUSS	15	1	Job Reference (optional)

Builders FirstSource, Lake City, Fl 32055 — 6.200 s Jul 13 2005 MiTek Industries, Inc. Fri Jan 13 09:16:33 2006 Page 1

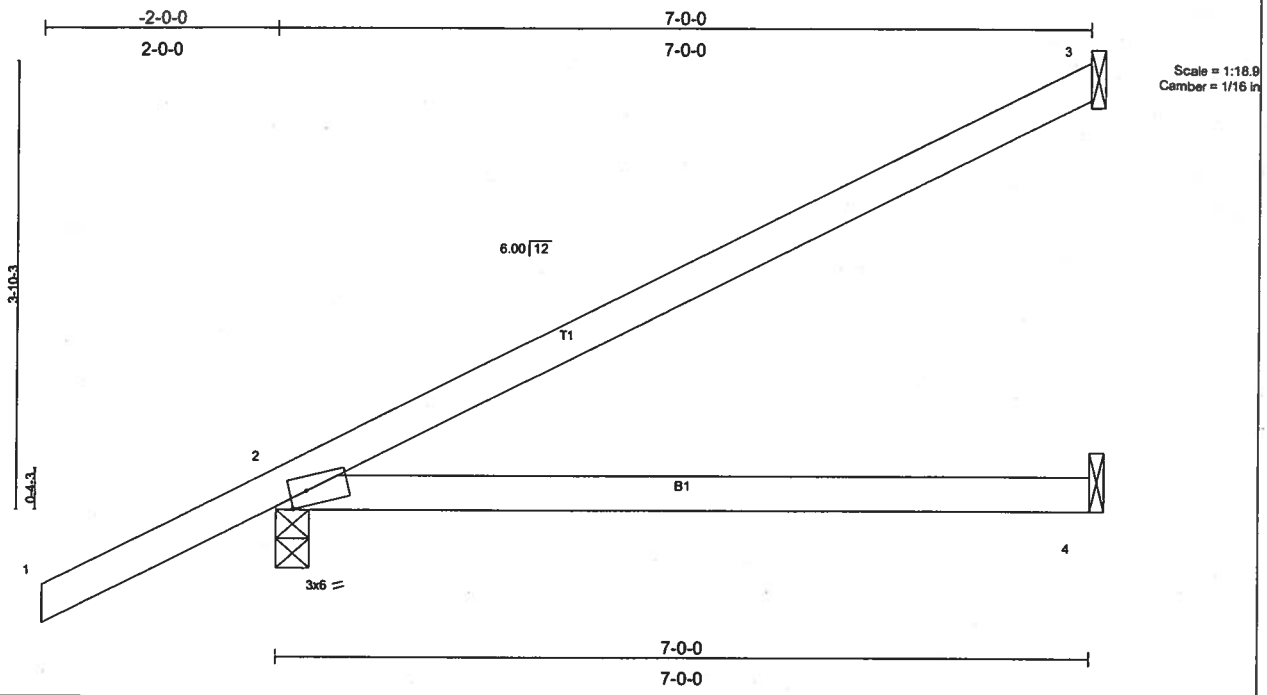

Plate Offsets (X,Y): [2:0-1-12,Edge]

LOADING (psf)		SPACING	2-0-0	CSI		DEFL	in	(loc)	l/defl	L/d	PLATES	GRIP
TCLL	20.0	Plates Increase	1.25	TC	0.48	Vert(LL)	-0.12	2-4	>664	240	MT20	244/190
TCDL	7.0	Lumber Increase	1.25	BC	0.35	Vert(TL)	-0.21	2-4	>397	180		
BCLL	10.0	Rep Stress Incr	YES	WB	0.00	Horz(TL)	-0.00	3	n/a	n/a		
BCDL	5.0	Code FBC2004/TPI2002		(Matrix)							Weight: 26 lb	

LUMBER
TOP CHORD 2 X 4 SYP No.2
BOT CHORD 2 X 4 SYP No.2

BRACING
TOP CHORD Structural wood sheathing directly applied or 6-0-0 oc purlins.
BOT CHORD Rigid ceiling directly applied or 10-0-0 oc bracing.

REACTIONS (lb/size) 3=162/Mechanical, 2=419/0-3-8, 4=104/Mechanical
Max Horz 2=224(load case 5)
Max Uplift3=-134(load case 5), 2=-210(load case 5)

FORCES (lb) - Maximum Compression/Maximum Tension
TOP CHORD 1-2=0/47, 2-3=-119/58
BOT CHORD 2-4=0/0

NOTES
1) Wind: ASCE 7-02; 110mph (3-second gust); h=20ft; TCDL=4.2psf; BCDL=3.0psf; Category II; Exp B; enclosed; MWFRS gable end zone and C-C Exterior(2) zone; Lumber DOL=1.60 plate grip DOL=1.60. This truss is designed for C-C for members and forces, and for MWFRS for reactions specified.
2) Refer to girder(s) for truss to truss connections.
3) Provide mechanical connection (by others) of truss to bearing plate capable of withstanding 134 lb uplift at joint 3 and 210 lb uplift at joint 2.

LOAD CASE(S) Standard

JANUARY 16, 2006 TRUSS DESIGN ENGINEER:
THOMAS E. MILLER PE 56877, BYRON K. ANDERSON PE 60987
STRUCTURAL ENGINEERING AND INSPECTIONS, INC. EB 9196
16105 N. FLORIDA AVE. STE B, LUTZ, FL 33549

Dwg.#0116061132

Job	Truss	Truss Type	Qty	Ply	BRYAN ZECHER- LOT 24 CSE
L139397	EJ7A	SPECIAL	8	1	Job Reference (optional)

Builders FirstSource, Lake City, Fl 32055 — 6.200 s Jul 13 2005 MiTek Industries, Inc. Fri Jan 13 09:16:34 2006 Page 1

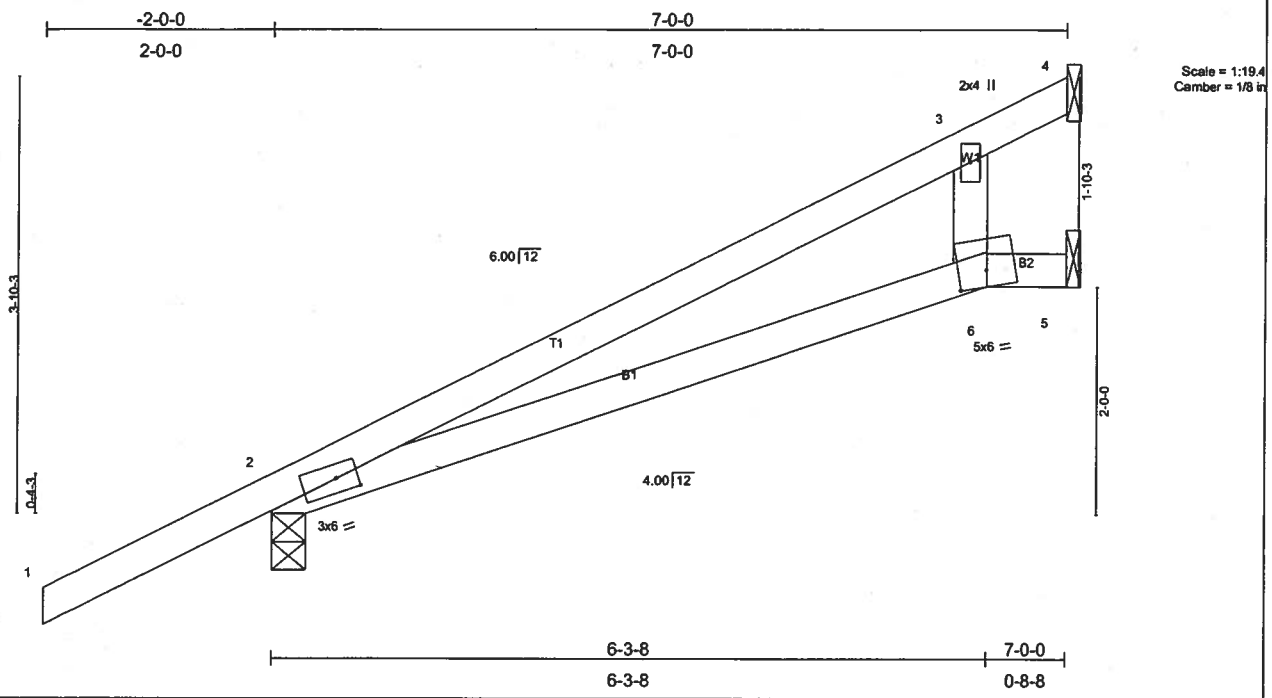

Plate Offsets (X,Y): [2:0-2-4,0-1-8], [6:0-3-0,0-1-12]

LOADING (psf)		SPACING	2-0-0	CSI		DEFL	in	(loc)	l/defl	L/d	PLATES	GRIP
TCLL	20.0	Plates Increase	1.25	TC	0.38	Vert(LL)	-0.15	2-6	>554	240	MT20	244/190
TCDL	7.0	Lumber Increase	1.25	BC	0.40	Vert(TL)	-0.24	2-6	>338	180		
BCLL	10.0	Rep Stress Incr	YES	WB	0.08	Horz(TL)	0.03	5	n/a	n/a		
BCDL	5.0	Code FBC2004/TPI2002		(Matrix)							Weight: 28 lb	

LUMBER
TOP CHORD 2 X 4 SYP No.2
BOT CHORD 2 X 4 SYP No.2
WEBS 2 X 4 SYP No.3

BRACING
TOP CHORD Structural wood sheathing directly applied or 6-0-0 oc purlins.
BOT CHORD Rigid ceiling directly applied or 6-0-0 oc bracing.

REACTIONS (lb/size) 4=39/Mechanical, 2=419/0-3-8, 5=228/Mechanical
Max Horz 2=223(load case 5)
Max Uplift2=-209(load case 5), 5=-179(load case 5)
Max Grav 4=52(load case 5), 2=419(load case 1), 5=228(load case 1)

FORCES (lb) - Maximum Compression/Maximum Tension
TOP CHORD 1-2=0/46, 2-3=-104/32, 3-4=-0/31
BOT CHORD 2-6=-39/33, 5-6=-1/2
WEBS 3-6=-141/310

NOTES
1) Wind: ASCE 7-02; 110mph (3-second gust); h=20ft; TCDL=4.2psf; BCDL=3.0psf; Category II; Exp B; enclosed; MWFRS gable end zone and C-C Exterior(2) zone; Lumber DOL=1.60 plate grip DOL=1.60. This truss is designed for C-C for members and forces, and for MWFRS for reactions specified.
2) Refer to girder(s) for truss to truss connections.
3) Bearing at joint(s) 2 considers parallel to grain value using ANSI/TPI 1 angle to grain formula. Building designer should verify capacity of bearing surface.
4) Provide mechanical connection (by others) of truss to bearing plate capable of withstanding 209 lb uplift at joint 2 and 179 lb uplift at joint 5.

LOAD CASE(S) Standard

JANUARY 16, 2006 TRUSS DESIGN ENGINEER:
THOMAS E. MILLER PE 56877, BYRON K. ANDERSON PE 60987
STRUCTURAL ENGINEERING AND INSPECTIONS, INC. EB 9196
16105 N. FLORIDA AVE. STE B, LUTZ, FL 33549

Dwg.#0116061133

Job	Truss	Truss Type	Qty	Ply	BRYAN ZECHER- LOT 24 CSE
L139397	HJ7	MONO TRUSS	1	1	Job Reference (optional)

Builders FirstSource, Lake City, Fl 32055 — 6.200 s Jul 13 2005 MiTek Industries, Inc. Fri Jan 13 09:16:35 2006 Page 1

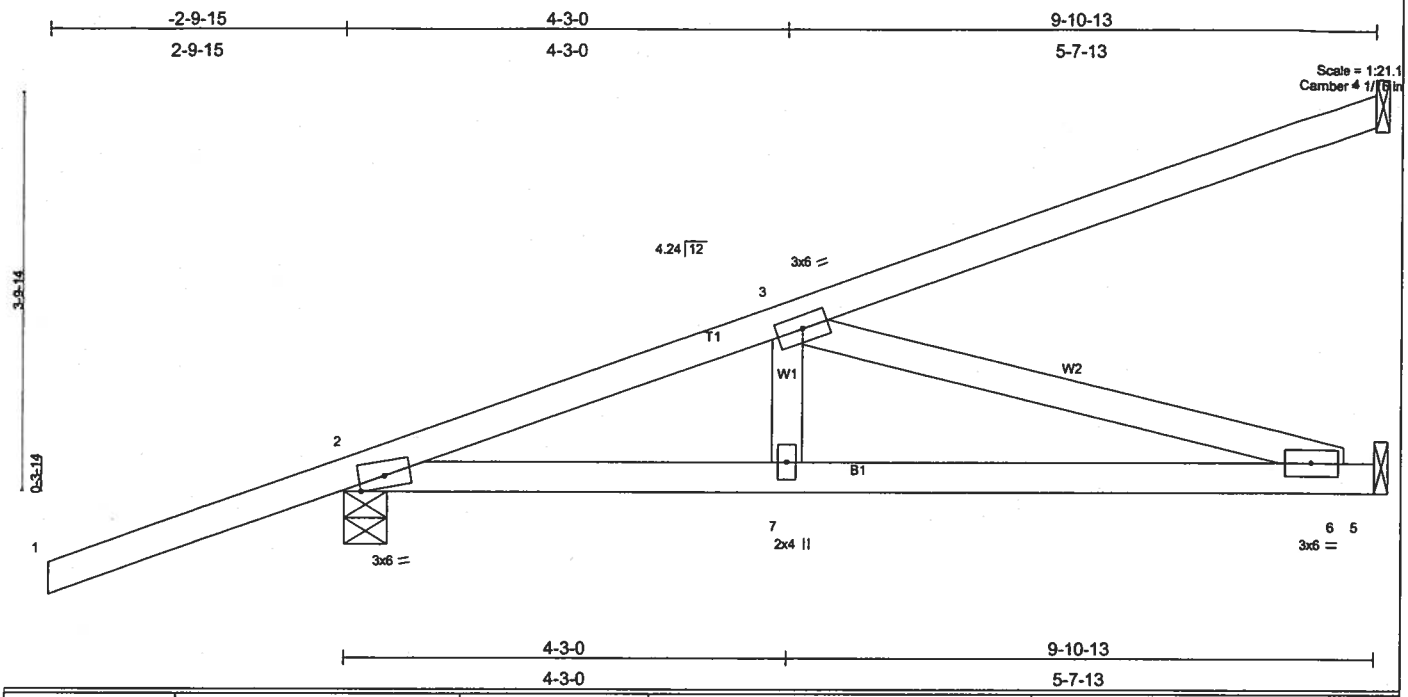

LOADING (psf)		SPACING	2-0-0	CSI		DEFL	in	(loc)	l/defl	L/d	PLATES	GRIP
TCLL	20.0	Plates Increase	1.25	TC	0.61	Vert(LL)	-0.10	6-7	>999	240	MT20	244/190
TCDL	7.0	Lumber Increase	1.25	BC	0.57	Vert(TL)	-0.17	6-7	>686	180		
BCLL	10.0	Rep Stress Incr	NO	WB	0.49	Horz(TL)	0.01	5	n/a	n/a		
BCDL	5.0	Code FBC2004/TPI2002		(Matrix)							Weight: 45 lb	

LUMBER
TOP CHORD 2 X 4 SYP No.2
BOT CHORD 2 X 4 SYP No.2
WEBS 2 X 4 SYP No.3

BRACING
TOP CHORD Structural wood sheathing directly applied or 6-0-0 oc purlins.
BOT CHORD Rigid ceiling directly applied or 10-0-0 oc bracing.

REACTIONS (lb/size) 4=269/Mechanical, 2=532/0-4-15, 5=377/Mechanical
Max Horz 2=269(load case 2)
Max Uplift4=-231(load case 2), 2=-278(load case 2), 5=-63(load case 2)

FORCES (lb) - Maximum Compression/Maximum Tension
TOP CHORD 1-2=0/50, 2-3=-888/121, 3-4=-105/66
BOT CHORD 2-7=-309/823, 6-7=-309/823, 5-6=0/0
WEBS 3-7=0/180, 3-6=-856/321

NOTES
1) Wind: ASCE 7-02; 110mph (3-second gust); h=20ft; TCDL=4.2psf; BCDL=3.0psf; Category II; Exp B; enclosed; MWFRS gable end zone; Lumber DOL=1.60 plate grip DOL=1.60.
2) Refer to girder(s) for truss to truss connections.
3) Provide mechanical connection (by others) of truss to bearing plate capable of withstanding 231 lb uplift at joint 4, 278 lb uplift at joint 2 and 63 lb uplift at joint 5.
4) In the LOAD CASE(S) section, loads applied to the face of the truss are noted as front (F) or back (B).

LOAD CASE(S) Standard
1) Regular: Lumber Increase=1.25, Plate Increase=1.25
Uniform Loads (plf)
Vert: 1-2=-54
Trapezoidal Loads (plf)
Vert: 2=-3(F=26, B=26)-to-4=-134(F=-40, B=-40), 2=-0(F=15, B=15)-to-5=-74(F=-22, B=-22)

JANUARY 16, 2006 TRUSS DESIGN ENGINEER:
THOMAS E. MILLER PE 56877, BYRON K. ANDERSON PE 60987
STRUCTURAL ENGINEERING AND INSPECTIONS, INC. EB 9196
16105 N. FLORIDA AVE. STE B, LUTZ, FL 33549

Dwg.#0116061134

Job	Truss	Truss Type	Qty	Ply	BRYAN ZECHER- LOT 24 CSE
L139397	HJ7A	SPECIAL	1	1	Job Reference (optional)

Builders FirstSource, Lake City, Fl 32055 — 6.200 s Jul 13 2005 MiTek Industries, Inc. Fri Jan 13 09:16:35 2006 Page 1

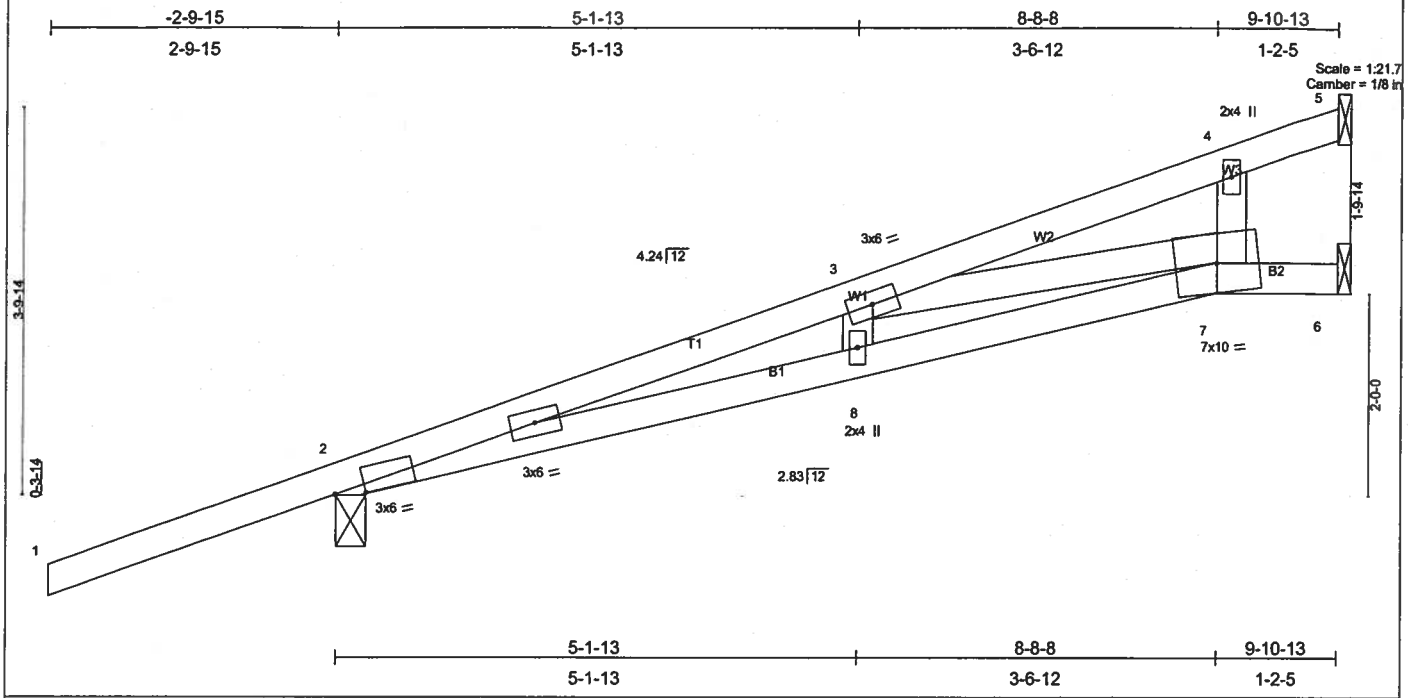

Plate Offsets (X,Y): [2:0-3-8,0-0-10]

LOADING (psf)		SPACING	2-0-0	CSI		DEFL	in	(loc)	l/defl	L/d	PLATES	GRIP
TCLL	20.0	Plates Increase	1.25	TC	0.69	Vert(LL)	-0.19	7-8	>601	240	MT20	244/190
TCDL	7.0	Lumber Increase	1.25	BC	0.93	Vert(TL)	-0.31	7-8	>375	180		
BCLL	10.0	Rep Stress Incr	NO	WB	0.47	Horz(TL)	0.07	6	n/a	n/a		
BCDL	5.0	Code FBC2004/TPI2002		(Matrix)							Weight: 43 lb	

LUMBER
TOP CHORD 2 X 4 SYP No.2
BOT CHORD 2 X 4 SYP No.2
WEBS 2 X 4 SYP No.3

BRACING
TOP CHORD Structural wood sheathing directly applied or 4-5-5 oc purlins.
BOT CHORD Rigid ceiling directly applied or 7-2-2 oc bracing.

REACTIONS (lb/size) 5=356/Mechanical, 2=527/0-3-8, 6=294/Mechanical
Max Horz 2=268(load case 2)
Max Uplift5=-157(load case 2), 2=-272(load case 2), 6=-140(load case 2)

FORCES (lb) - Maximum Compression/Maximum Tension
TOP CHORD 1-2=0/49, 2-3=-1850/514, 3-4=-114/0, 4-5=-59/114
BOT CHORD 2-8=-670/1761, 7-8=-672/1757, 6-7=0/0
WEBS 3-8=0/197, 3-7=-1694/669, 4-7=0/138

NOTES
1) Wind: ASCE 7-02; 110mph (3-second gust); h=20ft; TCDL=4.2psf; BCDL=3.0psf; Category II; Exp B; enclosed; MWFRS gable end zone; Lumber DOL=1.60 plate grip DOL=1.60.
2) Refer to girder(s) for truss to truss connections.
3) Bearing at joint(s) 2 considers parallel to grain value using ANSI/TPI 1 angle to grain formula. Building designer should verify capacity of bearing surface.
4) Provide mechanical connection (by others) of truss to bearing plate capable of withstanding 157 lb uplift at joint 5, 272 lb uplift at joint 2 and 140 lb uplift at joint 6.
5) In the LOAD CASE(S) section, loads applied to the face of the truss are noted as front (F) or back (B).

LOAD CASE(S) Standard
1) Regular: Lumber Increase=1.25, Plate Increase=1.25
Uniform Loads (plf)
Vert: 1-2=-54
Trapezoidal Loads (plf)
Vert: 2=-2(F=26, B=26)-to-5=-134(F=-40, B=-40), 2=0(F=15, B=15)-to-7=-66(F=-18, B=-18), 7=-66(F=-18, B=-18)-to-6=-74(F=-22, B=-22)

JANUARY 16, 2006 TRUSS DESIGN ENGINEER:
THOMAS E. MILLER PE 56877, BYRON K. ANDERSON PE 60987
STRUCTURAL ENGINEERING AND INSPECTIONS, INC. EB 9196
16105 N. FLORIDA AVE. STE B, LUTZ, FL 33549

Dwg.#0116061135

Job	Truss	Truss Type	Qty	Ply	BRYAN ZECHER- LOT 24 CSE
L139397	T01	COMMON	10	1	Job Reference (optional)

Builders FirstSource, Lake City, Fl 32055 — 6.200 s Jul 13 2005 MiTek Industries, Inc. Fri Jan 13 09:16:36 2006 Page 1

-2-0-0	3-9-13	9-9-12	15-9-11	19-7-8	21-7-8
2-0-0	3-9-13	5-11-15	5-11-15	3-9-13	2-0-0

Scale = 1:39.2
Camber = 1/8 in

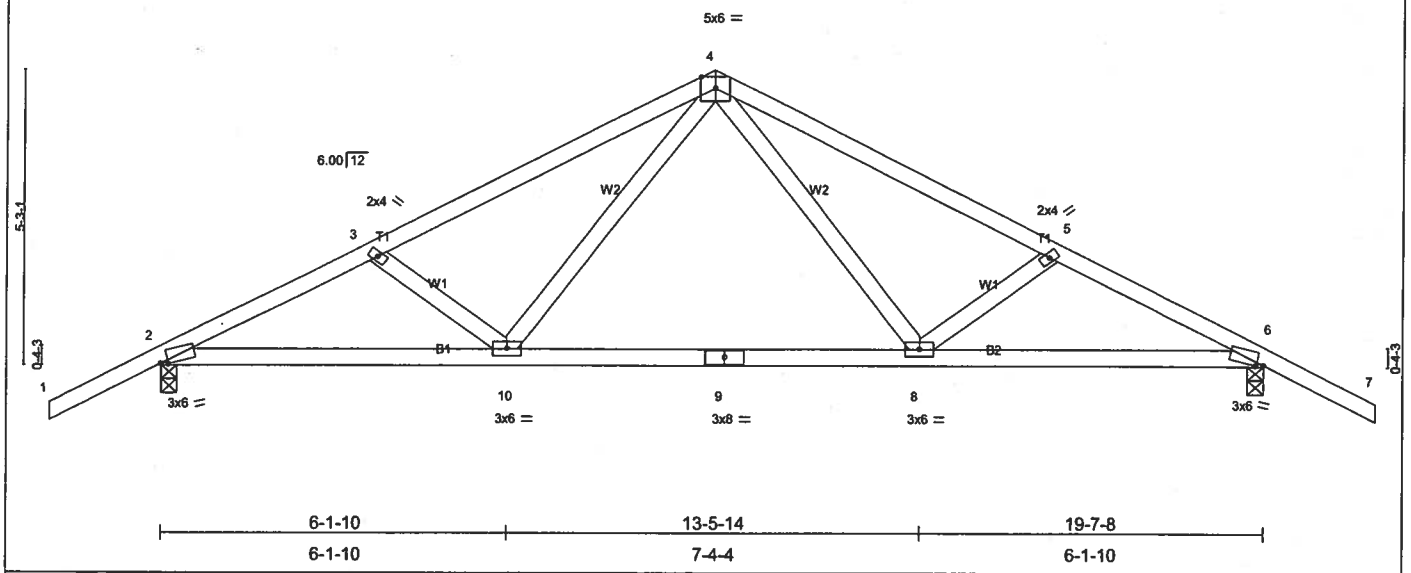

Plate Offsets (X,Y): [2:0-1-9,0-0-7], [6:0-1-9,0-0-7]

LOADING (psf)		SPACING 2-0-0		CSI		DEFL	in	(loc)	l/defl	L/d	PLATES	GRIP
TCLL	20.0	Plates Increase	1.25	TC	0.36	Vert(LL)	-0.25	8-10	>930	240	MT20	244/190
TCDL	7.0	Lumber Increase	1.25	BC	0.84	Vert(TL)	-0.40	8-10	>573	180		
BCLL	10.0	Rep Stress Incr	NO	WB	0.22	Horz(TL)	0.04	6	n/a	n/a		
BCDL	5.0	Code FBC2004/TPI2002		(Matrix)							Weight: 95 lb	

LUMBER
TOP CHORD 2 X 4 SYP No.2
BOT CHORD 2 X 4 SYP No.2
WEBS 2 X 4 SYP No.3

BRACING
TOP CHORD Structural wood sheathing directly applied or 4-6-3 oc purlins.
BOT CHORD Rigid ceiling directly applied or 8-2-5 oc bracing.

REACTIONS (lb/size) 2=1112/0-3-8, 6=1112/0-3-8
Max Horz 2=-107(load case 6)
Max Uplift2=-459(load case 5), 6=-459(load case 6)

FORCES (lb) - Maximum Compression/Maximum Tension
TOP CHORD 1-2=0/47, 2-3=-1848/803, 3-4=-1679/740, 4-5=-1679/740, 5-6=-1848/803, 6-7=0/47
BOT CHORD 2-10=-567/1590, 9-10=-275/1046, 8-9=-275/1046, 6-8=-567/1590
WEBS 3-10=-216/201, 4-10=-222/686, 4-8=-222/686, 5-8=-216/201

NOTES
1) Unbalanced roof live loads have been considered for this design.
2) Wind: ASCE 7-02; 110mph (3-second gust); h=20ft; TCDL=4.2psf; BCDL=3.0psf; Category II; Exp B; enclosed; MWFRS gable end zone and C-C Exterior(2) zone; Lumber DOL=1.60 plate grip DOL=1.60. This truss is designed for C-C for members and forces, and for MWFRS for reactions specified.
3) Provide mechanical connection (by others) of truss to bearing plate capable of withstanding 459 lb uplift at joint 2 and 459 lb uplift at joint 6.
4) In the LOAD CASE(S) section, loads applied to the face of the truss are noted as front (F) or back (B).

LOAD CASE(S) Standard
1) Regular: Lumber Increase=1.25, Plate Increase=1.25
Uniform Loads (plf)
Vert: 2-10=-30, 8-10=-80(F=-50), 6-8=-30, 1-4=-54, 4-7=-54

JANUARY 16, 2006 TRUSS DESIGN ENGINEER:
THOMAS E. MILLER PE 56877, BYRON K. ANDERSON PE 60987
STRUCTURAL ENGINEERING AND INSPECTIONS, INC. EB 9196
16105 N. FLORIDA AVE. STE B, LUTZ, FL 33549

Dwg.#0116061136

Job	Truss	Truss Type	Qty	Ply	BRYAN ZECHER- LOT 24 CSE
L139397	T01G	DROP TC GABLE	1	1	Job Reference (optional)

Builders FirstSource, Lake City, Fl 32055 — 6.200 s Jul 13 2005 MiTek Industries, Inc. Fri Jan 13 09:16:36 2006 Page 1

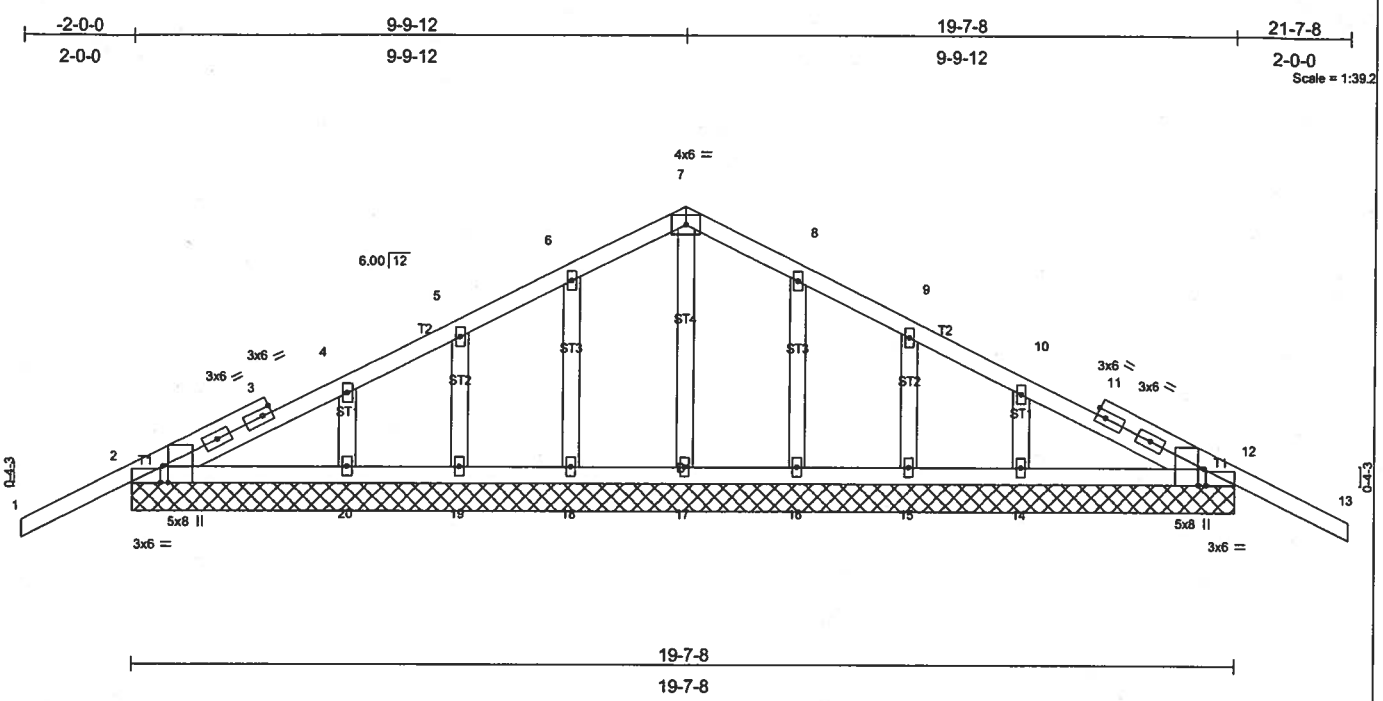

Plate Offsets (X,Y): [2:0-3-8,Edge], [2:0-0-8,Edge], [12:0-3-8,Edge], [12:0-0-8,Edge]

LOADING (psf)		SPACING	2-0-0	CSI		DEFL	in	(loc)	l/defl	L/d	PLATES	GRIP
TCLL	20.0	Plates Increase	1.25	TC	0.49	Vert(LL)	-0.04	13	n/r	120	MT20	244/190
TCDL	7.0	Lumber Increase	1.25	BC	0.06	Vert(TL)	-0.06	13	n/r	90		
BCLL	10.0	Rep Stress Incr	NO	WB	0.09	Horz(TL)	0.00	12	n/a	n/a		
BCDL	5.0	Code FBC2004/TPI2002		(Matrix)							Weight: 103 lb	

LUMBER
TOP CHORD 2 X 4 SYP No.2
BOT CHORD 2 X 4 SYP No.2
OTHERS 2 X 4 SYP No.3

BRACING
TOP CHORD Structural wood sheathing directly applied or 6-0-0 oc purlins.
BOT CHORD Rigid ceiling directly applied or 6-0-0 oc bracing.

REACTIONS (lb/size) 2=536/19-7-8, 12=536/19-7-8, 17=283/19-7-8, 18=299/19-7-8, 19=248/19-7-8, 20=416/19-7-8, 16=299/19-7-8, 15=248/19-7-8, 14=416/19-7-8
Max Horz 2=102(load case 5)
Max Uplift2=-280(load case 5), 12=-297(load case 6), 17=-4(load case 5), 18=-129(load case 5), 19=-135(load case 5), 20=-138(load case 5), 16=-127(load case 6), 15=-134(load case 6), 14=-143(load case 6)
Max Grav 2=536(load case 1), 12=536(load case 1), 17=283(load case 1), 18=304(load case 9), 19=248(load case 1), 20=416(load case 9), 16=304(load case 10), 15=248(load case 1), 14=416(load case 10)

FORCES (lb) - Maximum Compression/Maximum Tension
TOP CHORD 1-2=-20/99, 2-3=-88/52, 3-4=-65/85, 4-5=-59/96, 5-6=-48/139, 6-7=-52/193, 7-8=-52/193, 8-9=-48/139, 9-10=-59/84, 10-11=-23/85, 11-12=-88/28, 12-13=-20/99
BOT CHORD 2-20=-1/122, 19-20=-1/122, 18-19=-1/122, 17-18=-1/122, 16-17=-1/122, 15-16=-1/122, 14-15=-1/122, 12-14=-1/122
WEBS 7-17=-225/16, 6-18=-239/167, 5-19=-202/169, 4-20=-321/202, 8-16=-239/167, 9-15=-202/169, 10-14=-321/202

NOTES
1) Unbalanced roof live loads have been considered for this design.
2) Wind: ASCE 7-02; 110mph (3-second gust); h=20ft; TCDL=4.2psf; BCDL=3.0psf; Category II; Exp B; enclosed; MWFRS gable end zone and C-C Exterior(2) zone; Lumber DOL=1.60 plate grip DOL=1.60. This truss is designed for C-C for members and forces, and for MWFRS for reactions specified.
3) Truss designed for wind loads in the plane of the truss only. For studs exposed to wind (normal to the face), see MiTek "Standard Gable End Detail"
4) All plates are 2x4 MT20 unless otherwise indicated.
5) Gable requires continuous bottom chord bearing.
6) Gable studs spaced at 2-0-0 oc.
7) Provide mechanical connection (by others) of truss to bearing plate capable of withstanding 280 lb uplift at joint 2, 297 lb uplift at joint 12, 4 lb uplift at joint 17, 129 lb uplift at joint 18, 135 lb uplift at joint 19, 138 lb uplift at joint 20, 127 lb uplift at joint 16, 134 lb uplift at joint 15 and 143 lb uplift at joint 14.
8) In the LOAD CASE(S) section, loads applied to the face of the truss are noted as front (F) or back (B).

LOAD CASE(S) Standard
1) Regular: Lumber Increase=1.25, Plate Increase=1.25
Uniform Loads (plf)
Vert: 1-7=-114(F=-60), 7-13=-114(F=-60), 2-12=-30

JANUARY 16, 2006 TRUSS DESIGN ENGINEER:
THOMAS E. MILLER PE 56877, BYRON K. ANDERSON PE 60987
STRUCTURAL ENGINEERING AND INSPECTIONS, INC. EB 9196
16105 N. FLORIDA AVE. STE B, LUTZ, FL 33549

Dwg.#0116061137

Job	Truss	Truss Type	Qty	Ply	BRYAN ZECHER- LOT 24 CSE
L139397	T02	MONO HIP	1	1	Job Reference (optional)

Builders FirstSource, Lake City, Fl 32055 — 6.200 s Jul 13 2005 MiTek Industries, Inc. Fri Jan 13 09:16:37 2006 Page 1

-2-0-0	7-0-0	13-5-15	19-10-1	26-4-0
2-0-0	7-0-0	6-5-15	6-4-3	6-5-15

Scale = 1:48.9
Camber = 3/16 in

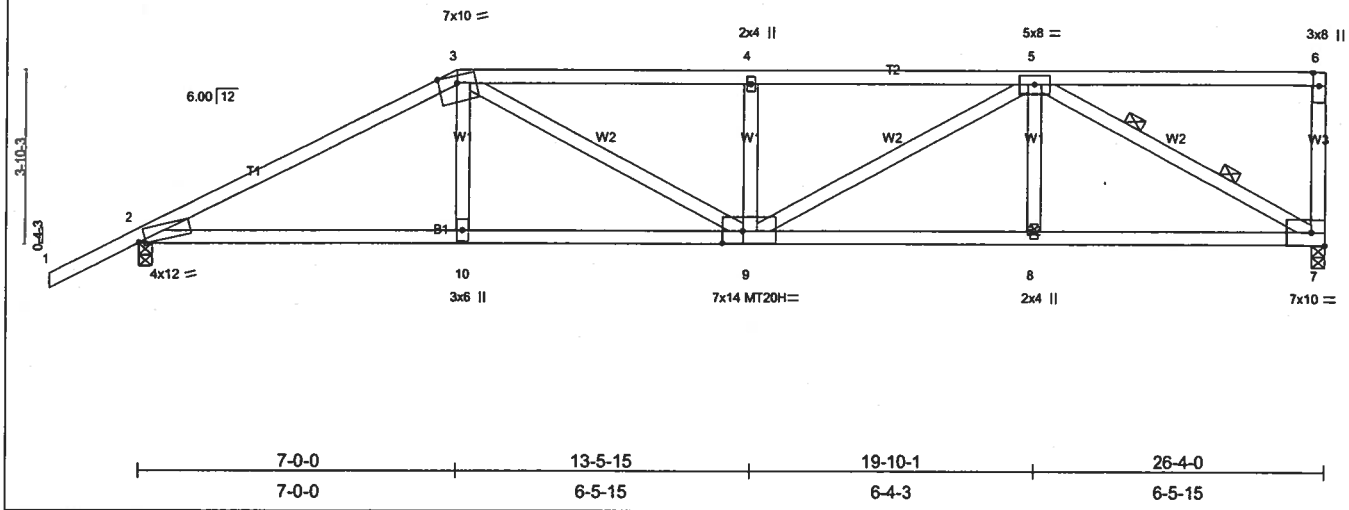

7-0-0	13-5-15	19-10-1	26-4-0
7-0-0	6-5-15	6-4-3	6-5-15

Plate Offsets (X,Y): [2:0-1-13,Edge], [9:0-5-4,0-3-3]

LOADING (psf)		SPACING	2-0-0	CSI		DEFL	in	(loc)	l/defl	L/d	PLATES	GRIP
TCLL	20.0	Plates Increase	1.25	TC	0.94	Vert(LL)	-0.31	9-10	>994	240	MT20	244/190
TCDL	7.0	Lumber Increase	1.25	BC	0.98	Vert(TL)	-0.51	9-10	>614	180	MT20H	187/143
BCLL	10.0	Rep Stress Incr	NO	WB	0.87	Horz(TL)	0.15	7	n/a	n/a		
BCDL	5.0	Code FBC2004/TPI2002		(Matrix)							Weight: 133 lb	

LUMBER
TOP CHORD 2 X 4 SYP No.2
BOT CHORD 2 X 4 SYP No.2 *Except*
B1 2 X 4 SYP No.1D
WEBS 2 X 4 SYP No.3 *Except*
W3 2 X 4 SYP No.2

BRACING
TOP CHORD Structural wood sheathing directly applied, except end verticals.
BOT CHORD Rigid ceiling directly applied or 4-11-15 oc bracing.
WEBS 2 Rows at 1/3 pts 5-7

REACTIONS (lb/size) 7=2431/0-3-8, 2=2304/0-3-8
Max Horz 2=227(load case 4)
Max Uplift7=-1094(load case 3), 2=-993(load case 4)

FORCES (lb) - Maximum Compression/Maximum Tension
TOP CHORD 1-2=0/47, 2-3=-4310/1821, 3-4=-4702/2114, 4-5=-4701/2114, 5-6=-154/70, 6-7=-363/287
BOT CHORD 2-10=-1666/3765, 9-10=-1675/3801, 8-9=-1557/3465, 7-8=-1557/3465
WEBS 3-10=-213/864, 3-9=-565/1026, 4-9=-761/644, 5-9=-638/1417, 5-8=0/406, 5-7=-3795/1705

NOTES
1) Wind: ASCE 7-02; 110mph (3-second gust); h=20ft; TCDL=4.2psf; BCDL=3.0psf; Category II; Exp B; enclosed; MWFRS gable end zone; Lumber DOL=1.60 plate grip DOL=1.60.
2) Provide adequate drainage to prevent water ponding.
3) All plates are MT20 plates unless otherwise indicated.
4) Provide mechanical connection (by others) of truss to bearing plate capable of withstanding 1094 lb uplift at joint 7 and 993 lb uplift at joint 2.
5) Girder carries hip end with 0-0-0 right side setback, 7-0-0 left side setback, and 7-0-0 end setback.
6) Hanger(s) or other connection device(s) shall be provided sufficient to support concentrated load(s) 539 lb down and 277 lb up at 7-0-0 on bottom chord. The design/selection of such connection device(s) is the responsibility of others.
7) In the LOAD CASE(S) section, loads applied to the face of the truss are noted as front (F) or back (B).

LOAD CASE(S) Standard
1) Regular: Lumber Increase=1.25, Plate Increase=1.25
Uniform Loads (plf)
Vert: 1-3=-54, 3-6=-118(F=-64), 2-10=-30, 7-10=-65(F=-35)
Concentrated Loads (lb)
Vert: 10=-539(F)

JANUARY 16, 2006 TRUSS DESIGN ENGINEER:
THOMAS E. MILLER PE 56877, BYRON K. ANDERSON PE 60987
STRUCTURAL ENGINEERING AND INSPECTIONS, INC. EB 9196
16105 N. FLORIDA AVE. STE B, LUTZ, FL 33549

Dwg.#0116061138

Job	Truss	Truss Type	Qty	Ply	BRYAN ZECHER- LOT 24 CSE
L139397	T03T	SPECIAL	1	1	Job Reference (optional)

Builders FirstSource, Lake City, Fl 32055 — 6.200 s Jul 13 2005 MiTek Industries, Inc. Fri Jan 13 09:16:38 2006 Page 1

-2-0-0	2-3-8	4-3-8	9-0-0	12-5-8	14-5-8	20-4-12	26-4-0
2-0-0	2-3-8	2-0-0	4-8-8	3-5-8	2-0-0	5-11-4	5-11-4

Scale = 1:49.6
Camber = 3/16 in

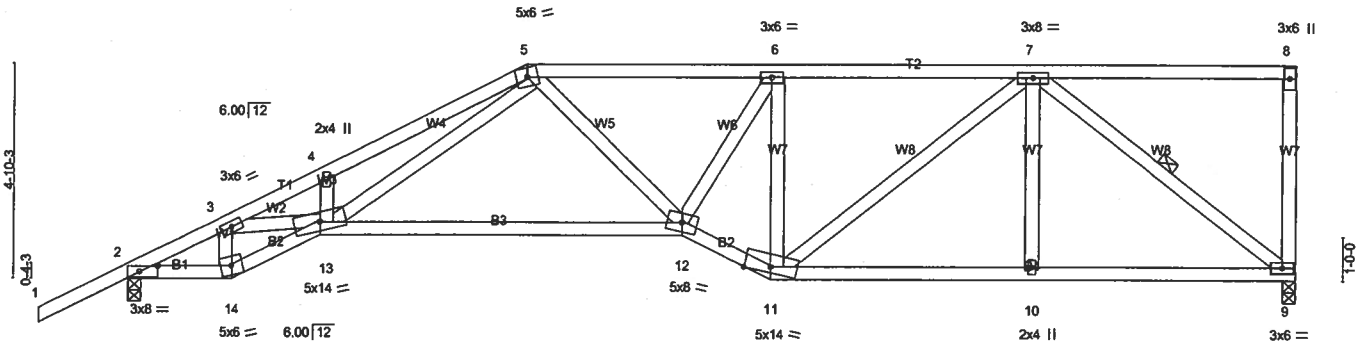

2-3-8	4-3-8	9-0-0	12-5-8	14-5-8	20-4-12	26-4-0
2-3-8	2-0-0	4-8-8	3-5-8	2-0-0	5-11-4	5-11-4

Plate Offsets (X,Y): [2:0-4-12,0-1-8]

LOADING (psf)		SPACING	2-0-0	CSI		DEFL	in	(loc)	l/defl	L/d	PLATES	GRIP
TCLL	20.0	Plates Increase	1.25	TC	0.37	Vert(LL)	-0.28	12-13	>999	240	MT20	244/190
TCDL	7.0	Lumber Increase	1.25	BC	0.57	Vert(TL)	-0.46	12-13	>679	180		
BCLL	10.0	Rep Stress Incr	YES	WB	0.51	Horz(TL)	0.14	9	n/a	n/a		
BCDL	5.0	Code FBC2004/TPI2002		(Matrix)							Weight: 151 lb	

LUMBER
TOP CHORD 2 X 4 SYP No.2
BOT CHORD 2 X 4 SYP No.2
WEBS 2 X 4 SYP No.3

BRACING
TOP CHORD Structural wood sheathing directly applied or 3-1-9 oc purlins, except end verticals.
BOT CHORD Rigid ceiling directly applied or 6-10-11 oc bracing.
WEBS 1 Row at midpt 7-9

REACTIONS (lb/size) 9=1089/0-3-8, 2=1214/0-3-8
Max Horz 2=272(load case 5)
Max Uplift9=-396(load case 4), 2=-442(load case 5)

FORCES (lb) - Maximum Compression/Maximum Tension
TOP CHORD 1-2=0/47, 2-3=-1962/638, 3-4=-3438/1359, 4-5=-3438/1464, 5-6=-2005/833, 6-7=-1582/675, 7-8=-38/15, 8-9=-145/101
BOT CHORD 2-14=-729/1678, 13-14=-745/1773, 12-13=-826/1785, 11-12=-735/1765, 10-11=-466/1131, 9-10=-466/1131
WEBS 3-14=-769/360, 3-13=-685/1473, 5-13=-685/1602, 5-12=-109/316, 6-12=-338/884, 6-11=-1052/500, 7-11=-263/568, 7-10=0/184, 7-9=-1391/573, 4-13=-135/194

NOTES
1) Wind: ASCE 7-02; 110mph (3-second gust); h=20ft; TCDL=4.2psf; BCDL=3.0psf; Category II; Exp B; enclosed; MWFRS gable end zone and C-C Exterior(2) zone; Lumber DOL=1.60 plate grip DOL=1.60. This truss is designed for C-C for members and forces, and for MWFRS for reactions specified.
2) Provide adequate drainage to prevent water ponding.
3) Provide mechanical connection (by others) of truss to bearing plate capable of withstanding 396 lb uplift at joint 9 and 442 lb uplift at joint 2.

LOAD CASE(S) Standard

JANUARY 16, 2006 TRUSS DESIGN ENGINEER:
THOMAS E. MILLER PE 56877, BYRON K. ANDERSON PE 60987
STRUCTURAL ENGINEERING AND INSPECTIONS, INC. EB 9196
16105 N. FLORIDA AVE. STE B, LUTZ, FL 33549

Dwg.#0116061139

Job	Truss	Truss Type	Qty	Ply	BRYAN ZECHER- LOT 24 CSE
L139397	T04T	SPECIAL	1	1	Job Reference (optional)

Builders FirstSource, Lake City, Fl 32055 — 6.200 s Jul 13 2005 MiTek Industries, Inc. Fri Jan 13 09:16:39 2006 Page 1

-2-0-0	2-3-8	4-3-8	11-0-0	12-5-8	14-5-8	20-4-12	26-4-0
2-0-0	2-3-8	2-0-0	6-8-8	1-5-8	2-0-0	5-11-4	5-11-4

Scale = 1:49.6
Camber = 3/16 in

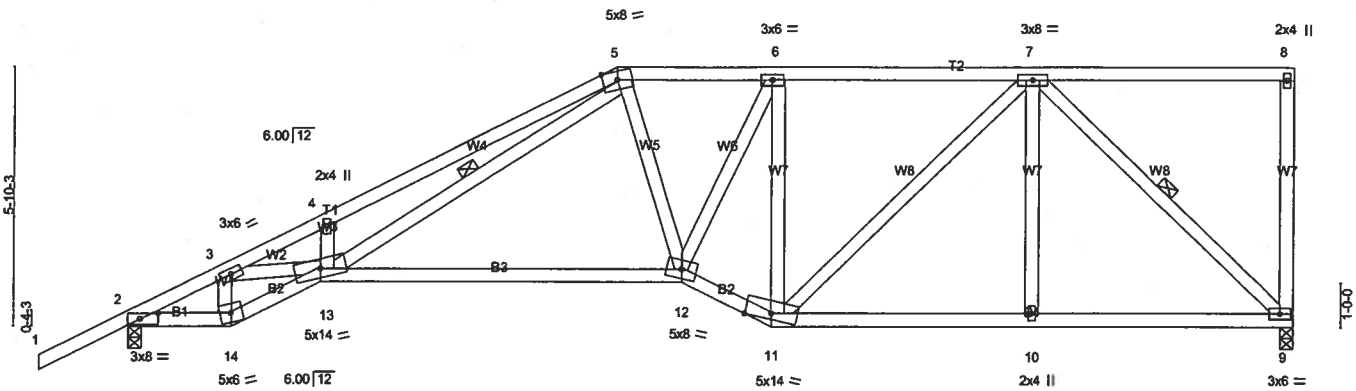

2-3-8	4-3-8	11-0-0	12-5-8	14-5-8	20-4-12	26-4-0
2-3-8	2-0-0	6-8-8	1-5-8	2-0-0	5-11-4	5-11-4

Plate Offsets (X,Y): [2:0-4-12,0-1-8]

LOADING (psf)		SPACING	2-0-0	CSI		DEFL	in	(loc)	l/defl	L/d	PLATES	GRIP
TCLL	20.0	Plates Increase	1.25	TC	0.49	Vert(LL)	-0.29	12-13	>999	240	MT20	244/190
TCDL	7.0	Lumber Increase	1.25	BC	0.55	Vert(TL)	-0.48	12-13	>652	180		
BCLL	10.0	Rep Stress Incr	YES	WB	0.61	Horz(TL)	0.14	9	n/a	n/a		
BCDL	5.0	Code FBC2004/TPI2002		(Matrix)							Weight: 162 lb	

LUMBER
TOP CHORD 2 X 4 SYP No.1D *Except*
T2 2 X 4 SYP No.2
BOT CHORD 2 X 4 SYP No.2
WEBS 2 X 4 SYP No.3

BRACING
TOP CHORD Structural wood sheathing directly applied or 3-1-4 oc purlins, except end verticals.
BOT CHORD Rigid ceiling directly applied or 7-0-8 oc bracing.
WEBS 1 Row at midpt 5-13, 7-9

REACTIONS (lb/size) 9=1089/0-3-8, 2=1214/0-3-8
Max Horz 2=318(load case 5)
Max Uplift9=-398(load case 6), 2=-450(load case 5)

FORCES (lb) - Maximum Compression/Maximum Tension
TOP CHORD 1-2=0/47, 2-3=-1955/617, 3-4=-3470/1428, 4-5=-3521/1592, 5-6=-1596/713, 6-7=-1286/571, 7-8=-27/11, 8-9=-141/97
BOT CHORD 2-14=-753/1664, 13-14=-768/1754, 12-13=-735/1548, 11-12=-626/1450, 10-11=-398/931, 9-10=-398/931
WEBS 3-14=-732/348, 3-13=-792/1532, 5-13=-929/1887, 5-12=-69/282, 6-12=-359/781, 6-11=-905/457, 7-11=-237/486, 7-10=0/187, 7-9=-1253/536, 4-13=-259/312

NOTES
1) Unbalanced roof live loads have been considered for this design.
2) Wind: ASCE 7-02; 110mph (3-second gust); h=20ft; TCDL=4.2psf; BCDL=3.0psf; Category II; Exp B; enclosed; MWFRS gable end zone and C-C Exterior(2) zone; Lumber DOL=1.60 plate grip DOL=1.60. This truss is designed for C-C for members and forces, and for MWFRS for reactions specified.
3) Provide adequate drainage to prevent water ponding.
4) Provide mechanical connection (by others) of truss to bearing plate capable of withstanding 398 lb uplift at joint 9 and 450 lb uplift at joint 2.

LOAD CASE(S) Standard

JANUARY 16, 2006 TRUSS DESIGN ENGINEER:
THOMAS E. MILLER PE 56877, BYRON K. ANDERSON PE 60987
STRUCTURAL ENGINEERING AND INSPECTIONS, INC. EB 9196
16105 N. FLORIDA AVE. STE B, LUTZ, FL 33549

Dwg.#0116061140

Job	Truss	Truss Type	Qty	Ply	BRYAN ZECHER- LOT 24 CSE	
L139397	T05T	SPECIAL	1	1	Job Reference (optional)	J1323671

Builders FirstSource, Lake City, Fl 32055 — 6.200 s Jul 13 2005 MiTek Industries, Inc. Fri Jan 13 09:16:39 2006 Page 1

-2-0-0	2-3-8	4-3-8	8-7-12	13-0-0	14-5-8	20-1-8	25-9-8	26-4-0
2-0-0	2-3-8	2-0-0	4-4-4	4-4-4	1-5-8	5-8-0	5-8-0	0-6-8

Scale = 1:50.2
Camber = 3/16 in

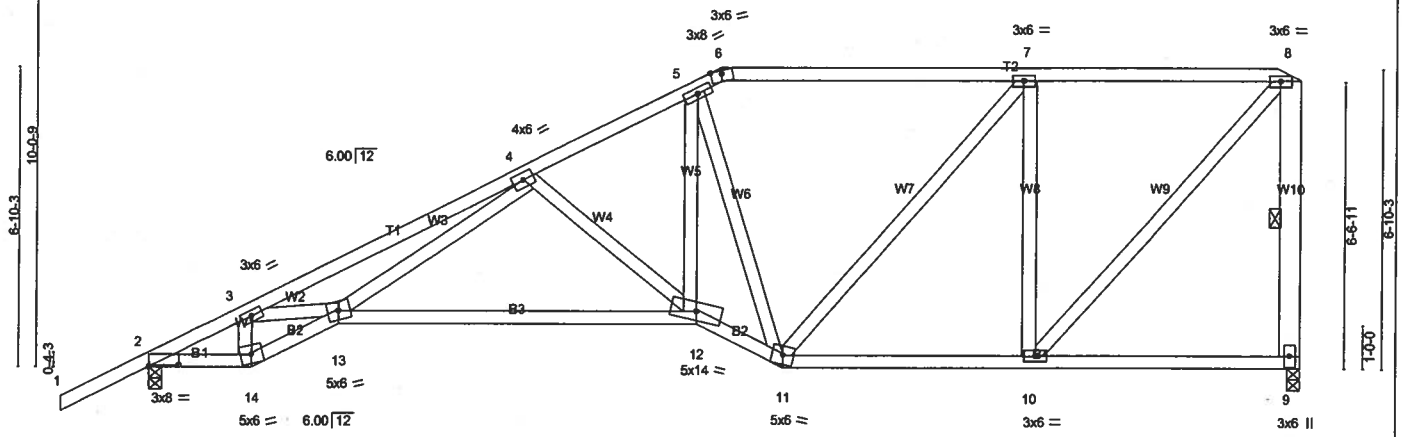

2-3-8	4-3-8	12-5-8	14-5-8	20-1-8	26-4-0
2-3-8	2-0-0	8-2-0	2-0-0	5-8-0	6-2-8

Plate Offsets (X,Y): [2:0-8-0,0-0-6]

LOADING (psf)		SPACING	2-0-0	CSI		DEFL	in	(loc)	l/defl	L/d	PLATES	GRIP
TCLL	20.0	Plates Increase	1.25	TC	0.48	Vert(LL)	-0.29	12-13	>999	240	MT20	244/190
TCDL	7.0	Lumber Increase	1.25	BC	0.53	Vert(TL)	-0.47	12-13	>663	180		
BCLL	10.0	Rep Stress Incr	YES	WB	0.72	Horz(TL)	0.14	9	n/a	n/a		
BCDL	5.0	Code FBC2004/TPI2002		(Matrix)							Weight: 170 lb	

LUMBER
TOP CHORD 2 X 4 SYP No.2
BOT CHORD 2 X 4 SYP No.2
WEBS 2 X 4 SYP No.3 *Except*
W10 2 X 6 SYP No.1D

BRACING
TOP CHORD Structural wood sheathing directly applied or 2-11-8 oc purlins, except end verticals.
BOT CHORD Rigid ceiling directly applied or 6-3-12 oc bracing.
WEBS 1 Row at midpt 8-9

REACTIONS (lb/size) 2=1211/0-3-8, 9=1085/0-3-8
Max Horz 2=364(load case 5)
Max Uplift2=-454(load case 5), 9=-392(load case 6)

FORCES (lb) - Maximum Compression/Maximum Tension
TOP CHORD 1-2=0/47, 2-3=-2006/694, 3-4=-3517/1393, 4-5=-1580/670, 5-6=-1053/500, 6-7=-1067/495, 7-8=-804/361, 8-9=-994/485
BOT CHORD 2-14=-917/1739, 13-14=-950/1857, 12-13=-978/1859, 11-12=-738/1590, 10-11=-361/804, 9-10=-12/35
WEBS 3-14=-885/505, 3-13=-583/1461, 4-13=-577/1549, 4-12=-658/430, 7-11=-204/401, 7-10=-666/429, 8-10=-517/1142, 5-11=-991/516, 5-12=-565/1325

NOTES
1) Unbalanced roof live loads have been considered for this design.
2) Wind: ASCE 7-02; 110mph (3-second gust); h=20ft; TCDL=4.2psf; BCDL=3.0psf; Category II; Exp B; enclosed; MWFRS gable end zone and C-C Exterior(2) zone; Lumber DOL=1.60 plate grip DOL=1.60. This truss is designed for C-C for members and forces, and for MWFRS for reactions specified.
3) Provide adequate drainage to prevent water ponding.
4) Provide mechanical connection (by others) of truss to bearing plate capable of withstanding 454 lb uplift at joint 2 and 392 lb uplift at joint 9.

LOAD CASE(S) Standard

JANUARY 16, 2006 TRUSS DESIGN ENGINEER:
THOMAS E. MILLER PE 56877, BYRON K. ANDERSON PE 60987
STRUCTURAL ENGINEERING AND INSPECTIONS, INC. EB 9196
16105 N. FLORIDA AVE. STE B, LUTZ, FL 33549

Dwg.#0116061141

Job	Truss	Truss Type	Qty	Ply	BRYAN ZECHER- LOT 24 CSE
L139397	T06T	SPECIAL	1	1	Job Reference (optional)

Builders FirstSource, Lake City, Fl 32055 — 6.200 s Jul 13 2005 MiTek Industries, Inc. Fri Jan 13 09:16:40 2006 Page 1

-2-0-0	2-3-8	4-3-8	8-4-8	12-5-8	15-0-0	19-3-1	23-9-8	26-4-0
2-0-0	2-3-8	2-0-0	4-1-0	4-1-0	2-6-8	4-3-1	4-6-8	2-6-8

Scale = 1:49.6
Camber = 3/16 in

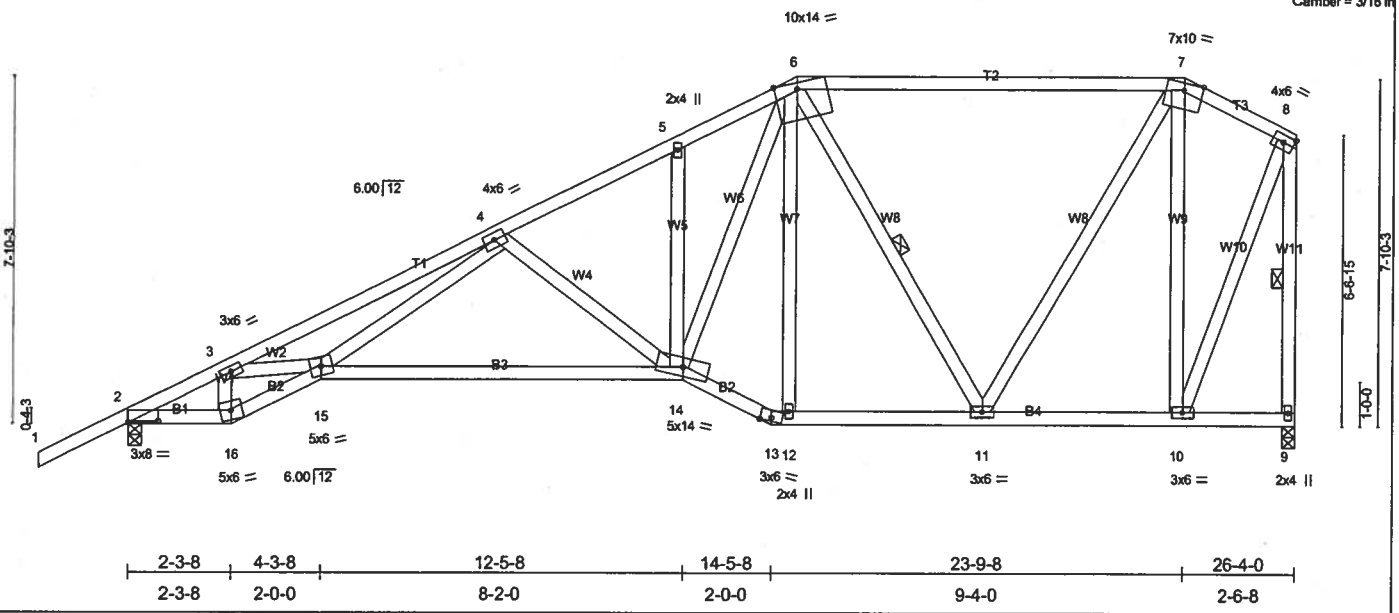

2-3-8	4-3-8	12-5-8	14-5-8	23-9-8	26-4-0
2-3-8	2-0-0	8-2-0	2-0-0	9-4-0	2-6-8

Plate Offsets (X,Y): [2:0-8-0,0-0-6], [6:0-6-3,Edge]

LOADING (psf)		SPACING	2-0-0	CSI		DEFL	in	(loc)	l/defl	L/d	PLATES	GRIP
TCLL	20.0	Plates Increase	1.25	TC	0.56	Vert(LL)	-0.27	14-15	>999	240	MT20	244/190
TCDL	7.0	Lumber Increase	1.25	BC	0.52	Vert(TL)	-0.45	14-15	>692	180		
BCLL	10.0	Rep Stress Incr	YES	WB	0.84	Horz(TL)	0.13	9	n/a	n/a		
BCDL	5.0	Code FBC2004/TPI2002		(Matrix)							Weight: 188 lb	

LUMBER
TOP CHORD 2 X 4 SYP No.2
BOT CHORD 2 X 4 SYP No.2
WEBS 2 X 4 SYP No.3

BRACING
TOP CHORD Structural wood sheathing directly applied or 3-0-2 oc purlins, except end verticals.
BOT CHORD Rigid ceiling directly applied or 6-0-0 oc bracing.
WEBS 1 Row at midpt 6-11, 8-9

REACTIONS (lb/size) 2=1214/0-3-8, 9=1089/0-3-8
Max Horz 2=371(load case 5)
Max Uplift2=-466(load case 5), 9=-324(load case 5)

FORCES (lb) - Maximum Compression/Maximum Tension
TOP CHORD 1-2=0/47, 2-3=-2001/695, 3-4=-3530/1414, 4-5=-1601/684, 5-6=-1508/724, 6-7=-712/366, 7-8=-390/187, 8-9=-1055/485
BOT CHORD 2-16=-902/1729, 15-16=-933/1847, 14-15=-1011/1912, 13-14=-482/1056, 12-13=-449/945, 11-12=-453/952, 10-11=-161/356, 9-10=-2/4
WEBS 3-16=-876/495, 3-15=-611/1486, 4-15=-558/1518, 4-14=-688/459, 5-14=-74/107, 6-11=-496/302, 7-11=-279/695, 7-10=-828/452, 8-10=-459/999, 6-12=-353/196, 6-14=-526/1114

NOTES
1) Unbalanced roof live loads have been considered for this design.
2) Wind: ASCE 7-02; 110mph (3-second gust); h=20ft; TCDL=4.2psf; BCDL=3.0psf; Category II; Exp B; enclosed; MWFRS gable end zone and C-C Exterior(2) zone; Lumber DOL=1.60 plate grip DOL=1.60. This truss is designed for C-C for members and forces, and for MWFRS for reactions specified.
3) Provide adequate drainage to prevent water ponding.
4) Provide mechanical connection (by others) of truss to bearing plate capable of withstanding 466 lb uplift at joint 2 and 324 lb uplift at joint 9.

LOAD CASE(S) Standard

JANUARY 16, 2006 TRUSS DESIGN ENGINEER:
THOMAS E. MILLER PE 56877, BYRON K. ANDERSON PE 60987
STRUCTURAL ENGINEERING AND INSPECTIONS, INC. EB 9196
16105 N. FLORIDA AVE. STE B, LUTZ, FL 33549

Dwg.#0116061142

Job	Truss	Truss Type	Qty	Ply	BRYAN ZECHER- LOT 24 CSE
L139397	T07T	SPECIAL	1	1	Job Reference (optional)

Builders FirstSource, Lake City, Fl 32055

6.200 s Jul 13 2005 MiTek Industries, Inc. Fri Jan 13 09:16:41 2006 Page 1

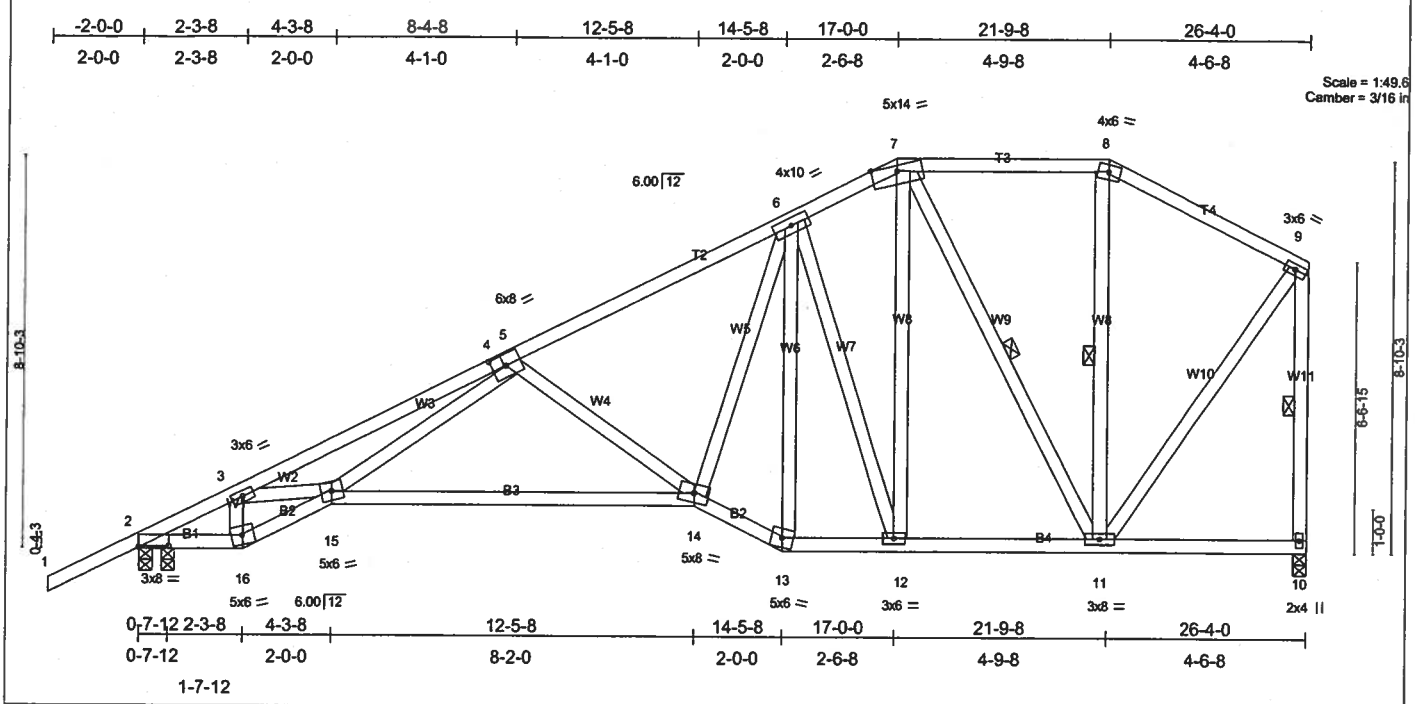

Plate Offsets (X,Y): [2:0-8-0,0-0-6], [4:0-3-14,0-3-0]

LOADING (psf)		SPACING	2-0-0	CSI		DEFL	in	(loc)	l/defl	L/d	PLATES	GRIP
TCLL	20.0	Plates Increase	1.25	TC	0.43	Vert(LL)	-0.28	14-15	>999	240	MT20	244/190
TCDL	7.0	Lumber Increase	1.25	BC	0.53	Vert(TL)	-0.45	14-15	>690	180		
BCLL	10.0	Rep Stress Incr	YES	WB	0.69	Horz(TL)	0.13	10	n/a	n/a		
BCDL	5.0	Code FBC2004/TPI2002		(Matrix)							Weight: 196 lb	

LUMBER
TOP CHORD 2 X 4 SYP No.2
BOT CHORD 2 X 4 SYP No.2
WEBS 2 X 4 SYP No.3

BRACING
TOP CHORD Structural wood sheathing directly applied or 3-0-5 oc purlins, except end verticals.
BOT CHORD Rigid ceiling directly applied or 6-1-15 oc bracing.
WEBS 1 Row at midpt 7-11, 8-11, 9-10

REACTIONS (lb/size) 2=1216/0-3-8, 2=1216/0-3-8, 10=1089/0-3-8
Max Horz 2=386(load case 5)
Max Uplift2=-473(load case 5), 10=-345(load case 5)

FORCES (lb) - Maximum Compression/Maximum Tension
TOP CHORD 1-2=0/47, 2-3=-1995/696, 3-4=-3532/1430, 4-5=-3384/1430, 5-6=-1587/692, 6-7=-884/491, 7-8=-495/325, 8-9=-601/304, 9-10=-1026/502
BOT CHORD 2-16=-898/1721, 15-16=-930/1838, 14-15=-1038/1927, 13-14=-517/1115, 12-13=-474/967, 11-12=-344/768, 10-11=-8/13
WEBS 3-16=-868/487, 3-15=-632/1498, 5-15=-548/1505, 5-14=-727/505, 6-14=-513/1209, 6-13=-485/214, 6-12=-647/416, 7-12=-361/719, 7-11=-599/274, 8-11=-81/102, 9-11=-354/829

NOTES
1) Unbalanced roof live loads have been considered for this design.
2) Wind: ASCE 7-02; 110mph (3-second gust); h=20ft; TCDL=4.2psf; BCDL=3.0psf; Category II; Exp B; enclosed; MWFRS gable end zone and C-C Exterior(2) zone; porch left exposed; Lumber DOL=1.60 plate grip DOL=1.60. This truss is designed for C-C for members and forces, and for MWFRS for reactions specified.
3) Provide adequate drainage to prevent water ponding.
4) Provide mechanical connection (by others) of truss to bearing plate capable of withstanding 473 lb uplift at joint 2 and 345 lb uplift at joint 10.

LOAD CASE(S) Standard

JANUARY 16, 2006 TRUSS DESIGN ENGINEER:
THOMAS E. MILLER PE 56877, BYRON K. ANDERSON PE 60987
STRUCTURAL ENGINEERING AND INSPECTIONS, INC. EB 9196
16105 N. FLORIDA AVE. STE B, LUTZ, FL 33549

Dwg.#0116061143

Job	Truss	Truss Type	Qty	Ply	BRYAN ZECHER- LOT 24 CSE
L139397	T08	HIP	1	1	Job Reference (optional)

Builders FirstSource, Lake City, Fl 32055 — 6.200 s Jul 13 2005 MiTek Industries, Inc. Fri Jan 13 09:16:41 2006 Page 1

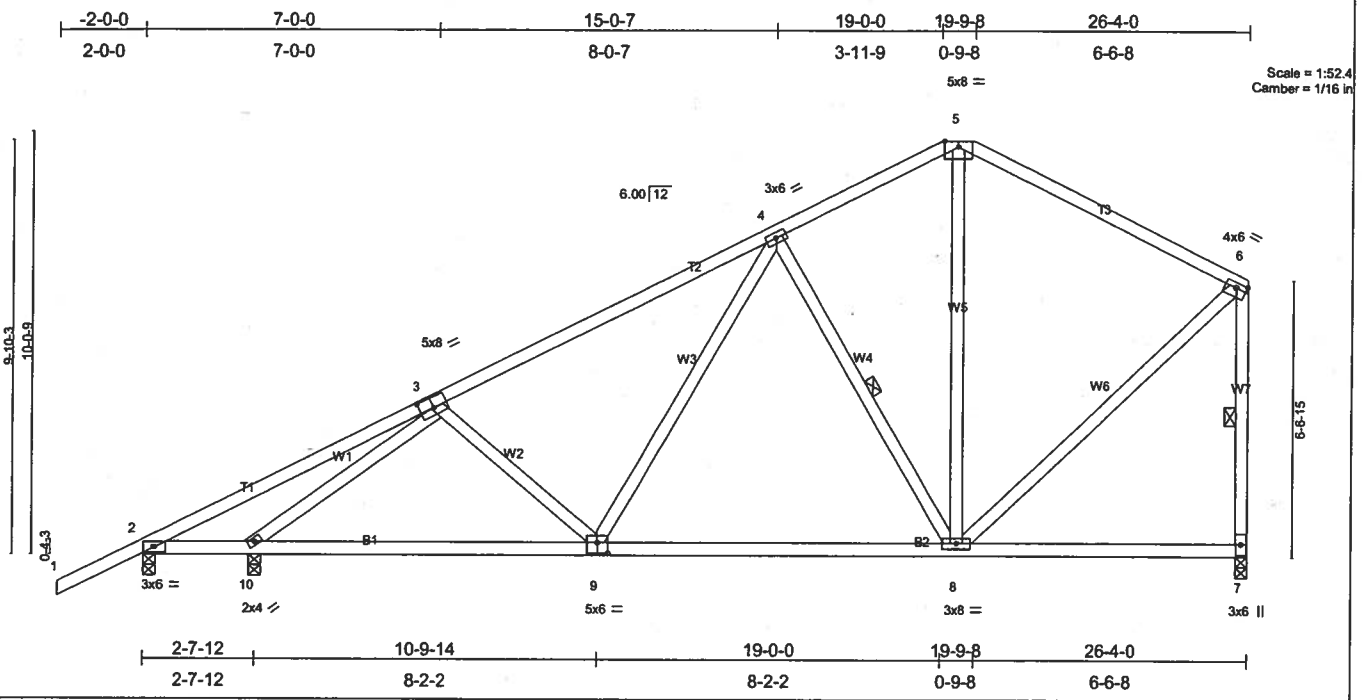

Plate Offsets (X,Y): [3:0-4-0,0-3-0], [6:0-3-0,0-1-8], [9:0-3-0,0-3-0]

LOADING (psf)		SPACING 2-0-0		CSI		DEFL	in	(loc)	l/defl	L/d	PLATES	GRIP
TCLL	20.0	Plates Increase	1.25	TC	0.55	Vert(LL)	-0.11	8-9	>999	240	MT20	244/190
TCDL	7.0	Lumber Increase	1.25	BC	0.43	Vert(TL)	-0.19	8-9	>999	180		
BCLL	10.0	Rep Stress Incr	YES	WB	0.72	Horz(TL)	0.03	7	n/a	n/a		
BCDL	5.0	Code FBC2004/TPI2002		(Matrix)							Weight: 163 lb	

LUMBER
TOP CHORD 2 X 4 SYP No.2
BOT CHORD 2 X 4 SYP No.2
WEBS 2 X 4 SYP No.3

BRACING
TOP CHORD Structural wood sheathing directly applied or 5-1-8 oc purlins, except end verticals.
BOT CHORD Rigid ceiling directly applied or 7-6-2 oc bracing.
WEBS 1 Row at midpt 4-8, 6-7

REACTIONS (lb/size) 2=262/0-3-8, 7=997/0-3-8, 10=1044/0-3-8
Max Horz 2=402(load case 5)
Max Uplift2=-231(load case 5), 7=-348(load case 5), 10=-330(load case 5)

FORCES (lb) - Maximum Compression/Maximum Tension
TOP CHORD 1-2=0/47, 2-3=-160/9, 3-4=-1207/530, 4-5=-650/399, 5-6=-672/361, 6-7=-906/485
BOT CHORD 2-10=-198/74, 9-10=-710/1086, 8-9=-426/795, 7-8=-25/36
WEBS 3-10=-1287/665, 3-9=-140/281, 4-9=-149/402, 4-8=-567/398, 6-8=-277/674, 5-8=-103/331

NOTES
1) Unbalanced roof live loads have been considered for this design.
2) Wind: ASCE 7-02; 110mph (3-second gust); h=20ft; TCDL=4.2psf; BCDL=3.0psf; Category II; Exp B; enclosed; MWFRS gable end zone and C-C Exterior(2) zone; porch left exposed; Lumber DOL=1.60 plate grip DOL=1.60. This truss is designed for C-C for members and forces, and for MWFRS for reactions specified.
3) Provide mechanical connection (by others) of truss to bearing plate capable of withstanding 231 lb uplift at joint 2, 348 lb uplift at joint 7 and 330 lb uplift at joint 10.

LOAD CASE(S) Standard

JANUARY 16, 2006 TRUSS DESIGN ENGINEER:
THOMAS E. MILLER PE 56877, BYRON K. ANDERSON PE 60987
STRUCTURAL ENGINEERING AND INSPECTIONS, INC. EB 9196
16105 N. FLORIDA AVE. STE B, LUTZ, FL 33549

Dwg.#0116061144

Job	Truss	Truss Type	Qty	Ply	BRYAN ZECHER- LOT 24 CSE	
L139397	T09	SPECIAL	1	2	Job Reference (optional)	J1481244

Builders FirstSource, Lake City, Fl 32055 — 6.200 s Jul 13 2005 MiTek Industries, Inc. Fri Jan 13 09:16:42 2006 Page 1

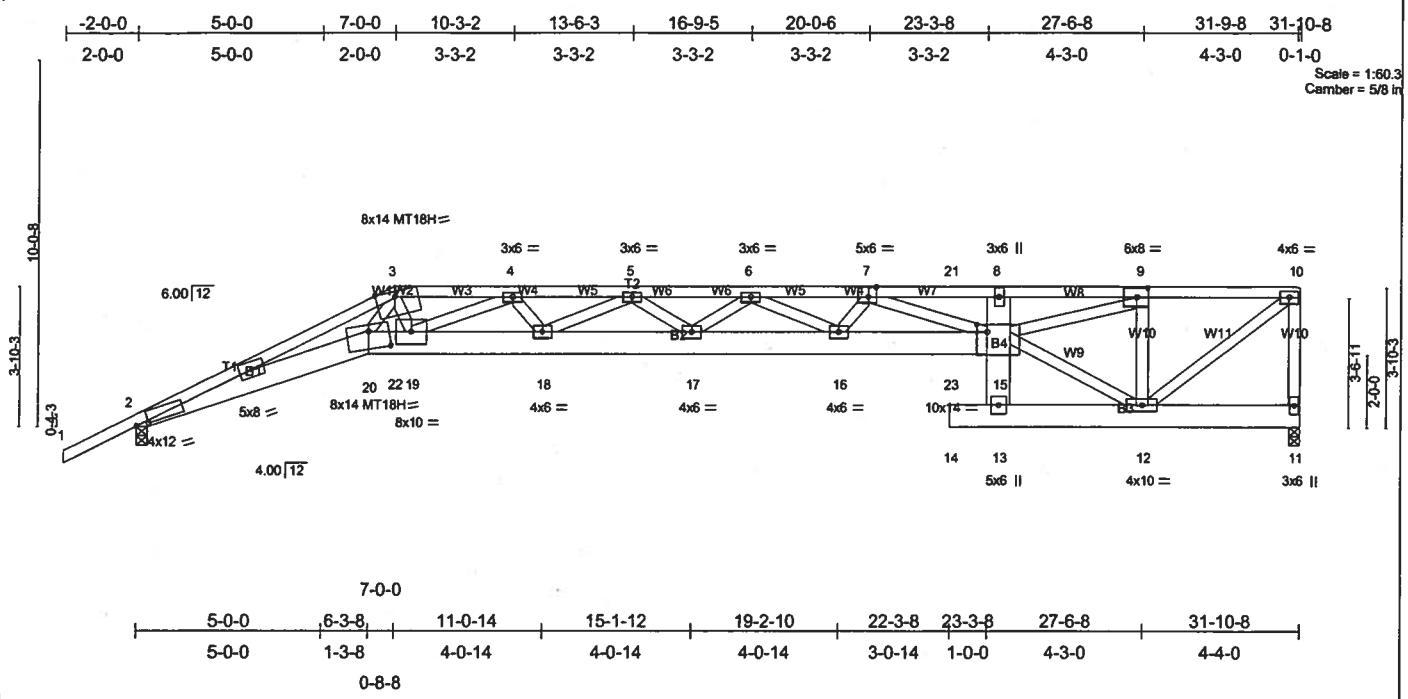

Plate Offsets (X,Y): [2:0-4-1,0-0-5], [3:0-6-3,Edge], [7:0-2-12,0-3-4], [9:0-3-8,0-3-0], [15:0-3-8,0-2-8], [20:0-6-8,0-5-12]

LOADING (psf)		SPACING	2-0-0	CSI		DEFL	in	(loc)	l/defl	L/d	PLATES	GRIP
TCLL	20.0	Plates Increase	1.25	TC	0.68	Vert(LL)	-1.01	17	>376	240	MT20	244/190
TCDL	7.0	Lumber Increase	1.25	BC	0.76	Vert(TL)	-1.61	17	>235	180	MT18H	244/190
BCLL	10.0	Rep Stress Incr	NO	WB	0.75	Horz(TL)	0.78	11	n/a	n/a		
BCDL	5.0	Code FBC2004/TPI2002		(Matrix)							Weight: 443 lb	

LUMBER
TOP CHORD 2 X 4 SYP No.1D *Except*
T3 2 X 4 SYP No.2
BOT CHORD 2 X 8 SYP 2400F 2.0E *Except*
B3 2 X 8 SYP No.1D
WEBS 2 X 4 SYP No.3 *Except*
W8 2 X 4 SYP No.1D, W11 2 X 4 SYP No.2

BRACING
TOP CHORD Structural wood sheathing directly applied or 3-0-8 oc purlins, except end verticals.
BOT CHORD Rigid ceiling directly applied or 10-0-0 oc bracing.

REACTIONS (lb/size) 2=2863/0-3-8, 11=3063/0-3-8
Max Horz 2=228(load case 4)
Max Uplift2=-1023(load case 4), 11=-1222(load case 3)

FORCES (lb) - Maximum Compression/Maximum Tension
TOP CHORD 1-2=0/52, 2-3=-12552/4510, 3-4=-12183/4495, 4-5=-15102/5614, 5-6=-16741/6264, 6-7=-16132/6078, 7-21=-12452/4729, 8-21=-12452/4729, 8-9=-10131/3872, 9-10=-3283/1285, 10-11=-2823/1187
BOT CHORD 2-20=-4227/11590, 20-22=-3949/10706, 19-22=-3948/10703, 18-19=-5417/14528, 17-18=-6104/16242, 16-17=-6289/16660, 16-23=-5891/15536, 15-23=-5891/15536, 13-15=-85/514, 8-15=-349/300, 13-14=0/0, 12-13=-1043/2690, 11-12=-48/83
WEBS 4-19=-2623/1097, 4-18=-399/1141, 5-18=-1315/586, 5-17=-237/657, 6-17=-23/106, 6-16=-609/243, 7-16=-372/1185, 7-15=-3315/1248, 12-15=-271/664, 9-15=-2745/7267, 9-12=-3036/1370, 10-12=-1593/4122, 3-19=-1726/4669, 3-20=-253/926

NOTES
1) 2-ply truss to be connected together with 0.131"x3" Nails as follows:
Top chords connected as follows: 2 X 4 - 1 row at 0-9-0 oc.
Bottom chords connected as follows: 2 X 8 - 2 rows at 0-9-0 oc.
Webs connected as follows: 2 X 4 - 1 row at 0-9-0 oc.
2) All loads are considered equally applied to all plies, except if noted as front (F) or back (B) face in the LOAD CASE(S) section. Ply to ply connections have been provided to distribute only loads noted as (F) or (B), unless otherwise indicated.
3) Wind: ASCE 7-02; 110mph (3-second gust); h=20ft; TCDL=4.2psf; BCDL=3.0psf; Category II; Exp B; enclosed; MWFRS gable end zone; Lumber DOL=1.60 plate grip DOL=1.60.
4) Provide adequate drainage to prevent water ponding.
5) All plates are MT20 plates unless otherwise indicated.
6) Bearing at joint(s) 2 considers parallel to grain value using ANSI/TPI 1 angle to grain formula. Building designer should verify capacity of bearing surface.
7) Provide mechanical connection (by others) of truss to bearing plate capable of withstanding 1023 lb uplift at joint 2 and 1222 lb uplift at joint 11.
8) Girder carries tie-in span(s): 3-0-0 from 7-0-0 to 22-3-8; 7-0-0 from 7-0-0 to 22-3-8
9) Girder carries hip end with 0-0-0 right side setback, 22-3-8 left side setback, and 7-0-0 end setback.
10) Hanger(s) or other connection device(s) shall be provided sufficient to support concentrated load(s) 400 lb down and 151 lb up at 7-0-0 on bottom chord. The design/selection of such connection device(s) is the responsibility of others.

LOAD CASE(S) Standard
1) Regular: Lumber Increase=1.25, Plate Increase=1.25
Uniform Loads (plf)
Vert: 1-3=-54, 3-21=-69(F=-15), 10-21=-118(F=-64), 2-20=-30, 20-22=-30, 22-23=-129(F=-99), 15-23=-65(F=-35), 13-14=-65(F=-35), 11-13=-65(F=-35)
Concentrated Loads (lb)
Vert: 22=-400(F)

JANUARY 16, 2006 TRUSS DESIGN ENGINEER:
THOMAS E. MILLER PE 56877, BYRON K. ANDERSON PE 60987
STRUCTURAL ENGINEERING AND INSPECTIONS, INC. EB 9196
16105 N. FLORIDA AVE. STE B, LUTZ, FL 33549

Dwg.#0116061145

Job	Truss	Truss Type	Qty	Ply	BRYAN ZECHER- LOT 24 CSE	
L139397	T10	SPECIAL	1	1	Job Reference (optional)	J1481245

Builders FirstSource, Lake City, Fl 32055 — 6.200 s Jul 13 2005 MiTek Industries, Inc. Fri Jan 13 09:16:43 2006 Page 1

-2-0-0	3-8-9	6-3-8	9-0-0	15-11-12	22-9-12	29-9-8	31-10-8
2-0-0	3-8-9	2-6-15	2-8-8	6-11-12	6-10-0	6-11-12	2-1-0

Scale = 1:59.2
Camber = 1/2 in

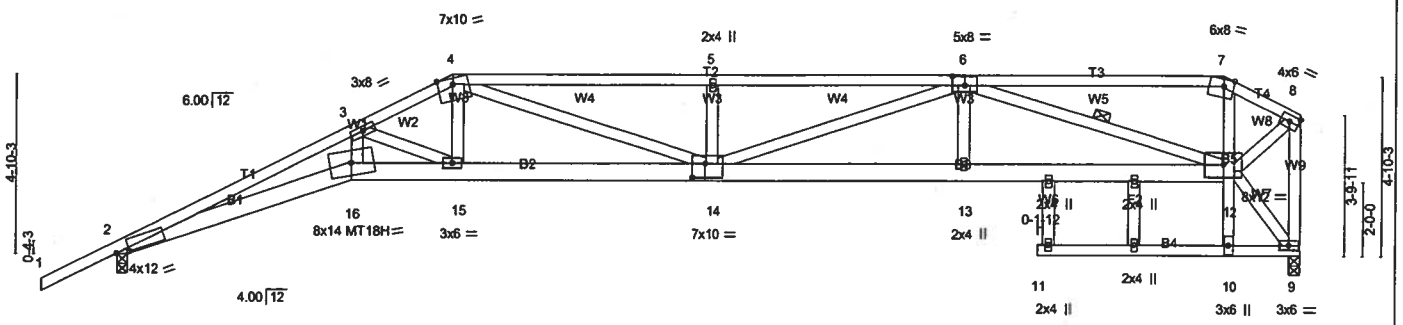

3-8-9	6-3-8	9-0-0	15-11-12	22-9-12	24-9-8	27-2-8	29-9-8	31-10-8
3-8-9	2-6-15	2-8-8	6-11-12	6-10-0	1-11-12	2-5-0	2-7-0	2-1-0

Plate Offsets (X,Y): [2:0-4-1,0-0-11], [6:0-4-0,0-3-0], [7:0-3-3,Edge], [14:0-4-4,0-4-8]

LOADING (psf)		SPACING	2-0-0	CSI		DEFL	in	(loc)	l/defl	L/d	PLATES	GRIP
TCLL	20.0	Plates Increase	1.25	TC	0.90	Vert(LL)	-0.77	11	>494	240	MT20	244/190
TCDL	7.0	Lumber Increase	1.25	BC	0.98	Vert(TL)	-1.30	11	>292	180	MT18H	244/190
BCLL	10.0	Rep Stress Incr	YES	WB	0.73	Horz(TL)	0.57	9	n/a	n/a		
BCDL	5.0	Code FBC2004/TPI2002		(Matrix)							Weight: 203 lb	

LUMBER
TOP CHORD 2 X 4 SYP No.2
BOT CHORD 2 X 6 SYP No.1D *Except*
B5 2 X 4 SYP No.3, B4 2 X 4 SYP No.2
WEBS 2 X 4 SYP No.3

BRACING
TOP CHORD Structural wood sheathing directly applied or 1-7-12 oc purlins, except end verticals.
BOT CHORD Rigid ceiling directly applied or 2-2-0 oc bracing. Except:
1 Row at midpt 12-13
WEBS 1 Row at midpt 6-12
JOINTS 1 Brace at Jt(s): 12

REACTIONS (lb/size) 2=1468/0-3-8, 9=1456/0-3-8
Max Horz 2=241(load case 5)
Max Uplift2=-497(load case 5), 9=-399(load case 3)

FORCES (lb) - Maximum Compression/Maximum Tension
TOP CHORD 1-2=0/49, 2-3=-6098/2395, 3-4=-3985/1610, 4-5=-4389/1736, 5-6=-4389/1736, 6-7=-1336/427, 7-8=-1410/381, 8-9=-1685/449
BOT CHORD 2-16=-2317/5634, 15-16=-2144/5162, 14-15=-1452/3636, 13-14=-1357/3705, 12-13=-1357/3703, 10-12=0/319, 7-12=0/347, 10-11=0/0, 9-10=-118/0
WEBS 3-16=-530/1518, 3-15=-1739/782, 4-15=-431/1182, 4-14=-395/948, 5-14=-367/271, 6-14=-350/734, 6-13=0/208, 6-12=-2514/1038, 8-12=-428/1661, 9-12=0/158

NOTES
1) Unbalanced roof live loads have been considered for this design.
2) Wind: ASCE 7-02; 110mph (3-second gust); h=20ft; TCDL=4.2psf; BCDL=3.0psf; Category II; Exp B; enclosed; MWFRS gable end zone and C-C Exterior(2) zone; Lumber DOL=1.60 plate grip DOL=1.60. This truss is designed for C-C for members and forces, and for MWFRS for reactions specified.
3) Provide adequate drainage to prevent water ponding.
4) All plates are MT20 plates unless otherwise indicated.
5) Bearing at joint(s) 2 considers parallel to grain value using ANSI/TPI 1 angle to grain formula. Building designer should verify capacity of bearing surface.
6) Provide mechanical connection (by others) of truss to bearing plate capable of withstanding 497 lb uplift at joint 2 and 399 lb uplift at joint 9.

LOAD CASE(S) Standard

JANUARY 16, 2006 TRUSS DESIGN ENGINEER:
THOMAS E. MILLER PE 56877, BYRON K. ANDERSON PE 60987
STRUCTURAL ENGINEERING AND INSPECTIONS, INC. EB 9196
16105 N. FLORIDA AVE. STE B, LUTZ, FL 33549

Dwg.#0116061146

Job	Truss	Truss Type	Qty	Ply	BRYAN ZECHER- LOT 24 CSE
L139397	T11	SPECIAL	1	1	Job Reference (optional)

Builders FirstSource, Lake City, Fl 32055 — 6.200 s Jul 13 2005 MiTek Industries, Inc. Fri Jan 13 09:16:44 2006 Page 1

-2-0-0	3-8-9	6-3-8	11-0-0	16-7-12	22-1-12	27-9-8	31-10-8
2-0-0	3-8-9	2-6-15	4-8-8	5-7-12	5-6-0	5-7-12	4-1-0

Scale = 1:59.2
Camber = 3/8 in

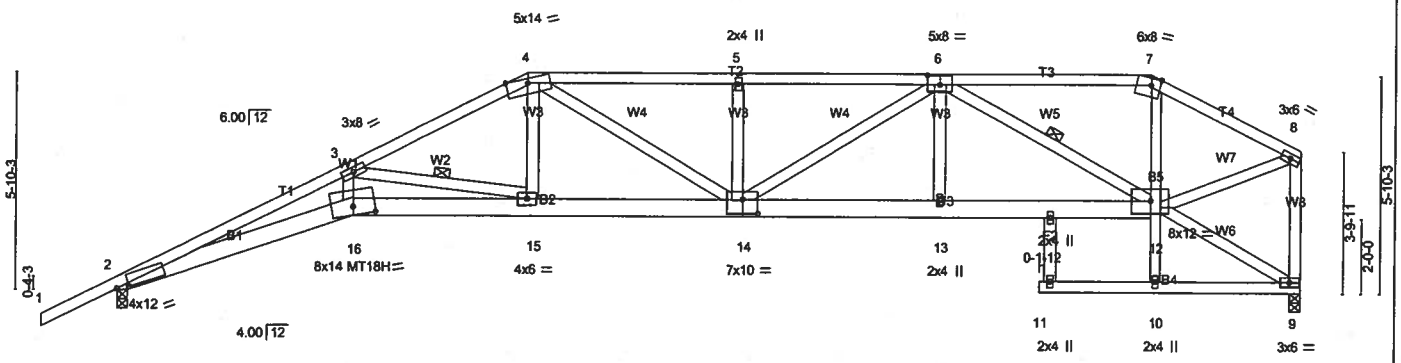

3-8-9	6-3-8	11-0-0	16-7-12	22-1-12	24-9-8	27-9-8	31-10-8
3-8-9	2-6-15	4-8-8	5-7-12	5-6-0	2-7-12	3-0-0	4-1-0

Plate Offsets (X,Y): [2:0-4-1,0-0-11], [6:0-4-0,0-3-0], [7:0-3-3,Edge], [14:0-4-12,0-4-8], [16:0-7-0,0-2-11]

LOADING (psf)		SPACING	2-0-0	CSI		DEFL	in	(loc)	l/defl	L/d	PLATES	GRIP
TCLL	20.0	Plates Increase	1.25	TC	0.81	Vert(LL)	-0.55	15-16	>684	240	MT20	244/190
TCDL	7.0	Lumber Increase	1.25	BC	0.99	Vert(TL)	-0.89	15-16	>426	180	MT18H	244/190
BCLL	10.0	Rep Stress Incr	YES	WB	0.53	Horz(TL)	0.51	9	n/a	n/a		
BCDL	5.0	Code FBC2004/TPI2002		(Matrix)							Weight: 207 lb	

LUMBER
TOP CHORD 2 X 4 SYP No.2
BOT CHORD 2 X 6 SYP No.1D *Except*
B5 2 X 4 SYP No.3, B4 2 X 4 SYP No.2
WEBS 2 X 4 SYP No.3

BRACING
TOP CHORD Structural wood sheathing directly applied or 1-10-8 oc purlins, except end verticals.
BOT CHORD Rigid ceiling directly applied or 2-2-0 oc bracing.
WEBS 1 Row at midpt 3-15, 6-12
JOINTS 1 Brace at Jt(s): 12

REACTIONS (lb/size) 2=1462/0-3-8, 9=1401/0-3-8
Max Horz 2=255(load case 5)
Max Uplift2=-515(load case 5), 9=-355(load case 3)

FORCES (lb) - Maximum Compression/Maximum Tension
TOP CHORD 1-2=0/49, 2-3=-6066/2449, 3-4=-3211/1317, 4-5=-3090/1288, 5-6=-3078/1280, 6-7=-1466/596, 7-8=-1673/607, 8-9=-1389/529
BOT CHORD 2-16=-2371/5605, 15-16=-2344/5558, 14-15=-1149/2885, 13-14=-1004/2696, 12-13=-1003/2697, 10-12=0/170, 7-12=-66/494, 10-11=0/0, 9-10=-38/0
WEBS 3-16=-570/1643, 3-15=-2771/1235, 4-15=-334/967, 4-14=-223/419, 5-14=-296/214, 6-14=-209/473, 6-13=0/186, 6-12=-1456/593, 8-12=-514/1548, 9-12=0/62

NOTES
1) Unbalanced roof live loads have been considered for this design.
2) Wind: ASCE 7-02; 110mph (3-second gust); h=20ft; TCDL=4.2psf; BCDL=3.0psf; Category II; Exp B; enclosed; MWFRS gable end zone and C-C Exterior(2) zone; Lumber DOL=1.60 plate grip DOL=1.60. This truss is designed for C-C for members and forces, and for MWFRS for reactions specified.
3) Provide adequate drainage to prevent water ponding.
4) All plates are MT20 plates unless otherwise indicated.
5) Bearing at joint(s) 2 considers parallel to grain value using ANSI/TPI 1 angle to grain formula. Building designer should verify capacity of bearing surface.
6) Provide mechanical connection (by others) of truss to bearing plate capable of withstanding 515 lb uplift at joint 2 and 355 lb uplift at joint 9.

LOAD CASE(S) Standard

JANUARY 16, 2006 TRUSS DESIGN ENGINEER:
THOMAS E. MILLER PE 56877, BYRON K. ANDERSON PE 60987
STRUCTURAL ENGINEERING AND INSPECTIONS, INC. EB 9196
16105 N. FLORIDA AVE. STE B, LUTZ, FL 33549

Dwg.#0116061147

Job	Truss	Truss Type	Qty	Ply	BRYAN ZECHER- LOT 24 CSE
L139397	T12	SPECIAL	1	1	Job Reference (optional)

Builders FirstSource, Lake City, Fl 32055 — 6.200 s Jul 13 2005 MiTek Industries, Inc. Fri Jan 13 09:16:45 2006 Page 1

-2-0-0	4-8-7	6-3-8	13-0-0	19-4-12	25-9-8	28-2-8	33-2-12	38-9-8	40-9-8
2-0-0	4-8-7	1-7-1	6-8-8	6-4-12	6-4-12	2-5-0	5-0-4	5-6-12	2-0-0

Scale = 1:73.0
Camber = 3/8 in

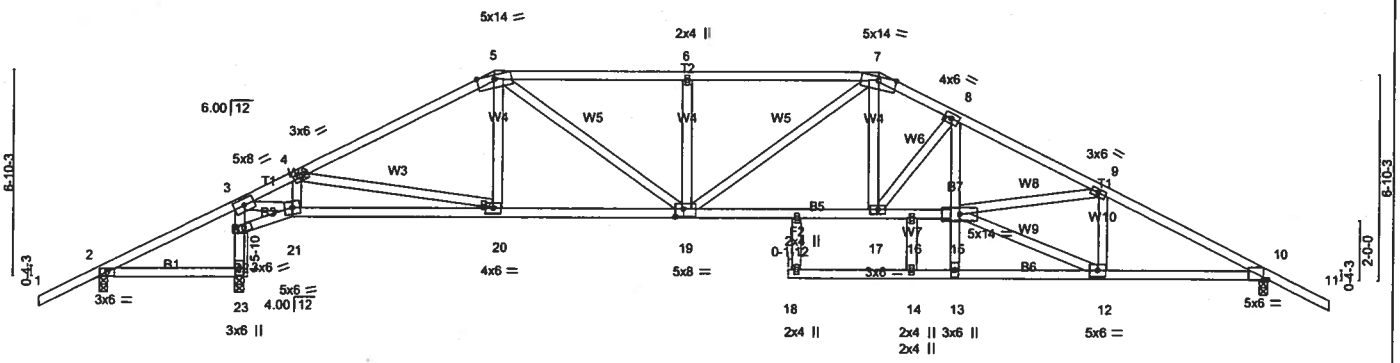

4-8-7	6-3-8	13-0-0	19-4-12	22-9-8	26-9-8	28-2-8	33-2-12	38-9-8
4-8-7	1-7-1	6-8-8	6-4-12	3-4-12	4-0-0	1-5-0	5-0-4	5-6-12

Plate Offsets (X,Y): [10:0-1-11,Edge], [19:0-3-4,0-3-0]

LOADING (psf)		SPACING	2-0-0	CSI		DEFL	in	(loc)	l/defl	L/d	PLATES	GRIP
TCLL	20.0	Plates Increase	1.25	TC	0.45	Vert(LL)	-0.51	18	>804	240	MT20	244/190
TCDL	7.0	Lumber Increase	1.25	BC	0.85	Vert(TL)	-0.85	18	>479	180		
BCLL	10.0	Rep Stress Incr	YES	WB	0.79	Horz(TL)	0.19	10	n/a	n/a		
BCDL	5.0	Code FBC2004/TPI2002		(Matrix)							Weight: 229 lb	

LUMBER
TOP CHORD 2 X 4 SYP No.2
BOT CHORD 2 X 4 SYP No.2 *Except*
B7 2 X 4 SYP No.3
WEBS 2 X 4 SYP No.3

BRACING
TOP CHORD Structural wood sheathing directly applied or 3-0-14 oc purlins.
BOT CHORD Rigid ceiling directly applied or 3-1-15 oc bracing.
JOINTS 1 Brace at Jt(s): 15, 16

REACTIONS (lb/size) 2=122/0-3-8, 23=1870/0-3-8, 10=1598/0-3-8
Max Horz 2=-129(load case 6)
Max Uplift2=-213(load case 5), 23=-552(load case 5), 10=-556(load case 6)
Max Grav 2=141(load case 9), 23=1870(load case 1), 10=1598(load case 1)

FORCES (lb) - Maximum Compression/Maximum Tension
TOP CHORD 1-2=0/47, 2-3=-119/455, 3-4=-1633/668, 4-5=-2317/896, 5-6=-2716/1090, 6-7=-2724/1096, 7-8=-3011/1104, 8-9=-3784/1327, 9-10=-2802/1030, 10-11=0/47
BOT CHORD 2-23=-337/121, 22-23=-1842/669, 3-22=-1484/495, 21-22=-885/396, 20-21=-448/1530, 19-20=-463/2010, 17-19=-624/2723, 16-17=-871/3325, 15-16=-868/3337, 13-15=-202/13, 8-15=-277/950, 14-18=0/0, 13-14=0/0, 12-13=-53/164, 10-12=-749/2427
WEBS 3-21=-776/2307, 4-21=-628/349, 4-20=-162/600, 5-20=0/139, 5-19=-280/963, 6-19=-359/258, 7-19=-194/172, 7-17=-248/1052, 8-17=-994/399, 12-15=-760/2470, 9-15=-175/906, 9-12=-827/355, 14-16=0/439

NOTES
1) Unbalanced roof live loads have been considered for this design.
2) Wind: ASCE 7-02; 110mph (3-second gust); h=20ft; TCDL=4.2psf; BCDL=3.0psf; Category II; Exp B; enclosed; MWFRS gable end zone and C-C Exterior(2) zone; porch left exposed; Lumber DOL=1.60 plate grip DOL=1.60. This truss is designed for C-C for members and forces, and for MWFRS for reactions specified.
3) Provide adequate drainage to prevent water ponding.
4) Provide mechanical connection (by others) of truss to bearing plate capable of withstanding 213 lb uplift at joint 2, 552 lb uplift at joint 23 and 556 lb uplift at joint 10.

LOAD CASE(S) Standard

JANUARY 16, 2006 TRUSS DESIGN ENGINEER:
THOMAS E. MILLER PE 56877, BYRON K. ANDERSON PE 60987
STRUCTURAL ENGINEERING AND INSPECTIONS, INC. EB 9196
16105 N. FLORIDA AVE. STE B, LUTZ, FL 33549

Dwg.#0116061148

Job	Truss	Truss Type	Qty	Ply	BRYAN ZECHER- LOT 24 CSE
L139397	T13	SPECIAL	1	1	Job Reference (optional)

Builders FirstSource, Lake City, Fl 32055 — 6.200 s Jul 13 2005 MiTek Industries, Inc. Fri Jan 13 09:16:45 2006 Page 1

-2-0-0	6-3-8	10-7-12	15-0-0	19-4-12	23-9-8	28-2-8	33-2-12	38-9-8	40-9-8
2-0-0	6-3-8	4-4-4	4-4-4	4-4-12	4-4-12	4-5-0	5-0-4	5-6-12	2-0-0

Scale = 1:73.0
Camber = 3/8 in

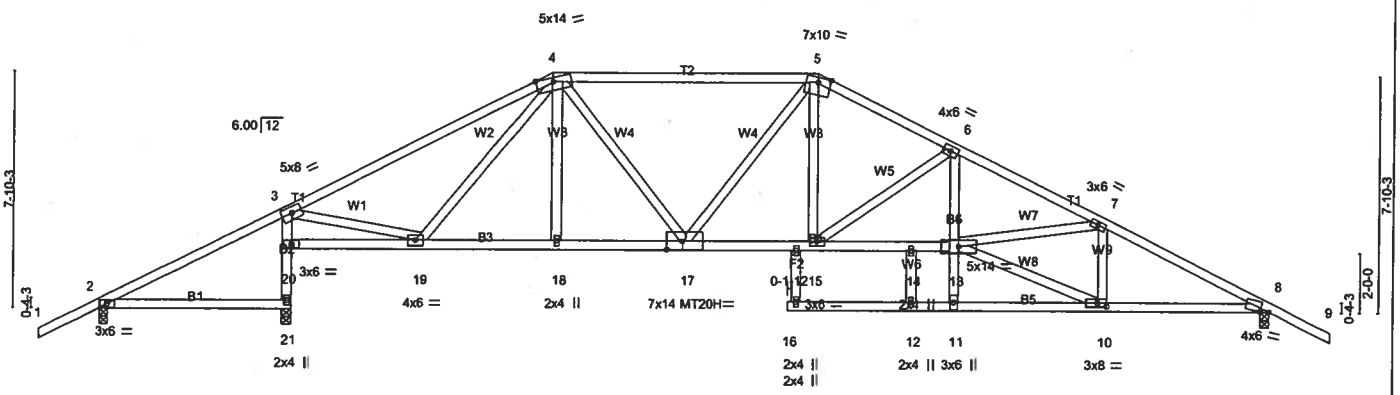

6-1-12	6-3-8	10-7-12	15-0-0	19-4-12	22-9-8	23-9-8	27-2-8	28-2-8	33-2-12	38-9-8
6-1-12	0-1-12	4-4-4	4-4-4	4-4-12	3-4-12	1-0-0	3-5-0	1-0-0	5-0-4	5-6-12

Plate Offsets (X,Y): [8:0-3-5,0-0-11], [10:0-3-8,0-1-8], [17:0-6-1,0-3-5]

LOADING (psf)		SPACING	2-0-0	CSI		DEFL	in	(loc)	l/defl	L/d	PLATES	GRIP
TCLL	20.0	Plates Increase	1.25	TC	0.59	Vert(LL)	-0.52	16	>750	240	MT20	244/190
TCDL	7.0	Lumber Increase	1.25	BC	0.84	Vert(TL)	-0.88	16	>442	180	MT20H	187/143
BCLL	10.0	Rep Stress Incr	YES	WB	0.78	Horz(TL)	0.14	8	n/a	n/a		
BCDL	5.0	Code FBC2004/TPI2002		(Matrix)							Weight: 231 lb	

LUMBER
TOP CHORD 2 X 4 SYP No.2
BOT CHORD 2 X 4 SYP No.2 *Except*
B2 2 X 4 SYP No.3, B6 2 X 4 SYP No.3
WEBS 2 X 4 SYP No.3

BRACING
TOP CHORD Structural wood sheathing directly applied or 3-1-11 oc purlins.
BOT CHORD Rigid ceiling directly applied or 4-0-13 oc bracing.
JOINTS 1 Brace at Jt(s): 13, 14

REACTIONS (lb/size) 2=323/0-3-8, 21=1723/0-3-8, 8=1544/0-3-8
Max Horz 2=-143(load case 6)
Max Uplift2=-282(load case 5), 21=-557(load case 5), 8=-563(load case 6)
Max Grav 2=332(load case 9), 21=1723(load case 1), 8=1544(load case 1)

FORCES (lb) - Maximum Compression/Maximum Tension
TOP CHORD 1-2=0/47, 2-3=-50/262, 3-4=-1761/734, 4-5=-1974/858, 5-6=-2423/951, 6-7=-3642/1276, 7-8=-2683/1005, 8-9=0/47
BOT CHORD 2-21=-31/0, 20-21=-1633/604, 3-20=-1547/608, 19-20=-148/86, 18-19=-355/1686, 17-18=-354/1690, 15-17=-455/2172, 14-15=-835/3215, 13-14=-830/3234, 11-13=-135/28, 6-13=-234/1075, 12-16=0/0, 11-12=0/0, 10-11=-68/99, 8-10=-727/2322
WEBS 3-19=-163/1473, 4-19=-329/102, 4-18=0/148, 4-17=-78/539, 5-17=-401/107, 5-15=-226/926, 6-15=-1297/469, 10-13=-719/2426, 7-13=-122/885, 7-10=-815/337, 12-14=0/377

NOTES
1) Unbalanced roof live loads have been considered for this design.
2) Wind: ASCE 7-02; 110mph (3-second gust); h=20ft; TCDL=4.2psf; BCDL=3.0psf; Category II; Exp B; enclosed; MWFRS gable end zone and C-C Exterior(2) zone; porch left exposed; Lumber DOL=1.60 plate grip DOL=1.60. This truss is designed for C-C for members and forces, and for MWFRS for reactions specified.
3) Provide adequate drainage to prevent water ponding.
4) All plates are MT20 plates unless otherwise indicated.
5) Provide mechanical connection (by others) of truss to bearing plate capable of withstanding 282 lb uplift at joint 2, 557 lb uplift at joint 21 and 563 lb uplift at joint 8.

LOAD CASE(S) Standard

JANUARY 16, 2006 TRUSS DESIGN ENGINEER:
THOMAS E. MILLER PE 56877, BYRON K. ANDERSON PE 60987
STRUCTURAL ENGINEERING AND INSPECTIONS, INC. EB 9196
16105 N. FLORIDA AVE. STE B, LUTZ, FL 33549

Dwg.#0116061149

Job	Truss	Truss Type	Qty	Ply	BRYAN ZECHER- LOT 24 CSE	
L139397	T14	SPECIAL	1	1	Job Reference (optional)	J1481249

Builders FirstSource, Lake City, Fl 32055

6.200 s Jul 13 2005 MiTek Industries, Inc. Fri Jan 13 09:16:46 2006 Page 1

-2-0-0	6-3-8	10-6-0	17-0-0	21-9-8	28-2-8	33-2-12	38-9-8	40-9-8
2-0-0	6-3-8	4-2-8	6-6-0	4-9-8	6-5-0	5-0-4	5-6-12	2-0-0

Scale = 1:73.0
Camber = 3/8 in

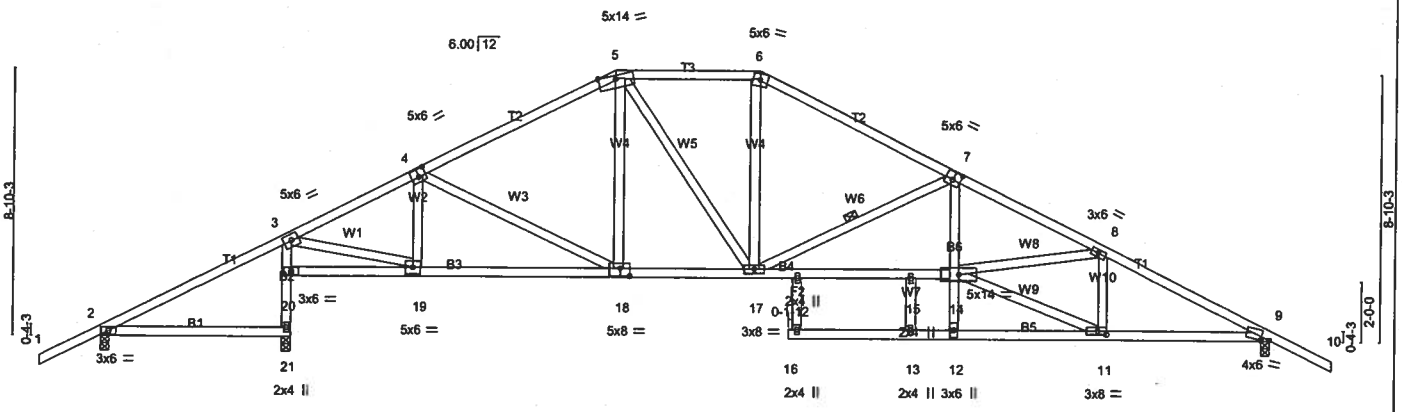

6-1-12	6-3-8	10-6-0	17-0-0	21-9-8	22-9-8	28-1-15	28-2-8	33-2-12	38-9-8
6-1-12	0-1-12	4-2-8	6-6-0	4-9-8	1-0-0	5-4-6	0-0-10	5-0-4	5-6-12

Plate Offsets (X,Y): [4:0-3-0,0-3-0], [7:0-3-0,0-3-0], [9:0-3-5,0-0-11], [11:0-3-8,0-1-8], [18:0-3-12,0-3-0]

LOADING (psf)		SPACING	2-0-0	CSI		DEFL	in	(loc)	l/defl	L/d	PLATES	GRIP
TCLL	20.0	Plates Increase	1.25	TC	0.34	Vert(LL)	-0.57	16	>685	240	MT20	244/190
TCDL	7.0	Lumber Increase	1.25	BC	0.84	Vert(TL)	-0.97	16	>403	180		
BCLL	10.0	Rep Stress Incr	YES	WB	0.78	Horz(TL)	0.15	9	n/a	n/a		
BCDL	5.0	Code FBC2004/TPI2002		(Matrix)							Weight: 233 lb	

LUMBER
TOP CHORD 2 X 4 SYP No.2
BOT CHORD 2 X 4 SYP No.2 *Except*
B2 2 X 4 SYP No.3, B6 2 X 4 SYP No.3
WEBS 2 X 4 SYP No.3

BRACING
TOP CHORD Structural wood sheathing directly applied or 3-2-0 oc purlins.
BOT CHORD Rigid ceiling directly applied or 4-0-6 oc bracing.
WEBS 1 Row at midpt 7-17
JOINTS 1 Brace at Jt(s): 14, 15

REACTIONS (lb/size) 2=328/0-3-8, 21=1716/0-3-8, 9=1545/0-3-8
Max Horz 2=157(load case 5)
Max Uplift2=-278(load case 5), 21=-576(load case 5), 9=-576(load case 6)
Max Grav 2=339(load case 9), 21=1716(load case 1), 9=1545(load case 1)

FORCES (lb) - Maximum Compression/Maximum Tension
TOP CHORD 1-2=0/47, 2-3=-56/276, 3-4=-1839/795, 4-5=-1851/798, 5-6=-1814/841, 6-7=-2095/860, 7-8=-3681/1292, 8-9=-2680/1018, 9-10=0/47
BOT CHORD 2-21=-32/0, 20-21=-1624/604, 3-20=-1557/608, 19-20=-149/99, 18-19=-418/1596, 17-18=-273/1591, 15-17=-887/3296, 14-15=-883/3318, 12-14=-100/50, 7-14=-211/1137, 13-16=0/0, 12-13=0/0, 11-12=-94/77, 9-11=-737/2318
WEBS 3-19=-536/1805, 4-19=-283/177, 4-18=-87/162, 5-18=-42/200, 5-17=-127/499, 6-17=-157/601, 7-17=-1664/626, 11-14=-701/2446, 8-14=-131/929, 8-11=-826/326, 13-15=-7/345

NOTES
1) Unbalanced roof live loads have been considered for this design.
2) Wind: ASCE 7-02; 110mph (3-second gust); h=20ft; TCDL=4.2psf; BCDL=3.0psf; Category II; Exp B; enclosed; MWFRS gable end zone and C-C Exterior(2) zone; porch left exposed; Lumber DOL=1.60 plate grip DOL=1.60. This truss is designed for C-C for members and forces, and for MWFRS for reactions specified.
3) Provide adequate drainage to prevent water ponding.
4) Provide mechanical connection (by others) of truss to bearing plate capable of withstanding 278 lb uplift at joint 2, 576 lb uplift at joint 21 and 576 lb uplift at joint 9.

LOAD CASE(S) Standard

JANUARY 16, 2006 TRUSS DESIGN ENGINEER:
THOMAS E. MILLER PE 56877, BYRON K. ANDERSON PE 60987
STRUCTURAL ENGINEERING AND INSPECTIONS, INC. EB 9196
16105 N. FLORIDA AVE. STE B, LUTZ, FL 33549

Dwg.#0116061150

Job	Truss	Truss Type	Qty	Ply	BRYAN ZECHER- LOT 24 CSE
L139397	T15	SPECIAL	1	1	Job Reference (optional)

Builders FirstSource, Lake City, Fl 32055 — 6.200 s Jul 13 2005 MiTek Industries, Inc. Fri Jan 13 09:16:47 2006 Page 1

-2-0-0	6-3-8	14-0-5	19-0-0	19-9-8	24-7-8	28-2-8	33-2-12	38-9-8	40-9-8
2-0-0	6-3-8	7-8-13	4-11-11	0-9-8	4-10-0	3-7-0	5-0-4	5-6-12	2-0-0

Scale = 1:73.0
Camber = 1/2 in

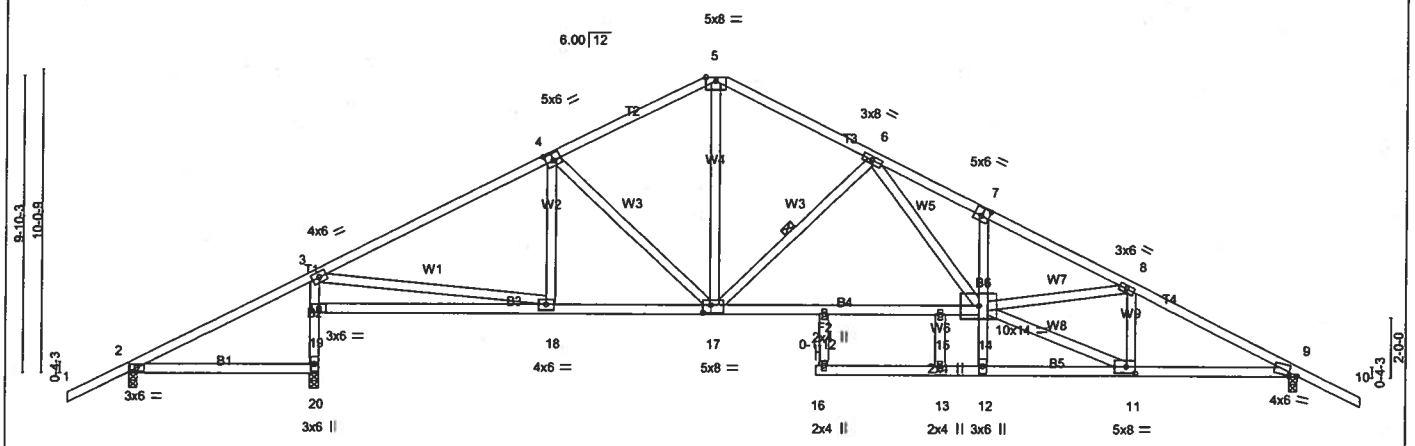

6-1-12	6-3-8	14-0-5	19-0-0	19-9-8	22-9-8	27-2-8	28-2-8	33-2-12	38-9-8
6-1-12	0-1-12	7-8-13	4-11-11	0-9-8	3-0-0	4-5-0	1-0-0	5-0-4	5-6-12

Plate Offsets (X,Y): [4:0-3-0,0-3-0], [7:0-3-0,0-3-0], [9:0-3-5,0-0-11], [11:0-3-8,0-2-8], [17:0-3-4,0-3-0]

LOADING (psf)		SPACING	2-0-0	CSI		DEFL	in	(loc)	l/defl	L/d	PLATES	GRIP
TCLL	20.0	Plates Increase	1.25	TC	0.47	Vert(LL)	-0.75	16	>521	240	MT20	244/190
TCDL	7.0	Lumber Increase	1.25	BC	0.76	Vert(TL)	-1.27	16	>308	180		
BCLL	10.0	Rep Stress Incr	YES	WB	0.84	Horz(TL)	0.14	9	n/a	n/a		
BCDL	5.0	Code FBC2004/TPI2002		(Matrix)							Weight: 231 lb	

LUMBER
TOP CHORD 2 X 4 SYP No.2
BOT CHORD 2 X 4 SYP No.2 *Except*
B2 2 X 4 SYP No.3, B6 2 X 4 SYP No.3, B4 2 X 4 SYP No.1D
WEBS 2 X 4 SYP No.3

BRACING
TOP CHORD Structural wood sheathing directly applied or 3-1-7 oc purlins.
BOT CHORD Rigid ceiling directly applied or 4-2-0 oc bracing.
WEBS 1 Row at midpt 6-17
JOINTS 1 Brace at Jt(s): 14, 15

REACTIONS (lb/size) 2=333/0-3-8, 20=1711/0-3-8, 9=1546/0-3-8
Max Horz 2=174(load case 5)
Max Uplift2=-280(load case 6), 20=-599(load case 5), 9=-588(load case 6)
Max Grav 2=340(load case 9), 20=1711(load case 1), 9=1546(load case 1)

FORCES (lb) - Maximum Compression/Maximum Tension
TOP CHORD 1-2=0/47, 2-3=-63/306, 3-4=-1992/842, 4-5=-1734/808, 5-6=-1706/793, 6-7=-3700/1390, 7-8=-3673/1295, 8-9=-2681/1038, 9-10=0/47
BOT CHORD 2-20=-45/0, 19-20=-1618/612, 3-19=-1480/633, 18-19=-102/217, 17-18=-398/1689, 15-17=-551/2255, 14-15=-551/2255, 12-14=0/81, 7-14=-222/209, 13-16=0/0, 12-13=0/0, 11-12=-132/0, 9-11=-756/2322
WEBS 3-18=-299/1498, 4-18=-57/85, 4-17=-347/272, 6-17=-1086/495, 6-14=-508/1734, 11-14=-746/2622, 8-14=-109/915, 8-11=-861/333, 5-17=-494/1199, 13-15=0/184

NOTES
1) Unbalanced roof live loads have been considered for this design.
2) Wind: ASCE 7-02; 110mph (3-second gust); h=20ft; TCDL=4.2psf; BCDL=3.0psf; Category II; Exp B; enclosed; MWFRS gable end zone and C-C Exterior(2) zone; porch left exposed; Lumber DOL=1.60 plate grip DOL=1.60. This truss is designed for C-C for members and forces, and for MWFRS for reactions specified.
3) Provide mechanical connection (by others) of truss to bearing plate capable of withstanding 280 lb uplift at joint 2, 599 lb uplift at joint 20 and 588 lb uplift at joint 9.

LOAD CASE(S) Standard

JANUARY 16, 2006 TRUSS DESIGN ENGINEER:
THOMAS E. MILLER PE 56877, BYRON K. ANDERSON PE 60987
STRUCTURAL ENGINEERING AND INSPECTIONS, INC. EB 9196
16105 N. FLORIDA AVE. STE B, LUTZ, FL 33549

Dwg.#0116061151

Job	Truss	Truss Type	Qty	Ply	BRYAN ZECHER- LOT 24 CSE
L139397	T16	SPECIAL	1	1	Job Reference (optional)

Builders FirstSource, Lake City, Fl 32055 — 6.200 s Jul 13 2005 MiTek Industries, Inc. Fri Jan 13 09:16:48 2006 Page 1

-2-0-0	6-3-8	14-0-3	19-4-12	24-7-7	28-2-8	33-2-12	38-9-8	40-9-8
2-0-0	6-3-8	7-8-11	5-4-9	5-2-12	3-7-1	5-0-4	5-6-12	2-0-0

Scale = 1:72.0
Camber = 1/2 in

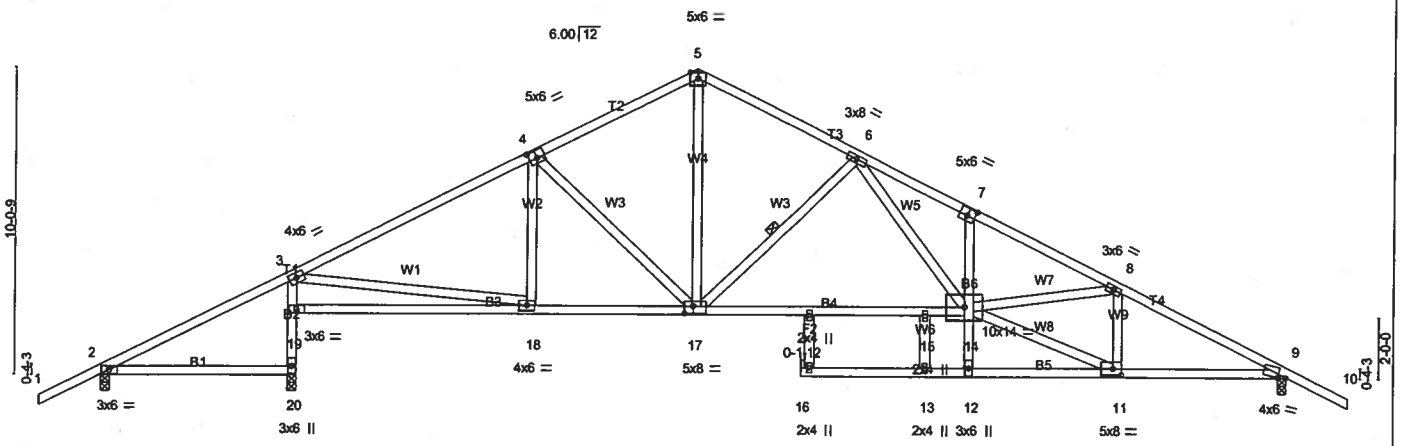

6-1-12	6-3-8	14-0-3	19-4-12	22-9-8	27-2-8	28-2-8	33-2-12	38-9-8
6-1-12	0-1-12	7-8-11	5-4-9	3-4-12	4-5-0	1-0-0	5-0-4	5-6-12

Plate Offsets (X,Y): [4:0-3-0,0-3-0], [7:0-3-0,0-3-0], [9:0-3-5,0-0-11], [11:0-3-8,0-2-8], [17:0-3-4,0-3-0]

LOADING (psf)		SPACING	2-0-0	CSI		DEFL	in	(loc)	l/defl	L/d	PLATES	GRIP
TCLL	20.0	Plates Increase	1.25	TC	0.48	Vert(LL)	-0.75	16	>521	240	MT20	244/190
TCDL	7.0	Lumber Increase	1.25	BC	0.76	Vert(TL)	-1.27	16	>308	180		
BCLL	10.0	Rep Stress Incr	YES	WB	0.84	Horz(TL)	0.14	9	n/a	n/a		
BCDL	5.0	Code FBC2004/TPI2002		(Matrix)							Weight: 231 lb	

LUMBER
TOP CHORD 2 X 4 SYP No.2
BOT CHORD 2 X 4 SYP No.2 *Except*
B2 2 X 4 SYP No.3, B6 2 X 4 SYP No.3, B4 2 X 4 SYP No.1D
WEBS 2 X 4 SYP No.3

BRACING
TOP CHORD Structural wood sheathing directly applied or 3-1-7 oc purlins.
BOT CHORD Rigid ceiling directly applied or 4-2-0 oc bracing.
WEBS 1 Row at midpt 6-17
JOINTS 1 Brace at Jt(s): 14, 15

REACTIONS (lb/size) 2=333/0-3-8, 20=1712/0-3-8, 9=1546/0-3-8
Max Horz 2=174(load case 5)
Max Uplift2=-280(load case 6), 20=-600(load case 5), 9=-588(load case 6)
Max Grav 2=340(load case 9), 20=1712(load case 1), 9=1546(load case 1)

FORCES (lb) - Maximum Compression/Maximum Tension
TOP CHORD 1-2=0/47, 2-3=-63/306, 3-4=-1990/839, 4-5=-1733/809, 5-6=-1706/793, 6-7=-3700/1390, 7-8=-3672/1295, 8-9=-2681/1038, 9-10=0/47
BOT CHORD 2-20=-45/0, 19-20=-1618/612, 3-19=-1480/634, 18-19=-107/221, 17-18=-396/1687, 15-17=-551/2255, 14-15=-551/2255, 12-14=0/81, 7-14=-222/209, 13-16=0/0, 12-13=0/0, 11-12=-132/0, 9-11=-756/2321
WEBS 3-18=-291/1491, 4-18=-56/84, 4-17=-347/274, 5-17=-497/1203, 6-17=-1087/496, 6-14=-507/1734, 11-14=-746/2622, 8-14=-109/915, 8-11=-861/333, 13-15=0/184

NOTES
1) Unbalanced roof live loads have been considered for this design.
2) Wind: ASCE 7-02; 110mph (3-second gust); h=20ft; TCDL=4.2psf; BCDL=3.0psf; Category II; Exp B; enclosed; MWFRS gable end zone and C-C Exterior(2) zone; porch left exposed; Lumber DOL=1.60 plate grip DOL=1.60. This truss is designed for C-C for members and forces, and for MWFRS for reactions specified.
3) Provide mechanical connection (by others) of truss to bearing plate capable of withstanding 280 lb uplift at joint 2, 600 lb uplift at joint 20 and 588 lb uplift at joint 9.

LOAD CASE(S) Standard

JANUARY 16, 2006 TRUSS DESIGN ENGINEER:
THOMAS E. MILLER PE 56877, BYRON K. ANDERSON PE 60987
STRUCTURAL ENGINEERING AND INSPECTIONS, INC. EB 9196
16105 N. FLORIDA AVE. STE B, LUTZ, FL 33549

Dwg.#0116061152

Job	Truss	Truss Type	Qty	Ply	BRYAN ZECHER- LOT 24 CSE
L139397	T17	SPECIAL	3	1	Job Reference (optional)

Builders FirstSource, Lake City, Fl 32055 — 6.200 s Jul 13 2005 MiTek Industries, Inc. Fri Jan 13 09:16:49 2006 Page 1

-2-0-0	6-3-8	14-0-3	19-4-12	24-7-8	31-0-0	38-9-8	40-9-8
2-0-0	6-3-8	7-8-11	5-4-9	5-2-12	6-4-8	7-9-8	2-0-0

Scale = 1:72.0
Camber = 1/4 in

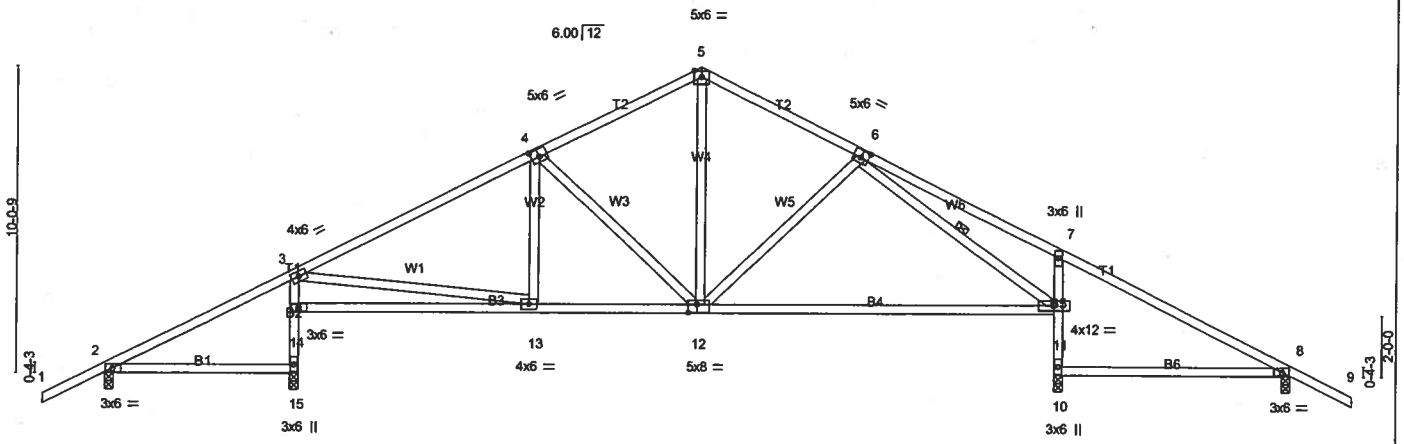

6-1-12	6-3-8	14-0-3	19-4-12	31-0-0	38-9-8
6-1-12	0-1-12	7-8-11	5-4-9	11-7-4	7-9-8

Plate Offsets (X,Y): [4:0-3-0,0-3-0], [6:0-3-0,0-3-0], [12:0-3-4,0-3-4]

LOADING (psf)		SPACING	2-0-0	CSI		DEFL	in	(loc)	l/defl	L/d	PLATES	GRIP
TCLL	20.0	Plates Increase	1.25	TC	0.44	Vert(LL)	0.16	8-10	>559	240	MT20	244/190
TCDL	7.0	Lumber Increase	1.25	BC	0.82	Vert(TL)	-0.58	11-12	>516	180		
BCLL	10.0	Rep Stress Incr	YES	WB	0.38	Horz(TL)	0.03	10	n/a	n/a		
BCDL	5.0	Code FBC2004/TPI2002		(Matrix)							Weight: 201 lb	

LUMBER
TOP CHORD 2 X 4 SYP No.2
BOT CHORD 2 X 4 SYP No.2 *Except*
B2 2 X 4 SYP No.3, B5 2 X 4 SYP No.3
WEBS 2 X 4 SYP No.3

BRACING
TOP CHORD Structural wood sheathing directly applied or 4-11-13 oc purlins.
BOT CHORD Rigid ceiling directly applied or 4-3-1 oc bracing.
WEBS 1 Row at midpt 6-11

REACTIONS (lb/size) 2=354/0-3-8, 15=1307/0-3-8, 10=1415/0-3-8, 8=390/0-3-8
Max Horz 2=174(load case 5)
Max Uplift2=-287(load case 6), 15=-536(load case 5), 10=-464(load case 6), 8=-413(load case 6)
Max Grav 2=354(load case 1), 15=1307(load case 1), 10=1415(load case 1), 8=391(load case 10)

FORCES (lb) - Maximum Compression/Maximum Tension
TOP CHORD 1-2=0/47, 2-3=-96/320, 3-4=-1351/675, 4-5=-1028/616, 5-6=-1014/606, 6-7=-209/434, 7-8=-84/307, 8-9=0/47
BOT CHORD 2-15=-54/27, 14-15=-1209/500, 3-14=-1073/524, 13-14=-137/290, 12-13=-271/1116, 11-12=-209/898, 10-11=-1284/491, 7-11=-475/377, 8-10=-93/1
WEBS 3-13=-150/834, 4-13=0/67, 4-12=-397/311, 5-12=-339/587, 6-12=-125/256, 6-11=-1005/246

NOTES
1) Unbalanced roof live loads have been considered for this design.
2) Wind: ASCE 7-02; 110mph (3-second gust); h=20ft; TCDL=4.2psf; BCDL=3.0psf; Category II; Exp B; enclosed; MWFRS gable end zone and C-C Exterior(2) zone; porch left and right exposed; Lumber DOL=1.60 plate grip DOL=1.60. This truss is designed for C-C for members and forces, and for MWFRS for reactions specified.
3) Provide mechanical connection (by others) of truss to bearing plate capable of withstanding 287 lb uplift at joint 2, 536 lb uplift at joint 15, 464 lb uplift at joint 10 and 413 lb uplift at joint 8.

LOAD CASE(S) Standard

JANUARY 16, 2006 TRUSS DESIGN ENGINEER:
THOMAS E. MILLER PE 56877, BYRON K. ANDERSON PE 60987
STRUCTURAL ENGINEERING AND INSPECTIONS, INC. EB 9196
16105 N. FLORIDA AVE. STE B, LUTZ, FL 33549

Dwg.#0116061153

Job	Truss	Truss Type	Qty	Ply	BRYAN ZECHER- LOT 24 CSE
L139397	T18	COMMON	7	1	Job Reference (optional)

Builders FirstSource, Lake City, Fl 32055

6.200 s Jul 13 2005 MiTek Industries, Inc. Fri Jan 13 09:16:49 2006 Page 1

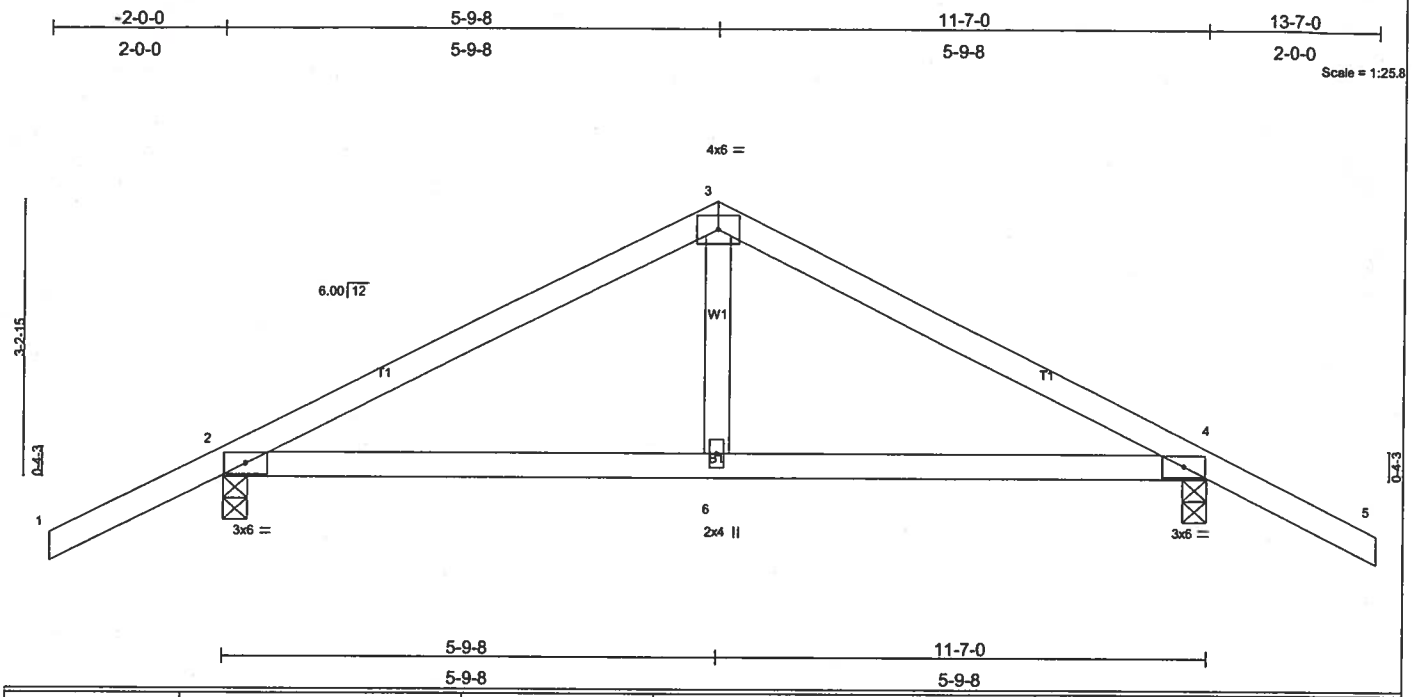

LOADING (psf)		SPACING	2-0-0	CSI		DEFL	in	(loc)	l/defl	L/d	PLATES	GRIP
TCLL	20.0	Plates Increase	1.25	TC	0.29	Vert(LL)	-0.03	2-6	>999	240	MT20	244/190
TCDL	7.0	Lumber Increase	1.25	BC	0.21	Vert(TL)	-0.05	2-6	>999	180		
BCLL	10.0	Rep Stress Incr	YES	WB	0.06	Horz(TL)	0.01	4	n/a	n/a		
BCDL	5.0	Code FBC2004/TPI2002		(Matrix)							Weight: 47 lb	

LUMBER
TOP CHORD 2 X 4 SYP No.2
BOT CHORD 2 X 4 SYP No.2
WEBS 2 X 4 SYP No.3

BRACING
TOP CHORD Structural wood sheathing directly applied or 6-0-0 oc purlins.
BOT CHORD Rigid ceiling directly applied or 10-0-0 oc bracing.

REACTIONS (lb/size) 2=590/0-3-8, 4=590/0-3-8
Max Horz 2=-79(load case 6)
Max Uplift2=-284(load case 5), 4=-284(load case 6)

FORCES (lb) - Maximum Compression/Maximum Tension
TOP CHORD 1-2=0/47, 2-3=-630/247, 3-4=-630/247, 4-5=0/47
BOT CHORD 2-6=-66/501, 4-6=-66/501
WEBS 3-6=0/193

NOTES
1) Unbalanced roof live loads have been considered for this design.
2) Wind: ASCE 7-02; 110mph (3-second gust); h=20ft; TCDL=4.2psf; BCDL=3.0psf; Category II; Exp B; enclosed; MWFRS gable end zone and C-C Exterior(2) zone; Lumber DOL=1.60 plate grip DOL=1.60. This truss is designed for C-C for members and forces, and for MWFRS for reactions specified.
3) Provide mechanical connection (by others) of truss to bearing plate capable of withstanding 284 lb uplift at joint 2 and 284 lb uplift at joint 4.

LOAD CASE(S) Standard

JANUARY 16, 2006 TRUSS DESIGN ENGINEER:
THOMAS E. MILLER PE 56877, BYRON K. ANDERSON PE 60987
STRUCTURAL ENGINEERING AND INSPECTIONS, INC. EB 9196
16105 N. FLORIDA AVE. STE B, LUTZ, FL 33549

Dwg.#0116061154

Job	Truss	Truss Type	Qty	Ply	BRYAN ZECHER- LOT 24 CSE
L139397	T18G	DROP TC GABLE	1	1	Job Reference (optional)

Builders FirstSource, Lake City, Fl 32055 — 6.200 s Jul 13 2005 MiTek Industries, Inc. Fri Jan 13 09:16:50 2006 Page 1

-2-0-0 | 5-9-8 | 11-7-0 | 13-7-0

2-0-0 | 5-9-8 | 5-9-8 | 2-0-0

Scale = 1:25.8

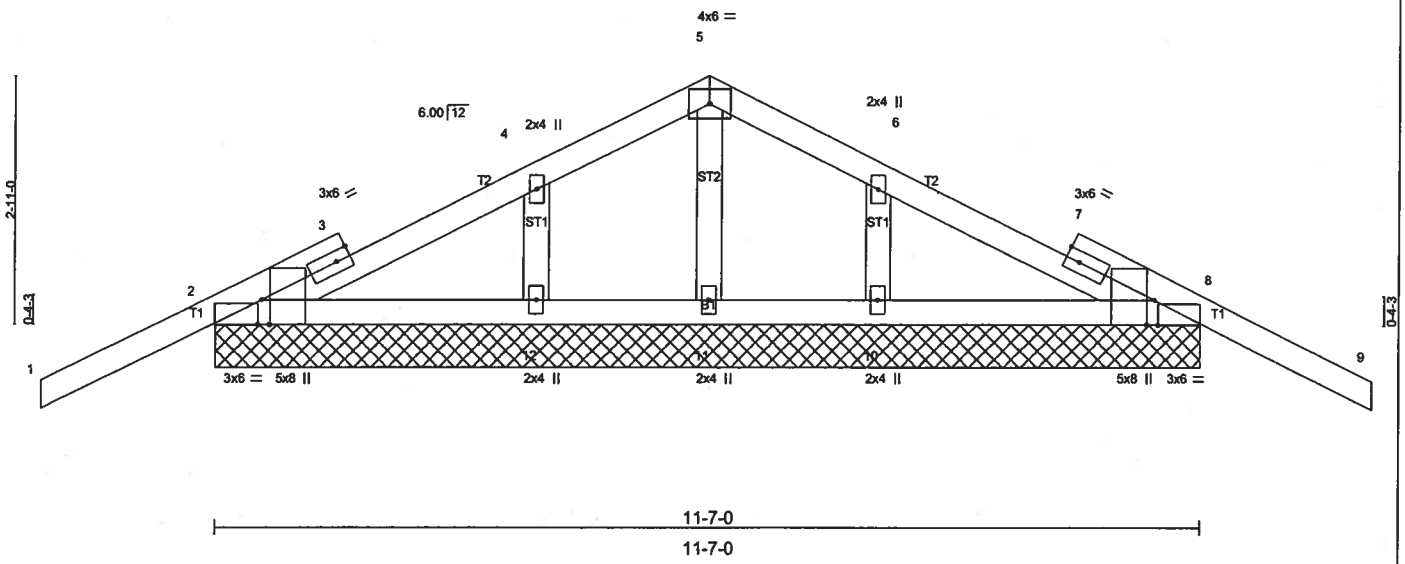

Plate Offsets (X,Y): [2:0-3-8,Edge], [2:0-0-8,Edge], [8:0-3-8,Edge], [8:0-0-8,Edge]

LOADING (psf)		SPACING 2-0-0		CSI		DEFL	in	(loc)	l/defl	L/d	PLATES	GRIP
TCLL	20.0	Plates Increase	1.25	TC	0.49	Vert(LL)	-0.03	9	n/r	120	MT20	244/190
TCDL	7.0	Lumber Increase	1.25	BC	0.07	Vert(TL)	-0.05	9	n/r	90		
BCLL	10.0	Rep Stress Incr	NO	WB	0.06	Horz(TL)	0.00	8	n/a	n/a		
BCDL	5.0	Code FBC2004/TPI2002		(Matrix)							Weight: 54 lb	

LUMBER
TOP CHORD 2 X 4 SYP No.2
BOT CHORD 2 X 4 SYP No.2
OTHERS 2 X 4 SYP No.3

BRACING
TOP CHORD Structural wood sheathing directly applied or 10-0-0 oc purlins.
BOT CHORD Rigid ceiling directly applied or 6-0-0 oc bracing.

REACTIONS (lb/size) 2=502/11-7-0, 8=502/11-7-0, 11=259/11-7-0, 12=431/11-7-0, 10=431/11-7-0
Max Horz 2=74(load case 5)
Max Uplift2=-290(load case 5), 8=-301(load case 6), 11=-49(load case 5), 12=-147(load case 5), 10=-151(load case 6)
Max Grav 2=505(load case 9), 8=505(load case 10), 11=259(load case 1), 12=434(load case 9), 10=434(load case 10)

FORCES (lb) - Maximum Compression/Maximum Tension
TOP CHORD 1-2=-25/99, 2-3=-23/32, 3-4=-34/158, 4-5=0/114, 5-6=0/114, 6-7=-15/158, 7-8=-11/32, 8-9=-25/99
BOT CHORD 2-12=-70/116, 11-12=-70/116, 10-11=-70/116, 8-10=-70/116
WEBS 5-11=-231/63, 4-12=-330/251, 6-10=-330/251

NOTES
1) Unbalanced roof live loads have been considered for this design.
2) Wind: ASCE 7-02; 110mph (3-second gust); h=20ft; TCDL=4.2psf; BCDL=3.0psf; Category II; Exp B; enclosed; MWFRS gable end zone and C-C Exterior(2) zone; Lumber DOL=1.60 plate grip DOL=1.60. This truss is designed for C-C for members and forces, and for MWFRS for reactions specified.
3) Truss designed for wind loads in the plane of the truss only. For studs exposed to wind (normal to the face), see MiTek "Standard Gable End Detail"
4) Gable requires continuous bottom chord bearing.
5) Gable studs spaced at 2-0-0 oc.
6) Provide mechanical connection (by others) of truss to bearing plate capable of withstanding 290 lb uplift at joint 2, 301 lb uplift at joint 8, 49 lb uplift at joint 11, 147 lb uplift at joint 12 and 151 lb uplift at joint 10.
7) In the LOAD CASE(S) section, loads applied to the face of the truss are noted as front (F) or back (B).

LOAD CASE(S) Standard
1) Regular: Lumber Increase=1.25, Plate Increase=1.25
Uniform Loads (plf)
Vert: 1-5=-114(F=-60), 5-9=-114(F=-60), 2-8=-30

JANUARY 16, 2006 TRUSS DESIGN ENGINEER:
THOMAS E. MILLER PE 56877, BYRON K. ANDERSON PE 60987
STRUCTURAL ENGINEERING AND INSPECTIONS, INC. EB 9196
16105 N. FLORIDA AVE. STE B, LUTZ, FL 33549

Symbols

PLATE LOCATION AND ORIENTATION

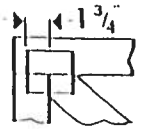

• Center plate on joint unless dimensions indicate otherwise. Dimensions are in inches. Apply plates to both sides of truss and securely seal.

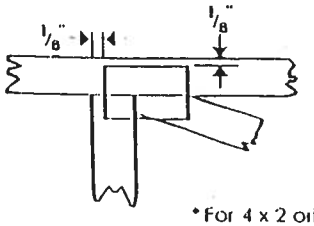

• For 4 x 2 orientation, locate plates 1/8" from outside edge of truss and vertical web.

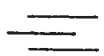

• This symbol indicates the required direction of slots in connector plates.

PLATE SIZE

4 x 4

The first dimension is the width perpendicular to slots. Second dimension is the length parallel to slots.

LATERAL BRACING

Indicates location of required continuous lateral bracing.

BEARING

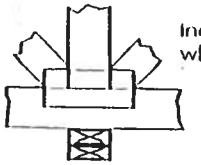

Indicates location of joints at which bearings (supports) occur.

Numbering System

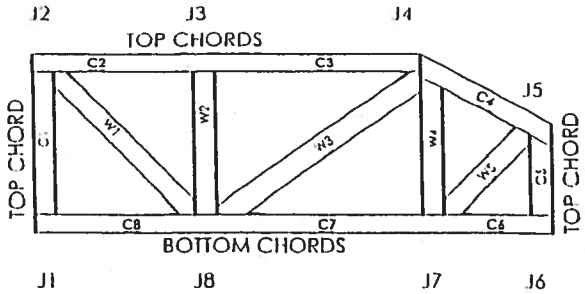

JOINTS AND CHORDS ARE NUMBERED CLOCKWISE AROUND THE TRUSS STARTING AT THE LOWEST JOINT FARTHEST TO THE LEFT.

WEBS ARE NUMBERED FROM LEFT TO RIGHT

CONNECTOR PLATE CODE APPROVALS

BOCA	96-31, 96-67
ICBO	3907, 4922
SBCCI	9667, 9432A
WISC/DILHR	960022-W, 970036-N
HER	561

MiTek Engineering Reference Sheet: MII-7473

General Safety Notes

Failure to Follow Could Cause Property Damage or Personal Injury

1. Provide copies of this truss design to the building designer, erection supervisor, property owner and all other interested parties.
2. Cut members to bear tightly against each other.
3. Place plates on each face of truss at each joint and embed fully. Avoid knots and wane at joint locations.
4. Unless otherwise noted, locate chord splices at ¼ panel length (± 6" from adjacent joint.)
5. Unless otherwise noted, moisture content of lumber shall not exceed 19% at time of fabrication.
6. Unless expressly noted, this design is not applicable for use with fire retardant or preservative treated lumber.
7. Camber is a non-structural consideration and is the responsibility of truss fabricator. General practice is to camber for dead load deflection.
8. Plate type, size and location dimensions shown indicate minimum plating requirements.
9. Lumber shall be of the species and size, and in all respects, equal to or better than the grade specified.
10. Top chords must be sheathed or purlins provided at spacing shown on design.
11. Bottom chords require lateral bracing at 10 ft. spacing, or less, if no ceiling is installed, unless otherwise noted.
12. Anchorage and / or load transfering connections to trusses are the responsibility of others unless shown.
13. Do not overload roof or floor trusses with stacks of construction materials.
14. Do not cut or alter truss member or plate without prior approval of a professional engineer.
15. Care should be exercised in handling, erection and installation of trusses.

COLUMBIA COUNTY BUILDING DEPARTMENT

RESIDENTIAL MINIMUM PLAN REQUIREMENTS AND CHECKLIST FOR FLORIDA BUILDING CODE 2001
ONE (1) AND TWO (2) FAMILY DWELLINGS

ALL REQUIREMENTS ARE SUBJECT TO CHANGE

EFFECTIVE MARCH 1, 2002

ALL BUILDING PLANS MUST INDICATE THE FOLLOWING ITEMS AND INDICATE COMPLIANCE WITH CHAPTER 1606 OF THE FLORIDA BUILDING CODE 2001 BY PROVIDING CALCULATIONS AND DETAILS THAT HAVE THE SEAL AND SIGNATURE OF A CERTIFIED ARCHITECT OR ENGINEER REGISTERED IN THE STATE OF FLORIDA, OR ALTERNATE METHODOLOGIES, APPROVED BY THE STATE OF FLORIDA BUILDING COMMISSION FOR ONE-AND-TWO FAMILY DWELLINGS. FOR DESIGN PURPOSES THE FOLLOWING BASIC WIND SPEED AS PER FIGURE 1606 SHALL BE USED.

WIND SPEED LINE SHALL BE DEFINED AS FOLLOWS: THE CENTERLINE OF INTERSTATE 75.

1. ALL BUILDINGS CONSTRUCTED EAST OF SAID LINE SHALL BE -------- 100 MPH
2. ALL BUILDINGS CONSTRUCTED WEST OF SAID LINE SHALL BE --------110 MPH
3. NO AREA IN COLUMBIA COUNTY IS IN A WIND BORNE DEBRIS REGION

APPLICANT – PLEASE CHECK ALL APPLICABLE BOXES BEFORE SUBMITTAL

GENERAL REQUIREMENTS: Two (2) complete sets of plans containing the following:

Applicant	Plans Examiner	
☑	☐	All drawings must be clear, concise and drawn to scale ("Optional " details that are not used shall be marked void or crossed off). Square footage of different areas shall be shown on plans.
☑	☐	Designers name and signature on document (FBC 104.2.1). If licensed architect or engineer, official seal shall be affixed.
☑	☐	**Site Plan including:** a) Dimensions of lot b) Dimensions of building set backs c) Location of all other buildings on lot, well and septic tank if applicable, and all utility easements. d) Provide a full legal description of property.
☑	☐	**Wind-load Engineering Summary, calculations and any details required** a) Plans or specifications must state compliance with FBC Section 1606 b) The following information must be shown as per section 1606.1.7 FBC a. Basic wind speed (MPH) b. Wind importance factor (I) and building category c. Wind exposure – if more than one wind exposure is used, the wind exposure and applicable wind direction shall be indicated d. The applicable internal pressure coefficient e. Components and Cladding. The design wind pressure in terms of psf (kN/m²), to be used for the design of exterior component and cladding materials not specifally designed by the registered design professional
☑	☐	**Elevations including:**
☑	☐	a) All sides
☑	☐	b) Roof pitch
☑	☐	c) Overhang dimensions and detail with attic ventilation
☑	☐	d) Location, size and height above roof of chimneys
☑	☐	e) Location and size of skylights
☑	☐	f) Building height
☑	☐	e) Number of stories

Floor Plan including:

a) Rooms labeled and dimensioned

b) Shear walls

c) Windows and doors (including garage doors) showing size, mfg., approval listing and attachment specs. (FBC 1707) and safety glazing where needed (egress windows in bedrooms to be shown)

d) Fireplaces (gas appliance) (vented or non-vented) or wood burning with hearth

e) Stairs with dimensions (width, tread and riser) and details of guardrails and handrails

f) Must show and identify accessibility requirements (accessible bathroom)

Foundation Plan including:

a) Location of all load-bearing wall with required footings indicated as standard Or monolithic and dimensions and reinforcing

b) All posts and/or column footing including size and reinforcing

c) Any special support required by soil analysis such as piling

d) Location of any vertical steel

Roof System:

a) Truss package including:

1. Truss layout and truss details signed and sealed by Fl. Pro. Eng
2. Roof assembly (FBC 104.2.1 Roofing system, materials, manufacturer, fastening requirements and product evaluation with wind resistance rating)

b) Conventional Framing Layout including:

1. Rafter size, species and spacing
2. Attachment to wall and uplift
3. Ridge beam sized and valley framing and support details
4. Roof assembly (FBC 104.2.1 Roofing systems, materials, manufacturer, fastening requirements and product evaluation with wind resistance rating)

NA

Wall Sections including:

a) Masonry wall

1. All materials making up wall
2. Block size and mortar type with size and spacing of reinforcement
3. Lintel, tie-beam sizes and reinforcement
4. Gable ends with rake beams showing reinforcement or gable truss and wall bracing details
5. All required connectors with uplift rating and required number and size of fasteners for continuous tie from roof to foundation
6. Roof assembly shown here or on roof system detail (FBC 104.2.1 Roofing system, materials, manufacturer, fastening requirements and product evaluation with resistance rating)
7. Fire resistant construction (if required)
8. Fireproofing requirements
9. Shoe type of termite treatment (termiticide or alternative method)
10. Slab on grade
    a. Vapor retarder (6mil. Polyethylene with joints lapped 6 inches and sealed)
    b. Must show control joints, synthetic fiber reinforcement or Welded fire fabric reinforcement and supports
11. Indicate where pressure treated wood will be placed
12. Provide insulation R value for the following:
    a. Attic space
    b. Exterior wall cavity
    c. Crawl space (if applicable)

NA

☑ ☐ b) Wood frame wall

1. All materials making up wall
2. Size and species of studs
3. Sheathing size, type and nailing schedule
4. Headers sized
5. Gable end showing balloon framing detail or gable truss and wall hinge bracing detail
6. All required fasteners for continuous tie from roof to foundation (truss anchors, straps, anchor bolts and washers)
7. Roof assembly shown here or on roof system detail (FBC104.2.1 Roofing system, materials, manufacturer, fastening requirements and product evaluation with wind resistance rating)
8. Fire resistant construction (if applicable)
9. Fireproofing requirements
10. Show type of termite treatment (termiticide or alternative method)
11. Slab on grade
    a. Vapor retarder (6Mil. Polyethylene with joints lapped 6 inches and sealed
    b. Must show control joints, synthetic fiber reinforcement or welded wire fabric reinforcement and supports
12. Indicate where pressure treated wood will be placed
13. Provide insulation R value for the following:
    a. Attic space
    b. Exterior wall cavity
    c. Crawl space (if applicable)

☐ ☐ ~~c) Metal frame wall and roof (designed, signed and sealed by Florida Prof Engineer or Architect)~~

NA

Floor Framing System:

☐ ☐ ~~a) Floor truss package including layout and details, signed and sealed by Florida Registered Professional Engineer~~

☐ ☐ ~~b) Floor joist size and spacing~~

☐ ☐ ~~c) Girder size and spacing~~

NA ☐ ☐ ~~d) Attachment of joist to girder~~

☐ ☐ ~~e) Wind load requirements where applicable~~

☐ ☐ **Plumbing Fixture layout**

Electrical layout including:

☑ ☐ a) Switches, outlets/receptacles, lighting and all required GFCI outlets identified

☑ ☐ b) Ceiling fans

☑ ☐ c) Smoke detectors

☑ ☐ d) Service panel and sub-panel size and location(s)

☑ ☐ e) Meter location with type of service entrance (overhead or underground)

☑ ☐ f) Appliances and HVAC equipment

☑ ☐ g) Arc Fault Circuits (AFCI) in bedrooms

HVAC information

☑ ☐ a) Manual J sizing equipment or equivalent computation

☑ ☐ b) Exhaust fans in bathroom

☑ ☐ **Energy Calculations** (dimensions shall match plans)

☑ ☐ **Gas System** Type (LP or Natural) Location and BTU demand of equipment N/A

Disclosure Statement for Owner Builders

Notice Of Commencement

Private Potable Water — Private water system

a) Size of pump motor

b) Size of pressure tank

c) Cycle stop valve if used

GARAGE DOORS

REVISIONS			
LETTER	DESCRIPTION	DATE	APPROVED
A	REV PER EN 10130	3/06/98	DL
B	REV PER EN 10141	3/13/98	DL
C	REV PER EN 10132	[illegible]	DL

ECTED WITH 5 OR MORE SECTIONS MUST BE
E/S/RUTS FOR THE ADDITIONAL INTERMEDIATE
ON THE THIRD SECTION.
L SECTIONS LESS THAN 20.812" MUST BE
THE ACTUAL SECTION HEIGHT & 20.812".
1 X 5/8" LONG TYPE AB HEX HEAD METAL SCREW
WIND WARNINGS ISSUED.

2.

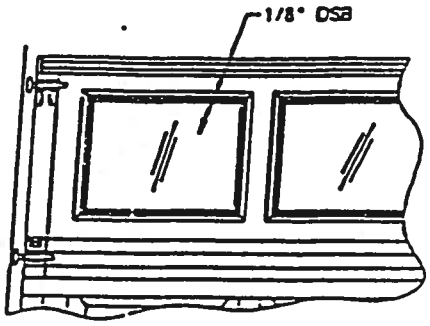

OPTIONAL WINDOW DETAIL
SCALE: 3/32

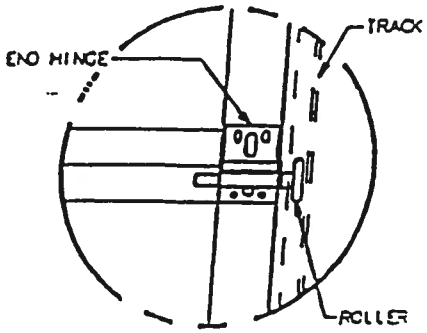

DETAIL "F"
SCALE: 1/4
(16" WIDE)

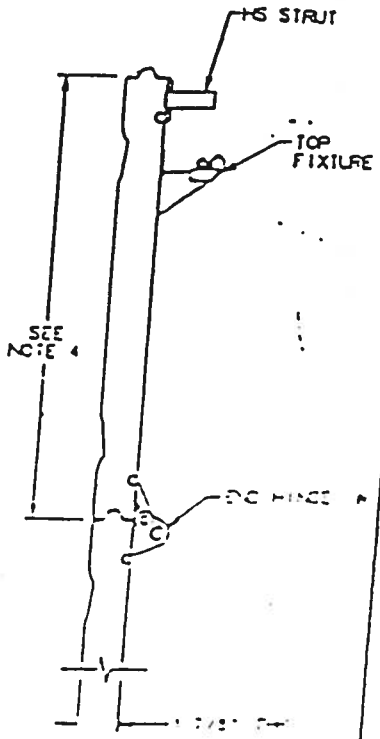

SECTION "A-A"
SCALE: 1/4

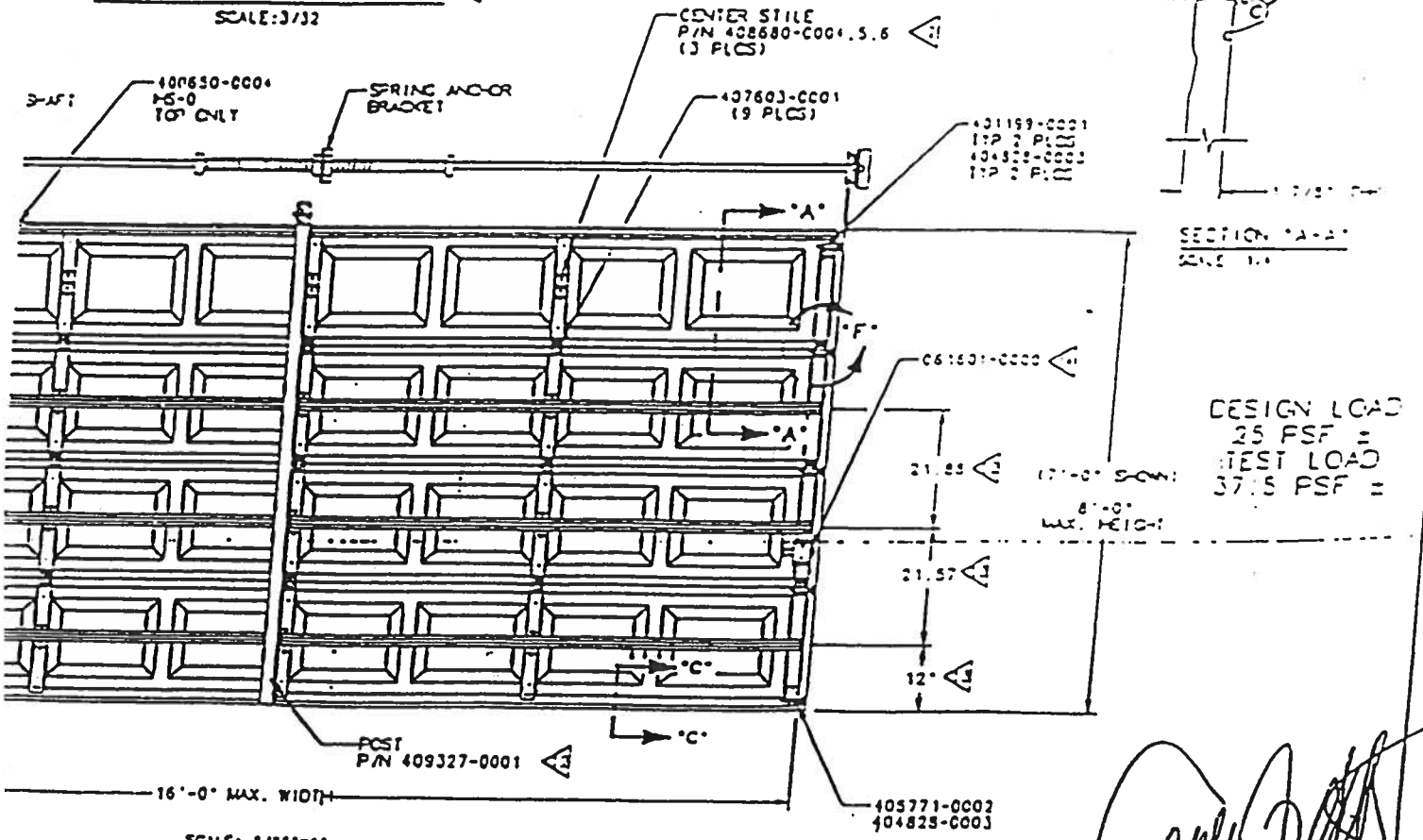

DESIGN LOAD
25 PSF =
TEST LOAD
37.5 PSF =

SCALE: 1/16"=1"
INTERIOR ELEVATION

10/01/01

M.TOLNIS	01/13/98	SERIES 280 & 180 RESI STL DR.16'-0" MAX WIDTH,WINDLOAD	
N/A	DAVID FAX	02/19/98	D-409335
NONE	EACH	DAVID FAX	02/19/98

NOTES:

1. TESTED IN ACCORDANCE WITH STANDARD BUILDING CODE, CHAPTER 17, TO A POSITIVE AND NEGATIVE 37.5 PSF.
2. DASH NUMBERS REPRESENT VARIOUS SECTION HEIGHTS.
3. FOUR SECTION 7' HIGH DOOR SHOWN. 8' HIGH DOORS HAVE FIVE SECTIONS.
4. SECTION HEIGHT OF 20.312, 19.00 & 16.75 ARE AVAILABLE AND MAY BE USED IN COMBINATION TO ACHIEVE VARIOUS HEIGHT DOORS.
5. EMBOSSMENT PATTERN OF 14.50 X 20.375 SHOWN. ALTERNATE PATTERNS OF 12.50 X 43.375 AND 12.50 X 20.375 MAY BE USED.
6. TORSION SPRINGS SHOWN. EXTENSION SPRINGS AVAILABLE.
7. USE THIS BRACKET, REF. P/N 405964-0002, ON 8' HIGH DOORS ONLY.
8. WINDOW MAY BE INSTALLED IN THE TOP SECTION OR THE SECTION IMMEDIATELY BELOW THE TOP SECTION.
9. THE STRUT PLACEMENT ON D CONSISTENT WITH THE DOOR SECTIONS ARE TO BE PLACE
10. THE STRUT PLACEMENT DIMEN REDUCED BY THE DIFFERENCE
11. SCREW P/N 605911-0001 IS
12. POST TO BE INSTALLED ONLY
13. STRUT PLACEMENTS CAN VARY
14. QUANTITY FOR LOCKS CAN BE

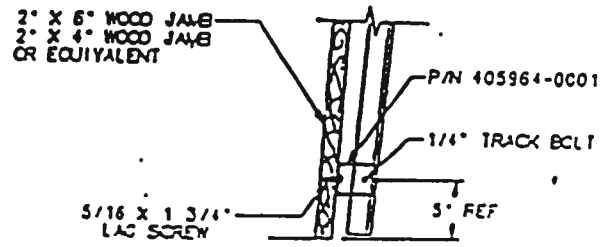

DETAIL "E"
SCALE: 1/3

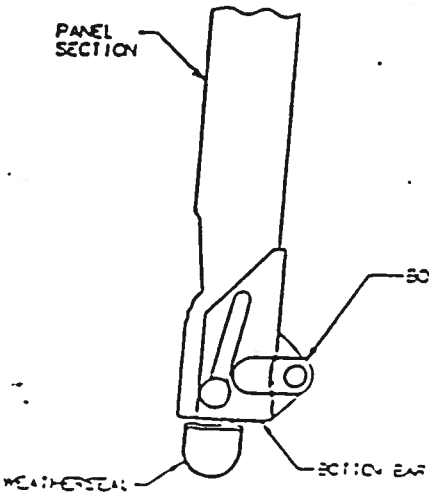

SECTION "C-C"
SCALE: 1/2

VIEW "D-
2" TRACK
.049 THK (VERT

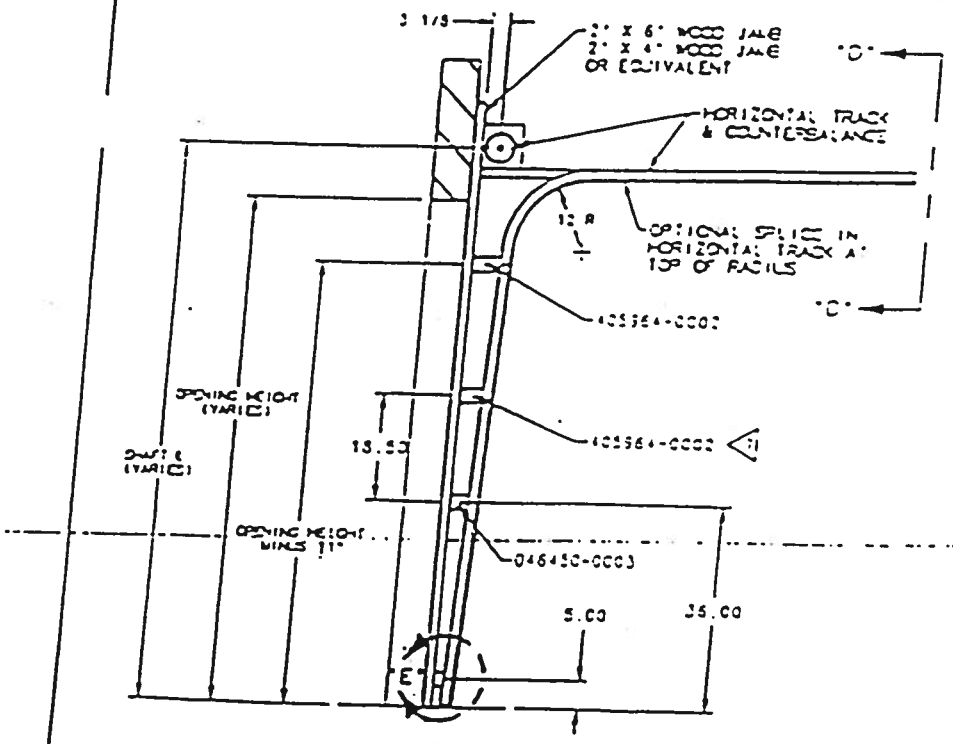

STANDARD TRACK DETAIL FOR 16'
SCALE: 1/16" = 1'

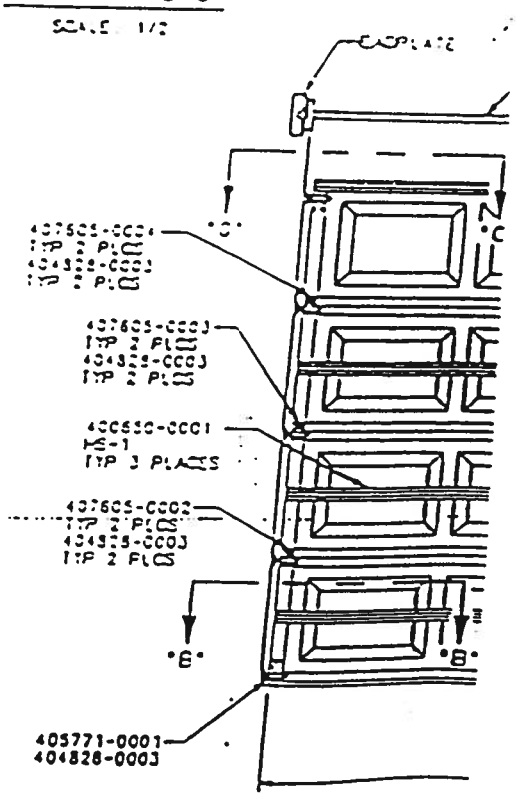

SERIES 280 THRU 289 ARE EQUIVALENT CONSTRUCTION 25GA STEEL
SERIES 180 ARE SAME CONSTRUCTION AS SERIES 280 ONLY 24GA STEEL AND END CAPS

DOOR TESTED WAS 231 SERIES.

DOOR WIDTH	CENTER STILE	END STILE	ROLLER SHAFT BRACKET	STRUTS/SECT.	ROLLER	VERTICAL TRACK GAGE	JAMB LOAD (# PER FT-HT)	HARDWARE
16'	3	SINGLE		HS1 HS0	2" X 7/16"	.049"	100	STD.

SHINGLES

ELK Premium Roofing

March 6, 2002

Subject: Elk Product Approval Information

All Prestique® and Capstone® products manufactured in Tuscaloosa, AL are certified under the Miami – Dade County Building Code Office (BCCO). These products also meet the requirements for the Florida Building Code since they are MD approved. The following test protocols must be passed by each of the products in order for MD product certification:

ASTM D3462
PA 100 (110 mph uplift and wind driven rain resistance)
PA 107 (Modified ASTM D3161 - 110 mph wind uplift resistance)

The nailing patterns that were used during the PA 100 and PA 107 wind test protocols for the Prestique and Capstone products are listed below. Also listed below are the Miami – Dade Notice of Acceptance Numbers (NOA).

Raised Profile, Prestique High Definition, Prestique 35, or Prestique 30 –
PA 100 = 4 nails
PA 107 = 5 nails
MD NOA# = 01-1226.04

Prestique I 35 or Prestique I* –
PA 100 = 4 nails
PA 107 = 5 nails
MD NOA# = 01-1226.05

Prestique Plus or Prestique Gallery Collection* –
PA 100 = 4 nails
PA 107 = 4 nails
MD NOA# = 01-1226.03

Capstone*
PA 100 = 4 Nails
PA 107 = 4 Nails
MD NOA# = 01-0523.01

* As per the Elk Limited Warranty, six nails are required for the Elk high wind warranty

If there are any questions please contact:

Mike Reed – Technical Manager
(205) 342-0287

or

Daniel DeJarnette – QA Engineer
(205) 342-0298

DIRECTIONS FOR APPLICATION

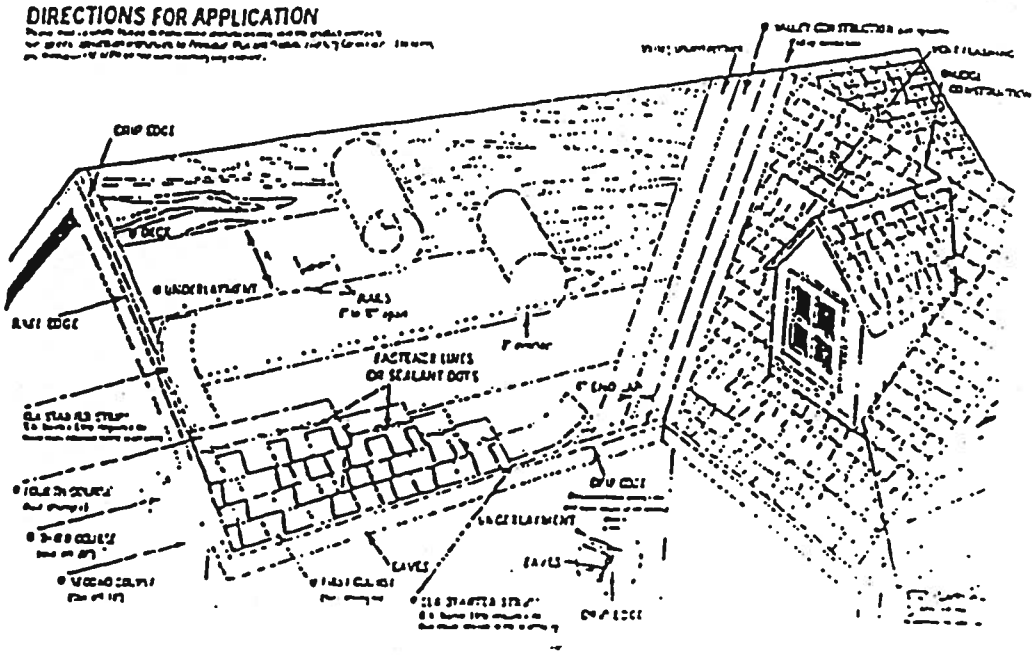

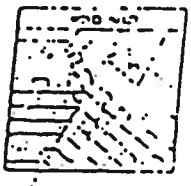

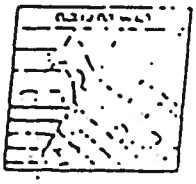

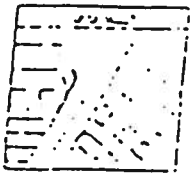

DIRECTIONS FOR APPLICATION

LINE FLASHING FOR ICE DAMS (USE A BOILING CONTRACTOR, REFER TO ROOFING MANUAL OR CHECK LOCAL CODES)

STARTER SHINGLE COURSE

FIRST COURSE

SECOND COURSE

THIRD COURSE

FOURTH COURSE

FIFTH COURSE

SIXTH COURSE

FASTENING

HAMSARU APPLICATIONS

LIMITED RAND WARRANTY

CAUTION TO WHOLESALER

ELK

www.elkcorp.com

ROOFING PRODUCTS SPECIFICATIONS – TUSCALOOSA, AL

PRESTIQUE®
HIGH DEFINITION®

RAISED PROFILE™

HIP AND RIDGE SHINGLES

WINDOWS

AAMA/NWWDA 101/I.S.2-97
TEST REPORT SUMMARY

Rendered to:

MI HOME PRODUCTS, INC.

SERIES/MODEL: 650 Fin
TYPE: Aluminum Single Hung Window

Title of Test	Results
Rating	H-R40 52 x 72
Overall Design Pressure	+45.0 psf -47.2 psf
Operating Force	11 lb max.
Air Infiltration	0.13 cfm/ft²
Water Resistance	6.00 psf
Structural Test Pressure	+67.5 psf -70.8 psf
Deglazing	Passed
Forced Entry Resistance	Grade 10

Reference should be made to Report No. 01-41134.01 dated 03/26/02 for complete test specimen description and data.

For ARCHITECTURAL TESTING, INC.

Mark A. Hess, Technician

MAH:nlb

ALLEN N. REEVES
LICENSE
NO. 15554
STATE OF
FLORIDA
PROFESSIONAL ENGINEER

1 APRIL 2002

Architectural Testing

AAMA/NWWDA 101/I.S.2-97 TEST REPORT

Rendered to

MI HOME PRODUCTS, INC.
650 West Market Street
P.O. Box 370
Gratz, Pennsylvania 17030-0370

Report No: 01-41134.01
Test Date: 03/07/02
Report Date: 03/26/02
Expiration Date: 03/07/06

Project Summary: Architectural Testing, Inc. (ATI) was contracted by MI Home Products, Inc. to perform tests on Series/Model 650 Fin, aluminum single hung window at their facility located in Elizabethville, Pennsylvania. The samples tested successfully met the performance requirements for a H-R40 52 x 72 rating.

Test Specification: The test specimen was evaluated in accordance with AAMA/NWWDA 101/I.S.2-97, *Voluntary Specifications for Aluminum, Vinyl (PVC) and Wood Windows and Glass Doors.*

Test Specimen Description

Series/Model: 650 Fin

Type: Aluminum Single Hung Window

Overall Size: 4' 4-1/4" wide by 6' 0-3/8" high

Active Sash Size: 4' 1-3/4" wide by 3' 0-5/8" high

Daylight Opening Size: 3' 11-3/8" wide by 2' 9-1/2" high

Screen Size: 4' 0-1/4" wide by 2' 11-1/8" high

Finish: All aluminum was white.

Glazing Details: The active and fixed lites utilized 5/8" thick, sealed insulating glass constructed from two sheets of 1/8" thick, clear annealed glass and a metal reinforced butyl spacer system. The active sash was channel glazed utilizing a flexible vinyl wrap around gasket. The fixed lite was interior glazed against double-sided adhesive foam tape and secured with PVC snap-in glazing beads.

130 Derry Court
York, PA 17402-9405
phone: 717.764.7700
fax: 717.764.4129
www.architest.com

Allen T. Rennie
1 APRIL 2002

REGISTERED PROFESSIONAL ENGINEER
LICENSE NO. 18354
STATE OF FLORIDA

Test Specimen Description: (Continued)

Weatherstripping:

Description	Quantity	Location
0.230" high by 0.270" backed polypile with center fin	1 Row	Fixed meeting rail
0.250" high by 0.187" backed polypile with center fin	2 Rows	Active sash stiles
1/2" x 1/2" dust plug	4 Pieces	Active sash, top and bottom of stiles
1/4" foam-filled vinyl bulb seal	1 Row	Active sash, bottom rail

Frame Construction: The frame was constructed of extruded aluminum with coped, butted, and sealed corners fastened with two #8 x 1" screws through the head and sill into each jamb screw boss. End caps were utilized on the ends of the fixed meeting rail and secured with two 1-1/4" screws per cap. Meeting rail was secured to the frame utilizing two 1-1/4" screws.

Sash Construction: The sash was constructed of extruded aluminum with coped, butted, and sealed corners fastened with two #8 x 1-1/2" screws through the rails into each jamb screw boss.

Screen Construction: The screen was constructed from roll-formed aluminum with keyed corners. The fiberglass mesh was secured with a flexible spline.

Hardware:

Description	Quantity	Location
Metal cam lock with keeper		Midspan, active meeting rail with keeper adjacent on fixed meeting rail
Plastic tilt latch	2	Active sash, meeting rail ends
Metal tilt pin	2	Active sash, bottom rail ends
Balance assembly	2	One in each jamb
Screen plunger	2	4" from rail ends on top rail

ALLEN H. REEVES, JR. CERTIFICATE NO. 11[illegible] STATE OF FLORIDA PROFESSIONAL ENGINEER

Allen H. Reeves
1 APRIL 2002

Test Specimen Description: (Continued)

Drainage: Sloped sill

Reinforcement: No reinforcement was utilized.

Installation: The test specimen was installed into a 2 x 8 #2 Spruce-Pine-Fir wood test buck with #8 x 1-5/8" drywall screws every 8" on center around the nail fin. Polyurethane was used as a sealant under the nail fin and around the exterior perimeter.

Test Results:

The results are tabulated as follows

Paragraph	Title of Test - Test Method	Results	Allowed
2.2.1.6.1	Operating Force	11 lbs	30 lbs max
	Air Infiltration (ASTM E 283-91) @ 1.57 psf (25 mph)	0.13 cfm/ft²	0.3 cfm/ft² max

Note #1: The tested specimen meets the performance levels specified in AAMA/NWWDA 101/I.S. 2-97 for air infiltration.

	Water Resistance (ASTM E 547-00) (with and without screen) WTP = 2.86 psf	No leakage	No leakage
2.1.4.1	Uniform Load Deflection (ASTM E 330-97) (Measurements reported were taken on the meeting rail) (Loads were held for 33 seconds)		
	@ 25.9 psf (positive)	0.42"*	0.26" max.
	@ 34.7 psf (negative)	0.43"*	0.26" max.

**Exceeds L/175 for deflection, but passes all other test requirements.*

2.1.4.2	Uniform Load Structural (ASTM E 330-97) (Measurements reported were taken on the meeting rail) (Loads were held for 10 seconds)		
	@ 38.9 psf (positive)	0.02"	0.18" max.
	@ 52.1 psf (negative)	0.02"	0.18" max.

Allen H. Reeves
1 APRIL 2002

ALLEN H. REEVES
CERTIFICATE
NO. 1337
STATE OF
FLORIDA
PROFESSIONAL ENGINEER

Test Specimen Description: (Continued)

Paragraph	Title of Test - Test Method	Results	Allowed
2.2.1.6.2	**Deglazing Test (ASTM E 987)**		
	In operating direction at 70 lbs		
	Meeting rail	0.12"/25%	0.50"/100%
	Bottom rail	0.12"/25%	0.50"/100%
	In remaining direction at 50 lbs		
	Left stile	0.06"/12%	0.50"/100%
	Right stile	0.06"/12%	0.50"/100%
	Forced Entry Resistance (ASTM F 588-97)		
	Type: A		
	Grade: 10		
	Lock Manipulation Test	No entry	No entry
	Tests A1 through A5	No entry	No entry
	Test A7	No entry	No entry
	Lock Manipulation Test	No entry	No entry

Optional Performance

4.3	Water Resistance (ASTM E 547-00) (with and without screen) WTP = 6.00 psf	No leakage	No leakage
	Uniform Load Deflection (ASTM E 330-97) (Measurements reported were taken on the meeting rail) (Loads were held for 33 seconds)		
	@ 45.0 psf (positive)	0.47"*	0.26" max.
	@ 47.2 psf (negative)	0.46"*	0.26" max.

**Exceeds L/175 for deflection, but passes all other test requirements.*

Uniform Load Structural (ASTM E 330-97) (Measurements reported were taken on the meeting rail) (Loads were held for 10 seconds)		
@ 67.5 psf (positive)	0.05"	0.18" max.
@ 70.8 psf (negative)	0.05"	0.18" max.

Allen M. Reuss
1 APRIL 2002

LEIF H. REYES
STATE OF FLORIDA
PROFESSIONAL ENGINEER

Detailed drawings, representative samples of the test specimen, and a copy of this report will be retained by ATI for a period of four years. The above results were secured by using the designated test methods and they indicate compliance with the performance requirements of the above referenced specification. This report does not constitute certification of this product, which may only be granted by the certification program administrator.

For ARCHITECTURAL TESTING, INC:

Mark A. Hess
Technician

Allen N. Reeves, P.E.
Director - Engineering Services
1 APRIL 2002

MAH:mb
01-41134.01

ALLEN N. REEVES
CERTIFICATE
NO. 17954
STATE OF
FLORIDA
PROFESSIONAL ENGINEER

X
Opaque Inswing Unit

COP-WL-JH4101-02

WOOD-EDGE STEEL DOORS

APPROVED ARRANGEMENT:

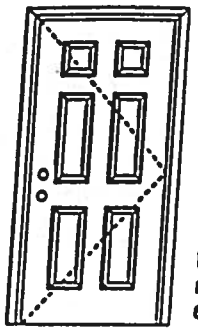

Warnock Hersey

Test Data Review Certificate #30264447A and COP/Test Report Validation Matrix #30264447A-001 provides additional information - available from the ITS/WH website (www.itsemia.com), the Masonite website (www.masonite.com) or the Masonite technical center

Note:
Units of other sizes are covered by this report as long as the panel used does not exceed 3'0" x 6'8".

Single Door
Maximum unit size - 3'0" x 6'8"

Design Pressure
+66.0/-66.0
Limited water unless special threshold design is used

Large Missile Impact Resistance
Hurricane protective system (shutters) is NOT REQUIRED.

Actual design pressure and impact resistant requirements for a specific building design are determined based on the requirements in ASCE 7-95. State or local building codes may be more restrictive

MINIMUM ASSEMBLY DETAIL:

Compliance requires that minimum assembly details have been followed - see MAD-WL-MA2001-02

MINIMUM INSTALLATION DETAIL:

Compliance requires that minimum installation details have been followed - see MID-WL-MA2001-02

APPROVED DOOR STYLES:

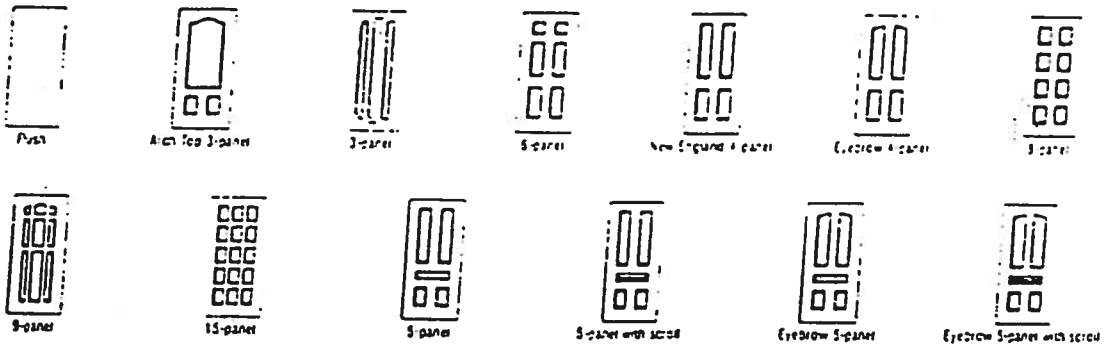

Johnson EntrySystems

June 17, 2002
Our continuing program of product improvement causes specifications, design and product data subject to change without notice

PREMDOR Fabrication
Premium Quality Doors

Exclusively from
Masonite
Masonite International Corporation

X
Opaque Inswing Unit

COP-WL-JH4101-02

WOOD-EDGE STEEL DOORS

CERTIFIED TEST REPORTS:

NCTL 210-2185-1, 2, 3

Certifying Engineer and License Number: Barry D. Portney, P.E. / 16258.

Unit Tested in Accordance with Miami-Dade BCCO PA201, PA202 and PA203.

Door panels constructed from 26-gauge 0.017" thick steel skins. Both stiles constructed from wood. Top end rails constructed of 0.041" steel. Bottom end rails constructed of 0.021" steel. Interior cavity of slab filled with rigid polyurethane foam core.

Frame constructed of wood with an extruded aluminum threshold.

PRODUCT COMPLIANCE LABELING:

TESTED IN ACCORDANCE WITH
MIAMI-DADE BCCO
PA201, PA202 & PA203

COMPANY NAME
CITY STATE

To the best of my knowledge and ability the above side-hinged exterior door unit conforms to the requirements of the 2001 Florida Building Code, Chapter 17 (Structural Tests and Inspections).

Kurt L Balthazor

State of Florida, Professional Engineer
Kurt Balthazor, P.E. – License Number 56533

Warnock Hersey

Test Data Review Certificate #3026447A and COP/Test Report Validation Matrix #3026447A-001 provides additional information - available from the ITS WH website (www.itsweb.com), the Masonite website (www.masonite.com) or the Masonite technical center.

Johnson EntrySystems

June 17, 2002

PREMDOR Premium Quality Doors

Masonite
Masonite International Corporation

XX
Glazed Inswing Unit

COP-WL-JH4142-02

WOOD-EDGE STEEL DOORS

APPROVED ARRANGEMENT:

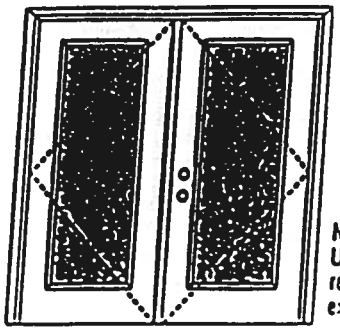

Warnock Hersey

Test Data Review Certificate #3026447A and CCP/Test Report Validation Matrix #3026447A-001 provides additional information - available from the ITS/WH website (www.itsweb.com), the Masonite website (www.masonite.com) or the Masonite technical center

Note:
Units of other sizes are covered by this report as long as the panels used do not exceed 3'0" x 6'8".

Double Door
Maximum unit size - 6'0" x 6'8"

Design Pressure
+40.5/-40.5
Based on the special overlay design [illegible]

Large Missile Impact Resistance
Hurricane protective system (shutters) is REQUIRED

Actual design pressure and impact resistance [illegible] the specific design and installation [illegible] door assembly [illegible]

MINIMUM ASSEMBLY DETAIL:

Compliance requires that minimum assembly details have been followed - see MAD-WL-MAC000-00 and MAD-WL-MAC041-02.

MINIMUM INSTALLATION DETAIL:

Compliance requires that minimum installation details have been followed - see MIDWL-MA0000-00

APPROVED DOOR STYLES:

1/4 GLASS:


100 Series


[illegible] Series


[illegible] Series

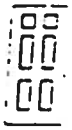
630 Series

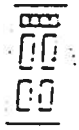
[illegible] Series

1/2 GLASS:


105 Series*


106, 160 Series*


129 Series*


200 Series*


12 A.L. 23 A.L. 24 A.L. Series*


107 Series*


108 Series


304 Series

*This glass lite may also be used in the following door styles: 5-panel, 5-panel with scroll, Eyebrow 5-panel, Eyebrow 5-panel with scroll.

Johnson EntrySystems

June 17, 2002
Our continuing program of product improvement makes specifications, sizes and products subject to change without notice.

Exclusively from PREMDOOR Premium Quality Doors
Masonite
Masonite International Corporation

XX
Glazed Inswing Unit

COP-WL-JH4142-02

WOOD-EDGE STEEL DOORS

APPROVED DOOR STYLES:

3/4 GLASS:


404 Series


410 Series


450 Series

FULL GLASS:


109 Series


114, 120, 122 Series


152 Series


149 Series


350 Series

CERTIFIED TEST REPORTS:

NCTL 210-1897-7, 8, 9, 10, 11, 12; NCTL 210-1861-4, 5, 6, 10, 11, 12, NCTL 210-2185-1, 2, 3

Certifying Engineer and License Number: Barry D. Portney, P.E. / 16258

Unit Tested in Accordance with Miami-Dade ECCO PA202.

Evaluation report NCTL-210-2794-1

Door panels constructed from 25-gauge 0.017" thick steel skins. Both stiles constructed from wood. Top end rails constructed of 0.041" steel. Bottom end rails constructed of 0.021" steel. Interior cavity of slab filled with rigid polyurethane foam core. Slab glazed with insulated glass mounted in a rigid plastic lip lite surround

Frame constructed of wood with an extruded aluminum threshold

PRODUCT COMPLIANCE LABELING:

TESTED IN
ACCORDANCE WITH
MIAMI-DADE ECCO PA202

COMPANY NAME
CITY, STATE

To the best of my knowledge and ability the above side-hinged exterior door unit conforms to the requirements of the 2001 Florida Building Code, Chapter 17 (Structural Tests and Inspections).

State of Florida, Professional Engineer
Kurt Balthazor, P.E. – License Number 56533

Warnock Hersey

Test Data Review Certificate #3025447A and COP/Test Report Validation Matrix #3025447A-001 provides additional information - available from the ITS/WH website (www.itsweb.com), the Masonite website (www.masonite.com) or the Masonite technical center.

Johnson EntrySystems

June 17, 2002

PREMDOR

Masonite

Masonite International Corporation

GARAGE HEADER (84)

Anthony POWER HEADER®

26F$_b$ - 1.9E

ENGINEERED WOOD SECTION PROPERTIES AND LOAD CAPACITIES

ALLOWABLE DESIGN STRESSES (PSI):

FLEXURAL STRESS (F_b) =	2600
COMPRESSION PERP. TO GRAIN ($F_{c\perp}$) =	740
HORIZONTAL SHEAR (F_v) =	225
MODULUS OF ELASTICITY (MOE) =	1.9×10^6

[illegible]	7.7	9.0	10.4	11.7	12.9	14.2	15.5
[illegible]	326	514	789	1115	1521	2014	2604
[illegible]	8865	12015	15996	20145	24772	29877	35460
[illegible]	3908	4550	5250	5892	6533	7175	7817

NOTES:

1. Beam weights are based on 38 pcf.
2. Moment capacities are based on a span of 21 feet and must be modified for other spans.
3. Flexural Stress, F_b, shall be modified by the Volume Factor, C_v as outlined in AITC 117 - Design 1993 and the NDS for Wood Construction 1997.
4. Allowable design properties and load capacities are based on a load duration of 100 percent and dry use conditions.
5. The AITC NER 466 was used in calculating the above allowable design stresses for POWER HEADER®.

GARAGE HEADER COMPARISONS

[illegible]						
[illegible]	810 / 540	3-1/2" x 8-3/8"	3-1/2" x 9-5/8"	3-1/2" x 9"	3-1/2" x 9-1/4"	3-1/2" x 11-1/4"**
[illegible]	990 / 720	3-1/2" x 9-3/4"	3-1/2" x 9-5/8"	3-1/2" x 10-1/2"	3-1/2" x 9-1/4"	3-1/2" x 11-1/4"**
[illegible]	610 / 400	3-1/2" x 12-5/8"	3-1/2" x 13-3/4"	3-1/2" x 13-1/2"	3-1/2" x 14"	3-1/2" x 14"*
[illegible]	765 / 510	3-1/2" x 14"	3-1/2" x 15-1/8"	3-1/2" x 15"	3-1/2" x 14"	3-1/2" x 16"*
[illegible]	750 / 480	3-1/2" x 15-3/8"	3-1/2" x 16-1/2"	3-1/2" x 16-1/2"	3-1/2" x 16"	3-1/2" x 18"*
[illegible]	900 / 600	3-1/2" x 16-3/4"	3-1/2" x 17-7/8"	3-1/2" x 18"	3-1/2" x 16"	—

For more information on POWER HEADER®, or other laminated structural products from Anthony Forest Products Company please call 1-800-221-2326 or FAX at 870-862-6502.

POWER HEADER® is a trademark of
Anthony Forest Products Company
Post Office Box 1877 • El Dorado, Arkansas 71731
Internet address: http:// www.anthonyforest.com
e-mail: info@anthonyforest.com

Distributed by:

WOODFORD PLYWOOD, INC.
"Structural Wood Products"

11960 West Beaver Street
Jacksonville, Florida 32220
(904) 695-9080
(800) 447-6568
FAX (904) 695-9160

Anthony POWER HEADER®

26F$_b$ - 1.9E

3-1/2" WIDTH GARAGE HEADER PLF CAPACITY

844	896		1216		1573							
161	207	254	330	390	510	552	669	752	824			
114	145	180	231	277	359	391	510	534	653	707	789	

844	975		1322									
161	207	254	330	390	510	552	724	752	897			
114	145	180	231	277	359	391	510	534	699	693		

562	778	888	1056	1363	1367		1582					
107	153	169	245	260	380	268	540	501	715	664	864	840
76	107	120	171	185	267	261	380	356	521	471	684	609	813

NOTES:

1. Values shown are the maximum uniform loads in pounds per lineal foot (PLF) that can be applied to the header. Header weight has been subtracted from the allowable total load.
2. Tables are based on simple span uniform load conditions using a design span equal to the center-to-center of bearing. Non-shaded areas are based on 3" of bearing at each support, shaded areas on 4.5" of bearing, and shaded & outlined areas on 6" of bearing at supports.
3. Headers are assumed to be loaded on the top edge with continuous lateral support along compression edge.
4. When no live load is listed, total load controls.
5. Deflection limits are listed within the PLF table heading.

GARAGE HEADER SIZING USING PLF TABLES:

To size a garage header supporting roof only, determine the total load & live load in pounds per lineal foot (PLF). Check the appropriate PLF table for a header supporting roof loads only (125% Non-Snow vs. 115% Snow) and select a member with a total load and live load capacity which meets or exceeds the design load for the rough opening size. For a garage header supporting roof, wall, and floor framing, determine the total load and live load in pounds per lineal foot (PLF). Select a header size from the roof, wall, and floor table (100% load duration) which has a total load and live load capacity equal to or greater than the design load for the appropriate rough opening.

Notice of Intent for Preventative Treatment for Termites

(As required by Florida Building Code 104.2.6)

Date: _____

_____ _____

(Address of Treatment or Lot/Block of Treatment) City

Florida Pest Control & Chemical Co.

www.flapest.com

Product to be used: Bora-Care Termiticide (Wood Treatment)

Chemical to be used: 23% Disodium Octaborate Tetrahydrate

Application will be performed onto structural wood at dried-in stage of construction. Bora-Care Termiticide application shall be applied according to EPA registered label directions as stated in the Florida Building Code Section 1861.1.8

(Information to be provided to local building code offices prior to concrete foundation installation.)

6/04

PRODUCT APPROVAL SPECIFICATION SHEET

Location: COUNTRYSIDE ESTATES **Project Name:** LOT 24

As required by Florida Statute 553.842 and Florida Administrative Code 9B-72, please provide the information and the product approval number(s) on the building components listed below if they will be utilized on the construction project for which you are applying for a building permit on or after April 1, 2004. We recommend you contact your local product supplier should you not know the product approval number for any of the applicable listed products. More information about statewide product approval can be obtained at www.floridabuilding.org

Category/Subcategory	Manufacturer	Product Description	Approval Number(s)
A. EXTERIOR DOORS			
1. Swinging			
2. Sliding			
3. Sectional			
4. Roll up			
5. Automatic			
6. Other			
B. WINDOWS			
1. Single hung			
2. Horizontal Slider			
3. Casement			
4. Double Hung			
5. Fixed			
6. Awning			
7. Pass -through			
8. Projected			
9. Mullion			
10. Wind Breaker			
11 Dual Action			
12. Other			
C. PANEL WALL			
1. Siding			
2. Soffits			
3. EIFS			
4. Storefronts			
5. Curtain walls			
6. Wall louver			
7. Glass block			
8. Membrane			
9. Greenhouse			
10. Other			
D. ROOFING PRODUCTS			
1. Asphalt Shingles			
2. Underlayments			
3. Roofing Fasteners			
4. Non-structural Metal Rf			
5. Built-Up Roofing			
6. Modified Bitumen			
7. Single Ply Roofing Sys			
8. Roofing Tiles			
9. Roofing Insulation			
10. Waterproofing			
11. Wood shingles /shakes			
12. Roofing Slate			

Category/Subcategory (cont.)	Manufacturer	Product Description	Approval Number(s)
13. Liquid Applied Roof Sys			
14. Cements-Adhesives – Coatings			
15. Roof Tile Adhesive			
16. Spray Applied Polyurethane Roof			
17. Other			
E. SHUTTERS			
1. Accordion			
2. Bahama			
3. Storm Panels			
4. Colonial			
5. Roll-up			
6. Equipment			
7. Others			
F. SKYLIGHTS			
1. Skylight			
2. Other			
G. STRUCTURAL COMPONENTS			
1. Wood connector/anchor			
2. Truss plates			
3. Engineered lumber			
4. Railing			
5. Coolers-freezers			
6. Concrete Admixtures			
7. Material			
8. Insulation Forms			
9. Plastics			
10. Deck-Roof			
11. Wall			
12. Sheds			
13. Other			
H. NEW EXTERIOR ENVELOPE PRODUCTS			
1.			
2.			

The products listed below did not demonstrate product approval at plan review. I understand that at the time of inspection of these products, the following information must be available to the inspector on the jobsite; 1) copy of the product approval, 2) the performance characteristics which the product was tested and certified to comply with, 3) copy of the applicable manufacturers installation requirements.

I understand these products may have to be removed if approval cannot be demonstrated during inspection

Contractor or Contractor's Authorized Agent Signature

CHRIS W. COX 2-9-06

Print Name Date

Location

Permit # **(FOR STAFF USE ONLY)**

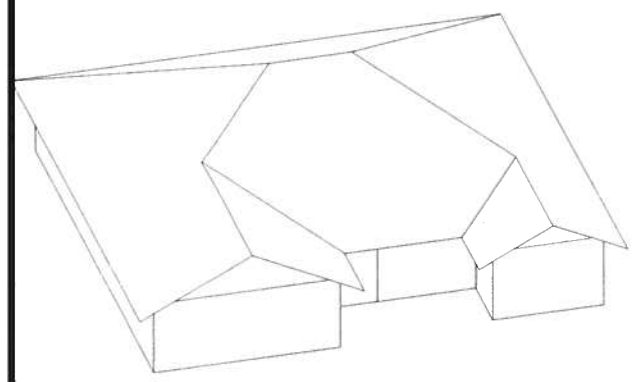

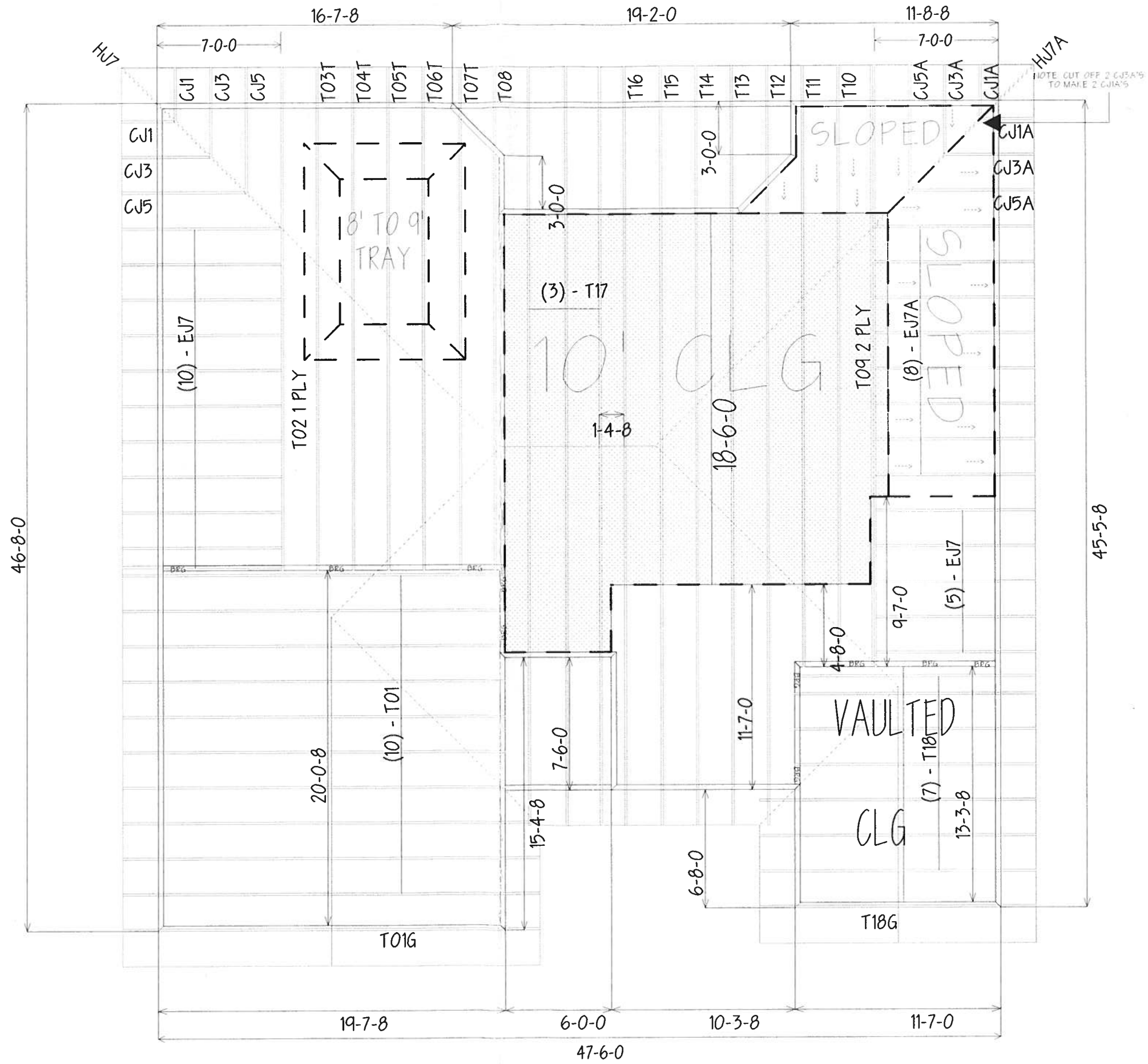

BEARING HEIGHT SCHEDULE

8'

2' O/H
6/12

NOTES:

1.) REFER TO HIB 91 (RECOMMENDATIONS FOR HANDLING INSTALLATION AND TEMPORARY BRACING) REFER TO ENGINEERED DRAWINGS FOR PERMANENT BRACING REQUIRED.

2.) ALL TRUSSES (INCLUDING TRUSSES UNDER VALLEY FRAMING) MUST BE COMPLETELY DECKED OR REFER TO DETAIL V105 FOR ALTERNATE BRACING REQUIREMENTS.

3.) ALL VALLEYS ARE TO BE CONVENTIONALLY FRAMED BY BUILDER.

4.) ALL TRUSSES ARE DESIGNED FOR 2' o.c. MAXIMUM SPACING, UNLESS OTHERWISE NOTED.

5.) ALL WALLS SHOWN ON PLACEMENT PLAN ARE CONSIDERED TO BE LOAD BEARING, UNLESS OTHERWISE NOTED.

6.) SY42 TRUSSES MUST BE INSTALLED WITH THE TOP BEING UP.

7.) ALL FLOOR TRUSS HANGERS TO BE SIMPSON HUS26 UNLESS OTHERWISE NOTED. ALL FLOOR TRUSS HANGERS TO BE SIMPSON THA422 UNLESS OTHERWISE NOTED.

8.) BEAM/HEADER/LINTEL (HDR) TO BE FURNISHED BY BUILDER.

SHOP DRAWING APPROVAL

THIS LAYOUT IS THE SOLE SOURCE FOR FABRICATION OF TRUSSES AND VOIDS ALL PREVIOUS ARCHITECTURAL OR OTHER TRUSS LAYOUTS. REVIEW AND APPROVAL OF THIS LAYOUT MUST BE RECEIVED BEFORE ANY TRUSSES WILL BE BUILT. VERIFY ALL CONDITIONS TO INSURE AGAINST CHANGES THAT WILL RESULT IN EXTRA CHARGES TO YOU

Requested Delivery Date: _____

Approved By: _____ Date: _____

Builders FirstSource
Bunnell
PHONE: 904-437-3349 FAX: 904-437-3994
Jacksonville
PHONE: 904-772-6100 FAX: 904-772-1973
Lake City
PHONE: 904-755-6894 FAX: 904-755-7973
Sanford
PHONE: 407-322-0059 FAX: 407-322-5553

BUILDER: BRYAN ZECHER

TRUSS ADDRESS: LOT 24 CSE

MODEL: THE SAMUEL

REVISION:

SCALE: NTS

DATE: 1-13-06

DRAWN BY: JRD

JOB #: L139397