Project Information:	Builder: Cash Account Model: CUSTOM Builders FirstSource Job #: L284512F	Builders FirstSource 2525 E. Duval St. Lake City, FL 32055

© Builders FirstSource, Inc. 2002

Job	Truss	Truss Type	Qty	Ply	CURTIS RES.
L284512F	F01	FLOOR	1	1	L284512F001 Job Reference (optional)

Builders FirstSource, Lake City, Fl 32055 — 6.300 s Apr 19 2006 MiTek Industries, Inc. Mon Aug 04 08:36:38 2008 Page 1

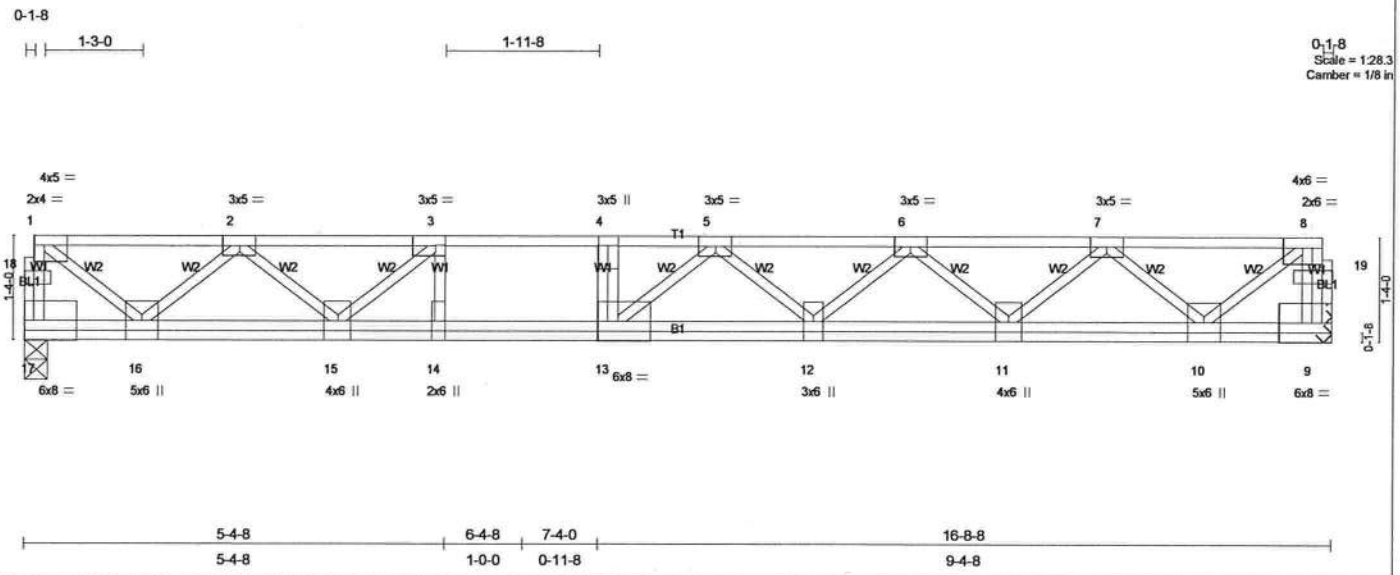

Plate Offsets (X,Y): [1:Edge,0-1-8], [3:0-1-8,Edge], [13:0-3-0,Edge], [14:0-3-0,Edge], [18:0-1-8,0-1-0], [19:0-1-8,0-1-0]

LOADING (psf)		SPACING	2-0-0	CSI		DEFL	in	(loc)	l/defl	L/d	PLATES	GRIP
TCLL	40.0	Plates Increase	1.00	TC	0.61	Vert(LL)	-0.22	12-13	>896	360	MT20	244/190
TCDL	10.0	Lumber Increase	1.00	BC	0.80	Vert(TL)	-0.34	12-13	>577	240		
BCLL	0.0	Rep Stress Incr	YES	WB	0.49	Horz(TL)	0.03	9	n/a	n/a		
BCDL	5.0	Code FBC2004/TPI2002		(Matrix)							Weight: 111 lb	

LUMBER
TOP CHORD 4 X 2 SYP No.2
BOT CHORD 4 X 2 SYP No.2
WEBS 4 X 2 SYP No.3

BRACING
TOP CHORD Structural wood sheathing directly applied or 6-0-0 oc purlins, except end verticals.
BOT CHORD Rigid ceiling directly applied or 10-0-0 oc bracing.

REACTIONS (lb/size) 17=896/0-3-8, 9=896/Mechanical

FORCES (lb) - Maximum Compression/Maximum Tension
TOP CHORD 17-18=-896/0, 1-18=-895/0, 9-19=-889/0, 8-19=-871/0, 1-2=-950/0, 2-3=-2295/0, 3-4=-3016/0, 4-5=-3016/0, 5-6=-3073/0, 6-7=-2322/0, 7-8=-989/0
BOT CHORD 16-17=0/49, 15-16=0/1761, 14-15=0/3016, 13-14=0/3016, 12-13=0/3205, 11-12=0/2827, 10-11=0/1815, 9-10=0/49
WEBS 3-14=0/400, 4-13=-118/19, 1-16=0/1196, 2-16=-1100/0, 2-15=0/724, 3-15=-1026/0, 8-10=0/1224, 7-10=-1121/0, 7-11=0/689, 6-11=-685/0, 6-12=0/334, 5-12=-247/0, 5-13=-418/220

JOINT STRESS INDEX
1 = 0.69, 2 = 0.75, 3 = 0.65, 4 = 0.32, 5 = 0.50, 6 = 0.50, 7 = 0.71, 8 = 0.78, 9 = 0.34, 10 = 0.93, 11 = 0.68, 12 = 0.66, 13 = 0.33, 14 = 0.49, 15 = 0.72, 16 = 0.91, 17 = 0.35, 18 = 0.00, 18 = 0.49, 19 = 0.00 and 19 = 0.49

NOTES (3-4)
1) Unbalanced floor live loads have been considered for this design.
2) Recommend 2x6 strongbacks, on edge, spaced at 10-0-0 oc and fastened to each truss with 3-16d nails. Strongbacks to be attached to walls at their outer ends or restrained by other means.
3) Truss Design Engineer: Julius Lee, PE: Florida P.E. License No. 34869: Address: 1109 Coastal Bay Blvd. Boynton Beach, FL 33435
4) Use Simpson HHUS48 to attach Truss to Carrying member

LOAD CASE(S) Standard

Job	Truss	Truss Type	Qty	Ply	CURTIS RES.
L284512F	F02	FLOOR	6	1	L284512F002 Job Reference (optional)

Builders FirstSource, Lake City, Fl 32055

6.300 s Apr 19 2006 MiTek Industries, Inc. Mon Aug 04 08:36:39 2008 Page 1

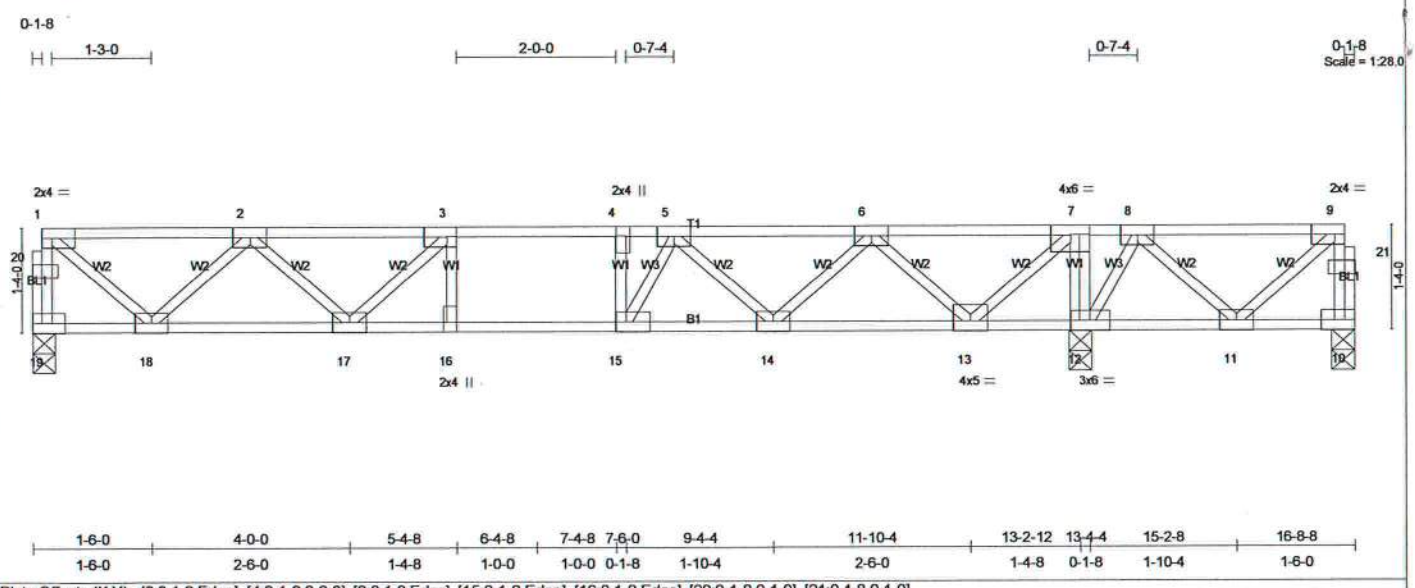

Plate Offsets (X,Y): [3:0-1-8,Edge], [4:0-1-8,0-0-0], [9:0-1-8,Edge], [15:0-1-8,Edge], [16:0-1-8,Edge], [20:0-1-8,0-1-0], [21:0-1-8,0-1-0]

LOADING (psf)		SPACING	2-0-0	CSI		DEFL	in	(loc)	l/defl	L/d	PLATES	GRIP
TCLL	40.0	Plates Increase	1.00	TC	0.53	Vert(LL)	-0.08	16-17	>999	360	MT20	244/190
TCDL	10.0	Lumber Increase	1.00	BC	0.57	Vert(TL)	-0.12	16-17	>999	240		
BCLL	0.0	Rep Stress Incr	YES	WB	0.41	Horz(TL)	0.02	12	n/a	n/a		
BCDL	5.0	Code FBC2004/TPI2002		(Matrix)							Weight: 90 lb	

LUMBER
TOP CHORD 4 X 2 SYP No.2
BOT CHORD 4 X 2 SYP No.2
WEBS 4 X 2 SYP No.3

BRACING
TOP CHORD Structural wood sheathing directly applied or 6-0-0 oc purlins, except end verticals.
BOT CHORD Rigid ceiling directly applied or 6-0-0 oc bracing.

REACTIONS (lb/size) 19=623/0-3-8, 10=-179/0-3-8, 12=1354/0-3-8
Max Uplift10=-303(load case 2)
Max Grav 19=624(load case 2), 10=75(load case 3), 12=1354(load case 1)

FORCES (lb) - Maximum Compression/Maximum Tension
TOP CHORD 19-20=-618/0, 1-20=-617/0, 10-21=-69/309, 9-21=-69/308, 1-2=-595/0, 2-3=-1314/0, 3-4=-1460/0, 4-5=-1460/0, 5-6=-907/0, 6-7=-86/400, 7-8=0/1089, 8-9=0/381
BOT CHORD 18-19=0/32, 17-18=0/1115, 16-17=0/1460, 15-16=0/1460, 14-15=0/1302, 13-14=0/513, 12-13=-1089/0, 11-12=-746/0, 10-11=-16/4
WEBS 3-16=-92/28, 4-15=-302/0, 7-12=-858/0, 1-18=0/766, 2-18=-723/0, 2-17=0/277, 3-17=-255/0, 7-13=0/1026, 6-13=-946/0, 6-14=0/548, 5-14=-551/0, 5-15=0/468, 9-11=-501/0, 8-11=0/508, 8-12=-663/0

JOINT STRESS INDEX
1 = 0.81, 2 = 0.52, 3 = 0.65, 4 = 0.49, 5 = 0.79, 6 = 0.60, 7 = 0.66, 8 = 0.77, 9 = 0.65, 10 = 0.65, 11 = 0.55, 12 = 0.76, 13 = 0.75, 14 = 0.60, 15 = 0.78, 16 = 0.49, 17 = 0.52, 18 = 0.83, 19 = 0.65, 20 = 0.00, 20 = 0.49, 21 = 0.00 and 21 = 0.49

NOTES (6)
1) Unbalanced floor live loads have been considered for this design.
2) All plates are 3x5 MT20 unless otherwise indicated.
3) Provide mechanical connection (by others) of truss to bearing plate capable of withstanding 303 lb uplift at joint 10.
4) Recommend 2x6 strongbacks, on edge, spaced at 10-0-0 oc and fastened to each truss with 3-16d nails. Strongbacks to be attached to walls at their outer ends or restrained by other means.
5) CAUTION, Do not erect truss backwards.
6) Truss Design Engineer: Julius Lee, PE: Florida P.E. License No. 34869: Address: 1109 Coastal Bay Blvd. Boynton Beach, FL 33435

LOAD CASE(S) Standard

Job	Truss	Truss Type	Qty	Ply	CURTIS RES.
L284512F	F03	FLOOR	5	1	L284512F003 Job Reference (optional)

Builders FirstSource, Lake City, Fl 32055

6.300 s Apr 19 2006 MiTek Industries, Inc. Mon Aug 04 08:36:39 2008 Page 1

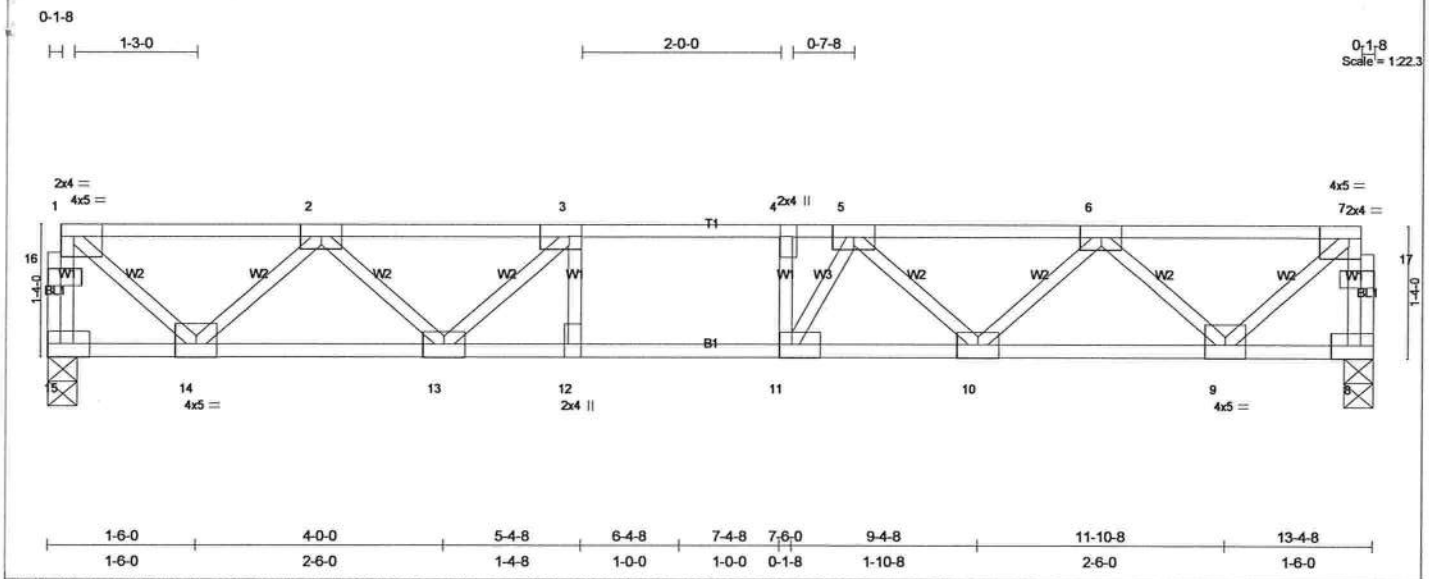

Plate Offsets (X,Y): [1:Edge,0-1-8], [3:0-1-8,Edge], [4:0-1-8,0-0-0], [7:0-1-8,Edge], [11:0-1-8,Edge], [12:0-1-8,Edge], [16:0-1-8,0-1-0], [17:0-1-8,0-1-0]

LOADING (psf)		SPACING	2-0-0	CSI		DEFL	in	(loc)	l/defl	L/d	PLATES	GRIP
TCLL	40.0	Plates Increase	1.00	TC	0.39	Vert(LL)	-0.10	10-11	>999	360	MT20	244/190
TCDL	10.0	Lumber Increase	1.00	BC	0.63	Vert(TL)	-0.15	10-11	>999	240		
BCLL	0.0	Rep Stress Incr	YES	WB	0.36	Horz(TL)	0.03	8	n/a	n/a		
BCDL	5.0	Code FBC2004/TPI2002		(Matrix)							Weight: 70 lb	

LUMBER
TOP CHORD 4 X 2 SYP No.2
BOT CHORD 4 X 2 SYP No.2
WEBS 4 X 2 SYP No.3

BRACING
TOP CHORD Structural wood sheathing directly applied or 6-0-0 oc purlins, except end verticals.
BOT CHORD Rigid ceiling directly applied or 10-0-0 oc bracing.

REACTIONS (lb/size) 15=716/0-3-8, 8=716/0-3-8

FORCES (lb) - Maximum Compression/Maximum Tension
TOP CHORD 15-16=-712/0, 1-16=-711/0, 8-17=-710/0, 7-17=-709/0, 1-2=-697/0, 2-3=-1610/0, 3-4=-1926/0, 4-5=-1926/0, 5-6=-1610/0, 6-7=-697/0
BOT CHORD 14-15=0/37, 13-14=0/1301, 12-13=0/1926, 11-12=0/1926, 10-11=0/1881, 9-10=0/1306, 8-9=0/37
WEBS 3-12=-62/132, 4-11=-250/41, 1-14=0/897, 2-14=-841/0, 2-13=0/444, 3-13=-522/0, 7-9=0/898, 6-9=-847/0, 6-10=0/422, 5-10=-377/0, 5-11=-134/383

JOINT STRESS INDEX
1 = 0.54, 2 = 0.48, 3 = 0.28, 4 = 0.16, 5 = 0.63, 6 = 0.46, 7 = 0.54, 8 = 0.56, 9 = 0.66, 10 = 0.46, 11 = 0.63, 12 = 0.17, 13 = 0.48, 14 = 0.65, 15 = 0.56, 16 = 0.00, 16 = 0.00, 17 = 0.00 and 17 = 0.00

NOTES (4-5)
1) Unbalanced floor live loads have been considered for this design.
2) All plates are 3x5 MT20 unless otherwise indicated.
3) Recommend 2x6 strongbacks, on edge, spaced at 10-0-0 oc and fastened to each truss with 3-16d nails. Strongbacks to be attached to walls at their outer ends or restrained by other means.
4) Truss Design Engineer: Julius Lee, PE: Florida P.E. License No. 34869: Address: 1109 Coastal Bay Blvd. Boynton Beach, FL 33435
5)

LOAD CASE(S) Standard

Job	Truss	Truss Type	Qty	Ply	CURTIS RES.
L284512F	F04	FLOOR	1	1	L284512F004 Job Reference (optional)

Builders FirstSource, Lake City, Fl 32055 — 6.300 s Apr 19 2006 MiTek Industries, Inc. Mon Aug 04 08:36:40 2008 Page 1

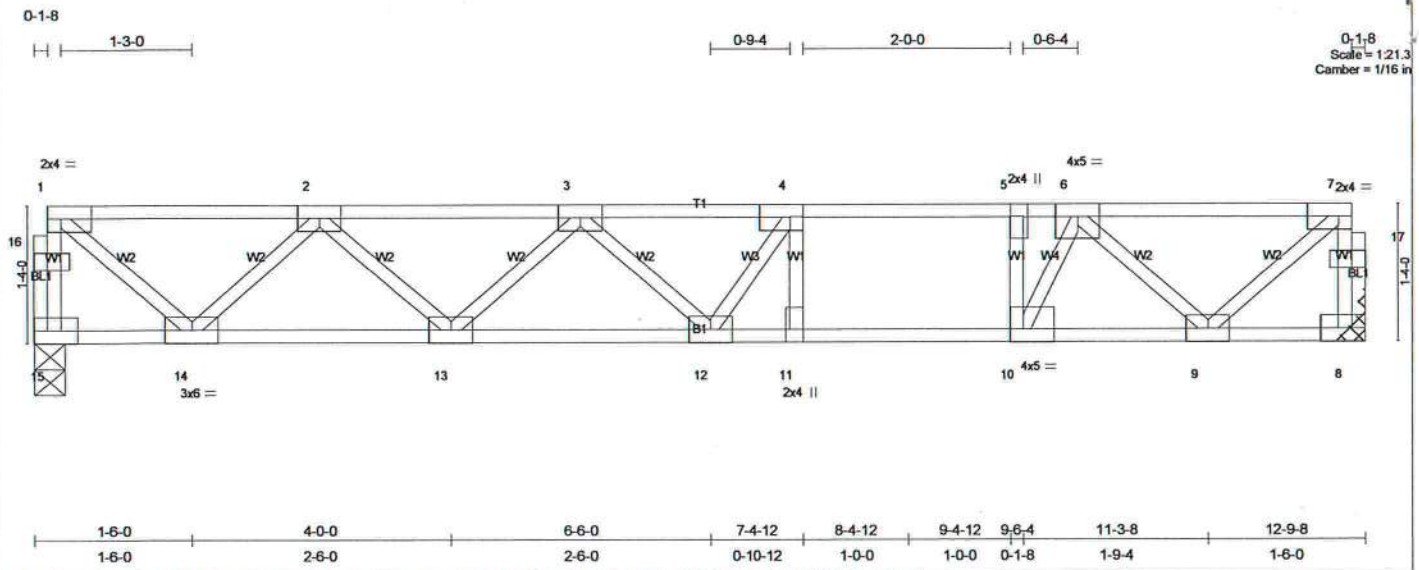

Plate Offsets (X,Y): [4:0-1-8,Edge], [5:0-1-8,Edge], [7:0-1-8,Edge], [10:0-1-8,Edge], [11:0-1-8,Edge], [16:0-1-8,0-1-0], [17:0-1-8,0-1-0]

LOADING (psf)		SPACING	2-0-0	CSI		DEFL	in	(loc)	l/defl	L/d	PLATES	GRIP
TCLL	40.0	Plates Increase	1.00	TC	0.85	Vert(LL)	-0.15	11-12	>999	360	MT20	244/190
TCDL	10.0	Lumber Increase	1.00	BC	0.81	Vert(TL)	-0.22	11-12	>678	240		
BCLL	0.0	Rep Stress Incr	YES	WB	0.34	Horz(TL)	0.02	8	n/a	n/a		
BCDL	5.0	Code FBC2004/TPI2002		(Matrix)							Weight: 68 lb	

LUMBER
TOP CHORD 4 X 2 SYP No.2
BOT CHORD 4 X 2 SYP No.1D
WEBS 4 X 2 SYP No.3

BRACING
TOP CHORD Structural wood sheathing directly applied or 6-0-0 oc purlins, except end verticals.
BOT CHORD Rigid ceiling directly applied or 10-0-0 oc bracing.

REACTIONS (lb/size) 15=684/0-3-8, 8=684/Mechanical

FORCES (lb) - Maximum Compression/Maximum Tension
TOP CHORD 15-16=-680/0, 1-16=-679/0, 8-17=-654/0, 7-17=-653/0, 1-2=-659/0, 2-3=-1511/0, 3-4=-1748/0, 4-5=-1582/0, 5-6=-1582/0, 6-7=-626/0
BOT CHORD 14-15=0/35, 13-14=0/1229, 12-13=0/1777, 11-12=0/1582, 10-11=0/1582, 9-10=0/1281, 8-9=0/34
WEBS 4-11=-335/0, 5-10=-526/0, 1-14=0/848, 2-14=-792/0, 2-13=0/392, 3-13=-371/0, 3-12=-98/147, 4-12=-48/373, 7-9=0/805, 6-9=-911/0, 6-10=0/859

JOINT STRESS INDEX
1 = 0.90, 2 = 0.43, 3 = 0.20, 4 = 0.54, 5 = 0.34, 6 = 0.81, 7 = 0.86, 8 = 0.51, 9 = 0.88, 10 = 0.81, 11 = 0.22, 12 = 0.55, 13 = 0.43, 14 = 0.91, 15 = 0.53, 16 = 0.00, 16 = 0.00, 17 = 0.00 and 17 = 0.00

NOTES (4-5)
1) Unbalanced floor live loads have been considered for this design.
2) All plates are 3x5 MT20 unless otherwise indicated.
3) Recommend 2x6 strongbacks, on edge, spaced at 10-0-0 oc and fastened to each truss with 3-16d nails. Strongbacks to be attached to walls at their outer ends or restrained by other means.
4) Truss Design Engineer: Julius Lee, PE: Florida P.E. License No. 34869: Address: 1109 Coastal Bay Blvd. Boynton Beach, FL 33435
5) Use Simpson THA422 to attach Truss to Carrying member

LOAD CASE(S) Standard

Job	Truss	Truss Type	Qty	Ply	CURTIS RES.
L284512F	F05	FLOOR	1	1	L284512F005 Job Reference (optional)

Builders FirstSource, Lake City, Fl 32055 — 6.300 s Apr 19 2006 MiTek Industries, Inc. Mon Aug 04 08:36:41 2008 Page 1

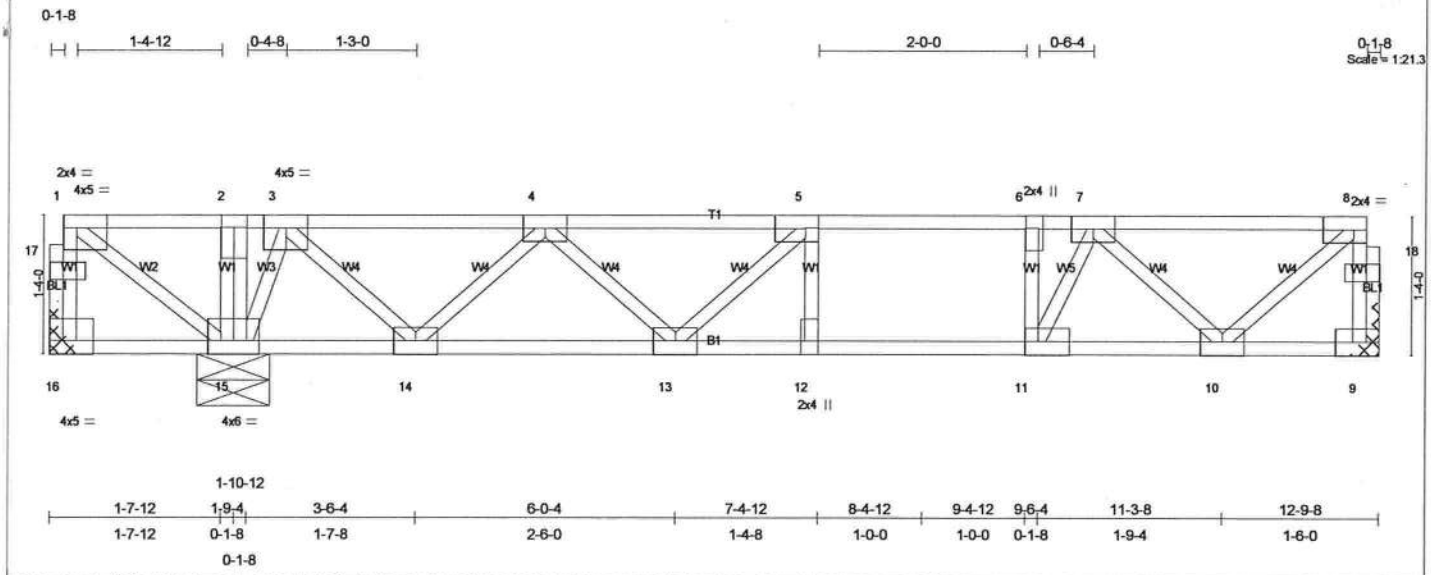

Plate Offsets (X,Y): [1:Edge,0-1-8], [5:0-1-8,Edge], [6:0-1-8,Edge], [8:0-1-8,Edge], [11:0-1-8,Edge], [12:0-1-8,Edge], [16:Edge,0-1-8], [17:0-1-8,0-1-0], [18:0-1-8,0-1-0]

LOADING (psf)		SPACING 2-0-0		CSI		DEFL	in	(loc)	l/defl	L/d	PLATES	GRIP
TCLL	40.0	Plates Increase	1.00	TC	0.39	Vert(LL)	-0.04	12	>999	360	MT20	244/190
TCDL	10.0	Lumber Increase	1.00	BC	0.31	Vert(TL)	-0.06	12	>999	240		
BCLL	0.0	Rep Stress Incr	YES	WB	0.30	Horz(TL)	0.01	9	n/a	n/a		
BCDL	5.0	Code FBC2004/TPI2002		(Matrix)							Weight: 71 lb	

LUMBER
TOP CHORD 4 X 2 SYP No.2
BOT CHORD 4 X 2 SYP No.2
WEBS 4 X 2 SYP No.3

BRACING
TOP CHORD Structural wood sheathing directly applied or 6-0-0 oc purlins, except end verticals.
BOT CHORD Rigid ceiling directly applied or 10-0-0 oc bracing, Except:
6-0-0 oc bracing: 15-16,14-15.

REACTIONS (lb/size) 16=-647/Mechanical, 9=485/Mechanical, 15=1529/0-8-7
Max Uplift16=-704(load case 3)
Max Grav 9=486(load case 3), 15=1550(load case 4)

FORCES (lb) - Maximum Compression/Maximum Tension
TOP CHORD 16-17=0/705, 1-17=0/705, 9-18=-476/0, 8-18=-476/0, 1-2=0/1016, 2-3=0/1015, 3-4=-76/222, 4-5=-672/0, 5-6=-887/0, 6-7=-887/0, 7-8=-428/0
BOT CHORD 15-16=-36/0, 14-15=-737/0, 13-14=0/425, 12-13=0/887, 11-12=0/887, 10-11=0/813, 9-10=0/25
WEBS 5-12=-48/35, 6-11=-225/0, 2-15=-139/2, 1-15=-1239/0, 5-13=-293/0, 4-13=0/345, 4-14=-738/0, 3-14=0/758, 3-15=-782/0, 8-10=0/549, 7-10=-535/0, 7-11=0/332

JOINT STRESS INDEX
1 = 0.66, 2 = 0.06, 3 = 0.55, 4 = 0.40, 5 = 0.16, 6 = 0.15, 7 = 0.60, 8 = 0.58, 9 = 0.37, 10 = 0.60, 11 = 0.60, 12 = 0.05, 13 = 0.38, 14 = 0.83, 15 = 0.82, 16 = 0.66, 17 = 0.00, 17 = 0.00, 18 = 0.00 and 18 = 0.00

NOTES (6-7)
1) Unbalanced floor live loads have been considered for this design.
2) All plates are 3x5 MT20 unless otherwise indicated.
3) Provide mechanical connection (by others) of truss to bearing plate capable of withstanding 704 lb uplift at joint 16.
4) Recommend 2x6 strongbacks, on edge, spaced at 10-0-0 oc and fastened to each truss with 3-16d nails. Strongbacks to be attached to walls at their outer ends or restrained by other means.
5) CAUTION, Do not erect truss backwards.
6) Truss Design Engineer: Julius Lee, PE: Florida P.E. License No. 34869: Address: 1109 Coastal Bay Blvd. Boynton Beach, FL 33435
7) Use Simpson THA422 to attach Truss to Carrying member

LOAD CASE(S) Standard

Job	Truss	Truss Type	Qty	Ply	CURTIS RES.
L284512F	F06	FLOOR	5	1	L284512F006 Job Reference (optional)

Builders FirstSource, Lake City, Fl 32055

6.300 s Apr 19 2006 MiTek Industries, Inc. Mon Aug 04 08:36:42 2008 Page 1

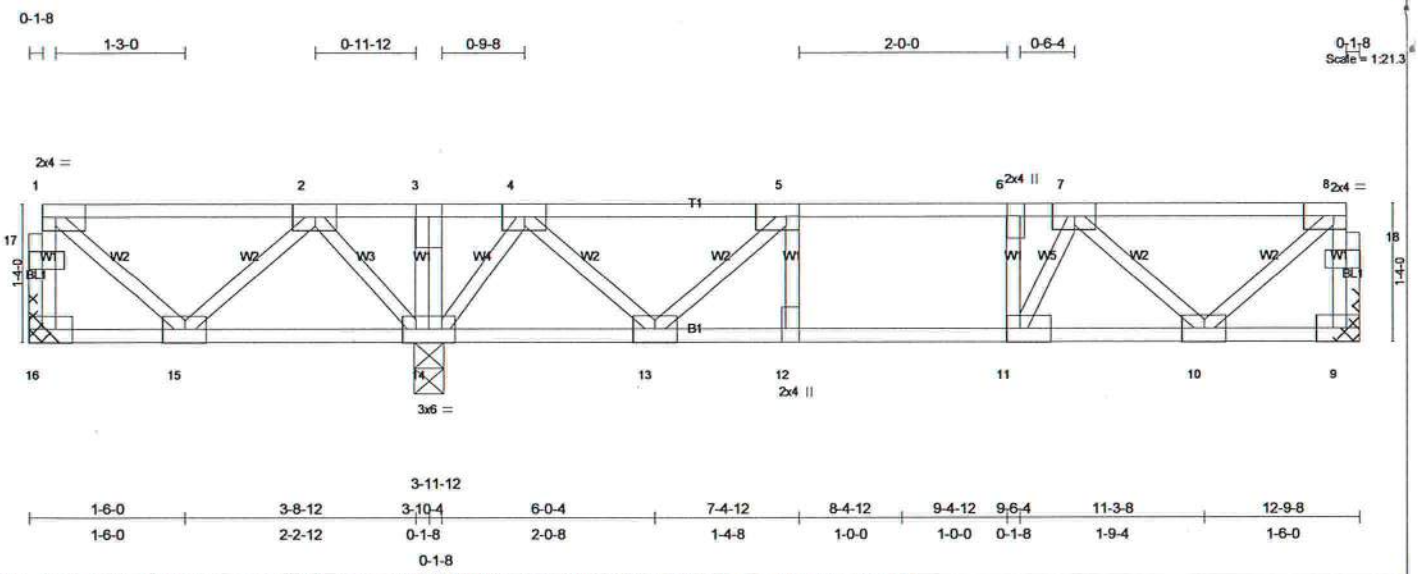

Plate Offsets (X,Y): [5:0-1-8,Edge], [6:0-1-8,Edge], [8:0-1-8,Edge], [11:0-1-8,Edge], [12:0-1-8,Edge], [17:0-1-8,0-1-0], [18:0-1-8,0-1-0]

LOADING (psf)		SPACING	2-0-0	CSI		DEFL	in	(loc)	l/defl	L/d	PLATES	GRIP
TCLL	40.0	Plates Increase	1.00	TC	0.41	Vert(LL)	-0.03	11	>999	360	MT20	244/190
TCDL	10.0	Lumber Increase	1.00	BC	0.25	Vert(TL)	-0.04	11	>999	240		
BCLL	0.0	Rep Stress Incr	YES	WB	0.19	Horz(TL)	0.01	9	n/a	n/a		
BCDL	5.0	Code FBC2004/TPI2002		(Matrix)							Weight: 71 lb	

LUMBER
TOP CHORD 4 X 2 SYP No.2
BOT CHORD 4 X 2 SYP No.2
WEBS 4 X 2 SYP No.3

BRACING
TOP CHORD Structural wood sheathing directly applied or 6-0-0 oc purlins, except end verticals.
BOT CHORD Rigid ceiling directly applied or 6-0-0 oc bracing.

REACTIONS (lb/size) 16=78/Mechanical, 9=428/Mechanical, 14=862/0-3-8
Max Uplift16=-62(load case 3)
Max Grav 16=194(load case 5), 9=429(load case 3), 14=878(load case 4)

FORCES (lb) - Maximum Compression/Maximum Tension
TOP CHORD 16-17=-189/67, 1-17=-188/67, 9-18=-425/0, 8-18=-425/0, 1-2=-101/98, 2-3=0/509, 3-4=0/509, 4-5=-400/0, 5-6=-686/0, 6-7=-686/0, 7-8=-371/0
BOT CHORD 15-16=-3/10, 14-15=-208/170, 13-14=-124/169, 12-13=0/686, 11-12=0/686, 10-11=0/680, 9-10=0/22
WEBS 5-12=0/58, 6-11=-124/6, 3-14=-6/20, 1-15=-129/124, 2-15=-95/153, 2-14=-493/0, 5-13=-450/0, 4-13=0/444, 4-14=-662/0, 8-10=0/475, 7-10=-429/0, 7-11=-16/166

JOINT STRESS INDEX
1 = 0.15, 2 = 0.31, 3 = 0.02, 4 = 0.48, 5 = 0.24, 6 = 0.08, 7 = 0.30, 8 = 0.50, 9 = 0.33, 10 = 0.52, 11 = 0.30, 12 = 0.07, 13 = 0.48, 14 = 0.52, 15 = 0.17, 16 = 0.15, 17 = 0.00, 17 = 0.00, 18 = 0.00 and 18 = 0.00

NOTES (6-7)
1) Unbalanced floor live loads have been considered for this design.
2) All plates are 3x5 MT20 unless otherwise indicated.
3) Provide mechanical connection (by others) of truss to bearing plate capable of withstanding 62 lb uplift at joint 16.
4) Recommend 2x6 strongbacks, on edge, spaced at 10-0-0 oc and fastened to each truss with 3-16d nails. Strongbacks to be attached to walls at their outer ends or restrained by other means.
5) CAUTION, Do not erect truss backwards.
6) Truss Design Engineer: Julius Lee, PE: Florida P.E. License No. 34869: Address: 1109 Coastal Bay Blvd. Boynton Beach, FL 33435
7) Use Simpson THA422 to attach Truss to Carrying member

LOAD CASE(S) Standard

Job	Truss	Truss Type	Qty	Ply	CURTIS RES.
L284512F	F06KW	GABLE	1	1	L284512F007 Job Reference (optional)

Builders FirstSource, Lake City, Fl 32055 — 6.300 s Apr 19 2006 MiTek Industries, Inc. Mon Aug 04 08:36:43 2008 Page 1

0-1-8 — 0-1-8

Scale = 1:21.3

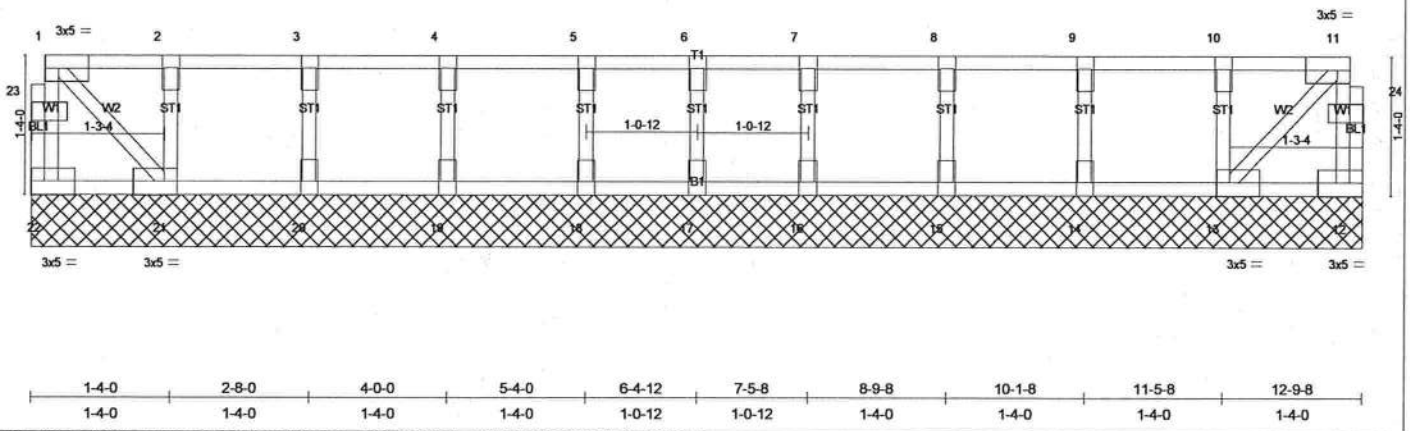

Plate Offsets (X,Y): [11:0-1-8,Edge], [13:0-1-8,Edge], [21:0-1-8,Edge], [23:0-1-8,0-1-0], [24:0-1-8,0-1-0]

LOADING (psf)		SPACING 2-0-0		CSI		DEFL	in	(loc)	l/defl	L/d	PLATES	GRIP
TCLL	40.0	Plates Increase	1.00	TC	0.07	Vert(LL)	n/a	-	n/a	999	MT20	244/190
TCDL	10.0	Lumber Increase	1.00	BC	0.01	Vert(TL)	n/a	-	n/a	999		
BCLL	0.0	Rep Stress Incr	YES	WB	0.03	Horz(TL)	-0.00	13	n/a	n/a		
BCDL	5.0	Code FBC2004/TPI2002		(Matrix)							Weight: 63 lb	

LUMBER
TOP CHORD 4 X 2 SYP No.2
BOT CHORD 4 X 2 SYP No.2
WEBS 4 X 2 SYP No.3
OTHERS 4 X 2 SYP No.3

BRACING
TOP CHORD Structural wood sheathing directly applied or 10-0-0 oc purlins, except end verticals.
BOT CHORD Rigid ceiling directly applied or 6-0-0 oc bracing, Except:
10-0-0 oc bracing: 21-22,12-13.

REACTIONS (lb/size) 22=45/12-9-8, 12=45/12-9-8, 17=107/12-9-8, 13=156/12-9-8, 14=145/12-9-8, 15=150/12-9-8, 16=134/12-9-8, 21=156/12-9-8, 20=145/12-9-8, 19=150/12-9-8, 18=134/12-9-8

FORCES (lb) - Maximum Compression/Maximum Tension
TOP CHORD 22-23=-40/0, 1-23=-40/0, 12-24=-40/0, 11-24=-40/0, 1-2=0/2, 2-3=0/2, 3-4=0/2, 4-5=0/2, 5-6=0/2, 6-7=0/2, 7-8=0/2, 8-9=0/2, 9-10=0/2, 10-11=0/2
BOT CHORD 21-22=0/2, 20-21=-2/0, 19-20=-2/0, 18-19=-2/0, 17-18=-2/0, 16-17=-2/0, 15-16=-2/0, 14-15=-2/0, 13-14=-2/0, 12-13=0/2
WEBS 6-17=-98/0, 10-13=-138/0, 9-14=-132/0, 8-15=-136/0, 7-16=-122/0, 2-21=-138/0, 3-20=-132/0, 4-19=-136/0, 5-18=-122/0, 1-21=-6/0, 11-13=-6/0

JOINT STRESS INDEX
1 = 0.03, 2 = 0.09, 3 = 0.09, 4 = 0.09, 5 = 0.08, 6 = 0.06, 7 = 0.08, 8 = 0.09, 9 = 0.09, 10 = 0.09, 11 = 0.03, 12 = 0.03, 13 = 0.11, 14 = 0.09, 15 = 0.09, 16 = 0.08, 17 = 0.06, 18 = 0.08, 19 = 0.09, 20 = 0.09, 21 = 0.11, 22 = 0.03, 23 = 0.00, 23 = 0.00, 24 = 0.00 and 24 = 0.00

NOTES (6)
1) All plates are 2x4 MT20 unless otherwise indicated.
2) Gable requires continuous bottom chord bearing.
3) Truss to be fully sheathed from one face or securely braced against lateral movement (i.e. diagonal web).
4) Gable studs spaced at 1-4-0 oc.
5) Recommend 2x6 strongbacks, on edge, spaced at 10-0-0 oc and fastened to each truss with 3-16d nails. Strongbacks to be attached to walls at their outer ends or restrained by other means.
6) Truss Design Engineer: Julius Lee, PE: Florida P.E. License No. 34869: Address: 1109 Coastal Bay Blvd. Boynton Beach, FL 33435

LOAD CASE(S) Standard

STEPDOWN CORNER SET

TOP CHORD 2X4 SO. PINE #2 or Better
BOT CHORD 2X4 SO. PINE #2 or Better
WEBS 2X4 SO. PINE #3 or Better

120 MPH MAX

Setback 7' or Less

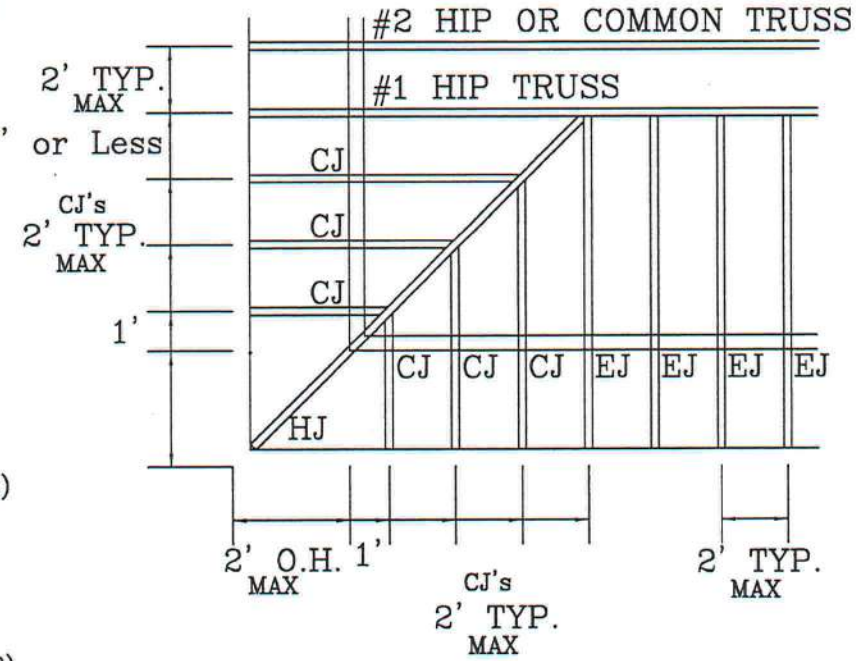

PROVIDE UPLIFT CONNECTIONS AT BEARINGS AS INDICATED.
UPLIFT: 400# or Less
BRG LOC: *
UPLIFT BASED ON 7.2 PSF TOTAL DEAD LOAD. WIND SPEED=120 "C" MPH. MEAN HGT=28 FT. ENCLOSED. (ASCE 7-02)

PROVIDE UPLIFT CONNECTIONS AT BEARINGS AS INDICATED. TILE
UPLIFT: 400# or Less
BRG LOC: *
UPLIFT BASED ON 15.0 PSF TOTAL DEAD LOAD. WIND SPEED=120 "C" MPH. MEAN HGT (of jacks)=28 FT. ENCLOSED. (ASCE 7-02)

PROVIDE UPLIFT CONNECTIONS AT BEARINGS AS INDICATED.
UPLIFT: 400# or Less
BRG LOC: *
UPLIFT BASED ON 7.2 PSF TOTAL DEAD LOAD. WIND SPEED=120 "B" MPH. MEAN HGT (of jacks)=28 FT. ENCLOSED. (ASCE 7-02)

* (3) 16d TOENAILS

** SEE EOR FOR TIE DOWN

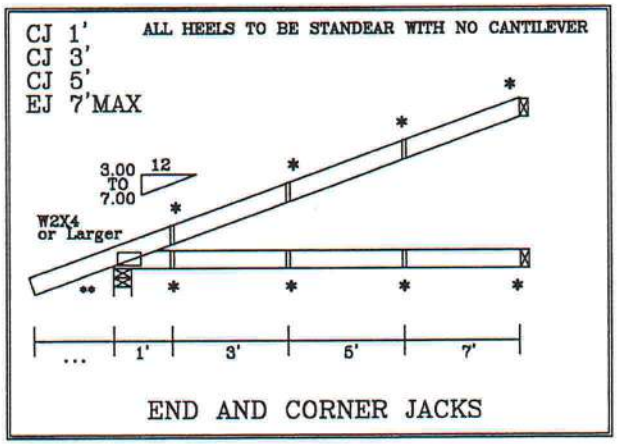

END AND CORNER JACKS

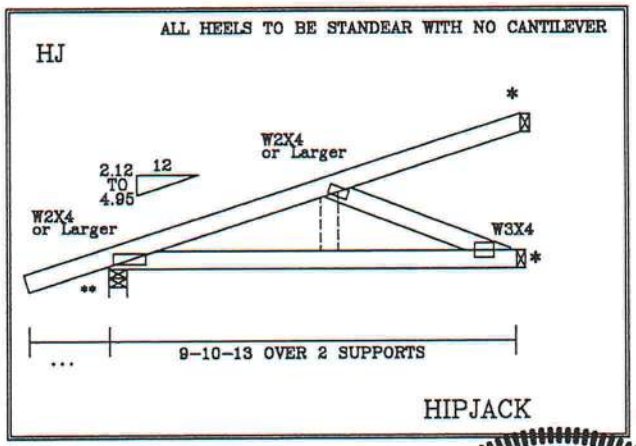

HIPJACK

UPLIFT VALUES DO TAKE INTO ACCOUNT PORCHES EXPOSED
BC LIVE LOAD IS NON CONCURRENT 10*

SHINGLE			
TC	LL	20	MAX PSF
TC	DL	7	MAX PSF
BC	LL	10*	MAX PSF
BC	DL	5	MAX PSF
TILE			
TC	LL	20	MAX PSF
TC	DL	20	MAX PSF
BC	LL	10*	MAX PSF
BC	DL	5	MAX PSF
DUR. FAC.		1.25	
SPACING		2' MAX	

REF	7'MAX STBK CS
DATE	Jun./27/2008
DRWG	
-ENG	

REVIEWED
By julius lee at 10:52 am, Jun 27, 2008

CORNER SET SETBACK
7'0" MAX

WARNING TRUSSES REQUIRE EXTREME CARE IN FABRICATING, HANDLING, SHIPPING, INSTALLING AND BRACING. REFER TO BCSI 1-03 (BUILDING COMPONENT SAFETY INFORMATION), PUBLISHED BY TPI (TRUSS PLATE INSTITUTE, 583 D'ONOFRIO DR., SUITE 200, MADISON, WI. 53719) AND WTCA (WOOD TRUSS COUNCIL OF AMERICA, 6300 ENTERPRISE LN, MADISON, WI 53719) FOR SAFETY PRACTICES PRIOR TO PERFORMING THESE FUNCTIONS. UNLESS OTHERWISE INDICATED, TOP CHORD SHALL HAVE PROPERLY ATTACHED STRUCTURAL PANELS AND BOTTOM CHORD SHALL HAVE A PROPERLY ATTACHED RIGID CEILING.

IMPORTANT FURNISH COPY OF THIS DESIGN TO INSTALLATION CONTRACTOR. ALPINE ENGINEERED PRODUCTS, INC., SHALL NOT BE RESPONSIBLE FOR ANY DEVIATION FROM THIS DESIGN; ANY FAILURE TO BUILD THE TRUSS IN CONFORMANCE WITH TPI; OR FABRICATING, HANDLING, SHIPPING, INSTALLING & BRACING OF TRUSSES. DESIGN CONFORMS WITH APPLICABLE PROVISIONS OF NDS (NATIONAL DESIGN SPEC BY AF&PA) AND TPI. ALPINE CONNECTOR PLATES ARE MADE OF 20/18/16GA (W,H/S/K) ASTM A653 GRADE 40/60 (W,K/H,S) GALV. STEEL. APPLY PLATES TO EACH FACE OF TRUSS AND, UNLESS OTHERWISE LOCATED ON THIS DESIGN, POSITION PER DRAWINGS 160A-Z. ANY INSPECTION OF PLATES FOLLOWED BY (I) SHALL BE PER ANNEX A3 OF TPI 1-2002 SEC. 3. A SEAL ON THIS DRAWING INDICATES ACCEPTANCE OF PROFESSIONAL ENGINEERING RESPONSIBILITY SOLELY FOR THE TRUSS COMPONENT DESIGN SHOWN. THE SUITABILITY AND USE OF THIS COMPONENT FOR ANY BUILDING IS THE RESPONSIBILITY OF THE BUILDING DESIGNER, PER ANSI/TPI 1 SEC. 2.

JULIUS LEE
CONS. ENGINEERS, P.A.
1455 SW 4th AVENUE
DELRAY BEACH, FL 33444-2181

JULIUS LEE NO. 34869 STATE OF FLORIDA PROFESSIONAL ENGINEER

ASCE 7-02: 130 MPH WIND SPEED, 15' MEAN HEIGHT, ENCLOSED, I = 1.00, EXPOSURE C

MAX GABLE VERTICAL LENGTH

2X4 GABLE VERTICAL SPACING	SPECIES	BRACE GRADE	NO BRACES	(1) 1X4 "L" BRACE * GROUP A	(1) 1X4 "L" BRACE * GROUP B	(1) 2X4 "L" BRACE * GROUP A	(1) 2X4 "L" BRACE * GROUP B	(2) 2X4 "L" BRACE ** GROUP A	(2) 2X4 "L" BRACE ** GROUP B	(1) 2X6 "L" BRACE * GROUP A	(1) 2X6 "L" BRACE * GROUP B	(2) 2X6 "L" BRACE ** GROUP A	(2) 2X6 "L" BRACE ** GROUP B
24" O.C.	SPF HF	#1 / #2	3' 4"	6' 10"	6' 0"	6' 11"	7' 1"	8' 3"	8' 6"	10' 10"	11' 2"	12' 11"	13' 3"
		#3	3' 3"	4' 11"	4' 11"	6' 6"	6' 6"	8' 3"	8' 3"	10' 1"	10' 1"	12' 11"	12' 11"
		STUD	3' 3"	4' 11"	4' 11"	6' 5"	6' 5"	8' 3"	8' 3"	10' 0"	10' 0"	12' 11"	12' 11"
		STANDARD	3' 3"	4' 2"	4' 2"	5' 6"	5' 6"	7' 5"	7' 5"	8' 8"	8' 8"	11' 8"	11' 8"
	SP DFL	#1	3' 8"	5' 10"	6' 3"	6' 11"	7' 5"	8' 3"	8' 11"	10' 10"	11' 8"	12' 11"	13' 11"
		#2	3' 7"	5' 10"	6' 3"	6' 11"	7' 5"	8' 3"	8' 11"	10' 10"	11' 8"	12' 11"	13' 11"
		#3	3' 6"	5' 0"	5' 0"	6' 8"	6' 8"	8' 3"	8' 8"	10' 4"	10' 4"	12' 11"	13' 7"
		STUD	3' 6"	5' 0"	5' 0"	6' 7"	6' 7"	8' 3"	8' 8"	10' 3"	10' 3"	12' 11"	13' 7"
		STANDARD	3' 4"	4' 3"	4' 3"	5' 8"	5' 8"	7' 8"	7' 8"	8' 10"	8' 10"	12' 0"	12' 0"
16" O.C.	SPF HF	#1 / #2	3' 10"	6' 8"	6' 10"	7' 11"	8' 1"	9' 6"	9' 8"	12' 6"	12' 9"	14' 0"	14' 0"
		#3	3' 9"	6' 0"	6' 0"	7' 11"	7' 11"	9' 5"	9' 5"	12' 4"	12' 4"	14' 0"	14' 0"
		STUD	3' 9"	6' 0"	6' 0"	7' 11"	7' 11"	9' 5"	9' 5"	12' 4"	12' 4"	14' 0"	14' 0"
		STANDARD	3' 9"	5' 2"	5' 2"	6' 10"	6' 10"	9' 2"	9' 2"	10' 7"	10' 7"	14' 0"	14' 0"
	SP DFL	#1	4' 3"	6' 8"	7' 2"	7' 11"	8' 8"	9' 5"	10' 2"	12' 5"	13' 5"	14' 0"	14' 0"
		#2	4' 2"	6' 8"	7' 2"	7' 11"	8' 8"	9' 5"	10' 2"	12' 5"	13' 5"	14' 0"	14' 0"
		#3	4' 0"	6' 2"	6' 2"	7' 11"	8' 2"	9' 5"	9' 11"	12' 5"	12' 8"	14' 0"	14' 0"
		STUD	4' 0"	6' 1"	6' 1"	7' 11"	8' 1"	9' 5"	9' 11"	12' 5"	12' 6"	14' 0"	14' 0"
		STANDARD	3' 10"	5' 3"	5' 3"	6' 11"	6' 11"	9' 4"	9' 4"	10' 10"	10' 10"	14' 0"	14' 0"
12" O.C.	SPF HF	#1 / #2	4' 3"	7' 4"	7' 7"	8' 9"	8' 11"	10' 5"	10' 8"	13' 8"	14' 0"	14' 0"	14' 0"
		#3	4' 2"	6' 11"	6' 11"	8' 9"	8' 9"	10' 5"	10' 5"	13' 8"	13' 8"	14' 0"	14' 0"
		STUD	4' 2"	6' 11"	6' 11"	8' 9"	8' 9"	10' 5"	10' 5"	13' 8"	13' 8"	14' 0"	14' 0"
		STANDARD	4' 2"	6' 11"	6' 11"	7' 10"	7' 10"	10' 5"	10' 5"	12' 3"	12' 3"	14' 0"	14' 0"
	SP DFL	#1	4' 8"	7' 4"	7' 11"	8' 9"	9' 5"	10' 5"	11' 2"	13' 8"	14' 0"	14' 0"	14' 0"
		#2	4' 7"	7' 4"	7' 11"	8' 9"	9' 5"	10' 5"	11' 2"	13' 8"	14' 0"	14' 0"	14' 0"
		#3	4' 4"	7' 2"	7' 2"	8' 9"	9' 2"	10' 5"	10' 11"	13' 8"	14' 0"	14' 0"	14' 0"
		STUD	4' 4"	7' 1"	7' 1"	8' 9"	9' 2"	10' 5"	10' 11"	13' 8"	14' 0"	14' 0"	14' 0"
		STANDARD	4' 3"	6' 1"	6' 1"	8' 0"	8' 0"	10' 5"	10' 8"	12' 6"	12' 6"	14' 0"	14' 0"

BRACING GROUP SPECIES AND GRADES:

GROUP A:

SPRUCE-PINE-FIR

#1 / #2	STANDARD
#3	STUD

HEM-FIR

#2	STUD
#3	STANDARD

DOUGLAS FIR-LARCH

#3
STUD
STANDARD

SOUTHERN PINE

#3
STUD
STANDARD

GROUP B:

HEM-FIR

#1 & BTR
#1

SOUTHERN PINE

#1
#2

DOUGLAS FIR-LARCH

#1
#2

GABLE TRUSS DETAIL NOTES:

LIVE LOAD DEFLECTION CRITERIA IS L/240.

PROVIDE UPLIFT CONNECTIONS FOR 136 PLF OVER CONTINUOUS BEARING (5 PSF TC DEAD LOAD).

GABLE END SUPPORTS LOAD FROM 4' 0" OUTLOOKERS WITH 2' 0" OVERHANG, OR 12" PLYWOOD OVERHANG.

ATTACH EACH "L" BRACE WITH 10d NAILS.
* FOR (1) "L" BRACE: SPACE NAILS AT 2" O.C. IN 18" END ZONES AND 4" O.C. BETWEEN ZONES.
** FOR (2) "L" BRACES: SPACE NAILS AT 3" O.C. IN 18" END ZONES AND 6" O.C. BETWEEN ZONES.

"L" BRACING MUST BE A MINIMUM OF 80% OF WEB MEMBER LENGTH.

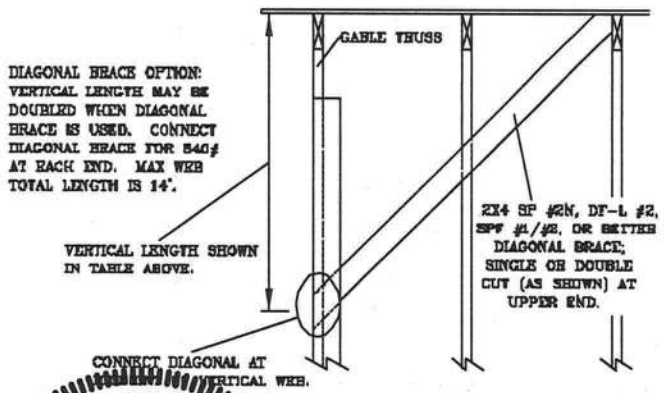

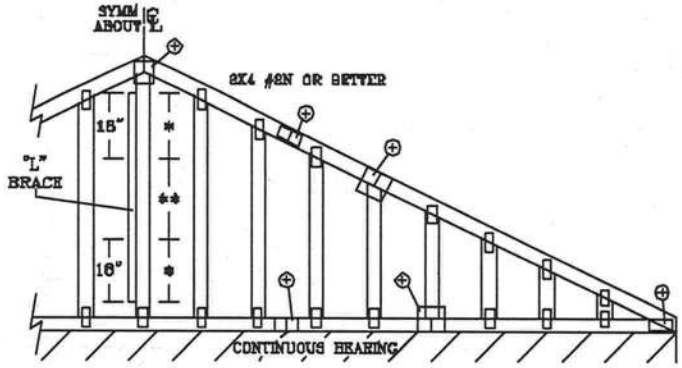

REFER TO CHART ABOVE FOR MAX GABLE VERTICAL LENGTH.

GABLE VERTICAL PLATE SIZES

VERTICAL LENGTH	NO SPLICE
LESS THAN 4' 0"	1X4 OR 2X3
GREATER THAN 4' 0", BUT LESS THAN 11' 8"	2X4
GREATER THAN 11' 8"	2.5X4

+ REFER TO COMMON TRUSS DESIGN FOR PEAK, SPLICE, AND HEEL PLATES.

JULIUS LEE LICENSE NO. 34869 STATE OF FLORIDA PROFESSIONAL ENGINEER

WARNING TRUSSES REQUIRE EXTREME CARE IN FABRICATING, HANDLING, SHIPPING, INSTALLING AND BRACING. REFER TO BCSI 1-03 (BUILDING COMPONENT SAFETY INFORMATION), PUBLISHED BY TPI (TRUSS PLATE INSTITUTE, 583 D'ONOFRIO DR, SUITE 200, MADISON, WI 53719) AND WTCA (WOOD TRUSS COUNCIL OF AMERICA, 6300 ENTERPRISE LN, MADISON, WI 53719) FOR SAFETY PRACTICES PRIOR TO PERFORMING THESE FUNCTIONS. UNLESS OTHERWISE INDICATED, TOP CHORD SHALL HAVE PROPERLY ATTACHED STRUCTURAL PANELS AND BOTTOM CHORD SHALL HAVE A PROPERLY ATTACHED RIGID CEILING.

REVIEWED
By julius lee at 12:00 pm, Jun 11, 2008

JULIUS LEE'S
CONS. ENGINEERS P.A.
1455 SW 4th AVENUE
DELRAY BEACH, FL 33444-2161

No: 34869
STATE OF FLORIDA

MAX. TOT. LD. 60 PSF

MAX. SPACING 24.0"

REF	ASCE7-02-GAB13015
DATE	11/26/03
DRWG	MITEK STD GABLE 15 E HT
-ENG	

ASCE 7-02: 130 MPH WIND SPEED, 30' MEAN HEIGHT, ENCLOSED, I = 1.00, EXPOSURE C

MAX GABLE VERTICAL LENGTH

2X4 GABLE VERTICAL SPACING	SPECIES	BRACE GRADE	NO BRACES	(1) 1X4 "L" BRACE * GROUP A	(1) 1X4 "L" BRACE * GROUP B	(1) 2X4 "L" BRACE * GROUP A	(1) 2X4 "L" BRACE * GROUP B	(2) 2X4 "L" BRACE ** GROUP A	(2) 2X4 "L" BRACE ** GROUP B	(1) 2X6 "L" BRACE * GROUP A	(1) 2X6 "L" BRACE * GROUP B	(2) 2X6 "L" BRACE ** GROUP A	(2) 2X6 "L" BRACE ** GROUP B
24" O.C.	SPF HF	#1 / #2	3' 2"	5' 6"	6' 8"	6' 6"	6' 9"	7' 10"	8' 0"	10' 3"	10' 7"	12' 3"	12' 7"
		#3	3' 1"	4' 5"	4' 5"	6' 10"	5' 10"	7' 10"	7' 10"	9' 1"	9' 1"	12' 3"	12' 3"
		STUD	3' 1"	4' 6"	4' 5"	5' 10"	5' 10"	7' 10"	7' 10"	9' 1"	9' 1"	12' 3"	12' 3"
		STANDARD	2' 11"	3' 9"	3' 9"	6' 0"	5' 0"	6' 9"	6' 9"	7' 10"	7' 10"	10' 7"	10' 7"
	SP DFL	#1	3' 6"	5' 6"	5' 11"	6' 8"	7' 0"	7' 10"	8' 5"	10' 3"	11' 1"	12' 3"	13' 2"
		#2	3' 5"	5' 6"	5' 11"	6' 8"	7' 0"	7' 10"	8' 5"	10' 3"	11' 1"	12' 3"	13' 2"
		#3	3' 3"	4' 6"	4' 6"	6' 0"	6' 0"	7' 10"	8' 1"	9' 4"	9' 4"	12' 3"	12' 8"
		STUD	3' 3"	4' 6"	4' 6"	5' 11"	5' 11"	7' 10"	8' 0"	9' 3"	9' 3"	12' 3"	12' 8"
		STANDARD	3' 0"	3' 10"	3' 10"	5' 1"	5' 1"	6' 11"	6' 11"	8' 0"	8' 0"	10' 10"	10' 10"
16" O.C.	SPF HF	#1 / #2	3' 8"	6' 4"	6' 6"	7' 6"	7' 8"	8' 11"	9' 2"	11' 9"	12' 1"	14' 0"	14' 0"
		#3	3' 7"	5' 5"	5' 5"	7' 2"	7' 2"	8' 11"	8' 11"	11' 2"	11' 2"	14' 0"	14' 0"
		STUD	3' 7"	5' 6"	5' 5"	7' 2"	7' 2"	8' 11"	8' 11"	11' 1"	11' 1"	14' 0"	14' 0"
		STANDARD	3' 7"	4' 8"	4' 8"	6' 2"	6' 2"	8' 3"	8' 3"	9' 7"	9' 7"	12' 11"	12' 11"
	SP DFL	#1	4' 0"	6' 4"	6' 10"	7' 6"	8' 1"	8' 11"	9' 7"	11' 9"	12' 8"	14' 0"	14' 0"
		#2	3' 11"	6' 4"	6' 10"	7' 6"	8' 1"	8' 11"	9' 7"	11' 9"	12' 8"	14' 0"	14' 0"
		#3	3' 9"	5' 7"	6' 7"	7' 4"	7' 4"	8' 11"	9' 6"	11' 5"	11' 6"	14' 0"	14' 0"
		STUD	3' 8"	5' 6"	5' 6"	7' 3"	7' 3"	8' 11"	9' 5"	11' 4"	11' 4"	14' 0"	14' 0"
		STANDARD	3' 8"	4' 9"	4' 9"	6' 3"	6' 3"	8' 5"	8' 5"	9' 9"	9' 9"	13' 3"	13' 3"
12" O.C.	SPF HF	#1 / #2	4' 0"	6' 11"	7' 2"	8' 3"	8' 6"	9' 10"	10' 1"	12' 11"	13' 4"	14' 0"	14' 0"
		#3	3' 11"	6' 3"	6' 3"	8' 3"	8' 3"	9' 10"	9' 10"	12' 11"	12' 11"	14' 0"	14' 0"
		STUD	3' 11"	6' 3"	6' 3"	8' 3"	8' 3"	9' 10"	9' 10"	12' 10"	12' 10"	14' 0"	14' 0"
		STANDARD	3' 11"	5' 4"	5' 4"	7' 1"	7' 1"	9' 6"	9' 6"	11' 1"	11' 1"	14' 0"	14' 0"
	SP DFL	#1	4' 5"	6' 11"	7' 6"	8' 3"	8' 11"	9' 10"	10' 7"	12' 11"	13' 11"	14' 0"	14' 0"
		#2	4' 4"	6' 11"	7' 6"	8' 3"	8' 11"	9' 10"	10' 7"	12' 11"	13' 11"	14' 0"	14' 0"
		#3	4' 2"	6' 6"	6' 5"	8' 3"	8' 6"	9' 10"	10' 4"	12' 11"	13' 3"	14' 0"	14' 0"
		STUD	4' 2"	6' 4"	6' 4"	8' 3"	8' 6"	9' 10"	10' 4"	12' 11"	13' 1"	14' 0"	14' 0"
		STANDARD	4' 0"	5' 6"	5' 6"	7' 3"	7' 3"	9' 9"	9' 9"	11' 4"	11' 4"	14' 0"	14' 0"

BRACING GROUP SPECIES AND GRADES:

GROUP A:

SPRUCE-PINE-FIR

#1 / #2	STANDARD
#3	STUD

HEM-FIR

#2	STUD
#3	STANDARD

DOUGLAS FIR-LARCH

#3
STUD
STANDARD

SOUTHERN PINE

#3
STUD
STANDARD

GROUP B:

HEM-FIR

#1 & BTR
#1

SOUTHERN PINE

#1
#2

DOUGLAS FIR-LARCH

#1
#2

GABLE TRUSS DETAIL NOTES:

LIVE LOAD DEFLECTION CRITERIA IS L/240.

PROVIDE UPLIFT CONNECTIONS FOR 180 PLF OVER CONTINUOUS BEARING (5 PSF TC DEAD LOAD).

GABLE END SUPPORTS LOAD FROM 4' 0" OUTLOOKERS WITH 2' 0" OVERHANG, OR 12" PLYWOOD OVERHANG.

ATTACH EACH "L" BRACE WITH 10d NAILS.
* FOR (1) "L" BRACE: SPACE NAILS AT 2" O.C. IN 16" END ZONES AND 4" O.C. BETWEEN ZONES.
** FOR (2) "L" BRACES: SPACE NAILS AT 3" O.C. IN 16" END ZONES AND 6" O.C. BETWEEN ZONES.

"L" BRACING MUST BE A MINIMUM OF 80% OF WEB MEMBER LENGTH.

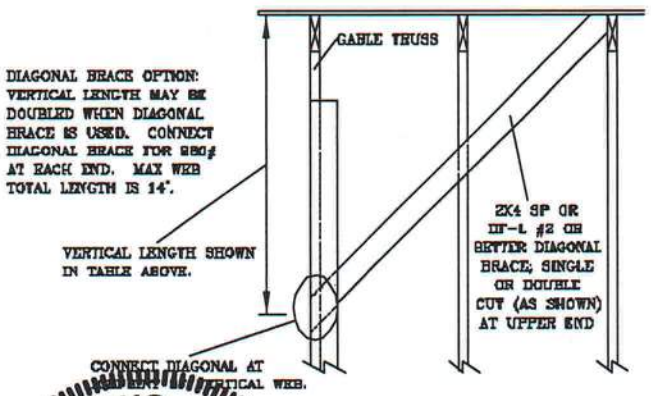

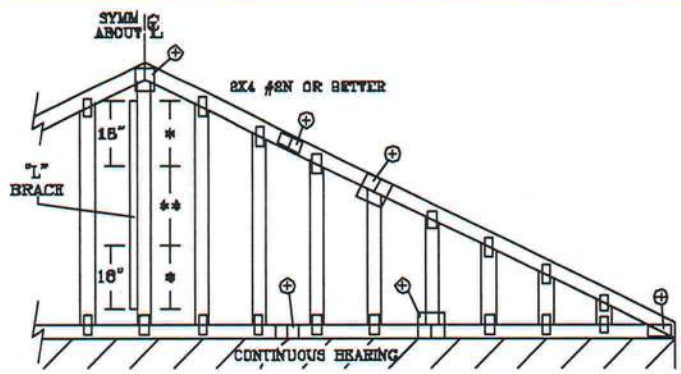

REFER TO CHART ABOVE FOR MAX GABLE VERTICAL LENGTH.

GABLE VERTICAL PLATE SIZES

VERTICAL LENGTH	NO SPLICE
LESS THAN 4' 0"	1X4 OR 2X3
GREATER THAN 4' 0", BUT LESS THAN 11' 8"	2X4
GREATER THAN 11' 8"	2.5X4

+ REFER TO COMMON TRUSS DESIGN FOR PEAK, SPLICE, AND HEEL PLATES.

JULIUS LEE LICENSED NO. 34869 STATE OF FLORIDA PROFESSIONAL ENGINEER

WARNING TRUSSES REQUIRE EXTREME CARE IN FABRICATING, HANDLING, SHIPPING, INSTALLING AND BRACING. REFER TO BCSI 1-03 (BUILDING COMPONENT SAFETY INFORMATION), PUBLISHED BY TPI (TRUSS PLATE INSTITUTE, 583 D'ONOFRIO DR., SUITE 200, MADISON, WI 53719) AND WTCA (WOOD TRUSS COUNCIL OF AMERICA, 6300 ENTERPRISE LN, MADISON, WI 53719) FOR SAFETY PRACTICES PRIOR TO PERFORMING THESE FUNCTIONS. UNLESS OTHERWISE INDICATED, TOP CHORD SHALL HAVE PROPERLY ATTACHED STRUCTURAL PANELS AND BOTTOM CHORD SHALL HAVE A PROPERLY ATTACHED RIGID CEILING.

REVIEWED
By julius lee at 12:00 pm, Jun 11, 2008

JULIUS LEE'S
CONS. ENGINEERS P.A.
1456 SW 4th AVENUE
DELRAY BEACH, FL. 33444-2161
No: 34869
STATE OF FLORIDA

MAX. TOT. LD. 60 PSF

MAX. SPACING 24.0"

REF	ASCE7-02-GAB13030
DATE	11/26/03
DWG	MITEK STD GABLE 30' E HT
-ENG	

TYPICAL ATTIC TRUSS BRACING

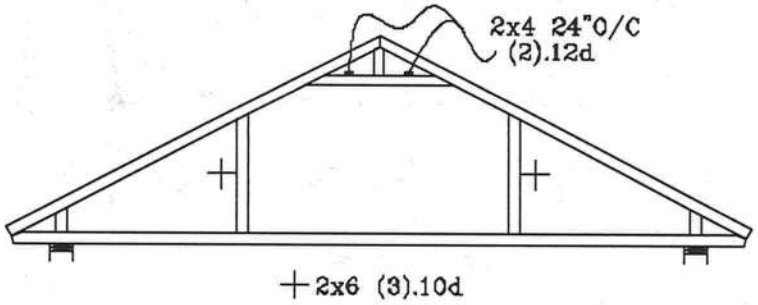

GABLE END TRUSS DETAIL

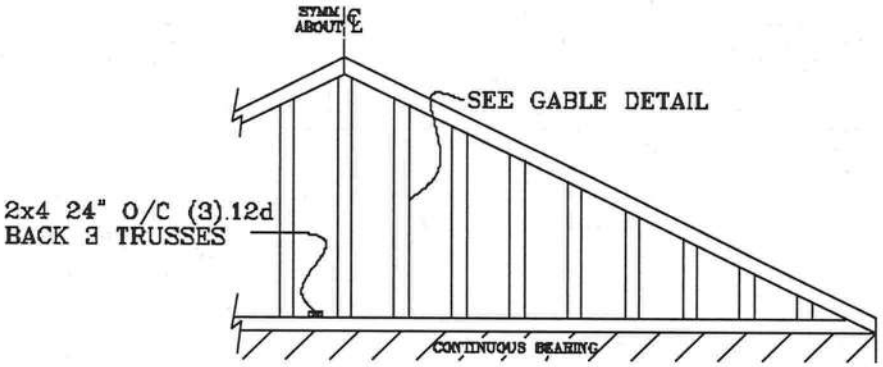

MINIMUM BC BRACING ON GABLE TRUSS. OTHER PERMANENT BRACING DESIGNS BY ARCHITECT OR EOR

TYPICAL ALTERNATE BRACING DETAIL FOR EXTERIOR FLAT GIRDER TRUSS

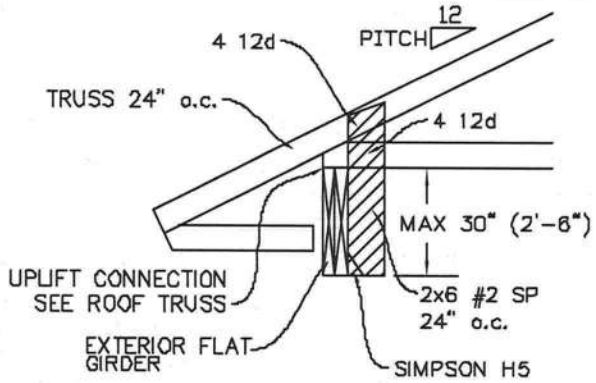

TYPICAL WALL GIRDER VERTICAL WEB BRACING DETAIL

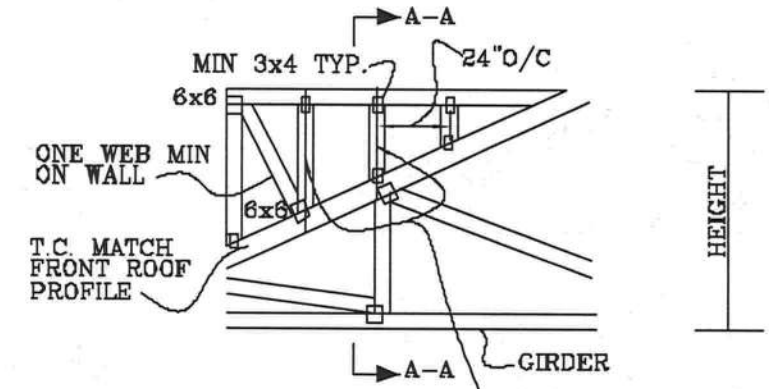

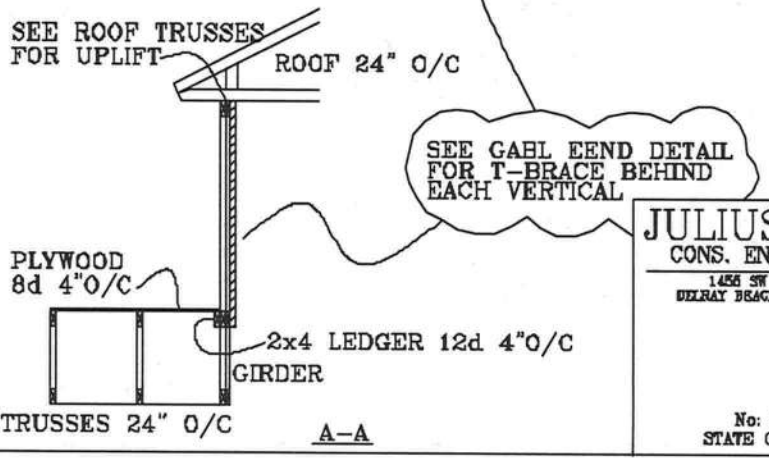

REVIEWED
By julius lee at 11:59 am, Jun 11, 2008

JULIUS LEE
LICENSE
NO. 34869
STATE OF
FLORIDA
PROFESSIONAL ENGINEER

JULIUS LEE'S
CONS. ENGINEERS P.A.
1456 SW 4th AVENUE
DELRAY BEACH, FL 33444-2161

No: 34869
STATE OF FLORIDA

PIGGYBACK DETAIL

TOP CHORD 2X4 #2 OR BETTER
BOT CHORD 2X4 #2 OR BETTER
WEBS 2X4 #3 OR BETTER

REFER TO SEALED DESIGN FOR DASHED PLATES.

SPACE PIGGYBACK VERTICALS AT 4' OC MAX.

TOP AND BOTTOM CHORD SPLICES MUST BE STAGGERED SO THAT ONE SPLICE IS NOT DIRECTLY OVER ANOTHER.

PIGGYBACK BOTTOM CHORD MAY BE OMITTED. ATTACH VERTICAL WEBS TO TRUSS TOP CHORD WITH 1.5X3 PLATE.

ATTACH PURLINS TO TOP OF FLAT TOP CHORD. IF PIGGYBACK IS SOLID LUMBER OR THE BOTTOM CHORD IS OMITTED, PURLINS MAY BE APPLIED BENEATH THE TOP CHORD OF SUPPORTING TRUSS.

REFER TO ENGINEER'S SEALED DESIGN FOR REQUIRED PURLIN SPACING.

THIS DETAIL IS APPLICABLE FOR THE FOLLOWING WIND CONDITIONS:

110 MPH WIND, 30' MEAN HGT, ASCE 7-02, CLOSED BLDG, LOCATED ANYWHERE IN ROOF, 1 MI FROM COAST CAT I, EXP C, WIND TC DL=5 PSF, WIND BC DL=5 PSF

110 MPH WIND, 30' MEAN HGT, FBC ENCLOSED BLDG, LOCATED ANYWHERE IN ROOF WIND TC DL=5 PSF, WIND BC DL=5 PSF

130 MPH WIND, 30' MEAN HGT, ASCE 7-02, CLOSED BLDG, LOCATED ANYWHERE IN ROOF, CAT II, EXP. C, WIND TC DL=6 PSF, WIND BC DL=6 PSF

FRONT FACE (E,*) PLATES MAY BE OFFSET FROM BACK FACE PLATES AS LONG AS BOTH FACES ARE SPACED 4' OC MAX.

JOINT TYPE	SPANS UP TO			
	30'	34'	38'	62'
A	2X4	2.5X4	2.5X4	3X5
B	4X6	5X6	5X6	5X6
C	1.5X3	1.5X4	1.5X4	1.5X4
D	5X4	5X5	5X5	5X6
E	4X8 OR 3X6 TRULOX AT 4' OC, ROTATED VERTICALLY			

ATTACH TRULOX PLATES WITH (6) 0.120" X 1.375" NAILS, OR EQUAL, PER FACE PER PLY. (4) NAILS IN EACH MEMBER TO BE CONNECTED. REFER TO DRAWING 160 TL FOR TRULOX INFORMATION.

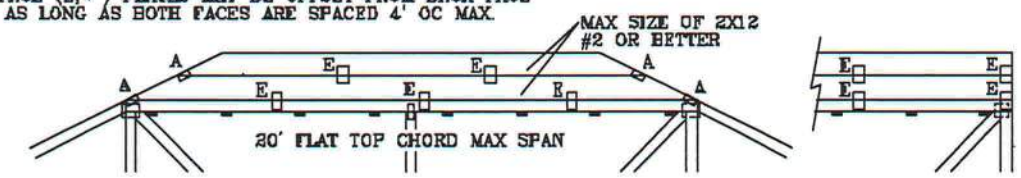

WEB BRACING CHART	
WEB LENGTH	REQUIRED BRACING
0' TO 7'9"	NO BRACING
7'9" TO 10'	1x4 "T" BRACE. SAME GRADE, SPECIES AS WEB MEMBER, OR BETTER, AND 80% LENGTH OF WEB MEMBER. ATTACH WITH 6d NAILS AT 4" OC.
10' TO 14'	2x4 "T" BRACE. SAME GRADE, SPECIES AS WEB MEMBER, OR BETTER, AND 80% LENGTH OF WEB MEMBER. ATTACH WITH 16d NAILS AT 4" OC.

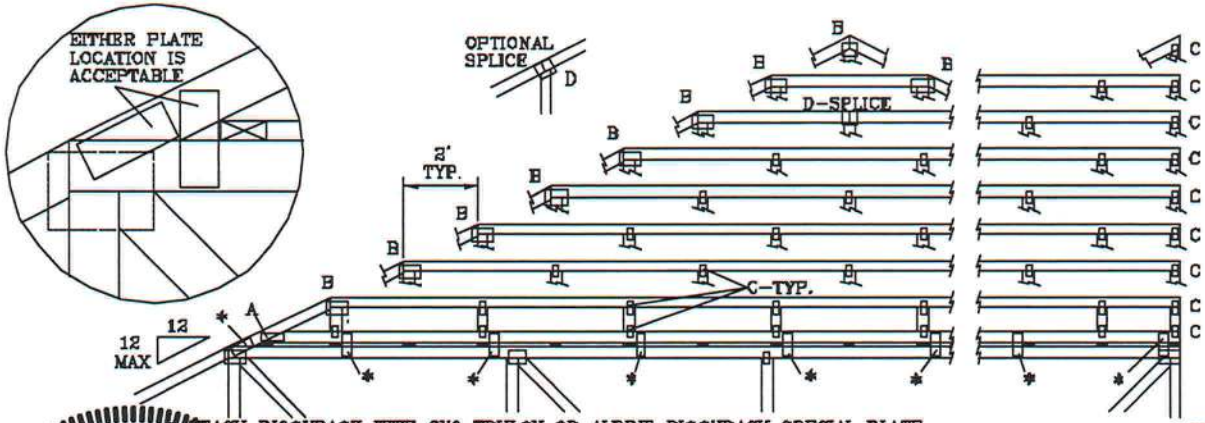

ATTACH PIGGYBACK WITH 3X6 TRULOX OR ALPINE PIGGYBACK SPECIAL PLATE.

* PIGGYBACK SPECIAL PLATE

ATTACH TEETH TO THE PIGGYBACK AT THE TIME OF FABRICATION. ATTACH TO SUPPORTING TRUSS WITH (4) 0.120" X 1.375" NAILS PER FACE PER PLY. APPLY PIGGYBACK SPECIAL PLATE TO EACH TRUSS FACE AND SPACE 4' OC OR LESS.

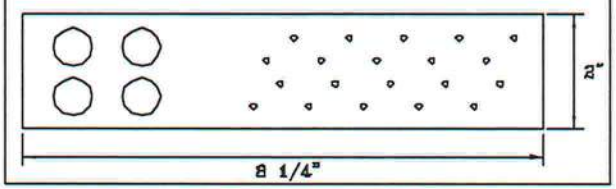

THIS DRAWING REPLACES DRAWINGS 634,016 634,017 & 847,045

JULIUS LEE LICENSE NO. 34869 STATE OF FLORIDA PROFESSIONAL ENGINEER

WARNING: TRUSSES REQUIRE EXTREME CARE IN FABRICATING, HANDLING, SHIPPING, INSTALLING AND BRACING. REFER TO BCSI (1-03 BUILDING COMPONENT SAFETY INFORMATION), PUBLISHED BY TPI (TRUSS PLATE INSTITUTE, 583 D'ONOFRIO DR., SUITE 200, MADISON, WI. 53719) AND WTCA (WOOD TRUSS COUNCIL OF AMERICA, 6300 ENTERPRISE LN, MADISON, WI 53719) FOR SAFETY PRACTICES PRIOR TO PERFORMING THESE FUNCTIONS. UNLESS OTHERWISE INDICATED, TOP CHORD SHALL HAVE PROPERLY ATTACHED STRUCTURAL PANELS AND BOTTOM CHORD SHALL HAVE A PROPERLY ATTACHED RIGID CEILING.

REVIEWED
By julius lee at 11:59 am, Jun 11, 2008

JULIUS LEE'S
CONS. ENGINEERS P.A.
1460 SW 4th AVENUE
DELRAY BEACH, FL 33444-2161

No: 34869
STATE OF FLORIDA

MAX LOADING
55 PSF AT 1.33 DUR. FAC.
50 PSF AT 1.25 DUR. FAC.
47 PSF AT 1.15 DUR. FAC.
SPACING 24.0"

REF PIGGYBACK
DATE 09/12/07
DRWG MITEK STD PIGGY
-ENG JL

VALLEY TRUSS DETAIL

TOP CHORD 2X4 SP #2 OR SPF #1/#2 OR BETTER.
BOT CHORD 2X3(*) OR 2X4 SP #2N OR SPF #1/#2 OR BETTER.
WEBS 2X4 SP #3 OR BETTER.

* 2X3 MAY BE RIPPED FROM A 2X6 (PITCHED OR SQUARE).

** ATTACH EACH VALLEY TO EVERY SUPPORTING TRUSS WITH: (2) 16d BOX (0.135" X 3.5") NAILS TOE-NAILED FOR FBC 2004 110 MPH, ASCE 7-02 110 MPH WIND OR (3) 16d FOR ASCE 7-02 130 MPH WIND. 15' MEAN HEIGHT, ENCLOSED BUILDING, EXP. C, RESIDENTIAL, WIND TC DL=5 PSF.

UNLESS SPECIFIED ON ENGINEER'S SEALED DESIGN, APPLY 1X4 "T"-BRACE, 80% LENGTH OF WEB, VALLEY WEB, SAME SPECIES AND GRADE OR BETTER, ATTACHED WITH 8d BOX (0.113" X 2.5") NAILS AT 6" OC, OR CONTINUOUS LATERAL BRACING, EQUALLY SPACED, FOR VERTICAL VALLEY WEBS GREATER THAN 7'9".

MAXIMUM VALLEY VERTICAL HEIGHT MAY NOT EXCEED 12'0".

TOP CHORD OF TRUSS BENEATH VALLEY SET MUST BE BRACED WITH:
PROPERLY ATTACHED, RATED SHEATHING APPLIED PRIOR TO VALLEY TRUSS INSTALLATION
OR
PURLINS AT 24" OC OR AS OTHERWISE SPECIFIED ON ENGINEERS' SEALED DESIGN
OR
BY VALLEY TRUSSES USED IN LIEU OF PURLIN SPACING AS SPECIFIED ON ENGINEERS' SEALED DESIGN.

*** NOTE THAT THE PURLIN SPACING FOR BRACING THE TOP CHORD OF THE TRUSS BENEATH THE VALLEY IS MEASURED ALONG THE SLOPE OF THE TOP CHORD.

++ LARGER SPANS MAY BE BUILT AS LONG AS THE VERTICAL HEIGHT DOES NOT EXCEED 12'0".

BOTTOM CHORD MAY BE SQUARE OR PITCHED CUT AS SHOWN.

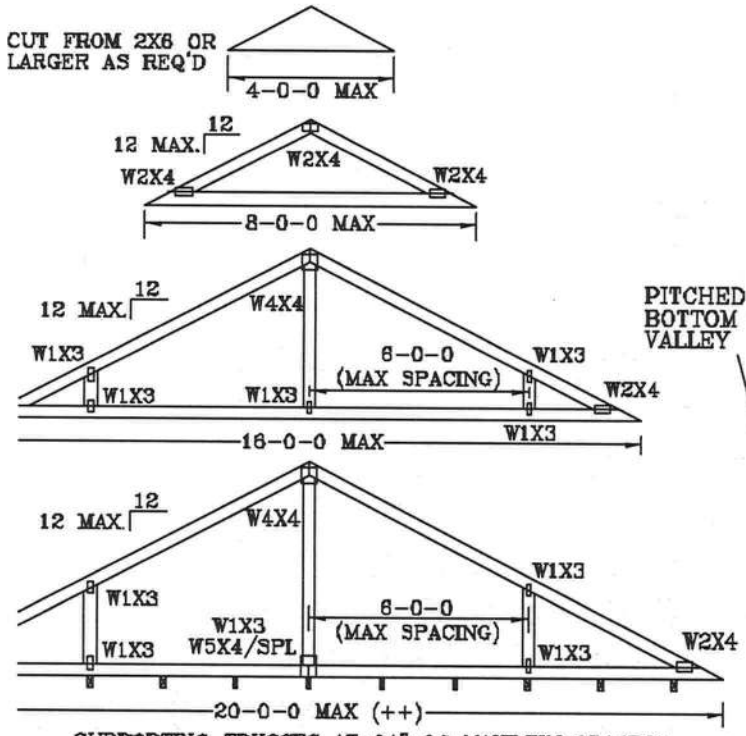

SUPPORTING TRUSSES AT 24" OC MAXIMUM SPACING.

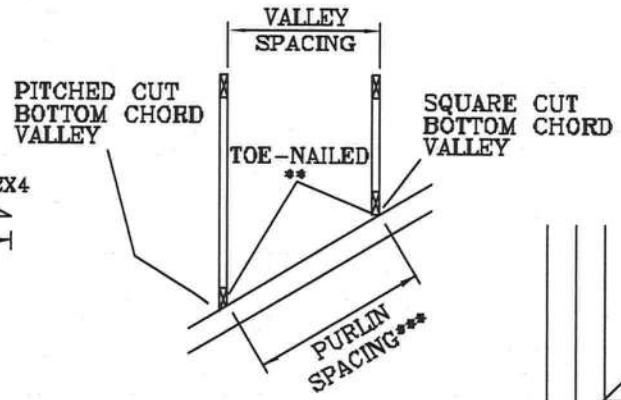

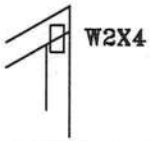

OPTIONAL STUB END DETAIL

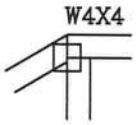

OPTIONAL HIP JOINT DETAIL

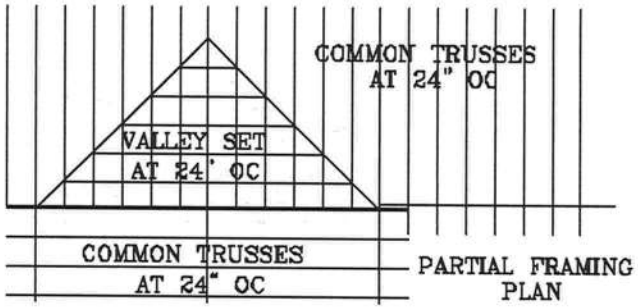

PARTIAL FRAMING PLAN

THIS DRAWING REPLACES DRAWING A105

JULIUS LEE LICENSE NO. 34869 STATE OF FLORIDA PROFESSIONAL ENGINEER

WARNING TRUSSES REQUIRE EXTREME CARE IN FABRICATING, HANDLING, SHIPPING, INSTALLING AND BRACING. REFER TO BCSI (1-03 BUILDING COMPONENT SAFETY INFORMATION), PUBLISHED BY TPI (TRUSS PLATE INSTITUTE, 583 D'ONOFRIO DR., SUITE 200, MADISON, WI 53719) AND WTCA (WOOD TRUSS COUNCIL OF AMERICA, 6300 ENTERPRISE LN, MADISON, WI 53719) FOR SAFETY PRACTICES PRIOR TO PERFORMING THESE FUNCTIONS. UNLESS OTHERWISE INDICATED, TOP CHORD SHALL HAVE PROPERLY ATTACHED STRUCTURAL PANELS AND BOTTOM CHORD SHALL HAVE A PROPERLY ATTACHED RIGID CEILING.

REVIEWED
By julius lee at 11:59 am, Jun 11, 2008

JULIUS LEE'S
CONS. ENGINEERS P.A.
1455 SW 4th AVENUE
DELRAY BEACH, FL 33444-2161

No: 34869
STATE OF FLORIDA

TC LL	20	20	PSF	
TC DL	7	15	PSF	
BC DL	5	5	PSF	
BC LL	0	0	PSF	
TOT. LD.	32	40	PSF	
DUR.FAC.	1.25	1.25		
SPACING		24"		

REF	VALLEY DETAIL
DATE	11/26/03
DRWG	VALTRUSS1103
-ENG	JL

TOE-NAIL DETAIL

TOE-NAILS TO BE DRIVEN AT AN ANGLE OF APPROXIMATELY THIRTY DEGREES WITH THE PIECE AND STARTED APPROXIMATELY ONE-THIRD THE LENGTH OF THE NAIL FROM THE END OF THE MEMBER.

PER ANSI/AF&PA NDS-2001 SECTION 12.4.1 – EDGE DISTANCE, END DISTANCE, SPACING: "EDGE DISTANCES, END DISTANCES AND SPACINGS FOR NAILS AND SPIKES SHALL BE SUFFICIENT TO PREVENT SPLITTING OF THE WOOD."

THE NUMBER OF TOE-NAILS TO BE USED IN A SPECIFIC APPLICATION IS DEPENDENT UPON PROPERTIES FOR THE CHORD SIZE, LUMBER SPECIES, AND NAIL TYPE. PROPER CONSTRUCTION PRACTICES AS WELL AS GOOD JUDGEMENT SHOULD DETERMINE THE NUMBER OF NAILS TO BE USED.

THIS DETAIL DISPLAYS A TOE-NAILED CONNECTION FOR JACK FRAMING INTO A SINGLE OR DOUBLE PLY SUPPORTING GIRDER.

MAXIMUM VERTICAL RESISTANCE OF 16d (0.162"X3.5") COMMON TOE-NAILS

NUMBER OF TOE-NAILS	SOUTHERN PINE		DOUGLAS FIR-LARCH		HEM-FIR		SPRUCE PINE FIR	
	1 PLY	2 PLIES	1 PLY	2 PLIES	1 PLY	2 PLIES	1 PLY	2 PLIES
2	197#	256#	181#	234#	156#	203#	154#	199#
3	296#	383#	271#	351#	234#	304#	230#	298#
4	394#	511#	361#	468#	312#	406#	307#	397#
5	493#	639#	452#	585#	390#	507#	384#	496#

ALL VALUES MAY BE MULTIPLIED BY APPROPRIATE DURATION OF LOAD FACTOR.

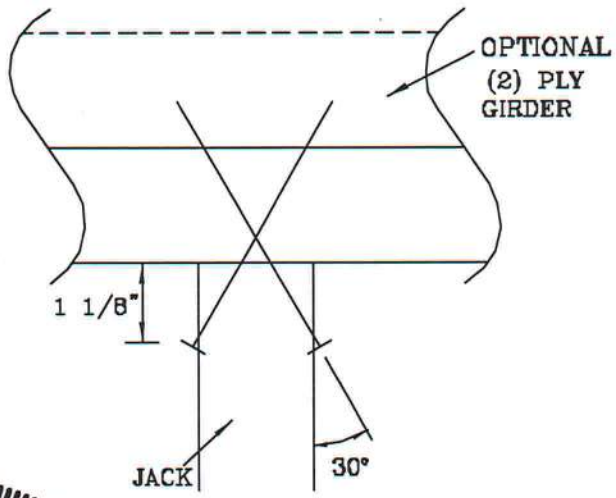

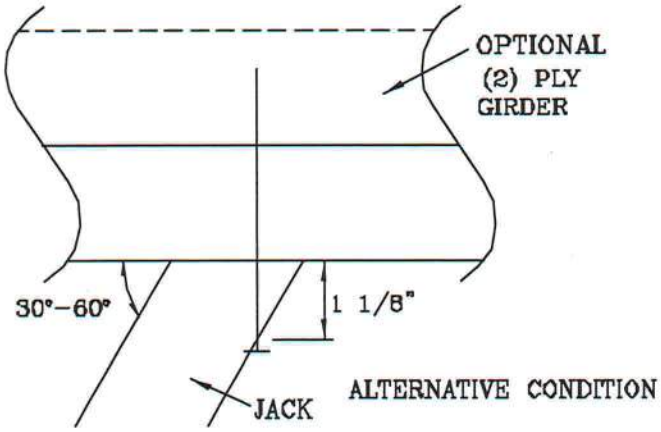

THIS DRAWING REPLACES DRAWING 784040

JULIUS LEE LICENSE NO. 34869 STATE OF FLORIDA PROFESSIONAL ENGINEER

WARNING TRUSSES REQUIRE EXTREME CARE IN FABRICATING, HANDLING, SHIPPING, INSTALLING AND BRACING. REFER TO BCSI 1-03 (BUILDING COMPONENT SAFETY INFORMATION), PUBLISHED BY TPI (TRUSS PLATE INSTITUTE, 583 D'ONOFRIO DR., SUITE 200, MADISON, WI 53719) AND WTCA (WOOD TRUSS COUNCIL OF AMERICA, 6900 ENTERPRISE LN, MADISON, WI 53719) FOR SAFETY PRACTICES PRIOR TO PERFORMING THESE FUNCTIONS. UNLESS OTHERWISE INDICATED, TOP CHORD SHALL HAVE PROPERLY ATTACHED STRUCTURAL PANELS AND BOTTOM CHORD SHALL HAVE A PROPERLY ATTACHED RIGID CEILING.

REVIEWED
By julius lee at 11:59 am, Jun 11, 2008

JULIUS LEE'S
CONS. ENGINEERS P.A.
1455 SW 4th AVENUE
DELRAY BEACH, FL 33444-2161
No: 34869
STATE OF FLORIDA

TC LL	PSF	REF TOE-NAIL
TC DL	PSF	DATE 09/12/07
BC DL	PSF	DRWG CNTONAIL1103
BC LL	PSF	-ENG JL
TOT. LD.	PSF	
DUR. FAC.	1.00	
SPACING		

1/2" DIAMETER BOLT SPACING FOR LOAD APPLIED PARALLEL TO GRAIN.

* GRADE AND SPECIES AS SPECIFIED ON THE ALPINE DESIGN.

BOLT HOLES SHALL BE A MINIMUM OF 1/32" TO A MAXIMUM OF 1/16" LARGER THAN BOLT DIAMETER.

TYPICAL LOCATION OF 1/2" DIAMETER THRU BOLTS. BOLT QUANTITIES AS NOTED ON SEALED DESIGN MUST BE APPLIED IN ONE OF THE PATTERNS SHOWN BELOW.

WASHERS REQUIRED UNDER BOLT HEAD AND NUT

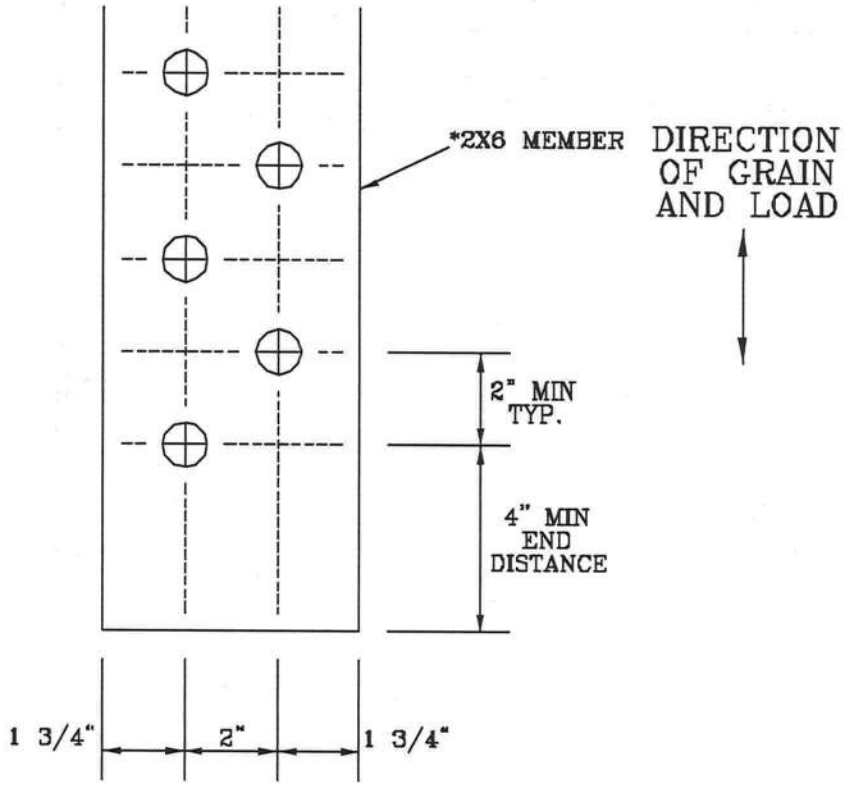

2X6 DETAIL

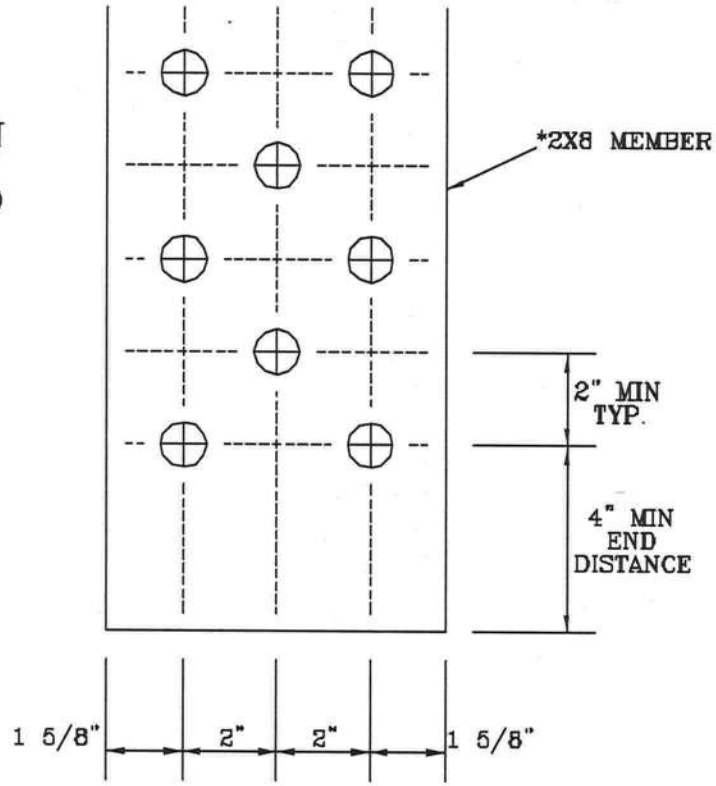

2X8 DETAIL

THIS DRAWING REPLACES DRAWING A628.016

JULIUS LEE LICENSE NO. 34869 STATE OF FLORIDA PROFESSIONAL ENGINEER

WARNING TRUSSES REQUIRE EXTREME CARE IN FABRICATING, HANDLING, SHIPPING, INSTALLING AND BRACING. REFER TO BCSI (1-03 BUILDING COMPONENT SAFETY INFORMATION), PUBLISHED BY TPI (TRUSS PLATE INSTITUTE, 583 D'ONOFRIO DR., SUITE 200, MADISON, WI. 53719) AND WTCA (WOOD TRUSS COUNCIL AMERICA, 6300 ENTERPRISE LN, MADISON, WI 53719) FOR SAFETY PRACTICES PRIOR TO PERFORMING THESE FUNCTIONS. UNLESS OTHERWISE INDICATED, TOP CHORD SHALL HAVE PROPERLY ATTACHED STRUCTURAL PANELS AND BOTTOM CHORD SHALL HAVE A PROPERLY ATTACHED RIGID CEILING.

REVIEWED
By julius lee at 11:59 am, Jun 11, 2008

JULIUS LEE'S CONS. ENGINEERS P.A.
1455 SW 4th AVENUE
DELRAY BEACH, FL 33444-2161

No: 34869
STATE OF FLORIDA

TC LL	PSF	
TC DL	PSF	
BC DL	PSF	
BC LL	PSF	
TOT. LD.	PSF	
DUR. FAC.		
SPACING		

REF	BOLT SPACING
DATE	11/26/03
DRWG	CNBOLTSP1103
-ENG	JL

TRULOX CONNECTION DETAIL

11 GAUGE (0.120" X 1.375") NAILS REQUIRED FOR TRULOX PLATE ATTACHMENT. FILL ROWS COMPLETELY WHERE SHOWN (⊕).

* NAILS MAY BE OMITTED FROM THESE ROWS.

THIS DETAIL MAY BE USED WITH SO. PINE, DOUGLAS-FIR OR HEM-FIR CHORDS WITH A MINIMUM 1.00 DURATION OF LOAD OR SPRUCE-PINE-FIR CHORDS WITH A MINIMUM 1.15 DURATION OF LOAD. CHORD SIZE OF BOTH TRUSSES MUST EXCEED THE TRULOX PLATE WIDTH.

TRULOX PLATE IS CENTERED ON THE CHORDS AND BENT BETWEEN NAIL ROWS.

REFER TO ENGINEER'S SEALED DESIGN REFERENCING THIS DETAIL FOR LUMBER, PLATES, AND OTHER INFORMATION NOT SHOWN.

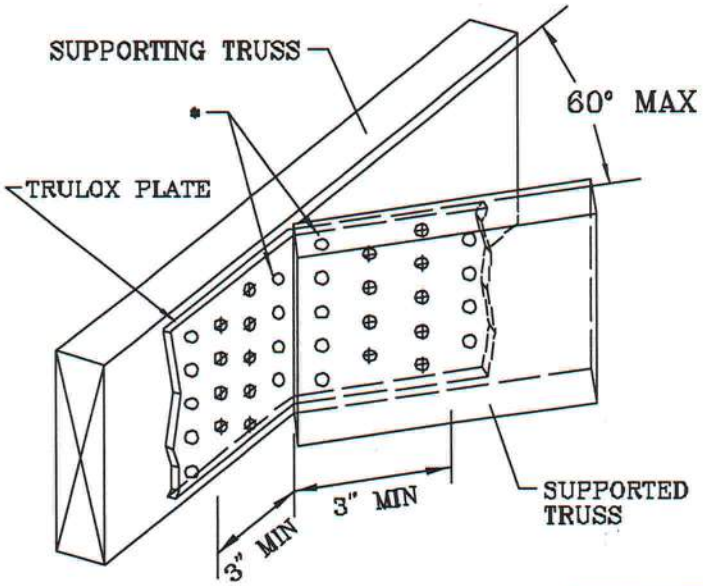

MINIMUM 3X6 TRULOX PLATE

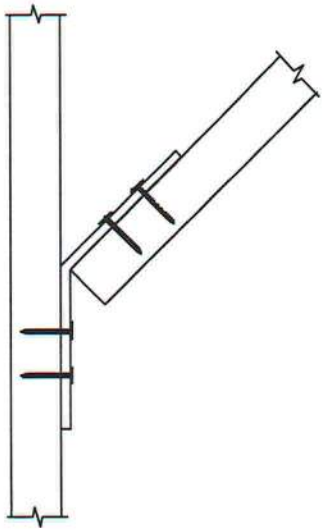

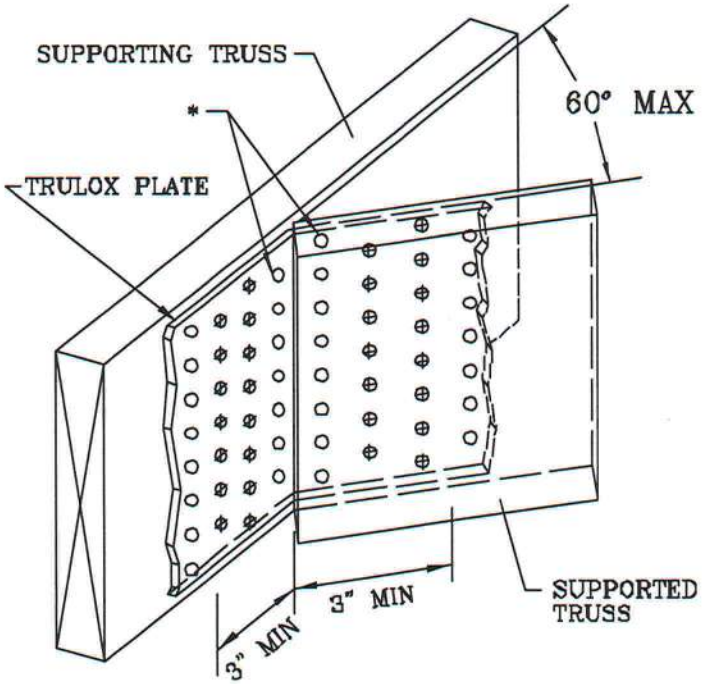

MINIMUM 5X6 TRULOX PLATE

TRULOX PLATE SIZE	REQUIRED NAILS PER TRUSS	MAXIMUM LOAD UP OR DOWN
3X6	9	350#
5X6	15	990#

REVIEWED
By julius lee at 11:58 am, Jun 11, 2008

JULIUS LEE LICENSE NO. 34869 STATE OF FLORIDA PROFESSIONAL ENGINEER

THIS DRAWING REPLACES DRAWINGS 1,158,989 1,158,989/R 1,154,944 1,152,217 1,152,017 1,159,154 & 1,151,524

WARNING TRUSSES REQUIRE EXTREME CARE IN FABRICATING, HANDLING, SHIPPING, INSTALLING AND BRACING. REFER TO BCSI 1-03 (BUILDING COMPONENT SAFETY INFORMATION, PUBLISHED BY TPI (TRUSS PLATE INSTITUTE, 583 D'ONOFRIO DR., SUITE 200, MADISON, WI 53719) AND WTCA (WOOD TRUSS COUNCIL OF AMERICA, 6300 ENTERPRISE LN, MADISON, WI 53719) FOR SAFETY PRACTICES PRIOR TO PERFORMING THESE FUNCTIONS. UNLESS OTHERWISE INDICATED, TOP CHORD SHALL HAVE PROPERLY ATTACHED STRUCTURAL PANELS AND BOTTOM CHORD SHALL HAVE A PROPERLY ATTACHED RIGID CEILING.

JULIUS LEE'S
CONS. ENGINEERS P.A.
1455 SW 4th AVENUE
DELRAY BEACH, FL. 33444-2161

No: 34869
STATE OF FLORIDA

REF	TRULOX
DATE	11/26/03
DRWG	CNTRULOX1103
-ENG	JL

STRONG BACK DETAIL
SYSTEM-42 OR FLAT TRUSS

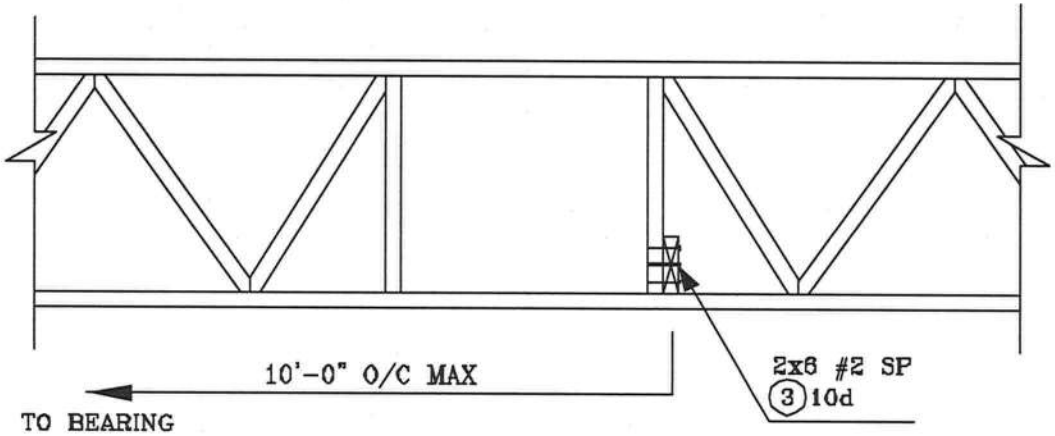

ALTERNATE DETAIL FOR STRONG BACK WITH VERTICAL NOT LINING UP

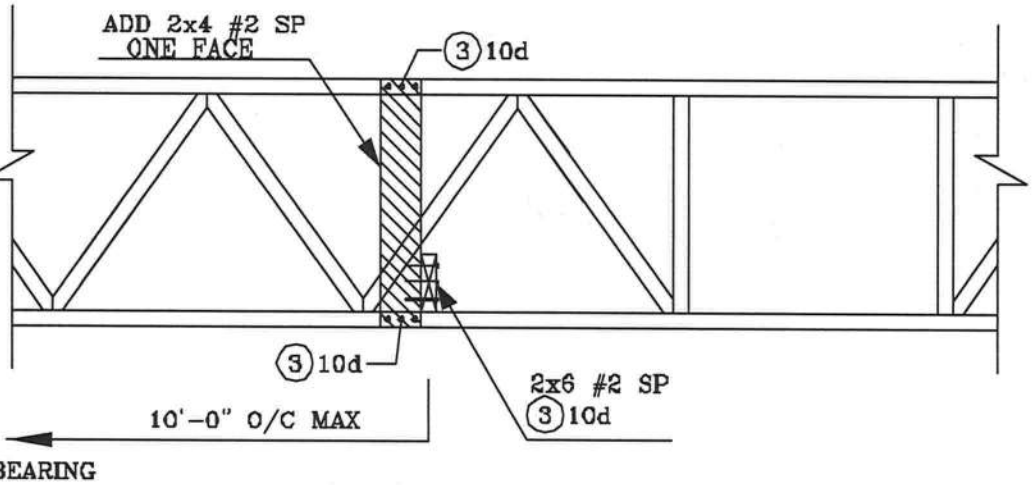

REVIEWED
By julius lee at 11:58 am, Jun 11, 2008

JULIUS LEE
LICENSE
NO. 34869
STATE OF
FLORIDA
PROFESSIONAL ENGINEER

JULIUS LEE'S
CONS. ENGINEERS P.A.
1456 SW 4th AVENUE
DELRAY BEACH, FL 33444-2161

No: 34869
STATE OF FLORIDA

MULTIPLE-MEMBER CONNECTIONS FOR SIDE-LOADED BEAMS

Maximum Uniform Load Applied to Either Outside Member (PLF)

Connector Type	Number of Rows	Connector On-Center Spacing	Connector Pattern					
			Assembly A	Assembly B	Assembly C	Assembly D	Assembly E	Assembly F
			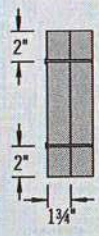	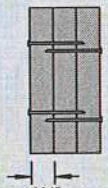	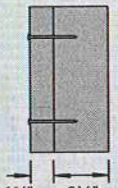	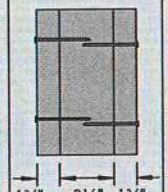	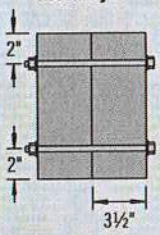	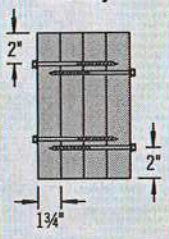
			3½" 2-ply	5¼" 3-ply	5¼" 2-ply	7" 3-ply	7" 2-ply	7" 4-ply
10d (0.128" x 3") Nail(1)	2	12"	370	***280***	280	***245***		
	3	12"	555	***415***	415	***370***		
½" A307 Through Bolts(2)(4)	2	24"	505	380	520	465	860	340
		19.2"	635	475	655	580	1,075	425
		16"	760	570	785	695	1,290	505
SDS ¼" x 3½"(4)	2	24"	680	***510***	510	***455***		
		19.2"	850	***640***	640	***565***		
		16"	1,020	***765***	765	***680***		
SDS ¼" x 6"(3)(4)	2	24"				***455***	***465***	***455***
		19.2"				***565***	***580***	***565***
		16"				***680***	***695***	***680***
USP WS35 (4)	2	24"	480	***360***	360	***320***		
		19.2"	600	***450***	450	***400***		
		16"	715	***540***	540	***480***		
USP WS6 (3)(4)	2	24"				***350***	***525***	***350***
		19.2"				***440***	***660***	***440***
		16"				***525***	***790***	***525***
3⅜" TrussLok(4)	2	24"	635	***475***	475	***425***		
		19.2"	795	***595***	595	***530***		
		16"	955	***715***	715	***635***		
5" TrussLok(4)	2	24"		***500***	500	***445***	***480***	***445***
		19.2"		***625***	625	***555***	***600***	***555***
		16"		***750***	750	***665***	***725***	***665***
6¾" TrussLok(4)	2	24"				445	620	445
		19.2"				555	770	555
		16"				665	925	665

(1) Nailed connection values may be doubled for 6" on-center or tripled for 4" on-center nail spacing.

(2) Washers required. Bolt holes to be 9/16" maximum.

(3) 6" SDS or WS screws can be used with Parallam® PSL and Microllam® LVL, but are not recommended for TimberStrand® LSL.

(4) 24" on-center bolted and screwed connection values may be doubled for 12" on-center spacing.

General Notes

- Connections are based on NDS® 2005 or manufacturer's code report.
- Use specific gravity of 0.5 when designing lateral connections.
- Values listed are for 100% stress level. Increase 15% for snow-loaded roof conditions or 25% for non-snow roof conditions, where code allows.
- ***Bold Italic*** cells indicate **Connector Pattern** must be installed on both sides. Stagger fasteners on opposite side of beam by ½ the required **Connector Spacing**.
- Verify adequacy of beam in allowable load tables on pages 16–33.
- 7" wide beams should be side-loaded only when loads are applied to both sides of the members (to minimize rotation).
- Minimum end distance for bolts and screws is 6".
- Beams wider than 7" require special consideration by the design professional.

Uniform Load Design Example

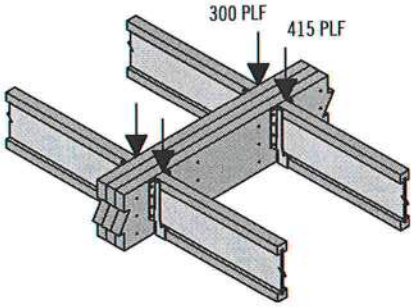

First, check the allowable load tables on pages 16–33 to verify that three pieces can carry the total load of 715 plf with proper live load deflection criteria. Maximum load applied to either outside member is 415 plf. For a 3-ply 1¾" assembly, two rows of 10d (0.128" x 3") nails at 12" on-center is good for only 280 plf. Therefore, use three rows of 10d (0.128" x 3") nails at 12" on-center (good for 415 plf).

Alternates:
Two rows of ½" bolts or SDS ¼" x 3½" screws at 19.2" on-center.

MULTIPLE-MEMBER CONNECTIONS FOR SIDE-LOADED BEAMS

Point Load—Maximum Point Load Applied to Either Outside Member (lbs)

Connector Type	Number of Connectors	Connector Pattern					
		Assembly A	Assembly B	Assembly C	Assembly D	Assembly E	Assembly F
		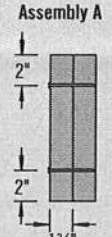	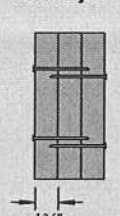	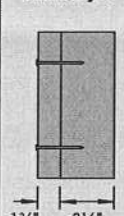	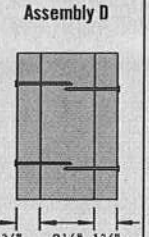	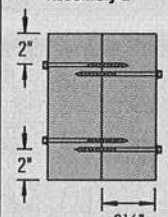	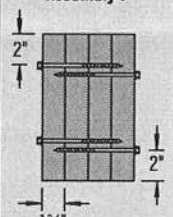
		3½" 2-ply	5¼" 3-ply	5¼" 2-ply	7" 3-ply	7" 2-ply	7" 4-ply
10d (0.128" x 3") Nail	6	1,110	***835***	835	***740***		
	12	2,225	***1,670***	1,670	***1,485***		
	18	3,335	***2,505***	2,505	***2,225***		
	24	4,450	***3,335***	3,335	***2,965***		
SDS Screws ¼" x 3½" or WS35 ¼" x 6" or WS6(1)	4	1,915	1,435(4)	1,435	***1,275***	***1,860(2)***	***1,405(2)***
	6	2,870	2,150 (4)	2,150	***1,915***	***2,785(2)***	***2,110(2)***
	8	3,825	2,870 (4)	2,870	***2,550***	***3,715(2)***	***2,810(2)***
3⅜" or 5" TrussLok™	4	2,545	1,910 (4)	1,910	***1,695***	***1,925(3)***	***1,775(3)***
	6	3,815	2,860 (4)	2,860	***2,545***	***2,890(3)***	***2,665(3)***
	8	5,090	3,815 (4)	3,815	***3,390***	***3,855(3)***	***3,550(3)***

(1) 6" SDS or WS screws can be used with Parallam® PSL and Microllam® LVL, but are not recommended for TimberStrand® LSL.

See General Notes on page 38

(2) 6" long screws required.

(3) 5" long screws required.

(4) 3½" and 3⅝" long screws must be installed on both sides.

Connections

4 or 6 or Screw Connection

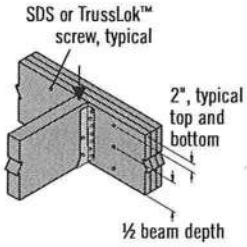

8 Screw Connection

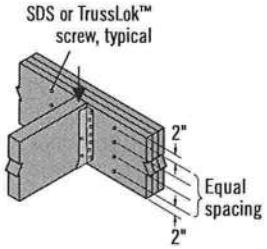

Nail Connection

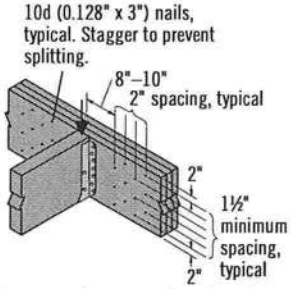

There must be an equal number of nails on each side of the connection

Point Load Design Example

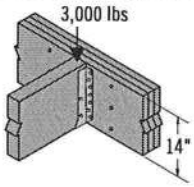

First, verify that a 3-ply 1¾" x 14" beam is capable of supporting the 3,000 lb point load as well as all other loads applied. The 3,000 lb point load is being transferred to the beam with a face mount hanger. For a 3-ply 1¾" assembly, eight 3⅜" TrussLok™ screws are good for 3,815 lbs with a face mount hanger.

MULTIPLE-MEMBER CONNECTIONS FOR TOP-LOADED BEAMS

1¾" Wide Pieces

- Minimum of three rows of 10d (0.128" x 3") nails at 12" on-center.
- Minimum of four rows of 10d (0.128" x 3") nails at 12" on-center for 14" or deeper.
- If using 12d–16d (0.148"–0.162" diameter) nails, the number of nailing rows may be reduced by one.
- Minimum of two rows of SDS, WS, or TrussLok™ screws at 16" on-center. Use 3⅜" minimum length with two or three plies; 5" minimum for 4-ply members. 6" SDS and WS screws are not recommended for use with TimberStrand® LSL. For 3- or 4-ply members, connectors must be installed on both sides. Stagger fasteners on opposite side of beam by ½ of the required connector spacing.
- Load must be applied evenly across entire beam width. Otherwise, use connections for side-loaded beams.

3½" Wide Pieces

- Minimum of two rows of SDS, WS, or TrussLok™ screws, 5" minimum length, at 16" on-center. 6" SDS and WS screws are not recommended for use with TimberStrand® LSL. Connectors must be installed on both sides. Stagger fasteners on opposite side of beam by ½ of the required connector spacing.
- Load must be applied evenly across entire beam width. Otherwise, use connections for side-loaded beams.
- Minimum of two rows of ½" bolts at 24" on-center staggered.

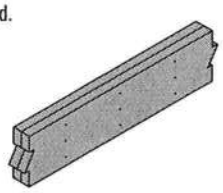

Multiple pieces can be nailed or bolted together to form a header or beam of the required size, up to a maximum width of 7"

Builders FirstSource

HLAKMF

JULIUS LEE LICENSE NO. 34869 STATE OF FLORIDA PROFESSIONAL ENGINEER

Project Information:

Builder: Cash Account
Model: CUSTOM
Builders FirstSource Job #: L284512
Street: 209 SW FARLINGTON COURT
City: Lake City
County: Columbia
Building Code: FBC2004/TPI2002
Computer Program Used: MiTek 6.3

Builders FirstSource
2525 E. Duval St
Lake City, FL 32055

1455 sw 4th Ave
Delray Beach
Florida 33444

Truss Design Information:

Gravity Loads
Roof: 32 psf Total
Floor: 55 psf Total

Wind
Wind Standard: ASCE 7-02
Wind Speed: 110 mph
Mean Roof Ht: 22 ft
Exposure: B

Note: Refer to individual truss design drawings for special loading conditions, design criteria, truss geometry, lumber, and plate information.

REVIEWED
By julius lee at 3:40 pm, Aug 04, 2008

Design Professional Information:

Design Professional Of Record: Owner Bldr.
Delegated Truss Engineer: Julius Lee

License # :
License # : 34869

COLUMBIA COUNTY BUILDING DEPARTMENT Received for FILE COPY Code Compliance PLANS EXAMINER

This truss specification package consists of this index sheet and 22 truss design drawings. This signed and sealed index sheet indicates acceptance of my professional engineering responsibility solely for listed truss design drawings. The suitability and use of each truss component for any particular building is the responsibility of the building designer per TPI.

Truss #	Truss Label	Drawing #	Seal Date	Truss #	Truss Label	Drawing #	Seal Date	Truss #	Truss Label	Drawing #	Seal Date
1	PB01	L284512001	8/4/2008								
2	PB01G	L284512002	8/4/2008								
3	PB02	L284512003	8/4/2008								
4	PB02G	L284512004	8/4/2008								
5	T01	L284512005	8/4/2008								
6	T01G	L284512006	8/4/2008								
7	T02	L284512007	8/4/2008								
8	T03	L284512008	8/4/2008								
9	T03G	L284512009	8/4/2008								
10	T04	L284512010	8/4/2008								
11	T05	L284512011	8/4/2008								
12	T06	L284512012	8/4/2008								
13	T06G	L284512013	8/4/2008								
14	T07	L284512014	8/4/2008								
15	T08	L284512015	8/4/2008								
16	T08G	L284512016	8/4/2008								
17	T09	L284512017	8/4/2008								
18	T10	L284512018	8/4/2008								
19	T11	L284512019	8/4/2008								
20	T11G	L284512020	8/4/2008								
21	T12	L284512021	8/4/2008								
22	T13	L284512022	8/4/2008								

© Builders FirstSource, Inc. 2002

Project Information:	Builder: Cash Account Model: CUSTOM Builders FirstSource Job #: L284512	Builders FirstSource 2525 E. Duval St. Lake City, FL 32055

© Builders FirstSource, Inc. 2002

Job	Truss	Truss Type	Qty	Ply	CURTIS RES.
L284512	PB01	PIGGYBACK	9	1	L284512001 Job Reference (optional)

Builders FirstSource, Lake City, Fl 32055 — 6.300 s Apr 19 2006 MiTek Industries, Inc. Mon Aug 04 08:32:25 2008 Page 1

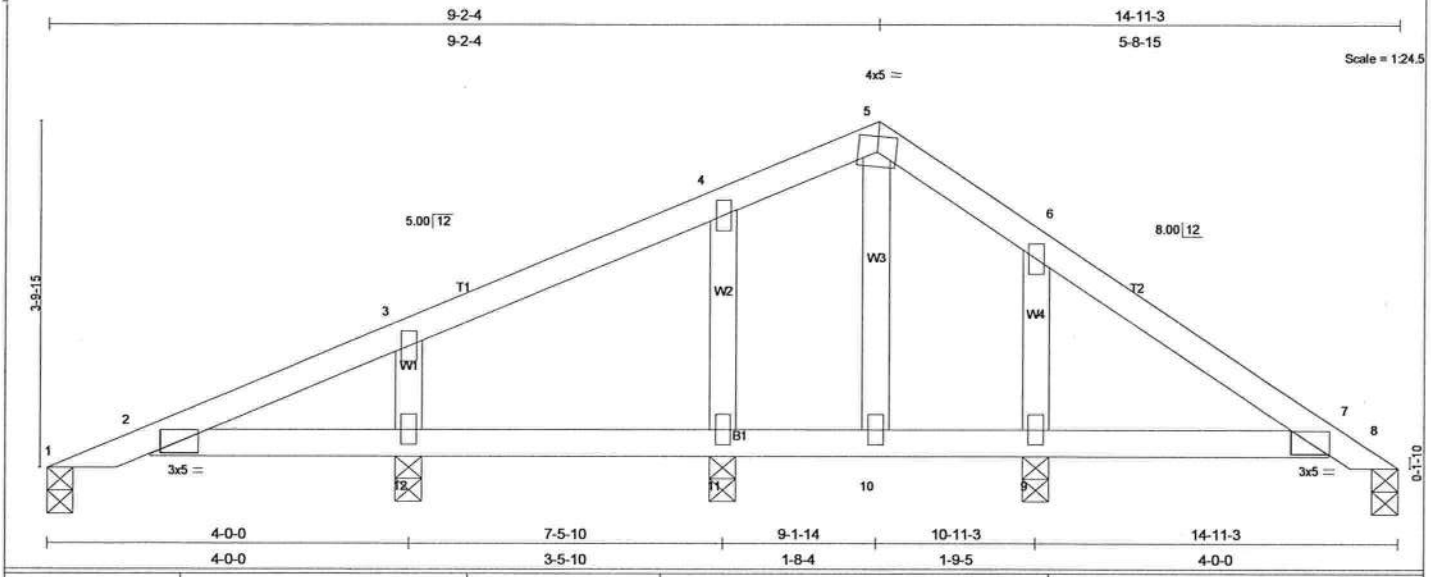

LOADING (psf)		SPACING 2-0-0	CSI		DEFL	in	(loc)	l/defl	L/d	PLATES	GRIP
TCLL	20.0	Plates Increase 1.25	TC	0.13	Vert(LL)	-0.01	2	>999	360	MT20	244/190
TCDL	7.0	Lumber Increase 1.25	BC	0.08	Vert(TL)	-0.01	2-12	>999	240		
BCLL	10.0 *	Rep Stress Incr YES	WB	0.05	Horz(TL)	0.01	8	n/a	n/a		
BCDL	5.0	Code FBC2004/TPI2002	(Matrix)							Weight: 57 lb	

LUMBER
TOP CHORD 2 X 4 SYP No.2
BOT CHORD 2 X 4 SYP No.2
WEBS 2 X 4 SYP No.3

BRACING
TOP CHORD Structural wood sheathing directly applied or 6-0-0 oc purlins.
BOT CHORD Rigid ceiling directly applied or 6-0-0 oc bracing.

REACTIONS (lb/size) 1=86/0-3-8, 8=71/0-3-8, 12=261/0-3-8, 11=228/0-3-8, 9=292/0-3-8
Max Horz 1=110(load case 5)
Max Uplift1=-6(load case 7), 8=-4(load case 7), 12=-93(load case 6), 11=-59(load case 6), 9=-96(load case 7)
Max Grav 1=91(load case 10), 8=77(load case 11), 12=268(load case 10), 11=228(load case 1), 9=292(load case 1)

FORCES (lb) - Maximum Compression/Maximum Tension
TOP CHORD 1-2=-108/48, 2-3=-134/91, 3-4=-45/84, 4-5=-5/50, 5-6=-4/54, 6-7=-85/114, 7-8=-37/10
BOT CHORD 2-12=-46/129, 11-12=-46/129, 10-11=-46/129, 9-10=-46/129, 7-9=-46/129
WEBS 5-10=-51/10, 3-12=-206/205, 4-11=-178/162, 6-9=-201/170

JOINT STRESS INDEX
2 = 0.36, 3 = 0.11, 4 = 0.09, 5 = 0.16, 6 = 0.10, 7 = 0.39, 9 = 0.10, 10 = 0.02, 11 = 0.09 and 12 = 0.12

NOTES (9)
1) Unbalanced roof live loads have been considered for this design.
2) Wind: ASCE 7-02; 110mph (3-second gust); h=22ft; TCDL=4.2psf; BCDL=3.0psf; Category II; Exp B; enclosed; MWFRS and C-C Exterior(2) zone; Lumber DOL=1.60 plate grip DOL=1.60. This truss is designed for C-C for members and forces, and for MWFRS for reactions specified.
3) *This truss has been designed for a 10.0 psf bottom chord live load nonconcurrent with any other live loads.
4) All plates are 2x4 MT20 unless otherwise indicated.
5) All bearings are assumed to be SYP No.2 crushing capacity of 565.00 psi
6) Bearing at joint(s) 1, 8 considers parallel to grain value using ANSI/TPI 1 angle to grain formula. Building designer should verify capacity of bearing surface.
7) Provide mechanical connection (by others) of truss to bearing plate capable of withstanding 6 lb uplift at joint 1, 4 lb uplift at joint 8, 93 lb uplift at joint 12, 59 lb uplift at joint 11 and 96 lb uplift at joint 9.
8) SEE MiTek STANDARD PIGGYBACK TRUSS CONNECTION DETAIL FOR CONNECTION TO BASE TRUSS
9) Truss Design Engineer: Julius Lee, PE: Florida P.E. License No. 34869: Address: 1109 Coastal Bay Blvd. Boynton Beach, FL 33435

LOAD CASE(S) Standard

Job	Truss	Truss Type	Qty	Ply	CURTIS RES.
L284512	PB01G	PIGGYBACK	1	1	L284512002 Job Reference (optional)

Builders FirstSource, Lake City, Fl 32055

6.300 s Apr 19 2006 MiTek Industries, Inc. Mon Aug 04 08:32:26 2008 Page 1

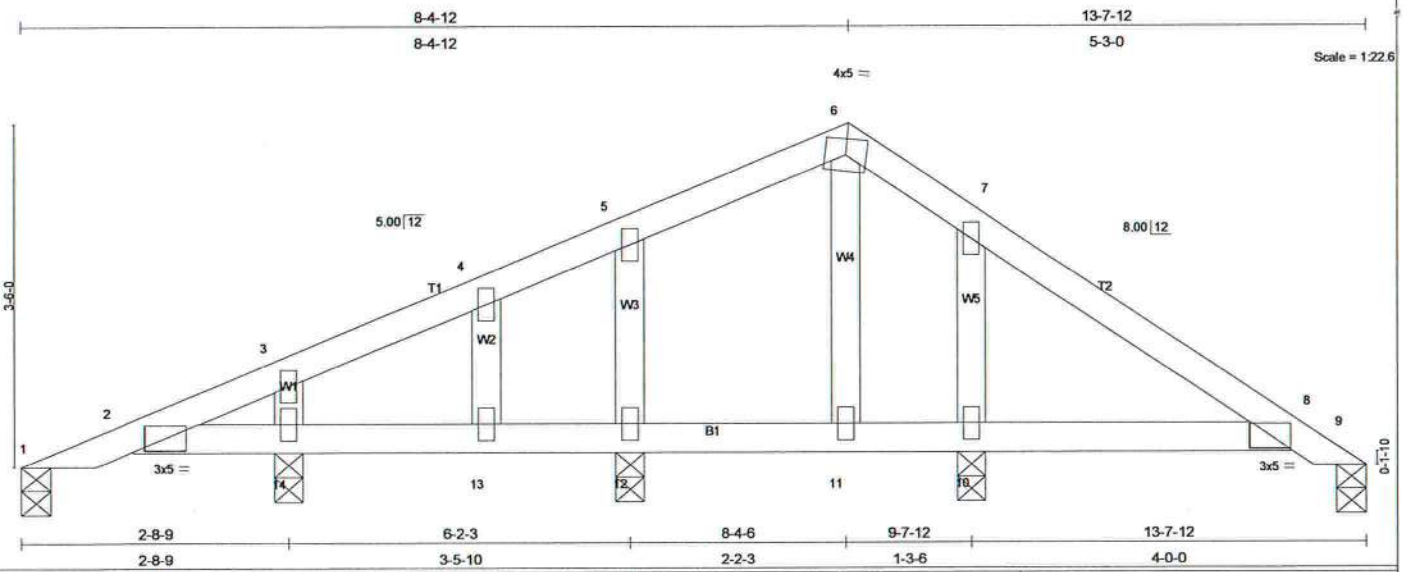

LOADING (psf)		SPACING	2-0-0	CSI		DEFL	in	(loc)	l/defl	L/d	PLATES	GRIP
TCLL	20.0	Plates Increase	1.25	TC	0.11	Vert(LL)	0.01	8-10	>999	360	MT20	244/190
TCDL	7.0	Lumber Increase	1.25	BC	0.09	Vert(TL)	-0.01	8-10	>999	240		
BCLL	10.0 *	Rep Stress Incr	YES	WB	0.04	Horz(TL)	0.00	9	n/a	n/a		
BCDL	5.0	Code FBC2004/TPI2002		(Matrix)							Weight: 53 lb	

LUMBER
TOP CHORD 2 X 4 SYP No.2
BOT CHORD 2 X 4 SYP No.2
WEBS 2 X 4 SYP No.3

BRACING
TOP CHORD Structural wood sheathing directly applied or 6-0-0 oc purlins.
BOT CHORD Rigid ceiling directly applied or 6-0-0 oc bracing.

REACTIONS (lb/size) 1=51/0-3-8, 9=78/0-3-8, 14=207/0-3-8, 12=230/0-3-8, 10=291/0-3-8
Max Horz 1=137(load case 5)
Max Uplift1=-10(load case 7), 9=-14(load case 7), 14=-122(load case 6), 12=-122(load case 6), 10=-160(load case 7)
Max Grav 1=58(load case 10), 9=78(load case 1), 14=217(load case 10), 12=230(load case 1), 10=291(load case 1)

FORCES (lb) - Maximum Compression/Maximum Tension
TOP CHORD 1-2=-135/53, 2-3=-131/66, 3-4=-71/54, 4-5=-42/67, 5-6=-27/52, 6-7=-12/47, 7-8=-83/115, 8-9=-37/14
BOT CHORD 2-14=-48/129, 13-14=-48/129, 12-13=-48/129, 11-12=-48/129, 10-11=-48/129, 8-10=-48/129
WEBS 6-11=-57/27, 3-14=-147/140, 5-12=-153/141, 7-10=-191/159, 4-13=-41/57

JOINT STRESS INDEX
2 = 0.15, 3 = 0.08, 4 = 0.03, 5 = 0.08, 6 = 0.09, 7 = 0.09, 8 = 0.40, 10 = 0.09, 11 = 0.02, 12 = 0.08, 13 = 0.03 and 14 = 0.08

NOTES (9)
1) Unbalanced roof live loads have been considered for this design.
2) Wind: ASCE 7-02; 110mph (3-second gust); h=22ft; TCDL=4.2psf; BCDL=3.0psf; Category II; Exp B; enclosed; MWFRS gable end zone and C-C Exterior(2) zone; Lumber DOL=1.60 plate grip DOL=1.60. This truss is designed for C-C for members and forces, and for MWFRS for reactions specified.
3) *This truss has been designed for a 10.0 psf bottom chord live load nonconcurrent with any other live loads.
4) All plates are 2x4 MT20 unless otherwise indicated.
5) All bearings are assumed to be SYP No.2 crushing capacity of 565.00 psi
6) Bearing at joint(s) 1, 9 considers parallel to grain value using ANSI/TPI 1 angle to grain formula. Building designer should verify capacity of bearing surface.
7) Provide mechanical connection (by others) of truss to bearing plate capable of withstanding 10 lb uplift at joint 1, 14 lb uplift at joint 9, 122 lb uplift at joint 14, 122 lb uplift at joint 12 and 160 lb uplift at joint 10.
8) SEE MiTek STANDARD PIGGYBACK TRUSS CONNECTION DETAIL FOR CONNECTION TO BASE TRUSS
9) Truss Design Engineer: Julius Lee, PE: Florida P.E. License No. 34869: Address: 1109 Coastal Bay Blvd. Boynton Beach, FL 33435

LOAD CASE(S) Standard

Job	Truss	Truss Type	Qty	Ply	CURTIS RES.
L284512	PB02	PIGGYBACK	3	1	L284512003 Job Reference (optional)

Builders FirstSource, Lake City, Fl 32055 — 6.300 s Apr 19 2006 MiTek Industries, Inc. Mon Aug 04 08:32:27 2008 Page 1

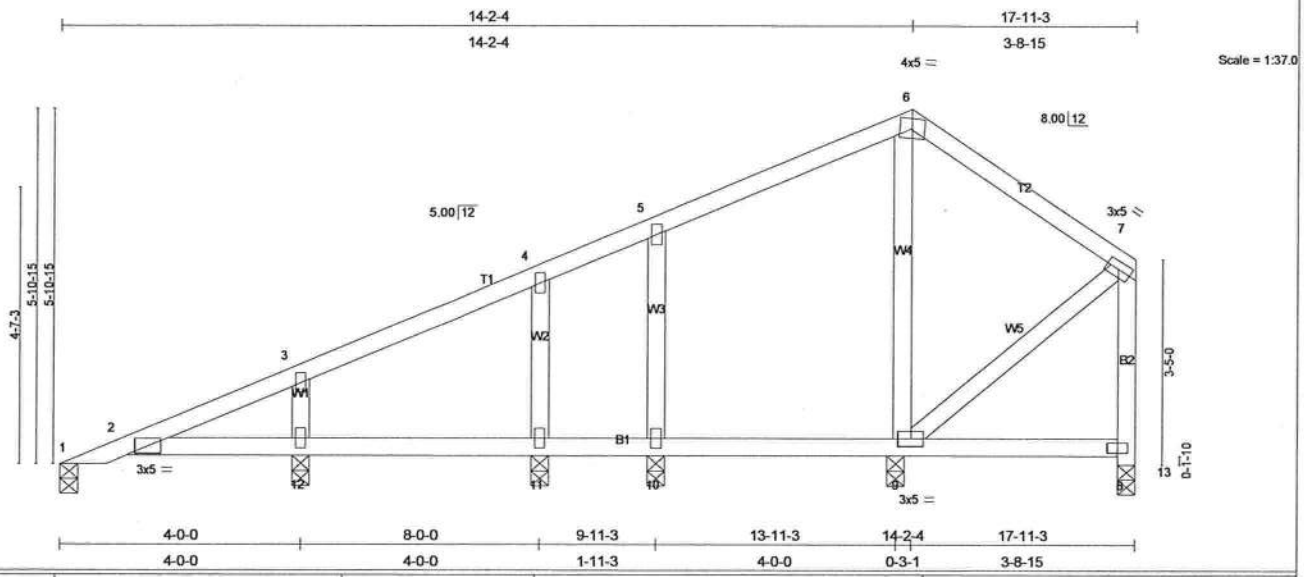

LOADING (psf)		SPACING 2-0-0	CSI		DEFL	in	(loc)	l/defl	L/d	PLATES	GRIP
TCLL	20.0	Plates Increase 1.25	TC	0.16	Vert(LL)	-0.01	2	>999	360	MT20	244/190
TCDL	7.0	Lumber Increase 1.25	BC	0.09	Vert(TL)	-0.01	2-12	>999	240		
BCLL	10.0 *	Rep Stress Incr YES	WB	0.13	Horz(TL)	0.00	12	n/a	n/a		
BCDL	5.0	Code FBC2004/TPI2002	(Matrix)							Weight: 84 lb	

LUMBER
TOP CHORD 2 X 4 SYP No.2
BOT CHORD 2 X 4 SYP No.2
WEBS 2 X 4 SYP No.3

BRACING
TOP CHORD Structural wood sheathing directly applied or 6-0-0 oc purlins.
BOT CHORD Rigid ceiling directly applied or 6-0-0 oc bracing, Except:
10-0-0 oc bracing: 8-9.

REACTIONS (lb/size) 1=88/0-3-8, 9=314/0-3-8, 12=294/0-3-8, 11=163/0-3-8, 10=201/0-3-8, 13=69/0-3-8
Max Horz 1=167(load case 5)
Max Uplift9=-32(load case 7), 12=-107(load case 6), 11=-58(load case 6), 10=-77(load case 6), 13=-30(load case 7)
Max Grav 1=88(load case 1), 9=314(load case 1), 12=294(load case 1), 11=163(load case 1), 10=213(load case 10), 13=97(load case 11)

FORCES (lb) - Maximum Compression/Maximum Tension
TOP CHORD 1-2=-188/0, 2-3=-186/71, 3-4=-95/65, 4-5=-58/52, 5-6=-19/70, 6-7=-51/79
BOT CHORD 2-12=-25/14, 11-12=-25/14, 10-11=-25/14, 9-10=-25/14, 8-9=-11/19, 8-13=-97/52, 7-8=-78/59
WEBS 6-9=-250/130, 7-9=-37/29, 3-12=-230/215, 4-11=-144/142, 5-10=-181/158

JOINT STRESS INDEX
2 = 0.32, 3 = 0.34, 4 = 0.34, 5 = 0.34, 6 = 0.55, 7 = 0.51, 8 = 0.34, 9 = 0.40, 10 = 0.34, 11 = 0.34 and 12 = 0.34

NOTES (9)
1) Unbalanced roof live loads have been considered for this design.
2) Wind: ASCE 7-02; 110mph (3-second gust); h=22ft; TCDL=4.2psf; BCDL=3.0psf; Category II; Exp B; enclosed; MWFRS and C-C Exterior(2) zone; Lumber DOL=1.60 plate grip DOL=1.60. This truss is designed for C-C for members and forces, and for MWFRS for reactions specified.
3) *This truss has been designed for a 10.0 psf bottom chord live load nonconcurrent with any other live loads.
4) All plates are 2x4 MT20 unless otherwise indicated.
5) All bearings are assumed to be SYP No.2 crushing capacity of 565.00 psi
6) Bearing at joint(s) 1, 13 considers parallel to grain value using ANSI/TPI 1 angle to grain formula. Building designer should verify capacity of bearing surface.
7) Provide mechanical connection (by others) of truss to bearing plate capable of withstanding 32 lb uplift at joint 9, 107 lb uplift at joint 12, 58 lb uplift at joint 11, 77 lb uplift at joint 10 and 30 lb uplift at joint 13.
8) SEE MiTek STANDARD PIGGYBACK TRUSS CONNECTION DETAIL FOR CONNECTION TO BASE TRUSS
9) Truss Design Engineer: Julius Lee, PE: Florida P.E. License No. 34869: Address: 1109 Coastal Bay Blvd. Boynton Beach, FL 33435

LOAD CASE(S) Standard

Job	Truss	Truss Type	Qty	Ply	CURTIS RES.
L284512	PB02G	PIGGYBACK	1	1	L284512004 Job Reference (optional)

Builders FirstSource, Lake City, Fl 32055

6.300 s Apr 19 2006 MiTek Industries, Inc. Mon Aug 04 08:32:28 2008 Page 1

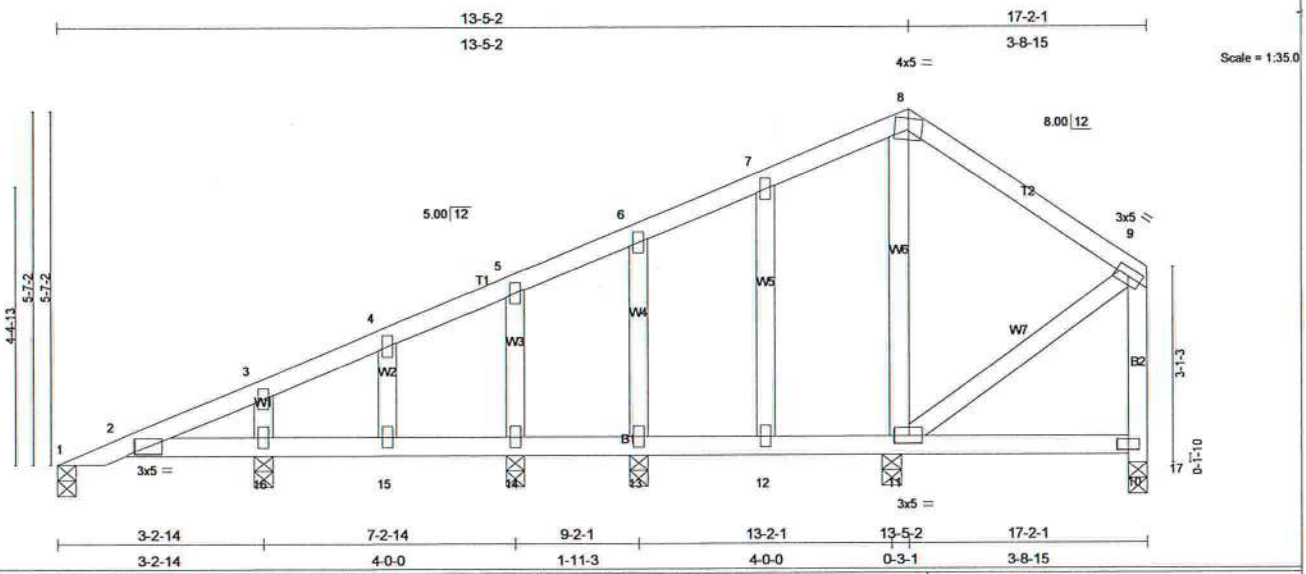

LOADING (psf)		SPACING	2-0-0	CSI		DEFL	in	(loc)	l/defl	L/d	PLATES	GRIP
TCLL	20.0	Plates Increase	1.25	TC	0.13	Vert(LL)	-0.01	12	>999	360	MT20	244/190
TCDL	7.0	Lumber Increase	1.25	BC	0.15	Vert(TL)	-0.01	12	>999	240		
BCLL	10.0 *	Rep Stress Incr	YES	WB	0.10	Horz(TL)	0.00	17	n/a	n/a		
BCDL	5.0	Code FBC2004/TPI2002		(Matrix)							Weight: 87 lb	

LUMBER
TOP CHORD 2 X 4 SYP No.2
BOT CHORD 2 X 4 SYP No.2 *Except*
B2 2 X 4 SYP No.3
WEBS 2 X 4 SYP No.3

BRACING
TOP CHORD Structural wood sheathing directly applied or 6-0-0 oc purlins.
BOT CHORD Rigid ceiling directly applied or 6-0-0 oc bracing, Except:
10-0-0 oc bracing: 10-11.

REACTIONS (lb/size) 1=69/0-3-8, 11=279/0-3-8, 16=266/0-3-8, 14=175/0-3-8, 13=195/0-3-8, 17=96/0-3-8
Max Horz 1=208(load case 5)
Max Uplift11=-76(load case 7), 16=-165(load case 6), 14=-108(load case 6), 13=-123(load case 6), 17=-57(load case 7)
Max Grav 1=69(load case 1), 11=279(load case 1), 16=266(load case 1), 14=175(load case 1), 13=206(load case 10), 17=110(load case 11)

FORCES (lb) - Maximum Compression/Maximum Tension
TOP CHORD 1-2=-211/0, 2-3=-173/40, 3-4=-128/10, 4-5=-105/37, 5-6=-71/29, 6-7=-32/61, 7-8=-5/77, 8-9=-61/65
BOT CHORD 2-16=-26/18, 15-16=-26/18, 14-15=-26/18, 13-14=-26/18, 12-13=-26/18, 11-12=-26/18, 10-11=-16/20, 10-17=-110/67, 9-10=-90/79
WEBS 8-11=-204/92, 9-11=-45/39, 3-16=-174/154, 5-14=-129/121, 6-13=-140/129, 4-15=-48/62, 7-12=-59/53

JOINT STRESS INDEX
2 = 0.26, 3 = 0.34, 4 = 0.34, 5 = 0.34, 6 = 0.34, 7 = 0.34, 8 = 0.46, 9 = 0.69, 10 = 0.34, 11 = 0.40, 12 = 0.34, 13 = 0.34, 14 = 0.34, 15 = 0.34 and 16 = 0.34

NOTES (9)
1) Unbalanced roof live loads have been considered for this design.
2) Wind: ASCE 7-02; 110mph (3-second gust); h=22ft; TCDL=4.2psf; BCDL=3.0psf; Category II; Exp B; enclosed; MWFRS gable end zone and C-C Exterior(2) zone; Lumber DOL=1.60 plate grip DOL=1.60. This truss is designed for C-C for members and forces, and for MWFRS for reactions specified.
3) *This truss has been designed for a 10.0 psf bottom chord live load nonconcurrent with any other live loads.
4) All plates are 2x4 MT20 unless otherwise indicated.
5) All bearings are assumed to be SYP No.2 crushing capacity of 565.00 psi
6) Bearing at joint(s) 1, 17 considers parallel to grain value using ANSI/TPI 1 angle to grain formula. Building designer should verify capacity of bearing surface.
7) Provide mechanical connection (by others) of truss to bearing plate capable of withstanding 76 lb uplift at joint 11, 165 lb uplift at joint 16, 108 lb uplift at joint 14, 123 lb uplift at joint 13 and 57 lb uplift at joint 17.
8) SEE MiTek STANDARD PIGGYBACK TRUSS CONNECTION DETAIL FOR CONNECTION TO BASE TRUSS
9) Truss Design Engineer: Julius Lee, PE: Florida P.E. License No. 34869: Address: 1109 Coastal Bay Blvd. Boynton Beach, FL 33435

LOAD CASE(S) Standard

Job	Truss	Truss Type	Qty	Ply	CURTIS RES.
L284512	T01	ATTIC	6	1	L284512005 Job Reference (optional)

Builders FirstSource, Lake City, Fl 32055 — 6.300 s Apr 19 2006 MiTek Industries, Inc. Mon Aug 04 08:32:30 2008 Page 1

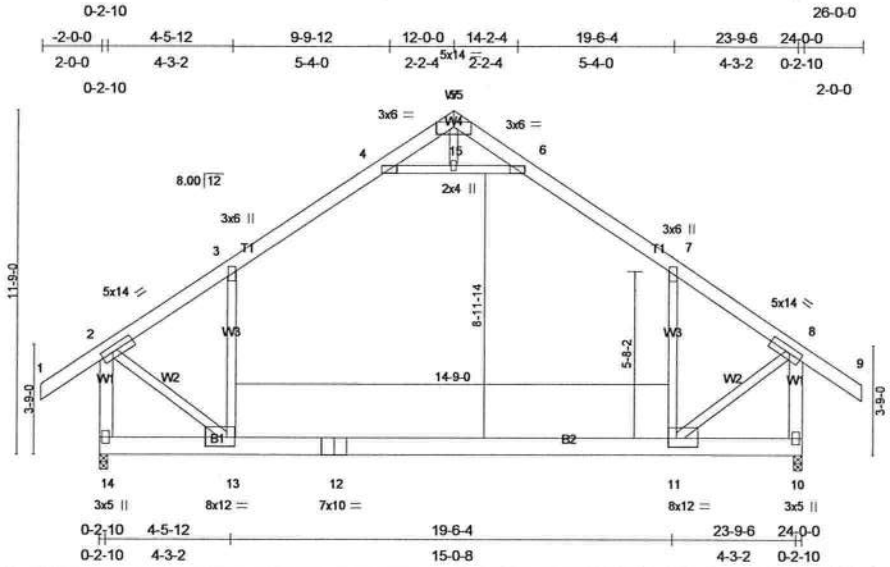

Plate Offsets (X,Y): [2:0-4-15,0-2-8], [8:0-4-15,0-2-8], [11:0-3-4,0-3-11], [13:0-3-4,0-3-11]

LOADING (psf)		SPACING 2-0-0		CSI		DEFL	in	(loc)	l/defl	L/d	PLATES	GRIP
TCLL	20.0	Plates Increase	1.25	TC	0.90	Vert(LL)	-0.62	11-13	>457	360	MT20	244/190
TCDL	7.0	Lumber Increase	1.25	BC	0.74	Vert(TL)	-0.98	11-13	>287	240		
BCLL	10.0 *	Rep Stress Incr	YES	WB	0.95	Horz(TL)	0.01	10	n/a	n/a		
BCDL	5.0	Code FBC2004/TPI2002		(Matrix)							Weight: 208 lb	

LUMBER
TOP CHORD 2 X 6 SYP No.1D
BOT CHORD 2 X 8 SYP No.1D
WEBS 2 X 4 SYP No.3 *Except*
W1 2 X 6 SYP No.1D, W1 2 X 6 SYP No.1D

BRACING
TOP CHORD Structural wood sheathing directly applied or 2-2-0 oc purlins, except end verticals.
BOT CHORD Rigid ceiling directly applied or 5-9-5 oc bracing.

REACTIONS (lb/size) 14=1763/0-3-8, 10=1763/0-3-8
Max Horz 14=350(load case 5)
Max Uplift14=-40(load case 6), 10=-40(load case 7)

FORCES (lb) - Maximum Compression/Maximum Tension
TOP CHORD 1-2=0/67, 2-3=-1566/150, 3-4=-1181/299, 4-5=0/614, 5-6=0/614, 6-7=-1181/299, 7-8=-1566/150, 8-9=0/67, 2-14=-2109/220, 8-10=-2109/220
BOT CHORD 13-14=-341/391, 12-13=0/1099, 11-12=0/1099, 10-11=0/82
WEBS 4-15=-1778/344, 6-15=-1778/344, 3-13=0/620, 7-11=0/620, 2-13=-20/1319, 5-15=0/114, 8-11=-23/1319

JOINT STRESS INDEX
2 = 0.91, 3 = 0.25, 4 = 0.59, 5 = 0.40, 6 = 0.59, 7 = 0.25, 8 = 0.91, 10 = 0.64, 11 = 0.23, 12 = 0.54, 13 = 0.23, 14 = 0.64 and 15 = 0.34

NOTES (8)
1) Unbalanced roof live loads have been considered for this design.
2) Wind: ASCE 7-02; 110mph (3-second gust); h=22ft; TCDL=4.2psf; BCDL=3.0psf; Category II; Exp B; enclosed; MWFRS and C-C Exterior(2) zone; end vertical left and right exposed; Lumber DOL=1.60 plate grip DOL=1.60. This truss is designed for C-C for members and forces, and for MWFRS for reactions specified.
3) *This truss has been designed for a 10.0 psf bottom chord live load nonconcurrent with any other live loads.
4) Ceiling dead load (5.0 psf) on member(s). 3-4, 6-7, 4-15, 6-15; Wall dead load (5.0psf) on member(s).3-13, 7-11
5) Bottom chord live load (40.0 psf) and additional bottom chord dead load (10.0 psf) applied only to room. 11-13
6) All bearings are assumed to be SYP No.2 crushing capacity of 565.00 psi
7) Provide mechanical connection (by others) of truss to bearing plate capable of withstanding 40 lb uplift at joint 14 and 40 lb uplift at joint 10.
8) Truss Design Engineer: Julius Lee, PE: Florida P.E. License No. 34869: Address: 1109 Coastal Bay Blvd. Boynton Beach, FL 33435

LOAD CASE(S) Standard

Job	Truss	Truss Type	Qty	Ply	CURTIS RES.
L284512	T01G	GABLE	1	1	L284512006 Job Reference (optional)

Builders FirstSource, Lake City, Fl 32055

6.300 s Apr 19 2006 MiTek Industries, Inc. Mon Aug 04 08:32:31 2008 Page 1

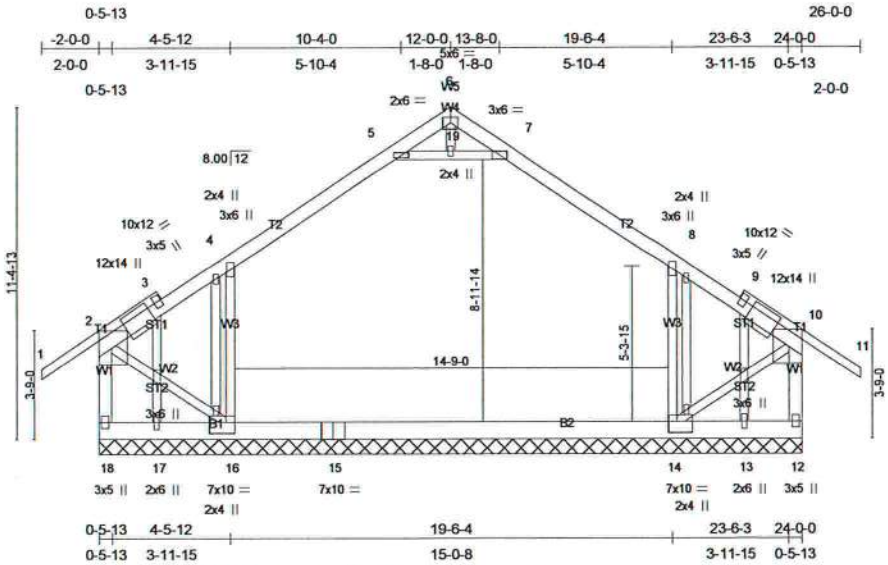

Plate Offsets (X,Y): [2:0-7-0,0-5-8], [10:0-7-0,0-5-8], [14:0-3-7,0-4-10], [16:0-3-7,0-4-10], [20:1-0-5,0-2-8], [25:1-0-5,0-2-8]

LOADING (psf)			SPACING 2-0-0	CSI		DEFL	in	(loc)	l/defl	L/d	PLATES	GRIP
TCLL	20.0		Plates Increase 1.25	TC	0.60	Vert(LL)	-0.06	10-11	n/r	120	MT20	244/190
TCDL	7.0		Lumber Increase 1.25	BC	0.23	Vert(TL)	-0.10	10-11	n/r	90		
BCLL	10.0	*	Rep Stress Incr NO	WB	0.42	Horz(TL)	0.01	12	n/a	n/a		
BCDL	5.0		Code FBC2004/TPI2002	(Matrix)							Weight: 231 lb	

LUMBER
TOP CHORD 2 X 6 SYP No.1D *Except*
T1 2 X 4 SYP No.2, T1 2 X 4 SYP No.2
BOT CHORD 2 X 8 SYP No.1D
WEBS 2 X 4 SYP No.3 *Except*
W1 2 X 6 SYP No.1D, W1 2 X 6 SYP No.1D
OTHERS 2 X 4 SYP No.3

BRACING
TOP CHORD Structural wood sheathing directly applied or 6-0-0 oc purlins, except end verticals.
BOT CHORD Rigid ceiling directly applied or 10-0-0 oc bracing.

REACTIONS (lb/size) 18=1706/24-0-0, 16=306/24-0-0, 14=306/24-0-0, 12=1706/24-0-0, 13=-165/24-0-0, 17=-165/24-0-0
Max Horz 18=-435(load case 4)
Max Uplift 18=-346(load case 7), 16=-239(load case 5), 14=-232(load case 4), 12=-351(load case 5), 13=-313(load case 2), 17=-313(load case 2)
Max Grav 18=1706(load case 1), 16=603(load case 2), 14=603(load case 2), 12=1706(load case 1)

FORCES (lb) - Maximum Compression/Maximum Tension
TOP CHORD 1-2=-21/127, 2-3=-1090/322, 3-4=-866/287, 4-5=-1215/497, 5-6=-235/52, 6-7=-235/61, 7-8=-1215/497, 8-9=-866/287, 9-10=-1090/322, 10-11=-21/127, 2-18=-1606/552, 10-12=-1606/552
BOT CHORD 17-18=-356/385, 16-17=-356/385, 15-16=-228/839, 14-15=-228/839, 13-14=-46/89, 12-13=-46/89
WEBS 5-19=-732/501, 7-19=-732/501, 4-16=-773/329, 8-14=-773/329, 2-16=-182/1014, 6-19=-14/66, 10-14=-228/1014

JOINT STRESS INDEX
2 = 0.70, 3 = 0.00, 3 = 0.00, 3 = 0.64, 4 = 0.23, 5 = 0.41, 6 = 0.20, 7 = 0.27, 8 = 0.23, 9 = 0.00, 9 = 0.64, 9 = 0.00, 10 = 0.70, 12 = 0.45, 13 = 0.23, 14 = 0.22, 15 = 0.13, 16 = 0.22, 17 = 0.23, 18 = 0.45, 19 = 0.34, 20 = 0.51, 21 = 0.64, 22 = 0.34, 23 = 0.34, 24 = 0.64, 25 = 0.51, 26 = 0.34 and 27 = 0.34

NOTES (11)
1) Unbalanced roof live loads have been considered for this design.
2) Wind: ASCE 7-02; 110mph (3-second gust); h=22ft; TCDL=4.2psf; BCDL=3.0psf; Category II; Exp B; enclosed; MWFRS gable end zone and C-C Exterior(2) zone; end vertical left and right exposed; Lumber DOL=1.60 plate grip DOL=1.60. This truss is designed for C-C for members and forces, and for MWFRS for reactions specified.
3) Truss designed for wind loads in the plane of the truss only. For studs exposed to wind (normal to the face), see MiTek "Standard Gable End Detail"
4) *This truss has been designed for a 10.0 psf bottom chord live load nonconcurrent with any other live loads.
5) Gable requires continuous bottom chord bearing.
6) Gable studs spaced at 2-0-0 oc.
7) Ceiling dead load (5.0 psf) on member(s). 4-5, 7-8, 5-19, 7-19; Wall dead load (5.0psf) on member(s).4-16, 8-14
8) All bearings are assumed to be SYP No.2 crushing capacity of 565.00 psi
9) Provide mechanical connection (by others) of truss to bearing plate capable of withstanding 346 lb uplift at joint 18, 239 lb uplift at joint 16, 232 lb uplift at joint 14, 351 lb uplift at joint 12, 313 lb uplift at joint 13 and 313 lb uplift at joint 17.
10) In the LOAD CASE(S) section, loads applied to the face of the truss are noted as front (F) or back (B).
11) Truss Design Engineer: Julius Lee, PE: Florida P.E. License No. 34869: Address: 1109 Coastal Bay Blvd. Boynton Beach, FL 33435

LOAD CASE(S) Standard
1) Regular: Lumber Increase=1.25, Plate Increase=1.25
Uniform Loads (plf)
Vert: 12-18=-10, 1-2=-114(F=-60), 2-4=-114(F=-60), 4-5=-124(F=-60), 5-6=-114(F=-60), 6-7=-114(F=-60), 7-8=-124(F=-60), 8-10=-114(F=-60), 10-11=-114(F=-60), 5-7=-10
Drag: 4-16=-10, 8-14=-10

Job	Truss	Truss Type	Qty	Ply	CURTIS RES.
L284512	T02	ATTIC	8	1	L284512007 Job Reference (optional)

Builders FirstSource, Lake City, Fl 32055 — 6.300 s Apr 19 2006 MiTek Industries, Inc. Mon Aug 04 08:32:33 2008 Page 1

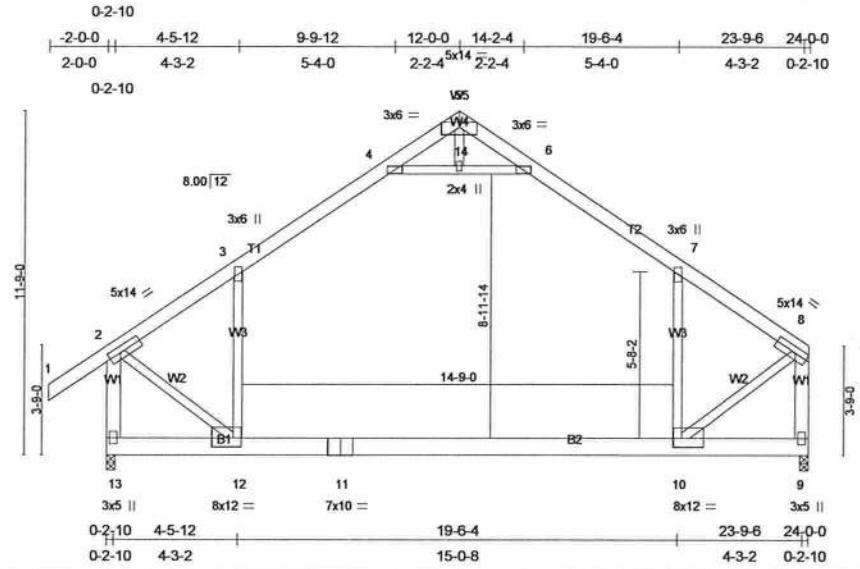

Plate Offsets (X,Y): [2:0-4-15,0-2-8], [10:0-3-4,0-3-11], [12:0-3-4,0-3-11]

LOADING (psf)			SPACING	2-0-0	CSI		DEFL	in	(loc)	l/defl	L/d	PLATES	GRIP
TCLL	20.0		Plates Increase	1.25	TC	0.91	Vert(LL)	-0.62	10-12	>453	360	MT20	244/190
TCDL	7.0		Lumber Increase	1.25	BC	0.75	Vert(TL)	-0.99	10-12	>285	240		
BCLL	10.0	*	Rep Stress Incr	YES	WB	0.98	Horz(TL)	0.01	9	n/a	n/a		
BCDL	5.0		Code FBC2004/TPI2002		(Matrix)							Weight: 202 lb	

LUMBER
TOP CHORD 2 X 6 SYP No.1D
BOT CHORD 2 X 8 SYP No.1D
WEBS 2 X 4 SYP No.3 *Except*
W1 2 X 6 SYP No.1D, W1 2 X 6 SYP No.1D

BRACING
TOP CHORD Structural wood sheathing directly applied or 2-2-0 oc purlins, except end verticals.
BOT CHORD Rigid ceiling directly applied or 5-7-0 oc bracing.

REACTIONS (lb/size) 13=1768/0-3-8, 9=1637/0-3-8
Max Horz 13=380(load case 5)
Max Uplift13=-38(load case 6)

FORCES (lb) - Maximum Compression/Maximum Tension
TOP CHORD 1-2=0/67, 2-3=-1577/142, 3-4=-1188/293, 4-5=0/616, 5-6=0/624, 6-7=-1187/295, 7-8=-1573/127, 2-13=-2123/210, 8-9=-1966/91
BOT CHORD 12-13=-372/363, 11-12=-2/1107, 10-11=-2/1107, 9-10=-4/120
WEBS 4-14=-1798/331, 6-14=-1798/331, 3-12=0/622, 7-10=0/621, 2-12=-16/1331, 5-14=0/115, 8-10=-42/1281

JOINT STRESS INDEX
2 = 0.96, 3 = 0.25, 4 = 0.60, 5 = 0.40, 6 = 0.60, 7 = 0.25, 8 = 0.66, 9 = 0.66, 10 = 0.23, 11 = 0.55, 12 = 0.23, 13 = 0.66 and 14 = 0.34

NOTES (8)
1) Unbalanced roof live loads have been considered for this design.
2) Wind: ASCE 7-02; 110mph (3-second gust); h=22ft; TCDL=4.2psf; BCDL=3.0psf; Category II; Exp B; enclosed; MWFRS and C-C Exterior(2) zone; end vertical left and right exposed; Lumber DOL=1.60 plate grip DOL=1.60. This truss is designed for C-C for members and forces, and for MWFRS for reactions specified.
3) *This truss has been designed for a 10.0 psf bottom chord live load nonconcurrent with any other live loads.
4) Ceiling dead load (5.0 psf) on member(s). 3-4, 6-7, 4-14, 6-14; Wall dead load (5.0psf) on member(s).3-12, 7-10
5) Bottom chord live load (40.0 psf) and additional bottom chord dead load (10.0 psf) applied only to room. 10-12
6) All bearings are assumed to be SYP No.2 crushing capacity of 565.00 psi
7) Provide mechanical connection (by others) of truss to bearing plate capable of withstanding 38 lb uplift at joint 13.
8) Truss Design Engineer: Julius Lee, PE: Florida P.E. License No. 34869: Address: 1109 Coastal Bay Blvd. Boynton Beach, FL 33435

LOAD CASE(S) Standard

Job	Truss	Truss Type	Qty	Ply	CURTIS RES.
L284512	T03	SPECIAL	9	1	L284512008 Job Reference (optional)

Builders FirstSource, Lake City, Fl 32055

6.300 s Apr 19 2006 MiTek Industries, Inc. Mon Aug 04 08:32:34 2008 Page 1

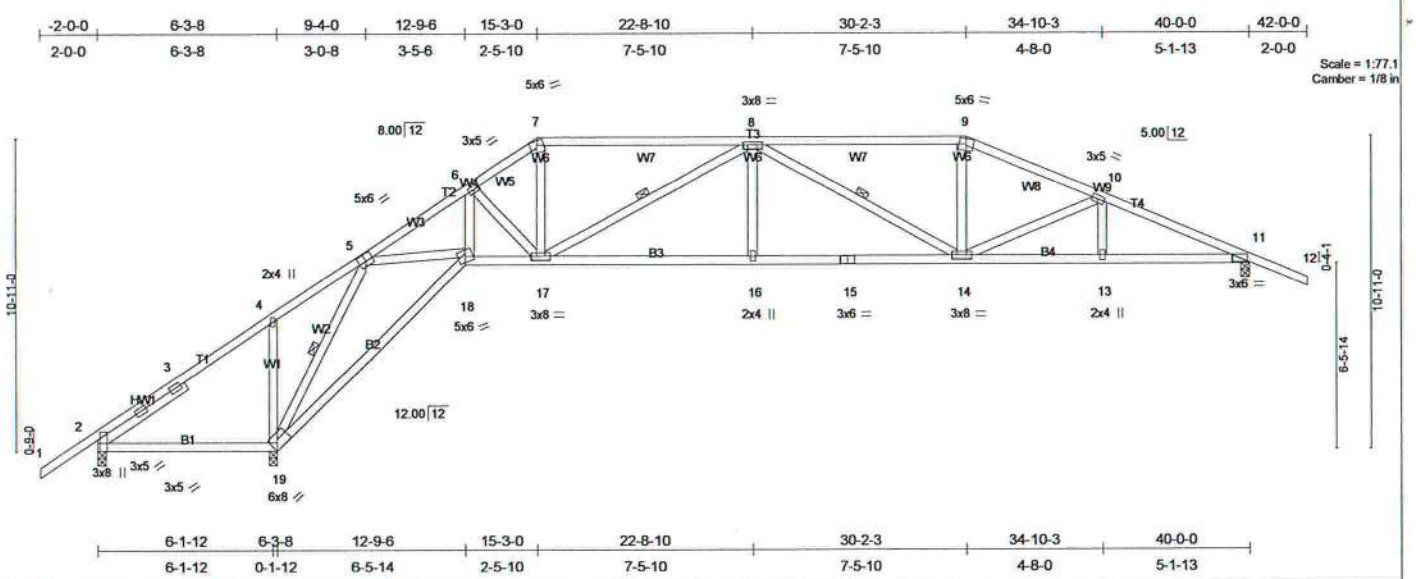

Plate Offsets (X,Y): [2:0-4-13,Edge], [5:0-3-0,0-3-0], [19:0-2-8,Edge]

LOADING (psf)		SPACING 2-0-0	CSI	DEFL in (loc) l/defl L/d	PLATES GRIP
TCLL 20.0		Plates Increase 1.25	TC 0.64	Vert(LL) 0.15 14-16 >999 360	MT20 244/190
TCDL 7.0		Lumber Increase 1.25	BC 0.39	Vert(TL) -0.26 14-16 >999 240	
BCLL 10.0	*	Rep Stress Incr YES	WB 0.37	Horz(TL) 0.17 11 n/a n/a	
BCDL 5.0		Code FBC2004/TPI2002	(Matrix)		Weight: 223 lb

LUMBER
TOP CHORD 2 X 4 SYP No.2
BOT CHORD 2 X 4 SYP No.2
WEBS 2 X 4 SYP No.3
SLIDER Left 2 X 4 SYP No.3 3-8-0

BRACING
TOP CHORD Structural wood sheathing directly applied or 4-5-3 oc purlins, except 2-0-0 oc purlins (4-10-9 max.): 7-9.
BOT CHORD Rigid ceiling directly applied or 5-9-15 oc bracing.
WEBS 1 Row at midpt 5-19, 8-17, 8-14

REACTIONS (lb/size) 2=-510/0-3-8, 19=2248/0-3-8, 11=1037/0-3-8
Max Horz 2=292(load case 6)
Max Uplift2=-598(load case 11), 19=-533(load case 6), 11=-275(load case 7)
Max Grav 2=57(load case 5), 19=2248(load case 1), 11=1037(load case 1)

FORCES (lb) - Maximum Compression/Maximum Tension
TOP CHORD 1-2=0/45, 2-3=-642/1324, 3-4=-626/1421, 4-5=-420/1305, 5-6=-733/448, 6-7=-988/621, 7-8=-837/569, 8-9=-1460/876, 9-10=-1610/893, 10-11=-1925/986, 11-12=0/40
BOT CHORD 2-19=-1068/414, 18-19=-784/274, 17-18=-228/600, 16-17=-671/1588, 15-16=-671/1588, 14-15=-671/1588, 13-14=-769/1711, 11-13=-769/1711
WEBS 4-19=-397/362, 5-19=-1343/610, 5-18=-389/1089, 6-18=-527/243, 6-17=-250/461, 7-17=-137/282, 8-17=-912/433, 8-16=0/233, 8-14=-295/82, 9-14=-89/324, 10-14=-288/188, 10-13=0/134

JOINT STRESS INDEX
2 = 0.90, 2 = 0.26, 2 = 0.26, 3 = 0.00, 4 = 0.34, 5 = 0.61, 6 = 0.51, 7 = 0.54, 8 = 0.57, 9 = 0.63, 10 = 0.47, 11 = 0.77, 13 = 0.34, 14 = 0.57, 15 = 0.58, 16 = 0.34, 17 = 0.57, 18 = 0.39 and 19 = 0.86

NOTES (8)
1) Unbalanced roof live loads have been considered for this design.
2) Wind: ASCE 7-02; 110mph (3-second gust); h=22ft; TCDL=4.2psf; BCDL=3.0psf; Category II; Exp B; enclosed; MWFRS and C-C Exterior(2) zone; porch left exposed; Lumber DOL=1.60 plate grip DOL=1.60. This truss is designed for C-C for members and forces, and for MWFRS for reactions specified.
3) Provide adequate drainage to prevent water ponding.
4) *This truss has been designed for a 10.0 psf bottom chord live load nonconcurrent with any other live loads.
5) All bearings are assumed to be SYP No.2 crushing capacity of 565.00 psi
6) Provide mechanical connection (by others) of truss to bearing plate capable of withstanding 598 lb uplift at joint 2, 533 lb uplift at joint 19 and 275 lb uplift at joint 11.
7) Design assumes 4x2 (flat orientation) purlins at oc spacing indicated, fastened to truss TC w/ 2-10d nails.
8) Truss Design Engineer: Julius Lee, PE: Florida P.E. License No. 34869: Address: 1109 Coastal Bay Blvd. Boynton Beach, FL 33435

LOAD CASE(S) Standard

Job	Truss	Truss Type	Qty	Ply	CURTIS RES.
L284512	T03G	GABLE	1	1	L284512009 Job Reference (optional)

Builders FirstSource, Lake City, Fl 32055

6.300 s Apr 19 2006 MiTek Industries, Inc. Mon Aug 04 08:32:37 2008 Page 1

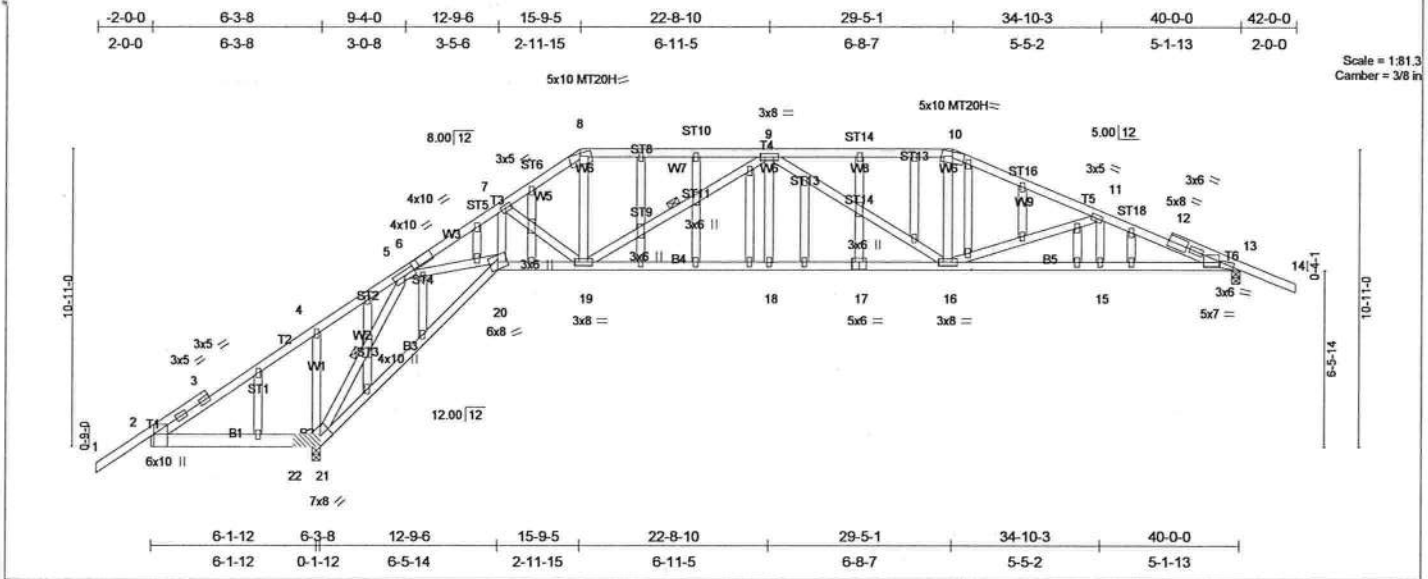

Plate Offsets (X,Y): [2:0-5-8,Edge], [6:0-2-10,Edge], [13:0-9-1,0-1-8], [13:0-3-1,0-0-9], [17:0-3-0,0-3-4], [21:0-3-8,Edge]

LOADING (psf)			SPACING 2-0-0	CSI		DEFL	in	(loc)	l/defl	L/d	PLATES	GRIP
TCLL	20.0		Plates Increase 1.25	TC	0.95	Vert(LL)	0.59	18	>688	360	MT20	244/190
TCDL	7.0		Lumber Increase 1.25	BC	0.78	Vert(TL)	-0.69	18-19	>582	240	MT20H	187/143
BCLL	10.0	*	Rep Stress Incr NO	WB	0.95	Horz(TL)	0.71	13	n/a	n/a		
BCDL	5.0		Code FBC2004/TPI2002	(Matrix)							Weight: 289 lb	

LUMBER

TOP CHORD 2 X 4 SYP No.2 *Except*
T5 2 X 4 SYP No.1D, T2 2 X 4 SYP No.1D
BOT CHORD 2 X 4 SYP No.2 *Except*
B1 2 X 6 SYP No.1D, B5 2 X 4 SYP No.1D
WEBS 2 X 4 SYP No.3
OTHERS 2 X 4 SYP No.3

BRACING

TOP CHORD Structural wood sheathing directly applied or 2-2-14 oc purlins, except 2-0-0 oc purlins (2-9-14 max.): 8-10.
BOT CHORD Rigid ceiling directly applied or 3-6-3 oc bracing.
WEBS 1 Row at midpt 5-21, 9-19

REACTIONS (lb/size) 13=2211/0-3-8, 21=3204/0-3-12 (0-3-8 + bearing block)
Max Horz 21=396(load case 6)
Max Uplift13=-1305(load case 4), 21=-1943(load case 6)

FORCES (lb) - Maximum Compression/Maximum Tension

TOP CHORD 1-2=-57/101, 2-3=-1135/880, 3-4=-1330/1230, 4-5=-1113/1134, 5-6=-4411/3190, 6-7=-4291/3124, 7-8=-3346/2663, 8-9=-2816/2290, 9-10=-3373/2887, 10-11=-3741/3108, 11-12=-4723/3910, 12-13=-4811/3958, 13-14=-48/85
BOT CHORD 2-22=-874/1183, 21-22=-875/1184, 20-21=-605/1067, 19-20=-2435/3515, 18-19=-2906/3794, 17-18=-2906/3794, 16-17=-2906/3794, 15-16=-3548/4423, 13-15=-3548/4423
WEBS 4-21=-568/630, 5-21=-3464/2780, 5-20=-2199/2950, 7-20=-475/950, 7-19=-922/561, 8-19=-858/1197, 9-19=-1172/1044, 9-18=0/203, 9-16=-632/349, 10-16=-486/705, 11-16=-1133/1005, 11-15=0/156

JOINT STRESS INDEX

2 = 0.70, 3 = 0.00, 3 = 0.73, 3 = 0.73, 4 = 0.34, 5 = 0.97, 6 = 0.94, 7 = 0.86, 8 = 0.89, 9 = 0.78, 10 = 0.85, 11 = 0.47, 12 = 0.00, 12 = 0.99, 12 = 0.84, 13 = 0.94, 13 = 0.95, 15 = 0.34, 16 = 0.72, 17 = 0.82, 18 = 0.34, 19 = 0.78, 20 = 0.80, 21 = 0.95, 21 = 0.00, 22 = 0.00, 22 = 0.00, 23 = 0.60, 24 = 0.34, 25 = 0.34, 26 = 0.34, 27 = 0.34, 28 = 0.34, 29 = 0.34, 30 = 0.34, 31 = 0.34, 32 = 0.34, 33 = 0.34, 34 = 0.34, 35 = 0.34, 36 = 0.34, 37 = 0.61, 38 = 0.34, 39 = 0.34, 40 = 0.34, 41 = 0.34, 42 = 0.34, 43 = 0.34, 44 = 0.30, 45 = 0.34, 46 = 0.34, 47 = 0.34, 48 = 0.34, 49 = 0.34, 50 = 0.34, 51 = 0.69, 52 = 0.34, 53 = 0.34, 54 = 0.60, 55 = 0.34 and 56 = 0.34

NOTES (15)

1) 2 X 6 SYP No.1D bearing block 12" long at jt. 21 attached to front face with 3 rows of 10d (0.131"x3") nails spaced 3" o.c. 12 Total fasteners. Bearing is assumed to be SYP.
2) Unbalanced roof live loads have been considered for this design.
3) Wind: ASCE 7-02; 110mph (3-second gust); h=22ft; TCDL=4.2psf; BCDL=3.0psf; Category II; Exp B; enclosed; MWFRS gable end zone and C-C Exterior(2) zone; cantilever left exposed ; Lumber DOL=1.60 plate grip DOL=1.60. This truss is designed for C-C for members and forces, and for MWFRS for reactions specified.
4) Truss designed for wind loads in the plane of the truss only. For studs exposed to wind (normal to the face), see MiTek "Standard Gable End Detail"
5) Provide adequate drainage to prevent water ponding.
6) *This truss has been designed for a 10.0 psf bottom chord live load nonconcurrent with any other live loads.
7) All plates are MT20 plates unless otherwise indicated.
8) All plates are 2x4 MT20 unless otherwise indicated.
9) The following joint(s) require plate inspection per the Tooth Count Method when this truss is chosen for quality assurance inspection: 8.
10) Gable studs spaced at 2-0-0 oc.
11) All bearings are assumed to be SYP No.2 crushing capacity of 565.00 psi
12) Provide mechanical connection (by others) of truss to bearing plate capable of withstanding 1305 lb uplift at joint 13 and 1943 lb uplift at joint 21.
13) Design assumes 4x2 (flat orientation) purlins at oc spacing indicated, fastened to truss TC w/ 2-10d nails.
14) In the LOAD CASE(S) section, loads applied to the face of the truss are noted as front (F) or back (B).
15) Truss Design Engineer: Julius Lee, PE: Florida P.E. License No. 34869: Address: 1109 Coastal Bay Blvd. Boynton Beach, FL 33435

LOAD CASE(S) Standard

1) Regular: Lumber Increase=1.25, Plate Increase=1.25
Uniform Loads (plf)
Vert: 1-8=-114(F=-60), 8-10=-114(F=-60), 10-14=-114(F=-60), 2-21=-10, 20-21=-10, 13-20=-10

Job	Truss	Truss Type	Qty	Ply	CURTIS RES.
L284512	T04	DUAL PITCH	9	1	L284512010 Job Reference (optional)

Builders FirstSource, Lake City, Fl 32055

6.300 s Apr 19 2006 MiTek Industries, Inc. Mon Aug 04 08:32:38 2008 Page 1

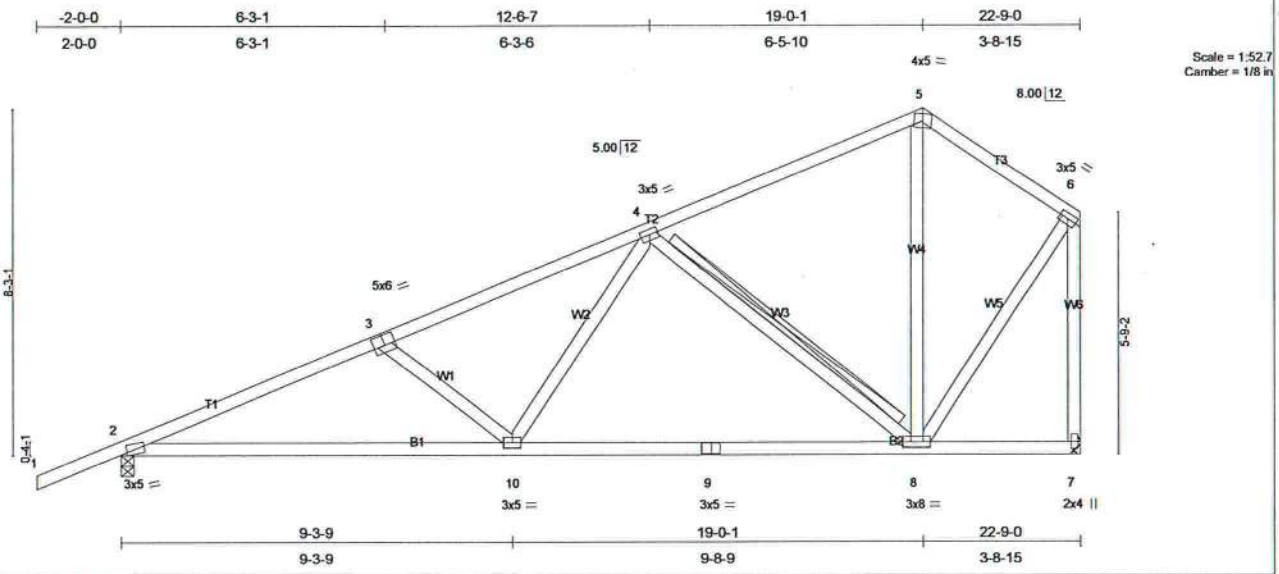

Plate Offsets (X,Y): [3:0-3-0,0-3-0]

LOADING (psf)		SPACING 2-0-0	CSI	DEFL in (loc) l/defl L/d	PLATES GRIP
TCLL 20.0		Plates Increase 1.25	TC 0.46	Vert(LL) -0.13 8-10 >999 360	MT20 244/190
TCDL 7.0		Lumber Increase 1.25	BC 0.48	Vert(TL) -0.26 8-10 >999 240	
BCLL 10.0	*	Rep Stress Incr YES	WB 0.25	Horz(TL) 0.03 7 n/a n/a	
BCDL 5.0		Code FBC2004/TPI2002	(Matrix)		Weight: 130 lb

LUMBER
TOP CHORD 2 X 4 SYP No.2
BOT CHORD 2 X 4 SYP No.2
WEBS 2 X 4 SYP No.3

BRACING
TOP CHORD Structural wood sheathing directly applied or 5-1-5 oc purlins, except end verticals.
BOT CHORD Rigid ceiling directly applied or 6-0-0 oc bracing.
WEBS T-Brace: 2 X 4 SYP No.3 - 4-8
Fasten T and I braces to narrow edge of web with 10d Common wire nails, 9in o.c. ,with 4in minimum end distance.
Brace must cover 90% of web length.

REACTIONS (lb/size) 2=840/0-3-8, 7=713/Mechanical
Max Horz 2=247(load case 6)
Max Uplift2=-260(load case 6), 7=-185(load case 6)

FORCES (lb) - Maximum Compression/Maximum Tension
TOP CHORD 1-2=0/40, 2-3=-1402/668, 3-4=-1122/552, 4-5=-399/234, 5-6=-398/253, 6-7=-708/417
BOT CHORD 2-10=-833/1231, 9-10=-521/780, 8-9=-521/780, 7-8=-5/6
WEBS 3-10=-334/303, 4-10=-154/437, 4-8=-623/460, 5-8=-3/156, 6-8=-292/537

JOINT STRESS INDEX
2 = 0.75, 3 = 0.47, 4 = 0.47, 5 = 0.74, 6 = 0.51, 7 = 0.34, 8 = 0.59, 9 = 0.64 and 10 = 0.43

NOTES (6-7)
1) Unbalanced roof live loads have been considered for this design.
2) Wind: ASCE 7-02; 110mph (3-second gust); h=22ft; TCDL=4.2psf; BCDL=3.0psf; Category II; Exp B; enclosed; MWFRS and C-C Exterior(2) zone; Lumber DOL=1.60 plate grip DOL=1.60. This truss is designed for C-C for members and forces, and for MWFRS for reactions specified.
3) *This truss has been designed for a 10.0 psf bottom chord live load nonconcurrent with any other live loads.
4) All bearings are assumed to be SYP No.2 crushing capacity of 565.00 psi
5) Provide mechanical connection (by others) of truss to bearing plate capable of withstanding 260 lb uplift at joint 2 and 185 lb uplift at joint 7.
6) Truss Design Engineer: Julius Lee, PE: Florida P.E. License No. 34869: Address: 1109 Coastal Bay Blvd. Boynton Beach, FL 33435
7) Use Simpson HTU26 to attach Truss to Carrying member

LOAD CASE(S) Standard

Job	Truss	Truss Type	Qty	Ply	CURTIS RES.
L284512	T05	SPECIAL	1	1	L284512011 Job Reference (optional)

Builders FirstSource, Lake City, Fl 32055 — 6.300 s Apr 19 2006 MiTek Industries, Inc. Mon Aug 04 08:32:39 2008 Page 1

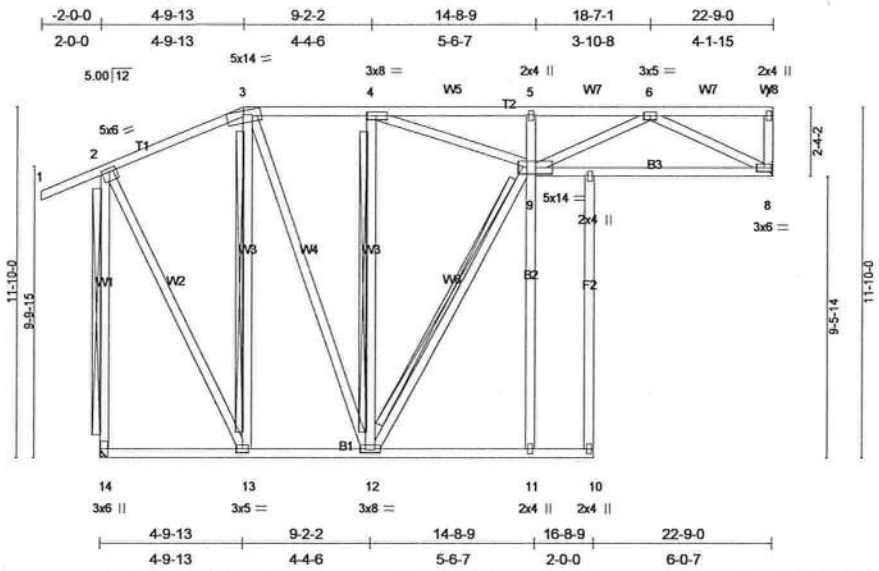

Plate Offsets (X,Y): [2:0-3-0,0-1-8], [4:0-3-8,0-1-8]

LOADING (psf)			SPACING 2-0-0	CSI		DEFL	in	(loc)	l/defl	L/d	PLATES	GRIP
TCLL	20.0		Plates Increase 1.25	TC	0.64	Vert(LL)	0.20	10	>999	360	MT20	244/190
TCDL	7.0		Lumber Increase 1.25	BC	0.45	Vert(TL)	-0.24	10	>999	240		
BCLL	10.0	*	Rep Stress Incr YES	WB	0.69	Horz(TL)	0.15	8	n/a	n/a		
BCDL	5.0		Code FBC2004/TPI2002	(Matrix)							Weight: 225 lb	

LUMBER
TOP CHORD 2 X 4 SYP No.2
BOT CHORD 2 X 4 SYP No.2 *Except*
B2 2 X 4 SYP No.3
WEBS 2 X 4 SYP No.3

BRACING
TOP CHORD Structural wood sheathing directly applied or 6-0-0 oc purlins, except end verticals, and 2-0-0 oc purlins (4-5-7 max.): 3-7.
BOT CHORD Rigid ceiling directly applied or 6-7-5 oc bracing.
WEBS T-Brace: 2 X 4 SYP No.3 - 3-13, 4-12, 9-12, 2-14
Fasten T and I braces to narrow edge of web with 10d Common wire nails, 9in o.c. ,with 4in minimum end distance.
Brace must cover 90% of web length.
JOINTS 1 Brace at Jt(s): 7

REACTIONS (lb/size) 8=728/Mechanical, 14=847/Mechanical
Max Horz 14=331(load case 6)
Max Uplift8=-255(load case 5), 14=-226(load case 4)

FORCES (lb) - Maximum Compression/Maximum Tension
TOP CHORD 1-2=0/45, 2-3=-311/368, 3-4=-346/350, 4-5=-1872/1494, 5-6=-1882/1471, 6-7=-97/16, 7-8=-112/77, 2-14=-824/466
BOT CHORD 13-14=-354/3, 12-13=-353/234, 11-12=-5/4, 10-11=0/0, 9-11=0/149, 5-9=-251/172, 8-9=-901/1182
WEBS 3-13=-424/160, 3-12=-84/316, 4-12=-856/656, 9-12=-699/691, 4-9=-1223/1633, 6-9=-640/786, 6-8=-1250/994, 2-13=-117/529

JOINT STRESS INDEX
2 = 0.77, 3 = 0.32, 4 = 0.64, 5 = 0.34, 6 = 0.63, 7 = 0.73, 8 = 0.71, 9 = 0.96, 10 = 0.34, 11 = 0.34, 12 = 0.77, 13 = 0.47, 14 = 0.74 and 15 = 0.34

NOTES (7-8)
1) Wind: ASCE 7-02; 110mph (3-second gust); h=22ft; TCDL=4.2psf; BCDL=3.0psf; Category II; Exp B; enclosed; MWFRS and C-C Exterior(2) zone; end vertical left exposed; Lumber DOL=1.60 plate grip DOL=1.60. This truss is designed for C-C for members and forces, and for MWFRS for reactions specified.
2) Provide adequate drainage to prevent water ponding.
3) *This truss has been designed for a 10.0 psf bottom chord live load nonconcurrent with any other live loads.
4) All bearings are assumed to be SYP No.2 crushing capacity of 565.00 psi
5) Provide mechanical connection (by others) of truss to bearing plate capable of withstanding 255 lb uplift at joint 8 and 226 lb uplift at joint 14.
6) Design assumes 4x2 (flat orientation) purlins at oc spacing indicated, fastened to truss TC w/ 2-10d nails.
7) Truss Design Engineer: Julius Lee, PE: Florida P.E. License No. 34869: Address: 1109 Coastal Bay Blvd. Boynton Beach, FL 33435
8) Use Simpson HTU26 to attach Truss to Carrying member

LOAD CASE(S) Standard

Job	Truss	Truss Type	Qty	Ply	CURTIS RES.
L284512	T06	SPECIAL	2	1	L284512012 Job Reference (optional)

Builders FirstSource, Lake City, Fl 32055

6.300 s Apr 19 2006 MiTek Industries, Inc. Mon Aug 04 08:32:40 2008 Page 1

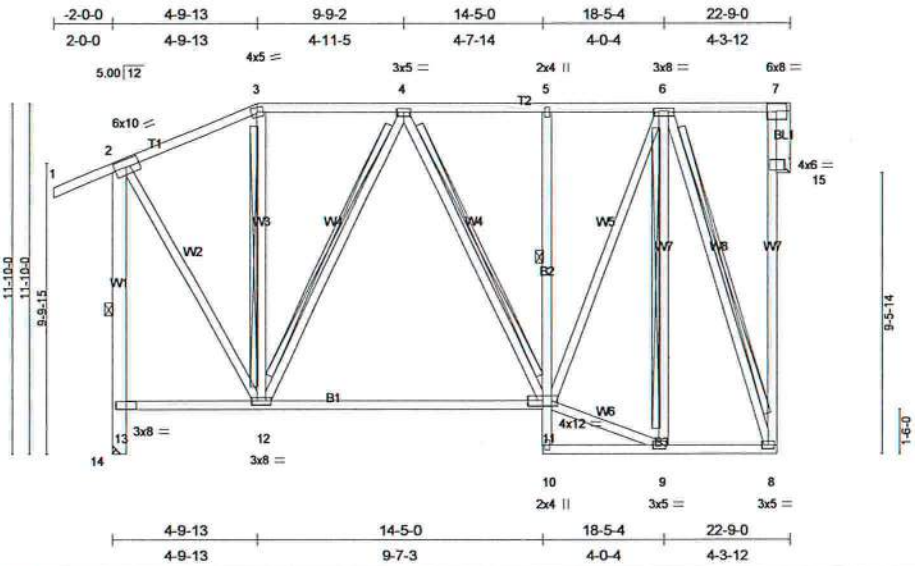

Plate Offsets (X,Y): [2:0-4-11,0-3-0]

LOADING (psf)		SPACING 2-0-0	CSI	DEFL in (loc) l/defl L/d	PLATES GRIP
TCLL 20.0		Plates Increase 1.25	TC 0.60	Vert(LL) -0.14 11-12 >999 360	MT20 244/190
TCDL 7.0		Lumber Increase 1.25	BC 0.60	Vert(TL) -0.26 11-12 >999 240	
BCLL 10.0	*	Rep Stress Incr YES	WB 0.82	Horz(TL) -0.24 15 n/a n/a	
BCDL 5.0		Code FBC2004/TPI2002	(Matrix)		Weight: 247 lb

LUMBER

TOP CHORD 2 X 4 SYP No.2
BOT CHORD 2 X 4 SYP No.2 *Except*
B2 2 X 4 SYP No.3
WEBS 2 X 4 SYP No.3 *Except*
W1 2 X 6 SYP No.1D
OTHERS 2 X 6 SYP No.1D

BRACING

TOP CHORD Structural wood sheathing directly applied or 6-0-0 oc purlins, except end verticals, and 2-0-0 oc purlins (6-0-0 max.): 3-7.
BOT CHORD Rigid ceiling directly applied or 6-0-0 oc bracing. Except:
1 Row at midpt 5-11
WEBS 1 Row at midpt 2-14
T-Brace: 2 X 4 SYP No.3 - 3-12, 4-12, 4-11, 6-8, 6-9
Fasten T and I braces to narrow edge of web with 10d Common wire nails, 9in o.c. ,with 4in minimum end distance.
Brace must cover 90% of web length.
JOINTS 1 Brace at Jt(s): 7

REACTIONS (lb/size) 14=828/Mechanical, 15=703/Mechanical
Max Horz 14=336(load case 6)
Max Uplift14=-229(load case 4), 15=-266(load case 5)

FORCES (lb) - Maximum Compression/Maximum Tension
TOP CHORD 1-2=0/46, 2-3=-336/420, 3-4=-263/409, 4-5=-357/295, 5-6=-354/296, 6-7=-5/3, 8-15=-452/603, 7-15=-100/72, 13-14=-828/380, 2-13=-816/473
BOT CHORD 10-11=0/46, 5-11=-229/162, 9-10=-117/0, 8-9=-149/192, 12-13=-407/0, 11-12=-402/375
WEBS 3-12=-139/78, 4-12=-261/95, 4-11=-42/248, 9-11=-103/268, 6-11=-406/450, 6-8=-611/479, 2-12=-116/530, 6-9=-49/74

JOINT STRESS INDEX
2 = 0.21, 3 = 0.49, 4 = 0.47, 5 = 0.34, 6 = 0.67, 7 = 0.14, 8 = 0.52, 9 = 0.40, 10 = 0.34, 11 = 0.76, 12 = 0.63, 13 = 0.75, 15 = 0.00 and 15 = 0.29

NOTES (7-8)
1) Wind: ASCE 7-02; 110mph (3-second gust); h=22ft; TCDL=4.2psf; BCDL=3.0psf; Category II; Exp B; enclosed; MWFRS and C-C Exterior(2) zone; end vertical left exposed; Lumber DOL=1.60 plate grip DOL=1.60. This truss is designed for C-C for members and forces, and for MWFRS for reactions specified.
2) Provide adequate drainage to prevent water ponding.
3) *This truss has been designed for a 10.0 psf bottom chord live load nonconcurrent with any other live loads.
4) All bearings are assumed to be SYP No.2 crushing capacity of 565.00 psi
5) Provide mechanical connection (by others) of truss to bearing plate capable of withstanding 229 lb uplift at joint 14 and 266 lb uplift at joint 15.
6) Design assumes 4x2 (flat orientation) purlins at oc spacing indicated, fastened to truss TC w/ 2-10d nails.
7) Truss Design Engineer: Julius Lee, PE: Florida P.E. License No. 34869: Address: 1109 Coastal Bay Blvd. Boynton Beach, FL 33435
8) Use Simpson HTU26 to attach Truss to Carrying member

LOAD CASE(S) Standard

Job	Truss	Truss Type	Qty	Ply	CURTIS RES.
L284512	T06G	GABLE	1	1	L284512013 Job Reference (optional)

Builders FirstSource, Lake City, Fl 32055

6.300 s Apr 19 2006 MiTek Industries, Inc. Mon Aug 04 08:32:42 2008 Page 1

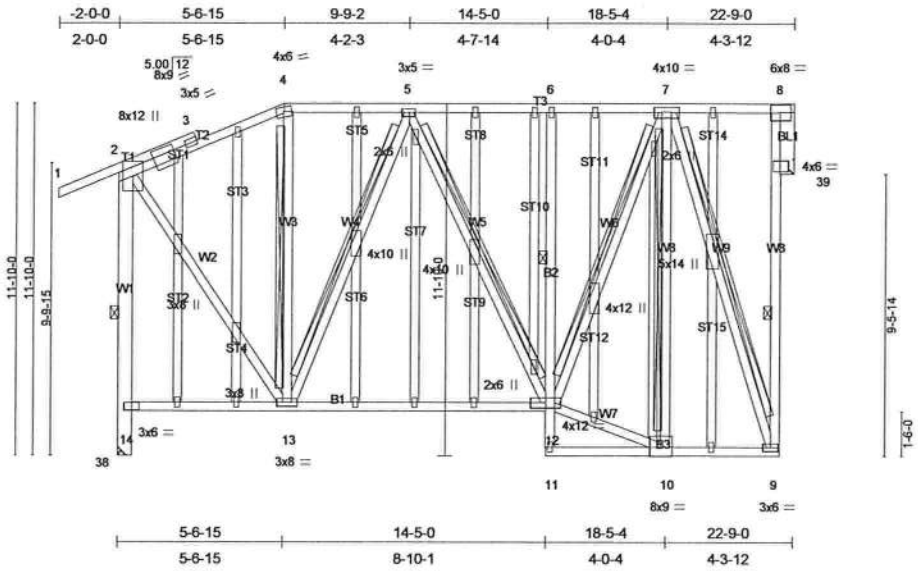

Plate Offsets (X,Y): [16:1-2-12,0-2-8]

LOADING (psf)			SPACING 2-0-0	CSI		DEFL	in	(loc)	l/defl	L/d	PLATES	GRIP
TCLL	20.0		Plates Increase 1.25	TC	0.61	Vert(LL)	-0.12	12-13	>999	360	MT20	244/190
TCDL	7.0		Lumber Increase 1.25	BC	0.51	Vert(TL)	-0.22	12-13	>999	240		
BCLL	10.0	*	Rep Stress Incr NO	WB	0.98	Horz(TL)	-0.24	39	n/a	n/a		
BCDL	5.0		Code FBC2004/TPI2002	(Matrix)							Weight: 378 lb	

LUMBER

TOP CHORD 2 X 4 SYP No.2
BOT CHORD 2 X 4 SYP No.2 *Except*
B2 2 X 4 SYP No.3
WEBS 2 X 4 SYP No.3 *Except*
W1 2 X 6 SYP No.1D
OTHERS 2 X 4 SYP No.3 *Except*
BL1 2 X 6 SYP No.1D

BRACING

TOP CHORD Structural wood sheathing directly applied or 6-0-0 oc purlins, except end verticals, and 2-0-0 oc purlins (6-0-0 max.): 4-8.
BOT CHORD Rigid ceiling directly applied or 6-0-0 oc bracing. Except:
1 Row at midpt 6-12
WEBS 1 Row at midpt 8-9, 2-38
T-Brace: 2 X 4 SYP No.3 - 4-13, 5-13, 5-12, 7-12, 7-9, 7-10
Fasten T and I braces to narrow edge of web with 10d Common wire nails, 9in o.c. ,with 4in minimum end distance.
Brace must cover 90% of web length.
JOINTS 1 Brace at Jt(s): 8

REACTIONS (lb/size) 38=1626/Mechanical, 39=1363/Mechanical
Max Horz 38=369(load case 6)
Max Uplift38=-598(load case 4), 39=-613(load case 5)

FORCES (lb) - Maximum Compression/Maximum Tension
TOP CHORD 1-2=-19/83, 2-3=-716/594, 3-4=-608/580, 4-5=-557/555, 5-6=-686/482, 6-7=-680/480, 7-8=-9/6, 9-39=-761/1151, 8-39=-210/135, 14-38=-1626/842, 2-14=-1600/911
BOT CHORD 11-12=0/50, 6-12=-502/318, 10-11=-84/0, 9-10=-250/370, 13-14=-444/21, 12-13=-597/727
WEBS 4-13=-285/156, 5-13=-457/204, 5-12=-97/269, 10-12=-210/405, 7-12=-639/861, 7-9=-1180/800, 2-13=-343/950, 7-10=-120/118

JOINT STRESS INDEX
2 = 0.57, 3 = 0.00, 3 = 0.00, 3 = 0.69, 4 = 0.79, 5 = 0.49, 6 = 0.34, 7 = 0.68, 8 = 0.17, 9 = 0.84, 10 = 0.34, 11 = 0.34, 12 = 0.76, 13 = 0.99, 14 = 0.79, 15 = 0.66, 16 = 0.52, 17 = 0.34, 18 = 0.66, 19 = 0.34, 20 = 0.34, 21 = 0.39, 22 = 0.34, 23 = 0.34, 24 = 0.34, 25 = 0.23, 26 = 0.34, 27 = 0.34, 28 = 0.32, 29 = 0.23, 30 = 0.34, 31 = 0.34, 32 = 0.34, 33 = 0.31, 34 = 0.23, 35 = 0.34, 36 = 0.34, 37 = 0.21, 39 = 0.00 and 39 = 0.56

NOTES (11-12)
1) Wind: ASCE 7-02; 110mph (3-second gust); h=22ft; TCDL=4.2psf; BCDL=3.0psf; Category II; Exp B; enclosed; MWFRS gable end zone and C-C Exterior(2) zone; end vertical left exposed; Lumber DOL=1.60 plate grip DOL=1.60. This truss is designed for C-C for members and forces, and for MWFRS for reactions specified.
2) Truss designed for wind loads in the plane of the truss only. For studs exposed to wind (normal to the face), see MiTek "Standard Gable End Detail"
3) Provide adequate drainage to prevent water ponding.
4) *This truss has been designed for a 10.0 psf bottom chord live load nonconcurrent with any other live loads.
5) All plates are 2x4 MT20 unless otherwise indicated.
6) Gable studs spaced at 2-0-0 oc.
7) All bearings are assumed to be SYP No.2 crushing capacity of 565.00 psi
8) Provide mechanical connection (by others) of truss to bearing plate capable of withstanding 598 lb uplift at joint 38 and 613 lb uplift at joint 39.
9) Design assumes 4x2 (flat orientation) purlins at oc spacing indicated, fastened to truss TC w/ 2-10d nails.
10) In the LOAD CASE(S) section, loads applied to the face of the truss are noted as front (F) or back (B).
11) Truss Design Engineer: Julius Lee, PE: Florida P.E. License No. 34869: Address: 1109 Coastal Bay Blvd. Boynton Beach, FL 33435Use Simpson HHUC412 to attach Truss to Carrying member
12) Use Simpson HUSC28 to attach Truss to Carrying member

LOAD CASE(S) Standard
1) Regular: Lumber Increase=1.25, Plate Increase=1.25
Uniform Loads (plf)
Vert: 1-2=-114(F=-60), 2-4=-114(F=-60), 4-8=-114(F=-60), 9-11=-10, 12-14=-10

Job	Truss	Truss Type	Qty	Ply	CURTIS RES.
L284512	T07	SPECIAL	1	1	L284512014 Job Reference (optional)

Builders FirstSource, Lake City, Fl 32055

6.300 s Apr 19 2006 MiTek Industries, Inc. Mon Aug 04 08:32:43 2008 Page 1

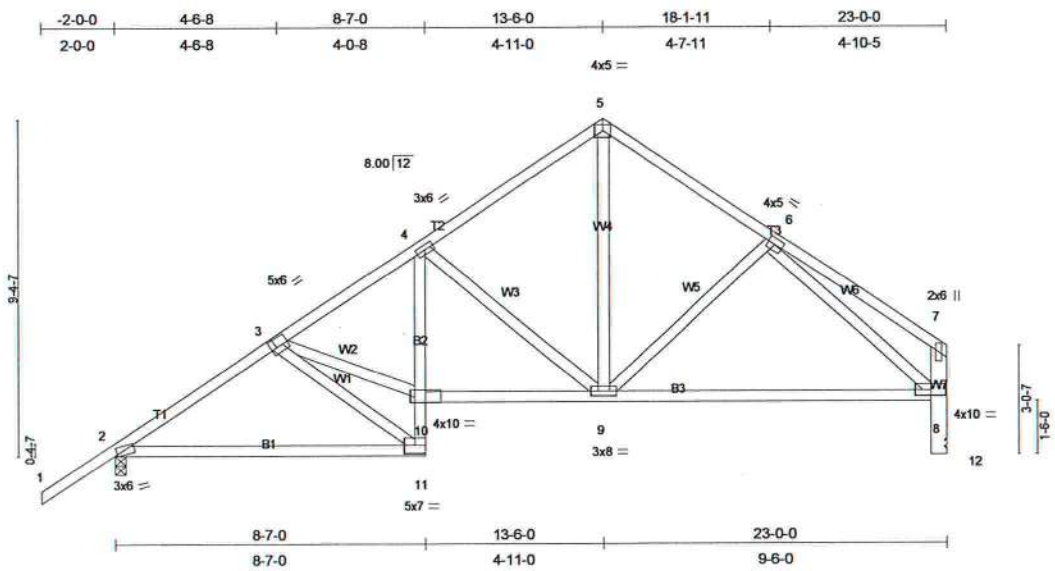

Plate Offsets (X,Y): [2:0-0-13,0-0-6], [3:0-1-12,0-3-0]

LOADING (psf)			SPACING	2-0-0	CSI		DEFL	in	(loc)	l/defl	L/d	PLATES	GRIP
TCLL	20.0		Plates Increase	1.25	TC	0.27	Vert(LL)	-0.11	8-9	>999	360	MT20	244/190
TCDL	7.0		Lumber Increase	1.25	BC	0.72	Vert(TL)	-0.20	8-9	>999	240		
BCLL	10.0	*	Rep Stress Incr	YES	WB	0.44	Horz(TL)	0.06	12	n/a	n/a		
BCDL	5.0		Code FBC2004/TPI2002		(Matrix)							Weight: 145 lb	

LUMBER
TOP CHORD 2 X 4 SYP No.2
BOT CHORD 2 X 4 SYP No.2 *Except*
B2 2 X 4 SYP No.3
WEBS 2 X 4 SYP No.3 *Except*
W7 2 X 6 SYP No.1D

BRACING
TOP CHORD Structural wood sheathing directly applied or 5-10-13 oc purlins, except end verticals.
BOT CHORD Rigid ceiling directly applied or 9-9-4 oc bracing.

REACTIONS (lb/size) 2=845/0-3-8, 12=719/Mechanical
Max Horz 2=272(load case 5)
Max Uplift2=-249(load case 6), 12=-137(load case 7)

FORCES (lb) - Maximum Compression/Maximum Tension
TOP CHORD 1-2=0/59, 2-3=-1064/451, 3-4=-1129/545, 4-5=-724/413, 5-6=-717/416, 6-7=-252/134, 8-12=-719/329, 7-8=-221/149
BOT CHORD 2-11=-405/814, 10-11=-278/580, 4-10=-119/291, 9-10=-394/907, 8-9=-253/602
WEBS 3-11=-893/515, 3-10=-421/845, 4-9=-474/329, 5-9=-268/444, 6-9=-137/154, 6-8=-643/301

JOINT STRESS INDEX
2 = 0.81, 3 = 0.67, 4 = 0.61, 5 = 0.58, 6 = 0.32, 7 = 0.64, 8 = 0.76, 9 = 0.57, 10 = 0.84 and 11 = 0.67

NOTES (6-7)
1) Unbalanced roof live loads have been considered for this design.
2) Wind: ASCE 7-02; 110mph (3-second gust); h=22ft; TCDL=4.2psf; BCDL=3.0psf; Category II; Exp B; enclosed; MWFRS and C-C Exterior(2) zone; Lumber DOL=1.60 plate grip DOL=1.60. This truss is designed for C-C for members and forces, and for MWFRS for reactions specified.
3) *This truss has been designed for a 10.0 psf bottom chord live load nonconcurrent with any other live loads.
4) All bearings are assumed to be SYP No.2 crushing capacity of 565.00 psi
5) Provide mechanical connection (by others) of truss to bearing plate capable of withstanding 249 lb uplift at joint 2 and 137 lb uplift at joint 12.
6) Truss Design Engineer: Julius Lee, PE: Florida P.E. License No. 34869: Address: 1109 Coastal Bay Blvd. Boynton Beach, FL 33435
7) Use Simpson HTU26 to attach Truss to Carrying member

LOAD CASE(S) Standard

Job	Truss	Truss Type	Qty	Ply	CURTIS RES.
L284512	T08	COMMON	1	1	L284512015 Job Reference (optional)

Builders FirstSource, Lake City, Fl 32055 — 6.300 s Apr 19 2006 MiTek Industries, Inc. Mon Aug 04 08:32:44 2008 Page 1

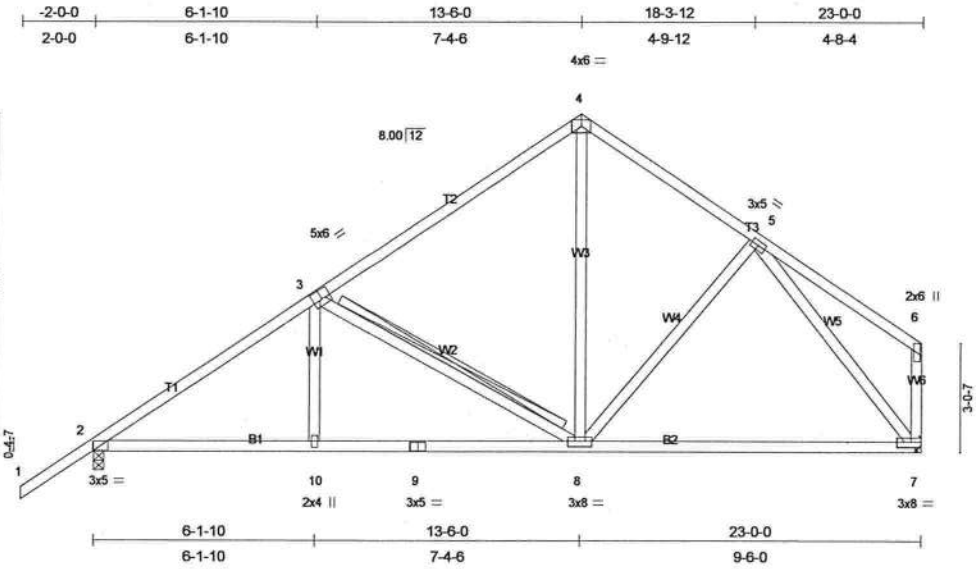

Plate Offsets (X,Y): [2:0-2-9,0-1-8], [3:0-3-0,0-3-0]

LOADING (psf)		SPACING 2-0-0	CSI	DEFL in (loc) l/defl L/d	PLATES	GRIP
TCLL 20.0		Plates Increase 1.25	TC 0.67	Vert(LL) -0.13 7-8 >999 360	MT20	244/190
TCDL 7.0		Lumber Increase 1.25	BC 0.36	Vert(TL) -0.23 7-8 >999 240		
BCLL 10.0	*	Rep Stress Incr YES	WB 0.60	Horz(TL) 0.03 7 n/a n/a		
BCDL 5.0		Code FBC2004/TPI2002	(Matrix)		Weight: 135 lb	

LUMBER
TOP CHORD 2 X 4 SYP No.2
BOT CHORD 2 X 4 SYP No.2
WEBS 2 X 4 SYP No.3

BRACING
TOP CHORD Structural wood sheathing directly applied or 5-9-13 oc purlins, except end verticals.
BOT CHORD Rigid ceiling directly applied or 10-0-0 oc bracing.
WEBS T-Brace: 2 X 4 SYP No.3 - 3-8
Fasten T and I braces to narrow edge of web with 10d Common wire nails, 9in o.c. ,with 4in minimum end distance.
Brace must cover 90% of web length.

REACTIONS (lb/size) 2=848/0-3-8, 7=721/Mechanical
Max Horz 2=272(load case 5)
Max Uplift2=-250(load case 6), 7=-138(load case 7)

FORCES (lb) - Maximum Compression/Maximum Tension
TOP CHORD 1-2=0/59, 2-3=-1069/438, 3-4=-671/366, 4-5=-618/388, 5-6=-134/99, 6-7=-159/124
BOT CHORD 2-10=-385/812, 9-10=-385/812, 8-9=-385/812, 7-8=-190/450
WEBS 3-10=0/198, 3-8=-407/298, 4-8=-170/346, 5-8=-81/159, 5-7=-649/293

JOINT STRESS INDEX
2 = 0.61, 3 = 0.67, 4 = 0.73, 5 = 0.42, 6 = 0.47, 7 = 0.57, 8 = 0.57, 9 = 0.34 and 10 = 0.34

NOTES (6-7)
1) Unbalanced roof live loads have been considered for this design.
2) Wind: ASCE 7-02; 110mph (3-second gust); h=22ft; TCDL=4.2psf; BCDL=3.0psf; Category II; Exp B; enclosed; MWFRS and C-C Exterior(2) zone; Lumber DOL=1.60 plate grip DOL=1.60. This truss is designed for C-C for members and forces, and for MWFRS for reactions specified.
3) *This truss has been designed for a 10.0 psf bottom chord live load nonconcurrent with any other live loads.
4) All bearings are assumed to be SYP No.2 crushing capacity of 565.00 psi
5) Provide mechanical connection (by others) of truss to bearing plate capable of withstanding 250 lb uplift at joint 2 and 138 lb uplift at joint 7.
6) Truss Design Engineer: Julius Lee, PE: Florida P.E. License No. 34869: Address: 1109 Coastal Bay Blvd. Boynton Beach, FL 33435
7) Use Simpson HTU26 to attach Truss to Carrying member

LOAD CASE(S) Standard

Job	Truss	Truss Type	Qty	Ply	CURTIS RES.
L284512	T08G	GABLE	1	1	L284512016 Job Reference (optional)

Builders FirstSource, Lake City, Fl 32055

6.300 s Apr 19 2006 MiTek Industries, Inc. Mon Aug 04 08:32:45 2008 Page 1

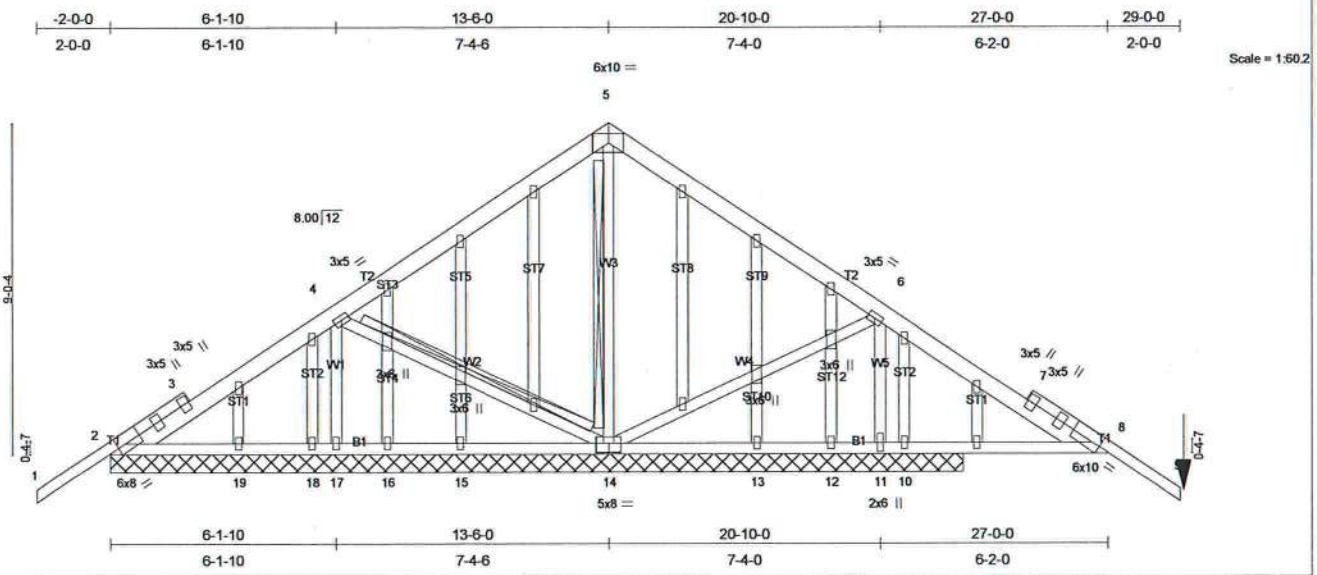

Plate Offsets (X,Y): [2:0-2-9,Edge], [8:0-2-9,Edge], [14:0-4-0,0-3-0]

LOADING (psf)		SPACING 2-0-0	CSI	DEFL in (loc) l/defl L/d	PLATES GRIP
TCLL 20.0		Plates Increase 1.25	TC 0.77	Vert(LL) -0.10 8-9 n/r 120	MT20 244/190
TCDL 7.0		Lumber Increase 1.25	BC 0.35	Vert(TL) -0.17 8-9 n/r 90	
BCLL 10.0	*	Rep Stress Incr NO	WB 0.67	Horz(TL) 0.02 10 n/a n/a	
BCDL 5.0		Code FBC2004/TPI2002	(Matrix)		Weight: 234 lb

LUMBER
TOP CHORD 2 X 6 SYP No.1D *Except*
T1 2 X 4 SYP No.2, T1 2 X 4 SYP No.2
BOT CHORD 2 X 4 SYP No.2
WEBS 2 X 4 SYP No.3
OTHERS 2 X 4 SYP No.3

BRACING
TOP CHORD Structural wood sheathing directly applied or 6-0-0 oc purlins.
BOT CHORD Rigid ceiling directly applied or 5-11-8 oc bracing.
WEBS T-Brace: 2 X 4 SYP No.3 - 4-14, 5-14
Fasten T and I braces to narrow edge of web with 10d Common wire nails, 9in o.c. ,with 4in minimum end distance.
Brace must cover 90% of web length.

REACTIONS (lb/size) 2=510/23-1-8, 17=605/23-1-8, 14=891/23-1-8, 11=1574/23-1-8, 15=33/23-1-8, 16=11/23-1-8, 18=-7/23-1-8, 19=50/23-1-8, 13=32/23-1-8, 12=23/23-1-8, 10=145/23-1-8
Max Horz 2=305(load case 5)
Max Uplift2=-254(load case 6), 17=-308(load case 6), 14=-344(load case 7), 11=-756(load case 7), 18=-7(load case 1), 12=-5(load case 7), 10=-167(load case 7)
Max Grav 2=534(load case 10), 17=670(load case 10), 14=891(load case 1), 11=1574(load case 1), 15=100(load case 2), 16=35(load case 2), 18=16(load case 2), 19=103(load case 2), 13=98(load case 2), 12=51(load case 2), 10=250(load case 2)

FORCES (lb) - Maximum Compression/Maximum Tension
TOP CHORD 1-2=-20/123, 2-3=-197/180, 3-4=-204/289, 4-5=-169/527, 5-6=-168/539, 6-7=-992/1459, 7-8=-940/1137, 8-9=-36/157
BOT CHORD 2-19=-98/234, 18-19=-98/234, 17-18=-98/234, 16-17=-98/234, 15-16=-98/234, 14-15=-98/234, 13-14=-1077/972, 12-13=-1077/972, 11-12=-1077/972, 10-11=-1077/972, 8-10=-1077/972
WEBS 4-17=-650/315, 4-14=-195/295, 5-14=-1184/619, 6-14=-579/938, 6-11=-1682/1109

JOINT STRESS INDEX
2 = 0.82, 3 = 0.00, 3 = 0.69, 3 = 0.69, 4 = 0.51, 5 = 0.86, 6 = 0.78, 7 = 0.00, 7 = 0.48, 7 = 0.48, 8 = 0.48, 10 = 0.34, 11 = 0.54, 12 = 0.34, 13 = 0.34, 14 = 0.53, 15 = 0.34, 16 = 0.34, 17 = 0.34, 18 = 0.34 , 19 = 0.34, 20 = 0.34, 21 = 0.34, 22 = 0.53, 23 = 0.34, 24 = 0.53, 25 = 0.34, 26 = 0.34, 27 = 0.34, 28 = 0.34, 29 = 0.34, 30 = 0.34, 31 = 0.53, 32 = 0.34, 33 = 0.53, 34 = 0.34, 35 = 0.34 and 36 = 0.34

NOTES (12)
1) Unbalanced roof live loads have been considered for this design.
2) Wind: ASCE 7-02; 110mph (3-second gust); h=22ft; TCDL=4.2psf; BCDL=3.0psf; Category II; Exp B; enclosed; MWFRS gable end zone and C-C Exterior(2) zone; cantilever right exposed ; Lumber DOL=1.60 plate grip DOL=1.60. This truss is designed for C-C for members and forces, and for MWFRS for reactions specified.
3) Truss designed for wind loads in the plane of the truss only. For studs exposed to wind (normal to the face), see MiTek "Standard Gable End Detail"
4) *This truss has been designed for a 10.0 psf bottom chord live load nonconcurrent with any other live loads.
5) All plates are 2x4 MT20 unless otherwise indicated.
6) Gable studs spaced at 2-0-0 oc.
7) All bearings are assumed to be SYP No.2 crushing capacity of 565.00 psi
8) Provide mechanical connection (by others) of truss to bearing plate capable of withstanding 254 lb uplift at joint 2, 308 lb uplift at joint 17, 344 lb uplift at joint 14, 756 lb uplift at joint 11, 7 lb uplift at joint 18, 5 lb uplift at joint 12 and 167 lb uplift at joint 10.
9) Non Standard bearing condition. Review required.
10) Hanger(s) or other connection device(s) shall be provided sufficient to support concentrated load(s) 63 lb down and 31 lb up at 29-0-0 on top chord. The design/selection of such connection device(s) is the responsibility of others.
11) In the LOAD CASE(S) section, loads applied to the face of the truss are noted as front (F) or back (B).
12) Truss Design Engineer: Julius Lee, PE: Florida P.E. License No. 34869: Address: 1109 Coastal Bay Blvd. Boynton Beach, FL 33435

LOAD CASE(S) Standard
1) Regular: Lumber Increase=1.25, Plate Increase=1.25
Uniform Loads (plf)
Vert: 1-5=-114(F=-60), 5-9=-114(F=-60), 2-8=-10
Concentrated Loads (lb)
Vert: 9=-63(F)

Job	Truss	Truss Type	Qty	Ply	CURTIS RES.
L284512	T09	SPECIAL	1	2	L284512017 Job Reference (optional)

Builders FirstSource, Lake City, Fl 32055

6.300 s Apr 19 2006 MiTek Industries, Inc. Mon Aug 04 08:32:46 2008 Page 1

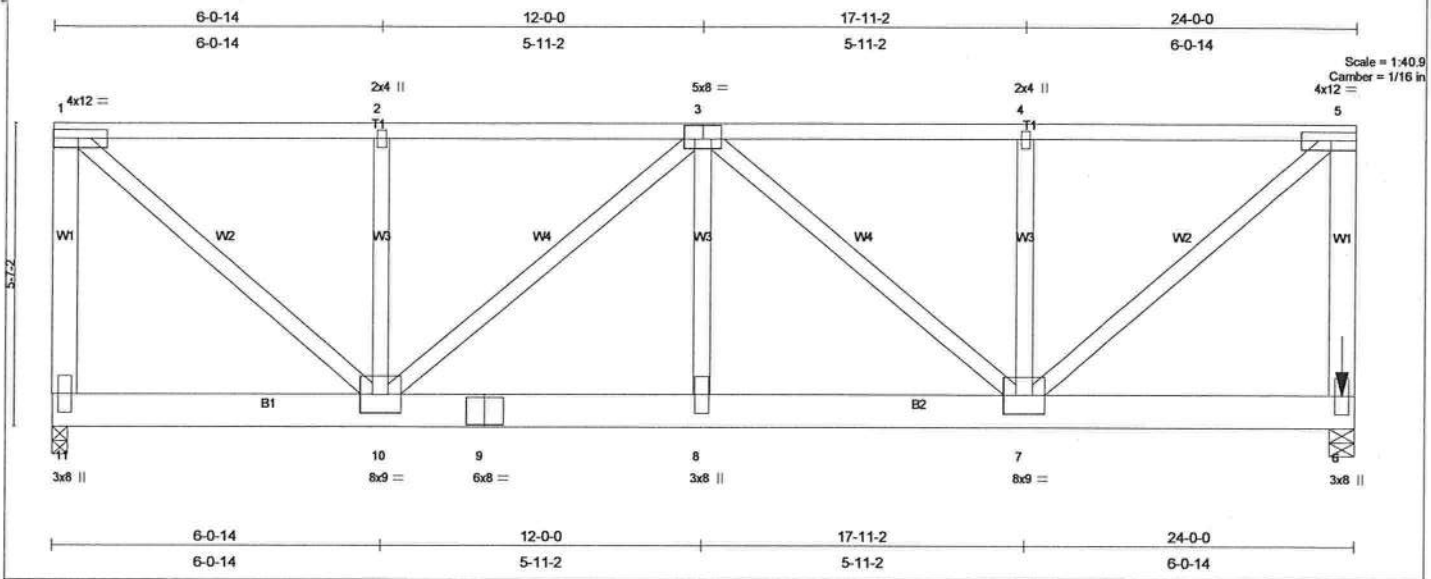

Plate Offsets (X,Y): [3:0-4-0,0-3-0]

LOADING (psf)			SPACING	2-0-0	CSI		DEFL	in	(loc)	l/defl	L/d	PLATES	GRIP
TCLL	20.0		Plates Increase	1.25	TC	0.29	Vert(LL)	-0.09	8-10	>999	360	MT20	244/190
TCDL	7.0		Lumber Increase	1.25	BC	0.36	Vert(TL)	-0.18	7-8	>999	240		
BCLL	10.0	*	Rep Stress Incr	NO	WB	0.85	Horz(TL)	0.02	6	n/a	n/a		
BCDL	5.0		Code FBC2004/TPI2002		(Matrix)							Weight: 392 lb	

LUMBER
TOP CHORD 2 X 4 SYP No.2
BOT CHORD 2 X 8 SYP No.1D
WEBS 2 X 4 SYP No.3 *Except*
W1 2 X 6 SYP No.1D, W1 2 X 6 SYP No.1D

BRACING
TOP CHORD Structural wood sheathing directly applied or 6-0-0 oc purlins, except end verticals.
BOT CHORD Rigid ceiling directly applied or 10-0-0 oc bracing.

REACTIONS (lb/size) 11=4661/0-3-8, 6=6024/0-5-8
Max Horz 11=-120(load case 5)
Max Uplift11=-1302(load case 5), 6=-1674(load case 4)

FORCES (lb) - Maximum Compression/Maximum Tension
TOP CHORD 1-11=-3701/1056, 1-2=-4159/1163, 2-3=-4159/1163, 3-4=-4159/1195, 4-5=-4159/1195, 5-6=-3701/1045
BOT CHORD 10-11=-121/162, 9-10=-1579/5513, 8-9=-1579/5513, 7-8=-1579/5513, 6-7=-89/162
WEBS 1-10=-1484/5326, 2-10=-284/132, 3-10=-1793/519, 3-8=-509/2010, 3-7=-1793/512, 4-7=-284/133, 5-7=-1470/5326

JOINT STRESS INDEX
1 = 0.81, 2 = 0.34, 3 = 0.46, 4 = 0.34, 5 = 0.81, 6 = 0.64, 7 = 0.72, 8 = 0.33, 9 = 0.58, 10 = 0.72 and 11 = 0.64

NOTES (10)
1) 2-ply truss to be connected together with 10d (0.131"x3") nails as follows:
Top chords connected as follows: 2 X 6 - 2 rows at 0-9-0 oc, 2 X 4 - 1 row at 0-9-0 oc.
Bottom chords connected as follows: 2 X 8 - 2 rows at 0-9-0 oc.
Webs connected as follows: 2 X 4 - 1 row at 0-9-0 oc.
2) All loads are considered equally applied to all plies, except if noted as front (F) or back (B) face in the LOAD CASE(S) section. Ply to ply connections have been provided to distribute only loads noted as (F) or (B), unless otherwise indicated.
3) Wind: ASCE 7-02; 110mph (3-second gust); h=22ft; TCDL=4.2psf; BCDL=3.0psf; Category II; Exp B; enclosed; MWFRS; end vertical right exposed; Lumber DOL=1.60 plate grip DOL=1.60.
4) Provide adequate drainage to prevent water ponding.
5) *This truss has been designed for a 10.0 psf bottom chord live load nonconcurrent with any other live loads.
6) All bearings are assumed to be SYP No.2 crushing capacity of 565.00 psi
7) Provide mechanical connection (by others) of truss to bearing plate capable of withstanding 1302 lb uplift at joint 11 and 1674 lb uplift at joint 6.
8) Girder carries tie-in span(s): 22-9-0 from 0-0-0 to 24-0-0
9) Hanger(s) or other connection device(s) shall be provided sufficient to support concentrated load(s) 1363 lb down and 377 lb up at 23-9-4 on bottom chord. The design/selection of such connection device(s) is the responsibility of others.
10) Truss Design Engineer: Julius Lee, PE: Florida P.E. License No. 34869: Address: 1109 Coastal Bay Blvd. Boynton Beach, FL 33435

LOAD CASE(S) Standard
1) Regular: Lumber Increase=1.25, Plate Increase=1.25
Uniform Loads (plf)
Vert: 1-5=-54, 6-11=-342(F=-332)
Concentrated Loads (lb)
Vert: 6=-1363(F)

Job	Truss	Truss Type	Qty	Ply	CURTIS RES.
L284512	T10	SPECIAL	1	2	L284512018 Job Reference (optional)

Builders FirstSource, Lake City, Fl 32055

6.300 s Apr 19 2006 MiTek Industries, Inc. Mon Aug 04 08:32:47 2008 Page 1

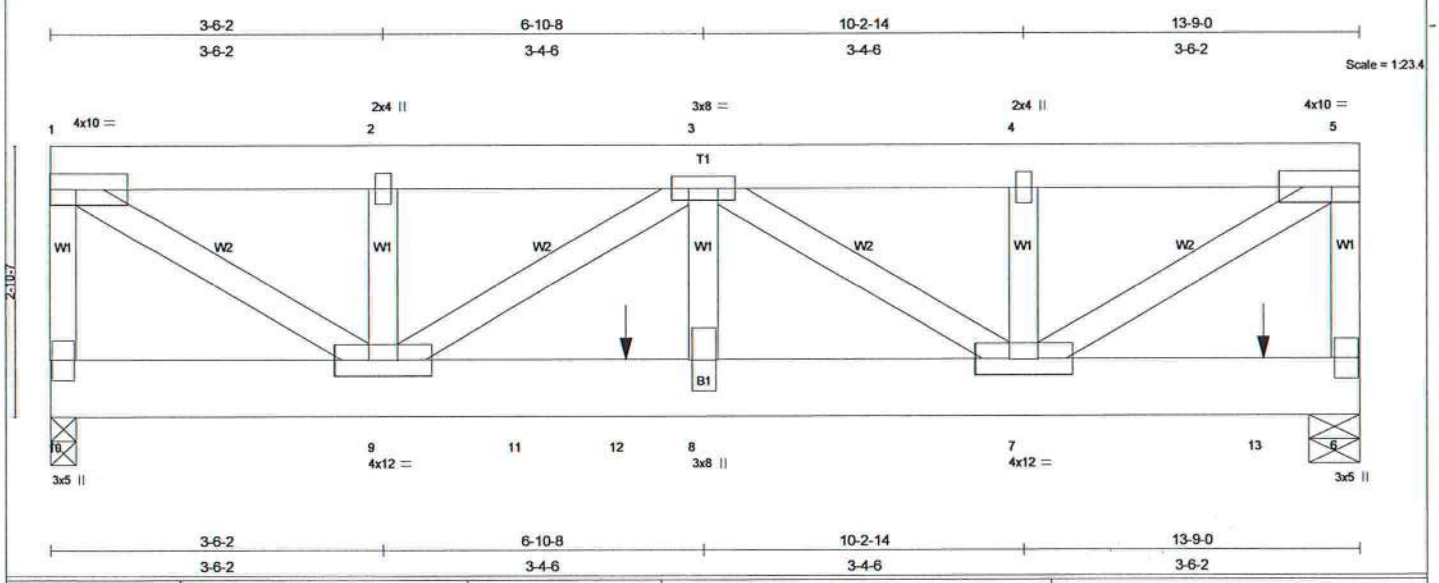

LOADING (psf)			SPACING 2-0-0	CSI		DEFL in (loc) l/defl L/d	PLATES GRIP
TCLL	20.0		Plates Increase 1.25	TC	0.58	Vert(LL) -0.05 8-9 >999 360	MT20 244/190
TCDL	7.0		Lumber Increase 1.25	BC	0.46	Vert(TL) -0.10 8-9 >999 240	
BCLL	10.0	*	Rep Stress Incr NO	WB	0.75	Horz(TL) 0.01 6 n/a n/a	
BCDL	5.0		Code FBC2004/TPI2002	(Matrix)			Weight: 218 lb

LUMBER
TOP CHORD 2 X 6 SYP No.1D
BOT CHORD 2 X 8 SYP No.1D
WEBS 2 X 4 SYP No.3

BRACING
TOP CHORD Structural wood sheathing directly applied or 6-0-0 oc purlins, except end verticals.
BOT CHORD Rigid ceiling directly applied or 10-0-0 oc bracing.

REACTIONS (lb/size) 10=3483/0-3-8, 6=4069/0-6-7
Max Horz 10=-80(load case 3)
Max Uplift10=-970(load case 3), 6=-1132(load case 4)

FORCES (lb) - Maximum Compression/Maximum Tension
TOP CHORD 1-10=-2843/802, 1-2=-3998/1131, 2-3=-3998/1131, 3-4=-3973/1124, 4-5=-3973/1124, 5-6=-2809/793
BOT CHORD 9-10=-106/179, 9-11=-1578/5575, 11-12=-1578/5575, 8-12=-1578/5575, 7-8=-1578/5575, 7-13=-77/214, 6-13=-77/214
WEBS 1-9=-1295/4652, 2-9=-69/53, 3-9=-1922/548, 3-8=-527/1998, 3-7=-1952/553, 4-7=-62/52, 5-7=-1275/4579

JOINT STRESS INDEX
1 = 0.51, 2 = 0.02, 3 = 0.50, 4 = 0.02, 5 = 0.51, 6 = 0.59, 7 = 0.94, 8 = 0.33, 9 = 0.94 and 10 = 0.59

NOTES (10)
1) 2-ply truss to be connected together with 10d (0.131"x3") nails as follows:
Top chords connected as follows: 2 X 4 - 1 row at 0-9-0 oc, 2 X 6 - 2 rows at 0-9-0 oc.
Bottom chords connected as follows: 2 X 8 - 2 rows at 0-7-0 oc.
Webs connected as follows: 2 X 4 - 1 row at 0-9-0 oc.
2) All loads are considered equally applied to all plies, except if noted as front (F) or back (B) face in the LOAD CASE(S) section. Ply to ply connections have been provided to distribute only loads noted as (F) or (B), unless otherwise indicated.
3) Wind: ASCE 7-02; 110mph (3-second gust); h=22ft; TCDL=4.2psf; BCDL=3.0psf; Category II; Exp B; enclosed; MWFRS; end vertical left and right exposed; Lumber DOL=1.60 plate grip DOL=1.60.
4) Provide adequate drainage to prevent water ponding.
5) *This truss has been designed for a 10.0 psf bottom chord live load nonconcurrent with any other live loads.
6) All bearings are assumed to be SYP No.2 crushing capacity of 565.00 psi
7) Provide mechanical connection (by others) of truss to bearing plate capable of withstanding 970 lb uplift at joint 10 and 1132 lb uplift at joint 6.
8) Girder carries tie-in span(s): 3-9-0 from 0-0-0 to 13-9-0; 23-0-0 from 0-0-0 to 5-0-0; 23-0-0 from 7-0-0 to 13-9-0
9) Hanger(s) or other connection device(s) shall be provided sufficient to support concentrated load(s) 1626 lb down and 450 lb up at 6-0-12, and 796 lb down and 220 lb up at 12-9-0 on bottom chord. The design/selection of such connection device(s) is the responsibility of others.
10) Truss Design Engineer: Julius Lee, PE: Florida P.E. License No. 34869: Address: 1109 Coastal Bay Blvd. Boynton Beach, FL 33435

LOAD CASE(S) Standard
1) Regular: Lumber Increase=1.25, Plate Increase=1.25
Uniform Loads (plf)
Vert: 1-5=-54, 10-11=-374(F=-336, B=-28), 8-11=-38(B=-28), 6-8=-374(F=-336, B=-28)
Concentrated Loads (lb)
Vert: 12=-1626(F) 13=-796(F)

Job	Truss	Truss Type	Qty	Ply	CURTIS RES.
L284512	T11	MONO TRUSS	18	1	L284512019 Job Reference (optional)

Builders FirstSource, Lake City, Fl 32055

6.300 s Apr 19 2006 MiTek Industries, Inc. Mon Aug 04 08:32:48 2008 Page 1

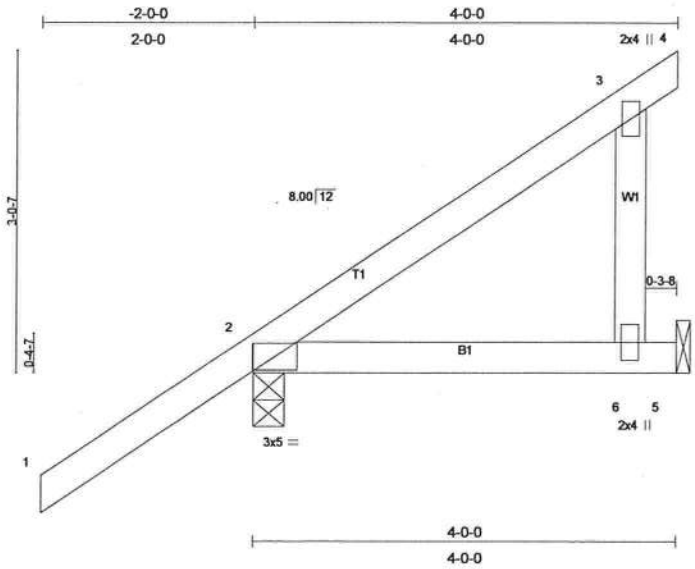

Plate Offsets (X,Y): [2:0-2-9,0-1-8]

LOADING (psf)		SPACING 2-0-0	CSI	DEFL in (loc) l/defl L/d	PLATES GRIP
TCLL 20.0		Plates Increase 1.25	TC 0.30	Vert(LL) 0.04 2-6 >999 360	MT20 244/190
TCDL 7.0		Lumber Increase 1.25	BC 0.18	Vert(TL) -0.02 2-6 >999 240	
BCLL 10.0	*	Rep Stress Incr YES	WB 0.03	Horz(TL) 0.00 n/a n/a	
BCDL 5.0		Code FBC2004/TPI2002	(Matrix)		Weight: 20 lb

LUMBER
TOP CHORD 2 X 4 SYP No.2
BOT CHORD 2 X 4 SYP No.2
WEBS 2 X 4 SYP No.3

BRACING
TOP CHORD Structural wood sheathing directly applied or 4-0-0 oc purlins.
BOT CHORD Rigid ceiling directly applied or 10-0-0 oc bracing.

REACTIONS (lb/size) 2=270/0-3-8, 5=92/Mechanical
Max Horz 2=150(load case 6)
Max Uplift2=-178(load case 6), 5=-89(load case 5)

FORCES (lb) - Maximum Compression/Maximum Tension
TOP CHORD 1-2=0/59, 2-3=-76/23, 3-4=-13/0
BOT CHORD 2-6=0/0, 5-6=0/0
WEBS 3-6=-81/101

JOINT STRESS INDEX
2 = 0.15, 3 = 0.05 and 6 = 0.06

NOTES (5)
1) Wind: ASCE 7-02; 110mph (3-second gust); h=22ft; TCDL=4.2psf; BCDL=3.0psf; Category II; Exp B; enclosed; MWFRS and C-C Exterior(2) zone; porch left and right exposed; Lumber DOL=1.60 plate grip DOL=1.60. This truss is designed for C-C for members and forces, and for MWFRS for reactions specified.
2) *This truss has been designed for a 10.0 psf bottom chord live load nonconcurrent with any other live loads.
3) All bearings are assumed to be SYP No.2 crushing capacity of 565.00 psi
4) Provide mechanical connection (by others) of truss to bearing plate capable of withstanding 178 lb uplift at joint 2 and 89 lb uplift at joint 5.
5) Truss Design Engineer: Julius Lee, PE: Florida P.E. License No. 34869: Address: 1109 Coastal Bay Blvd. Boynton Beach, FL 33435

LOAD CASE(S) Standard

Job	Truss	Truss Type	Qty	Ply	CURTIS RES.
L284512	T11G	GABLE	1	1	L284512020 Job Reference (optional)

Builders FirstSource, Lake City, Fl 32055

6.300 s Apr 19 2006 MiTek Industries, Inc. Mon Aug 04 08:32:49 2008 Page 1

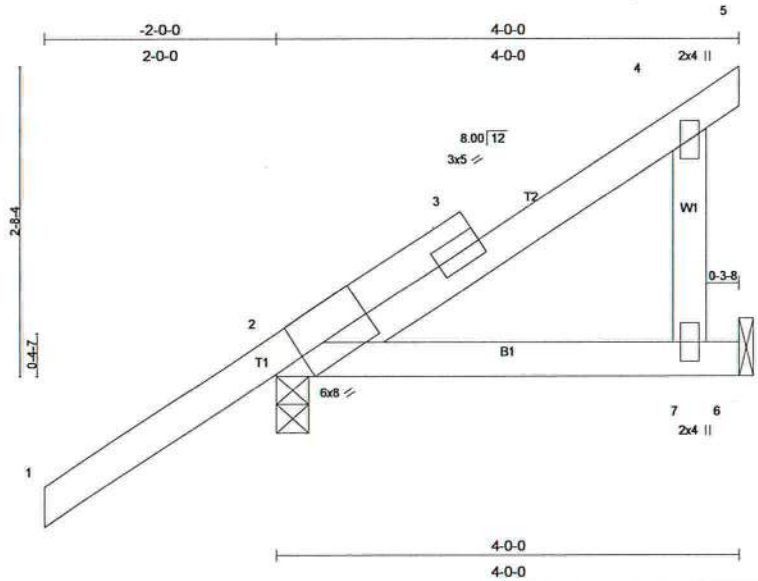

Plate Offsets (X,Y): [2:0-2-9,Edge]

LOADING (psf)			SPACING 2-0-0	CSI		DEFL	in	(loc)	l/defl	L/d	PLATES	GRIP
TCLL	20.0		Plates Increase 1.25	TC	0.57	Vert(LL)	-0.01	2-7	>999	360	MT20	244/190
TCDL	7.0		Lumber Increase 1.25	BC	0.15	Vert(TL)	-0.03	2-7	>999	240		
BCLL	10.0	*	Rep Stress Incr NO	WB	0.03	Horz(TL)	0.00		n/a	n/a		
BCDL	5.0		Code FBC2004/TPI2002	(Matrix)							Weight: 22 lb	

LUMBER
TOP CHORD 2 X 4 SYP No.2
BOT CHORD 2 X 4 SYP No.2
WEBS 2 X 4 SYP No.3

BRACING
TOP CHORD Structural wood sheathing directly applied or 4-0-0 oc purlins.
BOT CHORD Rigid ceiling directly applied or 10-0-0 oc bracing.

REACTIONS (lb/size) 2=549/0-3-8, 6=173/Mechanical
Max Horz 2=190(load case 6)
Max Uplift2=-273(load case 6), 6=-67(load case 6)

FORCES (lb) - Maximum Compression/Maximum Tension
TOP CHORD 1-2=-28/126, 2-3=-129/10, 3-4=-71/46, 4-5=-28/6
BOT CHORD 2-7=0/0, 6-7=0/0
WEBS 4-7=-171/139

JOINT STRESS INDEX
2 = 0.56, 3 = 0.00, 3 = 0.47, 4 = 0.08 and 7 = 0.08

NOTES (8)
1) Wind: ASCE 7-02; 110mph (3-second gust); h=22ft; TCDL=4.2psf; BCDL=3.0psf; Category II; Exp B; enclosed; MWFRS gable end zone and C-C Exterior(2) zone; Lumber DOL=1.60 plate grip DOL=1.60. This truss is designed for C-C for members and forces, and for MWFRS for reactions specified.
2) Truss designed for wind loads in the plane of the truss only. For studs exposed to wind (normal to the face), see MiTek "Standard Gable End Detail"
3) *This truss has been designed for a 10.0 psf bottom chord live load nonconcurrent with any other live loads.
4) Gable studs spaced at 2-0-0 oc.
5) All bearings are assumed to be SYP No.2 crushing capacity of 565.00 psi
6) Provide mechanical connection (by others) of truss to bearing plate capable of withstanding 273 lb uplift at joint 2 and 67 lb uplift at joint 6.
7) In the LOAD CASE(S) section, loads applied to the face of the truss are noted as front (F) or back (B).
8) Truss Design Engineer: Julius Lee, PE: Florida P.E. License No. 34869: Address: 1109 Coastal Bay Blvd. Boynton Beach, FL 33435

LOAD CASE(S) Standard
1) Regular: Lumber Increase=1.25, Plate Increase=1.25
Uniform Loads (plf)
Vert: 1-5=-114(F=-60), 2-6=-10

Job	Truss	Truss Type	Qty	Ply	CURTIS RES.
L284512	T12	MONO TRUSS	5	1	L284512021 Job Reference (optional)

Builders FirstSource, Lake City, Fl 32055 — 6.300 s Apr 19 2006 MiTek Industries, Inc. Mon Aug 04 08:32:49 2008 Page 1

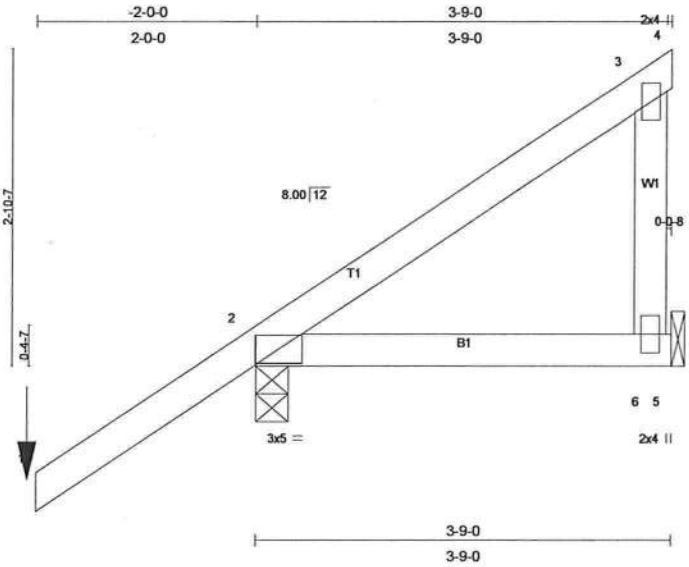

Plate Offsets (X,Y): [2:0-2-9,0-1-8]

LOADING (psf)		SPACING 2-0-0	CSI	DEFL in (loc) l/defl L/d	PLATES GRIP
TCLL 20.0		Plates Increase 1.25	TC 0.56	Vert(LL) -0.01 2-6 >999 360	MT20 244/190
TCDL 7.0		Lumber Increase 1.25	BC 0.09	Vert(TL) -0.01 2-6 >999 240	
BCLL 10.0	*	Rep Stress Incr NO	WB 0.01	Horz(TL) 0.00 n/a n/a	
BCDL 5.0		Code FBC2004/TPI2002	(Matrix)		Weight: 19 lb

LUMBER
TOP CHORD 2 X 4 SYP No.2
BOT CHORD 2 X 4 SYP No.2
WEBS 2 X 4 SYP No.3

BRACING
TOP CHORD Structural wood sheathing directly applied or 3-9-0 oc purlins.
BOT CHORD Rigid ceiling directly applied or 10-0-0 oc bracing.

REACTIONS (lb/size) 2=364/0-3-8, 6=38/Mechanical
Max Horz 2=146(load case 6)
Max Uplift2=-160(load case 6), 6=-21(load case 5)
Max Grav 2=364(load case 1), 6=47(load case 2)

FORCES (lb) - Maximum Compression/Maximum Tension
TOP CHORD 1-2=-18/92, 2-3=-97/15, 3-4=-1/0
BOT CHORD 2-6=0/0, 5-6=0/0
WEBS 3-6=-31/32

JOINT STRESS INDEX
2 = 0.20, 3 = 0.02 and 6 = 0.02

NOTES (7)
1) Wind: ASCE 7-02; 110mph (3-second gust); h=22ft; TCDL=4.2psf; BCDL=3.0psf; Category II; Exp B; enclosed; MWFRS and C-C Exterior(2) zone; Lumber DOL=1.60 plate grip DOL=1.60. This truss is designed for C-C for members and forces, and for MWFRS for reactions specified.
2) *This truss has been designed for a 10.0 psf bottom chord live load nonconcurrent with any other live loads.
3) All bearings are assumed to be SYP No.2 crushing capacity of 565.00 psi
4) Provide mechanical connection (by others) of truss to bearing plate capable of withstanding 160 lb uplift at joint 2 and 21 lb uplift at joint 6.
5) Hanger(s) or other connection device(s) shall be provided sufficient to support concentrated load(s) 63 lb down and 36 lb up at -2-0-0 on top chord. The design/selection of such connection device(s) is the responsibility of others.
6) In the LOAD CASE(S) section, loads applied to the face of the truss are noted as front (F) or back (B).
7) Truss Design Engineer: Julius Lee, PE: Florida P.E. License No. 34869: Address: 1109 Coastal Bay Blvd. Boynton Beach, FL 33435

LOAD CASE(S) Standard
1) Regular: Lumber Increase=1.25, Plate Increase=1.25
Uniform Loads (plf)
Vert: 1-3=-54, 3-4=-14, 2-5=-10
Concentrated Loads (lb)
Vert: 1=-63(F)

Job	Truss	Truss Type	Qty	Ply	CURTIS RES.
L284512	T13	MONO TRUSS	1	1	L284512022 Job Reference (optional)

Builders FirstSource, Lake City, Fl 32055

6.300 s Apr 19 2006 MiTek Industries, Inc. Mon Aug 04 08:32:50 2008 Page 1

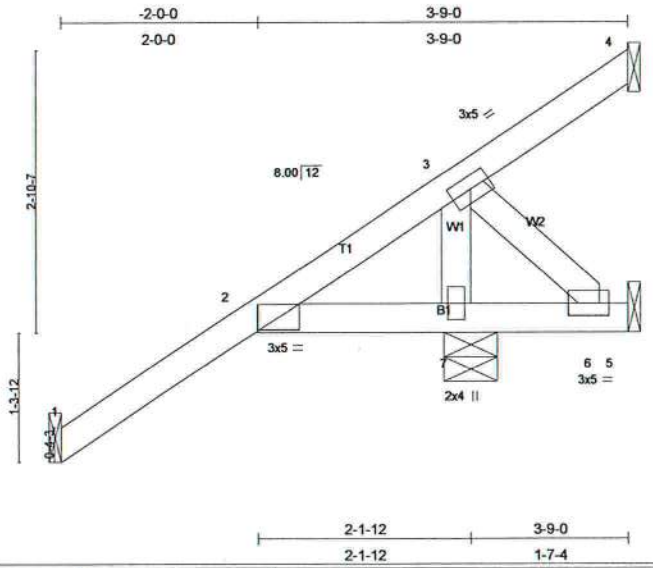

LOADING (psf)		SPACING 2-0-0	CSI	DEFL in (loc) l/defl L/d	PLATES GRIP
TCLL 20.0		Plates Increase 1.25	TC 0.08	Vert(LL) -0.00 2 >999 360	MT20 244/190
TCDL 7.0		Lumber Increase 1.25	BC 0.06	Vert(TL) -0.01 2 >999 240	
BCLL 10.0	*	Rep Stress Incr YES	WB 0.07	Horz(TL) -0.00 1 n/a n/a	
BCDL 5.0		Code FBC2004/TPI2002	(Matrix)		Weight: 20 lb

LUMBER
TOP CHORD 2 X 4 SYP No.2
BOT CHORD 2 X 4 SYP No.2
WEBS 2 X 4 SYP No.3

BRACING
TOP CHORD Structural wood sheathing directly applied or 3-9-0 oc purlins.
BOT CHORD Rigid ceiling directly applied or 6-0-0 oc bracing.

REACTIONS (lb/size) 1=63/Mechanical, 4=28/Mechanical, 5=-126/Mechanical, 7=399/0-6-7
Max Horz 7=120(load case 6)
Max Uplift1=-23(load case 6), 4=-24(load case 6), 5=-126(load case 1), 7=-38(load case 6)

FORCES (lb) - Maximum Compression/Maximum Tension
TOP CHORD 1-2=-27/41, 2-3=-104/230, 3-4=-35/10
BOT CHORD 2-7=-157/178, 6-7=-157/0, 5-6=0/0
WEBS 3-6=0/216, 3-7=-389/122

JOINT STRESS INDEX
2 = 0.08, 3 = 0.18, 6 = 0.11 and 7 = 0.14

NOTES (5)
1) Wind: ASCE 7-02; 110mph (3-second gust); h=22ft; TCDL=4.2psf; BCDL=3.0psf; Category II; Exp B; enclosed; MWFRS and C-C Exterior(2) zone; cantilever left exposed ; Lumber DOL=1.60 plate grip DOL=1.60. This truss is designed for C-C for members and forces, and for MWFRS for reactions specified.
2) *This truss has been designed for a 10.0 psf bottom chord live load nonconcurrent with any other live loads.
3) All bearings are assumed to be SYP No.2 crushing capacity of 565.00 psi
4) Provide mechanical connection (by others) of truss to bearing plate capable of withstanding 23 lb uplift at joint 1, 24 lb uplift at joint 4, 126 lb uplift at joint 5 and 38 lb uplift at joint 7.
5) Truss Design Engineer: Julius Lee, PE: Florida P.E. License No. 34869: Address: 1109 Coastal Bay Blvd. Boynton Beach, FL 33435

LOAD CASE(S) Standard

STEPDOWN CORNER SET

TOP CHORD 2X4 SO. PINE #2 or Better
BOT CHORD 2X4 SO. PINE #2 or Better
WEBS 2X4 SO. PINE #3 or Better

120 MPH MAX

Setback 7' or Less

PROVIDE UPLIFT CONNECTIONS AT BEARINGS AS INDICATED.
UPLIFT: 400# or Less
BRG LOC: *
UPLIFT BASED ON 7.2 PSF TOTAL DEAD LOAD. WIND SPEED=120 "C" MPH. MEAN HGT=28 FT. ENCLOSED. (ASCE 7-02)

PROVIDE UPLIFT CONNECTIONS AT BEARINGS AS INDICATED. TILE
UPLIFT: 400# or Less
BRG LOC: *
UPLIFT BASED ON 15.0 PSF TOTAL DEAD LOAD. WIND SPEED=120 "C" MPH. MEAN HGT (of jacks)=28 FT. ENCLOSED. (ASCE 7-02)

PROVIDE UPLIFT CONNECTIONS AT BEARINGS AS INDICATED.
UPLIFT: 400# or Less
BRG LOC: *
UPLIFT BASED ON 7.2 PSF TOTAL DEAD LOAD. WIND SPEED=120 "B" MPH. MEAN HGT (of jacks)=28 FT. ENCLOSED. (ASCE 7-02)

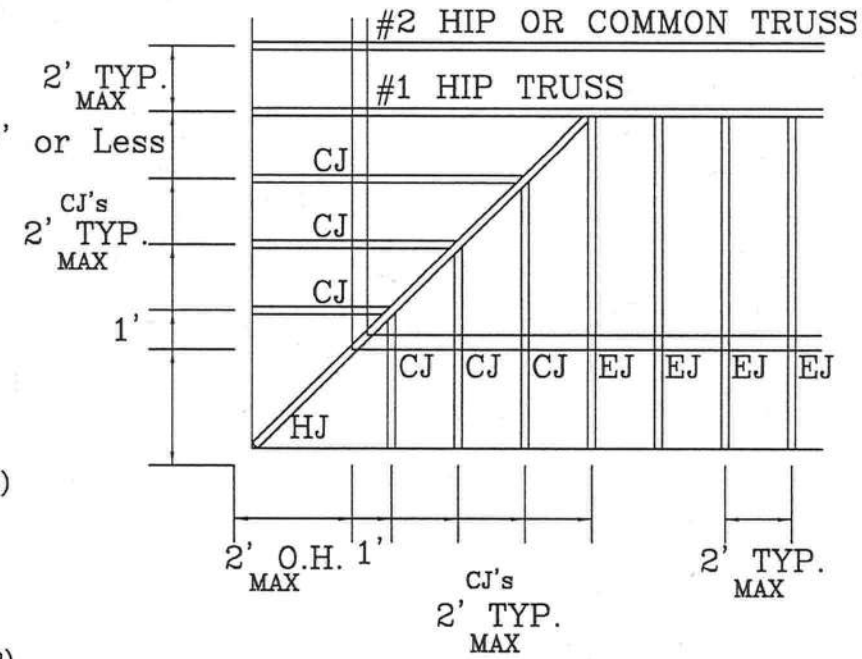

* (3) 16d TOENAILS

** SEE EOR FOR TIE DOWN

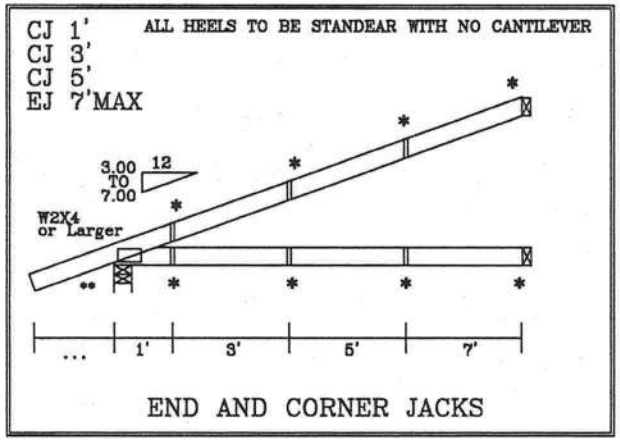

END AND CORNER JACKS

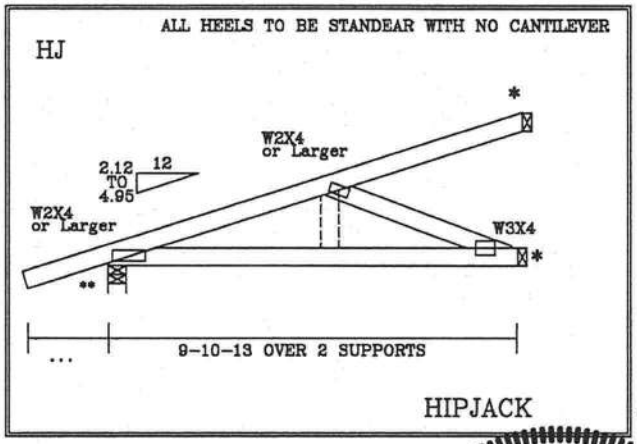

HIPJACK

UPLIFT VALUES DO TAKE INTO ACCOUNT PORCHES EXPOSED
BC LIVE LOAD IS NON CONCURRENT 10*

CORNER SET SETBACK
7'0" MAX

WARNING TRUSSES REQUIRE EXTREME CARE IN FABRICATING, HANDLING, SHIPPING, INSTALLING AND BRACING. REFER TO BCSI 1-03 (BUILDING COMPONENT SAFETY INFORMATION), PUBLISHED BY TPI (TRUSS PLATE INSTITUTE, 583 D'ONOFRIO DR., SUITE 200, MADISON, WI. 53719) AND WTCA (WOOD TRUSS COUNCIL OF AMERICA, 6300 ENTERPRISE LN, MADISON, WI 53719) FOR SAFETY PRACTICES PRIOR TO PERFORMING THESE FUNCTIONS. UNLESS OTHERWISE INDICATED, TOP CHORD SHALL HAVE PROPERLY ATTACHED STRUCTURAL PANELS AND BOTTOM CHORD SHALL HAVE A PROPERLY ATTACHED RIGID CEILING.

IMPORTANT FURNISH COPY OF THIS DESIGN TO INSTALLATION CONTRACTOR. ALPINE ENGINEERED PRODUCTS, INC., SHALL NOT BE RESPONSIBLE FOR ANY DEVIATION FROM THIS DESIGN; ANY FAILURE TO BUILD THE TRUSS IN CONFORMANCE WITH TPI; OR FABRICATING, HANDLING, SHIPPING, INSTALLING & BRACING OF TRUSSES. DESIGN CONFORMS WITH APPLICABLE PROVISIONS OF NDS (NATIONAL DESIGN SPEC BY AF&PA) AND TPI. ALPINE CONNECTOR PLATES ARE MADE OF 20/18/16GA (W,H/S/K) ASTM A653 GRADE 40/60 (W,K/H,S) GALV. STEEL. APPLY PLATES TO EACH FACE OF TRUSS AND, UNLESS OTHERWISE LOCATED ON THIS DESIGN, POSITION PER DRAWINGS 160A-Z. ANY INSPECTION OF PLATES FOLLOWED BY (I) SHALL BE PER ANNEX A3 OF TPI 1-2002 SEC. 3. A SEAL ON THIS DRAWING INDICATES ACCEPTANCE OF PROFESSIONAL ENGINEERING RESPONSIBILITY SOLELY FOR THE TRUSS COMPONENT DESIGN SHOWN. THE SUITABILITY AND USE OF THIS COMPONENT FOR ANY BUILDING IS THE RESPONSIBILITY OF THE BUILDING DESIGNER, PER ANSI/TPI 1 SEC. 2.

JULIUS LEE
CONS. ENGINEERS, P.A.
1455 SW 4th AVENUE
DELRAY BEACH, FL 33444-2101
NO. 54869
STATE OF FLORIDA
PROFESSIONAL ENGINEER

SHINGLE		
TC LL	20	MAX PSF
TC DL	7	MAX PSF
BC LL	10*	MAX PSF
BC DL	5	MAX PSF
TILE		
TC LL	20	MAX PSF
TC DL	20	MAX PSF
BC LL	10*	MAX PSF
BC DL	5	MAX PSF
DUR. FAC.	1.25	
SPACING	2' MAX	

REF	7'MAX STBK CS
DATE	Jun./27/2008
DRWG	
-ENG	

REVIEWED
By julius lee at 10:52 am, Jun 27, 2008

ASCE 7-02: 130 MPH WIND SPEED, 15' MEAN HEIGHT, ENCLOSED, I = 1.00, EXPOSURE C

MAX GABLE VERTICAL LENGTH

2X4 GABLE VERTICAL SPACING	SPECIES	BRACE GRADE	NO BRACES	(1) 1X4 "L" BRACE * GROUP A	(1) 1X4 "L" BRACE * GROUP B	(1) 2X4 "L" BRACE * GROUP A	(1) 2X4 "L" BRACE * GROUP B	(2) 2X4 "L" BRACE ** GROUP A	(2) 2X4 "L" BRACE ** GROUP B	(1) 2X6 "L" BRACE * GROUP A	(1) 2X6 "L" BRACE * GROUP B	(2) 2X6 "L" BRACE ** GROUP A	(2) 2X6 "L" BRACE ** GROUP B
24" O.C.	SPF HF	#1 / #2	3' 4"	6' 10"	6' 0"	6' 11"	7' 1"	8' 3"	8' 6"	10' 10"	11' 2"	12' 11"	13' 3"
		#3	3' 3"	4' 11"	4' 11"	6' 6"	6' 6"	8' 3"	8' 3"	10' 1"	10' 1"	12' 11"	12' 11"
		STUD	3' 3"	4' 11"	4' 11"	6' 5"	6' 5"	8' 3"	8' 3"	10' 0"	10' 0"	12' 11"	12' 11"
		STANDARD	3' 3"	4' 2"	4' 2"	5' 6"	5' 6"	7' 5"	7' 5"	8' 8"	8' 8"	11' 8"	11' 8"
	SP DFL	#1	3' 8"	5' 10"	6' 3"	6' 11"	7' 5"	8' 3"	8' 11"	10' 10"	11' 8"	12' 11"	13' 11"
		#2	3' 7"	5' 10"	6' 3"	6' 11"	7' 5"	8' 3"	8' 11"	10' 10"	11' 8"	12' 11"	13' 11"
		#3	3' 6"	5' 0"	5' 0"	6' 8"	6' 8"	8' 3"	8' 8"	10' 4"	10' 4"	12' 11"	13' 7"
		STUD	3' 6"	5' 0"	5' 0"	6' 7"	6' 7"	8' 3"	8' 8"	10' 3"	10' 3"	12' 11"	13' 7"
		STANDARD	3' 4"	4' 3"	4' 3"	5' 8"	5' 8"	7' 8"	7' 8"	8' 10"	8' 10"	12' 0"	12' 0"
16" O.C.	SPF HF	#1 / #2	3' 10"	6' 8"	6' 10"	7' 11"	8' 1"	9' 5"	9' 8"	12' 5"	12' 9"	14' 0"	14' 0"
		#3	3' 9"	6' 0"	6' 0"	7' 11"	7' 11"	9' 5"	9' 5"	12' 4"	12' 4"	14' 0"	14' 0"
		STUD	3' 9"	6' 0"	6' 0"	7' 11"	7' 11"	9' 5"	9' 5"	12' 4"	12' 4"	14' 0"	14' 0"
		STANDARD	3' 9"	5' 2"	5' 2"	6' 10"	6' 10"	9' 2"	9' 2"	10' 7"	10' 7"	14' 0"	14' 0"
	SP DFL	#1	4' 3"	6' 8"	7' 2"	7' 11"	8' 6"	9' 5"	10' 2"	12' 5"	13' 5"	14' 0"	14' 0"
		#2	4' 2"	6' 8"	7' 2"	7' 11"	8' 6"	9' 5"	10' 2"	12' 5"	13' 5"	14' 0"	14' 0"
		#3	4' 0"	6' 2"	6' 2"	7' 11"	8' 2"	9' 6"	9' 11"	12' 5"	12' 8"	14' 0"	14' 0"
		STUD	4' 0"	6' 1"	6' 1"	7' 11"	8' 1"	9' 5"	9' 11"	12' 5"	12' 8"	14' 0"	14' 0"
		STANDARD	3' 10"	5' 3"	5' 3"	6' 11"	6' 11"	9' 4"	9' 4"	10' 10"	10' 10"	14' 0"	14' 0"
12" O.C.	SPF HF	#1 / #2	4' 3"	7' 4"	7' 7"	8' 9"	8' 11"	10' 5"	10' 8"	13' 8"	14' 0"	14' 0"	14' 0"
		#3	4' 2"	6' 11"	6' 11"	8' 9"	8' 9"	10' 5"	10' 5"	13' 8"	13' 8"	14' 0"	14' 0"
		STUD	4' 2"	6' 11"	6' 11"	8' 9"	8' 9"	10' 5"	10' 5"	13' 8"	13' 8"	14' 0"	14' 0"
		STANDARD	4' 2"	6' 11"	6' 11"	7' 10"	7' 10"	10' 5"	10' 5"	12' 3"	12' 3"	14' 0"	14' 0"
	SP DFL	#1	4' 8"	7' 4"	7' 11"	8' 9"	9' 5"	10' 5"	11' 2"	13' 8"	14' 0"	14' 0"	14' 0"
		#2	4' 7"	7' 4"	7' 11"	8' 9"	9' 5"	10' 5"	11' 2"	13' 8"	14' 0"	14' 0"	14' 0"
		#3	4' 4"	7' 2"	7' 2"	8' 9"	9' 2"	10' 5"	10' 11"	13' 8"	14' 0"	14' 0"	14' 0"
		STUD	4' 4"	7' 1"	7' 1"	8' 9"	9' 2"	10' 5"	10' 11"	13' 8"	14' 0"	14' 0"	14' 0"
		STANDARD	4' 3"	6' 1"	6' 1"	8' 0"	8' 0"	10' 5"	10' 8"	12' 6"	12' 6"	14' 0"	14' 0"

BRACING GROUP SPECIES AND GRADES:

GROUP A:

SPRUCE-PINE-FIR: #1 / #2 STANDARD; #3 STUD

HEM-FIR: #2 STUD; #3 STANDARD

DOUGLAS FIR-LARCH: #3; STUD; STANDARD

SOUTHERN PINE: #3; STUD; STANDARD

GROUP B:

HEM-FIR: #1 & BTR; #1

SOUTHERN PINE: #1; #2

DOUGLAS FIR-LARCH: #1; #2

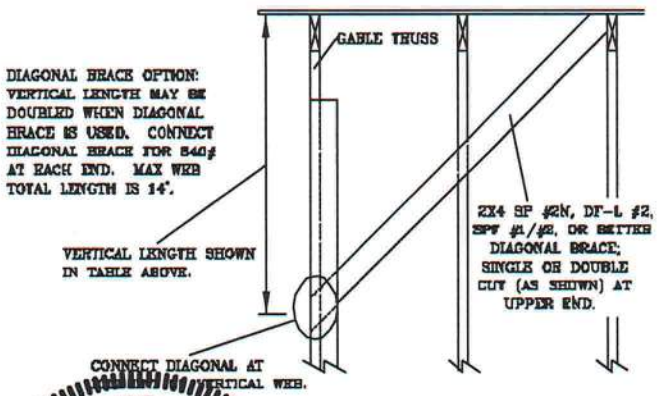

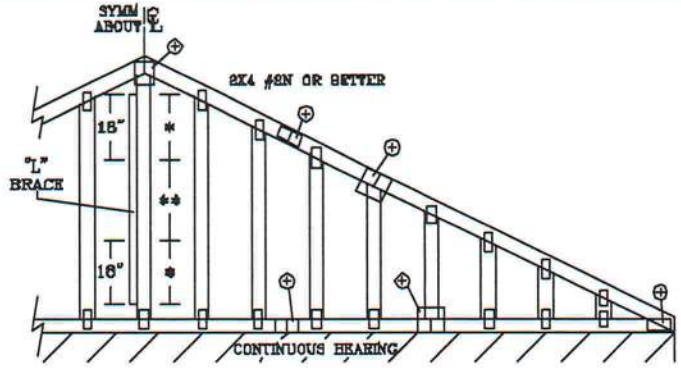

REFER TO CHART ABOVE FOR MAX GABLE VERTICAL LENGTH.

GABLE TRUSS DETAIL NOTES:

LIVE LOAD DEFLECTION CRITERIA IS L/240.

PROVIDE UPLIFT CONNECTIONS FOR 136 PLF OVER CONTINUOUS BEARING (5 PSF TC DEAD LOAD).

GABLE END SUPPORTS LOAD FROM 4' 0" OUTLOOKERS WITH 2' 0" OVERHANG, OR 12" PLYWOOD OVERHANG.

ATTACH EACH "L" BRACE WITH 10d NAILS.
* FOR (1) "L" BRACE: SPACE NAILS AT 2" O.C. IN 18" END ZONES AND 4" O.C. BETWEEN ZONES.
** FOR (2) "L" BRACES: SPACE NAILS AT 3" O.C. IN 18" END ZONES AND 6" O.C. BETWEEN ZONES.

"L" BRACING MUST BE A MINIMUM OF 80% OF WEB MEMBER LENGTH.

GABLE VERTICAL PLATE SIZES

VERTICAL LENGTH	NO SPLICE
LESS THAN 4' 0"	1X4 OR 2X3
GREATER THAN 4' 0", BUT LESS THAN 11' 8"	2X4
GREATER THAN 11' 8"	2.5X4

+ REFER TO COMMON TRUSS DESIGN FOR PEAK, SPLICE, AND HEEL PLATES.

JULIUS LEE LICENSE NO. 34869 STATE OF FLORIDA PROFESSIONAL ENGINEER

WARNING TRUSSES REQUIRE EXTREME CARE IN FABRICATING, HANDLING, SHIPPING, INSTALLING AND BRACING. REFER TO BCSI 1-03 (BUILDING COMPONENT SAFETY INFORMATION), PUBLISHED BY TPI (TRUSS PLATE INSTITUTE, 583 D'ONOFRIO DR, SUITE 200, MADISON, WI 53719) AND WTCA (WOOD TRUSS COUNCIL OF AMERICA, 6300 ENTERPRISE LN, MADISON, WI 53719) FOR SAFETY PRACTICES PRIOR TO PERFORMING THESE FUNCTIONS. UNLESS OTHERWISE INDICATED, TOP CHORD SHALL HAVE PROPERLY ATTACHED STRUCTURAL PANELS AND BOTTOM CHORD SHALL HAVE A PROPERLY ATTACHED RIGID CEILING.

REVIEWED
By julius lee at 12:00 pm, Jun 11, 2008

JULIUS LEE'S
CONS. ENGINEERS P.A.
1455 SW 4th AVENUE
DELRAY BEACH, FL 33444-2161
No: 34869
STATE OF FLORIDA

MAX. TOT. LD. 60 PSF

MAX. SPACING 24.0"

REF ASCE7-02-GAB13015
DATE 11/26/03
DRWG MITEK STD GABLE 15 E HT
-ENG

ASCE 7-02: 130 MPH WIND SPEED, 30' MEAN HEIGHT, ENCLOSED, I = 1.00, EXPOSURE C

MAX GABLE VERTICAL LENGTH

2X4 GABLE VERTICAL SPACING	SPECIES	BRACE GRADE	NO BRACES	(1) 1X4 "L" BRACE * GROUP A	(1) 1X4 "L" BRACE * GROUP B	(1) 2X4 "L" BRACE * GROUP A	(1) 2X4 "L" BRACE * GROUP B	(2) 2X4 "L" BRACE ** GROUP A	(2) 2X4 "L" BRACE ** GROUP B	(1) 2X6 "L" BRACE * GROUP A	(1) 2X6 "L" BRACE * GROUP B	(2) 2X6 "L" BRACE ** GROUP A	(2) 2X6 "L" BRACE ** GROUP B
24" O.C.	SPF HF	#1 / #2	3' 2"	5' 6"	6' 8"	6' 6"	6' 9"	7' 10"	8' 0"	10' 3"	10' 7"	12' 3"	12' 7"
		#3	3' 1"	4' 5"	4' 5"	5' 10"	5' 10"	7' 10"	7' 10"	9' 1"	9' 1"	12' 3"	12' 3"
		STUD	3' 1"	4' 5"	4' 5"	5' 10"	5' 10"	7' 10"	7' 10"	9' 1"	9' 1"	12' 3"	12' 3"
		STANDARD	2' 11"	3' 9"	3' 9"	5' 0"	5' 0"	6' 9"	6' 9"	7' 10"	7' 10"	10' 7"	10' 7"
	SP DFL	#1	3' 6"	5' 6"	5' 11"	6' 8"	7' 0"	7' 10"	8' 5"	10' 3"	11' 1"	12' 3"	13' 2"
		#2	3' 6"	5' 6"	5' 11"	6' 8"	7' 0"	7' 10"	8' 5"	10' 3"	11' 1"	12' 3"	13' 2"
		#3	3' 3"	4' 6"	4' 6"	6' 0"	6' 0"	7' 10"	8' 1"	9' 4"	9' 4"	12' 3"	12' 6"
		STUD	3' 3"	4' 6"	4' 6"	5' 11"	5' 11"	7' 10"	8' 0"	9' 3"	9' 3"	12' 3"	12' 6"
		STANDARD	3' 0"	3' 10"	3' 10"	5' 1"	5' 1"	6' 11"	6' 11"	8' 0"	8' 0"	10' 10"	10' 10"
16" O.C.	SPF HF	#1 / #2	3' 8"	6' 4"	6' 6"	7' 6"	7' 8"	8' 11"	9' 2"	11' 9"	12' 1"	14' 0"	14' 0"
		#3	3' 7"	5' 5"	5' 5"	7' 2"	7' 2"	8' 11"	8' 11"	11' 2"	11' 2"	14' 0"	14' 0"
		STUD	3' 7"	5' 5"	5' 5"	7' 2"	7' 2"	8' 11"	8' 11"	11' 1"	11' 1"	14' 0"	14' 0"
		STANDARD	3' 7"	4' 8"	4' 8"	6' 2"	6' 2"	8' 3"	8' 3"	9' 7"	9' 7"	12' 11"	12' 11"
	SP DFL	#1	4' 0"	6' 4"	6' 10"	7' 8"	8' 1"	8' 11"	9' 7"	11' 9"	12' 8"	14' 0"	14' 0"
		#2	3' 11"	6' 4"	6' 10"	7' 8"	8' 1"	8' 11"	9' 7"	11' 9"	12' 8"	14' 0"	14' 0"
		#3	3' 9"	5' 7"	5' 7"	7' 4"	7' 4"	8' 11"	9' 5"	11' 5"	11' 5"	14' 0"	14' 0"
		STUD	3' 8"	5' 6"	5' 6"	7' 3"	7' 3"	8' 11"	9' 5"	11' 4"	11' 4"	14' 0"	14' 0"
		STANDARD	3' 8"	4' 9"	4' 9"	6' 3"	6' 3"	8' 5"	8' 5"	9' 9"	9' 9"	13' 3"	13' 3"
12" O.C.	SPF HF	#1 / #2	4' 0"	6' 11"	7' 2"	8' 3"	8' 6"	9' 10"	10' 1"	12' 11"	13' 4"	14' 0"	14' 0"
		#3	3' 11"	6' 3"	6' 3"	8' 3"	8' 3"	9' 10"	9' 10"	12' 11"	12' 11"	14' 0"	14' 0"
		STUD	3' 11"	6' 3"	6' 3"	8' 3"	8' 3"	9' 10"	9' 10"	12' 10"	12' 10"	14' 0"	14' 0"
		STANDARD	3' 11"	5' 4"	5' 4"	7' 1"	7' 1"	9' 6"	9' 6"	11' 1"	11' 1"	14' 0"	14' 0"
	SP DFL	#1	4' 5"	6' 11"	7' 6"	8' 3"	8' 11"	9' 10"	10' 7"	12' 11"	13' 11"	14' 0"	14' 0"
		#2	4' 4"	6' 11"	7' 6"	8' 3"	8' 11"	9' 10"	10' 7"	12' 11"	13' 11"	14' 0"	14' 0"
		#3	4' 2"	6' 5"	6' 5"	8' 3"	8' 6"	9' 10"	10' 4"	12' 11"	13' 3"	14' 0"	14' 0"
		STUD	4' 2"	6' 4"	6' 4"	8' 3"	8' 6"	9' 10"	10' 4"	12' 11"	13' 1"	14' 0"	14' 0"
		STANDARD	4' 0"	5' 6"	5' 6"	7' 3"	7' 3"	9' 9"	9' 9"	11' 4"	11' 4"	14' 0"	14' 0"

BRACING GROUP SPECIES AND GRADES:

GROUP A:

SPRUCE-PINE-FIR

#1 / #2	STANDARD
#3	STUD

HEM-FIR

#2	STUD
#3	STANDARD

DOUGLAS FIR-LARCH

#3
STUD
STANDARD

SOUTHERN PINE

#3
STUD
STANDARD

GROUP B:

HEM-FIR

#1 & BTR
#1

SOUTHERN PINE

#1
#2

DOUGLAS FIR-LARCH

#1
#2

GABLE TRUSS DETAIL NOTES:

LIVE LOAD DEFLECTION CRITERIA IS L/240.

PROVIDE UPLIFT CONNECTIONS FOR 180 PLF OVER CONTINUOUS BEARING (5 PSF TC DEAD LOAD).

GABLE END SUPPORTS LOAD FROM 4' 0" OUTLOOKERS WITH 2' 0" OVERHANG, OR 12" PLYWOOD OVERHANG.

ATTACH EACH "L" BRACE WITH 10d NAILS.
* FOR (1) "L" BRACE: SPACE NAILS AT 2" O.C. IN 18" END ZONES AND 4" O.C. BETWEEN ZONES.
** FOR (2) "L" BRACES: SPACE NAILS AT 3" O.C. IN 18" END ZONES AND 6" O.C. BETWEEN ZONES.

"L" BRACING MUST BE A MINIMUM OF 80% OF WEB MEMBER LENGTH.

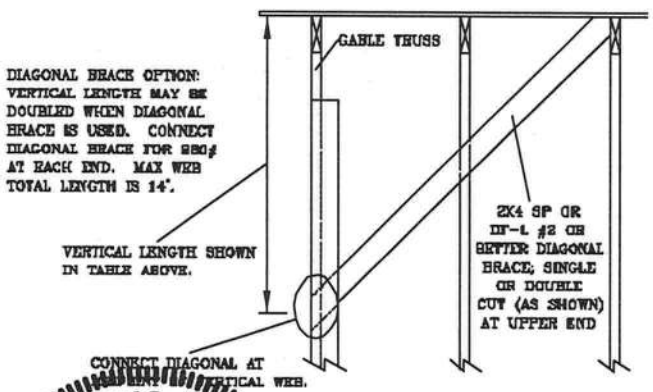

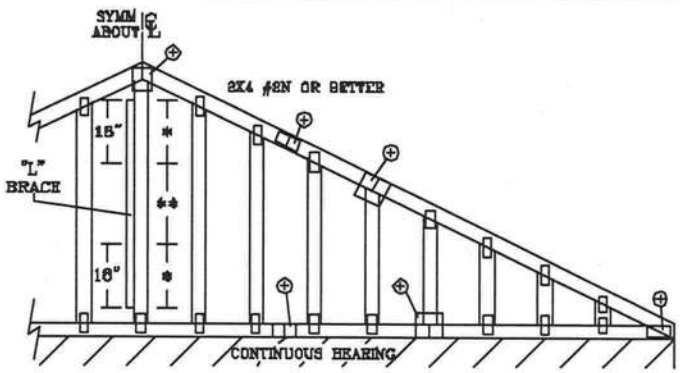

REFER TO CHART ABOVE FOR MAX GABLE VERTICAL LENGTH.

GABLE VERTICAL PLATE SIZES

VERTICAL LENGTH	NO SPLICE
LESS THAN 4' 0"	1X4 OR 2X3
GREATER THAN 4' 0", BUT LESS THAN 11' 8"	2X4
GREATER THAN 11' 8"	2.5X4

+ REFER TO COMMON TRUSS DESIGN FOR PEAK, SPLICE, AND HEEL PLATES.

JULIUS LEE LICENSED NO. 34869 STATE OF FLORIDA PROFESSIONAL ENGINEER

WARNING TRUSSES REQUIRE EXTREME CARE IN FABRICATING, HANDLING, SHIPPING, INSTALLING AND BRACING. REFER TO BCSI 1-03 (BUILDING COMPONENT SAFETY INFORMATION), PUBLISHED BY TPI (TRUSS PLATE INSTITUTE, 583 D'ONOFRIO DR, SUITE 200, MADISON, WI 53719) AND WTCA (WOOD TRUSS COUNCIL OF AMERICA, 6300 ENTERPRISE LN, MADISON, WI 53719) FOR SAFETY PRACTICES PRIOR TO PERFORMING THESE FUNCTIONS. UNLESS OTHERWISE INDICATED, TOP CHORD SHALL HAVE PROPERLY ATTACHED STRUCTURAL PANELS AND BOTTOM CHORD SHALL HAVE A PROPERLY ATTACHED RIGID CEILING.

REVIEWED
By julius lee at 12:00 pm, Jun 11, 2008

JULIUS LEE'S
CONS. ENGINEERS P.A.
1456 SW 4th AVENUE
DELRAY BEACH, FL. 33444-2161
No: 34869
STATE OF FLORIDA

MAX. TOT. LD. 60 PSF

MAX. SPACING 24.0"

REF	ASCE7-02-GAB13030
DATE	11/26/03
DWG	MITEK STD GABLE 30' E H7
	-ENG

TYPICAL ATTIC TRUSS BRACING

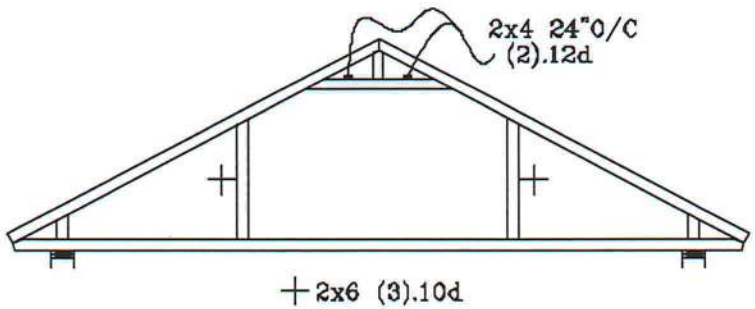

GABLE END TRUSS DETAIL

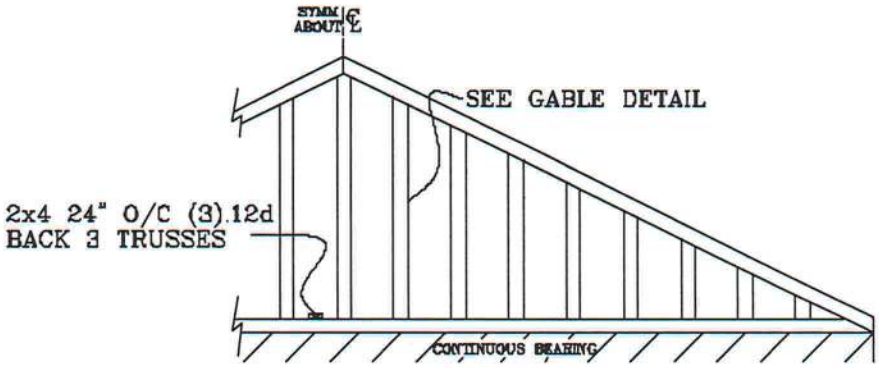

MINIMUM BC BRACING ON GABLE TRUSS. OTHER PERMANENT BRACING DESIGNS BY ARCHITECT OR EOR

TYPICAL ALTERNATE BRACING DETAIL FOR EXTERIOR FLAT GIRDER TRUSS

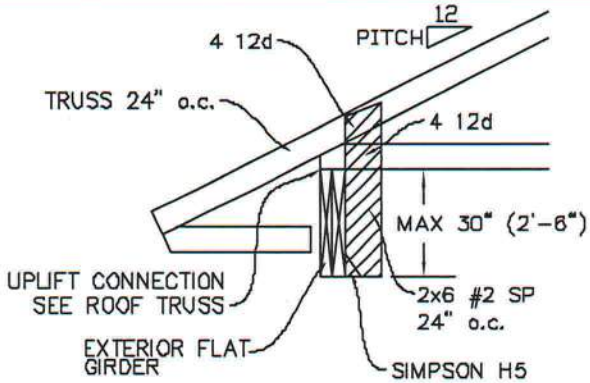

TYPICAL WALL GIRDER VERTICAL WEB BRACING DETAIL

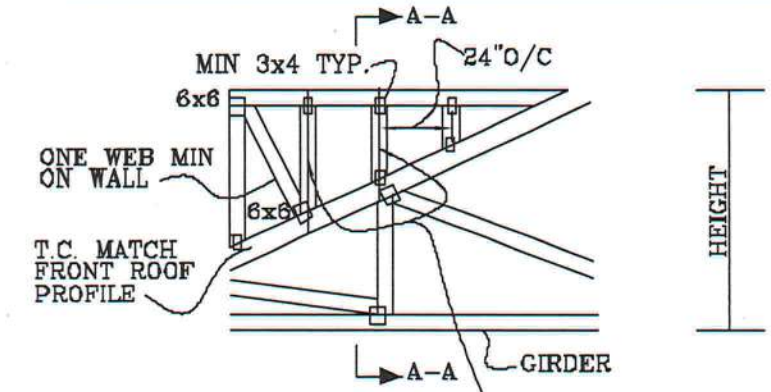

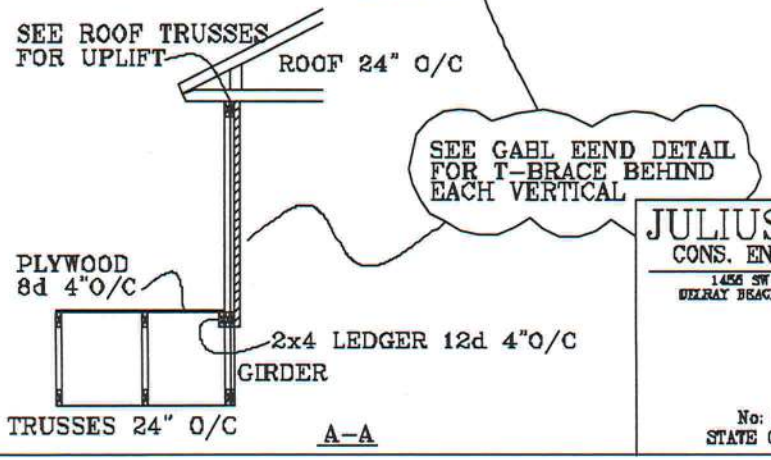

REVIEWED
By julius lee at 11:59 am, Jun 11, 2008

JULIUS LEE
LICENSE
NO. 34869
STATE OF
FLORIDA
PROFESSIONAL ENGINEER

JULIUS LEE'S
CONS. ENGINEERS P.A.
1456 SW 4th AVENUE
DELRAY BEACH, FL 33444-2161

No: 34869
STATE OF FLORIDA

PIGGYBACK DETAIL

TOP CHORD 2X4 #2 OR BETTER
BOT CHORD 2X4 #2 OR BETTER
WEBS 2X4 #3 OR BETTER

REFER TO SEALED DESIGN FOR DASHED PLATES.

SPACE PIGGYBACK VERTICALS AT 4' OC MAX.

TOP AND BOTTOM CHORD SPLICES MUST BE STAGGERED SO THAT ONE SPLICE IS NOT DIRECTLY OVER ANOTHER.

PIGGYBACK BOTTOM CHORD MAY BE OMITTED. ATTACH VERTICAL WEBS TO TRUSS TOP CHORD WITH 1.5X3 PLATE.

ATTACH PURLINS TO TOP OF FLAT TOP CHORD. IF PIGGYBACK IS SOLID LUMBER OR THE BOTTOM CHORD IS OMITTED, PURLINS MAY BE APPLIED BENEATH THE TOP CHORD OF SUPPORTING TRUSS.

REFER TO ENGINEER'S SEALED DESIGN FOR REQUIRED PURLIN SPACING.

THIS DETAIL IS APPLICABLE FOR THE FOLLOWING WIND CONDITIONS:

110 MPH WIND, 30' MEAN HGT, ASCE 7-02, CLOSED BLDG, LOCATED ANYWHERE IN ROOF, 1 MI FROM COAST CAT I, EXP C, WIND TC DL=5 PSF, WIND BC DL=5 PSF

110 MPH WIND, 30' MEAN HGT, FBC ENCLOSED BLDG, LOCATED ANYWHERE IN ROOF WIND TC DL=5 PSF, WIND BC DL=5 PSF

130 MPH WIND, 30' MEAN HGT, ASCE 7-02, CLOSED BLDG, LOCATED ANYWHERE IN ROOF, CAT II, EXP. C, WIND TC DL=6 PSF, WIND BC DL=6 PSF

FRONT FACE (E,*) PLATES MAY BE OFFSET FROM BACK FACE PLATES AS LONG AS BOTH FACES ARE SPACED 4' OC MAX.

JOINT TYPE	SPANS UP TO			
	30'	34'	38'	52'
A	2X4	2.5X4	2.5X4	3X5
B	4X6	5X6	5X6	5X6
C	1.5X3	1.5X4	1.5X4	1.5X4
D	5X4	5X5	5X5	5X6
E	4X8 OR 3X6 TRULOX AT 4' OC, ROTATED VERTICALLY			

ATTACH TRULOX PLATES WITH (6) 0.120" X 1.375" NAILS, OR EQUAL, PER FACE PER PLY. (4) NAILS IN EACH MEMBER TO BE CONNECTED. REFER TO DRAWING 160 TL FOR TRULOX INFORMATION.

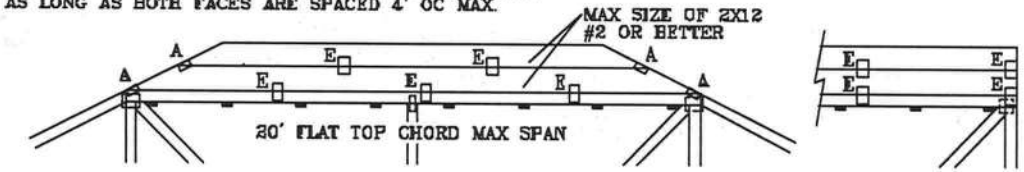

WEB BRACING CHART	
WEB LENGTH	REQUIRED BRACING
0' TO 7'9"	NO BRACING
7'9" TO 10'	1x4 "T" BRACE. SAME GRADE, SPECIES AS WEB MEMBER, OR BETTER, AND 80% LENGTH OF WEB MEMBER. ATTACH WITH 8d NAILS AT 4" OC.
10' TO 14'	2x4 "T" BRACE. SAME GRADE, SPECIES AS WEB MEMBER, OR BETTER, AND 80% LENGTH OF WEB MEMBER. ATTACH WITH 16d NAILS AT 4" OC.

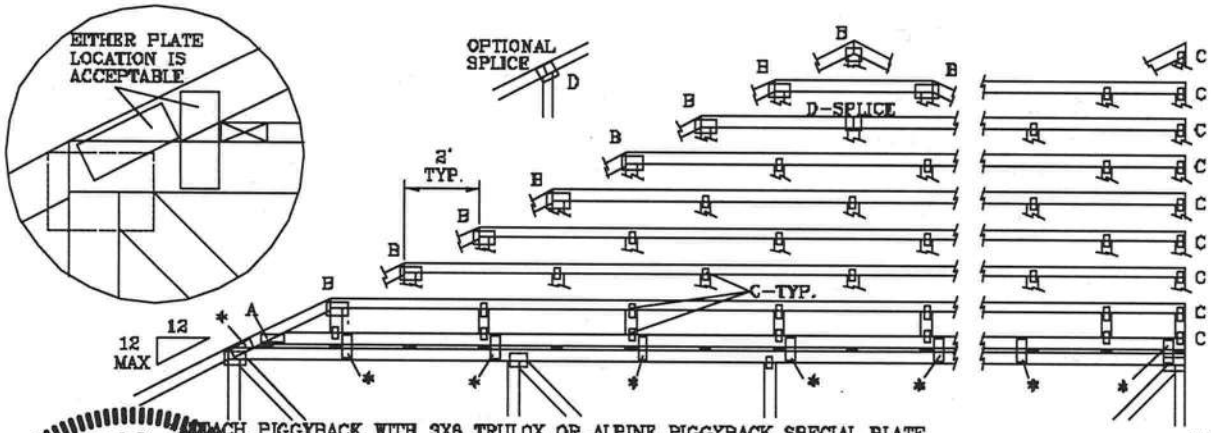

ATTACH PIGGYBACK WITH 3X8 TRULOX OR ALPINE PIGGYBACK SPECIAL PLATE.

* PIGGYBACK SPECIAL PLATE

ATTACH TEETH TO THE PIGGYBACK AT THE TIME OF FABRICATION. ATTACH TO SUPPORTING TRUSS WITH (4) 0.120" X 1.375" NAILS PER FACE PER PLY. APPLY PIGGYBACK SPECIAL PLATE TO EACH TRUSS FACE AND SPACE 4' OC OR LESS.

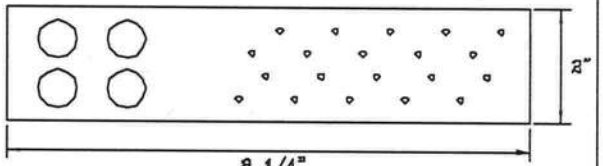

THIS DRAWING REPLACES DRAWINGS 634,016 634,017 & 847,045

JULIUS LEE LICENSED NO. 34869 STATE OF FLORIDA PROFESSIONAL ENGINEER

WARNING: TRUSSES REQUIRE EXTREME CARE IN FABRICATING, HANDLING, SHIPPING, INSTALLING AND BRACING. REFER TO BCSI 1-03 BUILDING COMPONENT SAFETY INFORMATION, PUBLISHED BY TPI (TRUSS PLATE INSTITUTE, 583 D'ONOFRIO DR., SUITE 200, MADISON, WI. 53719) AND WTCA (WOOD TRUSS COUNCIL OF AMERICA, 6300 ENTERPRISE LN, MADISON, WI 53719) FOR SAFETY PRACTICES PRIOR TO PERFORMING THESE FUNCTIONS. UNLESS OTHERWISE INDICATED, TOP CHORD SHALL HAVE PROPERLY ATTACHED STRUCTURAL PANELS AND BOTTOM CHORD SHALL HAVE A PROPERLY ATTACHED RIGID CEILING.

REVIEWED
By julius lee at 11:59 am, Jun 11, 2008

JULIUS LEE'S
CONS. ENGINEERS P.A.
1466 SW 4th AVENUE
DELRAY BEACH, FL. 33444-2161
No: 34869
STATE OF FLORIDA

MAX LOADING
55 PSF AT 1.33 DUR. FAC.
50 PSF AT 1.25 DUR. FAC.
47 PSF AT 1.15 DUR. FAC.
SPACING 24.0"

REF PIGGYBACK
DATE 09/12/07
DRWG MITEK STD PIGGY
-ENG JL

VALLEY TRUSS DETAIL

TOP CHORD 2X4 SP #2 OR SPF #1/#2 OR BETTER.
BOT CHORD 2X3(*) OR 2X4 SP #2N OR SPF #1/#2 OR BETTER.
WEBS 2X4 SP #3 OR BETTER.

* 2X3 MAY BE RIPPED FROM A 2X6 (PITCHED OR SQUARE).

** ATTACH EACH VALLEY TO EVERY SUPPORTING TRUSS WITH: (2) 16d BOX (0.135" X 3.5") NAILS TOE-NAILED FOR FBC 2004 110 MPH, ASCE 7-02 110 MPH WIND OR (3) 16d FOR ASCE 7-02 130 MPH WIND. 15' MEAN HEIGHT, ENCLOSED BUILDING, EXP. C, RESIDENTIAL, WIND TC DL=5 PSF.

UNLESS SPECIFIED ON ENGINEER'S SEALED DESIGN, APPLY 1X4 "T"-BRACE, 80% LENGTH OF WEB, VALLEY WEB, SAME SPECIES AND GRADE OR BETTER, ATTACHED WITH 8d BOX (0.113" X 2.5") NAILS AT 6" OC, OR CONTINUOUS LATERAL BRACING, EQUALLY SPACED, FOR VERTICAL VALLEY WEBS GREATER THAN 7'9".

MAXIMUM VALLEY VERTICAL HEIGHT MAY NOT EXCEED 12'0".

TOP CHORD OF TRUSS BENEATH VALLEY SET MUST BE BRACED WITH:
PROPERLY ATTACHED, RATED SHEATHING APPLIED PRIOR TO VALLEY TRUSS INSTALLATION
OR
PURLINS AT 24" OC OR AS OTHERWISE SPECIFIED ON ENGINEERS' SEALED DESIGN
OR
BY VALLEY TRUSSES USED IN LIEU OF PURLIN SPACING AS SPECIFIED ON ENGINEERS' SEALED DESIGN.

*** NOTE THAT THE PURLIN SPACING FOR BRACING THE TOP CHORD OF THE TRUSS BENEATH THE VALLEY IS MEASURED ALONG THE SLOPE OF THE TOP CHORD.

++ LARGER SPANS MAY BE BUILT AS LONG AS THE VERTICAL HEIGHT DOES NOT EXCEED 12'0".

BOTTOM CHORD MAY BE SQUARE OR PITCHED CUT AS SHOWN.

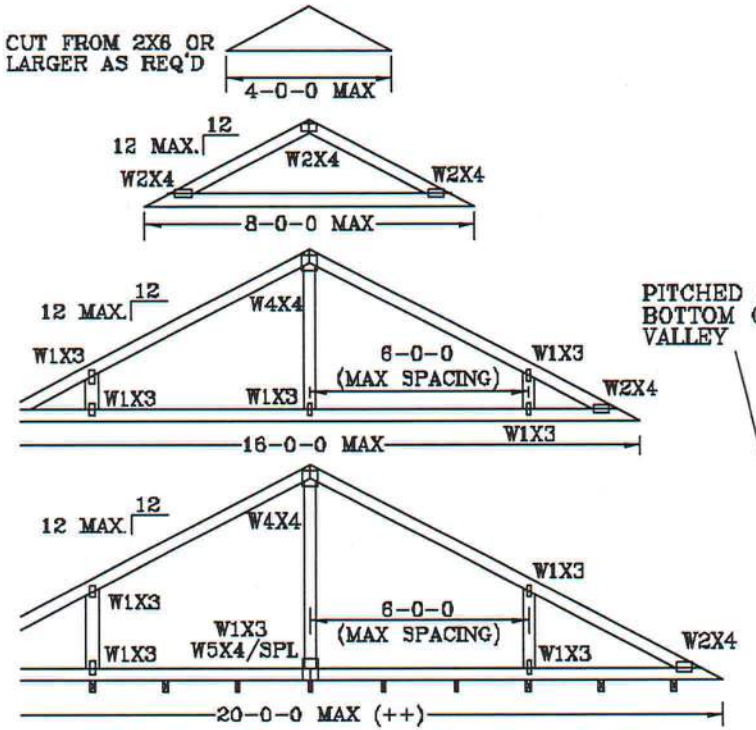

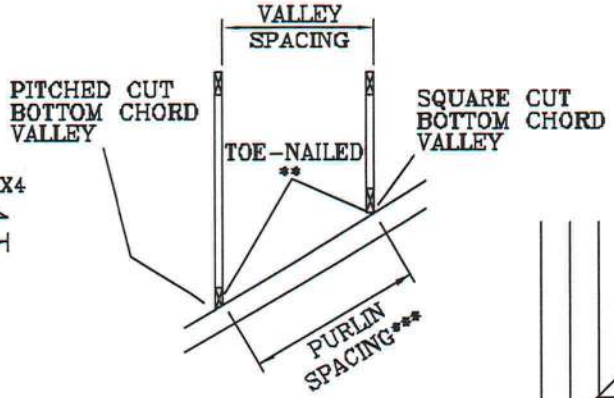

OPTIONAL STUB END DETAIL

OPTIONAL HIP JOINT DETAIL

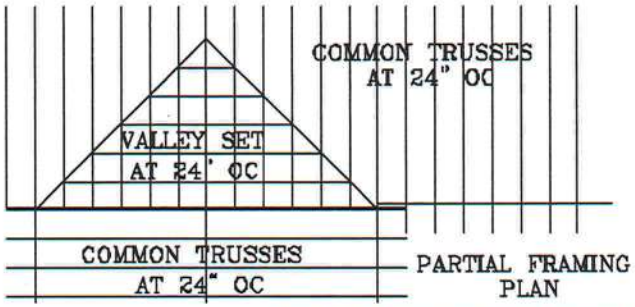

PARTIAL FRAMING PLAN

SUPPORTING TRUSSES AT 24" OC MAXIMUM SPACING.

THIS DRAWING REPLACES DRAWING A105

JULIUS LEE LICENSE NO. 34869 STATE OF FLORIDA PROFESSIONAL ENGINEER

WARNING TRUSSES REQUIRE EXTREME CARE IN FABRICATING, HANDLING, SHIPPING, INSTALLING AND BRACING. REFER TO BCSI 1-03 (BUILDING COMPONENT SAFETY INFORMATION), PUBLISHED BY TPI (TRUSS PLATE INSTITUTE, 583 D'ONOFRIO DR., SUITE 200, MADISON, WI. 53719) AND WTCA (WOOD TRUSS COUNCIL OF AMERICA, 6300 ENTERPRISE LN, MADISON, WI 53719) FOR SAFETY PRACTICES PRIOR TO PERFORMING THESE FUNCTIONS. UNLESS OTHERWISE INDICATED, TOP CHORD SHALL HAVE PROPERLY ATTACHED STRUCTURAL PANELS AND BOTTOM CHORD SHALL HAVE A PROPERLY ATTACHED RIGID CEILING.

REVIEWED
By julius lee at 11:59 am, Jun 11, 2008

JULIUS LEE'S
CONS. ENGINEERS P.A.
1455 SW 4th AVENUE
DELRAY BEACH, FL 33444-2161

No: 34869
STATE OF FLORIDA

TC LL	20	20	PSF	
TC DL	7	15	PSF	
BC DL	5	5	PSF	
BC LL	0	0	PSF	
TOT. LD.	32	40	PSF	
DUR.FAC.	1.25	1.25		
SPACING		24"		

REF	VALLEY DETAIL
DATE	11/26/03
DRWG	VALTRUSS1103
-ENG	JL

TOE-NAIL DETAIL

TOE-NAILS TO BE DRIVEN AT AN ANGLE OF APPROXIMATELY THIRTY DEGREES WITH THE PIECE AND STARTED APPROXIMATELY ONE-THIRD THE LENGTH OF THE NAIL FROM THE END OF THE MEMBER.

PER ANSI/AF&PA NDS-2001 SECTION 12.4.1 – EDGE DISTANCE, END DISTANCE, SPACING: "EDGE DISTANCES, END DISTANCES AND SPACINGS FOR NAILS AND SPIKES SHALL BE SUFFICIENT TO PREVENT SPLITTING OF THE WOOD."

THE NUMBER OF TOE-NAILS TO BE USED IN A SPECIFIC APPLICATION IS DEPENDENT UPON PROPERTIES FOR THE CHORD SIZE, LUMBER SPECIES, AND NAIL TYPE. PROPER CONSTRUCTION PRACTICES AS WELL AS GOOD JUDGEMENT SHOULD DETERMINE THE NUMBER OF NAILS TO BE USED.

THIS DETAIL DISPLAYS A TOE-NAILED CONNECTION FOR JACK FRAMING INTO A SINGLE OR DOUBLE PLY SUPPORTING GIRDER.

MAXIMUM VERTICAL RESISTANCE OF 16d (0.162"X3.5") COMMON TOE-NAILS

NUMBER OF TOE-NAILS	SOUTHERN PINE		DOUGLAS FIR-LARCH		HEM-FIR		SPRUCE PINE FIR	
	1 PLY	2 PLIES	1 PLY	2 PLIES	1 PLY	2 PLIES	1 PLY	2 PLIES
2	197#	256#	181#	234#	156#	203#	154#	199#
3	296#	383#	271#	351#	234#	304#	230#	298#
4	394#	511#	361#	468#	312#	406#	307#	397#
5	493#	639#	452#	585#	390#	507#	384#	496#

ALL VALUES MAY BE MULTIPLIED BY APPROPRIATE DURATION OF LOAD FACTOR.

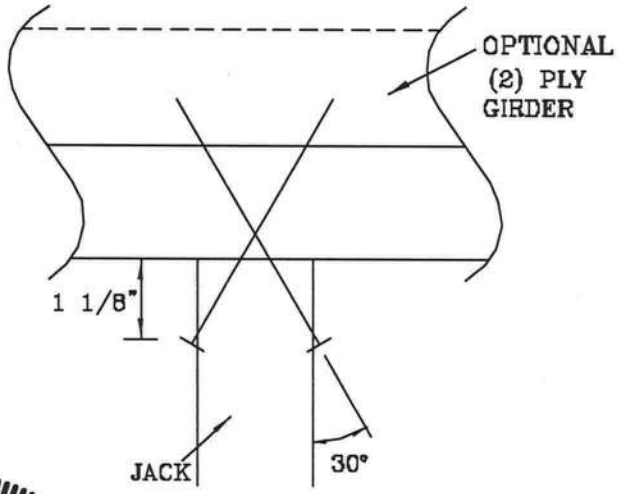

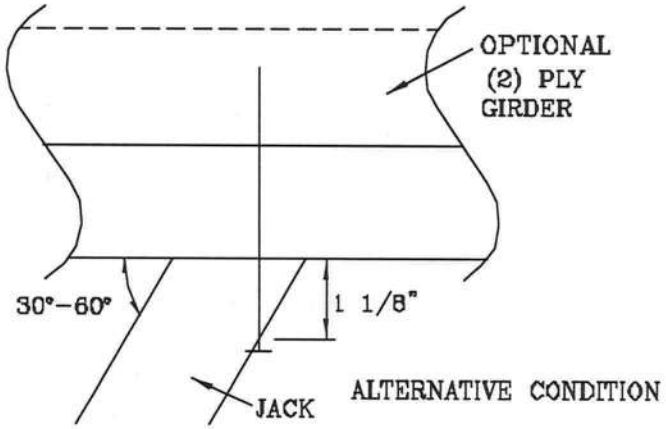

THIS DRAWING REPLACES DRAWING 784040

JULIUS LEE LICENSED NO. 34869 STATE OF FLORIDA PROFESSIONAL ENGINEER

WARNING TRUSSES REQUIRE EXTREME CARE IN FABRICATING, HANDLING, SHIPPING, INSTALLING AND BRACING. REFER TO BCSI 1-03 (BUILDING COMPONENT SAFETY INFORMATION), PUBLISHED BY TPI (TRUSS PLATE INSTITUTE, 583 D'ONOFRIO DR, SUITE 200, MADISON, WI 53719) AND WTCA (WOOD TRUSS COUNCIL OF AMERICA, 6300 ENTERPRISE LN, MADISON, WI 53719) FOR SAFETY PRACTICES PRIOR TO PERFORMING THESE FUNCTIONS. UNLESS OTHERWISE INDICATED, TOP CHORD SHALL HAVE PROPERLY ATTACHED STRUCTURAL PANELS AND BOTTOM CHORD SHALL HAVE A PROPERLY ATTACHED RIGID CEILING.

REVIEWED
By julius lee at 11:59 am, Jun 11, 2008

JULIUS LEE'S
CONS. ENGINEERS P.A.
1455 SW 4th AVENUE
DELRAY BEACH, FL 33444-2161
No: 34869
STATE OF FLORIDA

TC LL	PSF	REF TOE-NAIL
TC DL	PSF	DATE 09/12/07
BC DL	PSF	DRWG CNTONAIL1103
BC LL	PSF	-ENG JL
TOT. LD.	PSF	
DUR. FAC.	1.00	
SPACING		

1/2" DIAMETER BOLT SPACING FOR LOAD APPLIED PARALLEL TO GRAIN.

* GRADE AND SPECIES AS SPECIFIED ON THE ALPINE DESIGN.

BOLT HOLES SHALL BE A MINIMUM OF 1/32" TO A MAXIMUM OF 1/16" LARGER THAN BOLT DIAMETER.

TYPICAL LOCATION OF 1/2" DIAMETER THRU BOLTS. BOLT QUANTITIES AS NOTED ON SEALED DESIGN MUST BE APPLIED IN ONE OF THE PATTERNS SHOWN BELOW.

WASHERS REQUIRED UNDER BOLT HEAD AND NUT

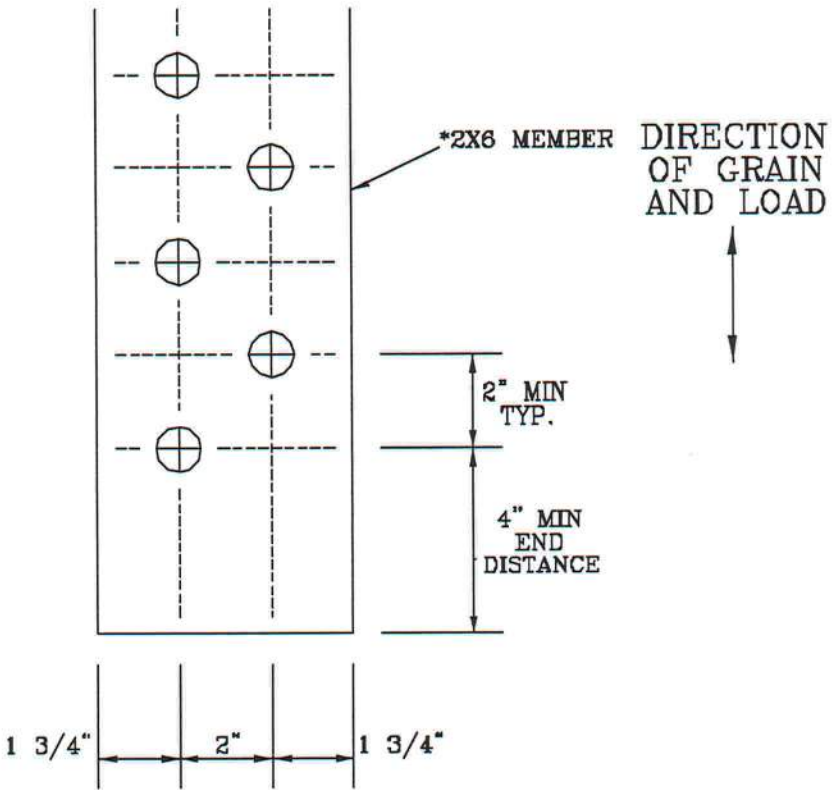

2X6 DETAIL

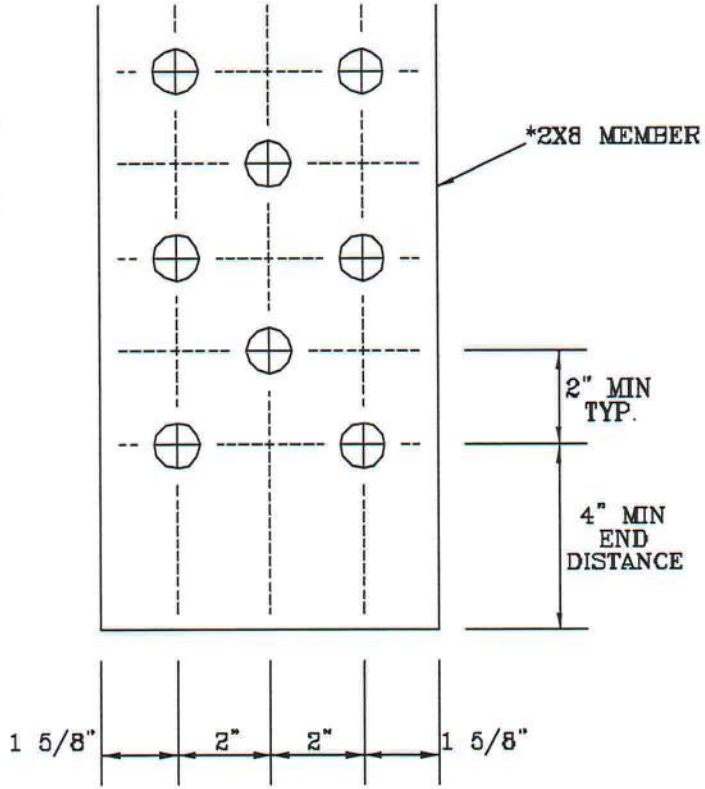

2X8 DETAIL

THIS DRAWING REPLACES DRAWING A626.016

JULIUS LEE LICENSE NO. 34869 STATE OF FLORIDA PROFESSIONAL ENGINEER

WARNING TRUSSES REQUIRE EXTREME CARE IN FABRICATING, HANDLING, SHIPPING, INSTALLING AND BRACING. REFER TO BCSI (1-03 BUILDING COMPONENT SAFETY INFORMATION), PUBLISHED BY TPI (TRUSS PLATE INSTITUTE, 583 D'ONOFRIO DR., SUITE 201, MADISON, WI. 53719) AND WTCA (WOOD TRUSS COUNCIL AMERICA, 6300 ENTERPRISE LN, MADISON, WI 53719) FOR SAFETY PRACTICES PRIOR TO PERFORMING THESE FUNCTIONS. UNLESS OTHERWISE INDICATED, TOP CHORD SHALL HAVE PROPERLY ATTACHED STRUCTURAL PANELS AND BOTTOM CHORD SHALL HAVE A PROPERLY ATTACHED RIGID CEILING.

REVIEWED
By julius lee at 11:59 am, Jun 11, 2008

JULIUS LEE'S
CONS. ENGINEERS P.A.
1450 SW 4th AVENUE
DELRAY BEACH, FL 33444-2161

No: 34869
STATE OF FLORIDA

TC LL	PSF	
TC DL	PSF	
BC DL	PSF	
BC LL	PSF	
TOT. LD.	PSF	
DUR. FAC.		
SPACING		

REF	BOLT SPACING
DATE	11/26/03
DRWG	CNBOLTSP1103
-ENG	JL

TRULOX CONNECTION DETAIL

11 GAUGE (0.120" X 1.375") NAILS REQUIRED FOR TRULOX PLATE ATTACHMENT. FILL ROWS COMPLETELY WHERE SHOWN (⊕).

* NAILS MAY BE OMITTED FROM THESE ROWS.

THIS DETAIL MAY BE USED WITH SO. PINE, DOUGLAS-FIR OR HEM-FIR CHORDS WITH A MINIMUM 1.00 DURATION OF LOAD OR SPRUCE-PINE-FIR CHORDS WITH A MINIMUM 1.15 DURATION OF LOAD. CHORD SIZE OF BOTH TRUSSES MUST EXCEED THE TRULOX PLATE WIDTH.

TRULOX PLATE IS CENTERED ON THE CHORDS AND BENT BETWEEN NAIL ROWS.

REFER TO ENGINEER'S SEALED DESIGN REFERENCING THIS DETAIL FOR LUMBER, PLATES, AND OTHER INFORMATION NOT SHOWN.

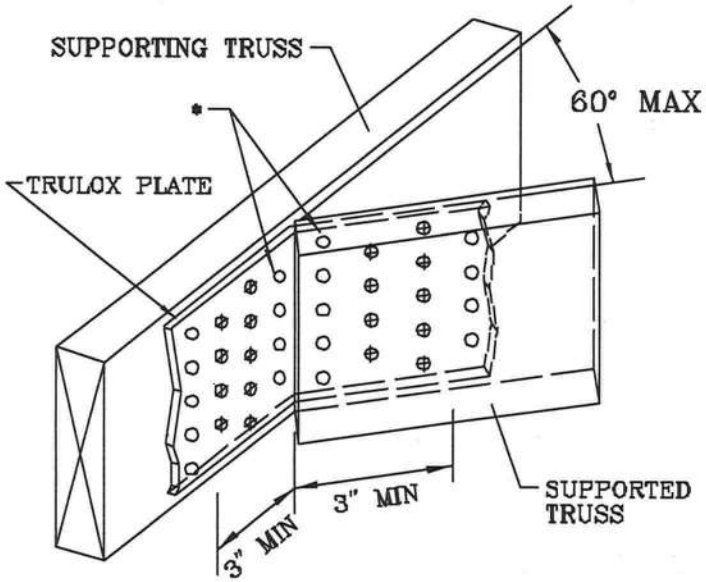

MINIMUM 3X6 TRULOX PLATE

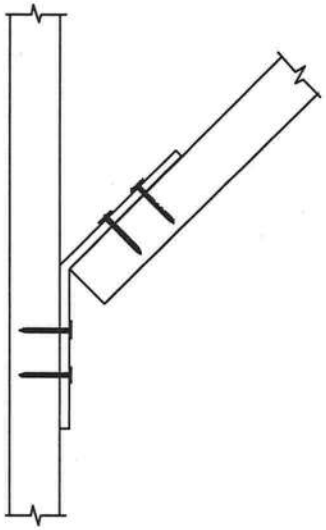

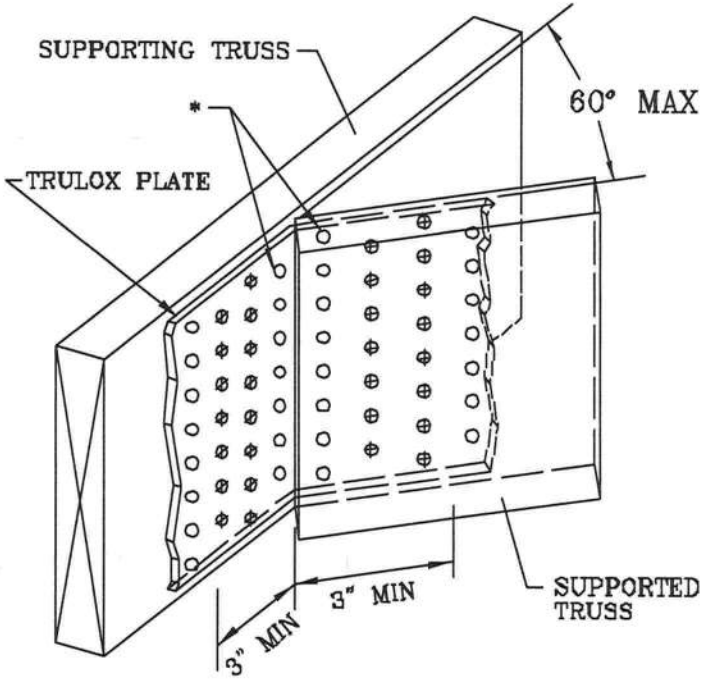

MINIMUM 5X6 TRULOX PLATE

TRULOX PLATE SIZE	REQUIRED NAILS PER TRUSS	MAXIMUM LOAD UP OR DOWN
3X6	9	350#
5X6	15	990#

REVIEWED
By julius lee at 11:58 am, Jun 11, 2008

JULIUS LEE LICENSE NO. 34869 STATE OF FLORIDA PROFESSIONAL ENGINEER

THIS DRAWING REPLACES DRAWINGS 1,158,989 1,158,989/R 1,154,844 1,152,217 1,152,017 1,159,154 & 1,151,524

=WARNING= TRUSSES REQUIRE EXTREME CARE IN FABRICATING, HANDLING, SHIPPING, INSTALLING AND BRACING. REFER TO BCSI 1-03 (BUILDING COMPONENT SAFETY INFORMATION), PUBLISHED BY TPI (TRUSS PLATE INSTITUTE, 583 D'ONOFRIO DR., SUITE 200, MADISON, WI 53719) AND WTCA (WOOD TRUSS COUNCIL OF AMERICA, 6300 ENTERPRISE LN, MADISON, WI 53719) FOR SAFETY PRACTICES PRIOR TO PERFORMING THESE FUNCTIONS. UNLESS OTHERWISE INDICATED, TOP CHORD SHALL HAVE PROPERLY ATTACHED STRUCTURAL PANELS AND BOTTOM CHORD SHALL HAVE A PROPERLY ATTACHED RIGID CEILING.

JULIUS LEE'S
CONS. ENGINEERS P.A.
1455 SW 4th AVENUE
DELRAY BEACH, FL 33444-2161

No: 34869
STATE OF FLORIDA

REF	TRULOX
DATE	11/26/03
DRWG	CNTRULOX1103
-ENG	JL

STRONG BACK DETAIL
SYSTEM-42 OR FLAT TRUSS

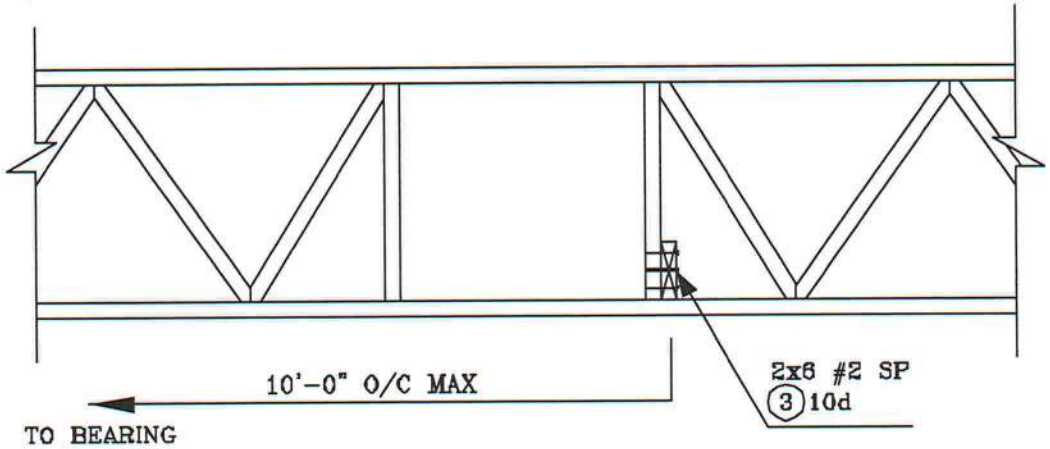

ALTERNATE DETAIL FOR STRONG BACK WITH VERTICAL NOT LINING UP

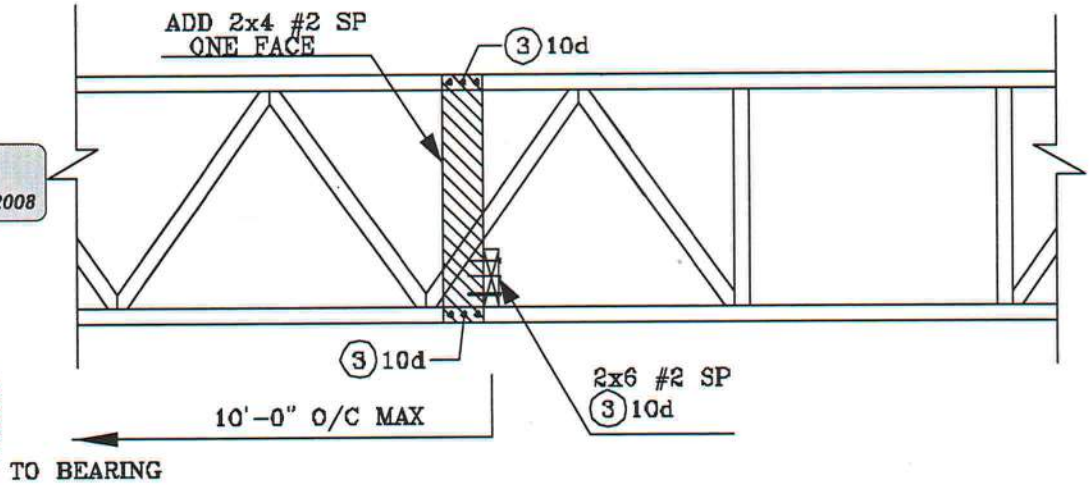

REVIEWED
By julius lee at 11:58 am, Jun 11, 2008

JULIUS LEE
LICENSE
NO. 34869
STATE OF
FLORIDA
PROFESSIONAL ENGINEER

JULIUS LEE'S
CONS. ENGINEERS P.A.
1456 SW 4th AVENUE
DELRAY BEACH, FL 33444-2161

No: 34869
STATE OF FLORIDA

MULTIPLE-MEMBER CONNECTIONS FOR SIDE-LOADED BEAMS

Maximum Uniform Load Applied to Either Outside Member (PLF)

Connector Type	Number of Rows	Connector On-Center Spacing	Connector Pattern					
			Assembly A 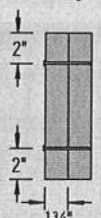	Assembly B 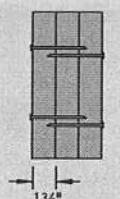	Assembly C 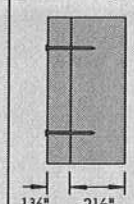	Assembly D 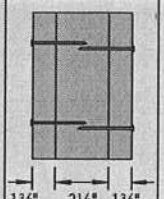	Assembly E 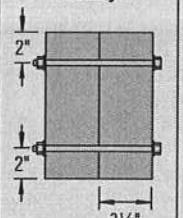	Assembly F 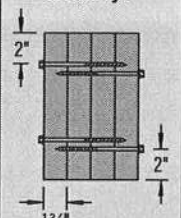
			3½" 2-ply	5¼" 3-ply	5¼" 2-ply	7" 3-ply	7" 2-ply	7" 4-ply
10d (0.128" x 3") Nail(1)	2	12"	370	***280***	280	***245***		
	3	12"	555	***415***	415	***370***		
½" A307 Through Bolts(2)(4)	2	24"	505	380	520	465	860	340
		19.2"	635	475	655	580	1,075	425
		16"	760	570	785	695	1,290	505
SDS ¼" x 3½"(4)	2	24"	680	***510***	510	***455***		
		19.2"	850	***640***	640	***565***		
		16"	1,020	***765***	765	***680***		
SDS ¼" x 6"(3)(4)	2	24"				***455***	***465***	***455***
		19.2"				***565***	***580***	***565***
		16"				***680***	***695***	***680***
USP WS35 (4)	2	24"	480	***360***	360	***320***		
		19.2"	600	***450***	450	***400***		
		16"	715	***540***	540	***480***		
USP WS6 (3)(4)	2	24"				***350***	***525***	***350***
		19.2"				***440***	***660***	***440***
		16"				***525***	***790***	***525***
3⅜" TrussLok(4)	2	24"	635	***475***	475	***425***		
		19.2"	795	***595***	595	***530***		
		16"	955	***715***	715	***635***		
5" TrussLok(4)	2	24"		***500***	500	***445***	***480***	***445***
		19.2"		***625***	625	***555***	***600***	***555***
		16"		***750***	750	***665***	***725***	***665***
6¾" TrussLok(4)	2	24"				445	620	445
		19.2"				555	770	555
		16"				665	925	665

(1) Nailed connection values may be doubled for 6" on-center or tripled for 4" on-center nail spacing.

(2) Washers required. Bolt holes to be 9/16" maximum.

(3) 6" SDS or WS screws can be used with Parallam® PSL and Microllam® LVL, but are not recommended for TimberStrand® LSL.

(4) 24" on-center bolted and screwed connection values may be doubled for 12" on-center spacing.

General Notes

- Connections are based on NDS® 2005 or manufacturer's code report.
- Use specific gravity of 0.5 when designing lateral connections.
- Values listed are for 100% stress level. Increase 15% for snow-loaded roof conditions or 25% for non-snow roof conditions, where code allows.
- ***Bold Italic*** cells indicate **Connector Pattern** must be installed on both sides. Stagger fasteners on opposite side of beam by ½ the required **Connector Spacing**.
- Verify adequacy of beam in allowable load tables on pages 16–33.
- 7" wide beams should be side-loaded only when loads are applied to both sides of the members (to minimize rotation).
- Minimum end distance for bolts and screws is 6".
- Beams wider than 7" require special consideration by the design professional.

Uniform Load Design Example

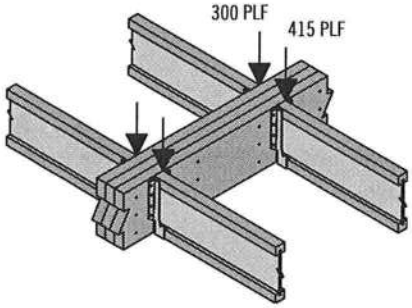

First, check the allowable load tables on pages 16–33 to verify that three pieces can carry the total load of 715 plf with proper live load deflection criteria. Maximum load applied to either outside member is 415 plf. For a 3-ply 1¾" assembly, two rows of 10d (0.128" x 3") nails at 12" on-center is good for only 280 plf. Therefore, use three rows of 10d (0.128" x 3") nails at 12" on-center (good for 415 plf).

Alternates:
Two rows of ½" bolts or SDS ¼" x 3½" screws at 19.2" on-center.

Point Load—Maximum Point Load Applied to Either Outside Member (lbs)

Connector Type	Number of Connectors	Connector Pattern					
		Assembly A	Assembly B	Assembly C	Assembly D	Assembly E	Assembly F
		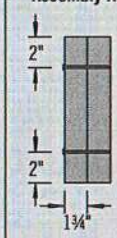	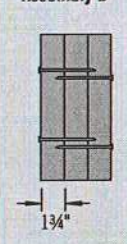	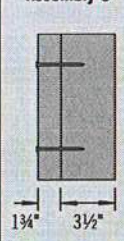	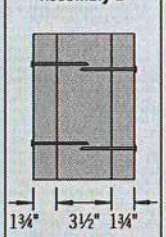	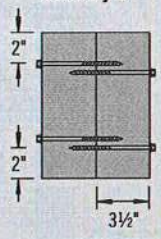	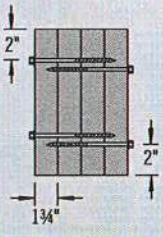
		3½" 2-ply	5¼" 3-ply	5¼" 2-ply	7" 3-ply	7" 2-ply	7" 4-ply
10d (0.128" x 3") Nail	6	1,110	*835*	835	*740*		
	12	2,225	*1,670*	1,670	*1,485*		
	18	3,335	*2,505*	2,505	*2,225*		
	24	4,450	*3,335*	3,335	*2,965*		
SDS Screws ¼" x 3½" or WS35 ¼" x 6" or WS6(1)	4	1,915	1,435(4)	1,435	*1,275*	*1,860(2)*	*1,405(2)*
	6	2,870	2,150 (4)	2,150	*1,915*	*2,785(2)*	*2,110(2)*
	8	3,825	2,870 (4)	2,870	*2,550*	*3,715(2)*	*2,810(2)*
3⅜" or 5" TrussLok™	4	2,545	1,910 (4)	1,910	*1,695*	*1,925(3)*	*1,775(3)*
	6	3,815	2,860 (4)	2,860	*2,545*	*2,890(3)*	*2,665(3)*
	8	5,090	3,815 (4)	3,815	*3,390*	*3,855(3)*	*3,550(3)*

(1) 6" SDS or WS screws can be used with Parallam® PSL and Microllam® LVL, but are not recommended for TimberStrand® LSL.

See General Notes on page 38

(2) 6" long screws required.

(3) 5" long screws required.

(4) 3½" and 3⅝" long screws must be installed on both sides.

Connections

4 or 6 or Screw Connection

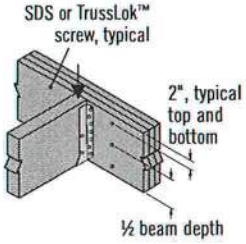

8 Screw Connection

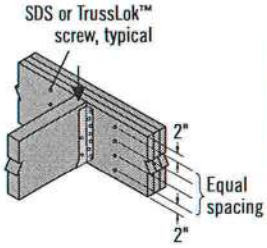

Nail Connection

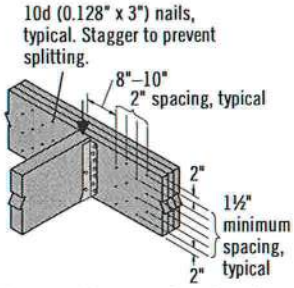

There must be an equal number of nails on each side of the connection

Point Load Design Example

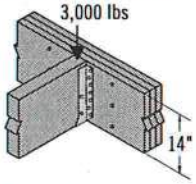

First, verify that a 3-ply 1¾" x 14" beam is capable of supporting the 3,000 lb point load as well as all other loads applied. The 3,000 lb point load is being transferred to the beam with a face mount hanger. For a 3-ply 1¾" assembly, eight 3⅜" TrussLok™ screws are good for 3,815 lbs with a face mount hanger.

MULTIPLE-MEMBER CONNECTIONS FOR TOP-LOADED BEAMS

1¾" Wide Pieces

- Minimum of three rows of 10d (0.128" x 3") nails at 12" on-center.
- Minimum of four rows of 10d (0.128" x 3") nails at 12" on-center for 14" or deeper.
- If using 12d–16d (0.148"–0.162" diameter) nails, the number of nailing rows may be reduced by one.
- Minimum of two rows of SDS, WS, or TrussLok™ screws at 16" on-center. Use 3⅜" minimum length with two or three plies; 5" minimum for 4-ply members. 6" SDS and WS screws are not recommended for use with TimberStrand® LSL. For 3- or 4-ply members, connectors must be installed on both sides. Stagger fasteners on opposite side of beam by ½ of the required connector spacing.
- Load must be applied evenly across entire beam width. Otherwise, use connections for side-loaded beams.

3½" Wide Pieces

- Minimum of two rows of SDS, WS, or TrussLok™ screws, 5" minimum length, at 16" on-center. 6" SDS and WS screws are not recommended for use with TimberStrand® LSL. Connectors must be installed on both sides. Stagger fasteners on opposite side of beam by ½ of the required connector spacing.
- Load must be applied evenly across entire beam width. Otherwise, use connections for side-loaded beams.
- Minimum of two rows of ½" bolts at 24" on-center staggered.

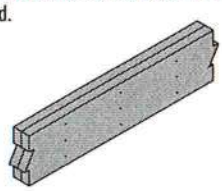

Multiple pieces can be nailed or bolted together to form a header or beam of the required size, up to a maximum width of 7"