DATE 11/16/2005

Columbia County Building Permit

This Permit Expires One Year From the Date of Issue

PERMIT
000023853

APPLICANT SUSAN FAIR PHONE 752-1711

ADDRESS 180 NW AMENITY COURT LAKE CITY FL 32055

OWNER CORNERSTONE DEVELOPMENT GROUP PHONE 752-1711

ADDRESS 276 SE GREGORY GLEN LAKE CITY FL 32025

CONTRACTOR BRYAN ZECHER PHONE 752-8653

LOCATION OF PROPERTY BAYA, TR ON OLD COUNTRY CLUB RD, TL ON GREGORY GLEN, 6TH LOT ON RIGHT

TYPE DEVELOPMENT SFD,UTILITY ESTIMATED COST OF CONSTRUCTION 75000.00

HEATED FLOOR AREA 1500.00 TOTAL AREA 1974.00 HEIGHT .00 STORIES 1

FOUNDATION CONC WALLS FRAMED ROOF PITCH 6/12 FLOOR SLAB

LAND USE & ZONING RSF-2 MAX. HEIGHT 18

Minimum Set Back Requirments: STREET-FRONT 25.00 REAR 15.00 SIDE 10.00

NO. EX.D.U. 0 FLOOD ZONE X DEVELOPMENT PERMIT NO.

PARCEL ID 15-4S-17-08359-126 SUBDIVISION COUNTRY SIDE ESTATES

LOT 26 BLOCK PHASE UNIT TOTAL ACRES

000000886		CBC054575	Susan Fair	
Culvert Permit No.	Culvert Waiver	Contractor's License Number	Applicant/Owner/Contractor	
CULVERT	05-1064-N	BK	JH	Y
Driveway Connection	Septic Tank Number	LU & Zoning checked by	Approved for Issuance	New Resident

COMMENTS: ONE FOOT ABOVE THE ROAD, NOC ON FILE

ALTERNATE TERMIT TREATMENT RECEIVED, COMPACTION TEST RECEIVED

Check # or Cash 2074

FOR BUILDING & ZONING DEPARTMENT ONLY

Temporary Power _____ date/app. by Foundation _____ date/app. by Monolithic _____ date/app. by (footer/Slab)

Under slab rough-in plumbing _____ date/app. by Slab _____ date/app. by Sheathing/Nailing _____ date/app. by

Framing _____ date/app. by Rough-in plumbing above slab and below wood floor _____ date/app. by

Electrical rough-in _____ date/app. by Heat & Air Duct _____ date/app. by Peri. beam (Lintel) _____ date/app. by

Permanent power _____ date/app. by C.O. Final _____ date/app. by Culvert _____ date/app. by

M/H tie downs, blocking, electricity and plumbing _____ date/app. by Pool _____ date/app. by

Reconnection _____ date/app. by Pump pole _____ date/app. by Utility Pole _____ date/app. by

M/H Pole _____ date/app. by Travel Trailer _____ date/app. by Re-roof _____ date/app. by

BUILDING PERMIT FEE $ 375.00 CERTIFICATION FEE $ 9.87 SURCHARGE FEE $ 9.87

MISC. FEES $ .00 ZONING CERT. FEE $ 50.00 FIRE FEE $ .00 WASTE FEE $

FLOOD DEVELOPMENT FEE $ FLOOD ZONE FEE $ n/c CULVERT FEE $ 25.00 **TOTAL FEE** 469.74

INSPECTORS OFFICE [signature] CLERKS OFFICE CH

NOTICE: IN ADDITION TO THE REQUIREMENTS OF THIS PERMIT, THERE MAY BE ADDITIONAL RESTRICTIONS APPLICABLE TO THIS PROPERTY THAT MAY BE FOUND IN THE PUBLIC RECORDS OF THIS COUNTY. AND THERE MAY BE ADDITIONAL PERMITS REQUIRED FROM OTHER GOVERNMENTAL ENTITIES SUCH AS WATER MANAGEMENT DISTRICTS, STATE AGENCIES, OR FEDERAL AGENCIES.

"WARNING TO OWNER: YOUR FAILURE TO RECORD A NOTICE OF COMMENCEMENT MAY RESULT IN YOUR PAYING TWICE FOR IMPROVEMENTS TO YOUR PROPERTY. IF YOU INTEND TO OBTAIN FINANCING, CONSULT WITH YOUR LENDER OR AN ATTORNEY BEFORE RECORDING YOUR NOTICE OF COMMENCEMENT."

This Permit Must Be Prominently Posted on Premises During Construction

PLEASE NOTIFY THE COLUMBIA COUNTY BUILDING DEPARTMENT AT LEAST 24 HOURS IN ADVANCE OF EACH INSPECTION, IN ORDER THAT IT MAY BE MADE WITHOUT DELAY OR INCONVIENCE, PHONE 758-1008. THIS PERMIT IS NOT VALID UNLESS THE WORK AUTHORIZED BY IT IS COMMENCED WITHIN 6 MONTHS AFTER ISSUANCE.

The Issuance of this Permit Does Not Waive Compliance by Permittee with Deed Restrictions.

Mark Disosway, P.E.
POB 868, Lake City, FL 32056, Ph (386) 754-5419, Fax (386) 269-4871

October 19, 2005

Building Department

Re: Cornerstone Development / Zecher Bryan, The Samuel Model, Lot 26, Countryside Estates, Lake City, FL

Dear Building Official:

Please accept this letter as addendum to the plans for the above referenced house to change all references to FBC 2001 to FBC 2004.

- The plan was drawn prior to the effective date for FBC 2004, 01 October 2005.
- Since the wind load requirements of FBC 2004 remain basically unchanged from FBC 2001 there are no structural changes required to this plan.

Mark Disosway
19OCT05

Mark Disosway, PE
Florida Registered Professional Engineer

Cc: Cornerstone Development

Mark Disosway, P.E.
POB 868, Lake City, FL 32056, Ph (386) 754-5419, Fax (386) 269-4871

November 09, 2005

Building Department

Re: Cornerstone Development / Zecher Bryan, The Samuel Model, Lot 26, Countryside Estates, Lake City, FL

Dear Building Official:

Please accept this letter as addendum to the plans for the above referenced house to change all references to FBC 2001 to FBC 2004.

- The plan was drawn prior to the effective date for FBC 2004, 01 October 2005.
- Since the wind load requirements of FBC 2004 remain basically unchanged from FBC 2001 there are no structural changes required to this plan.

09NOV05

Mark Disosway, PE
Florida Registered Professional Engineer

Cc Cornerstone Development / Zecher Bryan

X

Opaque Inswing Unit

COP-WL-JH4101-02

WOOD-EDGE STEEL DOORS

APPROVED ARRANGEMENT:

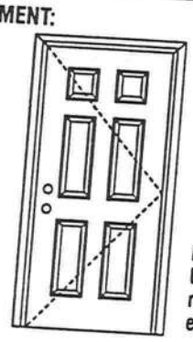

Note:
Units of other sizes are covered by this report as long as the panel used does not exceed 3'0" x 6'8".

Warnock Hersey

Test Data Review Certificate #3026447A and COP/Test Report Validation Matrix #3026447A-001 provides additional information - available from the ITS/WH website (www.etlsemko.com), the Masonite website (www.masonite.com) or the Masonite technical center.

Single Door
Maximum unit size = 3'0" x 6'8"

Design Pressure

+66.0/-66.0
limited water unless special threshold design is used

Large Missile Impact Resistance

Hurricane protective system (shutters) is NOT REQUIRED.

Actual design pressure and impact resistant requirements for a specific building design and geographic location is determined by ASCE 7-national state or local building codes specify the edition required.

MINIMUM ASSEMBLY DETAIL:

Compliance requires that minimum assembly details have been followed – see MAD-WL-MA0001-02

MINIMUM INSTALLATION DETAIL:

Compliance requires that minimum installation details have been followed – see MID-WL-MA0001-02.

APPROVED DOOR STYLES:

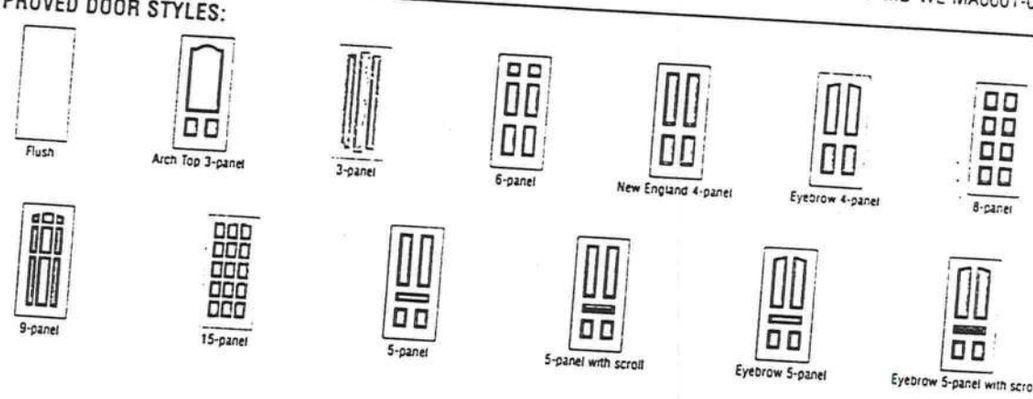

Johnson™ EntrySystems

June 17, 2002

PREMDOR Collection Premium Quality Doors

Exclusively from Masonite® Masonite International Corporation

X
Opaque Inswing Unit

COP-WL-JH4101-02

WOOD-EDGE STEEL DOORS

CERTIFIED TEST REPORTS:

NCTL 210-2185-1, 2, 3

Certifying Engineer and License Number: Barry D. Portney, P.E. / 16258.

Unit Tested in Accordance with Miami-Dade BCCO PA201, PA202 and PA203.

Door panels constructed from 26-gauge 0.017" thick steel skins. Both stiles constructed from wood. Top end rails constructed of 0.041" steel. Bottom end rails constructed of 0.021" steel. Interior cavity of slab filled with rigid polyurethane foam core.

Frame constructed of wood with an extruded aluminum threshold.

PRODUCT COMPLIANCE LABELING:

TESTED IN ACCORDANCE WITH
MIAMI-DADE BCCO
PA201, PA202 & PA203

COMPANY NAME
CITY, STATE

To the best of my knowledge and ability the above side-hinged exterior door unit conforms to the requirements of the 2001 Florida Building Code, Chapter 17 (Structural Tests and Inspections).

Kurt L Balthazor

State of Florida, Professional Engineer
Kurt Balthazor, P.E. – License Number 56533

Warnock Hersey

Test Data Review Certificate #3026447A and COP/Test Report Validation Matrix #3026447A-001 provides additional information - available from the ITS/WH website (www.etlsemko.com), the Masonite website (www.masonite.com) or the Masonite technical center.

Johnson™ EntrySystems

June 17, 2002
Our continuing program of product improvement makes specifications, design and product detail subject to change without notice.

PREMDOR Collection Premium Quality Doors

Exclusively from Masonite®
Masonite International Corporation

XX
Glazed Inswing Unit

COP-WL-JH4142-02

WOOD-EDGE STEEL DOORS

APPROVED ARRANGEMENT:

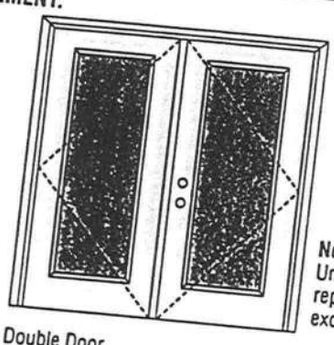

Double Door
Maximum unit size = 6'0" x 6'8"

Note:
Units of other sizes are covered by this report as long as the panels used do not exceed 3'0" x 6'8".

Warnock Hersey

Test Data Review Certificate #3026447A and COP/Test Report Validation Matrix #3026447A-001 provides additional information - available from the ITS/WH website (www.etlsemko.com), the Masonite website (www.masonite.com) or the Masonite technical center

Design Pressure
+40.5/-40.5
Limited water unless special threshold design is used

Large Missile Impact Resistance
Hurricane protective system (shutters) is REQUIRED.

Actual design pressure and impact resistant requirements for a specific building design and geographic location is determined by ASCE 7-national state or local building codes specify the edition required.

MINIMUM ASSEMBLY DETAIL:

Compliance requires that minimum assembly details have been followed – see MAD-WL-MA0002-02 and MAD-WL-MA0041-02.

MINIMUM INSTALLATION DETAIL:

Compliance requires that minimum installation details have been followed – see MID-WL-MA0002-02

APPROVED DOOR STYLES:

1/4 GLASS:


100 Series

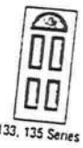
133, 135 Series


136 Series


680 Series


822 Series

1/2 GLASS:


105 Series*


106, 160 Series*

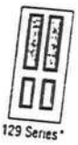
129 Series*

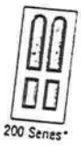
200 Series*

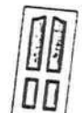
12 R/L, 23 R/L, 24 R/L Series*


107 Series*


108 Series


304 Series

*This glass kit may also be used in the following door styles: 5-panel; 5-panel with scroll; Eyebrow 5-panel; Eyebrow 5-panel with scroll.

Johnson™ EntrySystems

June 17, 2002
Our continuing program of product improvement makes specifications, design and product detail subject to change without notice.

PREMDOR Collection Premium Quality Doors

Exclusively from Masonite
Masonite International Corporation

XX
Glazed Inswing Unit

COP-WL-JH4142-02

WOOD-EDGE STEEL DOORS

APPROVED DOOR STYLES:

3/4 GLASS:


404 Series


410 Series


450 Series

FULL GLASS:


109 Series


114, 120, 122 Series


152 Series

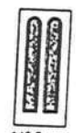
149 Series


300 Series

CERTIFIED TEST REPORTS:

NCTL 210-1897-7, 8, 9, 10, 11, 12; NCTL 210-1861-4, 5, 6, 10, 11, 12; NCTL 210-2185-1, 2, 3

Certifying Engineer and License Number: Barry D. Portney, P.E. / 16258.

Unit Tested in Accordance with Miami-Dade BCCO PA202.

Evaluation report NCTL-210-2794-1

Door panels constructed from 26-gauge 0.017" thick steel skins. Both stiles constructed from wood. Top end rails constructed of 0.041" steel. Bottom end rails constructed of 0.021" steel. Interior cavity of slab filled with rigid polyurethane foam core. Slab glazed with insulated glass mounted in a rigid plastic lip lite surround.

Frame constructed of wood with an extruded aluminum threshold.

PRODUCT COMPLIANCE LABELING:

TESTED IN
ACCORDANCE WITH
MIAMI-DADE BCCO PA202

COMPANY NAME
CITY, STATE

To the best of my knowledge and ability the above side-hinged exterior door unit conforms to the requirements of the 2001 Florida Building Code, Chapter 17 (Structural Tests and Inspections).

Kurt L Balthazor

State of Florida, Professional Engineer
Kurt Balthazor, P.E. – License Number 56533

Warnock Hersey

Test Data Review Certificate #3026447A and COP/Test Report Validation Matrix #3026447A-001 provides additional information - available from the ITS/WH website (www.etlsemko.com), the Masonite website (www.masonite.com) or the Masonite technical center.

Johnson™ EntrySystems

June 17, 2002
Our continuing program of product improvement makes specifications, design and product detail subject to change without notice.

PREMDOR Collection Premium Quality Doors

Exclusively from Masonite®
Masonite International Corporation

XX
Glazed Inswing Unit

COP-WL-JH4142-02

WOOD-EDGE STEEL DOORS

APPROVED ARRANGEMENT:

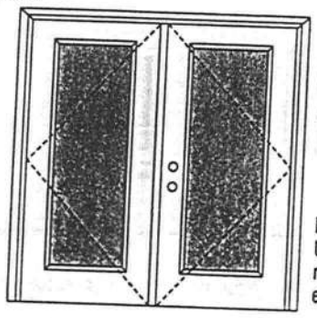

Warnock Hersey

Test Data Review Certificate #3026447A and COP/Test Report Validation Matrix #3026447A-001 provides additional information - available from the ITS/WH website (www.etlsemko.com), the Masonite website (www.masonite.com) or the Masonite technical center.

Note:
Units of other sizes are covered by this report as long as the panels used do not exceed 3'0" x 6'8".

Double Door
Maximum unit size = 6'0" x 6'8"

Design Pressure
+40.5/-40.5
Limited water unless special threshold design is used.

Large Missile Impact Resistance
Hurricane protective system (shutters) is REQUIRED.

Actual design pressure and impact resistant requirements for a specific building design and geographic location is determined by ASCE 7-national, state or local building codes specify the edition required.

MINIMUM ASSEMBLY DETAIL:

Compliance requires that minimum assembly details have been followed – see MAD-WL-MA0002-02 and MAD-WL-MA0041-02.

MINIMUM INSTALLATION DETAIL:

Compliance requires that minimum installation details have been followed – see MID-WL-MA0002-02.

APPROVED DOOR STYLES:

1/4 GLASS:

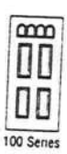
100 Series

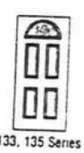
133, 135 Series


136 Series


680 Series


822 Series

1/2 GLASS:


105 Series*


106, 160 Series*


129 Series*


200 Series*

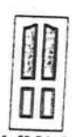
12 R/L, 23 R/L, 24 R/L Series*


107 Series*


108 Series


304 Series

*This glass kit may also be used in the following door styles: 5-panel; 5-panel with scroll; Eyebrow 5-panel; Eyebrow 5-panel with scroll.

Johnson™ EntrySystems

June 17, 2002
Our continuing program of product improvement makes specifications, design and product detail subject to change without notice.

PREMDOR Collection Premium Quality Doors

Exclusively from Masonite®
Masonite International Corporation

XX
Glazed Inswing Unit

COP-WL-JH4142-02

WOOD-EDGE STEEL DOORS

APPROVED DOOR STYLES:

3/4 GLASS:


404 Series


410 Series


450 Series

FULL GLASS:


109 Series


114, 120, 122 Series

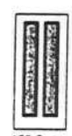
152 Series


149 Series


300 Series

CERTIFIED TEST REPORTS:

NCTL 210-1897-7, 8, 9, 10, 11, 12; NCTL 210-1861-4, 5, 6, 10, 11, 12; NCTL 210-2185-1, 2, 3

Certifying Engineer and License Number: Barry D. Portney, P.E. / 16258.

Unit Tested in Accordance with Miami-Dade BCCO PA202.

Evaluation report NCTL-210-2794-1

Door panels constructed from 26-gauge 0.017" thick steel skins. Both stiles constructed from wood. Top end rails constructed of 0.041" steel. Bottom end rails constructed of 0.021" steel. Interior cavity of slab filled with rigid polyurethane foam core. Slab glazed with insulated glass mounted in a rigid plastic lip lite surround.

Frame constructed of wood with an extruded aluminum threshold.

PRODUCT COMPLIANCE LABELING:

TESTED IN
ACCORDANCE WITH
MIAMI-DADE BCCO PA202

COMPANY NAME
CITY, STATE

To the best of my knowledge and ability the above side-hinged exterior door unit conforms to the requirements of the 2001 Florida Building Code, Chapter 17 (Structural Tests and Inspections).

Kurt L Balthazor

State of Florida, Professional Engineer
Kurt Balthazor, P.E. – License Number 56533

Warnock Hersey

Test Data Review Certificate #3026447A and COP/Test Report Validation Matrix #3026447A-001 provides additional information - available from the ITS/WH website (www.etisemko.com), the Masonite website (www.masonite.com) or the Masonite technical center.

Johnson™ EntrySystems

June 17, 2002
Our continuing program of product improvement makes specifications, design and product detail subject to change without notice.

PREMDOR Collection Premium Quality Doors

Exclusively from Masonite®
Masonite International Corporation

UCTED WITH 5 OR MORE SECTIONS MUST BE
E STRUTS FOR THE ADDITIONAL INTERMEDIATE
ON THE THIRD SECTION.
.L SECTIONS LESS THAN 20.812" MUST BE
THE ACTUAL SECTION HEIGHT & 20.812".
\ X 5/8" LONG TYPE AB HEX HEAD METAL SCREW
4 WIND WARNINGS ISSUED.

2.

REVISIONS		
LETTER	DESCRIPTION	DATE
A	REV PER EN 10130	3/06/9
B	REV PER EN 10141	3/13/9
C	REV PER EN 10152	1/18/

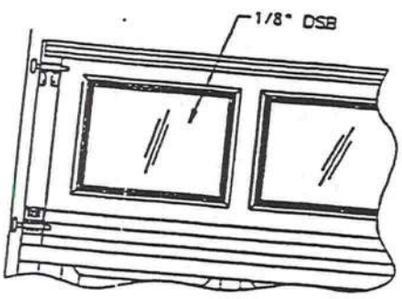

OPTIONAL WINDOW DETAIL 8
SCALE:3/32

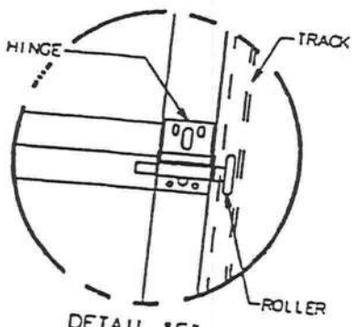

DETAIL "F"
SCALE: 1/4
(16" WIDE)

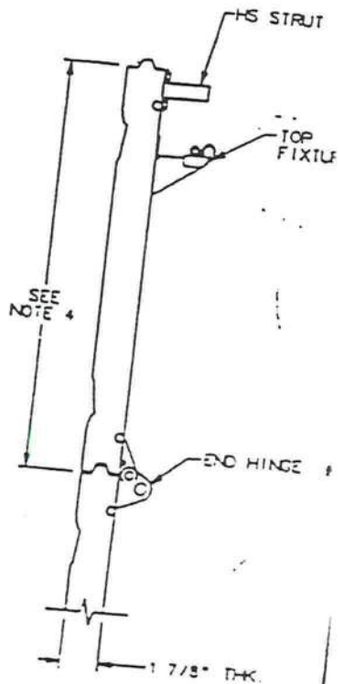

SECTION "A-A"
SCALE: 1/4

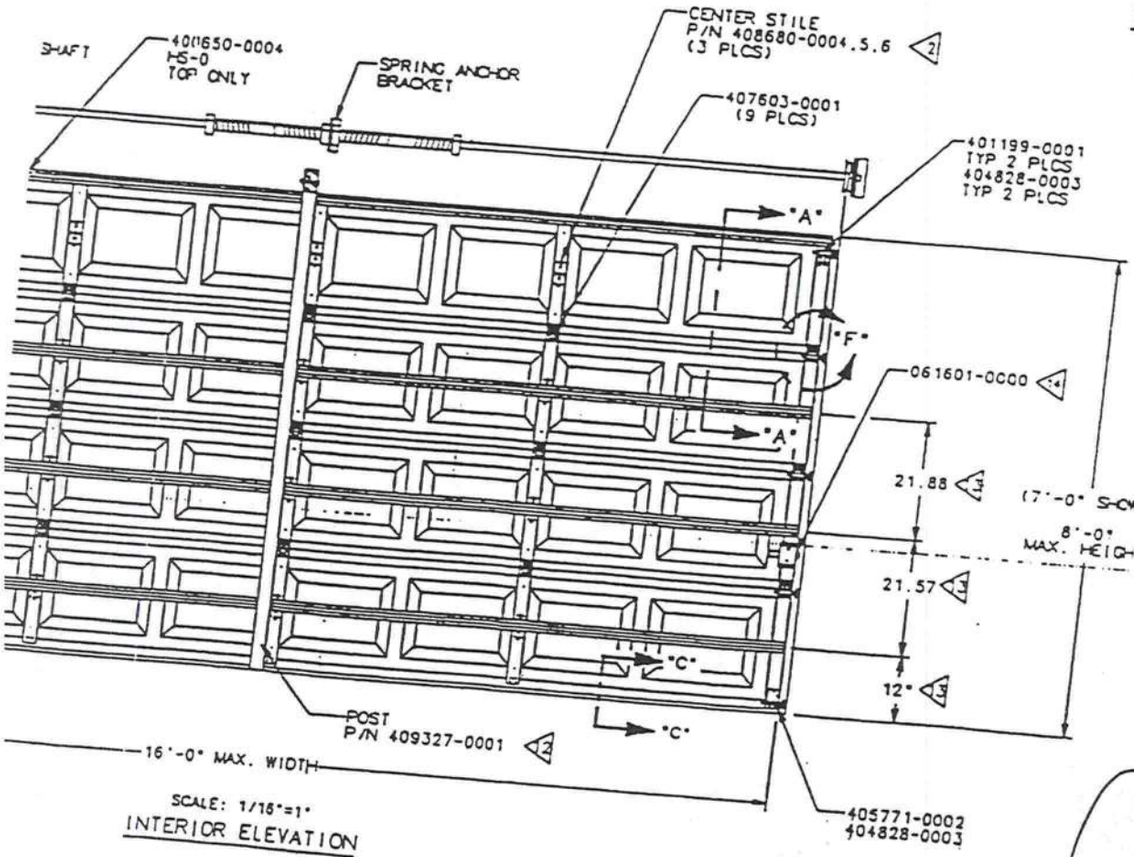

DESIGN LOAD
25 PSF ±
TEST LOAD
37.5 PSF ±

SCALE: 1/16"=1"
INTERIOR ELEVATION

10/01/01

UNLESS OTHERWISE SPECIFIED
DIMENSIONS ARE IN INCHES TOLERANCES ON
DECIMAL DIMENSIONS | HOLE DIMENSIONS | ANGLES ± 0° 30'
.XXX ± .010 | SURFACE FINISH
.XXX ± .005

OVERHEAD DOOR DALLAS, TEXAS

MATERIAL: N/A
APPLIED FINISH: NONE
UNIT OF MEASURE: EACH

NAME	DATE
DRAWN BY: M. YOUNIS	01/13/98
CHECKED BY: DAVID FAW	02/19/98
APPROVED BY: DAVID FAW	02/19/98

DRAWING TITLE: SERIES 280 & 180 RESI STL DR.16'-0" MAX WIDTH.WINDLOAD

DRAWING NUMBER D- 409335

MASTER VINYL WINDOWS

CERTIFIED TESTING LABORATORIES

Architectural Division • 7252 Narcoossee Rd. • Orlando, FL 32822
(407) 384-7744 • Fax (407) 384-7751
Web Site: www.ctlarch.com
E-mail: ctlarch.com

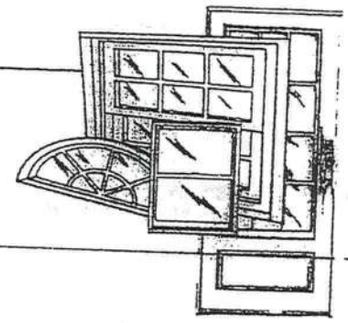

Report Number: CTLA-1038W-2-AWT
Report Date: March 4, 2003

STRUCTURAL PERFORMANCE TEST REPORT

Client: ACTION WINDOOR TECHNOLOGY INC.
1312 W. CROSBY ROAD
CARROLLTON, TX 75006

Product Type and Series: AWT Series 3180 Vinyl Fin Frame Picture Window F-R80 (48"x 72")

Test Specifications: AAMA/NWWDA 101/I.S.2-97 "Voluntary Specifications for Aluminum, Vinyl (PVC) and Wood Windows and Glass Doors"

Frame: Vinyl Fin frame measured 47.50" wide x 71.50" high overall. Mitered corner weld construction. Clear lite measured 44.50" wide x 68.50" high.

Ventilator: N/A

Weather Stripping: N/A
Hardware & Location: N/A

Glazing: 3/4" insulated annealed glass consisting of .1875" glass .375" air space with swiggle .1875" glass. Sash exterior glazed. Fixed lite interior glazed adhesive foam strip backbedding and vinyl snap in glazing bead.

Sealant: A silicone type sealant was used at frame corners and to seal specimen to test buck.

Weep System: N/A
Muntins: N/A

Reinforcement: N/A

Additional Description: N/A
Screen: N/A

Installation: Twenty-eight (28) 1.75" roofing nails were used to secure the specimen to the wood test buck. Six (6) were located in head and sill measuring 5.50", 13", 20.625", 28.25", 35.875" and 43.50" from left jamb. Eight (8) were located in each jamb measuring 5.50", 14", 22.75", 31.50", 40", 48.75", 57.75" and 66.50" from sill.

Surface Finish: White Vinyl

Comment: Nominal 2 mil polyethylene film was used to seal against air leakage during structural loads. The film was used in a manner that did not influence the test results.

Performance Test Results

Paragraph No	Title of Test	Method	Measured	Allowed
2.1.2	Air Infiltration @1.57 psf	ASTM E283-91	.02 cfm/ft²	.34 cfm/ft²

The tested specimen meets or exceeds the performance levels specified in AAMA/NWWDA 101/I.S.2-97. Results recorded in two (2) decimals at the clients request.

2.1.3	Water Resistance @ 5.0 gph/ft²	ASTM E547-93 Four (4) five (5) minute cycles	No Entry	No Entry
	WTP= 13.5 psf	ASTM E331-93 Fifteen (15) minute duration	No Entry	No Entry
2.1.4.2	Uniform Load Structural Permanent Deformation	ASTM E330-90 Ten (10) second load		
	@ 120 psf positive		Neg.	.192"
	@ 120 psf negative		Neg.	.192"
2.1.7	Welded Corner Test	AAMA/NWWDA 101/ IS2-97	Passed	
2.1.8	Forced Entry Resistance Test D Window Assemblies	ASTM F 588-97	Passed	

This specimen as tested complies to a grade 10-T [1]=5 minutes
Tools used: A spatula (10.1.1.1) and a piece of stiff wire (10.1.3.2)

Action Windoor Technology Inc.

Test Date January 28, 2003

Test Completion Date: January 28, 2003

Remarks: Detailed drawings were available for laboratory records and comparison to the test specimen at the time of this report. A copy of this report along with representative sections of the test specimen will be retained by CTL for a period of four (4) years. The results obtained apply only to the specimen tested.

This test report does not constitute certification of this product, but only that the above test results were obtained using the designated test methods and they indicate compliance with the performance requirements (paragraphs as listed) of the above referenced specifications.

Certified Testing Laboratories assumes that all information provided by the client is accurate and that the physical and chemical properties of the components are as stated by the manufacturer.

Certified Testing Laboratories, Inc.

James W. Blakely
Vice President
Architectural Division

c: Action Windoor Technology Inc. (3)
File (1)

CERTIFIED TESTING LABORATORIES

Architectural Division • 7252 Narcoossee Rd. • Orlando, FL 32822
(407) 384-7744 • Fax (407) 384-7751
Web Site: www.ctlarch.com
E-mail: ctlarch.com

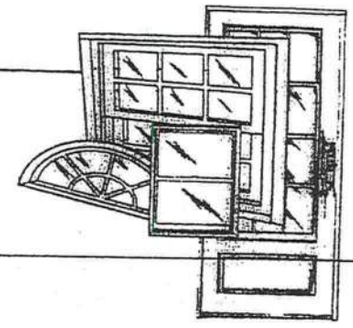

Report Number: CTLA-1038W-1-AWT
Report Date: March 4, 2003

STRUCTURAL PERFORMANCE TEST REPORT

Client: ACTION WINDOOR TECHNOLOGY INC.
1312 W. CROSBY ROAD
CARROLLTON, TX 75006

Product Type and Series: **AWT Series 3950Vinyl Fin Frame Mulled Double Hung Window with Reinforced Meeting Rail & Top Rail (72"x 72") Design Pressure 40**

Test Specifications: ASTM E 283-91 "Test Method for Determining the Rate of Air Leakage Through Exterior Windows, Curtain Walls and Doors Under Specified Pressure Differences Across the Specimen."
ASTM E 547-93 "Test Method for Water Penetration of Exterior Windows, Curtain Walls and Doors by Uniform Static Air Pressure Difference."
ASTM E 331-93 "Test Method for Water Penetration of Exterior Windows, Curtain Walls and Doors by Cyclic Static Air Pressure Differential."
ASTM E 330-90 "Test Method for Structural Performance of Exterior Windows, Curtain Walls and Doors by Uniform Static Air Pressure Difference."

Frame: Vinyl fin frame measured 71.50" wide x 71.50" high overall. Mitered corner weld construction. Fixed meeting rails secured to each frame jamb and mull with a steel "L" bracket at each end. Mull secured to head and sill with three (3) #8 x 2" PH., PH. screws

Ventilator: Two operable sashes measured 33.375" wide x 35.25" high overall. Mitered corner weld construction. Clear lite measured 31.5625" high x 33.5625" high. Fixed lites measured 32.50" wide x 33.4375" high.

Weather Stripping: One (1) strip of woolpile .220" high with integral plastic fin frame sill. One (1) strip of woolpile .250" high with integral plastic fin sash top rail exterior. One (1) strip of woolpile .250" high each sash stile exterior leg. One (1) strip of woolpile .250" high with integral plastic fin each sash stile interior leg. One (1) strip of foam filled bulb weatherstrip sash bottom rail.

Hardware & Location: Two (2) metallic sweep locks located on sash top rail approx 8" from each end of rail. Two (2) metallic keepers located on fixed meeting rail. One (1) tilt latch at each end of sash top rail. One (1) block and tackle at each frame jamb. One (1) pivot bar at each end of sash bottom rail.

Glazing: 5/8" insulated annealed glass consisting of .125" glass .375" air space with swiggle .125" glass. Sash exterior glazed. Fixed lite interior glazed adhesive foam strip backbedding and vinyl snap in glazing bead.

Sealant: A silicone type sealant was used at sill corners and to seal specimen to test buck.

Weep System: Weep notch measuring 2.25" x leg height located each end of sill and 4.25" x leg height located at mid-span weeping to the exterior.

Muntins: N/A

Reinforcement: Fixed meeting rail has one (1) piece of extruded aluminum reinforcement measuring .662" wide x .753" high x .099" thick x full length. Top rail has one (1) piece of extruded aluminum reinforcement measuring .590" wide x .995" high x .115" thick x full length. Mull has one (1) piece of extruded aluminum reinforcement measuring 2.972" wide x 2.365" high x .062" thick x full length. "L" bracket measured .312" wide x .755" high x 1.750" long x .078" thick.

Additional Description: N/A

Screen: Roll formed aluminum frame, fiberglass mesh with vinyl spline. Two (2) metallic retainer clips and two (2) metallic plungers. Corners secured with plastic corner keys

Installation: Twenty-four (24) 1.75" roofing nails were used to secure the specimen to the wood test buck. Seven (7) were located in head measuring 3.75", 15.50", 27", 38.50", 50.125", 61.75" and 69.50" from left jamb. Five (5) were located in sill measuring 3.75", 18.25", 37.25", 53.50" and 70" from left jamb. Six (6) were located in each jamb measuring 2.50", 14.50", 29.50", 45.25", 60.75" and 72.25" from sill.

Surface Finish: White Vinyl

Comment: Nominal 2 mil polyethylene film was used to seal against air leakage during structural loads. The film was used in a manner that did not influence the test results.

Performance Test Results

Paragraph No	Title of Test	Method	Measured	Allowed
2.1.2	Air Infiltration @1.57 psf	ASTM E283-91	.24 cfm/ft²	.34 cfm/ft²
	The tested specimen meets or exceeds the performance levels specified in AAMA/NWWDA 101/I.S.2-97. Results recorded in two (2) decimals at the clients request.			
2.1.3	Water Resistance @ 5.0 gph/ft²	ASTM E547-93 Four (4) five (5) minute cycles	No Entry	No Entry
	WTP= 6 psf	ASTM E331-93 Fifteen (15) minute duration	No Entry	No Entry
	Unit tested with and without insect screen.			
2.1.4.2	Uniform Load Structural Permanent Deformation	ASTM E330-90 Ten (10) second load		
DP= +40	@ 60 psf positive		.006"	.143"
DP= - 40	@ 60 psf negative		.106"	.143"

Test Date January 28, 2003

Test Completion Date: January 28, 2003

Remarks: Detailed drawings were available for laboratory records and comparison to the test specimen at the time of this report. A copy of this report along with representative sections of the test specimen will be retained by CTL for a period of four (4) years. The results obtained apply only to the specimen tested.

This test report does not constitute certification of this product, but only that the above test results were obtained using the designated test methods and they indicate compliance with the performance requirements (paragraphs as listed) of the above referenced specifications.

Certified Testing Laboratories assumes that all information provided by the client is accurate and that the physical and chemical properties of the components are as stated by the manufacturer.

Certified Testing Laboratories, Inc.

James W. Blakely
Vice President
Architectural Division

c: Action Windoor Technology Inc. (3)
File (1)

CERTIFIED TESTING LABORATORIES

Architectural Division • 7252 Narcoossee Rd. • Orlando, FL 32822
(407) 384-7744 • Fax (407) 384-7751
Web Site: www.ctlarch.com
E-mail: ctlarch.com

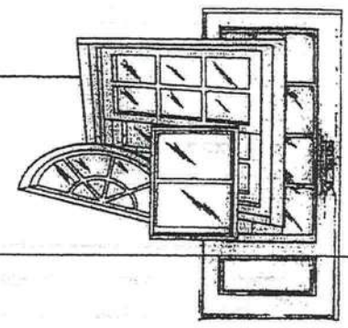

Report Number: CTLA-1038W-AWT
Report Date: February 19, 2003

STRUCTURAL PERFORMANCE TEST REPORT

Client: ACTION WINDOOR TECHNOLOGY INC.
1312 W. CROSBY ROAD
CARROLLTON, TX 75006

Product Type and Series: **AWT Series 3950 Vinyl Fin Frame Single Hung Window with Transom and Reinforced Meeting Rail & Top Rail (36"x 72") Design Pressure 45**

Test Specifications: ASTM E 283-91 "Test Method for Determining the Rate of Air Leakage Through Exterior Windows, Curtain Walls and Doors Under Specified Pressure Differences Across the Specimen."
ASTM E 547-93 "Test Method for Water Penetration of Exterior Windows, Curtain Walls and Doors by Uniform Static Air Pressure Difference."
ASTM E 331-93 "Test Method for Water Penetration of Exterior Windows, Curtain Walls and Doors by Cyclic Static Air Pressure Differential."
ASTM E 330-90 "Test Method for Structural Performance of Exterior Windows, Curtain Walls and Doors by Uniform Static Air Pressure Difference."

Frame: Vinyl fin frame measured 35.50" wide x 71.50" high overall. Mitered corner weld construction. Fixed meeting rail secured to each frame jamb with one (1) #8 x 2" PH., PH. screw. Transom bottom rail secured to each frame jamb with four (4) #8 x 2" PH., PH. screws

Ventilator: Operable sash measured 33.375" wide x 29.25" high overall. Mitered corner weld construction. Clear lite measured 31.5625" high x 27.5625" high. Fixed lite measured 32.50" wide x 27.4375" high. Transom lite measured 32.50" wide x 8.50" high.

Weather Stripping: One (1) strip of woolpile .220" high with integral plastic fin frame sill. One (1) strip of woolpile .250" high with integral plastic fin sash top rail exterior. One (1) strip of woolpile .250" high each sash stile exterior leg. One (1) strip of woolpile .250" high with integral plastic fin each sash stile interior leg. One (1) strip of foam filled bulb weatherstrip sash bottom rail.

Hardware & Location: Two (2) metallic sweep locks located on sash top rail approx 8" from each end of rail. One (1) tilt latch at each end of sash top rail. One (1) block and tackle at each frame jamb. One (1) pivot bar at each end of sash bottom rail.

Glazing: 5/8" insulated annealed glass consisting of .125" glass .375" air space with swiggle .125" glass. Sash exterior glazed. Fixed and transom lites interior glazed adhesive foam strip backbedding and vinyl snap in glazing bead.

Sealant: A silicone type sealant was used at sill corners and to seal specimen to test buck.

Weep System: Weep notch measuring 2.25" x leg height located each end of sill weeping to the exterior.

Muntins: N/A

Reinforcement: Fixed meeting rail has one (1) piece of extruded aluminum reinforcement measuring .662" wide x .755" high x .099" thick x full length. Top rail has one (1) piece of extruded aluminum reinforcement measuring .590" wide x .995" high x .115" thick x full length.

Additional Description: N/A

Screen: Roll formed aluminum frame, fiberglass mesh with vinyl spline. Two (2) metallic retainer clips and two (2) metallic plungers. Corners secured with plastic corner keys

Installation: Twenty-six (26) 1.75" roofing nails were used to secure the specimen to the wood test buck. Five (5) were located in head and sill measuring 4", 13", 21", 29", and 33" from left jamb. Eight (8) were located in each jamb measuring 4", 14.25", 24", 32.75", 42", 51", 60" and 69" from sill.

Surface Finish: White Vinyl

Comment: Nominal 2 mil polyethylene film was used to seal against air leakage during structural loads. The film was used in a manner that did not influence the test results.

Performance Test Results

Paragraph No	Title of Test	Method	Measured	Allowed
2.1.2	Air Infiltration @1.57 psf	ASTM E283-91	.28 cfm/ft²	.34 cfm/ft²
	The tested specimen meets or exceeds the performance levels specified in AAMA/NWWDA 101/I.S.2-97. Results recorded in two (2) decimals at the clients request.			
2.1.3	Water Resistance @ 5.0 gph/ft²	ASTM E547-93 Four (4) five (5) minute cycles	No Entry	No Entry
	WTP= 6.75 psf	ASTM E331-93 Fifteen (15) minute duration	No Entry	No Entry
	Unit tested with and without insect screen.			
2.1.4.2	Uniform Load Structural Permanent Deformation	ASTM E330-90 Ten (10) second load		
DP= +45	@ 67.5 psf positive		.019"	.142"
DP= - 45	@ 67.5 psf negative		.009"	.142"

Test Date January 27, 2003

Test Completion Date: January 27, 2003

Remarks: Detailed drawings were available for laboratory records and comparison to the test specimen at the time of this report. A copy of this report along with representative sections of the test specimen will be retained by CTL for a period of four (4) years. The results obtained apply only to the specimen tested.

This test report does not constitute certification of this product, but only that the above test results were obtained using the designated test methods and they indicate compliance with the performance requirements (paragraphs as listed) of the above referenced specifications.

Certified Testing Laboratories assumes that all information provided by the client is accurate and that the physical and chemical properties of the components are as stated by the manufacturer.

Certified Testing Laboratories, Inc.

James W. Blakely
Vice President
Architectural Division

cc: Action Windoor Technology Inc. (3)
File (1)

ACTION WINDOOR TECHNOLOGIES INC.

INSTALLATION INSTRUCTIONS

1. Prepare plumb, level and square opening, add 1/2" to height and width for clearance. **DO NOT** force window into undersized or unsquare opening.

2. Insure dimensions are consistent around perimeter of window frame opening. If it is not, it may cause problems with raising and lowering windows. Close and lock operating sash of window.

3. Sill of window must be set level. Do not let twin or triple unit sag in center during installation. Shim sill as required to prevent sagging. **DO NOT** shim center of head.

4. Preferred fasteners are 1 1/4" - 1 1/2" pointed screws. (**DO NOT** over tighten screws or counter sink screws, this causes frames to bow.)

   eners must be driven straight into wall, not at an angle. **WARNING:** power nailers are not recommended since they are sometimes held at an angle causing bowed frames. (This will void warranty.)

6. **DO NOT** use Expanding Foam or similar products, this causes bowed frames.

7. **DO NOT** use hammers or any air operated fastener. They contribute to more problems than anything else in the operation of a window.

8. Be sure that whatever fastener is used, it is fastened straight in the frame. If it is angled in or out it will cause bowed frames.

9. Bowing of Jambs, Heads or Sills directly effects the function of a window - stress cracks - leakage - etc. (This voids warranty).

   1/4" void between the window and frame should be maintained and not filled with foreign materials. This allows for movement and reduces stress cracks.

DO NOT allow another contractor to wedge foreign products behind or against frame in a manner that causes the frame of any windows to be bowed. (This will void the warranty.)

THE ABOVE GUIDELINES SHOULD BE FOLLOWED TO REDUCE INSTALLATION PROBLEMS.

ELK Premium Roofing

March 6, 2002

Subject: Elk Product Approval Information

All Prestique® and Capstone® products manufactured in Tuscaloosa, AL are certified under the Miami – Dade County Building Code Office (BCCO). These products also meet the requirements for the Florida Building Code since they are MD approved. The following test protocols must be passed by each of the products in order for MD product certification:

ASTM D3462
PA 100 (110 mph uplift and wind driven rain resistance)
PA 107 (Modified ASTM D3161 - 110 mph wind uplift resistance)

The nailing patterns that were used during the PA 100 and PA 107 wind test protocols for the Prestique and Capstone products are listed below. Also listed below are the Miami – Dade Notice of Acceptance Numbers (NOA).

Raised Profile, Prestique High Definition, Prestique 25, or Prestique 30 –
PA 100 = 4 nails
PA 107 = 5 nails
MD NOA# = 01-1226.04

Prestique I 35 or Prestique I* –
PA 100 = 4 nails
PA 107 = 5 nails
MD NOA# = 01-1226.05

Prestique Plus or Prestique Gallery Collection* –
PA 100 = 4 nails
PA 107 = 4 nails
MD NOA# = 01-1226.03

Capstone*
PA 100 = 4 Nails
PA 107 = 4 Nails
MD NOA# = 01-0523.01

* As per the Elk Limited Warranty, six nails are required for the Elk high wind warranty

If there are any questions please contact:

Mike Reed – Technical Manager or Daniel DeJarnette – QA Engineer
(205) 342-0287 (205) 342-0298

ROOFING PRODUCTS SPECIFICATIONS – TUSCALOOSA, AL

PRESTIQUE®
HIGH DEFINITION®

RAISED PROFILE™

High Definition

Product size	13¼" x 39⅜"	50-year limited warranty period [illegible] coverage to shingles and application labor for the initial 5 years, plus an [illegible] [illegible] coverage for application labor and shingles for balance of limited warranty period. 5-year limited wind warranty.*
Exposure	5⅝"	
Pieces/Bundle	16	
Bundles/Square	[illegible]	
Squares/Pallet	[illegible]	

Product size	13¼" x 39⅜"	[illegible] limited warranty period [illegible] coverage for shingles and application labor for the initial 5 years, plus an [illegible] [illegible] coverage for application labor and shingles for balance of limited warranty period. 5-year limited wind warranty.*
Exposure	5⅝"	
Pieces/Bundle	22	
Bundles/Square	[illegible]	
Squares/Pallet	16	

High Definition

Product size	13¼" x 39⅜"	[illegible] limited warranty period [illegible] coverage for shingles and application labor for the initial 5 years, plus an [illegible] [illegible] coverage for application labor and shingles for balance of limited warranty period. 5-year limited wind warranty.*
Exposure	5⅝"	
Pieces/Bundle	16	
Bundles/Square	[illegible]	
Squares/Pallet	14	

HIP AND RIDGE SHINGLES

Size: 12" x 12"
Exposure: 6⅝"
Pieces/Bundle: [illegible]
Coverage: [illegible] bundles [illegible] linear feet

High Definition

Product size	13¼" x 39⅜"	[illegible] limited warranty period [illegible] coverage for shingles and application labor for the initial 5 years, plus an [illegible] [illegible] coverage for application labor and shingles for balance of limited warranty period. 5-year limited wind warranty.*
Exposure	5⅝"	
Pieces/Bundle	22	
Bundles/Square	[illegible]	
Squares/Pallet	16	

[illegible]
[illegible]
[illegible]
[illegible]
[illegible]

Available Colors: Antique Slate, Weatheredwood, Shakewood, Sablewood, [illegible] [illegible] [illegible] [illegible] [illegible] Barkwood, Sandalwood, [illegible] Collection: [illegible] Weathered Sage, Sierra Sunset

All Prestique, Raised Profile and Seal-A-Ridge roofing products [illegible] [illegible] [illegible] [illegible] [illegible] [illegible] [illegible] [illegible] [illegible] [illegible] [illegible]

Check for availability [illegible] [illegible] [illegible] [illegible] [illegible] [illegible] [illegible] [illegible] [illegible] [illegible] available in Sablewood.

All Prestique and Raised Profile shingles meet UL Wind Resistant (UL 997) and Class "A" Fire Ratings (UL 790); and ASTM Specifications D 3018, Type I; D 3161, Type I; E 108 and the requirements of ASTM D 3462.

All Prestique and Raised Profile shingles meet the latest Metro Dade building code requirements.

*See actual limited warranty for conditions and limitations.
* Check for product availability.

[illegible]

[illegible]

[illegible]

[illegible]

For areas where algae is a problem, shingles shall be [illegible] with StainGuard treatment [illegible] [illegible] by the [illegible] plant. Hip and ridge type to be Seal-A-Ridge with formula FLX with StainGuard treatment.

Complete application instructions are published by Elk and printed on the back of every shingle bundle. [illegible]

[illegible]

For specifications in CSI format, call 800.354.SPEC (7732) or e-mail specs@elkcorp.com

SOUTHEAST &
ATLANTIC OFFICE:
800.945.5551

CORPORATE HEADQUARTERS:
800.354.7732

PLANT LOCATION:
800.945.5545

ELK
www.elkcorp.com

DIRECTIONS FOR APPLICATION

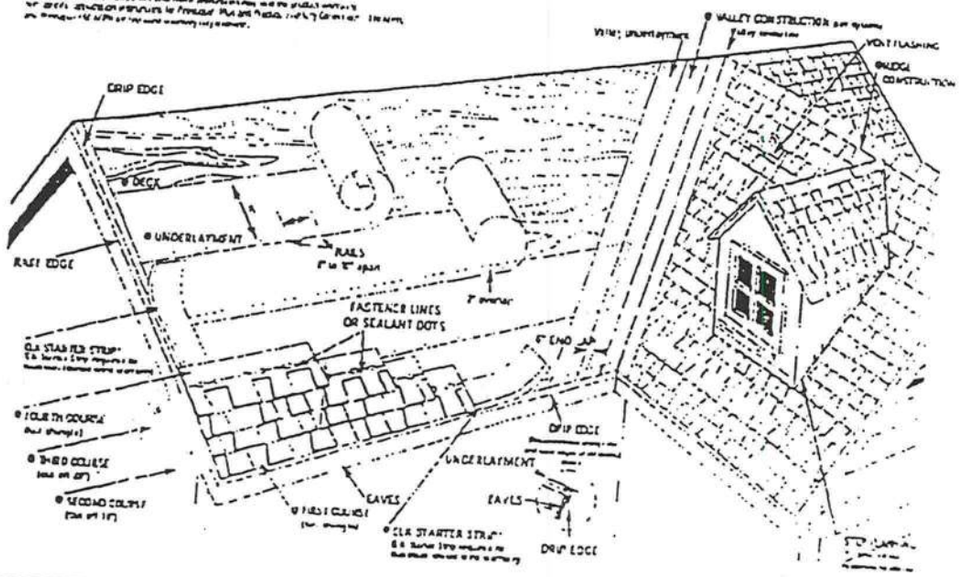

VALLEY CONSTRUCTION OPTION

VALLEY CENTERLINE

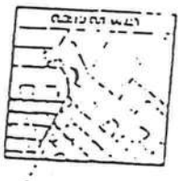

VALLEY FLOW LINE

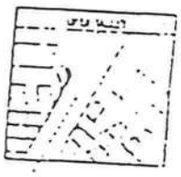

VALLEY FLOW LINE

DIRECTIONS FOR APPLICATION

DECK PREPARATION

UNDERLAYMENT

EAVE FLASHING FOR ICE DAMS (ASK A ROOFING CONTRACTOR, REFER TO ARMA MANUAL OR CHECK LOCAL CODES)

Consult the ELK Field Service Department for specification information on other decks and other roofs.

STARTER SHINGLE COURSE

USE AN ELK STAR TO STRIP OR A STRIP SHINGLE INVERTED WITH THE HEADLAP REMOVED. THE SAME DECK WHICH WILL BE USED FOR THE FIRST COURSE. TRIM THE STRIP FLUSH WITH EACH SIDE. Shingles may be started with a full or partial shingle.

FIRST COURSE

Start a full and continue course without changes (unless with the starter course).

SECOND COURSE

Start at the rake with the shingle having 10" (trimmed off one end) and alternate with full shingles.

THIRD COURSE

Start at the rake with the shingle having 20" (trimmed off one end) and continue across roof with full shingles.

FOURTH COURSE

FIFTH AND SUCCEEDING COURSES

VALLEY CONSTRUCTION

RIDGE CONSTRUCTION

FASTENERS

MANSARD APPLICATIONS

LIMITED WIND WARRANTY

STOP SLOW-OFFS AND CALL BACKS

CAUTION TO WHOLESALER

Keep these shingles completely covered, dry, reasonably cool and protected from the weather. Do not store near various sources of heat. Do not store in direct sunlight until applied. DO NOT DOUBLE STACK. Systematically rotate all stock so that the material that has been stored the longest will be the first to be removed out.

ELK

www.elkcorp.com

NOTES

1. TESTED IN ACCORDANCE WITH STANDARD BUILDING CODE, CHAPTER 17, TO A POSITIVE AND NEGATIVE 37.5 PSF.
2. DASH NUMBERS REPRESENT VARIOUS SECTION HEIGHTS.
3. FOUR SECTION 7' HIGH DOOR SHOWN. 8' HIGH DOORS HAVE FIVE SECTIONS.
4. SECTION HEIGHT OF 20.812, 19.00 & 16.75 ARE AVAILABLE AND MAY BE USED IN COMBINATION TO ACHIEVE VARIOUS HEIGHT DOORS.
5. EMBOSSMENT PATTERN OF 14.50 X 20.375 SHOWN. ALTERNATE PATTERNS OF 12.50 X 43.375 AND 12.50 X 20.375 MAY BE USED.
6. TORSION SPRINGS SHOWN. EXTENSION SPRINGS AVAILABLE.
7. USE THIS BRACKET, REF. P/N 405964-0002, ON 8' HIGH DOORS ONLY.
8. WINDOW MAY BE INSTALLED IN THE TOP SECTION OR THE SECTION IMMEDIATELY BELOW THE TOP SECTION.
9. THE STRUT PLACEMENT ON CONSISTENT WITH THE DOC SECTIONS ARE TO BE PLAC
10. THE STRUT PLACEMENT DIM REDUCED BY THE DIFFEREN
11. SCREW P/N 605911-0001 IS
12. POST TO BE INSTALLED ONL
13. STRUT PLACEMENTS CAN VAR
14. QUANTITY FOR LOCKS CAN B

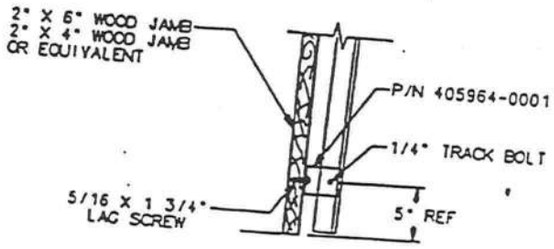

DETAIL "E"
SCALE: 1/8

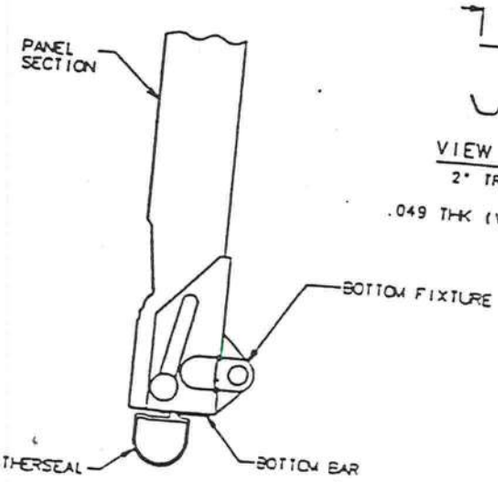

SECTION "C-C"
SCALE: 1/2

VIEW "D
2" TRACK
.049 THK (VER

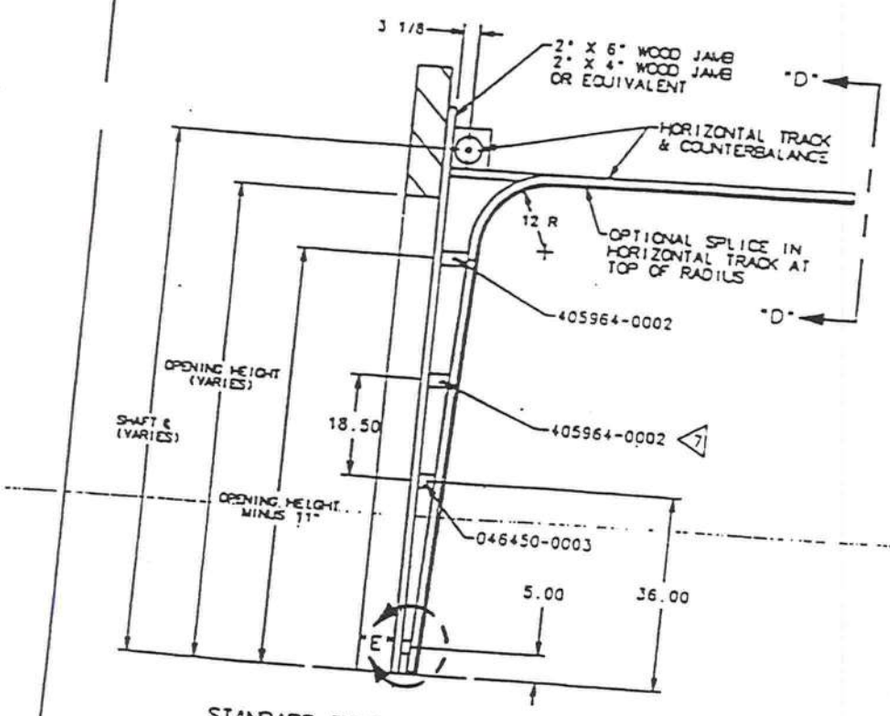

STANDARD TRACK DETAIL FOR 16'
SCALE: 1/16" = 1"

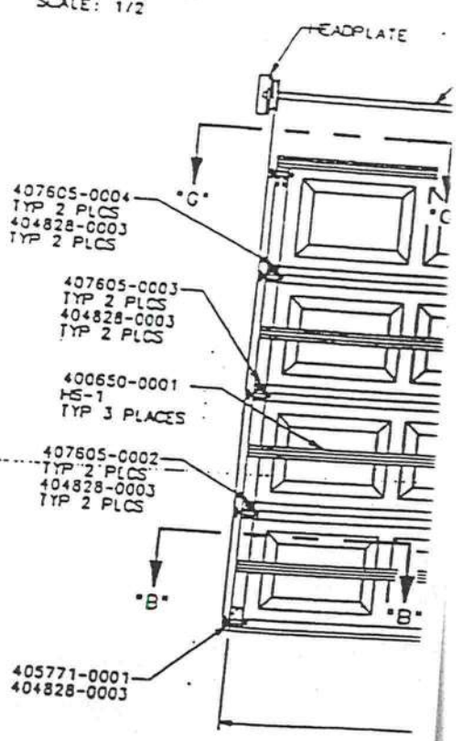

SERIES 280 THRU 289 ARE EQUIVALENT CONSTRUCTION 25GA STEEL
SERIES 180 ARE SAME CONSTRUCTION AS SERIES 280 ONLY 24GA STEEL AND END CAPS

DOOR TESTED WAS 281 SERIES.

DOOR WIDTH	CENTER STILE	END STILE	ROLLER SHAFT BRACKET	STRUTS/SECT.	ROLLER	VERTICAL TRACK GAGE	JAMB LOAD (# PER FT-HT)	HARDWARE
16'	3	SINGLE		HS1 HS0	2" X 7/16"	.049"	100	STD.

PORCH + GARAGE DOOR HEADER

Anthony Power Header®

(84) **$26F_b$ - 1.9E**

ENGINEERED WOOD SECTION PROPERTIES AND LOAD CAPACITIES

ALLOWABLE DESIGN STRESSES (PSI):

FLEXURAL STRESS (F_b) =	2600
COMPRESSION PERP. TO GRAIN ($F_{c\perp}$) =	740
HORIZONTAL SHEAR (F_v) =	225
MODULUS OF ELASTICITY (MOE) =	1.9×10^6

[illegible]	[illegible]	[illegible]	[illegible]	[illegible]	[illegible]	[illegible]	[illegible]
WEIGHT (LB/FT)	7.7	9.0	10.4	11.7	12.9	14.2	15.5
[illegible]	326	514	789	1115	1521	2014	2604
MOMENT CAPACITY (FT-LB)	8865	12015	15996	20145	24772	29877	35460
SHEAR CAPACITY (LB)	3908	4550	5250	5892	6533	7175	7817

NOTES:

1. Beam weights are based on 38 pcf.
2. Moment capacities are based on a span of 21 feet and must be modified for other spans.
3. Flexural Stress, F_b, shall be modified by the Volume Factor, C_v, as outlined in AITC 117 - Design 1993 and the NDS for Wood Construction 1997.
4. Allowable design properties and load capacities are based on a load duration of 100 percent and dry use conditions.
5. The AITC NER 466 was used in calculating the above allowable design stresses for Power Header®.

GARAGE HEADER COMPARISONS

[illegible]	[illegible]	[illegible]	[illegible]	[illegible]	[illegible]	[illegible]
[illegible]	810 / 540	3-1/2" x 8-3/8"	3-1/2" x 9-5/8"	3-1/2" x 9"	3-1/2" x 9-1/4"	3-1/2" x 11-1/4"**
[illegible]	990 / 720	3-1/2" x 9-3/4"	3-1/2" x 9-5/8"	3-1/2" x 10-1/2"	3-1/2" x 9-1/4"	3-1/2" x 11-1/4"**
[illegible]	640 / 400	3-1/2" x 12-5/8"	3-1/2" x 13-3/4"	3-1/2" x 13-1/2"	3-1/2" x 14"	3-1/2" x 14"*
[illegible]	765 / 510	3-1/2" x 14"	3-1/2" x 15-1/8"	3-1/2" x 15"	3-1/2" x 14"	3-1/2" x 16"*
[illegible]	750 / 480	3-1/2" x 15-3/8"	3-1/2" x 16-1/2"	3-1/2" x 16-1/2"	3-1/2" x 16"	3-1/2" x 18"*
[illegible]	900 / 600	3-1/2" x 16-3/4"	3-1/2" x 17-7/8"	3-1/2" x 18"	3-1/2" x 16"	—

For more information on Power Header®, or other laminated structural products from Anthony Forest Products Company please call 1-800-221-2326 or FAX at 870-862-6502.

Power Header® is a trademark of
Anthony Forest Products Company
Post Office Box 1877 • El Dorado, Arkansas 71731
Internet address: http:// www.anthonyforest.com
e-mail: info@anthonyforest.com

Distributed by:

WOODFORD PLYWOOD, INC.
"Structural Wood Products"
11960 West Beaver Street
Jacksonville, Florida 32220
(904) 695-9080
(800) 447-6566
FAX (904) 695-9160

Anthony POWER HEADER®

26F$_b$ - 1.9E

3-1/2" WIDTH GARAGE HEADER PLF CAPACITY

	844	896		1216		1573							
	161	207	254	330	390	510	552	669	752	824			
	114	145	180	231	277	359	391	510	534	653	707	789	

	844	975		1322									
	161	207	254	330	390	510	552	724	752	897			
	114	145	180	231	277	359	391	510	534	699	693		

	562	778	888	1056	1363	1367		1582					
	107	153	169	245	260	380	368	540	501	715	664	864	840
	76	107	120	171	185	267	261	380	356	521	471	684	609	813

NOTES:

1. Values shown are the maximum uniform loads in pounds per lineal foot (PLF) that can be applied to the header. Header weight has been subtracted from the allowable total load.
2. Tables are based on simple span uniform load conditions using a design span equal to the center-to-center of bearing. Non-shaded areas are based on 3" of bearing at each support, shaded areas on 4.5" of bearing, and shaded & outlined areas on 6" of bearing at supports.
3. Headers are assumed to be loaded on the top edge with continuous lateral support along compression edge.
4. When no live load is listed, total load controls.
5. Deflection limits are listed within the PLF table heading.

GARAGE HEADER SIZING USING PLF TABLES:

To size a garage header supporting roof only, determine the total load & live load in pounds per lineal foot (PLF). Check the appropriate PLF table for a header supporting roof loads only (125% Non-Snow vs. 115% Snow) and select a member with a total load and live load capacity which meets or exceeds the design load for the rough opening size. For a garage header supporting roof, wall, and floor framing, determine the total load and live load in pounds per lineal foot (PLF). Select a header size from the roof, wall, and floor table (100% load duration) which has a total load and live load capacity equal to or greater than the design load for the appropriate rough opening.

COLUMBIA COUNTY BUILDING DEPARTMENT

RESIDENTIAL MINIMUM PLAN REQUIREMENTS AND CHECKLIST FOR FLORIDA BUILDING CODE 2001
ONE (1) AND TWO (2) FAMILY DWELLINGS

ALL REQUIREMENTS ARE SUBJECT TO CHANGE

EFFECTIVE MARCH 1, 2002

ALL BUILDING PLANS MUST INDICATE THE FOLLOWING ITEMS AND INDICATE COMPLIANCE WITH CHAPTER 1606 OF THE FLORIDA BUILDING CODE 2001 BY PROVIDING CALCULATIONS AND DETAILS THAT HAVE THE SEAL AND SIGNATURE OF A CERTIFIED ARCHITECT OR ENGINEER REGISTERED IN THE STATE OF FLORIDA, OR ALTERNATE METHODOLOGIES, APPROVED BY THE STATE OF FLORIDA BUILDING COMMISSION FOR ONE-AND-TWO FAMILY DWELLINGS. FOR DESIGN PURPOSES THE FOLLOWING BASIC WIND SPEED AS PER FIGURE 1606 SHALL BE USED.

WIND SPEED LINE SHALL BE DEFINED AS FOLLOWS: THE CENTERLINE OF INTERSTATE 75.

1. ALL BUILDINGS CONSTRUCTED EAST OF SAID LINE SHALL BE -------- 100 MPH
2. ALL BUILDINGS CONSTRUCTED WEST OF SAID LINE SHALL BE --------110 MPH
3. NO AREA IN COLUMBIA COUNTY IS IN A WIND BORNE DEBRIS REGION

APPLICANT – PLEASE CHECK ALL APPLICABLE BOXES BEFORE SUBMITTAL

GENERAL REQUIREMENTS: Two (2) complete sets of plans containing the following:

Applicant	Plans Examiner	
☑	☑	All drawings must be clear, concise and drawn to scale ("Optional " details that are not used shall be marked void or crossed off). Square footage of different areas shall be shown on plans.
☑	☑	Designers name and signature on document (FBC 104.2.1). If licensed architect or engineer, official seal shall be affixed.
☑	☑	**Site Plan including:** a) Dimensions of lot b) Dimensions of building set backs c) Location of all other buildings on lot, well and septic tank if applicable, and all utility easements. d) Provide a full legal description of property.
☑	☑	**Wind-load Engineering Summary, calculations and any details required** a) Plans or specifications must state compliance with FBC Section 1606 b) The following information must be shown as per section 1606.1.7 FBC a. Basic wind speed (MPH) b. Wind importance factor (I) and building category c. Wind exposure – if more than one wind exposure is used, the wind exposure and applicable wind direction shall be indicated d. The applicable internal pressure coefficient e. Components and Cladding. The design wind pressure in terms of psf (kN/m²), to be used for the design of exterior component and cladding materials not specifally designed by the registered design professional
		See NOTE 1
☑	☑	**Elevations including:** a) All sides
☑	☑	b) Roof pitch
☑	☑	c) Overhang dimensions and detail with attic ventilation
☑	☑	d) Location, size and height above roof of chimneys
☑	☑	e) Location and size of skylights
☑	☑	f) Building height
☑	☑	e) Number of stories

Floor Plan including:

a) Rooms labeled and dimensioned

b) Shear walls

c) Windows and doors (including garage doors) showing size, mfg., approval listing and attachment specs. (FBC 1707) and safety glazing where needed (egress windows in bedrooms to be shown)

d) Fireplaces (gas appliance) (vented or non-vented) or wood burning with hearth

e) Stairs with dimensions (width, tread and riser) and details of guardrails and handrails

f) Must show and identify accessibility requirements (accessible bathroom)

Foundation Plan including:

a) Location of all load-bearing wall with required footings indicated as standard Or monolithic and dimensions and reinforcing

b) All posts and/or column footing including size and reinforcing

c) Any special support required by soil analysis such as piling

d) Location of any vertical steel

Roof System:

a) Truss package including:

1. Truss layout and truss details signed and sealed by Fl. Pro. Eng.
2. Roof assembly (FBC 104.2.1 Roofing system, materials, manufacturer, fastening requirements and product evaluation with wind resistance rating)

b) Conventional Framing Layout including:

1. Rafter size, species and spacing
2. Attachment to wall and uplift
3. Ridge beam sized and valley framing and support details
4. Roof assembly (FBC 104.2.1 Roofing systems, materials, manufacturer, fastening requirements and product evaluation with wind resistance rating)

NA

~~Wall Sections including:~~ N/A

a) Masonry wall

1. All materials making up wall
2. Block size and mortar type with size and spacing of reinforcement
3. Lintel, tie-beam sizes and reinforcement
4. Gable ends with rake beams showing reinforcement or gable truss and wall bracing details
5. All required connectors with uplift rating and required number and size of fasteners for continuous tie from roof to foundation
6. Roof assembly shown here or on roof system detail (FBC 104.2.1 Roofing system, materials, manufacturer, fastening requirements and product evaluation with resistance rating)
7. Fire resistant construction (if required)
8. Fireproofing requirements
9. Shoe type of termite treatment (termiticide or alternative method)
10. Slab on grade
    a. Vapor retarder (6mil. Polyethylene with joints lapped 6 inches and sealed)
    b. Must show control joints, synthetic fiber reinforcement or Welded fire fabric reinforcement and supports
11. Indicate where pressure treated wood will be placed
12. Provide insulation R value for the following:
    a. Attic space
    b. Exterior wall cavity
    c. Crawl space (if applicable)

NA

b) Wood frame wall

1. All materials making up wall
2. Size and species of studs
3. Sheathing size, type and nailing schedule
4. Headers sized
5. Gable end showing balloon framing detail or gable truss and wall hinge bracing detail
6. All required fasteners for continuous tie from roof to foundation (truss anchors, straps, anchor bolts and washers)
7. Roof assembly shown here or on roof system detail (FBC104.2.1 Roofing system, materials, manufacturer, fastening requirements and product evaluation with wind resistance rating)
8. Fire resistant construction (if applicable)
9. Fireproofing requirements
10. Show type of termite treatment (termiticide or alternative method)
11. Slab on grade
    a. Vapor retarder (6Mil. Polyethylene with joints lapped 6 inches and sealed
    b. Must show control joints, synthetic fiber reinforcement or welded wire fabric reinforcement and supports
12. Indicate where pressure treated wood will be placed
13. Provide insulation R value for the following:
    a. Attic space
    b. Exterior wall cavity
    c. Crawl space (if applicable)

c) Metal frame wall and roof (designed, signed and sealed by Florida Prof. Engineer or Architect) N/A

Floor Framing System: N/A

a) Floor truss package including layout and details, signed and sealed by Florida Registered Professional Engineer

b) Floor joist size and spacing

c) Girder size and spacing

d) Attachment of joist to girder

e) Wind load requirements where applicable

Plumbing Fixture layout

Electrical layout including:

a) Switches, outlets/receptacles, lighting and all required GFCI outlets identified

b) Ceiling fans

c) Smoke detectors

d) Service panel and sub-panel size and location(s)

e) Meter location with type of service entrance (overhead or underground)

f) Appliances and HVAC equipment

g) Arc Fault Circuits (AFCI) in bedrooms

HVAC information

See NOTE 2

a) Manual J sizing equipment or equivalent computation

b) Exhaust fans in bathroom

Energy Calculations (dimensions shall match plans)

Gas System Type (LP or Natural) Location and BTU demand of equipment N/A

Disclosure Statement for Owner Builders

Notice Of Commencement

Private Potable Water — Private water system

a) Size of pump motor

b) Size of pressure tank

c) Cycle stop valve if used

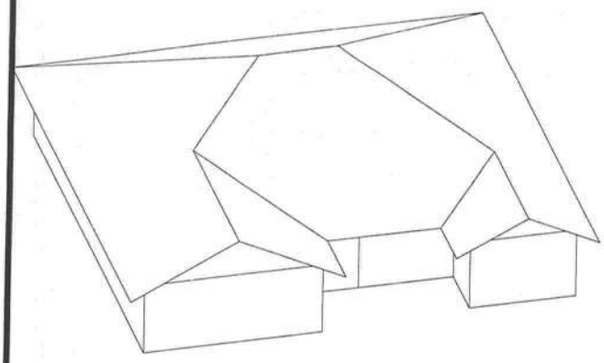

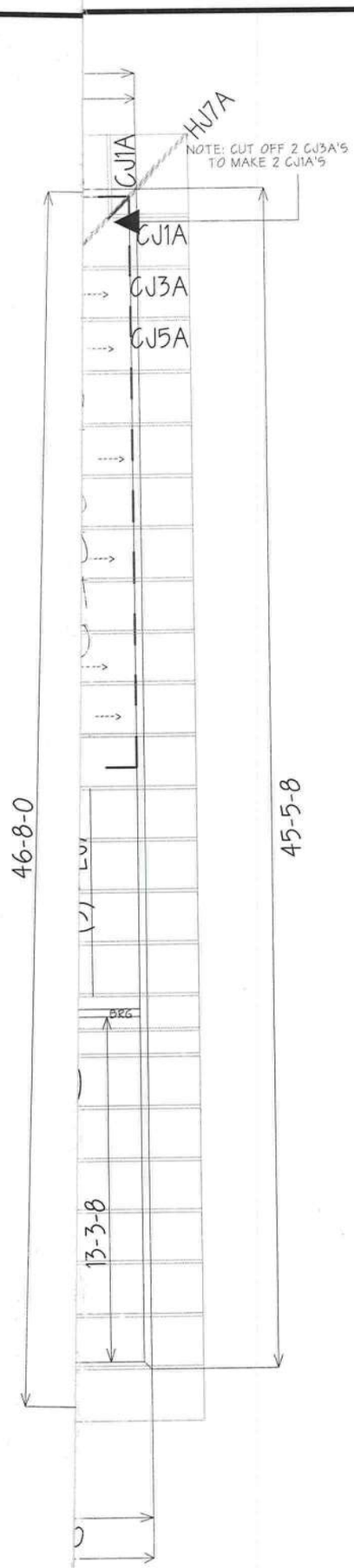

BEARING HEIGHT SCHEDULE

8'

2' O/H
6/12

NOTES:

1.) REFER TO HIB 91 (RECOMMENDATIONS FOR HANDLING INSTALLATION AND TEMPORARY BRACING.) REFER TO ENGINEERED DRAWINGS FOR PERMANENT BRACING REQUIRED.

2.) ALL TRUSSES (INCLUDING TRUSSES UNDER VALLEY FRAMING) MUST BE COMPLETELY DECKED OR REFER TO DETAIL V105 FOR ALTERNATE BRACING REQUIREMENTS.

3.) ALL VALLEYS ARE TO BE CONVENTIONALLY FRAMED BY BUILDER.

4.) ALL TRUSSES ARE DESIGNED FOR 2' o.c. MAXIMUM SPACING, UNLESS OTHERWISE NOTED.

5.) ALL WALLS SHOWN ON PLACEMENT PLAN ARE CONSIDERED TO BE LOAD BEARING, UNLESS OTHERWISE NOTED.

6.) SY42 TRUSSES MUST BE INSTALLED WITH THE TOP BEING UP.

7.) ALL ROOF TRUSS HANGERS TO BE SIMPSON HUS26 UNLESS OTHERWISE NOTED. ALL FLOOR TRUSS HANGERS TO BE SIMPSON THA422 UNLESS OTHERWISE NOTED.

8.) BEAM/HEADER/LINTEL (HDR) TO BE FURNISHED BY BUILDER.

SHOP DRAWING APPROVAL

THIS LAYOUT IS THE SOLE SOURCE FOR FABRICATION OF TRUSSES AND VOIDS ALL PREVIOUS ARCHITECTURAL OR OTHER TRUSS LAYOUTS. REVIEW AND APPROVAL OF THIS LAYOUT MUST BE RECEIVED BEFORE ANY TRUSSES WILL BE BUILT. VERIFY ALL CONDITIONS TO INSURE AGAINST CHANGES THAT WILL RESULT IN EXTRA CHARGES TO YOU.

Requested Delivery Date: _____

Approved by: _____ Date: _____

Builders FirstSource

Bunnell
PHONE: 904-437-3349 FAX: 904-437-3994

Jacksonville
PHONE: 904-772-6100 FAX: 904-772-1973

Lake City
PHONE: 904-755-6894 FAX: 904-755-7973

Sanford
PHONE: 407-322-0059 FAX: 407-322-5553

BUILDER: BRYAN ZECHER		
LEGAL ADDRESS: LOT 26 CSE		
MODEL: THE SAMUEL.		REVISION:
		SCALE: NTS
DATE: 10-14-05	DRAWN BY: JRD	JOB #: L128039

Project Information for: L128039
Builder: BRYAN ZECHER Date: 10/17/2005
Lot: N/A Start Number: 152
Subdivision: LOT 26 COUNTRY SIDE EST.
County or City: COLUMBIA COUNTY
Truss Page Count: 30

Truss Design Load Information (UNO) Design Program: MiTek 5.2 / 6.2

Gravity		Wind		Building Code:	FBC2004
Roof (psf):	42	Wind Standard:	ASCE 7-02		
Floor (psf):	55	Wind Speed (mph):	110		

Note: See individual truss drawings for special loading conditions

Building Designer, responsible for Structural Engineering: (See attached)
ZECHER, BRYAN C. CBC 054575
Address: PO BOX 815
ALACHUA,FL 32615 Designer: 132

Truss Design Engineer: Thomas, E. Miller, P.E., 56877 - Byron K. Anderson, PE FL 60987
Company: Structural Engineering and Inspections, Inc. EB 9196
Address 16105 N. Florida Ave, Ste B, Lutz, FL 33549

Notes:
1. Truss Design Engineer is responsible for the individual trusses as components only.
2. Determination as to the suitability and use of these truss components for the structure is the responsibility of the Building Designer of Record, as defined in ANSI/TPI
3. The seal date shown on the individual truss component drawings must match the seal date on this index sheet.

#	Truss ID	Dwg. #	Seal Date	#	Truss ID	Dwg. #	Seal Date
1	CJ1	101705152	10/17/2005				
2	CJ3	101705153	10/17/2005				
3	CJ3A	101705154	10/17/2005				
4	CJ5	101705155	10/17/2005				
5	CJ5A	101705156	10/17/2005				
6	EJ7	101705157	10/17/2005				
7	EJ7A	101705158	10/17/2005				
8	HJ7	101705159	10/17/2005				
9	HJ7A	101705160	10/17/2005				
10	T01	101705161	10/17/2005				
11	T01G	101705162	10/17/2005				
12	T02	101705163	10/17/2005				
13	T03T	101705164	10/17/2005				
14	T04T	101705165	10/17/2005				
15	T05T	101705166	10/17/2005				
16	T06T	101705167	10/17/2005				
17	T07T	101705168	10/17/2005				
18	T08	101705169	10/17/2005				
19	T09	101705170	10/17/2005				
20	T09	101705171	10/17/2005				
21	T10	101705172	10/17/2005				
22	T11	101705173	10/17/2005				
23	T12	101705174	10/17/2005				
24	T13	101705175	10/17/2005				
25	T14	101705176	10/17/2005				
26	T15	101705177	10/17/2005				
27	T16	101705178	10/17/2005				
28	T17	101705179	10/17/2005				
29	T18	101705180	10/17/2005				
30	T18G	101705181	10/17/2005				

OCT 17 2005

Dwg.#101705151

10:00:13 AM

Licensee Details

Licensee Information

Name:	**ZECHER, BRYAN CHRISTIAN (Primary Name)**
	BRYAN ZECHER CONSTRUCTION INC (DBA
Main Address:	**P O BOX 815** **LAKE CITY, Florida 32056**
Lic. Location:	**465 NW ORANGE ST** **LAKE CITY, FL 32055 United States Columbia**

License Information

License Type:	**Certified Building Contractor**
Rank:	**Cert Building**
License Number:	**CBC054575**
Status:	**Current, Active**
Licensure Date:	**12/05/1991**
Expires:	**08/31/2006**

Special Qualifications	Effective Date
Bldg Code Core Course Credit	
Qualified Business License Required	04/13/2004

View Related License Information

View License Complaint

New Search

OCTOBER 17,2005 TRUSS DESIGN ENGINEER:
THOMAS E. MILLER PE 56877, BYRON K. ANDERSON PE 60987
STRUCTURAL ENGINEERING AND INSPECTIONS, INC. EB 9196
16105 N. FLORIDA AVE. STE B, LUTZ, FL 33549

Job	Truss	Truss Type	Qty	Ply	BRYAN ZECHER- LOT 26 CSE
L128039	CJ1	MONO TRUSS	2	1	Job Reference (optional)

Dwg.#101705152

Builders FirstSource, Lake City, Fl 32055 — 6.200 s Jul 13 2005 MiTek Industries, Inc. Fri Oct 14 14:58:50 2005 Page 1

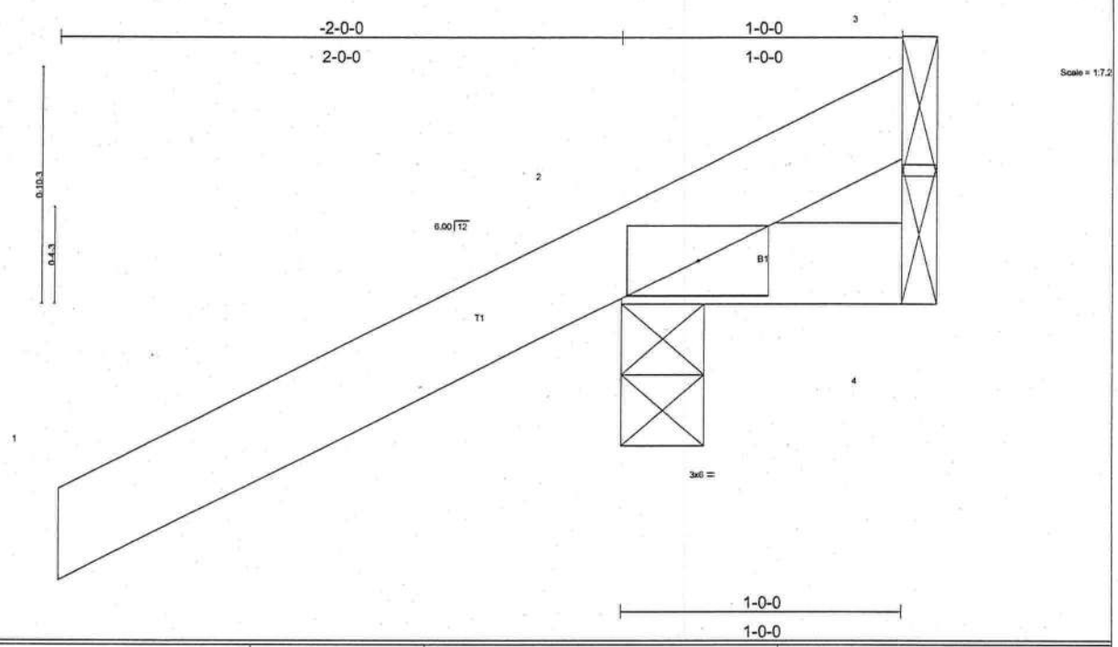

LOADING (psf)		SPACING 2-0-0		CSI		DEFL	in	(loc)	l/defl	L/d	PLATES	GRIP
TCLL	20.0	Plates Increase	1.25	TC	0.28	Vert(LL)	-0.00	2	>999	240	MT20	244/190
TCDL	7.0	Lumber Increase	1.25	BC	0.01	Vert(TL)	-0.00	2	>999	180		
BCLL	10.0	Rep Stress Incr	YES	WB	0.00	Horz(TL)	0.00	3	n/a	n/a		
BCDL	5.0	Code FBC2004/TPI2002		(Matrix)							Weight: 7 lb	

LUMBER
TOP CHORD 2 X 4 SYP No.2
BOT CHORD 2 X 4 SYP No.2

BRACING
TOP CHORD Structural wood sheathing directly applied or 1-0-0 oc purlins.
BOT CHORD Rigid ceiling directly applied or 10-0-0 oc bracing.

REACTIONS (lb/size) 2=266/0-3-8, 4=14/Mechanical, 3=-90/Mechanical
Max Horz 2=87(load case 5)
Max Uplift2=-274(load case 5), 3=-90(load case 1)
Max Grav 2=266(load case 1), 4=14(load case 1), 3=127(load case 5)

FORCES (lb) - Maximum Compression/Maximum Tension
TOP CHORD 1-2=0/47, 2-3=-69/75
BOT CHORD 2-4=0/0

NOTES
1) Wind: ASCE 7-02; 110mph (3-second gust); h=20ft; TCDL=4.2psf; BCDL=3.0psf; Category II; Exp B; enclosed; MWFRS gable end zone and C-C Exterior(2) zone; Lumber DOL=1.60 plate grip DOL=1.60. This truss is designed for C-C for members and forces, and for MWFRS for reactions specified.
2) Refer to girder(s) for truss to truss connections.
3) Provide mechanical connection (by others) of truss to bearing plate capable of withstanding 274 lb uplift at joint 2 and 90 lb uplift at joint 3.

LOAD CASE(S) Standard

OCTOBER 17,2005 TRUSS DESIGN ENGINEER:
THOMAS E. MILLER PE 56877, BYRON K. ANDERSON PE 60987
STRUCTURAL ENGINEERING AND INSPECTIONS, INC. EB 9196
16105 N. FLORIDA AVE. STE B, LUTZ, FL 33549

Job	Truss	Truss Type	Qty	Ply	BRYAN ZECHER- LOT 26 CSE
L128039	CJ3	MONO TRUSS	2	1	Job Reference (optional)

Dwg.#101705153

Builders FirstSource, Lake City, Fl 32055 — 6.200 s Jul 13 2005 MiTek Industries, Inc. Fri Oct 14 14:58:50 2005 Page 1

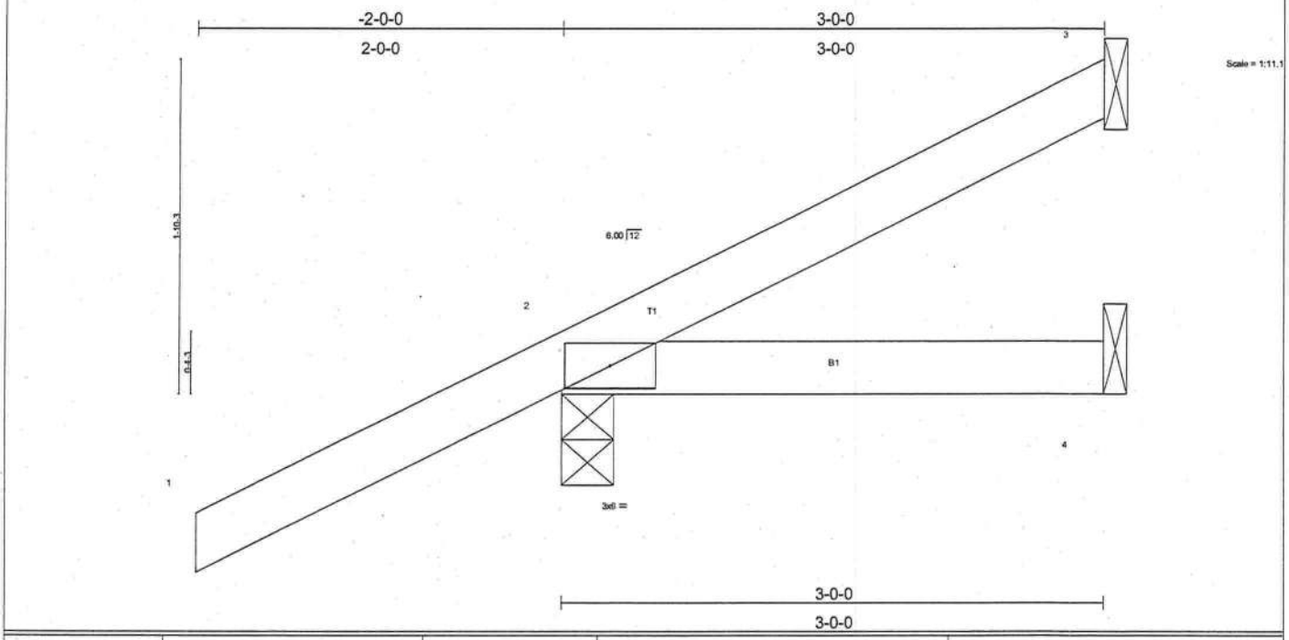

LOADING (psf)		SPACING	2-0-0	CSI		DEFL	in	(loc)	l/defl	L/d	PLATES	GRIP
TCLL	20.0	Plates Increase	1.25	TC	0.29	Vert(LL)	-0.00	2-4	>999	240	MT20	244/190
TCDL	7.0	Lumber Increase	1.25	BC	0.06	Vert(TL)	-0.01	2-4	>999	180		
BCLL	10.0	Rep Stress Incr	YES	WB	0.00	Horz(TL)	-0.00	3	n/a	n/a		
BCDL	5.0	Code FBC2004/TPI2002		(Matrix)							Weight: 13 lb	

LUMBER
TOP CHORD 2 X 4 SYP No.2
BOT CHORD 2 X 4 SYP No.2

BRACING
TOP CHORD Structural wood sheathing directly applied or 3-0-0 oc purlins.
BOT CHORD Rigid ceiling directly applied or 10-0-0 oc bracing.

REACTIONS (lb/size) 3=31/Mechanical, 2=278/0-3-8, 4=42/Mechanical
Max Horz 2=132(load case 5)
Max Uplift3=-28(load case 6), 2=-203(load case 5)

FORCES (lb) - Maximum Compression/Maximum Tension
TOP CHORD 1-2=0/47, 2-3=-57/7
BOT CHORD 2-4=0/0

NOTES
1) Wind: ASCE 7-02; 110mph (3-second gust); h=20ft; TCDL=4.2psf; BCDL=3.0psf; Category II; Exp B; enclosed; MWFRS gable end zone and C-C Exterior(2) zone; Lumber DOL=1.60 plate grip DOL=1.60. This truss is designed for C-C for members and forces, and for MWFRS for reactions specified.
2) Refer to girder(s) for truss to truss connections.
3) Provide mechanical connection (by others) of truss to bearing plate capable of withstanding 28 lb uplift at joint 3 and 203 lb uplift at joint 2.

LOAD CASE(S) Standard

OCTOBER 17,2005 TRUSS DESIGN ENGINEER:
THOMAS E. MILLER PE 56877, BYRON K. ANDERSON PE 60987
STRUCTURAL ENGINEERING AND INSPECTIONS, INC. EB 9196
16105 N. FLORIDA AVE. STE B, LUTZ, FL 33549

Job	Truss	Truss Type	Qty	Ply	BRYAN ZECHER- LOT 26 CSE
L128039	CJ3A	MONO SCISSOR	4	1	Job Reference (optional)

Dwg.#101705154

Builders FirstSource, Lake City, Fl 32055 — 6.200 s Jul 13 2005 MiTek Industries, Inc. Fri Oct 14 14:58:51 2005 Page 1

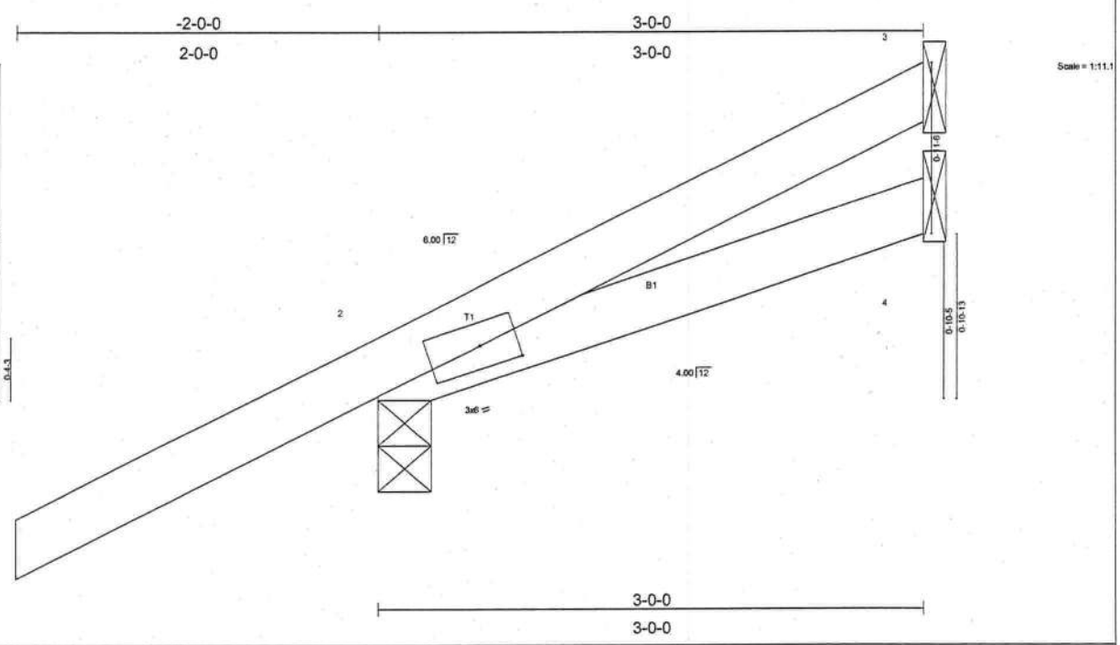

Plate Offsets (X,Y): [2:0-2-8,0-1-8]

LOADING (psf)		SPACING	2-0-0	CSI		DEFL	in	(loc)	l/defl	L/d	PLATES	GRIP
TCLL	20.0	Plates Increase	1.25	TC	0.29	Vert(LL)	-0.00	2-4	>999	240	MT20	244/190
TCDL	7.0	Lumber Increase	1.25	BC	0.06	Vert(TL)	-0.01	2-4	>999	180		
BCLL	10.0	Rep Stress Incr	YES	WB	0.00	Horz(TL)	-0.00	3	n/a	n/a		
BCDL	5.0	Code FBC2004/TPI2002		(Matrix)							Weight: 13 lb	

LUMBER
TOP CHORD 2 X 4 SYP No.2
BOT CHORD 2 X 4 SYP No.2

BRACING
TOP CHORD Structural wood sheathing directly applied or 3-0-0 oc purlins.
BOT CHORD Rigid ceiling directly applied or 10-0-0 oc bracing.

REACTIONS (lb/size) 3=31/Mechanical, 2=278/0-3-8, 4=42/Mechanical
Max Horz 2=131(load case 5)
Max Uplift3=-29(load case 6), 2=-201(load case 5)

FORCES (lb) - Maximum Compression/Maximum Tension
TOP CHORD 1-2=0/46, 2-3=-58/8
BOT CHORD 2-4=-11/11

NOTES
1) Wind: ASCE 7-02; 110mph (3-second gust); h=20ft; TCDL=4.2psf; BCDL=3.0psf; Category II; Exp B; enclosed; MWFRS gable end zone and C-C Exterior(2) zone; Lumber DOL=1.60 plate grip DOL=1.60. This truss is designed for C-C for members and forces, and for MWFRS for reactions specified.
2) Refer to girder(s) for truss to truss connections.
3) Bearing at joint(s) 2 considers parallel to grain value using ANSI/TPI 1 angle to grain formula. Building designer should verify capacity of bearing surface.
4) Provide mechanical connection (by others) of truss to bearing plate capable of withstanding 29 lb uplift at joint 3 and 201 lb uplift at joint 2.

LOAD CASE(S) Standard

OCTOBER 17,2005 TRUSS DESIGN ENGINEER:
THOMAS E. MILLER PE 56877, BYRON K. ANDERSON PE 60987
STRUCTURAL ENGINEERING AND INSPECTIONS, INC. EB 9196
16105 N. FLORIDA AVE. STE B, LUTZ, FL 33549

Job	Truss	Truss Type	Qty	Ply	BRYAN ZECHER- LOT 26 CSE
L128039	CJ5	MONO TRUSS	2	1	Job Reference (optional)

Dwg.#101705155

Builders FirstSource, Lake City, Fl 32055 — 6.200 s Jul 13 2005 MiTek Industries, Inc. Fri Oct 14 14:58:51 2005 Page 1

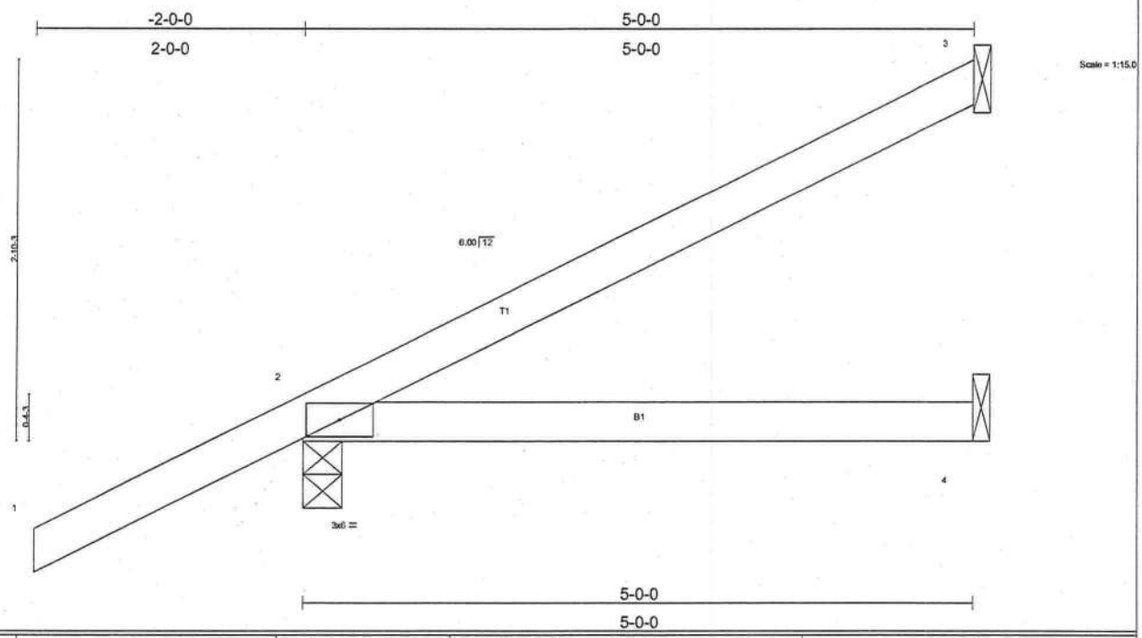

LOADING (psf)		SPACING 2-0-0		CSI		DEFL	in	(loc)	l/defl	L/d	PLATES	GRIP
TCLL	20.0	Plates Increase	1.25	TC	0.29	Vert(LL)	-0.03	2-4	>999	240	MT20	244/190
TCDL	7.0	Lumber Increase	1.25	BC	0.16	Vert(TL)	-0.05	2-4	>999	180		
BCLL	10.0	Rep Stress Incr	YES	WB	0.00	Horz(TL)	-0.00	3	n/a	n/a		
BCDL	5.0	Code FBC2004/TPI2002		(Matrix)							Weight: 19 lb	

LUMBER
TOP CHORD 2 X 4 SYP No.2
BOT CHORD 2 X 4 SYP No.2

BRACING
TOP CHORD Structural wood sheathing directly applied or 5-0-0 oc purlins.
BOT CHORD Rigid ceiling directly applied or 10-0-0 oc bracing.

REACTIONS (lb/size) 3=103/Mechanical, 2=343/0-3-8, 4=72/Mechanical
Max Horz 2=178(load case 5)
Max Uplift3=-87(load case 5), 2=-199(load case 5)

FORCES (lb) - Maximum Compression/Maximum Tension
TOP CHORD 1-2=0/47, 2-3=-88/36
BOT CHORD 2-4=0/0

NOTES
1) Wind: ASCE 7-02; 110mph (3-second gust); h=20ft; TCDL=4.2psf; BCDL=3.0psf; Category II; Exp B; enclosed; MWFRS gable end zone and C-C Exterior(2) zone; Lumber DOL=1.60 plate grip DOL=1.60. This truss is designed for C-C for members and forces, and for MWFRS for reactions specified.
2) Refer to girder(s) for truss to truss connections.
3) Provide mechanical connection (by others) of truss to bearing plate capable of withstanding 87 lb uplift at joint 3 and 199 lb uplift at joint 2.

LOAD CASE(S) Standard

OCTOBER 17,2005 TRUSS DESIGN ENGINEER:
THOMAS E. MILLER PE 56877, BYRON K. ANDERSON PE 60987
STRUCTURAL ENGINEERING AND INSPECTIONS, INC. EB 9196
16105 N. FLORIDA AVE. STE B, LUTZ, FL 33549

Job	Truss	Truss Type	Qty	Ply	BRYAN ZECHER- LOT 26 CSE	Dwg.#101705156
L128039	CJ5A	MONO SCISSOR	2	1	Job Reference (optional)	

Builders FirstSource, Lake City, Fl 32055 — 6.200 s Jul 13 2005 MiTek Industries, Inc. Fri Oct 14 14:58:52 2005 Page 1

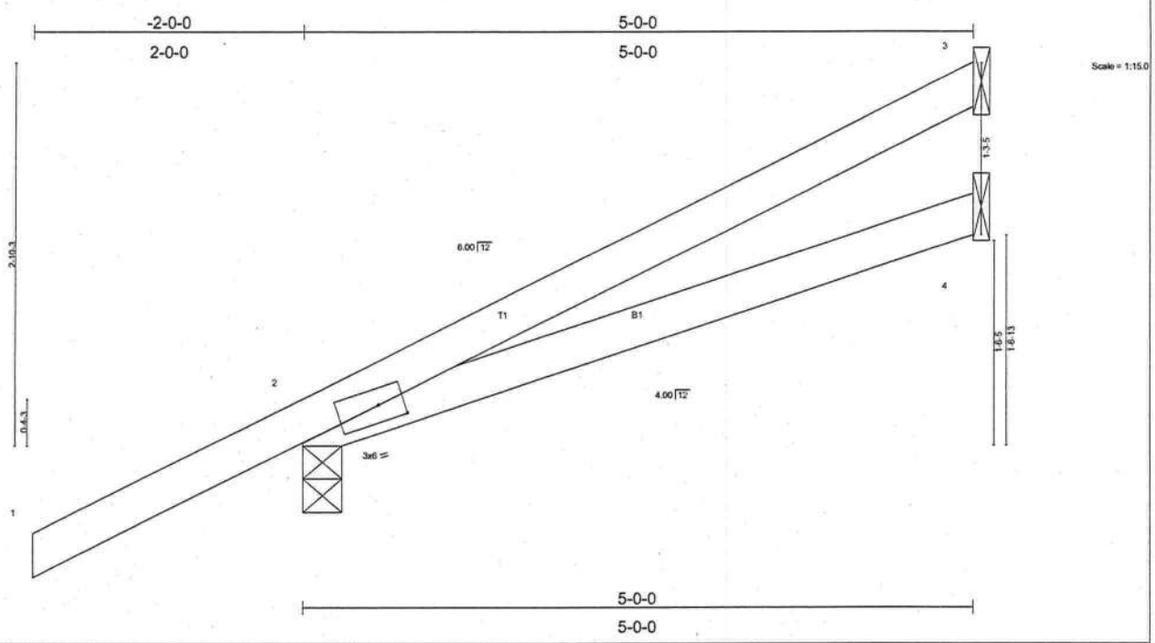

Plate Offsets (X,Y): [2:0-2-4,0-1-8]

LOADING (psf)		SPACING	2-0-0	CSI		DEFL	in	(loc)	l/defl	L/d	PLATES	GRIP
TCLL	20.0	Plates Increase	1.25	TC	0.29	Vert(LL)	-0.03	2-4	>999	240	MT20	244/190
TCDL	7.0	Lumber Increase	1.25	BC	0.16	Vert(TL)	-0.05	2-4	>999	180		
BCLL	10.0	Rep Stress Incr	YES	WB	0.00	Horz(TL)	-0.00	3	n/a	n/a		
BCDL	5.0	Code FBC2004/TPI2002		(Matrix)							Weight: 20 lb	

LUMBER
TOP CHORD 2 X 4 SYP No.2
BOT CHORD 2 X 4 SYP No.2

BRACING
TOP CHORD Structural wood sheathing directly applied or 5-0-0 oc purlins.
BOT CHORD Rigid ceiling directly applied or 10-0-0 oc bracing.

REACTIONS (lb/size) 3=103/Mechanical, 2=343/0-3-8, 4=72/Mechanical
Max Horz 2=177(load case 5)
Max Uplift3=-89(load case 5), 2=-198(load case 5)

FORCES (lb) - Maximum Compression/Maximum Tension
TOP CHORD 1-2=0/46, 2-3=-90/36
BOT CHORD 2-4=-18/18

NOTES
1) Wind: ASCE 7-02; 110mph (3-second gust); h=20ft; TCDL=4.2psf; BCDL=3.0psf; Category II; Exp B; enclosed; MWFRS gable end zone and C-C Exterior(2) zone; Lumber DOL=1.60 plate grip DOL=1.60. This truss is designed for C-C for members and forces, and for MWFRS for reactions specified.
2) Refer to girder(s) for truss to truss connections.
3) Bearing at joint(s) 2 considers parallel to grain value using ANSI/TPI 1 angle to grain formula. Building designer should verify capacity of bearing surface.
4) Provide mechanical connection (by others) of truss to bearing plate capable of withstanding 89 lb uplift at joint 3 and 198 lb uplift at joint 2.

LOAD CASE(S) Standard

OCTOBER 17,2005 TRUSS DESIGN ENGINEER:
THOMAS E. MILLER PE 56877, BYRON K. ANDERSON PE 60987
STRUCTURAL ENGINEERING AND INSPECTIONS, INC. EB 9196
16105 N. FLORIDA AVE. STE B, LUTZ, FL 33549

Job	Truss	Truss Type	Qty	Ply	BRYAN ZECHER- LOT 26 CSE
L128039	EJ7	MONO TRUSS	15	1	Job Reference (optional)

Dwg.#101705157

Builders FirstSource, Lake City, Fl 32055 — 6.200 s Jul 13 2005 MiTek Industries, Inc. Fri Oct 14 14:58:52 2005 Page 1

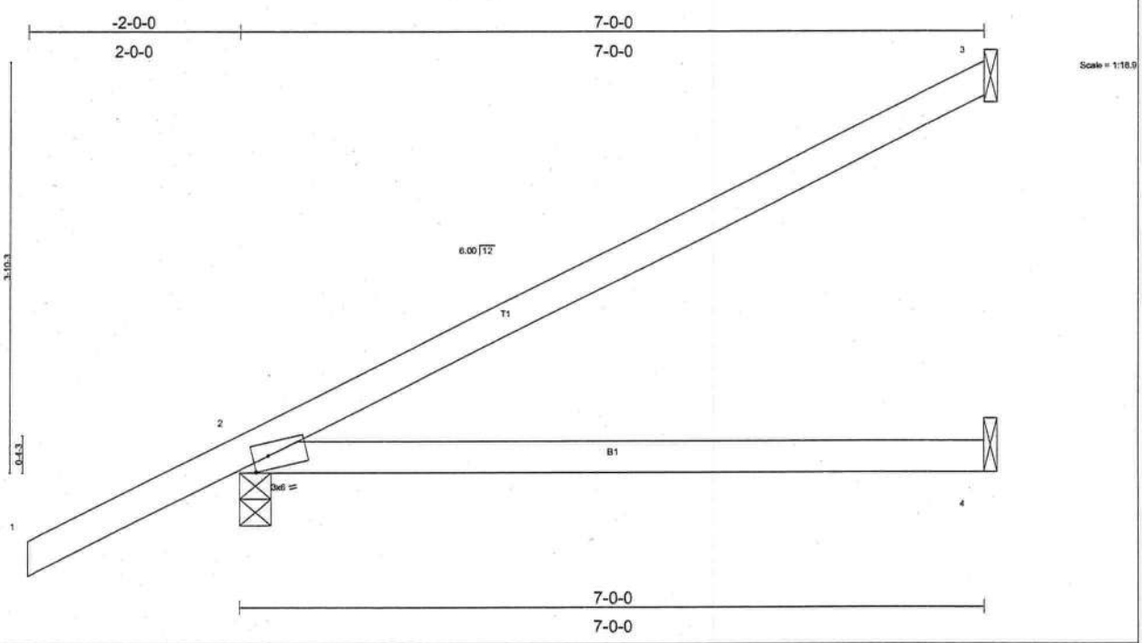

Plate Offsets (X,Y): [2:0-1-12,Edge]

LOADING (psf)		SPACING	2-0-0	CSI		DEFL	in	(loc)	l/defl	L/d	PLATES	GRIP
TCLL	20.0	Plates Increase	1.25	TC	0.48	Vert(LL)	-0.12	2-4	>664	240	MT20	244/190
TCDL	7.0	Lumber Increase	1.25	BC	0.35	Vert(TL)	-0.21	2-4	>397	180		
BCLL	10.0	Rep Stress Incr	YES	WB	0.00	Horz(TL)	-0.00	3	n/a	n/a		
BCDL	5.0	Code FBC2004/TPI2002		(Matrix)							Weight: 26 lb	

LUMBER
TOP CHORD 2 X 4 SYP No.2
BOT CHORD 2 X 4 SYP No.2

BRACING
TOP CHORD Structural wood sheathing directly applied or 6-0-0 oc purlins.
BOT CHORD Rigid ceiling directly applied or 10-0-0 oc bracing.

REACTIONS (lb/size) 3=162/Mechanical, 2=419/0-3-8, 4=104/Mechanical
Max Horz 2=224(load case 5)
Max Uplift3=-134(load case 5), 2=-210(load case 5)

FORCES (lb) - Maximum Compression/Maximum Tension
TOP CHORD 1-2=0/47, 2-3=-119/58
BOT CHORD 2-4=0/0

NOTES
1) Wind: ASCE 7-02; 110mph (3-second gust); h=20ft; TCDL=4.2psf; BCDL=3.0psf; Category II; Exp B; enclosed; MWFRS gable end zone and C-C Exterior(2) zone; Lumber DOL=1.60 plate grip DOL=1.60. This truss is designed for C-C for members and forces, and for MWFRS for reactions specified.
2) Refer to girder(s) for truss to truss connections.
3) Provide mechanical connection (by others) of truss to bearing plate capable of withstanding 134 lb uplift at joint 3 and 210 lb uplift at joint 2.

LOAD CASE(S) Standard

OCTOBER 17,2005 TRUSS DESIGN ENGINEER:
THOMAS E. MILLER PE 56877, BYRON K. ANDERSON PE 60987
STRUCTURAL ENGINEERING AND INSPECTIONS, INC. EB 9196
16105 N. FLORIDA AVE. STE B, LUTZ, FL 33549

Job	Truss	Truss Type	Qty	Ply	BRYAN ZECHER- LOT 26 CSE	Dwg.#101705158
L128039	EJ7A	SPECIAL	8	1	Job Reference (optional)	

Builders FirstSource, Lake City, Fl 32055 — 6.200 s Jul 13 2005 MiTek Industries, Inc. Fri Oct 14 14:58:53 2005 Page 1

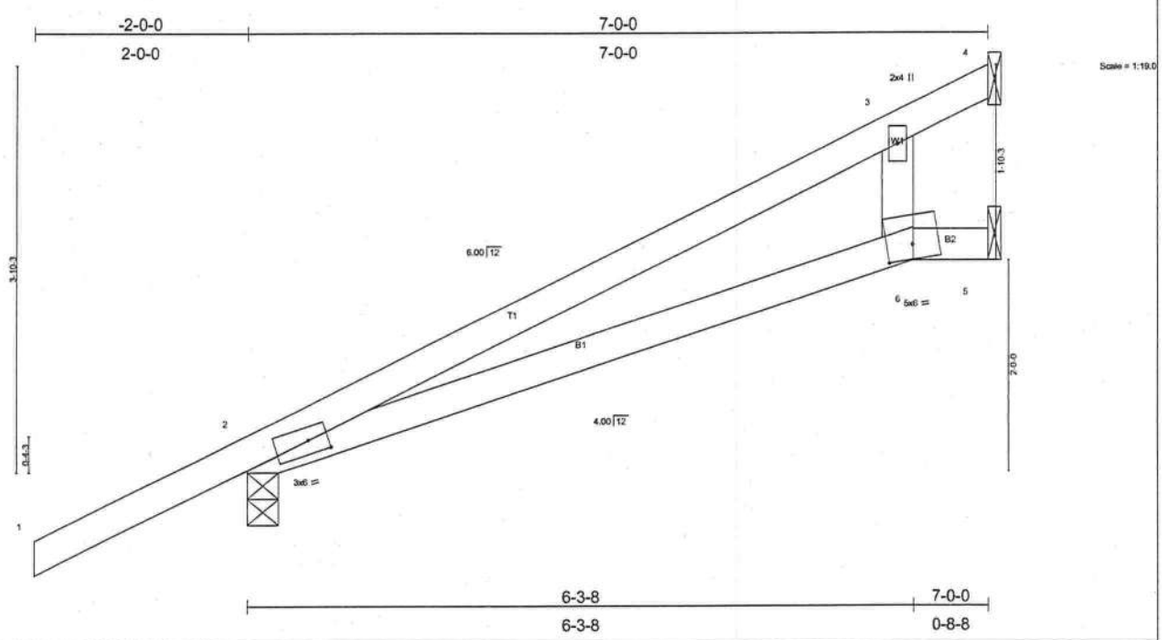

Plate Offsets (X,Y): [2:0-2-4,0-1-8], [6:0-3-0,0-1-12]

LOADING (psf)		SPACING	2-0-0	CSI		DEFL	in	(loc)	l/defl	L/d	PLATES	GRIP
TCLL	20.0	Plates Increase	1.25	TC	0.38	Vert(LL)	-0.15	2-6	>554	240	MT20	244/190
TCDL	7.0	Lumber Increase	1.25	BC	0.40	Vert(TL)	-0.24	2-6	>338	180		
BCLL	10.0	Rep Stress Incr	YES	WB	0.08	Horz(TL)	0.03	5	n/a	n/a		
BCDL	5.0	Code FBC2004/TPI2002		(Matrix)							Weight: 28 lb	

LUMBER
TOP CHORD 2 X 4 SYP No.2
BOT CHORD 2 X 4 SYP No.2
WEBS 2 X 4 SYP No.3

BRACING
TOP CHORD Structural wood sheathing directly applied or 6-0-0 oc purlins.
BOT CHORD Rigid ceiling directly applied or 6-0-0 oc bracing.

REACTIONS (lb/size) 4=39/Mechanical, 2=419/0-3-8, 5=228/Mechanical
Max Horz 2=223(load case 5)
Max Uplift2=-209(load case 5), 5=-179(load case 5)
Max Grav 4=52(load case 5), 2=419(load case 1), 5=228(load case 1)

FORCES (lb) - Maximum Compression/Maximum Tension
TOP CHORD 1-2=0/46, 2-3=-104/32, 3-4=-0/31
BOT CHORD 2-6=-39/33, 5-6=-1/2
WEBS 3-6=-141/310

NOTES
1) Wind: ASCE 7-02; 110mph (3-second gust); h=20ft; TCDL=4.2psf; BCDL=3.0psf; Category II; Exp B; enclosed; MWFRS gable end zone and C-C Exterior(2) zone; Lumber DOL=1.60 plate grip DOL=1.60. This truss is designed for C-C for members and forces, and for MWFRS for reactions specified.
2) Refer to girder(s) for truss to truss connections.
3) Bearing at joint(s) 2 considers parallel to grain value using ANSI/TPI 1 angle to grain formula. Building designer should verify capacity of bearing surface.
4) Provide mechanical connection (by others) of truss to bearing plate capable of withstanding 209 lb uplift at joint 2 and 179 lb uplift at joint 5.

LOAD CASE(S) Standard

OCTOBER 17,2005 TRUSS DESIGN ENGINEER:
THOMAS E. MILLER PE 56877, BYRON K. ANDERSON PE 60987
STRUCTURAL ENGINEERING AND INSPECTIONS, INC. EB 9196
16105 N. FLORIDA AVE. STE B, LUTZ, FL 33549

Job	Truss	Truss Type	Qty	Ply	BRYAN ZECHER- LOT 26 CSE
L128039	HJ7	MONO TRUSS	1	1	Job Reference (optional)

Dwg.#101705159

Builders FirstSource, Lake City, Fl 32055 — 6.200 s Jul 13 2005 MiTek Industries, Inc. Fri Oct 14 14:58:54 2005 Page 1

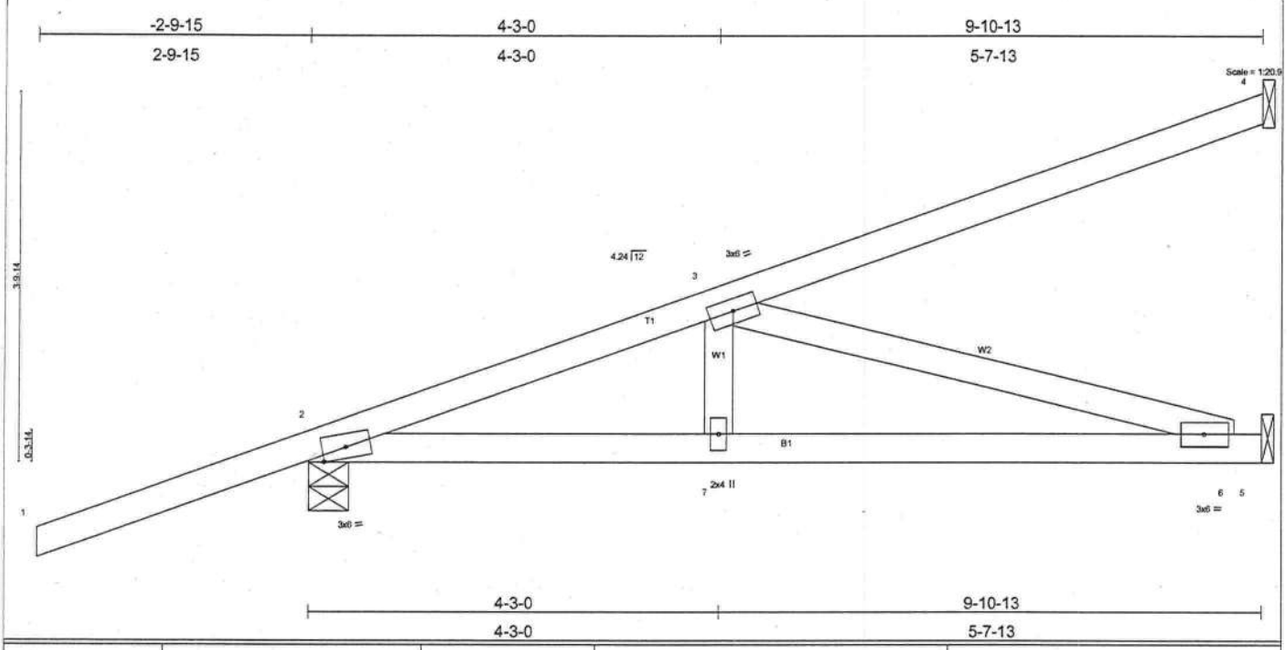

LOADING (psf)		SPACING 2-0-0		CSI		DEFL	in	(loc)	l/defl	L/d	PLATES	GRIP
TCLL	20.0	Plates Increase	1.25	TC	0.61	Vert(LL)	-0.10	6-7	>999	240	MT20	244/190
TCDL	7.0	Lumber Increase	1.25	BC	0.57	Vert(TL)	-0.17	6-7	>686	180		
BCLL	10.0	Rep Stress Incr	NO	WB	0.49	Horz(TL)	0.01	5	n/a	n/a		
BCDL	5.0	Code FBC2004/TPI2002		(Matrix)							Weight: 45 lb	

LUMBER
TOP CHORD 2 X 4 SYP No.2
BOT CHORD 2 X 4 SYP No.2
WEBS 2 X 4 SYP No.3

BRACING
TOP CHORD Structural wood sheathing directly applied or 6-0-0 oc purlins.
BOT CHORD Rigid ceiling directly applied or 10-0-0 oc bracing.

REACTIONS (lb/size) 4=269/Mechanical, 2=532/0-4-15, 5=377/Mechanical
Max Horz 2=269(load case 2)
Max Uplift4=-231(load case 2), 2=-278(load case 2), 5=-63(load case 2)

FORCES (lb) - Maximum Compression/Maximum Tension
TOP CHORD 1-2=0/50, 2-3=-888/121, 3-4=-105/66
BOT CHORD 2-7=-309/823, 6-7=-309/823, 5-6=0/0
WEBS 3-7=0/180, 3-6=-856/321

NOTES
1) Wind: ASCE 7-02; 110mph (3-second gust); h=20ft; TCDL=4.2psf; BCDL=3.0psf; Category II; Exp B; enclosed; MWFRS gable end zone; Lumber DOL=1.60 plate grip DOL=1.60.
2) Refer to girder(s) for truss to truss connections.
3) Provide mechanical connection (by others) of truss to bearing plate capable of withstanding 231 lb uplift at joint 4, 278 lb uplift at joint 2 and 63 lb uplift at joint 5.
4) In the LOAD CASE(S) section, loads applied to the face of the truss are noted as front (F) or back (B).

LOAD CASE(S) Standard
1) Regular: Lumber Increase=1.25, Plate Increase=1.25
Uniform Loads (plf)
Vert: 1-2=-54
Trapezoidal Loads (plf)
Vert: 2=-3(F=26, B=26)-to-4=-134(F=-40, B=-40), 2=-0(F=15, B=15)-to-5=-74(F=-22, B=-22)

OCTOBER 17,2005 TRUSS DESIGN ENGINEER:
THOMAS E. MILLER PE 56877, BYRON K. ANDERSON PE 60987
STRUCTURAL ENGINEERING AND INSPECTIONS, INC. EB 9196
16105 N. FLORIDA AVE. STE B, LUTZ, FL 33549

Job	Truss	Truss Type	Qty	Ply	BRYAN ZECHER- LOT 26 CSE
L128039	HJ7A	SPECIAL	1	1	Job Reference (optional)

Dwg.#101705160

Builders FirstSource, Lake City, Fl 32055 — 6.200 s Jul 13 2005 MiTek Industries, Inc. Fri Oct 14 14:58:54 2005 Page 1

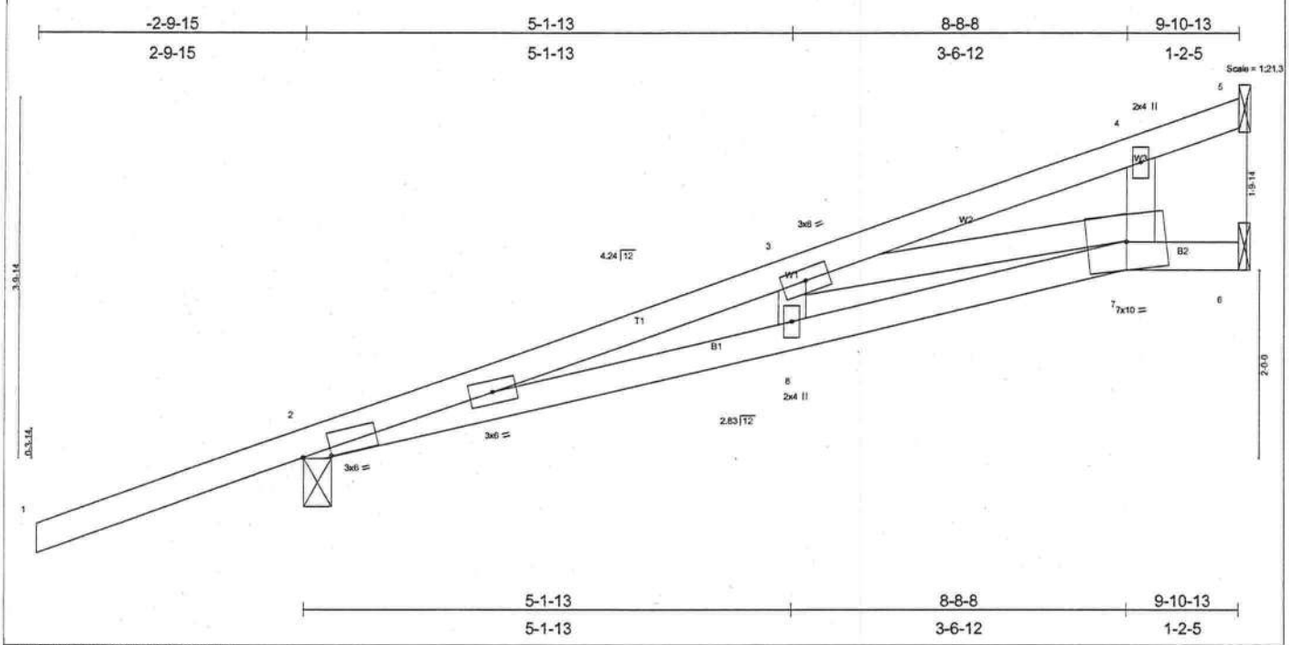

Plate Offsets (X,Y): [2:0-3-8,0-0-10]

LOADING (psf)		SPACING	2-0-0	CSI		DEFL	in	(loc)	l/defl	L/d	PLATES	GRIP
TCLL	20.0	Plates Increase	1.25	TC	0.69	Vert(LL)	-0.19	7-8	>601	240	MT20	244/190
TCDL	7.0	Lumber Increase	1.25	BC	0.93	Vert(TL)	-0.31	7-8	>375	180		
BCLL	10.0	Rep Stress Incr	NO	WB	0.47	Horz(TL)	0.07	6	n/a	n/a		
BCDL	5.0	Code FBC2004/TPI2002		(Matrix)							Weight: 43 lb	

LUMBER
TOP CHORD 2 X 4 SYP No.2
BOT CHORD 2 X 4 SYP No.2
WEBS 2 X 4 SYP No.3

BRACING
TOP CHORD Structural wood sheathing directly applied or 4-5-5 oc purlins.
BOT CHORD Rigid ceiling directly applied or 7-2-2 oc bracing.

REACTIONS (lb/size) 5=356/Mechanical, 2=527/0-3-8, 6=294/Mechanical
Max Horz 2=268(load case 2)
Max Uplift5=-157(load case 2), 2=-272(load case 2), 6=-140(load case 2)

FORCES (lb) - Maximum Compression/Maximum Tension
TOP CHORD 1-2=0/49, 2-3=-1850/514, 3-4=-114/0, 4-5=-59/114
BOT CHORD 2-8=-670/1761, 7-8=-672/1757, 6-7=0/0
WEBS 3-8=0/197, 3-7=-1694/669, 4-7=0/138

NOTES
1) Wind: ASCE 7-02; 110mph (3-second gust); h=20ft; TCDL=4.2psf; BCDL=3.0psf; Category II; Exp B; enclosed; MWFRS gable end zone; Lumber DOL=1.60 plate grip DOL=1.60.
2) Refer to girder(s) for truss to truss connections.
3) Bearing at joint(s) 2 considers parallel to grain value using ANSI/TPI 1 angle to grain formula. Building designer should verify capacity of bearing surface.
4) Provide mechanical connection (by others) of truss to bearing plate capable of withstanding 157 lb uplift at joint 5, 272 lb uplift at joint 2 and 140 lb uplift at joint 6.
5) In the LOAD CASE(S) section, loads applied to the face of the truss are noted as front (F) or back (B).

LOAD CASE(S) Standard
1) Regular: Lumber Increase=1.25, Plate Increase=1.25
Uniform Loads (plf)
Vert: 1-2=-54
Trapezoidal Loads (plf)
Vert: 2=-2(F=26, B=26)-to-5=-134(F=-40, B=-40), 2=0(F=15, B=15)-to-7=-66(F=-18, B=-18), 7=-66(F=-18, B=-18)-to-6=-74(F=-22, B=-22)

OCTOBER 17,2005 TRUSS DESIGN ENGINEER:
THOMAS E. MILLER PE 56877, BYRON K. ANDERSON PE 60987
STRUCTURAL ENGINEERING AND INSPECTIONS, INC. EB 9196
16105 N. FLORIDA AVE. STE B, LUTZ, FL 33549

Job	Truss	Truss Type	Qty	Ply	BRYAN ZECHER- LOT 26 CSE	Dwg.#101705161
L128039	T01	COMMON	10	1	Job Reference (optional)	

Builders FirstSource, Lake City, Fl 32055 — 6.200 s Jul 13 2005 MiTek Industries, Inc. Fri Oct 14 14:58:55 2005 Page 1

-2-0-0	3-9-13	9-9-12	15-9-11	19-7-8	21-7-8
2-0-0	3-9-13	5-11-15	5-11-15	3-9-13	2-0-0

Scale = 1:38.8

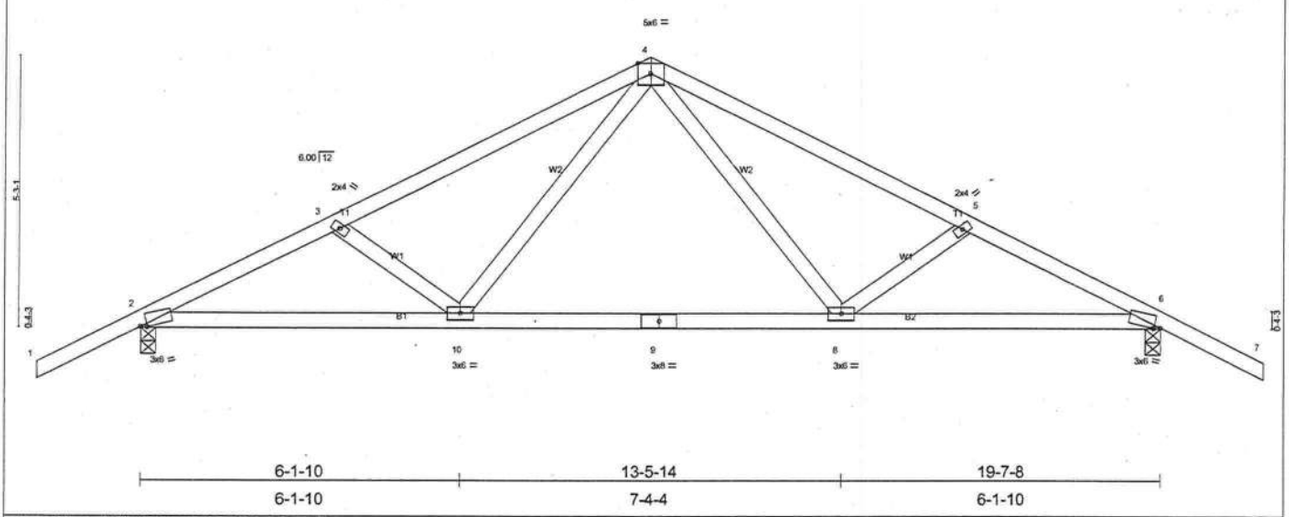

6-1-10	13-5-14	19-7-8
6-1-10	7-4-4	6-1-10

Plate Offsets (X,Y): [2:0-1-9,0-0-7], [6:0-1-9,0-0-7]

LOADING (psf)		SPACING	2-0-0	CSI		DEFL	in	(loc)	l/defl	L/d	PLATES	GRIP
TCLL	20.0	Plates Increase	1.25	TC	0.36	Vert(LL)	-0.25	8-10	>930	240	MT20	244/190
TCDL	7.0	Lumber Increase	1.25	BC	0.84	Vert(TL)	-0.40	8-10	>573	180		
BCLL	10.0	Rep Stress Incr	NO	WB	0.22	Horz(TL)	0.04	6	n/a	n/a		
BCDL	5.0	Code FBC2004/TPI2002		(Matrix)							Weight: 95 lb	

LUMBER
TOP CHORD 2 X 4 SYP No.2
BOT CHORD 2 X 4 SYP No.2
WEBS 2 X 4 SYP No.3

BRACING
TOP CHORD Structural wood sheathing directly applied or 4-6-3 oc purlins.
BOT CHORD Rigid ceiling directly applied or 8-2-5 oc bracing.

REACTIONS (lb/size) 2=1112/0-3-8, 6=1112/0-3-8
Max Horz 2=-107(load case 6)
Max Uplift2=-459(load case 5), 6=-459(load case 6)

FORCES (lb) - Maximum Compression/Maximum Tension
TOP CHORD 1-2=0/47, 2-3=-1848/803, 3-4=-1679/740, 4-5=-1679/740, 5-6=-1848/803, 6-7=0/47
BOT CHORD 2-10=-567/1590, 9-10=-275/1046, 8-9=-275/1046, 6-8=-567/1590
WEBS 3-10=-216/201, 4-10=-222/686, 4-8=-222/686, 5-8=-216/201

NOTES
1) Unbalanced roof live loads have been considered for this design.
2) Wind: ASCE 7-02; 110mph (3-second gust); h=20ft; TCDL=4.2psf; BCDL=3.0psf; Category II; Exp B; enclosed; MWFRS gable end zone and C-C Exterior(2) zone; Lumber DOL=1.60 plate grip DOL=1.60. This truss is designed for C-C for members and forces, and for MWFRS for reactions specified.
3) Provide mechanical connection (by others) of truss to bearing plate capable of withstanding 459 lb uplift at joint 2 and 459 lb uplift at joint 6.
4) In the LOAD CASE(S) section, loads applied to the face of the truss are noted as front (F) or back (B).

LOAD CASE(S) Standard
1) Regular: Lumber Increase=1.25, Plate Increase=1.25
Uniform Loads (plf)
Vert: 2-10=-30, 8-10=-80(F=-50), 6-8=-30, 1-4=-54, 4-7=-54

OCTOBER 17,2005 TRUSS DESIGN ENGINEER:
THOMAS E. MILLER PE 56877, BYRON K. ANDERSON PE 60987
STRUCTURAL ENGINEERING AND INSPECTIONS, INC. EB 9196
16105 N. FLORIDA AVE. STE B, LUTZ, FL 33549

Job	Truss	Truss Type	Qty	Ply	BRYAN ZECHER- LOT 26 CSE	Dwg.#101705162
L128039	T01G	DROP TC GABLE	1	1	Job Reference (optional)	

Builders FirstSource, Lake City, Fl 32055 — 6.200 s Jul 13 2005 MiTek Industries, Inc. Fri Oct 14 14:58:55 2005 Page 1

-2-0-0 | 9-9-12 | 19-7-8 | 21-7-8

2-0-0 | 9-9-12 | 9-9-12 | 2-0-0

Scale = 1:38.6

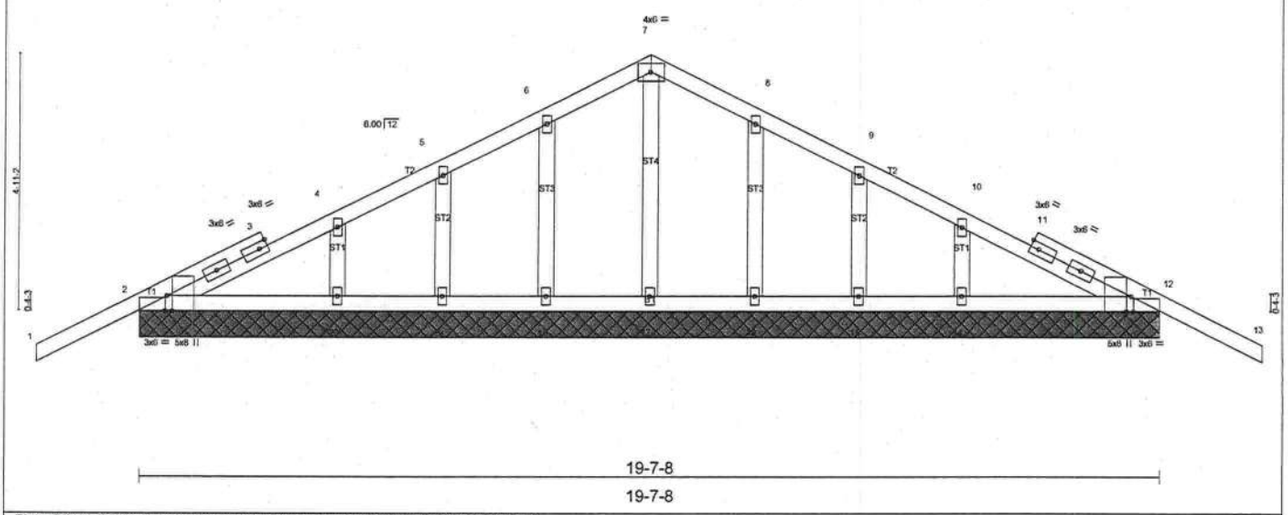

19-7-8

19-7-8

Plate Offsets (X,Y): [2:0-3-8,Edge], [2:0-0-8,Edge], [12:0-3-8,Edge], [12:0-0-8,Edge]

LOADING (psf)		SPACING	2-0-0	CSI		DEFL	in	(loc)	l/defl	L/d	PLATES	GRIP
TCLL	20.0	Plates Increase	1.25	TC	0.49	Vert(LL)	-0.04	13	n/r	120	MT20	244/190
TCDL	7.0	Lumber Increase	1.25	BC	0.06	Vert(TL)	-0.06	13	n/r	90		
BCLL	10.0	Rep Stress Incr	NO	WB	0.09	Horz(TL)	0.00	12	n/a	n/a		
BCDL	5.0	Code FBC2004/TPI2002		(Matrix)							Weight: 103 lb	

LUMBER
TOP CHORD 2 X 4 SYP No.2
BOT CHORD 2 X 4 SYP No.2
OTHERS 2 X 4 SYP No.3

BRACING
TOP CHORD Structural wood sheathing directly applied or 6-0-0 oc purlins.
BOT CHORD Rigid ceiling directly applied or 6-0-0 oc bracing.

REACTIONS (lb/size) 2=536/19-7-8, 12=536/19-7-8, 17=283/19-7-8, 18=299/19-7-8, 19=248/19-7-8, 20=416/19-7-8, 16=299/19-7-8, 15=248/19-7-8, 14=416/19-7-8
Max Horz 2=102(load case 5)
Max Uplift2=-280(load case 5), 12=-297(load case 6), 17=-4(load case 5), 18=-129(load case 5), 19=-135(load case 5), 20=-138(load case 5), 16=-127(load case 6), 15=-134(load case 6), 14=-143(load case 6)
Max Grav 2=536(load case 1), 12=536(load case 1), 17=283(load case 1), 18=304(load case 9), 19=248(load case 1), 20=416(load case 9), 16=304(load case 10), 15=248(load case 1), 14=416(load case 10)

FORCES (lb) - Maximum Compression/Maximum Tension
TOP CHORD 1-2=-20/99, 2-3=-88/52, 3-4=-65/85, 4-5=-59/96, 5-6=-48/139, 6-7=-52/193, 7-8=-52/193, 8-9=-48/139, 9-10=-59/84, 10-11=-23/85, 11-12=-88/28, 12-13=-20/99
BOT CHORD 2-20=-1/122, 19-20=-1/122, 18-19=-1/122, 17-18=-1/122, 16-17=-1/122, 15-16=-1/122, 14-15=-1/122, 12-14=-1/122
WEBS 7-17=-225/16, 6-18=-239/167, 5-19=-202/169, 4-20=-321/202, 8-16=-239/167, 9-15=-202/169, 10-14=-321/202

NOTES
1) Unbalanced roof live loads have been considered for this design.
2) Wind: ASCE 7-02; 110mph (3-second gust); h=20ft; TCDL=4.2psf; BCDL=3.0psf; Category II; Exp B; enclosed; MWFRS gable end zone and C-C Exterior(2) zone; Lumber DOL=1.60 plate grip DOL=1.60. This truss is designed for C-C for members and forces, and for MWFRS for reactions specified.
3) Truss designed for wind loads in the plane of the truss only. For studs exposed to wind (normal to the face), see MiTek "Standard Gable End Detail"
4) All plates are 2x4 MT20 unless otherwise indicated.
5) Gable requires continuous bottom chord bearing.
6) Gable studs spaced at 2-0-0 oc.
7) Provide mechanical connection (by others) of truss to bearing plate capable of withstanding 280 lb uplift at joint 2, 297 lb uplift at joint 12, 4 lb uplift at joint 17, 129 lb uplift at joint 18, 135 lb uplift at joint 19, 138 lb uplift at joint 20, 127 lb uplift at joint 16, 134 lb uplift at joint 15 and 143 lb uplift at joint 14.
8) In the LOAD CASE(S) section, loads applied to the face of the truss are noted as front (F) or back (B).

LOAD CASE(S) Standard
1) Regular: Lumber Increase=1.25, Plate Increase=1.25
Uniform Loads (plf)
Vert: 1-7=-114(F=-60), 7-13=-114(F=-60), 2-12=-30

OCTOBER 17,2005 TRUSS DESIGN ENGINEER:
THOMAS E. MILLER PE 56877, BYRON K. ANDERSON PE 60987
STRUCTURAL ENGINEERING AND INSPECTIONS, INC. EB 9196
16105 N. FLORIDA AVE. STE B, LUTZ, FL 33549