KODIAK STEEL HOMES

Kodiak Steel Homes, Inc
7301 Industry Drive
North Little Rock, AR 72117

AUGUSTA 1

BUILDING SPECIFICATIONS

THE STRUCTURE UNDER THIS CONTRACT HAS BEEN DESIGNED AND DETAILED FOR THE LOADS AND CONDITIONS STIPULATED IN THE CONTRACT AND SHOWN ON THESE DRAWINGS. ANY ALTERATIONS TO THE STRUCTURAL SYSTEM OR REMOVAL OF ANY COMPONENT PARTS, OR THE ADDITION OF OTHER CONSTRUCTION MATERIALS OR LOADS MUST BE DONE UNDER THE ADVICE OF A REGISTERED ARCHITECT, CIVIL OR STRUCTURAL ENGINEER. KODIAK STEEL HOMES BUILDING SYSTEMS WILL ASSUME NO RESPONSIBILITY FOR ANY LOADS NOT INDICATED.

THIS STRUCTURE IS DESIGNED USING STANDARD DESIGN PRACTICES BASED ON PERTINENT PROCEDURES AND RECOMMENDATIONS OF THE FOLLOWING ORGANIZATIONS AND CODES.

AMERICAN INSTITUTE OF STEEL CONSTRUCTION: "SPECIFICATION FOR THE DESIGN, FABRICATION, AND ERECTION OF STRUCTURAL STEEL FOR BUILDINGS", 9TH EDITION.

AMERICAN IRON AND STEEL INSTITUTE: "SPECIFICATION FOR THE DESIGN OF COLD FORMED STRUCTURAL MEMBERS.

AMERICAN WELDING SOCIETY: "STRUCTURAL WELDING CODE" AWS D1.1-88, SECT. 5, PART B.

MATERIAL PROPERTIES OF STEEL PLATE AND SHEET STEEL USED IN THE FABRICATION OF PRIMARY RIGID FRAMES AND ALL PRIMARY STRUCTURAL FRAMING MEMBERS (OTHER THAN COLD FORMED SECTIONS) CONFORM TO ASTM A-36 MODIFIED WITH A MINIMUM YIELD OF 50,000 PSI, OR A-570 OR A-572 GRADE 50.

MATERIAL PROPERTIES OF COLD FORMED LIGHT GAGE STEEL MEMBERS CONFORM TO THE REQUIREMENTS OF ASTM-570, WITH A MINIMUM YIELD OF 55,000 PSI.

HIGH STRENGTH BOLTS AND THEIR INSTALLATION SHALL CONFORM TO ASTM SPECIFICATIONS A-330 AND ARE DESIGNED AS BEARING TYPE CONNECTIONS WITH THREADS INCLUDED IN THE SHEAR PLANE. TIGHTENING OF THESE BOLTS IS RECOMMENDED BY THE TURN-OF-THE-NUT METHOD, PER "AISC SPECIFICATIONS FOR STRUCTURAL JOINTS."

SHOP AND FIELD INSPECTIONS AND ASSOCIATED FEES ARE THE RESPONSIBILITY OF THE CONTRACTOR, UNLESS STIPULATED OTHERWISE.

SINGLE-STORY CEILING JOIST SYSTEMS ARE DESIGNED TO COMPLY WITH THE IRC CODE SPECIFICATIONS FOR UNINHABITED ATTICS WITHOUT STORAGE AND ARE NOT INTENDED TO SERVE AS A MEZZANINE OR SUPPORT LOADS EXCEEDING 10PSF.

BUILDERS RESPONSIBILITIES

THE BUILDER MUST SECURE ALL REQUIRED APPROVALS AND PERMITS FROM THE APPROPRIATE AGENCY AS REQUIRED.

APPROVAL OF KODIAK STEEL HOMES DRAWINGS AND CALCULATIONS INDICATES THAT KODIAK STEEL HOMES HAS CORRECTLY INTERPRETED AND APPLIED THE REQUIREMENTS OF THE CONTRACT DRAWINGS AND SPECIFICATIONS. (SECT. 4.2.1 AISC CODE OF STANDARD PRACTICE, 9TH EDITION.)

WHERE DISCREPANCIES EXIST BETWEEN KODIAK STEEL HOMES STRUCTURAL STEEL PLANS AND THE PLANS FOR OTHER TRADES, KODIAK STEEL HOMES STRUCTURAL STEEL PLANS WILL GOVERN. (SECT. 3.3 AISC CODE OF STANDARD PRACTICE, 9TH EDITION.)

DESIGN CONSIDERATONS OF ANY MATERIALS IN THE STRUCTURE WHICH ARE NOT FURNISHED BY KODIAK STEEL HOMES ARE THE RESPONSIBILITY OF THE BUILDER AND ENGINEERS OTHER THAN KODIAK STEEL HOMES ENGINEERING UNLESS SPECIFICALLY INDICATED.

THE BUILDER IS RESPONSIBLE FOR ALL ERECTION OF STEEL AND ASSOCIATED WORK IN COMPLIANCE WITH KODIAK STEEL HOMES CONSTRUCTION DRAWINGS.

TEMPORARY SUPPORTS, SUCH AS TEMPORARY GUYS, BRACES, FALSEWORK OR OTHER ELEMENTS REQUIRED FOR ERECTION WILL BE DETERMINED, FURNISHED, AND INSTALLED BY THE BUILDER, (SECT 7.9.1 AISC CODE OF STANDARD PRACTICE, 9TH EDITION.)

IT IS THE BUILDERS RESPONSIBILITY TO APPLY AND OBSERVE ALL PERTINENT SAFETY RULES AND REGULATIONS, PER OSHA STANDARDS AS APPLICABLE.

THE BUILDER IS RESPONSIBLE FOR THE VERIFICATION OF ALL SHIPMENTS RECEIVED, AND MUST INVENTORY BUILDING AT TIME OF DELIVERY.

ENGINEER SEAL

THE CERTIFICATION COVERS PARTS MANUFACTURED AND DELIVERED BY THE MANUFACTURE ONLY AND EXCLUDES PARTS SUCH AS DOORS, WINDOWS, AND FOUNDATION DESIGN AND ERECTION OF THE HOME. THE UNDERSIGNED PROFESSIONAL ENGINEER IS NOT THE ENGINEER OF RECORD FOR OVERALL PROJECT.

DESIGN LOADING

THIS STRUCTURE IS DESIGNED UTILIZING THE LOADS INDICATED AND APPLIED AS REQUIRED BY:

FLORDIA BUILDING CODE 2004

THE BUILDER IS TO CONFIRM THAT THESE LOADS COMPLY WITH THE REQUIREMENTS OF THE LOCAL BUILDING DEPARTMENT.

SPECIFIC LOADS: (SEE STRUCTURAL CALCULATIONS AND FOUNDATION REACTIONS)

20	PSF ROOF LIVE LOAD
28	PSF GROUND SNOW LOAD
140	WIND SPEED (MPH)
7	PSF COLLATERAL LOAD
B	EXPOSURE
2	SEISMIC ZONE
37'-0"	WIDTH
60'-0"	LENGTH
11'-9"	HEIGHT
5:12/2:12	ROOF SLOPE
1.0	IMPORTANCE FACTOR
3.0	DEAD LOAD-BLDG P.S.F.
N/A	OTHER LOADS P.S.F.

DRAWING INDEX

	COVER SHEET
F1	ANCHOR BOLT PLAN
F2	ANCHOR BOLT DETAILS
F3	ANCHOR BOLT DETAILS
F4	ANCHOR BOLT DETAILS
E1	ROOF FRAMING PLAN
E2	CEILING FRAMING PLAN
E3	FRAME CROSS SECTION @ COLUMN LINES 3 THRU 6
E4	FRAME CROSS SECTION @ COLUMN LINES B THRU E & @ HIPS
E5	SIDEWALL FRAMING & SHEETING @ COLUMN LINE B
E6	SIDEWALL FRAMING & SHEETING @ COLUMN LINE E
E7	PORCH FRAMING & SHEETING @ COLUMN LINES A & F
E8	ENDWALL FRAMING & SHEETING @ COLUMN LINE 2
E9	ENDWALL FRAMING & SHEETING @ COLUMN LINE 7
E10	PORCH FRAMING & SHEETING @ COLUMN LINES 1 & 8
E11	PORCH ROOF SHEETING PLAN
E12	ROOF SHEETING PLAN
E13	PORCH SOFFIT SHEETING PLAN
E14	FRAMING DETAILS
E15	FRAMING DETAILS
E16	FRAMING DETAILS
	STANDARD BACK TO BACK GIRT DETAILS
	STANDARD FASTENERS
	STANDARD FRAMED OPENING DETAILS
	STANDARD GUTTER & DOWNSPOUT DETAILS
	STANDARD HIP & VALLEY DETAILS
	STANDARD POLAR WALL SIDING & SOFFIT DETAILS
	STANDARD ROOF & TRIM DETAILS
	STANDARD STEEL SIDING & SOFFIT DETAILS
	STANDARD STUD PLACEMENT AT CORNERS

REVISIONS

NO.	DATE	DESCRIPTION	BY	CK'D
3	8/08/06	REVISED DRAWING INDEX	WF	KSH
4	12/12/06	REVISED DRAWING INDEX	WF	KSH

FOR QUESTIONS OR ASSISTANCE CONCERNING ERECTION CALL:
1-800-793-9185

*HOLD FOR PERMIT APPROVAL ORDERS MUST BE RELEASED FOR FABRICATION WITHIN 30 CALENDAR DAYS AFTER SUBMITTAL DRAWINGS ARE ISSUED OR THE ORDER WILL BE SUBJECT TO ANY CURRENT PRICE INCREASE.

CUSTOMER INFORMATION

CUSTOMER NAME: JOSEPH EARL BENNETT

JOB NUMBER: 1028FL

LOCATION: 2699 SW SPRUCE ROAD
LAKE CITY, FL

Muhammad Almahayni, PE
7101 W. 12TH Street, Suite 301B
Little Rock, AR 72204
Tel: 501-660-4000

THESE DRAWINGS ARE:

- [x] FOR CONSTRUCTION
- [ ] NOT FOR CONSTRUCTION
- [ ] FOR PERMITS ONLY
- [ ] OTHER _____

12/3/07

REVISION #: 4

COVER SHEET

© 2005 KODIAK STEEL HOMES, ALL RIGHTS RESERVED

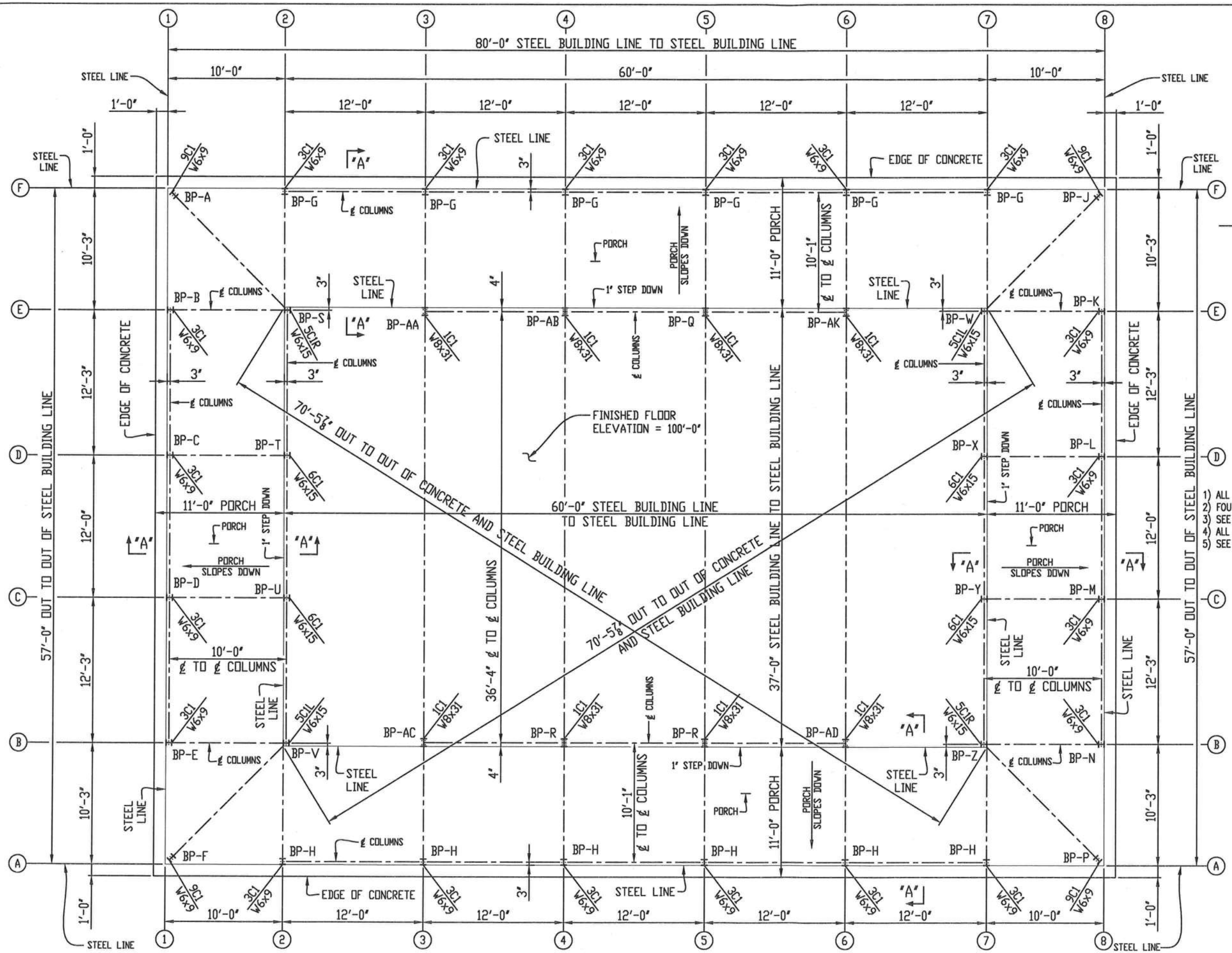

ANCHOR BOLT COUNT ¾" = 96

ANCHOR BOLT PLAN AUGUSTA 1

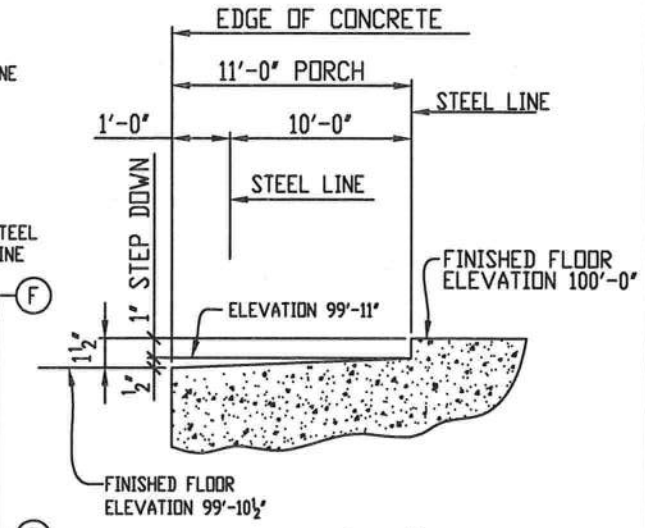

SECTION "A-A"

GENERAL NOTES:

1) ALL ANCHOR BOLTS ARE TO BE SUPPLIED BY OTHERS.
2) FOUNDATION TO BE DESIGN BY FIELD ENGINEER.
3) SEE DRAWINGS No. F2, F3, & F4 FOR BASE PLATE DETAILS.
4) ALL ANCHOR BOLTS ARE TO BE PROJECTED 2½" ABOVE FINSIHED FLOOR.
5) SEE DRAWING NO. F4 FOR REACTIONS.

12/3/07

REVISIONS

NO.	DATE	DESCRIPTION	BY	CK'D
1	9/15/05	REVISED ℄ TO ℄ FROM 36'-4" TO 36'-0"	WM	WF
2	6/12/06	REVISED & REWORKED WITH NEW DRAWING AND INCORPORATED 1'-0" CONCRETE EDGE.	JF	MK

KODIAK STEEL HOMES

Kodiak Steel Homes, Inc
7301 Industry Drive
North Little Rock, AR 72117

DESCRIPTION: ANCHOR BOLT PLAN

STYLE: AUGUSTA 1 | SIZE: 37'-0" X 60'-0"

DRN. BY	CK'D BY	DATE	SCALE	CODE	SHEET NO.	REV. #
JF	MK	6/12/06	NTS		F1	2

© COPYRIGHT 2003 ALL STEEL HOMES, INC.

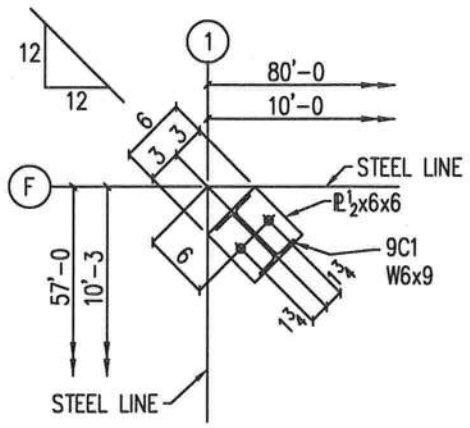

DETAIL "BP-A" (2) ¾"ø ANCHOR BOLTS

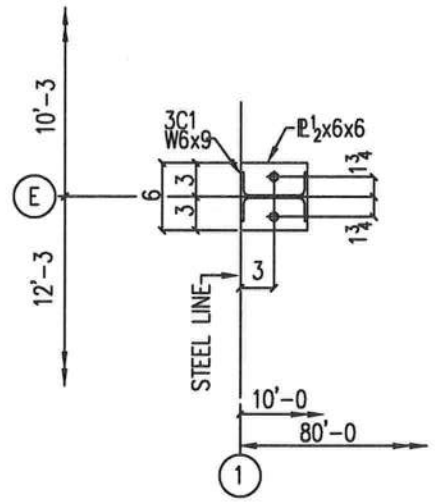

DETAIL "BP-B" (2) ¾"ø ANCHOR BOLTS

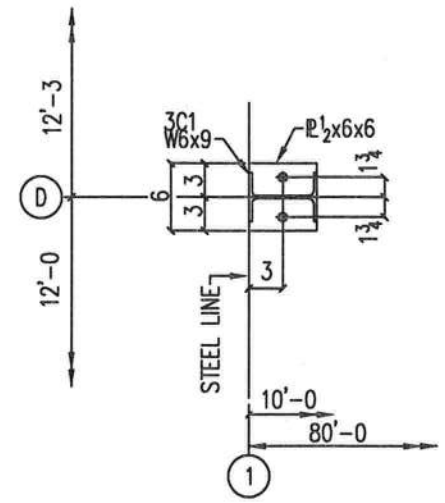

DETAIL "BP-C" (2) ¾"ø ANCHOR BOLTS

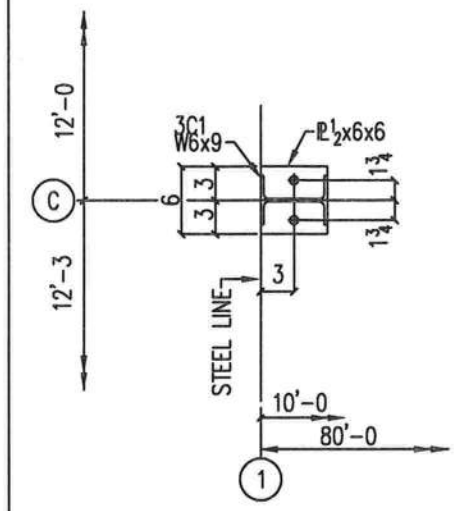

DETAIL "BP-D" (2) ¾"ø ANCHOR BOLTS

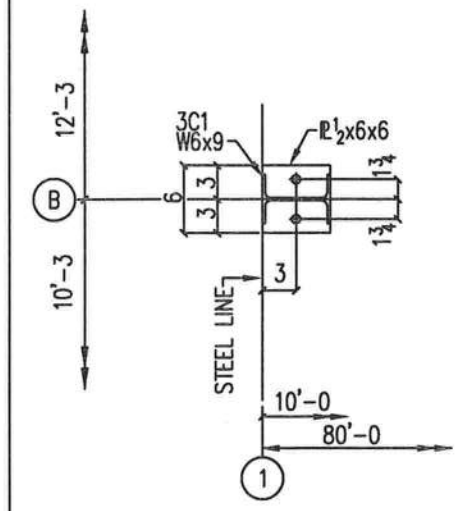

DETAIL "BP-E" (2) ¾"ø ANCHOR BOLTS

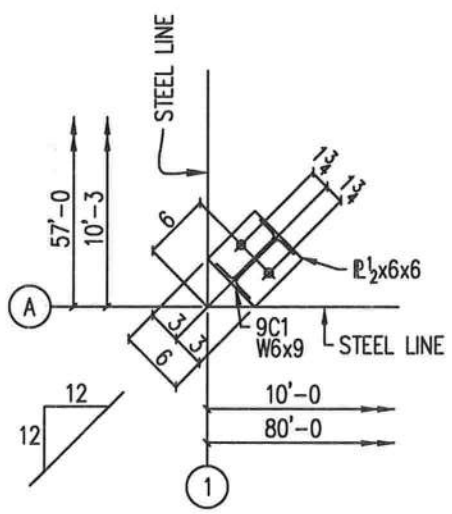

DETAIL "BP-F" (2) ¾"ø ANCHOR BOLTS

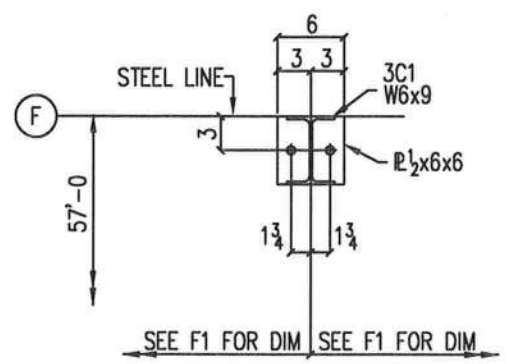

DETAIL "BP-G" (2) ¾"ø ANCHOR BOLTS

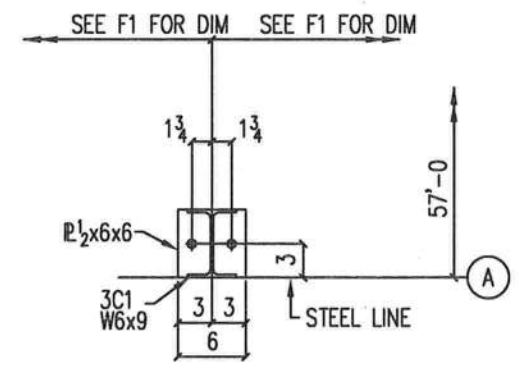

DETAIL "BP-H" (2) ¾"ø ANCHOR BOLTS

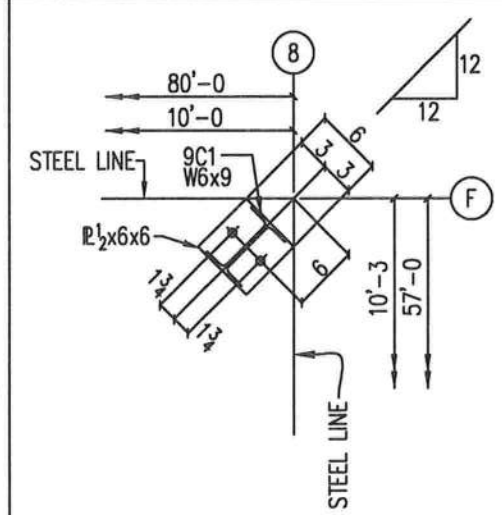

DETAIL "BP-J" (2) ¾"ø ANCHOR BOLTS

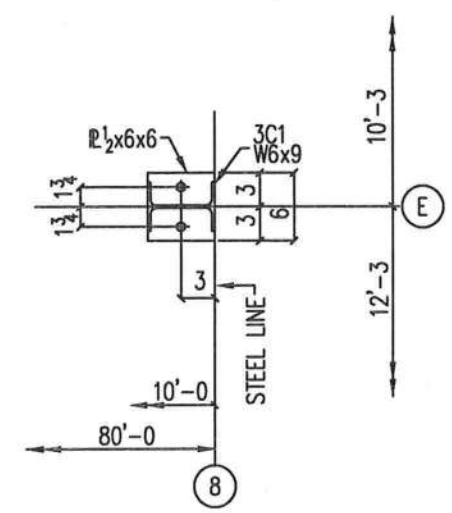

DETAIL "BP-K" (2) ¾"ø ANCHOR BOLTS

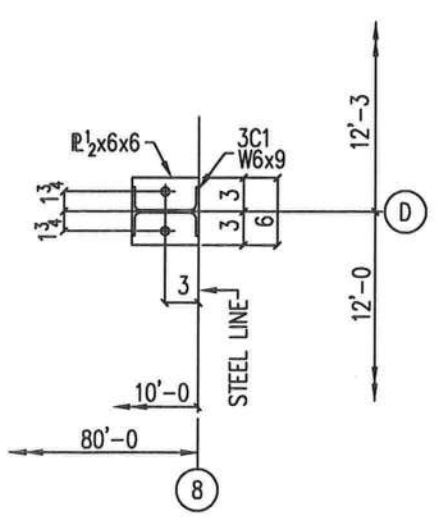

DETAIL "BP-L" (2) ¾"ø ANCHOR BOLTS

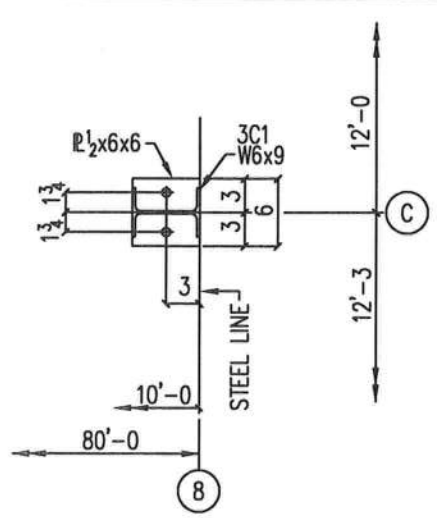

DETAIL "BP-M" (2) ¾"ø ANCHOR BOLTS

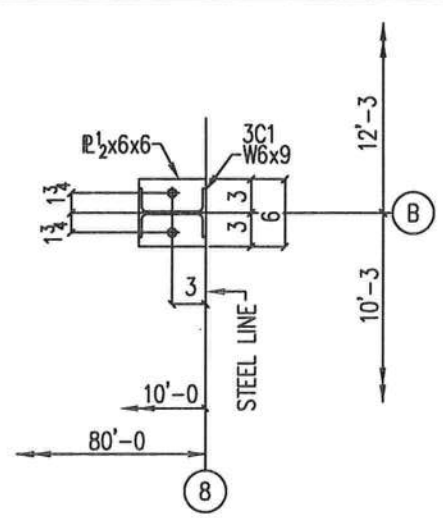

DETAIL "BP-N" (2) ¾"ø ANCHOR BOLTS

12/3/07

REVISIONS				
NO.	DATE	DESCRIPTION	BY	CK'D
1	6/12/06	CLARIFIED ANCHOR BOLT DETAILS	JF	MK

KODIAK STEEL HOMES

Kodiak Steel Homes, Inc
7301 Industry Drive
North Little Rock, AR 72117

DESCRIPTION: ANCHOR BOLT DETAILS

STYLE: AUGUSTA I | SIZE: 31'-0" X 60'-0"

DRN. BY	CK'D BY	DATE	SCALE	CODE	SHEET NO.	REV. #
EAP	HDS	04/03	NTS		F2	1

© COPYRIGHT 2003 ALL STEEL HOMES, INC.

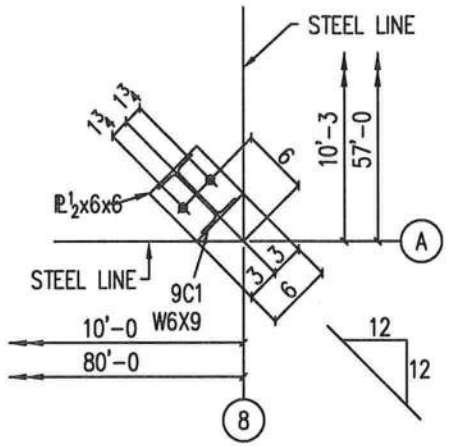

DETAIL "BP-P" (2) ¾"ø ANCHOR BOLTS

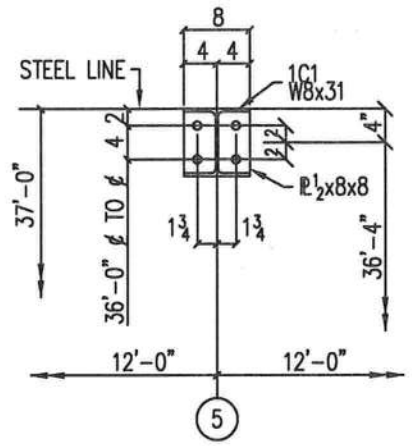

DETAIL "BP-Q" (4) ¾"ø ANCHOR BOLTS

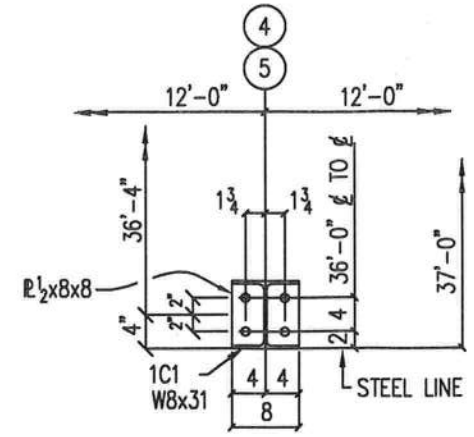

DETAIL "BP-R" (4) ¾"ø ANCHOR BOLTS

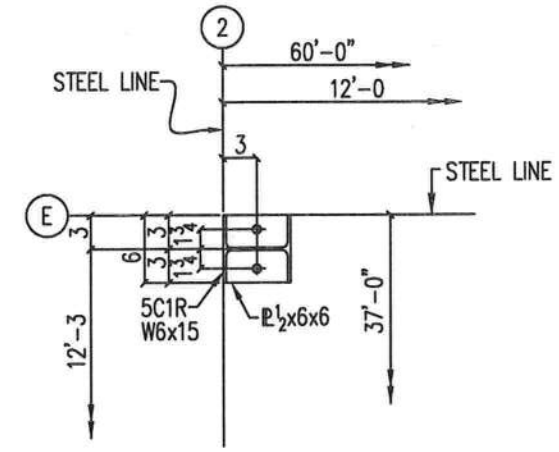

DETAIL "BP-S" (2) ¾"ø ANCHOR BOLTS

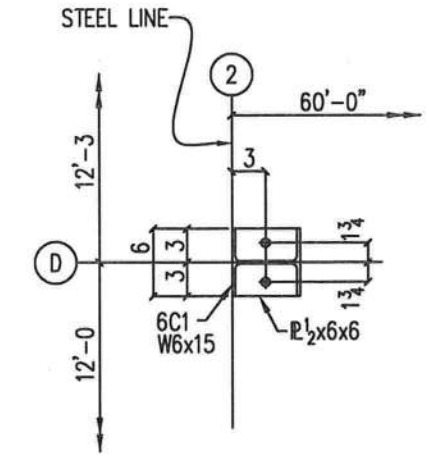

DETAIL "BP-T" (2) ¾"ø ANCHOR BOLTS

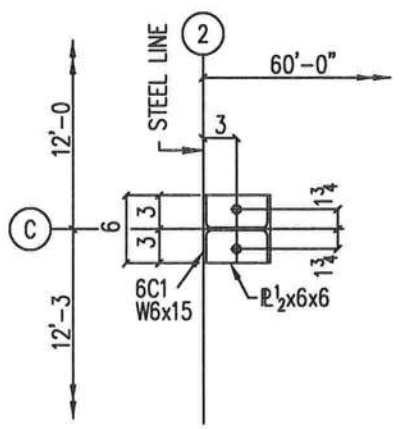

DETAIL "BP-U" (2) ¾"ø ANCHOR BOLTS

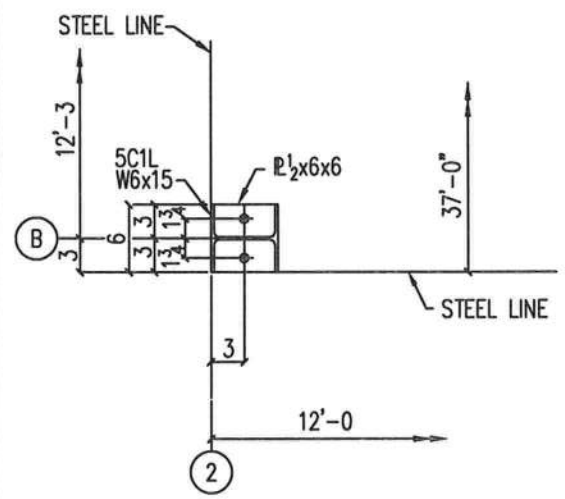

DETAIL "BP-V" (2) ¾"ø ANCHOR BOLTS

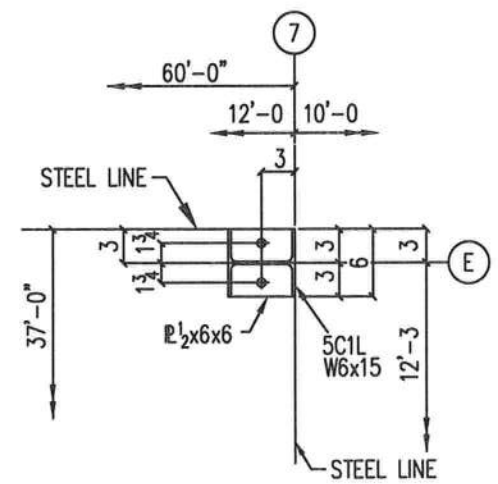

DETAIL "BP-W" (2) ¾"ø ANCHOR BOLTS

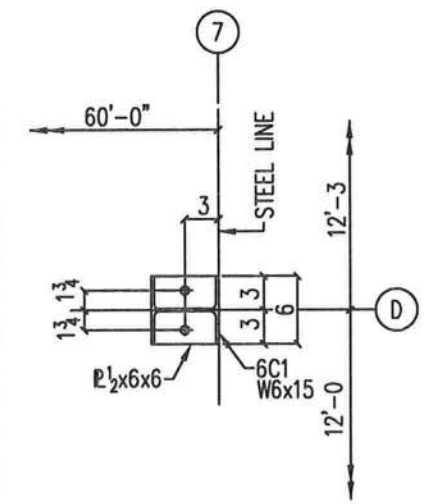

DETAIL "BP-X" (2) ¾"ø ANCHOR BOLTS

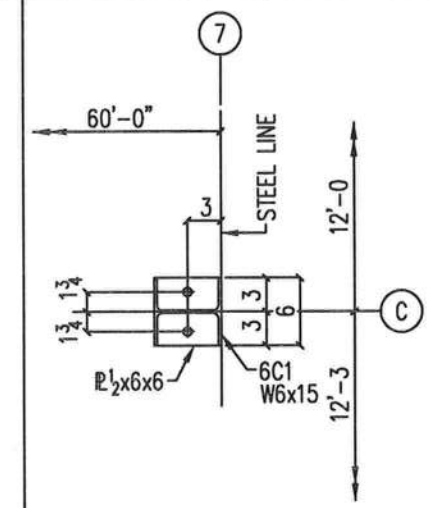

DETAIL "BP-Y" (2) ¾"ø ANCHOR BOLTS

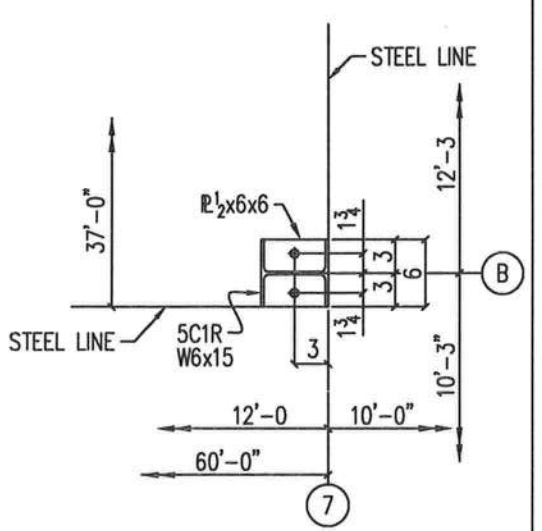

DETAIL "BP-Z" (2) ¾"ø ANCHOR BOLTS

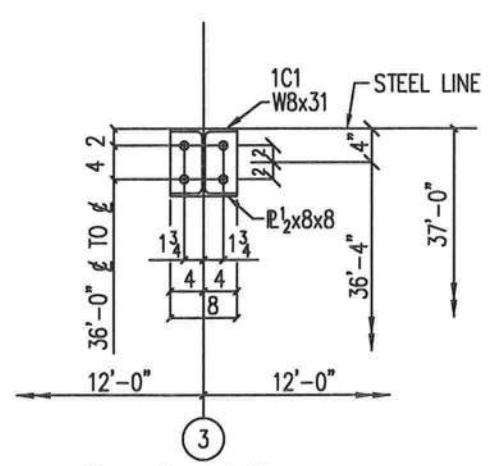

DETAIL "BP-AA" (4) ¾"ø ANCHOR BOLTS

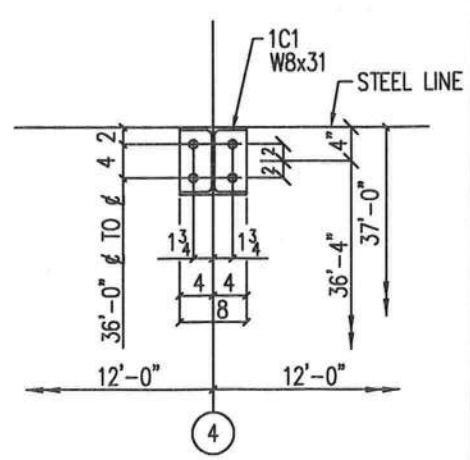

DETAIL "BP-AB" (4) ¾"ø ANCHOR BOLTS

12/3/07

REVISIONS				
NO.	DATE	DESCRIPTION	BY	CK'D
1	9/15/05	REVISED ℄ TO ℄ FROM 36'-4" TO 36'-0"	WM	WF
		REPLACED SMTT BRACKETS WITH S\HD10		
2	6/12/06	CLARIFIED ANCHOR BOLT DETAILS	JF	MK

KODIAK STEEL HOMES

Kodiak Steel Homes, Inc
7301 Industry Drive
North Little Rock, AR 72117

DESCRIPTION: ANCHOR BOLT DETAILS

STYLE: AUGUSTA I | SIZE: 37'-0" X 60'-0"

DRN. BY	CK'D BY	DATE	SCALE	CODE	SHEET NO.	REV. #
EAP	HDS	04/03	NTS		F3	2

© COPYRIGHT 2003 ALL STEEL HOMES, INC.

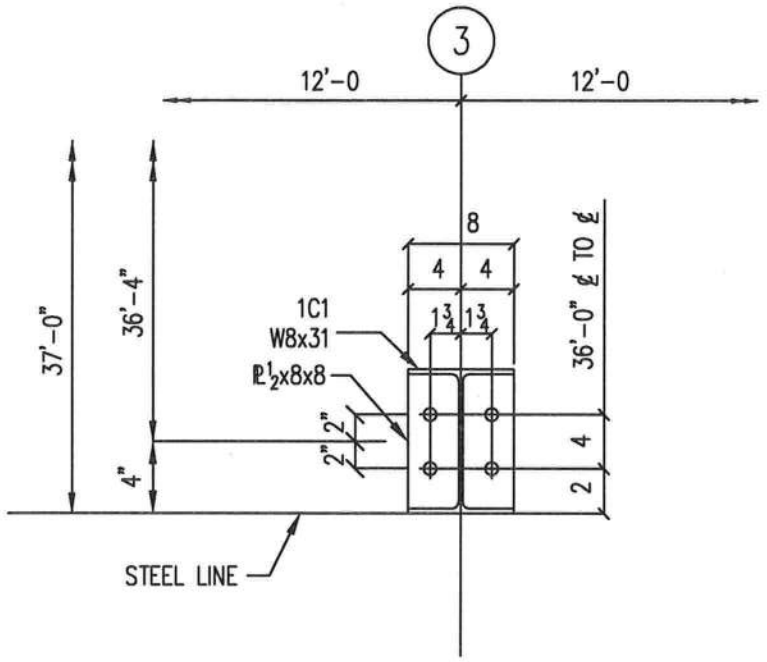

DETAIL "BP-AC" (4) 3/4"ø ANCHOR BOLTS

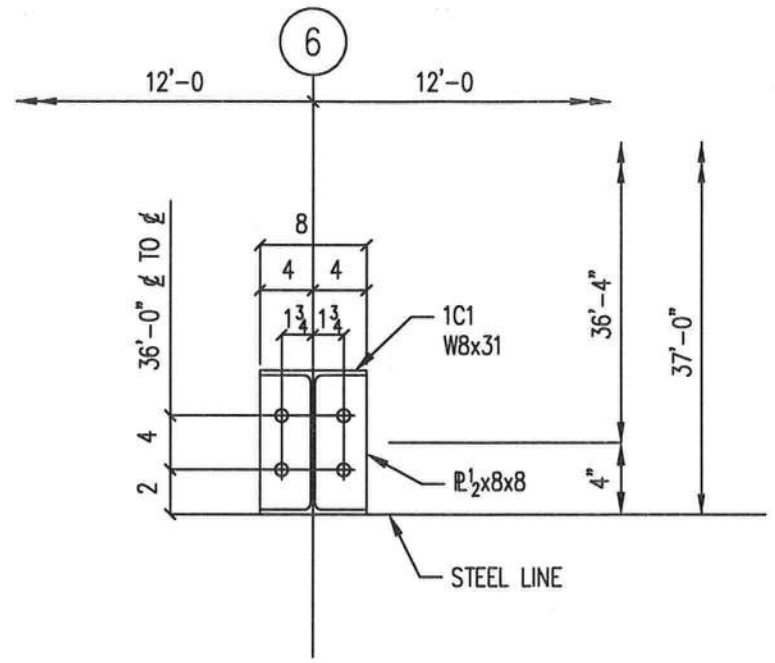

DETAIL "BP-AD" (4) 3/4"ø ANCHOR BOLTS

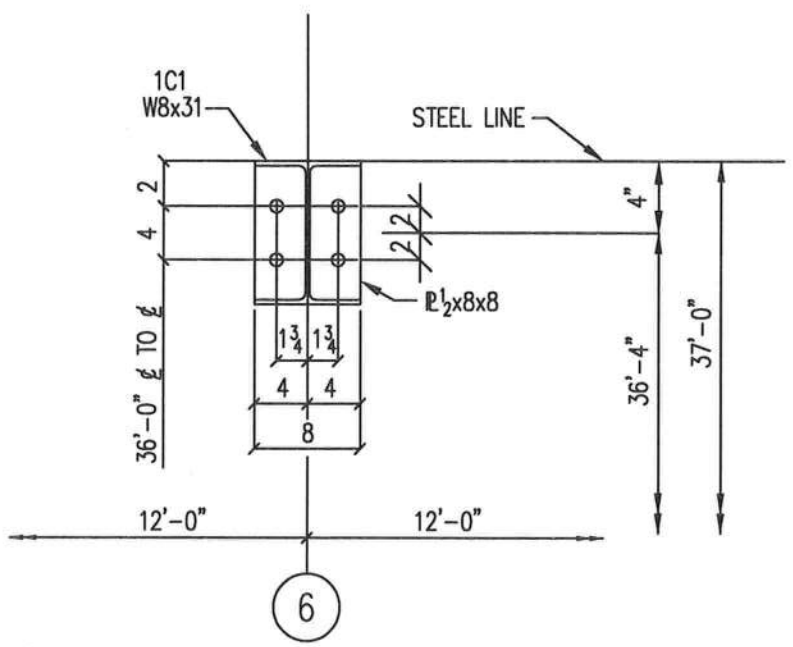

DETAIL "BP-AK" (4) 3/4"ø ANCHOR BOLTS

RIGID FRAME REACTIONS (k)

@2 3 4 5

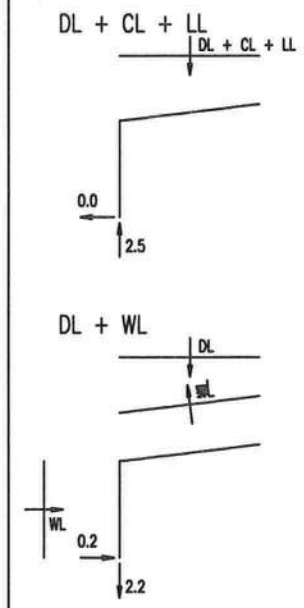

RIGID FRAME REACTIONS (k)

@2 3 4 5

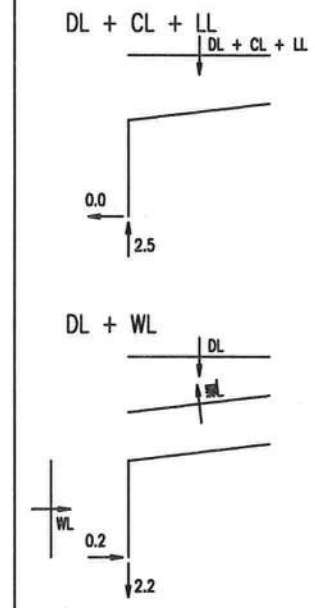

ENDWALL COLUMN REACTIONS(k)

MAXIMUM VERTICAL DL+CL+LL	= 2.8
MAXIMUM VERTICAL DL+WL	= -1.6
MAXIMUM HORIZONTAL DL+WL	= 0.0

ENDWALL COLUMN REACTIONS(k)

MAXIMUM VERTICAL DL+CL+LL	= 2.8
MAXIMUM VERTICAL DL+WL	= -1.6
MAXIMUM HORIZONTAL DL+WL	= 0.0

BRACING REACTIONS, PANEL SHEAR

Wall Loc	Wall Line	Col Line	± Reactions (k) Wind Horz	Wind Vert	Seismic Horz	Seismic Vert	Panel Shear (lb/ft)
L_EW	1	A ,B	0.5	0.5	0.3	0.3	
F_SW	A	3 ,4	0.4	0.3	0.8	0.6	
R_EW	6	A ,B	0.7	0.7	0.3	0.3	
B_SW	B	3 ,4	0.4	0.2	0.9	0.5	

BRACING REACTIONS, PANEL SHEAR

Wall Loc	Wall Line	Col Line	± Reactions (k) Wind Horz	Wind Vert	Seismic Horz	Seismic Vert	Panel Shear (lb/ft)
L_EW	1	A ,B	0.5	0.5	0.3	0.3	
F_SW	A	3 ,4	0.4	0.3	0.8	0.6	
R_EW	6	A ,B	0.7	0.7	0.3	0.3	
B_SW	B	3 ,4	0.4	0.2	0.9	0.5	

REACTION SCHEDULE

ALL REACTIONS IN KIPS

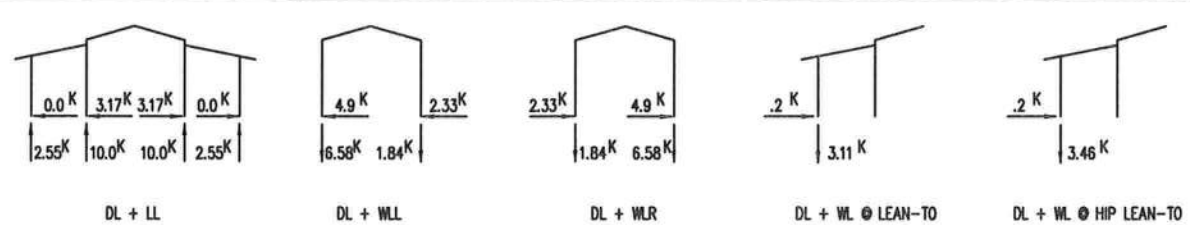

ENDWALL REACTIONS

ALL REACTIONS IN KIPS

MAX V. DL =	5.0 K
MAX V. LL =	2.8 K
MAX H. WL =	4.0 K

LONGITUDINAL WIND REACTIONS

ALL REACTIONS IN KIPS

(RF + LEAN-TO)

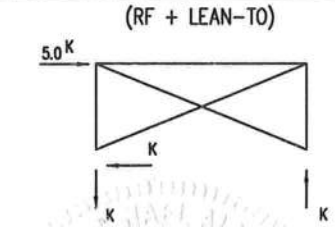

12/3/07

REVISIONS

NO.	DATE	DESCRIPTION	BY	CK'D
1	9/15/05	REVISED ℄ TO ℄ FROM 36'-4" TO 36'-0"	WM	WF
		REPLACED SMTT BRACKETS WITH S\HD10		
2	6/12/06	MOVED REACTIONS TO THIS DRAWING AND	JF	MK
		CLARIFIED ANCHOR BOLTS DETAILS.		

KODIAK STEEL HOMES

Kodiak Steel Homes, Inc
7301 Industry Drive
North Little Rock, AR 72117

DESCRIPTION: ANCHOR BOLT DETAILS

STYLE: AUGUSTA I SIZE: 37'-0" X 60'-0"

DRN. BY	CK'D BY	DATE	SCALE	CODE	SHEET NO.	REV. #
EAP	HDS	04/03	NTS		F4	2

© COPYRIGHT 2003 ALL STEEL HOMES, INC.

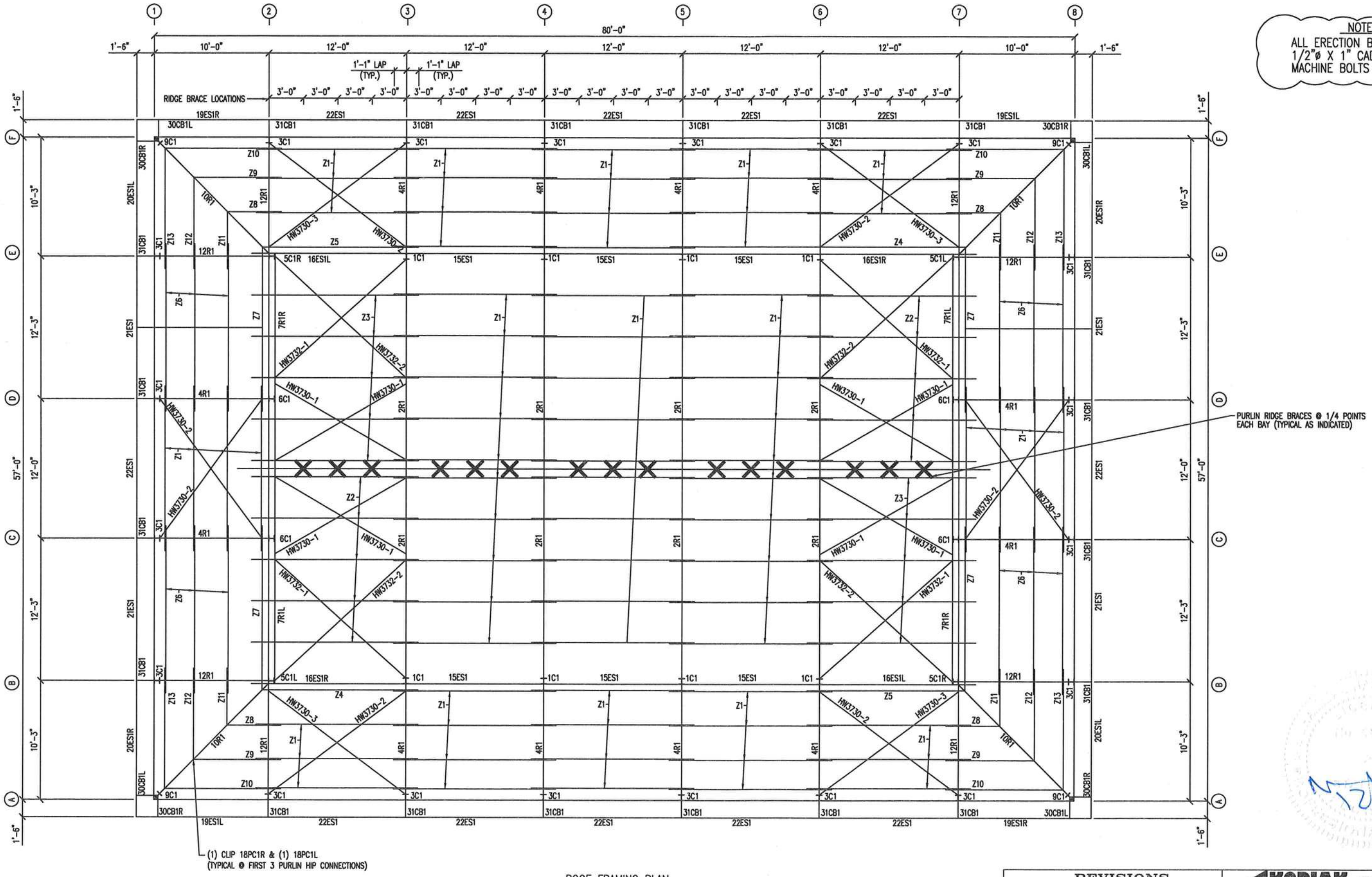

NOTE:
ALL ERECTION BOLTS ARE 1/2"ø X 1" CAD. PLATED MACHINE BOLTS (TYP. UNO)

12/3/05

ROOF FRAMING PLAN

REVISIONS				
NO.	DATE	DESCRIPTION	BY	CK'D
1	6/15/05	REVISED CABLE BRACING PART NUMBERS	WM	–

KODIAK STEEL HOMES

Kodiak Steel Homes, Inc
7301 Industry Drive
North Little Rock, AR 72117

DESCRIPTION: ROOF FRAMING PLAN

STYLE: AUGUSTA I — SIZE: 31'-0" X 60'-0"

DRN. BY	CK'D BY	DATE	SCALE	CODE	SHEET NO.	REV. #
EAP	HDS	04/03	NTS	AE5	E1	1

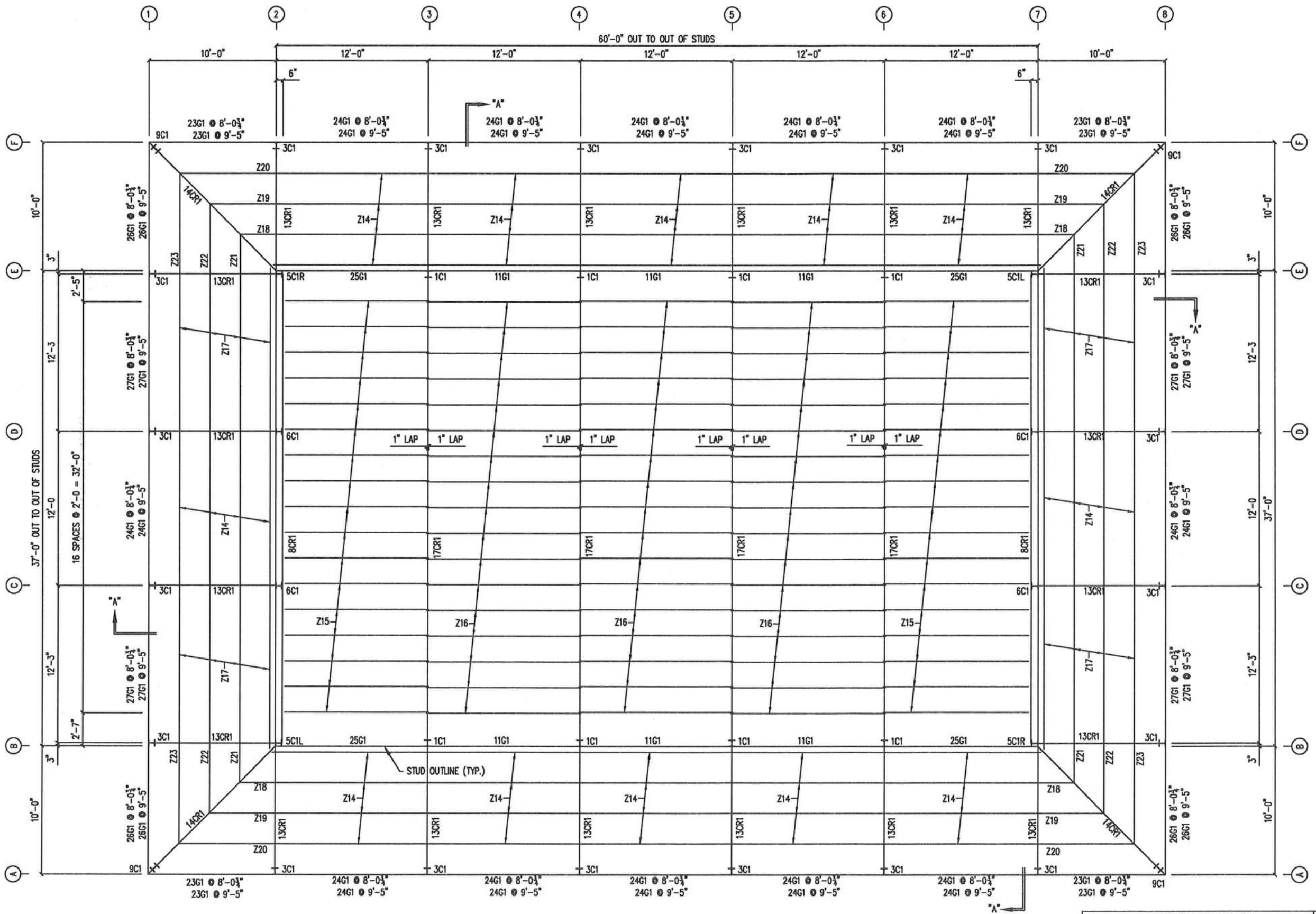

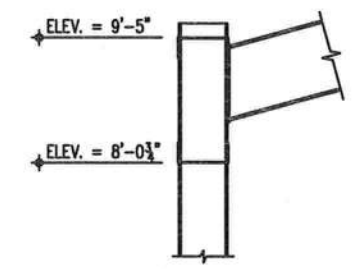

SECTION "A"

12/3/07

CEILING FRAMING PLAN

REVISIONS				
NO.	DATE	DESCRIPTION	BY	CK'D
-				

KODIAK STEEL HOMES

Kodiak Steel Homes, Inc
7301 Industry Drive
North Little Rock, AR 72117

DESCRIPTION: CEILING FRAMING PLAN

STYLE: AUGUSTA I — SIZE: 37'-0" X 60'-0"

DRN. BY	CK'D BY	DATE	SCALE	CODE	SHEET NO.	REV. #
EAP	HDB	04/03	NTS	AE5	E2	0

© COPYRIGHT 2003 ALL STEEL HOMES, INC.

CONNECTION CODES		
MARK	QTY	DESCRIPTION
A	4	1/2"Ø X 1" B.H.B.
B	4	1/2"Ø X 1 1/2" A325
C	2	3/4"Ø X 2" A325
D	8	3/4"Ø X 2 1/4" A325
E	8	3/4"Ø X 2" A325
F	2	3/4"Ø X 1 3/4" A325

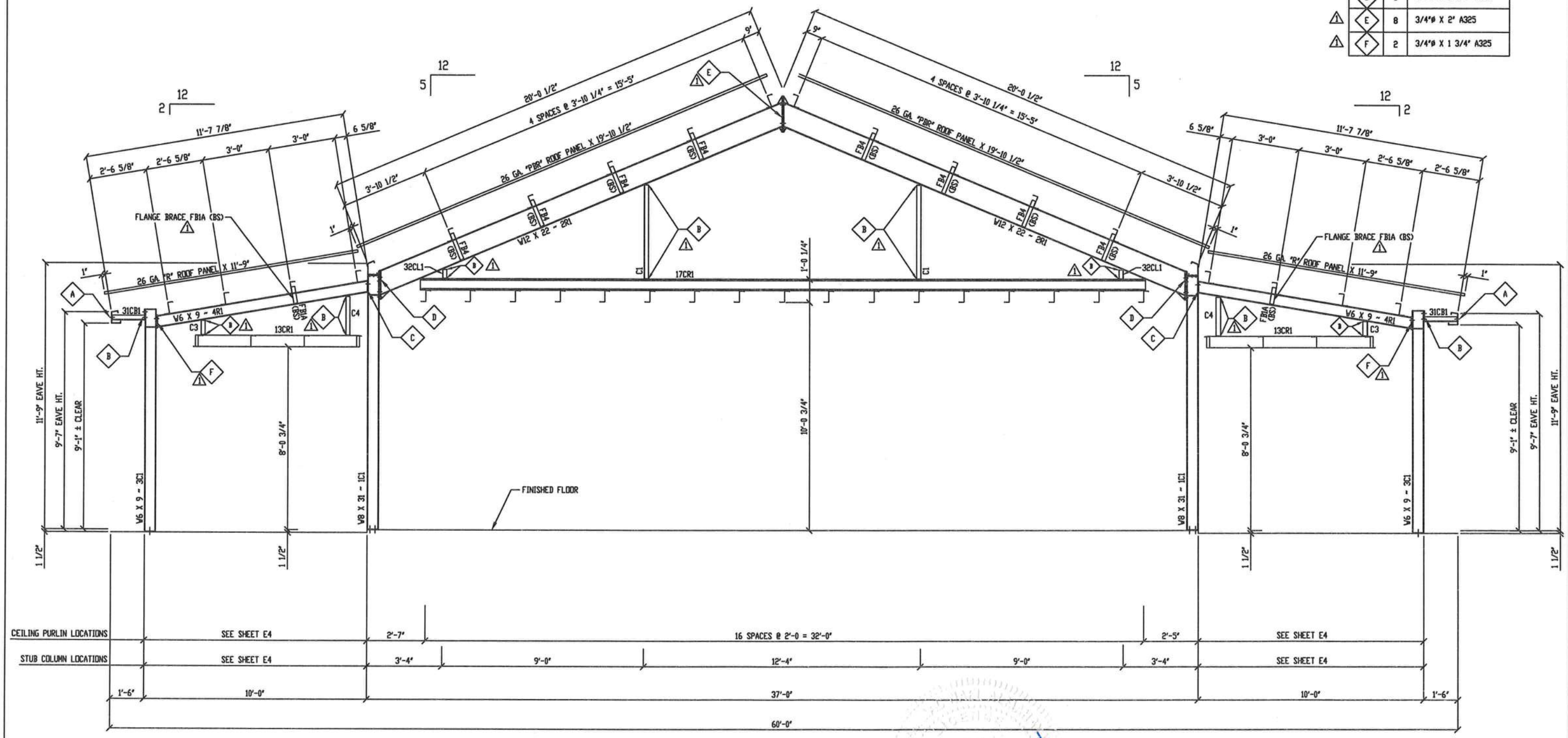

FRAME CROSS-SECTION @ COLUMN LINES 3 THRU 6

M 12/3/07

REVISIONS				
NO.	DATE	DESCRIPTION	BY	CK'D
1	12/1/06	General Revision	KGH	UF

KODIAK STEEL HOMES

Kodiak Steel Homes, Inc
7301 Industry Drive
North Little Rock, AR 72117

DESCRIPTION: FRAME CROSS-SECTION @ COLUMN LINES 3 THRU 6

STYLE: AUGUSTA I — SIZE: 37'-0" X 60'-0"

DRN. BY	CK'D BY	DATE	SCALE	CODE	SHEET NO.	REV. #
EAP	HDS	04/03	NTS	AE5	E3	1

© COPYRIGHT 2003 ALL STEEL HOMES, INC.

CONNECTION CODES		
MARK	QTY	DESCRIPTION
A	4	1/2"ø X 1" B.H.B.
B	4	1/2"ø X 1 1/2" A325
C	2	3/4"ø X 1 3/4" A325

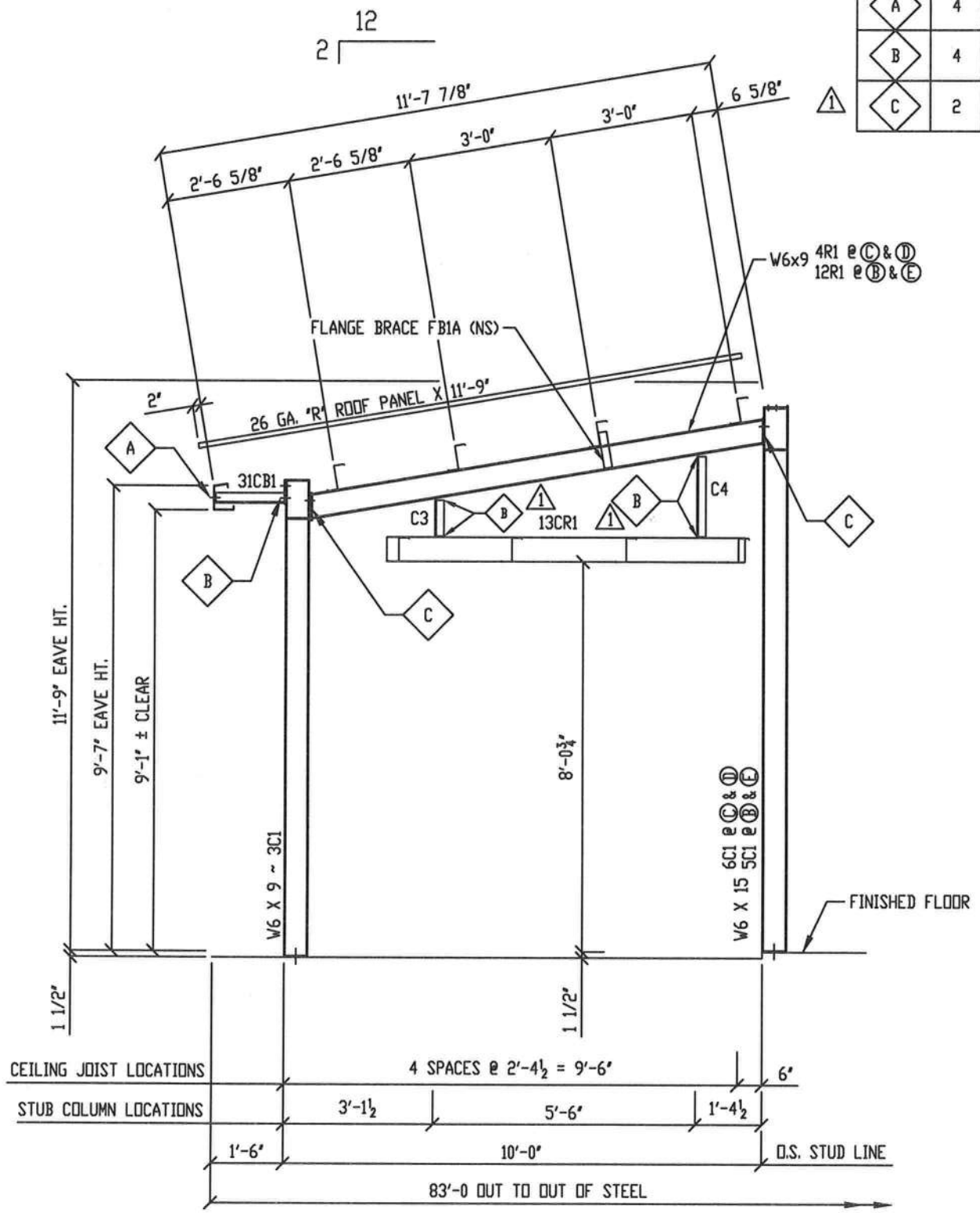

FRAME CROSS-SECTION @ COLUMN LINES B THRU E

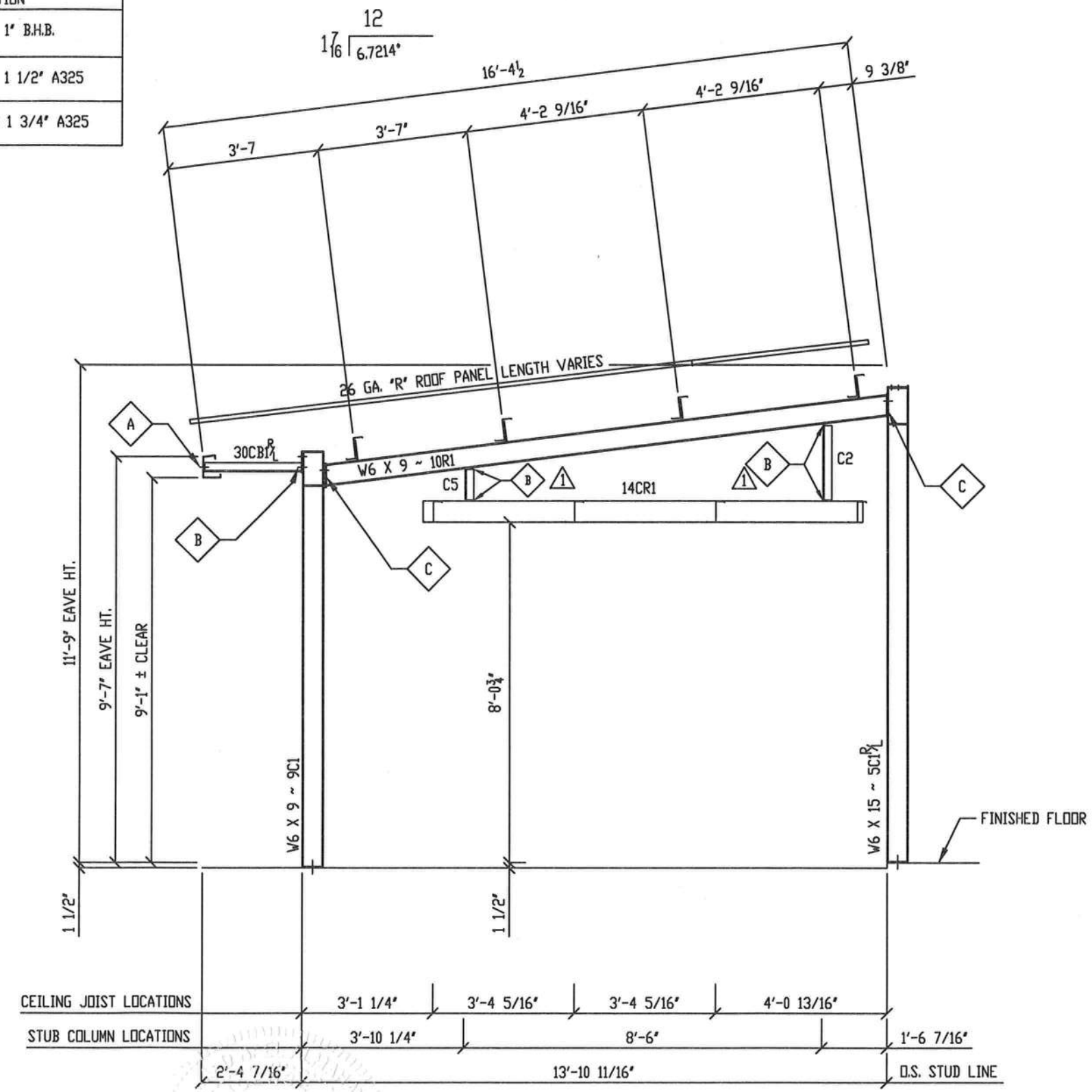

FRAME CROSS-SECTION @ COLUMN LINES @ HIPS

12/3/07

REVISIONS				
NO.	DATE	DESCRIPTION	BY	CK'D
1	12/1/06	General Revision	KSH	UF

KODIAK STEEL HOMES

Kodiak Steel Homes, Inc
7301 Industry Drive
North Little Rock, AR 72117

DESCRIPTION: FRAME CROSS SECTION @ COLUMN LINES B THRU E AND @ HIPS

STYLE: AUGUSTA I — SIZE: 31'-0" X 60'-0"

DRN. BY	CK'D BY	DATE	SCALE	CODE	SHEET NO.	REV. #
EAP	HDS	04/03	NTS	AE5	E4	1

© COPYRIGHT 2003 ALL STEEL HOMES, INC.

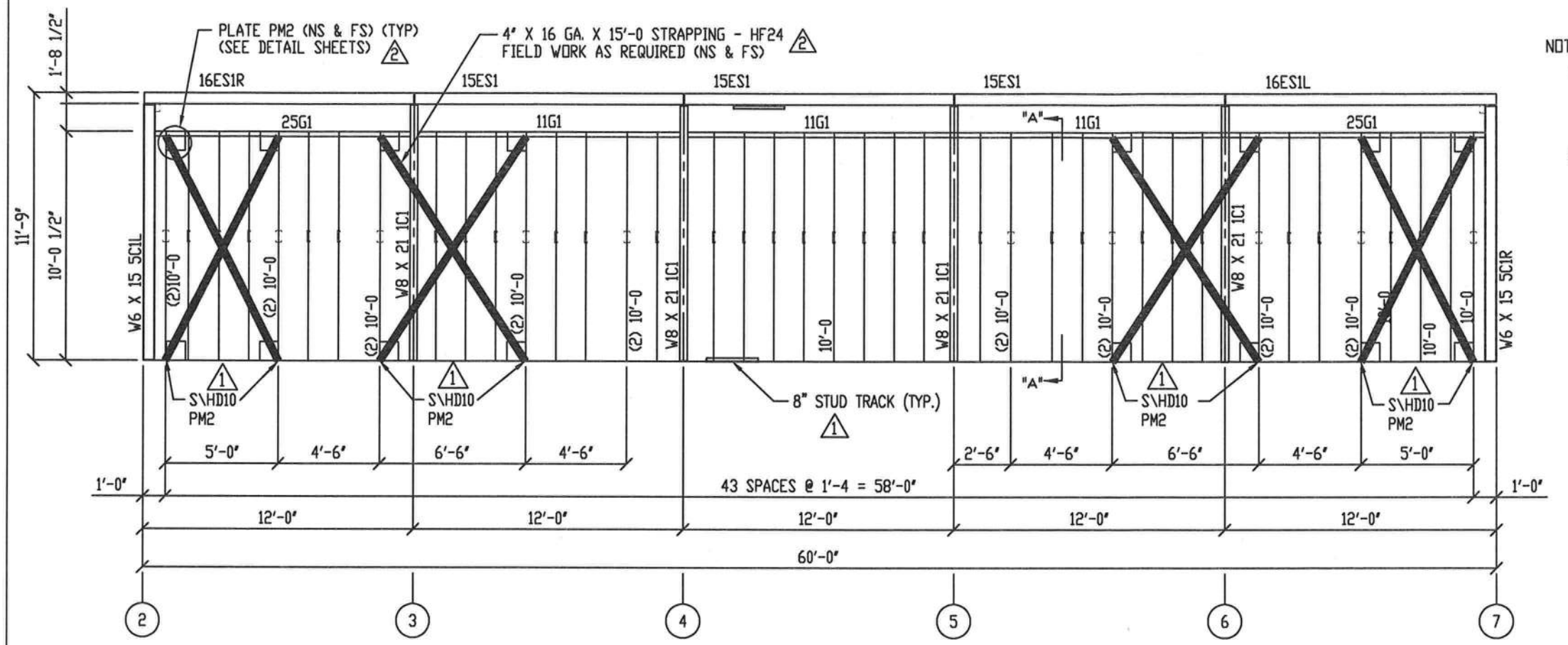

SIDEWALL FRAMING ELEVATION @ COLUMN LINE "B"

NOTES:

1) THE SIDEWALL STRAP BRACING MAY BE RELOCATED, TO AVOID INTERFERENCE WITH WINDOWS AND DOORS, BUT MUST REMAIN ON THE SAME SIDEWALL. THE DOUBLE STUDS, S\HD10 BRACKETS, PM2 PLATES AND ¾" ANCHOR BOLTS ARE INTEGRAL PARTS OF THE BRACING AND MUST MOVE WITH THE STRAPPING.

2) ENDWALL AND SIDEWALL STRAP BRACING MUST BE INSTALLED TO THE INSIDE AND OUTSIDE OF THE STUDS AS SHOWN IN THE DETAILS ON THE DETAIL SHEETS OF THIS SET OF DRAWINGS.

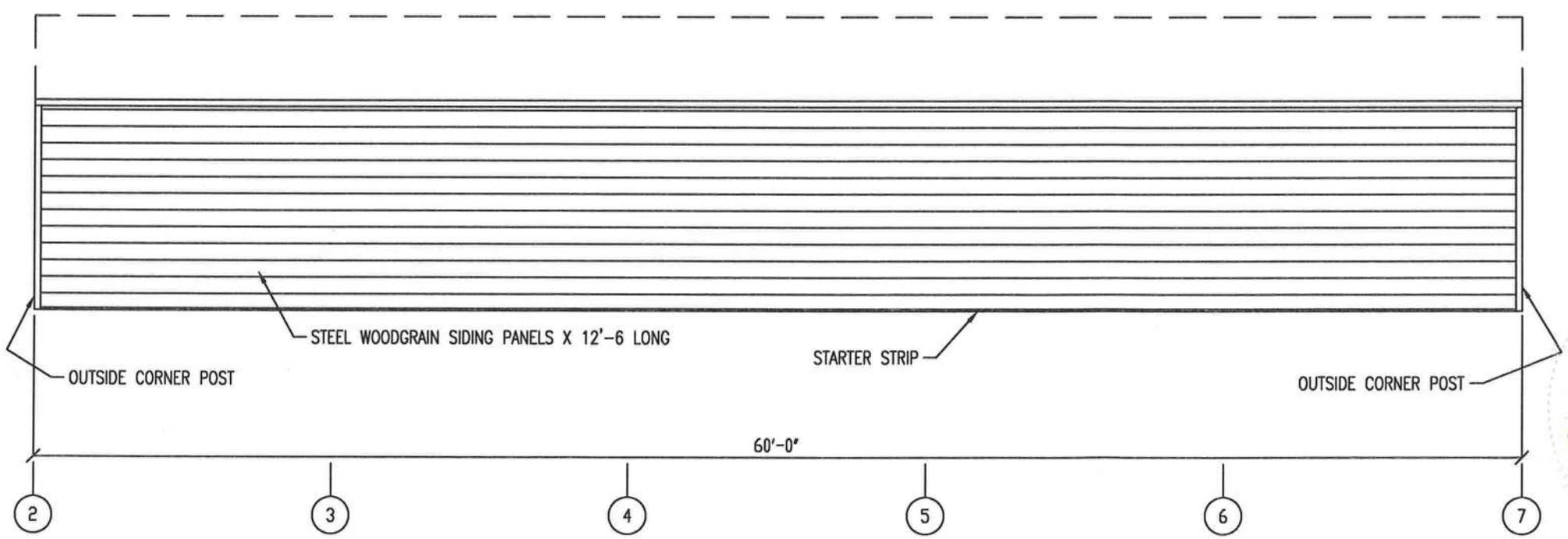

SIDEWALL SHEETING ELEVATION @ COLUMN LINE "B"

GENERAL NOTES:

1) SEALANT REQUIRED UNDER SILL TRACK BY OTHERS.
2) * = FIELD WORK AROUND OPENINGS AS REQ'D.
3) BACK TO BACK GIRTS ARE FIELD BOLTED TOGETHER USING A307 BOLTS.

12/3/07

REVISIONS

NO.	DATE	DESCRIPTION	BY	CK'D
1	9/15/05	CHANGED 8MTT TO 8½HD10 BRACKETS	UM	UF
2	12/1/06	GENERAL REVISION	KBH	UF

KODIAK STEEL HOMES

Kodiak Steel Homes, Inc
7301 Industry Drive
North Little Rock, AR 72117

DESCRIPTION: SIDEWALL FRAMING & SHEETING @ COLUMN LINE B

STYLE: AUGUSTA I | SIZE: 31'-0" X 60'-0"

DRN. BY	CK'D BY	DATE	SCALE	CODE	SHEET NO.	REV. #
EAP	HDB	04/03	NTS	AEB	E5	2

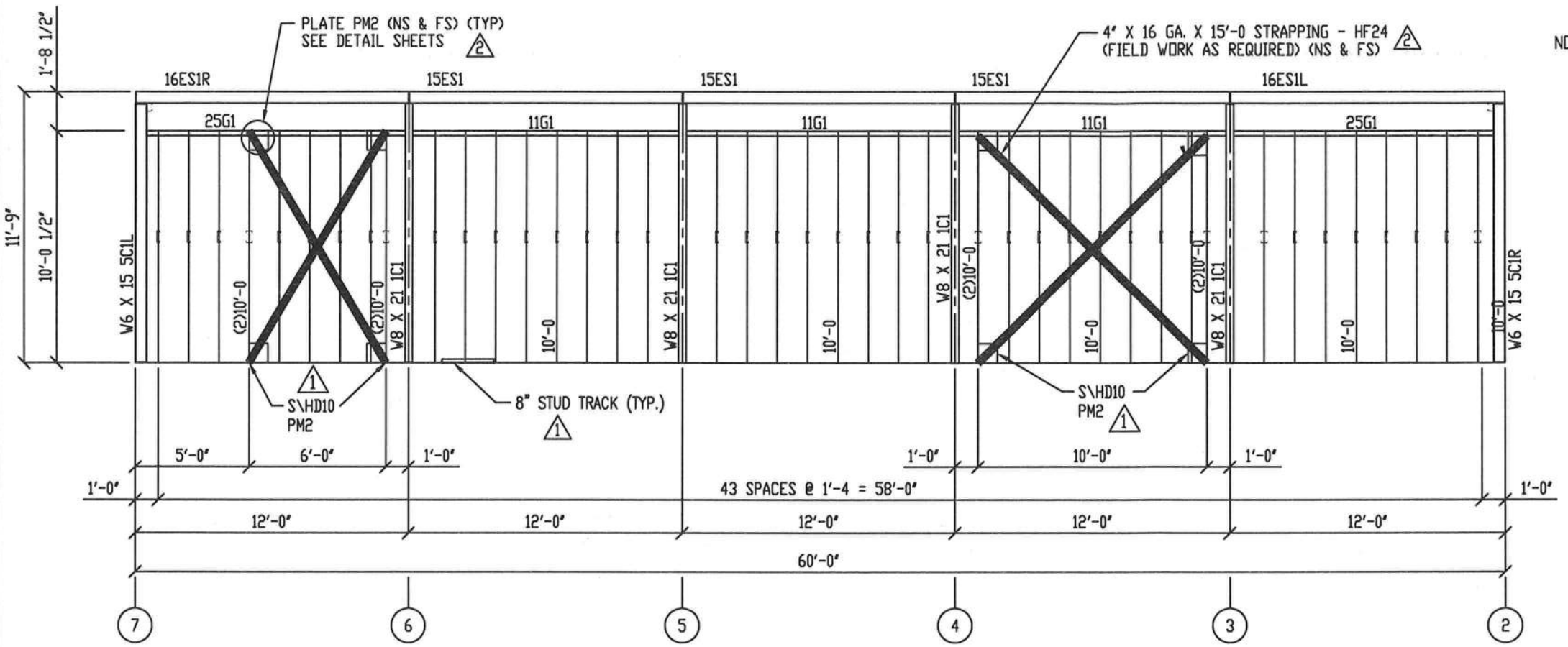

SIDEWALL FRAMING ELEVATION @ COLUMN LINE "E"

NOTES:

1) THE SIDEWALL STRAP BRACING MAY BE RELOCATED, TO AVOID INTERFERENCE WITH WINDOWS AND DOORS, BUT MUST REMAIN ON THE SAME SIDEWALL. THE DOUBLE STUDS, S\HD10 BRACKETS, PM2 PLATES AND ¾" ANCHOR BOLTS ARE INTEGRAL PARTS OF THE BRACING AND MUST MOVE WITH THE STRAPPING.

2) ENDWALL AND SIDEWALL STRAP BRACING MUST BE INSTALLED TO THE INSIDE AND OUTSIDE OF THE STUDS AS SHOWN IN THE DETAILS ON THE DETAIL SHEETS OF THIS SET OF DRAWINGS.

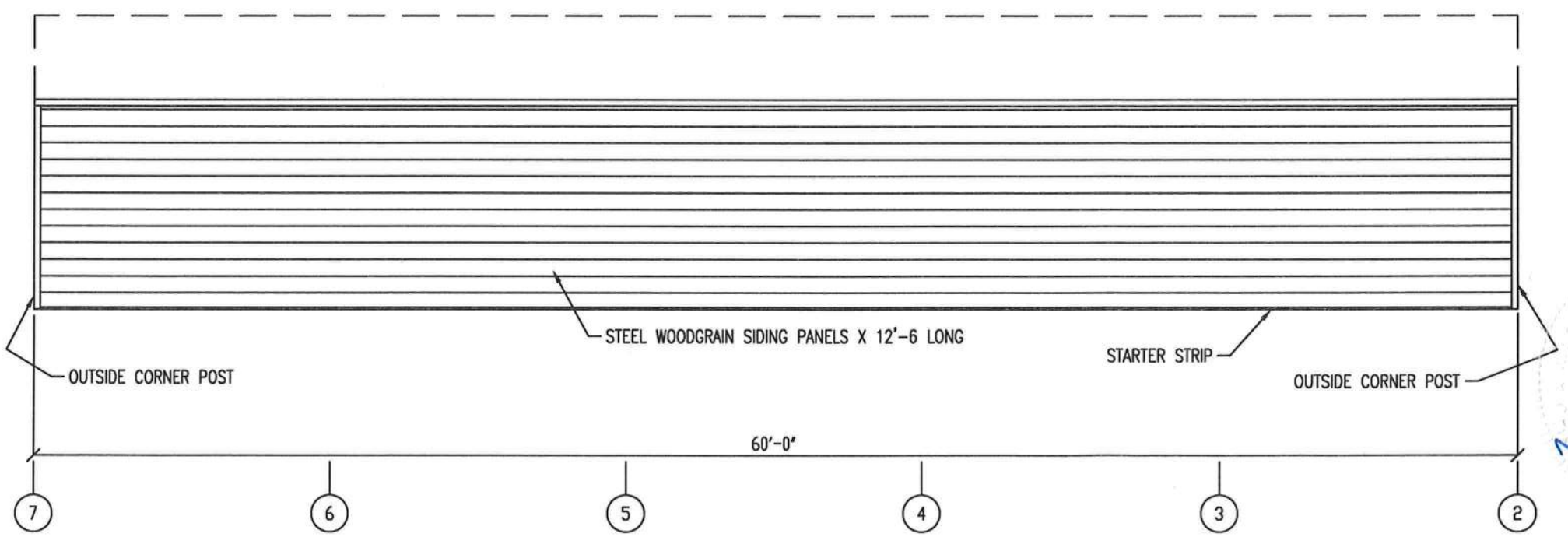

SIDEWALL SHEETING ELEVATION @ COLUMN LINE "E"

12/3/07

GENERAL NOTES:

1) SEALANT REQUIRED UNDER SILL TRACK BY OTHERS.
2) * = FIELD WORK AROUND OPENINGS AS REQ'D.
3) BACK TO BACK GIRTS ARE FIELD BOLTED TOGETHER USING A307 BOLTS.

REVISIONS

NO.	DATE	DESCRIPTION	BY	CK'D
1	9/15/05	CHANGED SHTT TO 8½HD10 BRACKETS	WM	WF
2	12/1/06	GENERAL REVISION	KSH	WF

KODIAK STEEL HOMES

Kodiak Steel Homes, Inc
7301 Industry Drive
North Little Rock, AR 72117

DESCRIPTION: SIDEWALL FRAMING & SHEETING @ COLUMN LINE E

STYLE: AUGUSTA I | SIZE: 31'-0" X 60'-0"

DRN. BY	CK'D BY	DATE	SCALE	CODE	SHEET NO.	REV. #
EAP	HDB	04/03	NTS	AE5	E6	2

GENERAL NOTES:

1) SEALANT REQUIRED UNDER SILL TRACK BY OTHERS.
2) FIELD WORK AROUND OPENINGS AS REQ'D.
3) BACK TO BACK GIRTS ARE FIELD BOLTED TOGETHER USING A307 BOLTS.
4) PLACE PERFORATED SIDE OF INSULATION TOWARDS THE INSIDE OF THE HOUSE

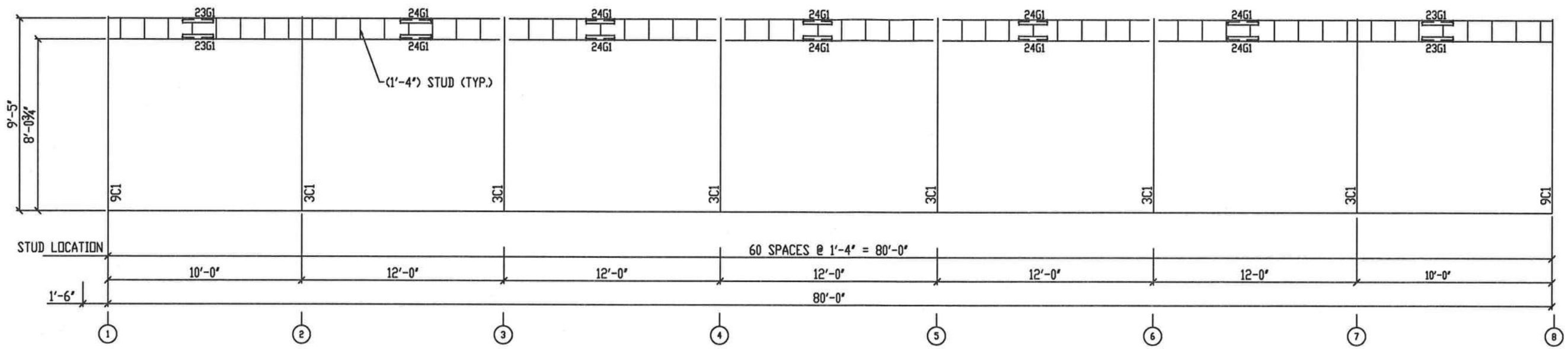

PORCH FRAMING ELEVATION @ COLUMN LINE (A) (AS SHOWN)
PORCH FRAMING ELEVATION @ COLUMN LINE (F) (OPP HAND)

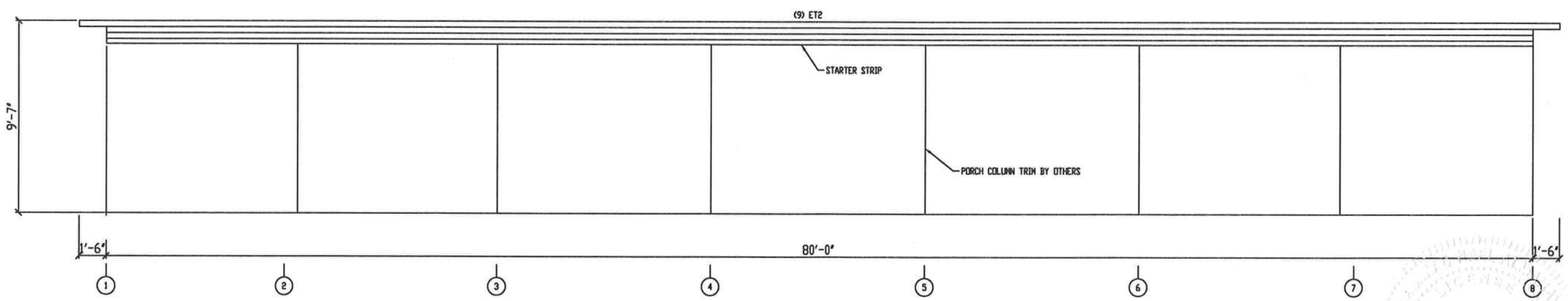

PORCH SHEETING ELEVATION @ COLUMN LINE (A) (AS SHOWN)
PORCH SHEETING ELEVATION @ COLUMN LINE (F) (OPP HAND)

12/3/07

REVISIONS				
NO.	DATE	DESCRIPTION	BY	CK'D
-				

KODIAK STEEL HOMES

Kodiak Steel Homes, Inc
7301 Industry Drive
North Little Rock, AR 72117

DESCRIPTION: PORCH FRAMING & SHEETING @ COLUMN LINES A & F

STYLE: AUGUSTA I — SIZE: 31'-0" X 60'-0"

DRN. BY	CK'D BY	DATE	SCALE	CODE	SHEET NO.	REV. #
EAP	HDS	04/03	NTS		ET	1

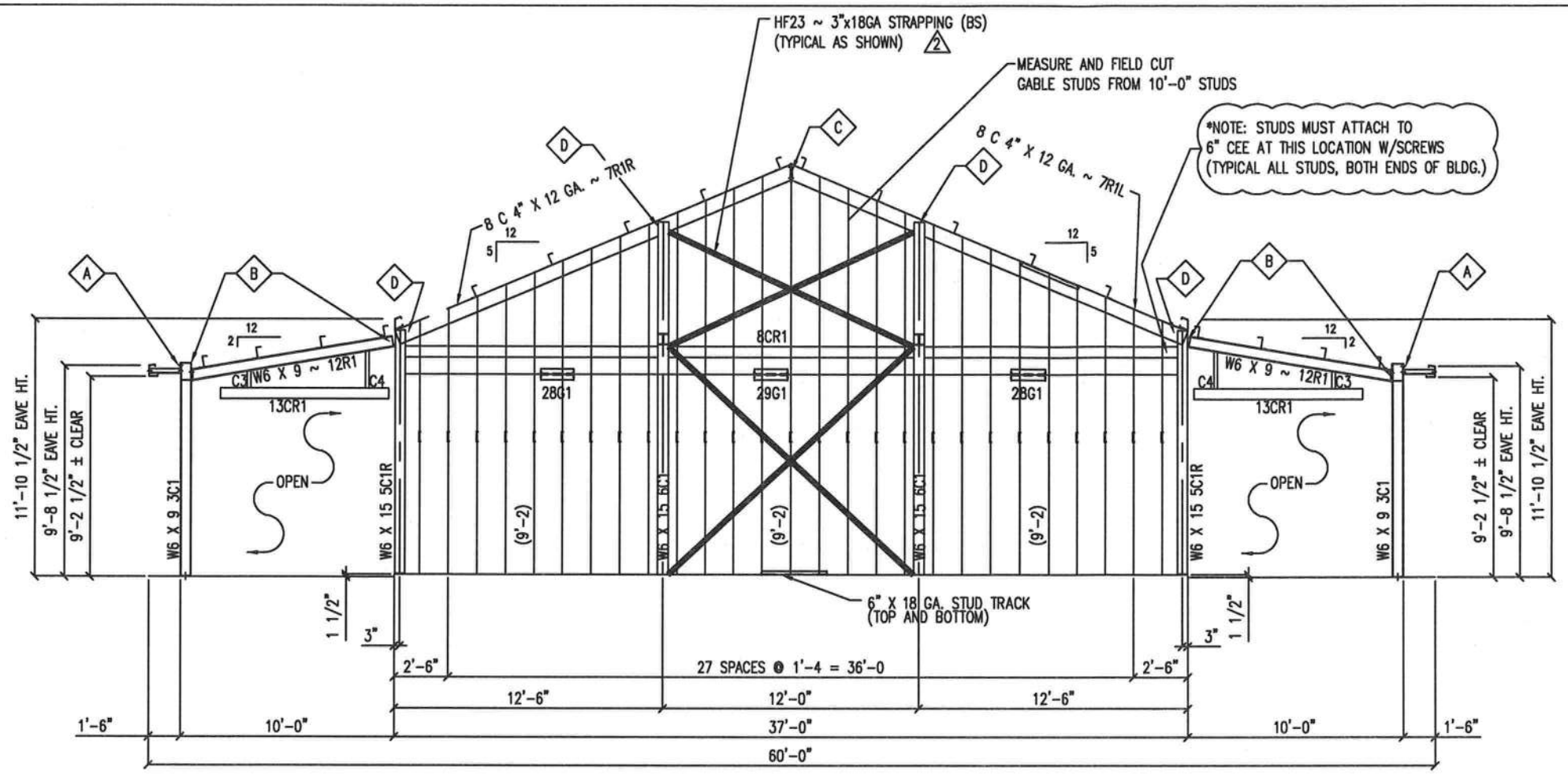

ENDWALL FRAMING ELEVATION @ COLUMN LINE "2"

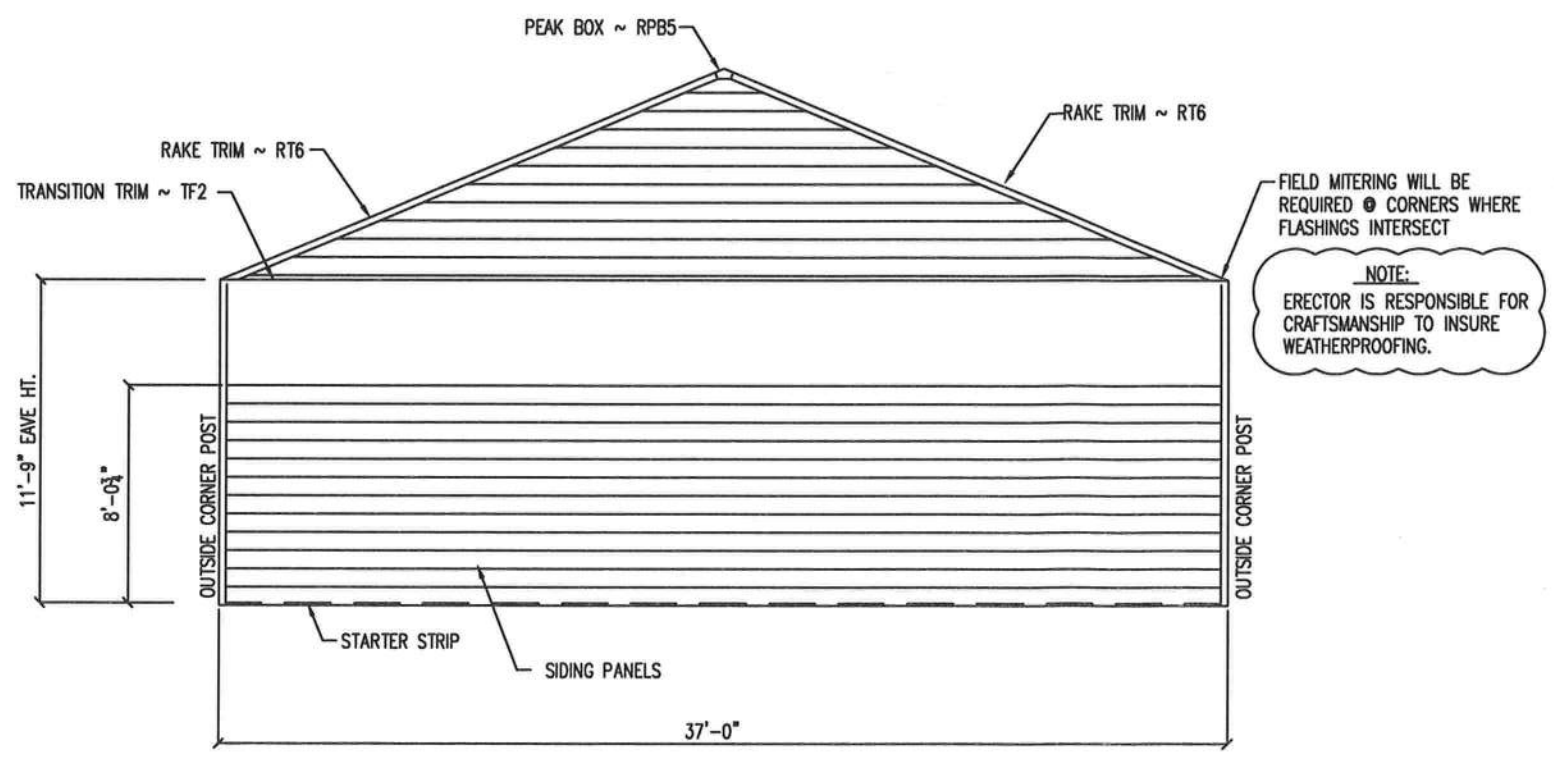

ENDWALL SHEETING ELEVATION @ COLUMN LINE "2"

CONNECTION CODES			
	MARK	QUANTITY	DESCRIPTION:
	A	4	1/2"ø X 1 1/2" A325
2	B	2	3/4"ø X 1 3/4" A325
2	C	4	5/8"ø X 1 3/4" A325
2	D	4	5/8"ø X 1 1/4" A325

GENERAL NOTES:

1. SEALANT REQUIRED UNDER SILL TRACK BY OTHERS.
2. FIELD WORK AROUND OPENINGS AS REQ'D.
3. BACK TO BACK GIRTS ARE FIELD BOLTED TOGETHER USING A307 BOLTS.
4. STRAP BRACING MAY BE RELOCATED, TO AVOID INTERFERENCE WITH WINDOWS AND DOORS, BUT MUST HAVE UPPER & LOWER TIERS BRACED.
5. STRAP BRACING MUST BE INSTALLED TO THE INSIDE AND OUTSIDE OF THE STUDS.
6. GABLE STUDS ARE TO BE MEASURED AND FIELD CUT FROM 6" x 10'-0" STUDS.

12/3/07

REVISIONS

NO.	DATE	DESCRIPTION	BY	CK'D
1	6/18/06	ADDED STRAPPING TO LOWER TIER	WM	KBH
2	12/1/06	GENERAL REVISION	KBH	WF

KODIAK STEEL HOMES

Kodiak Steel Homes, Inc
7301 Industry Drive
North Little Rock, AR 72117

DESCRIPTION: ENDWALL FRAMING & SHEETING @ COLUMN LINE 2

STYLE: AUGUSTA I | SIZE: 37'-0" X 60'-0"

DRN. BY	CK'D BY	DATE	SCALE	CODE	SHEET NO.	REV. #
EAP	HDS	04/03	NTS	AE5	E8	2

© COPYRIGHT 2003 ALL STEEL HOMES, INC.

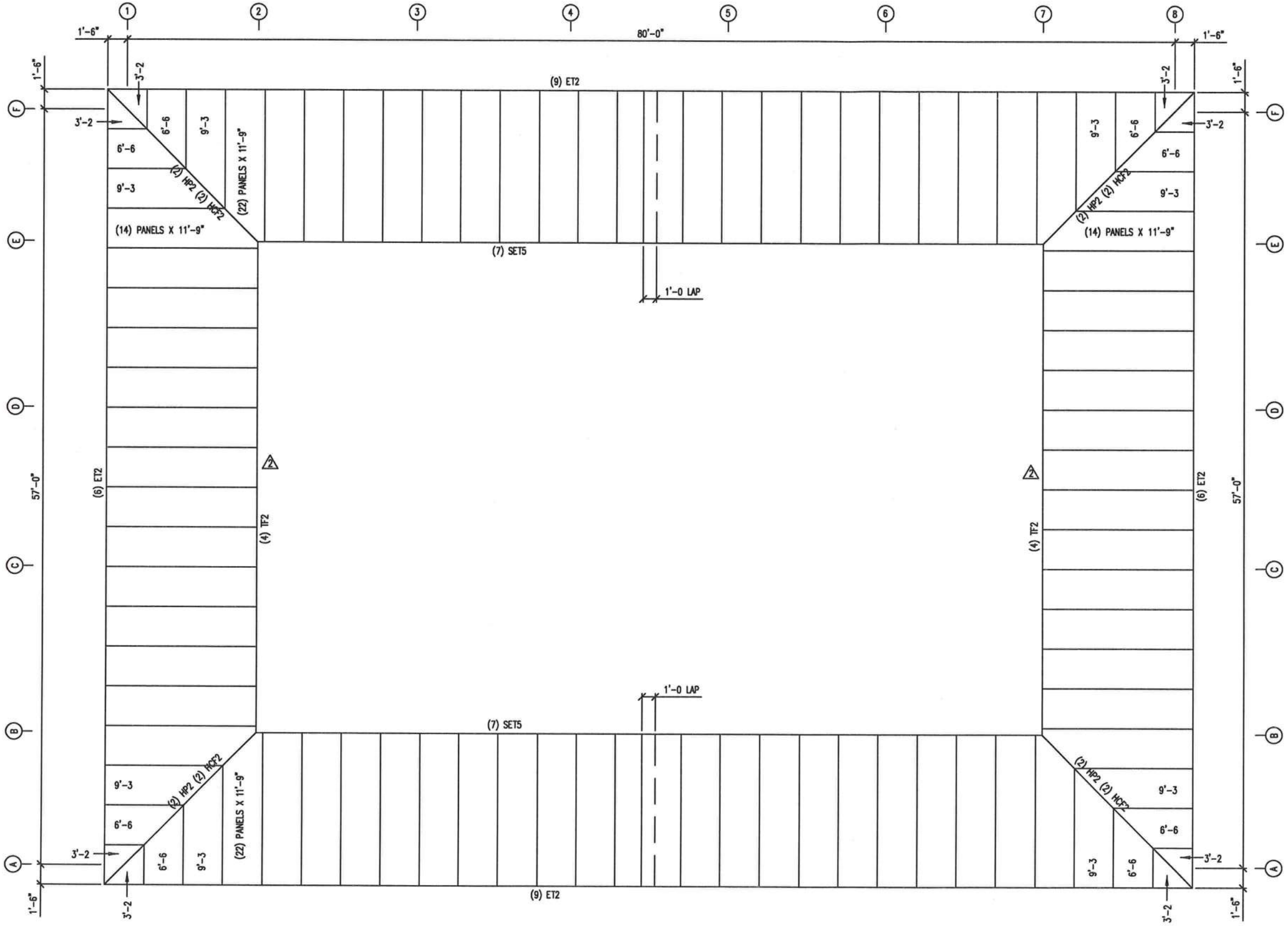

"PORCH" ROOF SHEETING PLAN

12/3/07

REVISIONS				
NO.	DATE	DESCRIPTION	BY	CK'D
1	12/7/06	GENERAL REVISION	KSH	LF
2	1/23/07	GENERAL REVISION	KSH	LF

KODIAK STEEL HOMES

Kodiak Steel Homes, Inc
7301 Industry Drive
North Little Rock, AR 72117

DESCRIPTION: PORCH ROOF SHEETING PLAN

STYLE: AUGUSTA I | SIZE: 31'-0" X 60'-0"

DRN. BY	CK'D BY	DATE	SCALE	CODE	SHEET NO.	REV. #
EAP	HDS	04/03	NTS	AE5	E11	2

© COPYRIGHT 2003 ALL STEEL HOMES, INC.

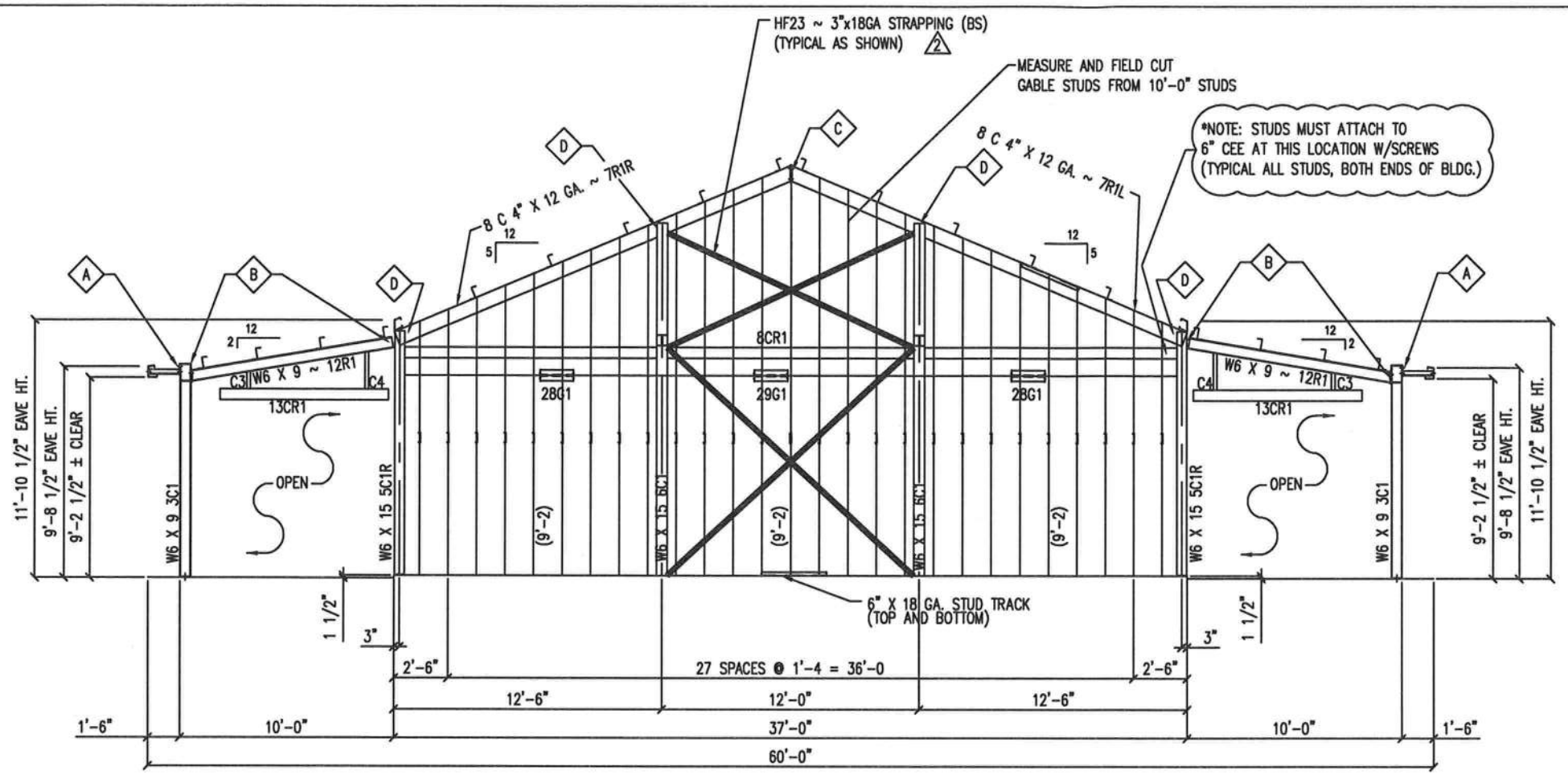

ENDWALL FRAMING ELEVATION @ COLUMN LINE "7"

CONNECTION CODES			
	MARK	QUANTITY	DESCRIPTION:
	A	4	1/2"ø X 1 1/2" A325
2	B	2	3/4"ø X 1 3/4" A325
2	C	4	5/8"ø X 1 3/4" A325
2	D	4	5/8"ø X 1 1/4" A325

GENERAL NOTES:

1. SEALANT REQUIRED UNDER SILL TRACK BY OTHERS.
2. FIELD WORK AROUND OPENINGS AS REQ'D.
3. BACK TO BACK GIRTS ARE FIELD BOLTED TOGETHER USING A307 BOLTS.
4. STRAP BRACING MAY BE RELOCATED, TO AVOID INTERFERENCE WITH WINDOWS AND DOORS, BUT MUST HAVE UPPER & LOWER TIERS BRACED.
5. STRAP BRACING MUST BE INSTALLED TO THE INSIDE AND OUTSIDE OF THE STUDS.
6. GABLE STUDS ARE TO BE MEASURED AND FIELD CUT FROM 6" x 10'-0" STUDS.

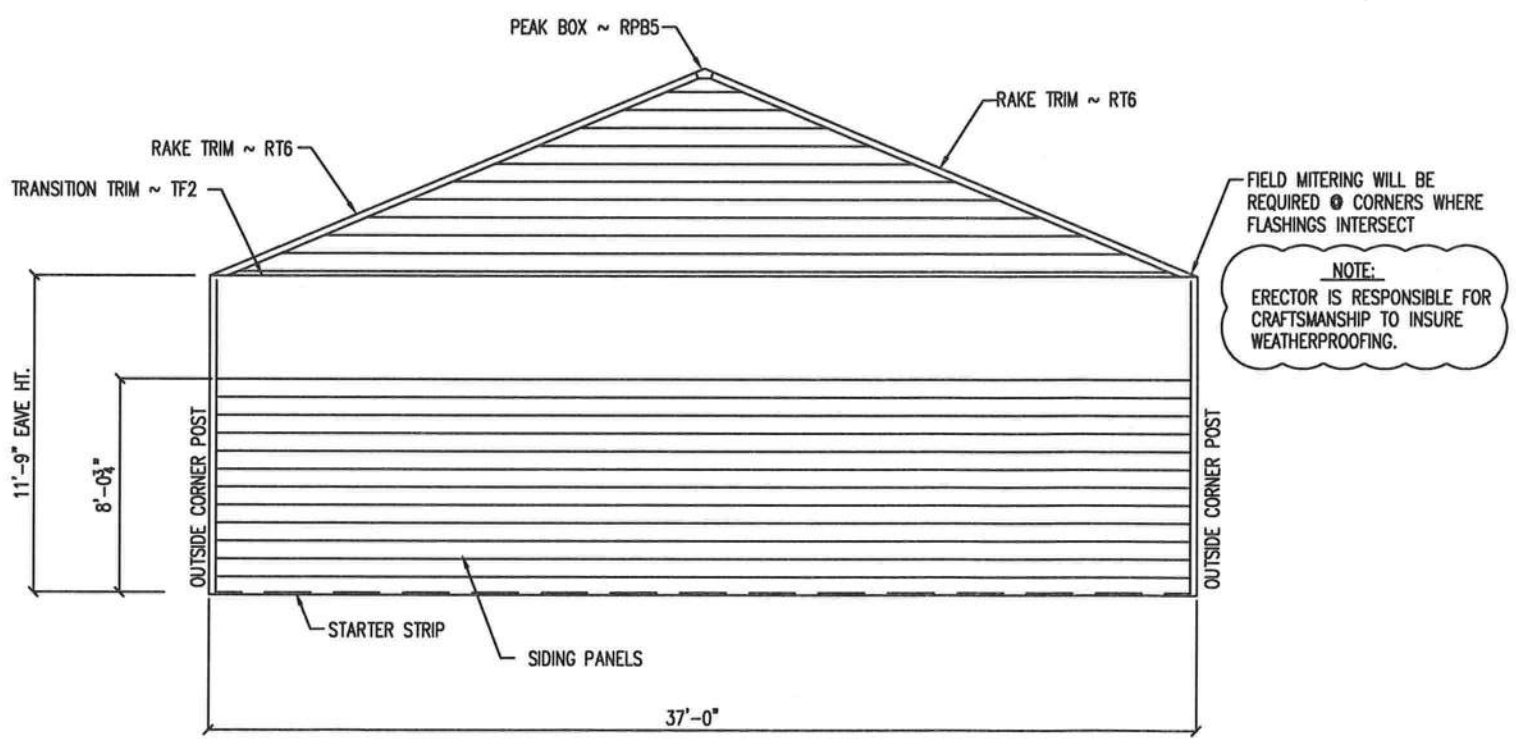

ENDWALL SHEETING ELEVATION @ COLUMN LINE "7"

12/3/07

REVISIONS				
NO.	DATE	DESCRIPTION	BY	CK'D
1	6/18/06	ADDED STRAPPING TO LOWER TIER	WM	KBH
2	12/1/06	GENERAL REVISION	KBH	WF

KODIAK STEEL HOMES

Kodiak Steel Homes, Inc
7301 Industry Drive
North Little Rock, AR 72117

DESCRIPTION: ENDWALL FRAMING & SHEETING @ COLUMN LINE 7

STYLE: AUGUSTA I | SIZE: 37'-0" X 60'-0"

DRN. BY	CK'D BY	DATE	SCALE	CODE	SHEET NO.	REV. #
EAP	HDS	04/03	NTS	AE5	E9	2

© COPYRIGHT 2003 ALL STEEL HOMES, INC.

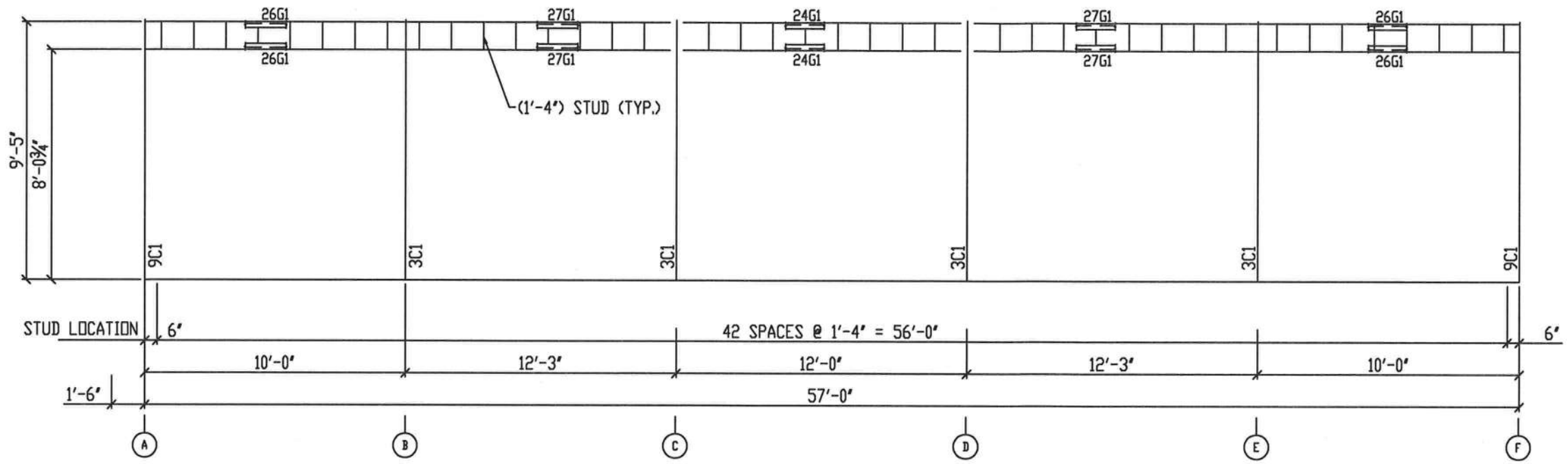

PORCH FRAMING ELEVATION @ COLUMN LINE (1) (AS SHOWN)
PORCH FRAMING ELEVATION @ COLUMN LINE (8) (OPP HAND)

GENERAL NOTES:

1) SEALANT REQUIRED UNDER SILL TRACK BY OTHERS.
2) FIELD WORK AROUND OPENINGS AS REQ'D.
3) BACK TO BACK GIRTS ARE FIELD BOLTED TOGETHER USING A307 BOLTS.
4) PLACE PERFORATED SIDE OF INSULATION TOWARDS THE INSIDE OF THE HOUSE

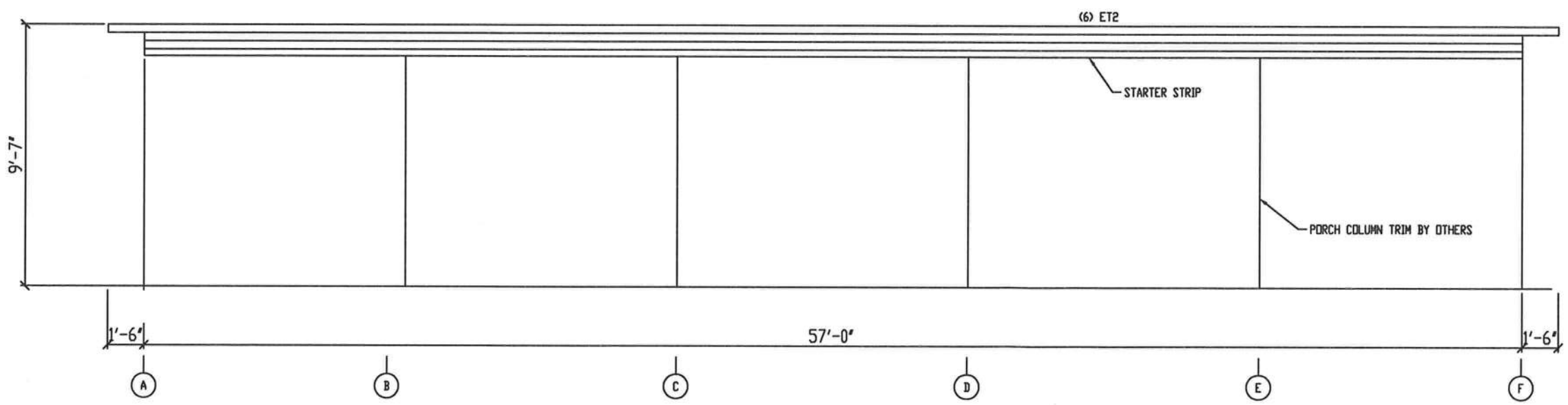

PORCH SHEETING ELEVATION @ COLUMN LINE (1) (AS SHOWN)
PORCH SHEETING ELEVATION @ COLUMN LINE (8) (OPP HAND)

12/3/07

REVISIONS				
NO.	DATE	DESCRIPTION	BY	CK'D
.				

KODIAK STEEL HOMES

Kodiak Steel Homes, Inc
7301 Industry Drive
North Little Rock, AR 72117

DESCRIPTION: PORCH FRAMING AND SHEETING @ COLUMN LINES 1 & 8

STYLE: AUGUSTA I | SIZE: 40'-0" X 60'-0"

DRN. BY	CK'D BY	DATE	SCALE	CODE	SHEET NO.	REV. #
EAP	HDB	04/03	NTS		E10	0

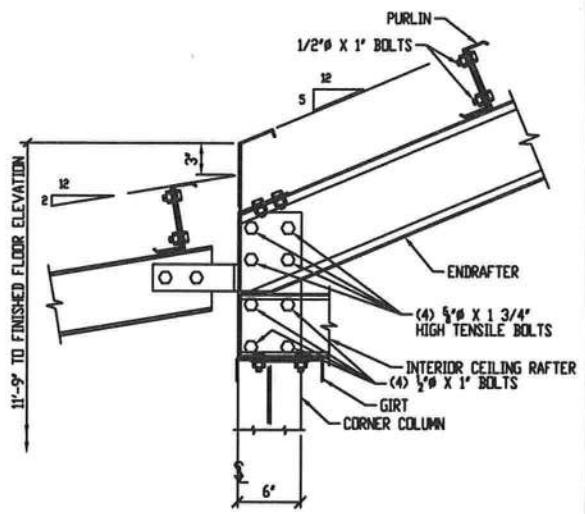

NOTE:
SECTION IS STANDING INSIDE BUILDING LOOKING OUT

STANDARD SECTION @ ENDWALL EAVE

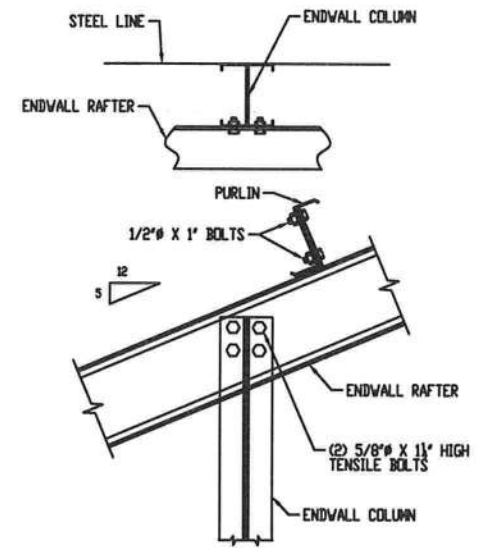

NOTE:
SECTION IS STANDING INSIDE BUILDING LOOKING OUT

NOTE:
DOUBLE CEE COLUMN SHOWN, SINGLE CEE & I-BEAM COLUMNS SIMILAR

STANDARD SECTION @ ENDWALL CONNECTION

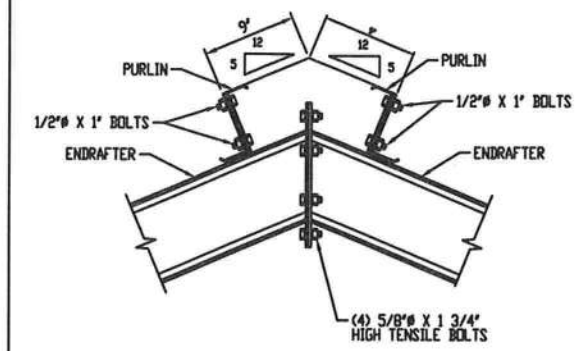

NOTE:
SECTION IS STANDING INSIDE BUILDING LOOKING OUT

STANDARD SECTION @ RIDGE ENDWALL

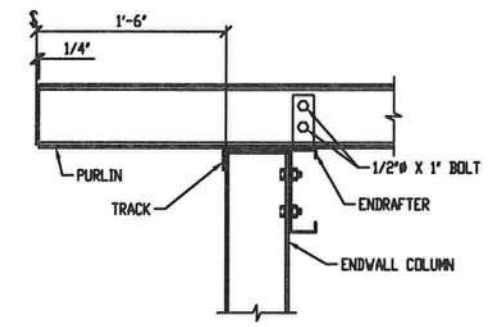

STANDARD SECTION THRU ENDWALL

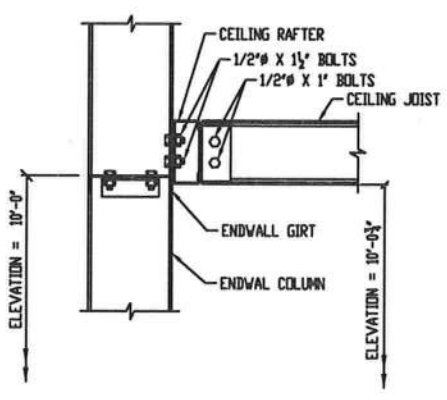

STANDARD SECTION @ CEILING

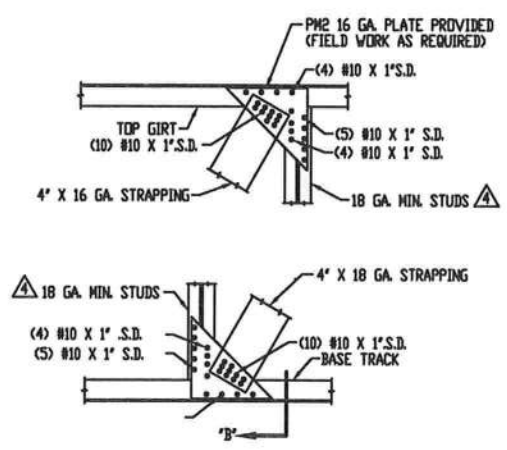

NOTE:
CONDITION EXISTS ON INSIDE AND OUTSIDE WALL.

STANDARD SECTION @ BRACE CONNECTIONS

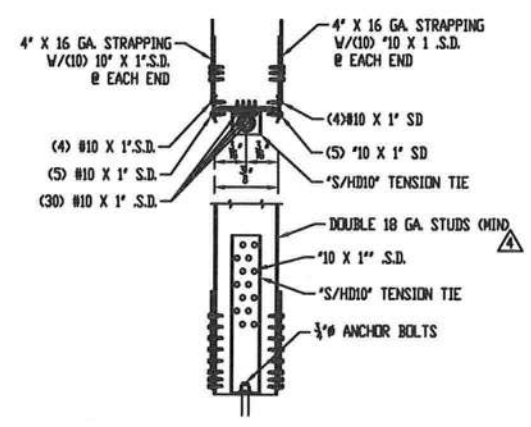

SECTION "B"

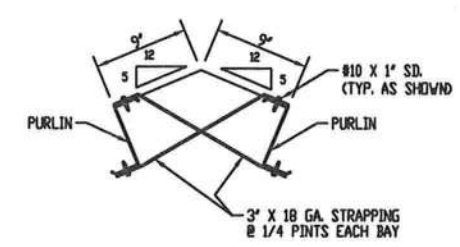

STANDARD SECTION @ RIDGE BRACING

12/3/07

REVISIONS				
NO.	DATE	DESCRIPTION	BY	CK'D
1	2/27/06	CLARIFIED STANDARD SECTIONS	JF	WMc
2	3/8/06	REVISED SCREWS, "@ FPH TO 1/4-14 SSD	WMc	--
3	12/1/06	Changed "S/HTT4" Tension Tie to "S/HD10" @ Sect "B"	KSH	WF
3	12/1/06	Also changed 1/2"ABolts to 3/4"	KSH	WF
4	1/3/07	CHANGED STUD GA FROM 16GA TO 18GA AT "STD	KSH	WF
4	1/3/07	SECT @ BRACE CONNECTIONS" & "SECT "B".	KSH	WF

KODIAK STEEL HOMES

Kodiak Steel Homes, Inc
7301 Industry Drive
North Little Rock, AR 72117

DESCRIPTION: FRAMING DETAILS

STYLE: AUGUSTA I

SIZE: 31'-0" X 60'-0"

DRN. BY	CK'D BY	DATE	SCALE	CODE	SHEET NO.	REV. #
EAP	HDS	04/03	NTS	AE5	E15	4

© COPYRIGHT 2003 ALL STEEL HOMES, INC.

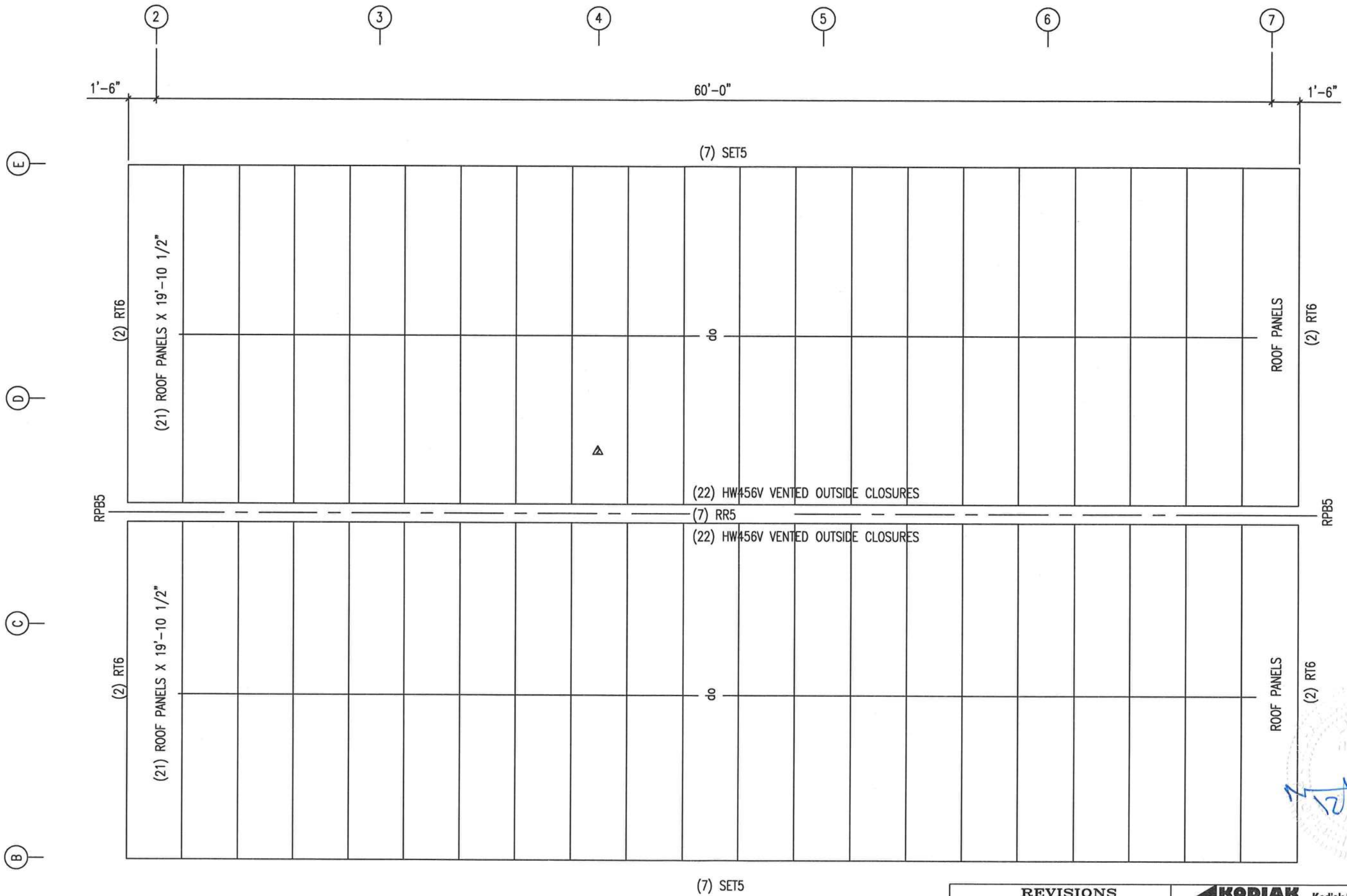

12/3/07

ROOF SHEETING PLAN

REVISIONS				
NO.	DATE	DESCRIPTION	BY	CK'D
2	5/17/06	ADDED NOTE SHOWING VENTED CLOSURES	JU	**

KODIAK STEEL HOMES

Kodiak Steel Homes, Inc
7301 Industry Drive
North Little Rock, AR 72117

DESCRIPTION: ROOF SHEETING PLAN

STYLE: AUGUSTA I | SIZE: 31'-0" X 60'-0"

DRN. BY	CK'D BY	DATE	SCALE	CODE	SHEET NO.	REV. #
EAP	HDS	04/03	NTS	AES	E12	2

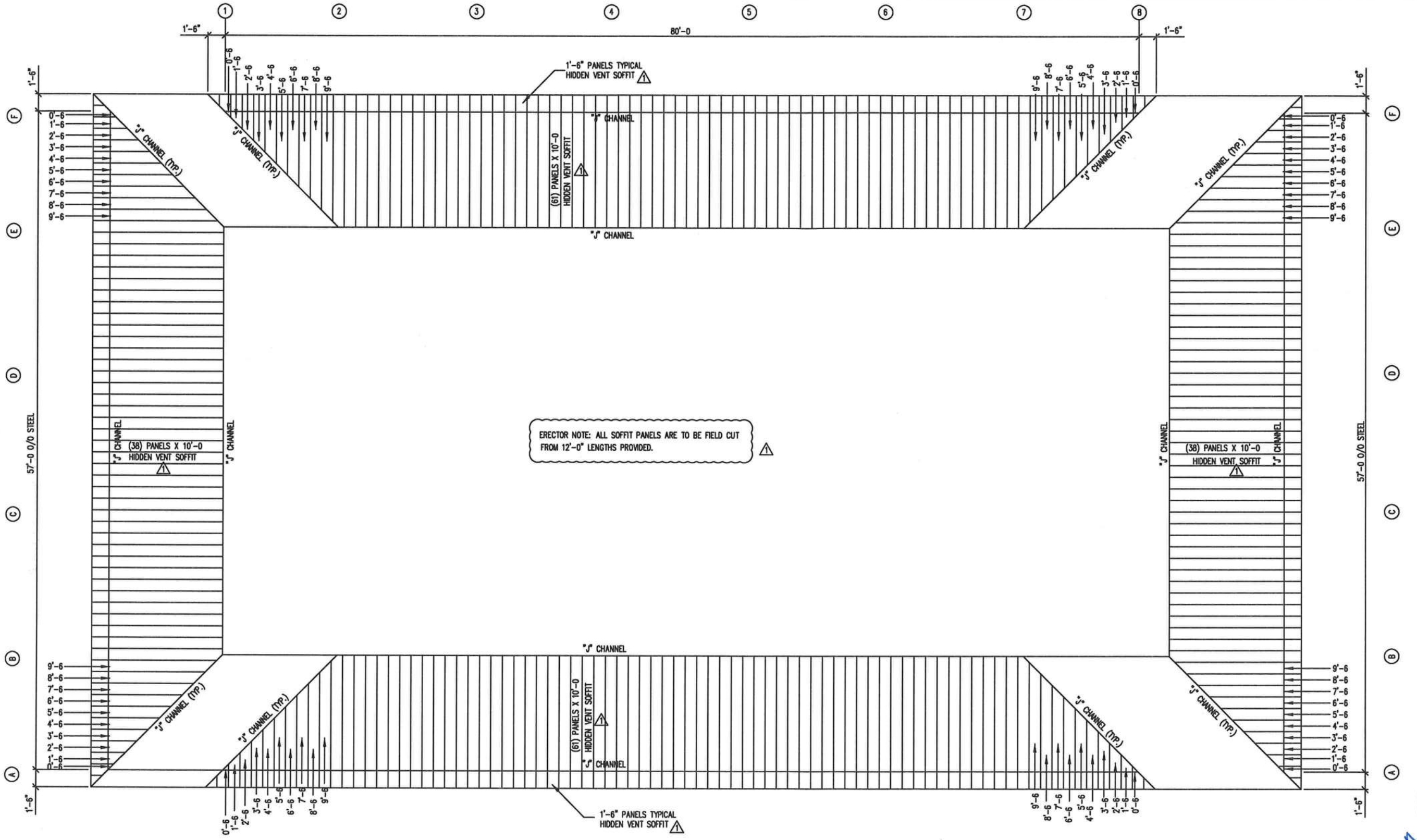

PORCH SOFFIT SHEETING PLAN

12/3/07

REVISIONS				
NO.	DATE	DESCRIPTION	BY	CK'D
1	12/1/06	CHANGED "NON-VENTED" SOFFIT TO	KSH	UF
1	12/1/06	"HIDDEN VENT" SOFFIT	KSH	UF

KODIAK STEEL HOMES

Kodiak Steel Homes, Inc
7301 Industry Drive
North Little Rock, AR 72117

DESCRIPTION: PORCH SOFFIT SHEETING PLAN

STYLE: AUGUSTA I | SIZE: 31'-0" X 60'-0"

DRN. BY	CK'D BY	DATE	SCALE	CODE	SHEET NO.	REV. #
EAP	HDS	04/03	NTS	AE5	E13	1

© COPYRIGHT 2003 ALL STEEL HOMES, INC.

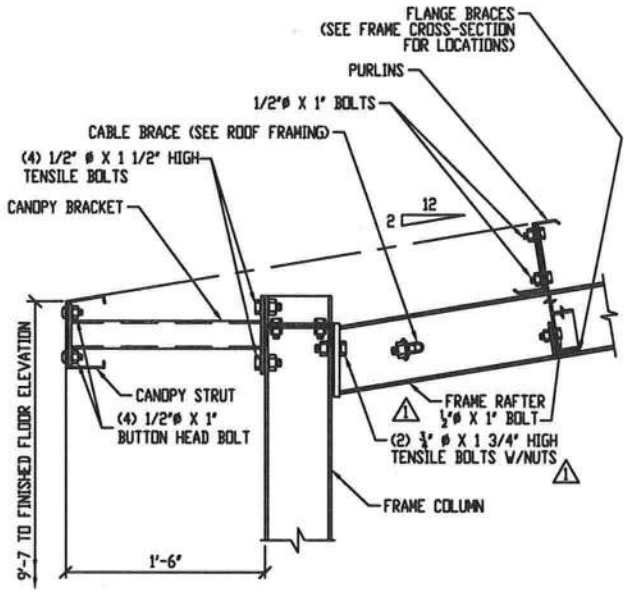

STANDARD SECTION @ FRAME EAVE

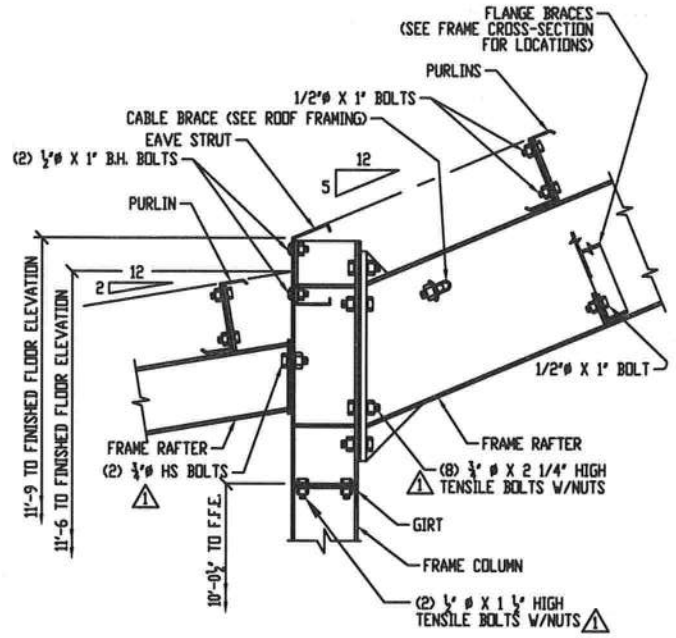

STANDARD SECTION @ FRAME EAVE

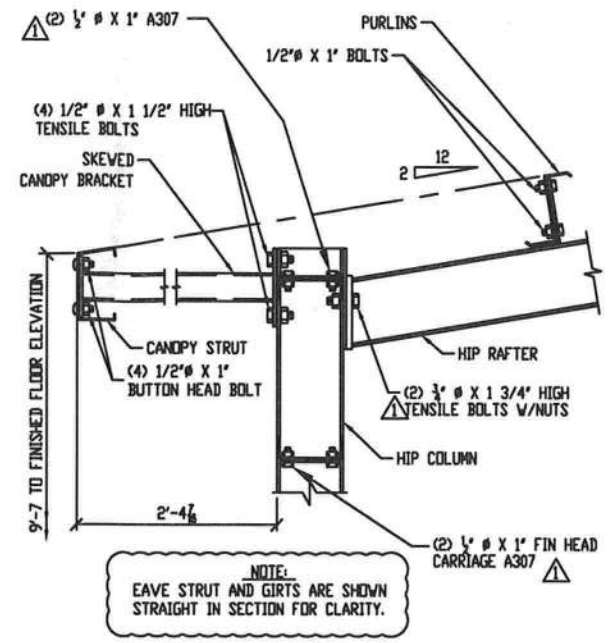

STANDARD PORCH SECTION @ FRAME EAVE

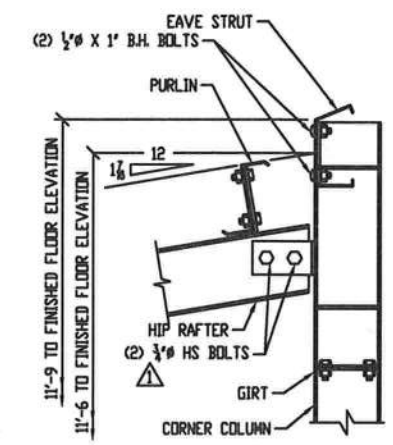

STANDARD SECTION @ HIP CONNECTION

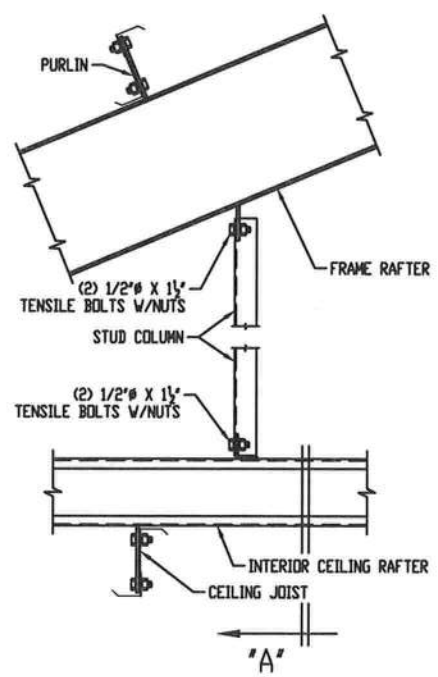

STANDARD SECTION INTERIOR CEILING RAFTER

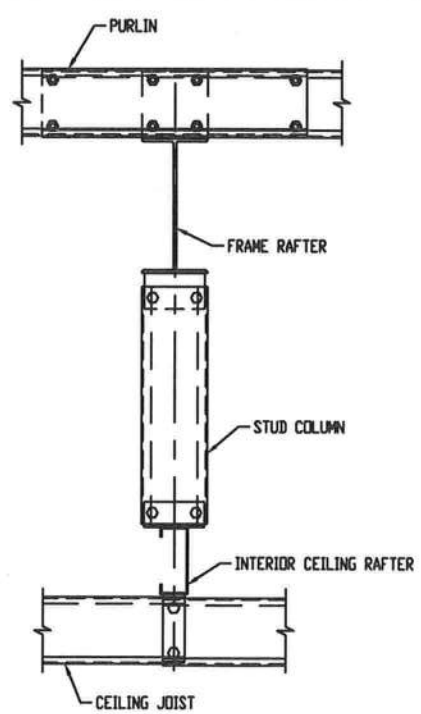

SECTION "A"

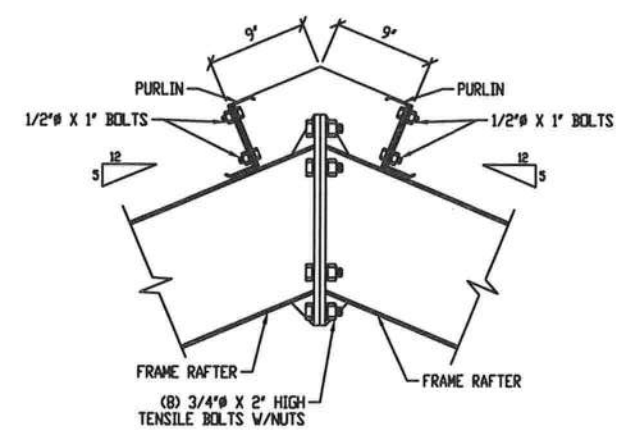

STANDARD SECTION @ RIDGE

12/13/07

REVISIONS				
NO.	DATE	DESCRIPTION	BY	CK'D
1	12/7/06	GENERAL REVISION	KBH	WF

KODIAK STEEL HOMES

Kodiak Steel Homes, Inc
7301 Industry Drive
North Little Rock, AR 72117

DESCRIPTION: FRAMING DETAILS

STYLE: AUGUSTA I — SIZE: 37'-0" X 60'-0"

DRN. BY	CK'D BY	DATE	SCALE	CODE	SHEET NO.	REV. #
EAP	HDS	04/03	NTS	AE5	E14	1

© COPYRIGHT 2003 ALL STEEL HOMES, INC.

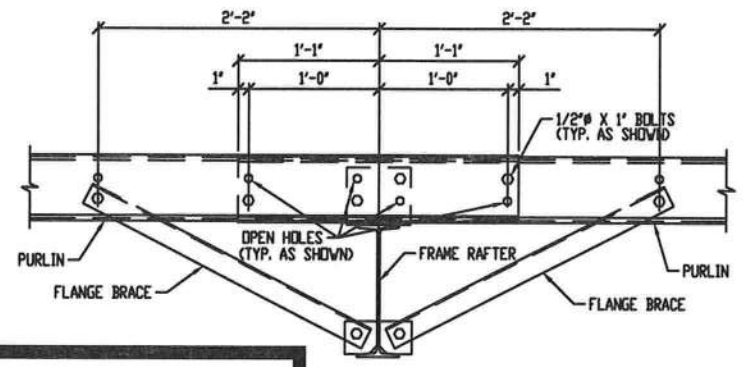

NOTE:
FLANGE BRACES WERE SHOWN ON BOTH SIDES.
FLANGE BRACES MAY NOT BE ON ALL PURLINS.
FLANGE BRACES MAY ALSO BE ON ONE SIDE ONLY.
SEE CROSS-SECTION FOR THEIR LOCATIONS

STANDARD SECTION THRU PURLIN SPLICES

12/3/07

REVISIONS				
NO.	DATE	DESCRIPTION	BY	CK'D
-				

KODIAK STEEL HOMES

Kodiak Steel Homes, Inc
7301 Industry Drive
North Little Rock, AR 72117

DESCRIPTION: FRAMING DETAILS

STYLE: AUGUSTA I | SIZE: 31'-0" X 60'-0"

DRN. BY	CK'D BY	DATE	SCALE	CODE	SHEET NO.	REV.
EAP	HDS	04/03	NTS	AE5	E16	0

© COPYRIGHT 2003 ALL STEEL HOMES, INC.

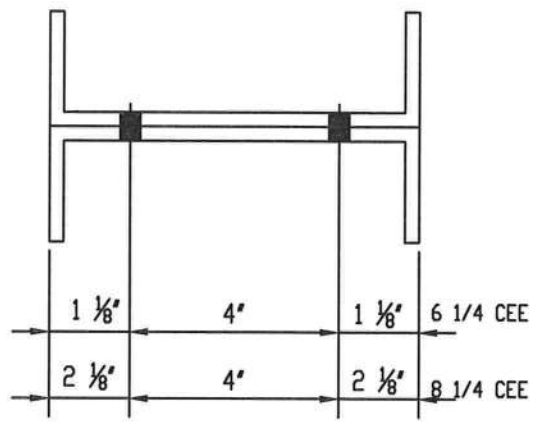

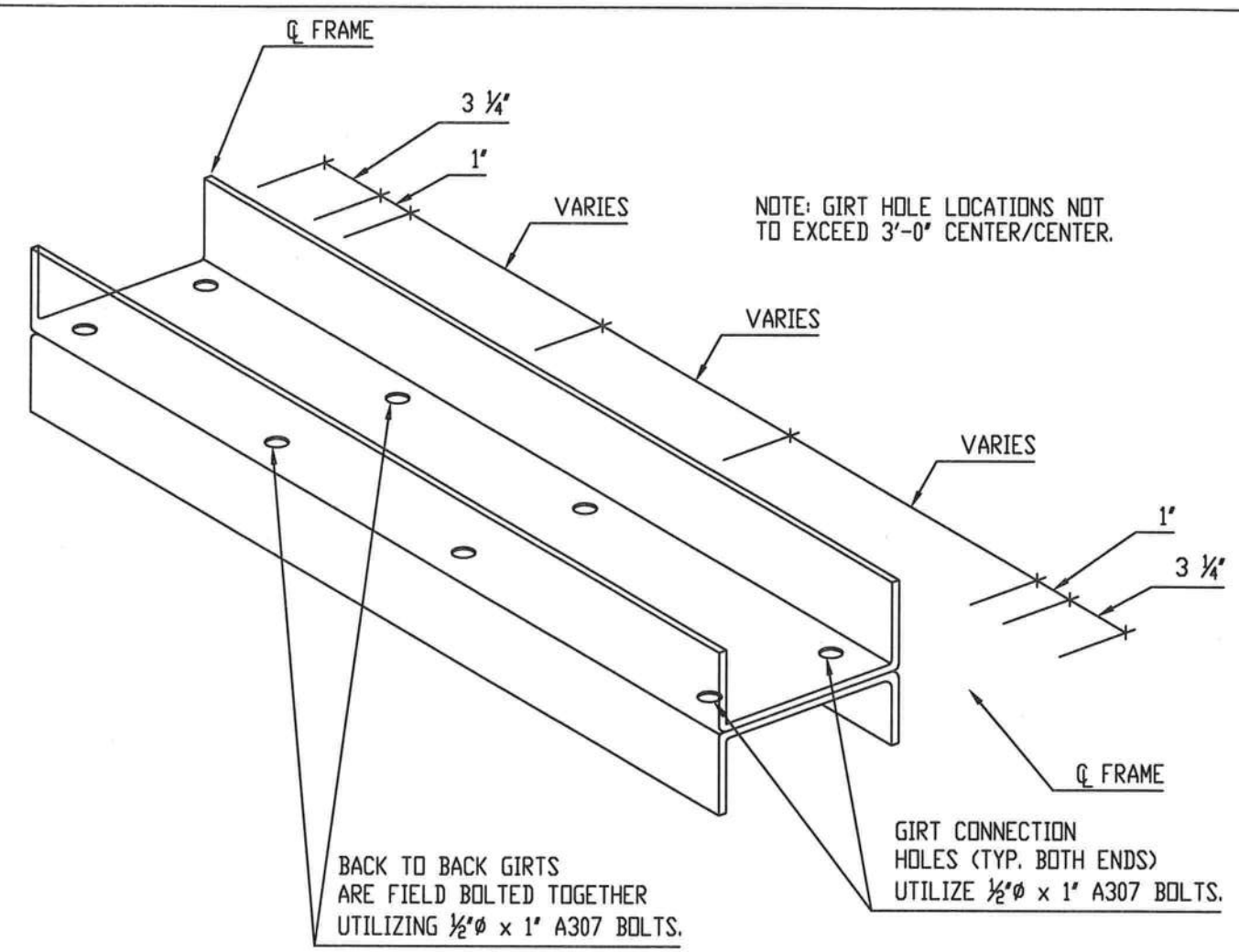

NOTE: GIRT HOLE LOCATIONS NOT TO EXCEED 3'-0" CENTER/CENTER.

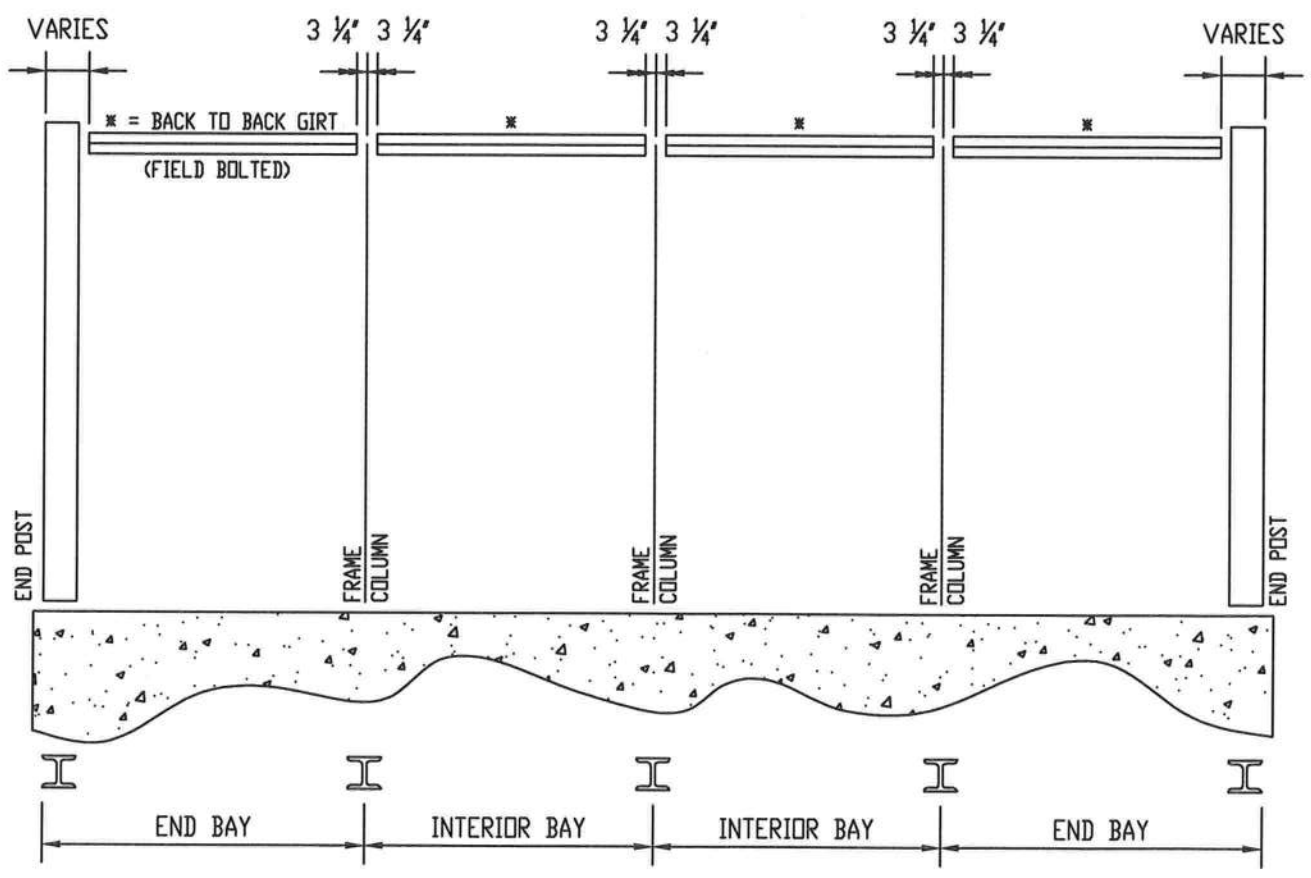

NOTE: INFORMATION SHOWN DOES NOT APPY IN ALL CONDITIONS. REFER TO SIDEWALL & ENDWALL DRAWINGS.

12/3/07

REVISIONS				
NO.	DATE	DESCRIPTION	BY	CK'D
0	5/10/06	RELEASED FOR CONSTRUCTION	BH	JU

KODIAK STEEL HOMES

Kodiak Steel Homes, Inc
7301 Industry Drive
North Little Rock, AR 72117

DESCRIPTION: STANDARD BACK TO BACK GIRTS DETAILS

STYLE: SIZE:

DRN. BY	CK'D BY	DATE	SCALE	CODE	SHEET NO.	REV.
EAP	HDS	04/03	NTS			0

							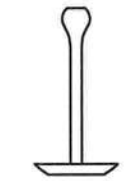
#8 X ¾" DP2 BLAZER ROUND WASHER HEAD	#8 X 1¼" DP2 BLAZER ROUND WASHER HEAD	#10-16 X 1" DP3 CARBON CONCEALOR SELF DRILL	#12-14 X 1-1/4" DP2 LONG LIFE HEAD W/W	1/4"-14 X 7/8 DP LAP LONG LIFE HEAD W/W	1/4-14 X 7/8" DP3 STRESSLESS S.D. 5/16 HEX OVERSIZED WASHER HEAD	¼" X 2" ZAMAC CONCRETE ANCHOR	1/8" POP RIVET
USES: A) INTERIOR/ EXTERIOR STUDS B) SIDING/SOFFIT (STEEL) C) STARTER STRIP D) J-CHANNEL E) CEILING/FLOOR STRAPPING F) EDGE ANGLE	USES: POLAR WALL A) SIDING/SOFFIT B) STARTER STRIP C) J-CHANNEL	USES: A) PM2 PLATE CONNECTIONS B) RIDGE BRACING C) 3" BRACE STRAPPING △2 D) 4" BRACE STRAPPING △2	USES: A) ROOF PANEL TO PURLIN	USES: A) PANEL TO PANEL LAP B) ROOF TRIM C) RIDGE CAP D) PERFORATED VENT DRIP	USES: A) PM1 (RAKE ANGLE) TO ROOF PURLINS B) TRACK TO BEAM C) HAT CHANNEL	USES: A) USE FOR EXTERIOR TRACK △2 @ 1'-0" ON CENTER ONLY.	USES: A) ROOF PANEL B) ROOF TRIM C) GUTTERS & DOWNSPOUTS
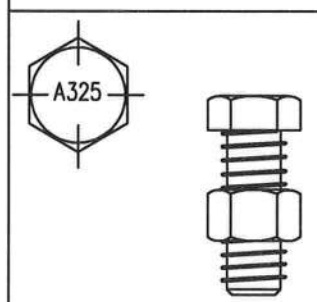	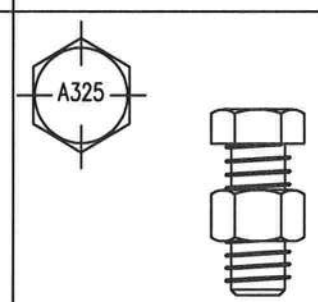	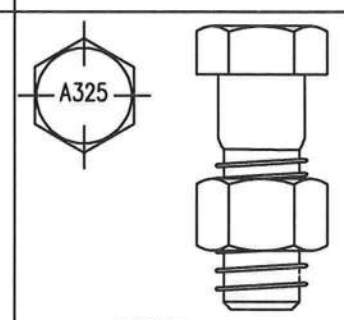	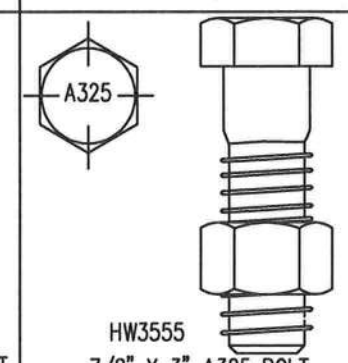	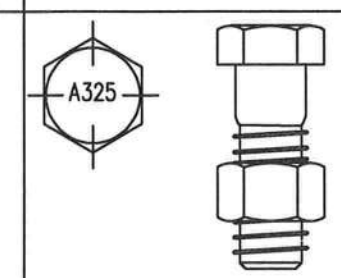	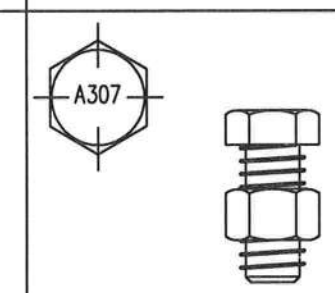	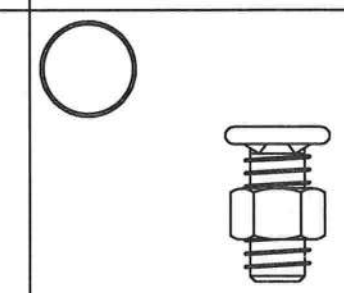	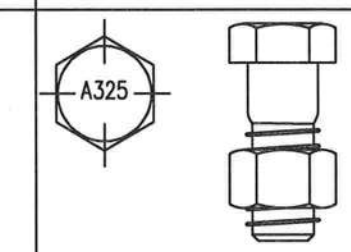
HW3514 1/2" X 1-1/2" A325 BOLT W/A563 NUT	HW363 1/2" X 1-1/4" A325 BOLT W/A563 NUT	HW3552 7/8" X 2-1/2" A325 BOLT W/A563 NUT	HW3555 7/8" X 3" A325 BOLT W/A563 NUT	HW3537 3/4" X 2-1/2" A325 BOLT W/A563 NUT	HW355 1/2" X 1" A307 BOLT W/A563 NUT	HW362 1/2" FH CARRIAGE A307 BOLT W/A563 NUT	HW3536 3/4" X 2" A325 BOLT W/A563 NUT
USES: A) CANOPY BRACKET TO COLUMN CONNECTIONS	USES: A) GIRT TO COLUMN CONNECTIONS B) ENDWALL RAFTER CONNECTIONS C) STUB COLUMNS	USES: A) RIGID FRAME CONNECTIONS	USES: A) RIGID FRAME CONNECTIONS	USES: A) RIGID FRAME CONNECTIONS	USES: A) PURLIN CONNECTIONS B) BACK TO BACK GIRTS	USES: EAVE STRUT TO CANOPY BRACKET CONNECTIONS	USES: A) RIGID FRAME CONNECTIONS

STANDARD FASTENERS

NOTE:
FASTENER TYPES MAY NOT APPLY TO ALL MODELS.
REFER TO ERECTION DRAWINGS AND DETAILS FOR CLARIFICATION.

M 12/3/07

REVISIONS

NO.	DATE	DESCRIPTION	BY	CK'D
0	3/24/06	RELEASED FOR CONSTRUCTION	JW	WM
1	5/02/06	GENERAL REVISION	JF	WM
2	8/31/06	UPDATED FASTENER USEAGE	BC	WF

KODIAK STEEL HOMES

Kodiak Steel Homes, Inc
7301 Industry Drive
North Little Rock, AR 72117

DESCRIPTION: STANDARD FASTENERS

STYLE: SIZE:

DRN. BY	CK'D BY	DATE	SCALE	CODE	SHEET NO.	REV. #
JW	W Mc	3/06	NTS			2

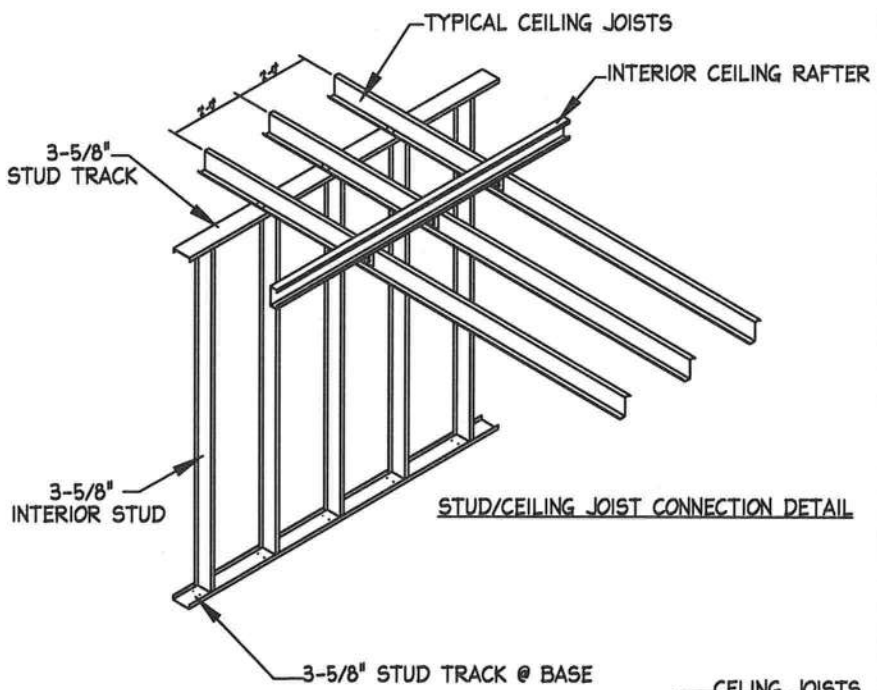

STUD/CEILING JOIST CONNECTION DETAIL

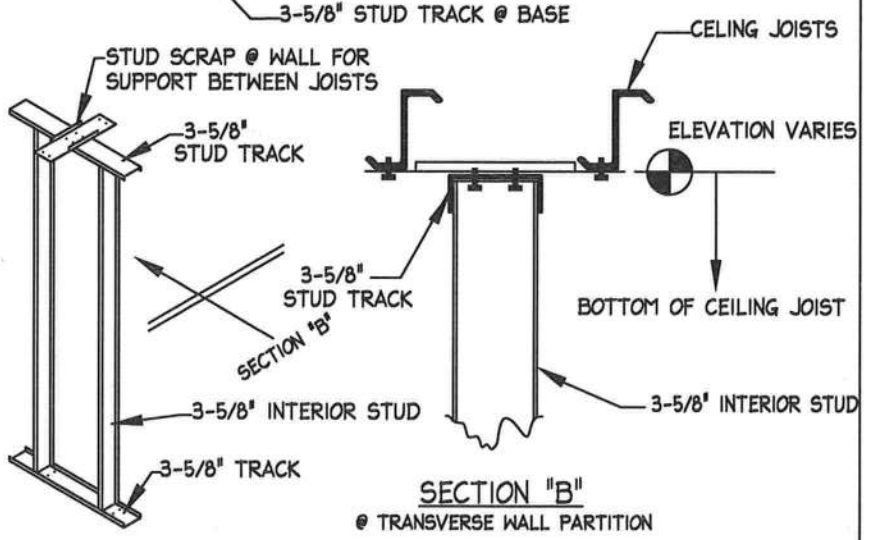

SECTION "B"
@ TRANSVERSE WALL PARTITION

STUD/CEILING JOIST CONNECTION DETAIL

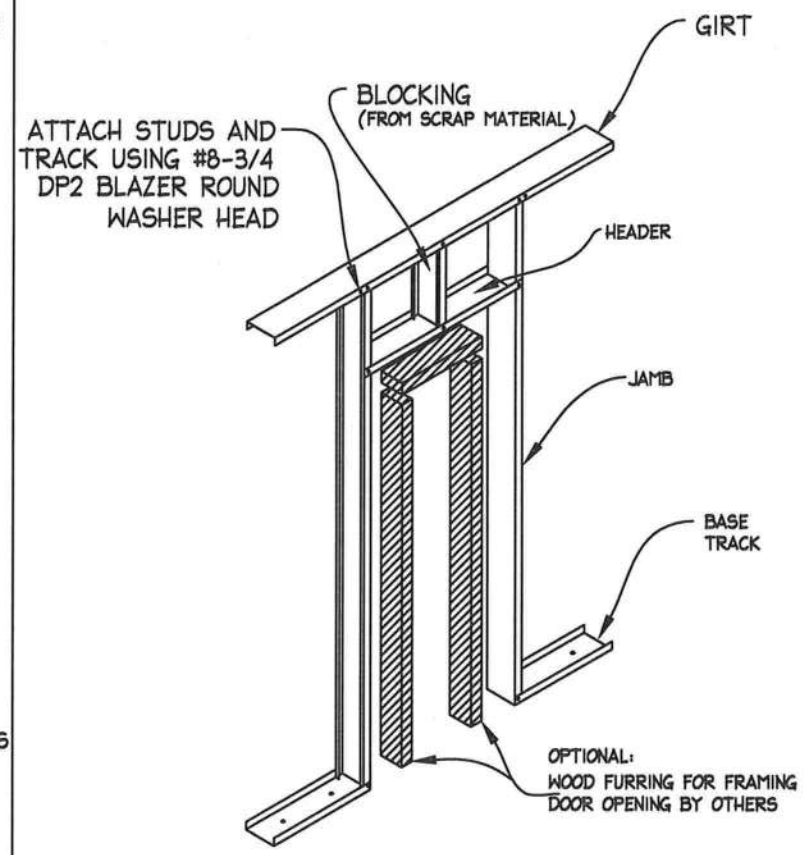

INTERIOR FRAMED OPENING COMPONENTS

JAMB- SINGLE STUD WITH OPTIONAL WOOD FURRING
HEADER-SINGLE TRACK WITH OPTIONAL WOOD FURRING
BLOCKING- STUD PIECE CUT FROM SCRAP MATERIAL

INTERIOR FRAMED DOOR OPENING

NOTE:
EXTERIOR AND INTERIOR STUDS ARE PLACED 16" O.C.

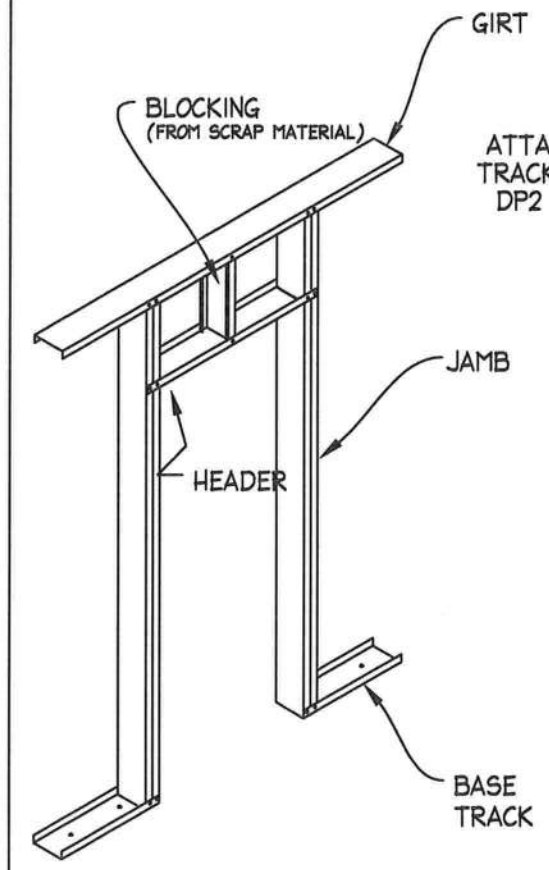

EXTERIOR FRAMED OPENING COMPONENTS

JAMB- TWO STUDS
HEADER-SINGLE PIECE OF TRACK WITH WEB NOTCHED 4"
SILL- SINGLE PIECE OF TRACK WITH WEB NOTCHED 4"
BLOCKING- STUD PIECE CUT FROM FROM SCRAP MATERIAL

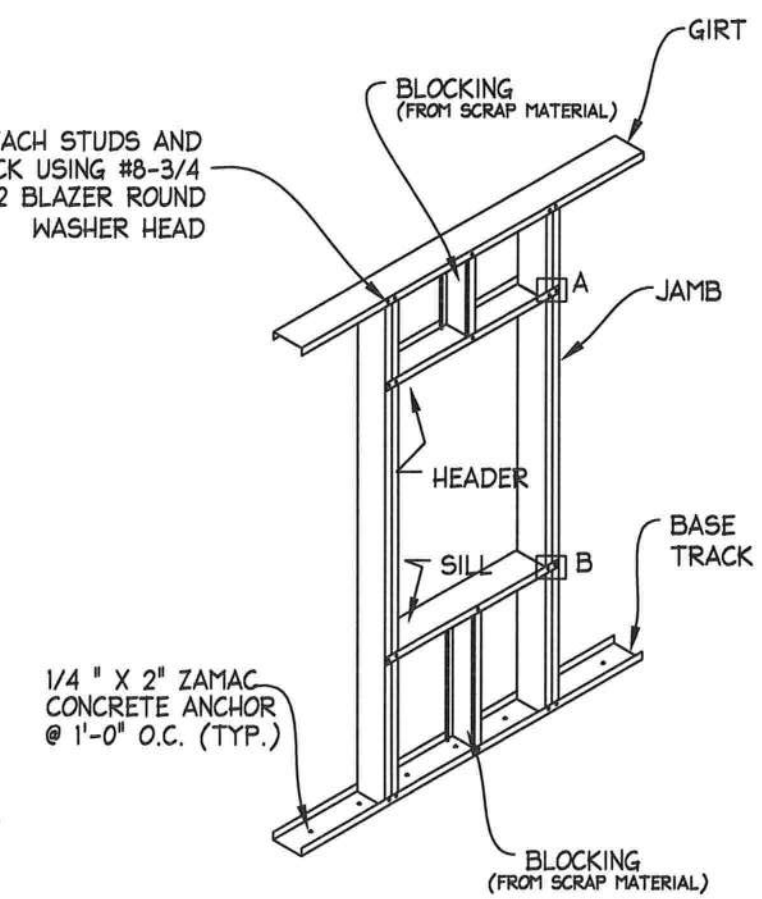

GENERAL NOTE:

These details are for window openings up to 4'0" wide. Kodiak Steel Homeshas not supplied additional material that may be needed for windows more than 4'0" wide.

EXTERIOR FRAMED WINDOW AND DOOR OPENINGS

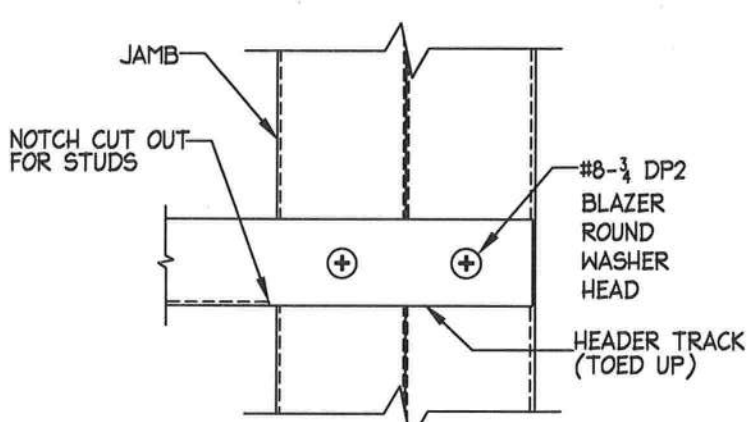

HEADER/JAMB ATTACHMENT

DETAIL A

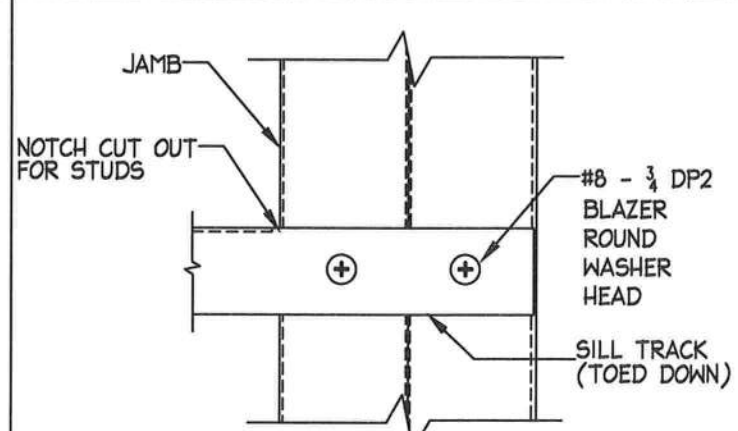

SILL/JAMB ATTACHMENT

DETAIL B

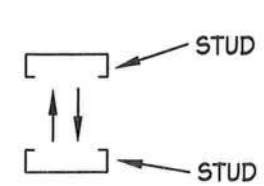

EXTERIOR JAMB ASSEMBLY

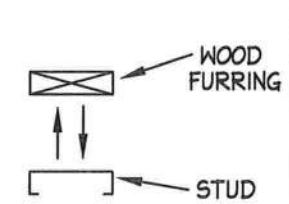

INTERIOR JAMB ASSEMBLY

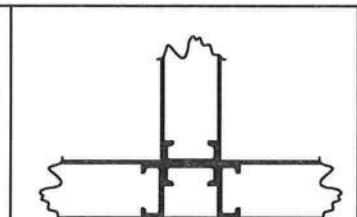

INTERIOR & EXTERIOR TEE

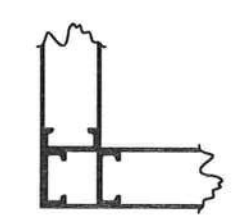

INTERIOR & EXTERIOR CORNER

M 12/3/07

REVISIONS

NO.	DATE	DESCRIPTION	BY	CK'D
0	3/24/06	RELEASED FOR CONSTRUCTION	JW	-
1	5/02/06	GENERAL REVISION	JF	WM
2	08/07	REVISED NOT FOR WINDOW MATERIAL	WM	KSH

KODIAK STEEL HOMES

Kodiak Steel Homes, Inc
7301 Industry Drive
North Little Rock, AR 72117

DESCRIPTION: FRAMED OPENING DETAILS

STYLE: SIZE:

DRN. BY	CK'D BY	DATE	SCALE	CODE	SHEET NO.	REV. #
JW	W Mc	3/06	NTS			2

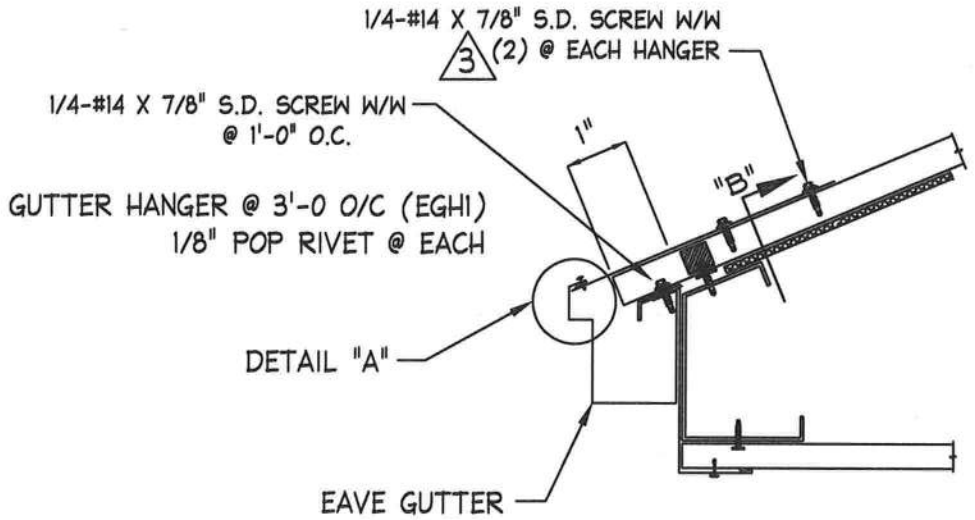

STANDARD EAVE GUTTER 1 -

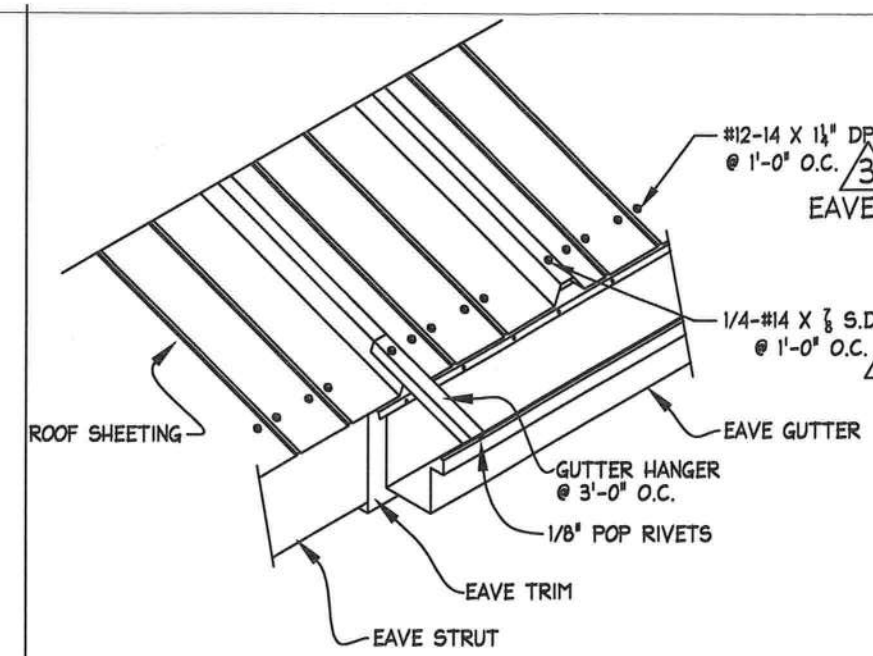

STANDARD GUTTER DETAIL

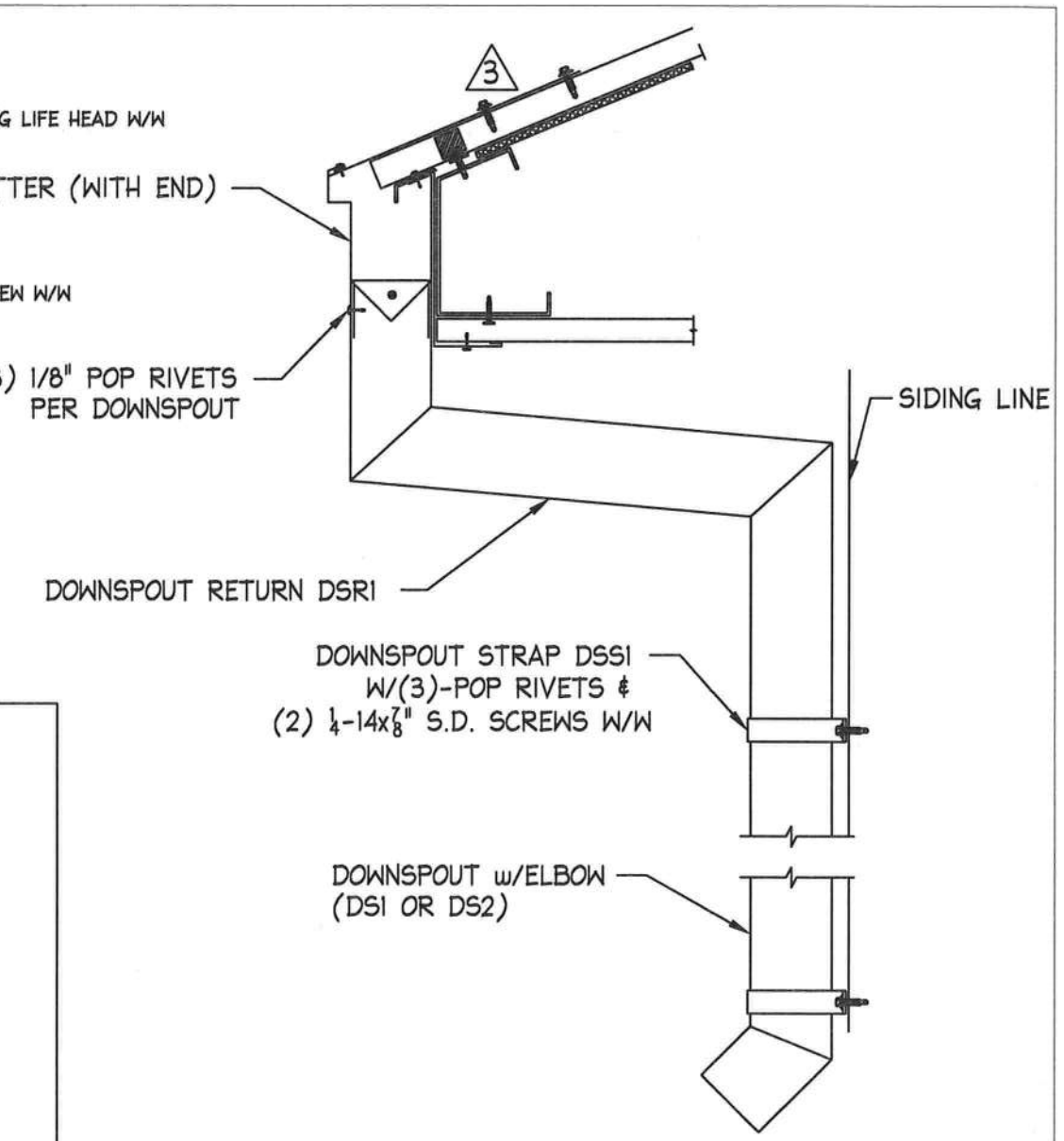

TYPICAL GUTTER & DOWNSPOUT DETAIL 2 -

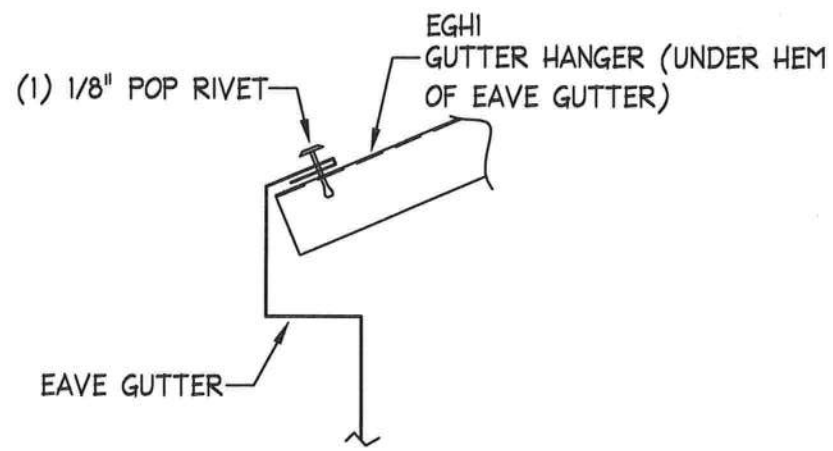

DETAIL A -

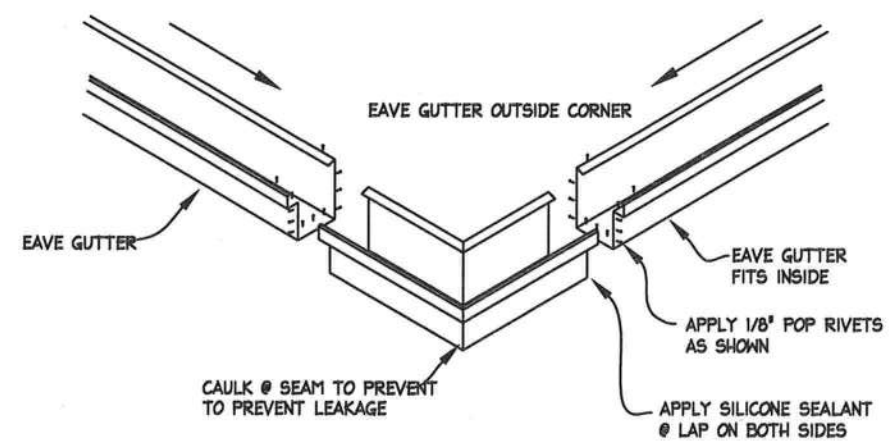

OUTSIDE GUTTER CORNER DETAIL
(NOT TYPICAL ON ALL MODELS)

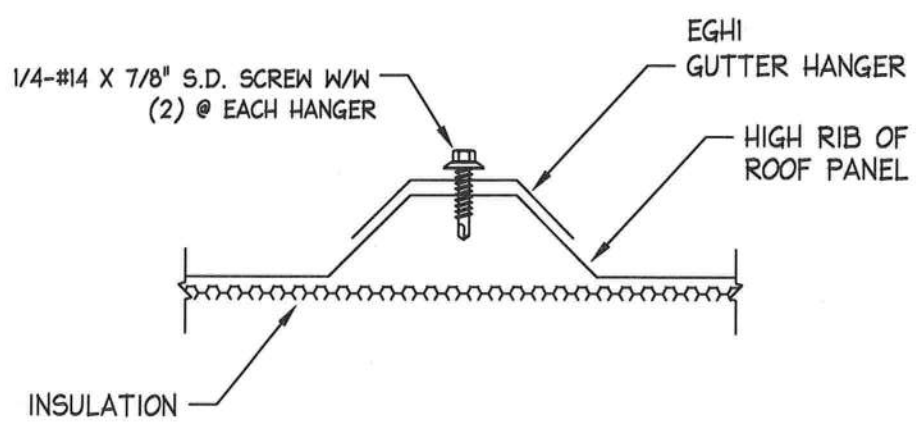

SECTION B -

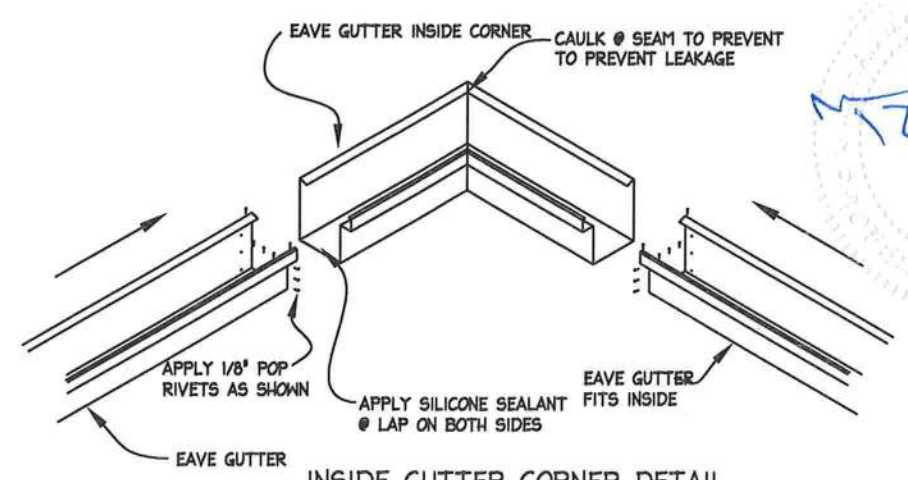

INSIDE GUTTER CORNER DETAIL
(NOT TYPICAL ON ALL MODELS)

12/8/07

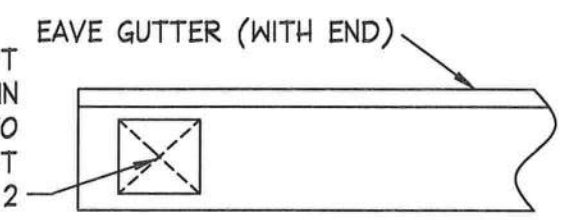

SECTION C -

REVISIONS				
NO.	DATE	DESCRIPTION	BY	CK'D
1	3/24/06	ADDED SECTION DETAILS	JW	-
2	6/27/06	GENERAL REVISION (FIXED LEADERS)	WF	KSH
3	12/12/06	GENERAL REVISION	WF	KSH

KODIAK STEEL HOMES

Kodiak Steel Homes, Inc
7301 Industry Drive
North Little Rock, AR 72117

DESCRIPTION: GUTTER & DOWNSPOUT DETAILS

STYLE: SIZE: 36'-0" x 36'-0"

DRN. BY	CK'D BY	DATE	SCALE	CODE	SHEET NO.	REV. #
W Mc	-	11/05	NTS	WP12		3

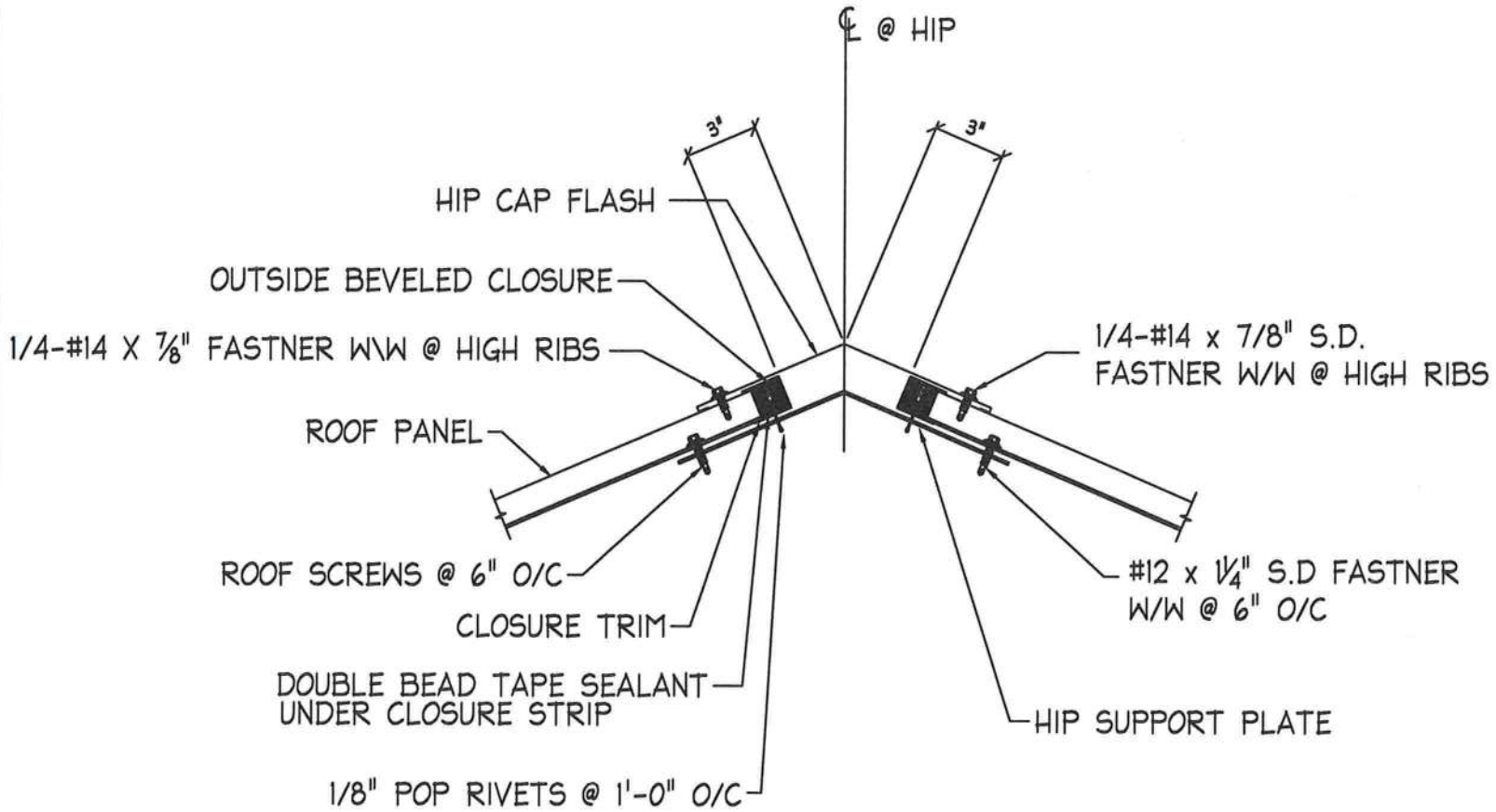

PURLINS NOT SHOWN FOR CLARITY.
ATTACH HIP PLATE AT PURLINS USING
#10 x 1" CARBON CONCEALOR S.D.

STANDARD PLAN @ STANDARD HIP DETAIL

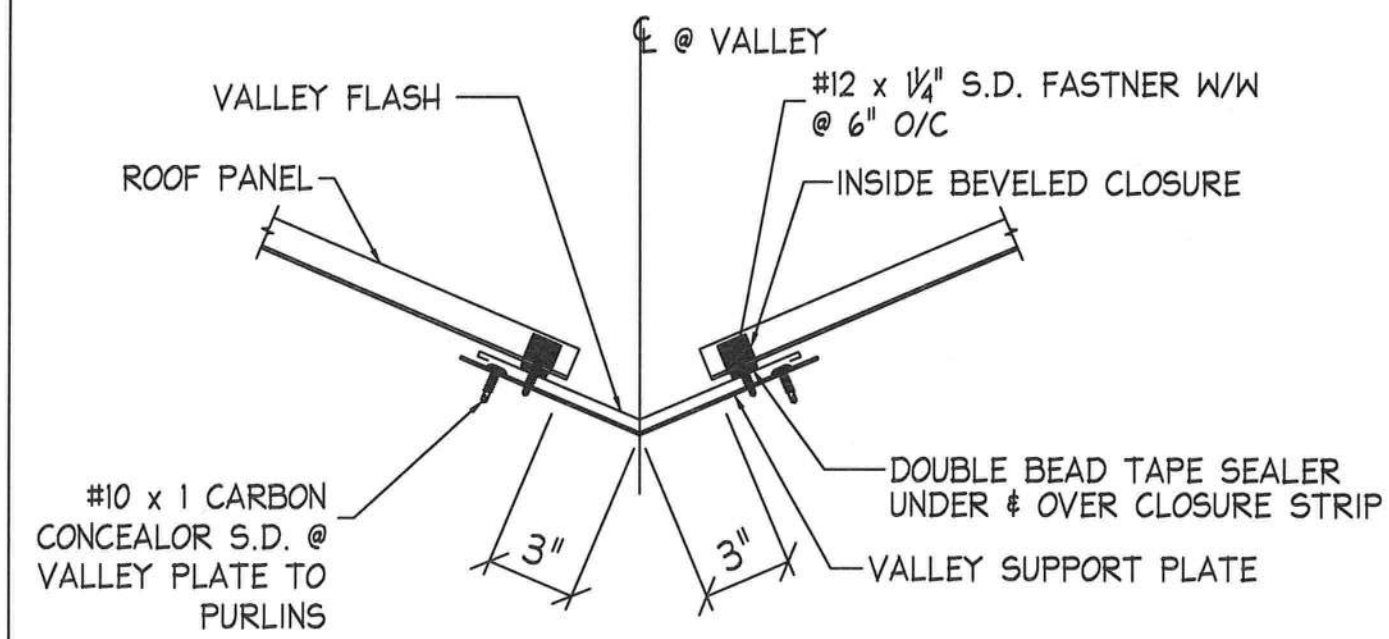

PURLINS NOT SHOWN FOR CLARITY.
ATTACH VALLEY PLATE AT PURLINS USING
#10 x 1" CARBON CONCEALOR S.D.

STANDARD PLAN @ STANDARD VALLEY DETAIL

12/3/07

REVISIONS				
NO.	DATE	DESCRIPTION	BY	CK'D
0	3/24/06	RELEASED FOR CONSTRUCTION	JW	-
1	5/02/06	GENERAL REVISION	JF	WM

KODIAK STEEL HOMES

Kodiak Steel Homes, Inc
7301 Industry Drive
North Little Rock, AR 72117

DESCRIPTION: HIP & VALLEY DETAILS

STYLE: SIZE:

DRN. BY	CK'D BY	DATE	SCALE	CODE	SHEET NO.	REV. #
JW	W Mc	3/06	NTS			1

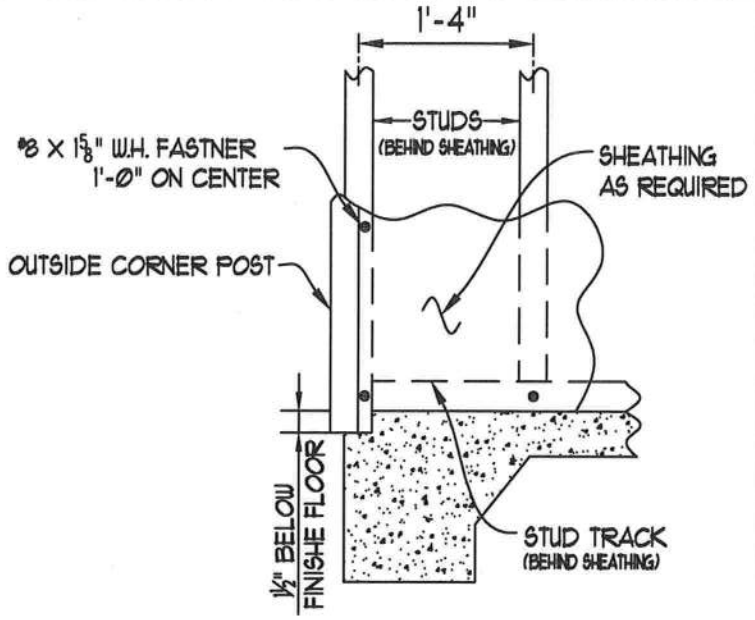

OUTSIDE CORNER POST @ FOUNDATION

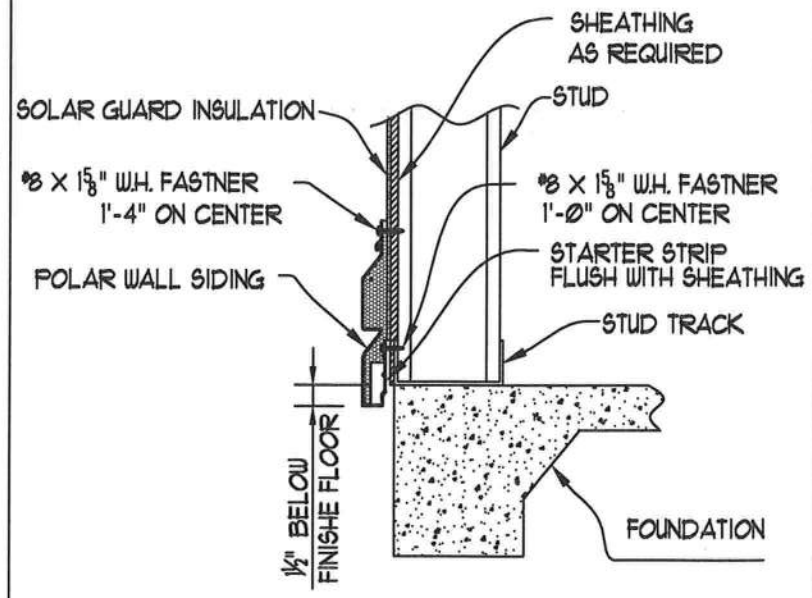

SIDING @ FOUNDATION

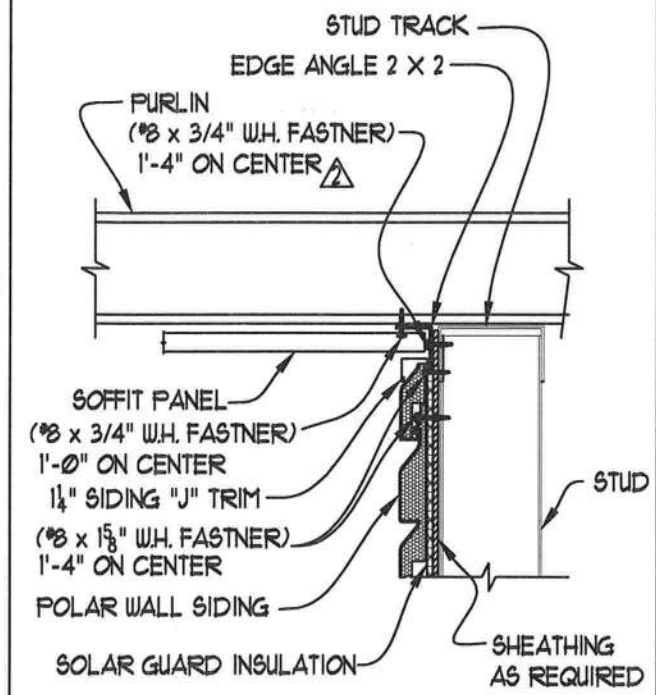

STANDARD @ ENDWALL SOFFIT

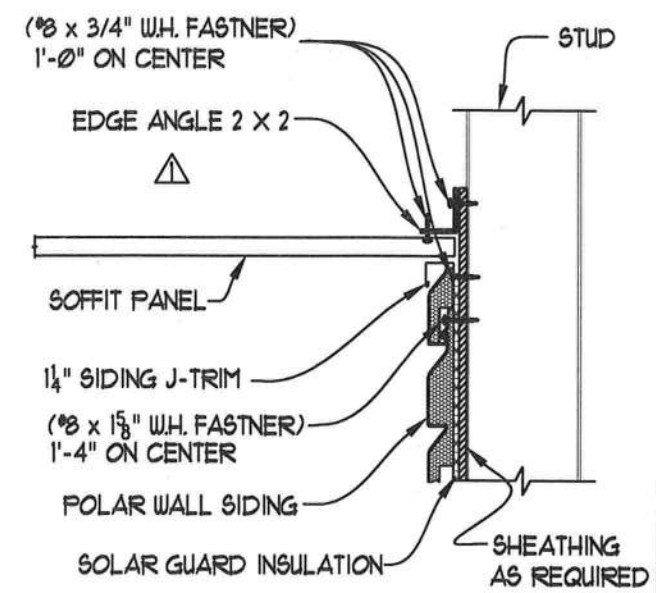

STANDARD @ SIDEWALL SOFFIT

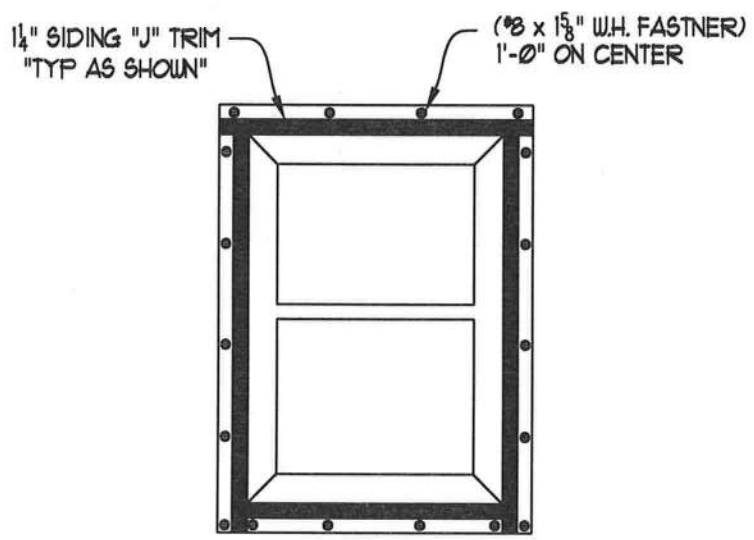

USE WINDOWS WITHOUT TRIM FINS.

SIDING TRIM @ WINDOWS

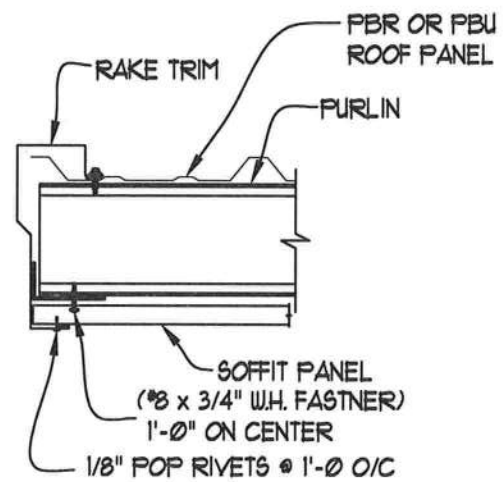

STANDARD SECTION @ RAKE

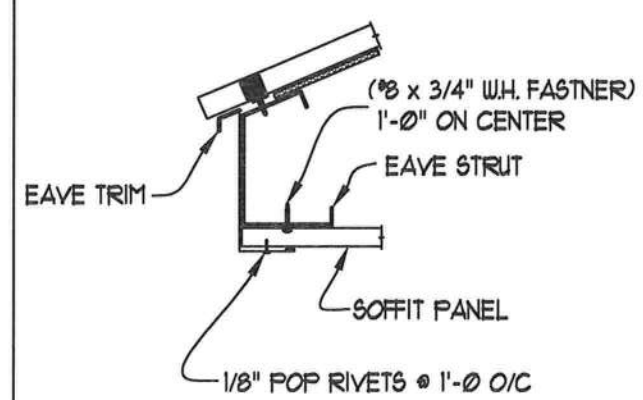

STANDARD SECTION @ EAVE

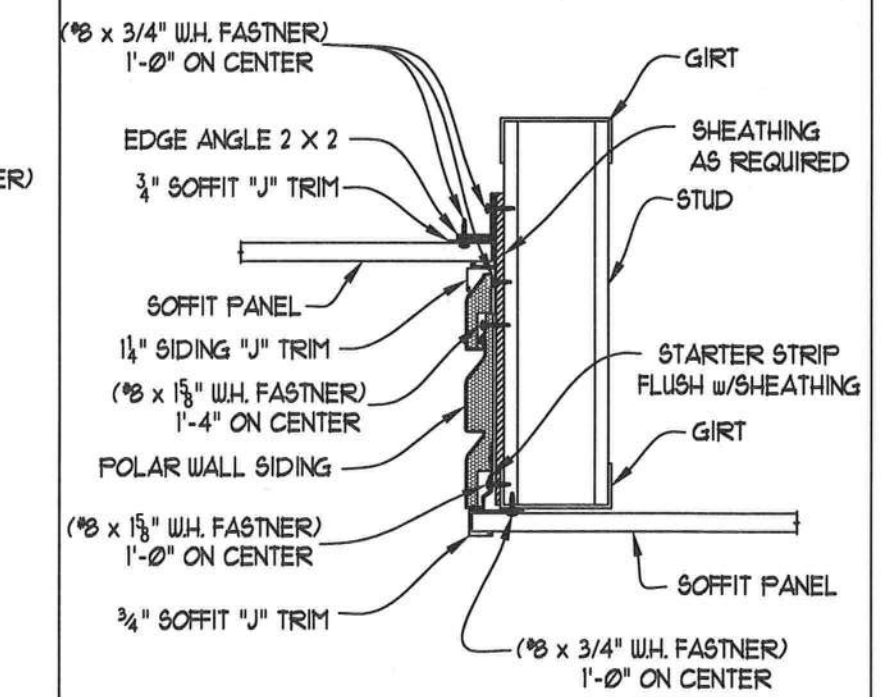

STANDARD SECTION @ PORCH

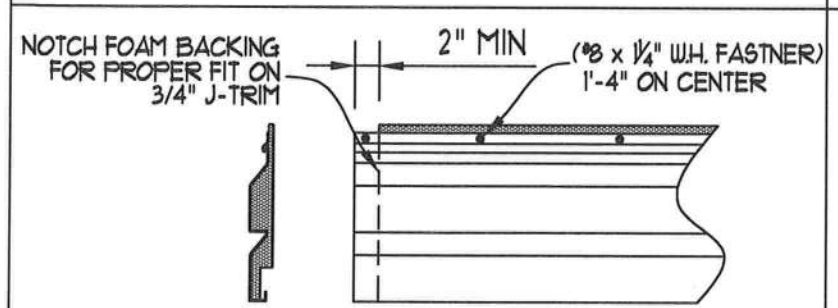

SIDING TO TRIM @ WINDOWS

12/3/07

REVISIONS				
NO.	DATE	DESCRIPTION	BY	CK'D
Ø	5/11/06	RELEASED FOR CONSTRUCTION	BM	JW
1	6/16/06	REMOVED "J" TRIM @ STANDARD	BF	KSH
1	6/16/06	ENDWALL & SIDEWALL SOFFIT DETAILS	BF	KSH
2	12/12/06	GENERAL REVISION	BF	KSH

KODIAK STEEL HOMES

Kodiak Steel Homes, Inc
7301 Industry Drive
North Little Rock, AR 72117

DESCRIPTION: POLAR WALL SIDING & SOFFIT DETAILS

STYLE: SIZE:

DRN. BY	CK'D BY	DATE	SCALE	CODE	SHEET NO.	REV.
W Mc	JW	Ø5/1Ø6	NTS			2

BUTYL TAPE

Proper Butyl Tape application is critical to the weather tightness of a home.
Butyl tape should not be stretched when installed. Apply only to clean, dry surfaces.
Keep only enough butyl tape on the roof that can be installed in a day.
Store remaining butyl tape in a cool dry place. After butyl tape has been applied, keep protective paper in place until panel is ready to be installed.

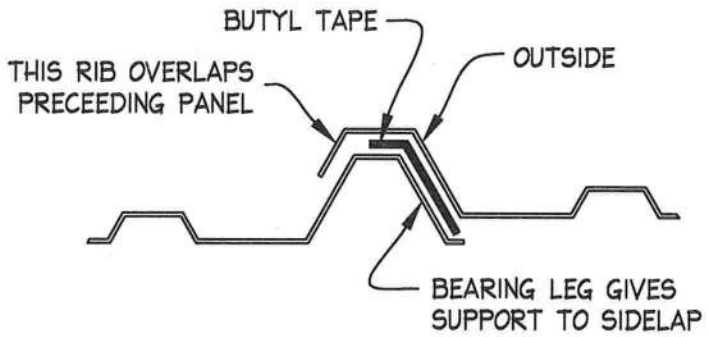

PANEL TO PURLIN	(#12 X 1-1/4" DP2 SCREW W\W)
PANEL TO PANEL LAP	(1/4-14 X 7/8" DPI LAP SCREW W\W) 1'-0" ON CENTER
PANEL TO TRIM	1/8"ø POP RIVET

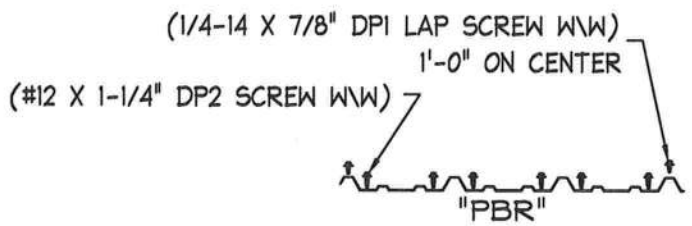

ROOF PANEL FASTENER SPACING
EAVE STRUT, ROOF PANEL, RIDGE PURLIN

ROOF PANEL FASTENER SPACING
INTERMEDIATE PURLINS

UL 90 Roofs with UL 90 up lift rating, require fastners at each end at all purlins and eave strut locations

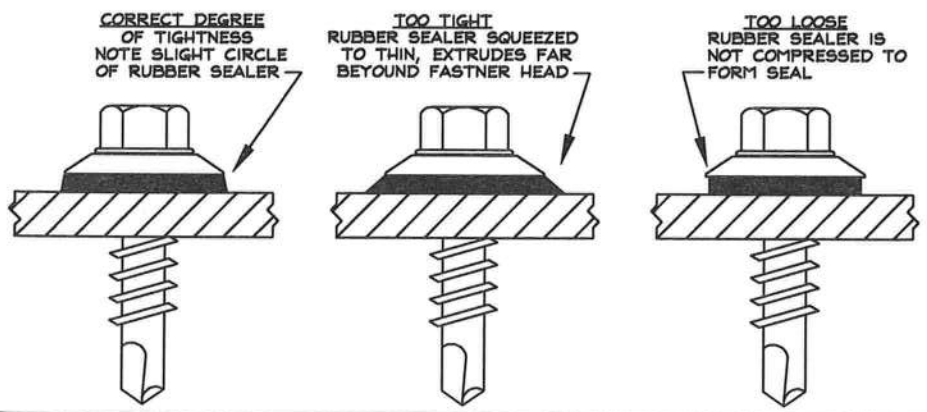

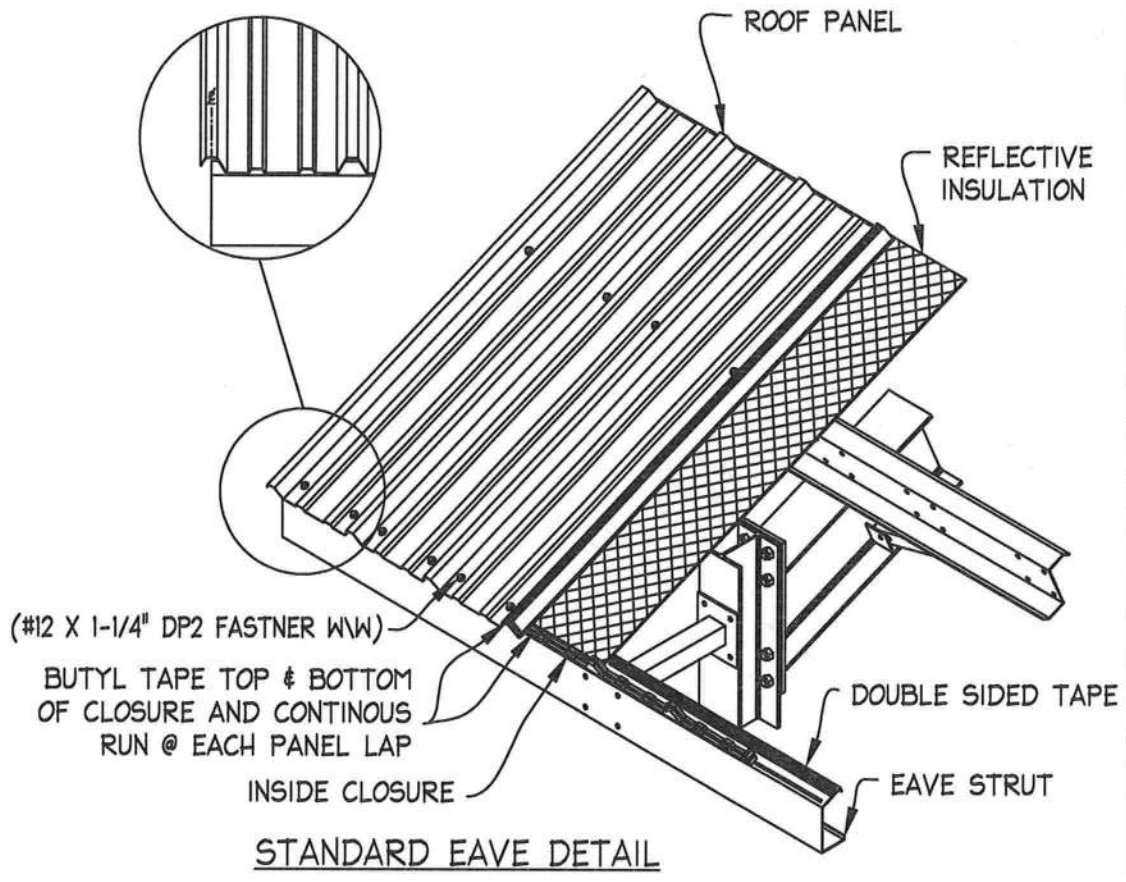

STANDARD EAVE DETAIL

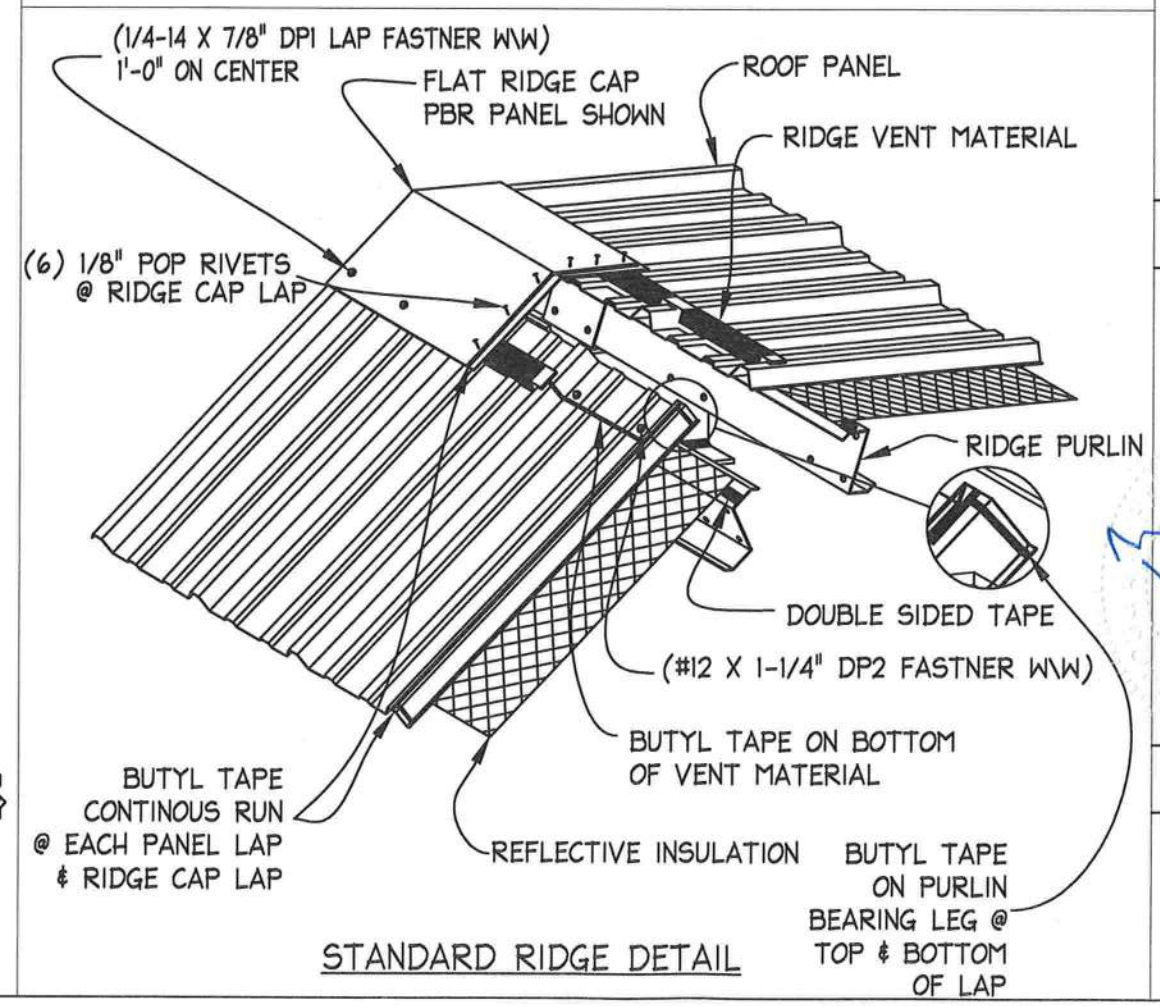

STANDARD RIDGE DETAIL

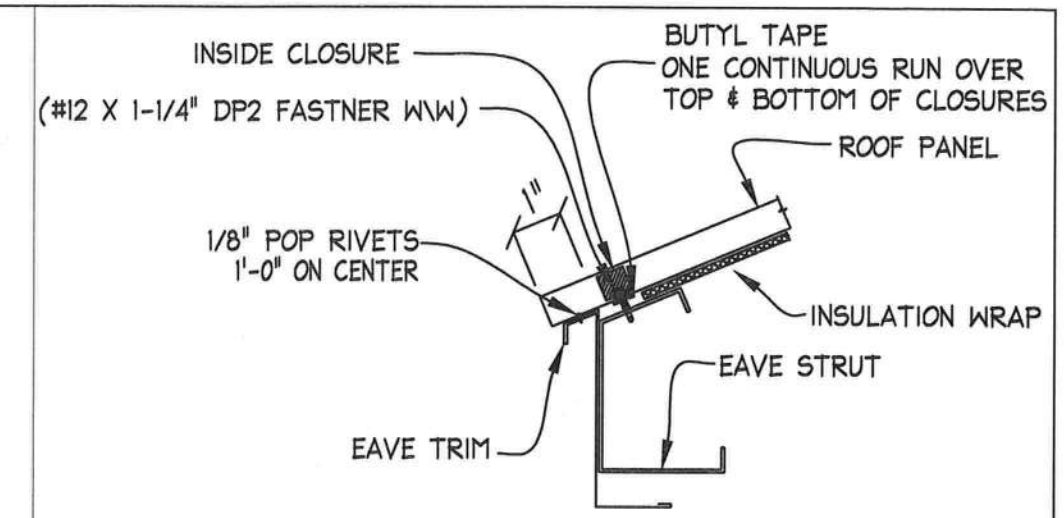

STANDARD SECTION @ EAVE

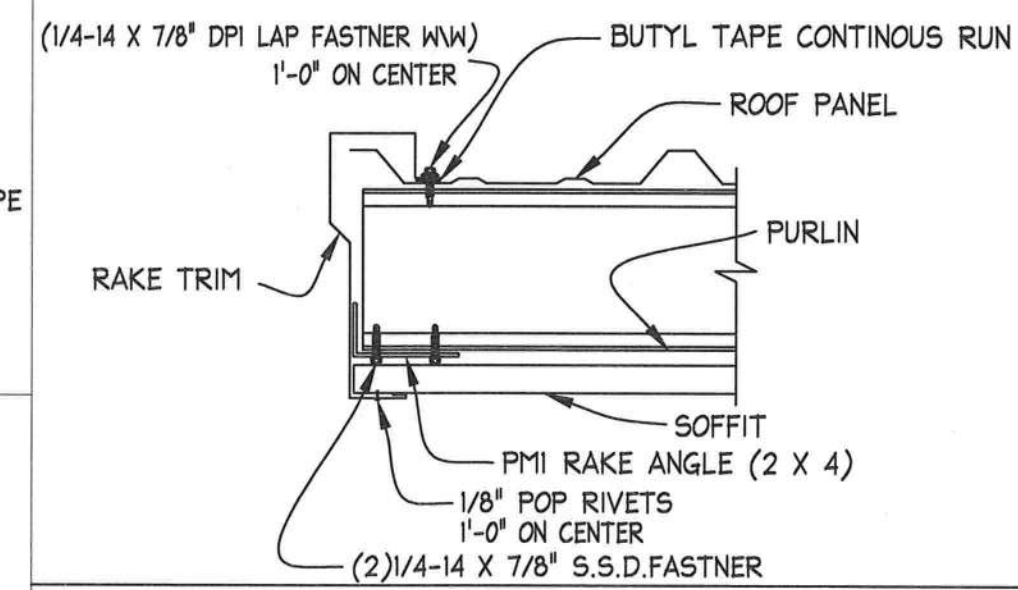

STANDARD SECTION @ RAKE

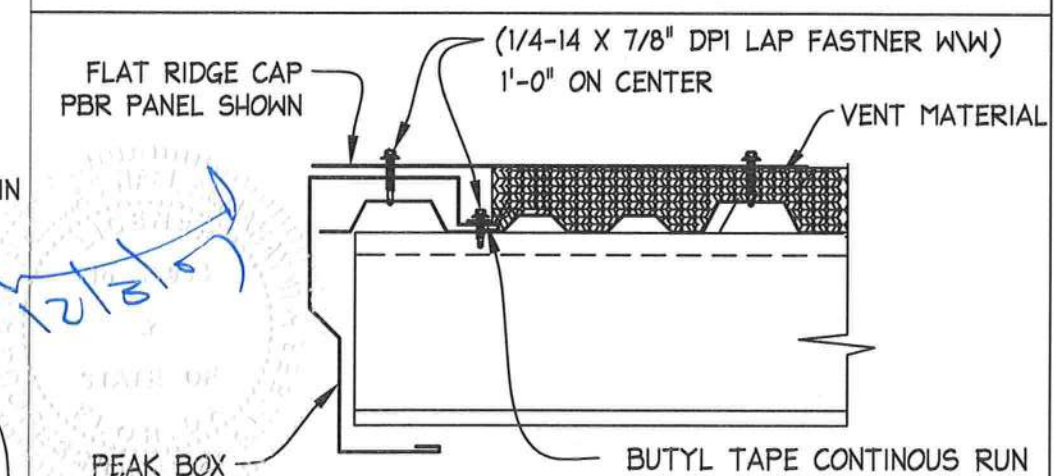

STANDARD SECTION @ PEAK BOX

REVISIONS

NO.	DATE	DESCRIPTION	BY	CK'D
0	5/3/06	RELEASED FOR CONSTRUCTION	WMc	JW
1	5/24/06	ADDED POP RIVET TO	WF	KBH
1	5/24/06	"STANDARD SECTION @ RAKE"	WF	KBH
2	6/27/06	GENERAL REVISION (CORRECTED SPELLING)	WF	KBH
3	9/1/06	REVISED FOR "PBR PANELS" ONLY	WF	WMc
4	11/01/06	REVISED FASTENER SPACING & INTERMEDIATE PURLINS	BC	WF

KODIAK STEEL HOMES

Kodiak Steel Homes, Inc
7301 Industry Drive
North Little Rock, AR 72117

DESCRIPTION: STANDARD ROOF & TRIM DETAILS - PBR PANEL

STYLE:				SIZE:		
DRN. BY	CK'D BY	DATE	SCALE	CODE	SHEET NO.	REV. #
WMc	JW	5/3/06	NTS			4

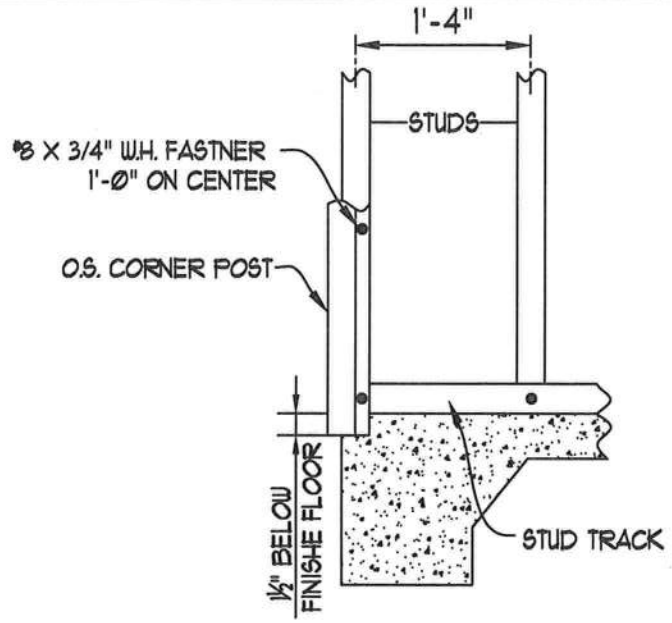

O.S. CORNER POST @ FOUNDATION

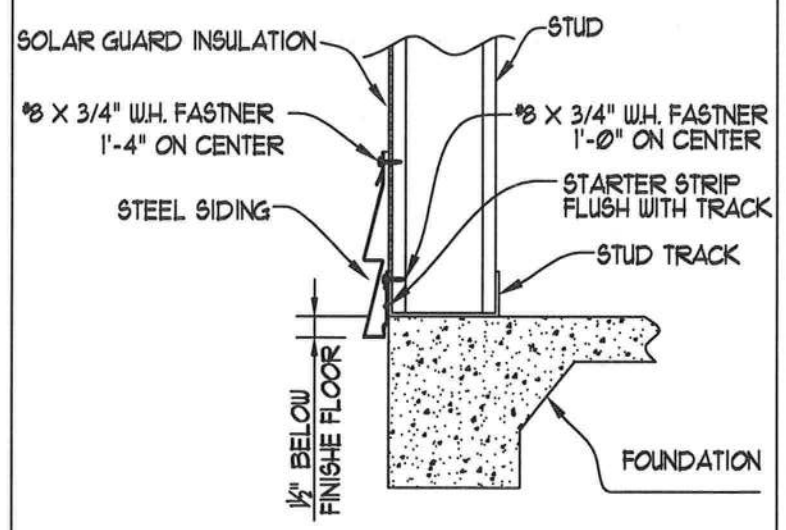

SIDING @ FOUNDATION

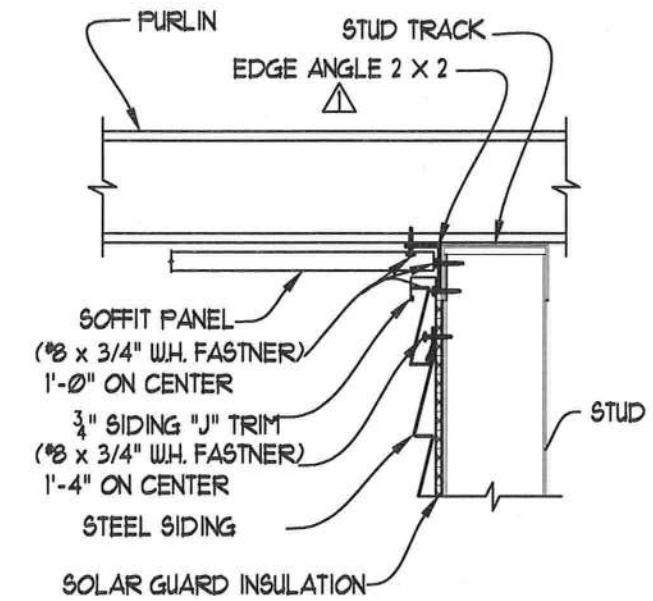

STANDARD @ ENDWALL SOFFIT

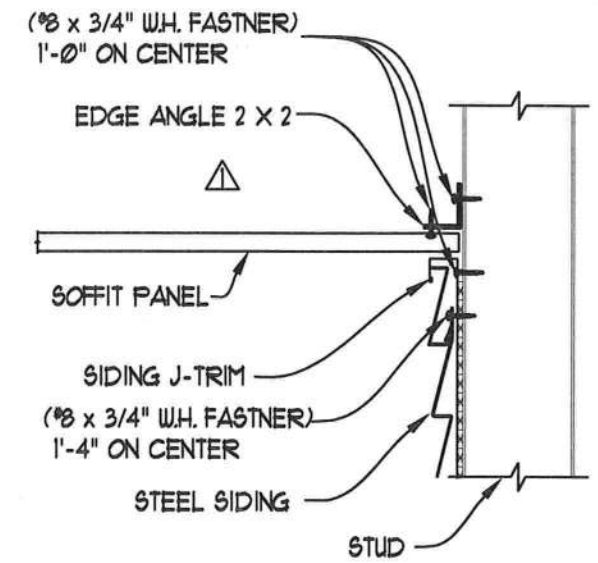

STANDARD @ SIDEWALL SOFFIT

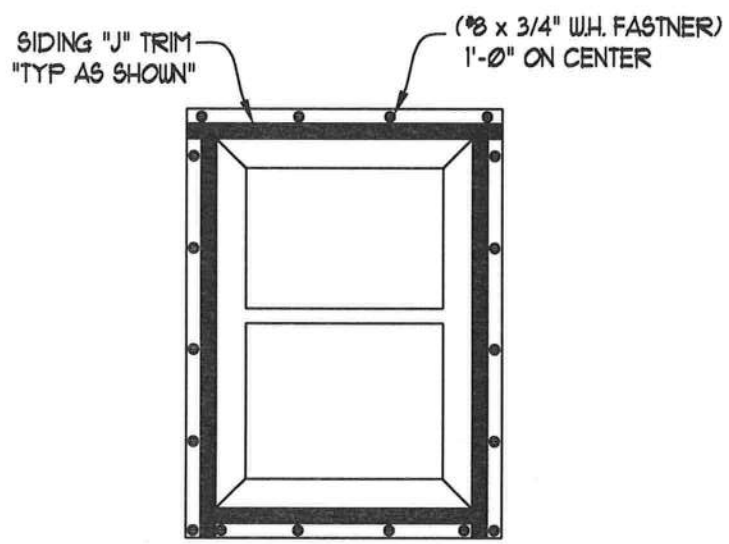

NOTE: "J" TRIM NOT NEEDED WITH WINDOWS THAT COME WITH TRIM FINS.

SIDING TRIM @ WINDOWS

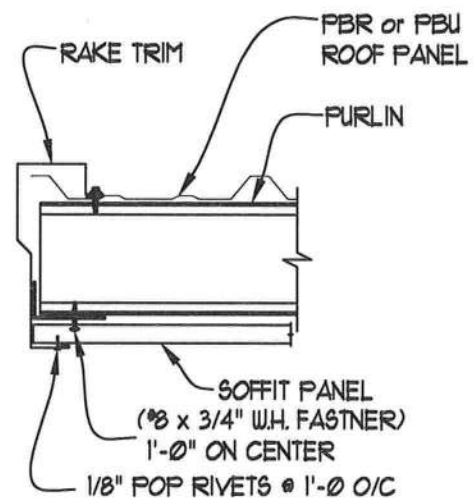

STANDARD SECTION @ RAKE

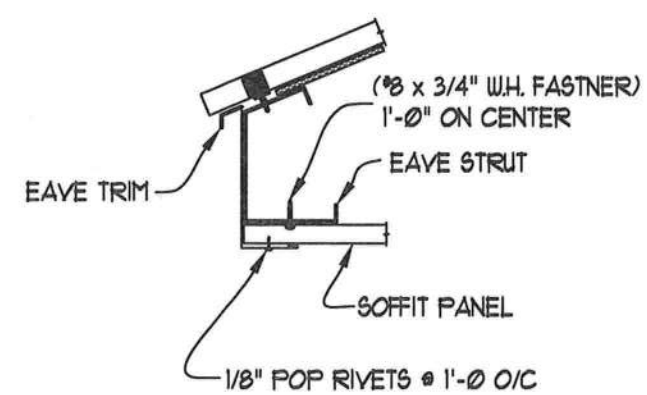

STANDARD SECTION @ EAVE

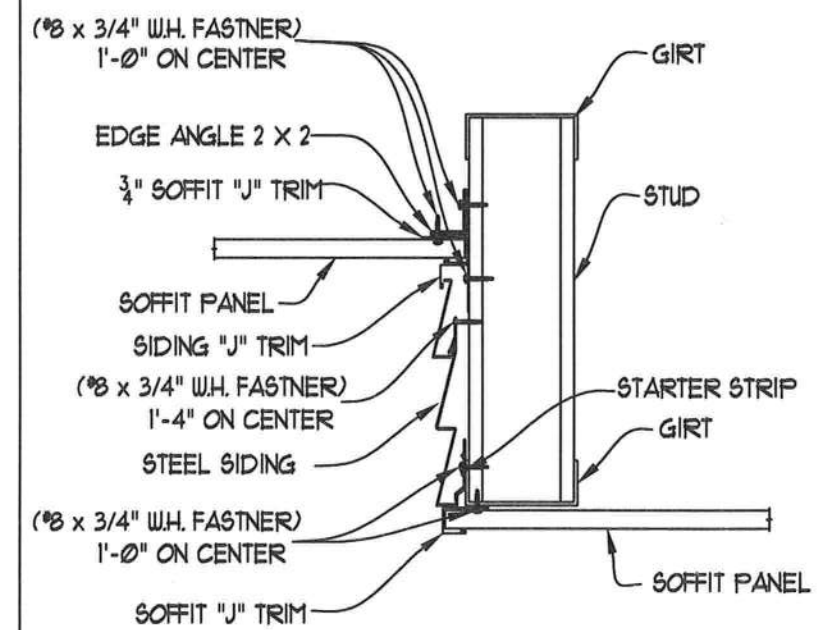

STANDARD SECTION @ PORCH

12/3/07

REVISIONS				
NO.	DATE	DESCRIPTION	BY	CK'D
Ø	5/10/06	RELEASED FOR CONSTRUCTION	BH	JW
1	6/6/06	REMOVED "J" TRIM @ STANDARD	BF	KBH
1	6/6/06	ENDWALL & SIDEWALL SOFFIT DETAILS	BF	KBH

KODIAK STEEL HOMES

Kodiak Steel Homes, Inc
7301 Industry Drive
North Little Rock, AR 72117

DESCRIPTION: STEEL SIDING & SOFFIT DETAILS

STYLE: | SIZE:

DRN. BY	CK'D BY	DATE	SCALE	CODE	SHEET NO.	REV. #
W Mc	JW	05/06	NTS			1

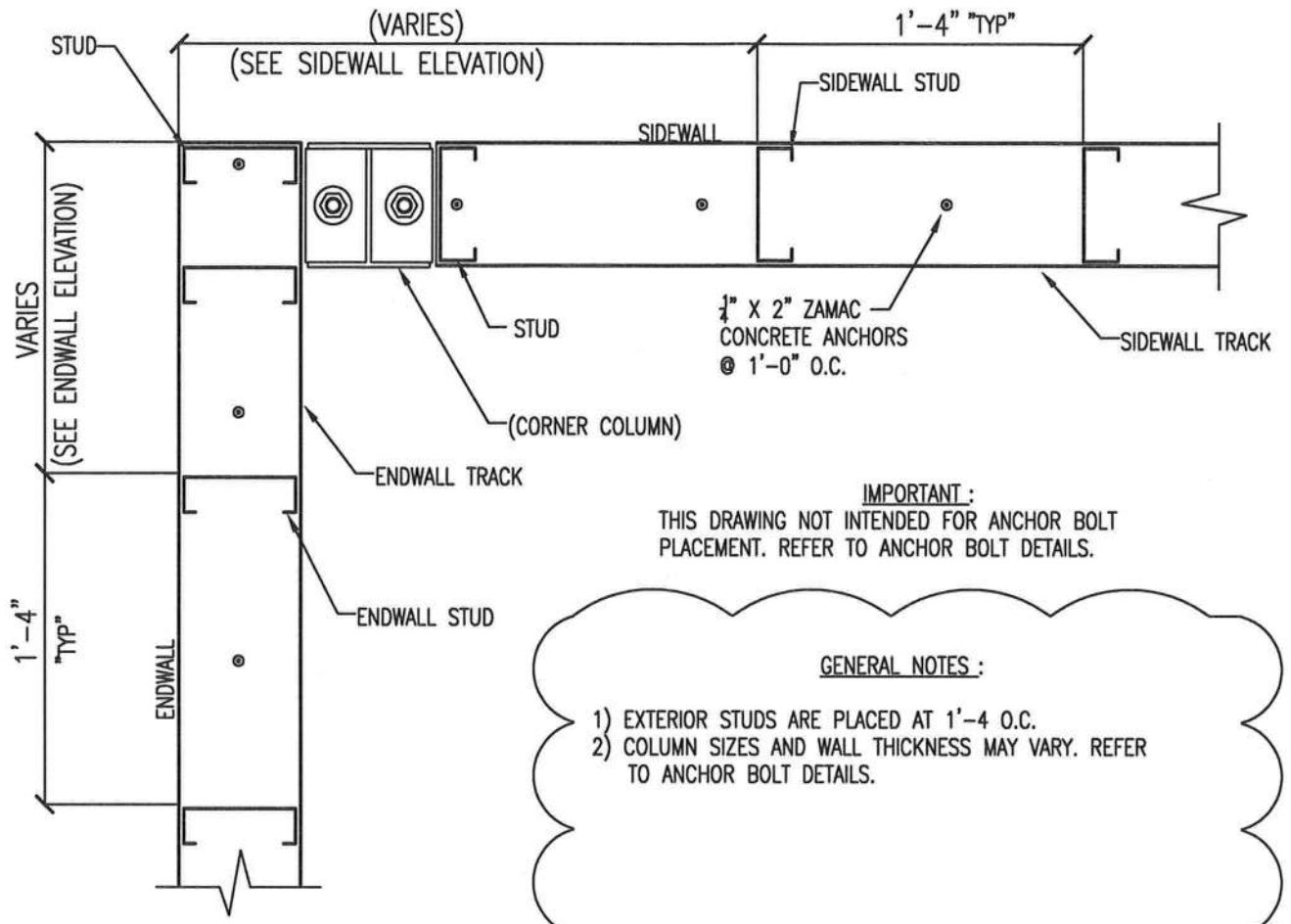

IMPORTANT:
THIS DRAWING NOT INTENDED FOR ANCHOR BOLT PLACEMENT. REFER TO ANCHOR BOLT DETAILS.

GENERAL NOTES:

1) EXTERIOR STUDS ARE PLACED AT 1'-4 O.C.
2) COLUMN SIZES AND WALL THICKNESS MAY VARY. REFER TO ANCHOR BOLT DETAILS.

STANDARD STUD PLACEMENT AT HOT ROLLED MATERIAL CORNERS

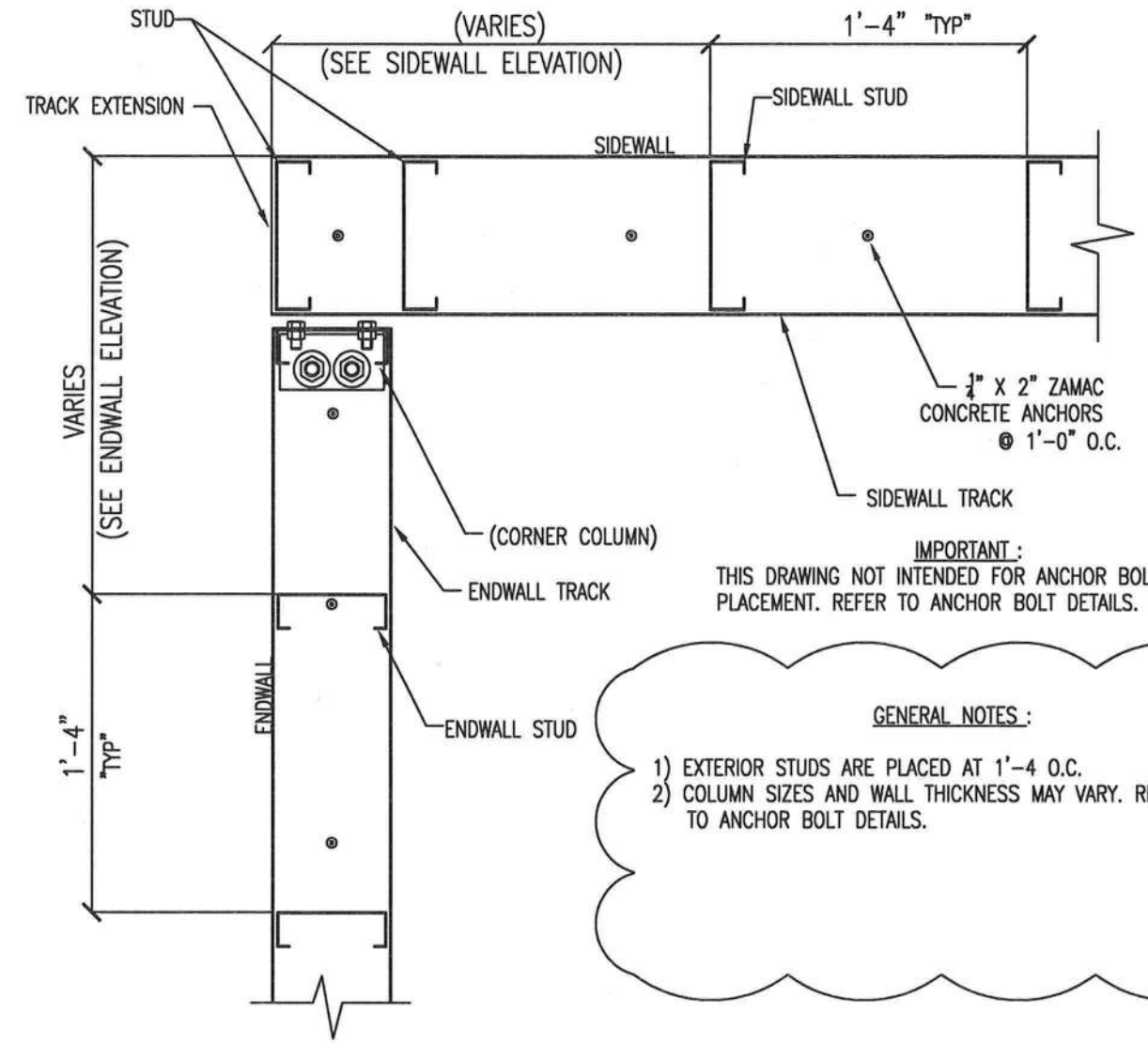

IMPORTANT:
THIS DRAWING NOT INTENDED FOR ANCHOR BOLT PLACEMENT. REFER TO ANCHOR BOLT DETAILS.

GENERAL NOTES:

1) EXTERIOR STUDS ARE PLACED AT 1'-4 O.C.
2) COLUMN SIZES AND WALL THICKNESS MAY VARY. REFER TO ANCHOR BOLT DETAILS.

STANDARD STUD PLACEMENT AT GAUGE MATERIAL CORNERS

12/3/07

REVISIONS

NO.	DATE	DESCRIPTION	BY	CK'D
1	11/28/05	ADDED STUD PLACEMENT DETAILS	JW	WM
2	5/02/06	GENERAL REVISION	JF	WM

KODIAK STEEL HOMES

Kodiak Steel Homes, Inc
7301 Industry Drive
North Little Rock, AR 72117

DESCRIPTION: STANDARD STUD PLACEMENT @ CORNERS

STYLE: SIZE:

DRN. BY	CK'D BY	DATE	SCALE	CODE	SHEET NO.	REV. #
J W	W Mc	04/03	NTS			2

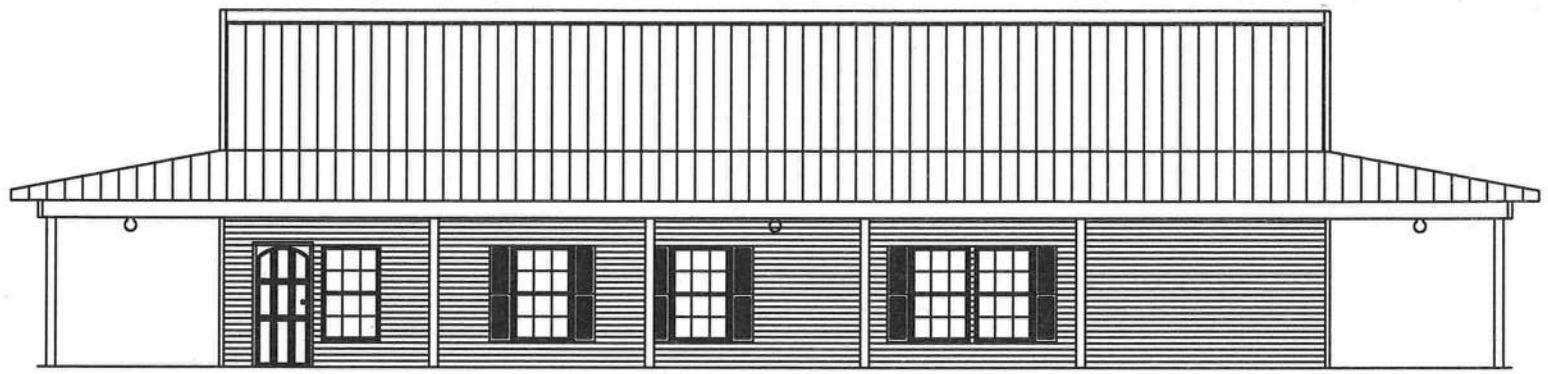

FRONT SIDEWALL ELEVATION

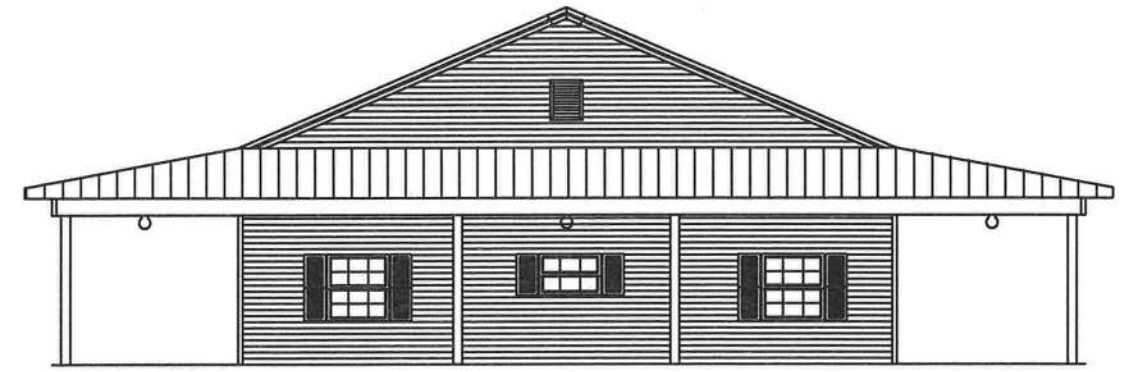

LEFT ENDWALL ELEVATION

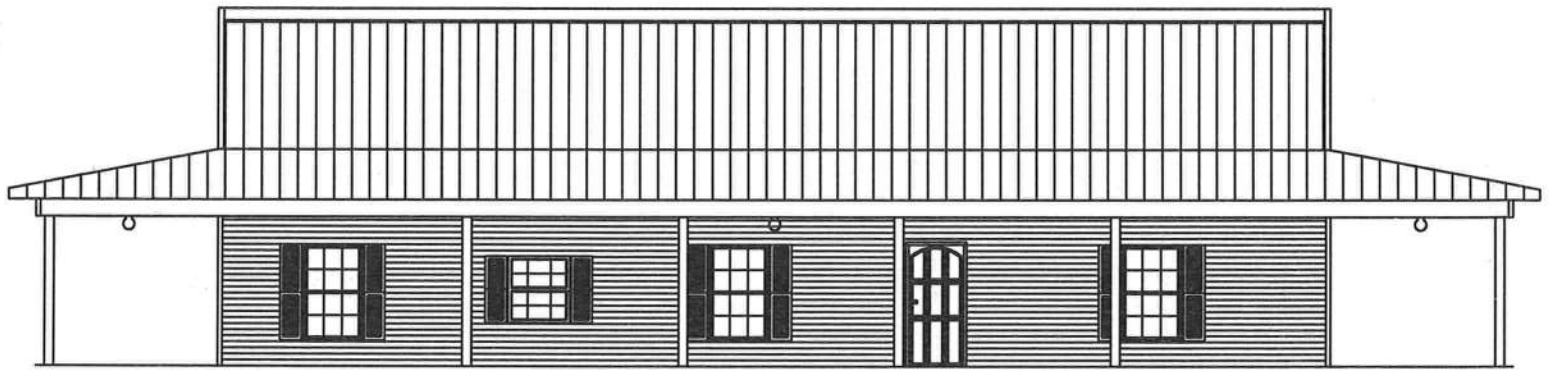

BACK SIDEWALL ELEVATION

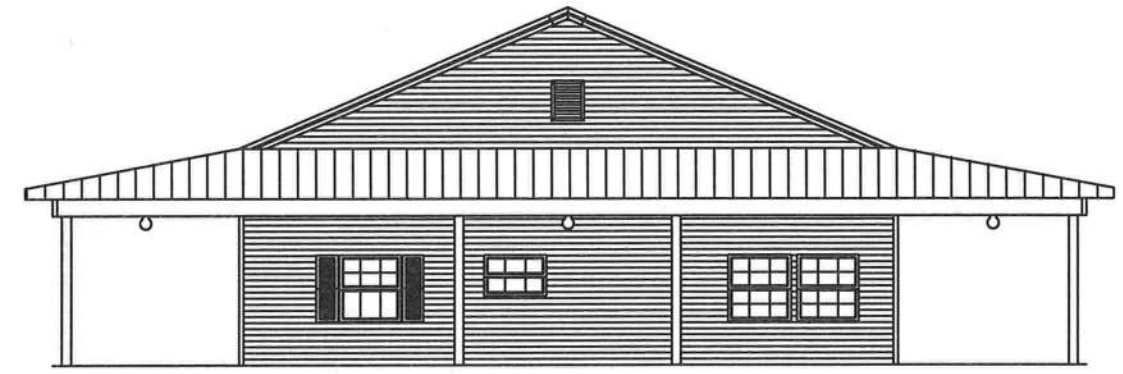

RIGHT ENDWALL ELEVATION

FILE COPY

FILE COPY

REVISIONS				
NO.	DATE	DESCRIPTION	BY	CK'D

KODIAK STEEL HOMES

Kodiak Steel Homes, Inc
7301 Industry Drive
North Little Rock, AR 72117

DESCRIPTION: ELEVATIONS "B"

STYLE: AUGUSTA I — SIZE: 31'-0" X 60'-0"

DRN. BY	CK'D BY	DATE	SCALE	CODE	SHEET NO.	REV. #
EAP	HDS	04/03	NTS	AE5	A1	0

© COPYRIGHT 2003 ALL STEEL HOMES, INC.

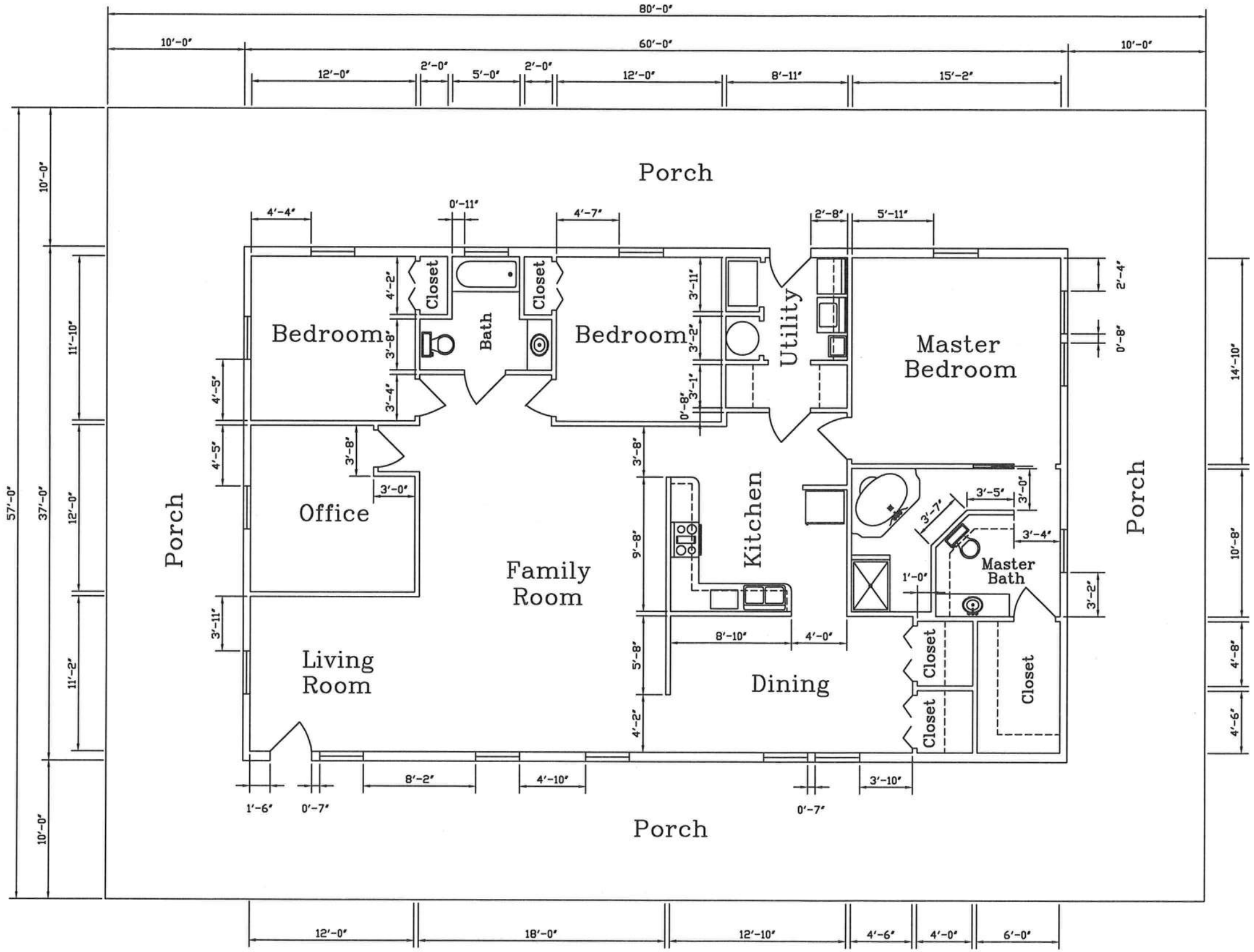

DISCLAIMER:
THIS FLOOR PLAN IS FOR REFERENCE ONLY. LOCAL BUILDING CODES AND REGULATIONS MAY CONFLICT.

EXTERIOR FLOOR PLAN WINDOW AMOUNT = 15
EXTERIOR FLOOR PLAN DOOR AMOUNT = 2

REVISIONS				
NO.	DATE	DESCRIPTION	BY	CK'D

KODIAK STEEL HOMES

Kodiak Steel Homes, Inc
7301 Industry Drive
North Little Rock, AR 72117

DESCRIPTION: FLOOR PLAN "B"

STYLE: AUGUSTA I — SIZE: 37'-0" X 60'-0"

DRN. BY	CK'D BY	DATE	SCALE	CODE	SHEET NO.	REV. #
EAP	HDS	04/03	NTS	AES	A2	0

© COPYRIGHT 2003 ALL STEEL HOMES, INC.

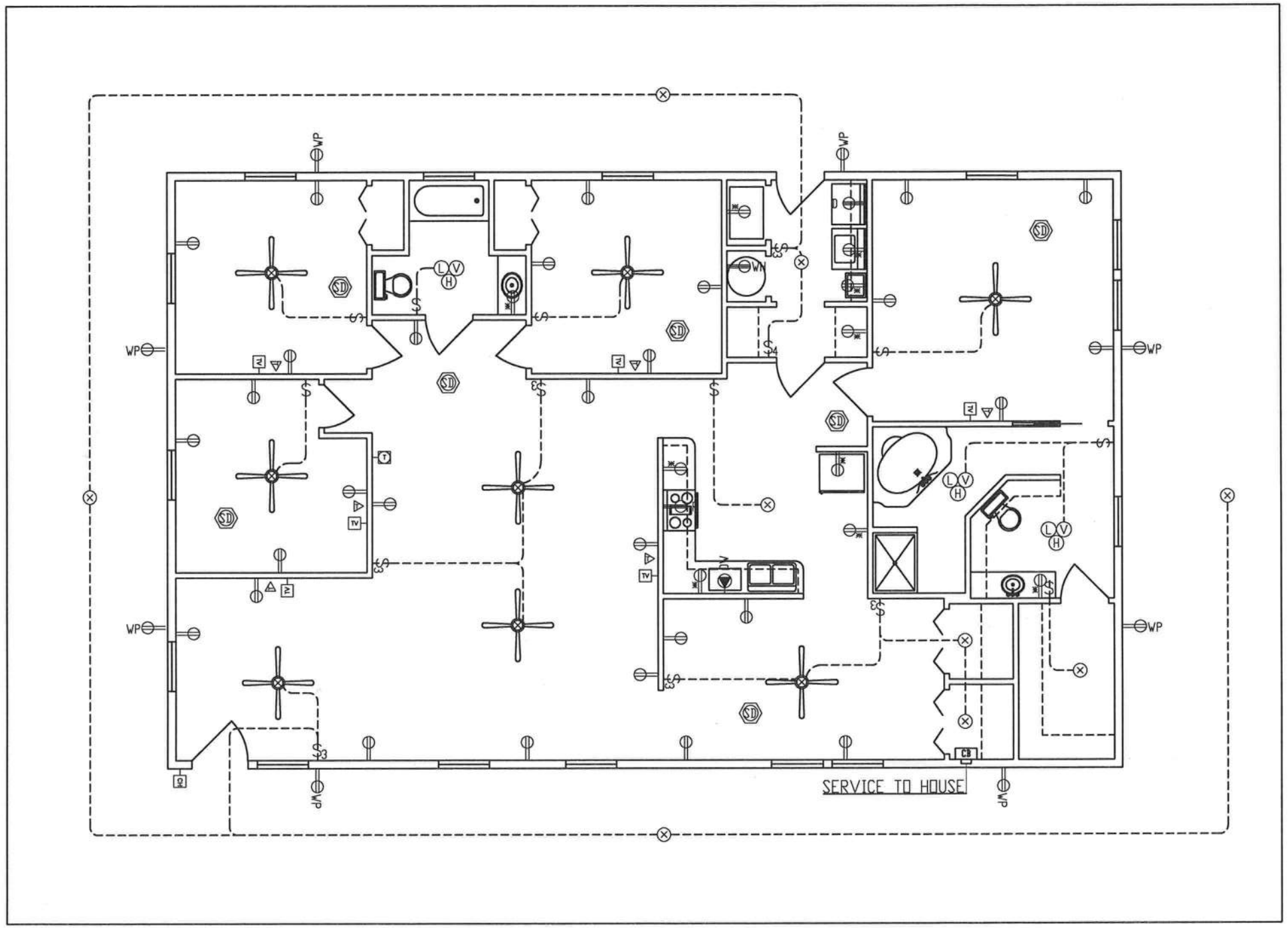

ELECTRICAL SERVICE		
LEGEND	DESCRIPTION	NOTES
CB	CIRCUIT BREAKER PANEL	
SD	WIRELESS SMOKE DETECTOR	
	STANDARD WALL SWITCH	
3	STANDARD 3 WAY WALL SWITCH	
	STANDARD DUPLEX WALL OUTLET	
	SPLIT WIRED DUPLEX WALL OUTLET	
	STANDARD 220 VOLT WALL OUTLET	
	GROUND FAULT CIRCUIT INTERRUPTER	
M	MOTOR CIRCUIT	
WH	WATER HEATER (220 VOLT)	
L V H	LIGHT - VENT HEATER	
WP	WEATHER PROOF DUPLEX OUTLET	
R	RANGE / OVEN (220 VOLT)	
D	CLOTHES DRYER (220 VOLT)	
	CEILING MOUNTED LIGHT	
	WALL MOUNTED EXTERIOR LIGHT	
DW	DISH WASHER	
GD	GARBAGE DISPOSAL	
TC	TRASH COMPACTOR	
	TELEPHONE JACK	
TV	TELEVISION OUTLET	
CH	DOOR CHIME	
T	DOOR CHIME TRANSISTOR	

DISCLAIMER:
THIS FLOOR PLAN IS FOR REFERENCE ONLY. LOCAL BUILDING CODES AND REGULATIONS MAY CONFLICT.

REVISIONS				
NO.	DATE	DESCRIPTION	BY	CK'D

KODIAK STEEL HOMES

Kodiak Steel Homes, Inc
7301 Industry Drive
North Little Rock, AR 72117

DESCRIPTION: ELECTRICAL PLAN "B"

STYLE: AUGUSTA I — SIZE: 31'-0" X 60'-0"

DRN. BY	CK'D BY	DATE	SCALE	CODE	SHEET NO.	REV. #
EAP	HDS	04/03	NTS	AES	A3	0

© COPYRIGHT 2003 ALL STEEL HOMES, INC.

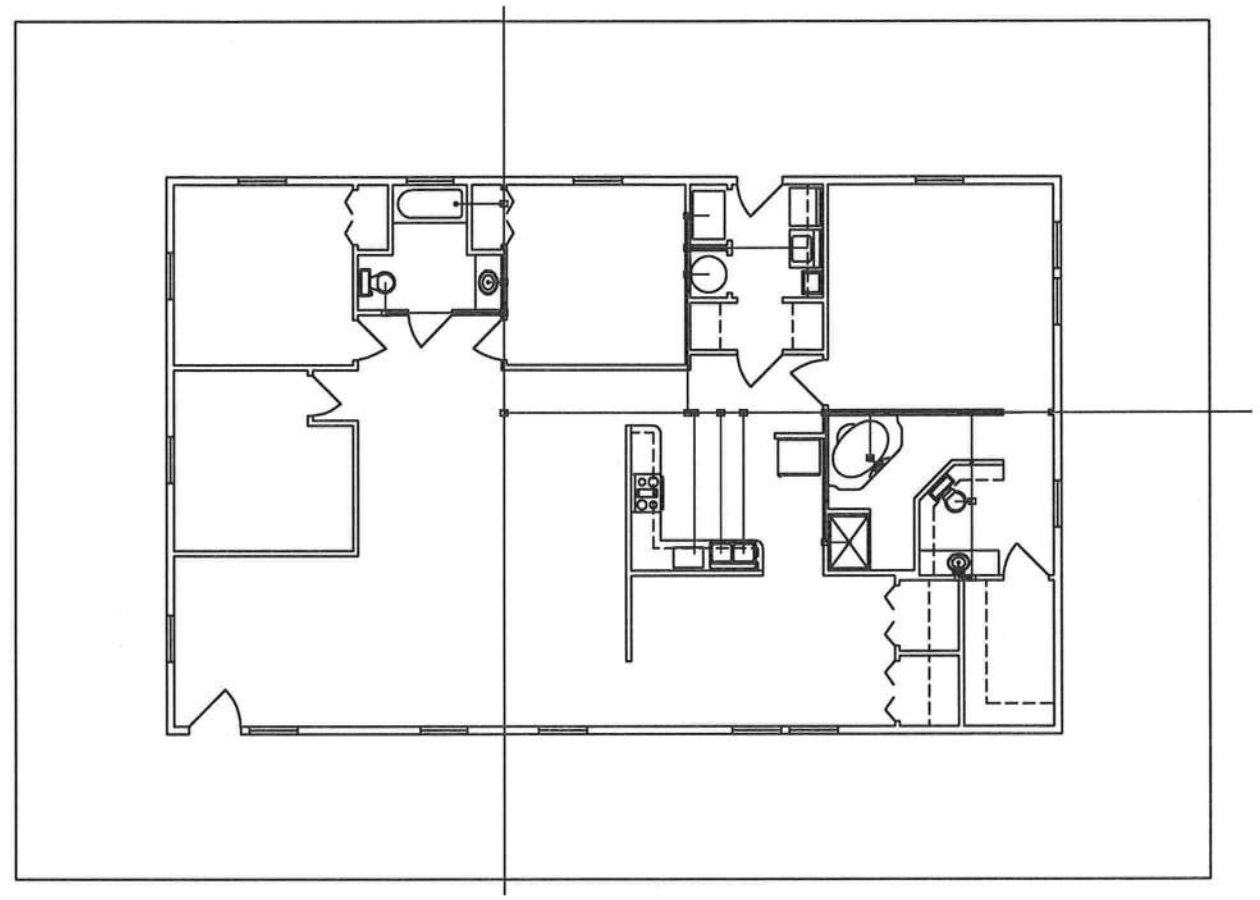

PLUMBING DRAIN PLAN

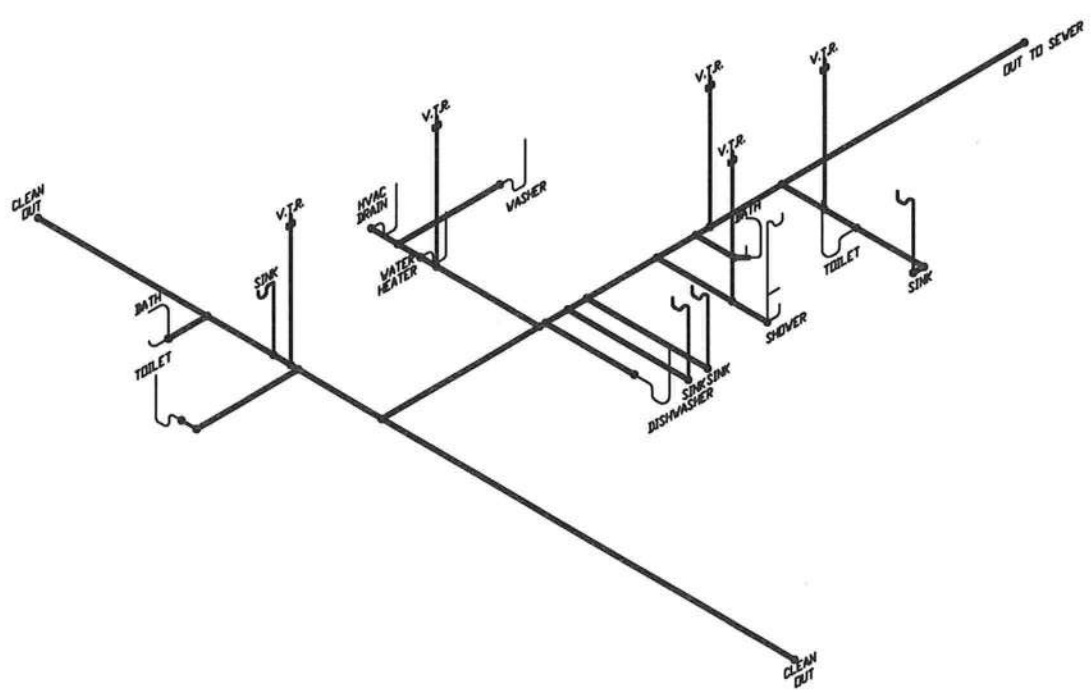

ISOMETRIC VIEW OF DRAIN SYSTEM
(NOT TO SCALE)

DISCLAIMER
THIS FLOOR PLAN IS FOR REFERENCE ONLY. LOCAL BUILDING CODES AND REGULATIONS MAY CONFLICT.

NOTES:
1) MAIN SEPTIC LINE OUT OF HOME IS 4" Ø.
2) ALL VENT PIPES ARE 3" AND 2"
3) ALL WATER CLOSET DRAINS ARE 3" Ø.
4) LAVATORY DRAINS ARE 2" Ø AT WALL.
5) BATH TUB DRAINS ARE 3"Ø.
6) AIR CONDITIONING DRAIN IS 1 1/2" Ø.

REVISIONS

NO.	DATE	DESCRIPTION	BY	CK'D

KODIAK STEEL HOMES

Kodiak Steel Homes, Inc
7301 Industry Drive
North Little Rock, AR 72117

DESCRIPTION: SEWER PLUMBING PLAN "B"

STYLE: AUGUSTA I | SIZE: 31'-0" X 60'-0"

DRN. BY	CK'D BY	DATE	SCALE	CODE	SHEET NO.	REV. #
EAP	HDS	04/03	NTS	AES	A4	0

© COPYRIGHT 2003 ALL STEEL HOMES, INC.

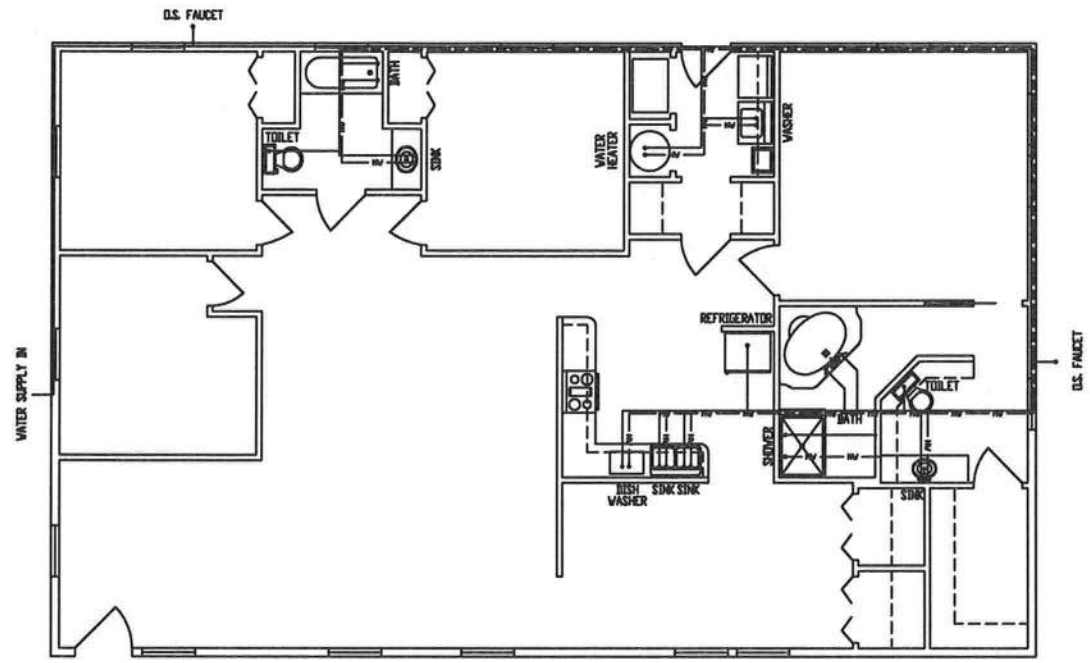

PLUMBING FLOOR PLAN

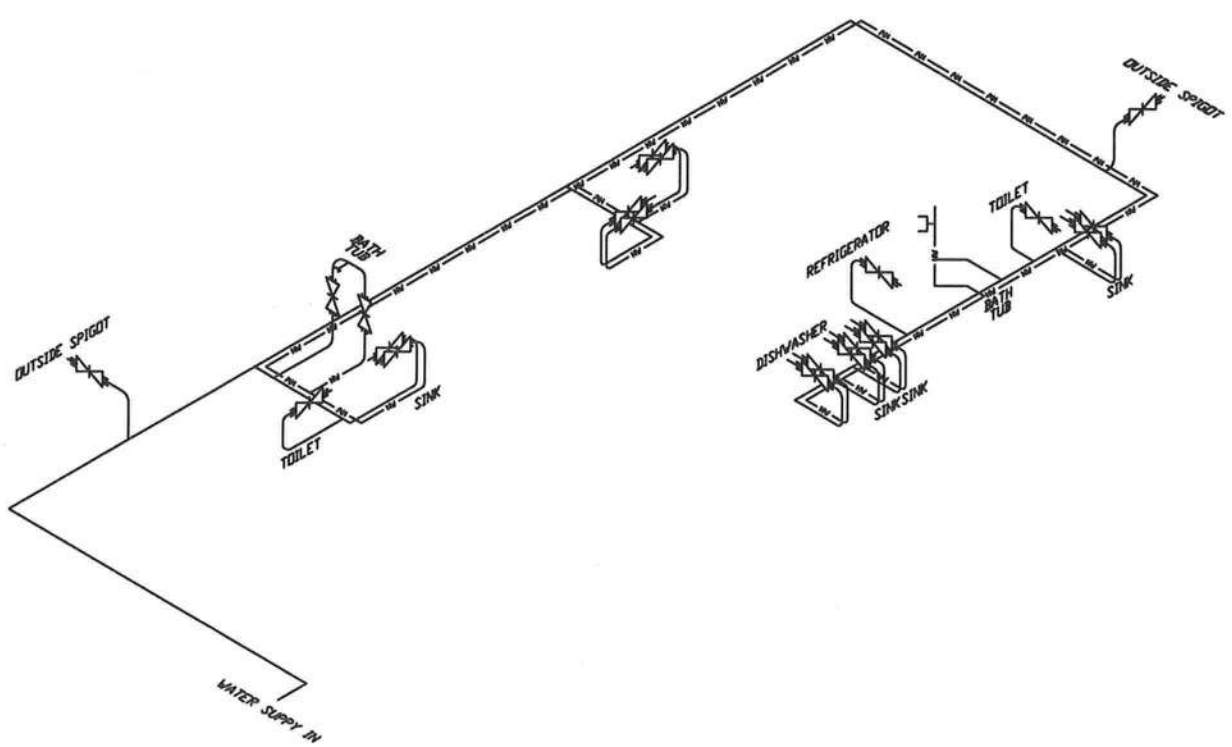

ISOMETRIC VIEW OF WATER SYSTEM
(NOT TO SCALE)

NOTES:
1) MAIN WATER LINE IN TO HOME IS 1" Ø.
2) ALL WATER LINES ARE 3/4" Ø. PAST WATER HEATER
3) APPLIANCE HOSES ARE BY APPLIANCE MANUFACTURE.

DISCLAIMER:
THIS FLOOR PLAN IS FOR REFERENCE ONLY. LOCAL BUILDING CODES AND REGULATIONS MAY CONFLICT.

REVISIONS				
NO.	DATE	DESCRIPTION	BY	CK'D

KODIAK STEEL HOMES

Kodiak Steel Homes, Inc
7301 Industry Drive
North Little Rock, AR 72117

DESCRIPTION: WATER PLUMBING PLAN "B"

STYLE: AUGUSTA I — SIZE: 37'-0" X 60'-0"

DRN. BY	CK'D BY	DATE	SCALE	CODE	SHEET NO.	REV. #
EAP	HDS	04/03	NTS	AES	A5	0

© COPYRIGHT 2003 ALL STEEL HOMES, INC.

DISCLAIMER:
THIS FLOOR PLAN IS FOR REFERENCE ONLY. LOCAL BUILDING CODES AND REGULATIONS MAY CONFLICT.

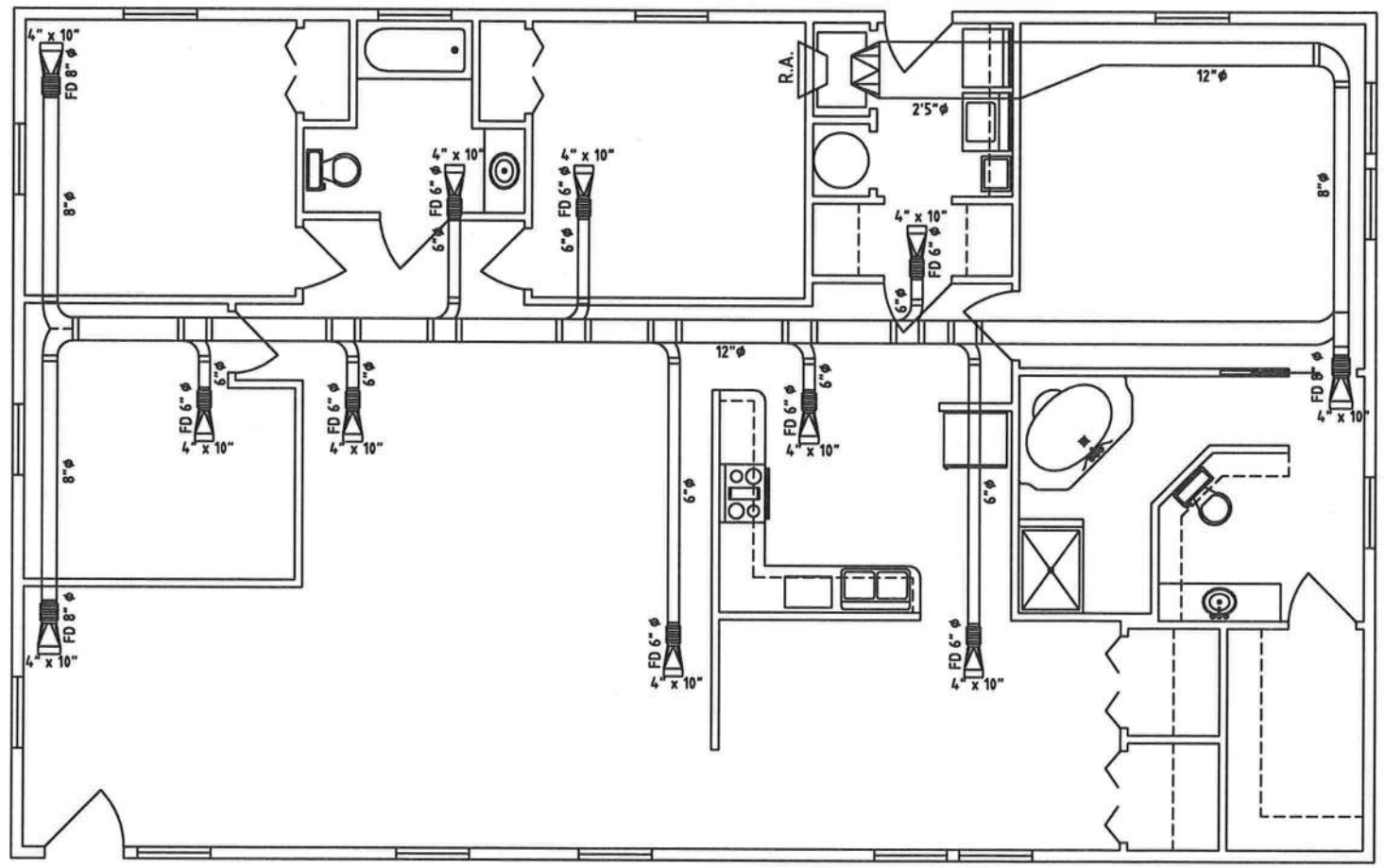

HEAT AND AIR CONDITIONING DUCT PLAN

REVISIONS				
NO.	DATE	DESCRIPTION	BY	CK'D

KODIAK STEEL HOMES

Kodiak Steel Homes, Inc
7301 Industry Drive
North Little Rock, AR 72117

DESCRIPTION: HVAC PLAN "B"

STYLE: AUGUSTA I — SIZE: 37'-0" X 60'-0"

DRN. BY	CK'D BY	DATE	SCALE	CODE	SHEET NO.	REV. #
EAP	HDS	04/03	NTS	AES	A6	0

©COPYRIGHT 2003 ALL STEEL HOMES, INC.