DATE 06/11/2007

Columbia County Building Permit

PERMIT

This Permit Expires One Year From the Date of Issue

000025911

APPLICANT BENJAMIN ATKINS PHONE 863 412-3822

ADDRESS P.O. BOX 1202 DAVENPORT FL 33836

OWNER BENJAMIN ATKINS PHONE 863 412-9896

ADDRESS 1299 SW MIXSON RD LAKE CITY FL 32024

CONTRACTOR OWNER BUILDER PHONE 863 412-3822

LOCATION OF PROPERTY 41S, TR ON TUSTENUGGEE RD, TL ON 240, TR ON MIXON RD, 1 MILE ON LEFT, NEXT TO BIG CONCRETE POWER POLE

TYPE DEVELOPMENT SFD,UTILITY ESTIMATED COST OF CONSTRUCTION 96000.00

HEATED FLOOR AREA 1920.00 TOTAL AREA 2607.00 HEIGHT STORIES 1

FOUNDATION CONC WALLS FRAMED ROOF PITCH 6/12 FLOOR SLAB

LAND USE & ZONING A-3 MAX. HEIGHT 16

Minimum Set Back Requirments: STREET-FRONT 30.00 REAR 25.00 SIDE 25.00

NO. EX.D.U. 0 FLOOD ZONE X DEVELOPMENT PERMIT NO.

PARCEL ID 16-5S-17-09272-003 SUBDIVISION MIXON TRACT

LOT 3 BLOCK PHASE UNIT TOTAL ACRES 10.00

Culvert Permit No.	Culvert Waiver	Contractor's License Number	Applicant/Owner/Contractor	
EXISTING	07-204	BK	JH	Y
Driveway Connection	Septic Tank Number	LU & Zoning checked by	Approved for Issuance	New Resident

COMMENTS: NOC ON FILE, ONE FOOT ABOVE THE ROAD

Check # or Cash 1186

FOR BUILDING & ZONING DEPARTMENT ONLY

(footer/Slab)

Temporary Power _____ date/app. by Foundation _____ date/app. by Monolithic _____ date/app. by

Under slab rough-in plumbing _____ date/app. by Slab _____ date/app. by Sheathing/Nailing _____ date/app. by

Framing _____ date/app. by Rough-in plumbing above slab and below wood floor _____ date/app. by

Electrical rough-in _____ date/app. by Heat & Air Duct _____ date/app. by Peri. beam (Lintel) _____ date/app. by

Permanent power _____ date/app. by C.O. Final _____ date/app. by Culvert _____ date/app. by

M/H tie downs, blocking, electricity and plumbing _____ date/app. by Pool _____ date/app. by

Reconnection _____ date/app. by Pump pole _____ date/app. by Utility Pole _____ date/app. by

M/H Pole _____ date/app. by Travel Trailer _____ date/app. by Re-roof _____ date/app. by

BUILDING PERMIT FEE $ 480.00 CERTIFICATION FEE $ 13.04 SURCHARGE FEE $ 13.04

MISC. FEES $ 0.00 ZONING CERT. FEE $ 50.00 FIRE FEE $ 0.00 WASTE FEE $

FLOOD DEVELOPMENT FEE $ FLOOD ZONE FEE $ 25.00 CULVERT FEE $ **TOTAL FEE** 581.08

INSPECTORS OFFICE CLERKS OFFICE

NOTICE: IN ADDITION TO THE REQUIREMENTS OF THIS PERMIT, THERE MAY BE ADDITIONAL RESTRICTIONS APPLICABLE TO THIS PROPERTY THAT MAY BE FOUND IN THE PUBLIC RECORDS OF THIS COUNTY. AND THERE MAY BE ADDITIONAL PERMITS REQUIRED FROM OTHER GOVERNMENTAL ENTITIES SUCH AS WATER MANAGEMENT DISTRICTS, STATE AGENCIES, OR FEDERAL AGENCIES.

"WARNING TO OWNER: YOUR FAILURE TO RECORD A NOTICE OF COMMENCEMENT MAY RESULT IN YOUR PAYING TWICE FOR IMPROVEMENTS TO YOUR PROPERTY. IF YOU INTEND TO OBTAIN FINANCING, CONSULT WITH YOUR LENDER OR AN ATTORNEY BEFORE RECORDING YOUR NOTICE OF COMMENCEMENT."

This Permit Must Be Prominently Posted on Premises During Construction

PLEASE NOTIFY THE COLUMBIA COUNTY BUILDING DEPARTMENT AT LEAST 24 HOURS IN ADVANCE OF EACH INSPECTION, IN ORDER THAT IT MAY BE MADE WITHOUT DELAY OR INCONVIENCE, PHONE 758-1008. THIS PERMIT IS NOT VALID UNLESS THE WORK AUTHORIZED BY IT IS COMMENCED WITHIN 6 MONTHS AFTER ISSUANCE.

The Issuance of this Permit Does Not Waive Compliance by Permittee with Deed Restrictions.

✓ C/C# 1186 left message EH# 07-204-

Columbia County Building Permit Application

For Office Use Only Application # 0704-50 Date Received 4/23/07 By CP Permit # 25911

Application Approved by - Zoning Official BLK Date 11.06.07 Plans Examiner OKJTH Date 6-1-07

Flood Zone X Development Permit N/A Zoning A-3 Land Use Plan Map Category A-3

Comments

☐ NOC ☑ EH ☑ Deed or PA ☑ Site Plan ☐ State Road Info ☐ Parent Parcel # ☐ Development Permit

Name Authorized Person Signing Permit BENJAMIN ATKINS Phone 863-412-3822 Fax 863-422-4150

Address P.O BOX 1202 DAVENPORT FL. 33836

Owners Name BENJAMIN ATKINS AND JULIA ATKINS Phone 863-412-3822

911 Address 1799 SW MIXSON Rd LAKE CITY FL. 32024

Contractors Name OWNERS Phone 863-412-9896

Address P.O BOX 1202 DAVENPORT FL. 33836

Fee Simple Owner Name & Address P.O. BOX 1202 DAVENPORT FL. 33836

Bonding Co. Name & Address NA

Architect/Engineer Name & Address

Mortgage Lenders Name & Address

Circle the correct power company - FL Power & Light - (Clay Elec.) - Suwannee Valley Elec. - Progressive Energy

Property ID Number R 09272-003 16-5S-17 Estimated Cost of Construction

Subdivision Name MIXON TRACT Lot 3 Block Unit Phase

Driving Directions FROM LAKE CITY TAKE 41S TO TUSTENNUGEE RD turn Right, go Approx. 5 MILES TO CR 240 turn (L) go Approx 3/4 of A mile, turn Right onto MIXON Rd. go Approx 1 MILE, property on L by Big concr. power pole

Type of Construction HOUSE SFD Number of Existing Dwellings on Property 0

Total Acreage 10 Lot Size 205'x250 Do you need a - Culvert Permit or Culvert Waiver or Have an Existing Drive

Actual Distance of Structure from Property Lines - Front 180' Side 576' Side 203.8' Rear 154'

Total Building Height 16' Number of Stories 1 Heated Floor Area 1920 TOTAL 2607 Roof Pitch 6/12

Application is hereby made to obtain a permit to do work and installations as indicated. I certify that no work or installation has commenced prior to the issuance of a permit and that all work be performed to meet the standards of all laws regulating construction in this jurisdiction.

OWNERS AFFIDAVIT: I hereby certify that all the foregoing information is accurate and all work will be done in compliance with all applicable laws and regulating construction and zoning.

WARNING TO OWNER: YOUR FAILURE TO RECORD A NOTICE OF COMMENCMENT MAY RESULT IN YOU PAYING TWICE FOR IMPROVEMENTS TO YOUR PROPERTY. IF YOU INTEND TO OBTAIN FINANCING, CONSULT WITH YOUR LENDER OR ATTORNEY BEFORE RECORDING YOUR NOTICE OF COMMENCEMENT.

Benjamin Atkins

Owner Builder or Authorized Person by Notarized Letter

Contractor Signature

Contractors License Number

Competency Card Number

STATE OF FLORIDA
COUNTY OF COLUMBIA

Sworn to (or affirmed) and subscribed before me this 23rd day of March 2007.

Personally known X or Produced Identification

NOTARY STAMP/SEAL

Notary Public State of Florida
Linda J Newcomb
My Commission DD528880
Expires 03/14/2010

Linda J Newcomb

Notary Signature

(Revised Sept. 2006)

STATE OF FLORIDA
DEPARTMENT OF HEALTH

APPLICATION FOR ONSITE SEWAGE DISPOSAL SYSTEM CONSTRUCTION PERMIT

Permit Application Number _____

PART II - SITE PLAN

Scale: Each block represents 5 feet and 1 inch = 50 feet.

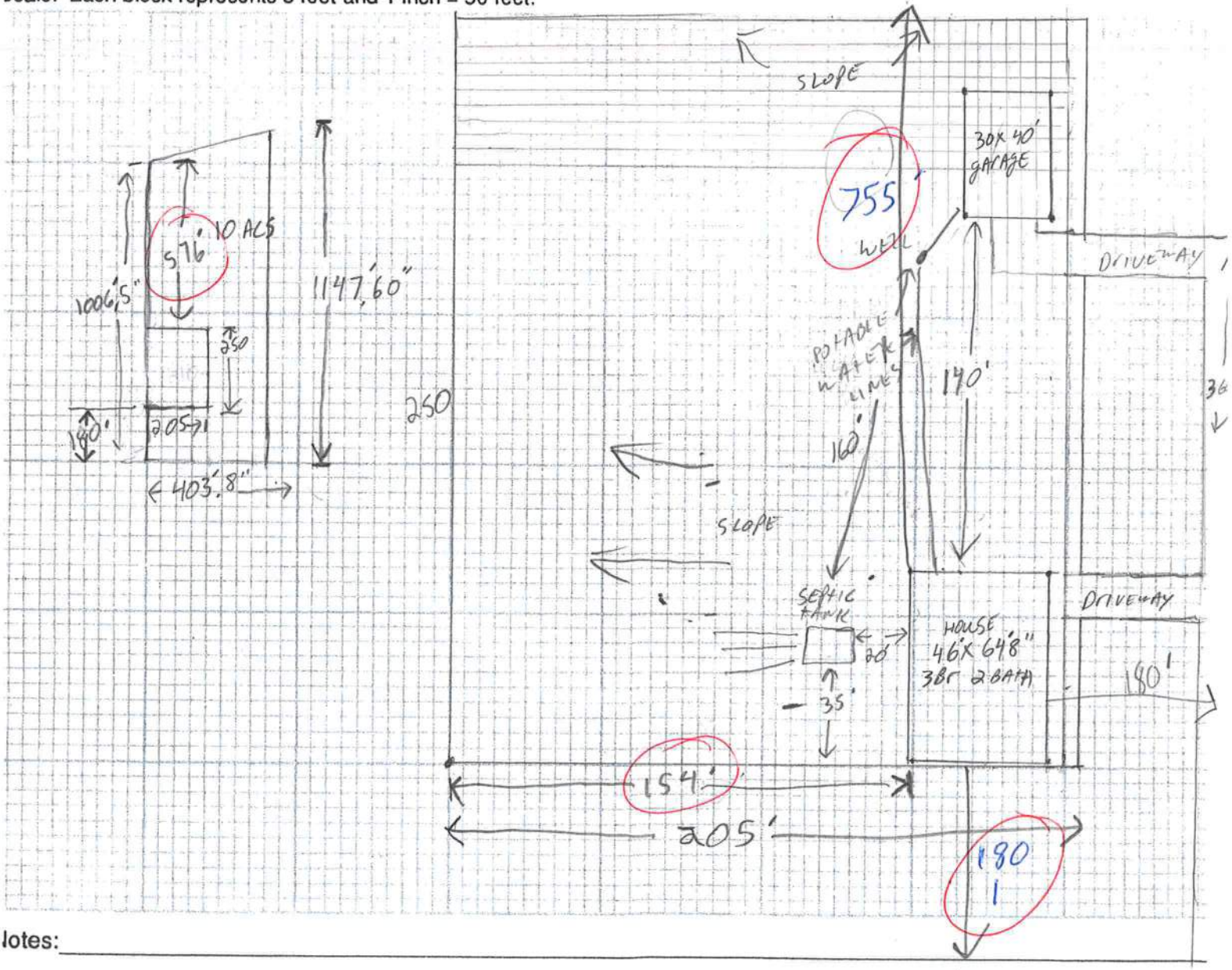

Notes: _____

Site Plan submitted by: BENJAMIN ATKINS [signature] OWNER
Signature Title

Plan Approved _____ Not Approved _____ Date _____

By _____ County Health Department

ALL CHANGES MUST BE APPROVED BY THE COUNTY HEALTH DEPARTMENT

NOTORIZED DISCLOSURE STATEMENT

FOR OWNER/BUILDER WHEN ACTING AS THER OWN CONTRACTOR AND CLAIMING EXEMPTION OF CONTRACTOR LICENSING REQUIREMENTS IN ACCORDANCE WITH FLORIDA STATUTES, ss. 489.103(7).

State law requires construction to be done by licensed contractors. You have applied for a permit under an exemption to that law. The exemption allows you, as the owner of your property, to act as your own contractor with certain restrictions even though you do not have a license. You must provide direct, onsite supervision of the construction yourself. You may build or improve a one-family or two-family residence or a farm outbuilding. You may also build or improve a commercial building, provided your costs do not exceed $75,000. The building or residence must be for your own use or occupancy. It may not be built or substantially improved for sale or lease. If you sell or lease a building you have built or substantially improved yourself within 1 year after the construction is complete, the law will presume that you built or substantially improved it for sale or lease, which is a violation of this exemption. You may not hire an unlicensed person to act as your contractor or to supervise people working on your building. It is your responsibility to make sure that people employed by you have licenses required by state law and by county or municipal licensing ordinances. You may not delegate the responsibility for supervising work to a licensed contractor who is not licensed to perform the work being done. Any person working on your building who is not licensed must work under your direct supervision and must be employed by you, which means that you must deduct F .I.C.A. and withholding tax and provide workers' compensation for that employee, all as prescribed by law. Your construction must comply with all applicable laws, ordinances, building codes, and zoning regulations.

TYPE OF CONSTRUCTION

(✓) Single Family Dwelling **( ) Two-Family Residence**
( ) Farm Outbuilding **( ) Other** 30'x 40' GARAGE

NEW CONSTRUCTION OR IMPROVEMENT

(✓) New Construction **( ) Addition, Alteration, Modification or other Improvement**

I BENJAMIN ATKINS **, have been advised of the above disclosure statement for exemption from contractor licensing as an owner/builder. I agree to comply with all requirements provided for in Florida Statutes ss.489.103(7) allowing this exception for the construction permitted by Columbia County Building Permit Number** _____

Benjamin Atkins 4/23/07
Owner Builder Signature **Date**

Notary Public State of Florida
Linda J Newcomb
My Commission DD528590
Expires 03/14/2010

The above signer is personally known to me or produced identification _____

Notary Signature Linda J. Newcomb **Date** 4/23/07 **(Stamp / Seal)**

FOR BUILDING USE ONLY

I hereby certify that the above listed owner/builder has been notified of the disclosure statement in Florida Statutes ss 489.103(7).

Date_____ **Building Official/Representative**_____

Prepared by & Return to:
Matthew D. Rocco
Sierra Title, LLC
619 SW Baya Drive, Suite 102
Lake City, Florida 32025

File Number: 07-0022

General Warranty Deed

Made this FEBRUARY 01st, 2007 A.D. By **Marie Y. Maurice and her husband, Biennot Maurice**, PO Box 726, Loxahatchee, FL 33470, hereinafter called the grantor, to **Ben Atkins and his wife, Julia Atkins**, whose post office address is: PO Box 1202, Davenport, FL 33836, hereinafter called the grantee:

(Whenever used herein the term "grantor" and "grantee" include all the parties to this instrument and the heirs, legal representatives and assigns of individuals, and the successors and assigns of corporations)

Witnesseth, that the grantor, for and in consideration of the sum of Ten Dollars, ($10.00) and other valuable considerations, receipt whereof is hereby acknowledged, hereby grants, bargains, sells, aliens, remises, releases, conveys and confirms unto the grantee, all that certain land situate in Columbia County, Florida, viz:

See Attached Schedule "A"

Parcel ID Number: **R09272-003**

Together with all the tenements, hereditaments and appurtenances thereto belonging or in anywise appertaining.

To Have and to Hold, the same in fee simple forever.

And the grantor hereby covenants with said grantee that the grantor is lawfully seized of said land in fee simple; that the grantor has good right and lawful authority to sell and convey said land; that the grantor hereby fully warrants the title to said land and will defend the same against the lawful claims of all persons whomsoever; and that said land is free of all encumbrances except taxes accruing subsequent to December 31, 2006.

In Witness Whereof, the said grantor has signed and sealed these presents the day and year first above written.

Signed, sealed and delivered in our presence:

Nasreen Jafri
Witness Printed Name NASREEN JAFRI

Witness Printed Name JEFF EPSTEIN

Marie Y. Maurice (Seal)
Address: PO Box 726, Loxahatchee, FL 33470

Biennot Maurice (Seal)
Address:

State of Florida
County of Columbia

The foregoing instrument was acknowledged before me this 01st day of FEBRUARY, 2007, by Marie Y. Maurice and her husband, Biennot Maurice, who is/are personally known to me or who has produced FL. DRIVER LICENSE as identification.

Nasreen Jafri
Notary Public
Print Name: NASREEN JAFRI

My Commission Expires: 07/12/2010

NASREEN JAFRI
Notary Public - State of Florida
My Commission Expires Jul 12, 2010
Commission # DD 573417
Bonded By National Notary Assn.

COLUMBIA COUNTY 9-1-1 ADDRESSING

P. O. Box 1787, Lake City, FL 32056-1787
PHONE: (386) 758-1125 * FAX: (386) 758-1365 * Email: ron_croft@columbiacountyfla.com

Addressing Maintenance

To maintain the Countywide Addressing Policy you must make application for a 9-1-1 Address at the time you apply for a building permit. The established standards for assigning and posting numbers to all principal buildings, dwellings, businesses and industries are contained in Columbia County Ordinance 2001-9. The addressing system is to enable Emergency Service Agencies to locate you in an emergency, and to assist the United States Postal Service and the public in the timely and efficient provision of services to residents and businesses of Columbia County.

DATE REQUESTED: 2/12/2007 **DATE ISSUED:** 2/15/2007

ENHANCED 9-1-1 ADDRESS:

1299 SW MIXSON RD

LAKE CITY FL 32024

PROPERTY APPRAISER PARCEL NUMBER:

16-5S-17-09272-003

Remarks:

LOT 3, MIXSON TRACT

Address Issued By: _____
Columbia County 9-1-1 Addressing / GIS Department

NOTICE: THIS ADDRESS WAS ISSUED BASED ON LOCATION INFORMATION RECEIVED FROM THE REQUESTER. SHOULD, AT A LATER DATE, THE LOCATION INFORMATION BE FOUND TO BE IN ERROR, THIS ADDRESS IS SUBJECT TO CHANGE.

624

Approved Address

FEB 15 2007

911Addressing/GIS Dept

07-204

STATE OF FLORIDA
DEPARTMENT OF HEALTH
APPLICATION FOR ONSITE SEWAGE DISPOSAL SYSTEM CONSTRUCTION PERMIT

Permit Application Number 12 SB 112644

---------- PART II - SITEPLAN ----------

Scale: 1 inch = 50 feet

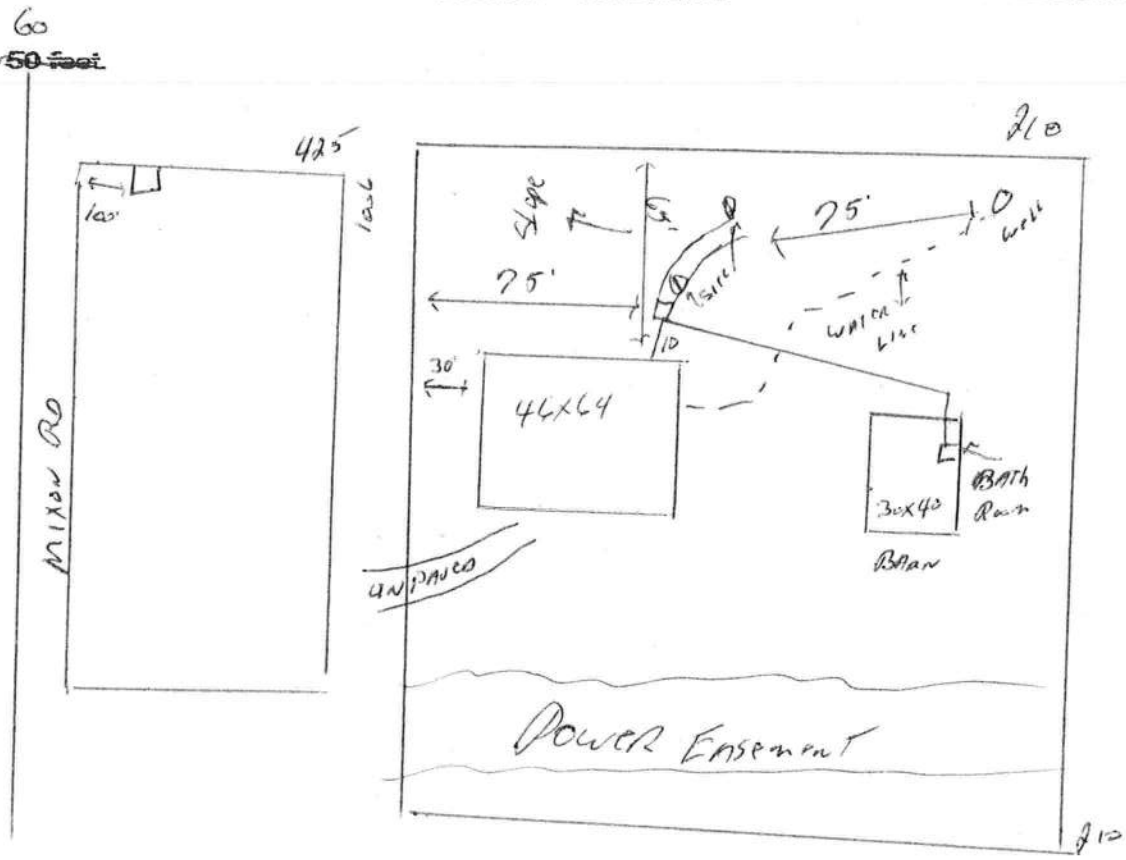

Plan submitted by: A C Ford

Approved: ✓ Not Approved

MASTER CONTRACTOR

Date 3/9/07

Columbia County Health Department

ALL CHANGES MUST BE APPROVED BY THE COUNTY HEALTH DEPARTMENT

10/96 (Replaces HRS-H Form 4016 which may be used)
Rules: 5744.002-5015.5)

HUGHES WELL DRILLING & PUMP SERVICE

12367 N US HWY 441 OFFICE: (386)-752-1840
LAKE CITY, FLORIDA 32055 FAX: (386)-755-2934

EMAIL: HUGWELL1840@AOL.COM

Columbia County Building and Zoning
PO Box 1529
Lake City, FL. 32056-1529

Attn: Gale Tedder / Janis

Subject: Requested Info: Ben & Julie Atkins 16-05-17-09272-003

1.4" Deep well
2.1-hp pump-20gpm
3.32 Gallon Bladder Tank-eqv.82 gallon tank
4.1¼" pvc drop pipe
5.1-Cycle stop valve

If you have any further questions, please feel free to phone me at the above number.

Sincerely,

Ronnie Hughes

WE DRILL THE BEST AND SERVICE THE REST

0704-50

*Re

This
Prog
part
plan

Cert
prot

Bou
inte
hydr
Eme

Floo
Refe
1/20

Coa

Elev
Repo

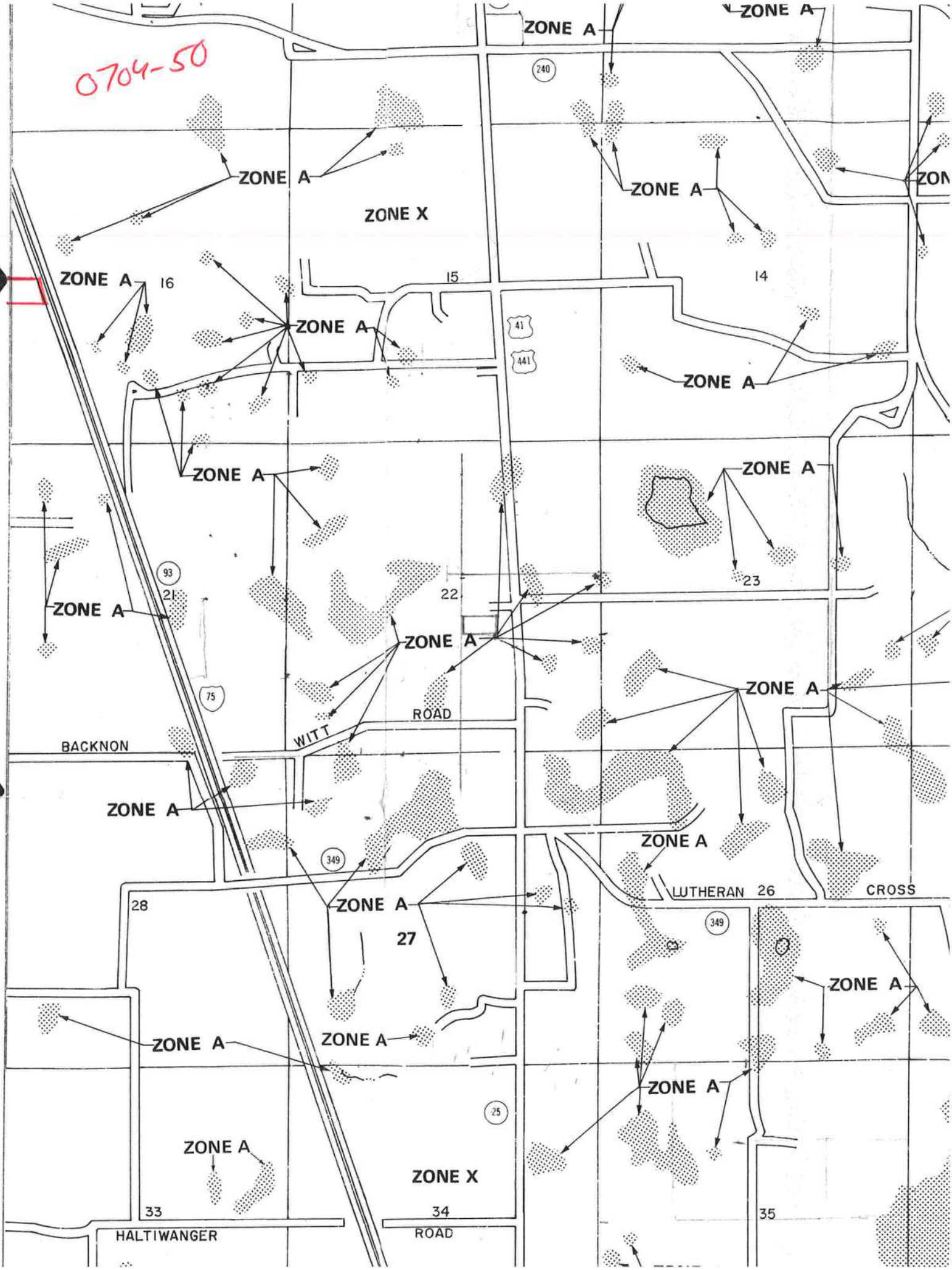
0704-50
ZONE A
ZONE X
240
41
441
93
75
349
25
16
15
14
21
22
23
26
27
28
33
34
35
BACKNON
WITT
ROAD
LUTHERAN
CROSS
HALTIWANGER
ROAD

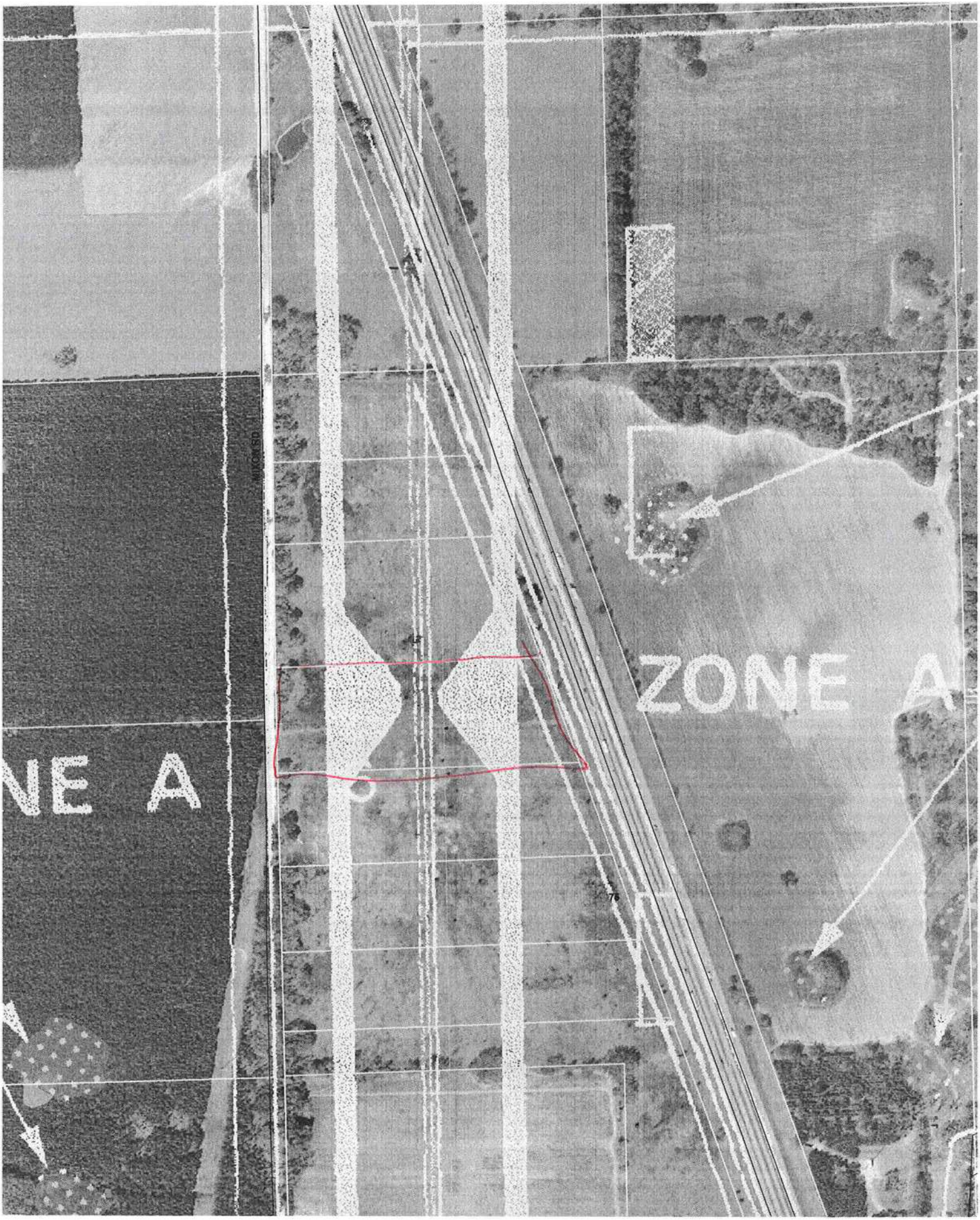

0704-50

NOTICE OF COMMENCEMENT FORM
COLUMBIA COUNTY, FLORIDA

THIS DOCUMENT MUST BE RECORDED AT THE COUNTY CLERKS OFFICE BEFORE YOUR FIRST INSPECTION

THE UNDERSIGNED hereby gives notice that improvement will be made to certain real property, and inaccordance with Chapter 713, Florida Statutes, the following information is provided in this Notice of Commencement.
IF YOU INTEND TO OBTAIN FINANCING, CONSULT WITH YOUR LENDER OR AN ATTORNEY BEFORE RECORDING YOUR NOTICE OF COMMENCEMENT.

Tax Parcel ID Number R09772-003 **Permit Number** _____

1. Description of property: (legal description of the property and street address or 911 address)
PARCEL 3 SECTION 16, TOWNSHIP 5 SOUTH, RANGE 17 EAST, COLUMBIA COUNTY, FLORIDA

2. General description of improvement: BUILDING OF 30'x40' GARAGE AND 3BR 2 BATH HOME APPROX 46'x 64'8"

3. Owner Name & Address BENJAMIN ATKINS AND JULIA ATKINS P.O. BOX 1202 DAVENPORT FL 33836. **Interest in Property** OWNERS

4. Name & Address of Fee Simple Owner (if other than owner): _____

5. Contractor Name ~~OWNER/BUILDERS~~ BENJAMIN ATKINS **Phone Number** 863-412-3822

Address P.O. BOX 1202 DAVENPORT FL. 33836

6. Surety Holders Name NA **Phone Number** _____

Address _____

Amount of Bond _____

Inst:2007009109 Date:04/23/2007 Time:16:39
DC,P.DeWitt Cason,Columbia County B:1117 P:678

7. Lender Name _____

Address _____

8. Persons within the State of Florida designated by the Owner upon whom notices or other documents may be served as provided by section 718.13 (1)(a) 7; Florida Statutes:

Name _____ **Phone Number** _____

Address _____

9. In addition to himself/herself the owner designates _____ **of** _____ **to receive a copy of the Lien Notice as provided in Section 713.13 (1) –**

(a) 7. Phone Number of the designee _____

10. Expiration date of the Notice of Commencement (the expiration date is 1 (one) year from the date of recording, (Unless a different date is specified) _____

THE OWNER MUST SIGN THE NOTICE OF COMMENCEMENT AND NO ONE ELSE MAY BE PERMITTED TO SIGN IN HIS/HER STEAD.

Benjamin Atkins
Signature of Owner

Sworn to (or affirmed) and subscribed before day of March 23rd **, 20** 07.

Linda J. Newcomb **NOTARY STAMP/SEAL**
Signature of Notary

Notary Public State of Florida
Linda J Newcomb
My Commission DD528590
Expires 03/14/2010

FORM 600A-2004R EnergyGauge® 4.5

FLORIDA ENERGY EFFICIENCY CODE FOR BUILDING CONSTRUCTION

Florida Department of Community Affairs

Residential Whole Building Performance Method A

Project Name:	**SYNERGY / ATKINS**	Builder:	Atkins
Address:	**MIXON ROAD**	Permitting Office:	Columbia
City, State:	**LAKE CITY, FL 32024-0000**	Permit Number:	25911
Owner:	**MR/MRS ATKINS**	Jurisdiction Number:	221000
Climate Zone:	**Central**		

1. New construction or existing	New	
2. Single family or multi-family	Single family	
3. Number of units, if multi-family	1	
4. Number of Bedrooms	3	
5. Is this a worst case?	Yes	
6. Conditioned floor area (ft²)	1920 ft²	
7. Glass type[1] and area: (Label reqd. by 13-104.4.5 if not default)		
a. U-factor:	Description Area	
(or Single or Double DEFAULT) 7a	(Sngle Default) 137.0 ft²	
b. SHGC:		
(or Clear or Tint DEFAULT) 7b.	(Clear) 137.0 ft²	
8. Floor types		
a. Slab-On-Grade Edge Insulation	R=0.0, 209.0(p) ft	
b. N/A		
c. N/A		
9. Wall types		
a. Frame, Wood, Adjacent	R=11.0, 294.0 ft²	
b. Concrete, Int Insul, Exterior	R=4.1, 1159.0 ft²	
c. N/A		
d. N/A		
e. N/A		
10. Ceiling types		
a. Under Attic	R=30.0, 1920.0 ft²	
b. N/A		
c. N/A		
11. Ducts		
a. Sup: Unc. Ret: Unc. AH(Sealed):Garage	Sup. R=6.0, 10.0 ft	
b. N/A		

12. Cooling systems		
a. Central Unit	Cap: 42.0 kBtu/hr	
	SEER: 13.00	
b. N/A		
c. N/A		
13. Heating systems		
a. Electric Heat Pump	Cap: 42.0 kBtu/hr	
	HSPF: 7.70	
b. N/A		
c. N/A		
14. Hot water systems		
a. Electric Resistance	Cap: 40.0 gallons	
	EF: 0.92	
b. N/A		
c. Conservation credits (HR-Heat recovery, Solar DHP-Dedicated heat pump)		
15. HVAC credits (CF-Ceiling fan, CV-Cross ventilation, HF-Whole house fan, PT-Programmable Thermostat, MZ-C-Multizone cooling, MZ-H-Multizone heating)		

Glass/Floor Area: 0.07

Total as-built points: 21728
Total base points: 22771

PASS

I hereby certify that the plans and specifications covered by this calculation are in compliance with the Florida Energy Code.

PREPARED BY: W. DAVID DOUGLAS, SR.

DATE: 4-6-07

I hereby certify that this building, as designed, is in compliance with the Florida Energy Code.

OWNER/AGENT: _____

DATE: _____

Review of the plans and specifications covered by this calculation indicates compliance with the Florida Energy Code. Before construction is completed this building will be inspected for compliance with Section 553.908 Florida Statutes.

BUILDING OFFICIAL: _____

DATE: _____

1 Predominant glass type. For actual glass type and areas, see Summer & Winter Glass output on pages 2&4.

SUMMER CALCULATIONS

Residential Whole Building Performance Method A - Details

ADDRESS:	MIXON ROAD, LAKE CITY, FL, 32024-0000	PERMIT #:

BASE				AS-BUILT							
GLASS TYPES .18 X Conditioned Floor Area	X BSPM	= Points		Type/SC	Overhang Ornt	Len	Hgt	Area X	SPM X	SOF	= Points
.18	1920.0	24.35	8415.0	1.Single, Clear	E	1.0	4.0	60.0	63.97	0.92	3517.0
				2.Single, Clear	W	1.0	4.0	32.0	57.68	0.92	1689.0
				3.Single, Clear	W	9.0	4.0	16.0	57.68	0.41	382.0
				4.Single, Clear	N	1.0	4.0	20.0	30.19	0.94	567.0
				5.Single, Clear	S	1.0	3.0	9.0	48.22	0.80	346.0
				As-Built Total:				**137.0**			**6501.0**

WALL TYPES	Area X	BSPM =	Points	Type	R-Value	Area X	SPM =	Points
Adjacent	294.0	0.70	205.8	1. Frame, Wood, Adjacent	11.0	294.0	0.70	205.8
Exterior	1159.0	1.90	2202.1	2. Concrete, Int Insul, Exterior	4.1	1159.0	1.18	1367.6
Base Total:	**1453.0**		**2407.9**	**As-Built Total:**		**1453.0**		**1573.4**

DOOR TYPES	Area X	BSPM =	Points	Type	Area X	SPM =	Points
Adjacent	18.0	1.60	28.8	1.Exterior Insulated	20.0	4.80	96.0
Exterior	55.0	4.80	264.0	2.Exterior Insulated	35.0	4.80	168.0
				3.Adjacent Insulated	18.0	1.60	28.8
Base Total:	**73.0**		**292.8**	**As-Built Total:**	**73.0**		**292.8**

CEILING TYPES	Area X	BSPM =	Points	Type	R-Value	Area X	SPM X SCM =	Points
Under Attic	1920.0	2.13	4089.6	1. Under Attic	30.0	1920.0	2.13 X 1.00	4089.6
Base Total:	**1920.0**		**4089.6**	**As-Built Total:**		**1920.0**		**4089.6**

FLOOR TYPES	Area X	BSPM =	Points	Type	R-Value	Area X	SPM =	Points
Slab	209.0(p)	-31.8	-6646.2	1. Slab-On-Grade Edge Insulation	0.0	209.0(p	-31.90	-6667.1
Raised	0.0	0.00	0.0					
Base Total:			**-6646.2**	**As-Built Total:**		**209.0**		**-6667.1**

INFILTRATION	Area X	BSPM =	Points	Area X	SPM =	Points
	1920.0	14.31	27475.2	1920.0	14.31	27475.2

SUMMER CALCULATIONS

Residential Whole Building Performance Method A - Details

ADDRESS:	MIXON ROAD, LAKE CITY, FL, 32024-0000	PERMIT #:

BASE				AS-BUILT							
Summer Base Points: 36034.3				**Summer As-Built Points:**							**33264.9**
Total Summer Points	X System Multiplier	= Cooling Points		Total Component (System - Points)	X Cap Ratio	X Duct Multiplier (DM x DSM x AHU)	X System Multiplier	X Credit Multiplier	= Cooling Points		
				(sys 1: Central Unit 42000btuh ,SEER/EFF(13.0) Ducts:Unc(S),Unc(R),Gar(AH),R6.0(INS)							
				33265	1.00	(1.09 x 1.150 x 0.95)	0.260	1.000	10271.0		
36034.3	**0.3250**	**11711.1**		**33264.9**	**1.00**	**1.188**	**0.260**	**1.000**	**10271.0**		

WINTER CALCULATIONS

Residential Whole Building Performance Method A - Details

ADDRESS:	MIXON ROAD, LAKE CITY, FL, 32024-0000	PERMIT #:

BASE				AS-BUILT							
GLASS TYPES .18 X Conditioned Floor Area		X BWPM	= Points	Type/SC	Overhang Ornt	Len	Hgt	Area X	WPM X	WOF	= Points
.18	1920.0	9.11	3148.0	1.Single, Clear	E	1.0	4.0	60.0	12.37	1.02	755.0
				2.Single, Clear	W	1.0	4.0	32.0	13.25	1.01	428.0
				3.Single, Clear	W	9.0	4.0	16.0	13.25	1.11	235.0
				4.Single, Clear	N	1.0	4.0	20.0	15.07	1.00	300.0
				5.Single, Clear	S	1.0	3.0	9.0	9.90	1.12	99.0
				As-Built Total:				**137.0**			**1817.0**
WALL TYPES	Area X	BWPM	= Points	Type		R-Value		Area X	WPM		= Points
Adjacent	294.0	1.80	529.2	1. Frame, Wood, Adjacent		11.0		294.0	1.80		529.2
Exterior	1159.0	2.00	2318.0	2. Concrete, Int Insul, Exterior		4.1		1159.0	3.31		3830.5
Base Total:	**1453.0**		**2847.2**	**As-Built Total:**				**1453.0**			**4359.7**
DOOR TYPES	Area X	BWPM	= Points	Type				Area X	WPM		= Points
Adjacent	18.0	4.00	72.0	1.Exterior Insulated				20.0	5.10		102.0
Exterior	55.0	5.10	280.5	2.Exterior Insulated				35.0	5.10		178.5
				3.Adjacent Insulated				18.0	4.00		72.0
Base Total:	**73.0**		**352.5**	**As-Built Total:**				**73.0**			**352.5**
CEILING TYPES	Area X	BWPM	= Points	Type		R-Value		Area X	WPM X	WCM	= Points
Under Attic	1920.0	0.64	1228.8	1. Under Attic		30.0		1920.0	0.64 X	1.00	1228.8
Base Total:	**1920.0**		**1228.8**	**As-Built Total:**				**1920.0**			**1228.8**
FLOOR TYPES	Area X	BWPM	= Points	Type		R-Value		Area X	WPM		= Points
Slab	209.0(p)	-1.9	-397.1	1. Slab-On-Grade Edge Insulation		0.0		209.0(p	2.50		522.5
Raised	0.0	0.00	0.0								
Base Total:			**-397.1**	**As-Built Total:**				**209.0**			**522.5**
INFILTRATION	Area X	BWPM	= Points					Area X	WPM		= Points
	1920.0	-0.28	-537.6					1920.0	-0.28		-537.6

WINTER CALCULATIONS

Residential Whole Building Performance Method A - Details

ADDRESS:	MIXON ROAD, LAKE CITY, FL, 32024-0000	PERMIT #:

BASE			AS-BUILT						
Winter Base Points:		**6641.8**	**Winter As-Built Points:**						**7742.9**
Total Winter Points	X System Multiplier	= Heating Points	Total Component (System - Points)	X Cap Ratio	X Duct Multiplier (DM x DSM x AHU)	X System Multiplier	X Credit Multiplier	= Heating Points	
			(sys 1: Electric Heat Pump 42000 btuh ,EFF(7.7) Ducts:Unc(S),Unc(R),Gar(AH),R6.0						
			7742.9	1.000	(1.078 x 1.160 x 0.95)	0.443	1.000	4077.1	
6641.8	**0.5540**	**3679.6**	**7742.9**	**1.00**	**1.188**	**0.443**	**1.000**	**4077.1**	

WATER HEATING & CODE COMPLIANCE STATUS

Residential Whole Building Performance Method A - Details

ADDRESS:	MIXON ROAD, LAKE CITY, FL, 32024-0000	PERMIT #:

BASE					AS-BUILT								
WATER HEATING													
Number of Bedrooms	X	Multiplier	=	Total	Tank Volume	EF	Number of Bedrooms	X	Tank Ratio	X	Multiplier	X	Credit Multiplier	=	Total
3		2460.00		7380.0	40.0	0.92	3		1.00		2460.00		1.00		7380.0
					As-Built Total:										**7380.0**

CODE COMPLIANCE STATUS

BASE							AS-BUILT						
Cooling Points	+	Heating Points	+	Hot Water Points	=	Total Points	Cooling Points	+	Heating Points	+	Hot Water Points	=	Total Points
11711		**3680**		**7380**		**22771**	**10271**		**4077**		**7380**		**21728**

PASS

Code Compliance Checklist

Residential Whole Building Performance Method A - Details

ADDRESS:	MIXON ROAD, LAKE CITY, FL, 32024-0000	PERMIT #:

6A-21 INFILTRATION REDUCTION COMPLIANCE CHECKLIST

COMPONENTS	SECTION	REQUIREMENTS FOR EACH PRACTICE	CHECK
Exterior Windows & Doors	606.1.ABC.1.1	Maximum:.3 cfm/sq.ft. window area; .5 cfm/sq.ft. door area.	
Exterior & Adjacent Walls	606.1.ABC.1.2.1	Caulk, gasket, weatherstrip or seal between: windows/doors & frames, surrounding wall; foundation & wall sole or sill plate; joints between exterior wall panels at corners; utility penetrations; between wall panels & top/bottom plates; between walls and floor. EXCEPTION: Frame walls where a continuous infiltration barrier is installed that extends from, and is sealed to, the foundation to the top plate.	
Floors	606.1.ABC.1.2.2	Penetrations/openings >1/8" sealed unless backed by truss or joint members. EXCEPTION: Frame floors where a continuous infiltration barrier is installed that is sealed to the perimeter, penetrations and seams.	
Ceilings	606.1.ABC.1.2.3	Between walls & ceilings; penetrations of ceiling plane of top floor; around shafts, chases, soffits, chimneys, cabinets sealed to continuous air barrier; gaps in gyp board & top plate; attic access. EXCEPTION: Frame ceilings where a continuous infiltration barrier is installed that is sealed at the perimeter, at penetrations and seams.	
Recessed Lighting Fixtures	606.1.ABC.1.2.4	Type IC rated with no penetrations, sealed; or Type IC or non-IC rated, installed inside a sealed box with 1/2" clearance & 3" from insulation; or Type IC rated with < 2.0 cfm from conditioned space, tested.	
Multi-story Houses	606.1.ABC.1.2.5	Air barrier on perimeter of floor cavity between floors.	
Additional Infiltration reqts	606.1.ABC.1.3	Exhaust fans vented to outdoors, dampers; combustion space heaters comply with NFPA, have combustion air.	

6A-22 OTHER PRESCRIPTIVE MEASURES (must be met or exceeded by all residences.)

COMPONENTS	SECTION	REQUIREMENTS	CHECK
Water Heaters	612.1	Comply with efficiency requirements in Table 612.1.ABC.3.2. Switch or clearly marked cir breaker (electric) or cutoff (gas) must be provided. External or built-in heat trap required.	
Swimming Pools & Spas	612.1	Spas & heated pools must have covers (except solar heated). Non-commercial pools must have a pump timer. Gas spa & pool heaters must have a minimum thermal efficiency of 78%.	
Shower heads	612.1	Water flow must be restricted to no more than 2.5 gallons per minute at 80 PSIG.	
Air Distribution Systems	610.1	All ducts, fittings, mechanical equipment and plenum chambers shall be mechanically attached, sealed, insulated, and installed in accordance with the criteria of Section 610. Ducts in unconditioned attics: R-6 min. insulation.	
HVAC Controls	607.1	Separate readily accessible manual or automatic thermostat for each system.	
Insulation	604.1, 602.1	Ceilings-Min. R-19. Common walls-Frame R-11 or CBS R-3 both sides. Common ceiling & floors R-11.	

ENERGY PERFORMANCE LEVEL (EPL) DISPLAY CARD

ESTIMATED ENERGY PERFORMANCE SCORE* = 86.9

The higher the score, the more efficient the home.

MR/MRS ATKINS, MIXON ROAD, LAKE CITY, FL, 32024-0000

1. New construction or existing	New	
2. Single family or multi-family	Single family	
3. Number of units, if multi-family	1	
4. Number of Bedrooms	3	
5. Is this a worst case?	Yes	
6. Conditioned floor area (ft²)	1920 ft²	
7. Glass type[1] and area: (Label reqd. by 13-104.4.5 if not default)		
a. U-factor: (or Single or Double DEFAULT) 7a	Description Area (Sngle Default) 137.0 ft²	
b. SHGC: (or Clear or Tint DEFAULT) 7b.	(Clear) 137.0 ft²	
8. Floor types		
a. Slab-On-Grade Edge Insulation	R=0.0, 209.0(p) ft	
b. N/A		
c. N/A		
9. Wall types		
a. Frame, Wood, Adjacent	R=11.0, 294.0 ft²	
b. Concrete, Int Insul, Exterior	R=4.1, 1159.0 ft²	
c. N/A		
d. N/A		
e. N/A		
10. Ceiling types		
a. Under Attic	R=30.0, 1920.0 ft²	
b. N/A		
c. N/A		
11. Ducts		
a. Sup: Unc. Ret: Unc. AH(Sealed):Garage	Sup. R=6.0, 10.0 ft	
b. N/A		

12. Cooling systems		
a. Central Unit	Cap: 42.0 kBtu/hr	
	SEER: 13.00	
b. N/A		
c. N/A		
13. Heating systems		
a. Electric Heat Pump	Cap: 42.0 kBtu/hr	
	HSPF: 7.70	
b. N/A		
c. N/A		
14. Hot water systems		
a. Electric Resistance	Cap: 40.0 gallons	
	EF: 0.92	
b. N/A		
c. Conservation credits (HR-Heat recovery, Solar DHP-Dedicated heat pump)		
15. HVAC credits (CF-Ceiling fan, CV-Cross ventilation, HF-Whole house fan, PT-Programmable Thermostat, MZ-C-Multizone cooling, MZ-H-Multizone heating)		

I certify that this home has complied with the Florida Energy Efficiency Code For Building Construction through the above energy saving features which will be installed (or exceeded) in this home before final inspection. Otherwise, a new EPL Display Card will be completed based on installed Code compliant features.

Builder Signature: _____ Date: _____

Address of New Home: _____ City/FL Zip: _____

**NOTE: The home's estimated energy performance score is only available through the FLA/RES computer program. This is not a Building Energy Rating. If your score is 80 or greater (or 86 for a US EPA/DOE EnergyStar™ designation), your home may qualify for energy efficiency mortgage (EEM) incentives if you obtain a Florida Energy Gauge Rating. Contact the Energy Gauge Hotline at 321/638-1492 or see the Energy Gauge web site at www.fsec.ucf.edu for information and a list of certified Raters. For information about Florida's Energy Efficiency Code For Building Construction, contact the Department of Community Affairs at 850/487-1824.*

1 Predominant glass type. For actual glass type and areas, see Summer & Winter Glass output on pages 2&4.

EnergyGauge® (Version: FLRCPB v4.5)

Residential System Sizing Calculation

Summary

MR/MRS ATKINS
MIXON ROAD
LAKE CITY, FL 32024-0000

Project Title:
SYNERGY / ATKINS

Code Only
Professional Version
Climate: Central

4/6/2007

Location for weather data: Lakeland - Defaults: Latitude(28) Altitude(214 ft.) Temp Range(M)
Humidity data: Interior RH (50%) Outdoor wet bulb (76F) Humidity difference(49gr.)

Winter design temperature	41	F	Summer design temperature	91	F
Winter setpoint	70	F	Summer setpoint	75	F
Winter temperature difference	29	F	Summer temperature difference	16	F
Total heating load calculation	**23833**	**Btuh**	**Total cooling load calculation**	**17536**	**Btuh**
Submitted heating capacity	% of calc	Btuh	Submitted cooling capacity	% of calc	Btuh
Total (Electric Heat Pump)	176.2	42000	Sensible (SHR = 0.75)	200.5	31500
Heat Pump + Auxiliary(0.0kW)	176.2	42000	Latent	576.2	10500
			Total (Electric Heat Pump)	239.5	42000

WINTER CALCULATIONS

Winter Heating Load (for 1920 sqft)

Load component			Load	
Window total	137	sqft	5046	Btuh
Wall total	1453	sqft	5795	Btuh
Door total	73	sqft	741	Btuh
Ceiling total	1920	sqft	1773	Btuh
Floor total	209	sqft	7152	Btuh
Infiltration	97	cfm	3082	Btuh
Duct loss			244	Btuh
Subtotal			**23833**	**Btuh**
Ventilation	0	cfm	0	Btuh
TOTAL HEAT LOSS			**23833**	**Btuh**

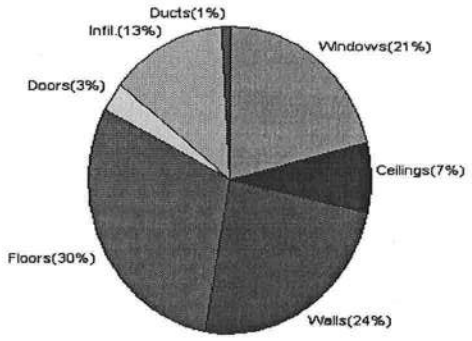

SUMMER CALCULATIONS

Summer Cooling Load (for 1920 sqft)

Load component			Load	
Window total	137	sqft	7384	Btuh
Wall total	1453	sqft	3249	Btuh
Door total	73	sqft	690	Btuh
Ceiling total	1920	sqft	3118	Btuh
Floor total			0	Btuh
Infiltration	51	cfm	895	Btuh
Internal gain			0	Btuh
Duct gain			377	Btuh
Sens. Ventilation	0	cfm	0	Btuh
Total sensible gain			**15713**	**Btuh**
Latent gain(ducts)			128	Btuh
Latent gain(infiltration)			1695	Btuh
Latent gain(ventilation)			0	Btuh
Latent gain(internal/occupants/other)			0	Btuh
Total latent gain			**1822**	**Btuh**
TOTAL HEAT GAIN			**17536**	**Btuh**

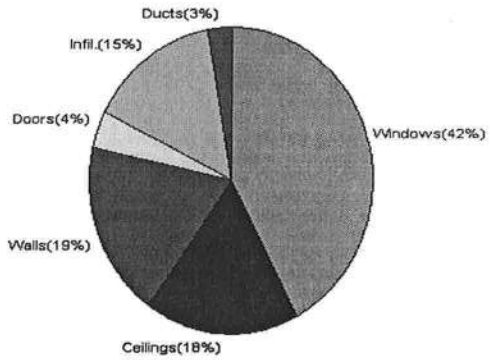

Version 8
For Florida residences only

EnergyGauge® System Sizing
PREPARED BY:
DATE: 4-6-07

#25911

Request fot permit extension

To

Columbia county Building and Zoning

Att;Mr Harry Dicks,

To whom it may concern,

My name is Benjamin Atkins. My building permit number is 000025911. The address is 1299 sw Mixson rd,Lake City Fl. 32024. I am writing this letter to request an 90 day extension for my building permit on my house. I currently have the Framing phase of construction finished and I am currently working on the electrical and air conditioning phases of construction. My estimated completion date is the first week of June 2009.

Thank you, Benjamin Atkins
863-412-3844

CERTIFICATE OF

OCCUPANCY

COLUMBIA COUNTY, FLORIDA

Department of Building and Zoning Inspection

This Certificate of Occupancy is issued to the below named permit holder for the building and premises at the below named location, and certifies that the work has been completed in accordance with the Columbia County Building Code.

Parcel Number 16-5S-17-09272-003 **Building permit No.** 000025911

Use Classification SFD,UTILITY **Fire:** 134.42

Permit Holder OWNER BUILDER **Waste:** 184.25

Owner of Building BENJAMIN ATKINS **Total:** 318.67

Location: 1299 SW MIXSON RD, LAKE CITY, FL

Date: 11/03/2009

Harry Dicks

Building Inspector

POST IN A CONSPICUOUS PLACE
(Business Places Only)

Architectural
Construction
Engineering

May 31, 2007

The Columbia County Building
& Zoning Department Plan Review
135 Hernando Avenue
PO Box 1529
Lake City, FL 32056-1529

RE: #0704-50

Mr. Joe Waltiwanger:

This letter is in response to your letter.

1. Please see attached detail.
2. All windows in bedrooms comply with Section R310.1.1
3. The garage door does/shall comply with Section R309.1
4. The attic access opening does/shall have a fire rating of 20 minutes
5. The garage and its attic area does/shall be separated from the residence with not less than a ½-inch gypsum board applied to garage side
6. The residence shall show the location of the electrical service entrance and indicate an over current protection device installed on the exterior of the structure to service as a disconnection means. Conductors used from the exterior disconnect means shall have a panel or sub panel with four-wire conductors of which one shall be used as an equipment ground.

Please accept this as confirmation of addressing plan review concerns.

Sincerely,

George B. Williams
Owner

2161 E County Road 540A #101

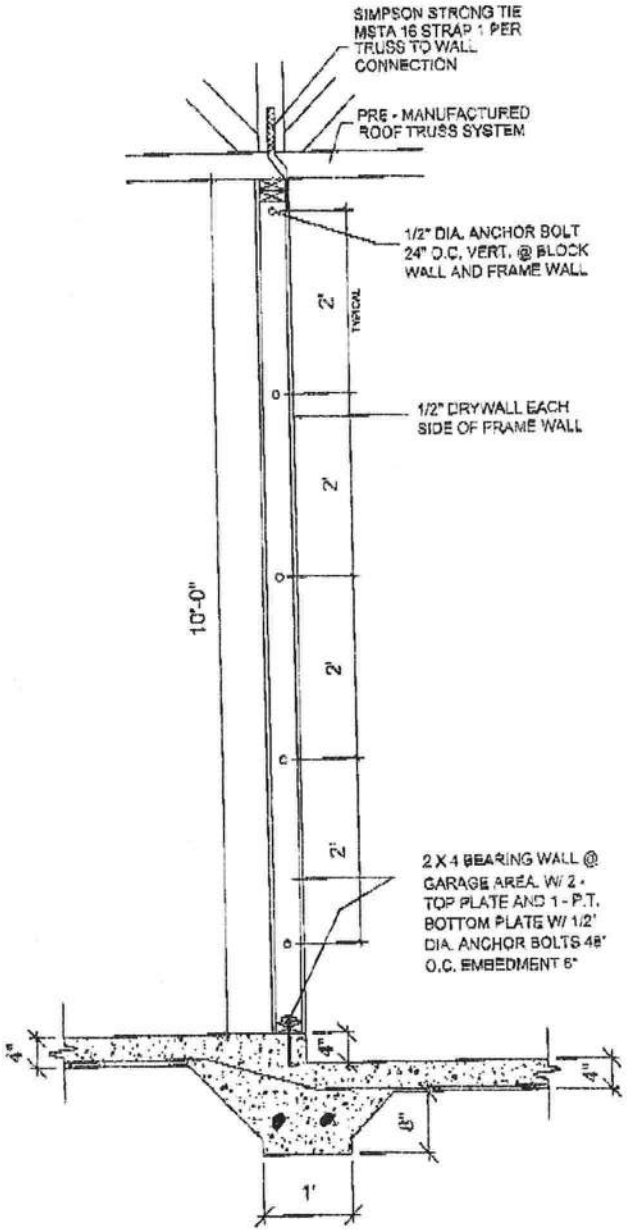

BEARING WALL & STEP DOWN FOOTER @ GARAGE

SCALE:=N.T.S.

From: The Columbia County Building & Zoning Department
Plan Review
135 NE Hernando Av.
P.O. Box 1529
Lake City Florida 32056-1529

Reference to a building permit application Number: 0704-50

BEN & JULIA ATKINS, Owner/Builder Property ID# 16-5s-17-09272-003

On the date of April 25, 2007 application 0704-50 and plans for construction of a single family dwelling were reviewed and the following information or alteration to the plans will be required to continue processing this application. If you should have any question please contact the above address, or contact phone number (386) 758-1163 or fax any information to (386) 754-7088.

Please include application number 0704-50 and when making reference to this application.

This is a plan review for compliance with the Florida Residential Code 2004 only and doesn't make any consideration toward the land use and zoning requirements.

1. On the foundation plan (A1.4) show the design of the 4 inch step down foundation.

2. Please indicate that one window in each bedroom will comply with the exception of section R310.1.1All emergency escape and rescue openings shall have a minimum net clear opening of 5 square feet. With a minimum net clear opening height of 24 inches and a minimum net clear opening width of 20 inches.

3. The door which provides egress from the garage into the dwelling shall comply with section R309.1.This egress door shall a solid wood doors not less than 13/8 inches (35 mm) in thickness, solid or honeycomb core steel doors not less than 13/8 inches (35 mm) thick, or 20-minute fire-rated doors.

4. The attic access opening (pull down stairs) shall have a fire rating of 20-minute.

5. Please indicate that the garage shall be separated from the residence and its attic area by not less than ½-inch (12.7 mm) gypsum board applied to the garage side.

6. The electrical plan shows the location of the electrical service entrance. Please indicate on the electrical plan that an overcurrent protection device will be installed on the exterior of structures to serve as a disconnecting means. Conductors used from the exterior disconnecting means to a panel or sub panel shall have four-wire conductors, of which one conductor shall be used as an equipment ground.

Thank You:

Joe Haltiwanger
Plan Examiner
Columbia County Building
Department

0704-50 863 412-3822

PRODUCT APPROVAL SPECIFICATION SHEET

As required by Florida Statute 553.842 and Florida Administrative Code 9B-72, please provide the information and approval numbers on the building components listed below if they will be utilized on the construction project for which you are applying for a building permit. We recommend you contact your local product supplier should you not know the product approval number for any of the applicable listed products. Statewide approved products are listed online @ www.floridabuilding.org

Category/Subcategory	Manufacturer	Product Description	Approval Number(s)
1. EXTERIOR DOORS			
A. SWINGING	FEATHER RIVER	36 X 80 · FIBERGLASS DOOR + JAMB	FL 4389
B. SLIDING			
C. SECTIONAL/ROLL UP	CLOPAY	SERIES 75 WINDCODE 3 GARAGE DOOR	FL. 5675.4
D. OTHER	JENDWEN	FRENCH DOOR 72X80	02-1211-10
2. WINDOWS			
A. SINGLE/DOUBLE HUNG		WINDOWS / INSULATED	FL-1671-R0
B. HORIZONTAL SLIDER			
C. CASEMENT			
D. FIXED			
E. MULLION			
F. SKYLIGHTS			
G. OTHER			
3. PANEL WALL			
A. SIDING			
B. SOFFITS	VERATOR M	SOFFIT / VYNL	FL 4554-R1
C. STOREFRONTS			
D. GLASS BLOCK			
E. OTHER			
4. ROOFING PRODUCTS			
A. ASPHALT SHINGLES			
B. NON-STRUCT METAL	METAL SYSTEMS	26 GA 9-5 MAX RIB	FL 6508
C. ROOFING TILES			
D. SINGLE PLY ROOF			
E. OTHER			
5. STRUCT COMPONENTS			
A. WOOD CONNECTORS	SIMPSON STRONG TIES		HETA TRUSS ANCOR
B. WOOD ANCHORS			
C. TRUSS PLATES			
D. INSULATION FORMS			
E. LINTELS	CEMENT PRE-CAST	LINTELS FOR DOORS / WINDOWS ECT	4569
F. OTHERS			
6. NEW EXTERIOR ENVELOPE PRODUCTS			
A.			

The products listed below did not demonstrate product approval at plan review. I understand that at the time of inspection of these products, the following information must be available to the inspector on the jobsite; 1) copy of the product approval, 2) performance characteristics which the product was tested and certified to comply with, 3) copy of the applicable manufacturers installation requirements. Further, I understand these products may have to be removed if approval cannot be demonstrated during inspection.

Bryan [illegible] 4/23/07

APPLICANT SIGNATURE DATE

R-1305 01-04

COLUMBIA COUNTY BUILDING DEPARTMENT

Revised 10-01-05

RESIDENTIAL MINIMUM PLAN REQUIREMENTS AND CHECKLIST FOR FLORIDA BUILDING CODE 2004 and FLORIDA RESIDENTIAL CODE 2004 WITH AMENDMENTS ONE (1) AND TWO (2) FAMILY DWELLINGS

ALL REQUIREMENTS ARE SUBJECT TO CHANGE
EFFECTIVE OCTOBER 1, 2005

ALL BUILDING PLANS MUST INDICATE THE FOLLOWING ITEMS AND INDICATE COMPLIANCE WITH CHAPTER 16 OF THE FLORIDA BUILDING CODE 2004 BY PROVIDING CALCULATIONS AND DETAILS THAT HAVE THE SEAL AND SIGNATURE OF A CERTIFIED ARCHITECT OR ENGINEER REGISTERED IN THE STATE OF FLORIDA, OR ALTERNATE METHODOLOGIES, APPROVED BY THE STATE OF FLORIDA BUILDING COMMISSION FOR ONE-AND-TWO FAMILY DWELLINGS. FOR DESIGN PURPOSES THE FOLLOWING BASIC WIND SPEED AS PER FIGURE 1609 SHALL BE USED.

WIND SPEED LINE SHALL BE DEFINED AS FOLLOWS: THE CENTERLINE OF INTERSTATE 75.

1. ALL BUILDINGS CONSTRUCTED EAST OF SAID LINE SHALL BE ——— 100 MPH
2. ALL BUILDINGS CONSTRUCTED WEST OF SAID LINE SHALL BE ———110 MPH
3. NO AREA IN COLUMBIA COUNTY IS IN A WIND BORNE DEBRIS REGION

APPLICANT – PLEASE CHECK ALL APPLICABLE BOXES BEFORE SUBMITTAL

GENERAL REQUIREMENTS: Two (2) complete sets of plans containing the following:

Applicant	Plans Examiner	
☑	☐	All drawings must be clear, concise and drawn to scale ("Optional " details that are not used shall be marked void or crossed off). Square footage of different areas shall be shown on plans.
☑	☐	Designers name and signature on document (FBC 106.1). If licensed architect or engineer, official seal shall be affixed.
☑	☐	**Site Plan including:** a) Dimensions of lot b) Dimensions of building set backs c) Location of all other buildings on lot, well and septic tank if applicable, and all utility easements. d) Provide a full legal description of property.
☐	☐	**Wind-load Engineering Summary, calculations and any details required** Plans or specifications must state compliance with FBC Section 1609. *The following information must be shown as per section 1603.1.4 FBC* a. Basic wind speed (3-second gust), miles per hour (km/hr). b. Wind importance factor, I_w, and building classification from Table 1604.5 or Table 6-1, ASCE 7 and building classification in Table 1-1, ASCE 7. c. Wind exposure, if more than one wind exposure is utilized, the wind exposure and applicable wind direction shall be indicated. d. The applicable enclosure classifications and, if designed with ASCE 7, internal pressure coefficient. e. Components and Cladding. The design wind pressures in terms of psf (kN/m²) to be used for the design of exterior component and cladding materials not specifally designed by the registered design professional.
☑	☐	**Elevations including:** a) All sides
☑	☐	b) Roof pitch
☑	☐	c) Overhang dimensions and detail with attic ventilation

☐	☐	d) Location, size and height above roof of chimneys.
☐	☐	e) Location and size of skylights
☐	☐	f) Building height
☐	☐	e) Number of stories
		Floor Plan including:
☐	☐	a) Rooms labeled and dimensioned.
☐	☐	b) Shear walls identified.
☐	☐	c) Show product approval specification as required by Fla. Statute 553.842 and Fla. Administrative Code 9B-72 **(see attach forms).**
☐	☐	d) Show safety glazing of glass, where required by code.
☐	☐	e) Identify egress windows in bedrooms, and size.
☐	☐	f) Fireplace (gas vented), (gas non-vented) or wood burning with hearth, **(Please circle applicable type).**
☐	☐	g) Stairs with dimensions (width, tread and riser) and details of guardrails and handrails.
☐	☐	h) Must show and identify accessibility requirements (accessible bathroom)
		Foundation Plan including:
☐	☐	a) Location of all load-bearing wall with required footings indicated as standard or monolithic and dimensions and reinforcing.
☐	☐	b) All posts and/or column footing including size and reinforcing
☐	☐	c) Any special support required by soil analysis such as piling
☐	☐	d) Location of any vertical steel.
		Roof System:
☐	☐	a) Truss package including: 1. Truss layout and truss details signed and sealed by Fl. Pro. Eng. 2. Roof assembly (FBC 106.1.1.2)Roofing system, materials, manufacturer, fastening requirements and product evaluation with wind resistance rating)
☐	☐	b) Conventional Framing Layout including: 1. Rafter size, species and spacing 2. Attachment to wall and uplift 3. Ridge beam sized and valley framing and support details 4. Roof assembly (FBC 106.1.1.2)Roofing systems, materials, manufacturer, fastening requirements and product evaluation with wind resistance rating)
		Wall Sections including:
☐	☐	a) Masonry wall 1. All materials making up wall 2. Block size and mortar type with size and spacing of reinforcement 3. Lintel, tie-beam sizes and reinforcement 4. Gable ends with rake beams showing reinforcement or gable truss and wall bracing details 5. *All required connectors with uplift rating and required number and* size of fasteners for continuous tie from roof to foundation shall be designed by a Windload engineer using the engineered roof truss plans. 6. Roof assembly shown here or on roof system detail (FBC 106.1.1.2) Roofing system, materials, manufacturer, fastening requirements and product evaluation with resistance rating) 7. Fire resistant construction (if required) 8. Fireproofing requirements 9. Shoe type of termite treatment (termiticide or alternative method) 10. Slab on grade a. Vapor retarder (6mil. Polyethylene with joints lapped 6 inches and sealed) b. Must show control joints, synthetic fiber reinforcement or Welded fire fabric reinforcement and supports 11. Indicate where pressure treated wood will be placed 12. Provide insulation R value for the following:

a. Attic space
b. Exterior wall cavity
c. Crawl space (if applicable)

☐ ☐ b) Wood frame wall

1. All materials making up wall
2. Size and species of studs
3. Sheathing size, type and nailing schedule
4. Headers sized
5. Gable end showing balloon framing detail or gable truss and wall hinge bracing detail
6. All required fasteners for continuous tie from roof to foundation (truss anchors, straps, anchor bolts and washers) shall be designed by a Windload engineer using the engineered roof truss plans.
7. Roof assembly shown here or on roof system detail (FBC 106.1.1.2) Roofing system, materials, manufacturer, fastening requirements and product evaluation with wind resistance rating)
8. Fire resistant construction (if applicable)
9. Fireproofing requirements
10. Show type of termite treatment (termiticide or alternative method)
11. Slab on grade
    a. Vapor retarder (6Mil. Polyethylene with joints lapped 6 inches and sealed
    b. Must show control joints, synthetic fiber reinforcement or welded wire fabric reinforcement and supports
12. Indicate where pressure treated wood will be placed
13. Provide insulation R value for the following:
    a. Attic space
    b. Exterior wall cavity
    c. Crawl space (if applicable)

☐ ☐ c) Metal frame wall and roof (designed, signed and sealed by Florida Prof. Engineer or Architect)

Floor Framing System:

☐ ☐ a) Floor truss package including layout and details, signed and sealed by Florida Registered Professional Engineer

☐ ☐ b) Floor joist size and spacing

☐ ☐ c) Girder size and spacing

☐ ☐ d) Attachment of joist to girder

☐ ☐ e) Wind load requirements where applicable

☐ ☐ **Plumbing Fixture layout**

Electrical layout including:

☐ ☐ a) Switches, outlets/receptacles, lighting and all required GFCI outlets identified

☐ ☐ b) Ceiling fans

☐ ☐ c) Smoke detectors

☐ ☐ d) Service panel and sub-panel size and location(s)

☐ ☐ e) Meter location with type of service entrance (overhead or underground)

☐ ☐ f) Appliances and HVAC equipment

☐ ☐ g) Arc Fault Circuits (AFCI) in bedrooms

☐ ☐ h) Exhaust fans in bathroom

HVAC information

☐ ☐ a) Energy Calculations (dimensions shall match plans)

☐ ☐ b) Manual J sizing equipment or equivalent computation

☐ ☐ c)Gas System Type (LP or Natural) Location and BTU demand of equipment

☐ ☐ **Disclosure Statement for Owner Builders**

☐ ☐ ***Notice Of Commencement Required Before Any Inspections Will Be Done**

☐ ☐ **Private Potable Water**

Truss Design Index Sheet*

Project Identification
Name: ACE CONST.
Address:
City/County:

Truss Manufacture Information
Name: Standard Truss & Roof Supply
Address 1: 608 North 12th Street
Address 2:
City/State: Haines City, FL 33844-4400

Design Information
Job Load: 20 TCLL 7 TCDL 0 BCLL 10 BCDL psf
Wind Load: 120 mph Spec: ASCE 7-2002 Bld Type: All Buildings Except Category I, III, IV Exposure B, Enclosed
Snow Load: See Individual Design Drawings
Bldg Code: Florida Code 2004 - Residential
Dsgn Code: ANSI/TPI 1 - 2002
Software: TrusPlus T6.5.41

Structural Engineer of Record
No Structural Engineer of Record

Truswal ID: T254585.J279361

Work Order
WO: jr60-07
CUST: BEN ATKINS

Truss Design Engineer
Name: Donald Lee Scott
Address: 220 Westway Place, Suite 200
City/State: Arlington, Texas 76018
License No.: Florida 35036

3/27/2007

I hereby verify that this document was prepared by me or under my direct supervision and that I am a duly Licensed Professional Engineer. This document is no longer valid if any modifications are made to it.

Table of Contents

Page	Design Label	Page	Design Label	Page	Design Label	Page	Design Label	Page	Design Label
1	Scope of Work	2	Details List	3	T-01	4	T-02	5	T-03
6	T-04	7	T-05	8	T-06	9	T-07	10	T-08
11	T-09	12	T-10	13	T-11	14	T-12	15	T-13
16	T-14	17	T-15	18	T-16	19	T-17	20	T-18
21	T-19	22	T-20	23	T-21	24	T-22	25	T-23
26	T-24	27	T-25	28	T-26	29	T-30	30	T-31
31	T-37	32	T-38	33	TJ-01	34	TJ-01A	35	TJ-01B
36	TJ-02A	37	TJ-03	38	TJ-04A	39	TJ-04B	40	TJ-05
41	TJ-05A	42	TJ-07	43	TK-03	44	TK-07		

 * FLORIDA ADMINISTRATIVE CODE 61G15-31.003 section 5

Engineering eJob
3/27/2007

Truss Engineer Design Responsibilities

The engineer's signature on this design certifies that the individual component depicted, if built with the materials and to the placements and tolerances specified, will bear the loads shown on the drawing. Users of the component are responsible for determining that any as-built component conforms to the design. The loading and dimensions specified have been provided by others and have not been verified by the signing engineer. The building designer is responsible for determining that the dimensions and loads for each component match those required by the plans and by the actual use of the individual component. The building designer is responsible for ascertaining that the loads shown on the designs meet or exceed applicable building code requirements and any additional factors required in the particular application. The engineer's seal on the attached component designs indicates acceptance of professional engineering responsibility solely for the design of the individual component assuming that the loading and dimension requirements are as represented to the engineer. The suitability and use of this component for any particular building is the responsibility of the building designer in accordance with ANSI/TPI 1-2002 Chapter 2. The engineer certifying this component is not responsible for anything beyond the specific scope of work set forth above, including but not limited to, the loading factors used in the design of the component, the dimensions of the component, the transfer of lateral loads from the roof and/or forward to the shear walls down to the foundation, connection of the components to the bearing support, the design of the bearing supports, the design and connection to the shear walls, the design of temporary or permanent building bracing required in the roof and/or floor systems, transfer of vertical loads down to the foundation, the design of the foundation or analysis in connection with the roof and/or floor diaphragms of the building. This is a high quality facsimile of the original engineering document. A wet or embossed seal copy of this engineering document is available upon request.

Truswal Systems Corporation
220 Westway Pl. Suite 200
Arlington, TX 76018
800-521-9790

Engineering eJob
3/27/2007

Required Details*

Other Available Details*

ftp://140:truswal@ftp.truswal.com/DesignsDetails/CO/AltBrace.pdf
ftp://140:truswal@ftp.truswal.com/DesignsDetails/CO/EvaluationReport1607.pdf

***Sealed versions of these details are available upon request.**

Truswal Systems Corporation
220 Westway Pl. Suite 200
Arlington, TX 76018
800-521-9790

Job Name: ACE CONST. Truss ID: T-01 Qty: 1

BRG	X-LOC	REACT	SIZE	REQ'D
1	0- 4- 0	2685	8.00"	3.17"
2	33- 0- 0	2685	8.00"	3.17"

BRG REQUIREMENTS shown are based ONLY on the truss material at each bearing

MAX DEFLECTION (span) :
L/999 MEM 9-10 (LIVE) LC 1
L= -0.34" D= -0.33" T= -0.67"

CRITICAL MEMBER FORCES:

TC	COMP.(DUR.)/	TENS.(DUR.)	CSI
1-2	-4877(1.25)/	824(1.60)	0.69
2-3	-6373(1.25)/	1107(1.60)	0.37
3-4	-6438(1.25)/	1120(1.60)	0.26
4-5	-6438(1.25)/	1120(1.60)	0.35
5-6	-4877(1.25)/	823(1.60)	0.69

BC	COMP.(DUR.)/	TENS.(DUR.)	CSI
7-8	-655(1.60)/	4261(1.25)	0.78
8-9	-651(1.60)/	4304(1.25)	0.57
9-10	-977(1.60)/	6444(1.25)	0.77
10-11	-977(1.60)/	6444(1.25)	0.78
11-12	-651(1.60)/	4304(1.25)	0.58
12-13	-655(1.60)/	4261(1.25)	0.78

WB	COMP.(DUR.)/	TENS.(DUR.)	CSI
2-8	/	591(1.25)	0.10
2-9	-370(1.60)/	2327(1.25)	0.41
3-9	-769(1.25)/	230(1.60)	0.13
3-11	-38(1.60)/	56(1.60)	0.03
4-11	-761(1.25)/	236(1.60)	0.13
5-11	-382(1.60)/	2387(1.25)	0.42
5-12	/	595(1.25)	0.10

TC	2x4	SP	SS	
	2x6	SP	SS	2-5
BC	2x4	SP	SS	
WEB	2x4	SP	#2 D	
PLT BLK	2x4	SP	#2 D	

This design does not account for long term time dependent loading (creep). Building Designer must account for this.
IRC/IBC truss plate values are based on testing and approval as required by IBC 1703 and ANSI/TPI and are reported in available documents such as ICBO #1607.

Designed per ANSI/TPI 1-2002
Plating is based on quality control factors
Cq = 1.20 for wide face and
Cq = 1.11 for narrow face.
Any alterations to this are shown for individual joints on the Joint Report.
Refer to Joint QC Detail Sheet for Maximum Rotational Tolerance used
THIS DESIGN IS THE COMPOSITE RESULT OF MULTIPLE LOAD CASES.
Loaded for 10 PSF non-concurrent BCLL.
Drainage must be provided to avoid ponding.
Permanent bracing is required (by others) to prevent rotation/toppling. See BCSI 1-03 and ANSI/TPI 1.

UPLIFT REACTION(S) :

Support	C&C Wind	Non-Wind
1	-1024 lb	
2	-1024 lb	

HORIZONTAL REACTION(S) :
support 1 127 lb
support 2 127 lb
This truss is designed using the ASCE7-02 Wind Specification
Bldg Enclosed = Yes, Importance Factor = 1.00
Truss Location = Not End Zone
Hurricane/Ocean Line = No , Exp Category = B
Bldg Length = 40.00 ft, Bldg Width = 20.00 ft
Mean roof height = 9.92 ft, mph = 120
TPI Standard Occupancy, Dead Load = 9.2 psf
Designed as Main Wind Force Resisting System and Components and Cladding
Tributary Area = 137 sqft

LOAD CASE #1 DESIGN LOADS

Dir	L.Plf	L.Loc	R.Plf	R.Loc	LL/TL
TC Vert	74.00	2- 0- 0	74.00	0- 0- 0	0.54
TC Vert	54.00	0- 0- 0	54.00	7- 0- 0	0.74
TC Vert	117.56	7- 0- 0	117.56	26- 4- 0	0.74
TC Vert	54.00	26- 4- 0	54.00	33- 4- 0	0.74
TC Vert	74.00	33- 4- 0	74.00	35- 4- 0	0.54
BC Vert	20.00	0- 0- 0	20.00	7- 0- 0	0.00
BC Vert	43.54	7- 0- 0	43.54	26- 4- 0	0.00
BC Vert	20.00	26- 4- 0	20.00	33- 4- 0	0.00

...Type...	lbs	X.Loc	LL/TL
TC Vert	0.0	0- 4- 0	1.00
TC Vert	0.0	33- 0- 0	1.00
BC Vert	249.6	7- 0- 0	1.00
BC Vert	212.2	7- 0- 0	0.00
BC Vert	249.6	26- 4- 0	1.00
BC Vert	212.2	26- 4- 0	0.00

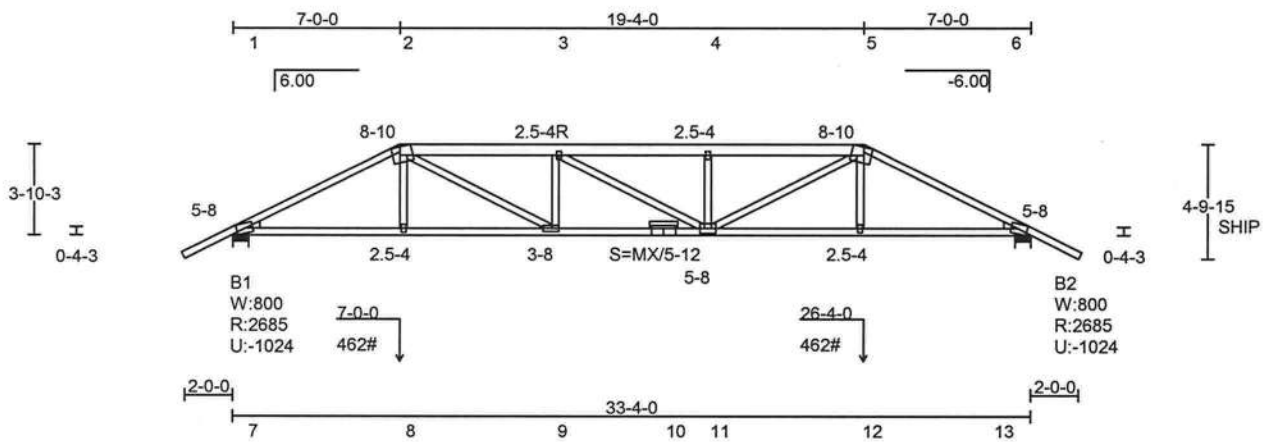

Truswal Systems Corporation
Donald Lee Scott, P.E.
220 Westway Place, Suite 200
Arlington, Texas 76018
Florida License No. 35036
Date: 3/27/2007

All connector plates are Truswal 20 ga. unless shown by "18"(18 ga.), "H"(16 ga.), or "MX"(TWMX 20 ga.), positioned per Joint Details Report.
Circled plates and false frame plates are positioned as shown above. Shift gable stud plates to avoid overlap with structural plates (or staple).

TRUSWAL SYSTEMS
ITW Building Components Group, Inc.
220 Westway Place, Suite 200, Arlington, TX 76018
Florida Certificate of Authorization # 278

TRUSPLUS 6.0 VER: T6.5.41

WARNING *Read all notes on this sheet and give a copy of it to the Erecting Contractor.*

This design is for an individual building component not truss system. It has been based on specifications provided by the component manufacturer and done in accordance with the current versions of TPI and AFPA design standards. No responsibility is assumed for dimensional accuracy. Dimensions are to be verified by the component manufacturer and/or building designer prior to fabrication. The building designer must ascertain that the loads utilized on this design meet or exceed the loading imposed by the local building code and the particular application. The design assumes that the top chord is laterally braced by the roof or floor sheathing and the bottom chord is laterally braced by a rigid sheathing material directly attached, unless otherwise noted. Bracing shown is for lateral support of components members only to reduce buckling length. This component shall not be placed in any environment that will cause the moisture content of the wood to exceed 19% and/or cause connector plate corrosion. Fabricate, handle, install and brace this truss in accordance with the following standards: 'Joint and Cutting Detail Reports' available as output from Truswal software, 'ANSI/TPI 1', 'WTCA 1' - Wood Truss Council of America Standard Design Responsibilities, 'BUILDING COMPONENT SAFETY INFORMATION' - (BCSI 1-03) and 'BCSI SUMMARY SHEETS' by WTCA and TPI. The Truss Plate Institute (TPI) is located at 583 D'Onofrio Drive, Madison, Wisconsin 53719. The American Forest and Paper Association (AFPA) is located at 1111 19th Street, NW, Ste 800, Washington, DC 20036.

Cust: BEN ATKINS
WO: Drive_J_jr60-07_L00006_J00001
Dsgnr: ABCD #LC = 34 WT: 233#

TC Live	20.00 psf	LiveDur	L=1.25 P=1.25
TC Snow(Ps)	0.00 psf	SnowDur	L=1.15 P=1.15
TC Dead	7.00 psf	Rep Mbr Bnd / Comp / Tens	
BC Live	0.00 psf		1.00 / 1.00 / 1.00
BC Dead	10.00 psf	O.C.Spacing	2- 0- 0
Bldg Code:	FBC2004R	DEFL RATIO:	L/240 TC: L/240

Job Name: ACE CONST. Truss ID: T-02 Qty: 1

BRG	X-LOC	REACT	SIZE	REQ'D
1	0- 4- 0	1381	8.00"	1.50"
2	33- 0- 0	1381	8.00"	1.50"

BRG REQUIREMENTS shown are based ONLY on the truss material at each bearing

MAX DEFLECTION (span) :
L/999 MEM 11-12 (LIVE) LC 1
L= -0.13" D= -0.13" T= -0.27"

CRITICAL MEMBER FORCES:

TC	COMP.(DUR.)/	TENS.(DUR.)	CSI
1-2	-2194(1.25)/	897(1.60)	0.33
2-3	-1985(1.25)/	802(1.60)	0.21
3-4	-2251(1.25)/	965(1.60)	0.50
4-5	-2251(1.25)/	965(1.60)	0.50
5-6	-1985(1.25)/	802(1.60)	0.21
6-7	-2194(1.25)/	897(1.60)	0.33

BC	COMP.(DUR.)/	TENS.(DUR.)	CSI
8-9	-754(1.60)/	1901(1.25)	0.57
9-10	-574(1.60)/	1730(1.25)	0.51
10-11	-574(1.60)/	1730(1.25)	0.51
11-12	-574(1.60)/	1730(1.25)	0.47
12-13	-754(1.60)/	1901(1.25)	0.57

WB	COMP.(DUR.)/	TENS.(DUR.)	CSI
2-9	-188(1.25)/	204(1.60)	0.07
3-9	-6(1.60)/	308(1.25)	0.05
3-10	-254(1.60)/	601(1.25)	0.28
4-10	-445(1.25)/	297(1.60)	0.13
5-10	-254(1.60)/	601(1.25)	0.28
5-12	-6(1.60)/	308(1.25)	0.05
6-12	-188(1.25)/	204(1.60)	0.07

TC	2x4	SP	#2 D
BC	2x4	SP	#2 D
WEB	2x4	SP	#2 D

This design does not account for long term time dependent loading (creep). Building Designer must account for this.
THIS DESIGN IS THE COMPOSITE RESULT OF MULTIPLE LOAD CASES.
Loaded for 10 PSF non-concurrent BCLL.
Drainage must be provided to avoid ponding.

Designed per ANSI/TPI 1-2002
Plating is based on quality control factors
Cq = 1.20 for wide face and
Cq = 1.11 for narrow face.
Any alterations to this are shown for individual joints on the Joint Report.
Refer to Joint QC Detail Sheet for Maximum Rotational Tolerance used
IRC/IBC truss plate values are based on testing and approval as required by IBC 1703 and ANSI/TPI and are reported in available documents such as ICBO #1607.

UPLIFT REACTION(S) :

Support	C&C Wind	Non-Wind
1	-652 lb	
2	-652 lb	

HORIZONTAL REACTION(S) :
support 1 -141 lb
support 2 141 lb
This truss is designed using the ASCE7-02 Wind Specification
Bldg Enclosed = Yes, Importance Factor = 1.00
Truss Location = Not End Zone
Hurricane/Ocean Line = No , Exp Category = B
Bldg Length = 40.00 ft, Bldg Width = 20.00 ft
Mean roof height = 10.42 ft, mph = 120
TPI Standard Occupancy, Dead Load = 9.2 psf
Designed as Main Wind Force Resisting System and Components and Cladding
Tributary Area = 67 sqft

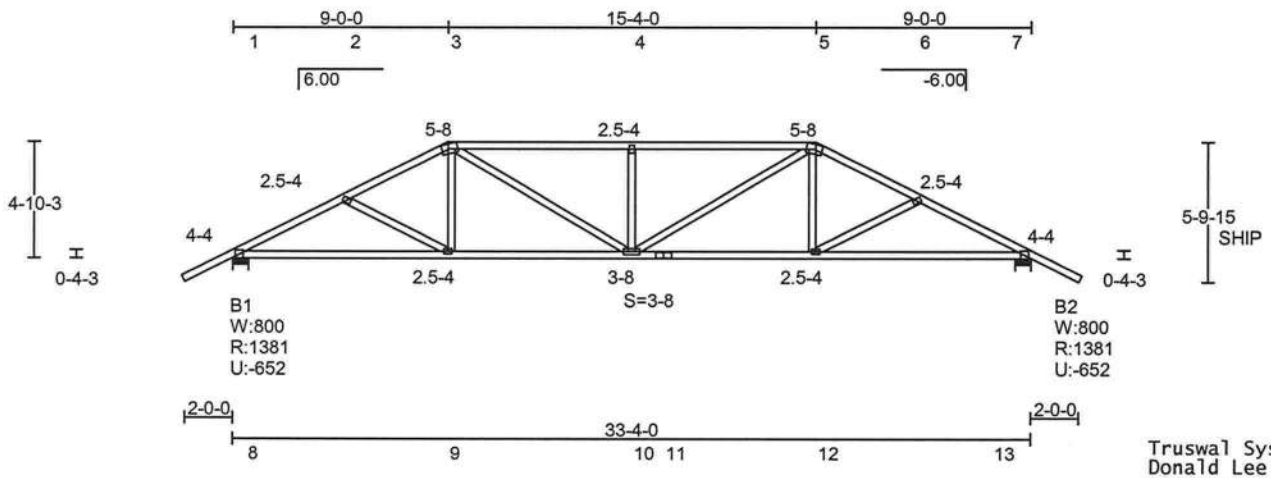

Truswal Systems Corporation
Donald Lee Scott, P.E.
220 Westway Place, Suite 200
Arlington, Texas 76018
Florida License No. 35036
Date: 3/27/2007

All connector plates are Truswal 20 ga. unless shown by "18"(18 ga.), "H"(16 ga.), or "MX"(TWMX 20 ga.), positioned per Joint Details Report. Circled plates and false frame plates are positioned as shown above. Shift gable stud plates to avoid overlap with structural plates (or staple).

TRUSWAL SYSTEMS
Building Components Group, Inc.
220 Westway Place, Suite 200, Arlington, TX 76018
Florida Certificate of Authorization # 278
TRUSPLUS 6.0 VER: T6.5.41

WARNING *Read all notes on this sheet and give a copy of it to the Erecting Contractor.*

This design is for an individual building component not truss system. It has been based on specifications provided by the component manufacturer and done in accordance with the current versions of TPI and AFPA design standards. No responsibility is assumed for dimensional accuracy. Dimensions are to be verified by the component manufacturer and/or building designer prior to fabrication. The building designer must ascertain that the loads utilized on this design meet or exceed the loading imposed by the local building code and the particular application. The design assumes that the top chord is laterally braced by the roof or floor sheathing and the bottom chord is laterally braced by a rigid sheathing material directly attached, unless otherwise noted. Bracing shown is for lateral support of components members only to reduce buckling length. This component shall not be placed in any environment that will cause the moisture content of the wood to exceed 19% and/or cause connector plate corrosion. Fabricate, handle, install and brace this truss in accordance with the following standards: 'Joint and Cutting Detail Reports' available as output from Truswal software, 'ANSI/TPI 1', 'WTCA 1' - Wood Truss Council of America Standard Design Responsibilities, 'BUILDING COMPONENT SAFETY INFORMATION' - (BCSI 1-03) and 'BCSI SUMMARY SHEETS' by WTCA and TPI. The Truss Plate Institute (TPI) is located at 583 D'Onofrio Drive, Madison, Wisconsin 53719. The American Forest and Paper Association (AFPA) is located at 1111 19th Street, NW, Ste 800, Washington, DC 20036.

Cust: BEN ATKINS
WO: Drive_J_jr60-07_L00006_J00001
Dsgnr: ABCD #LC = 34 WT: 220#

TC Live	20.00 psf	LiveDur L=1.25 P=1.25
TC Snow(Ps)	0.00 psf	SnowDur L=1.15 P=1.15
TC Dead	7.00 psf	Rep Mbr Bnd / Comp / Tens
BC Live	0.00 psf	1.15 / 1.10 / 1.10
BC Dead	10.00 psf	O.C.Spacing 2- 0- 0
Bldg Code:	FBC2004R	DEFL RATIO: L/240 TC: L/240

Job Name: ACE CONST. Truss ID: T-03 Qty: 1

BRG	X-LOC	REACT	SIZE	REQ'D
1	0- 4- 0	1381	8.00"	1.50"
2	33- 0- 0	1381	8.00"	1.50"

BRG REQUIREMENTS shown are based ONLY on the truss material at each bearing
MAX DEFLECTION (span) :
L/999 MEM 9-10 (LIVE) LC 33
L= -0.29" D= -0.25" T= -0.54"

CRITICAL MEMBER FORCES:

TC	COMP.(DUR.)/	TENS.(DUR.)	CSI
1-2	-2171(1.25)/	899(1.60)	0.33
2-3	-1872(1.25)/	766(1.60)	0.25
3-4	-1618(1.25)/	746(1.60)	0.27
4-5	-1618(1.25)/	746(1.60)	0.27
5-6	-1872(1.25)/	766(1.60)	0.25
6-7	-2171(1.25)/	900(1.60)	0.33

BC	COMP.(DUR.)/	TENS.(DUR.)	CSI
8-9	-748(1.60)/	1881(1.25)	0.81
9-10	-609(1.60)/	1782(1.25)	0.80
10-11	-609(1.60)/	1782(1.25)	0.80
11-12	-748(1.60)/	1881(1.25)	0.81

WB	COMP.(DUR.)/	TENS.(DUR.)	CSI
2-9	-298(1.25)/	272(1.60)	0.16
3-9	-111(1.60)/	518(1.25)	0.09
4-9	-232(1.25)/	178(1.60)	0.20
4-11	-232(1.25)/	178(1.60)	0.20
5-11	-111(1.60)/	518(1.25)	0.09
6-11	-298(1.25)/	272(1.60)	0.16

TC 2x4 SP #2 D
BC 2x4 SP #2 D
WEB 2x4 SP #2 D
This design does not account for long term time dependent loading (creep). Building Designer must account for this.
THIS DESIGN IS THE COMPOSITE RESULT OF MULTIPLE LOAD CASES.
Loaded for 10 PSF non-concurrent BCLL.
Drainage must be provided to avoid ponding.

Designed per ANSI/TPI 1-2002
Plating is based on quality control factors
Cq = 1.20 for wide face and
Cq = 1.11 for narrow face.
Any alterations to this are shown for individual joints on the Joint Report.
Refer to Joint QC Detail Sheet for Maximum Rotational Tolerance used
IRC/IBC truss plate values are based on testing and approval as required by IBC 1703 and ANSI/TPI and are reported in available documents such as ICBO #1607.

UPLIFT REACTION(S) :

Support	C&C Wind	Non-Wind
1	-653 lb	
2	-653 lb	

HORIZONTAL REACTION(S) :
support 1 -141 lb
support 2 -141 lb
This truss is designed using the ASCE7-02 Wind Specification
Bldg Enclosed = Yes, Importance Factor = 1.00
Truss Location = Not End Zone
Hurricane/Ocean Line = No , Exp Category = B
Bldg Length = 40.00 ft, Bldg Width = 20.00 ft
Mean roof height = 10.92 ft, mph = 120
TPI Standard Occupancy, Dead Load = 9.2 psf
Designed as Main Wind Force Resisting System and Components and Cladding
Tributary Area = 67 sqft

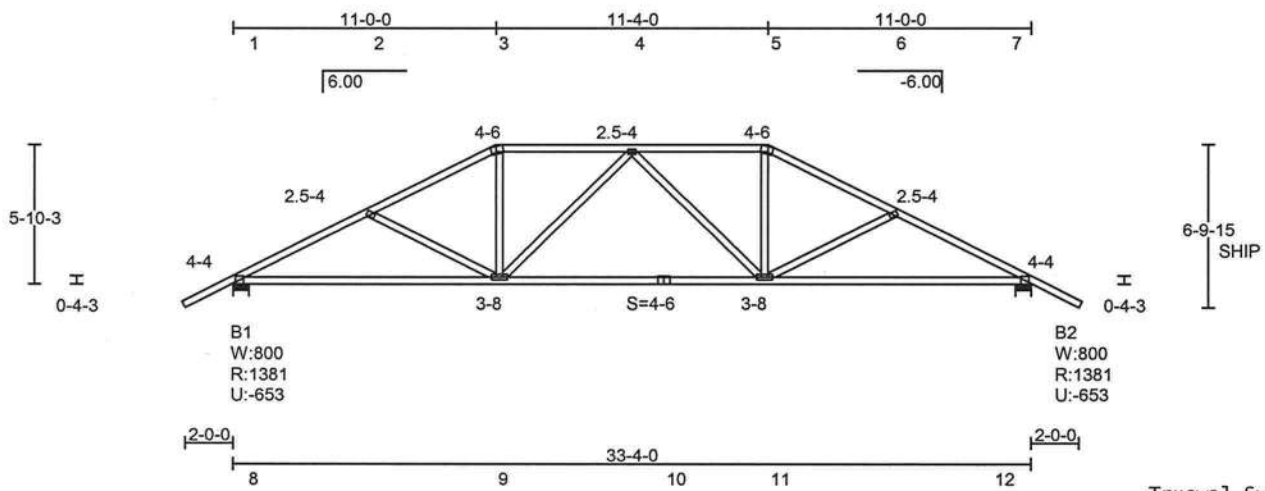

Truswal Systems Corporation
Donald Lee Scott, P.E.
220 Westway Place, Suite 200
Arlington, Texas 76018
Florida License No. 35036
Date: 3/27/2007

All connector plates are Truswal 20 ga. unless shown by "18"(18 ga.), "H"(16 ga.), or "MX"(TWMX 20 ga.), positioned per Joint Details Report. Circled plates and false frame plates are positioned as shown above. Shift gable stud plates to avoid overlap with structural plates (or staple).

TRUSWAL SYSTEMS
TTW Building Components Group, Inc.
220 Westway Place, Suite 200, Arlington, TX 76018
Florida Certificate of Authorization # 278
TRUSPLUS 6.0 VER: T6.5.41

WARNING *Read all notes on this sheet and give a copy of it to the Erecting Contractor.*

This design is for an individual building component not truss system. It has been based on specifications provided by the component manufacturer and done in accordance with the current versions of TPI and AFPA design standards. No responsibility is assumed for dimensional accuracy. Dimensions are to be verified by the component manufacturer and/or building designer prior to fabrication. The building designer must ascertain that the loads utilized on this design meet or exceed the loading imposed by the local building code and the particular application. The design assumes that the top chord is laterally braced by the roof or floor sheathing and the bottom chord is laterally braced by a rigid sheathing material directly attached, unless otherwise noted. Bracing shown is for lateral support of components members only to reduce buckling length. This component shall not be placed in any environment that will cause the moisture content of the wood to exceed 19% and/or cause connector plate corrosion. Fabricate, handle, install and brace this truss in accordance with the following standards: 'Joint and Cutting Detail Reports' available as output from Truswal software, 'ANSI/TPI 1', 'WTCA 1' - Wood Truss Council of America Standard Design Responsibilities, 'BUILDING COMPONENT SAFETY INFORMATION' - (BCSI 1-03) and 'BCSI SUMMARY SHEETS' by WTCA and TPI. The Truss Plate Institute (TPI) is located at 583 D'Onofrio Drive, Madison, Wisconsin 53719. The American Forest and Paper Association (AFPA) is located at 1111 19th Street, NW, Ste 800, Washington, DC 20036.

Cust: BEN ATKINS
WO: Drive_J_jr60-07_L00006_J00001
Dsgnr: ABCD #LC = 34 WT: 217#

TC Live	20.00 psf	LiveDur	L=1.25 P=1.25
TC Snow(Ps)	0.00 psf	SnowDur	L=1.15 P=1.15
TC Dead	7.00 psf	Rep Mbr Bnd / Comp / Tens	
BC Live	0.00 psf		1.15 / 1.10 / 1.10
BC Dead	10.00 psf	O.C.Spacing	2- 0- 0
Bldg Code:	FBC2004R	DEFL RATIO:	L/240 TC: L/240

Job Name: ACE CONST. Truss ID: T-04 Qty: 1

BRG	X-LOC	REACT	SIZE	REQ'D
1	0- 4- 0	1381	8.00"	1.50"
2	33- 0- 0	1381	8.00"	1.50"

BRG REQUIREMENTS shown are based ONLY on the truss material at each bearing

MAX DEFLECTION (span) :
L/849 MEM 8-9 (LIVE) LC 1
L= -0.46" D= -0.44" T= -0.91"

CRITICAL MEMBER FORCES:

TC	COMP.(DUR.)/	TENS.(DUR.)	CSI
1-2	-3760(1.25)/	1477(1.60)	0.35
2-3	-3518(1.25)/	1366(1.60)	0.72
3-4	-3915(1.25)/	1454(1.60)	0.51
4-5	-3518(1.25)/	1365(1.60)	0.72
5-6	-3759(1.25)/	1476(1.60)	0.35

BC	COMP.(DUR.)/	TENS.(DUR.)	CSI
7-8	-1287(1.60)/	3397(1.25)	0.88
8-9	-926(1.60)/	2799(1.25)	0.64
9-10	-925(1.60)/	2799(1.25)	0.64
10-11	-1286(1.60)/	3397(1.25)	0.88

WB	COMP.(DUR.)/	TENS.(DUR.)	CSI
2-8	-243(1.25)/	271(1.60)	0.04
3-8	-200(1.60)/	548(1.25)	0.12
3-9	-367(1.60)/	1444(1.25)	0.25
4-9	-368(1.60)/	1444(1.25)	0.25
4-10	-200(1.60)/	548(1.25)	0.12
5-10	-243(1.25)/	271(1.60)	0.04

TC	2x4	SP	SS	
	2x4	SP	#2 D	3-4
BC	2x4	SP	#2 D	
WEB	2x4	SP	#2 D	
WEDGE	2x4	SP	#2 D	

This design does not account for long term time dependent loading (creep). Building Designer must account for this.
IRC/IBC truss plate values are based on testing and approval as required by IBC 1703 and ANSI/TPI and are reported in available documents such as ICBO #1607.
Drainage must be provided to avoid ponding.

Designed per ANSI/TPI 1-2002
Plating is based on quality control factors
Cq = 1.20 for wide face and
Cq = 1.11 for narrow face.
Any alterations to this are shown for individual joints on the Joint Report.
Refer to Joint QC Detail Sheet for Maximum Rotational Tolerance used
THIS DESIGN IS THE COMPOSITE RESULT OF MULTIPLE LOAD CASES.
Loaded for 10 PSF non-concurrent BCLL.
+ +
Unrestrained horiz. LL deflection = 0.31 "
+ +

UPLIFT REACTION(S) :

Support	C&C Wind	Non-Wind
1	-654 lb	
2	-654 lb	

HORIZONTAL REACTION(S) :
support 1 -140 lb
support 2 -140 lb
This truss is designed using the ASCE7-02 Wind Specification
Bldg Enclosed = Yes, Importance Factor = 1.00
Truss Location = Not End Zone
Hurricane/Ocean Line = No , Exp Category = B
Bldg Length = 40.00 ft, Bldg Width = 20.00 ft
Mean roof height = 11.42 ft, mph = 120
TPI Standard Occupancy, Dead Load = 9.2 psf
Designed as Main Wind Force Resisting System and Components and Cladding
Tributary Area = 67 sqft

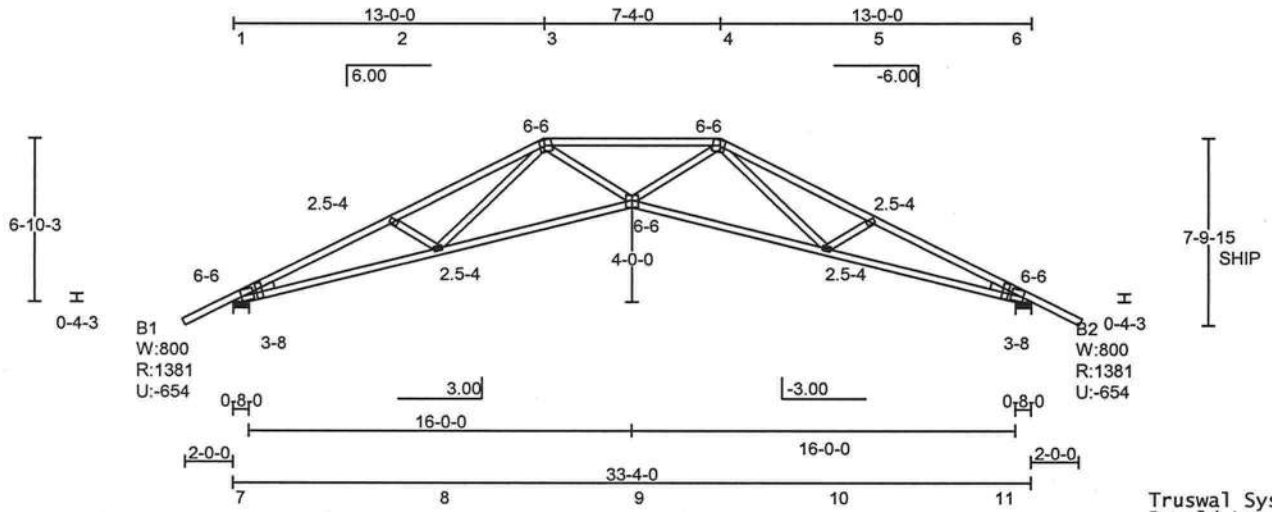

Truswal Systems Corporation
Donald Lee Scott, P.E.
220 Westway Place, Suite 200
Arlington, Texas 76018
Florida License No. 35036
Date: 3/27/2007

All connector plates are Truswal 20 ga. unless shown by "18"(18 ga.), "H"(16 ga.), or "MX"(TWMX 20 ga.), positioned per Joint Details Report. Circled plates and false frame plates are positioned as shown above. Shift gable stud plates to avoid overlap with structural plates (or staple).

TRUSWAL SYSTEMS
ITW Building Components Group, Inc.
220 Westway Place, Suite 200, Arlington, TX 76018
Florida Certificate of Authorization # 278
TRUSPLUS 6.0 VER: T6.5.41

WARNING *Read all notes on this sheet and give a copy of it to the Erecting Contractor.*

This design is for an individual building component not truss system. It has been based on specifications provided by the component manufacturer and done in accordance with the current versions of TPI and AFPA design standards. No responsibility is assumed for dimensional accuracy. Dimensions are to be verified by the component manufacturer and/or building designer prior to fabrication. The building designer must ascertain that the loads utilized on this design meet or exceed the loading imposed by the local building code and the particular application. The design assumes that the top chord is laterally braced by the roof or floor sheathing and the bottom chord is laterally braced by a rigid sheathing material directly attached, unless otherwise noted. Bracing shown is for lateral support of components members only to reduce buckling length. This component shall not be placed in any environment that will cause the moisture content of the wood to exceed 19% and/or cause connector plate corrosion. Fabricate, handle, install and brace this truss in accordance with the following standards: 'Joint and Cutting Detail Reports' available as output from Truswal software, 'ANSI/TPI 1', 'WTCA 1' - Wood Truss Council of America Standard Design Responsibilities, 'BUILDING COMPONENT SAFETY INFORMATION' - (BCSI 1-03) and 'BCSI SUMMARY SHEETS' by WTCA and TPI. The Truss Plate Institute (TPI) is located at 583 D'Onofrio Drive, Madison, Wisconsin 53719. The American Forest and Paper Association (AFPA) is located at 1111 19th Street, NW, Ste 800, Washington, DC 20036.

Cust: BEN ATKINS
WO: Drive_J_jr60-07_L00006_J00001
Dsgnr: ABCD #LC = 34 WT: 203#

TC Live	20.00 psf	LiveDur	L=1.25 P=1.25
TC Snow(Ps)	0.00 psf	SnowDur	L=1.15 P=1.15
TC Dead	7.00 psf	Rep Mbr Bnd / Comp / Tens	
BC Live	0.00 psf		1.15 / 1.10 / 1.10
BC Dead	10.00 psf	O.C.Spacing	2- 0- 0
Bldg Code:	FBC2004R	DEFL RATIO:	L/240 TC: L/240

Job Name: ACE CONST. Truss ID: T-05 Qty: 1

BRG	X-LOC	REACT	SIZE	REQ'D
1	0- 4- 0	1381	8.00"	1.50"
2	33- 0- 0	1381	8.00"	1.50"

BRG REQUIREMENTS shown are based ONLY on the truss material at each bearing

MAX DEFLECTION (span) :
L/951 MEM 10-11 (LIVE) LC 1
L= -0.41" D= -0.40" T= -0.81"

CRITICAL MEMBER FORCES:

TC	COMP.(DUR.)/	TENS.(DUR.)	CSI
1-2	-3692(1.25)/	1454(1.60)	0.55
2-3	-3549(1.25)/	1332(1.60)	0.61
3-4	-2672(1.25)/	1043(1.60)	0.30
4-5	-2801(1.25)/	1120(1.60)	0.21
5-6	-2671(1.25)/	1043(1.60)	0.30
6-7	-3549(1.25)/	1332(1.60)	0.61
7-8	-3692(1.25)/	1455(1.60)	0.55

BC	COMP.(DUR.)/	TENS.(DUR.)	CSI
9-10	-1270(1.60)/	3325(1.25)	0.80
10-11	-1121(1.60)/	3172(1.25)	0.69
11-12	-1121(1.60)/	3172(1.25)	0.69
12-13	-1270(1.60)/	3325(1.25)	0.80

WB	COMP.(DUR.)/	TENS.(DUR.)	CSI
2-10	-74(1.25)/	240(1.60)	0.03
3-10	-8(1.60)/	175(0.90)	0.04
3-11	-738(1.25)/	419(1.60)	0.46
4-11	-346(1.60)/	1080(1.25)	0.19
5-11	-346(1.60)/	1080(1.25)	0.19
6-11	-738(1.25)/	419(1.60)	0.46
6-12	-8(1.60)/	175(0.90)	0.04
7-12	-74(1.25)/	240(1.60)	0.03

TC	2x4	SP	#2 D
BC	2x4	SP	#2 D
WEB	2x4	SP	#2 D
WEDGE	2x4	SP	#2 D

This design does not account for long term time dependent loading (creep). Building Designer must account for this.
THIS DESIGN IS THE COMPOSITE RESULT OF MULTIPLE LOAD CASES.
Loaded for 10 PSF non-concurrent BCLL.
+ +
Unrestrained horiz. LL deflection = 0.28 "
+ +

Designed per ANSI/TPI 1-2002
Plating is based on quality control factors
Cq = 1.20 for wide face and
Cq = 1.11 for narrow face.
Any alterations to this are shown for individual joints on the Joint Report.
Refer to Joint QC Detail Sheet for Maximum Rotational Tolerance used
IRC/IBC truss plate values are based on testing and approval as required by IBC 1703 and ANSI/TPI and are reported in available documents such as ICBO #1607.
Drainage must be provided to avoid ponding.

UPLIFT REACTION(S) :

Support	C&C Wind	Non-Wind
1	-655 lb	
2	-655 lb	

HORIZONTAL REACTION(S) :
support 1 140 lb
support 2 140 lb
This truss is designed using the ASCE7-02 Wind Specification
Bldg Enclosed = Yes, Importance Factor = 1.00
Truss Location = Not End Zone
Hurricane/Ocean Line = No Exp Category = B
Bldg Length = 40.00 ft, Bldg Width = 20.00 ft
Mean roof height = 11.92 ft, mph = 120
TPI Standard Occupancy, Dead Load = 9.2 psf
Designed as Main Wind Force Resisting System and Components and Cladding
Tributary Area = 67 sqft

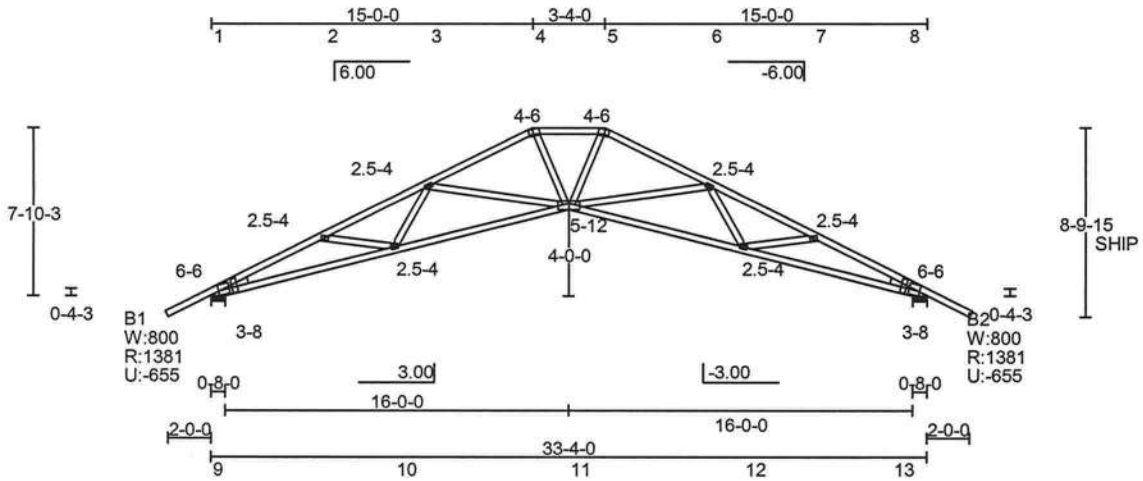

Truswal Systems Corporation
Donald Lee Scott, P.E.
220 Westway Place, Suite 200
Arlington, Texas 76018
Florida License No. 35036
Date: 3/27/2007

All connector plates are Truswal 20 ga. unless shown by "18"(18 ga.), "H"(16 ga.), or "MX"(TWMX 20 ga.), positioned per Joint Details Report. Circled plates and false frame plates are positioned as shown above. Shift gable stud plates to avoid overlap with structural plates (or staple).

TRUSWAL SYSTEMS
TW Building Components Group, Inc.
220 Westway Place, Suite 200, Arlington, TX 76018
Florida Certificate of Authorization # 278
TRUSPLUS 6.0 VER: T6.5.41

WARNING *Read all notes on this sheet and give a copy of it to the Erecting Contractor.*

This design is for an individual building component not truss system. It has been based on specifications provided by the component manufacturer and done in accordance with the current versions of TPI and AFPA design standards. No responsibility is assumed for dimensional accuracy. Dimensions are to be verified by the component manufacturer and/or building designer prior to fabrication. The building designer must ascertain that the loads utilized on this design meet or exceed the loading imposed by the local building code and the particular application. The design assumes that the top chord is laterally braced by the roof or floor sheathing and the bottom chord is laterally braced by a rigid sheathing material directly attached, unless otherwise noted. Bracing shown is for lateral support of components members only to reduce buckling length. This component shall not be placed in any environment that will cause the moisture content of the wood to exceed 19% and/or cause connector plate corrosion. Fabricate, handle, install and brace this truss in accordance with the following standards: 'Joint and Cutting Detail Reports' available as output from Truswal software, 'ANSI/TPI 1', 'WTCA 1' - Wood Truss Council of America Standard Design Responsibilities, 'BUILDING COMPONENT SAFETY INFORMATION' - (BCSI 1-03) and 'BCSI SUMMARY SHEETS' by WTCA and TPI. The Truss Plate Institute (TPI) is located at 583 D'Onofrio Drive, Madison, Wisconsin 53719. The American Forest and Paper Association (AFPA) is located at 1111 19th Street, NW, Ste 800, Washington, DC 20036.

Cust: BEN ATKINS
WO: Drive_J_jr60-07_L00006_J00001
Dsgnr: ABCD #LC = 34 WT: 220#

TC Live	20.00 psf	LiveDur	L=1.25 P=1.25
TC Snow(Ps)	0.00 psf	SnowDur	L=1.15 P=1.15
TC Dead	7.00 psf	Rep Mbr Bnd / Comp / Tens	
BC Live	0.00 psf		1.15 / 1.10 / 1.10
BC Dead	10.00 psf	O.C.Spacing	2- 0- 0
Bldg Code:	FBC2004R	DEFL RATIO:	L/240 TC: L/240

Job Name: ACE CONST. Truss ID: T-06 Qty: 3

BRG	X-LOC	REACT	SIZE	REQ'D
1	0- 4- 0	1382	8.00"	1.50"
2	33- 0- 0	1381	8.00"	1.50"

BRG REQUIREMENTS shown are based ONLY on the truss material at each bearing

MAX DEFLECTION (span) :
L/939 MEM 9-10 (LIVE) LC 1
L= -0.42" D= -0.42" T= -0.84"

CRITICAL MEMBER FORCES:

TC	COMP.(DUR.)/	TENS.(DUR.)	CSI
1-2	-3704(1.25)/	1296(1.60)	0.53
2-3	-2685(1.25)/	908(1.60)	0.47
3-4	-2643(1.25)/	931(1.60)	0.74
4-5	-2643(1.25)/	931(1.60)	0.74
5-6	-2685(1.25)/	908(1.60)	0.47
6-7	-3703(1.25)/	1296(1.60)	0.53

BC	COMP.(DUR.)/	TENS.(DUR.)	CSI
8-9	-1105(1.60)/	3338(1.25)	0.86
9-10	-1117(1.60)/	3346(1.25)	0.72
10-11	-1118(1.60)/	3346(1.25)	0.72
11-12	-1105(1.60)/	3338(1.25)	0.86

WB	COMP.(DUR.)/	TENS.(DUR.)	CSI
2-9	/	138(0.90)	0.03
2-10	-904(1.25)/	532(1.60)	0.23
4-10	-496(1.60)/	1869(1.25)	0.33
6-10	-904(1.25)/	532(1.60)	0.23
6-11	/	138(0.90)	0.03

TC	2x4 SP	#2 D
BC	2x4 SP	#2 D
WEB	2x4 SP	#2 D
WEDGE	2x4 SP	#2 D

This design does not account for long term time dependent loading (creep). Building Designer must account for this.
Refer to Joint QC Detail Sheet for Maximum Rotational Tolerance used
IRC/IBC truss plate values are based on testing and approval as required by IBC 1703 and ANSI/TPI and are reported in available documents such as ICBO #1607.

☒ Web bracing required at each location shown. See standard details (TX01087001-001 rev1).
Designed per ANSI/TPI 1-2002
Plating is based on quality control factors
Cq = 1.20 for wide face and
Cq = 1.11 for narrow face.
Any alterations to this are shown for individual joints on the Joint Report.
THIS DESIGN IS THE COMPOSITE RESULT OF MULTIPLE LOAD CASES.
Loaded for 10 PSF non-concurrent BCLL.
+ + + + + + + + + + + + + + + + + + + +
Unrestrained horiz. LL deflection = 0.29 "
+ + + + + + + + + + + + + + + + + + + +

UPLIFT REACTION(S) :

Support	C&C Wind	Non-Wind
1	-632 lb	
2	-632 lb	

HORIZONTAL REACTION(S) :
support 1 -140 lb
support 2 -140 lb
This truss is designed using the ASCE7-02 Wind Specification
Bldg Enclosed = Yes, Importance Factor = 1.00
Truss Location = Not End Zone
Hurricane/Ocean Line = No , Exp Category = B
Bldg Length = 40.00 ft, Bldg Width = 20.00 ft
Mean roof height = 12.34 ft, mph = 120
TPI Standard Occupancy, Dead Load = 9.2 psf
Designed as Main Wind Force Resisting System and Components and Cladding
Tributary Area = 67 sqft

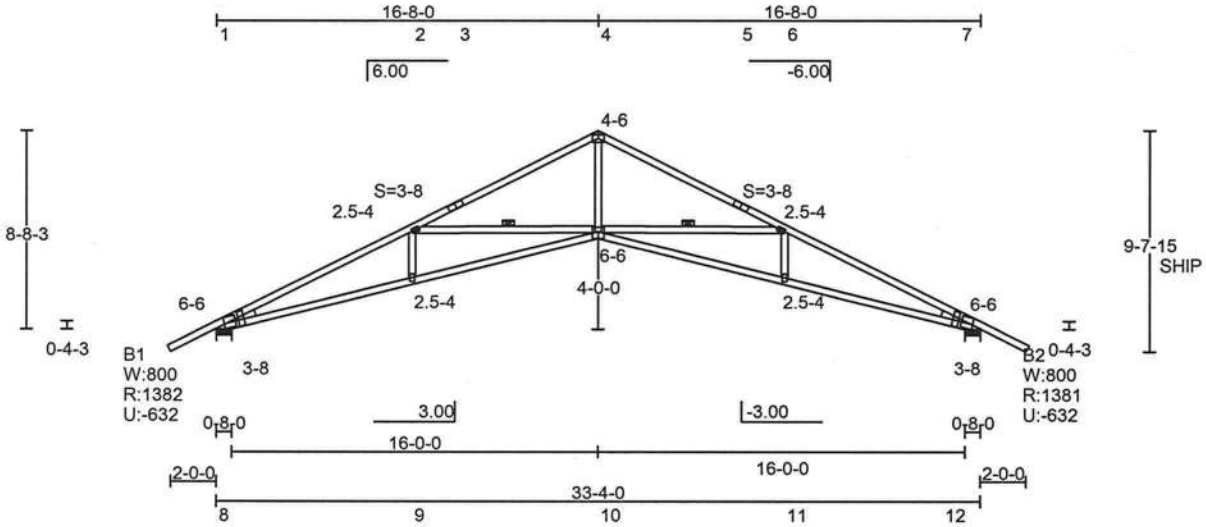

Truswal Systems Corporation
Donald Lee Scott, P.E.
220 Westway Place, Suite 200
Arlington, Texas 76018
Florida License No. 35036
Date: 3/27/2007

All connector plates are Truswal 20 ga. unless shown by "18"(18 ga.), "H"(16 ga.), or "MX"(TWMX 20 ga.), positioned per Joint Details Report. Circled plates and false frame plates are positioned as shown above. Shift gable stud plates to avoid overlap with structural plates (or staple).

TRUSWAL SYSTEMS
TW Building Components Group, Inc.
220 Westway Place, Suite 200, Arlington, TX 76018
Florida Certificate of Authorization # 278
TRUSPLUS 6.0 VER: T6.5.41

WARNING *Read all notes on this sheet and give a copy of it to the Erecting Contractor.*

This design is for an individual building component not truss system. It has been based on specifications provided by the component manufacturer and done in accordance with the current versions of TPI and AFPA design standards. No responsibility is assumed for dimensional accuracy. Dimensions are to be verified by the component manufacturer and/or building designer prior to fabrication. The building designer must ascertain that the loads utilized on this design meet or exceed the loading imposed by the local building code and the particular application. The design assumes that the top chord is laterally braced by the roof or floor sheathing and the bottom chord is laterally braced by a rigid sheathing material directly attached, unless otherwise noted. Bracing shown is for lateral support of components members only to reduce buckling length. This component shall not be placed in any environment that will cause the moisture content of the wood to exceed 19% and/or cause connector plate corrosion. Fabricate, handle, install and brace this truss in accordance with the following standards: 'Joint and Cutting Detail Reports' available as output from Truswal software, 'ANSI/TPI 1', 'WTCA 1' - Wood Truss Council of America Standard Design Responsibilities, 'BUILDING COMPONENT SAFETY INFORMATION' - (BCSI 1-03) and 'BCSI SUMMARY SHEETS' by WTCA and TPI. The Truss Plate Institute (TPI) is located at 583 D'Onofrio Drive, Madison, Wisconsin 53719. The American Forest and Paper Association (AFPA) is located at 1111 19th Street, NW, Ste 800, Washington, DC 20036.

Cust: BEN ATKINS
WO: Drive_J_jr60-07_L00006_J00001
Dsgnr: ABCD #LC = 34 WT: 202#

TC Live	20.00 psf	LiveDur	L=1.25 P=1.25
TC Snow(Ps)	0.00 psf	SnowDur	L=1.15 P=1.15
TC Dead	7.00 psf	Rep Mbr Bnd / Comp / Tens	
BC Live	0.00 psf		1.15 / 1.10 / 1.10
BC Dead	10.00 psf	O.C.Spacing	2- 0- 0
Bldg Code:	FBC2004R	DEFL RATIO:	L/240 TC: L/240

Job Name: ACE CONST. Truss ID: T-07 Qty: 7

BRG	X-LOC	REACT	SIZE	REQ'D
1	0- 4- 0	1233	8.00"	1.50"
2	33- 0- 0	1381	8.00"	1.50"

BRG REQUIREMENTS shown are based ONLY on the truss material at each bearing
MAX DEFLECTION (span) :
L/939 MEM 9-10 (LIVE) LC 1
L= -0.42" D= -0.42" T= -0.84"
CRITICAL MEMBER FORCES:

TC	COMP.(DUR.)/	TENS.(DUR.)	CSI
1-2	-3704(1.25)/	1311(1.60)	0.53
2-3	-2685(1.25)/	921(1.60)	0.74
3-4	-2643(1.25)/	931(1.60)	0.74
4-5	-2686(1.25)/	908(1.60)	0.47
5-6	-3704(1.25)/	1293(1.60)	0.53

BC	COMP.(DUR.)/	TENS.(DUR.)	CSI
7-8	-1105(1.60)/	3339(1.25)	0.86
8-9	-1117(1.60)/	3347(1.25)	0.72
9-10	-1092(1.60)/	3347(1.25)	0.72
10-11	-1080(1.60)/	3339(1.25)	0.86

WB	COMP.(DUR.)/	TENS.(DUR.)	CSI
2-8	/	138(0.90)	0.03
2-9	-904(1.25)/	540(1.60)	0.23
3-9	-496(1.60)/	1869(1.25)	0.33
5-9	-904(1.25)/	532(1.60)	0.23
5-10	/	138(0.90)	0.03

TC	2x4 SP	#2 D
BC	2x4 SP	#2 D
WEB	2x4 SP	#2 D
WEDGE	2x4 SP	#2 D

This design does not account for long term time dependent loading (creep). Building Designer must account for this.
Refer to Joint QC Detail Sheet for Maximum Rotational Tolerance used IRC/IBC truss plate values are based on testing and approval as required by IBC 1703 and ANSI/TPI and are reported in available documents such as ICBO #1607.

☒ Web bracing required at each location shown. See standard details (TX01087001-001 rev1).
Designed per ANSI/TPI 1-2002
Plating is based on quality control factors
Cq = 1.20 for wide face and
Cq = 1.11 for narrow face.
Any alterations to this are shown for individual joints on the Joint Report.
THIS DESIGN IS THE COMPOSITE RESULT OF MULTIPLE LOAD CASES.
Loaded for 10 PSF non-concurrent BCLL.
+ +
Unrestrained horiz. LL deflection = 0.29 "
+ +

UPLIFT REACTION(S) :

Support	C&C Wind	Non-Wind
1	-490 lb	
2	-632 lb	

HORIZONTAL REACTION(S) :
support 1 -171 lb
support 2 -171 lb
This truss is designed using the ASCE7-02 Wind Specification
Bldg Enclosed = Yes, Importance Factor = 1.00
Truss Location = Not End Zone
Hurricane/Ocean Line = No , Exp Category = B
Bldg Length = 40.00 ft, Bldg Width = 20.00 ft
Mean roof height = 12.34 ft, mph = 120
TPI Standard Occupancy, Dead Load = 9.2 psf
Designed as Main Wind Force Resisting System and Components and Cladding
Tributary Area = 67 sqft

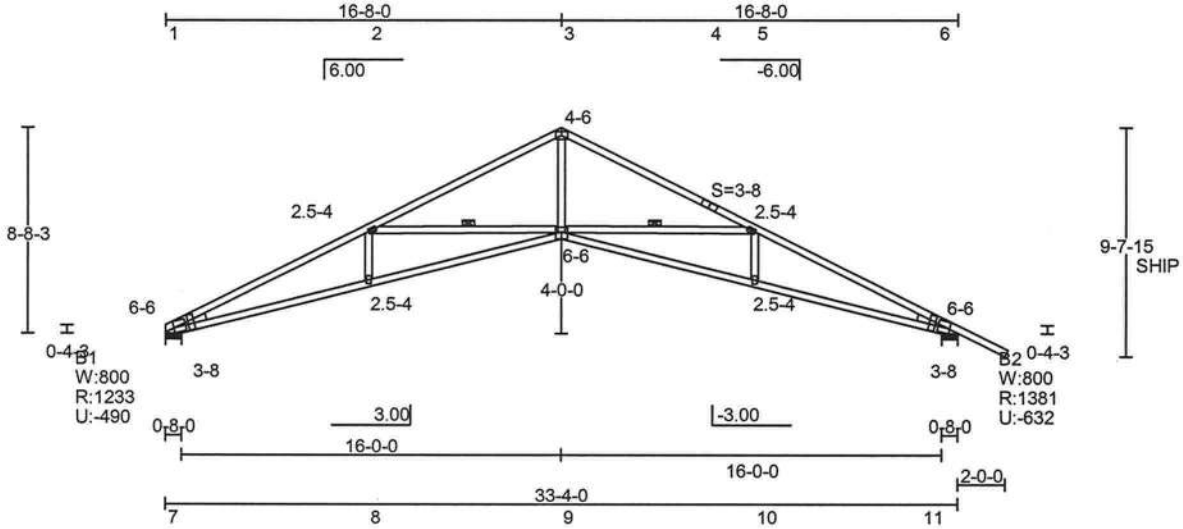

Truswal Systems Corporation
Donald Lee Scott, P.E.
220 Westway Place, Suite 200
Arlington, Texas 76018
Florida License No. 35036
Date: 3/27/2007

All connector plates are Truswal 20 ga. unless shown by "18"(18 ga.), "H"(16 ga.), or "MX"(TWMX 20 ga.), positioned per Joint Details Report. Circled plates and false frame plates are positioned as shown above. Shift gable stud plates to avoid overlap with structural plates (or staple).

TRUSWAL SYSTEMS
TTW Building Components Group, Inc.
220 Westway Place, Suite 200, Arlington, TX 76018
Florida Certificate of Authorization # 278
TRUSPLUS 6.0 VER: T6.5.41

WARNING ***Read all notes on this sheet and give a copy of it to the Erecting Contractor.***

This design is for an individual building component not truss system. It has been based on specifications provided by the component manufacturer and done in accordance with the current versions of TPI and AFPA design standards. No responsibility is assumed for dimensional accuracy. Dimensions are to be verified by the component manufacturer and/or building designer prior to fabrication. The building designer must ascertain that the loads utilized on this design meet or exceed the loading imposed by the local building code and the particular application. The design assumes that the top chord is laterally braced by the roof or floor sheathing and the bottom chord is laterally braced by a rigid sheathing material directly attached, unless otherwise noted. Bracing shown is for lateral support of components members only to reduce buckling length. This component shall not be placed in any environment that will cause the moisture content of the wood to exceed 19% and/or cause connector plate corrosion. Fabricate, handle, install and brace this truss in accordance with the following standards: 'Joint and Cutting Detail Reports' available as output from Truswal software, 'ANSI/TPI 1', 'WTCA 1' - Wood Truss Council of America Standard Design Responsibilities, 'BUILDING COMPONENT SAFETY INFORMATION' - (BCSI 1-03) and 'BCSI SUMMARY SHEETS' by WTCA and TPI. The Truss Plate Institute (TPI) is located at 583 D'Onofrio Drive, Madison, Wisconsin 53719. The American Forest and Paper Association (AFPA) is located at 1111 19th Street, NW, Ste 800, Washington, DC 20036.

Cust: BEN ATKINS
WO: Drive_J_jr60-07_L00006_J00001
Dsgnr: ABCD #LC = 34 WT: 197#

TC Live	20.00 psf	LiveDur	L=1.25 P=1.25
TC Snow(Ps)	0.00 psf	SnowDur	L=1.15 P=1.15
TC Dead	7.00 psf	Rep Mbr Bnd / Comp / Tens	
BC Live	0.00 psf		1.15 / 1.10 / 1.10
BC Dead	10.00 psf	O.C.Spacing	2- 0- 0
Bldg Code:	FBC2004R	DEFL RATIO:	L/240 TC: L/240

Job Name: ACE CONST. Truss ID: T-08 Qty: 3

BRG	X-LOC	REACT	SIZE	REQ'D
1	0- 4- 0	1147	8.00"	1.50"
2	30- 8- 0	1140	8.00"	5.50"

BRG REQUIREMENTS shown are based ONLY on the truss material at each bearing
MAX DEFLECTION (span) :
L/999 MEM 7-8 (LIVE) LC 2
L= -0.29" D= -0.31" T= -0.61"
EX.WB DEF CRITERIA:L/120
IN MEM 11- 5; T= 0.05"
CRITICAL MEMBER FORCES:

TC	COMP.(DUR.)/	TENS.(DUR.)	CSI
1-2	-3377(1.25)/	1286(1.60)	0.48
2-3	-2324(1.25)/	898(1.60)	0.64
3-4	-2327(1.25)/	920(1.60)	0.53
4-5	-2737(1.25)/	1055(1.60)	0.43

BC	COMP.(DUR.)/	TENS.(DUR.)	CSI
6-7	-1207(1.60)/	3042(1.25)	0.76
7-8	-1220(1.60)/	3048(1.25)	0.68
8-9	-989(1.60)/	2504(1.25)	0.54
9-10	-323(1.60)/	402(1.60)	0.23

WB	COMP.(DUR.)/	TENS.(DUR.)	CSI
2-7	/	141(0.90)	0.03
2-8	-940(1.25)/	571(1.60)	0.24
3-8	-488(1.60)/	1560(1.25)	0.27
4-8	-416(1.25)/	418(1.60)	0.11
4-9	-203(1.25)/	214(1.60)	0.03
5-9	-868(1.60)/	2411(1.25)	0.44
11-10	-1140(1.25)/	471(1.60)	0.07
10-5	-1094(1.25)/	506(1.60)	0.07

TC	2x4	SP	#2	D
BC	2x4	SP	#2	D
WEB	2x4	SP	#2	D
	2x6	SP	SS	11-5
WEDGE	2x4	SP	#2	D

This design does not account for long term time dependent loading (creep). Building Designer must account for this.
THIS DESIGN IS THE COMPOSITE RESULT OF MULTIPLE LOAD CASES.
Loaded for 10 PSF non-concurrent BCLL.
Shim bearings (if needed) for req. support.

☒ Web bracing required at each location shown. See standard details (TX01087001-001 rev1).
Designed per ANSI/TPI 1-2002
Plating is based on quality control factors
Cq = 1.20 for wide face and
Cq = 1.11 for narrow face.
Any alterations to this are shown for individual joints on the Joint Report.
Refer to Joint QC Detail Sheet for Maximum Rotational Tolerance used
IRC/IBC truss plate values are based on testing and approval as required by IBC 1703 and ANSI/TPI and are reported in available documents such as ICBO #1607.

UPLIFT REACTION(S) :

Support	C&C Wind	Non-Wind
1	-460 lb	
2	-470 lb	

HORIZONTAL REACTION(S) :
support 1 -192 lb
support 2 -192 lb
This truss is designed using the ASCE7-02 Wind Specification
Bldg Enclosed = Yes, Importance Factor = 1.00
Truss Location = Not End Zone
Hurricane/Ocean Line = No , Exp Category = B
Bldg Length = 40.00 ft, Bldg Width = 20.00 ft
Mean roof height = 12.34 ft, mph = 120
TPI Standard Occupancy, Dead Load = 9.2 psf
Designed as Main Wind Force Resisting System and Components and Cladding
Tributary Area = 62 sqft
Vertical members exposed to wind: 11- 5

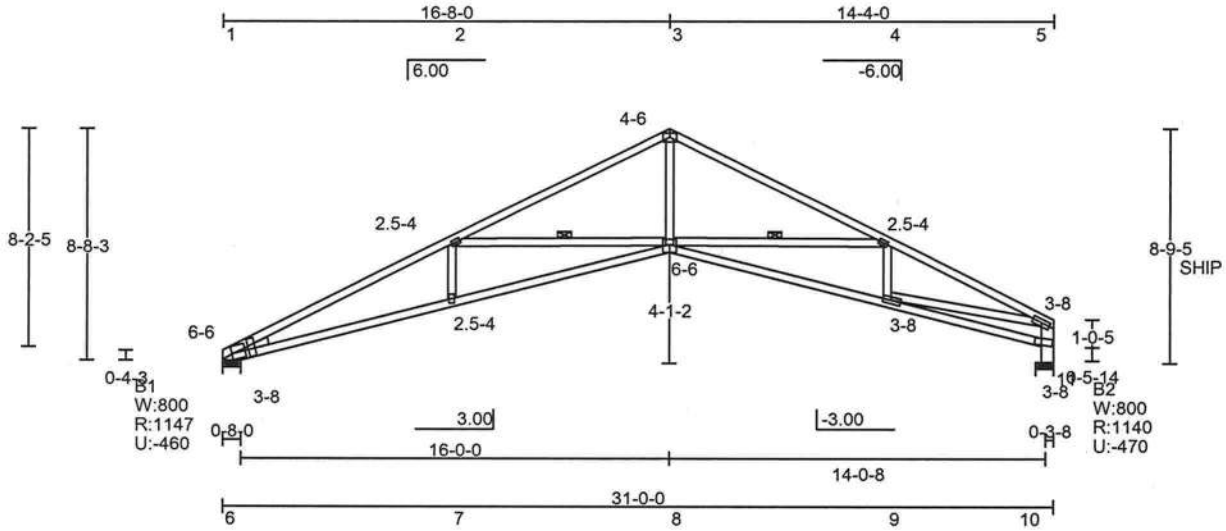

Truswal Systems Corporation
Donald Lee Scott, P.E.
220 Westway Place, Suite 200
Arlington, Texas 76018
Florida License No. 35036
Date: 3/27/2007

All connector plates are Truswal 20 ga. unless shown by "18"(18 ga.), "H"(16 ga.), or "MX"(TWMX 20 ga.), positioned per Joint Details Report. Circled plates and false frame plates are positioned as shown above. Shift gable stud plates to avoid overlap with structural plates (or staple).

TRUSWAL SYSTEMS
TPI Building Components Group, Inc.
220 Westway Place, Suite 200, Arlington, TX 76018
Florida Certificate of Authorization # 278
TRUSPLUS 6.0 VER: T6.5.41

WARNING ***Read all notes on this sheet and give a copy of it to the Erecting Contractor.***

This design is for an individual building component not truss system. It has been based on specifications provided by the component manufacturer and done in accordance with the current versions of TPI and AFPA design standards. No responsibility is assumed for dimensional accuracy. Dimensions are to be verified by the component manufacturer and/or building designer prior to fabrication. The building designer must ascertain that the loads utilized on this design meet or exceed the loading imposed by the local building code and the particular application. The design assumes that the top chord is laterally braced by the roof or floor sheathing and the bottom chord is laterally braced by a rigid sheathing material directly attached, unless otherwise noted. Bracing shown is for lateral support of components members only to reduce buckling length. This component shall not be placed in any environment that will cause the moisture content of the wood to exceed 19% and/or cause connector plate corrosion. Fabricate, handle, install and brace this truss in accordance with the following standards: 'Joint and Cutting Detail Reports' available as output from Truswal software, 'ANSI/TPI 1', 'WTCA 1' - Wood Truss Council of America Standard Design Responsibilities, 'BUILDING COMPONENT SAFETY INFORMATION' - (BCSI 1-03) and 'BCSI SUMMARY SHEETS' by WTCA and TPI. The Truss Plate Institute (TPI) is located at 583 D'Onofrio Drive, Madison, Wisconsin 53719. The American Forest and Paper Association (AFPA) is located at 1111 19th Street, NW, Ste 800, Washington, DC 20036.

Cust: BEN ATKINS
WO: Drive_J_jr60-07_L00006_J00001
Dsgnr: ABCD #LC = 37 WT: 195#

TC Live	20.00 psf	LiveDur	L=1.25 P=1.25
TC Snow(Ps)	0.00 psf	SnowDur	L=1.15 P=1.15
TC Dead	7.00 psf	Rep Mbr Bnd / Comp / Tens	
BC Live	0.00 psf		1.15 / 1.10 / 1.10
BC Dead	10.00 psf	O.C.Spacing	2- 0- 0
Bldg Code:	FBC2004R	DEFL RATIO:	L/240 TC: L/240

Job Name: ACE CONST. Truss ID: T-09 Qty: 1

BRG	X-LOC	REACT	SIZE	REQ'D
1	0- 4- 0	1744	8.00"	1.76"
2	21- 5-12	1592	3.50"	1.61"

BRG REQUIREMENTS shown are based ONLY on the truss material at each bearing

MAX DEFLECTION (span) :
L/999 MEM 8-9 (LIVE) LC 1
L= -0.12" D= -0.24" T= -0.37"
EX.WB DEF CRITERIA:L/120
IN MEM 11- 6; T= 0.00"

CRITICAL MEMBER FORCES:

TC	COMP.(DUR.)/	TENS.(DUR.)	CSI
1-2	-2943(1.25)/	542(1.60)	0.65
2-3	-2598(1.25)/	561(1.60)	0.37
3-4	-2521(1.25)/	534(1.60)	0.37
4-5	-2867(1.25)/	554(1.60)	0.39
5-6	-45(1.60)/	49(1.60)	0.36

BC	COMP.(DUR.)/	TENS.(DUR.)	CSI
7-8	-555(1.60)/	2548(1.25)	0.75
8-9	-616(1.60)/	2845(1.25)	0.83
9-10	-616(1.60)/	2845(1.25)	0.79
10-11	-665(1.60)/	2542(1.25)	0.74

WB	COMP.(DUR.)/	TENS.(DUR.)	CSI
2-8	-42(1.60)/	923(1.25)	0.16
3-8	-340(1.25)/	178(1.60)	0.13
3-10	-437(1.25)/	165(1.60)	0.17
4-10	-93(1.60)/	1026(1.25)	0.18
5-10	-107(1.60)/	213(1.60)	0.03
5-11	-2900(1.25)/	708(1.60)	0.58
6-11	-153(1.25)/	93(1.60)	0.04

TC	2x4	SP	#2 D
BC	2x4	SP	#2 D
WEB	2x4	SP	#2 D

This design does not account for long term time dependent loading (creep). Building Designer must account for this.
THIS DESIGN IS THE COMPOSITE RESULT OF MULTIPLE LOAD CASES.
Loaded for 10 PSF non-concurrent BCLL.
Drainage must be provided to avoid ponding.
Permanent bracing is required (by others) to prevent rotation/toppling. See BCSI 1-03 and ANSI/TPI 1.

Designed per ANSI/TPI 1-2002
Plating is based on quality control factors
Cq = 1.20 for wide face and
Cq = 1.11 for narrow face.
Any alterations to this are shown for individual joints on the Joint Report.
Refer to Joint QC Detail Sheet for Maximum Rotational Tolerance used
IRC/IBC truss plate values are based on testing and approval as required by IBC 1703 and ANSI/TPI and are reported in available documents such as ICBO #1607.
End verticals are designed for axial loads only unless noted otherwise.
Extensions above or below the truss profile (if any) have been designed for loads indicated only. Horizontal loads applied at the end of the extensions have not been considered unless shown. A drop-leg to an otherwise unsupported wall may create a hinge effect that requires additional design consideration (by others).

UPLIFT REACTION(S) :

Support	C&C Wind	Non-Wind
1	-810 lb	
2	-739 lb	

HORIZONTAL REACTION(S) :
support 1 166 lb
support 2 166 lb
This truss is designed using the ASCE7-02 Wind Specification
Bldg Enclosed = Yes, Importance Factor = 1.00
Truss Location = Not End Zone
Hurricane/Ocean Line = No , Exp Category = B
Bldg Length = 40.00 ft, Bldg Width = 20.00 ft
Mean roof height = 9.92 ft, mph = 120
TPI Standard Occupancy, Dead Load = 9.2 psf
Designed as Main Wind Force Resisting System and Components and Cladding
Tributary Area = 86 sqft
Vertical members exposed to wind: 11- 6

----------LOAD CASE #1 DESIGN LOADS ----------

Dir	L.Plf	L.Loc	R.Plf	R.Loc	LL/TL
TC Vert	74.00	2- 0- 0	74.00	0- 0- 0	0.54
TC Vert	54.00	0- 0- 0	54.00	7- 0- 0	0.74
TC Vert	117.56	7- 0- 0	117.56	14- 7- 8	0.74
TC Vert	54.00	14- 7- 8	54.00	21- 7- 8	0.74
BC Vert	20.00	0- 0- 0	20.00	7- 0- 0	0.00
BC Vert	43.54	7- 0- 0	43.54	14- 7- 8	0.00
BC Vert	20.00	14- 7- 8	20.00	21- 7- 8	0.00

...Type...	lbs	X.Loc	LL/TL
TC Vert	0.0	0- 4- 0	1.00
BC Vert	249.6	7- 0- 0	1.00
BC Vert	212.2	7- 0- 0	0.00
BC Vert	249.6	14- 7- 8	1.00
BC Vert	212.2	14- 7- 8	0.00

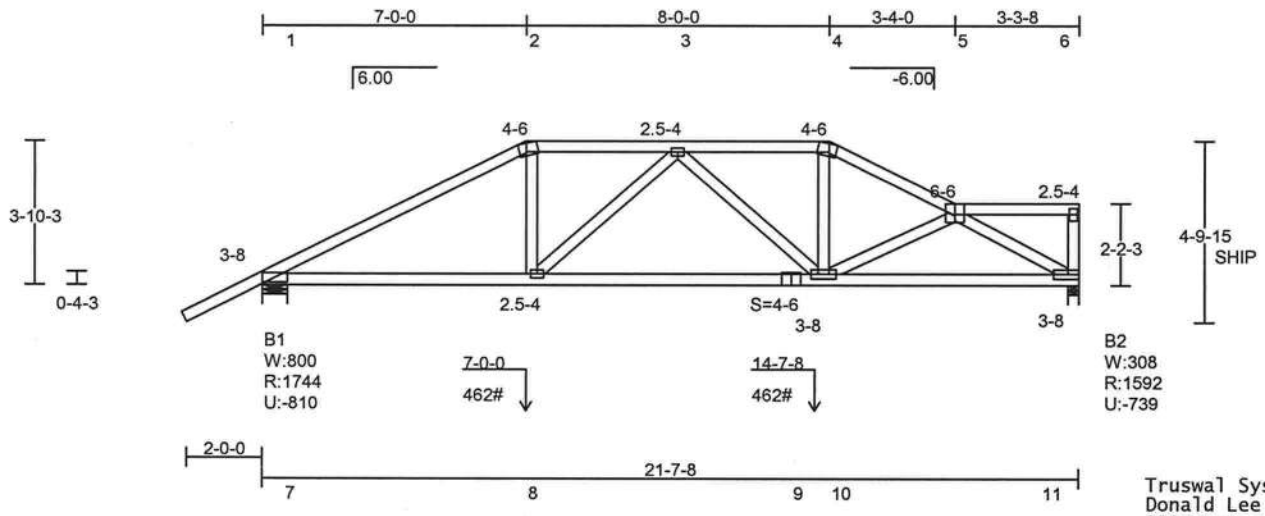

Truswal Systems Corporation
Donald Lee Scott, P.E.
220 Westway Place, Suite 200
Arlington, Texas 76018
Florida License No. 35036
Date: 3/27/2007

All connector plates are Truswal 20 ga. unless shown by "18"(18 ga.), "H"(16 ga.), or "MX"(TWMX 20 ga.), positioned per Joint Details Report. Circled plates and false frame plates are positioned as shown above. Shift gable stud plates to avoid overlap with structural plates (or staple).

TRUSWAL SYSTEMS
ITW Building Components Group, Inc.
220 Westway Place, Suite 200, Arlington, TX 76018
Florida Certificate of Authorization # 278
TRUSPLUS 6.0 VER: T6.5.41

WARNING *Read all notes on this sheet and give a copy of it to the Erecting Contractor.*

This design is for an individual building component not truss system. It has been based on specifications provided by the component manufacturer and done in accordance with the current versions of TPI and AFPA design standards. No responsibility is assumed for dimensional accuracy. Dimensions are to be verified by the component manufacturer and/or building designer prior to fabrication. The building designer must ascertain that the loads utilized on this design meet or exceed the loading imposed by the local building code and the particular application. The design assumes that the top chord is laterally braced by the roof or floor sheathing and the bottom chord is laterally braced by a rigid sheathing material directly attached, unless otherwise noted. Bracing shown is for lateral support of components members only to reduce buckling length. This component shall not be placed in any environment that will cause the moisture content of the wood to exceed 19% and/or cause connector plate corrosion. Fabricate, handle, install and brace this truss in accordance with the following standards: 'Joint and Cutting Detail Reports' available as output from Truswal software, 'ANSI/TPI 1', 'WTCA 1' - Wood Truss Council of America Standard Design Responsibilities, 'BUILDING COMPONENT SAFETY INFORMATION' - (BCSI 1-03) and 'BCSI SUMMARY SHEETS' by WTCA and TPI. The Truss Plate Institute (TPI) is located at 583 D'Onofrio Drive, Madison, Wisconsin 53719. The American Forest and Paper Association (AFPA) is located at 1111 19th Street, NW, Ste 800, Washington, DC 20036.

Cust: BEN ATKINS
WO: Drive_J_jr60-07_L00006_J00001
Dsgnr: ABCD #LC = 37 WT: 142#

TC Live	20.00 psf	LiveDur	L=1.25 P=1.25
TC Snow(Ps)	0.00 psf	SnowDur	L=1.15 P=1.15
TC Dead	7.00 psf	Rep Mbr Bnd / Comp / Tens	
BC Live	0.00 psf		1.00 / 1.00 / 1.00
BC Dead	10.00 psf	O.C.Spacing	2- 0- 0
Bldg Code:	FBC2004R	DEFL RATIO:	L/240 TC: L/240

Job Name: ACE CONST. Truss ID: T-10 Qty: 1

BRG	X-LOC	REACT	SIZE	REQ'D
1	0- 1-12	947	3.50"	1.50"
2	21- 3- 0	799	8.00"	1.50"

BRG REQUIREMENTS shown are based ONLY on the truss material at each bearing
MAX DEFLECTION (span) :
L/999 MEM 10-11 (LIVE) LC 35
L= -0.20" D= -0.17" T= -0.37"
EX.WB DEF CRITERIA:L/120
IN MEM 11- 6; T= 0.01"
CRITICAL MEMBER FORCES:

TC	COMP.(DUR.)/	TENS.(DUR.)	CSI
1-2	-1361(1.25)/	646(1.60)	0.19
2-3	-1090(1.25)/	535(1.60)	0.18
3-4	-918(1.25)/	518(1.60)	0.13
4-5	-1080(1.25)/	541(1.60)	0.22
5-6	-68(1.60)/	74(1.60)	0.28

BC	COMP.(DUR.)/	TENS.(DUR.)	CSI
7-8	-779(1.60)/	1184(1.25)	0.36
8-9	-552(1.60)/	918(1.25)	0.44
9-10	-683(1.60)/	1084(1.25)	0.44
10-11	-683(1.60)/	1084(1.25)	0.53

WB	COMP.(DUR.)/	TENS.(DUR.)	CSI
2-8	-297(1.25)/	271(1.60)	0.11
3-8	-47(1.60)/	250(1.25)	0.04
4-9	-93(1.60)/	323(1.25)	0.06
5-9	-214(1.25)/	273(1.60)	0.06
5-11	-1229(1.25)/	697(1.60)	0.61
6-11	-146(1.25)/	128(1.60)	0.09

TC	2x4	SP #2 D
BC	2x4	SP #2 D
WEB	2x4	SP #2 D

This design does not account for long term time dependent loading (creep). Building Designer must account for this.
THIS DESIGN IS THE COMPOSITE RESULT OF MULTIPLE LOAD CASES.
Loaded for 10 PSF non-concurrent BCLL.
Drainage must be provided to avoid ponding.
End verticals are designed for axial loads only unless noted otherwise.
Extensions above or below the truss profile (if any) have been designed for loads indicated only. Horizontal loads applied at the end of the extensions have not been considered unless shown. A drop-leg to an otherwise unsupported wall may create a hinge effect that requires additional design consideration (by others).

Designed per ANSI/TPI 1-2002
Plating is based on quality control factors
Cq = 1.20 for wide face and
Cq = 1.11 for narrow face.
Any alterations to this are shown for individual joints on the Joint Report.
Refer to Joint QC Detail Sheet for Maximum Rotational Tolerance used
IRC/IBC truss plate values are based on testing and approval as required by IBC 1703 and ANSI/TPI and are reported in available documents such as ICBO #1607.

UPLIFT REACTION(S) :

Support	C&C Wind	Non-Wind
1	-516 lb	
2	-416 lb	

HORIZONTAL REACTION(S) :
support 1 256 lb
support 2 256 lb
This truss is designed using the ASCE7-02 Wind Specification
Bldg Enclosed = Yes, Importance Factor = 1.00
Truss Location = Not End Zone
Hurricane/Ocean Line = No , Exp Category = B
Bldg Length = 40.00 ft, Bldg Width = 20.00 ft
Mean roof height = 10.42 ft, mph = 120
TPI Standard Occupancy, Dead Load = 9.2 psf
Designed as Main Wind Force Resisting System and Components and Cladding
Tributary Area = 43 sqft
Vertical members exposed to wind: 11- 6

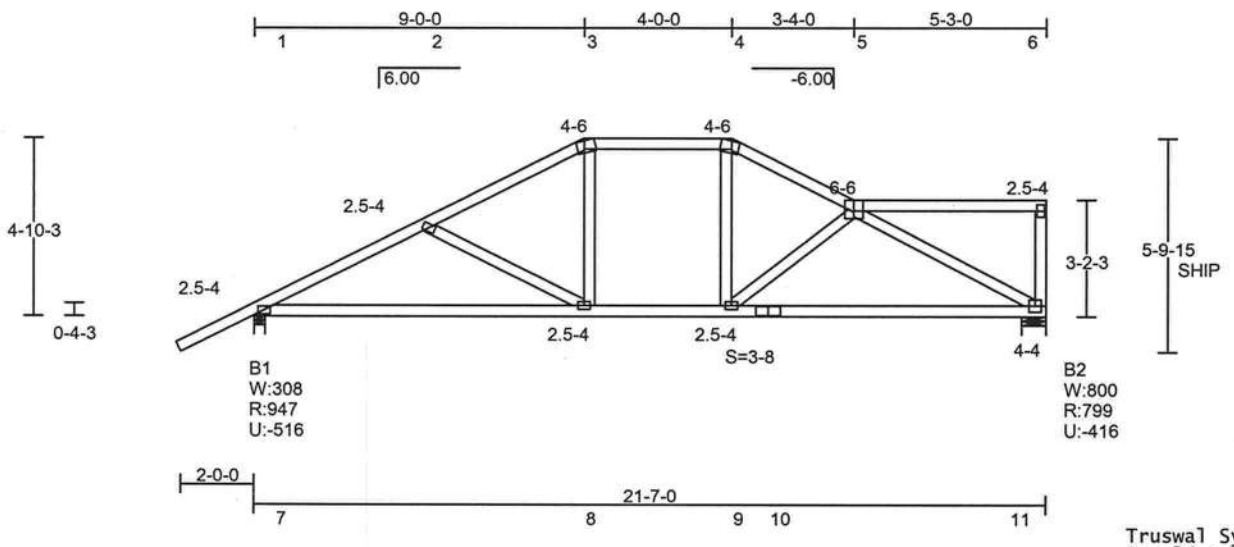

Truswal Systems Corporation
Donald Lee Scott, P.E.
220 Westway Place, Suite 200
Arlington, Texas 76018
Florida License No. 35036
Date: 3/27/2007

All connector plates are Truswal 20 ga. unless shown by "18"(18 ga.), "H"(16 ga.), or "MX"(TWMX 20 ga.), positioned per Joint Details Report.
Circled plates and false frame plates are positioned as shown above. Shift gable stud plates to avoid overlap with structural plates (or staple).

TRUSWAL SYSTEMS
TW Building Components Group, Inc.
220 Westway Place, Suite 200, Arlington, TX 76018
Florida Certificate of Authorization # 278
TRUSPLUS 6.0 VER: T6.5.41

WARNING ***Read all notes on this sheet and give a copy of it to the Erecting Contractor.***

This design is for an individual building component not truss system. It has been based on specifications provided by the component manufacturer and done in accordance with the current versions of TPI and AFPA design standards. No responsibility is assumed for dimensional accuracy. Dimensions are to be verified by the component manufacturer and/or building designer prior to fabrication. The building designer must ascertain that the loads utilized on this design meet or exceed the loading imposed by the local building code and the particular application. The design assumes that the top chord is laterally braced by the roof or floor sheathing and the bottom chord is laterally braced by a rigid sheathing material directly attached, unless otherwise noted. Bracing shown is for lateral support of components members only to reduce buckling length. This component shall not be placed in any environment that will cause the moisture content of the wood to exceed 19% and/or cause connector plate corrosion. Fabricate, handle, install and brace this truss in accordance with the following standards: 'Joint and Cutting Detail Reports' available as output from Truswal software, 'ANSI/TPI 1', 'WTCA 1' - Wood Truss Council of America Standard Design Responsibilities, 'BUILDING COMPONENT SAFETY INFORMATION' - (BCSI 1-03) and 'BCSI SUMMARY SHEETS' by WTCA and TPI. The Truss Plate Institute (TPI) is located at 583 D'Onofrio Drive, Madison, Wisconsin 53719. The American Forest and Paper Association (AFPA) is located at 1111 19th Street, NW, Ste 800, Washington, DC 20036.

Cust: BEN ATKINS
WO: Drive_J_jr60-07_L00006_J00001
Dsgnr: ABCD #LC = 37 WT: 143#

TC Live	20.00 psf	LiveDur L=1.25 P=1.25
TC Snow(Ps)	0.00 psf	SnowDur L=1.15 P=1.15
TC Dead	7.00 psf	Rep Mbr Bnd / Comp / Tens
BC Live	0.00 psf	1.15 / 1.10 / 1.10
BC Dead	10.00 psf	O.C.Spacing 2- 0- 0
Bldg Code:	FBC2004R	DEFL RATIO: L/240 TC: L/240

Job Name: ACE CONST. Truss ID: T-11 Qty: 1

BRG	X-LOC	REACT	SIZE	REQ'D
1	0- 4- 0	954	8.00"	1.50"
2	21- 5- 4	791	3.50"	1.50"

BRG REQUIREMENTS shown are based ONLY on the truss material at each bearing
MAX DEFLECTION (span) :
L/733 MEM 8-9 (LIVE) LC 35
L= -0.35" D= -0.31" T= -0.65"
EX.WB DEF CRITERIA:L/120
IN MEM 9- 5; T= 0.03"
CRITICAL MEMBER FORCES:

TC	COMP.(DUR.)/	TENS.(DUR.)	CSI
1-2	-1288(1.25)/	576(1.60)	0.24
2-3	-964(1.25)/	441(1.60)	0.24
3-4	-944(1.25)/	453(1.60)	0.34
4-5	-92(1.60)/	100(1.60)	0.48

BC	COMP.(DUR.)/	TENS.(DUR.)	CSI
6-7	-760(1.60)/	1103(1.25)	0.83
7-8	-632(1.60)/	988(1.25)	0.82
8-9	-632(1.60)/	988(1.25)	0.66

WB	COMP.(DUR.)/	TENS.(DUR.)	CSI
2-7	-347(1.25)/	298(1.60)	0.18
3-7	-246(1.60)/	630(1.25)	0.11
4-7	-300(1.25)/	327(1.60)	0.11
4-9	-1116(1.25)/	610(1.60)	0.29
5-9	-187(1.25)/	159(1.60)	0.16

TC	2x4	SP #2 D
BC	2x4	SP #2 D
WEB	2x4	SP #2 D

This design does not account for long term time dependent loading (creep). Building Designer must account for this.
Refer to Joint QC Detail Sheet for Maximum Rotational Tolerance used
IRC/IBC truss plate values are based on testing and approval as required by IBC 1703 and ANSI/TPI and are reported in available documents such as ICBO #1607.

☒ Web bracing required at each location shown. See standard details (TX01087001-001 rev1).
Designed per ANSI/TPI 1-2002
Plating is based on quality control factors
Cq = 1.20 for wide face and
Cq = 1.11 for narrow face.
Any alterations to this are shown for individual joints on the Joint Report.
THIS DESIGN IS THE COMPOSITE RESULT OF MULTIPLE LOAD CASES.
Loaded for 10 PSF non-concurrent BCLL.
Drainage must be provided to avoid ponding.
End verticals are designed for axial loads only unless noted otherwise.
Extensions above or below the truss profile (if any) have been designed for loads indicated only. Horizontal loads applied at the end of the extensions have not been considered unless shown. A drop-leg to an otherwise unsupported wall may create a hinge effect that requires additional design consideration (by others).

UPLIFT REACTION(S) :

Support	C&C Wind	Non-Wind
1	-504 lb	
2	-400 lb	

HORIZONTAL REACTION(S) :
support 1 347 lb
support 2 347 lb
This truss is designed using the ASCE7-02 Wind Specification
Bldg Enclosed = Yes, Importance Factor = 1.00
Truss Location = Not End Zone
Hurricane/Ocean Line = No , Exp Category = B
Bldg Length = 40.00 ft, Bldg Width = 20.00 ft
Mean roof height = 10.92 ft, mph = 120
TPI Standard Occupancy, Dead Load = 9.2 psf
Designed as Main Wind Force Resisting System and Components and Cladding
Tributary Area = 43 sqft
Vertical members exposed to wind: 9- 5

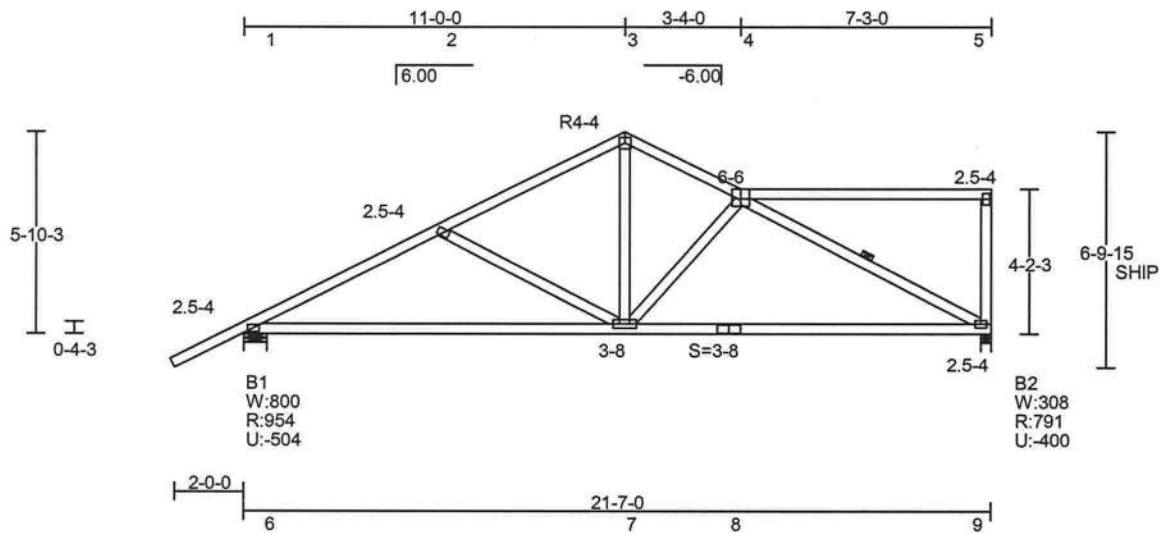

Truswal Systems Corporation
Donald Lee Scott, P.E.
220 Westway Place, Suite 200
Arlington, Texas 76018
Florida License No. 35036
Date: 3/27/2007

All connector plates are Truswal 20 ga. unless shown by "18"(18 ga.), "H"(16 ga.), or "MX"(TWMX 20 ga.), positioned per Joint Details Report. Circled plates and false frame plates are positioned as shown above. Shift gable stud plates to avoid overlap with structural plates (or staple).

TRUSWAL SYSTEMS
TW Building Components Group, Inc.
220 Westway Place, Suite 200, Arlington, TX 76018
Florida Certificate of Authorization # 278
TRUSPLUS 6.0 VER: T6.5.41

WARNING *Read all notes on this sheet and give a copy of it to the Erecting Contractor.*

This design is for an individual building component not truss system. It has been based on specifications provided by the component manufacturer and done in accordance with the current versions of TPI and AFPA design standards. No responsibility is assumed for dimensional accuracy. Dimensions are to be verified by the component manufacturer and/or building designer prior to fabrication. The building designer must ascertain that the loads utilized on this design meet or exceed the loading imposed by the local building code and the particular application. The design assumes that the top chord is laterally braced by the roof or floor sheathing and the bottom chord is laterally braced by a rigid sheathing material directly attached, unless otherwise noted. Bracing shown is for lateral support of components members only to reduce buckling length. This component shall not be placed in any environment that will cause the moisture content of the wood to exceed 19% and/or cause connector plate corrosion. Fabricate, handle, install and brace this truss in accordance with the following standards: 'Joint and Cutting Detail Reports' available as output from Truswal software, 'ANSI/TPI 1', 'WTCA 1' - Wood Truss Council of America Standard Design Responsibilities, 'BUILDING COMPONENT SAFETY INFORMATION' - (BCSI 1-03) and 'BCSI SUMMARY SHEETS' by WTCA and TPI. The Truss Plate Institute (TPI) is located at 583 D'Onofrio Drive, Madison, Wisconsin 53719. The American Forest and Paper Association (AFPA) is located at 1111 19th Street, NW, Ste 800, Washington, DC 20036.

Cust: BEN ATKINS
WO: Drive_J_jr60-07_L00006_J00001
Dsgnr: ABCD #LC = 37 WT: 145#

TC Live	20.00 psf	LiveDur	L=1.25 P=1.25
TC Snow(Ps)	0.00 psf	SnowDur	L=1.15 P=1.15
TC Dead	7.00 psf	Rep Mbr Bnd / Comp / Tens	
BC Live	0.00 psf		1.15 / 1.10 / 1.10
BC Dead	10.00 psf	O.C.Spacing	2- 0- 0
Bldg Code:	FBC2004R	DEFL RATIO:	L/240 TC: L/240

Job Name: ACE CONST. Truss ID: T-12 Qty: 1

BRG	X-LOC	REACT	SIZE	REQ'D
1	0- 4- 0	954	8.00"	1.50"
2	21- 5- 4	791	3.50"	1.50"

BRG REQUIREMENTS shown are based ONLY on the truss material at each bearing
MAX DEFLECTION (span) :
L/797 MEM 9-10 (LIVE) LC 35
L= -0.32" D= -0.28" T= -0.60"
EX.WB DEF CRITERIA:L/120
IN MEM 10- 6; T= 0.07"

CRITICAL MEMBER FORCES:

TC	COMP.(DUR.)/	TENS.(DUR.)	CSI
1-2	-1284(1.25)/	560(1.60)	0.23
2-3	-957(1.25)/	422(1.60)	0.23
3-4	-895(1.25)/	449(1.60)	0.13
4-5	-925(1.25)/	469(1.60)	0.22
5-6	-116(1.60)/	126(1.60)	0.21

BC	COMP.(DUR.)/	TENS.(DUR.)	CSI
7-8	-809(1.60)/	1099(1.25)	0.82
8-9	-436(1.60)/	559(1.25)	0.77
9-10	-436(1.60)/	559(1.25)	0.59

WB	COMP.(DUR.)/	TENS.(DUR.)	CSI
2-8	-345(1.25)/	301(1.60)	0.18
3-8	-243(1.60)/	590(1.25)	0.11
4-8	-512(1.25)/	323(1.60)	0.18
5-8	-208(1.60)/	478(1.25)	0.17
5-10	-826(1.25)/	473(1.60)	0.52
6-10	-100(1.25)/	98(1.60)	0.23

TC	2x4	SP #2 D
BC	2x4	SP #2 D
WEB	2x4	SP #2 D

This design does not account for long term time dependent loading (creep). Building Designer must account for this.
THIS DESIGN IS THE COMPOSITE RESULT OF MULTIPLE LOAD CASES.
Loaded for 10 PSF non-concurrent BCLL.
Drainage must be provided to avoid ponding.
End verticals are designed for axial loads only unless noted otherwise.
Extensions above or below the truss profile (if any) have been designed for loads indicated only. Horizontal loads applied at the end of the extensions have not been considered unless shown. A drop-leg to an otherwise unsupported wall may create a hinge effect that requires additional design consideration (by others).

Designed per ANSI/TPI 1-2002
Plating is based on quality control factors
Cq = 1.20 for wide face and
Cq = 1.11 for narrow face.
Any alterations to this are shown for individual joints on the Joint Report.
Refer to Joint QC Detail Sheet for Maximum Rotational Tolerance used
IRC/IBC truss plate values are based on testing and approval as required by IBC 1703 and ANSI/TPI and are reported in available documents such as ICBO #1607.

UPLIFT REACTION(S) :

Support	C&C Wind	Non-Wind
1	-496 lb	
2	-404 lb	

HORIZONTAL REACTION(S) :
support 1 454 lb
support 2 454 lb
This truss is designed using the ASCE7-02 Wind Specification
Bldg Enclosed = Yes, Importance Factor = 1.00
Truss Location = Not End Zone
Hurricane/Ocean Line = No , Exp Category = B
Bldg Length = 40.00 ft, Bldg Width = 20.00 ft
Mean roof height = 10.92 ft, mph = 120
TPI Standard Occupancy, Dead Load = 9.2 psf
Designed as Main Wind Force Resisting System and Components and Cladding
Tributary Area = 43 sqft
Vertical members exposed to wind: 10- 6

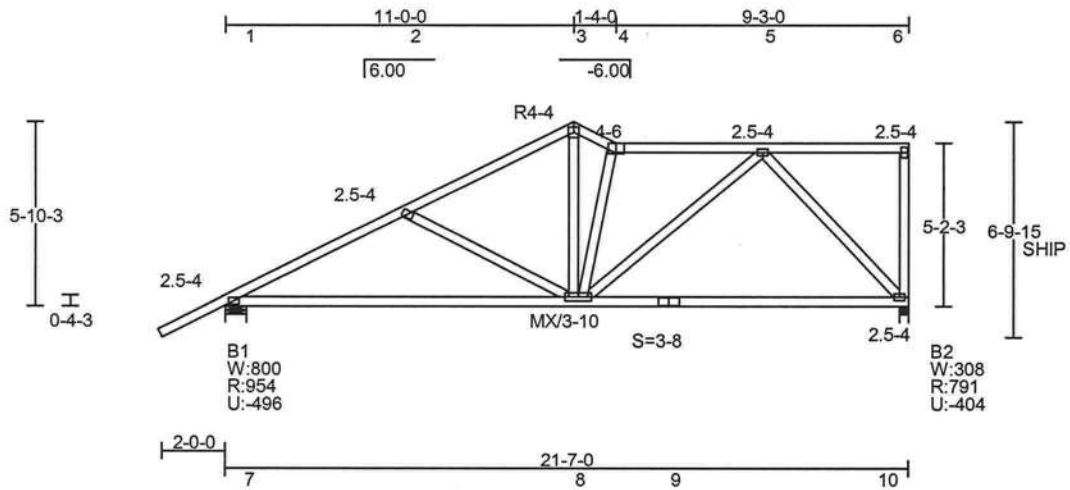

Truswal Systems Corporation
Donald Lee Scott, P.E.
220 Westway Place, Suite 200
Arlington, Texas 76018
Florida License No. 35036
Date: 3/27/2007

All connector plates are Truswal 20 ga. unless shown by "18"(18 ga.), "H"(16 ga.), or "MX"(TWMX 20 ga.), positioned per Joint Details Report. Circled plates and false frame plates are positioned as shown above. Shift gable stud plates to avoid overlap with structural plates (or staple).

TRUSWAL SYSTEMS
TW Building Components Group, Inc.
220 Westway Place, Suite 200, Arlington, TX 76018
Florida Certificate of Authorization # 278
TRUSPLUS 6.0 VER: T6.5.41

WARNING *Read all notes on this sheet and give a copy of it to the Erecting Contractor.*
This design is for an individual building component not truss system. It has been based on specifications provided by the component manufacturer and done in accordance with the current versions of TPI and AFPA design standards. No responsibility is assumed for dimensional accuracy. Dimensions are to be verified by the component manufacturer and/or building designer prior to fabrication. The building designer must ascertain that the loads utilized on this design meet or exceed the loading imposed by the local building code and the particular application. The design assumes that the top chord is laterally braced by the roof or floor sheathing and the bottom chord is laterally braced by a rigid sheathing material directly attached, unless otherwise noted. Bracing shown is for lateral support of components members only to reduce buckling length. This component shall not be placed in any environment that will cause the moisture content of the wood to exceed 19% and/or cause connector plate corrosion. Fabricate, handle, install and brace this truss in accordance with the following standards: 'Joint and Cutting Detail Reports' available as output from Truswal software, 'ANSI/TPI 1', 'WTCA 1' - Wood Truss Council of America Standard Design Responsibilities, 'BUILDING COMPONENT SAFETY INFORMATION' - (BCSI 1-03) and 'BCSI SUMMARY SHEETS' by WTCA and TPI. The Truss Plate Institute (TPI) is located at 583 D'Onofrio Drive, Madison, Wisconsin 53719. The American Forest and Paper Association (AFPA) is located at 1111 19th Street, NW, Ste 800, Washington, DC 20036.

Cust: BEN ATKINS
WO: Drive_J_jr60-07_L00006_J00001
Dsgnr: ABCD #LC = 37 WT: 158#

TC Live	20.00 psf	LiveDur	L=1.25 P=1.25
TC Snow(Ps)	0.00 psf	SnowDur	L=1.15 P=1.15
TC Dead	7.00 psf	Rep Mbr Bnd / Comp / Tens	
BC Live	0.00 psf		1.15 / 1.10 / 1.10
BC Dead	10.00 psf	O.C.Spacing	2- 0- 0
Bldg Code:	FBC2004R	DEFL RATIO:	L/240 TC: L/240

Job Name: ACE CONST. Truss ID: T-13 Qty: 1

BRG	X-LOC	REACT	SIZE	REQ'D
1	0- 4- 0	954	8.00"	1.50"
2	21- 5- 4	791	3.50"	1.50"

BRG REQUIREMENTS shown are based ONLY on the truss material at each bearing

MAX DEFLECTION (span) :
L/999 MEM 8-9 (LIVE) LC 35
L= -0.22" D= -0.19" T= -0.41"
EX.WB DEF CRITERIA:L/120
IN MEM 9- 5; T= 0.15"

CRITICAL MEMBER FORCES:

TC	COMP.(DUR.)/	TENS.(DUR.)	CSI
1-2	-1265(1.25)/	540(1.60)	0.28
2-3	-911(1.25)/	394(1.60)	0.28
3-4	-747(1.25)/	401(1.60)	0.22
4-5	-137(1.60)/	149(1.60)	0.22

BC	COMP.(DUR.)/	TENS.(DUR.)	CSI
6-7	-832(1.60)/	1082(1.25)	0.81
7-8	-423(1.60)/	495(1.25)	0.75
8-9	-423(1.60)/	495(1.25)	0.49

WB	COMP.(DUR.)/	TENS.(DUR.)	CSI
2-7	-377(1.25)/	325(1.60)	0.23
3-7	/	217(1.25)	0.04
4-7	-189(1.60)/	395(1.25)	0.16
4-9	-782(1.25)/	452(1.60)	0.65
5-9	-110(1.25)/	107(1.60)	0.34

TC	2x4	SP #2 D
BC	2x4	SP #2 D
WEB	2x4	SP #2 D

This design does not account for long term time dependent loading (creep). Building Designer must account for this.
THIS DESIGN IS THE COMPOSITE RESULT OF MULTIPLE LOAD CASES.
Loaded for 10 PSF non-concurrent BCLL.
Drainage must be provided to avoid ponding.
End verticals are designed for axial loads only unless noted otherwise.
Extensions above or below the truss profile (if any) have been designed for loads indicated only. Horizontal loads applied at the end of the extensions have not been considered unless shown. A drop-leg to an otherwise unsupported wall may create a hinge effect that requires additional design consideration (by others).

Designed per ANSI/TPI 1-2002
Plating is based on quality control factors
Cq = 1.20 for wide face and
Cq = 1.11 for narrow face.
Any alterations to this are shown for individual joints on the Joint Report.
Refer to Joint QC Detail Sheet for Maximum Rotational Tolerance used
IRC/IBC truss plate values are based on testing and approval as required by IBC 1703 and ANSI/TPI and are reported in available documents such as ICBO #1607.

UPLIFT REACTION(S) :

Support	C&C Wind	Non-Wind
1	-487 lb	
2	-419 lb	

HORIZONTAL REACTION(S) :
support 1 548 lb
support 2 548 lb
This truss is designed using the ASCE7-02 Wind Specification
Bldg Enclosed = Yes, Importance Factor = 1.00
Truss Location = Not End Zone
Hurricane/Ocean Line = No , Exp Category = B
Bldg Length = 40.00 ft, Bldg Width = 20.00 ft
Mean roof height = 11.09 ft, mph = 120
TPI Standard Occupancy, Dead Load = 9.2 psf
Designed as Main Wind Force Resisting System and Components and Cladding
Tributary Area = 43 sqft
Vertical members exposed to wind: 9- 5

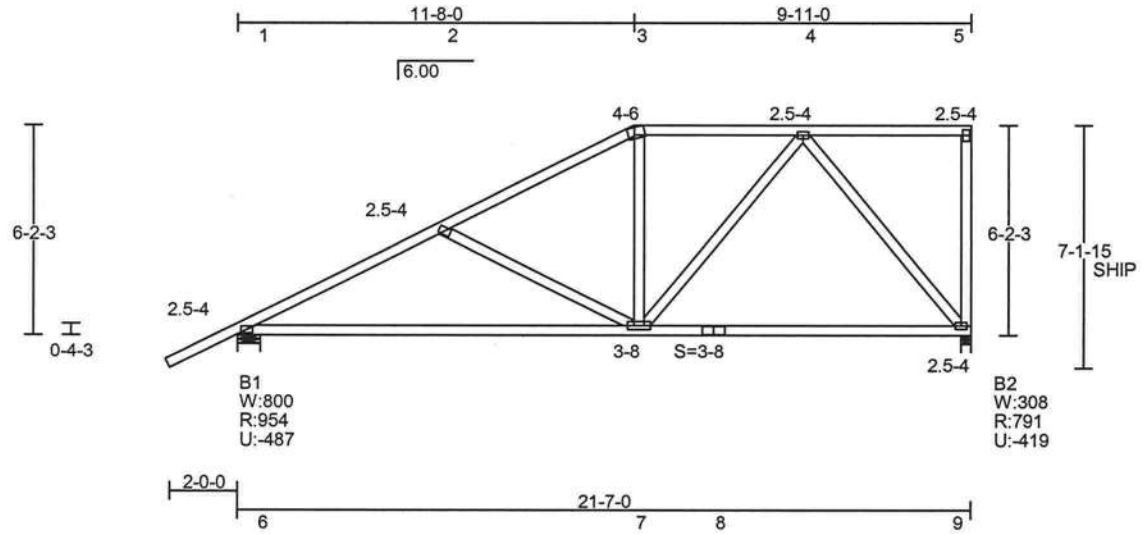

Truswal Systems Corporation
Donald Lee Scott, P.E.
220 Westway Place, Suite 200
Arlington, Texas 76018
Florida License No. 35036
Date: 3/27/2007

All connector plates are Truswal 20 ga. unless shown by "18"(18 ga.), "H"(16 ga.), or "MX"(TWMX 20 ga.), positioned per Joint Details Report. Circled plates and false frame plates are positioned as shown above. Shift gable stud plates to avoid overlap with structural plates (or staple).

TRUSWAL SYSTEMS
ITW Building Components Group, Inc.
220 Westway Place, Suite 200, Arlington, TX 76018
Florida Certificate of Authorization # 278
TRUSPLUS 6.0 VER: T6.5.41

WARNING *Read all notes on this sheet and give a copy of it to the Erecting Contractor.*

This design is for an individual building component not truss system. It has been based on specifications provided by the component manufacturer and done in accordance with the current versions of TPI and AFPA design standards. No responsibility is assumed for dimensional accuracy. Dimensions are to be verified by the component manufacturer and/or building designer prior to fabrication. The building designer must ascertain that the loads utilized on this design meet or exceed the loading imposed by the local building code and the particular application. The design assumes that the top chord is laterally braced by the roof or floor sheathing and the bottom chord is laterally braced by a rigid sheathing material directly attached, unless otherwise noted. Bracing shown is for lateral support of components members only to reduce buckling length. This component shall not be placed in any environment that will cause the moisture content of the wood to exceed 19% and/or cause connector plate corrosion. Fabricate, handle, install and brace this truss in accordance with the following standards: 'Joint and Cutting Detail Reports' available as output from Truswal software, 'ANSI/TPI 1', 'WTCA 1' - Wood Truss Council of America Standard Design Responsibilities, 'BUILDING COMPONENT SAFETY INFORMATION' - (BCSI 1-03) and 'BCSI SUMMARY SHEETS' by WTCA and TPI. The Truss Plate Institute (TPI) is located at 583 D'Onofrio Drive, Madison, Wisconsin 53719. The American Forest and Paper Association (AFPA) is located at 1111 19th Street, NW, Ste 800, Washington, DC 20036.

Cust: BEN ATKINS
WO: Drive_J_jr60-07_L00006_J00001
Dsgnr: ABCD #LC = 37 WT: 153#

TC Live	20.00 psf	LiveDur	L=1.25 P=1.25
TC Snow(Ps)	0.00 psf	SnowDur	L=1.15 P=1.15
TC Dead	7.00 psf	Rep Mbr Bnd / Comp / Tens	
BC Live	0.00 psf		1.15 / 1.10 / 1.10
BC Dead	10.00 psf	O.C.Spacing	2- 0- 0
Bldg Code:	FBC2004R	DEFL RATIO:	L/240 TC: L/240

Job Name: ACE CONST. Truss ID: T-14 Qty: 1

BRG	X-LOC	REACT	SIZE	REQ'D
1	0- 4- 0	954	8.00"	1.50"
2	21- 5- 4	791	3.50"	1.50"

BRG REQUIREMENTS shown are based ONLY on the truss material at each bearing
MAX DEFLECTION (span) :
L/766 MEM 7-8 (LIVE) LC 35
L= -0.33" D= -0.29" T= -0.62"
EX.WB DEF CRITERIA:L/120
IN MEM 8- 4; T= 0.28"
CRITICAL MEMBER FORCES:

TC	COMP.(DUR.)/	TENS.(DUR.)	CSI
1-2	-1233(1.25)/	501(1.60)	0.31
2-3	-944(1.25)/	417(1.60)	0.43
3-4	-158(1.60)/	171(1.60)	0.53

BC	COMP.(DUR.)/	TENS.(DUR.)	CSI
5-6	-814(1.60)/	1038(1.25)	0.83
6-7	-538(1.60)/	586(1.25)	0.79
7-8	-538(1.60)/	586(1.25)	0.61

WB	COMP.(DUR.)/	TENS.(DUR.)	CSI
2-6	-347(1.25)/	317(1.60)	0.15
3-6	-100(1.60)/	567(1.25)	0.10
3-8	-777(1.25)/	504(1.60)	0.32
4-8	-197(1.25)/	163(1.60)	0.44

TC	2x4	SP	#2 D
BC	2x4	SP	#2 D
WEB	2x4	SP	#2 D

This design does not account for long term time dependent loading (creep). Building Designer must account for this.
Refer to Joint QC Detail Sheet for Maximum Rotational Tolerance used
IRC/IBC truss plate values are based on testing and approval as required by IBC 1703 and ANSI/TPI and are reported in available documents such as ICBO #1607.

☒ Web bracing required at each location shown. See standard details (TX01087001-001 rev1).
Designed per ANSI/TPI 1-2002
Plating is based on quality control factors
Cq = 1.20 for wide face and
Cq = 1.11 for narrow face.
Any alterations to this are shown for individual joints on the Joint Report.
THIS DESIGN IS THE COMPOSITE RESULT OF MULTIPLE LOAD CASES.
Loaded for 10 PSF non-concurrent BCLL.
Drainage must be provided to avoid ponding.
End verticals are designed for axial loads only unless noted otherwise.
Extensions above or below the truss profile (if any) have been designed for loads indicated only. Horizontal loads applied at the end of the extensions have not been considered unless shown. A drop-leg to an otherwise unsupported wall may create a hinge effect that requires additional design consideration (by others).

UPLIFT REACTION(S) :

Support	C&C Wind	Non-Wind
1	-483 lb	
2	-451 lb	

HORIZONTAL REACTION(S) :
support 1 631 lb
support 2 631 lb
This truss is designed using the ASCE7-02 Wind Specification
Bldg Enclosed = Yes, Importance Factor = 1.00
Truss Location = Not End Zone
Hurricane/Ocean Line = No , Exp Category = B
Bldg Length = 40.00 ft, Bldg Width = 20.00 ft
Mean roof height = 11.59 ft, mph = 120
TPI Standard Occupancy, Dead Load = 9.2 psf
Designed as Main Wind Force Resisting System and Components and Cladding
Tributary Area = 43 sqft
Vertical members exposed to wind: 8- 4

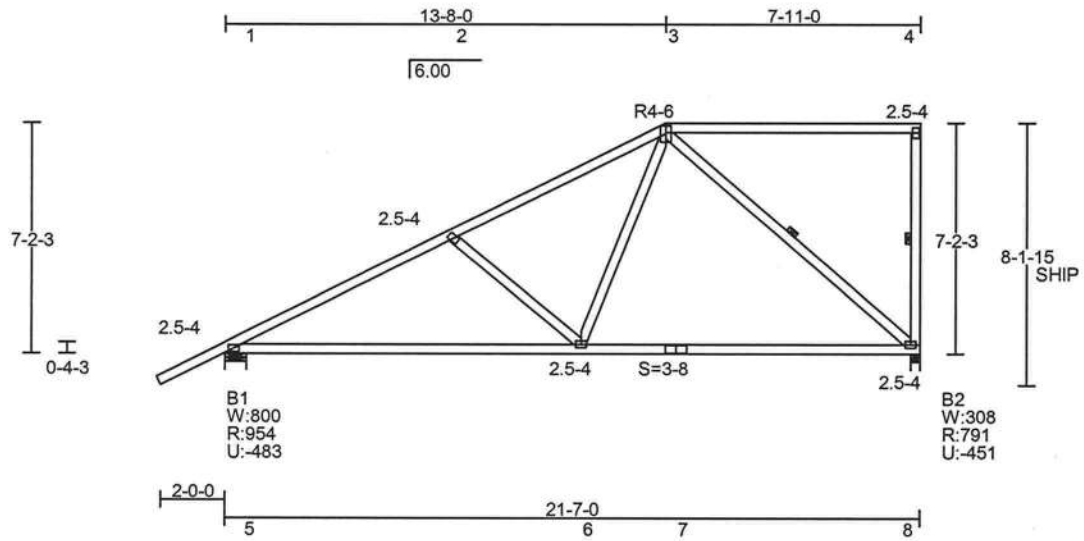

Truswal Systems Corporation
Donald Lee Scott, P.E.
220 Westway Place, Suite 200
Arlington, Texas 76018
Florida License No. 35036
Date: 3/27/2007

All connector plates are Truswal 20 ga. unless shown by "18"(18 ga.), "H"(16 ga.), or "MX"(TWMX 20 ga.), positioned per Joint Details Report. Circled plates and false frame plates are positioned as shown above. Shift gable stud plates to avoid overlap with structural plates (or staple).

TRUSWAL SYSTEMS
TW Building Components Group, Inc.
220 Westway Place, Suite 200, Arlington, TX 76018
Florida Certificate of Authorization # 278
TRUSPLUS 6.0 VER: T6.5.41

WARNING ***Read all notes on this sheet and give a copy of it to the Erecting Contractor.***

This design is for an individual building component not truss system. It has been based on specifications provided by the component manufacturer and done in accordance with the current versions of TPI and AFPA design standards. No responsibility is assumed for dimensional accuracy. Dimensions are to be verified by the component manufacturer and/or building designer prior to fabrication. The building designer must ascertain that the loads utilized on this design meet or exceed the loading imposed by the local building code and the particular application. The design assumes that the top chord is laterally braced by the roof or floor sheathing and the bottom chord is laterally braced by a rigid sheathing material directly attached, unless otherwise noted. Bracing shown is for lateral support of components members only to reduce buckling length. This component shall not be placed in any environment that will cause the moisture content of the wood to exceed 19% and/or cause connector plate corrosion. Fabricate, handle, install and brace this truss in accordance with the following standards: 'Joint and Cutting Detail Reports' available as output from Truswal software, 'ANSI/TPI 1', 'WTCA 1' - Wood Truss Council of America Standard Design Responsibilities, 'BUILDING COMPONENT SAFETY INFORMATION' - (BCSI 1-03) and 'BCSI SUMMARY SHEETS' by WTCA and TPI. The Truss Plate Institute (TPI) is located at 583 D'Onofrio Drive, Madison, Wisconsin 53719. The American Forest and Paper Association (AFPA) is located at 1111 19th Street, NW, Ste 800, Washington, DC 20036.

Cust: BEN ATKINS
WO: Drive_J_jr60-07_L00006_J00001
Dsgnr: ABCD #LC = 37 WT: 147#

TC Live	20.00 psf	LiveDur	L=1.25 P=1.25
TC Snow(Ps)	0.00 psf	SnowDur	L=1.15 P=1.15
TC Dead	7.00 psf	Rep Mbr Bnd / Comp / Tens	
BC Live	0.00 psf		1.15 / 1.10 / 1.10
BC Dead	10.00 psf	O.C.Spacing	2- 0- 0
Bldg Code:	FBC2004R	DEFL RATIO:	L/240 TC: L/240

Job Name: ACE CONST. Truss ID: T-15 Qty: 1

BRG	X-LOC	REACT	SIZE	REQ'D
1	0- 4- 0	954	8.00"	1.50"
2	21- 5- 4	791	3.50"	1.50"

BRG REQUIREMENTS shown are based ONLY on the truss material at each bearing

MAX DEFLECTION (span) :
L/775 MEM 7-8 (LIVE) LC 35
L= -0.33" D= -0.28" T= -0.60"
EX.WB DEF CRITERIA:L/120
IN MEM 8- 4; T= 0.47"

CRITICAL MEMBER FORCES:

TC	COMP.(DUR.)/	TENS.(DUR.)	CSI
1-2	-1207(1.25)/	478(1.60)	0.49
2-3	-952(1.25)/	446(1.60)	0.49
3-4	-177(1.60)/	193(1.60)	0.28

BC	COMP.(DUR.)/	TENS.(DUR.)	CSI
5-6	-803(1.60)/	1009(1.25)	0.83
6-7	-479(1.60)/	416(1.25)	0.77
7-8	-479(1.60)/	416(1.25)	0.58

WB	COMP.(DUR.)/	TENS.(DUR.)	CSI
2-6	-405(1.25)/	360(1.60)	0.15
3-6	-207(1.60)/	674(1.25)	0.25
3-8	-700(1.25)/	508(1.60)	0.25
4-8	-146(1.25)/	123(1.60)	0.57

TC	2x4	SP	#2 D
BC	2x4	SP	#2 D
WEB	2x4	SP	#2 D

This design does not account for long term time dependent loading (creep). Building Designer must account for this.
Refer to Joint QC Detail Sheet for Maximum Rotational Tolerance used
IRC/IBC truss plate values are based on testing and approval as required by IBC 1703 and ANSI/TPI and are reported in available documents such as ICBO #1607.

☒ Web bracing required at each location shown. See standard details (TX01087001-001 rev1).
Designed per ANSI/TPI 1-2002
Plating is based on quality control factors
Cq = 1.20 for wide face and
Cq = 1.11 for narrow face.
Any alterations to this are shown for individual joints on the Joint Report.
THIS DESIGN IS THE COMPOSITE RESULT OF MULTIPLE LOAD CASES.
Loaded for 10 PSF non-concurrent BCLL.
Drainage must be provided to avoid ponding.
End verticals are designed for axial loads only unless noted otherwise.
Extensions above or below the truss profile (if any) have been designed for loads indicated only. Horizontal loads applied at the end of the extensions have not been considered unless shown. A drop-leg to an otherwise unsupported wall may create a hinge effect that requires additional design consideration (by others).

UPLIFT REACTION(S) :

Support	C&C Wind	Non-Wind
1	-479 lb	
2	-488 lb	

HORIZONTAL REACTION(S) :
support 1 714 lb
support 2 714 lb
This truss is designed using the ASCE7-02 Wind Specification
Bldg Enclosed = Yes, Importance Factor = 1.00
Truss Location = Not End Zone
Hurricane/Ocean Line = No Exp Category = B
Bldg Length = 40.00 ft, Bldg Width = 20.00 ft
Mean roof height = 12.09 ft, mph = 120
TPI Standard Occupancy, Dead Load = 9.2 psf
Designed as Main Wind Force Resisting System and Components and Cladding
Tributary Area = 43 sqft
Vertical members exposed to wind: 8- 4

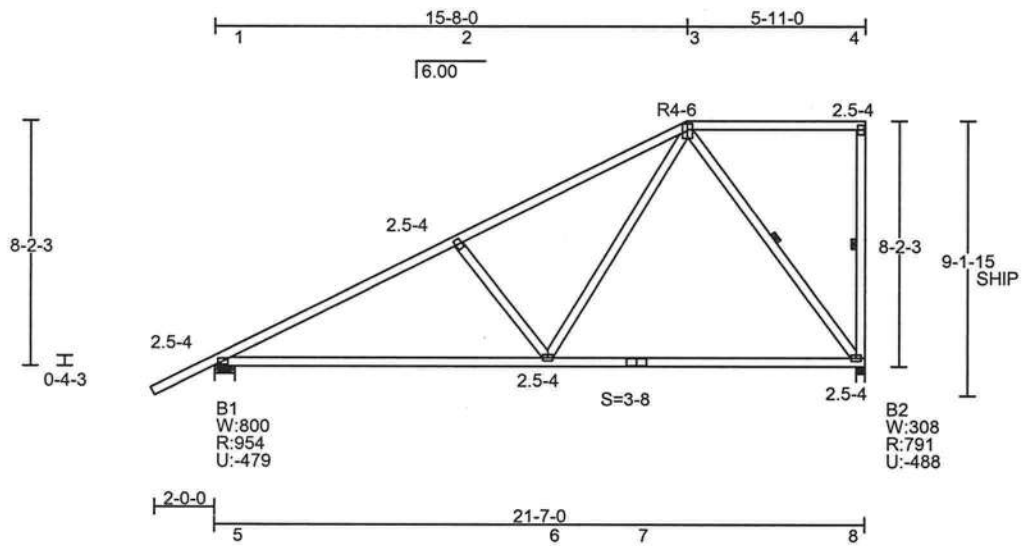

Truswal Systems Corporation
Donald Lee Scott, P.E.
220 Westway Place, Suite 200
Arlington, Texas 76018
Florida License No. 35036
Date: 3/27/2007

All connector plates are Truswal 20 ga. unless shown by "18"(18 ga.), "H"(16 ga.), or "MX"(TWMX 20 ga.), positioned per Joint Details Report. Circled plates and false frame plates are positioned as shown above. Shift gable stud plates to avoid overlap with structural plates (or staple).

TRUSWAL SYSTEMS
TW Building Components Group, Inc.
220 Westway Place, Suite 200, Arlington, TX 76018
Florida Certificate of Authorization # 278
TRUSPLUS 6.0 VER: T6.5.41

WARNING ***Read all notes on this sheet and give a copy of it to the Erecting Contractor.***

This design is for an individual building component not truss system. It has been based on specifications provided by the component manufacturer and done in accordance with the current versions of TPI and AFPA design standards. No responsibility is assumed for dimensional accuracy. Dimensions are to be verified by the component manufacturer and/or building designer prior to fabrication. The building designer must ascertain that the loads utilized on this design meet or exceed the loading imposed by the local building code and the particular application. The design assumes that the top chord is laterally braced by the roof or floor sheathing and the bottom chord is laterally braced by a rigid sheathing material directly attached, unless otherwise noted. Bracing shown is for lateral support of components members only to reduce buckling length. This component shall not be placed in any environment that will cause the moisture content of the wood to exceed 19% and/or cause connector plate corrosion. Fabricate, handle, install and brace this truss in accordance with the following standards: 'Joint and Cutting Detail Reports' available as output from Truswal software, 'ANSI/TPI 1', 'WTCA 1' - Wood Truss Council of America Standard Design Responsibilities, 'BUILDING COMPONENT SAFETY INFORMATION' - (BCSI 1-03) and 'BCSI SUMMARY SHEETS' by WTCA and TPI. The Truss Plate Institute (TPI) is located at 583 D'Onofrio Drive, Madison, Wisconsin 53719. The American Forest and Paper Association (AFPA) is located at 1111 19th Street, NW, Ste 800, Washington, DC 20036.

Cust: BEN ATKINS
WO: Drive_J_jr60-07_L00006_J00001
Dsgnr: ABCD #LC = 37 WT: 151#

TC Live	20.00 psf	LiveDur	L=1.25 P=1.25
TC Snow(Ps)	0.00 psf	SnowDur	L=1.15 P=1.15
TC Dead	7.00 psf	Rep Mbr Bnd / Comp / Tens	
BC Live	0.00 psf		1.15 / 1.10 / 1.10
BC Dead	10.00 psf	O.C.Spacing	2- 0- 0
Bldg Code:	FBC2004R	DEFL RATIO:	L/240 TC: L/240

Job Name: ACE CONST. Truss ID: T-16 Qty: 1

BRG	X-LOC	REACT	SIZE	REQ'D
1	0- 4- 0	954	8.00"	1.50"
2	21- 5- 4	791	3.50"	1.50"

BRG REQUIREMENTS shown are based ONLY on the truss material at each bearing

MAX DEFLECTION (span) :
L/780 MEM 8-9 (LIVE) LC 35
L= -0.32" D= -0.27" T= -0.59"
EX.WB DEF CRITERIA:L/120
IN MEM 9- 5; T= 0.74"

CRITICAL MEMBER FORCES:

TC	COMP.(DUR.)/	TENS.(DUR.)	CSI
1-2	-1178(1.25)/	451(1.60)	0.66
2-3	-992(1.25)/	473(1.60)	0.66
3-4	-958(1.25)/	500(1.60)	0.39
4-5	-197(1.60)/	214(1.60)	0.19

BC	COMP.(DUR.)/	TENS.(DUR.)	CSI
6-7	-780(1.60)/	974(1.25)	0.83
7-8	-411(1.60)/	387(1.60)	0.76
8-9	-411(1.60)/	387(1.60)	0.56

WB	COMP.(DUR.)/	TENS.(DUR.)	CSI
2-7	-463(1.25)/	406(1.60)	0.17
4-7	-336(1.60)/	857(1.25)	0.61
4-9	-678(1.25)/	548(1.60)	0.24
5-9	-86(1.25)/	68(1.60)	0.72

TC	2x4	SP	#2 D
BC	2x4	SP	#2 D
WEB	2x4	SP	#2 D

This design does not account for long term time dependent loading (creep). Building Designer must account for this.
Refer to Joint QC Detail Sheet for Maximum Rotational Tolerance used
IRC/IBC truss plate values are based on testing and approval as required by IBC 1703 and ANSI/TPI and are reported in available documents such as ICBO #1607.

☒ Web bracing required at each location shown. See standard details (TX01087001-001 rev1).
Designed per ANSI/TPI 1-2002
Plating is based on quality control factors
Cq = 1.20 for wide face and
Cq = 1.11 for narrow face.
Any alterations to this are shown for individual joints on the Joint Report.
THIS DESIGN IS THE COMPOSITE RESULT OF MULTIPLE LOAD CASES.
Loaded for 10 PSF non-concurrent BCLL.
Drainage must be provided to avoid ponding.
End verticals are designed for axial loads only unless noted otherwise.
Extensions above or below the truss profile (if any) have been designed for loads indicated only. Horizontal loads applied at the end of the extensions have not been considered unless shown. A drop-leg to an otherwise unsupported wall may create a hinge effect that requires additional design consideration (by others).

UPLIFT REACTION(S) :

Support	C&C Wind	Non-Wind
1	-475 lb	
2	-528 lb	

HORIZONTAL REACTION(S) :
support 1 796 lb
support 2 796 lb
This truss is designed using the ASCE7-02 Wind Specification
Bldg Enclosed = Yes, Importance Factor = 1.00
Truss Location = Not End Zone
Hurricane/Ocean Line = No Exp Category = B
Bldg Length = 40.00 ft, Bldg Width = 20.00 ft
Mean roof height = 12.59 ft, mph = 120
TPI Standard Occupancy, Dead Load = 9.2 psf
Designed as Main Wind Force Resisting System and Components and Cladding
Tributary Area = 43 sqft
Vertical members exposed to wind: 9- 5

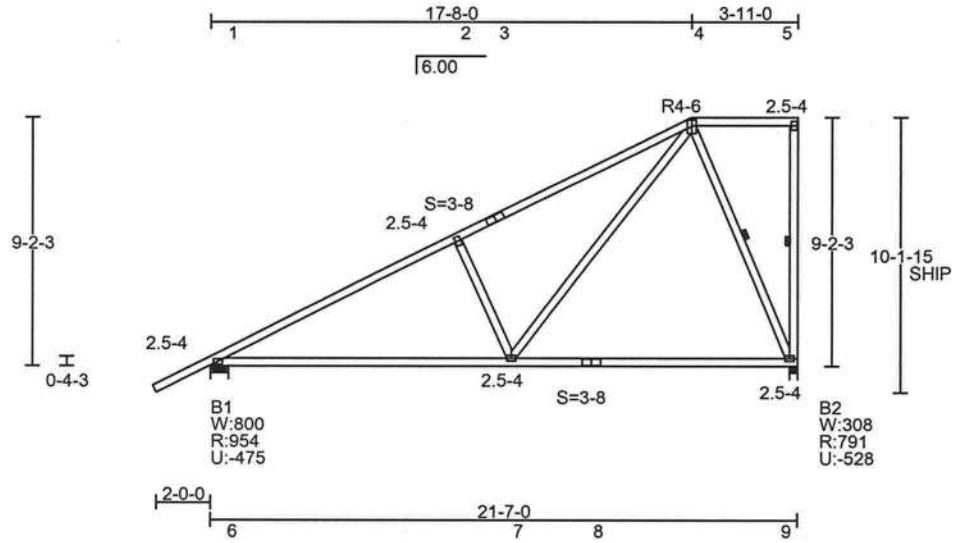

Truswal Systems Corporation
Donald Lee Scott, P.E.
220 Westway Place, Suite 200
Arlington, Texas 76018
Florida License No. 35036
Date: 3/27/2007

All connector plates are Truswal 20 ga. unless shown by "18"(18 ga.), "H"(16 ga.), or "MX"(TWMX 20 ga.), positioned per Joint Details Report. Circled plates and false frame plates are positioned as shown above. Shift gable stud plates to avoid overlap with structural plates (or staple).

TRUSWAL SYSTEMS
TW Building Components Group, Inc.
220 Westway Place, Suite 200, Arlington, TX 76018
Florida Certificate of Authorization # 278
TRUSPLUS 6.0 VER: T6.5.41

WARNING ***Read all notes on this sheet and give a copy of it to the Erecting Contractor.***

This design is for an individual building component not truss system. It has been based on specifications provided by the component manufacturer and done in accordance with the current versions of TPI and AFPA design standards. No responsibility is assumed for dimensional accuracy. Dimensions are to be verified by the component manufacturer and/or building designer prior to fabrication. The building designer must ascertain that the loads utilized on this design meet or exceed the loading imposed by the local building code and the particular application. The design assumes that the top chord is laterally braced by the roof or floor sheathing and the bottom chord is laterally braced by a rigid sheathing material directly attached, unless otherwise noted. Bracing shown is for lateral support of components members only to reduce buckling length. This component shall not be placed in any environment that will cause the moisture content of the wood to exceed 19% and/or cause connector plate corrosion. Fabricate, handle, install and brace this truss in accordance with the following standards: 'Joint and Cutting Detail Reports' available as output from Truswal software, 'ANSI/TPI 1', 'WTCA 1' - Wood Truss Council of America Standard Design Responsibilities, 'BUILDING COMPONENT SAFETY INFORMATION' - (BCSI 1-03) and 'BCSI SUMMARY SHEETS' by WTCA and TPI. The Truss Plate Institute (TPI) is located at 583 D'Onofrio Drive, Madison, Wisconsin 53719. The American Forest and Paper Association (AFPA) is located at 1111 19th Street, NW, Ste 800, Washington, DC 20036.

Cust: BEN ATKINS
WO: Drive_J_jr60-07_L00006_J00001
Dsgnr: ABCD #LC = 37 WT: 157#

TC Live	20.00 psf	LiveDur	L=1.25 P=1.25
TC Snow(Ps)	0.00 psf	SnowDur	L=1.15 P=1.15
TC Dead	7.00 psf	Rep Mbr Bnd / Comp / Tens	
BC Live	0.00 psf		1.15 / 1.10 / 1.10
BC Dead	10.00 psf	O.C.Spacing	2- 0- 0
Bldg Code:	FBC2004R	DEFL RATIO:	L/240 TC: L/240

Job Name: ACE CONST. Truss ID: T-17 Qty: 1

BRG	X-LOC	REACT	SIZE	REQ'D
1	0- 4- 0	1876	8.00"	1.89"
2	23- 1- 4	1722	3.50"	1.74"

BRG REQUIREMENTS shown are based ONLY on the truss material at each bearing

MAX DEFLECTION (span) :
L/999 MEM 8-9 (LIVE) LC 2
L= -0.13" D= -0.12" T= -0.26"
EX.WB DEF CRITERIA:L/120
IN MEM 12- 6; T= 0.00"

CRITICAL MEMBER FORCES:

TC	COMP.(DUR.)/	TENS.(DUR.)	CSI
1-2	-3186(1.25)/	581(1.60)	0.66
2-3	-3330(1.25)/	667(1.60)	0.53
3-4	-3330(1.25)/	667(1.60)	0.53
4-5	-3085(1.25)/	594(1.60)	0.46
5-6	-53(1.60)/	57(1.60)	0.38

BC	COMP.(DUR.)/	TENS.(DUR.)	CSI
7-8	-622(1.60)/	2765(1.25)	0.86
8-9	-621(1.60)/	2778(1.25)	0.64
9-10	-587(1.60)/	2696(1.25)	0.62
10-11	-587(1.60)/	2696(1.25)	0.58
11-12	-688(1.60)/	2759(1.25)	0.62

WB	COMP.(DUR.)/	TENS.(DUR.)	CSI
2-8	/	587(1.25)	0.10
2-9	-192(1.60)/	678(1.25)	0.12
3-9	-617(1.25)/	182(1.60)	0.12
4-9	-163(1.60)/	779(1.25)	0.14
4-11	-59(1.60)/	669(1.25)	0.12
5-11	-107(1.60)/	203(1.60)	0.03
5-12	-3143(1.25)/	723(1.60)	0.88
6-12	-156(1.25)/	107(1.60)	0.06

TC	2x4	SP	#2 D
BC	2x4	SP	#2 D
WEB	2x4	SP	#2 D

This design does not account for long term time dependent loading (creep). Building Designer must account for this.
THIS DESIGN IS THE COMPOSITE RESULT OF MULTIPLE LOAD CASES.
Loaded for 10 PSF non-concurrent BCLL.
Drainage must be provided to avoid ponding.
Permanent bracing is required (by others) to prevent rotation/toppling. See BCSI 1-03 and ANSI/TPI 1.

Designed per ANSI/TPI 1-2002
Plating is based on quality control factors
Cq = 1.20 for wide face and
Cq = 1.11 for narrow face.
Any alterations to this are shown for individual joints on the Joint Report.
Refer to Joint QC Detail Sheet for Maximum Rotational Tolerance used
IRC/IBC truss plate values are based on testing and approval as required by IBC 1703 and ANSI/TPI and are reported in available documents such as ICBO #1607.
End verticals are designed for axial loads only unless noted otherwise.
Extensions above or below the truss profile (if any) have been designed for loads indicated only. Horizontal loads applied at the end of the extensions have not been considered unless shown. A drop-leg to an otherwise unsupported wall may create a hinge effect that requires additional design consideration (by others).

UPLIFT REACTION(S) :

Support	C&C Wind	Non-Wind
1	-847 lb	
2	-777 lb	

HORIZONTAL REACTION(S) :
support 1 200 lb
support 2 200 lb
This truss is designed using the ASCE7-02 Wind Specification
Bldg Enclosed = Yes, Importance Factor = 1.00
Truss Location = Not End Zone
Hurricane/Ocean Line = No , Exp Category = B
Bldg Length = 40.00 ft, Bldg Width = 20.00 ft
Mean roof height = 9.92 ft, mph = 120
TPI Standard Occupancy, Dead Load = 9.2 psf
Designed as Main Wind Force Resisting System and Components and Cladding
Tributary Area = 93 sqft
Vertical members exposed to wind: 12- 6

----------LOAD CASE #1 DESIGN LOADS ----------

Dir	L.Plf	L.Loc	R.Plf	R.Loc	LL/TL
TC Vert	74.00 - 2-	0- 0	74.00	0- 0- 0	0.54
TC Vert	54.00	0- 0- 0	54.00	7- 0- 0	0.74
TC Vert	117.56	7- 0- 0	117.56	16- 3- 0	0.74
TC Vert	54.00	16- 3- 0	54.00	23- 3- 0	0.74
BC Vert	20.00	0- 0- 0	20.00	7- 0- 0	0.00
BC Vert	43.54	7- 0- 0	43.54	16- 3- 0	0.00
BC Vert	20.00	16- 3- 0	20.00	23- 3- 0	0.00

...Type...	lbs	X.Loc	LL/TL
TC Vert	0.0	0- 4- 0	1.00
BC Vert	249.6	7- 0- 0	1.00
BC Vert	212.2	7- 0- 0	0.00
BC Vert	249.6	16- 3- 0	1.00
BC Vert	212.2	16- 3- 0	0.00

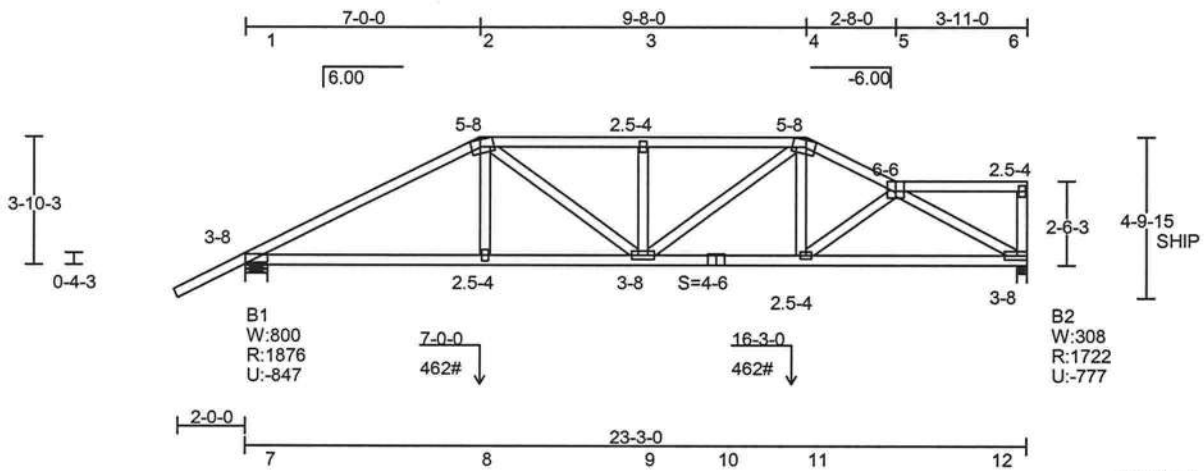

Truswal Systems Corporation
Donald Lee Scott, P.E.
220 Westway Place, Suite 200
Arlington, Texas 76018
Florida License No. 35036
Date: 3/27/2007

All connector plates are Truswal 20 ga. unless shown by "18"(18 ga.), "H"(16 ga.), or "MX"(TWMX 20 ga.), positioned per Joint Details Report. Circled plates and false frame plates are positioned as shown above. Shift gable stud plates to avoid overlap with structural plates (or staple).

TRUSWAL SYSTEMS
TW Building Components Group, Inc.
220 Westway Place, Suite 200, Arlington, TX 76018
Florida Certificate of Authorization # 278
TRUSPLUS 6.0 VER: T6.5.41

WARNING ***Read all notes on this sheet and give a copy of it to the Erecting Contractor.***

This design is for an individual building component not truss system. It has been based on specifications provided by the component manufacturer and done in accordance with the current versions of TPI and AFPA design standards. No responsibility is assumed for dimensional accuracy. Dimensions are to be verified by the component manufacturer and/or building designer prior to fabrication. The building designer must ascertain that the loads utilized on this design meet or exceed the loading imposed by the local building code and the particular application. The design assumes that the top chord is laterally braced by the roof or floor sheathing and the bottom chord is laterally braced by a rigid sheathing material directly attached, unless otherwise noted. Bracing shown is for lateral support of components members only to reduce buckling length. This component shall not be placed in any environment that will cause the moisture content of the wood to exceed 19% and/or cause connector plate corrosion. Fabricate, handle, install and brace this truss in accordance with the following standards: 'Joint and Cutting Detail Reports' available as output from Truswal software, 'ANSI/TPI 1', 'WTCA 1' - Wood Truss Council of America Standard Design Responsibilities, 'BUILDING COMPONENT SAFETY INFORMATION' - (BCSI 1-03) and 'BCSI SUMMARY SHEETS' by WTCA and TPI. The Truss Plate Institute (TPI) is located at 583 D'Onofrio Drive, Madison, Wisconsin 53719. The American Forest and Paper Association (AFPA) is located at 1111 19th Street, NW, Ste 800, Washington, DC 20036.

Cust: BEN ATKINS
WO: Drive_J_jr60-07_L00006_J00001
Dsgnr: ABCD #LC = 37 WT: 158#

TC Live	20.00 psf	LiveDur	L=1.25 P=1.25
TC Snow(Ps)	0.00 psf	SnowDur	L=1.15 P=1.15
TC Dead	7.00 psf	Rep Mbr Bnd / Comp / Tens	
BC Live	0.00 psf		1.00 / 1.00 / 1.00
BC Dead	10.00 psf	O.C.Spacing	2- 0- 0
Bldg Code:	FBC2004R	DEFL RATIO:	L/240 TC: L/240

Job Name: ACE CONST. Truss ID: T-18 Qty: 1

BRG	X-LOC	REACT	SIZE	REQ'D
1	0- 4- 0	1015	8.00"	1.50"
2	23- 1- 4	853	3.50"	1.50"

BRG REQUIREMENTS shown are based ONLY on the truss material at each bearing

MAX DEFLECTION (span) :
L/999 MEM 8-9 (LIVE) LC 35
L= -0.11" D= -0.10" T= -0.21"
EX.WB DEF CRITERIA:L/120
IN MEM 11- 6; T= 0.01"

CRITICAL MEMBER FORCES:

TC	COMP.(DUR.)/	TENS.(DUR.)	CSI
1-2	-1445(1.25)/	655(1.60)	0.23
2-3	-1211(1.25)/	559(1.60)	0.17
3-4	-1042(1.25)/	543(1.60)	0.25
4-5	-1379(1.25)/	753(1.60)	0.19
5-6	-1130(1.25)/	578(1.60)	0.39

BC	COMP.(DUR.)/	TENS.(DUR.)	CSI
7-8	-814(1.60)/	1243(1.25)	0.49
8-9	-614(1.60)/	980(1.25)	0.47
9-10	-614(1.60)/	980(1.25)	0.42
10-11	-76(1.60)/	214(1.60)	0.31

WB	COMP.(DUR.)/	TENS.(DUR.)	CSI
2-8	-228(1.25)/	222(1.60)	0.08
3-8	-20(1.60)/	291(1.25)	0.05
4-8	-75(1.60)/	96(1.25)	0.06
4-10	-231(1.60)/	407(1.25)	0.09
5-10	-846(1.25)/	559(1.60)	0.13
6-10	-634(1.60)/	1306(1.25)	0.37
6-11	-810(1.25)/	454(1.60)	0.15

TC	2x4	SP	#2 D
BC	2x4	SP	#2 D
WEB	2x4	SP	#2 D

This design does not account for long term time dependent loading (creep). Building Designer must account for this.
THIS DESIGN IS THE COMPOSITE RESULT OF MULTIPLE LOAD CASES.
Loaded for 10 PSF non-concurrent BCLL.
Drainage must be provided to avoid ponding.
End verticals are designed for axial loads only unless noted otherwise.
Extensions above or below the truss profile (if any) have been designed for loads indicated only. Horizontal loads applied at the end of the extensions have not been considered unless shown. A drop-leg to an otherwise unsupported wall may create a hinge effect that requires additional design consideration (by others).

Designed per ANSI/TPI 1-2002
Plating is based on quality control factors
Cq = 1.20 for wide face and
Cq = 1.11 for narrow face.
Any alterations to this are shown for individual joints on the Joint Report.
Refer to Joint QC Detail Sheet for Maximum Rotational Tolerance used
IRC/IBC truss plate values are based on testing and approval as required by IBC 1703 and ANSI/TPI and are reported in available documents such as ICBO #1607.

UPLIFT REACTION(S) :

Support	C&C Wind	Non-Wind
1	-539 lb	
2	-434 lb	

HORIZONTAL REACTION(S) :
support 1 290 lb
support 2 290 lb
This truss is designed using the ASCE7-02 Wind Specification
Bldg Enclosed = Yes, Importance Factor = 1.00
Truss Location = Not End Zone
Hurricane/Ocean Line = No , Exp Category = B
Bldg Length = 40.00 ft, Bldg Width = 20.00 ft
Mean roof height = 10.42 ft, mph = 120
TPI Standard Occupancy, Dead Load = 9.2 psf
Designed as Main Wind Force Resisting System and Components and Cladding
Tributary Area = 47 sqft
Vertical members exposed to wind: 11- 6

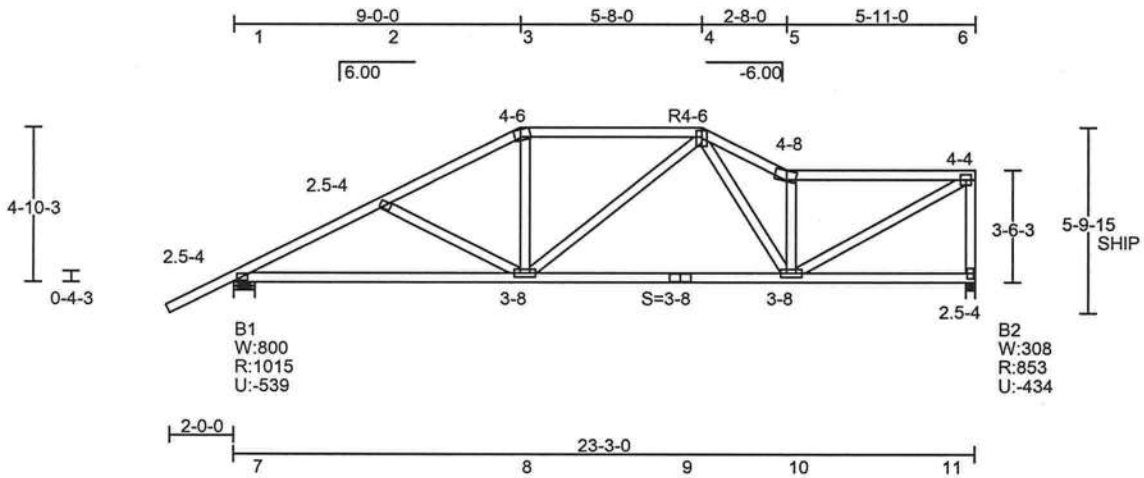

Truswal Systems Corporation
Donald Lee Scott, P.E.
220 Westway Place, Suite 200
Arlington, Texas 76018
Florida License No. 35036
Date: 3/27/2007

All connector plates are Truswal 20 ga. unless shown by "18"(18 ga.), "H"(16 ga.), or "MX"(TWMX 20 ga.), positioned per Joint Details Report.
Circled plates and false frame plates are positioned as shown above. Shift gable stud plates to avoid overlap with structural plates (or staple).

TRUSWAL SYSTEMS
TTW Building Components Group, Inc.
220 Westway Place, Suite 200, Arlington, TX 76018
Florida Certificate of Authorization # 278
TRUSPLUS 6.0 VER: T6.5.41

WARNING *Read all notes on this sheet and give a copy of it to the Erecting Contractor.*

This design is for an individual building component not truss system. It has been based on specifications provided by the component manufacturer and done in accordance with the current versions of TPI and AFPA design standards. No responsibility is assumed for dimensional accuracy. Dimensions are to be verified by the component manufacturer and/or building designer prior to fabrication. The building designer must ascertain that the loads utilized on this design meet or exceed the loading imposed by the local building code and the particular application. The design assumes that the top chord is laterally braced by the roof or floor sheathing and the bottom chord is laterally braced by a rigid sheathing material directly attached, unless otherwise noted. Bracing shown is for lateral support of components members only to reduce buckling length. This component shall not be placed in any environment that will cause the moisture content of the wood to exceed 19% and/or cause connector plate corrosion. Fabricate, handle, install and brace this truss in accordance with the following standards: 'Joint and Cutting Detail Reports' available as output from Truswal software, 'ANSI/TPI 1', 'WTCA 1' - Wood Truss Council of America Standard Design Responsibilities, 'BUILDING COMPONENT SAFETY INFORMATION' - (BCSI 1-03) and 'BCSI SUMMARY SHEETS' by WTCA and TPI. The Truss Plate Institute (TPI) is located at 583 D'Onofrio Drive, Madison, Wisconsin 53719. The American Forest and Paper Association (AFPA) is located at 1111 19th Street, NW, Ste 800, Washington, DC 20036.

Cust: BEN ATKINS
WO: Drive_J_jr60-07_L00006_J00001
Dsgnr: ABCD #LC = 37 WT: 163#

TC Live	20.00 psf	LiveDur L=1.25 P=1.25
TC Snow(Ps)	0.00 psf	SnowDur L=1.15 P=1.15
TC Dead	7.00 psf	Rep Mbr Bnd / Comp / Tens
BC Live	0.00 psf	1.15 / 1.10 / 1.10
BC Dead	10.00 psf	O.C.Spacing 2- 0- 0
Bldg Code:	FBC2004R	DEFL RATIO: L/240 TC: L/240

Job Name: ACE CONST. Truss ID: T-19 Qty: 1

BRG	X-LOC	REACT	SIZE	REQ'D
1	0- 4- 0	1015	8.00"	1.50"
2	23- 1- 4	853	3.50"	1.50"

BRG REQUIREMENTS shown are based ONLY on the truss material at each bearing

MAX DEFLECTION (span) :
L/999 MEM 7-8 (LIVE) LC 35
L= -0.13" D= -0.25" T= -0.38"
EX.WB DEF CRITERIA:L/120
IN MEM 11- 6; T= 0.04"

CRITICAL MEMBER FORCES:

TC	COMP.(DUR.)/	TENS.(DUR.)	CSI
1-2	-1402(1.25)/	649(1.60)	0.27
2-3	-1070(1.25)/	515(1.60)	0.24
3-4	-895(1.25)/	507(1.60)	0.15
4-5	-1307(1.25)/	758(1.60)	0.33
5-6	-1049(1.25)/	569(1.60)	0.70

BC	COMP.(DUR.)/	TENS.(DUR.)	CSI
7-8	-857(1.60)/	1206(1.25)	0.51
8-9	-578(1.60)/	864(1.25)	0.49
9-10	-578(1.60)/	864(1.25)	0.36
10-11	-100(1.60)/	283(1.60)	0.34

WB	COMP.(DUR.)/	TENS.(DUR.)	CSI
2-8	-353(1.25)/	291(1.60)	0.19
3-8	-46(1.60)/	264(1.25)	0.05
4-8	-85(1.60)/	118(1.25)	0.04
4-10	-375(1.60)/	521(1.25)	0.20
5-10	-933(1.25)/	646(1.60)	0.24
6-10	-618(1.60)/	1202(1.25)	0.66
6-11	-784(1.25)/	469(1.60)	0.23

TC	2x4	SP	#2 D
BC	2x4	SP	#2 D
WEB	2x4	SP	#2 D

This design does not account for long term time dependent loading (creep). Building Designer must account for this.
THIS DESIGN IS THE COMPOSITE RESULT OF MULTIPLE LOAD CASES.
Loaded for 10 PSF non-concurrent BCLL.
Drainage must be provided to avoid ponding.
End verticals are designed for axial loads only unless noted otherwise.
Extensions above or below the truss profile (if any) have been designed for loads indicated only. Horizontal loads applied at the end of the extensions have not been considered unless shown. A drop-leg to an otherwise unsupported wall may create a hinge effect that requires additional design consideration (by others).

Designed per ANSI/TPI 1-2002
Plating is based on quality control factors
Cq = 1.20 for wide face and
Cq = 1.11 for narrow face.
Any alterations to this are shown for individual joints on the Joint Report.
Refer to Joint QC Detail Sheet for Maximum Rotational Tolerance used
IRC/IBC truss plate values are based on testing and approval as required by IBC 1703 and ANSI/TPI and are reported in available documents such as ICBO #1607.

UPLIFT REACTION(S) :

Support	C&C Wind	Non-Wind
1	-535 lb	
2	-435 lb	

HORIZONTAL REACTION(S) :
support 1 382 lb
support 2 382 lb
This truss is designed using the ASCE7-02 Wind Specification
Bldg Enclosed = Yes, Importance Factor = 1.00
Truss Location = Not End Zone
Hurricane/Ocean Line = No , Exp Category = B
Bldg Length = 40.00 ft, Bldg Width = 20.00 ft
Mean roof height = 10.92 ft, mph = 120
TPI Standard Occupancy, Dead Load = 9.2 psf
Designed as Main Wind Force Resisting System and Components and Cladding
Tributary Area = 47 sqft
Vertical members exposed to wind: 11- 6

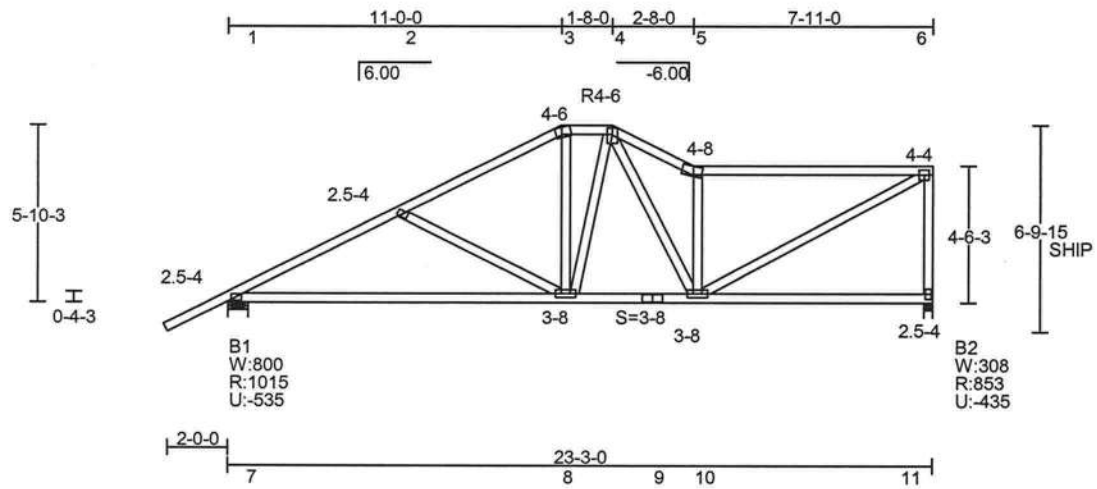

Truswal Systems Corporation
Donald Lee Scott, P.E.
220 Westway Place, Suite 200
Arlington, Texas 76018
Florida License No. 35036
Date: 3/27/2007

All connector plates are Truswal 20 ga. unless shown by "18"(18 ga.), "H"(16 ga.), or "MX"(TWMX 20 ga.), positioned per Joint Details Report.
Circled plates and false frame plates are positioned as shown above. Shift gable stud plates to avoid overlap with structural plates (or staple).

TRUSWAL SYSTEMS
TW Building Components Group, Inc.
220 Westway Place, Suite 200, Arlington, TX 76018
Florida Certificate of Authorization # 278
TRUSPLUS 6.0 VER: T6.5.41

WARNING *Read all notes on this sheet and give a copy of it to the Erecting Contractor.*

This design is for an individual building component not truss system. It has been based on specifications provided by the component manufacturer and done in accordance with the current versions of TPI and AFPA design standards. No responsibility is assumed for dimensional accuracy. Dimensions are to be verified by the component manufacturer and/or building designer prior to fabrication. The building designer must ascertain that the loads utilized on this design meet or exceed the loading imposed by the local building code and the particular application. The design assumes that the top chord is laterally braced by the roof or floor sheathing and the bottom chord is laterally braced by a rigid sheathing material directly attached, unless otherwise noted. Bracing shown is for lateral support of components members only to reduce buckling length. This component shall not be placed in any environment that will cause the moisture content of the wood to exceed 19% and/or cause connector plate corrosion. Fabricate, handle, install and brace this truss in accordance with the following standards: 'Joint and Cutting Detail Reports' available as output from Truswal software, 'ANSI/TPI 1', 'WTCA 1' - Wood Truss Council of America Standard Design Responsibilities, 'BUILDING COMPONENT SAFETY INFORMATION' - (BCSI 1-03) and 'BCSI SUMMARY SHEETS' by WTCA and TPI. The Truss Plate Institute (TPI) is located at 583 D'Onofrio Drive, Madison, Wisconsin 53719. The American Forest and Paper Association (AFPA) is located at 1111 19th Street, NW, Ste 800, Washington, DC 20036.

Cust: BEN ATKINS
WO: Drive_J_jr60-07_L00006_J00001
Dsgnr: ABCD #LC = 37 WT: 175#

TC Live	20.00 psf	LiveDur	L=1.25 P=1.25
TC Snow(Ps)	0.00 psf	SnowDur	L=1.15 P=1.15
TC Dead	7.00 psf	Rep Mbr Bnd / Comp / Tens	
BC Live	0.00 psf		1.15 / 1.10 / 1.10
BC Dead	10.00 psf	O.C.Spacing	2- 0- 0
Bldg Code:	FBC2004R	DEFL RATIO:	L/240 TC: L/240

Job Name: ACE CONST. Truss ID: T-20 Qty: 1

BRG	X-LOC	REACT	SIZE	REQ'D
1	0- 4- 0	1015	8.00"	1.50"
2	23- 1- 4	853	3.50"	1.50"

BRG REQUIREMENTS shown are based ONLY on the truss material at each bearing
MAX DEFLECTION (span) :
L/876 MEM 10-11 (LIVE) LC 35
L= -0.31" D= -0.34" T= -0.65"
EX.WB DEF CRITERIA:L/120
IN MEM 11- 6; T= 0.09"
CRITICAL MEMBER FORCES:

TC	COMP.(DUR.)/	TENS.(DUR.)	CSI
1-2	-1389(1.25)/	612(1.60)	0.31
2-3	-1068(1.25)/	490(1.60)	0.34
3-4	-899(1.25)/	458(1.60)	0.32
4-5	-868(1.25)/	438(1.60)	0.33
5-6	-124(1.60)/	134(1.60)	0.31

BC	COMP.(DUR.)/	TENS.(DUR.)	CSI
7-8	-867(1.60)/	1185(1.25)	0.78
8-9	-593(1.60)/	887(1.25)	0.77
9-10	-460(1.60)/	609(1.25)	0.43
10-11	-460(1.60)/	609(1.25)	0.62

WB	COMP.(DUR.)/	TENS.(DUR.)	CSI
2-8	-326(1.25)/	308(1.60)	0.20
3-8	-141(1.60)/	440(1.25)	0.08
4-9	-309(1.25)/	214(1.60)	0.12
5-9	-178(1.60)/	389(1.25)	0.13
5-11	-898(1.25)/	497(1.60)	0.65
6-11	-98(1.25)/	102(1.60)	0.27

TC	2x4 SP	#2 D
BC	2x4 SP	#2 D
WEB	2x4 SP	#2 D

This design does not account for long term time dependent loading (creep). Building Designer must account for this.
THIS DESIGN IS THE COMPOSITE RESULT OF MULTIPLE LOAD CASES.
Loaded for 10 PSF non-concurrent BCLL.
Drainage must be provided to avoid ponding.
End verticals are designed for axial loads only unless noted otherwise.
Extensions above or below the truss profile (if any) have been designed for loads indicated only. Horizontal loads applied at the end of the extensions have not been considered unless shown. A drop-leg to an otherwise unsupported wall may create a hinge effect that requires additional design consideration (by others).

Designed per ANSI/TPI 1-2002
Plating is based on quality control factors
Cq = 1.20 for wide face and
Cq = 1.11 for narrow face.
Any alterations to this are shown for individual joints on the Joint Report.
Refer to Joint QC Detail Sheet for Maximum Rotational Tolerance used
IRC/IBC truss plate values are based on testing and approval as required by IBC 1703 and ANSI/TPI and are reported in available documents such as ICBO #1607.

UPLIFT REACTION(S) :

Support	C&C Wind	Non-Wind
1	-519 lb	
2	-429 lb	

HORIZONTAL REACTION(S) :
support 1 481 lb
support 2 481 lb
This truss is designed using the ASCE7-02 Wind Specification
Bldg Enclosed = Yes, Importance Factor = 1.00
Truss Location = Not End Zone
Hurricane/Ocean Line = No , Exp Category = B
Bldg Length = 40.00 ft, Bldg Width = 20.00 ft
Mean roof height = 11.13 ft, mph = 120
TPI Standard Occupancy, Dead Load = 9.2 psf
Designed as Main Wind Force Resisting System and Components and Cladding
Tributary Area = 47 sqft
Vertical members exposed to wind: 11- 6

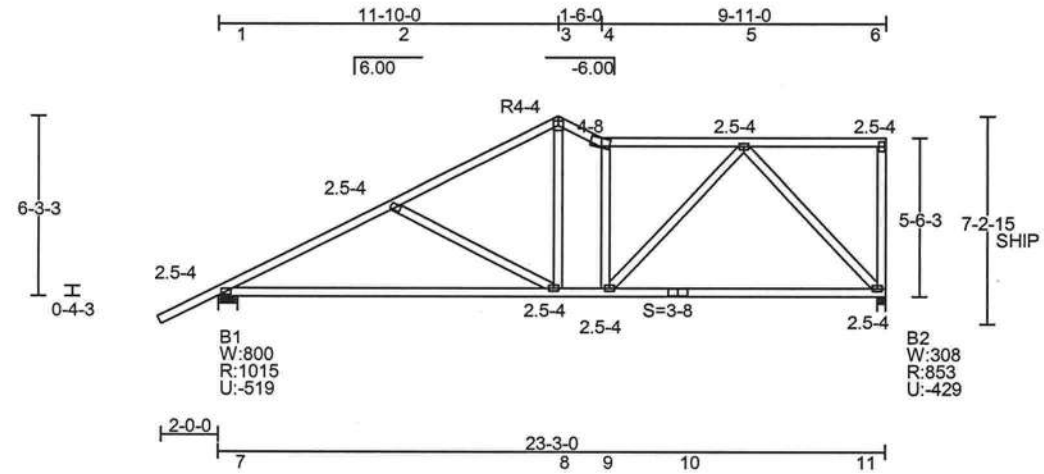

Truswal Systems Corporation
Donald Lee Scott, P.E.
220 Westway Place, Suite 200
Arlington, Texas 76018
Florida License No. 35036
Date: 3/27/2007

All connector plates are Truswal 20 ga. unless shown by "18"(18 ga.), "H"(16 ga.), or "MX"(TWMX 20 ga.), positioned per Joint Details Report. Circled plates and false frame plates are positioned as shown above. Shift gable stud plates to avoid overlap with structural plates (or staple).

TRUSWAL SYSTEMS
Building Components Group, Inc.
220 Westway Place, Suite 200, Arlington, TX 76018
Florida Certificate of Authorization # 278

TRUSPLUS 6.0 VER: T6.5.41

WARNING *Read all notes on this sheet and give a copy of it to the Erecting Contractor.*

This design is for an individual building component not truss system. It has been based on specifications provided by the component manufacturer and done in accordance with the current versions of TPI and AFPA design standards. No responsibility is assumed for dimensional accuracy. Dimensions are to be verified by the component manufacturer and/or building designer prior to fabrication. The building designer must ascertain that the loads utilized on this design meet or exceed the loading imposed by the local building code and the particular application. The design assumes that the top chord is laterally braced by the roof or floor sheathing and the bottom chord is laterally braced by a rigid sheathing material directly attached, unless otherwise noted. Bracing shown is for lateral support of components members only to reduce buckling length. This component shall not be placed in any environment that will cause the moisture content of the wood to exceed 19% and/or cause connector plate corrosion. Fabricate, handle, install and brace this truss in accordance with the following standards: 'Joint and Cutting Detail Reports' available as output from Truswal software, 'ANSI/TPI 1', 'WTCA 1' - Wood Truss Council of America Standard Design Responsibilities, 'BUILDING COMPONENT SAFETY INFORMATION' - (BCSI 1-03) and 'BCSI SUMMARY SHEETS' by WTCA and TPI. The Truss Plate Institute (TPI) is located at 583 D'Onofrio Drive, Madison, Wisconsin 53719. The American Forest and Paper Association (AFPA) is located at 1111 19th Street, NW, Ste 800, Washington, DC 20036.

Cust: BEN ATKINS
WO: Drive_J_jr60-07_L00006_J00001
Dsgnr: ABCD #LC = 37 WT: 167#

TC Live	20.00 psf	LiveDur	L=1.25 P=1.25
TC Snow(Ps)	0.00 psf	SnowDur	L=1.15 P=1.15
TC Dead	7.00 psf	Rep Mbr Bnd / Comp / Tens	
BC Live	0.00 psf		1.15 / 1.10 / 1.10
BC Dead	10.00 psf	O.C.Spacing	2- 0- 0
Bldg Code:	FBC2004R	DEFL RATIO:	L/240 TC: L/240

Job Name: ACE CONST. Truss ID: T-21 Qty: 1

BRG	X-LOC	REACT	SIZE	REQ'D
1	0- 4- 0	1015	8.00"	1.50"
2	23- 1- 4	853	3.50"	1.50"

BRG REQUIREMENTS shown are based ONLY on the truss material at each bearing
MAX DEFLECTION (span) :
L/825 MEM 8-9 (LIVE) LC 35
L= -0.33" D= -0.29" T= -0.62"
EX.WB DEF CRITERIA:L/120
IN MEM 9- 5; T= 0.19"
CRITICAL MEMBER FORCES:

TC	COMP.(DUR.)/	TENS.(DUR.)	CSI
1-2	-1378(1.25)/	582(1.60)	0.31
2-3	-1003(1.25)/	427(1.60)	0.31
3-4	-825(1.25)/	433(1.60)	0.27
4-5	-144(1.60)/	157(1.60)	0.26

BC	COMP.(DUR.)/	TENS.(DUR.)	CSI
6-7	-887(1.60)/	1180(1.25)	0.95
7-8	-459(1.60)/	554(1.25)	0.89
8-9	-459(1.60)/	554(1.25)	0.60

WB	COMP.(DUR.)/	TENS.(DUR.)	CSI
2-7	-399(1.25)/	341(1.60)	0.27
3-7	/	244(1.25)	0.04
4-7	-192(1.60)/	423(1.25)	0.18
4-9	-853(1.25)/	485(1.60)	0.22
5-9	-120(1.25)/	115(1.60)	0.39

TC	2x4	SP	#2 D
BC	2x4	SP	#2 D
WEB	2x4	SP	#2 D

This design does not account for long term time dependent loading (creep). Building Designer must account for this.
Refer to Joint QC Detail Sheet for Maximum Rotational Tolerance used
IRC/IBC truss plate values are based on testing and approval as required by IBC 1703 and ANSI/TPI and are reported in available documents such as ICBO #1607.

☒ Web bracing required at each location shown. See standard details (TX01087001-001 rev1).
Designed per ANSI/TPI 1-2002
Plating is based on quality control factors
Cq = 1.20 for wide face and
Cq = 1.11 for narrow face.
Any alterations to this are shown for individual joints on the Joint Report.
THIS DESIGN IS THE COMPOSITE RESULT OF MULTIPLE LOAD CASES.
Loaded for 10 PSF non-concurrent BCLL.
Drainage must be provided to avoid ponding.
End verticals are designed for axial loads only unless noted otherwise.
Extensions above or below the truss profile (if any) have been designed for loads indicated only. Horizontal loads applied at the end of the extensions have not been considered unless shown. A drop-leg to an otherwise unsupported wall may create a hinge effect that requires additional design consideration (by others).

UPLIFT REACTION(S) :

Support	C&C Wind	Non-Wind
1	-508 lb	
2	-441 lb	

HORIZONTAL REACTION(S) :
support 1 576 lb
support 2 576 lb
This truss is designed using the ASCE7-02 Wind Specification
Bldg Enclosed = Yes, Importance Factor = 1.00
Truss Location = Not End Zone
Hurricane/Ocean Line = No , Exp Category = B
Bldg Length = 40.00 ft, Bldg Width = 20.00 ft
Mean roof height = 11.26 ft, mph = 120
TPI Standard Occupancy, Dead Load = 9.2 psf
Designed as Main Wind Force Resisting System and Components and Cladding
Tributary Area = 47 sqft
Vertical members exposed to wind: 9- 5

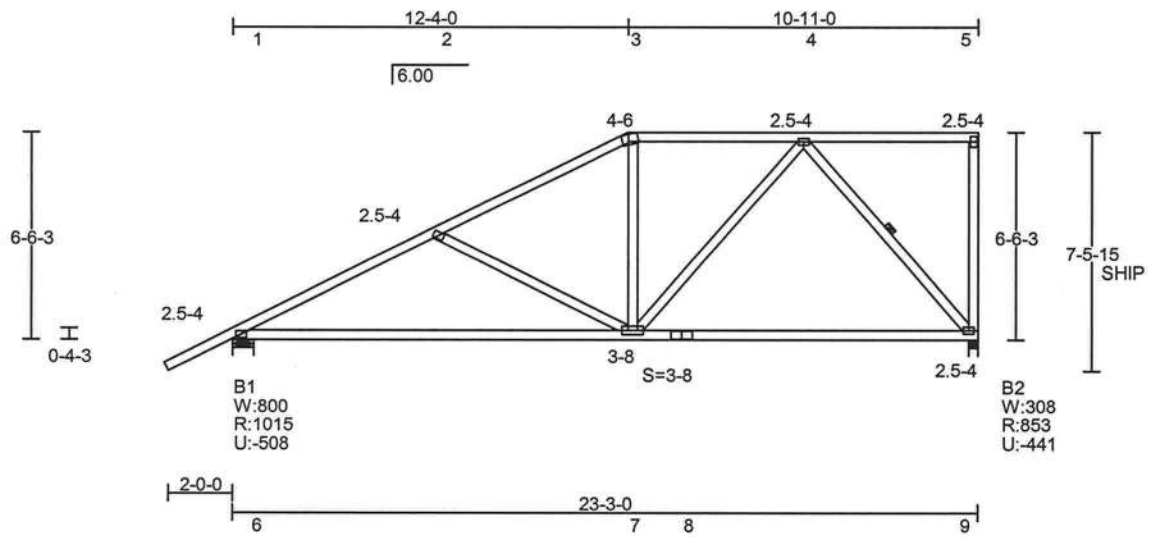

Truswal Systems Corporation
Donald Lee Scott, P.E.
220 Westway Place, Suite 200
Arlington, Texas 76018
Florida License No. 35036
Date: 3/27/2007

All connector plates are Truswal 20 ga. unless shown by "18"(18 ga.), "H"(16 ga.), or "MX"(TWMX 20 ga.), positioned per Joint Details Report.
Circled plates and false frame plates are positioned as shown above. Shift gable stud plates to avoid overlap with structural plates (or staple).

TRUSWAL SYSTEMS
TTW Building Components Group, Inc.
220 Westway Place, Suite 200, Arlington, TX 76018
Florida Certificate of Authorization # 278
TRUSPLUS 6.0 VER: T6.5.41

WARNING *Read all notes on this sheet and give a copy of it to the Erecting Contractor.*

This design is for an individual building component not truss system. It has been based on specifications provided by the component manufacturer and done in accordance with the current versions of TPI and AFPA design standards. No responsibility is assumed for dimensional accuracy. Dimensions are to be verified by the component manufacturer and/or building designer prior to fabrication. The building designer must ascertain that the loads utilized on this design meet or exceed the loading imposed by the local building code and the particular application. The design assumes that the top chord is laterally braced by the roof or floor sheathing and the bottom chord is laterally braced by a rigid sheathing material directly attached, unless otherwise noted. Bracing shown is for lateral support of components members only to reduce buckling length. This component shall not be placed in any environment that will cause the moisture content of the wood to exceed 19% and/or cause connector plate corrosion. Fabricate, handle, install and brace this truss in accordance with the following standards: 'Joint and Cutting Detail Reports' available as output from Truswal software, 'ANSI/TPI 1', 'WTCA 1' - Wood Truss Council of America Standard Design Responsibilities, 'BUILDING COMPONENT SAFETY INFORMATION' - (BCSI 1-03) and 'BCSI SUMMARY SHEETS' by WTCA and TPI. The Truss Plate Institute (TPI) is located at 583 D'Onofrio Drive, Madison, Wisconsin 53719. The American Forest and Paper Association (AFPA) is located at 1111 19th Street, NW, Ste 800, Washington, DC 20036.

Cust: BEN ATKINS
WO: Drive_J_jr60-07_L00006_J00001
Dsgnr: ABCD #LC = 37 WT: 164#

TC Live	20.00 psf	LiveDur	L=1.25 P=1.25
TC Snow(Ps)	0.00 psf	SnowDur	L=1.15 P=1.15
TC Dead	7.00 psf	Rep Mbr Bnd / Comp / Tens	
BC Live	0.00 psf		1.15 / 1.10 / 1.10
BC Dead	10.00 psf	O.C.Spacing	2- 0- 0
Bldg Code:	FBC2004R	DEFL RATIO:	L/240 TC: L/240

Job Name: ACE CONST. Truss ID: T-22 Qty: 1

BRG	X-LOC	REACT	SIZE	REQ'D
1	0- 4- 0	1015	8.00"	1.50"
2	23- 1- 4	853	3.50"	1.50"

BRG REQUIREMENTS shown are based ONLY on the truss material at each bearing

MAX DEFLECTION (span) :
L/625 MEM 7-8 (LIVE) LC 35
L= -0.44" D= -0.39" T= -0.82"
EX.WB DEF CRITERIA:L/120
IN MEM 8- 4; T= 0.33"

CRITICAL MEMBER FORCES:

	COMP.(DUR.)/	TENS.(DUR.)	CSI
TC 1-2	-1340(1.25)/	543(1.60)	0.35
2-3	-1026(1.25)/	445(1.60)	0.54
3-4	-164(1.60)/	179(1.60)	0.66
BC 5-6	-870(1.60)/	1131(1.25)	0.97
6-7	-584(1.60)/	670(1.25)	0.93
7-8	-584(1.60)/	670(1.25)	0.70
WB 2-6	-363(1.25)/	330(1.60)	0.18
3-6	-88(1.60)/	606(1.25)	0.11
3-8	-863(1.25)/	540(1.60)	0.42
4-8	-220(1.25)/	180(1.60)	0.48

TC 2x4 SP #2 D
BC 2x4 SP #2 D
WEB 2x4 SP #2 D

This design does not account for long term time dependent loading (creep). Building Designer must account for this.
Refer to Joint QC Detail Sheet for Maximum Rotational Tolerance used
IRC/IBC truss plate values are based on testing and approval as required by IBC 1703 and ANSI/TPI and are reported in available documents such as ICBO #1607.

☒ Web bracing required at each location shown. See standard details (TX01087001-001 rev1).
Designed per ANSI/TPI 1-2002
Plating is based on quality control factors
Cq = 1.20 for wide face and
Cq = 1.11 for narrow face.
Any alterations to this are shown for individual joints on the Joint Report.
THIS DESIGN IS THE COMPOSITE RESULT OF MULTIPLE LOAD CASES.
Loaded for 10 PSF non-concurrent BCLL.
Drainage must be provided to avoid ponding.
End verticals are designed for axial loads only unless noted otherwise.
Extensions above or below the truss profile (if any) have been designed for loads indicated only. Horizontal loads applied at the end of the extensions have not been considered unless shown. A drop-leg to an otherwise unsupported wall may create a hinge effect that requires additional design consideration (by others).

UPLIFT REACTION(S) :

Support	C&C Wind	Non-Wind
1	-504 lb	
2	-473 lb	

HORIZONTAL REACTION(S) :
support 1 659 lb
support 2 659 lb
This truss is designed using the ASCE7-02 Wind Specification
Bldg Enclosed = Yes, Importance Factor = 1.00
Truss Location = Not End Zone
Hurricane/Ocean Line = No , Exp Category = B
Bldg Length = 40.00 ft, Bldg Width = 20.00 ft
Mean roof height = 11.76 ft, mph = 120
TPI Standard Occupancy, Dead Load = 9.2 psf
Designed as Main Wind Force Resisting System and Components and Cladding
Tributary Area = 47 sqft
Vertical members exposed to wind: 8- 4

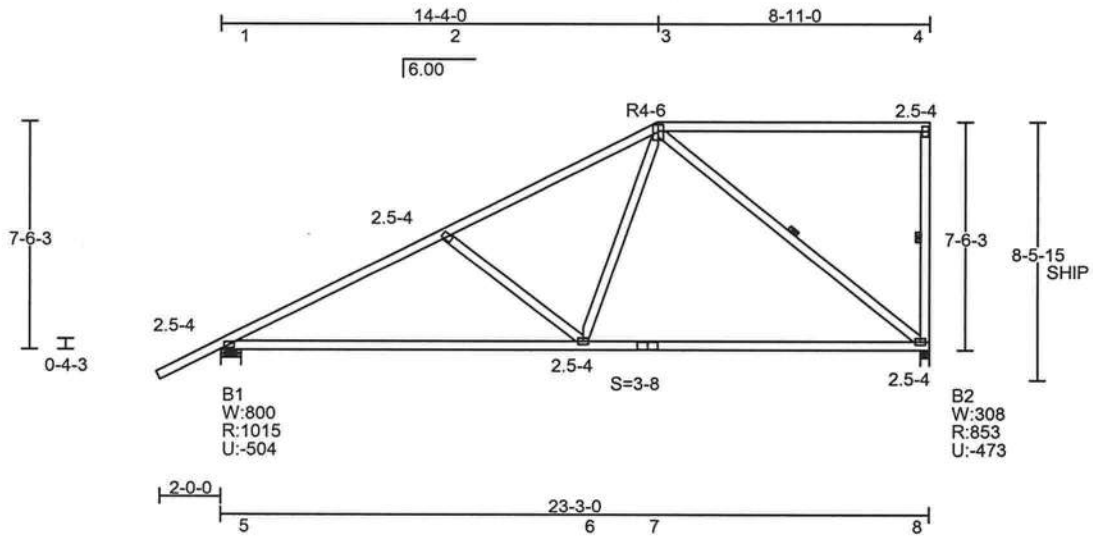

Truswal Systems Corporation
Donald Lee Scott, P.E.
220 Westway Place, Suite 200
Arlington, Texas 76018
Florida License No. 35036
Date: 3/27/2007

All connector plates are Truswal 20 ga. unless shown by "18"(18 ga.), "H"(16 ga.), or "MX"(TWMX 20 ga.), positioned per Joint Details Report. Circled plates and false frame plates are positioned as shown above. Shift gable stud plates to avoid overlap with structural plates (or staple).

TRUSWAL SYSTEMS
Building Components Group, Inc.
220 Westway Place, Suite 200, Arlington, TX 76018
Florida Certificate of Authorization # 278
TRUSPLUS 6.0 VER: T6.5.41

WARNING *Read all notes on this sheet and give a copy of it to the Erecting Contractor.*

This design is for an individual building component not truss system. It has been based on specifications provided by the component manufacturer and done in accordance with the current versions of TPI and AFPA design standards. No responsibility is assumed for dimensional accuracy. Dimensions are to be verified by the component manufacturer and/or building designer prior to fabrication. The building designer must ascertain that the loads utilized on this design meet or exceed the loading imposed by the local building code and the particular application. The design assumes that the top chord is laterally braced by the roof or floor sheathing and the bottom chord is laterally braced by a rigid sheathing material directly attached, unless otherwise noted. Bracing shown is for lateral support of components members only to reduce buckling length. This component shall not be placed in any environment that will cause the moisture content of the wood to exceed 19% and/or cause connector plate corrosion. Fabricate, handle, install and brace this truss in accordance with the following standards: 'Joint and Cutting Detail Reports' available as output from Truswal software, 'ANSI/TPI 1', 'WTCA 1' - Wood Truss Council of America Standard Design Responsibilities, 'BUILDING COMPONENT SAFETY INFORMATION' - (BCSI 1-03) and 'BCSI SUMMARY SHEETS' by WTCA and TPI. The Truss Plate Institute (TPI) is located at 583 D'Onofrio Drive, Madison, Wisconsin 53719. The American Forest and Paper Association (AFPA) is located at 1111 19th Street, NW, Ste 800, Washington, DC 20036.

Cust: BEN ATKINS
WO: Drive_J_jr60-07_L00006_J00001
Dsgnr: ABCD #LC = 37 WT: 158#

TC Live	20.00 psf	LiveDur	L=1.25 P=1.25
TC Snow(Ps)	0.00 psf	SnowDur	L=1.15 P=1.15
TC Dead	7.00 psf	Rep Mbr Bnd / Comp / Tens	1.15 / 1.10 / 1.10
BC Live	0.00 psf	O.C.Spacing	2- 0- 0
BC Dead	10.00 psf		
Bldg Code:	FBC2004R	DEFL RATIO:	L/240 TC: L/240

Job Name: ACE CONST. Truss ID: T-23 Qty: 1

BRG	X-LOC	REACT	SIZE	REQ'D
1	0- 4- 0	1015	8.00"	1.50"
2	23- 1- 4	853	3.50"	1.50"

BRG REQUIREMENTS shown are based ONLY on the truss material at each bearing
MAX DEFLECTION (span) :
L/632 MEM 8-9 (LIVE) LC 35
L= -0.43" D= -0.37" T= -0.81"
EX.WB DEF CRITERIA:L/120
IN MEM 9- 5; T= 0.55"
CRITICAL MEMBER FORCES:

TC	COMP.(DUR.)/	TENS.(DUR.)	CSI
1-2	-1316(1.25)/	521(1.60)	0.52
2-3	-1026(1.25)/	447(1.60)	0.52
3-4	-975(1.25)/	469(1.60)	0.41
4-5	-184(1.60)/	200(1.60)	0.39

BC	COMP.(DUR.)/	TENS.(DUR.)	CSI
6-7	-863(1.60)/	1102(1.25)	0.97
7-8	-528(1.60)/	494(1.25)	0.91
8-9	-528(1.60)/	494(1.25)	0.67

WB	COMP.(DUR.)/	TENS.(DUR.)	CSI
2-7	-424(1.25)/	375(1.60)	0.19
4-7	-190(1.60)/	684(1.25)	0.24
4-9	-773(1.25)/	538(1.60)	0.33
5-9	-170(1.25)/	141(1.60)	0.61

TC	2x4	SP #2 D
BC	2x4	SP #2 D
WEB	2x4	SP #2 D

This design does not account for long term time dependent loading (creep). Building Designer must account for this.
Refer to Joint QC Detail Sheet for Maximum Rotational Tolerance used
IRC/IBC truss plate values are based on testing and approval as required by IBC 1703 and ANSI/TPI and are reported in available documents such as ICBO #1607.

☒ Web bracing required at each location shown. See standard details (TX01087001-001 rev1).
Designed per ANSI/TPI 1-2002
Plating is based on quality control factors
Cq = 1.20 for wide face and
Cq = 1.11 for narrow face.
Any alterations to this are shown for individual joints on the Joint Report.
THIS DESIGN IS THE COMPOSITE RESULT OF MULTIPLE LOAD CASES.
Loaded for 10 PSF non-concurrent BCLL.
Drainage must be provided to avoid ponding.
End verticals are designed for axial loads only unless noted otherwise.
Extensions above or below the truss profile (if any) have been designed for loads indicated only. Horizontal loads applied at the end of the extensions have not been considered unless shown. A drop-leg to an otherwise unsupported wall may create a hinge effect that requires additional design consideration (by others).

UPLIFT REACTION(S) :

Support	C&C Wind	Non-Wind
1	-501 lb	
2	-508 lb	

HORIZONTAL REACTION(S) :
support 1 741 lb
support 2 741 lb
This truss is designed using the ASCE7-02 Wind Specification
Bldg Enclosed = Yes, Importance Factor = 1.00
Truss Location = Not End Zone
Hurricane/Ocean Line = No , Exp Category = B
Bldg Length = 40.00 ft, Bldg Width = 20.00 ft
Mean roof height = 12.26 ft, mph = 120
TPI Standard Occupancy, Dead Load = 9.2 psf
Designed as Main Wind Force Resisting System and Components and Cladding
Tributary Area = 47 sqft
Vertical members exposed to wind: 9- 5

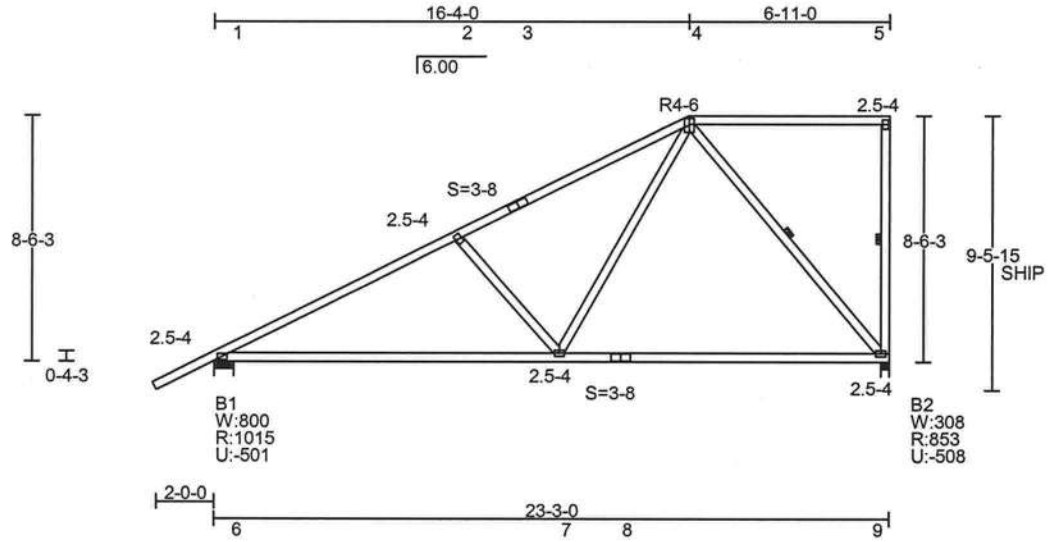

Truswal Systems Corporation
Donald Lee Scott, P.E.
220 Westway Place, Suite 200
Arlington, Texas 76018
Florida License No. 35036

Date: 3/27/2007

All connector plates are Truswal 20 ga. unless shown by "18"(18 ga.), "H"(16 ga.), or "MX"(TWMX 20 ga.), positioned per Joint Details Report. Circled plates and false frame plates are positioned as shown above. Shift gable stud plates to avoid overlap with structural plates (or staple).

TRUSWAL SYSTEMS
TW Building Components Group, Inc.
220 Westway Place, Suite 200, Arlington, TX 76018
Florida Certificate of Authorization # 278
TRUSPLUS 6.0 VER: T6.5.41

WARNING *Read all notes on this sheet and give a copy of it to the Erecting Contractor.*

This design is for an individual building component not truss system. It has been based on specifications provided by the component manufacturer and done in accordance with the current versions of TPI and AFPA design standards. No responsibility is assumed for dimensional accuracy. Dimensions are to be verified by the component manufacturer and/or building designer prior to fabrication. The building designer must ascertain that the loads utilized on this design meet or exceed the loading imposed by the local building code and the particular application. The design assumes that the top chord is laterally braced by the roof or floor sheathing and the bottom chord is laterally braced by a rigid sheathing material directly attached, unless otherwise noted. Bracing shown is for lateral support of components members only to reduce buckling length. This component shall not be placed in any environment that will cause the moisture content of the wood to exceed 19% and/or cause connector plate corrosion. Fabricate, handle, install and brace this truss in accordance with the following standards: 'Joint and Cutting Detail Reports' available as output from Truswal software, 'ANSI/TPI 1', 'WTCA 1' - Wood Truss Council of America Standard Design Responsibilities, 'BUILDING COMPONENT SAFETY INFORMATION' - (BCSI 1-03) and 'BCSI SUMMARY SHEETS' by WTCA and TPI. The Truss Plate Institute (TPI) is located at 583 D'Onofrio Drive, Madison, Wisconsin 53719. The American Forest and Paper Association (AFPA) is located at 1111 19th Street, NW, Ste 800, Washington, DC 20036.

Cust: BEN ATKINS
WO: Drive_J_jr60-07_L00006_J00001
Dsgnr: ABCD #LC = 37 WT: 162#

TC Live	20.00 psf	LiveDur	L=1.25 P=1.25
TC Snow(Ps)	0.00 psf	SnowDur	L=1.15 P=1.15
TC Dead	7.00 psf	Rep Mbr Bnd / Comp / Tens	
BC Live	0.00 psf		1.15 / 1.10 / 1.10
BC Dead	10.00 psf	O.C.Spacing	2- 0- 0
Bldg Code:	FBC2004R	DEFL RATIO:	L/240 TC: L/240

Job Name: ACE CONST. Truss ID: T-24 Qty: 1

BRG	X-LOC	REACT	SIZE	REQ'D
1	0- 4- 0	1015	8.00"	1.50"
2	23- 1- 4	853	3.50"	1.50"

BRG REQUIREMENTS shown are based ONLY on the truss material at each bearing

MAX DEFLECTION (span) :
L/637 MEM 8-9 (LIVE) LC 35
L= -0.43" D= -0.36" T= -0.79"
EX.WB DEF CRITERIA:L/120
IN MEM 9- 5; T= 0.86"

CRITICAL MEMBER FORCES:

TC	COMP.(DUR.)/	TENS.(DUR.)	CSI
1-2	-1287(1.25)/	495(1.60)	0.71
2-3	-1058(1.25)/	487(1.60)	0.71
3-4	-1032(1.25)/	517(1.60)	0.42
4-5	-203(1.60)/	221(1.60)	0.21

BC	COMP.(DUR.)/	TENS.(DUR.)	CSI
6-7	-843(1.60)/	1068(1.25)	0.98
7-8	-463(1.60)/	338(1.25)	0.90
8-9	-463(1.60)/	338(1.25)	0.65

WB	COMP.(DUR.)/	TENS.(DUR.)	CSI
2-7	-480(1.25)/	419(1.60)	0.20
4-7	-312(1.60)/	862(1.25)	0.58
4-9	-735(1.25)/	564(1.60)	0.30
5-9	-113(1.25)/	93(1.60)	0.77

TC	2x4	SP	#2 D
BC	2x4	SP	#2 D
WEB	2x4	SP	#2 D

This design does not account for long term time dependent loading (creep). Building Designer must account for this.
Refer to Joint QC Detail Sheet for Maximum Rotational Tolerance used
IRC/IBC truss plate values are based on testing and approval as required by IBC 1703 and ANSI/TPI and are reported in available documents such as ICBO #1607.

☒ Web bracing required at each location shown. See standard details (TX01087001-001 rev1).
Designed per ANSI/TPI 1-2002
Plating is based on quality control factors
Cq = 1.20 for wide face and
Cq = 1.11 for narrow face.
Any alterations to this are shown for individual joints on the Joint Report.
THIS DESIGN IS THE COMPOSITE RESULT OF MULTIPLE LOAD CASES.
Loaded for 10 PSF non-concurrent BCLL.
Drainage must be provided to avoid ponding.
End verticals are designed for axial loads only unless noted otherwise.
Extensions above or below the truss profile (if any) have been designed for loads indicated only. Horizontal loads applied at the end of the extensions have not been considered unless shown. A drop-leg to an otherwise unsupported wall may create a hinge effect that requires additional design consideration (by others).

UPLIFT REACTION(S) :

Support	C&C Wind	Non-Wind
1	-497 lb	
2	-546 lb	

HORIZONTAL REACTION(S) :
support 1 823 lb
support 2 823 lb
This truss is designed using the ASCE7-02 Wind Specification
Bldg Enclosed = Yes, Importance Factor = 1.00
Truss Location = Not End Zone
Hurricane/Ocean Line = No , Exp Category = B
Bldg Length = 40.00 ft, Bldg Width = 20.00 ft
Mean roof height = 12.76 ft, mph = 120
TPI Standard Occupancy, Dead Load = 9.2 psf
Designed as Main Wind Force Resisting System and Components and Cladding
Tributary Area = 47 sqft
Vertical members exposed to wind: 9- 5

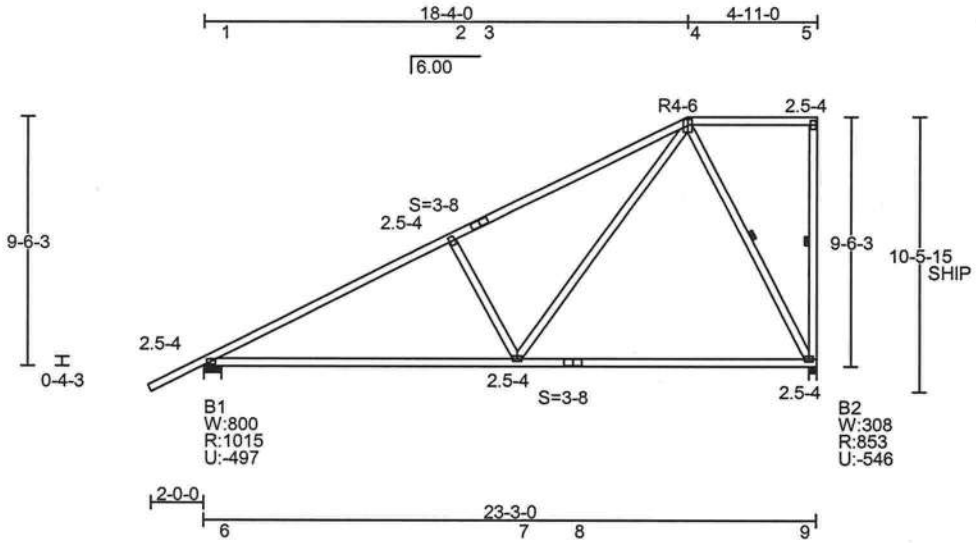

Truswal Systems Corporation
Donald Lee Scott, P.E.
220 Westway Place, Suite 200
Arlington, Texas 76018
Florida License No. 35036
Date: 3/27/2007

All connector plates are Truswal 20 ga. unless shown by "18"(18 ga.), "H"(16 ga.), or "MX"(TWMX 20 ga.), positioned per Joint Details Report. Circled plates and false frame plates are positioned as shown above. Shift gable stud plates to avoid overlap with structural plates (or staple).

TRUSWAL SYSTEMS
Building Components Group, Inc.
220 Westway Place, Suite 200, Arlington, TX 76018
Florida Certificate of Authorization # 278
TRUSPLUS 6.0 VER: T6.5.41

WARNING *Read all notes on this sheet and give a copy of it to the Erecting Contractor.*

This design is for an individual building component not truss system. It has been based on specifications provided by the component manufacturer and done in accordance with the current versions of TPI and AFPA design standards. No responsibility is assumed for dimensional accuracy. Dimensions are to be verified by the component manufacturer and/or building designer prior to fabrication. The building designer must ascertain that the loads utilized on this design meet or exceed the loading imposed by the local building code and the particular application. The design assumes that the top chord is laterally braced by the roof or floor sheathing and the bottom chord is laterally braced by a rigid sheathing material directly attached, unless otherwise noted. Bracing shown is for lateral support of components members only to reduce buckling length. This component shall not be placed in any environment that will cause the moisture content of the wood to exceed 19% and/or cause connector plate corrosion. Fabricate, handle, install and brace this truss in accordance with the following standards: 'Joint and Cutting Detail Reports' available as output from Truswal software, 'ANSI/TPI 1', 'WTCA 1' - Wood Truss Council of America Standard Design Responsibilities, 'BUILDING COMPONENT SAFETY INFORMATION' - (BCSI 1-03) and 'BCSI SUMMARY SHEETS' by WTCA and TPI. The Truss Plate Institute (TPI) is located at 583 D'Onofrio Drive, Madison, Wisconsin 53719. The American Forest and Paper Association (AFPA) is located at 1111 19th Street, NW, Ste 800, Washington, DC 20036.

Cust: BEN ATKINS
WO: Drive_J_jr60-07_L00006_J00001
Dsgnr: ABCD #LC = 37 WT: 167#

TC Live	20.00 psf	LiveDur	L=1.25 P=1.25
TC Snow(Ps)	0.00 psf	SnowDur	L=1.15 P=1.15
TC Dead	7.00 psf	Rep Mbr Bnd / Comp / Tens	
BC Live	0.00 psf		1.15 / 1.10 / 1.10
BC Dead	10.00 psf	O.C.Spacing	2- 0- 0
Bldg Code:	FBC2004R	DEFL RATIO:	L/240 TC: L/240

Job Name: ACE CONST. Truss ID: T-25 Qty: 1

BRG	X-LOC	REACT	SIZE	REQ'D
1	0- 4- 0	1015	8.00"	1.50"
2	23- 1- 4	853	3.50"	1.50"

BRG REQUIREMENTS shown are based ONLY on the truss material at each bearing

MAX DEFLECTION (span) :
L/637 MEM 8-9 (LIVE) LC 33
L= -0.43" D= -0.36" T= -0.79"

CRITICAL MEMBER FORCES:

TC	COMP.(DUR.)/	TENS.(DUR.)	CSI
1-2	-1279(1.25)/	292(1.60)	0.75
2-3	-1071(1.25)/	307(1.60)	0.75
3-4	-1052(1.25)/	339(1.60)	0.46
4-5	0(1.25)/	0(1.60)	0.20

BC	COMP.(DUR.)/	TENS.(DUR.)	CSI
6-7	-580(1.60)/	1058(1.25)	0.98
7-8	-197(1.60)/	299(1.25)	0.89
8-9	-197(1.60)/	299(1.25)	0.65

WB	COMP.(DUR.)/	TENS.(DUR.)	CSI
2-7	-496(1.25)/	426(1.60)	0.21
4-7	-337(1.60)/	913(1.25)	0.69
4-9	-734(1.25)/	483(1.60)	0.30
5-9	-96(1.25)/	75(1.60)	0.03

TC	2x4	SP	#2 D
BC	2x4	SP	#2 D
WEB	2x4	SP	#2 D

This design does not account for long term time dependent loading (creep). Building Designer must account for this.
Refer to Joint QC Detail Sheet for Maximum Rotational Tolerance used
IRC/IBC truss plate values are based on testing and approval as required by IBC 1703 and ANSI/TPI and are reported in available documents such as ICBO #1607.

☒ Web bracing required at each location shown. See standard details (TX01087001-001 rev1).
Designed per ANSI/TPI 1-2002
Plating is based on quality control factors
Cq = 1.20 for wide face and
Cq = 1.11 for narrow face.
Any alterations to this are shown for individual joints on the Joint Report.
THIS DESIGN IS THE COMPOSITE RESULT OF MULTIPLE LOAD CASES.
Loaded for 10 PSF non-concurrent BCLL.
Drainage must be provided to avoid ponding.
End verticals are designed for axial loads only unless noted otherwise.
Extensions above or below the truss profile (if any) have been designed for loads indicated only. Horizontal loads applied at the end of the extensions have not been considered unless shown. A drop-leg to an otherwise unsupported wall may create a hinge effect that requires additional design consideration (by others).

UPLIFT REACTION(S) :

Support	C&C Wind	Non-Wind
1	-401 lb	
2	-469 lb	

HORIZONTAL REACTION(S) :
support 1 428 lb
support 2 428 lb
This truss is designed using the ASCE7-02 Wind Specification
Bldg Enclosed = Yes, Importance Factor = 1.00
Truss Location = Not End Zone
Hurricane/Ocean Line = No , Exp Category = B
Bldg Length = 40.00 ft, Bldg Width = 20.00 ft
Mean roof height = 12.89 ft, mph = 120
TPI Standard Occupancy, Dead Load = 9.2 psf
Designed as Main Wind Force Resisting System and Components and Cladding
Tributary Area = 47 sqft

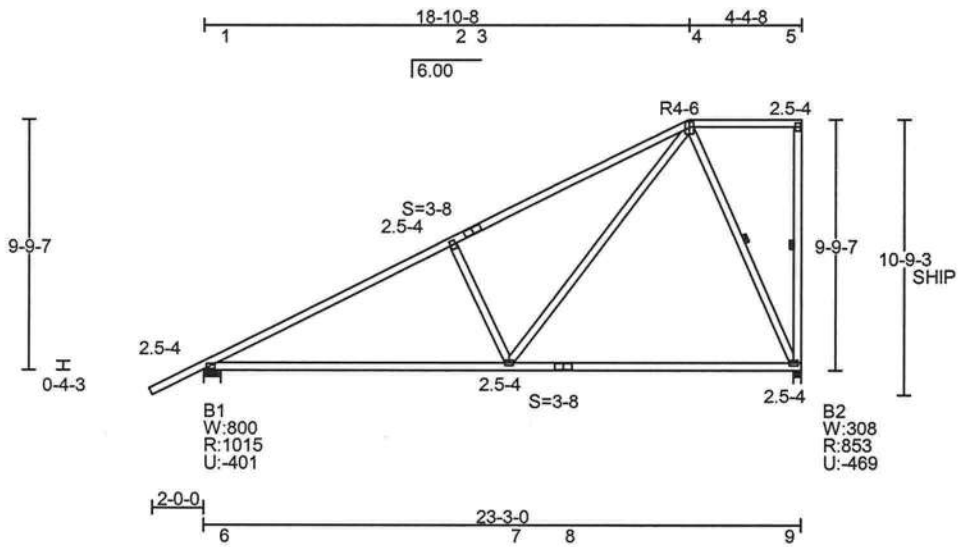

Truswal Systems Corporation
Donald Lee Scott, P.E.
220 Westway Place, Suite 200
Arlington, Texas 76018
Florida License No. 35036

Date: 3/27/2007

All connector plates are Truswal 20 ga. unless shown by "18"(18 ga.), "H"(16 ga.), or "MX"(TWMX 20 ga.), positioned per Joint Details Report. Circled plates and false frame plates are positioned as shown above. Shift gable stud plates to avoid overlap with structural plates (or staple).

TRUSWAL SYSTEMS
TW Building Components Group, Inc.
220 Westway Place, Suite 200, Arlington, TX 76018
Florida Certificate of Authorization # 278
TRUSPLUS 6.0 VER: T6.5.41

WARNING *Read all notes on this sheet and give a copy of it to the Erecting Contractor.*
This design is for an individual building component not truss system. It has been based on specifications provided by the component manufacturer and done in accordance with the current versions of TPI and AFPA design standards. No responsibility is assumed for dimensional accuracy. Dimensions are to be verified by the component manufacturer and/or building designer prior to fabrication. The building designer must ascertain that the loads utilized on this design meet or exceed the loading imposed by the local building code and the particular application. The design assumes that the top chord is laterally braced by the roof or floor sheathing and the bottom chord is laterally braced by a rigid sheathing material directly attached, unless otherwise noted. Bracing shown is for lateral support of components members only to reduce buckling length. This component shall not be placed in any environment that will cause the moisture content of the wood to exceed 19% and/or cause connector plate corrosion. Fabricate, handle, install and brace this truss in accordance with the following standards: 'Joint and Cutting Detail Reports' available as output from Truswal software, 'ANSI/TPI 1', 'WTCA 1' - Wood Truss Council of America Standard Design Responsibilities, 'BUILDING COMPONENT SAFETY INFORMATION' - (BCSI 1-03) and 'BCSI SUMMARY SHEETS' by WTCA and TPI. The Truss Plate Institute (TPI) is located at 583 D'Onofrio Drive, Madison, Wisconsin 53719. The American Forest and Paper Association (AFPA) is located at 1111 19th Street, NW, Ste 800, Washington, DC 20036.

Cust: BEN ATKINS
WO: Drive_J_jr60-07_L00006_J00001
Dsgnr: ABCD #LC = 34 WT: 168#

TC Live	20.00 psf	LiveDur	L=1.25 P=1.25
TC Snow(Ps)	0.00 psf	SnowDur	L=1.15 P=1.15
TC Dead	7.00 psf	Rep Mbr Bnd / Comp / Tens	
BC Live	0.00 psf		1.15 / 1.10 / 1.10
BC Dead	10.00 psf	O.C.Spacing	2- 0- 0
Bldg Code:	FBC2004R	DEFL RATIO:	L/240 TC: L/240

Job Name: ACE CONST. Truss ID: T-26 Qty: 1

BRG	X-LOC	REACT	SIZE	REQ'D
1	0- 4- 0	500	8.00"	1.50"
2	7- 0- 0	500	8.00"	1.50"

BRG REQUIREMENTS shown are based ONLY on the truss material at each bearing

MAX DEFLECTION (span) :
L/999 MEM 6-7 (LIVE) LC 1
L= 0.00" D= 0.00" T= -0.01"

CRITICAL MEMBER FORCES:

TC	COMP.(DUR.)/	TENS.(DUR.)	CSI
1-2	-475(1.25)/	221(1.60)	0.10
2-3	-398(1.25)/	220(1.60)	0.05
3-4	-475(1.25)/	221(1.60)	0.10

BC	COMP.(DUR.)/	TENS.(DUR.)	CSI
5-6	-146(1.60)/	392(1.25)	0.12
6-7	-144(1.60)/	398(1.25)	0.09
7-8	-146(1.60)/	392(1.25)	0.12

WB	COMP.(DUR.)/	TENS.(DUR.)	CSI
2-6	-20(1.60)/	98(1.25)	0.02
3-7	-20(1.60)/	98(1.25)	0.02

TC	2x4	SP	#2 D
BC	2x4	SP	#2 D
WEB	2x4	SP	#2 D

This design does not account for long term time dependent loading (creep). Building Designer must account for this.
THIS DESIGN IS THE COMPOSITE RESULT OF MULTIPLE LOAD CASES.
Drainage must be provided to avoid ponding.
Permanent bracing is required (by others) to prevent rotation/toppling. See BCSI 1-03 and ANSI/TPI 1.

Designed per ANSI/TPI 1-2002
Plating is based on quality control factors
Cq = 1.20 for wide face and
Cq = 1.11 for narrow face.
Any alterations to this are shown for individual joints on the Joint Report.
Refer to Joint QC Detail Sheet for Maximum Rotational Tolerance used
IRC/IBC truss plate values are based on testing and approval as required by IBC 1703 and ANSI/TPI and are reported in available documents such as ICBO #1607.

UPLIFT REACTION(S) :

Support	C&C Wind	Non-Wind
1	-346 lb	
2	-346 lb	

This truss is designed using the ASCE7-02 Wind Specification
Bldg Enclosed = Yes, Importance Factor = 1.00
Truss Location = Not End Zone
Hurricane/Ocean Line = No , Exp Category = B
Bldg Length = 40.00 ft, Bldg Width = 20.00 ft
Mean roof height = 10.92 ft, mph = 120
TPI Standard Occupancy, Dead Load = 9.2 psf
Designed as Main Wind Force Resisting System and Components and Cladding
Tributary Area = 19 sqft

LOAD CASE #1 DESIGN LOADS

Dir	L.Plf	L.Loc	R.Plf	R.Loc	LL/TL
TC Vert	74.00 -	2- 0- 0	74.00	0- 0- 0	0.54
TC Vert	54.00	0- 0- 0	54.00	3- 0- 0	0.74
TC Vert	63.56	3- 0- 0	63.56	4- 4- 0	0.74
TC Vert	54.00	4- 4- 0	54.00	7- 4- 0	0.74
TC Vert	74.00	7- 4- 0	74.00	9- 4- 0	0.54
BC Vert	20.00	0- 0- 0	20.00	3- 0- 0	0.00
BC Vert	23.54	3- 0- 0	23.54	4- 4- 0	0.00
BC Vert	20.00	4- 4- 0	20.00	7- 4- 0	0.00

...Type...	lbs	X.Loc	LL/TL
TC Vert	0.0	0- 4- 0	1.00
TC Vert	0.0	7- 0- 0	1.00
BC Vert	39.0	3- 0- 0	1.00
BC Vert	33.1	3- 0- 0	0.00
BC Vert	39.0	4- 4- 0	1.00
BC Vert	33.1	4- 4- 0	0.00

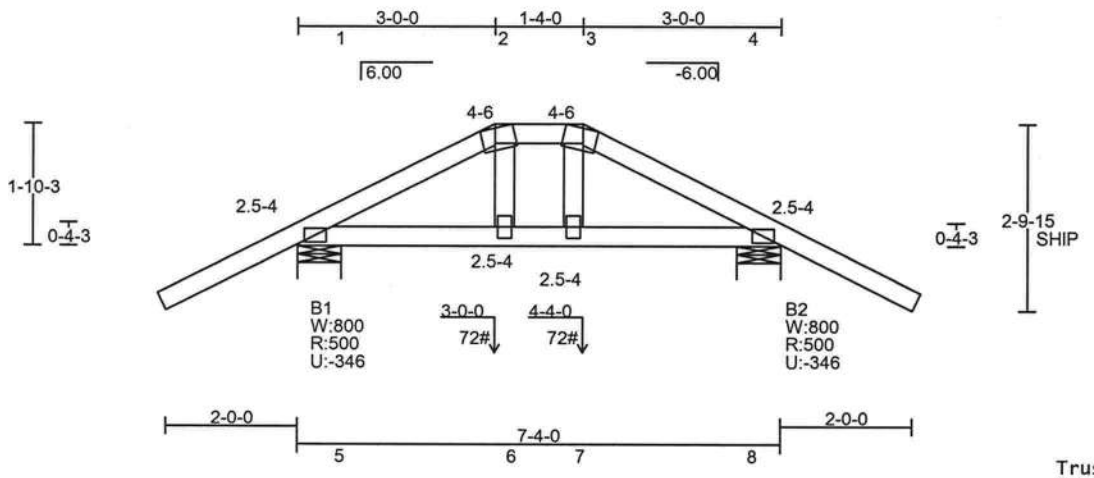

Truswal Systems Corporation
Donald Lee Scott, P.E.
220 Westway Place, Suite 200
Arlington, Texas 76018
Florida License No. 35036
Date: 3/27/2007

All connector plates are Truswal 20 ga. unless shown by "18"(18 ga.), "H"(16 ga.), or "MX"(TWMX 20 ga.), positioned per Joint Details Report. Circled plates and false frame plates are positioned as shown above. Shift gable stud plates to avoid overlap with structural plates (or staple).

TRUSWAL SYSTEMS
ITW Building Components Group, Inc.
220 Westway Place, Suite 200, Arlington, TX 76018
Florida Certificate of Authorization # 278

TRUSPLUS 6.0 VER: T6.5.41

WARNING ***Read all notes on this sheet and give a copy of it to the Erecting Contractor.***

This design is for an individual building component not truss system. It has been based on specifications provided by the component manufacturer and done in accordance with the current versions of TPI and AFPA design standards. No responsibility is assumed for dimensional accuracy. Dimensions are to be verified by the component manufacturer and/or building designer prior to fabrication. The building designer must ascertain that the loads utilized on this design meet or exceed the loading imposed by the local building code and the particular application. The design assumes that the top chord is laterally braced by the roof or floor sheathing and the bottom chord is laterally braced by a rigid sheathing material directly attached, unless otherwise noted. Bracing shown is for lateral support of components members only to reduce buckling length. This component shall not be placed in any environment that will cause the moisture content of the wood to exceed 19% and/or cause connector plate corrosion. Fabricate, handle, install and brace this truss in accordance with the following standards: 'Joint and Cutting Detail Reports' available as output from Truswal software, 'ANSI/TPI 1', 'WTCA 1' - Wood Truss Council of America Standard Design Responsibilities, 'BUILDING COMPONENT SAFETY INFORMATION' - (BCSI 1-03) and 'BCSI SUMMARY SHEETS' by WTCA and TPI. The Truss Plate Institute (TPI) is located at 583 D'Onofrio Drive, Madison, Wisconsin 53719. The American Forest and Paper Association (AFPA) is located at 1111 19th Street, NW, Ste 800, Washington, DC 20036.

Cust: BEN ATKINS
WO: Drive_J_jr60-07_L00006_J00001
Dsgnr: ABCD #LC = 33 WT: 45#

TC Live	20.00 psf	LiveDur	L=1.25 P=1.25
TC Snow(Ps)	0.00 psf	SnowDur	L=1.15 P=1.15
TC Dead	7.00 psf	Rep Mbr Bnd / Comp / Tens	
BC Live	0.00 psf		1.00 / 1.00 / 1.00
BC Dead	10.00 psf	O.C.Spacing	2- 0- 0
Bldg Code:	FBC2004R	DEFL RATIO:	L/240 TC: L/240

Job Name: ACE CONST. Truss ID: T-30 Qty: 1

BRG	X-LOC	REACT	SIZE	REQ'D
1	0- 4- 0	1393	8.00"	1.50"
2	17- 8- 0	1507	8.00"	1.52"

BRG REQUIREMENTS shown are based ONLY on the truss material at each bearing
MAX DEFLECTION (span) :
L/999 MEM 6-7 (LIVE) LC 1
L= -0.06" D= -0.07" T= -0.13"
EX.WB DEF CRITERIA:L/120
IN MEM 8- 4; T= 0.02"
CRITICAL MEMBER FORCES:

	COMP.(DUR.)/	TENS.(DUR.)	CSI
TC 1-2	-2186(1.25)/	396(1.60)	0.46
2-3	-1910(1.25)/	407(1.60)	0.72
3-4	-1670(1.25)/	359(1.60)	0.71
BC 5-6	-538(1.60)/	1879(1.25)	0.55
6-7	-432(1.60)/	1736(1.25)	0.52
7-8	-84(1.60)/	257(1.60)	0.34
WB 2-6	-7(1.60)/	509(1.25)	0.09
3-6	-121(1.60)/	212(1.25)	0.07
3-7	-875(1.25)/	289(1.60)	0.16
4-7	-395(1.60)/	2021(1.25)	0.35
4-8	-1410(1.25)/	342(1.60)	0.31

TC 2x4 SP #2 D
BC 2x4 SP #2 D
WEB 2x4 SP #2 D
Lumber shear allowables are per NDS.
This design does not account for long term time dependent loading (creep). Building Designer must account for this.
THIS DESIGN IS THE COMPOSITE RESULT OF MULTIPLE LOAD CASES.
Loaded for 10 PSF non-concurrent BCLL.
Drainage must be provided to avoid ponding.
Permanent bracing is required (by others) to prevent rotation/toppling. See BCSI 1-03 and ANSI/TPI 1.

Designed per ANSI/TPI 1-2002
Plating is based on quality control factors
Cq = 1.20 for wide face and
Cq = 1.11 for narrow face.
Any alterations to this are shown for individual joints on the Joint Report.
Refer to Joint QC Detail Sheet for Maximum Rotational Tolerance used
IRC/IBC truss plate values are based on testing and approval as required by IBC 1703 and ANSI/TPI and are reported in available documents such as ICBO #1607.
End verticals are designed for axial loads only unless noted otherwise.
Extensions above or below the truss profile (if any) have been designed for loads indicated only. Horizontal loads applied at the end of the extensions have not been considered unless shown. A drop-leg to an otherwise unsupported wall may create a hinge effect that requires additional design consideration (by others).

UPLIFT REACTION(S) :

Support	C&C Wind	Non-Wind
1	-573 lb	
2	-620 lb	

HORIZONTAL REACTION(S) :
support 1 341 lb
support 2 341 lb
This truss is designed using the ASCE7-02 Wind Specification
Bldg Enclosed = Yes, Importance Factor = 1.00
Truss Location = Not End Zone
Hurricane/Ocean Line = No , Exp Category = B
Bldg Length = 40.00 ft, Bldg Width = 20.00 ft
Mean roof height = 9.92 ft, mph = 120
TPI Standard Occupancy, Dead Load = 9.2 psf
Designed as Main Wind Force Resisting System and Components and Cladding
Tributary Area = 74 sqft
Vertical members exposed to wind: 8- 4

----------LOAD CASE #1 DESIGN LOADS ----------

Dir	L.Plf	L.Loc	R.Plf	R.Loc	LL/TL
TC Vert	74.00	2- 0- 0	74.00	0- 0- 0	0.54
TC Vert	54.00	0- 0- 0	54.00	7- 0- 0	0.74
TC Vert	117.56	7- 0- 0	117.56	18- 0- 0	0.74
BC Vert	20.00	0- 0- 0	20.00	7- 0- 0	0.00
BC Vert	43.54	7- 0- 0	43.54	18- 0- 0	0.00

...Type...	lbs	X.Loc	LL/TL
TC Vert	0.0	0- 4- 0	1.00
BC Vert	249.6	7- 0- 0	1.00
BC Vert	212.2	7- 0- 0	0.00

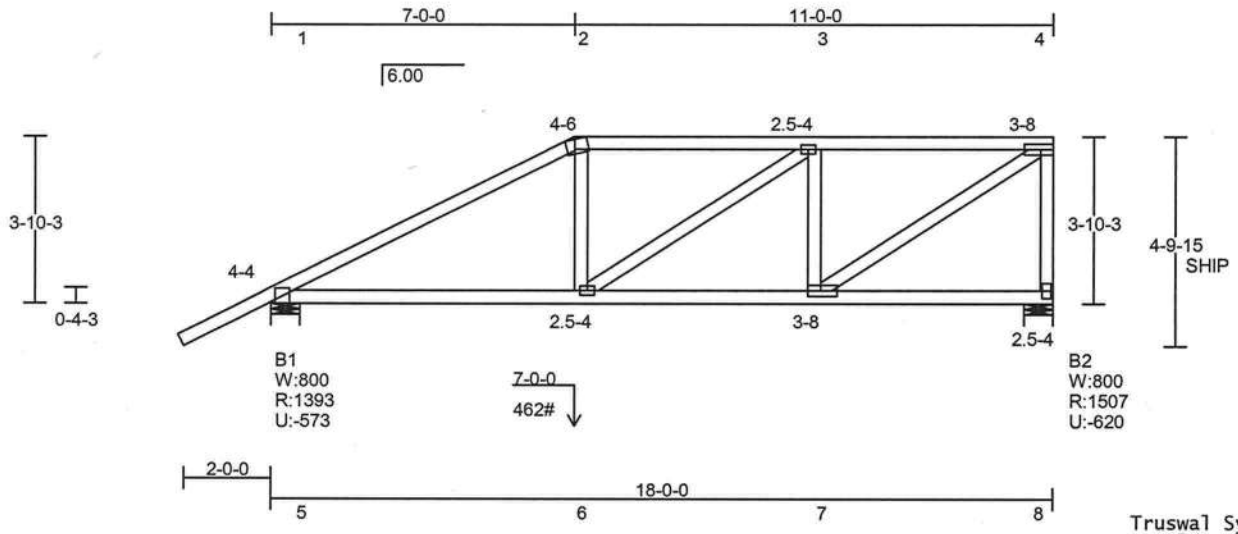

Truswal Systems Corporation
Donald Lee Scott, P.E.
220 Westway Place, Suite 200
Arlington, Texas 76018
Florida License No. 35036

Date: 3/27/2007

All connector plates are Truswal 20 ga. unless shown by "18"(18 ga.), "H"(16 ga.), or "MX"(TWMX 20 ga.), positioned per Joint Details Report. Circled plates and false frame plates are positioned as shown above. Shift gable stud plates to avoid overlap with structural plates (or staple).

TRUSWAL SYSTEMS
TW Building Components Group, Inc.
220 Westway Place, Suite 200, Arlington, TX 76018
Florida Certificate of Authorization # 278
TRUSPLUS 6.0 VER: T6.5.41

WARNING ***Read all notes on this sheet and give a copy of it to the Erecting Contractor.***

This design is for an individual building component not truss system. It has been based on specifications provided by the component manufacturer and done in accordance with the current versions of TPI and AFPA design standards. No responsibility is assumed for dimensional accuracy. Dimensions are to be verified by the component manufacturer and/or building designer prior to fabrication. The building designer must ascertain that the loads utilized on this design meet or exceed the loading imposed by the local building code and the particular application. The design assumes that the top chord is laterally braced by the roof or floor sheathing and the bottom chord is laterally braced by a rigid sheathing material directly attached, unless otherwise noted. Bracing shown is for lateral support of components members only to reduce buckling length. This component shall not be placed in any environment that will cause the moisture content of the wood to exceed 19% and/or cause connector plate corrosion. Fabricate, handle, install and brace this truss in accordance with the following standards: 'Joint and Cutting Detail Reports' available as output from Truswal software, 'ANSI/TPI 1', 'WTCA 1' - Wood Truss Council of America Standard Design Responsibilities, 'BUILDING COMPONENT SAFETY INFORMATION' - (BCSI 1-03) and 'BCSI SUMMARY SHEETS' by WTCA and TPI. The Truss Plate Institute (TPI) is located at 583 D'Onofrio Drive, Madison, Wisconsin 53719. The American Forest and Paper Association (AFPA) is located at 1111 19th Street, NW, Ste 800, Washington, DC 20036.

Cust: BEN ATKINS
WO: Drive_J_jr60-07_L00006_J00001
Dsgnr: ABCD #LC = 37 WT: 119#

TC Live	20.00 psf	LiveDur	L=1.25 P=1.25
TC Snow(Ps)	0.00 psf	SnowDur	L=1.15 P=1.15
TC Dead	7.00 psf	Rep Mbr Bnd / Comp / Tens	
BC Live	0.00 psf		1.00 / 1.00 / 1.00
BC Dead	10.00 psf	O.C.Spacing	2- 0- 0

Bldg Code: FBC2004R
DEFL RATIO: L/240 TC: L/240

Job Name: ACE CONST. Truss ID: T-31 Qty: 1

BRG	X-LOC	REACT	SIZE	REQ'D
1	0- 4- 0	821	8.00"	1.50"
2	17- 8- 0	659	8.00"	1.50"

BRG REQUIREMENTS shown are based ONLY on the truss material at each bearing

MAX DEFLECTION (span) :
L/999 MEM 7-8 (LIVE) LC 35
L= -0.18" D= -0.15" T= -0.33"
EX.WB DEF CRITERIA:L/120
IN MEM 8- 5; T= 0.05"

CRITICAL MEMBER FORCES:

TC	COMP.(DUR.)/	TENS.(DUR.)	CSI
1-2	-1055(1.25)/	452(1.60)	0.17
2-3	-802(1.25)/	346(1.60)	0.14
3-4	-668(1.25)/	348(1.60)	0.18
4-5	-108(1.60)/	117(1.60)	0.18

BC	COMP.(DUR.)/	TENS.(DUR.)	CSI
6-7	-701(1.60)/	900(1.25)	0.56
7-8	-383(1.60)/	465(1.25)	0.52

WB	COMP.(DUR.)/	TENS.(DUR.)	CSI
2-7	-262(1.25)/	256(1.60)	0.10
3-7	/	186(1.25)	0.03
4-7	-131(1.60)/	306(1.25)	0.07
4-8	-672(1.25)/	398(1.60)	0.38
5-8	-100(1.25)/	98(1.60)	0.20

TC	2x4 SP	#2 D
BC	2x4 SP	#2 D
WEB	2x4 SP	#2 D

This design does not account for long term time dependent loading (creep). Building Designer must account for this.
THIS DESIGN IS THE COMPOSITE RESULT OF MULTIPLE LOAD CASES.
Loaded for 10 PSF non-concurrent BCLL.
Drainage must be provided to avoid ponding.
End verticals are designed for axial loads only unless noted otherwise.
Extensions above or below the truss profile (if any) have been designed for loads indicated only. Horizontal loads applied at the end of the extensions have not been considered unless shown. A drop-leg to an otherwise unsupported wall may create a hinge effect that requires additional design consideration (by others).

Designed per ANSI/TPI 1-2002
Plating is based on quality control factors
Cq = 1.20 for wide face and
Cq = 1.11 for narrow face.
Any alterations to this are shown for individual joints on the Joint Report.
Refer to Joint QC Detail Sheet for Maximum Rotational Tolerance used
IRC/IBC truss plate values are based on testing and approval as required by IBC 1703 and ANSI/TPI and are reported in available documents such as ICBO #1607.

UPLIFT REACTION(S) :

Support	C&C Wind	Non-Wind
1	-443 lb	
2	-350 lb	

HORIZONTAL REACTION(S) :
support 1 432 lb
support 2 432 lb
This truss is designed using the ASCE7-02 Wind Specification
Bldg Enclosed = Yes, Importance Factor = 1.00
Truss Location = Not End Zone
Hurricane/Ocean Line = No , Exp Category = B
Bldg Length = 40.00 ft, Bldg Width = 20.00 ft
Mean roof height = 10.42 ft, mph = 120
TPI Standard Occupancy, Dead Load = 9.2 psf
Designed as Main Wind Force Resisting System and Components and Cladding
Tributary Area = 36 sqft
Vertical members exposed to wind: 8- 5

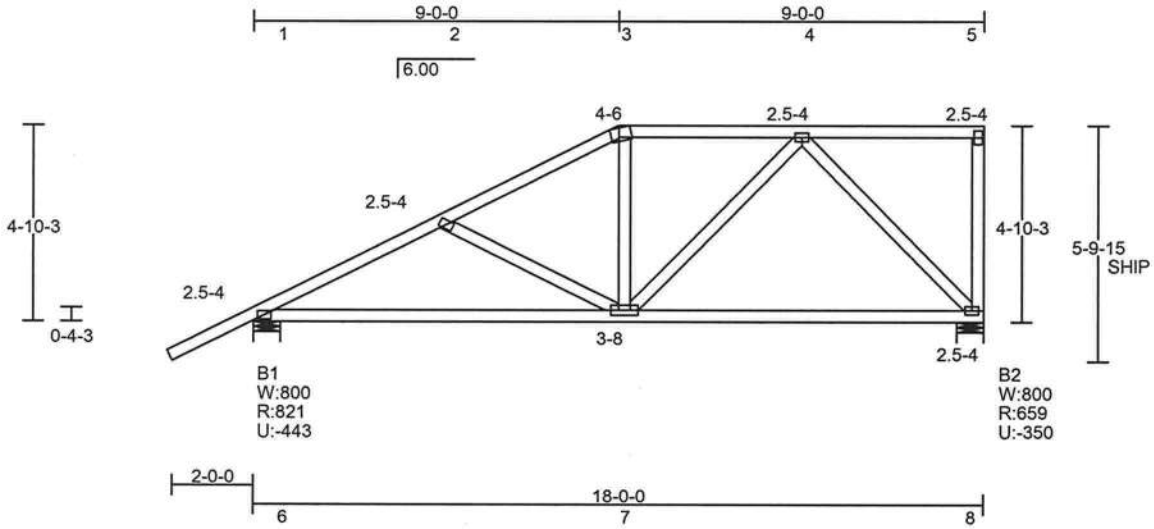

Truswal Systems Corporation
Donald Lee Scott, P.E.
220 Westway Place, Suite 200
Arlington, Texas 76018
Florida License No. 35036

Date: 3/27/2007

All connector plates are Truswal 20 ga. unless shown by "18"(18 ga.), "H"(16 ga.), or "MX"(TWMX 20 ga.), positioned per Joint Details Report. Circled plates and false frame plates are positioned as shown above. Shift gable stud plates to avoid overlap with structural plates (or staple).

TRUSWAL SYSTEMS
TW Building Components Group, Inc.
220 Westway Place, Suite 200, Arlington, TX 76018
Florida Certificate of Authorization # 278
TRUSPLUS 6.0 VER: T6.5.41

WARNING ***Read all notes on this sheet and give a copy of it to the Erecting Contractor.***

This design is for an individual building component not truss system. It has been based on specifications provided by the component manufacturer and done in accordance with the current versions of TPI and AFPA design standards. No responsibility is assumed for dimensional accuracy. Dimensions are to be verified by the component manufacturer and/or building designer prior to fabrication. The building designer must ascertain that the loads utilized on this design meet or exceed the loading imposed by the local building code and the particular application. The design assumes that the top chord is laterally braced by the roof or floor sheathing and the bottom chord is laterally braced by a rigid sheathing material directly attached, unless otherwise noted. Bracing shown is for lateral support of components members only to reduce buckling length. This component shall not be placed in any environment that will cause the moisture content of the wood to exceed 19% and/or cause connector plate corrosion. Fabricate, handle, install and brace this truss in accordance with the following standards: 'Joint and Cutting Detail Reports' available as output from Truswal software, 'ANSI/TPI 1', 'WTCA 1' - Wood Truss Council of America Standard Design Responsibilities, 'BUILDING COMPONENT SAFETY INFORMATION' - (BCSI 1-03) and 'BCSI SUMMARY SHEETS' by WTCA and TPI. The Truss Plate Institute (TPI) is located at 583 D'Onofrio Drive, Madison, Wisconsin 53719. The American Forest and Paper Association (AFPA) is located at 1111 19th Street, NW, Ste 800, Washington, DC 20036.

Cust: BEN ATKINS
WO: Drive_J_jr60-07_L00006_J00001
Dsgnr: ABCD #LC = 37 WT: 126#

TC Live	20.00 psf	LiveDur	L=1.25 P=1.25
TC Snow(Ps)	0.00 psf	SnowDur	L=1.15 P=1.15
TC Dead	7.00 psf	Rep Mbr Bnd / Comp / Tens	
BC Live	0.00 psf		1.15 / 1.10 / 1.10
BC Dead	10.00 psf	O.C.Spacing	2- 0- 0
Bldg Code:	FBC2004R	DEFL RATIO:	L/240 TC: L/240

Job Name: ACE CONST. Truss ID: T-37 Qty: 1

BRG	X-LOC	REACT	SIZE	REQ'D
1	0- 4- 0	419	8.00"	1.50"
2	7- 0- 0	419	8.00"	1.50"

BRG REQUIREMENTS shown are based ONLY on the truss material at each bearing
MAX DEFLECTION (span) :
L/999 MEM 4-5 (LIVE) LC 1
L= 0.00" D= 0.00" T= -0.01"
CRITICAL MEMBER FORCES:

TC	COMP.(DUR.)/	TENS.(DUR.)	CSI
1-2	-310(1.25)/	195(1.60)	0.11
2-3	-310(1.25)/	195(1.60)	0.11

BC	COMP.(DUR.)/	TENS.(DUR.)	CSI
4-5	-116(1.60)/	243(1.25)	0.07
5-6	-116(1.60)/	243(1.25)	0.07

WB	COMP.(DUR.)/	TENS.(DUR.)	CSI
2-5	/	68(0.90)	0.02

TC	2x4 SP	#2 D
BC	2x4 SP	#2 D
WEB	2x4 SP	#2 D

This design does not account for long term time dependent loading (creep). Building Designer must account for this.
THIS DESIGN IS THE COMPOSITE RESULT OF MULTIPLE LOAD CASES.

Designed per ANSI/TPI 1-2002
Plating is based on quality control factors
Cq = 1.20 for wide face and
Cq = 1.11 for narrow face.
Any alterations to this are shown for individual joints on the Joint Report.
Refer to Joint QC Detail Sheet for Maximum Rotational Tolerance used
IRC/IBC truss plate values are based on testing and approval as required by IBC 1703 and ANSI/TPI and are reported in available documents such as ICBO #1607.

UPLIFT REACTION(S) :

Support	C&C Wind	Non-Wind
1	-337 lb	
2	-337 lb	

This truss is designed using the ASCE7-02 Wind Specification
Bldg Enclosed = Yes, Importance Factor = 1.00
Truss Location = Not End Zone
Hurricane/Ocean Line = No , Exp Category = B
Bldg Length = 40.00 ft, Bldg Width = 20.00 ft
Mean roof height = 11.09 ft, mph = 120
TPI Standard Occupancy, Dead Load = 9.2 psf
Designed as Main Wind Force Resisting System and Components and Cladding
Tributary Area = 15 sqft

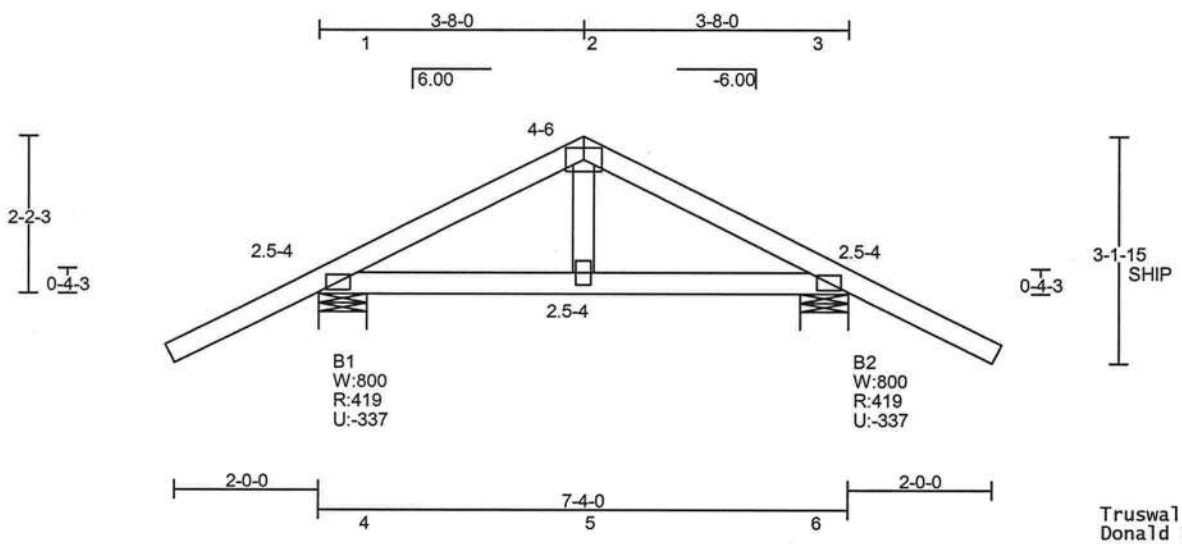

Truswal Systems Corporation
Donald Lee Scott, P.E.
220 Westway Place, Suite 200
Arlington, Texas 76018
Florida License No. 35036
Date: 3/27/2007

All connector plates are Truswal 20 ga. unless shown by "18"(18 ga.), "H"(16 ga.), or "MX"(TWMX 20 ga.), positioned per Joint Details Report. Circled plates and false frame plates are positioned as shown above. Shift gable stud plates to avoid overlap with structural plates (or staple).

TRUSWAL SYSTEMS
TW Building Components Group, Inc.
220 Westway Place, Suite 200, Arlington, TX 76018
Florida Certificate of Authorization # 278
TRUSPLUS 6.0 VER: T6.5.41

WARNING *Read all notes on this sheet and give a copy of it to the Erecting Contractor.*
This design is for an individual building component not truss system. It has been based on specifications provided by the component manufacturer and done in accordance with the current versions of TPI and AFPA design standards. No responsibility is assumed for dimensional accuracy. Dimensions are to be verified by the component manufacturer and/or building designer prior to fabrication. The building designer must ascertain that the loads utilized on this design meet or exceed the loading imposed by the local building code and the particular application. The design assumes that the top chord is laterally braced by the roof or floor sheathing and the bottom chord is laterally braced by a rigid sheathing material directly attached, unless otherwise noted. Bracing shown is for lateral support of components members only to reduce buckling length. This component shall not be placed in any environment that will cause the moisture content of the wood to exceed 19% and/or cause connector plate corrosion. Fabricate, handle, install and brace this truss in accordance with the following standards: 'Joint and Cutting Detail Reports' available as output from Truswal software, 'ANSI/TPI 1', 'WTCA 1' - Wood Truss Council of America Standard Design Responsibilities, 'BUILDING COMPONENT SAFETY INFORMATION' - (BCSI 1-03) and 'BCSI SUMMARY SHEETS' by WTCA and TPI. The Truss Plate Institute (TPI) is located at 583 D'Onofrio Drive, Madison, Wisconsin 53719. The American Forest and Paper Association (AFPA) is located at 1111 19th Street, NW, Ste 800, Washington, DC 20036.

Cust: BEN ATKINS
WO: Drive_J_jr60-07_L00006_J00001
Dsgnr: ABCD #LC = 33 WT: 43#

TC Live	20.00 psf	LiveDur	L=1.25 P=1.25
TC Snow(Ps)	0.00 psf	SnowDur	L=1.15 P=1.15
TC Dead	7.00 psf	Rep Mbr Bnd / Comp / Tens	
BC Live	0.00 psf		1.15 / 1.10 / 1.10
BC Dead	10.00 psf	O.C.Spacing	2- 0- 0
Bldg Code:	FBC2004R	DEFL RATIO:	L/240 TC: L/240

Job Name: ACE CONST. Truss ID: T-38 Qty: 1

BRG	X-LOC	REACT	SIZE	REQ'D
1	0- 1-12	419	3.50"	1.50"
2	7- 2- 4	419	3.50"	1.50"

BRG REQUIREMENTS shown are based ONLY on the truss material at each bearing
MAX DEFLECTION (span) :
L/999 MEM 5-6 (LIVE) LC 1
L= 0.00" D= 0.00" T= -0.01"
CRITICAL MEMBER FORCES:

TC	COMP.(DUR.)/	TENS.(DUR.)	CSI
1-2	-348(1.25)/	217(1.60)	0.11
2-3	-348(1.25)/	217(1.60)	0.11

BC	COMP.(DUR.)/	TENS.(DUR.)	CSI
4-5	-139(1.60)/	280(1.25)	0.09
5-6	-139(1.60)/	280(1.25)	0.09

WB	COMP.(DUR.)/	TENS.(DUR.)	CSI
2-5	/	78(0.90)	0.02

TC	2x4	SP	#2 D
BC	2x4	SP	#2 D
WEB	2x4	SP	#2 D

This design does not account for long term time dependent loading (creep). Building Designer must account for this.
THIS DESIGN IS THE COMPOSITE RESULT OF MULTIPLE LOAD CASES.

Designed per ANSI/TPI 1-2002
Plating is based on quality control factors
Cq = 1.20 for wide face and
Cq = 1.11 for narrow face.
Any alterations to this are shown for individual joints on the Joint Report.
Refer to Joint QC Detail Sheet for Maximum Rotational Tolerance used
IRC/IBC truss plate values are based on testing and approval as required by IBC 1703 and ANSI/TPI and are reported in available documents such as ICBO #1607.

UPLIFT REACTION(S) :

Support	C&C Wind	Non-Wind
1	-337 lb	
2	-337 lb	

This truss is designed using the ASCE7-02 Wind Specification
Bldg Enclosed = Yes, Importance Factor = 1.00
Truss Location = Not End Zone
Hurricane/Ocean Line = No , Exp Category = B
Bldg Length = 40.00 ft, Bldg Width = 20.00 ft
Mean roof height = 11.09 ft, mph = 120
TPI Standard Occupancy, Dead Load = 9.2 psf
Designed as Main Wind Force Resisting System and Components and Cladding
Tributary Area = 15 sqft

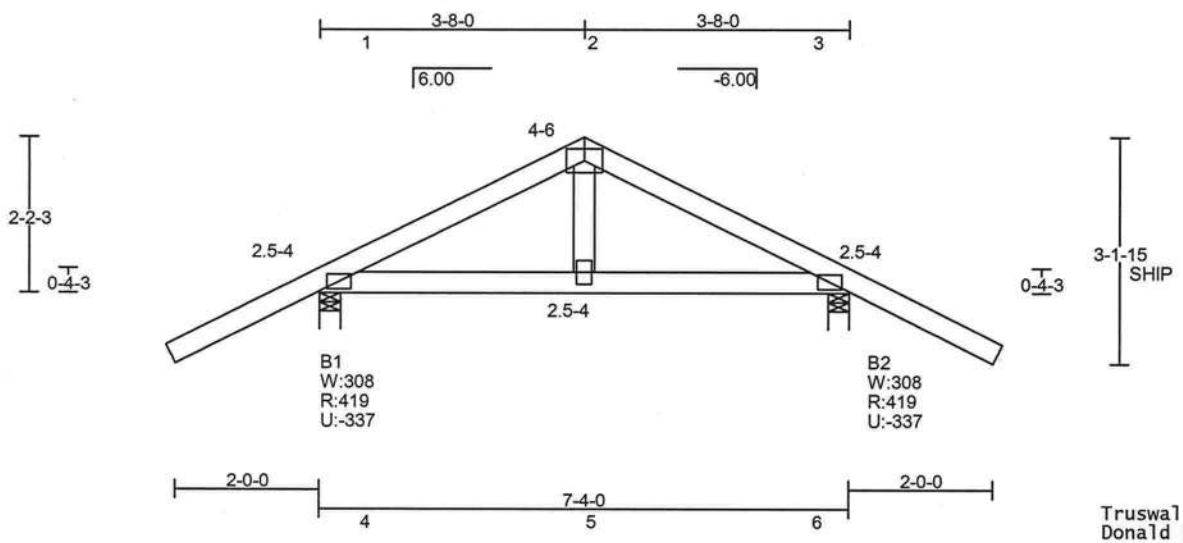

Truswal Systems Corporation
Donald Lee Scott, P.E.
220 Westway Place, Suite 200
Arlington, Texas 76018
Florida License No. 35036
Date: 3/27/2007

All connector plates are Truswal 20 ga. unless shown by "18"(18 ga.), "H"(16 ga.), or "MX"(TWMX 20 ga.), positioned per Joint Details Report. Circled plates and false frame plates are positioned as shown above. Shift gable stud plates to avoid overlap with structural plates (or staple).

TRUSWAL SYSTEMS
TW Building Components Group, Inc.
220 Westway Place, Suite 200, Arlington, TX 76018
Florida Certificate of Authorization # 278
TRUSPLUS 6.0 VER: T6.5.41

WARNING *Read all notes on this sheet and give a copy of it to the Erecting Contractor.*

This design is for an individual building component not truss system. It has been based on specifications provided by the component manufacturer and done in accordance with the current versions of TPI and AFPA design standards. No responsibility is assumed for dimensional accuracy. Dimensions are to be verified by the component manufacturer and/or building designer prior to fabrication. The building designer must ascertain that the loads utilized on this design meet or exceed the loading imposed by the local building code and the particular application. The design assumes that the top chord is laterally braced by the roof or floor sheathing and the bottom chord is laterally braced by a rigid sheathing material directly attached, unless otherwise noted. Bracing shown is for lateral support of components members only to reduce buckling length. This component shall not be placed in any environment that will cause the moisture content of the wood to exceed 19% and/or cause connector plate corrosion. Fabricate, handle, install and brace this truss in accordance with the following standards: 'Joint and Cutting Detail Reports' available as output from Truswal software, 'ANSI/TPI 1', 'WTCA 1' - Wood Truss Council of America Standard Design Responsibilities, 'BUILDING COMPONENT SAFETY INFORMATION' - (BCSI 1-03) and 'BCSI SUMMARY SHEETS' by WTCA and TPI. The Truss Plate Institute (TPI) is located at 583 D'Onofrio Drive, Madison, Wisconsin 53719. The American Forest and Paper Association (AFPA) is located at 1111 19th Street, NW, Ste 800, Washington, DC 20036.

Cust: BEN ATKINS
WO: Drive_J_jr60-07_L00006_J00001
Dsgnr: ABCD #LC = 33 WT: 43#

TC Live	20.00 psf	LiveDur	L=1.25 P=1.25
TC Snow(Ps)	0.00 psf	SnowDur	L=1.15 P=1.15
TC Dead	7.00 psf	Rep Mbr Bnd / Comp / Tens	
BC Live	0.00 psf		1.15 / 1.10 / 1.10
BC Dead	10.00 psf	O.C.Spacing	2- 0- 0
Bldg Code:	FBC2004R	DEFL RATIO:	L/240 TC: L/240

Job Name: ACE CONST. Truss ID: TJ-01 Qty: 16

BRG	X-LOC	REACT	SIZE	REQ'D
1	0- 4- 0	202	8.00"	1.50"
2	0-11- 4	15	1.50"	1.50"
3	0-11- 4	5	1.50"	1.50"

BRG REQUIREMENTS shown are based ONLY on the truss material at each bearing
MAX DEFLECTION (span) :
L/999 MEM 3-4 (LIVE) LC 35
L= 0.00" D= 0.00" T= 0.00"
CRITICAL MEMBER FORCES:

TC	COMP.(DUR.)/	TENS.(DUR.)	CSI
1-2	-14(1.60)/	5(1.25)	0.01
2-0	-2(1.25)/	2(1.60)	0.00

BC	COMP.(DUR.)/	TENS.(DUR.)	CSI
3-4	-10(1.60)/	31(1.60)	0.01
4-0	0(1.25)/	0(1.60)	0.00

TC 2x4 SP #2 D
BC 2x4 SP #2 D
This design does not account for long term time dependent loading (creep). Building Designer must account for this.
Refer to Joint QC Detail Sheet for Maximum Rotational Tolerance used IRC/IBC truss plate values are based on testing and approval as required by IBC 1703 and ANSI/TPI and are reported in available documents such as ICBO #1607.

Designed per ANSI/TPI 1-2002
Plating is based on quality control factors
Cq = 1.20 for wide face and
Cq = 1.11 for narrow face.
Any alterations to this are shown for individual joints on the Joint Report.
THIS DESIGN IS THE COMPOSITE RESULT OF MULTIPLE LOAD CASES.
Mark all interior bearing locations.
Install interior support(s) before erection.
Shim bearings (if needed) for req. support.

UPLIFT REACTION(S) :

Support	C&C Wind	Non-Wind
1	-203 lb	
2	-32 lb	
3	-4 lb	

This truss is designed using the ASCE7-02 Wind Specification
Bldg Enclosed = Yes, Importance Factor = 1.00
Truss Location = Not End Zone
Hurricane/Ocean Line = No , Exp Category = B
Bldg Length = 40.00 ft, Bldg Width = 20.00 ft
Mean roof height = 8.26 ft, mph = 120
TPI Standard Occupancy, Dead Load = 9.2 psf
Designed as Main Wind Force Resisting System and Components and Cladding
Tributary Area = 2 sqft

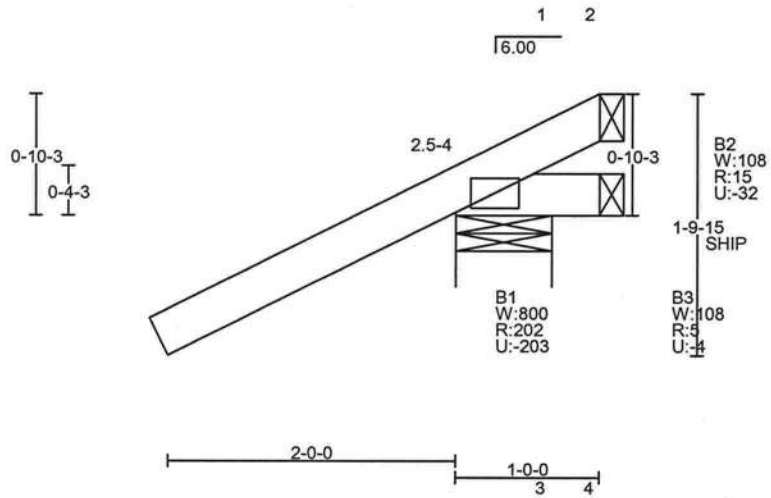

Truswal Systems Corporation
Donald Lee Scott, P.E.
220 Westway Place, Suite 200
Arlington, Texas 76018
Florida License No. 35036
Date: 3/27/2007

All connector plates are Truswal 20 ga. unless shown by "18"(18 ga.), "H"(16 ga.), or "MX"(TWMX 20 ga.), positioned per Joint Details Report. Circled plates and false frame plates are positioned as shown above. Shift gable stud plates to avoid overlap with structural plates (or staple).

TRUSWAL SYSTEMS
TW Building Components Group, Inc.
220 Westway Place, Suite 200, Arlington, TX 76018
Florida Certificate of Authorization # 278
TRUSPLUS 6.0 VER: T6.5.41

WARNING ***Read all notes on this sheet and give a copy of it to the Erecting Contractor.***

This design is for an individual building component not truss system. It has been based on specifications provided by the component manufacturer and done in accordance with the current versions of TPI and AFPA design standards. No responsibility is assumed for dimensional accuracy. Dimensions are to be verified by the component manufacturer and/or building designer prior to fabrication. The building designer must ascertain that the loads utilized on this design meet or exceed the loading imposed by the local building code and the particular application. The design assumes that the top chord is laterally braced by the roof or floor sheathing and the bottom chord is laterally braced by a rigid sheathing material directly attached, unless otherwise noted. Bracing shown is for lateral support of components members only to reduce buckling length. This component shall not be placed in any environment that will cause the moisture content of the wood to exceed 19% and/or cause connector plate corrosion. Fabricate, handle, install and brace this truss in accordance with the following standards: 'Joint and Cutting Detail Reports' available as output from Truswal software, 'ANSI/TPI 1', 'WTCA 1' - Wood Truss Council of America Standard Design Responsibilities, 'BUILDING COMPONENT SAFETY INFORMATION' - (BCSI 1-03) and 'BCSI SUMMARY SHEETS' by WTCA and TPI. The Truss Plate Institute (TPI) is located at 583 D'Onofrio Drive, Madison, Wisconsin 53719. The American Forest and Paper Association (AFPA) is located at 1111 19th Street, NW, Ste 800, Washington, DC 20036.

Cust: BEN ATKINS
WO: Drive_J_jr60-07_L00006_J00001
Dsgnr: ABCD #LC = 41 WT: 9#

TC Live	20.00 psf	LiveDur	L=1.25 P=1.25
TC Snow(Ps)	0.00 psf	SnowDur	L=1.15 P=1.15
TC Dead	7.00 psf	Rep Mbr Bnd / Comp / Tens	
BC Live	0.00 psf		1.15 / 1.10 / 1.10
BC Dead	10.00 psf	O.C.Spacing	2- 0- 0
Bldg Code:	FBC2004R	DEFL RATIO:	L/240 TC: L/180

Job Name: ACE CONST. Truss ID: TJ-01A Qty: 1

BRG	X-LOC	REACT	SIZE	REQ'D
1	0- 4- 0	202	8.00"	1.50"
2	0-11- 4	15	1.50"	1.50"
3	0-11- 4	5	1.50"	1.50"

BRG REQUIREMENTS shown are based ONLY on the truss material at each bearing
MAX DEFLECTION (span) :
L/999 MEM 3-4 (LIVE) LC 35
L= 0.00" D= 0.00" T= 0.00"
CRITICAL MEMBER FORCES:

TC	COMP.(DUR.)/	TENS.(DUR.)	CSI
1-2	-14(1.60)/	5(1.25)	0.01
2-0	-2(1.25)/	2(1.60)	0.00

BC	COMP.(DUR.)/	TENS.(DUR.)	CSI
3-4	-10(1.60)/	31(1.60)	0.01
4-0	0(0.90)/	0(1.60)	0.00

TC 2x4 SP #2 D
BC 2x4 SP #2 D
This design does not account for long term time dependent loading (creep). Building Designer must account for this.
Refer to Joint QC Detail Sheet for Maximum Rotational Tolerance used IRC/IBC truss plate values are based on testing and approval as required by IBC 1703 and ANSI/TPI and are reported in available documents such as ICBO #1607.

Designed per ANSI/TPI 1-2002
Plating is based on quality control factors
Cq = 1.20 for wide face and
Cq = 1.11 for narrow face.
Any alterations to this are shown for individual joints on the Joint Report.
THIS DESIGN IS THE COMPOSITE RESULT OF MULTIPLE LOAD CASES.
Mark all interior bearing locations.
Install interior support(s) before erection.
Shim bearings (if needed) for req. support.

UPLIFT REACTION(S) :

Support	C&C Wind	Non-Wind
1	-203 lb	
2	-32 lb	
3	-4 lb	

This truss is designed using the ASCE7-02 Wind Specification
Bldg Enclosed = Yes, Importance Factor = 1.00
Truss Location = Not End Zone
Hurricane/Ocean Line = No , Exp Category = B
Bldg Length = 40.00 ft, Bldg Width = 20.00 ft
Mean roof height = 8.26 ft, mph = 120
TPI Standard Occupancy, Dead Load = 9.2 psf
Designed as Main Wind Force Resisting System and Components and Cladding
Tributary Area = 2 sqft

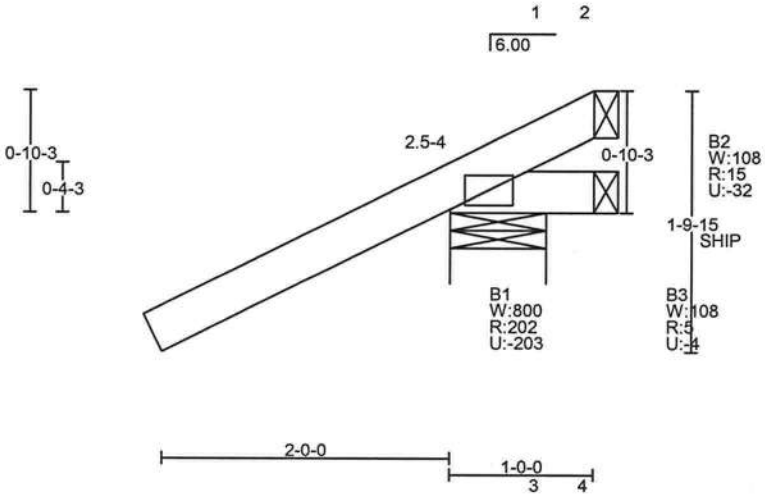

Truswal Systems Corporation
Donald Lee Scott, P.E.
220 Westway Place, Suite 200
Arlington, Texas 76018
Florida License No. 35036
Date: 3/27/2007

All connector plates are Truswal 20 ga. unless shown by "18"(18 ga.), "H"(16 ga.), or "MX"(TWMX 20 ga.), positioned per Joint Details Report. Circled plates and false frame plates are positioned as shown above. Shift gable stud plates to avoid overlap with structural plates (or staple).

TRUSWAL SYSTEMS
TW Building Components Group, Inc.
220 Westway Place, Suite 200, Arlington, TX 76018
Florida Certificate of Authorization # 278
TRUSPLUS 6.0 VER: T6.5.41

WARNING ***Read all notes on this sheet and give a copy of it to the Erecting Contractor.***

This design is for an individual building component not truss system. It has been based on specifications provided by the component manufacturer and done in accordance with the current versions of TPI and AFPA design standards. No responsibility is assumed for dimensional accuracy. Dimensions are to be verified by the component manufacturer and/or building designer prior to fabrication. The building designer must ascertain that the loads utilized on this design meet or exceed the loading imposed by the local building code and the particular application. The design assumes that the top chord is laterally braced by the roof or floor sheathing and the bottom chord is laterally braced by a rigid sheathing material directly attached, unless otherwise noted. Bracing shown is for lateral support of components members only to reduce buckling length. This component shall not be placed in any environment that will cause the moisture content of the wood to exceed 19% and/or cause connector plate corrosion. Fabricate, handle, install and brace this truss in accordance with the following standards: 'Joint and Cutting Detail Reports' available as output from Truswal software, 'ANSI/TPI 1', 'WTCA 1' - Wood Truss Council of America Standard Design Responsibilities, 'BUILDING COMPONENT SAFETY INFORMATION' - (BCSI 1-03) and 'BCSI SUMMARY SHEETS' by WTCA and TPI. The Truss Plate Institute (TPI) is located at 583 D'Onofrio Drive, Madison, Wisconsin 53719. The American Forest and Paper Association (AFPA) is located at 1111 19th Street, NW, Ste 800, Washington, DC 20036.

Cust: BEN ATKINS
WO: Drive_J_jr60-07_L00006_J00001
Dsgnr: ABCD #LC = 41 WT: 9#

TC Live	20.00 psf	LiveDur	L=1.25 P=1.25
TC Snow(Ps)	0.00 psf	SnowDur	L=1.15 P=1.15
TC Dead	7.00 psf	Rep Mbr Bnd / Comp / Tens	
BC Live	0.00 psf		1.15 / 1.10 / 1.10
BC Dead	10.00 psf	O.C.Spacing	2- 0- 0
Bldg Code:	FBC2004R	DEFL RATIO:	L/240 TC: L/180

Job Name: ACE CONST. Truss ID: TJ-01B Qty: 1

BRG	X-LOC	REACT	SIZE	REQ'D
1	0- 4- 0	202	8.00"	1.50"
2	0-11- 4	15	1.50"	1.50"
3	0-11- 4	5	1.50"	1.50"

BRG REQUIREMENTS shown are based ONLY on the truss material at each bearing
MAX DEFLECTION (span) :
L/999 MEM 3-4 (LIVE) LC 3S
L= 0.00" D= 0.00" T= 0.00"
CRITICAL MEMBER FORCES:

TC	COMP.(DUR.)/	TENS.(DUR.)	CSI
1-2	-14(1.60)/	5(1.25)	0.01
2-0	-2(1.25)/	2(1.60)	0.00

BC	COMP.(DUR.)/	TENS.(DUR.)	CSI
3-4	-10(1.60)/	31(1.60)	0.01
4-0	0(0.90)/	0(1.60)	0.00

TC 2x4 SP #2 D
BC 2x4 SP #2 D
This design does not account for long term time dependent loading (creep). Building Designer must account for this.
Refer to Joint QC Detail Sheet for Maximum Rotational Tolerance used
IRC/IBC truss plate values are based on testing and approval as required by IBC 1703 and ANSI/TPI and are reported in available documents such as ICBO #1607.

Designed per ANSI/TPI 1-2002
Plating is based on quality control factors
Cq = 1.20 for wide face and
Cq = 1.11 for narrow face.
Any alterations to this are shown for individual joints on the Joint Report.
THIS DESIGN IS THE COMPOSITE RESULT OF MULTIPLE LOAD CASES.
Mark all interior bearing locations.
Install interior support(s) before erection.
Shim bearings (if needed) for req. support.

UPLIFT REACTION(S) :

Support	C&C Wind	Non-Wind
1	-203 lb	
2	-32 lb	
3	-4 lb	

This truss is designed using the ASCE7-02 Wind Specification
Bldg Enclosed = Yes, Importance Factor = 1.00
Truss Location = Not End Zone
Hurricane/Ocean Line = No , Exp Category = B
Bldg Length = 40.00 ft, Bldg Width = 20.00 ft
Mean roof height = 8.26 ft, mph = 120
TPI Standard Occupancy, Dead Load = 9.2 psf
Designed as Main Wind Force Resisting System and Components and Cladding
Tributary Area = 2 sqft

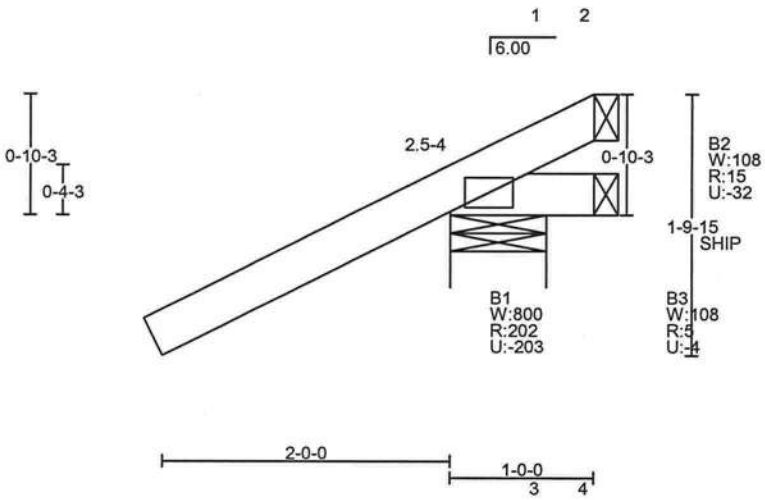

Truswal Systems Corporation
Donald Lee Scott, P.E.
220 Westway Place, Suite 200
Arlington, Texas 76018
Florida License No. 35036
Date: 3/27/2007

All connector plates are Truswal 20 ga. unless shown by "18"(18 ga.), "H"(16 ga.), or "MX"(TWMX 20 ga.), positioned per Joint Details Report. Circled plates and false frame plates are positioned as shown above. Shift gable stud plates to avoid overlap with structural plates (or staple).

TRUSWAL SYSTEMS
TW Building Components Group, Inc.
220 Westway Place, Suite 200, Arlington, TX 76018
Florida Certificate of Authorization # 278
TRUSPLUS 6.0 VER: T6.5.41

WARNING ***Read all notes on this sheet and give a copy of it to the Erecting Contractor.***

This design is for an individual building component not truss system. It has been based on specifications provided by the component manufacturer and done in accordance with the current versions of TPI and AFPA design standards. No responsibility is assumed for dimensional accuracy. Dimensions are to be verified by the component manufacturer and/or building designer prior to fabrication. The building designer must ascertain that the loads utilized on this design meet or exceed the loading imposed by the local building code and the particular application. The design assumes that the top chord is laterally braced by the roof or floor sheathing and the bottom chord is laterally braced by a rigid sheathing material directly attached, unless otherwise noted. Bracing shown is for lateral support of components members only to reduce buckling length. This component shall not be placed in any environment that will cause the moisture content of the wood to exceed 19% and/or cause connector plate corrosion. Fabricate, handle, install and brace this truss in accordance with the following standards: 'Joint and Cutting Detail Reports' available as output from Truswal software, 'ANSI/TPI 1', 'WTCA 1' - Wood Truss Council of America Standard Design Responsibilities, 'BUILDING COMPONENT SAFETY INFORMATION' - (BCSI 1-03) and 'BCSI SUMMARY SHEETS' by WTCA and TPI. The Truss Plate Institute (TPI) is located at 583 D'Onofrio Drive, Madison, Wisconsin 53719. The American Forest and Paper Association (AFPA) is located at 1111 19th Street, NW, Ste 800, Washington, DC 20036.

Cust: BEN ATKINS
WO: Drive_J_jr60-07_L00006_J00001
Dsgnr: ABCD #LC = 41 WT: 9#

TC Live	20.00 psf	LiveDur	L=1.25 P=1.25
TC Snow(Ps)	0.00 psf	SnowDur	L=1.15 P=1.15
TC Dead	7.00 psf	Rep Mbr Bnd / Comp / Tens	
BC Live	0.00 psf		1.15 / 1.10 / 1.10
BC Dead	10.00 psf	O.C.Spacing	2- 0- 0
Bldg Code:	FBC2004R	DEFL RATIO:	L/240 TC: L/180

Job Name: ACE CONST. Truss ID: TJ-02A Qty: 1

BRG	X-LOC	REACT	SIZE	REQ'D
1	0- 6-12	99	3.50"	1.50"
2	2-11- 4	61	1.50"	1.50"
3	2-11- 4	31	1.50"	1.50"

BRG REQUIREMENTS shown are based ONLY on the truss material at each bearing
MAX DEFLECTION (span) :
L/999 MEM 3-4 (LIVE) LC 37
L= 0.01" D= 0.00" T= 0.01"
CRITICAL MEMBER FORCES:

TC	COMP.(DUR.)/	TENS.(DUR.)	CSI
1-2	-50(1.60)/	26(1.25)	0.07
2-0	-2(1.25)/	2(1.60)	0.00

BC	COMP.(DUR.)/	TENS.(DUR.)	CSI
3-4	-30(1.60)/	91(1.60)	0.06
4-0	0(1.25)/	0(1.60)	0.00

TC	2x4	SP	#2 D
BC	2x4	SP	#2 D
WEDGE	2x4	SP	#2 D

This design does not account for long term time dependent loading (creep). Building Designer must account for this.
THIS DESIGN IS THE COMPOSITE RESULT OF MULTIPLE LOAD CASES.
Mark all interior bearing locations.
Install interior support(s) before erection.
Shim bearings (if needed) for req. support.

Designed per ANSI/TPI 1-2002
Plating is based on quality control factors
Cq = 1.20 for wide face and
Cq = 1.11 for narrow face.
Any alterations to this are shown for individual joints on the Joint Report.
Refer to Joint QC Detail Sheet for Maximum Rotational Tolerance used
IRC/IBC truss plate values are based on testing and approval as required by IBC 1703 and ANSI/TPI and are reported in available documents such as ICBO #1607.

UPLIFT REACTION(S) :

Support	C&C Wind	Non-Wind
1	-44 lb	
2	-101 lb	
3	-11 lb	

This truss is designed using the ASCE7-02 Wind Specification
Bldg Enclosed = Yes, Importance Factor = 1.00
Truss Location = Not End Zone
Hurricane/Ocean Line = No , Exp Category = B
Bldg Length = 40.00 ft, Bldg Width = 20.00 ft
Mean roof height = 8.76 ft, mph = 120
TPI Standard Occupancy, Dead Load = 9.2 psf
Designed as Main Wind Force Resisting System and Components and Cladding
Tributary Area = 5 sqft

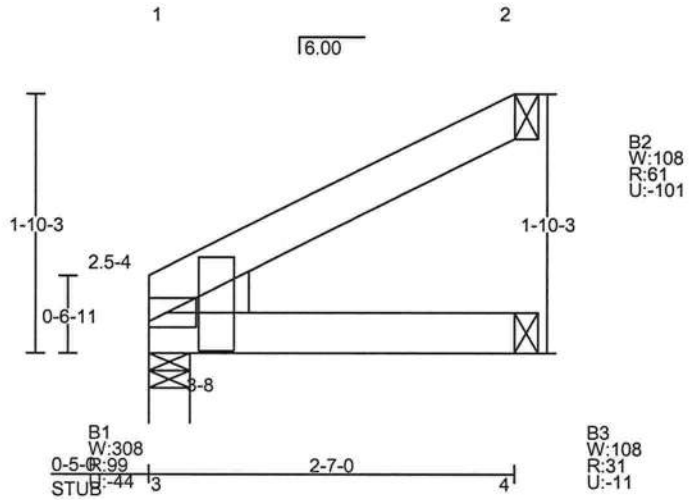

Truswal Systems Corporation
Donald Lee Scott, P.E.
220 Westway Place, Suite 200
Arlington, Texas 76018
Florida License No. 35036
Date: 3/27/2007

All connector plates are Truswal 20 ga. unless shown by "18"(18 ga.), "H"(16 ga.), or "MX"(TWMX 20 ga.), positioned per Joint Details Report.
Circled plates and false frame plates are positioned as shown above. Shift gable stud plates to avoid overlap with structural plates (or staple).

TRUSWAL SYSTEMS
TW Building Components Group, Inc.
220 Westway Place, Suite 200, Arlington, TX 76018
Florida Certificate of Authorization # 278
TRUSPLUS 6.0 VER: T6.5.41

WARNING *Read all notes on this sheet and give a copy of it to the Erecting Contractor.*
This design is for an individual building component not truss system. It has been based on specifications provided by the component manufacturer and done in accordance with the current versions of TPI and AFPA design standards. No responsibility is assumed for dimensional accuracy. Dimensions are to be verified by the component manufacturer and/or building designer prior to fabrication. The building designer must ascertain that the loads utilized on this design meet or exceed the loading imposed by the local building code and the particular application. The design assumes that the top chord is laterally braced by the roof or floor sheathing and the bottom chord is laterally braced by a rigid sheathing material directly attached, unless otherwise noted. Bracing shown is for lateral support of components members only to reduce buckling length. This component shall not be placed in any environment that will cause the moisture content of the wood to exceed 19% and/or cause connector plate corrosion. Fabricate, handle, install and brace this truss in accordance with the following standards: 'Joint and Cutting Detail Reports' available as output from Truswal software, 'ANSI/TPI 1', 'WTCA 1' - Wood Truss Council of America Standard Design Responsibilities, 'BUILDING COMPONENT SAFETY INFORMATION' - (BCSI 1-03) and 'BCSI SUMMARY SHEETS' by WTCA and TPI. The Truss Plate Institute (TPI) is located at 583 D'Onofrio Drive, Madison, Wisconsin 53719. The American Forest and Paper Association (AFPA) is located at 1111 19th Street, NW, Ste 800, Washington, DC 20036.

Cust: BEN ATKINS
WO: Drive_J_jr60-07_L00006_J00001
Dsgnr: ABCD #LC = 41 WT: 13#

TC Live	20.00 psf	LiveDur	L=1.25 P=1.25
TC Snow(Ps)	0.00 psf	SnowDur	L=1.15 P=1.15
TC Dead	7.00 psf	Rep Mbr Bnd / Comp / Tens	
BC Live	0.00 psf		1.15 / 1.10 / 1.10
BC Dead	10.00 psf	O.C.Spacing	2- 0- 0
Bldg Code:	FBC2004R	DEFL RATIO:	L/240 TC: L/180

Job Name: ACE CONST. Truss ID: TJ-03 Qty: 15

BRG	X-LOC	REACT	SIZE	REQ'D
1	0- 4- 0	271	8.00"	1.50"
2	2-11- 4	67	1.50"	1.50"
3	2-11- 4	32	1.50"	1.50"

BRG REQUIREMENTS shown are based ONLY on the truss material at each bearing

MAX DEFLECTION (span) :
L/999 MEM 3-4 (LIVE) LC 37
L= 0.00" D= 0.00" T= 0.00"

CRITICAL MEMBER FORCES:

TC	COMP.(DUR.)/	TENS.(DUR.)	CSI
1-2	-57(1.60)/	29(1.25)	0.08
2-0	-2(1.25)/	2(1.60)	0.00

BC	COMP.(DUR.)/	TENS.(DUR.)	CSI
3-4	-36(1.60)/	109(1.60)	0.07
4-0	0(1.25)/	0(1.60)	0.00

TC 2x4 SP #2 D
BC 2x4 SP #2 D

This design does not account for long term time dependent loading (creep). Building Designer must account for this.
Refer to Joint QC Detail Sheet for Maximum Rotational Tolerance used IRC/IBC truss plate values are based on testing and approval as required by IBC 1703 and ANSI/TPI and are reported in available documents such as ICBO #1607.

Designed per ANSI/TPI 1-2002
Plating is based on quality control factors
Cq = 1.20 for wide face and
Cq = 1.11 for narrow face.
Any alterations to this are shown for individual joints on the Joint Report.
THIS DESIGN IS THE COMPOSITE RESULT OF MULTIPLE LOAD CASES.
Mark all interior bearing locations.
Install interior support(s) before erection.
Shim bearings (if needed) for req. support.

UPLIFT REACTION(S) :

Support	C&C Wind	Non-Wind
1	-235 lb	
2	-110 lb	
3	-7 lb	

HORIZONTAL REACTION(S) :
support 1 109 lb
support 3 109 lb
This truss is designed using the ASCE7-02 Wind Specification
Bldg Enclosed = Yes, Importance Factor = 1.00
Truss Location = Not End Zone
Hurricane/Ocean Line = No Exp Category = B
Bldg Length = 40.00 ft, Bldg Width = 20.00 ft
Mean roof height = 8.76 ft, mph = 120
TPI Standard Occupancy, Dead Load = 9.2 psf
Designed as Main Wind Force Resisting System and Components and Cladding
Tributary Area = 6 sqft

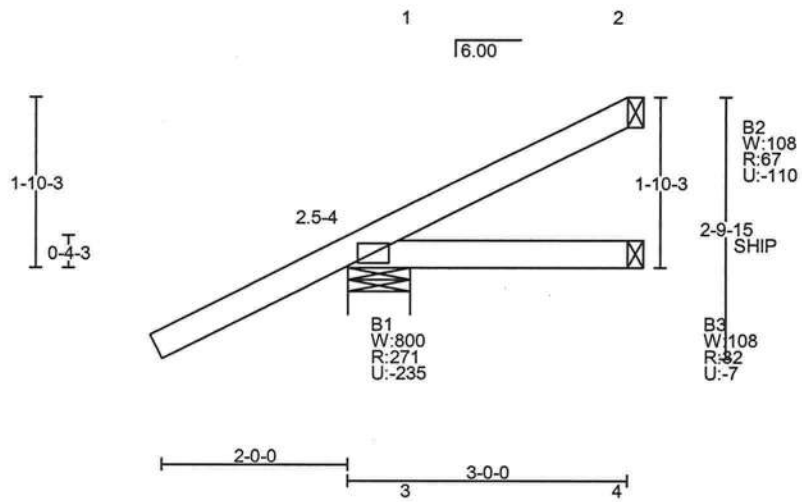

Truswal Systems Corporation
Donald Lee Scott, P.E.
220 Westway Place, Suite 200
Arlington, Texas 76018
Florida License No. 35036

Date: 3/27/2007

All connector plates are Truswal 20 ga. unless shown by "18"(18 ga.), "H"(16 ga.), or "MX"(TWMX 20 ga.), positioned per Joint Details Report. Circled plates and false frame plates are positioned as shown above. Shift gable stud plates to avoid overlap with structural plates (or staple).

TRUSWAL SYSTEMS
TW Building Components Group, Inc.
220 Westway Place, Suite 200, Arlington, TX 76018
Florida Certificate of Authorization # 278
TRUSPLUS 6.0 VER: T6.5.41

WARNING *Read all notes on this sheet and give a copy of it to the Erecting Contractor.*

This design is for an individual building component not truss system. It has been based on specifications provided by the component manufacturer and done in accordance with the current versions of TPI and AFPA design standards. No responsibility is assumed for dimensional accuracy. Dimensions are to be verified by the component manufacturer and/or building designer prior to fabrication. The building designer must ascertain that the loads utilized on this design meet or exceed the loading imposed by the local building code and the particular application. The design assumes that the top chord is laterally braced by the roof or floor sheathing and the bottom chord is laterally braced by a rigid sheathing material directly attached, unless otherwise noted. Bracing shown is for lateral support of components members only to reduce buckling length. This component shall not be placed in any environment that will cause the moisture content of the wood to exceed 19% and/or cause connector plate corrosion. Fabricate, handle, install and brace this truss in accordance with the following standards: 'Joint and Cutting Detail Reports' available as output from Truswal software, 'ANSI/TPI 1', 'WTCA 1' - Wood Truss Council of America Standard Design Responsibilities, 'BUILDING COMPONENT SAFETY INFORMATION' - (BCSI 1-03) and 'BCSI SUMMARY SHEETS' by WTCA and TPI. The Truss Plate Institute (TPI) is located at 583 D'Onofrio Drive, Madison, Wisconsin 53719. The American Forest and Paper Association (AFPA) is located at 1111 19th Street, NW, Ste 800, Washington, DC 20036.

Cust: BEN ATKINS
WO: Drive_J_jr60-07_L00006_J00001
Dsgnr: ABCD #LC = 41 WT: 17#

TC Live	20.00 psf	LiveDur	L=1.25 P=1.25
TC Snow(Ps)	0.00 psf	SnowDur	L=1.15 P=1.15
TC Dead	7.00 psf	Rep Mbr Bnd / Comp / Tens	
BC Live	0.00 psf		1.15 / 1.10 / 1.10
BC Dead	10.00 psf	O.C.Spacing	2- 0- 0
Bldg Code:	FBC2004R	DEFL RATIO:	L/240 TC: L/180

Job Name: ACE CONST. Truss ID: TJ-04A Qty: 1

BRG	X-LOC	REACT	SIZE	REQ'D
1	0- 6-12	173	3.50"	1.50"
2	4-11- 4	112	1.50"	1.50"
3	4-11- 4	54	1.50"	1.50"

BRG REQUIREMENTS shown are based ONLY on the truss material at each bearing

MAX DEFLECTION (span) :
L/999 MEM 3-4 (LIVE) LC 37
L= 0.04" D= -0.01" T= 0.03"

CRITICAL MEMBER FORCES:

TC	COMP.(DUR.)/	TENS.(DUR.)	CSI
1-2	-94(1.60)/	49(1.25)	0.22
2-0	-1(1.25)/	2(1.60)	0.00

BC	COMP.(DUR.)/	TENS.(DUR.)	CSI
3-4	-55(1.60)/	169(1.60)	0.16
4-0	0(1.25)/	0(0.90)	0.00

TC	2x4	SP	#2 D
BC	2x4	SP	#2 D
WEDGE	2x4	SP	#2 D

This design does not account for long term time dependent loading (creep). Building Designer must account for this.
THIS DESIGN IS THE COMPOSITE RESULT OF MULTIPLE LOAD CASES.
Mark all interior bearing locations.
Install interior support(s) before erection.
Shim bearings (if needed) for req. support.

Designed per ANSI/TPI 1-2002
Plating is based on quality control factors
Cq = 1.20 for wide face and
Cq = 1.11 for narrow face.
Any alterations to this are shown for individual joints on the Joint Report.
Refer to Joint QC Detail Sheet for Maximum Rotational Tolerance used
IRC/IBC truss plate values are based on testing and approval as required by IBC 1703 and ANSI/TPI and are reported in available documents such as ICBO #1607.

UPLIFT REACTION(S) :

Support	C&C Wind	Non-Wind
1	-85 lb	
2	-182 lb	
3	-10 lb	

HORIZONTAL REACTION(S) :
support 1 169 lb
support 3 169 lb
This truss is designed using the ASCE7-02 Wind Specification
Bldg Enclosed = Yes, Importance Factor = 1.00
Truss Location = Not End Zone
Hurricane/Ocean Line = No Exp Category = B
Bldg Length = 40.00 ft, Bldg Width = 20.00 ft
Mean roof height = 9.26 ft, mph = 120
TPI Standard Occupancy, Dead Load = 9.2 psf
Designed as Main Wind Force Resisting System and Components and Cladding
Tributary Area = 9 sqft

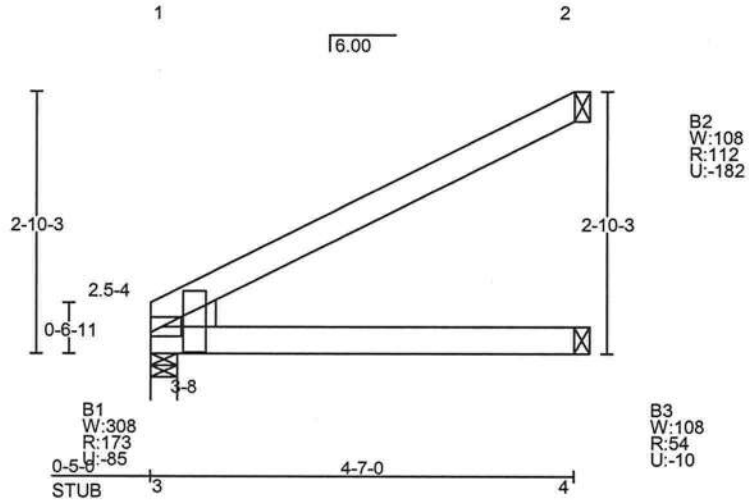

Truswal Systems Corporation
Donald Lee Scott, P.E.
220 Westway Place, Suite 200
Arlington, Texas 76018
Florida License No. 35036
Date: 3/27/2007

All connector plates are Truswal 20 ga. unless shown by "18"(18 ga.), "H"(16 ga.), or "MX"(TWMX 20 ga.), positioned per Joint Details Report. Circled plates and false frame plates are positioned as shown above. Shift gable stud plates to avoid overlap with structural plates (or staple).

TRUSWAL SYSTEMS
TWG Building Components Group, Inc.
220 Westway Place, Suite 200, Arlington, TX 76018
Florida Certificate of Authorization # 278
TRUSPLUS 6.0 VER: T6.5.41

WARNING ***Read all notes on this sheet and give a copy of it to the Erecting Contractor.***

This design is for an individual building component not truss system. It has been based on specifications provided by the component manufacturer and done in accordance with the current versions of TPI and AFPA design standards. No responsibility is assumed for dimensional accuracy. Dimensions are to be verified by the component manufacturer and/or building designer prior to fabrication. The building designer must ascertain that the loads utilized on this design meet or exceed the loading imposed by the local building code and the particular application. The design assumes that the top chord is laterally braced by the roof or floor sheathing and the bottom chord is laterally braced by a rigid sheathing material directly attached, unless otherwise noted. Bracing shown is for lateral support of components members only to reduce buckling length. This component shall not be placed in any environment that will cause the moisture content of the wood to exceed 19% and/or cause connector plate corrosion. Fabricate, handle, install and brace this truss in accordance with the following standards: 'Joint and Cutting Detail Reports' available as output from Truswal software, 'ANSI/TPI 1', WTCA 1' - Wood Truss Council of America Standard Design Responsibilities, 'BUILDING COMPONENT SAFETY INFORMATION' - (BCSI 1-03) and 'BCSI SUMMARY SHEETS' by WTCA and TPI. The Truss Plate Institute (TPI) is located at 583 D'Onofrio Drive, Madison, Wisconsin 53719. The American Forest and Paper Association (AFPA) is located at 1111 19th Street, NW, Ste 800, Washington, DC 20036.

Cust: BEN ATKINS
WO: Drive_J_jr60-07_L00006_J00001
Dsgnr: ABCD #LC = 41 WT: 21#

TC Live	20.00 psf	LiveDur	L=1.25 P=1.25
TC Snow(Ps)	0.00 psf	SnowDur	L=1.15 P=1.15
TC Dead	7.00 psf	Rep Mbr Bnd / Comp / Tens	
BC Live	0.00 psf		1.15 / 1.10 / 1.10
BC Dead	10.00 psf	O.C.Spacing	2- 0- 0
Bldg Code:	FBC2004R	DEFL RATIO:	L/240 TC: L/180

Job Name: ACE CONST. Truss ID: TJ-04B Qty: 1

BRG	X-LOC	REACT	SIZE	REQ'D
1	0- 6-12	173	3.50"	1.50"
2	4-11- 4	112	1.50"	1.50"
3	4-11- 4	54	1.50"	1.50"

BRG REQUIREMENTS shown are based ONLY on the truss material at each bearing
MAX DEFLECTION (span) :
L/999 MEM 3-4 (LIVE) LC 37
L= 0.04" D= -0.01" T= 0.03"
CRITICAL MEMBER FORCES:

TC	COMP.(DUR.)/	TENS.(DUR.)	CSI
1-2	-94(1.60)/	49(1.25)	0.22
2-0	-1(1.25)/	2(1.60)	0.00

BC	COMP.(DUR.)/	TENS.(DUR.)	CSI
3-4	-55(1.60)/	169(1.60)	0.16
4-0	0(1.25)/	0(0.90)	0.00

TC	2x4	SP	#2 D
BC	2x4	SP	#2 D
WEDGE	2x4	SP	#2 D

This design does not account for long term time dependent loading (creep). Building Designer must account for this.
THIS DESIGN IS THE COMPOSITE RESULT OF MULTIPLE LOAD CASES.
Mark all interior bearing locations.
Install interior support(s) before erection.
Shim bearings (if needed) for req. support.

Designed per ANSI/TPI 1-2002
Plating is based on quality control factors
Cq = 1.20 for wide face and
Cq = 1.11 for narrow face.
Any alterations to this are shown for individual joints on the Joint Report.
Refer to Joint QC Detail Sheet for Maximum Rotational Tolerance used
IRC/IBC truss plate values are based on testing and approval as required by IBC 1703 and ANSI/TPI and are reported in available documents such as ICBO #1607.

UPLIFT REACTION(S) :

Support	C&C Wind	Non-Wind
1	-85 lb	
2	-182 lb	
3	-10 lb	

HORIZONTAL REACTION(S) :
support 1 169 lb
support 3 169 lb
This truss is designed using the ASCE7-02 Wind Specification
Bldg Enclosed = Yes, Importance Factor = 1.00
Truss Location = Not End Zone
Hurricane/Ocean Line = No Exp Category = B
Bldg Length = 40.00 ft, Bldg Width = 20.00 ft
Mean roof height = 9.26 ft, mph = 120
TPI Standard Occupancy, Dead Load = 9.2 psf
Designed as Main Wind Force Resisting System and Components and Cladding
Tributary Area = 9 sqft

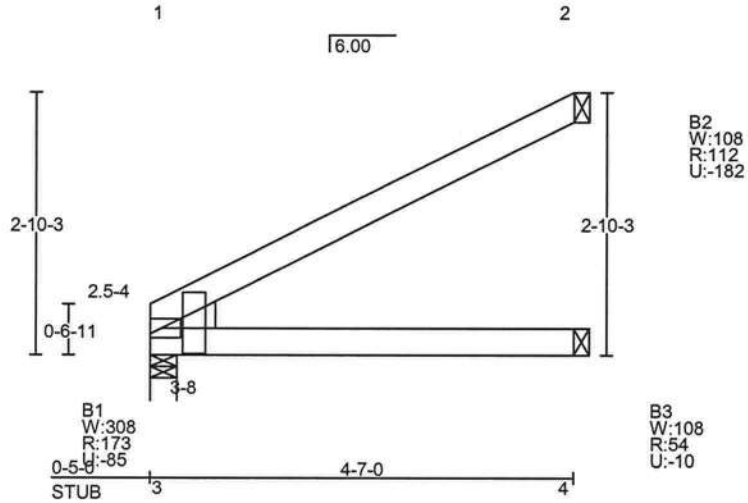

Truswal Systems Corporation
Donald Lee Scott, P.E.
220 Westway Place, Suite 200
Arlington, Texas 76018
Florida License No. 35036
Date: 3/27/2007

All connector plates are Truswal 20 ga. unless shown by "18"(18 ga.), "H"(16 ga.), or "MX"(TWMX 20 ga.), positioned per Joint Details Report. Circled plates and false frame plates are positioned as shown above. Shift gable stud plates to avoid overlap with structural plates (or staple).

TRUSWAL SYSTEMS
TW Building Components Group, Inc.
220 Westway Place, Suite 200, Arlington, TX 76018
Florida Certificate of Authorization # 278
TRUSPLUS 6.0 VER: T6.5.41

WARNING *Read all notes on this sheet and give a copy of it to the Erecting Contractor.*

This design is for an individual building component not truss system. It has been based on specifications provided by the component manufacturer and done in accordance with the current versions of TPI and AFPA design standards. No responsibility is assumed for dimensional accuracy. Dimensions are to be verified by the component manufacturer and/or building designer prior to fabrication. The building designer must ascertain that the loads utilized on this design meet or exceed the loading imposed by the local building code and the particular application. The design assumes that the top chord is laterally braced by the roof or floor sheathing and the bottom chord is laterally braced by a rigid sheathing material directly attached, unless otherwise noted. Bracing shown is for lateral support of components members only to reduce buckling length. This component shall not be placed in any environment that will cause the moisture content of the wood to exceed 19% and/or cause connector plate corrosion. Fabricate, handle, install and brace this truss in accordance with the following standards: 'Joint and Cutting Detail Reports' available as output from Truswal software, 'ANSI/TPI 1', 'WTCA 1' - Wood Truss Council of America Standard Design Responsibilities, 'BUILDING COMPONENT SAFETY INFORMATION' - (BCSI 1-03) and 'BCSI SUMMARY SHEETS' by WTCA and TPI. The Truss Plate Institute (TPI) is located at 583 D'Onofrio Drive, Madison, Wisconsin 53719. The American Forest and Paper Association (AFPA) is located at 1111 19th Street, NW, Ste 800, Washington, DC 20036.

Cust: BEN ATKINS
WO: Drive_J_jr60-07_L00006_J00001
Dsgnr: ABCD #LC = 41 WT: 21#

TC Live	20.00 psf	LiveDur	L=1.25 P=1.25
TC Snow(Ps)	0.00 psf	SnowDur	L=1.15 P=1.15
TC Dead	7.00 psf	Rep Mbr Bnd / Comp / Tens	
BC Live	0.00 psf		1.15 / 1.10 / 1.10
BC Dead	10.00 psf	O.C.Spacing	2- 0- 0
Bldg Code:	FBC2004R	DEFL RATIO:	L/240 TC: L/180

Job Name: ACE CONST. Truss ID: TJ-05 Qty: 11

BRG	X-LOC	REACT	SIZE	REQ'D
1	0- 4- 0	344	8.00"	1.50"
2	4-11- 4	117	1.50"	1.50"
3	4-11- 4	57	1.50"	1.50"

BRG REQUIREMENTS shown are based ONLY on the truss material at each bearing
MAX DEFLECTION (span) :
L/999 MEM 3-4 (LIVE) LC 1
L= -0.01" D= -0.02" T= -0.03"
CRITICAL MEMBER FORCES:

TC	COMP.(DUR.)/	TENS.(DUR.)	CSI
1-2	-98(1.60)/	51(1.25)	0.23
2-0	-2(1.25)/	2(1.60)	0.00

BC	COMP.(DUR.)/	TENS.(DUR.)	CSI
3-4	-61(1.60)/	187(1.60)	0.20
4-0	0(1.60)/	0(1.25)	0.00

TC 2x4 SP #2 D
BC 2x4 SP #2 D
This design does not account for long term time dependent loading (creep). Building Designer must account for this.
Refer to Joint QC Detail Sheet for Maximum Rotational Tolerance used
IRC/IBC truss plate values are based on testing and approval as required by IBC 1703 and ANSI/TPI and are reported in available documents such as ICBO #1607.

Designed per ANSI/TPI 1-2002
Plating is based on quality control factors
Cq = 1.20 for wide face and
Cq = 1.11 for narrow face.
Any alterations to this are shown for individual joints on the Joint Report.
THIS DESIGN IS THE COMPOSITE RESULT OF MULTIPLE LOAD CASES.
Mark all interior bearing locations.
Install interior support(s) before erection.
Shim bearings (if needed) for req. support.

UPLIFT REACTION(S) :

Support	C&C Wind	Non-Wind
1	-266 lb	
2	-186 lb	
3	-10 lb	

HORIZONTAL REACTION(S) :
support 1 187 lb
support 3 187 lb
This truss is designed using the ASCE7-02 Wind Specification
Bldg Enclosed = Yes, Importance Factor = 1.00
Truss Location = Not End Zone
Hurricane/Ocean Line = No , Exp Category = B
Bldg Length = 40.00 ft, Bldg Width = 20.00 ft
Mean roof height = 9.26 ft, mph = 120
TPI Standard Occupancy, Dead Load = 9.2 psf
Designed as Main Wind Force Resisting System and Components and Cladding
Tributary Area = 10 sqft

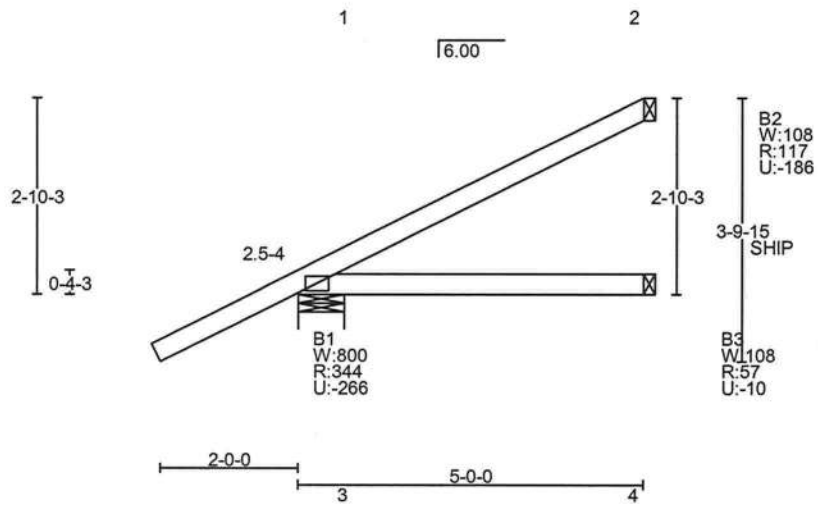

Truswal Systems Corporation
Donald Lee Scott, P.E.
220 Westway Place, Suite 200
Arlington, Texas 76018
Florida License No. 35036
Date: 3/27/2007

All connector plates are Truswal 20 ga. unless shown by "18"(18 ga.), "H"(16 ga.), or "MX"(TWMX 20 ga.), positioned per Joint Details Report. Circled plates and false frame plates are positioned as shown above. Shift gable stud plates to avoid overlap with structural plates (or staple).

TRUSWAL SYSTEMS
TW Building Components Group, Inc.
220 Westway Place, Suite 200, Arlington, TX 76018
Florida Certificate of Authorization # 278
TRUSPLUS 6.0 VER: T6.5.41

WARNING ***Read all notes on this sheet and give a copy of it to the Erecting Contractor.***

This design is for an individual building component not truss system. It has been based on specifications provided by the component manufacturer and done in accordance with the current versions of TPI and AFPA design standards. No responsibility is assumed for dimensional accuracy. Dimensions are to be verified by the component manufacturer and/or building designer prior to fabrication. The building designer must ascertain that the loads utilized on this design meet or exceed the loading imposed by the local building code and the particular application. The design assumes that the top chord is laterally braced by the roof or floor sheathing and the bottom chord is laterally braced by a rigid sheathing material directly attached, unless otherwise noted. Bracing shown is for lateral support of components members only to reduce buckling length. This component shall not be placed in any environment that will cause the moisture content of the wood to exceed 19% and/or cause connector plate corrosion. Fabricate, handle, install and brace this truss in accordance with the following standards: 'Joint and Cutting Detail Reports' available as output from Truswal software, 'ANSI/TPI 1', 'WTCA 1' - Wood Truss Council of America Standard Design Responsibilities, 'BUILDING COMPONENT SAFETY INFORMATION' - (BCSI 1-03) and 'BCSI SUMMARY SHEETS' by WTCA and TPI. The Truss Plate Institute (TPI) is located at 583 D'Onofrio Drive, Madison, Wisconsin 53719. The American Forest and Paper Association (AFPA) is located at 1111 19th Street, NW, Ste 800, Washington, DC 20036.

Cust: BEN ATKINS
WO: Drive_J_jr60-07_L00006_J00001
Dsgnr: ABCD #LC = 41 WT: 25#

TC Live	20.00 psf	LiveDur	L=1.25 P=1.25
TC Snow(Ps)	0.00 psf	SnowDur	L=1.15 P=1.15
TC Dead	7.00 psf	Rep Mbr Bnd / Comp / Tens	
BC Live	0.00 psf		1.15 / 1.10 / 1.10
BC Dead	10.00 psf	O.C.Spacing	2- 0- 0

Bldg Code: FBC2004R DEFL RATIO: L/240 TC: L/180

Job Name: ACE CONST. Truss ID: TJ-05A Qty: 1

BRG	X-LOC	REACT	SIZE	REQ'D
1	0- 4- 0	344	8.00"	1.50"
2	4-11- 4	117	1.50"	1.50"
3	4-11- 4	57	1.50"	1.50"

BRG REQUIREMENTS shown are based ONLY on the truss material at each bearing
MAX DEFLECTION (span) :
L/999 MEM 3-4 (LIVE) LC 1
L= -0.01" D= -0.02" T= -0.03"
CRITICAL MEMBER FORCES:

TC	COMP.(DUR.)/	TENS.(DUR.)	CSI
1-2	-98(1.60)/	51(1.25)	0.23
2-0	-2(1.25)/	2(1.60)	0.00

BC	COMP.(DUR.)/	TENS.(DUR.)	CSI
3-4	-61(1.60)/	187(1.60)	0.20
4-0	0(0.90)/	0(1.60)	0.00

TC 2x4 SP #2 D
BC 2x4 SP #2 D
This design does not account for long term time dependent loading (creep). Building Designer must account for this.
Refer to Joint QC Detail Sheet for Maximum Rotational Tolerance used IRC/IBC truss plate values are based on testing and approval as required by IBC 1703 and ANSI/TPI and are reported in available documents such as ICBO #1607.

Designed per ANSI/TPI 1-2002
Plating is based on quality control factors
Cq = 1.20 for wide face and
Cq = 1.11 for narrow face.
Any alterations to this are shown for individual joints on the Joint Report.
THIS DESIGN IS THE COMPOSITE RESULT OF MULTIPLE LOAD CASES.
Mark all interior bearing locations.
Install interior support(s) before erection.
Shim bearings (if needed) for req. support.

UPLIFT REACTION(S) :

Support	C&C Wind	Non-Wind
1	-266 lb	
2	-186 lb	
3	-10 lb	

HORIZONTAL REACTION(S) :
support 1 187 lb
support 3 187 lb
This truss is designed using the ASCE7-02 Wind Specification
Bldg Enclosed = Yes, Importance Factor = 1.00
Truss Location = Not End Zone
Hurricane/Ocean Line = No , Exp Category = B
Bldg Length = 40.00 ft, Bldg Width = 20.00 ft
Mean roof height = 9.26 ft, mph = 120
TPI Standard Occupancy, Dead Load = 9.2 psf
Designed as Main Wind Force Resisting System and Components and Cladding
Tributary Area = 10 sqft

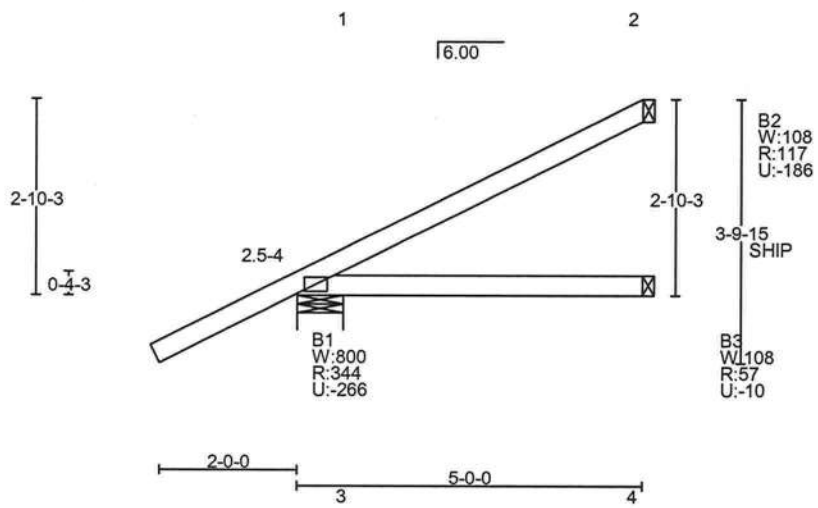

Truswal Systems Corporation
Donald Lee Scott, P.E.
220 Westway Place, Suite 200
Arlington, Texas 76018
Florida License No. 35036
Date: 3/27/2007

All connector plates are Truswal 20 ga. unless shown by "18"(18 ga.), "H"(16 ga.), or "MX"(TWMX 20 ga.), positioned per Joint Details Report. Circled plates and false frame plates are positioned as shown above. Shift gable stud plates to avoid overlap with structural plates (or staple).

TRUSWAL SYSTEMS
TWW Building Components Group, Inc.
220 Westway Place, Suite 200, Arlington, TX 76018
Florida Certificate of Authorization # 278
TRUSPLUS 6.0 VER: T6.5.41

WARNING *Read all notes on this sheet and give a copy of it to the Erecting Contractor.*

This design is for an individual building component not truss system. It has been based on specifications provided by the component manufacturer and done in accordance with the current versions of TPI and AFPA design standards. No responsibility is assumed for dimensional accuracy. Dimensions are to be verified by the component manufacturer and/or building designer prior to fabrication. The building designer must ascertain that the loads utilized on this design meet or exceed the loading imposed by the local building code and the particular application. The design assumes that the top chord is laterally braced by the roof or floor sheathing and the bottom chord is laterally braced by a rigid sheathing material directly attached, unless otherwise noted. Bracing shown is for lateral support of components members only to reduce buckling length. This component shall not be placed in any environment that will cause the moisture content of the wood to exceed 19% and/or cause connector plate corrosion. Fabricate, handle, install and brace this truss in accordance with the following standards: 'Joint and Cutting Detail Reports' available as output from Truswal software, 'ANSI/TPI 1', 'WTCA 1' - Wood Truss Council of America Standard Design Responsibilities, 'BUILDING COMPONENT SAFETY INFORMATION' - (BCSI 1-03) and 'BCSI SUMMARY SHEETS' by WTCA and TPI. The Truss Plate Institute (TPI) is located at 583 D'Onofrio Drive, Madison, Wisconsin 53719. The American Forest and Paper Association (AFPA) is located at 1111 19th Street, NW, Ste 800, Washington, DC 20036.

Cust: BEN ATKINS
WO: Drive_J_jr60-07_L00006_J00001
Dsgnr: ABCD #LC = 41 WT: 25#

TC Live	20.00 psf	LiveDur	L=1.25 P=1.25
TC Snow(Ps)	0.00 psf	SnowDur	L=1.15 P=1.15
TC Dead	7.00 psf	Rep Mbr Bnd / Comp / Tens	
BC Live	0.00 psf		1.15 / 1.10 / 1.10
BC Dead	10.00 psf	O.C.Spacing	2- 0- 0
Bldg Code:	FBC2004R	DEFL RATIO:	L/240 TC: L/180

Job Name: ACE CONST. Truss ID: TJ-07 Qty: 28

BRG	X-LOC	REACT	SIZE	REQ'D
1	0- 4- 0	418	8.00"	1.50"
2	6-11- 4	166	1.50"	1.50"
3	6-11- 4	90	1.50"	1.50"

BRG REQUIREMENTS shown are based ONLY on the truss material at each bearing

MAX DEFLECTION (span) :
L/999 MEM 3-4 (LIVE) LC 1
L= -0.06" D= -0.09" T= -0.15"

CRITICAL MEMBER FORCES:

TC	COMP.(DUR.)/	TENS.(DUR.)	CSI
1-2	-134(1.60)/	73(1.25)	0.44
2-0	-2(1.25)/	2(1.60)	0.00

BC	COMP.(DUR.)/	TENS.(DUR.)	CSI
3-4	-83(1.60)/	248(1.60)	0.37
4-0	0(0.90)/	0(1.60)	0.00

TC 2x4 SP #2 D
BC 2x4 SP #2 D
This design does not account for long term time dependent loading (creep). Building Designer must account for this.
Refer to Joint QC Detail Sheet for Maximum Rotational Tolerance used IRC/IBC truss plate values are based on testing and approval as required by IBC 1703 and ANSI/TPI and are reported in available documents such as ICBO #1607.

Designed per ANSI/TPI 1-2002
Plating is based on quality control factors
Cq = 1.20 for wide face and
Cq = 1.11 for narrow face.
Any alterations to this are shown for individual joints on the Joint Report.
THIS DESIGN IS THE COMPOSITE RESULT OF MULTIPLE LOAD CASES.
Loaded for 10 PSF non-concurrent BCLL.
Mark all interior bearing locations.
Install interior support(s) before erection.
Shim bearings (if needed) for req. support.

UPLIFT REACTION(S) :

Support	C&C Wind	Non-Wind
1	-290 lb	
2	-248 lb	
3	-10 lb	

HORIZONTAL REACTION(S) :
support 1 247 lb
support 3 247 lb
This truss is designed using the ASCE7-02 Wind Specification
Bldg Enclosed = Yes, Importance Factor = 1.00
Truss Location = Not End Zone
Hurricane/Ocean Line = No , Exp Category = B
Bldg Length = 40.00 ft, Bldg Width = 20.00 ft
Mean roof height = 9.76 ft, mph = 120
TPI Standard Occupancy, Dead Load = 9.2 psf
Designed as Main Wind Force Resisting System and Components and Cladding
Tributary Area = 14 sqft

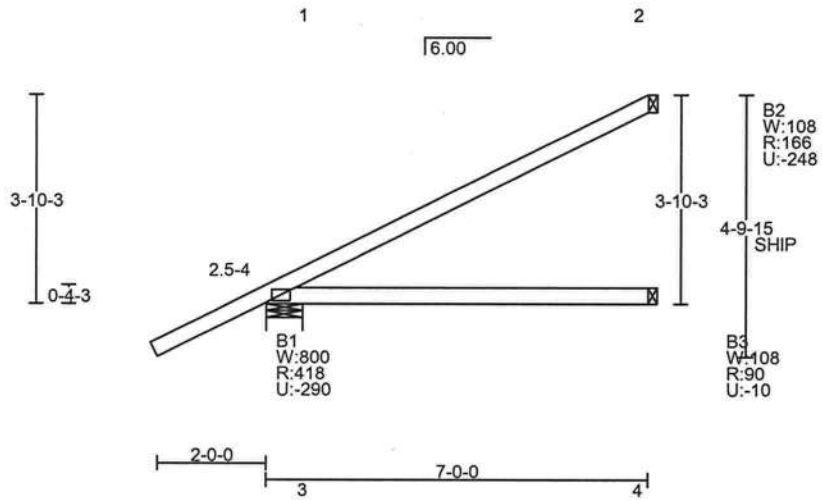

Truswal Systems Corporation
Donald Lee Scott, P.E.
220 Westway Place, Suite 200
Arlington, Texas 76018
Florida License No. 35036

Date: 3/27/2007

All connector plates are Truswal 20 ga. unless shown by "18"(18 ga.), "H"(16 ga.), or "MX"(TWMX 20 ga.), positioned per Joint Details Report. Circled plates and false frame plates are positioned as shown above. Shift gable stud plates to avoid overlap with structural plates (or staple).

TRUSWAL SYSTEMS
TW Building Components Group, Inc.
220 Westway Place, Suite 200, Arlington, TX 76018
Florida Certificate of Authorization # 278
TRUSPLUS 6.0 VER: T6.5.41

WARNING *Read all notes on this sheet and give a copy of it to the Erecting Contractor.*

This design is for an individual building component not truss system. It has been based on specifications provided by the component manufacturer and done in accordance with the current versions of TPI and AFPA design standards. No responsibility is assumed for dimensional accuracy. Dimensions are to be verified by the component manufacturer and/or building designer prior to fabrication. The building designer must ascertain that the loads utilized on this design meet or exceed the loading imposed by the local building code and the particular application. The design assumes that the top chord is laterally braced by the roof or floor sheathing and the bottom chord is laterally braced by a rigid sheathing material directly attached, unless otherwise noted. Bracing shown is for lateral support of components members only to reduce buckling length. This component shall not be placed in any environment that will cause the moisture content of the wood to exceed 19% and/or cause connector plate corrosion. Fabricate, handle, install and brace this truss in accordance with the following standards: 'Joint and Cutting Detail Reports' available as output from Truswal software, 'ANSI/TPI 1', 'WTCA 1' - Wood Truss Council of America Standard Design Responsibilities, 'BUILDING COMPONENT SAFETY INFORMATION' - (BCSI 1-03) and 'BCSI SUMMARY SHEETS' by WTCA and TPI. The Truss Plate Institute (TPI) is located at 583 D'Onofrio Drive, Madison, Wisconsin 53719. The American Forest and Paper Association (AFPA) is located at 1111 19th Street, NW, Ste 800, Washington, DC 20036.

Cust: BEN ATKINS
WO: Drive_J_jr60-07_L00006_J00001
Dsgnr: ABCD #LC = 42 WT: 33#

TC Live	20.00 psf	LiveDur	L=1.25 P=1.25
TC Snow(Ps)	0.00 psf	SnowDur	L=1.15 P=1.15
TC Dead	7.00 psf	Rep Mbr Bnd / Comp / Tens	
BC Live	0.00 psf		1.15 / 1.10 / 1.10
BC Dead	10.00 psf	O.C.Spacing	2- 0- 0
Bldg Code:	FBC2004R	DEFL RATIO:	L/240 TC: L/180

Job Name: ACE CONST. Truss ID: TK-03 Qty: 2

BRG	X-LOC	REACT	SIZE	REQ'D
1	0- 5-11	284	11.31"	1.50"
2	4- 2- 3	60	1.50"	1.50"
3	4- 2- 3	21	1.50"	1.50"

BRG REQUIREMENTS shown are based ONLY on the truss material at each bearing

MAX DEFLECTION (span) :
L/999 MEM 3-4 (LIVE) LC 39
L= 0.00" D= 0.00" T= -0.01"

CRITICAL MEMBER FORCES:

TC	COMP.(DUR.)/	TENS.(DUR.)	CSI
1-2	-49(1.60)/	19(1.60)	0.13
2-0	-1(1.25)/	1(1.60)	0.00

BC	COMP.(DUR.)/	TENS.(DUR.)	CSI
3-4	-35(1.60)/	109(1.60)	0.07
4-0	0(1.60)/	0(1.25)	0.00

TC 2x4 SP #2 D
BC 2x4 SP #2 D

This design does not account for long term time dependent loading (creep). Building Designer must account for this.
Refer to Joint QC Detail Sheet for Maximum Rotational Tolerance used
IRC/IBC truss plate values are based on testing and approval as required by IBC 1703 and ANSI/TPI and are reported in available documents such as ICBO #1607.
Shim bearings (if needed) for req. support.
NOTE: LEFT OVERHANG DOES NOT WORK UNLESS OTHER PROVISIONS ARE MADE (PER THE BUILDING DESIGNER) TO REDUCE THE OVERHANGS STRESS/ DEFLECTION, OR TRIM TO MAX. LENGTH NOTED.
Maximum Unsupported Left TC OH = 2-9-5

Designed per ANSI/TPI 1-2002
Plating is based on quality control factors
Cq = 1.20 for wide face and
Cq = 1.11 for narrow face.
Any alterations to this are shown for individual joints on the Joint Report.
THIS DESIGN IS THE COMPOSITE RESULT OF MULTIPLE LOAD CASES.
Mark all interior bearing locations.
Install interior support(s) before erection.
Permanent bracing is required (by others) to prevent rotation/toppling. See BCSI 1-03 and ANSI/TPI 1.

UPLIFT REACTION(S) :

Support	C&C Wind	Non-Wind
1	-365 lb	
2	-122 lb	
3	-6 lb	

HORIZONTAL REACTION(S) :
support 1 108 lb
support 3 108 lb
This truss is designed using the ASCE7-02 Wind Specification
Bldg Enclosed = Yes, Importance Factor = 1.00
Truss Location = Not End Zone
Hurricane/Ocean Line = No , Exp Category = B
Bldg Length = 40.00 ft, Bldg Width = 20.00 ft
Mean roof height = 10.76 ft, mph = 120
TPI Standard Occupancy, Dead Load = 9.2 psf
Designed as Main Wind Force Resisting System and Components and Cladding
Tributary Area = 3 sqft

----------LOAD CASE #1 DESIGN LOADS ----------

Dir	L.Plf	L.Loc	R.Plf	R.Loc	LL/TL
TC Vert	74.00	- 2- 9-15	74.00	0- 0- 0	0.54
TC Vert	0.00	0- 0- 0	32.62	2- 9-15	0.74
TC Vert	27.00	2- 9-15	27.00	4- 2-15	0.74
BC Vert	0.00	0- 0- 0	12.08	2- 9-15	0.00
BC Vert	10.00	2- 9-15	10.00	4- 2-15	0.00

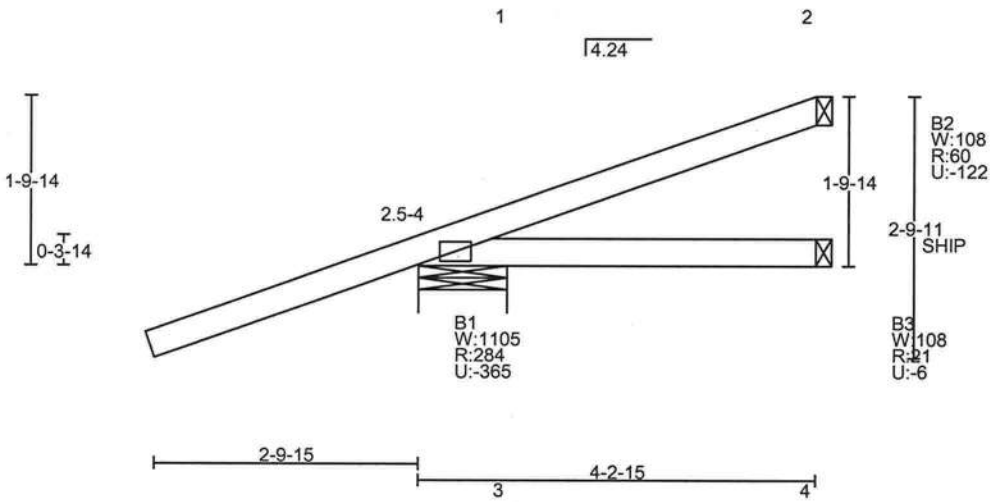

Truswal Systems Corporation
Donald Lee Scott, P.E.
220 Westway Place, Suite 200
Arlington, Texas 76018
Florida License No. 35036
Date: 3/27/2007

All connector plates are Truswal 20 ga. unless shown by "18"(18 ga.), "H"(16 ga.), or "MX"(TWMX 20 ga.), positioned per Joint Details Report. Circled plates and false frame plates are positioned as shown above. Shift gable stud plates to avoid overlap with structural plates (or staple).

TRUSWAL SYSTEMS
TW Building Components Group, Inc.
220 Westway Place, Suite 200, Arlington, TX 76018
Florida Certificate of Authorization # 278
TRUSPLUS 6.0 VER: T6.5.41

WARNING *Read all notes on this sheet and give a copy of it to the Erecting Contractor.*

This design is for an individual building component not truss system. It has been based on specifications provided by the component manufacturer and done in accordance with the current versions of TPI and AFPA design standards. No responsibility is assumed for dimensional accuracy. Dimensions are to be verified by the component manufacturer and/or building designer prior to fabrication. The building designer must ascertain that the loads utilized on this design meet or exceed the loading imposed by the local building code and the particular application. The design assumes that the top chord is laterally braced by the roof or floor sheathing and the bottom chord is laterally braced by a rigid sheathing material directly attached, unless otherwise noted. Bracing shown is for lateral support of components members only to reduce buckling length. This component shall not be placed in any environment that will cause the moisture content of the wood to exceed 19% and/or cause connector plate corrosion. Fabricate, handle, install and brace this truss in accordance with the following standards: 'Joint and Cutting Detail Reports' available as output from Truswal software, 'ANSI/TPI 1', 'WTCA 1' - Wood Truss Council of America Standard Design Responsibilities, 'BUILDING COMPONENT SAFETY INFORMATION' - (BCSI 1-03) and 'BCSI SUMMARY SHEETS' by WTCA and TPI. The Truss Plate Institute (TPI) is located at 583 D'Onofrio Drive, Madison, Wisconsin 53719. The American Forest and Paper Association (AFPA) is located at 1111 19th Street, NW, Ste 800, Washington, DC 20036.

Cust: BEN ATKINS
WO: Drive_J_jr60-07_L00006_J00001
Dsgnr: ABCD #LC = 41 WT: 23#

TC Live	20.00 psf	LiveDur	L=1.25 P=1.25
TC Snow(Ps)	0.00 psf	SnowDur	L=1.15 P=1.15
TC Dead	7.00 psf	Rep Mbr Bnd / Comp / Tens	
BC Live	0.00 psf		1.00 / 1.00 / 1.00
BC Dead	10.00 psf	O.C.Spacing	2- 0- 0
Bldg Code:	FBC2004R	DEFL RATIO:	L/240 TC: L/180

Job Name: ACE CONST. Truss ID: TK-07 Qty: 7

BRG	X-LOC	REACT	SIZE	REQ'D
1	0- 5-11	506	11.31"	1.50"
2	9-10- 1	113	1.50"	1.50"
3	9-10- 1	276	1.50"	1.50"

BRG REQUIREMENTS shown are based ONLY on the truss material at each bearing

MAX DEFLECTION (span) :
L/999 MEM 4-5 (LIVE) LC 41
L= -0.02" D= -0.21" T= -0.23"

CRITICAL MEMBER FORCES:

TC	COMP.(DUR.)/	TENS.(DUR.)	CSI
1-2	-525(1.25)/	300(1.60)	0.29
2-3	-73(1.25)/	37(1.25)	0.29
3-0	-1(1.25)/	1(1.60)	0.00

BC	COMP.(DUR.)/	TENS.(DUR.)	CSI
4-5	-442(1.60)/	489(1.25)	0.51
5-0	0(0.90)/	0(1.25)	0.00

WB	COMP.(DUR.)/	TENS.(DUR.)	CSI
2-5	-525(1.25)/	475(1.60)	0.17

TC 2x4 SP #2 D
BC 2x4 SP #2 D
WEB 2x4 SP #2 D

This design does not account for long term time dependent loading (creep). Building Designer must account for this.
THIS DESIGN IS THE COMPOSITE RESULT OF MULTIPLE LOAD CASES.
Loaded for 10 PSF non-concurrent BCLL.
Mark all interior bearing locations.
Install interior support(s) before erection.
Permanent bracing is required (by others) to prevent rotation/toppling. See BCSI 1-03 and ANSI/TPI 1.

Designed per ANSI/TPI 1-2002
Plating is based on quality control factors
Cq = 1.20 for wide face and
Cq = 1.11 for narrow face.
Any alterations to this are shown for individual joints on the Joint Report.
Refer to Joint QC Detail Sheet for Maximum Rotational Tolerance used
IRC/IBC truss plate values are based on testing and approval as required by IBC 1703 and ANSI/TPI and are reported in available documents such as ICBO #1607.
Shim bearings (if needed) for req. support.
NOTE: LEFT OVERHANG DOES NOT WORK UNLESS OTHER PROVISIONS ARE MADE (PER THE BUILDING DESIGNER) TO REDUCE THE OVERHANGS STRESS/ DEFLECTION, OR TRIM TO MAX. LENGTH NOTED.
Maximum Unsupported Left TC OH = 2-9-5

UPLIFT REACTION(S) :

Support	C&C Wind	Non-Wind
1	-435 lb	
2	-140 lb	
3	-176 lb	

HORIZONTAL REACTION(S) :
support 1 223 lb
support 3 223 lb
This truss is designed using the ASCE7-02 Wind Specification
Bldg Enclosed = Yes, Importance Factor = 1.00
Truss Location = Not End Zone
Hurricane/Ocean Line = No , Exp Category = B
Bldg Length = 40.00 ft, Bldg Width = 20.00 ft
Mean roof height = 11.76 ft, mph = 120
TPI Standard Occupancy, Dead Load = 9.2 psf
Designed as Main Wind Force Resisting System and Components and Cladding
Tributary Area = 19 sqft

LOAD CASE #1 DESIGN LOADS

Dir	L.Plf	L.Loc	R.Plf	R.Loc	LL/TL
TC Vert	74.00	- 2- 9-15	74.00	0- 0- 0	0.54
TC Vert	0.00	0- 0- 0	108.98	8- 5-13	0.74
TC Vert	27.00	8- 5-13	27.00	9-10-13	0.74
BC Vert	0.00	0- 0- 0	40.36	8- 5-13	0.00
BC Vert	10.00	8- 5-13	10.00	9-10-13	0.00

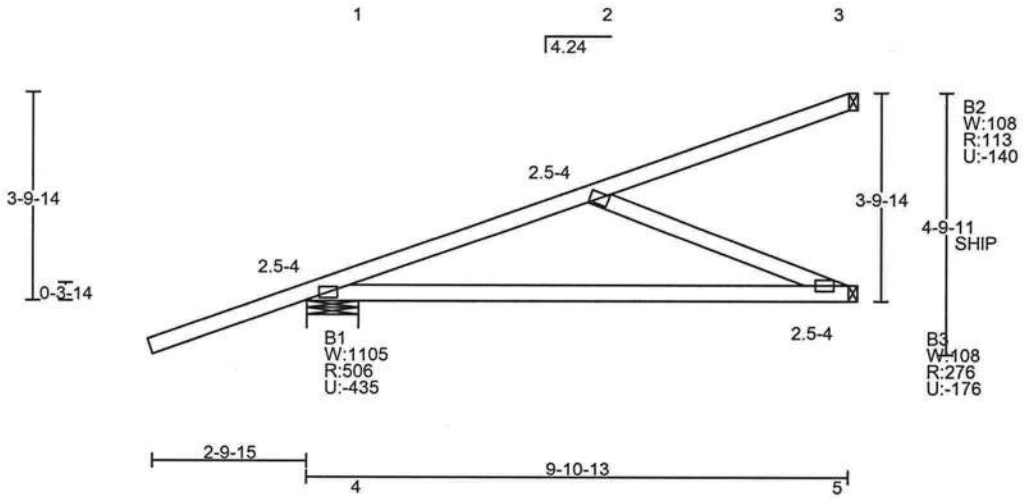

Truswal Systems Corporation
Donald Lee Scott, P.E.
220 Westway Place, Suite 200
Arlington, Texas 76018
Florida License No. 35036

Date: 3/27/2007

All connector plates are Truswal 20 ga. unless shown by "18"(18 ga.), "H"(16 ga.), or "MX"(TWMX 20 ga.), positioned per Joint Details Report. Circled plates and false frame plates are positioned as shown above. Shift gable stud plates to avoid overlap with structural plates (or staple).

TRUSWAL SYSTEMS
TW Building Components Group, Inc.
220 Westway Place, Suite 200, Arlington, TX 76018
Florida Certificate of Authorization # 278
TRUSPLUS 6.0 VER: T6.5.41

WARNING *Read all notes on this sheet and give a copy of it to the Erecting Contractor.*

This design is for an individual building component not truss system. It has been based on specifications provided by the component manufacturer and done in accordance with the current versions of TPI and AFPA design standards. No responsibility is assumed for dimensional accuracy. Dimensions are to be verified by the component manufacturer and/or building designer prior to fabrication. The building designer must ascertain that the loads utilized on this design meet or exceed the loading imposed by the local building code and the particular application. The design assumes that the top chord is laterally braced by the roof or floor sheathing and the bottom chord is laterally braced by a rigid sheathing material directly attached, unless otherwise noted. Bracing shown is for lateral support of components members only to reduce buckling length. This component shall not be placed in any environment that will cause the moisture content of the wood to exceed 19% and/or cause connector plate corrosion. Fabricate, handle, install and brace this truss in accordance with the following standards: 'Joint and Cutting Detail Reports' available as output from Truswal software, 'ANSI/TPI 1', 'WTCA 1' - Wood Truss Council of America Standard Design Responsibilities, 'BUILDING COMPONENT SAFETY INFORMATION' - (BCSI 1-03) and 'BCSI SUMMARY SHEETS' by WTCA and TPI. The Truss Plate Institute (TPI) is located at 583 D'Onofrio Drive, Madison, Wisconsin 53719. The American Forest and Paper Association (AFPA) is located at 1111 19th Street, NW, Ste 800, Washington, DC 20036.

Cust: BEN ATKINS
WO: Drive_J_jr60-07_L00006_J00001
Dsgnr: ABCD #LC = 42 WT: 55#

TC Live	20.00 psf	LiveDur	L=1.25 P=1.25
TC Snow(Ps)	0.00 psf	SnowDur	L=1.15 P=1.15
TC Dead	7.00 psf	Rep Mbr Bnd / Comp / Tens	
BC Live	0.00 psf		1.00 / 1.00 / 1.00
BC Dead	10.00 psf	O.C.Spacing	2- 0- 0
Bldg Code:	FBC2004R	DEFL RATIO:	L/240 TC: L/240

TRUSWAL SYSTEMS
1101 N. Great Southwest Parkway
Arlington, TX 76011
(800) 521-9790 FAX:(817) 649-0105

STANDARD DETAIL
TX03135018-001

5/16/03 Users of Truswal engineering:

The TrusPlus™ engineering software will correctly design the location requirements for permanent continuous lateral bracing (CLB) on members for which it is required to reduce buckling length. Sealed engineering drawings from Truswal will show the required number and approximate locations of braces for each member needing bracing. In general, this bracing is done by using Truswal Systems Brace-It™ or a 1x or 2x member (attached to the top or bottom edge of the member) running perpendicular to the trusses and adequately designed, connected and braced to the building per the building designer (See ANSI/TPI current version). The following are other options (when CLB bracing is not possible or desirable) that will also satisfy bracing needs for individual members (not building system bracing):

1. A 1x or 2x structurally graded "T" brace may be nailed flat to the edge of the member with 10d common or box nails at 8" o.c. if only one brace is required, or may be nailed to both edges of the member if two braces are required. The "T" brace must extend a minimum of 90% of the member's length.
2. A scab (add-on) of the same size and structural grade as the member may be nailed to one face of the member with 10d common or box nails at 8" o.c. if only one brace is required, or may be nailed to both faces of the member if two braces are required. A minimum of 2x6 scabs are required for any member exceeding 14'-0" in length. Scab(s) must extend a minimum of 90% of the members length.
3. Any member requiring more than two braces must use perpendicular bracing or a combination of scabs and "T" braces, or any other approved method, as specified and approved by the building designer.
4. Bracing material may be of SYP, SPF, Hem-Fir, or DFL species

EXAMPLES

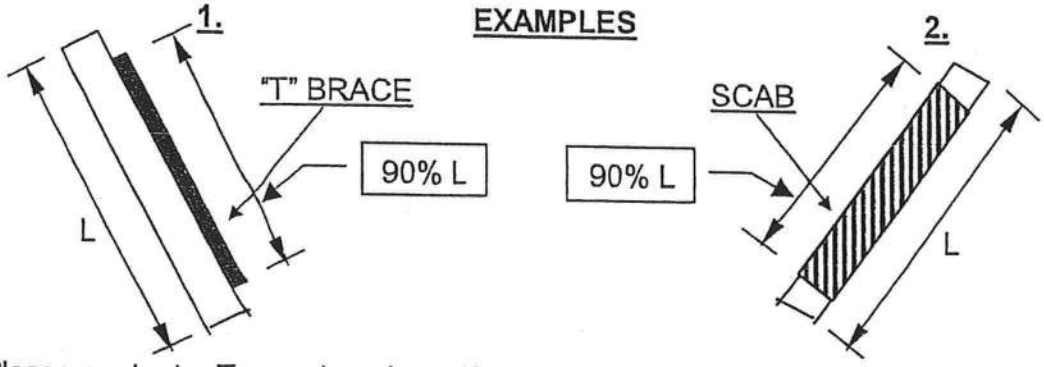

Please contact a Truswal engineer if there are any questions.

VALLEY TRUSS TO BASE TRUSS CONNECTION DETAIL

DWG# TX05291001-001

Lumber Size and Grade Minumum Requirements

See truss engineering for lumber specs

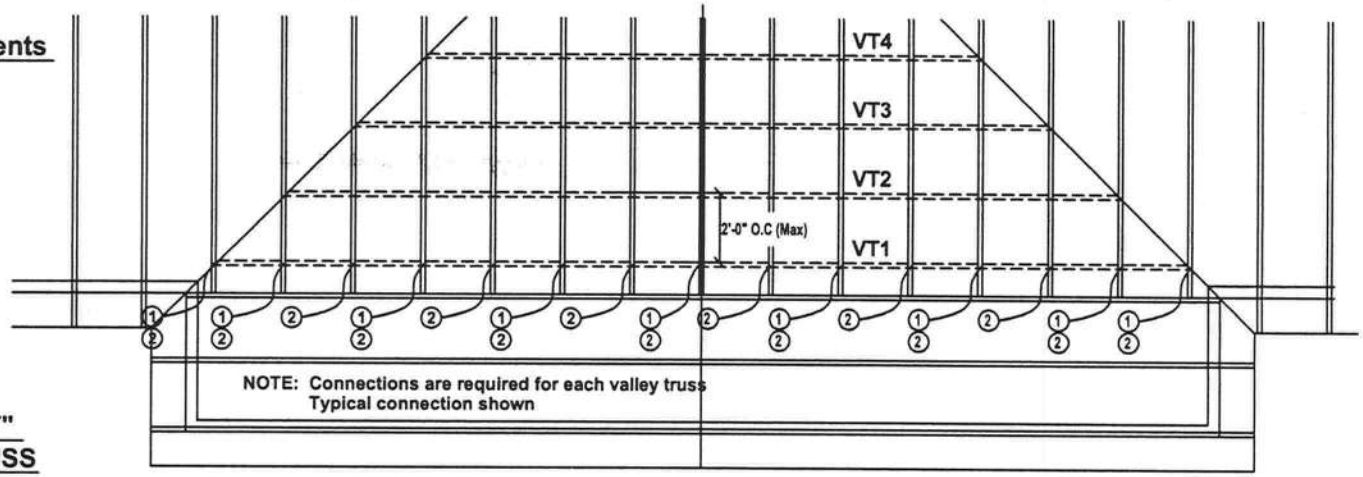

VALLEY ROOF PLAN

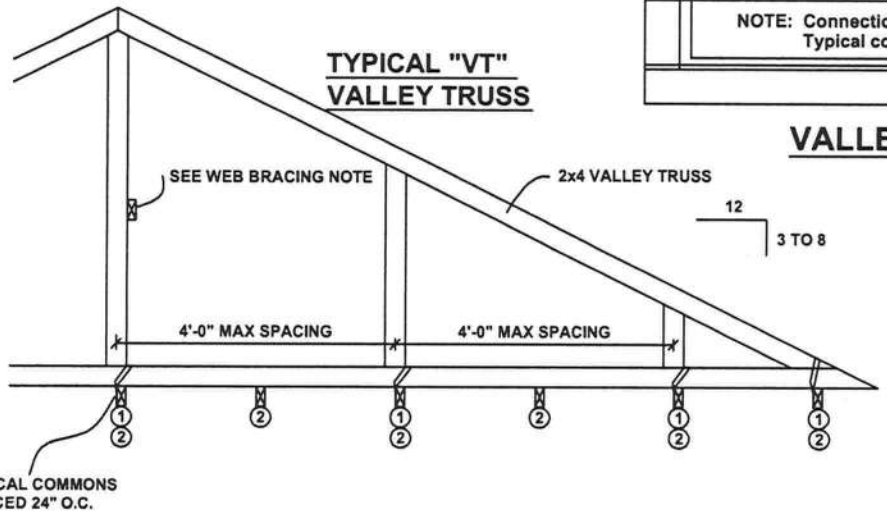

SECTION CUT PARALLEL TO VALLEY RAFTER

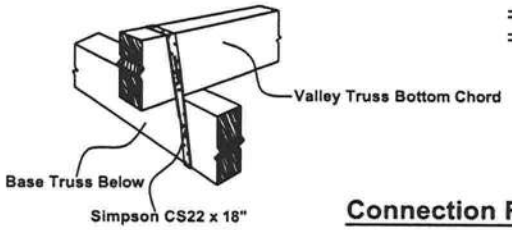

TRUSS UNDER VALLEY FRAMING
VALLEY TRUSS

Connection Requirement Notes*

1. Simpson CS22 X 18" [(7) 8d common wire nails to each member)] (Every intersection)
2. Truss to Truss connection [(2) 16d Common Wire Toe-nails] (Every intersection)

*Connections based on So. Pine lumber and 2x4 valley truss bottom chord and 2x4 lower truss top chord. For wider chord members, use longer strap and evenly space required nails throughout.

General Notes

rlins required 2'-0" O.C. in absence of roof sheathing.
lley truss bottom chords are considered purlins
en nailed according to purlin requirements.
e effects of not providing sheathing below a valley set
the membrane characteristics of the roof must be
aluated by the building designer.
is drawing applies to valleys with the following conditions:
Spans (distance between heels) 40'-0" or less
Maximum valley truss height (bottom chord to peak): 14'-0"
Maximum wind speed: 120 mph
Maximum mean roof height: 30 feet
Maximum total loading: 55 psf
Meets FBC 2004 code requirements
Exposure Category "B"
Enclosed Building

Web Bracing, & Blocking Notes

-1x4 continuous lateral brace (CLB) is required for webs 5'-0" to 10'-0" long nailed w/ 2 -10d nails. Or 1x4 "T" or scab brace nailed to flat edge of web with 8d nails at 8" o.c. "T" or scab must be 90% of cripple length. Webs over 12'-0" long requre two CLB's or both faces w/ "T" or scab. Use stress graded lumber & box or common nails.

-Apply all nailing in accordance to NDS-2001 section 11

Diagonal Bracing

Install diagonal bracing in accordance to the building designer's specifications. For further information, refer to "Design Responsibilities" section of ANSI/TPI 1-2002 and "Commentary for Permanent Bracing of Metal Plate Connected Wood Trusses," published by the Wood Truss Council of America.

See HIB-91 or ANSI/TPI-95 for more information regarding temporary and permanent bracing of wood trusses.

TRUSWAL SYSTEMS
Truswal Systems Corporation
1 N. Great S.W. Pkwy., Arlington, TX 76011
Florida Certificate of Authorization # 278

WARNING **Read all notes on this sheet and give a copy of it to the erecting contractor.**

This design is for an individual building component, not a truss system . It has been based on specifications provided by the component manufacturer and done in accordance with the current versions of TPI and AFPA design standards. No responsibility is assumed for dimensional accuracy. Dimensions are to be verified by the component manufacture and/ or building designer prior to fabrication. The building designer shall ascertain that the loads utilized on this design meet or exceed the loading imposed by the local building code and the particular application. It is assumed that the top chord is laterally braced by the roof or floor sheathing and the bottom chord is laterally braced by a rigid ceiling material directly attached, unless otherwise noted. Bracing shown is for lateral support of component members only to reduce buckling length. This component shall not be placed in any environment that will cause the moisture content of the wood to exceed 19% and / or cause connector plate corrosion. Fabricate, handle, install and brace this truss in accordance with the following standards: 'Joint and Cutting Reports' available as output from Truswal software, 'ANSI/TPI 1,' 'WTCA 1,' - Wood Truss Council of America Standard Design Responsibilities, 'BUILDING COMPONENT SAFETY INFORMATION'-(BCSI 1-03) AND 'BCSI SUMMARY SHEETS' by WTCA and TPI. The Truss Plate Institute (TPI) is located at 583 D'Onofrio Dr., Madison Wisconsin 53719. The American Forest and Paper Association (AFPA) is located at 1111 19th St., NW, Ste 800, Washington, DC 20036.

Revisions:
10/27/2005 - FBC 2004

Duration factor: 1.25
Repetitive member bending: 1.15
O.C. Spacing: 2-0-0
Max loading (PSF): TL-20 TD-25 BD-10
Design specs: FBC 2004, NDS 2001
ASCE 7-02, ANSI/TPI 1-2002

TOE-NAIL JACK ATTACHMENT DETAIL

DWG# TX05291001-002

Calculating Minimum Toe-Nail Requirements

. Find bearing reaction in upper left hand corner of sealed truss engineering. (Vertical)
  Find uplift reaction in upper right hand corner of sealed truss engineering. (Uplift)
. 10d commons divide reaction by 112 lb/nail (Vertical -1.25)
  10d commons divide reaction by 144 lb/nail (Uplift -1.60)
  16d commons divide reaction by 123 lb/nail (Vertical -1.25)
  16d commons divide reaction by 157 lb/nail (Uplift -1.60)
3. Always round up to the nearest whole number
  Example: Bearing 2 = 193 lb. divided by 112 lb./nail = 2 - 10d toe-nails.
  Bearing 2 = 126 lb. divided by 144 lb./nail = 2 - 10d toe-nails.

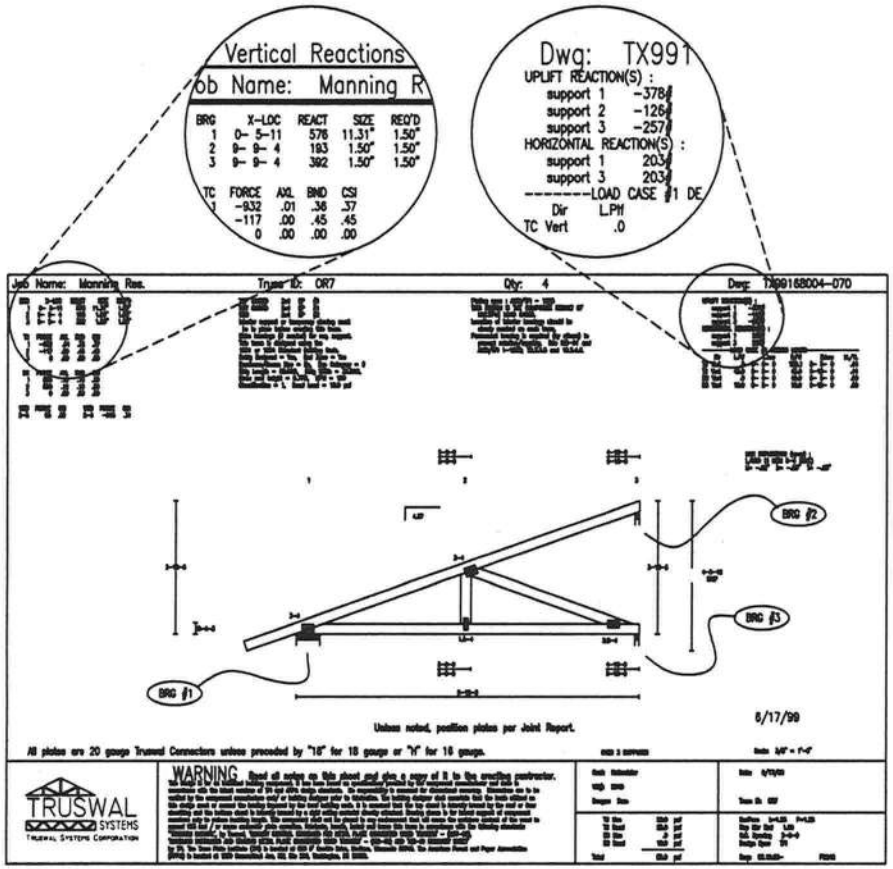

Toe-Nail - Plumb Cut

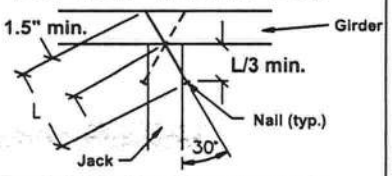

Toe-Nails shall be driven at an angle approximately 30° with the member and started approximately 1/3 the length of the nail from the member end. For plum cut chords, a maximum of (4) nails is allowed. If this is exceeded, use truss connector. Apply 2 toe-nails from each face.

Double Bevel Cut

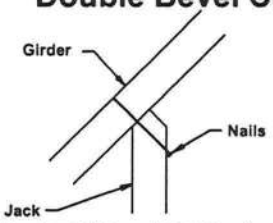

For Double Bevel Cut chords, a maximum of (3) nails is allowed. If this is exceeded use truss connector. Apply toe-nails all from one face. 1.5" minimum penetration of nails into girder required.

Single Bevel Cut

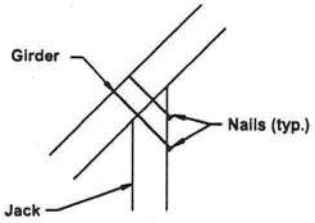

For Single Bevel Cut chords, a maximum of (4) nails is allowed. If this is exceeded, use truss connector.
Apply all toe-nails from one face.
If more than 2 nails are used apply nails in two rows evenly spaced.
1.5" minimum penetration of nails into girder required

Toe-Nail values are per NDS-2001 section 11
All nails are common wire nails or equivalent.

Toe-Nails shall be applied in a manner to avoid splitting of the wood. Minimum of (2) nails required at each connection.

Use truss connectors if maximum number of toe-nails will be exceeded.

This detail assumes minimum lumber size & grade 2x4 SP #2 Non Dense. Refer to engineered drawing for specific truss design and lumber size and grade. Connection for horizontal reactions are to be designed by others.

TRUSWAL SYSTEMS
Truswal Systems Corporation
01 N. Great S.W. Pkwy., Arlington, TX 76011
Florida Certificate of Authorization # 278

WARNING **Read all notes on this sheet and give a copy of it to the erecting contractor.**
This design is for an individual building component, not a truss system . It has been based on specifications provided by the component manufacturer and done in accordance with the current versions of TPI and AFPA design standards. No responsibility is assumed for dimensional accuracy. Dimensions are to be verified by the component manufacture and/ or building designer prior to fabrication. The building designer shall ascertain that the loads utilized on this design meet or exceed the loading imposed by the local building code and the particular application. It is assumed that the top chord is laterally braced by the roof or floor sheathing and the bottom chord is laterally braced by a rigid ceiling material directly attached, unless otherwise noted. Bracing shown is for lateral support of component members only to reduce buckling length. This component shall not be placed in any environment that will cause the moisture content of the wood to exceed 19% and / or cause connector plate corrosion. Fabricate, handle, install and brace this truss in accordance with the following standards: 'Joint and Cutting Reports' available as output from Truswal software, 'ANSI/TPI 1,' 'WTCA 1,' - Wood Truss Council of America Standard Design Responsibilities, 'BUILDING COMPONENT SAFETY INFORMATION'- (BCSI 1-03) AND 'BCSI SUMMARY SHEETS' by WTCA and TPI. The Truss Plate Institute (TPI) is located at 583 D'Onofrio Dr., Madison Wisconsin 53719. The American Forest and Paper Association (AFPA) is located at 1111 19th St., NW, Ste 800, Washington, DC 20036.

Revisions:
10/27/2005 -FBC 2004

Duration factor: 1.25
Repetitive member bending: 1.15
O.C. Spacing: 2-0-0
Design specs: FBC 2004, NDS 2001
ASCE 7-02, ANSI/TPI 1-2002

GABLE BRACING DETAIL (for 2 x 4 #2 Southern Pine Webs)

DWG# TX05291001-003

SECTION A
"T" BRACE DETAIL

SECTION A
"L" BRACE DETAIL
(Alternate)

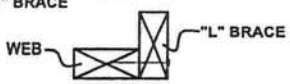

SECTION B

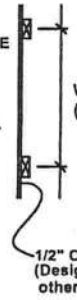

"T" or "L" bracing must be full web length.

Attach "T" or "L" bracing as shown in Section A (or A-Alt.). Use 10d nails or equal as follows:

4" O.C. for web length ≤ 6'-8"
3" O.C. for web length > 6'-8"

Diagonal Brace Detail

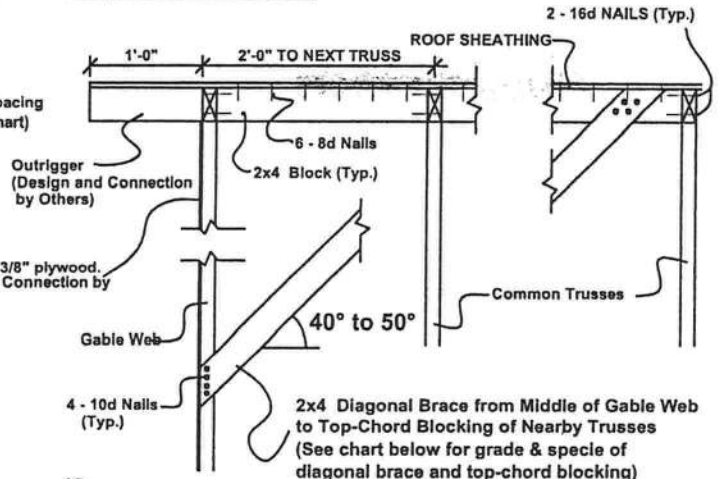

2x4 Diagonal Brace from Middle of Gable Web to Top-Chord Blocking of Nearby Trusses (See chart below for grade & specie of diagonal brace and top-chord blocking) When diag. brace exceeds 93", 2x4 scab (same grade as diagonal brace) applied to the wide face of diag. brace is required. Attach scab with 10d nails, @ 6" o.c., staggered. Scab brace to be a minimum of 90% of the diag. brace length.

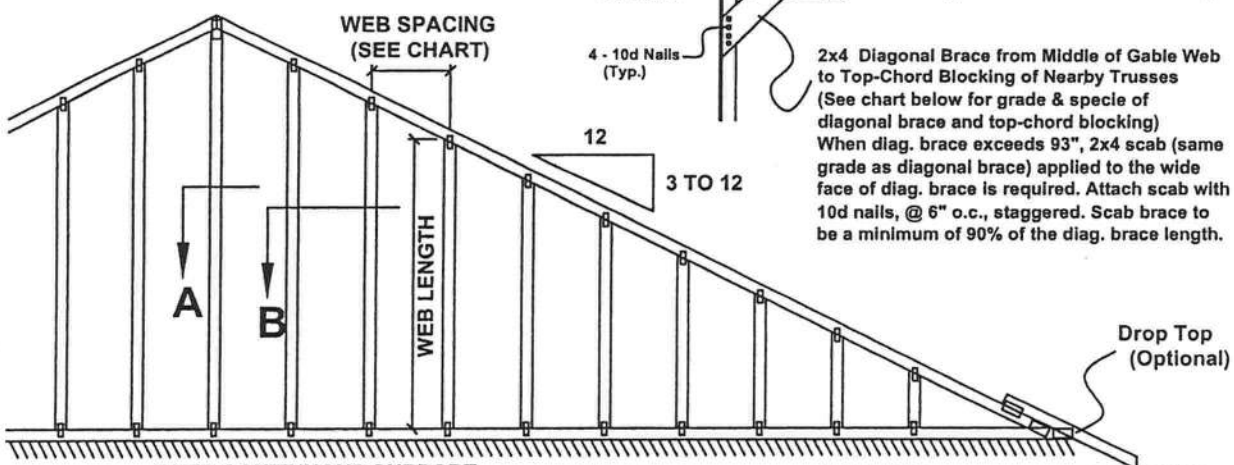

Notes:

Minimum Lumber Size and Grade:

Top Chord	See Engineered Truss Drawing
Bot. Chord	See Engineered Truss Drawing
Webs	2 x 4 #2 Southern Pine or better

Differential web spacing may be used on the same design to optimize bracing requirements.

Apply all nails in accordance to NDS-2001 section 11. All nails are common wire nails or equivalent.

Bracing (designed by others) is required at the truss bottom to resist horizontal forces from the wall. The determination of all lateral forces is beyond the scope of the component fabricator and is the building designer's responsibility.

This drawing applies to gables with the following conditions:
- -Maximum wind speed: 120 mph
- -Maximum mean roof height: 30 foot
- -Maximum total loading: 55 psf
- -Meets FBC 2004 code requirements
- -Exposure Category "B"
- -Enclosed Building
- -1.00 Importance factor
- -No diaphragm loads considered
- -Kzt: 1.00

Specie and Grade of Brace Material	OVER CONTINUOUS SUPPORT: MAXIMUM WEB LENGTH WITHOUT BRACING (SHEATHED) *		OPTION #1: MAXIMUM WEB LENGTH WITH 1x4 "L" BRACE (SHEATHED) *		OPTION #2: MAXIMUM WEB LENGTH WITH 2x4 "T" or "L" BRACE (SHEATHED) *		OPTION #3: MAXIMUM WEB LENGTH WITH 2X4 DIAG BRACE (SHEATHED) *	
WEB SPACING	16" O.C.	24" O.C.	16" O.C.	24" O.C.	16" O.C.	24" O.C.	16" O.C.	24" O.C.
#2 S. PINE or better	6' - 0"	5' - 3"	9' - 3"	7' - 9"	11' - 8"	9' - 6"	11' - 10"	10' - 6"
#2 SPF or better			7' - 2"	5' - 11"	9' - 2"	7' - 6"	11' - 10"	8' - 6"

* (sheathing plus vertical section [see section B detail] / vertical section only)

TRUSWAL SYSTEMS
Truswal Systems Corporation
1101 N. Great S.W. Pkwy., Arlington, TX 76011
Florida Certificate of Authorization # 278

WARNING **Read all notes on this sheet and give a copy of it to the erecting contractor.**
This design is for an individual building component, not a truss system. It has been based on specifications provided by the component manufacturer and done in accordance with the current versions of TPI and AFPA design standards. No responsibility is assumed for dimensional accuracy. Dimensions are to be verified by the component manufacture and/ or building designer prior to fabrication. The building designer shall ascertain that the loads utilized on this design meet or exceed the loading imposed by the local building code and the particular application. It is assumed that the top chord is laterally braced by the roof or floor sheathing and the bottom chord is laterally braced by a rigid ceiling material directly attached, unless otherwise noted. Bracing shown is for lateral support of component members only to reduce buckling length. This component shall not be placed in any environment that will cause the moisture content of the wood to exceed 19% and / or cause connector plate corrosion. Fabricate, handle, install and brace this truss in accordance with the following standards: 'Joint and Cutting Reports' available as output from Truswal software, 'ANSI/TPI 1,' 'WTCA 1,' - Wood Truss Council of America Standard Design Responsibilities, 'BUILDING COMPONENT SAFETY INFORMATION'- (BCSI 1-03) AND 'BCSI SUMMARY SHEETS' by WTCA and TPI. The Truss Plate Institute (TPI) is located at 583 D'Onofrio Dr., Madison Wisconsin 53719. The American Forest and Paper Association (AFPA) is located at 1111 19th St., NW, Ste 800, Washington, DC 20036.

Revisions:
10/27/2005 - FBC 2004

Duration factor: 1.25
O.C. Spacing: 2-0-0
Max loading (PSF): TL-20 TD-25 BD-10
Design specs: FBC-2004, NDS 2001
ASCE 7-02, ANSI/TPI 1-2002

VALLEY FRAMING & BRACING DETAIL

DWG# TX05291001-004

Lumber Size and Grade Minumum Requirements

Ridge board...	2x6 (min)#2 Southern Pine or better,
Rafter spans 20'-0" or less...	2x4 #2 Southern Pine or better
Purlins / Lateral bracing...	2x4 #2 Spf or better
Sleepers...	2x(width of rafter seat cut) #3 Spf or 2 parallel 2x4 #3 Spf
Cripples and blocking...	2x4 #3 Spf or better
Truss Below...	See design - Southern Pine material

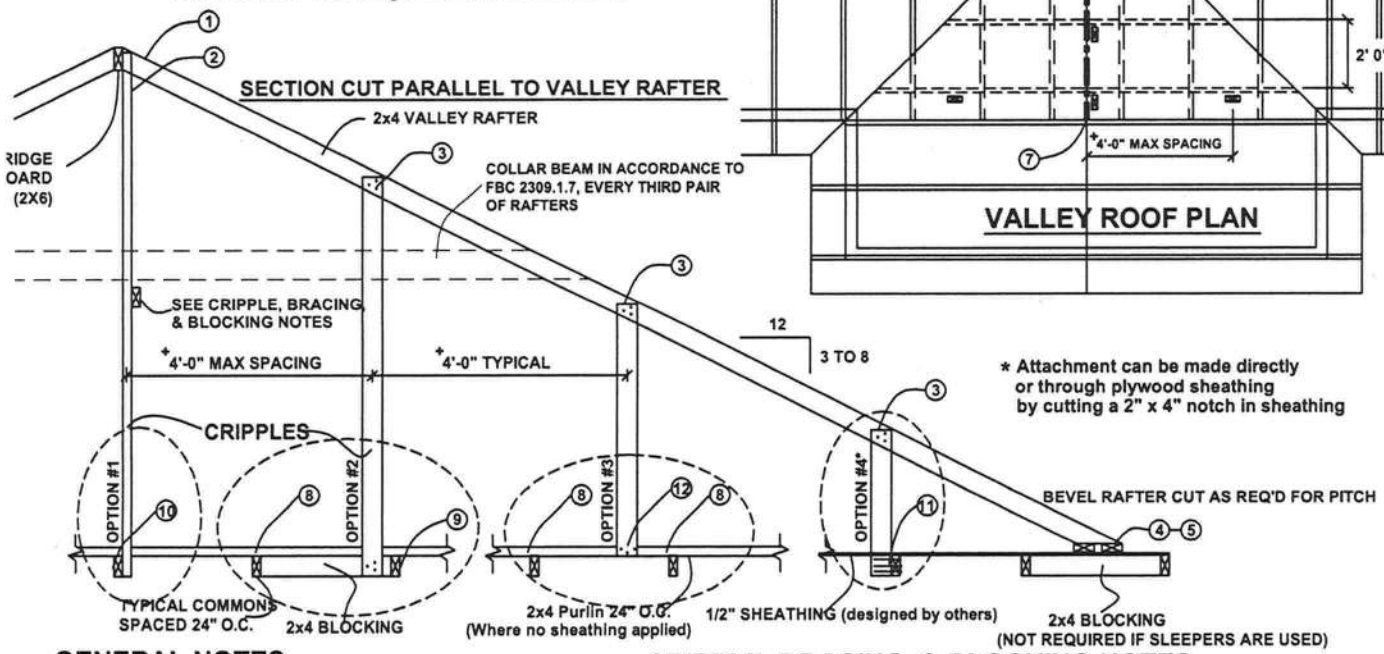

* Attachment can be made directly or through plywood sheathing by cutting a 2" x 4" notch in sheathing

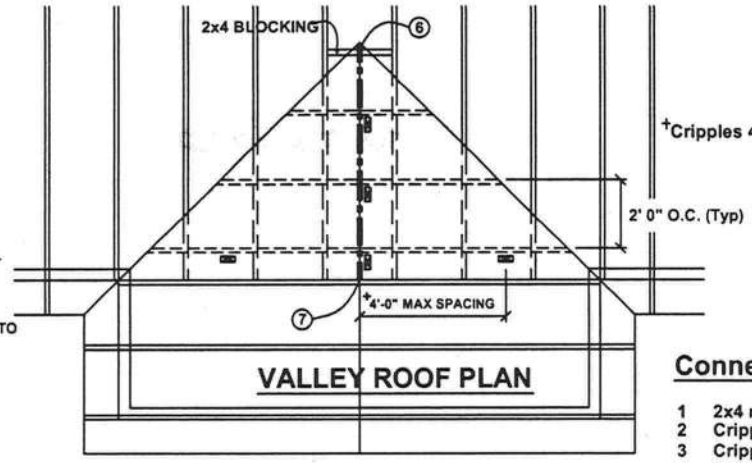

TRUSS
TRUSS UNDER VALLEY FRAMING
VALLEY RAFTER OR RIDGE
+CRIPPLE

+Cripples 4'-0" o.c. for 20 psf (TL) and 10 psf (TD) (typ. shingle roof) MAX

Connection Requirement Notes

1	2x4 rafters to ridge	3 16d toe-nails
2	Cripple to ridge	3 16d face nails
3	Cripple to rafter	3 16d face nails
4	Rafter to sleeper or blocking	5 16d toe-nails
	Rafter to two 2x4 sleepers	3 16d toe-nails each sleeper
5	Sleeper to truss	3 16d face nails each truss
	Two 2x4 sleepers to truss	2 16d face nails each sleeper & truss
6	Ridge board to roof block	3 16d toe-nails
7	Ridge board to truss	3 16d toe-nails
8	Purlin to truss (Typ)	3 16d nails
	Purlin to truss (If cripple is attached to purlin)	3 16d nails
9	Truss to blocking	3 16d end nails
10	Truss to cripple	3 16d face nails
11	Truss to cripple	3 16d face nails
12	Cripple to purlin	3 16d face nails

GENERAL NOTES

Purlins required 2'-0" O.C. in absence of plywood sheathing. Trusses without sheathing applied must be evaluated accordingly.
Purlins should overlap sheathing one truss spacing minimum. In cases that this is impractical, overlap sheathing a minimum of 6", and nail upwards through sheathing into purlin with a minimum of 8-8d common wire nails.
The effects of not providing sheathing below a valley set on the membrane characteristics of the roof must be evaluated by the building designer.
This drawing applies to valleys with the following conditions:
- -Spans (distance between heels) 40'-0" or less
- -Maximum valley height: 14'-0"
- -Maximum wind speed: 120 mph
- -Maximum mean roof height: 30 feet
- -Maximum total loading: 40 psf
- -Meets FBC 2004/ASCE 7-2002 wind requirements
- -Exposure Category "B", I=1.0, Kzt=1.0
- -Enclosed Building

CRIPPLE, BRACING, & BLOCKING NOTES

- -1x4 continuous lateral brace (CLB) min. is required for cripples 5'-0" to 10'-0" long nailed w/ 2 -10d nails. Or 1x4 "T" or scab brace nailed to flat edge of cripple with 8D nails at 8" o.c. "T" or scab must be 90% of cripple length. Cripples over 10'-0" long requre two CLB's or both faces w/ "T" or scab. Use stress graded lumber & box or common nails.
- -Narrow edge of cripple can face ridge or rafter, as long as the proper number of nails are installed into ridge board
- -Install blocking under rafter if sleepers are not used.
- -Install blocking under cripples if cripples fall between lower truss top chords and lateral bracing is not used.
- -Apply all nailing in accordance to NDS-2001 section 11. Nails are common wire nails unless noted otherwise.

TRUSWAL SYSTEMS
Truswal Systems Corporation
1101 N. Great S.W. Pkwy., Arlington, TX 76011
Florida Certificate of Authorization # 278

WARNING **Read all notes on this sheet and give a copy of it to the erecting contractor.**
This design is for an individual building component, not a truss system . It has been based on specifications provided by the component manufacturer and done in accordance with the current versions of TPI and AFPA design standards. No responsibility is assumed for dimensional accuracy. Dimensions are to be verified by the component manufacture and/ or building designer prior to fabrication. The building designer shall ascertain that the loads utilized on this design meet or exceed the loading imposed by the local building code and the particular application. It is assumed that the top chord is laterally braced by the roof or floor sheathing and the bottom chord is laterally braced by a rigid ceiling material directly attached, unless otherwise noted. Bracing shown is for lateral support of component members only to reduce buckling length. This component shall not be placed in any environment that will cause the moisture content of the wood to exceed 19% and / or cause connector plate corrosion. Fabricate, handle, install and brace this truss in accordance with the following standards: 'Joint and Cutting Reports' available as output from Truswal software, 'ANSI/TPI 1,' 'WTCA 1,' - Wood Truss Council of America Standard Design Responsibilities, 'BUILDING COMPONENT SAFETY INFORMATION'- (BCSI 1-03) AND 'BCSI SUMMARY SHEETS' by WTCA and TPI. The Truss Plate Institute (TPI) is located at 583 D'Onofrio Dr., Madison Wisconsin 53719. The American Forest and Paper Association (AFPA) is located at 1111 19th St., NW, Ste 800, Washington, DC 20036.

Revisions:
11/21/02 Collar beam added
10/27/2005- FBC 2004

Duration factor: 1.25
O.C. Spacing: 2-0-0
Max loading (psf): TL-20 TD-10 BD-10
Design specs: FBC 2004, NDS 2001
ASCE 7-02, ANSI/TPI 1-2002

PIGGYBACK CONNECTION DETAIL

DWG # TX05291001-007

Connection Notes

Attach piggyback to structural truss as described below:

A) Use 2x4 scabs nailed to each face of structural/piggyback truss assembly. Attach using "N" number of 10d common nails or equivalent. Number of nails, "N," and length of scabs,"X," are indicated in table below. Scabs are required on the left and right heels. Center scabs about joints.

B) Attach bottom chord of each piggyback truss to each continuous lateral brace (purlin) using (2) 16d common wire toe-nails or equivalent. See Toe-nail detail.

Scab Length Table

"L"	"X"	"N"
8-0-0	12"	2 nails
12-0-0	12"	3 nails
20-0-0	18"	4 nails
28-0-0	20"	5 nails
36-0-0	24"	6 nails

"L" = Maximum Flat Top Length

"X" = Minimum Scab Length

"N" = Number of nails each side of joint in each block

Scab Connection Detail

See table for scab lengths and number of nails required (Scab is #3 s. pine or better)

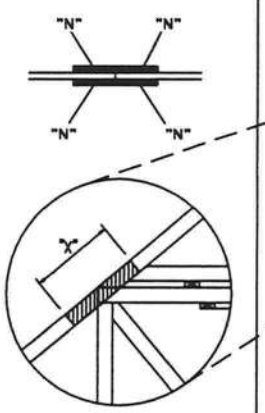

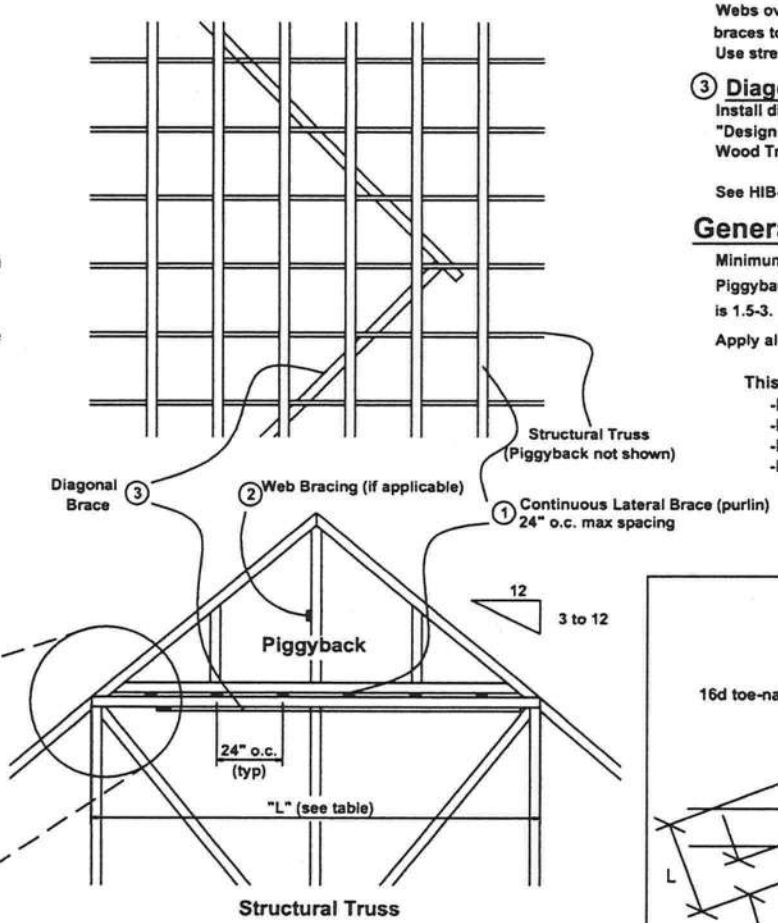

Bracing Notes

1 Continuous Lateral Chord Bracing

Install 2x4 S. Pine continuous lateral bracing at 24" o.c. maximum spacing to flat top chord of structural truss. Attach with (2) 10d common wire nails or equivalent. Structural truss must be designed with purlins spaced 24" O.C. in flat top chord area.

2 Web Bracing

Webs over 5-0-0 long require bracing. Use 1x4 continuous lateral brace (CLB) nailed w/2-10d nails, or 1x4 "T" brace nailed to flat edge of web w/8d nails at 8" o.c., or scab (same size and grade as web) nailed to face of web with 10d nails at 8" o.c., "T" or scab brace must be 90% of web length.
Webs over 10-0-0 long require two CLB's or "T" or scab braces. Attach "T" braces to both edges of web or scab braces to both faces of web.
Use stress graded lumber for CLB, "T", or scab braces. Nails are box or common wire nails.

3 Diagonal Bracing

Install diagonal bracing in accordance to the building designer's specifications. For further information, refer to "Design Responsibilities" section of ANSI/TPI 1-2002 and "Commentary for Permanent Bracing of Metal Plate Connected Wood Trusses," published by the Wood Truss Council of America.

See HIB-91 or ANSI/TPI-95 for more information regarding temporary and permanent bracing of wood trusses.

General Notes

Minimum grade for piggyback is #2 S. Pine for chords and #3 S. Pine for webs.

Piggyback truss require vertical web members at 72" o.c. in addition to king post. Minimum plate size for vertical webs is 1.5-3. Use 3.5-4 plates at peak and 3-4 plates at heels and splices. Maximum piggyback span 36-0-0.

Apply all nails in accordance to NDS-2001 section 11.

This detail is valid under the following conditions:

- -FBC 2004 code requirements
- -Maximum wind speed: 120 mph
- -Maximum mean roof height: 30 ft.
- -Maximum total loading: 55 psf
- -Enclosed Building
- -Exposure Category "B"
- -1.00 Importance factor
- -No diaphagm loads considered

Toe-nail Detail

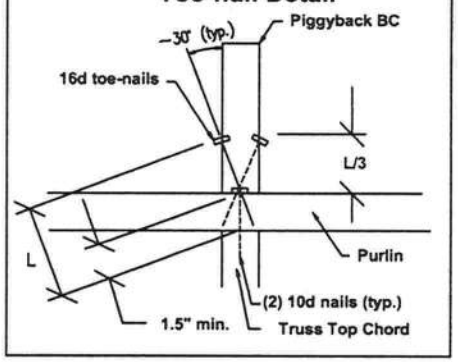

TRUSWAL SYSTEMS

Truswal Systems Corporation

1101 N. Great S.W. Pkwy., Arlington, TX 76011
Florida Certificate of Authorization # 278

WARNING **Read all notes on this sheet and give a copy of it to the erecting contractor.**

This design is for an individual building component, not a truss system . It has been based on specifications provided by the component manufacturer and done in accordance with the current versions of TPI and AFPA design standards. No responsibility is assumed for dimensional accuracy. Dimensions are to be verified by the component manufacture and/ or building designer prior to fabrication. The building designer shall ascertain that the loads utilized on this design meet or exceed the loading imposed by the local building code and the particular application. It is assumed that the top chord is laterally braced by the roof or floor sheathing and the bottom chord is laterally braced by a rigid ceiling material directly attached, unless otherwise noted. Bracing shown is for lateral support of component members only to reduce buckling length. This component shall not be placed in any environment that will cause the moisture content of the wood to exceed 19% and / or cause connector plate corrosion. Fabricate, handle, install and brace this truss in accordance with the following standards: 'Joint and Cutting Reports' available as output from Truswal software, 'ANSI/TPI 1,' 'WTCA 1,' - Wood Truss Council of America Standard Design Responsibilities, 'BUILDING COMPONENT SAFETY INFORMATION'- (BCSI 1-03) AND 'BCSI SUMMARY SHEETS' by WTCA and TPI. The Truss Plate Institute (TPI) is located at 583 D'Onofrio Dr., Madison Wisconsin 53719. The American Forest and Paper Association (AFPA) is located at 1111 19th St., NW, Ste 800, Washington, DC 20036.

Revisions:

10/27/2005 - FBC 2004

Duration factor: 1.25
Repetitive member bending: 1.15
O.C. Spacing: 2-0-0
Max loading (PSF): TL-20 TD-25 BD-10
Design specs: FBC-2004, NDS 2001
ASCE 7-02, ANSI/TPI 1-2002

VALLEY TRUSS TO BASE TRUSS CONNECTION DETAIL

DWG# TX05291001-008

Lumber Size and Grade Minumum Requirements

See truss engineering for lumber specs

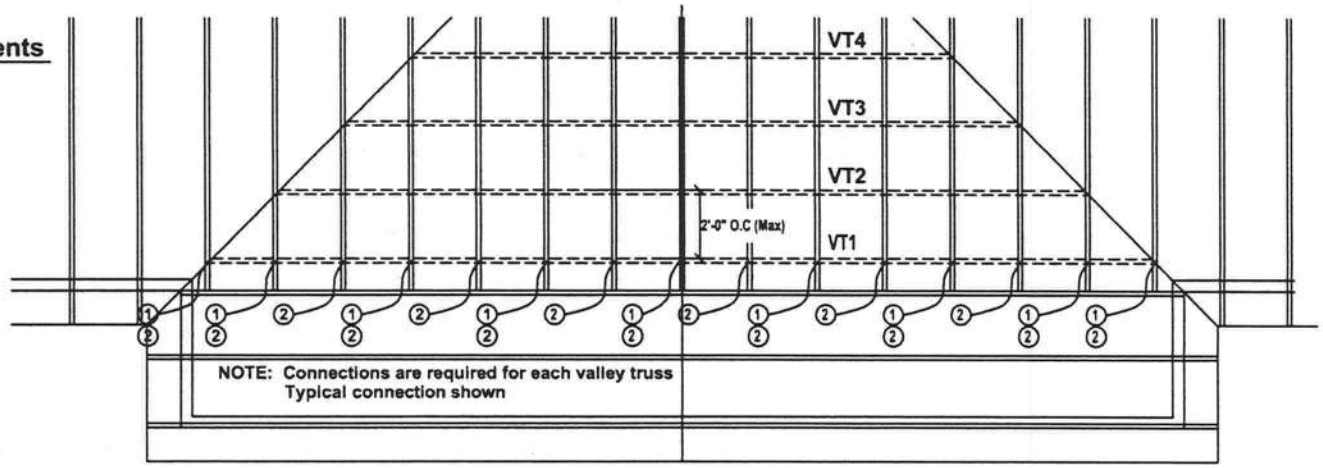

VALLEY ROOF PLAN

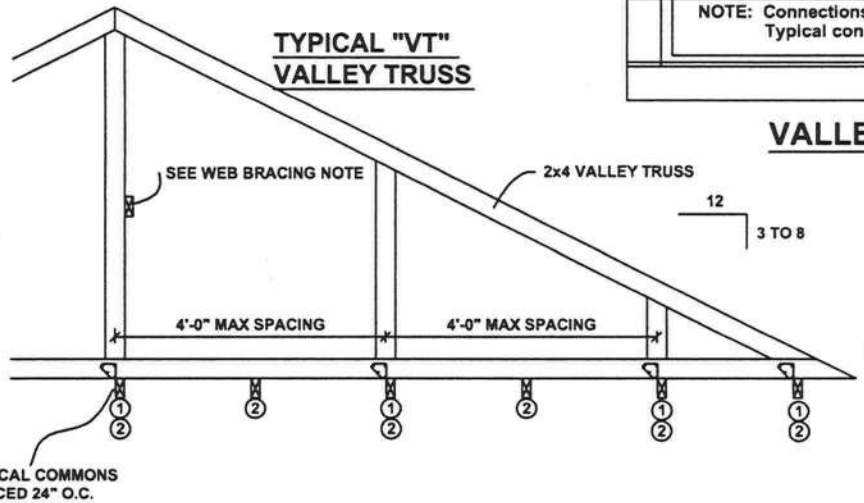

SECTION CUT PARALLEL TO VALLEY RAFTER

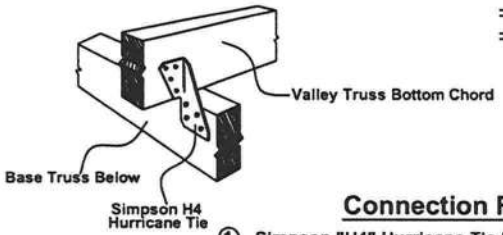

═══ TRUSS UNDER VALLEY FRAMING
====== VALLEY TRUSS

Connection Requirement Notes*

① Simpson "H4" Hurricane Tie [(4) 8d Common Wire Nails to each member]

② Truss to Truss connection [(2) 16d Common Wire Toe-nails] (Every intersection)

*Connections based on So. Pine lumber and 2x4 valley truss bottom chord and 2x4 lower truss top chord.

General Notes

Purlins required 2'-0" O.C. in absence of roof sheathing.
Valley truss bottom chords are considered purlins when nailed according to purlin requirements.
The effects of not providing sheathing below a valley set on the membrane characteristics of the roof must be evaluated by the building designer.
This drawing applies to valleys with the following conditions:
- -Spans (distance between heels) 40'-0" or less
- -Maximum valley truss height (bottom chord to peak): 14'-0"
- -Maximum wind speed: 120 mph
- -Maximum mean roof height: 30 feet
- -Maximum total loading: 55 psf
- -Meets FBC 2004 code requirements
- -Exposure Category "B"
- -Enclosed Building

Web Bracing, & Blocking Notes

-1x4 continuous lateral brace (CLB) is required for webs 5'-0" to 10'-0" long nailed w/ 2 -10d nails. Or 1x4 "T" or scab brace nailed to flat edge of web with 8d nails at 8" o.c. "T" or scab must be 90% of cripple length. Webs over 12'-0" long requre two CLB's or both faces w/ "T" or scab. Use stress graded lumber & box or common nails.

-Apply all nailing in accordance to NDS-2001 section 11

Diagonal Bracing

Install diagonal bracing in accordance to the building designer's specifications. For further information, refer to "Design Responsibilities" section of ANSI/TPI 1-02 and "Commentary for Permanent Bracing of Metal Plate Connected Wood Trusses," published by the Wood Truss Council of America.

See BCSI 1-03 or ANSI/TPI 1-02 for more information regarding temporary and permanent bracing of wood trusses.

TRUSWAL SYSTEMS
Truswal Systems Corporation
1101 N. Great S.W. Pkwy., Arlington, TX 76011
Florida Certificate of Authorization # 278

WARNING **Read all notes on this sheet and give a copy of it to the erecting contractor.**
This design is for an individual building component, not a truss system . It has been based on specifications provided by the component manufacturer and done in accordance with the current versions of TPI and AFPA design standards. No responsibility is assumed for dimensional accuracy. Dimensions are to be verified by the component manufacture and/ or building designer prior to fabrication. The building designer shall ascertain that the loads utilized on this design meet or exceed the loading imposed by the local building code and the particular application. It is assumed that the top chord is laterally braced by the roof or floor sheathing and the bottom chord is laterally braced by a rigid ceiling material directly attached, unless otherwise noted. Bracing shown is for lateral support of component members only to reduce buckling length. This component shall not be placed in any environment that will cause the moisture content of the wood to exceed 19% and / or cause connector plate corrosion. Fabricate, handle, install and brace this truss in accordance with the following standards: 'Joint and Cutting Reports' available as output from Truswal software, 'ANSI/TPI 1,' 'WTCA 1,' - Wood Truss Council of America Standard Design Responsibilities, 'BUILDING COMPONENT SAFETY INFORMATION'- (BCSI 1-03) AND 'BCSI SUMMARY SHEETS' by WTCA and TPI. The Truss Plate Institute (TPI) is located at 583 D'Onofrio Dr., Madison Wisconsin 53719. The American Forest and Paper Association (AFPA) is located at 1111 19th St., NW, Ste 800, Washington, DC 20036.

Revisions:
10/27/2005 - FBC 2004

Duration factor: 1.25
Repetitive member bending: 1.15
O.C. Spacing: 2-0-0
Max loading (PSF): TL-20 TD-25 BD-10
Design specs: FBC 2004, NDS 2001
ASCE 7-02, ANSI/TPI 1-2002

STRONGBACK BRIDGING AND BRACING REQUIREMENTS

DWG # TX02281015-001

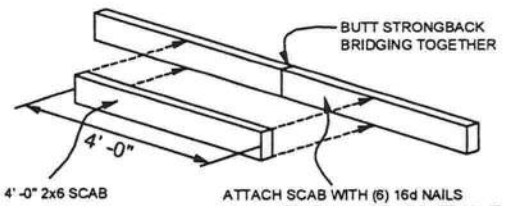

NOTE: IN LIEU OF SPLICING AS SHOWN, LAP STRONGBACK BRIDGING MEMBERS FOR AT LEAST ONE TRUSS SPACING

STRONGBACK BRIDGING SPLICE DETAIL

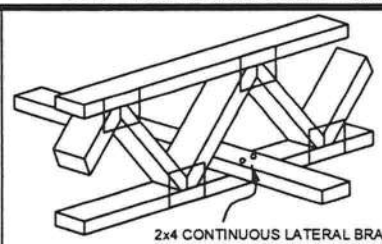

NOTE: Lateral bracing may be omitted if a rigid ceiling material is directly attached to the bottom chord .

LATERAL BRACING DETAIL

NOTE: Top two attachment alternatives are the preferred methods

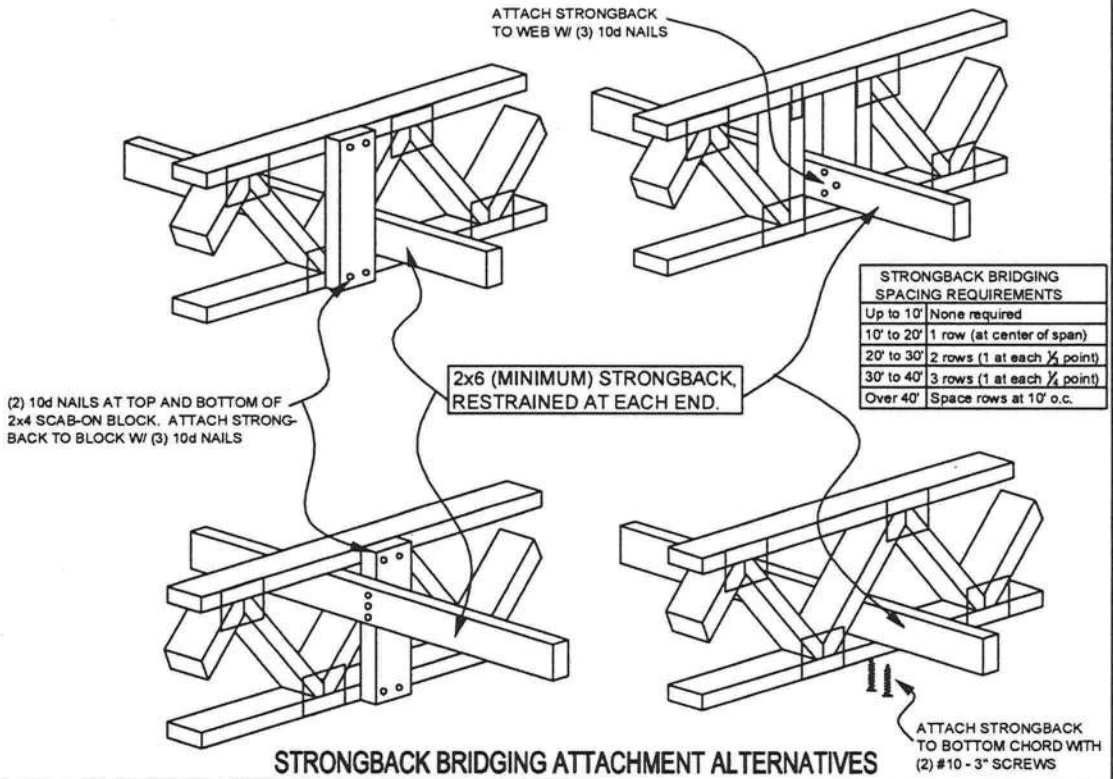

STRONGBACK BRIDGING SPACING REQUIREMENTS	
Up to 10'	None required
10' to 20'	1 row (at center of span)
20' to 30'	2 rows (1 at each ⅓ point)
30' to 40'	3 rows (1 at each ¼ point)
Over 40'	Space rows at 10' o.c.

STRONGBACK BRIDGING ATTACHMENT ALTERNATIVES

- All bracing and strongback bridging material to be grade marked lumber.
- The purpose of strongback bridging is to develop load sharing between individual trusses, resulting in an overall increase in the stiffness of the floor system. 2x6 strongback bridging, positioned as shown in details, is required at 10' -0" o.c.
- The purpose of lateral bracing is to provide lateral stability of the member. 2x4 continuous lateral bracing is required at intervals not to exceed 10' -0" o.c. NOTE: when positioned at the upper side of the bottom chord, strongback bridging also satisfies the lateral bracing requirements for the bottom chord of the truss.

The terms "bridging" and "bracing" are sometimes mistakenly used interchangeably. "Bracing" is an important structural requirement of any floor or roof system. "Bridging," particularly "strongback bridging" is a requirement to a truss system to help control vibration. In addition to aiding in the distribution of point loads between adjacent truss, strongback bridging serves to reduce "bounce" or residual vibration resulting from moving point loads, such as footsteps.

In addition to safely supporting the load to be imposed upon it, a floor system should perform to the satisfaction of the owner. Since expectancy levels vary from one occupant to another, designing a floor system becomes a subjective issue requiring judgment as to the sensitivity of the occupant. For example, a floor system that is entirely satisfactory for one user may be unacceptable for another. The performance of all floor systems are enhanced by the installation of strongback bridging, and therefore is required by Truswal Systems Corporation.

For additional information regarding bracing, see *Bracing Wood Trusses: Commentary & Recommendations for Handling, Installing and Bracing Metal Plate Connected Wood Trusses* (HIB-91).

TRUSWAL SYSTEMS
Truswal Systems Corporation
1101 N. Great S.W. Pkwy., Arlington, TX 76011

WARNING Read all notes on this sheet and give a copy of it to the erecting contractor.
This design is for an individual building component, not a truss system . It has been based on specifications provided by the component manufacturer and done in accordance with the latest versions of TPI and AFPA design standards. No responsibility is assumed for dimensional accuracy. Dimensions are to be verified by the component manufacture and/ or building designer prior to fabrication. The building designer shall ascertain that the loads utilized on this design meet or exceed the loading imposed by the local building code and the particular application. It is assumed that the top chord is laterally braced by the roof or floor sheathing and the bottom chord is laterally braced by a rigid ceiling material directly attached, unless otherwise noted. Bracing shown is for lateral support of component members only to reduce buckling length. This component shall not be placed in any environment that will cause the moisture content of the wood to exceed 19% and / or cause connector plate corrosion. Fabricate, handle, install and brace this truss in accordance with the following standards: 'Joint and Cutting Reports' available as output from Truswal software, 'ANSI/TPI 1,' 'WTCA 1,' - Wood Truss Council of America Standard Design Responsibilities, 'HANDLING INSTALLING AND BRACING METAL PLATE CONNECTED WOOD TRUSSES' - (HIB-91) AND 'HIB-91 SUMMARY SHEET' by TPI. The Truss Plate Institute (TPI) is located at 583 D'Onofrio Dr., Madison, WI 53719. The American Forest and Paper Association (AFPA) is located at 1111 19th St., NW, Ste 800, Washington, DC 20036.

Revisions:

Duration factor: 1.00

O.C. Spacing:
Max loading (PSF):
Design specs: IBC/IRC, UBC, NDS 97, TPI 95

The truss layout is only a placement guide. Superintendent or framer must refer to the truss engineering for all quantities,plies, spacing, and spans.

*=Load Bearing

WallHeights:

Sheathing:

El cabreada diseno es solamente un sitio de guie. El Superintendente o carpintero debe referirse hacia el cabreada ingenieria para todas las cantidades, hacer el servicio entre el espacio y envergadura.

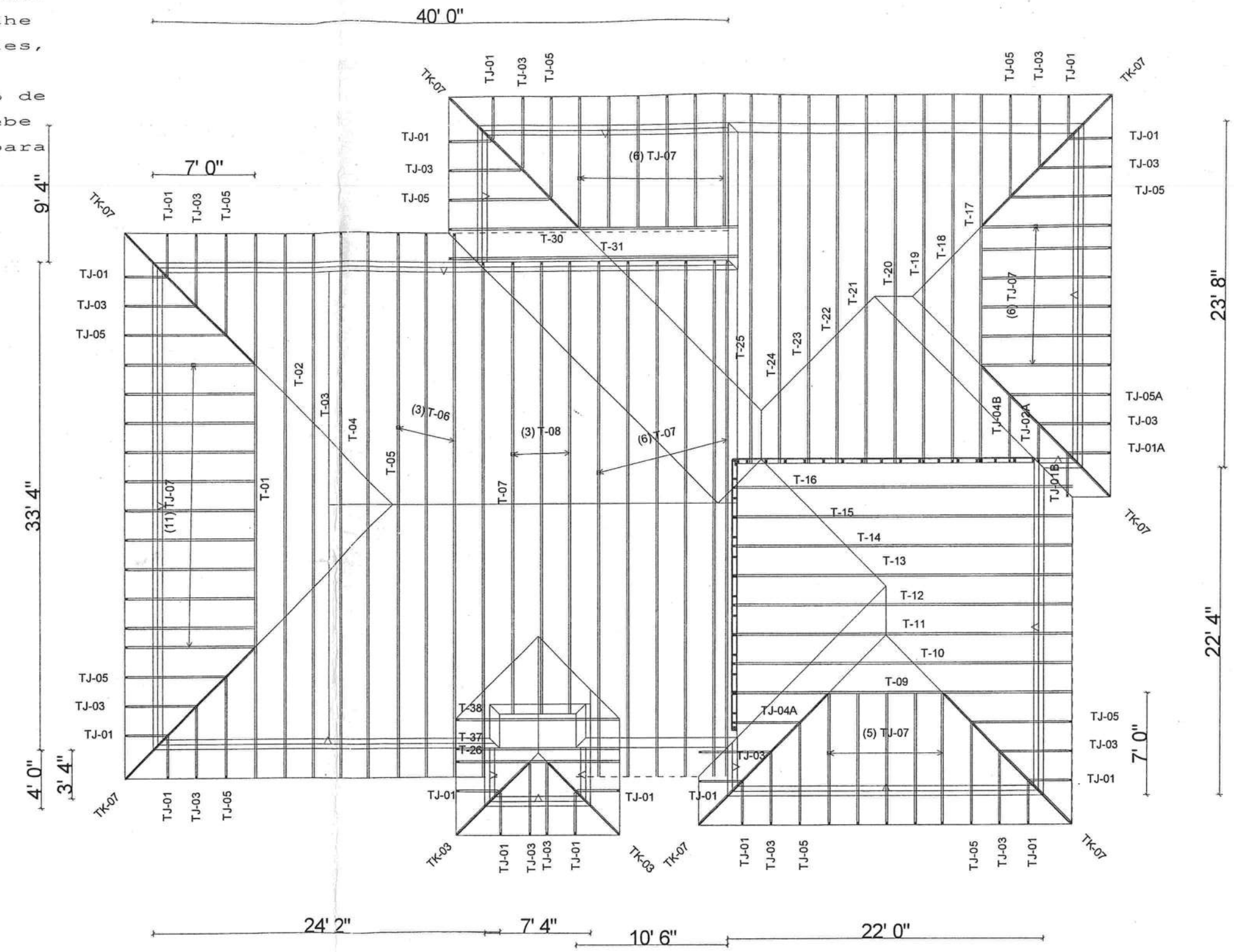

Standard Truss & Roof Supply, Inc. 608 N. 12th Street Haines City, FL. 33844 Ph. (863)422-5964 Fax (863)421-2201	ACE CONST. BEN ATKINS	SALES REP: ABCD DUE DATE: 03/22/2007 DSGNR/CHKR: ABCD / ABCD
		TC Live 20.00 psf TC Dead 7.00 psf BC Live 0.00 psf BC Dead 10.00 psf Total 37.00 psf
		WO#: JR60-07 SCALE: 1/8" = 1' Date: 3/27/2007 14:52
		DurFac-Lbr : 1.25 DurFac-Plt : 1.25 O.C. Spacing: 24.0 Design Spec: FBC2004R #Tr/#Cfg: 125 / 42

13032

Notice of Treatment

Applicator: Florida Pest Control & Chemical Co. (www.flapest .com)
Address: 536 SE Baya Dr
City Lake City Phone 752-1703

Site Location: Subdivision
Lot # Block# Permit # 25911
Address 1299 SW Nixson

Product used	Active Ingredient	% Concentration
☒ Premise	Imidacloprid	0.1%
☐ Termidor	Fipronil	0.12%
☐ Bora-Care	Disodium Octaborate Tetrahydrate	23.0%

Type treatment: ☒ Soil ☐ Wood

Area Treated	Square feet	Linear feet	Gallons Applied
MB, FP, BP, Grg	2607		250

As per Florida Building Code 104.2.6 – If soil chemical barrier method for termite prevention is used, final exterior treatment shall be completed prior to final building approval.

If this notice is for the final exterior treatment, initial this line _____.

4/17/08	11:40	Guy Harrington
Date	Time	Print Technician's Name

Remarks:

Applicator - White Permit File - Canary Permit Holder - Pink

10/05 ©