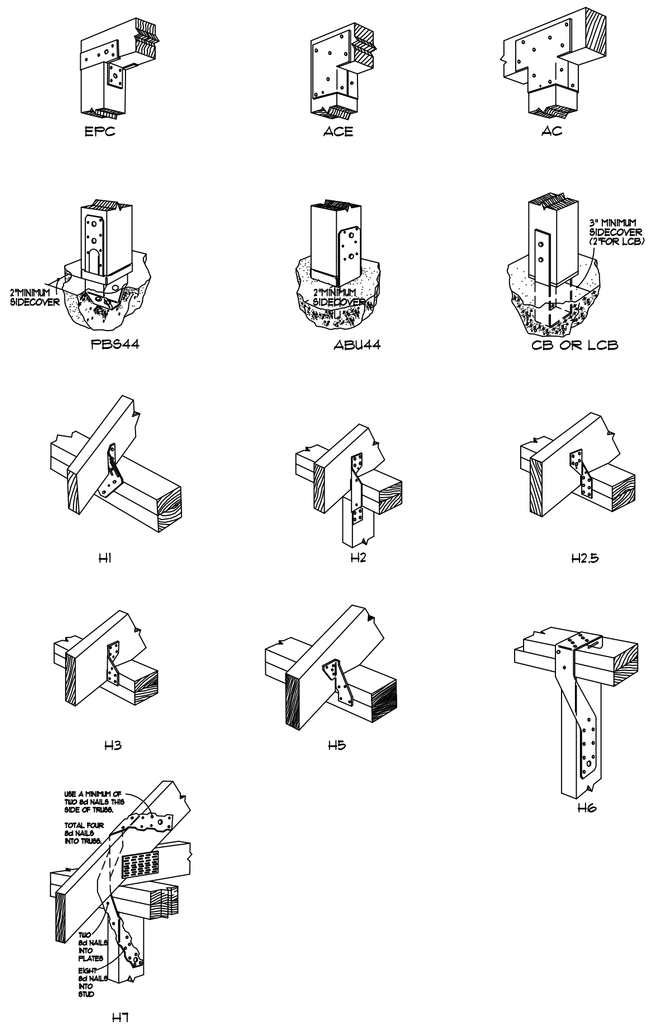

Typical "Simpson" CONNECTORS

SCALE: NONE

A

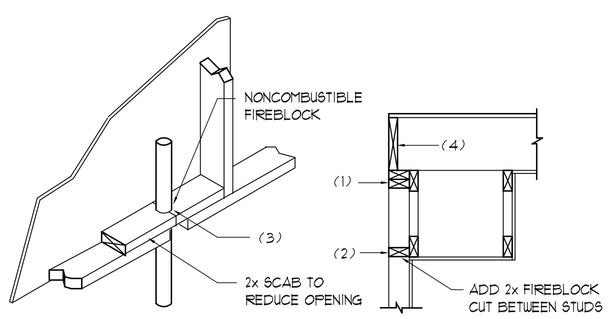

PENETRATIONS

SOFFIT/DROPPED CLG.

FIREBLOCKING NOTES:

FIREBLOCKING SHALL BE INSTALLED IN WOOD FRAME CONSTRUCTION IN THE FOLLOWING LOCATIONS:

1. IN CONCEALED SPACES OF STUD WALLS AND PARTITIONS INCLUDING FURRED SPACES AT CEILING AND FLOOR LEVELS.
2. AT ALL INTERCONNECTIONS BETWEEN CONCEALED VERTICAL AND HORIZONTAL SPACES SUCH AS OCCUR AT SOFFITS, DROP CEILINGS, COVE CEILINGS, ETC.
3. AT OPENINGS AROUND VENTS, PIPES, DUCTS, CHIMNEYS AND FIREPLACES AT CEILING AND FLOOR LEVELS WITH "PYROPANEL MULTIFLEX SEALANT"
4. AT ALL INTERCONNECTIONS BETWEEN CONCEALED VERTICAL STUD WALL OR PARTITION SPACES AND CONCEALED SPACES CREATED BY AN ASSEMBLY OF FLOOR JOISTS, FIREBLOCKING SHALL BE PROVIDED FOR THE FULL DEPTH OF THE JOISTS AT THE ENDS AND OVER THE SUPPORTS.

Fire Stopping DETAILS

SCALE: NONE

B

GENERAL NOTES:

1. THE CONTRACTOR SHALL INDEMNIFY THE OWNER AGAINST ALL CLAIMS, WHETHER FROM PERSONAL INJURY OR PROPERTY DAMAGE, ARISING FROM EVENTS ASSOCIATED WITH THE WORK PERFORMED UNDER THE CONTRACT FOR THIS PROJECT.
2. THE CONTRACTOR AND/OR SUB-CONTRACTORS SHALL WARRANT ALL WORK FOR A PERIOD OF ONE YEAR FOLLOWING THE DATE OF FINAL COMPLETION AND ACCEPTANCE BY THE OWNER. DEFECTS IN MATERIALS, EQUIPMENT, COMPONENTS AND WORKMANSHIP SHALL BE CORRECTED AT NO FURTHER COST TO THE OWNER DURING THE ONE YEAR WARRANTY PERIOD.
3. AT THE OWNER'S OPTION, A WARRANTY INSPECTION SHALL BE PERFORMED DURING THE ELEVENTH MONTH FOLLOWING THE COMMENCEMENT OF THE WARRANTY PERIOD, FOR THE PURPOSE OF DETERMINING ANY WARRANTY WORK THAT MAY BE REQUIRED. THE CONTRACTOR SHALL BE PRESENT DURING THIS INSPECTION IF REQUESTED BY THE OWNER.
4. THE CONTRACTOR SHALL PAY FOR ALL PERMITS, LICENSES, TESTS AND THE LIKE THAT MAY BE REQUIRED BY THE VARIOUS AUTHORITIES HAVING JURISDICTION OVER THIS PROJECT BE THEY CITY, COUNTY, STATE OR FEDERAL.
5. THE OWNER SHALL FILE A "NOTICE OF COMMENCEMENT" PRIOR TO THE BEGINNING THE THE PROJECT AND THE CONTRACTOR(S) SHALL FILE "NOTICE TO OWNER" AND PROVIDE "RELEASE OF LIEN" FOR ALL PAYMENT REQUESTS PRIOR TO DISBURSEMENT OF ANY FUNDS.
6. ANY AND ALL DISPUTES ARISING FROM EVENTS ASSOCIATED WITH THE CONSTRUCTION OF THIS PROJECT BETWEEN THE OWNER, CONTRACTOR(S) AND SUPPLIERS SHALL BE RESOLVED THROUGH BINDING ARBITRATION.
7. ALL WORK SHALL BE IN ACCORDANCE W/ APPLICABLE CODES AND LOCAL REGULATIONS, INCLUDING APPLICABLE ENERGY CODES. ALL COMPONENTS OF THE BUILDING SHALL MEET WITH THE MINIMUM ENERGY REQUIREMENTS OF THE BUILDING CODE. ANY DISCREPANCIES SHALL BE REPORTED TO THE ARCHITECT IN WRITING PRIOR TO THE COMMENCEMENT OF THE WORK.
8. ALL INSULATION SHALL BE LEFT EXPOSED AND ALL LABLES LEFT INTACT ON THE WINDOWS AND DOORS UNTIL INSPECTED BY THE BUILDING OFFICIAL.
9. ALL WOOD IN CONTACT WITH CONCRETE OR MASONRY SHALL BE PRESSURE TREATED.
10. INTERIOR BEARING WALLS SHALL BE CONSTRUCTED IN COMPLIANCE WITH "UL Design U333", BATT INSULATION SHALL BE INCLUDED WHERE UNCONDITIONED AREA IS BEING SEPARATED FROM HEATED / COOLED AREA.
11. INTERIOR STUD WALLS SEPARATING LIVING AREA FROM GARAGE AREAS SHALL BE CONSTRUCTED IN COMPLIANCE WITH "UL Design U333", INCLUDING R-11 BATT INSULATION.
12. CEILINGS OVER ATTACHED GARAGES OR GARAGES W/ LIVING AREA ABOVE SHALL BE 5/8" FIRECODE "C" GWB ON 1X3 WOOD FURRING AT 16" O.C., ATTACHED W/ 1 1/4" BUGLEHEAD SCREWS @ 6" O.C. ALONG EACH POINT OF BEARING.

STANDARD ABBREVIATIONS

@	AT	GALV.	GALVANIZED
#	NUMBER or POUND(S)	HORZ.	HORIZONTAL
=	EQUALS	INS.	INSULATION
ϕ	DIAMETER	INT.	INTERIOR
W/	WITH	LAV.	LAVATORY
W/O	WITHOUT	LVL.	LAMINATED VENEER LUMBER
℄	CENTERLINE	MAX.	MAXIMUM
&	AND	MIN.	MINIMUM
+/- or ±	PLUS OR MINUS	MISC.	MISCELLANEOUS
1'	ONE FOOT	MO.	MASONRY OPENING
1"	ONE INCH	No. or Nr.	NUMBER
1/4" or ¼"	ONE QUARTER INCH	O.C.	ON CENTER
8d	8 PENNY	O/H	OVERHEAD
BM	BEAM	OHD	OVERHEAD DOOR
B.O.	BY OTHERS	PLYWD.	PLYWOOD
BOT.	BOTTOM	P/T	PRESSURE TREATED
CLG.	CEILING	REINF.	REINFORCING (ED)
CO	CLEANOUT	REQ'D	REQUIRED
CONC.	CONCRETE	RM.	ROOM
COTG	CLEANOUT TO GRADE	R.O.	ROUGH OPENING
DBL.	DOUBLE	SF	SQUARE FEET
DIM.	DIMENSION	SGD	SLIDING GLASS DOOR
DN.	DOWN	SHT.	SHEET
ELEV.	ELEVATION	SRLH	SUWANNEE RIVER LOG HOMES
EXT.	EXTERIOR	TYP.	TYPICAL
F	FRENCH (DOORS)	VERT.	VERTICAL
FDN.	FOUNDATION	WC	WATERCLOSET (TOILET)

PROJECT INFORMATION / NOTES:

DESIGN VALUES/LOADS & CODES

WIND DESIGN SPEED: 130 MPH, UNLESS NOTED OTHERWISE

SOIL DESIGN STATEMENT:
FOOTING DESIGN IS BASED UPON 1000PSF SOIL BEARING PRESSURE PROVIDED BY CLEAN SAND, GRAVEL OR STONE. OTHER SOIL CONDITIONS ie: CLAY, HIGH LEVEL OF ORGANICS OR OTHER UNDESIRABLE SOILS SHALL REQUIRE FOUNDATION MODIFACATIONS.

LIVE LOADS: 1st FLOOR: 40PSF, 2nd FLOOR: 40PSF, ROOF: AS DETERMINED BY SHAPE FACTORS APPLIED TO THE WIND FORCE GENERATED BY THE DESIGN WIND SPEED.

BUILDING CODE: 2023 FLORIDA BUILDING CODE

ELECTRICAL CODE: NATIONAL ELECTRICAL CODE - 2020
LIFE SAFETY: NFPA-101 - LATEST

CONSTRUCTION DOCUMENTS

THE CUSTOMER IS RESPONSIBLE FOR DELIVERING THE REQUIRED SETS OF CONSTRUCTION DOCUMENTS TO THE PERMIT ISSUING AUTHORITIES, FOR THE ISSUANCE OF CONSTRUCTION PERMITS. THE CONTRACTOR SHALL REVIEW THE CONSTRUCTION DOCUMENTS AND VERIFY ALL DIMENSIONS. ANY DISCREPANCIES SHALL BE REPORTED TO THE ARCHITECT PRIOR TO THE COMMENCEMENT OF ANY WORK OR FABRACATION OF ANY MATERIALS.

DO NOT SCALE OFF THESE PLANS

AMPLE DIMENSIONS ARE SHOWN ON THE PLANS TO LOCATE ALL ITEMS. SIMPLE ARITHMETIC MAY BE USED TO DETERMINE THE LOCATIONS OF THOSE ITEMS NOT DIMENSIONED.

CHANGES TO FINAL PLAN SETS

PLEASE DO NOT MAKE ANY STRUCTURAL CHANGES TO THESE PLANS WITHOUT CONSULTING WITH THE ARCHITECT. THE OWNER SHALL ASSUME ANY AND ALL LIABILITY FOR STRUCTURAL DAMAGE RESULTING FROM CHANGES MADE TO THE PLANS OR BY SUBSTITUTION OF MATERIALS DIFFERENT FROM SPECIFICATION ON THE PLANS.

TERMITE PROTECTION NOTES:

SOIL CHEMICAL BARRIER METHOD:

1. A PERMANENT SIGN WHICH IDENTIFIES THE TERMITE TREATMENT PROVIDER AND NEED FOR REINSPECTION AND TREATMENT CONTRACT RENEWAL SHALL BE PROVIDED. THE SIGN SHALL BE POSTED NEAR THE WATER HEATER OR ELECTRIC PANEL. FBC 1042.6
2. CONDENSATE AND ROOF DOWNSPOUTS SHALL DISCHARGE AT LEAST 1'-0" AWAY FROM BUILDING SIDE WALLS. FBC 1803.4.4
3. IRRIGATION/SPRINKLER SYSTEMS INCLUDING ALL RISERS AND SPRAY HEADS SHALL NOT BE INSTALLED WITHIN 1'-0" FROM BUILDING SIDE WALLS. FBC 1803.4.4
4. TO PROVIDE FOR INSPECTION FOR TERMITE INFESTATION, BETWEEN WALL COVERINGS AND FINAL EARTH GRADE SHALL NOT BE LESS THAN 6".

EXCEPTION: PAINT AND DECORATIVE CEMENTIOUS FINISH LESS THAN 5/8" THICK ADHERED DIRECTLY TO THE FOUNDATION WALL. FBC 1403.1.6

5. INITIAL TREATMENT SHALL BE DONE AFTER ALL EXCAVATION AND BACKFILL IS COMPLETE. FBC 1816.1.1
6. SOIL DISTURBED AFTER THE INITIAL TREATMENT SHALL BE RETREATED INCLUDING SPACES BOXED OR FORMED. FBC 1816.1.2
7. BOXED AREAS IN CONCRETE FLOOR FOR SUBSEQUENT INSTALLATION OF TRAPS, ETC. SHALL BE MADE WITH PERMANENT METAL OR PLASTIC FORMS. PERMANENT FORMS MUST BE OF A SIZE AND DEPTH THAT WILL ELIMINATE THE DISTURBANCE OF SOIL AFTER THE INITIAL TREATMENT. FBC 1816.1.3
8. MINIMUM 6 MIL VAPOR RETARDER MUST BE INSTALLED TO PROTECT AGAINST RAINFALL DILUTION. IF RAINFALL OCCURS BEFORE VAPOR RETARDER PLACEMENT, RETREATMENT IS REQUIRED. FBC 1816.1.4
9. CONCRETE OVERPOUR AND MORTAR ALONG THE FOUNDATION PERIMETER MUST BE REMOVED BEFORE EXTERIOR SOIL TREATMENT. FBC 1816.1.5
10. SOIL TREATMENT MUST BE APPLIED UNDER ALL EXTERIOR CONCRETE OR GRADE WITHIN 1'-0" OF THE STRUCTURE SIDEWALLS. FBC 1816.1.6
11. AN EXTERIOR VERTICAL CHEMICAL BARRIER MUST BE INSTALLED AFTER CONSTRUCTION IS COMPLETE INCLUDING LANDSCAPING AND IRRIGATION. ANY SOIL DISTURBED AFTER THE VERTICAL BARRIER IS APPLIED, SHALL BE RETREATED. FBC 1816.1.6
12. ALL BUILDINGS ARE REQUIRED TO HAVE PER-CONSTRUCTION TREATMENT. FBC 1816.1.7
13. A CERTIFICATE OF COMPLIANCE MUST BE ISSUED TO THE BUILDING DEPARTMENT BY A LICENSED PEST CONTROL COMPANY BEFORE A CERTIFICATE OF OCCUPANCY WILL BE ISSUED. THE CERTIFICATE OF COMPLIANCE SHALL STATE: "THE BUILDING HAS RECEIVED A COMPLETE TREATMENT FOR THE PREVENTION OF SUBTERRANEAN TERMITES. THE TREATMENT IS IN ACCORDANCE WITH THE RULES AND LAWS OF THE FLORIDA DEPARTMENT OF AGRICULTURE AND CONSUMER SERVICES". FBC 1816.1.1
14. AFTER ALL WORK IS COMPLETED, LOOSE WOOD AND FILL MUST BE REMOVED FROM BELOW AND WITHIN 1'-0" OF THE BUILDING. THIS INCLUDES ALL GRADE STAKES, TUB TRAP BOXES, FORMS, SHORING OR OTHER CELLULOSE CONTAINING MATERIAL. FBC 2303.1.3
15. NO WOOD, VEGETATION, STUMPS, CARDBOARD, TRASH, ETC., SHALL BE BURIED WITHIN 15'-0" OF ANY BUILDING OR PROPOSED BUILDING. FBC 2303.1.4

FLORIDA BUILDING CODE

Compliance Summary

TYPE OF CONSTRUCTION

Roof: Gable Construction, Wood Trusses @ 24" O.C.
Walls: 2x4 Wood Studs @ 16" O.C.
Floor: 4" Thk. Concrete Slab W/ Fibermesh Concrete Additive
Foundation: Continuous Stemwall Footer

ROOF DECKING

Material: 1/2" CD Plywood or 7/16" OSB.
Sheet Size: 48"x96" Sheets Perpendicular to Roof Framing
Fasteners: 8d Ring Shank Nails per schedule on sheet A.7

SHEARWALLS

Material: 7/16" OSB. "WindSTORM"; 48" X 97", 109", 121" OR 145"
Sheet Size: 48"x97" (109", 121" OR 145") Sheets Placed Vertical
Fasteners: 8d Ring Shank Nails @ 4" O.C. Edges & 8" O.C. Interior
Dragstrut: Double Top Plate (S.T.P.) W/2 - 16d Nails @ 12" O.C.
Wall Studs: 2x4 SPF Studs @ 16" O.C.

HURRICANE UPLIFT CONNECTORS

Truss Anchors: Simpson H2.5a @ Ea. Truss End (Typ. U.O.N.)
Wall Tension: Wall Sheathing Nailing is Adequate - 8d @ 4" O.C. Top & Bot.
Anchor Bolts: 1/2" A307 @ 48" O.C. - 1st Bolt 8" from corner
Corner Hold-down Device: Simpson HDU8, ea. corner

FOOTINGS AND FOUNDATIONS

Footing: 20"X12" Cont. W/2-#5 Cont. & wire chairs @ 48" O.C.

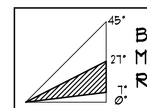

BUILDING COMPONENTS & CLADDING LOADS
MEAN BUILDING HEIGHT = 30.0', EXPOSURE "B"
ROOF ANGLE 1° TO 21°

	ZONE	AREA	Vult 110 MPH	Vult 120 MPH	Vult 130 MPH	Vult 140 MPH
ROOF 1° TO 21°	1	10	12.0 / -19.9	14.9 / -23.7	17.5 / -27.8	20.3 / -32.3
	1	20	11.4 / -19.4	13.6 / -23.0	16.0 / -27.0	18.5 / -31.4
	1	50	10.0 / -18.6	11.9 / -22.2	13.9 / -26.0	16.1 / -30.2
	2	10	12.5 / -34.7	14.9 / -41.3	17.5 / -48.4	20.3 / -56.2
	2	20	11.4 / -31.9	13.6 / -38.0	16.0 / -44.6	18.5 / -51.7
	2	50	10.0 / -28.2	11.9 / -33.6	13.9 / -39.4	16.1 / -45.7
	3	10	12.5 / -51.3	14.9 / -61.0	17.5 / -71.6	20.3 / -83.1
	3	20	11.4 / -47.9	13.6 / -57.1	16.0 / -67.0	18.5 / -77.7
	3	50	10.0 / -43.5	11.9 / -51.8	13.9 / -60.8	16.1 / -70.5
WALL	4	10	21.8 / -23.6	25.9 / -34.7	30.4 / -33.0	35.3 / -38.2
	4	20	20.8 / -22.6	24.7 / -26.9	29.0 / -31.6	33.7 / -36.7
	4	50	19.5 / -21.3	23.2 / -25.4	27.2 / -29.8	31.6 / -34.6
	5	10	21.8 / -29.1	25.9 / -34.7	30.4 /-40.7	35.3 / -47.2
	5	20	20.8 / -27.2	24.7 / -32.4	29.0 / -38.0	33.7 / -44.0
	5	50	19.5 / -24.6	23.2 / -29.3	27.2 / -34.3	31.6 / -39.8

HEIGHT & EXPOSURE ADJUSTMENT COEFFICIENTS FOR BUILDING COMPONENTS & CLADDING

BLDG HEIGHT	EXPOSURE "B"	EXPOSURE "C"	EXPOSURE "D"
15	0.82	1.21	1.47
20	0.89	1.29	1.55
25	0.94	1.35	1.61
30	1.00	1.40	1.66

STRUCTURAL DESIGN CRITERIA:

1. THE DESIGN COMPLIES WITH THE REQUIREMENTS OF THE 2023 FLORIDA BUILDING CODE - SECTION 1609 AND OTHER REFERENCED CODES AND SPECIFICATIONS. ALL CODES AND SPECIFICATIONS SHALL BE LATEST EDITION AT TIME OF PERMIT.
2. WIND LOAD CRITERIA: RISK CATAGORY: 2, EXPOSURE: "B"

BASED ON ANSI/ASCE 7-22, 2023 FBC 1609-A WIND VELOCITY: V_{ULT} = 130 MPH
V_{ASD} = 101 MPH

3. ROOF DESIGN LOADS:
SUPERIMPOSED DEAD LOADS: ..... 20 PSF
SUPERIMPOSED LIVE LOADS: ..... 20 PSF

4. FLOOR DESIGN LOADS:
SUPERIMPOSED DEAD LOADS: ..... 25 PSF
SUPERIMPOSED LIVE LOADS:
RESIDENTIAL ..... 40 PSF
BALCONIES ..... 60 PSF

5. WIND NET UPLIFT: ARE AS INDICATED ON PLANS

SYMBOLS

THESE SYMBOLS ARE MOST OFTEN ENCOUNTERED IN THE FOLLOWING DRAWINGS: ELEVATIONS, DIMENSION PLANS, SECTIONS & STRUCTURAL PLANS

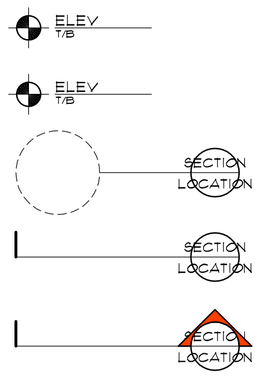

TYPE OF ELEVATION MARK USED TO INDICATE A PREFERRED TARGET ELEVATION - TRUE MEASUREMENT.

TYPE OF ELEVATION MARK USED TO INDICATE THE TOP OF A LOG WALL STACK - NOMINAL ONLY.

TYPE OF DETAIL MARK USED TO INDICATE A SECTION OR DETAIL ASSOCIATED WITH A PLAN VIEW

TYPE OF DETAIL MARK USED TO INDICATE A SECTION ie: SECTION "A" ON SHEET "A.5", TAIL INDICATES DIRECTION OF VIEW

TYPE OF SECTION MARK USED TO INDICATE A VIEW TAKEN IN THE DIRECTION OF THE ARROW ie: SECTION "A" FOUND ON "D6a" OF THE PROJECT MANUAL

FRAMING ANCHOR SCHEDULE

APPLICATION	MANUFR/MODEL	CAP.
TRUSS TO WALL:	SIMPSON H2.5a	535#
GIRDER TRUSS TO POST/HEADER:	SIMPSON LGT, W/ 28 - 16d NAILS	1785#
HEADER TO KING STUD(S):	SIMPSON ST22	1370#
PLATE TO FOUNDATION:	5/8"ϕ THRU-BOLT	3340#
PORCH BEAM TO POST:	SIMPSON PC44/EPC44	1700#
PORCH POST TO FND.:	SIMPSON ABU44	2200#
MISC. JOINTS	SIMPSON A34	315#/240#

NOTE:
ALL ANCHORS SHALL BE SECURED W/ NAILS AS PRESCRIBED BY THE MANUFACTURER FOR MAXIMUM JOINT STRENGTH, UNLESS NOTED OTHERWISE.

NOTE:
REFER TO THE INCLUDED STRUCTURAL DETAILS FOR ADDITIONAL ANCHORS/ JOINT REINFORCEMENT AND FASTENERS.

NOTE:
ALL UNLISTED JOINTS IN THE LOAD PATH SHALL BE REINFORCED WITH SIMPSON A34 FRAMING ANCHORS, TYPICAL T.O.

NOTE:
"SEMCO" PRODUCT APPROVAL:
MIAMI/DADE COUNTY REPORT #95-0818.15

NOTE:
"SIMPSON" PRODUCT APPROVALS:
MIAMI/DADE COUNTY REPORT #97-0107.05, #96-1126.11, #99-0623.04
SBCCI NER-443, NER-393

GENERAL NAILING SCHEDULE:

NUMBER OF NAILS FOR CONNECTING WOOD MEMBERS:

CONNECTION	COMMON NAILS	Nr. / SPACING
BRIDGING TO JOIST, TOE NAIL	16d	2 EA. END
2" SUBFLOOR TO JOIST, BLIND & FACE NAILING	16d	2
SOLE PLATE TO JOIST OR BLOCKING FACE NAILED	16d	16" O.C.
TOP OR SOLE PLATE TO STUD END NAILED	16d	2
STUD TO SOLE PLATE, TOE NAILED	8d	3 OR 2 16d
DOUBLE STUDS, FACE NAILED	16d	24" O.C.
DOUBLE TOP PLATES, FACE NAILED	16d	16" O.C.
TOP PLATES - LAPS & INTERSECTIONS FACE NAILED	16d	2
1 X 6 SHEATHING TO EACH POINT OF BEARING, FACE NAILED	8d	2
BUILT-UP CORNER STUDS, FACE NAILED	16d	30" O.C.
BUILT-UP GIRDERS & BEAMS	20d	32" O.C. @ TOP & BOTTOM & STAGGERED - 2 @ EA. END & @ SPLICES
3/4" PLYWOOD SUBFLOORING	8d	6" O.C. @ EDGES 10" O.C. @ INTERMEDIATE
OSB SHEATHING, 7/16" THICK	8d	6" O.C. @ EDGES 10" O.C. @ INTERMEDIATE
1/8" FIBERBOARD SHEATHING	6d	3" O.C. @ EDGES 6" O.C. @ INTERMEDIATE

NAILS, BOLTS AND OTHER METAL CONNECTORS WHICH ARE USED IN LOCATIONS EXPOSED TO THE WEATHER SHALL BE GALVANIZED OR OTHERWISE CORROSION RESISTANT.

B. IN GENERAL, NAILS SHALL PENETRATE THE SECOND MEMBER A DISTANCE EQUAL TO THE THICKNESS OF THE MEMBER BEING NAILED THERETO, OR GREATER.

C. THERE SHALL BE NOT LESS THAN 2 NAILS PER CONNECTION.

D. GLUING SHALL NOT BE CONSIDERED AN ACCEPTABLE CONNECTOR IN LIEU OF THOSE SPECIFIED HEREIN.

E. FORMED METAL CONNECTORS, AS PER THE SCHEDULE HEREIN, SHALL HAVE THE NUMBER OF NAILS INSTALLED AS REQUIRED BY THE MANUFACTURER, OR AS DIRECTED BY THE PLANS.

F. NAILS PROJECTING BEYOND THE LAST WOOD MEMBER SHALL BE CLINCHED, WHEREVER POSSIBLE.

G. NOTES IN THE "PLANS" PACKAGE OF THE CONSTRUCTION DOCUMENTS SUPERSEDE SIZES & SPACINGS OF NAILS CONTAINED HEREIN.

Columbia County Building Department
Plans Reviewed for Code Compliance
State of Florida

Nicholas P Geisler
Digitally signed by Nicholas P Geisler
Date: 2025.12.16 15:30:26 -05'00'
AR0007005

REVISION:

Copyright 2025 © N.P. Geisler, Architect

DRAWN: NPG

6 UNIT APARTMENT BUILDING for:
TOUCHSTONE CONSTRUCTION INC.
LAKE CITY, FLORIDA
STRUCTURAL INFORMATION

Celebrating 53 Years of Service
1972 - 2025
N.P. Geisler, Architect
AR0007005
CUSTOM ARCHITECTURAL DESIGN
NICHOLAS PAUL GEISLER ARCHITECT
1758 NW Brown Rd.
Lake City, FL 32055
386-365-4355

DATE: 23SEP 2025

COMM#: 2K2549

SHEET: A.6

6 OF 9

These drawings, as instruments of service, are the sole property of the architect, and may not be used, copied or reproduced in whole or in part for use on or incorporated within any other job without specific and individual authorization by the architect.