DATE 11/03/2010

Columbia County Building Permit

This Permit Must Be Prominently Posted on Premises During Construction

PERMIT
000028976

APPLICANT JOEL PHINNEY PHONE 867-1499

ADDRESS 120 SW SMITH LN LAKE CITY FL 32024

OWNER TROY JUSTIN LAND PHONE 386-590-1744

ADDRESS 787 NW LOWER SPRINGS RD LAKE CITY FL 32055

CONTRACTOR JOEL PHINNEY PHONE 867-1499

LOCATION OF PROPERTY 90 WEST, R LAKE JEFFERY RD, R LOWER SPRINGS RD, 3/4 MILE ON JUST PAST SAULSBY GLN ON RIGHT

TYPE DEVELOPMENT SFD, UTILITY ESTIMATED COST OF CONSTRUCTION 141100.00

HEATED FLOOR AREA 1911.00 TOTAL AREA 2822.00 HEIGHT 21.00 STORIES 1

FOUNDATION CONCRETE WALLS FRAMED ROOF PITCH 6/12 FLOOR SLAB

LAND USE & ZONING AG-3 MAX. HEIGHT 35

Minimum Set Back Requirments: STREET-FRONT 30.00 REAR 25.00 SIDE 25.00

NO. EX.D.U. 0 FLOOD ZONE X DEVELOPMENT PERMIT NO.

PARCEL ID 01-3S-15-00127-009 SUBDIVISION

LOT BLOCK PHASE UNIT TOTAL ACRES 10.29

000001854		CBC1256243		
Culvert Permit No.	Culvert Waiver	Contractor's License Number	Applicant/Owner/Contractor	
CULVERT	10-0441	BK	TC	N
Driveway Connection	Septic Tank Number	LU & Zoning checked by	Approved for Issuance	New Resident

COMMENTS: FLOOR ONE FOOT ABOVE THE ROAD, NOC ON FILE
SFD IS BEING CONSTRUCTED ON 00127-009 PARCEL NUMBER

Check # or Cash 1263

FOR BUILDING & ZONING DEPARTMENT ONLY

Temporary Power _____ date/app. by
Foundation _____ date/app. by
Monolithic _____ date/app. by (footer/Slab)
Under slab rough-in plumbing _____ date/app. by
Slab _____ date/app. by
Sheathing/Nailing _____ date/app. by
Framing _____ date/app. by
Insulation _____ date/app. by
Rough-in plumbing above slab and below wood floor _____ date/app. by
Electrical rough-in _____ date/app. by
Heat & Air Duct _____ date/app. by
Peri. beam (Lintel) _____ date/app. by
Pool _____ date/app. by
Permanent power _____ date/app. by
C.O. Final _____ date/app. by
Culvert _____ date/app. by
Pump pole _____ date/app. by
Utility Pole _____ date/app. by
M/H tie downs, blocking, electricity and plumbing _____ date/app. by
Reconnection _____ date/app. by
RV _____ date/app. by
Re-roof _____ date/app. by

BUILDING PERMIT FEE $ 710.00 CERTIFICATION FEE $ 14.11 SURCHARGE FEE $ 14.11

MISC. FEES $ 0.00 ZONING CERT. FEE $ 50.00 FIRE FEE $ 0.00 WASTE FEE $

FLOOD DEVELOPMENT FEE $ FLOOD ZONE FEE $ CULVERT FEE $ 25.00 **TOTAL FEE** 813.22

INSPECTORS OFFICE CLERKS OFFICE

NOTICE: IN ADDITION TO THE REQUIREMENTS OF THIS PERMIT, THERE MAY BE ADDITIONAL RESTRICTIONS APPLICABLE TO THIS PROPERTY THAT MAY BE FOUND IN THE PUBLIC RECORDS OF THIS COUNTY. AND THERE MAY BE ADDITIONAL PERMITS REQUIRED FROM OTHER GOVERNMENTAL ENTITIES SUCH AS WATER MANAGEMENT DISTRICTS, STATE AGENCIES, OR FEDERAL AGENCIES.

"WARNING TO OWNER: YOUR FAILURE TO RECORD A NOTICE OF COMMENCEMENT MAY RESULT IN YOUR PAYING TWICE FOR IMPROVEMENTS TO YOUR PROPERTY. IF YOU INTEND TO OBTAIN FINANCING, CONSULT WITH YOUR LENDER OR AN ATTORNEY BEFORE RECORDING YOUR NOTICE OF COMMENCEMENT."

EVERY PERMIT ISSUED SHALL BECOME INVALID UNLESS THE WORK AUTHORIZED BY SUCH PERMIT IS COMMENCED WITHIN 180 DAYS AFTER ITS ISSUANCE, OR IF THE WORK AUTHORIZED BY SUCH PERMIT IS SUSPENDED OR ABANDONED FOR A PERIOD OF 180 DAYS AFTER THE TIME THE WORK IS COMMENCED. A VALID PERMIT RECIEVES AN APPROVED INSPECTION EVERY 180 DAYS. WORK SHALL BE CONSIDERED NOT SUSPENDED, ABANDONED OR INVALID WHEN THE PERMIT HAS RECIEVED AN APPROVED INSPECTION WITHIN 180 DAYS OT THE PREVIOUS INSPECTION.

The Issuance of this Permit Does Not Waive Compliance by Permittee with Deed Restrictions.

$813.22

Columbia County Building Permit Application

For Office Use Only Application # 1009-42 Date Received 9/21/10 By G Permit # 1854/28976

Zoning Official BLK Date 27.09.10 Flood Zone X Land Use A-3 Zoning A-3

FEMA Map # N/A Elevation N/A MFE 1' above Rd River N/A Plans Examiner T.C. Date 9-24-10

Comments: House is being constructed on 00127-009 parcel #

☑ NOC ☐ EH ☑ Deed or PA ☑ Site Plan ☐ State Road Info ☐ Parent Parcel # ~~☐ Letter to Sign Authorization Form~~

☐ Dev Permit # ☐ In Floodway ☑ Letter of Auth. from Contractor ☐ F W Comp. letter

IMPACT FEES: EMS Fire Corr Road/Code ~~4 UF~~

School = TOTAL N/A Suspended

existing well

Septic Permit No. 10-0441 Fax 752-2282

Name Authorized Person Signing Permit Joel Phinney Phone ~~752-2281~~

Address 120 SW Smith Ln L.C. 32024

Owners Name Troy Justin Land Phone 386-590-1744

911 Address 787 NW Lower Springs Rd Lake City FL 32055

Contractors Name Joel Phinney Phone 867-1499

Address 120 SW Smith Lane Lake City FL 32024

Fee Simple Owner Name & Address NA

Bonding Co. Name & Address NA

Architect/Engineer Name & Address Jonathan Morris Nick Geisler

Mortgage Lenders Name & Address First Federal Bank

Circle the correct power company - FL Power & Light - Clay Elec. - Suwannee Valley Elec. - Progress Energ

Property ID Number 01-35-15-00127-009 Estimated Cost of Construction 183 K

Subdivision Name Lot Block Unit Phase

Driving Directions 90 West, Turn R on Lake Jeffery Rd, cross I-75 turn R on Lower Springs Rd 3/4 mile on R past Saulsby Rd

Number of Existing Dwellings on Property 0

Construction of Single family dwelling Total Acreage 10.09 Lot Size

Do you need a Culvert Permit or Culvert Waiver or Have an Existing Drive Total Building Height 21'-1"

Actual Distance of Structure from Property Lines - Front 339' Side 367' Side 143' Rear 286'

Number of Stories 1 Heated Floor Area 1911 Total Floor Area 2822 Roof Pitch 6-12

Application is hereby made to obtain a permit to do work and installations as indicated. I certify that no work or installation has commenced prior to the issuance of a permit and that all work be performed to meet the standard of all laws regulating construction in this jurisdiction.

Columbia County Building Permit Application

TIME LIMITATIONS OF APPLICATION : An application for a permit for any proposed work shall be deemed to have been abandoned 180 days after the date of filing, unless such application has been pursued in good faith or a permit has been issued; except that the building official is authorized to grant one or more extensions of time for additional periods not exceeding 90 days each. The extension shall be requested in writing and justifiable cause demonstrated.

TIME LIMITATIONS OF PERMITS: Every permit issued shall become invalid unless the work authorized by such permit is commenced within 180 days after its issuance, or if the work authorized by such permit is suspended or abandoned for a period of 180 days after the time work is commenced. A valid permit receives an approved inspection every 180 days. Work shall be considered not suspended, abandoned or invalid when the permit has received an approved inspection within 180 days of the previous approved inspection.

FLORIDA'S CONSTRUCTION LIEN LAW: Protect Yourself and Your Investment: According to Florida Law, those who work on your property or provide materials, and are not paid-in-full, have a right to enforce their claim for payment against your property. This claim is known as a construction lien. If your contractor fails to pay subcontractors or material suppliers or neglects to make other legally required payments, the people who are owed money may look to your property for payment, even if you have paid your contractor in full.
This means if a lien is filed against your property, it could be sold against your will to pay for labor, materials or other services which your contractor may have failed to pay.

NOTICE OF RESPONSIBILITY TO BUILDING PERMITEE: ***YOU ARE HEREBY NOTIFIED*** as the recipient of a building permit from Columbia County, Florida, you will be held responsible to the County for any damage to sidewalks and/or road curbs and gutters, concrete features and structures, together with damage to drainage facilities, removal of sod, major changes to lot grades that result in ponding of water, or other damage to roadway and other public infrastructure facilities caused by you or your contractor, subcontractors, agents or representatives in the construction and/or improvement of the building and lot for which this permit is issued. No certificate of occupancy will be issued until all corrective work to these public infrastructures and facilities has been corrected.

WARNING TO OWNER: YOUR FAILURE TO RECORD A NOTICE OF COMMENCMENT MAY RESULT IN YOU PAYING TWICE FOR IMPROVEMENTS TO YOUR PROPERTY. A NOTICE OF COMMENCEMENT MUST BE RECORDED AND POSTED ON THE JOB SITE BEFORE THE FIRST INSPECTION. IF YOU INTEND TO OBTAIN FINANCING, CONSULT WITH YOUR LENDER OR ATTORNEY BEFORE RECORDING YOUR NOTICE OF COMMENCEMENT.

OWNERS CERTIFICATION: I CERTIFY THAT ALL THE FOREGOING INFORMATION IS ACCURATE AND THAT ALL WORK WILL BE DONE IN COMPLIANCE WITH ALL APPLICABLE LAWS REGULATING CONSTRUCTION AND ZONING.

NOTICE TO OWNER: There are some properties that may have deed restrictions recorded upon them. These restrictions may limit or prohibit the work applied for in your building permit. It may be to your advantage to check and see if your property is encumbered by any restrictions.

(Owners Must Sign All Applications Before Permit Issuance.)

Owners Signature ****OWNER BUILDERS MUST PERSONALLY APPEAR AND SIGN THE BUILDING PERMIT.**

CONTRACTORS AFFIDAVIT: By my signature I understand and agree that I have informed and provided this written statement to the owner of all the above written responsibilities in Columbia County for obtaining this Building Permit including all application and permit time limitations.

Contractor's Signature (Permitee)

Contractor's License Number CBC # 1256243
Columbia County
Competency Card Number _____

Affirmed under penalty of perjury to by the Contractor and subscribed before me this 3rd **day of** August **20**10.

Personally known ✓ **or Produced Identification** _____

State of Florida Notary Signature (For the Contractor)

SEAL:

JUSTIN TROY LAND
Comm# DD0693352
Expires 7/9/2011
Florida Notary Assn., Inc

SUBCONTRACTOR VERIFICATION FORM

APPLICATION NUMBER _____ CONTRACTOR Skyline Homes, Inc PHONE 386-754-6667

THIS FORM MUST BE SUBMITTED PRIOR TO THE ISSUANCE OF A PERMIT

In Columbia County one permit will cover all trades doing work at the permitted site. It is REQUIRED that we have records of the subcontractors who actually did the trade specific work under the permit. Per Florida Statute 440 and Ordinance 89-6, a contractor shall require all subcontractors to provide evidence of workers' compensation or exemption, general liability insurance and a valid Certificate of Competency license in Columbia County.

Any changes, the permitted contractor is responsible for the corrected form being submitted to this office prior to the start of that subcontractor beginning any work. Violations will result in stop work orders and/or fines.

380 ELECTRICAL OK High Springs Plumbing & Electric	Print Name Donald R Davis License #: EC0002306	Signature Donald R Davis Phone #: 386 623 0499
ok MECHANICAL/ A/C _____	Print Name Seperate Sheet License #:	Signature Phone #:
PLUMBING/ GAS OK	Print Name SUWANNEE PLMG License #: CFC1426088	Signature Phone #: 386.208.5199
ROOFING 494 OK	Print Name Caleb Laughlin License #: CCC1327718	Signature Phone #: 386-752-4022
SHEET METAL	Print Name Non License #:	Signature Phone #:
FIRE SYSTEM/ SPRINKLER	Print Name non License#:	Signature Phone #:
SOLAR	Print Name non License #:	Signature Phone #:

Specialty License	License Number	Sub-Contractors Printed Name	Sub-Contractors Signature
MASON	Seperate Sheet		
CONCRETE FINISHER	Seperate Sheet	Papka	
ok FRAMING	OK 000804	Brian North Flo Tim	
ok INSULATION	000628	Bobby O Jackson	Bobby Jackson
STUCCO	N/A		
OK DRYWALL	000627	Bobby O Jackson	Bobby Jackson
PLASTER	N/A		
ok CABINET INSTALLER	CBC 1256243	Joel Phinney	
ok PAINTING	1016		
ACOUSTICAL CEILING		non	
ok GLASS	Seperate Sheet		
ok CERAMIC TILE	CBC 1256243	Joel Phinney	
ok FLOOR COVERING	1016		
ALUM/VINYL SIDING			
ok GARAGE DOOR OK	000873	Dale R. Nickelson dba Evergreen Building Products	Dale R Nickelson
METAL BLDG ERECTOR			

F. S. 440.103 Building permits; identification of minimum premium policy.--Every employer shall, as a condition to applying for and receiving a building permit, show proof and certify to the permit issuer that it has secured compensation for its employees under this chapter as provided in ss. 440.10 and 440.38, and shall be presented each time the employer applies for a building permit.

1009-4C

Troy Land

SUBCONTRACTOR VERIFICATION FORM

APPLICATION NUMBER _____ CONTRACTOR _____ PHONE _____

THIS FORM MUST BE SUBMITTED PRIOR TO THE ISSUANCE OF A PERMIT

In Columbia County one permit will cover all trades doing work at the permitted site. It is REQUIRED that we have records of the subcontractors who actually did the trade specific work under the permit. Per Florida Statute 440 and Ordinance 89-6, a contractor shall require all subcontractors to provide evidence of workers' compensation or exemption, general liability insurance and a valid Certificate of Competency license in Columbia County.

Any changes, the permitted contractor is responsible for the corrected form being submitted to this office prior to the start of that subcontractor beginning any work. Violations will result in stop work orders and/or fines.

ELECTRICAL	Print Name _____ License #:	Signature _____ Phone #:
MECHANICAL/ A/C ____	Print Name Glenn I Jones Jr License #: CAC051486	Signature _____ Phone #: 386-752-5389
PLUMBING/ GAS	Print Name _____ License #:	Signature _____ Phone #:
ROOFING	Print Name _____ License #:	Signature _____ Phone #:
SHEET METAL	Print Name _____ License #:	Signature _____ Phone #:
FIRE SYSTEM/ SPRINKLER	Print Name _____ License#:	Signature _____ Phone#:
SOLAR	Print Name _____ License #:	Signature _____ Phone #:

Specialty License	License Number	Sub-Contractors Printed Name	Sub-Contractors Signature
MASON			
CONCRETE FINISHER			
FRAMING			
INSULATION			
STUCCO			
DRYWALL			
PLASTER			
CABINET INSTALLER			
PAINTING			
ACOUSTICAL CEILING			
GLASS	122	Richard Bennett	Richy Bennett
CERAMIC TILE			
FLOOR COVERING			
ALUM/VINYL SIDING			
GARAGE DOOR			
METAL BLDG ERECTOR			

F. S. 440.103 Building permits; identification of minimum premium policy.—Every employer shall, as a condition to applying for and receiving a building permit, show proof and certify to the permit issuer that it has secured compensation for its employees under this chapter as provided in ss. 440.10 and 440.38, and shall be presented each time the employer applies for a building permit.

01-055-B-00121-000 1 001 -Troy Land

Parcels A + B

BOUNDARY SURVEY

IN SECTION 1, TOWNSHIP 3 SOUTH, RANGE 15 EAST
COLUMBIA COUNTY, FLORIDA

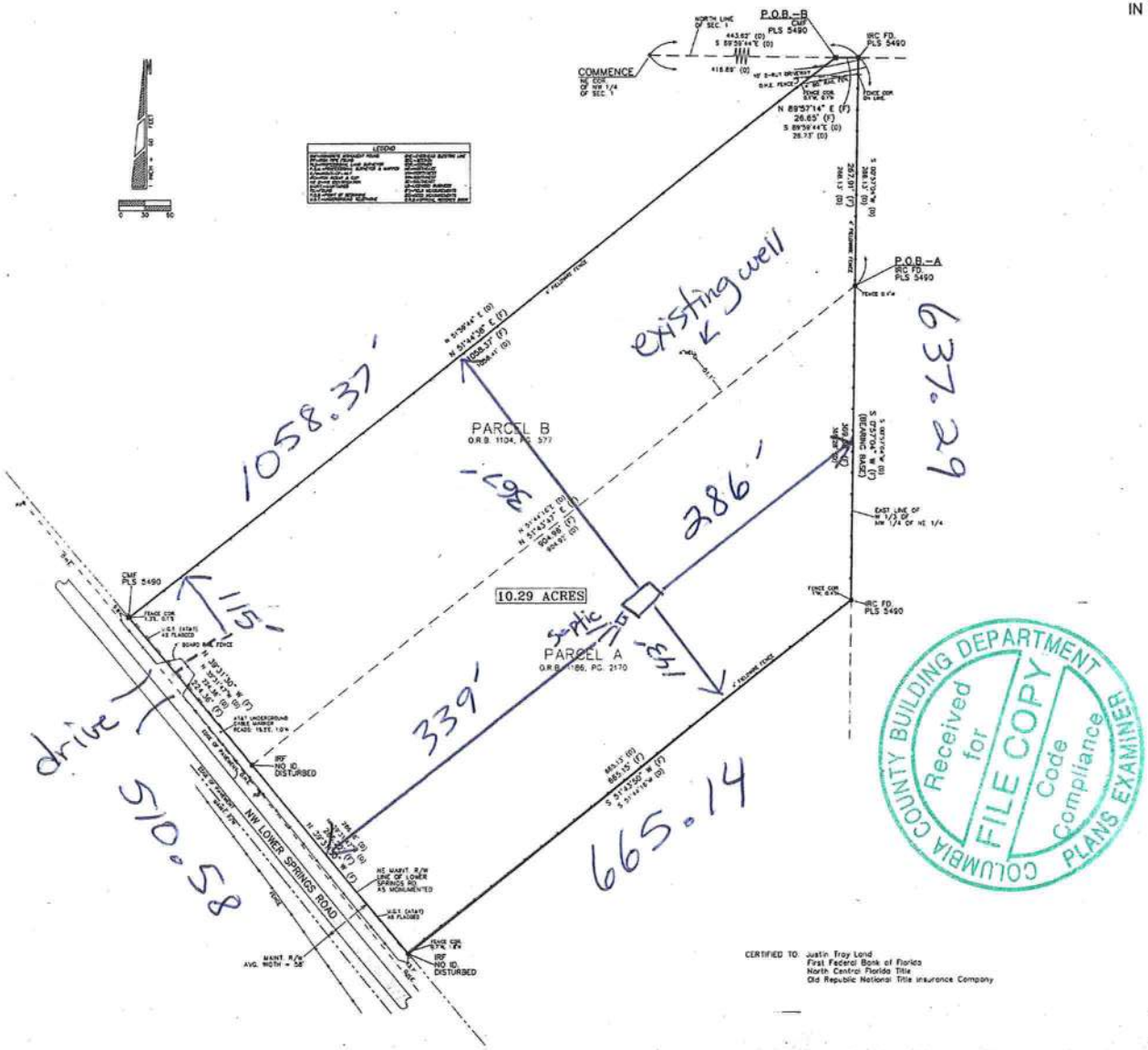

DESCRIPTION: FURNISHED BY CLIENT

PARCEL A
O.R.B. 1186, PG. 2170
A part of the NE 1/4 of the NW 1/4 and the NW 1/4 of the NE 1/4 of Section 1, Township 3 South, Range 15 East, Columbia County, Florida, more particularly described as follows: COMMENCE at the NE Corner of the NW 1/4 of said Section 1 and run S.89°59'44"E., 443.62 feet along the North line of said Section 1; thence S.00°57'04"W., 288.13 feet along the East line of the Westerly 1/3 of the NW 1/4 of the NE 1/4 of said Section 1 to the POINT OF BEGINNING; thence continue S.00°57'04"W., 359.28 feet along said East line; thence S.51°44'16"W., 665.13 feet to a point on the Northeasterly Maintained Right-of-Way line of Lower Springs Road; thence N.39°31'47"W., 285.18 feet along said Right-of-Way line; thence N.51°44'16"E., 904.92 feet to the POINT OF BEGINNING.

AND ALSO

PARCEL B
O.R.B. 1104, PG. 577
A part of the Northeast 1/4 of the Northwest 1/4 and the Northwest 1/4 of the Northeast 1/4 of Section 1, Township 3 South, Range 15 East, Columbia County, Florida, more particularly described as follows: COMMENCE at the Northeast corner of the Northwest 1/4 of said Section 1, and run South 89°59'44" East, 416.89 feet along the North line of said Section 1, to the POINT OF BEGINNING; thence continue South 89°59'44" East, 26.73 feet, along the North line of said Section 1; thence South 00°57'04" West, 288.13 feet along the East line of the Westerly 1/3 of the Northwest 1/4 of the Northeast 1/4 of said Section 1; thence South 51°44'16" West, 904.92 feet to a point on the Northeasterly maintained right of way line of Lower Springs Road; thence North 39°31'47" West, 224.36 feet along said Northeasterly right of way; thence North 51°59'44" East, 1,058.41 feet to the POINT OF BEGINNING.

NOTES:

1.) Monumentation is as shown and designated on the face of the plat.

2.) Boundary based on monumentation found in place, descriptions furnished by client, prior survey by J. Sherman Frier, PLS, and prior survey by Company.

3.) Bearings projected from East property line and based on above referenced description furnished by client.

4.) Interior improvements, if present, were not located with this survey.

5.) Underground encroachments, if present, were not located with this survey.

6.) This survey was made without benefit of a title search. There may be additional easements, restrictions, etc. not shown hereon but found in the Public Records. Issues regarding title, land use & zoning, easements & other encumberances are not a part of the scope of a Boundary Survey and can only be revealed with a title search.

7.) Date of field survey completion: April 23, 2010.

8.) Examination of the Flood Insurance Rate Maps (FIRM) for Columbia County shows that, per said maps, the described parcel lies within Flood Zone "X", which according to said maps is outside of the 0.2% chance floodplain (ref: Map No. 12023C0170C).

9.) AT&T Easement, recorded in O.R. Book 615, Page 26, of the Public Records of Columbia County, Florida, does not affect this parcel of land, as the description states that the 18.5' easement is adjacent to Interstate Highway No. 10. An AT&T marker and flags were found, however, along NW Lower Springs Road. Said marker indicates a 18.5' easement here, but we do not believe that the above mentioned O.R. Book 615, page 26, represents it. Said AT&T line is shown on the plat.

10) The parcel's parent tract is subject to a "blanket" easement to Suwannee Valley Electric Cooperative (O.R. Book 849, Page 2383) indicating a 20' easement along all constructed power lines.

COLUMBIA COUNTY BUILDING DEPARTMENT
Received for FILE COPY
Code Compliance
PLANS EXAMINER

CERTIFIED TO: Justin Troy Land
First Federal Bank of Florida
North Central Florida Title
Old Republic National Title Insurance Company

REVISED: 05/11/2010 Legal Updated & Surveyor's Note removed.

CAD FILE: 5816.DWG

NOT VALID WITHOUT THE SIGNATURE AND ORIGINAL RAISED SEAL OF A FLORIDA REGISTERED PROFESSIONAL SURVEYOR AND MAPPER

Timothy A. Delbene, P.L.S.
Florida Reg. No. 5594
DATE: 5/11/2010

Donald F. Lee and Associates, Inc.
SURVEYORS – ENGINEERS
140 Northwest Ridgewood Avenue, Lake City, Florida 32055
Phone: (386) 755-6166 FAX: (386) 755-6167
Certificate of Authorization # LB 7042

Date: 04/23/2010	TROY LAND	Scale: 1"=60'
Drafting: A V G		Field Book: 09-580
Computations: A V G		Work Order: 09-5816
Checked: T A D		File: 8-26-42

01-035-15-00127-008 & 009
Parcels A + B

Troy Land

BOUNDARY SURVEY

IN SECTION 1, TOWNSHIP 3 SOUTH, RANGE 15 EAST
COLUMBIA COUNTY, FLORIDA

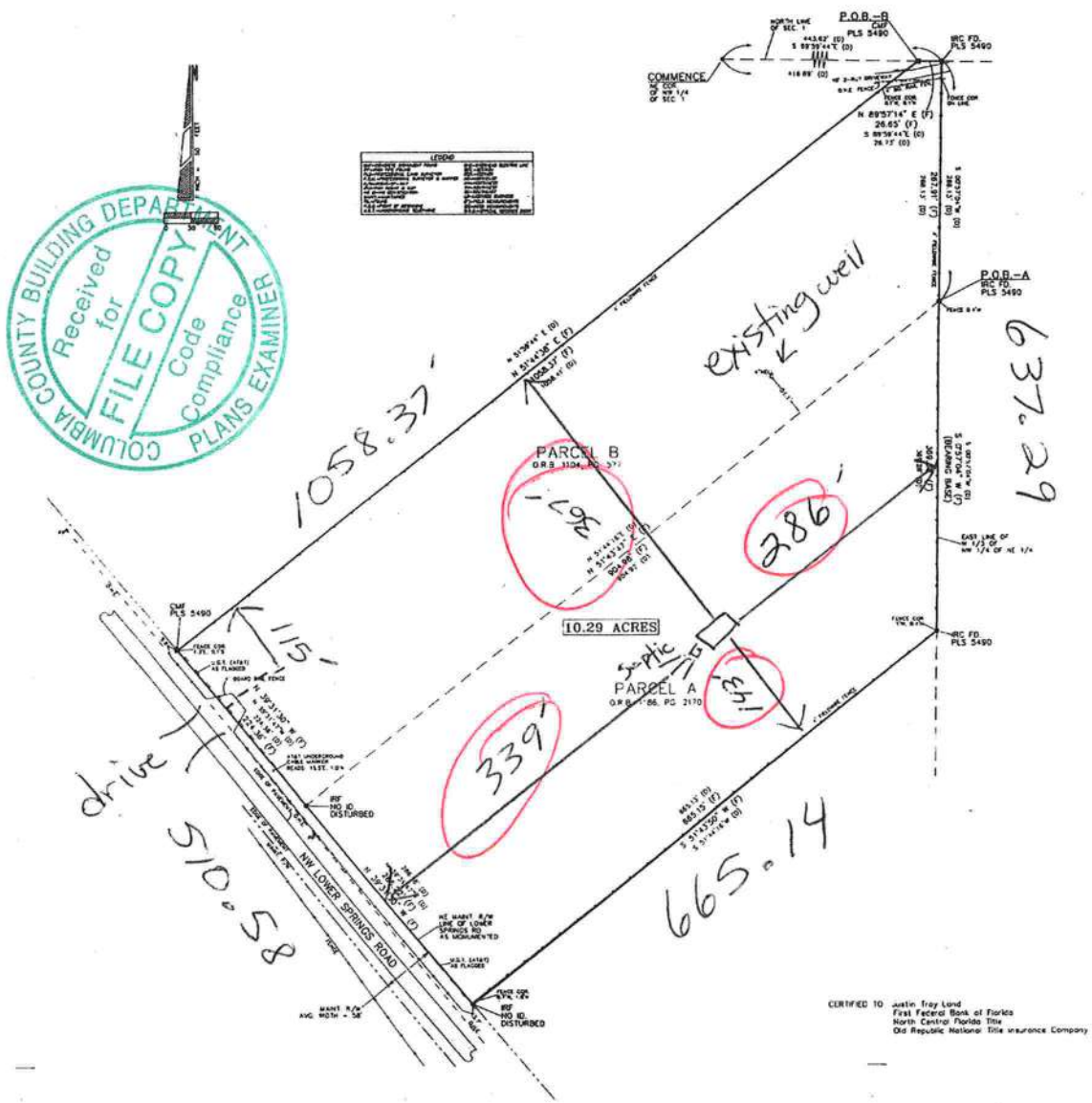

DESCRIPTION: FURNISHED BY CLIENT

PARCEL A
O.R.B. 1186, PG. 2170
A part of the NE 1/4 of the NW 1/4 and the NW 1/4 of the NE 1/4 of Section 1, Township 3 South, Range 15 East, Columbia County, Florida, more particularly described as follows: COMMENCE at the NE Corner of the NW 1/4 of said Section 1 and run S.89°59'44"E., 443.62 feet along the North line of said Section 1; thence S.00°57'04"W., 268.13 feet along the East line of the Westerly 1/3 of the NW 1/4 of the NE 1/4 of said Section 1 to the POINT OF BEGINNING; thence continue S.00°57'04"W., 389.28 feet along said East line; thence S.51°44'16"W., 865.13 feet to a point on the Northeasterly Maintained Right-of-Way line of Lower Springs Road; thence N.39°31'47"W., 285.18 feet along said Right-of-Way line; thence N.51°44'16"E., 904.92 feet to the POINT OF BEGINNING.

AND ALSO

PARCEL B
O.R.B. 1104, PG. 577
A part of the Northwest 1/4 of the Northwest 1/4 and the Northwest 1/4 of the Northeast 1/4 of Section 1, Township 3 South, Range 15 East, Columbia County, Florida, more particularly described as follows: COMMENCE at the Northeast corner of the Northwest 1/4 of said Section 1, and run South 89°59'44" East, 416.69 feet along the North line of said Section 1, to the POINT OF BEGINNING; thence continue South 89°59'44" East, 26.73 feet, along the North line of said Section 1; thence South 00°57'04" West, 268.13 feet along the East line of the Westerly 1/3 of the Northwest 1/4 of the Northeast 1/4 of said Section 1; thence South 51°44'16" West, 904.92 feet to a point on the Northeasterly maintained right of way line of Lower Springs Road; thence North 39°31'47" West, 224.36 feet along said Northeasterly right of way; thence North 51°59'44" East, 1,058.41 feet to the POINT OF BEGINNING.

NOTES:

1.) Monumentation is as shown and designated on the face of the plat.

2.) Boundary based on monumentation found in place, descriptions furnished by client, prior survey by J. Sherman Frier, PLS, and prior survey by Company.

3.) Bearings projected from East property line and based on above referenced description furnished by client.

4.) Interior improvements, if present, were not located with this survey.

5.) Underground encroachments, if present, were not located with this survey.

6.) This survey was made without benefit of a title search. There may be additional easements, restrictions, etc. not shown hereon but found in the Public Records Issues regarding title, land use & zoning, easements & other encumberances are not a part of the scope of a Boundary Survey and can only be revealed with a title search.

7.) Date of field survey completion: April 23, 2010

8.) Examination of the Flood Insurance Rate Maps (FIRM) for Columbia County shows that, per said maps, the described parcel lies within Flood Zone "X", which according to said maps is outside of the 0.2% chance floodplain (ref: Map No. 12023C0170C).

9.) AT&T Easement, recorded in O.R. Book 615, Page 26, of the Public Records of Columbia County, Florida, does not affect this parcel of land, as the description states that the 18.5' easement is adjacent to Interstate Highway No. 10. An AT&T marker and flags were found, however, along NW Lower Springs Road. Said marker indicates a 18.5' easement here, but we do not believe that the above mentioned O.R. Book 615, page 26, represents it. Said AT&T line is shown on the plat.

10) The parcel's parent tract is subject to a "blanket" easement to Suwannee Valley Electric Cooperative (O.R. Book 849, Page 2383) indicating a 20' easement along all constructed power lines.

CERTIFIED TO: Justin Troy Land
First Federal Bank of Florida
North Central Florida Title
Old Republic National Title Insurance Company

CAD FILE: 5816.DWG

NOT VALID WITHOUT THE SIGNATURE AND ORIGINAL RAISED SEAL OF A FLORIDA REGISTERED PROFESSIONAL SURVEYOR AND MAPPER

Timothy A. Delbene, P.L.S.
Florida Reg. No. 5594
DATE: 5/11/2010

REVISED: 05/11/2010 Legal Updated & Surveyor's Note removed.

Donald F. Lee and Associates, Inc.
SURVEYORS - ENGINEERS
140 Northwest Ridgewood Avenue, Lake City, Florida 32055
Phone: (386) 755-6166 FAX: (386) 755-6167
Certificate of Authorization # LB 7042

Date: 04/23/2010	TROY LAND	Scale: 1"=60'
Drafting: A V G		Field Book: 09-560
Computations: A V G		Work Order: 09-5816
Checked: T A D.		File: 8-26-42

This Instrument Prepared by & return to:
Name: ***TRISH LANG, an employee of NORTH CENTRAL FLORIDA TITLE, LLC***
Address: ***343 NW COLE TERRACE, SUITE 101 LAKE CITY, FLORIDA 32055***
File No. 10Y-04011TL

Inst:201012014130 Date:9/1/2010 Time:11:25 AM
Doc Stamp-Deed:0.70
DC,P.DeWitt Cason,Columbia County Page 1 of 2 B:1200 P:1620

Parcel I.D. #: ***00127-008 & 009***

SPACE ABOVE THIS LINE FOR PROCESSINGDATA | *SPACE ABOVE THIS LINE FOR RECORDING DATA*

THIS WARRANTY DEED *Made the 1ST day of* ***SEPTEMBER, A.D. 2010, by JUSTIN TROY LAND, A SINGLE PERSON,*** *hereinafter called the grantor, to* ***JUSTIN TROY LAND, A SINGLE PERSON,*** *whose post office address is* ***13508 120TH STREET, LIVE OAK, FLORDIA 32060,*** *hereinafter called the grantee*

(Wherever used herein the terms "grantor" and "grantee" include all the parties to this instrument, singular and plural, the heirs, legal representatives and assigns of individuals, ad the successors and assigns of corporations, wherever the context so admits or requires.)

Witnesseth: *That the grantor, for and in consideration of the sum of $10.00 and other valuable consideration, receipt whereof is hereby acknowledged, does hereby grant, bargain, sell, alien, remise, release, convey and confirm unto the grantee all that certain land situate in* ***Columbia County, State of Florida,*** *viz:*

PARCEL A
A PART OF THE NE ¼ OF NW ¼ AND THE NW ¼ OF NE ¼ OF SECTION 1, TOWNSHIP 3 SOUTH, RANGE 15 EAST, COLUMBIA COUNTY, FLORIDA, MORE PARTICULARLY DESCRIBED AS FOLLOWS: COMMENCE AT THE NE CORNER OF THE NW ¼ OF SAID SECTION 1, AND RUN S 89°59'44" E, 443.62 FEET ALONG THE NORTH LINE OF SAID SECTION 1; THENCE S 00°57'04" W, 268.13 FEET ALONG THE EAST LINE OF THE WESTERLY 1/3 OF THE NW ¼ OF NE ¼ OF SAID SECTION 1 TO THE POINT OF BEGINNING; THENCE CONTINUE S 00°57'04" W, 369.28 FEET ALONG SAID EAST LINE; THENCE S 51°44'16" W, 665.13 FEET TO A POINT ON THE NORTHEASTERLY MAINTAINED RIGHT OF WAY LINE OF LOWER SPRINGS ROAD; THENCE N 39°31'47" W, 286.18 FEET ALONG SAID RIGHT OF WAY LINE; THENCE N 51°44'16" E, 904.92 FEET TO THE POINT OF BEGINNING.

AND ALSO

PARCEL B
A PART OF THE NORTHEAST ¼ OF THE NORTHWEST ¼ AND THE NORTHWEST ¼ OF THE NORTHEAST ¼ OF SECTION 1, TOWNSHIP 3 SOUTH, RANGE 15 EAST, COLUMBIA COUNTY, FLORIDA, MORE PARTICULARLY DESCRIBED AS FOLLOWS: COMMENCE AT THE NORTHEAST CORNER OF THE NORTHWEST ¼ OF SAID SECTION 1, AND RUN SOUTH 89°59'44" EAST, 416.89 FEET ALONG THE NORTH LINE OF SAID SECTION 1 TO THE POINT OF BEGINNING; THENCE CONTINUE SOUTH 89°59'44" EAST, 26.73 FEET ALONG THE NORTH LINE OF SAID SECTION 1; THENCE SOUTH 00°57'04" WEST, 268.13 FEET ALONG THE EAST LINE OF THE WESTERLY 1/3 OF THE NORTHWEST ¼ OF THE NORTHEAST ¼ OF SAID SECTION 1; THENCE SOUTH 51°44'16" WEST, 904.92 FEET TO A POINT ON THE NORTHEASTERLY MAINTAINED RIGHT OF WAY LINE OF LOWER SPRINGS ROAD; THENCE NORTH 39°31'47" WEST, 224.36 FEET ALONG SAID NORTHEASTERLY RIGHT OF WAY; THENCE NORTH 51°59'44" EAST, 1,058.41 FEET TO THE POINT OF BEGINNING.

Together *with all the tenements, hereditaments and appurtenances thereto belonging or in anywise appertaining.*

To Have and to Hold *the same in fee simple forever.*

And *the grantor hereby covenants with said grantee that he is lawfully seized of said land in fee simple; that he has good right and lawful authority to sell and convey said land, and hereby fully warrants the title to said land and will defend the same against the lawful claims of all persons whomsoever, and that said land is free of all encumbrances, except taxes accruing subsequent to December 31,2009.*

In Witness Whereof, *the said grantor has signed and sealed these presents, the day and year first above written.*

Signed, sealed and delivered in the presence of:

Witness Signature Regina Simpkins

Printed Name

Witness Signature PATRICIA LANG

Printed Name

JUSTIN TROY LAND *L.S.*
Address: 13508 120TH STREET, LIVE OAK, FLORIDA 32060

STATE OF FLORIDA
COUNTY OF COLUMBIA

The foregoing instrument was acknowledged before me this ***1ST*** *day of* ***SEPTEMBER, 2010****, by* ***JUSTIN TROY LAND****, who is known to me or who has produced* Driver's License *as identification.*

Notary Public Regina Simpkins
My commission expires 1-4-13

REGINA SIMPKINS
MY COMMISSION # DD848716
EXPIRES January 04, 2013
(407) 398-0153 FloridaNotaryService.com

COLUMBIA COUNTY 9-1-1 ADDRESSING

P. O. Box 1787, Lake City, FL 32056-1787
PHONE: (386) 758-1125 • FAX: (386) 758-1365 • Email: ron croft@columbiacountyfla.com

Addressing Maintenance

To maintain the Countywide Addressing Policy you must make application for a 9-1-1 Address at the time you apply for a building permit. The established standards for assigning and posting numbers to all principal buildings, dwellings, businesses and industries are contained in Columbia County Ordinance 2001-9. The addressing system is to enable Emergency Service Agencies to locate you in an emergency, and to assist the United States Postal Service and the public in the timely and efficient provision of services to residents and businesses of Columbia County.

DATE REQUESTED: 7/29/2010 **DATE ISSUED:** 8/2/2010

ENHANCED 9-1-1 ADDRESS:

787 NW LOWER SPRINGS RD

LAKE CITY FL 32055

PROPERTY APPRAISER PARCEL NUMBER:

01-3S-15-00127-009

Remarks:

Address Issued By: _____
Columbia County 9-1-1 Addressing / GIS Department

NOTICE: THIS ADDRESS WAS ISSUED BASED ON LOCATION INFORMATION RECEIVED FROM THE REQUESTER. SHOULD, AT A LATER DATE, THE LOCATION INFORMATION BE FOUND TO BE IN ERROR, THIS ADDRESS IS SUBJECT TO CHANGE.

1786

THIS INSTRUMENT PREPARED BY
AND RETURN TO:
NORTH CENTRAL FLORIDA TITLE, LLC
343 NW COLE TERRACE
SUITE 101
LAKE CITY, FLORIDA 32055

Parcel I.D. #: ***00127-008 & 009***
Permit No.

SPACE ABOVE THIS LINE FOR PROCESSING DATA — *SPACE ABOVE THIS LINE FOR RECORDING DATA*

NOTICE OF COMMENCEMENT

STATE OF FLORIDA
COUNTY OF COLUMBIA

THE UNDERSIGNED hereby gives notice that improvement will be made to certain real property, and in accordance with Chapter 713, Florida Statutes, the following information is provided in this Notice of Commencement. This Notice shall be void and of no force and effect if construction is not commenced within ninety (90) days after recordation.

1. Description of property: (Legal description of property, and street address if available)

TBD NW LOWER SPRINGS ROAD, LAKE CITY, FLORIDA 32055
PARCEL A
A PART OF THE NE ¼ OF NW ¼ AND THE NW ¼ OF NE ¼ OF SECTION 1, TOWNSHIP 3 SOUTH, RANGE 15 EAST, COLUMBIA COUNTY, FLORIDA, MORE PARTICULARLY DESCRIBED AS FOLLOWS: COMMENCE AT THE NE CORNER OF THE NW ¼ OF SAID SECTION 1, AND RUN S 89°59'44" E, 443.62 FEET ALONG THE NORTH LINE OF SAID SECTION 1; THENCE S 00°57'04" W, 268.13 FEET ALONG THE EAST LINE OF THE WESTERLY 1/3 OF THE NW ¼ OF NE ¼ OF SAID SECTION 1 TO THE POINT OF BEGINNING; THENCE CONTINUE S 00°57'04" W, 369.28 FEET ALONG SAID EAST LINE; THENCE S 51°44'16" W, 665.13 FEET TO A POINT ON THE NORTHEASTERLY MAINTAINED RIGHT OF WAY LINE OF LOWER SPRINGS ROAD; THENCE N 39°31'47" W, 286.18 FEET ALONG SAID RIGHT OF WAY LINE; THENCE N 51°44'16" E, 904.92 FEET TO THE POINT OF BEGINNING.

AND ALSO

PARCEL B
A PART OF THE NORTHEAST ¼ OF THE NORTHWEST ¼ AND THE NORTHWEST ¼ OF THE NORTHEAST ¼ OF SECTION 1, TOWNSHIP 3 SOUTH, RANGE 15 EAST, COLUMBIA COUNTY, FLORIDA, MORE PARTICULARLY DESCRIBED AS FOLLOWS: COMMENCE AT THE NORTHEAST CORNER OF THE NORTHWEST ¼ OF SAID SECTION 1, AND RUN SOUTH 89°59'44" EAST, 416.89 FEET ALONG THE NORTH LINE OF SAID SECTION 1 TO THE POINT OF BEGINNING; THENCE CONTINUE SOUTH 89°59'44" EAST, 26.73 FEET ALONG THE NORTH LINE OF SAID SECTION 1; THENCE SOUTH 00°57'04" WEST, 268.13 FEET ALONG THE EAST LINE OF THE WESTERLY 1/3 OF THE NORTHWEST ¼ OF THE NORTHEAST ¼ OF SAID SECTION 1; THENCE SOUTH 51°44'16" WEST, 904.92 FEET TO A POINT ON THE NORTHEASTERLY MAINTAINED RIGHT OF WAY LINE OF LOWER SPRINGS ROAD; THENCE NORTH 39°31'47" WEST, 224.36 FEET ALONG SAID NORTHEASTERLY RIGHT OF WAY; THENCE NORTH 51°59'44" EAST, 1,058.41 FEET TO THE POINT OF BEGINNING.

2. General description of improvement: **CONSTRUCTION OF A SINGLE FAMILY DWELLING**

3. Owner information:
   a. Name and address:
      JUSTIN TROY LAND
      13508 120TH STREET, LIVE OAK, FLORIDA 32060
   b. Interest in property: **Fee Simple**
   c. Name and Address of Fee Simple Titleholder (if other than owner):

4. Contractor: (Name and Address)
   SKYLINE HOMES, INC.
   120 SW SMITH LANE, LAKE CITY, FLORIDA 32024
   Telephone Number: 386-867-1499

5. Surety (if any):
   a. Name and Address:
      Telephone Number: _____
   b. Amount of Bond $_____

6. Lender: (Name and Address)
   FIRST FEDERAL BANK OF FLORIDA
   4705 WEST U.S. HWY 90, P.O. BOX 2029, LAKE CITY, FL 32056
   Telephone Number: 755-0600

Telephone Number: 755-0600

7. Persons within the State of Florida designated by Owner upon whom notice or other documents may be served as provided by Section 713.13(1)(a)(7), Florida Statutes: (Name and Address)
N/A

8. In addition to himself, Owner designates the following person(s) to receive a copy of the Lienor's Notice as provided in Section 713.13(1)(b), Florida Statutes: (Name and Address)
FIRST FEDERAL BANK OF FLORIDA
4705 WEST U.S. HWY 90, P.O. BOX 2029, LAKE CITY, FL 32056
Telephone Number: 755-0600

9. Expiration date of Notice of Commencement (the expiration date is 1 year from the date of recording unless a different date is specified) _____.

WARNING TO OWNER: ANY PAYMENTS MADE BY THE OWNER AFTER THE EXPIRATION OF THE NOTICE OF COMMENCEMENT ARE CONSIDERED IMPROPER PAYMENTS UNDER CHAPTER 713, PART I, SECTION 713.13, FLORIDA STATUTES, AND CAN RESULT IN YOUR PAYING TWICE FOR IMPROVEMENTS TO YOUR PROPERTY. A NOTICE OF COMMENCEMENT MUST BE RECORDED AND POSTED ON THE JOB SITE BEFORE THE FIRST INSPECTION. IF YOU INTEND TO OBTAIN FINANCING, CONSULT WITH YOUR LENDER OR AN ATTORNEY BEFORE COMMENCING WORK OR RECORDING YOUR NOTICE OF COMMENCEMENT.

Signature of Owner(s) or Owner's Authorized Officer/Director/Partner/Manager:

_____{SEAL} _____{SEAL}
JUSTIN TROY LAND

The foregoing instrument was acknowledged before me this **13th** day of **July, 2010**, by **JUSTIN TROY LAND**, who is personally known to me or who has produced _____ as identification.

Notary Public
My Commission Expires: 12-14-10

PATRICIA H. LANG
Commission DD 622516
Expires December 14, 2010
Bonded Thru Troy Fain Insurance 800-385-7019

STATE OF FLORIDA
DEPARTMENT OF HEALTH
ONSITE SEWAGE TREATMENT AND DISPOSAL SYSTEM

PERMIT #: 12-SC-1279901
APPLICATION #: AP979474
DATE PAID: 9/21/10
FEE PAID: 310.00
RECEIPT #: 1494738
DOCUMENT #: PR823980

CONSTRUCTION PERMIT FOR: OSTDS New

APPLICANT: TROY""10-0441 LAND

PROPERTY ADDRESS: LOWER SPRINGS Rd Lake City, FL 32055

LOT: _____ BLOCK: _____ SUBDIVISION: _____

PROPERTY ID #: 00127-008/009 [SECTION, TOWNSHIP, RANGE, PARCEL NUMBER] [OR TAX ID NUMBER]

SYSTEM MUST BE CONSTRUCTED IN ACCORDANCE WITH SPECIFICATIONS AND STANDARDS OF SECTION 381.0065, F.S., AND CHAPTER 64E-6, F.A.C. DEPARTMENT APPROVAL OF SYSTEM DOES NOT GUARANTEE SATISFACTORY PERFORMANCE FOR ANY SPECIFIC PERIOD OF TIME. ANY CHANGE IN MATERIAL FACTS, WHICH SERVED AS A BASIS FOR ISSUANCE OF THIS PERMIT, REQUIRE THE APPLICANT TO MODIFY THE PERMIT APPLICATION. SUCH MODIFICATIONS MAY RESULT IN THIS PERMIT BEING MADE NULL AND VOID. ISSUANCE OF THIS PERMIT DOES NOT EXEMPT THE APPLICANT FROM COMPLIANCE WITH OTHER FEDERAL, STATE, OR LOCAL PERMITTING REQUIRED FOR DEVELOPMENT OF THIS PROPERTY.

SYSTEM DESIGN AND SPECIFICATIONS

T [900] GALLONS / GPD Septic CAPACITY
A [ ] GALLONS / GPD N/A CAPACITY
N [ ] GALLONS GREASE INTERCEPTOR CAPACITY [MAXIMUM CAPACITY SINGLE TANK:1250 GALLONS]
K [ ] GALLONS DOSING TANK CAPACITY [ ]GALLONS @[ ]DOSES PER 24 HRS #Pumps [ ]

D [375] SQUARE FEET Drainfield SYSTEM
R [ ] SQUARE FEET N/A SYSTEM
A TYPE SYSTEM: [X] STANDARD [ ] FILLED [ ] MOUND [ ]
I CONFIGURATION: [X] TRENCH [ ] BED [ ]
N
F LOCATION OF BENCHMARK: Nail in 6" post South of system site.
I ELEVATION OF PROPOSED SYSTEM SITE [60.00] [INCHES / FT] [ABOVE / BELOW] BENCHMARK/REFERENCE POINT
E BOTTOM OF DRAINFIELD TO BE [84.00] [INCHES / FT] [ABOVE / BELOW] BENCHMARK/REFERENCE POINT
L
D FILL REQUIRED: [0.00] INCHES EXCAVATION REQUIRED: [0.00] INCHES

O The licensed contractor installing the system is responsible for installing the minimum category of tank in accordance with s. 64E-6.013(3)(f), FAC.
T
H
E
R

SPECIFICATIONS BY: PAUL LLOYD TITLE: PSE

APPROVED BY: Jeremy K Gifford TITLE: Environmental Specialist I Columbia CHD

DATE ISSUED: 10/08/2010 EXPIRATION DATE: 04/08/2012

DH 4016, 08/09 (Obsoletes all previous editions which may not be used)
Incorporated: 64E-6.003, FAC

v 1.1.4 AP979474 SE827156

SF

New Construction Subterranean Termite Service Record

OMB Approval No. 2502-0525
(exp. 02/29/2012)

This form is completed by the licensed Pest Control Company. 28976

Public reporting burden for this collection of information is estimated to average 15 minutes per response, including the time for reviewing instructions, searching existing data sources, gathering and maintaining the data needed, and completing and reviewing the collection of information. This information is required to obtain benefits. HUD may not collect this information, and you are not required to complete this form, unless it displays a currently valid OMB control number.
Section 24 CFR 200.926d(b)(3) requires that the sites for HUD insured structures must be free of termite hazards. This information collection requires the builder to certify that an authorized Pest Control company performed all required treatment for termites, and that the builder guarantees the treated area against infestation for one year. Builders, pest control companies, mortgage lenders, homebuyers, and HUD as a record of treatment for specific homes will use the information collected. The information is not considered confidential, therefore, no assurance of confidentiality is provided.

This report is submitted for informational purposes to the builder on proposed (new) construction cases when treatment for prevention of subterranean termite infestation is specified by the builder, architect, or required by the lender, architect, FHA, or VA.

All contracts for services are between the Pest Control Company and builder, unless stated otherwise.

Section 1: General Information (Pest Control Company Information)

Company Name Aspen Pest Control, Inc.
Company Address P.O. Box 1795 City Lake City State FL Zip 32056
Company Business License No. JB109476 Company Phone No. 386-755-3611
FHA/VA Case No. (if any)

Section 2: Builder Information

Company Name Skyline Homes Phone No. 867-1499

Section 3: Property Information

Location of Structure(s) Treated (Street Address or Legal Description, City, State and Zip) Troy Justin Land
787 NW Lower Springs Rd Lake City, Fl 32055

Section 4: Service Information

Date(s) of Service(s) 12-1-2010
Type of Construction (More than one box may be checked) ☒ Slab ☐ Basement ☐ Crawl ☐ Other

Check all that apply:

☒ A. Soil Applied Liquid Termiticide
Brand Name of Termiticide: Maxx-Thor EPA Registration No. 83923-6
Approx. Dilution (%): .06 Approx. Total Gallons Mix Applied: 400 Treatment completed on exterior: ☐ Yes ☒ No

☐ B. Wood Applied Liquid Termiticide
Brand Name of Termiticide: EPA Registration No.
Approx. Dilution (%): Approx. Total Gallons Mix Applied:

☐ C. Bait System Installed
Name of System EPA Registration No. Number of Stations Installed

☐ D. Physical Barrier System Installed
Name of System Attach installation information (required)

Service Agreement Available? ☒ Yes ☐ No
Note: Some state laws require service agreements to be issued. This form does not preempt state law.

Attachments (List)

Comments

Name of Applicator(s) C. Lacey Certification No. (if required by State law) JF104376

The applicator has used a product in accordance with the product label and state requirements. All materials and methods used comply with state and federal regulations.

Authorized Signature [signature] Date 12-1-2010

Warning: HUD will prosecute false claims and statements. Conviction may result in criminal and/or civil penalties. (18 U.S.C. 1001, 1010. 1012; 31 U.S.C. 3729, 3802)

"REVISED"

SUBCONTRACTOR VERIFICATION FORM

APPLICATION NUMBER Permit 28976 CONTRACTOR Joel Phinney PHONE 386-867-1499

THIS FORM MUST BE SUBMITTED PRIOR TO THE ISSUANCE OF A PERMIT

In Columbia County one permit will cover all trades doing work at the permitted site. It is REQUIRED that we have records of the subcontractors who actually did the trade specific work under the permit. Per Florida Statute 440 and Ordinance 89-6, a contractor shall require all subcontractors to provide evidence of workers' compensation or exemption, general liability insurance and a valid Certificate of Competency license in Columbia County.

Any changes, the permitted contractor is responsible for the corrected form being submitted to this office prior to the start of that subcontractor beginning any work. Violations will result in stop work orders and/or fines.

ELECTRICAL	Print Name License #:	Signature Phone #:
MECHANICAL/ A/C _____	Print Name License #:	Signature Phone #:
PLUMBING/ GAS	Print Name License #:	Signature Phone #:
ROOFING 1095 ✓	Print Name ANTHONY SULLIVAN License #: CCC1326357/CBC1252724	Signature Phone #: 386-362-2541
SHEET METAL 1096 ✓	Print Name ANTHONY SULLIVAN License #: CCC1326357/CBC1262724	Signature Phone #: 362-2541
FIRE SYSTEM/ SPRINKLER	Print Name License#:	Signature Phone #:
SOLAR	Print Name License #:	Signature Phone #:

Specialty License	License Number	Sub-Contractors Printed Name	Sub-Contractors Signature
MASON			
CONCRETE FINISHER			
FRAMING			
INSULATION			
STUCCO			
DRYWALL			
PLASTER			
CABINET INSTALLER			
PAINTING			
ACOUSTICAL CEILING			
GLASS			
CERAMIC TILE			
FLOOR COVERING			
ALUM/VINYL SIDING			
GARAGE DOOR			
METAL BLDG ERECTOR			

F. S. 440.103 Building permits; identification of minimum premium policy.--Every employer shall, as a condition to applying for and receiving a building permit, show proof and certify to the permit issuer that it has secured compensation for its employees under this chapter as provided in ss. 440.10 and 440.38, and shall be presented each time the employer applies for a building permit.

Contractor Forms: Subcontractor forms 6/00

PERMIT

SUBCONTRACTOR VERIFICATION FORM

NUMBER 28976 CONTRACTOR JOEL HINNEY PHONE 867-1499

THIS FORM MUST BE SUBMITTED PRIOR TO THE ISSUANCE OF A PERMIT

In Columbia County one permit will cover all trades doing work at the permitted site. It is REQUIRED that we have records of the subcontractors who actually did the trade specific work under the permit. Per Florida Statute 440 and Ordinance 89-6, a contractor shall require all subcontractors to provide evidence of workers' compensation or exemption, general liability insurance and a valid Certificate of Competency license in Columbia County.

Any changes, the permitted contractor is responsible for the corrected form being submitted to this office prior to the start of that subcontractor beginning any work. Violations will result in stop work orders and/or fines.

ELECTRICAL	Print Name License #:	Signature Phone #:
MECHANICAL/ A/C	Print Name Glenn I Jones Inc License #: CACO 51486	Signature Phone #: 386-752-5389
PLUMBING/ GAS	Print Name License #:	Signature Phone #:
ROOFING	Print Name License #:	Signature Phone #:
SHEET METAL	Print Name License #:	Signature Phone #:
FIRE SYSTEM/ SPRINKLER	Print Name License#:	Signature Phone #:
SOLAR	Print Name License #:	Signature Phone #:

JAN 18 2011

Specialty License	License Number	Sub Contractors Printed Name	Sub-Contractors Signature
MASON			
CONCRETE FINISHER			
FRAMING			
INSULATION			
STUCCO			
DRYWALL			
PLASTER			
CABINET INSTALLER			
PAINTING			
ACOUSTICAL CEILING			
GLASS			
CERAMIC TILE			
FLOOR COVERING			
ALUM/VINYL SIDING			
GARAGE DOOR			
METAL BLDG ERECTOR			

F. S. 440.103 Building permits; identification of minimum premium policy.--Every employer shall, as a condition to applying for and receiving a building permit, show proof and certify to the permit issuer that it has secured compensation for its employees under this chapter as provided in ss. 440.10 and 440.38, and shall be presented each time the employer applies for a building permit.

Permit

SUBCONTRACTOR VERIFICATION FORM

APPLICATION NUMBER 28976 CONTRACTOR Joel Phinney PHONE 386 867-1499

THIS FORM MUST BE SUBMITTED PRIOR TO THE ISSUANCE OF A PERMIT

In Columbia County one permit will cover all trades doing work at the permitted site. It is REQUIRED that we have records of the subcontractors who actually did the trade specific work under the permit. Per Florida Statute 440 and Ordinance 89-6, a contractor shall require all subcontractors to provide evidence of workers' compensation or exemption, general liability insurance and a valid Certificate of Competency license in Columbia County.

Any changes, the permitted contractor is responsible for the corrected form being submitted to this office prior to the start of that subcontractor beginning any work. Violations will result in stop work orders and/or fines.

ELECTRICAL	Print Name_____ License #:	Signature_____ Phone #:
MECHANICAL/ A/C _____	Print Name_____ License #:	Signature_____ Phone #:
PLUMBING/ GAS	Print Name_____ License #:	Signature_____ Phone #:
ROOFING	Print Name_____ License #:	Signature_____ Phone #:
SHEET METAL	Print Name_____ License #:	Signature_____ Phone #:
FIRE SYSTEM/ SPRINKLER	Print Name_____ License#:	Signature_____ Phone #:
SOLAR	Print Name_____ License #:	Signature_____ Phone #:

Specialty License	License Number	Sub-Contractors Printed Name	Sub-Contractors Signature
MASON			
CONCRETE FINISHER			
FRAMING			
INSULATION			
STUCCO			
DRYWALL			
PLASTER			
CABINET INSTALLER			
PAINTING			
ACOUSTICAL CEILING			
GLASS			
CERAMIC TILE ✓	1044	Amos Rimert LLC	[illegible]
FLOOR COVERING			
ALUM/VINYL SIDING			
GARAGE DOOR			
METAL BLDG ERECTOR			

F. S. 440.103 Building permits; identification of minimum premium policy.--Every employer shall, as a condition to applying for and receiving a building permit, show proof and certify to the permit issuer that it has secured compensation for its employees under this chapter as provided in ss. 440.10 and 440.38, and shall be presented each time the employer applies for a building permit.

Permit 28976

SUBCONTRACTOR VERIFICATION FORM

APPLICATION NUMBER _____ CONTRACTOR Joe Phinney PHONE 386-867-1499

THIS FORM MUST BE SUBMITTED PRIOR TO THE ISSUANCE OF A PERMIT

In Columbia County one permit will cover all trades doing work at the permitted site. It is REQUIRED that we have records of the subcontractors who actually did the trade specific work under the permit. Per Florida Statute 440 and Ordinance 89-6, a contractor shall require all subcontractors to provide evidence of workers' compensation or exemption, general liability insurance and a valid Certificate of Competency license in Columbia County.

Any changes, the permitted contractor is responsible for the corrected form being submitted to this office prior to the start of that subcontractor beginning any work. Violations will result in stop work orders and/or fines.

ELECTRICAL	Print Name _____ License #:	Signature _____ Phone #:
MECHANICAL/ A/C _____	Print Name _____ License #:	Signature _____ Phone #:
PLUMBING/ GAS	Print Name _____ License #:	Signature _____ Phone #:
ROOFING	Print Name _____ License #:	Signature _____ Phone #:
SHEET METAL	Print Name _____ License #:	Signature _____ Phone #:
FIRE SYSTEM/ SPRINKLER	Print Name _____ License#:	Signature _____ Phone #:
SOLAR	Print Name _____ License #:	Signature _____ Phone #:

Specialty License	License Number	Sub-Contractors Printed Name	Sub-Contractors Signature
MASON			
CONCRETE FINISHER			
FRAMING			
INSULATION	000957	Patsy Bowen	Patsy Bowen
STUCCO			
DRYWALL			
PLASTER			
CABINET INSTALLER			
PAINTING			
ACOUSTICAL CEILING			
GLASS			
CERAMIC TILE			
FLOOR COVERING			
ALUM/VINYL SIDING			
GARAGE DOOR			
METAL BLDG ERECTOR			

FEB 15 2011

F. S. 440.103 Building permits; identification of minimum premium policy.--Every employer shall, as a condition to applying for and receiving a building permit, show proof and certify to the permit issuer that it has secured compensation for its employees under this chapter as provided in ss. 440.10 and 440.38, and shall be presented each time the employer applies for a building permit.

CERTIFICATE OF

OCCUPANCY

COLUMBIA COUNTY, FLORIDA

Department of Building and Zoning Inspection

This Certificate of Occupancy is issued to the below named permit holder for the building and premises at the below named location, and certifies that the work has been completed in accordance with the Columbia County Building Code.

Parcel Number 01-3S-15-00127-009 **Building permit No.** 000028976

Use Classification SFD, UTILITY **Fire:** 25.68

Permit Holder JOEL PHINNEY **Waste:** 67.00

Owner of Building TROY JUSTIN LAND **Total:** 92.68

Location: 787 NW LOWER SPRINGS ROAD, LAKE CITY, FL 32055

Date: 06/30/2011

Building Inspector

POST IN A CONSPICUOUS PLACE
(Business Places Only)

Attn. Connie "Rush"

Columbia County Building Department
Culvert Waiver

Culvert Waiver No. 000001854

DATE: 06/28/2011 BUILDING PERMIT NO. 28976

APPLICANT JOEL PHINNEY PHONE 867-1499

ADDRESS 120 SW SMITH LN LAKE CITY FL 32024

OWNER TROY JUSTIN LAND PHONE 386-590-1744

ADDRESS 787 NW LOWER SPRINGS RD LAKE CITY FL 32055

CONTRACTOR JOEL PHINNEY PHONE 867-1499

LOCATION OF PROPERTY 90 WEST, R LAKE JEFFERY RD, R LOWER SPRINGS RD, 3/4 MILE ON RIGHT JUST PAST SAULSBY GLN ON RIGHT.

SUBDIVISION/LOT/BLOCK/PHASE/UNIT

PARCEL ID # 01-3S-15-00127-009

I HEREBY CERTIFY THAT I UNDERSTAND AND WILL FULLY COMPLY WITH THE DECISION OF THE COLUMBIA COUNTY PUBLIC WORKS DEPARTMENT IN CONNECTION WITH THE HEREIN PROPOSED APPLICATION.

SIGNATURE:

A SEPARATE CHECK IS REQUIRED
MAKE CHECKS PAYABLE TO BCC

Amount Paid 50.00

PUBLIC WORKS DEPARTMENT USE ONLY

I HEREBY CERTIFY THAT I HAVE EXAMINED THIS APPLICATION AND DETERMINED THAT THE CULVERT WAIVER IS:

✓ APPROVED ____ NOT APPROVED - NEEDS A CULVERT PERMIT

COMMENTS:

SIGNED: J.M. Wood DATE: 29 June 11

ANY QUESTIONS PLEASE CONTACT THE PUBLIC WORKS DEPARTMENT AT 386-752-5955.

135 NE Hernando Ave., Suite B-21
Lake City, FL 32055
Phone: 386-758-1008 Fax: 386-758-2160

Parel: John Connie 11/2 SN"

Columbia County Building Department
Culvert Waiver

Culvert Waiver No. 000001854

DATE: 06/28/2011 BUILDING PERMIT NO. 28976

APPLICANT JOEL PHINNEY PHONE 867-1499

ADDRESS 120 SW SMITH LN LAKE CITY FL 32024

OWNER TROY JUSTIN LAND PHONE 386-590-1744

ADDRESS 787 NW LOWER SPRINGS RD LAKE CITY FL 32055

CONTRACTOR JOEL PHINNEY PHONE 867-1499

LOCATION OF PROPERTY 90 WEST, R LAKE JEFFERY RD, R LOWER SPRINGS RD, 3/4 MILE ON RIGHT JUST PAST SAULSBY GLN ON RIGHT.

SUBDIVISION/LOT/BLOCK/PHASE/UNIT

PARCEL ID # 01-3S-15-00127-009

I HEREBY CERTIFY THAT I UNDERSTAND AND WILL FULLY COMPLY WITH THE DECISION OF THE COLUMBIA COUNTY PUBLIC WORKS DEPARTMENT IN CONNECTION WITH THE HEREIN PROPOSED APPLICATION.

SIGNATURE:

A SEPARATE CHECK IS REQUIRED
MAKE CHECKS PAYABLE TO BCC

Amount Paid 50.00

PUBLIC WORKS DEPARTMENT USE ONLY

I HEREBY CERTIFY THAT I HAVE EXAMINED THIS APPLICATION AND DETERMINED THAT THE CULVERT WAIVER IS:

_____ APPROVED _____ NOT APPROVED - NEEDS A CULVERT PERMIT

COMMENTS:

SIGNED: DATE:

ANY QUESTIONS PLEASE CONTACT THE PUBLIC WORKS DEPARTMENT AT 386-752-5955.

135 NE Hernando Ave., Suite B-21
Lake City, FL 32055
Phone: 386-758-1008 Fax: 386-758-2160

CertainTeed

#28976

Builders Statement

InsulSafe® SP Fiber Glass Blowing Insulation

Troy Land
Homeowner Name / Jobsite Name

787 NW Lower Springs Rd
Home Address

Thomas
Installer / Contractor (sign) Company Name Date

Builder (sign) Company Name Date

Inspected By (sign if required) Date

OPEN ATTIC APPLICATION

R-VALUE	MINIMUM BAGS PER 1000 SQ. FT.	MAXIMUM NET SQ. FT. PER BAG COVERAGE	MINIMUM WEIGHT–POUNDS PER SQ. FT.	MINIMUM INSTALLED THICKNESS	MINIMUM SETTLED THICKNESS
To obtain a thermal resistance (R) of:	Bags per 1000 sq. ft. of net area:	Contents of bag shall not cover more than: (sq. ft.)	Weight per sq. ft. of installed insulation shall not be less than: (lbs.)	Installed insulation shall not be less than: (in.)	Minimum settled insulation shall not be less than: (in.)
60	31.4	31.9	0.972	22.00	22.00
49	25.2	39.7	0.780	18.50	18.50
44	22.4	44.6	0.695	16.75	16.75
38	19.1	52.5	0.591	14.50	14.50
~~30~~	14.9	67.1	0.462	~~11.75~~	11.75
26	12.8	77.9	0.398	10.25	10.25
22	10.8	92.9	0.334	8.75	8.75
19	9.3	107.4	0.289	7.75	7.75
13	6.2	161.7	0.192	5.25	5.25
11	5.3	190.5	0.163	4.50	4.50

	R-VALUE	THICKNESS	NET AREA (SQ. FT.)	INSULSAFE SP (✓)	BAGS USED	BATTS/ROLLS (✓)
CEILINGS	30	11.75	1730	✓	28	X
WALLS						
FLOORS						

THERMAL PERFORMANCE—ATTIC BLOWING APPLICATION

- In accordance with the chart above, you must install the minimum number of bags per 1,000 sq. ft. of net area for each R-Value listed.
- The maximum net coverage must not exceed that specified for each R-Value.
- The insulation must be installed at or above the specified installed thickness for each R-Value.
- Failure to install the required minimum weight per sq. ft. of insulation at or above the initial installed thickness will result in reduced R-Value.
- This product should not be mixed with other blown insulations or the thermal claims will become invalid.

DANGER: RECESSED LIGHT FIXTURES—TO PREVENT OVERHEATING, DO NOT INSULATE ON TOP OR WITHIN 3" OF SUCH DEVICES. THIS WARNING DOES NOT APPLY TO TYPE IC LIGHT FIXTURES OR TO FLUORESCENT FIXTURES WITH THERMALLY PROTECTED BALLASTS.

COLUMBIA COUNTY BUILDING DEPARTMENT
RESIDENTIAL CHECK LIST REQUIRMENTS

MINIMUM PLAN REQUIREMENTS FOR THE FLORIDA BUILDING CODE RESIDENTIAL 2007 ONE (1) AND TWO (2) FAMILY DWELLINGS

ALL REQUIREMENTS ARE SUBJECT TO CHANGE

ALL BUILDING PLANS MUST INDICATE COMPLIANCE with the Current 2007 FLORIDA BUILDING CODES RESIDENTIAL. ALL PLANS OR DRAWINGS SHALL PROVIDE CALCULATIONS AND DETAILS THAT HAVE THE SEAL AND SIGNATURE OF A CERTIFIED ARCHITECT OR ENGINEER REGISTERED IN THE STATE OF FLORIDA, OR ALTERNATE METHODOLOGIES, APPROVED BY THE STATE OF FLORIDA BUILDING COMMISSION FOR ONE-AND-TWO FAMILY DWELLINGS.

FOR DESIGN PURPOSES THE FOLLOWING BASIC WIND SPEEDS ARE PER FIGURE R301.2(4) of the FLORIDA BUILDING CODES RESIDENTIAL (Florida Wind speed map) **SHALL BE USED.**

WIND SPEED LINE SHALL BE DEFINED AS FOLLOWS: THE CENTERLINE OF INTERSTATE 75.

ALL BUILDINGS CONSTRUCTED EAST OF SAID LINE SHALL BE -------- 100 MPH
ALL BUILDINGS CONSTRUCTED WEST OF SAID LINE SHALL BE --------110 MPH
NO AREA IN COLUMBIA COUNTY IS IN A WIND BORNE DEBRIS REGION

	GENERAL REQUIREMENTS APPLICANT - PLEASE CHECK ALL APPLICABLE BOXES BEFORE SUBMITTAL			Yes	No	N/A
1	Two (2) complete sets of plans containing the following:			✓		
2	All drawings must be clear, concise, drawn to scale, details that are not used shall be marked void			✓		
3	Condition space (Sq. Ft.)		Total (Sq. Ft.) under roof	IIIIIII	IIIIIII	IIIII

Designers name and signature shall be on all documents and a licensed architect or engineer, signature and official embossed seal shall be affixed to the plans and documents as per the FLORIDA BUILDING CODES RESIDENTIAL R101.2.1

Site Plan information including:

4	Dimensions of lot or parcel of land			✓		
5	Dimensions of all building set backs			✓		
6	Location of all other structures (include square footage of structures) on parcel, existing or proposed well and septic tank and all utility easements.			✓		
7	Provide a full legal description of property.			✓		

Wind-load Engineering Summary, calculations and any details required

	GENERAL REQUIREMENTS APPLICANT – PLEASE CHECK ALL APPLICABLE BOXES BEFORE SUBMITTAL	Items to include. Check Box shall be Checked as applicable		
		YES	NO	N/A
8	Plans or specifications must show compliance with FBCR Chapter 3	✓		
9	Basic wind speed (3-second gust), miles per hour			
10	(Wind exposure – if more than one wind exposure is used, the wind exposure and applicable wind direction shall be indicated)	✓		
11	Wind importance factor and nature of occupancy	✓		
12	The applicable internal pressure coefficient, Components and Cladding	✓		
13	The design wind pressure in terms of psf (kN/m²), to be used for the design of exterior component, cladding materials not specifally designed by the registered design professional.			

Elevations Drawing including:

14	All side views of the structure	✓		
15	Roof pitch			
16	Overhang dimensions and detail with attic ventilation			
17	Location, size and height above roof of chimneys			
18	Location and size of skylights with Florida Product Approval	✓		
18	Number of stories	✓		
20A	Building height from the established grade to the roofs highest peak			

Floor Plan including:

20	Dimensioned area plan showing rooms, attached garage, breeze ways, covered porches, deck, balconies			
21	Raised floor surfaces located more than 30 inches above the floor or grade			
22	All exterior and interior shear walls indicated			
23	Shear wall opening shown (Windows, Doors and Garage doors)			
24	Emergency escape and rescue opening shown in each bedroom (net clear opening shown)			
25	Safety glazing of glass where needed			
26	Fireplaces types (gas appliance) (vented or non-vented) or wood burning with Hearth (see chapter 10 of FBCR)	✓		
27	Stairs with dimensions (width, tread and riser and total run) details of guardrails, Handrails (see FBCR SECTION 311)			
28	Identify accessibility of bathroom (see FBCR SECTION 322)			

All materials placed within opening or onto/into exterior walls, soffits or roofs shall have Florida product approval number and mfg. installation information submitted with the p (see Florida product approval form)

GENERAL REQUIREMENTS

APPLICANT - PLEASE CHECK ALL APPLICABLE BOXES BEFORE SUBMITTAL

Items to include: Each box shall be checked as applicable

FBCR 403: Foundation Plans

		YES	NO	N/A
29	Location of all load-bearing walls footings indicated as standard, monolithic, dimensions, size and type of reinforcing.	✓		
30	All posts and/or column footing including size and reinforcing			
31	Any special support required by soil analysis such as piling.			
32	Assumed load-bearing valve of soil _____ Pound Per Square Foot			
33	Location of horizontal and vertical steel, for foundation or walls (include # size and type)			

FBCR 506: CONCRETE SLAB ON GRADE

34	Show Vapor retarder (6mil. Polyethylene with joints lapped 6 inches and sealed)	✓		
35	Show control joints, synthetic fiber reinforcement or welded fire fabric reinforcement and Supports			

FBCR 320: PROTECTION AGAINST TERMITES

36	Indicate on the foundation plan if soil treatment is used for subterranean termite prevention or submit other approved termite protection methods. **Protection shall be provided by registered termiticides**	✓		

FBCR 606: Masonry Walls and Stem walls (load bearing & shear Walls)

37	Show all materials making up walls, wall height, and Block size, mortar type			
38	Show all Lintel sizes, type, spans and tie-beam sizes and spacing of reinforcement			

Metal frame shear wall and roof systems shall be designed, signed and sealed by Florida Prof. Engineer Architect

Floor Framing System: First and/or second story

39	Floor truss package shall including layout and details, signed and sealed by Florida Registered Professional Engineer	✓		
40	Show conventional floor joist type, size, span, spacing and attachment to load bearing walls, stem walls and/or priers			
41	Girder type, size and spacing to load bearing walls, stem wall and/or priers			
42	Attachment of joist to girder			
43	Wind load requirements where applicable			
44	Show required under-floor crawl space			
45	Show required amount of ventilation opening for under-floor spaces			
46	Show required covering of ventilation opening			
47	Show the required access opening to access to under-floor spaces			
	Show the sub-floor structural panel sheathing type, thickness and fastener schedule on the edges &			

48	intermediate of the areas structural panel sheathing			
49	Show Draftstopping, Fire caulking and Fire blocking			
50	Show fireproofing requirements for garages attached to living spaces, per FBCR section 309			
51	Provide live and dead load rating of floor framing systems (psf).			

FBCR CHAPTER 6 WOOD WALL FRAMING CONSTRUCTION

	GENERAL REQUIREMENTS APPLICANT PLEASE CHECK ALL APPLICABLE BOXES BEFORE SUBMITTAL	Items to include Each box should read Yes or Applicable		
		YES	NO	N/A
52	Stud type, grade, size, wall height and oc spacing for all load bearing or shear walls	✓		
53	Fastener schedule for structural members per table FBCR 602.3 are to be shown			
54	Show Wood structural panel's sheathing attachment to studs, joist, trusses, rafters and structural members, showing fastener schedule attachment on the edges & intermediate of the areas structural panel sheathing			
55	Show all required connectors with a max uplift rating and required number of connectors and oc spacing for continuous connection of structural walls to foundation and roof trusses or rafter systems			
56	Show sizes, type, span lengths and required number of support jack studs, king studs for shear wall opening and girder or header per FBCR Table 502.5 (1)			
57	Indicate where pressure treated wood will be placed			
58	Show all wall structural panel sheathing, grade, thickness and show fastener schedule for structural panel sheathing edges & intermediate areas			
59	A detail showing gable truss bracing, wall balloon framing details or/ and wall hinge bracing detail			

FBCR :ROOF SYSTEMS:

60	Truss design drawing shall meet section FBCR 802.10 Wood trusses	✓		
61	Include a layout and truss details, signed and sealed by Florida Professional Engineer			
62	Show types of connector's assemblies' and resistance uplift rating for all trusses and rafters			
63	Show gable ends with rake beams showing reinforcement or gable truss and wall bracing details			
64	Provide dead load rating of trusses			

FBCR 802:Conventional Roof Framing Layout

65	Rafter and ridge beams sizes, span, species and spacing			
66	Connectors to wall assemblies' include assemblies' resistance to uplift rating			
67	Valley framing and support details			
68	Provide dead load rating of rafter system			

FBCR Table 602,3(2) & FBCR 803 ROOF SHEATHING

69	Include all materials which will make up the roof decking, identification of structural panel sheathing, grade, thickness			
70	Show fastener Size and schedule for structural panel sheathing on the edges & intermediate areas			

FBCR ROOF ASSEMBLIES FRC Chapter 9

71	Include all materials which will make up the roof assembles covering			
72	Submit Florida Product Approval numbers for each component of the roof assembles covering			

FBCR Chapter 11 Energy Efficiency Code for residential building

Residential construction shall comply with this code by using the following compliance methods in the FBCR chapter11 Residential buildings compliance methods. *Two of the required forms are to be submitted, showing dimensions condition area equal to the total condition living space area*

	GENERAL REQUIREMENTS APPLICANT PLEASE CHECK ALL APPLICABLE BOXES BEFORE SUBMITTAL	Items to include: Each box shall be checked or marked as applicable		
		YES	NO	N/A
73	Show the insulation R value for the following areas of the structure			
74	Attic space			
75	Exterior wall cavity			
76	Crawl space			

HVAC information

77	Submit two copies of a Manual J sizing equipment or equivalent computation study	✓		
78	Exhaust fans locations in bathrooms			
79	Show clothes dryer route and total run of exhaust duct			

Plumbing Fixture layout shown

80	All fixtures waste water lines shall be shown on the foundation plan	✓		
81	Show the location of water heater			

Private Potable Water

existing well

82	Pump motor horse power			
83	Reservoir pressure tank gallon capacity			
84	Rating of cycle stop valve if used			

Electrical layout shown including

85	Switches, outlets/receptacles, lighting and all required GFCI outlets identified	✓		
86	Ceiling fans			
87	Smoke detectors & Carbon dioxide detectors			
88	Service panel, sub-panel, location(s) and total ampere ratings			
89	On the electrical plans identify the electrical service overcurrent protection device for the main electrical service. This device shall be installed on the exterior of structures to serve as a disconnecting means for the utility company electrical service. Conductors used from the exterior disconnecting means to a panel or sub panel shall have four-wire conductors, of which one conductor shall be used as an equipment ground. Indicate if the utility company service entrance cable will be of the overhead or underground type.			

90	Appliances and HVAC equipment and disconnects			
91	Arc Fault Circuits (AFCI) in bedrooms			

Disclosure Statement for Owner Builders *If you as the applicant will be acting as an owner/builder under section 489.103(7) of the Florida Statutes, submit the required owner builder disclosure statement form.*

Notice Of Commencement

A notice of commencement form **recorded** in the Columbia County Clerk Office is required to be filed with the building department Before Any Inspections can be preformed.

	GENERAL REQUIREMENTS APPLICANT: PLEASE CHECK ALL APPLICABLE BOXES BEFORE SUBMITTAL	Items to include each Box shall be Checked if Applicable

THE FOLLOWING ITEMS MUST BE SUBMITTED WITH BUILDING PLANS

		YES	NO	N/A
92	**Building Permit Application** A current Building Permit Application form is to be completed and submitted for all residential projects	✓		
93	**Parcel Number** The parcel number (Tax ID number) from the Property Appraiser (386) 758-1084 is required. A copy of property deed is also requested	✓		
94	**Environmental Health Permit or Sewer Tap Approval** A copy of a approved Columbia County Environmental Health (386) 758-1058			
95	**City of Lake City** A permit showing an approved waste water sewer tap			
96	**Toilet facilities shall be provided for all construction sites**			
97	**Town of Fort White** (386) 497-2321 If the parcel in the application for building permit is within the Corporate city limits of Fort White an approval land use development letter issued by the Town of Fort is required to be submitted with the application for a building permit.			
98	**Flood Information:** All projects within the Floodway of the Suwannee or Santa Fe Rivers shall require permitting through the Suwannee River Water Management District, before submitting a application to this office. Any project located within a flood zone where the base flood elevation (100 year flood) has been established shall meet the requirements of Section 8.5.2 of the Columbia County Land Development Regulations. Any project located within a flood zone where the base flood elevation has not been established (Zone A) shall meet the requirements of Section 8.5.3 of the Columbia County Land Development Regulations			
99	CERTIFIED FINISHED FLOOR ELEVATIONS will be required on any project where the base flood elevation (100 year flood) has been established			
100	A development permit will also be required. Development permit cost is **$50.00**			
101	**Driveway Connection:** If the property does not have an existing access to a public road, then an application for a culvert permit (**$25.00**) must be made. If the applicant feels that a culvert is not needed, they may apply for a culvert waiver (**$50.00**). All culvert waivers are sent to the Columbia County Public Works Department for approval or denial.			
102	**911 Address:** If the project is located in an area where a 911 address has not been issued, then application for a 911address must be applied for and received through the Columbia County Emergency Management Office of 911 Addressing Department (386) 758-1125	✓		

FORM 1100A-08

FLORIDA ENERGY EFFICIENCY CODE FOR BUILDING CONSTRUCTION

Florida Department of Community Affairs Residential Performance Method A

Project Name:	1007042SkylineConstructionTroyLandResidence	Builder Name:	Skyline Construction
Street:		Permit Office:	28976
City, State, Zip:	Lake City , FL , 32024-	Permit Number:	Columbia County
Owner:	Troy Land	Jurisdiction:	221000
Design Location:	FL, Gainesville		

1. New construction or existing	New (From Plans)
2. Single family or multiple family	Single-family
3. Number of units, if multiple family	1
4. Number of Bedrooms	3
5. Is this a worst case?	Yes
6. Conditioned floor area (ft²)	1911

7. Windows	Description	Area
a. U-Factor:	Dbl, U=0.35	253.00 ft²
SHGC:	SHGC=0.35	
b. U-Factor:	Dbl, U=0.87	36.00 ft²
SHGC:	SHGC=0.66	
c. U-Factor:	N/A	ft²
SHGC:		
d. U-Factor:	N/A	ft²
SHGC:		
e. U-Factor:	N/A	ft²
SHGC:		

8. Floor Types	Insulation	Area
a. Slab-On-Grade Edge Insulation	R=0.0	1911.00 ft²
b. N/A	R=	ft²
c. N/A	R=	ft²

9. Wall Types	Insulation	Area
a. Frame - Wood, Exterior	R=13.0	1804.10 ft²
b. Frame - Wood, Adjacent	R=13.0	402.67 ft²
c. N/A	R=	ft²
d. N/A	R=	ft²

10. Ceiling Types	Insulation	Area
a. Under Attic (Vented)	R=30.0	1911.00 ft²
b. Knee Wall (Vented)	R=30.0	150.00 ft²
c. N/A	R=	ft²

11. Ducts
a. Sup: Attic Ret: Attic AH: Interior Sup. R= 6, 382.2 ft²

12. Cooling systems
a. Central Unit — Cap: 44.0 kBtu/hr, SEER: 13

13. Heating systems
a. Electric Heat Pump — Cap: 44.0 kBtu/hr, HSPF: 7.7

14. Hot water systems
a. Electric — Cap: 40 gallons, EF: 0.92

b. Conservation features
None

15. Credits — None

Glass/Floor Area: 0.151

Total As-Built Modified Loads: 33.31
Total Baseline Loads: 41.41

PASS

I hereby certify that the plans and specifications covered by this calculation are in compliance with the Florida Energy Code.

PREPARED BY:
DATE: 7/23/10 EVAN BEAMSLEY

I hereby certify that this building, as designed, is in compliance with the Florida Energy Code.

OWNER/AGENT:
DATE: 8/2/10

Review of the plans and specifications covered by this calculation indicates compliance with the Florida Energy Code. Before construction is completed this building will be inspected for compliance with Section 553.908 Florida Statutes.

GREAT SEAL OF THE STATE OF FLORIDA — IN GOD WE TRUST

BUILDING OFFICIAL:
DATE:

COLUMBIA COUNTY BUILDING DEPARTMENT — Received for FILE COPY — Code Compliance — PLANS EXAMINER

PROJECT

Title:	1007042SkylineConstructionT	Bedrooms:	3	Adress Type:	Street Address
Building Type:	FLAsBuilt	Conditioned Area:	1911	Lot #	
Owner:	Troy Land	Total Stories:	1	SubDivision:	
# of Units:	1	Worst Case:	Yes	PlatBook:	
Builder Name:	Skyline Construction	Rotate Angle:	90	Street:	
Permit Office:		Cross Ventilation:		County:	Columbia
Jurisdiction:		Whole House Fan:		City, State, Zip:	Lake City , FL , 32024-
Family Type:	Single-family				
New/Existing:	New (From Plans)				
Comment:					

CLIMATE

√	Design Location	TMY Site	IECC Zone	Design Temp 97.5 %	Design Temp 2.5 %	Int Design Temp Winter	Int Design Temp Summer	Heating Degree Days	Design Moisture	Daily Temp Range
____	FL, Gainesville	FL_GAINESVILLE_REGI	2	32	92	75	70	1305.5	51	Medium

FLOORS

√	#	Floor Type	Perimeter	R-Value	Area	Tile	Wood	Carpet
____	1	Slab-On-Grade Edge Insulatio	247 ft	0	1911 ft²	0.3	0.3	0.4

ROOF

√	#	Type	Materials	Roof Area	Gable Area	Roof Color	Solar Absor.	Tested	Deck Insul.	Pitch
____	1	Gable or shed	Composition shingles	2137 ft²	478 ft²	Dark	0.96	No	0	26.6 deg

ATTIC

√	#	Type	Ventilation	Vent Ratio (1 in)	Area	RBS	IRCC
____	1	Full attic	Vented	300	1911 ft²	N	N

CEILING

√	#	Ceiling Type	R-Value	Area	Framing Frac	Truss Type
____	1	Under Attic (Vented)	30	1911 ft²	0.11	Wood
____	2	Knee Wall (Vented)	30	150 ft²	0.11	Wood

WALLS

√	#	Ornt	Adjacent To	Wall Type	Cavity R-Value	Area	Sheathing R-Value	Framing Fraction	Solar Absor.
____	1	N	Exterior	Frame - Wood	13	615 ft²		0.23	0.75
____	2	NW	Exterior	Frame - Wood	13	28.33 ft²		0.23	0.75
____	3	NE	Exterior	Frame - Wood	13	28.33 ft²		0.23	0.75
____	4	E	Exterior	Frame - Wood	13	414.67 ft²		0.23	0.75
____	5	S	Exterior	Frame - Wood	13	467.13 ft²		0.23	0.75
____	6	W	Exterior	Frame - Wood	13	250.67 ft²		0.23	0.75
____	7	S	Garage	Frame - Wood	13	402.67 ft²		0.23	0.01

DOORS

√	#	Ornt	Door Type	Storms	U-Value	Area
____	1	E	Insulated	None	0.400000	6.666666
____	2	N	Insulated	None	0.400000	6.666666
____	3	S	Insulated	None	0.4	6.666666
____	4	S	Insulated	None	0.400000	20 ft²
____	5	S	Insulated	None	0.4	16.66666

WINDOWS

Orientation shown is the entered orientation (=>) changed to Worst Case.

√	#	Ornt	Frame	Panes	NFRC	U-Factor	SHGC	Storms	Area	Overhang Depth	Overhang Separation	Int Shade	Screening
____	1	N=>E	Metal	Low-E Double	Yes	0.87	0.66	N	36 ft²	1 ft 6 in	2 ft 0 in	HERS 2006	None
____	2	NW=>NE	Metal	Low-E Double	Yes	0.35	0.35	N	12 ft²	99 ft 0 in	2 ft 0 in	HERS 2006	None
____	3	N=>E	Metal	Low-E Double	Yes	0.35	0.35	N	24 ft²	9 ft 16 in	2 ft 0 in	HERS 2006	None
____	4	NE=>SE	Metal	Low-E Double	Yes	0.35	0.35	N	12 ft²	14 ft 8 in	2 ft 0 in	HERS 2006	None
____	5	N=>E	Metal	Low-E Double	Yes	0.35	0.35	N	13.33333	11 ft 8 in	2 ft 0 in	HERS 2006	None
____	6	N=>E	Metal	Low-E Double	Yes	0.35	0.35	N	18 ft²	11 ft 8 in	2 ft 0 in	HERS 2006	None
____	7	N=>E	Metal	Low-E Double	Yes	0.35	0.35	N	20 ft²	1 ft 6 in	3 ft 0 in	HERS 2006	None
____	8	E=>S	Metal	Low-E Double	Yes	0.35	0.35	N	40 ft²	0 ft 0 in	0 ft 0 in	HERS 2006	None
____	9	E=>S	Metal	Low-E Double	Yes	0.35	0.35	N	4 ft²	0 ft 0 in	0 ft 0 in	HERS 2006	None
____	10	S=>W	Metal	Low-E Double	Yes	0.35	0.35	N	20 ft²	1 ft 6 in	1 ft 0 in	HERS 2006	None
____	11	S=>W	Metal	Low-E Double	Yes	0.35	0.35	N	36 ft²	9 ft 6 in	2 ft 0 in	HERS 2006	None
____	12	S=>W	Metal	Low-E Double	Yes	0.35	0.35	N	13.33333	9 ft 6 in	2 ft 0 in	HERS 2006	None
____	13	S=>W	Metal	Low-E Double	Yes	0.35	0.35	N	12 ft²	1 ft 6 in	2 ft 0 in	HERS 2006	None
____	14	S=>W	Metal	Low-E Double	Yes	0.35	0.35	N	9 ft²	1 ft 6 in	1 ft 0 in	HERS 2006	None
____	15	W=>N	Metal	Low-E Double	Yes	0.35	0.35	N	6 ft²	1 ft 6 in	1 ft 0 in	HERS 2006	None
____	16	E=>S	Metal	Low-E Double	Yes	0.35	0.35	N	13.33333	99 ft 0 in	2 ft 0 in	HERS 2006	None

INFILTRATION & VENTING

√	Method	SLA	CFM 50	ACH 50	ELA	EqLA	---- Forced Ventilation ---- Supply CFM	Exhaust CFM	Run Time Fraction	Fan Watts
____	Default	0.00036	1805	5.67	99.1	186.3	0 cfm	0 cfm	0	0

GARAGE

√	#	Floor Area	Ceiling Area	Exposed Wall Perimeter	Avg. Wall Height	Exposed Wall Insulation
____	1	457.15 ft²	457.15 ft²	43 ft	8 ft	(invalid)

COOLING SYSTEM

√	#	System Type	Subtype	Efficiency	Capacity	Air Flow	SHR	Ducts
____	1	Central Unit	None	SEER: 13	44 kBtu/hr	1320 cfm	0.75	sys#1

HEATING SYSTEM

√	#	System Type	Subtype	Efficiency	Capacity	Ducts
_____	1	Electric Heat Pump	None	HSPF: 7.7	44 kBtu/hr	sys#1

HOT WATER SYSTEM

√	#	System Type	EF	Cap	Use	SetPnt	Conservation
_____	1	Electric	0.92	40 gal	60 gal	120 deg	None

SOLAR HOT WATER SYSTEM

√	FSEC Cert #	Company Name	System Model #	Collector Model #	Collector Area	Storage Volume	FEF
_____	None	None			ft²		

DUCTS

√	#	---- Supply ---- Location	R-Value	Area	---- Return ---- Location	Area	Leakage Type	Air Handler	CFM 25	Percent Leakage	QN	RLF
_____	1	Attic	6	382.2 ft	Attic	95.55 ft	Default Leakage	Interior	(Default)	(Default) %		

TEMPERATURES

Programable Thermostat: None

Ceiling Fans:

Cooling	[X] Jan	[X] Feb	[X] Mar	[X] Apr	[X] May	[X] Jun	[X] Jul	[X] Aug	[X] Sep	[X] Oct	[X] Nov	[X] Dec
Heating	[X] Jan	[X] Feb	[X] Mar	[X] Apr	[X] May	[X] Jun	[X] Jul	[X] Aug	[X] Sep	[X] Oct	[X] Nov	[X] Dec
Venting	[X] Jan	[X] Feb	[X] Mar	[X] Apr	[X] May	[X] Jun	[X] Jul	[X] Aug	[X] Sep	[X] Oct	[X] Nov	[X] Dec

Thermostat Schedule: HERS 2006 Reference

Schedule Type		Hours 1	2	3	4	5	6	7	8	9	10	11	12
Cooling (WD)	AM	78	78	78	78	78	78	78	78	78	78	78	78
	PM	78	78	78	78	78	78	78	78	78	78	78	78
Cooling (WEH)	AM	78	78	78	78	78	78	78	78	78	78	78	78
	PM	78	78	78	78	78	78	78	78	78	78	78	78
Heating (WD)	AM	68	68	68	68	68	68	68	68	68	68	68	68
	PM	68	68	68	68	68	68	68	68	68	68	68	68
Heating (WEH)	AM	68	68	68	68	68	68	68	68	68	68	68	68
	PM	68	68	68	68	68	68	68	68	68	68	68	68

FORM 1100A-08

Code Compliance Cheklist

Residential Whole Building Performance Method A - Details

ADDRESS:	PERMIT #:
Lake City, FL, 32024-	

INFILTRATION REDUCTION COMPLIANCE CHECKLIST

COMPONENTS	SECTION	REQUIREMENTS FOR EACH PRACTICE	CHECK
Exterior Windows & Doors	N1106.AB.1.1	Maximum: .3 cfm/sq.ft. window area; .5 cfm/sq.ft. door area.	
Exterior & Adjacent Walls	N1106.AB.1.2.1	Caulk, gasket, weatherstrip or seal between: windows/doors & frames, surrounding wall; foundation & wall sole or sill plate; joints between exterior wall panels at corners; utility penetrations; between wall panels & top/bottom plates; between walls and floor. EXCEPTION: Frame walls where a continuous infiltration barrier is installed that extends from, and is sealed to, the foundation to the top plate.	
Floors	N1106.AB.1.2.2	Penetrations/openings > 1/8" sealed unless backed by truss or joint members. EXCEPTION: Frame floors where a continuous infiltration barrier is installed that is sealed to the perimeter, penetrations and seams.	
Ceilings	N1106.AB.1.2.3	Between walls & ceilings; penetrations of ceiling plane to top floor; around shafts, chases, soffits, chimneys, cabinets sealed to continuous air barrier; gaps in gyp board & top plate; attic access. EXCEPTION: Frame ceilings where a continuous infiltration barrier is installed that is sealed at the perimeter, at penetrations and seams.	
Recessed Lighting Fixtures	N1106.AB.1.2.4	Type IC rated with no penetrations, sealed; or Type IC or non-IC rated, installed inside a sealed box with 1/2" clearance & 3" from insulation; or Type IC with < 2.0 cfm from conditioned space, tested.	
Multi-story Houses	N1106.AB.1.2.5	Air barrier on perimeter of floor cavity between floors.	
Additional Infiltration reqts	N1106.AB.1.3	Exhaust fans vented to outdoors, dampers; combustion space heaters comply with NFPA, have combustion air.	

OTHER PRESCRIPTIVE MEASURES (must be met or exceeded by all residences.)

COMPONENTS	SECTION	REQUIREMENTS	CHECK
Water Heaters	N1112.AB.3	Comply with efficiency requirements in Table N112.ABC.3. Switch or clearly marked circuit breaker (electric) or cutoff (gas) must be provided. External or built-in heat trap required.	
Swimming Pools & Spas	N1112.AB.2.3	Spas & heated pools must have covers (except solar heated). Non-commercial pools must have a pump timer. Gas spa & pool heaters must have a minimum thermal efficiency of 78%. Heat pump pool heaters shall have a minimum COP of 4.0.	
Shower heads	N1112.AB.2.4	Water flow must be restricted to no more than 2.5 gallons per minute at 80 PSIG.	
Air Distribution Systems	N1110.AB	All ducts, fittings, mechanical equipment and plenum chambers shall be mechanically attached, sealed, insulated and installed in accordance with the criteria of Section N1110.AB. Ducts in unconditioned attics: R-6 min. insulation.	
HVAC Controls	N1107.AB.2	Separate readily accessible manual or automatic thermostat for each system.	
Insulation	N1104.AB.1 N1102.B.1.1	Ceilings-Min. R-19. Common walls-frame R-11 or CBS R-3 both sides. Common ceiling & floors R-11.	

ENERGY PERFORMANCE LEVEL (EPL) DISPLAY CARD

ESTIMATED ENERGY PERFORMANCE INDEX* = 80

The lower the EnergyPerformance Index, the more efficient the home.

, Lake City, FL, 32024-

1. New construction or existing	New (From Plans)
2. Single family or multiple family	Single-family
3. Number of units, if multiple family	1
4. Number of Bedrooms	3
5. Is this a worst case?	Yes
6. Conditioned floor area (ft²)	1911

7. Windows**	Description	Area
a. U-Factor:	Dbl, U=0.35	253.00 ft²
SHGC:	SHGC=0.35	
b. U-Factor:	Dbl, U=0.87	36.00 ft²
SHGC:	SHGC=0.66	
c. U-Factor:	N/A	ft²
SHGC:		
d. U-Factor:	N/A	ft²
SHGC:		
e. U-Factor:	N/A	ft²
SHGC:		

8. Floor Types	Insulation	Area
a. Slab-On-Grade Edge Insulation	R=0.0	1911.00 ft²
b. N/A	R=	ft²
c. N/A	R=	ft²

9. Wall Types	Insulation	Area
a. Frame - Wood, Exterior	R=13.0	1804.10 ft²
b. Frame - Wood, Adjacent	R=13.0	402.67 ft²
c. N/A	R=	ft²
d. N/A	R=	ft²

10. Ceiling Types	Insulation	Area
a. Under Attic (Vented)	R=30.0	1911.00 ft²
b. Knee Wall (Vented)	R=30.0	150.00 ft²
c. N/A	R=	ft²

11. Ducts
a. Sup: Attic Ret: Attic AH: Interior Sup. R= 6, 382.2 ft²

12. Cooling systems
a. Central Unit — Cap: 44.0 kBtu/hr, SEER: 13

13. Heating systems
a. Electric Heat Pump — Cap: 44.0 kBtu/hr, HSPF: 7.7

14. Hot water systems
a. Electric — Cap: 40 gallons, EF: 0.92

b. Conservation features
None

15. Credits — None

I certify that this home has complied with the Florida Energy Efficiency Code for Building Construction through the above energy saving features which will be installed (or exceeded) in this home before final inspection. Otherwise, a new EPL Display Card will be completed based on installed Code compliant features.

Builder Signature: _____ Date: 8/2/10

Address of New Home: _____ City/FL Zip: _____

GREAT SEAL OF THE STATE OF FLORIDA — IN GOD WE TRUST

*Note: The home's estimated Energy Performance Index is only available through the EnergyGauge USA - FlaRes2008 computer program. This is not a Building Energy Rating. If your Index is below 100, your home may qualify for incentives if you obtain a Florida Energy Gauge Rating. Contact the Energy Gauge Hotline at (321) 638-1492 or see the Energy Gauge web site at energygauge.com for information and a list of certified Raters. For information about Florida's Energy Efficiency Code for Building Construction, contact the Department of Community Affairs at (850) 487-1824.

**Label required by Section 13-104.4.5 of the Florida Building Code, Building, or Section B2.1.1 of Appendix G of the Florida Building Code, Residential, if not DEFAULT.

PRODUCT APPROVAL SPECIFICATION SHEET

Location: Project Name: Justin Troy Land

As required by Florida Statute 553.842 and Florida Administrative Code 9B-72, please provide the information and the product approval number(s) on the building components listed below if they will be utilized on the construction project for which you are applying for a building permit on or after April 1, 2004. We recommend you contact your local product supplier should you not know the product approval number for any of the applicable listed products. More information about statewide product approval can be obtained at www.floridabuilding.org

Category/Subcategory	Manufacturer	Product Description	Approval Number(s)
A. EXTERIOR DOORS			
1. Swinging	Mayfair	Entry door	FL 1311
2. Sliding			
3. Sectional			
4. Roll up	General American	garage door	FL 2868
5. Automatic			
6. Other			
B. WINDOWS			
1. Single hung	Dawid	Single Hung Windows	FL 1369
2. Horizontal Slider			
3. Casement			
4. Double Hung			
5. Fixed			
6. Awning			
7. Pass -through			
8. Projected			
9. Mullion			
10. Wind Breaker			
11 Dual Action			
12. Other			
C. PANEL WALL			
1. Siding	James Hardie	hardiboard Siding	FL 889-R1
2. Soffits	Ashley	Aluminum	FL 406
3. EIFS			
4. Storefronts			
5. Curtain walls			
6. Wall louver			
7. Glass block			
8. Membrane			
9. Greenhouse			
10. Other			
D. ROOFING PRODUCTS			
1. Asphalt Shingles	Tamko	30-year Shingles Asphalt	FL 673
2. Underlayments			
3. Roofing Fasteners			
4. Non-structural Metal Rf			
5. Built-Up Roofing			
6. Modified Bitumen			
7. Single Ply Roofing Sys			
8. Roofing Tiles			
9. Roofing Insulation			
10. Waterproofing			
11. Wood shingles /shakes			
12. Roofing Slate			

/Subcategory (cont.)	Manufacturer	Product Description	Approval Number(s)
quid Applied Roof Sys			
Cements-Adhesives – Coatings			
15. Roof Tile Adhesive			
16. Spray Applied Polyurethane Roof			
17. Other			
E. SHUTTERS			
1. Accordion			
2. Bahama			
3. Storm Panels			
4. Colonial			
5. Roll-up			
6. Equipment			
7. Others			
F. SKYLIGHTS			
1. Skylight			
2. Other			
G. STRUCTURAL COMPONENTS			
1. Wood connector/anchor			
2. Truss plates			
3. Engineered lumber			
4. Railing			
5. Coolers-freezers			
6. Concrete Admixtures			
7. Material			
8. Insulation Forms			
9. Plastics			
10. Deck-Roof			
11. Wall			
12. Sheds			
13. Other			
H. NEW EXTERIOR ENVELOPE PRODUCTS			
1.			
2.			

The products listed below did not demonstrate product approval at plan review. I understand that at the time of inspection of these products, the following information must be available to the inspector on the jobsite; 1) copy of the product approval, 2) the performance characteristics which the product was tested and certified to comply with, 3) copy of the applicable manufacturers installation requirements.

I understand these products may have to be removed if approval cannot be demonstrated during inspection

Linda Roder

Contractor or Contractor's Authorized Agent Signature

Linda Roder 9-20-10

Print Name Date

Location

Permit # (FOR STAFF USE ONLY)

Residential System Sizing Calculation

Summary

Troy Land

Lake City, FL 32024-

Project Title:
1007042SkylineConstructionTroyLandResidence

7/23/2010

Location for weather data: Gainesville, FL - Defaults: Latitude(29.7) Altitude(152 ft.) Temp Range(M)
Humidity data: Interior RH (50%) Outdoor wet bulb (77F) Humidity difference(54gr.)

Winter design temperature(MJ8 99%)	33	F	Summer design temperature(MJ8 99%)	92	F
Winter setpoint	70	F	Summer setpoint	75	F
Winter temperature difference	37	F	Summer temperature difference	17	F
Total heating load calculation	**35382**	**Btuh**	**Total cooling load calculation**	**36773**	**Btuh**
Submitted heating capacity	% of calc	Btuh	Submitted cooling capacity	% of calc	Btuh
Total (Electric Heat Pump)	124.4	44000	Sensible (SHR = 0.75)	110.7	33000
Heat Pump + Auxiliary(0.0kW)	124.4	44000	Latent	157.9	11000
			Total (Electric Heat Pump)	119.7	44000

WINTER CALCULATIONS

Winter Heating Load (for 1911 sqft)

Load component			Load	
Window total	289	sqft	4435	Btuh
Wall total	1861	sqft	6112	Btuh
Door total	57	sqft	839	Btuh
Ceiling total	2061	sqft	2429	Btuh
Floor total	1911	sqft	10784	Btuh
Infiltration	159	cfm	6451	Btuh
Duct loss			4333	Btuh
Subtotal			**35382**	**Btuh**
Ventilation	0	cfm	0	Btuh
TOTAL HEAT LOSS			**35382**	**Btuh**

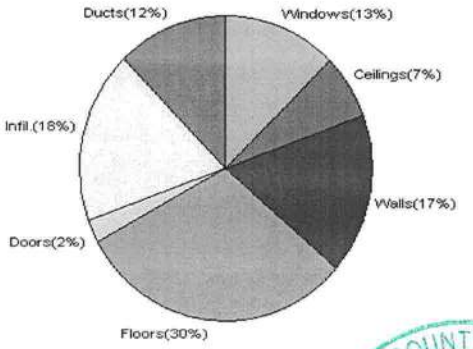

SUMMER CALCULATIONS

Summer Cooling Load (for 1911 sqft)

Load component			Load	
Window total	289	sqft	10399	Btuh
Wall total	1861	sqft	3671	Btuh
Door total	57	sqft	635	Btuh
Ceiling total	2061	sqft	3413	Btuh
Floor total			0	Btuh
Infiltration	127	cfm	2371	Btuh
Internal gain			3780	Btuh
Duct gain			5538	Btuh
Sens. Ventilation	0	cfm	0	Btuh
Blower Load			0	Btuh
Total sensible gain			**29806**	**Btuh**
Latent gain(ducts)			1110	Btuh
Latent gain(infiltration)			4656	Btuh
Latent gain(ventilation)			0	Btuh
Latent gain(internal/occupants/other)			1200	Btuh
Total latent gain			**6966**	**Btuh**
TOTAL HEAT GAIN			**36773**	**Btuh**

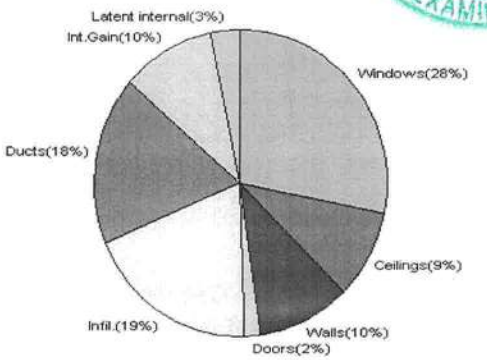

8th Edition

EnergyGauge® System Sizing
PREPARED BY:
DATE: 7/23/10 EVAN BERNSLEY

System Sizing Calculations - Winter

Residential Load - Whole House Component Details

Troy Land

Lake City, FL 32024-

Project Title:
1007042SkylineConstructionTroyLandResidence
Building Type: User

7/23/2010

Reference City: Gainesville, FL (Defaults) Winter Temperature Difference: 37.0 F (MJ8 99%)
This calculation is for Worst Case. The house has been rotated 225 degrees.

Component Loads for Whole House

Window	Panes/Type	Frame	U	Orientation	Area(sqft) X	HTM=	Load
1	2, NFRC 0.66	Metal	0.87	SW	36.0	32.2	1159 Btuh
2	2, NFRC 0.35	Metal	0.35	S	12.0	12.9	155 Btuh
3	2, NFRC 0.35	Metal	0.35	SW	24.0	12.9	311 Btuh
4	2, NFRC 0.35	Metal	0.35	W	12.0	12.9	155 Btuh
5	2, NFRC 0.35	Metal	0.35	SW	13.3	12.9	173 Btuh
6	2, NFRC 0.35	Metal	0.35	SW	18.0	12.9	233 Btuh
7	2, NFRC 0.35	Metal	0.35	SW	20.0	12.9	259 Btuh
8	2, NFRC 0.35	Metal	0.35	NW	40.0	12.9	518 Btuh
9	2, NFRC 0.35	Metal	0.35	NW	4.0	12.9	52 Btuh
10	2, NFRC 0.35	Metal	0.35	NE	20.0	12.9	259 Btuh
11	2, NFRC 0.35	Metal	0.35	NE	36.0	12.9	466 Btuh
12	2, NFRC 0.35	Metal	0.35	NE	13.3	12.9	173 Btuh
13	2, NFRC 0.35	Metal	0.35	NE	12.0	12.9	155 Btuh
14	2, NFRC 0.35	Metal	0.35	NE	9.0	12.9	117 Btuh
15	2, NFRC 0.35	Metal	0.35	SE	6.0	12.9	78 Btuh
16	2, NFRC 0.35	Metal	0.35	NW	13.3	12.9	173 Btuh
	Window Total				289.0(sqft)		4435 Btuh

Walls	Type	Ornt.	Ueff.	R-Value (Cav/Sh)	Area X	HTM=	Load
1	Frame - Wood	- Ext	(0.089)	13.0/0.0	497	3.28	1632 Btuh
2	Frame - Wood	- Ext	(0.089)	13.0/0.0	16	3.28	54 Btuh
3	Frame - Wood	- Ext	(0.089)	13.0/0.0	16	3.28	54 Btuh
4	Frame - Wood	- Ext	(0.089)	13.0/0.0	351	3.28	1152 Btuh
5	Frame - Wood	- Ext	(0.089)	13.0/0.0	370	3.28	1216 Btuh
6	Frame - Wood	- Ext	(0.089)	13.0/0.0	245	3.28	803 Btuh
7	Frame - Wood	- Adj	(0.089)	13.0/0.0	366	3.28	1202 Btuh
	Wall Total				1861(sqft)		6112 Btuh

Doors	Type	Storm	Ueff.	Area X	HTM=	Load
1	Insulated - Exterior,	n	(0.400)	7	14.8	99 Btuh
2	Insulated - Exterior,	n	(0.400)	7	14.8	99 Btuh
3	Insulated - Exterior,	n	(0.400)	7	14.8	99 Btuh
4	Insulated - Garage,	n	(0.400)	20	14.8	296 Btuh
5	Insulated - Garage,	n	(0.400)	17	14.8	247 Btuh
	Door Total			57(sqft)		839Btuh

Ceilings	Type/Color/Surface	Ueff.	R-Value	Area X	HTM=	Load
1	Vented Attic/D/Shing	(0.032)	30.0/0.0	1911	1.2	2252 Btuh
2	Knee Wall/D/Shing	(0.032)	30.0/0.0	150	1.2	177 Btuh
	Ceiling Total			2061(sqft)		2429Btuh

Floors	Type	Ueff.	R-Value	Size X	HTM=	Load
1	Slab On Grade	(1.180)	0.0	247.0 ft(perim.)	43.7	10784 Btuh
	Floor Total			1911 sqft		10784 Btuh

Manual J Winter Calculations

Residential Load - Component Details (continued)

Troy Land
Lake City, FL 32024-

Project Title:
1007042SkylineConstructionTroyLandResidence
Building Type: User

7/23/2010

				Envelope Subtotal:			24598 Btuh
Infiltration	Type Natural	ACH 0.50	Volume(cuft) 19110	Wall Ratio 1.00	CFM= 159.3		6451 Btuh
Duct load	Average sealed, R6.0, Supply(Att), Return(Att)				(DLM of 0.140)		4333 Btuh
All Zones				**Sensible Subtotal All Zones**			**35382 Btuh**

WHOLE HOUSE TOTALS

Totals for Heating	Subtotal Sensible Heat Loss Ventilation Sensible Heat Loss Total Heat Loss	35382 Btuh 0 Btuh 35382 Btuh

EQUIPMENT

1. Electric Heat Pump	#	44000 Btuh

Key: Window types - NFRC (Requires U-Factor and Shading coefficient(SHGC) of glass as numerical values)
or - Glass as 'Clear' or 'Tint' (Uses U-Factor and SHGC defaults)
U - (Window U-Factor)
HTM - (ManualJ Heat Transfer Multiplier)

Version 8

System Sizing Calculations - Summer

Residential Load - Whole House Component Details

Troy Land

Lake City, FL 32024-

Project Title:
1007042SkylineConstructionTroyLandResidence

7/23/2010

Reference City: Gainesville, FL Temperature Difference: 17.0F(MJ8 99%) Humidity difference: 54gr.

This calculation is for Worst Case. The house has been rotated 225 degrees.

Component Loads for Whole House

Window	Type* Panes	SHGC	U	InSh	IS	Ornt	Overhang Len	Hgt	Window Area(sqft) Gross	Shaded	Unshaded	HTM Shaded	Unshaded	Load
1	2 NFRC	0.66,	0.87	No	No	SW	1.5ft	2.0ft	36.0	2.8	33.2	29	62	2141 Btuh
2	2 NFRC	0.35,	0.35	No	No	S	99.0f	2.0ft	12.0	12.0	0.0	13	16	160 Btuh
3	2 NFRC	0.35,	0.35	No	No	SW	10.3f	2.0ft	24.0	24.0	0.0	13	31	319 Btuh
4	2 NFRC	0.35,	0.35	No	No	W	14.7f	2.0ft	12.0	12.0	0.0	13	40	160 Btuh
5	2 NFRC	0.35,	0.35	No	No	SW	11.7f	2.0ft	13.3	13.3	0.0	13	31	177 Btuh
6	2 NFRC	0.35,	0.35	No	No	SW	11.7f	2.0ft	18.0	18.0	0.0	13	31	240 Btuh
7	2 NFRC	0.35,	0.35	No	No	SW	1.5ft	3.0ft	20.0	0.0	20.0	13	31	621 Btuh
8	2 NFRC	0.35,	0.35	No	No	NW	0.0ft	0.0ft	40.0	0.0	40.0	13	29	1179 Btuh
9	2 NFRC	0.35,	0.35	No	No	NW	0.0ft	0.0ft	4.0	0.0	4.0	13	29	118 Btuh
10	2 NFRC	0.35,	0.35	No	No	NE	1.5ft	1.0ft	20.0	0.0	20.0	13	29	589 Btuh
11	2 NFRC	0.35,	0.35	No	No	NE	9.5ft	2.0ft	36.0	0.0	36.0	13	29	1061 Btuh
12	2 NFRC	0.35,	0.35	No	No	NE	9.5ft	2.0ft	13.3	0.0	13.3	13	29	393 Btuh
13	2 NFRC	0.35,	0.35	No	No	NE	1.5ft	2.0ft	12.0	0.0	12.0	13	29	354 Btuh
14	2 NFRC	0.35,	0.35	No	No	NE	1.5ft	1.0ft	9.0	0.0	9.0	13	29	265 Btuh
15	2 NFRC	0.35,	0.35	No	No	SE	1.5ft	1.0ft	6.0	2.9	3.1	13	31	134 Btuh
16	2 NFRC	0.35,	0.35	No	No	NW	99.0f	2.0ft	13.3	0.0	13.3	13	29	393 Btuh
	Excursion													2095 Btuh
	Window Total								289 (sqft)					10399 Btuh

Walls	Type	U-Value	R-Value Cav/Sheath	Area(sqft)	HTM	Load
1	Frame - Wood - Ext	0.09	13.0/0.0	497.0	2.1	1037 Btuh
2	Frame - Wood - Ext	0.09	13.0/0.0	16.3	2.1	34 Btuh
3	Frame - Wood - Ext	0.09	13.0/0.0	16.3	2.1	34 Btuh
4	Frame - Wood - Ext	0.09	13.0/0.0	350.7	2.1	731 Btuh
5	Frame - Wood - Ext	0.09	13.0/0.0	370.1	2.1	772 Btuh
6	Frame - Wood - Ext	0.09	13.0/0.0	244.7	2.1	510 Btuh
7	Frame - Wood - Adj	0.09	13.0/0.0	366.0	1.5	552 Btuh
	Wall Total			1861 (sqft)		3671 Btuh

Doors	Type	Area (sqft)	HTM	Load
1	Insulated - Exterior	6.7	11.2	75 Btuh
2	Insulated - Exterior	6.7	11.2	75 Btuh
3	Insulated - Exterior	6.7	11.2	75 Btuh
4	Insulated - Garage	20.0	11.2	224 Btuh
5	Insulated - Garage	16.7	11.2	187 Btuh
	Door Total	57 (sqft)		635 Btuh

Ceilings	Type/Color/Surface	U-Value	R-Value	Area(sqft)	HTM	Load
1	Vented Attic/DarkShingle	0.032	30.0/0.0	1911.0	1.66	3165 Btuh
2	Knee Wall/DarkShingle	0.032	30.0/0.0	150.0	1.66	248 Btuh
	Ceiling Total			2061 (sqft)		3413 Btuh

Floors	Type	R-Value	Size	HTM	Load
1	Slab On Grade	0.0	1911 (ft-perimeter)	0.0	0 Btuh
	Floor Total		1911.0 (sqft)		0 Btuh

	Envelope Subtotal:	18118 Btuh

Manual J Summer Calculations

Residential Load - Component Details (continued)

Troy Land

Project Title: 1007042SkylineConstructionTroyLandResidence

Climate:FL_GAINESVILLE_REGIONAL_A

Lake City, FL 32024-

7/23/2010

Infiltration	Type SensibleNatural	ACH 0.40	Volume(cuft) 19110	Wall Ratio 1861		CFM= 159.3	Load 2371	Btuh
Internal gain		Occupants 4	Btuh/occupant X 230		+	Appliance 2400	Load 3320	Btuh
					Sensible Envelope Load:		23809	Btuh
Duct load	Average sealed, Supply(R6.0-Attic), Return(R6.0-Attic)				(DGM of 0.228)		5538	Btuh
					Sensible Load All Zones		**29346**	**Btuh**

Manual J Summer Calculations

Residential Load - Component Details (continued)

Troy Land

Lake City, FL 32024-

Project Title: 1007042SkylineConstructionTroyLandResidence

Climate:FL_GAINESVILLE_REGIONAL_A

7/23/2010

WHOLE HOUSE TOTALS

Whole House Totals for Cooling	**Sensible Envelope Load All Zones**	**24269 Btuh**
	Sensible Duct Load	5538 Btuh
	Total Sensible Zone Loads	**29806 Btuh**
	Sensible ventilation	0 Btuh
	Blower	0 Btuh
	Total sensible gain	**29806 Btuh**
	Latent infiltration gain (for 54 gr. humidity difference)	4656 Btuh
	Latent ventilation gain	0 Btuh
	Latent duct gain	1110 Btuh
	Latent occupant gain (6 people @ 200 Btuh per person)	1200 Btuh
	Latent other gain	0 Btuh
	Latent total gain	**6966 Btuh**
	TOTAL GAIN	**36773 Btuh**

EQUIPMENT

1. Central Unit	#	44000 Btuh

*Key: Window types (Panes - Number and type of panes of glass)
(SHGC - Shading coefficient of glass as SHGC numerical value)
(U - Window U-Factor)
(InSh - Interior shading device: none(No), Blinds(B), Draperies(D) or Roller Shades(R))
- For Blinds: Assume medium color, half closed
For Draperies: Assume medium weave, half closed
For Roller shades: Assume translucent, half closed
(IS - Insect screen: none(N), Full(F) or Half(½))
(Ornt - compass orientation)

Version 8

COLUMBIA COUNTY BUILDING DEPARTMENT
Received for FILE COPY
Code Compliance
PLANS EXAMINER

Julius Lee

RE: 327354 - TROY LAND RES.

1109 Coastal Bay Blvd.
Boynton Beach, FL 33435

Site Information:
Project Customer: SKYLINE HOMES Project Name: 327354 Model: TROY LAND RES.
Lot/Block: Subdivision:
Address: 100 NW LOWER SPRINGS RD
City: COLUMBIA CTY State: FL

Name Address and License # of Structural Engineer of Record, If there is one, for the building.
Name: JOEL R. PHINNEY License #: CBC1256243
Address: 120 SW SMITH LANE
City: LAKE CITY State: FL

General Truss Engineering Criteria & Design Loads (Individual Truss Design Drawings Show Special Loading Conditions):
Design Code: FBC2007/TPI2002 Design Program: MiTek 20/20 7.1
Wind Code: ASCE 7-05 Wind Speed: 110 mph Floor Load: N/A psf
Roof Load: 32.0 psf

This package includes 34 individual, dated Truss Design Drawings and 0 Additional Drawings.
With my seal affixed to this sheet, I hereby certify that I am the Truss Design Engineer and this index sheet conforms to 61G15-31.003, section 5 of the Florida Board of Professional Engineers Rules.
This document processed per section 16G15-23.003 of the Florida Board of Professionals Rules

In the event of changes from Builder or E.O.R. additional coversheets and drawings may accompany this coversheet. The latest approval dates supersede and replace the previous drawings.

No.	Seal#	Truss Name	Date	No.	Seal#	Truss Name	Date
1	I4395694	CJ1	7/12/010	18	I4395711	T09	7/12/010
2	I4395695	EJ3	7/12/010	19	I4395712	T10	7/12/010
3	I4395696	EJ3A	7/12/010	20	I4395713	T11	7/12/010
4	I4395697	EJ3B	7/12/010	21	I4395714	T12	7/12/010
5	I4395698	EJ6	7/12/010	22	I4395715	T13	7/12/010
6	I4395699	EJ7	7/12/010	23	I4395716	T14	7/12/010
7	I4395700	EJ7G	7/12/010	24	I4395717	T15	7/12/010
8	I4395701	HJ4	7/12/010	25	I4395718	T16	7/12/010
9	I4395702	T01	7/12/010	26	I4395719	T17	7/12/010
10	I4395703	T01G	7/12/010	27	I4395720	T18	7/12/010
11	I4395704	T02	7/12/010	28	I4395721	T18G	7/12/010
12	I4395705	T03	7/12/010	29	I4395722	T19	7/12/010
13	I4395706	T04	7/12/010	30	I4395723	T20	7/12/010
14	I4395707	T05	7/12/010	31	I4395724	T20G	7/12/010
15	I4395708	T06	7/12/010	32	I4395725	T21	7/12/010
16	I4395709	T07	7/12/010	33	I4395726	T21G	7/12/010
17	I4395710	T08	7/12/010	34	I4395727	T22	7/12/010

1,027 uplift

The truss drawing(s) referenced above have been prepared by MiTek Industries, Inc. under my direct supervision based on the parameters provided by Builders FirstSource (Lake City).

Truss Design Engineer's Name: Julius Lee

My license renewal date for the state of Florida is February 28, 2011.

NOTE: The seal on these drawings indicate acceptance of professional engineering responsibility solely for the truss components shown. The suitability and use of this component for any particular building is the responsibility of the building designer, per ANSI/TPI-1 Chapter 2.

JULIUS S.K. LEE
LICENSE
No 34869
STATE OF FLORIDA
PROFESSIONAL ENGINEER

July 12,2010
Julius Lee

Job	Truss	Truss Type	Qty	Ply	TROY LAND RES.
327354	CJ1	JACK	2	1	I4395694
					Job Reference (optional)

Builders FrstSource, Lake City, FL 32055

7.140 s Oct 1 2009 MiTek Industries, Inc. Mon Jul 12 09:46:06 2010 Page 1

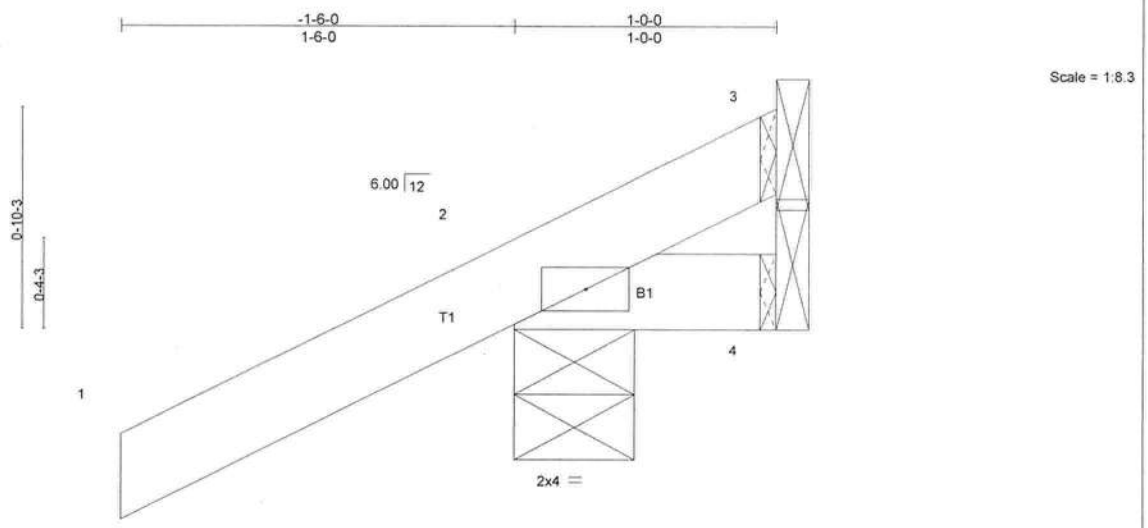

LOADING (psf)		SPACING	2-0-0	CSI		DEFL	in	(loc)	l/defl	L/d	PLATES	GRIP
TCLL	20.0	Plates Increase	1.25	TC	0.16	Vert(LL)	-0.00	2	>999	360	MT20	244/190
TCDL	7.0	Lumber Increase	1.25	BC	0.01	Vert(TL)	-0.00	2	>999	240		
BCLL	0.0 *	Rep Stress Incr	YES	WB	0.00	Horz(TL)	0.00	3	n/a	n/a		
BCDL	5.0	Code FBC2007/TPI2002		(Matrix)		Wind(LL)	0.00	2	****	240	Weight: 6 lb	

LUMBER
TOP CHORD 2 X 4 SYP No.2
BOT CHORD 2 X 4 SYP No.2

BRACING
TOP CHORD Structural wood sheathing directly applied or 1-0-0 oc purlins.
BOT CHORD Rigid ceiling directly applied or 10-0-0 oc bracing.

MiTek recommends that Stabilizers and required cross bracing be installed during truss erection, in accordance with Stabilizer Installation guide.

REACTIONS (lb/size) 2=182/0-5-8, 4=5/Mechanical, 3=-43/Mechanical
Max Horz 2=70(LC 6)
Max Uplift 2=-183(LC 6), 3=-43(LC 1)
Max Grav 2=182(LC 1), 4=14(LC 2), 3=64(LC 6)

FORCES (lb) - Max. Comp./Max. Ten. - All forces 250 (lb) or less except when shown.

NOTES (8-9)
1) Wind: ASCE 7-05; 110mph (3-second gust); TCDL=4.2psf; BCDL=3.0psf; h=18ft; Cat. II; Exp B; enclosed; MWFRS (low-rise) gable end zone and C-C Exterior(2) zone;C-C for members and forces & MWFRS for reactions shown; Lumber DOL=1.60 plate grip DOL=1.60
2) This truss has been designed for a 10.0 psf bottom chord live load nonconcurrent with any other live loads.
3) * This truss has been designed for a live load of 20.0psf on the bottom chord in all areas where a rectangle 3-6-0 tall by 2-0-0 wide will fit between the bottom chord and any other members.
4) All bearings are assumed to be SYP No.2 .
5) Refer to girder(s) for truss to truss connections.
6) Provide mechanical connection (by others) of truss to bearing plate capable of withstanding 183 lb uplift at joint 2 and 43 lb uplift at joint 3.
7) "Semi-rigid pitchbreaks including heels" Member end fixity model was used in the analysis and design of this truss.
8) This manufactured product is designed as an individual building component. The suitability and use of this component for any particular building is the responsibility of the building designer per ANSI TPI 1 as referenced by the building code.
9) Truss Design Engineer: Julius Lee, PE: Florida P.E. License No. 34869: Address: 1109 Coastal Bay Blvd. Boynton Beach, FL 33435

LOAD CASE(S) Standard

JULIUS S.K. LEE
LICENSE
No 34869
STATE OF
FLORIDA
PROFESSIONAL ENGINEER

July 12,2010

Julius Lee
1109 Coastal Bay Blvd.
Boynton, FL 33435

Job	Truss	Truss Type	Qty	Ply	TROY LAND RES.
327354	EJ3A	JACK	2	1	I4395696
					Job Reference (optional)

Builders FrstSource, Lake City, FL 32055

7.140 s Oct 1 2009 MiTek Industries, Inc. Mon Jul 12 09:46:07 2010 Page 1

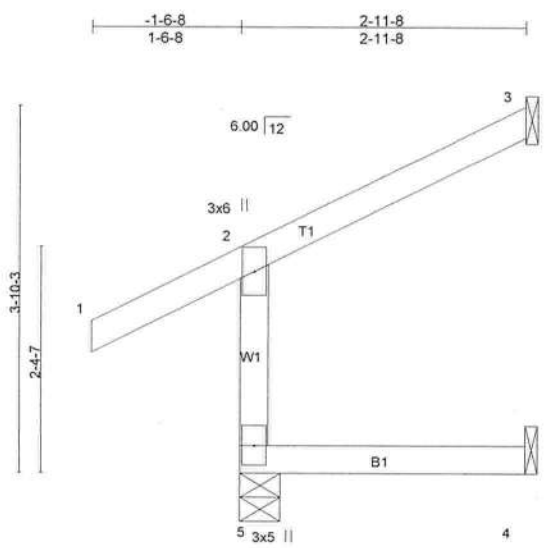

LOADING (psf)		SPACING 2-0-0	CSI		DEFL	in	(loc)	l/defl	L/d	PLATES	GRIP
TCLL	20.0	Plates Increase 1.25	TC	0.70	Vert(LL)	-0.00	4-5	>999	360	MT20	244/190
TCDL	7.0	Lumber Increase 1.25	BC	0.34	Vert(TL)	-0.00	4-5	>999	240		
BCLL	0.0 *	Rep Stress Incr YES	WB	0.00	Horz(TL)	-0.12	3	n/a	n/a		
BCDL	5.0	Code FBC2007/TPI2002	(Matrix)		Wind(LL)	0.02	4-5	>999	240	Weight: 15 lb	

LUMBER
TOP CHORD 2 X 4 SYP No.2
BOT CHORD 2 X 4 SYP No.2
WEBS 2 X 4 SYP No.3

BRACING
TOP CHORD Structural wood sheathing directly applied or 2-11-8 oc purlins, except end verticals.
BOT CHORD Rigid ceiling directly applied or 10-0-0 oc bracing.

MiTek recommends that Stabilizers and required cross bracing be installed during truss erection, in accordance with Stabilizer Installation guide.

REACTIONS (lb/size) 5=207/0-5-0, 3=49/Mechanical, 4=11/Mechanical
Max Horz 5=167(LC 6)
Max Uplift 5=-49(LC 6), 3=-87(LC 6), 4=-46(LC 6)
Max Grav 5=207(LC 1), 3=49(LC 1), 4=38(LC 2)

FORCES (lb) - Max. Comp./Max. Ten. - All forces 250 (lb) or less except when shown.

NOTES (8-9)
1) Wind: ASCE 7-05; 110mph (3-second gust); TCDL=4.2psf; BCDL=3.0psf; h=18ft; Cat. II; Exp B; enclosed; MWFRS (low-rise) gable end zone and C-C Exterior(2) zone; end vertical left exposed;C-C for members and forces & MWFRS for reactions shown; Lumber DOL=1.60 plate grip DOL=1.60
2) This truss has been designed for a 10.0 psf bottom chord live load nonconcurrent with any other live loads.
3) * This truss has been designed for a live load of 20.0psf on the bottom chord in all areas where a rectangle 3-6-0 tall by 2-0-0 wide will fit between the bottom chord and any other members.
4) All bearings are assumed to be SYP No.2 .
5) Refer to girder(s) for truss to truss connections.
6) Provide mechanical connection (by others) of truss to bearing plate capable of withstanding 49 lb uplift at joint 5, 87 lb uplift at joint 3 and 46 lb uplift at joint 4.
7) "Semi-rigid pitchbreaks including heels" Member end fixity model was used in the analysis and design of this truss.
8) This manufactured product is designed as an individual building component. The suitability and use of this component for any particular building is the responsibility of the building designer per ANSI TPI 1 as referenced by the building code.
9) Truss Design Engineer: Julius Lee, PE: Florida P.E. License No. 34869: Address: 1109 Coastal Bay Blvd. Boynton Beach, FL 33435

LOAD CASE(S) Standard

JULIUS S.K. LEE
LICENSE
No 34869
STATE OF
FLORIDA
PROFESSIONAL ENGINEER

July 12,2010

Julius Lee
1109 Coastal Bay Blvd.
Boynton, FL 33435

Job	Truss	Truss Type	Qty	Ply	TROY LAND RES.
327354	EJ6	JACK	4	1	I4395698 Job Reference (optional)

Builders FirstSource, Lake City, FL 32055 — 7.140 s Oct 1 2009 MiTek Industries, Inc. Mon Jul 12 09:46:07 2010 Page 1

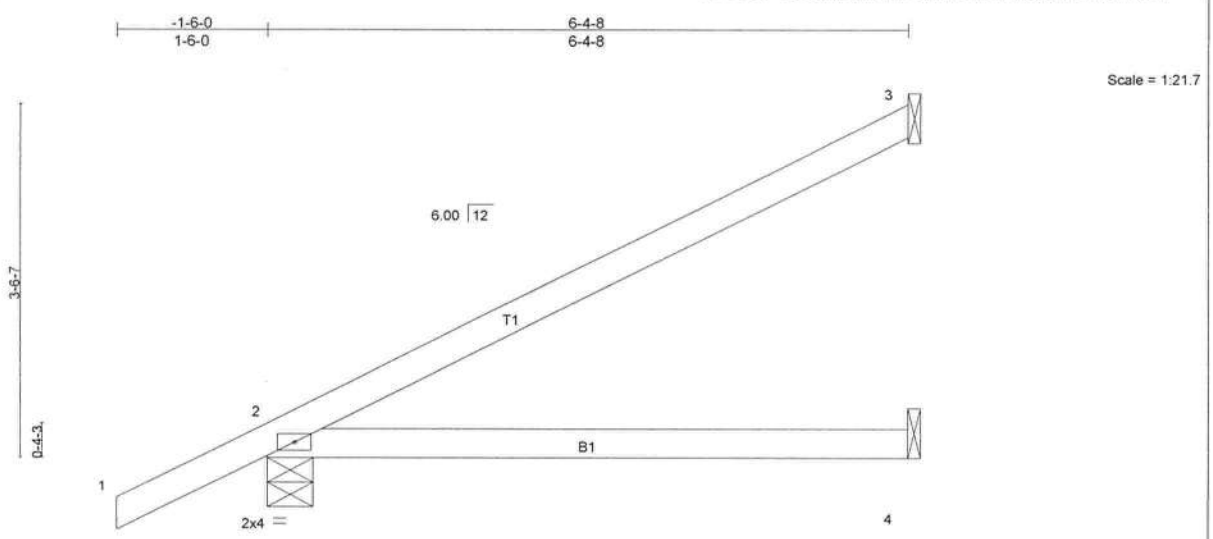

LOADING (psf)		SPACING	2-0-0	CSI		DEFL	in	(loc)	l/defl	L/d	PLATES	GRIP
TCLL	20.0	Plates Increase	1.25	TC	0.42	Vert(LL)	-0.07	2-4	>999	360	MT20	244/190
TCDL	7.0	Lumber Increase	1.25	BC	0.26	Vert(TL)	-0.13	2-4	>580	240		
BCLL	0.0 *	Rep Stress Incr	YES	WB	0.00	Horz(TL)	-0.00	3	n/a	n/a		
BCDL	5.0	Code FBC2007/TPI2002		(Matrix)		Wind(LL)	0.00	2	****	240	Weight: 23 lb	

LUMBER
TOP CHORD 2 X 4 SYP No.2
BOT CHORD 2 X 4 SYP No.2

BRACING
TOP CHORD Structural wood sheathing directly applied or 6-0-0 oc purlins.
BOT CHORD Rigid ceiling directly applied or 10-0-0 oc bracing.

MiTek recommends that Stabilizers and required cross bracing be installed during truss erection, in accordance with Stabilizer Installation guide.

REACTIONS (lb/size) 3=151/Mechanical, 2=301/0-5-8, 4=30/Mechanical
Max Horz 2=193(LC 6)
Max Uplift 3=-137(LC 6), 2=-171(LC 6)
Max Grav 3=151(LC 1), 2=301(LC 1), 4=91(LC 2)

FORCES (lb) - Max. Comp./Max. Ten. - All forces 250 (lb) or less except when shown.

NOTES (8-9)
1) Wind: ASCE 7-05; 110mph (3-second gust); TCDL=4.2psf; BCDL=3.0psf; h=18ft; Cat. II; Exp B; enclosed; MWFRS (low-rise) gable end zone and C-C Exterior(2) zone;C-C for members and forces & MWFRS for reactions shown; Lumber DOL=1.60 plate grip DOL=1.60
2) This truss has been designed for a 10.0 psf bottom chord live load nonconcurrent with any other live loads.
3) * This truss has been designed for a live load of 20.0psf on the bottom chord in all areas where a rectangle 3-6-0 tall by 2-0-0 wide will fit between the bottom chord and any other members.
4) All bearings are assumed to be SYP No.2 .
5) Refer to girder(s) for truss to truss connections.
6) Provide mechanical connection (by others) of truss to bearing plate capable of withstanding 137 lb uplift at joint 3 and 171 lb uplift at joint 2.
7) "Semi-rigid pitchbreaks including heels" Member end fixity model was used in the analysis and design of this truss.
8) This manufactured product is designed as an individual building component. The suitability and use of this component for any particular building is the responsibility of the building designer per ANSI TPI 1 as referenced by the building code.
9) Truss Design Engineer: Julius Lee, PE: Florida P.E. License No. 34869: Address: 1109 Coastal Bay Blvd. Boynton Beach, FL 33435

LOAD CASE(S) Standard

JULIUS S.K. LEE
LICENSE
No 34869
STATE OF FLORIDA
PROFESSIONAL ENGINEER

July 12,2010

Julius Lee
1109 Coastal Bay Blvd.
Boynton, FL 33435

Job	Truss	Truss Type	Qty	Ply	TROY LAND RES.
327354	EJ7G	GABLE	1	1	I4395700 Job Reference (optional)

Builders FrstSource, Lake City, FL 32055 — 7.140 s Oct 1 2009 MiTek Industries, Inc. Mon Jul 12 09:46:08 2010 Page 1

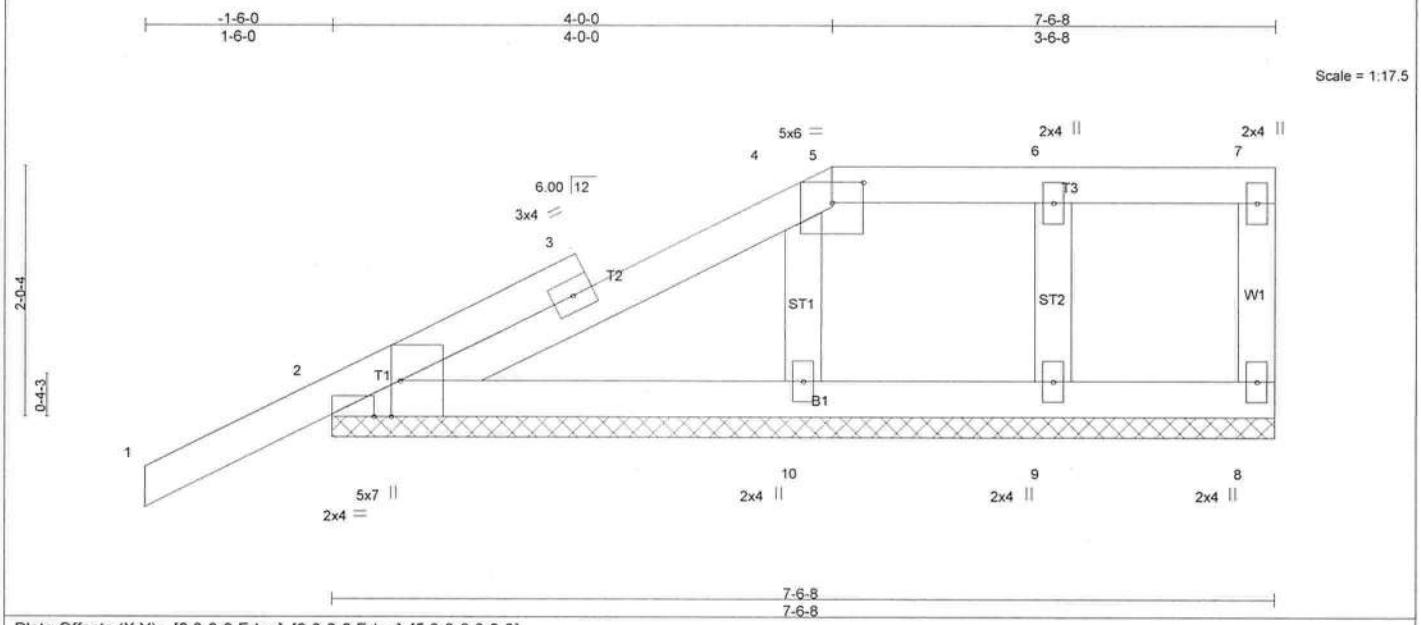

Plate Offsets (X,Y): [2:0-3-8,Edge], [2:0-2-8,Edge], [5:0-3-0,0-2-0]

LOADING (psf)		SPACING 2-0-0	CSI	DEFL in (loc) l/defl L/d	PLATES GRIP
TCLL 20.0		Plates Increase 1.25	TC 0.22	Vert(LL) -0.00 1 n/r 120	MT20 244/190
TCDL 7.0		Lumber Increase 1.25	BC 0.07	Vert(TL) -0.00 1 n/r 90	
BCLL 0.0	*	Rep Stress Incr NO	WB 0.06	Horz(TL) 0.00 8 n/a n/a	
BCDL 5.0		Code FBC2007/TPI2002	(Matrix)		Weight: 34 lb

LUMBER
TOP CHORD 2 X 4 SYP No.2
BOT CHORD 2 X 4 SYP No.2
WEBS 2 X 4 SYP No.3
OTHERS 2 X 4 SYP No.3

BRACING
TOP CHORD Structural wood sheathing directly applied or 6-0-0 oc purlins, except end verticals.
BOT CHORD Rigid ceiling directly applied or 10-0-0 oc bracing.

MiTek recommends that Stabilizers and required cross bracing be installed during truss erection, in accordance with Stabilizer Installation guide.

REACTIONS All bearings 7-6-8.
(lb) - Max Horz 2=126(LC 6)
Max Uplift All uplift 100 lb or less at joint(s) 8, 9 except 2=-200(LC 6), 10=-138(LC 6)
Max Grav All reactions 250 lb or less at joint(s) 8, 9 except 2=320(LC 1), 10=301(LC 1)

FORCES (lb) - Max. Comp./Max. Ten. - All forces 250 (lb) or less except when shown.
WEBS 4-10=-260/259

NOTES (13-14)
1) Unbalanced roof live loads have been considered for this design.
2) Wind: ASCE 7-05; 110mph (3-second gust); TCDL=4.2psf; BCDL=3.0psf; h=18ft; Cat. II; Exp B; enclosed; MWFRS (low-rise) gable end zone and C-C Exterior(2) zone;C-C for members and forces & MWFRS for reactions shown; Lumber DOL=1.60 plate grip DOL=1.60
3) Truss designed for wind loads in the plane of the truss only. For studs exposed to wind (normal to the face), see Standard Industry Gable End Details as applicable, or consult qualified building designer as per ANSI/TPI 1-2002.
4) Provide adequate drainage to prevent water ponding.
5) Gable requires continuous bottom chord bearing.
6) Gable studs spaced at 2-0-0 oc.
7) This truss has been designed for a 10.0 psf bottom chord live load nonconcurrent with any other live loads.
8) * This truss has been designed for a live load of 20.0psf on the bottom chord in all areas where a rectangle 3-6-0 tall by 2-0-0 wide will fit between the bottom chord and any other members.
9) All bearings are assumed to be SYP No.2 .
10) Provide mechanical connection (by others) of truss to bearing plate capable of withstanding 100 lb uplift at joint(s) 8, 9 except (jt=lb) 2=200, 10=138.
11) "Semi-rigid pitchbreaks including heels" Member end fixity model was used in the analysis and design of this truss.
12) In the LOAD CASE(S) section, loads applied to the face of the truss are noted as front (F) or back (B).
13) This manufactured product is designed as an individual building component. The suitability and use of this component for any particular building is the responsibility of the building designer per ANSI TPI 1 as referenced by the building code.
14) Truss Design Engineer: Julius Lee, PE: Florida P.E. License No. 34869: Address: 1109 Coastal Bay Blvd. Boynton Beach, FL 33435

LOAD CASE(S) Standard
1) Regular: Lumber Increase=1.25, Plate Increase=1.25
Uniform Loads (plf)
Vert: 1-5=-87(F=-33), 5-7=-87(F=-33), 2-8=-10

JULIUS S.K. LEE
LICENSE
No 34869
STATE OF
FLORIDA
PROFESSIONAL ENGINEER

July 12,2010

Julius Lee
1109 Coastal Bay Blvd.
Boynton, FL 33435

Job	Truss	Truss Type	Qty	Ply	TROY LAND RES.
327354	T01	COMMON	3	1	I4395702
					Job Reference (optional)

Builders FrstSource, Lake City, FL 32055 — 7.140 s Oct 1 2009 MiTek Industries, Inc. Mon Jul 12 09:46:08 2010 Page 1

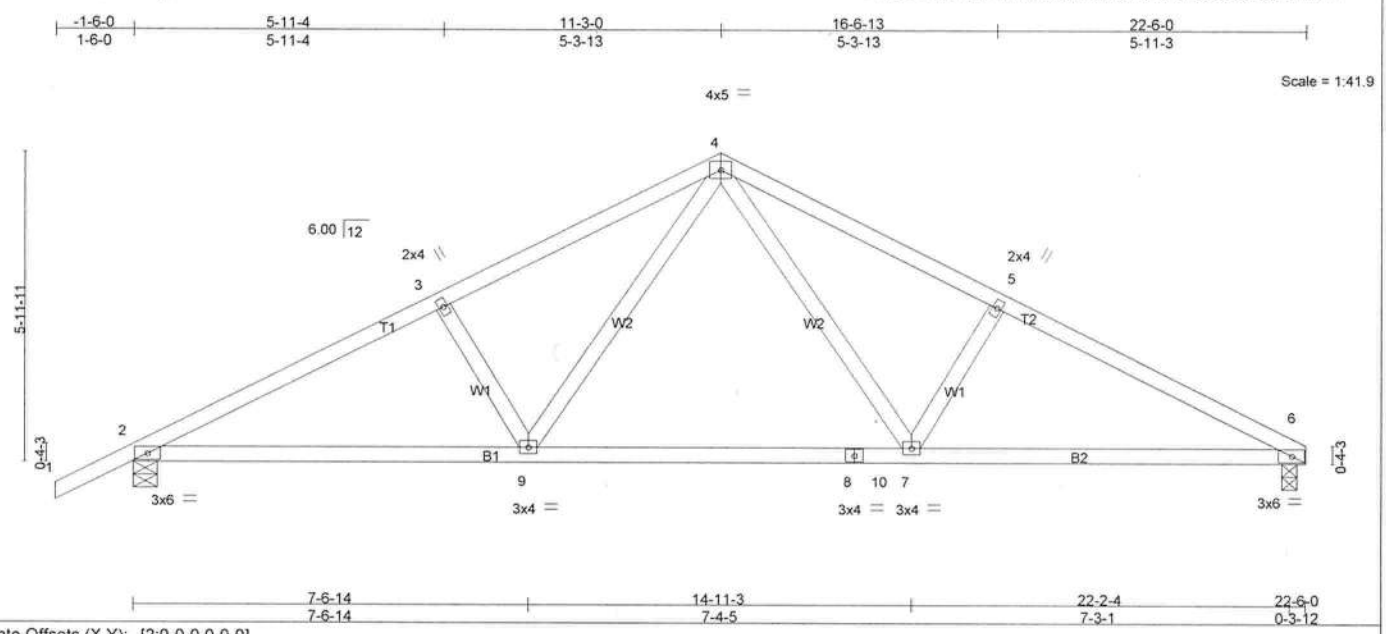

Plate Offsets (X,Y): [2:0-0-0,0-0-0]

LOADING (psf)		SPACING 2-0-0	CSI		DEFL	in	(loc)	l/defl	L/d	PLATES	GRIP
TCLL	20.0	Plates Increase 1.25	TC	0.44	Vert(LL)	-0.21	7-9	>999	360	MT20	244/190
TCDL	7.0	Lumber Increase 1.25	BC	0.73	Vert(TL)	-0.42	7-9	>637	240		
BCLL	0.0 *	Rep Stress Incr NO	WB	0.32	Horz(TL)	0.05	6	n/a	n/a		
BCDL	5.0	Code FBC2007/TPI2002	(Matrix)		Wind(LL)	0.27	7-9	>978	240	Weight: 103 lb	

LUMBER
TOP CHORD 2 X 4 SYP No.2
BOT CHORD 2 X 4 SYP No.2
WEBS 2 X 4 SYP No.3

BRACING
TOP CHORD Structural wood sheathing directly applied or 4-7-0 oc purlins.
BOT CHORD Rigid ceiling directly applied or 6-11-8 oc bracing.

MiTek recommends that Stabilizers and required cross bracing be installed during truss erection, in accordance with Stabilizer Installation guide.

REACTIONS (lb/size) 6=901/0-3-8, 2=1014/0-5-8
Max Horz 2=103(LC 6)
Max Uplift 6=-209(LC 7), 2=-288(LC 6)

FORCES (lb) - Max. Comp./Max. Ten. - All forces 250 (lb) or less except when shown.
TOP CHORD 2-3=-1719/957, 3-4=-1565/964, 4-5=-1563/977, 5-6=-1719/972
BOT CHORD 2-9=-760/1460, 8-9=-420/986, 8-10=-420/986, 7-10=-420/986, 6-7=-785/1470
WEBS 4-7=-399/647, 5-7=-285/295, 4-9=-382/656, 3-9=-258/263

NOTES (9-10)
1) Unbalanced roof live loads have been considered for this design.
2) Wind: ASCE 7-05; 110mph (3-second gust); TCDL=4.2psf; BCDL=3.0psf; h=18ft; Cat. II; Exp B; enclosed; MWFRS (low-rise) and C-C Exterior(2) zone;C-C for members and forces & MWFRS for reactions shown; Lumber DOL=1.60 plate grip DOL=1.60
3) This truss has been designed for a 10.0 psf bottom chord live load nonconcurrent with any other live loads.
4) * This truss has been designed for a live load of 20.0psf on the bottom chord in all areas where a rectangle 3-6-0 tall by 2-0-0 wide will fit between the bottom chord and any other members.
5) All bearings are assumed to be SYP No.2 .
6) Provide mechanical connection (by others) of truss to bearing plate capable of withstanding 100 lb uplift at joint(s) except (jt=lb) 6=209, 2=288.
7) "Semi-rigid pitchbreaks including heels" Member end fixity model was used in the analysis and design of this truss.
8) In the LOAD CASE(S) section, loads applied to the face of the truss are noted as front (F) or back (B).
9) This manufactured product is designed as an individual building component. The suitability and use of this component for any particular building is the responsibility of the building designer per ANSI TPI 1 as referenced by the building code.
10) Truss Design Engineer: Julius Lee, PE: Florida P.E. License No. 34869: Address: 1109 Coastal Bay Blvd. Boynton Beach, FL 33435

LOAD CASE(S) Standard
1) Regular: Lumber Increase=1.25, Plate Increase=1.25
Uniform Loads (plf)
Vert: 1-4=-54, 4-6=-54, 2-9=-10, 9-10=-70(F=-60), 6-10=-10

JULIUS S.K. LEE
LICENSE
No 34869
STATE OF
FLORIDA
PROFESSIONAL ENGINEER

July 12,2010

Julius Lee
1109 Coastal Bay Blvd.
Boynton, FL 33435

Job	Truss	Truss Type	Qty	Ply	TROY LAND RES.
327354	T02	SPECIAL	1	1	I4395704 Job Reference (optional)

Builders FrstSource, Lake City, FL 32055 — 7.140 s Oct 1 2009 MiTek Industries, Inc. Mon Jul 12 09:46:09 2010 Page 1

-1-6-0	5-11-4	11-3-0	16-1-9	20-5-12	25-8-13	30-0-0
1-6-0	5-11-4	5-3-12	4-10-8	4-4-3	5-3-1	4-3-3

Scale = 1:55.3

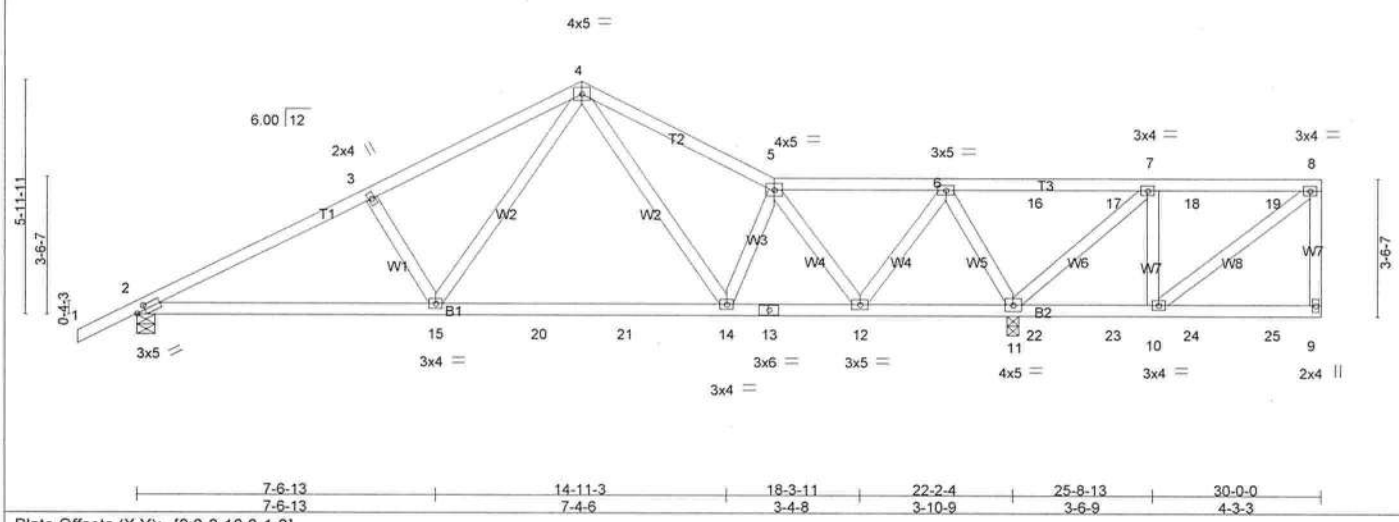

7-6-13	14-11-3	18-3-11	22-2-4	25-8-13	30-0-0
7-6-13	7-4-6	3-4-8	3-10-9	3-6-9	4-3-3

Plate Offsets (X,Y): [2:0-2-10,0-1-8]

LOADING (psf)		SPACING	2-0-0	CSI		DEFL	in	(loc)	l/defl	L/d	PLATES	GRIP
TCLL	20.0	Plates Increase	1.25	TC	0.57	Vert(LL)	-0.27	14-15	>961	360	MT20	244/190
TCDL	7.0	Lumber Increase	1.25	BC	0.83	Vert(TL)	-0.40	14-15	>653	240		
BCLL	0.0 *	Rep Stress Incr	NO	WB	0.50	Horz(TL)	0.02	11	n/a	n/a		
BCDL	5.0	Code FBC2007/TPI2002		(Matrix)		Wind(LL)	0.08	14-15	>999	240	Weight: 162 lb	

LUMBER
TOP CHORD 2 X 4 SYP No.2
BOT CHORD 2 X 4 SYP No.2
WEBS 2 X 4 SYP No.3

BRACING
TOP CHORD Structural wood sheathing directly applied or 5-0-6 oc purlins, except end verticals.
BOT CHORD Rigid ceiling directly applied or 6-0-0 oc bracing.

MiTek recommends that Stabilizers and required cross bracing be installed during truss erection, in accordance with Stabilizer Installation guide.

REACTIONS (lb/size) 2=902/0-5-8, 11=2087/0-3-8
Max Horz 2=169(LC 5)
Max Uplift 2=-182(LC 5), 11=-826(LC 6)

FORCES (lb) - Max. Comp./Max. Ten. - All forces 250 (lb) or less except when shown.
TOP CHORD 2-3=-1489/149, 3-4=-1336/162, 4-5=-991/0, 5-6=-389/58, 6-16=-625/1102, 16-17=-625/1102, 7-17=-625/1102
BOT CHORD 2-15=-207/1256, 15-20=-40/753, 20-21=-40/753, 14-21=-40/753, 13-14=0/717, 12-13=0/717, 11-12=-537/445
WEBS 3-15=-260/163, 4-15=-157/705, 5-14=-231/453, 5-12=-1149/264, 6-12=-218/998, 6-11=-1333/435, 7-11=-1179/686, 7-10=-38/398, 8-10=-314/161

NOTES (11-12)
1) Unbalanced roof live loads have been considered for this design.
2) Wind: ASCE 7-05; 110mph (3-second gust); TCDL=4.2psf; BCDL=3.0psf; h=18ft; Cat. II; Exp B; enclosed; MWFRS (low-rise); Lumber DOL=1.60 plate grip DOL=1.60
3) Provide adequate drainage to prevent water ponding.
4) This truss has been designed for a 10.0 psf bottom chord live load nonconcurrent with any other live loads.
5) * This truss has been designed for a live load of 20.0psf on the bottom chord in all areas where a rectangle 3-6-0 tall by 2-0-0 wide will fit between the bottom chord and any other members, with BCDL = 5.0psf.
6) All bearings are assumed to be SYP No.2 .
7) Provide mechanical connection (by others) of truss to bearing plate capable of withstanding 100 lb uplift at joint(s) except (jt=lb) 2=182, 11=826.
8) "Semi-rigid pitchbreaks including heels" Member end fixity model was used in the analysis and design of this truss.
9) Hanger(s) or other connection device(s) shall be provided sufficient to support concentrated load(s) 137 lb down and 125 lb up at 22-8-12, 137 lb down and 125 lb up at 24-8-12, and 137 lb down and 125 lb up at 26-8-12, and 137 lb down and 125 lb up at 28-8-12 on top chord, and 61 lb down at 22-8-12, 61 lb down at 24-8-12, and 61 lb down at 26-8-12, and 61 lb down at 28-8-12 on bottom chord. The design/selection of such connection device(s) is the responsibility of others.
10) In the LOAD CASE(S) section, loads applied to the face of the truss are noted as front (F) or back (B).
11) This manufactured product is designed as an individual building component. The suitability and use of this component for any particular building is the responsibility of the building designer per ANSI TPI 1 as referenced by the building code.
12) Truss Design Engineer: Julius Lee, PE: Florida P.E. License No. 34869: Address: 1109 Coastal Bay Blvd. Boynton Beach, FL 33435

JULIUS S.K. LEE
LICENSE
No 34869
STATE OF
FLORIDA
PROFESSIONAL ENGINEER

LOAD CASE(S) Standard

July 12,2010

Continued on page 2

Julius Lee
1109 Coastal Bay Blvd.
Boynton, FL 33435

Job	Truss	Truss Type	Qty	Ply	TROY LAND RES.
327354	T03	SPECIAL	1	1	I4395705 Job Reference (optional)

Builders FrstSource, Lake City, FL 32055

7.140 s Oct 1 2009 MiTek Industries, Inc. Mon Jul 12 09:46:10 2010 Page 1

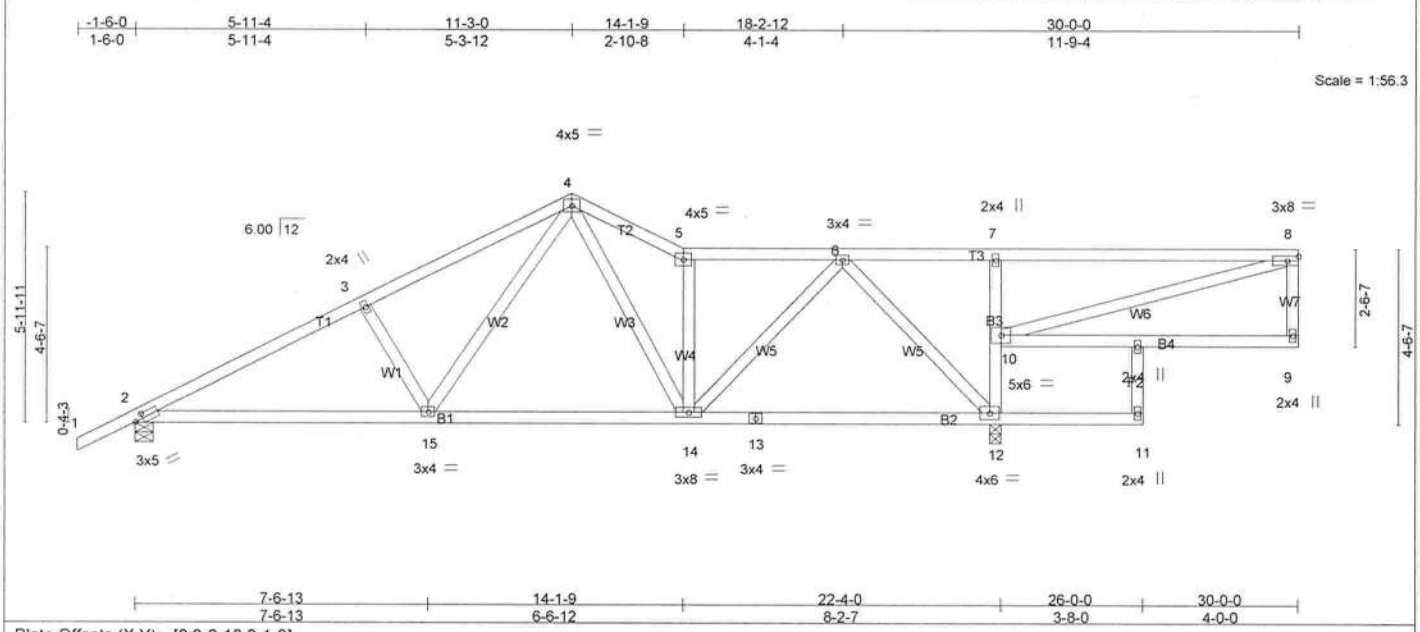

Plate Offsets (X,Y): [2:0-2-10,0-1-8]

LOADING (psf)		SPACING	2-0-0	CSI		DEFL	in	(loc)	l/defl	L/d	PLATES	GRIP
TCLL	20.0	Plates Increase	1.25	TC	0.89	Vert(LL)	-0.14	14-15	>999	360	MT20	244/190
TCDL	7.0	Lumber Increase	1.25	BC	0.95	Vert(TL)	-0.54	9	>170	90		
BCLL	0.0 *	Rep Stress Incr	NO	WB	0.80	Horz(TL)	0.03	12	n/a	n/a		
BCDL	5.0	Code FBC2007/TPI2002		(Matrix)		Wind(LL)	0.19	14-15	>999	240	Weight: 168 lb	

LUMBER
TOP CHORD 2 X 4 SYP No.2
BOT CHORD 2 X 4 SYP No.2 *Except*
B3: 2 X 4 SYP No.1D
WEBS 2 X 4 SYP No.3

BRACING
TOP CHORD Structural wood sheathing directly applied or 5-0-1 oc purlins, except end verticals.
BOT CHORD Rigid ceiling directly applied or 6-9-12 oc bracing. Except:
5-1-0 oc bracing: 10-12

MiTek recommends that Stabilizers and required cross bracing be installed during truss erection, in accordance with Stabilizer Installation guide.

REACTIONS (lb/size) 2=917/0-5-8, 12=1513/0-3-8
Max Horz 2=189(LC 6)
Max Uplift 2=-273(LC 6), 12=-354(LC 7)

FORCES (lb) - Max. Comp./Max. Ten. - All forces 250 (lb) or less except when shown.
TOP CHORD 2-3=-1501/796, 3-4=-1347/804, 4-5=-1125/703, 5-6=-957/578, 6-7=-192/399, 7-8=-318/641
BOT CHORD 2-15=-834/1268, 14-15=-497/806, 13-14=-237/333, 12-13=-237/333, 10-12=-695/387, 7-10=-441/305
WEBS 3-15=-261/270, 4-15=-371/624, 4-14=-206/393, 5-14=-673/445, 6-14=-500/916, 6-12=-1071/630, 8-10=-718/354

NOTES (10-11)
1) Unbalanced roof live loads have been considered for this design.
2) Wind: ASCE 7-05; 110mph (3-second gust); TCDL=4.2psf; BCDL=3.0psf; h=18ft; Cat. II; Exp B; enclosed; MWFRS (low-rise) and C-C Exterior(2) zone;C-C for members and forces & MWFRS for reactions shown; Lumber DOL=1.60 plate grip DOL=1.60
3) Provide adequate drainage to prevent water ponding.
4) This truss has been designed for a 10.0 psf bottom chord live load nonconcurrent with any other live loads.
5) * This truss has been designed for a live load of 20.0psf on the bottom chord in all areas where a rectangle 3-6-0 tall by 2-0-0 wide will fit between the bottom chord and any other members.
6) All bearings are assumed to be SYP No.2 .
7) Provide mechanical connection (by others) of truss to bearing plate capable of withstanding 100 lb uplift at joint(s) except (jt=lb) 2=273, 12=354.
8) "Semi-rigid pitchbreaks including heels" Member end fixity model was used in the analysis and design of this truss.
9) In the LOAD CASE(S) section, loads applied to the face of the truss are noted as front (F) or back (B).
10) This manufactured product is designed as an individual building component. The suitability and use of this component for any particular building is the responsibility of the building designer per ANSI TPI 1 as referenced by the building code.
11) Truss Design Engineer: Julius Lee, PE: Florida P.E. License No. 34869: Address: 1109 Coastal Bay Blvd. Boynton Beach, FL 33435

LOAD CASE(S) Standard
1) Regular: Lumber Increase=1.25, Plate Increase=1.25

JULIUS S.K. LEE
LICENSE
No 34869
STATE OF
FLORIDA
PROFESSIONAL ENGINEER

July 12,2010

Continued on page 2

Julius Lee
1109 Coastal Bay Blvd.
Boynton, FL 33435

Job	Truss	Truss Type	Qty	Ply	TROY LAND RES.
327354	T04	SPECIAL	1	1	I4395706
					Job Reference (optional)

Builders FrstSource, Lake City, FL 32055

7.140 s Oct 1 2009 MiTek Industries, Inc. Mon Jul 12 09:46:10 2010 Page 1

-1-6-0	5-11-4	10-4-8	17-3-14	21-6-4	26-0-0	30-0-0
1-6-0	5-11-4	4-5-4	6-11-6	4-2-6	4-5-13	4-0-0

Scale = 1:55.3

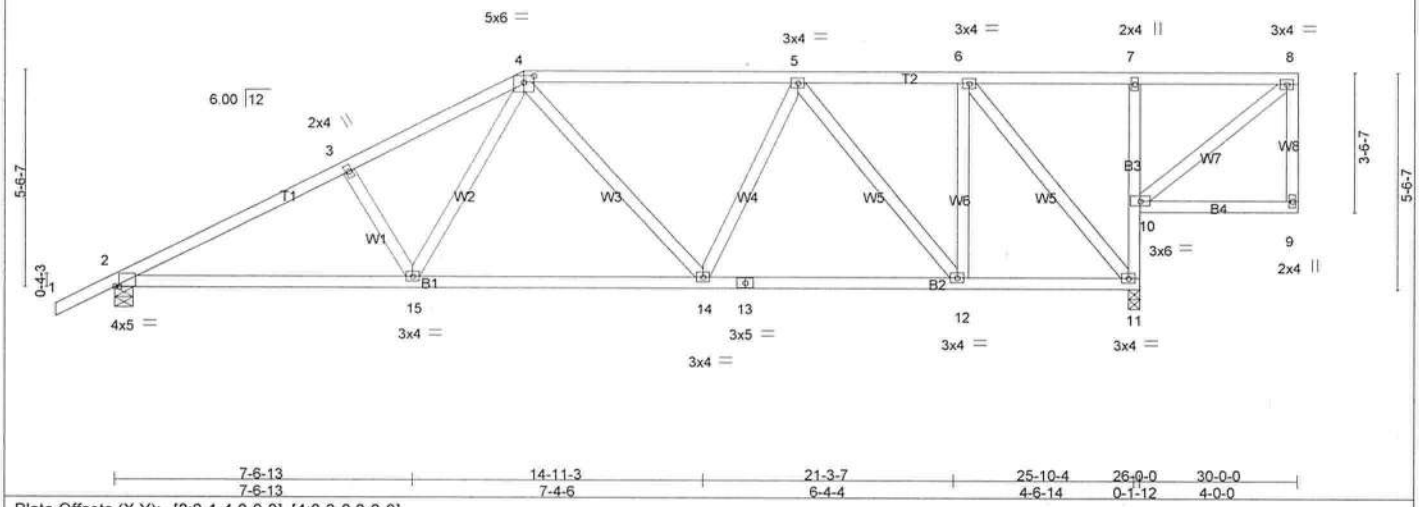

7-6-13	14-11-3	21-3-7	25-10-4	26-0-0	30-0-0
7-6-13	7-4-6	6-4-4	4-6-14	0-1-12	4-0-0

Plate Offsets (X,Y): [2:0-1-4,0-0-2], [4:0-3-0,0-2-0]

LOADING (psf)		SPACING	2-0-0	CSI		DEFL	in	(loc)	l/defl	L/d	PLATES	GRIP
TCLL	20.0	Plates Increase	1.25	TC	0.43	Vert(LL)	-0.21	14-15	>999	360	MT20	244/190
TCDL	7.0	Lumber Increase	1.25	BC	0.77	Vert(TL)	-0.43	14-15	>719	240		
BCLL	0.0 *	Rep Stress Incr	NO	WB	0.89	Horz(TL)	0.06	11	n/a	n/a		
BCDL	5.0	Code FBC2007/TPI2002		(Matrix)		Wind(LL)	0.27	14-15	>999	240	Weight: 170 lb	

LUMBER
TOP CHORD 2 X 4 SYP No.2
BOT CHORD 2 X 4 SYP No.2 *Except*
B3: 2 X 4 SYP No.3
WEBS 2 X 4 SYP No.3

BRACING
TOP CHORD Structural wood sheathing directly applied or 4-3-8 oc purlins, except end verticals.
BOT CHORD Rigid ceiling directly applied or 5-11-10 oc bracing.

MiTek recommends that Stabilizers and required cross bracing be installed during truss erection, in accordance with Stabilizer Installation guide.

REACTIONS (lb/size) 2=1148/0-5-8, 11=1283/0-3-8
Max Horz 2=204(LC 6)
Max Uplift 2=-298(LC 6), 11=-349(LC 5)

FORCES (lb) - Max. Comp./Max. Ten. - All forces 250 (lb) or less except when shown.
TOP CHORD 2-3=-1996/1017, 3-4=-1845/1023, 4-5=-1332/759, 5-6=-638/357
BOT CHORD 2-15=-1077/1702, 14-15=-805/1328, 13-14=-687/1183, 12-13=-687/1183, 11-12=-357/638, 10-11=-400/231, 7-10=-277/195
WEBS 4-15=-332/574, 5-14=-175/371, 5-12=-872/528, 6-12=-351/696, 6-11=-1115/613

NOTES (9-10)
1) Wind: ASCE 7-05; 110mph (3-second gust); TCDL=4.2psf; BCDL=3.0psf; h=18ft; Cat. II; Exp B; enclosed; MWFRS (low-rise) and C-C Exterior(2) zone;C-C for members and forces & MWFRS for reactions shown; Lumber DOL=1.60 plate grip DOL=1.60
2) Provide adequate drainage to prevent water ponding.
3) This truss has been designed for a 10.0 psf bottom chord live load nonconcurrent with any other live loads.
4) * This truss has been designed for a live load of 20.0psf on the bottom chord in all areas where a rectangle 3-6-0 tall by 2-0-0 wide will fit between the bottom chord and any other members.
5) All bearings are assumed to be SYP No.2 .
6) Provide mechanical connection (by others) of truss to bearing plate capable of withstanding 100 lb uplift at joint(s) except (jt=lb) 2=298, 11=349.
7) "Semi-rigid pitchbreaks including heels" Member end fixity model was used in the analysis and design of this truss.
8) In the LOAD CASE(S) section, loads applied to the face of the truss are noted as front (F) or back (B).
9) This manufactured product is designed as an individual building component. The suitability and use of this component for any particular building is the responsibility of the building designer per ANSI TPI 1 as referenced by the building code.
10) Truss Design Engineer: Julius Lee, PE: Florida P.E. License No. 34869: Address: 1109 Coastal Bay Blvd. Boynton Beach, FL 33435

LOAD CASE(S) Standard
1) Regular: Lumber Increase=1.25, Plate Increase=1.25
Uniform Loads (plf)
Vert: 1-4=-54, 4-8=-54, 2-15=-10, 14-15=-70(F=-60), 11-14=-10, 9-10=-10

JULIUS S.K. LEE
LICENSE
No 34869
STATE OF
FLORIDA
PROFESSIONAL ENGINEER

July 12,2010

Julius Lee
1109 Coastal Bay Blvd.
Boynton, FL 33435

LOAD CASE(S) Standard

1) Regular: Lumber Increase=1.25, Plate Increase=1.25
   Uniform Loads (plf)
   Vert: 1-4=-54, 4-8=-54, 2-15=-10, 15-16=-70(F=-60), 16-17=-110(F=-60), 14-17=-70(F=-60), 13-14=-10, 13-18=-50, 11-18=-10, 9-10=-10

JULIUS S.K. LEE
LICENSE
No 34869
STATE OF
FLORIDA
PROFESSIONAL ENGINEER

July 12,2010

Julius Lee
1109 Coastal Bay Blvd.
Boynton, FL 33435

LOAD CASE(S) Standard

1) Regular: Lumber Increase=1.25, Plate Increase=1.25
   Uniform Loads (plf)
   Vert: 1-5=-54, 5-7=-54, 2-14=-10, 14-16=-70(F=-60), 16-17=-110(F=-60), 13-17=-70(F=-60), 13-18=-50, 11-18=-10, 11-19=-10, 10-19=-50, 9-20=-10, 20-21=-50, 8-21=-10

JULIUS S.K. LEE
LICENSE
No 34869
STATE OF
FLORIDA
PROFESSIONAL ENGINEER

July 12,2010

Julius Lee
1109 Coastal Bay Blvd.
Boynton, FL 33435

LOAD CASE(S) Standard

1) Regular: Lumber Increase=1.25, Plate Increase=1.25
   Uniform Loads (plf)
   Vert: 1-5=-54, 5-7=-54, 2-14=-10, 14-16=-70(F=-60), 16-17=-110(F=-60), 13-17=-70(F=-60), 12-13=-10, 12-18=-50, 11-18=-10, 10-11=-10, 9-19=-10, 8-19=-50

JULIUS S.K. LEE
LICENSE
No 34899
STATE OF
FLORIDA
PROFESSIONAL ENGINEER

July 12,2010

Julius Lee
1109 Coastal Bay Blvd.
Boynton, FL 33435

LOAD CASE(S) Standard

1) Regular: Lumber Increase=1.25, Plate Increase=1.25
   Uniform Loads (plf)
   Vert: 1-5=-54, 5-7=-54, 2-14=-10, 14-16=-70(F=-60), 16-17=-110(F=-60), 13-17=-70(F=-60), 13-18=-10, 18-19=-50, 11-19=-10, 10-11=-10, 9-20=-10, 8-20=-50

JULIUS S.K. LEE
LICENSE
No 34[illegible]9
STATE OF
FLORIDA
PROFESSIONAL ENGINEER

July 12,2010

Julius Lee
1109 Coastal Bay Blvd.
Boynton, FL 33435

11) This manufactured product is designed as an individual building component. The suitability and use of this component for any particular building is the responsibility of the building designer per ANSI TPI 1 as referenced by the building code.
12) Truss Design Engineer: Julius Lee, PE: Florida P.E. License No. 34869: Address: 1109 Coastal Bay Blvd. Boynton Beach, FL 33435

LOAD CASE(S) Standard
1) Regular: Lumber Increase=1.25, Plate Increase=1.25
Uniform Loads (plf)
Vert: 1-3=-54, 3-7=-54, 7-9=-54, 2-15=-10, 14-15=-10, 8-13=-10
Concentrated Loads (lb)
Vert: 7=18(B) 15=-1(B) 4=5(B) 10=-10(B) 17=11(B) 18=5(B) 19=11(B) 20=11(B) 21=11(B) 22=11(B) 23=11(B) 24=11(B) 25=-146(B) 26=-1(B) 27=-4(B) 28=-4(B) 29=-4(B) 30=-4(B) 31=-4(B) 32=-4(B)

JULIUS S.K. LEE
LICENSE
No 34869
STATE OF
FLORIDA
PROFESSIONAL ENGINEER

July 12,2010

Julius Lee
1109 Coastal Bay Blvd.
Boynton, FL 33435

Job	Truss	Truss Type	Qty	Ply	TROY LAND RES.
327354	T11	SPECIAL	1	1	I4395713
					Job Reference (optional)

Builders FrstSource, Lake City, FL 32055

7.140 s Oct 1 2009 MiTek Industries, Inc. Mon Jul 12 09:46:13 2010 Page 1

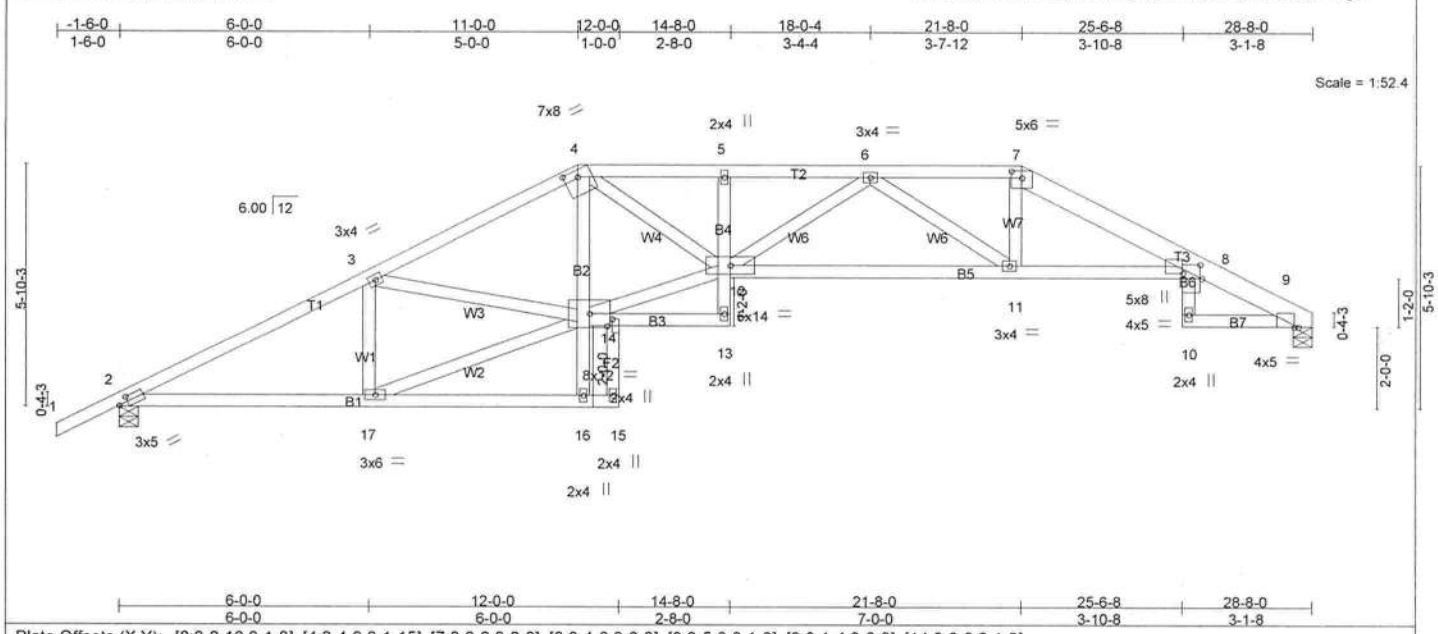

Plate Offsets (X,Y): [2:0-2-10,0-1-8], [4:0-4-0,0-1-15], [7:0-3-0,0-2-0], [8:0-4-0,0-0-8], [8:0-5-8,0-1-8], [9:0-1-4,0-0-0], [14:0-2-0,0-1-8]

LOADING (psf)		SPACING	2-0-0	CSI		DEFL	in	(loc)	l/defl	L/d	PLATES	GRIP
TCLL	20.0	Plates Increase	1.25	TC	0.92	Vert(LL)	-0.28	8-11	>999	360	MT20	244/190
TCDL	7.0	Lumber Increase	1.25	BC	0.96	Vert(TL)	-0.57	11-12	>587	240		
BCLL	0.0 *	Rep Stress Incr	YES	WB	0.53	Horz(TL)	0.44	9	n/a	n/a		
BCDL	5.0	Code FBC2007/TPI2002		(Matrix)		Wind(LL)	0.35	8-11	>969	240	Weight: 160 lb	

LUMBER
TOP CHORD 2 X 4 SYP No.2 *Except*
T3: 2 X 6 SYP No.1D
BOT CHORD 2 X 4 SYP No.2 *Except*
B2,B4,B6: 2 X 4 SYP No.3
WEBS 2 X 4 SYP No.3

BRACING
TOP CHORD Structural wood sheathing directly applied or 2-2-0 oc purlins.
BOT CHORD Rigid ceiling directly applied or 2-2-0 oc bracing. Except:
10-0-0 oc bracing: 14-16

MiTek recommends that Stabilizers and required cross bracing be installed during truss erection, in accordance with Stabilizer Installation guide.

REACTIONS (lb/size) 9=896/0-5-8, 2=994/0-5-8
Max Horz 2=142(LC 6)
Max Uplift 9=-140(LC 7), 2=-249(LC 6)

FORCES (lb) - Max. Comp./Max. Ten. - All forces 250 (lb) or less except when shown.
TOP CHORD 2-3=-1636/833, 3-4=-1909/1030, 4-5=-2579/1406, 5-6=-2619/1422, 6-7=-2008/1095, 7-8=-2119/1079, 8-9=-701/390
BOT CHORD 2-17=-752/1387, 11-12=-1154/2403, 8-11=-906/1981
WEBS 3-17=-467/327, 3-14=-72/338, 12-14=-770/1641, 4-12=-529/1119, 6-12=-106/311, 7-11=-146/416, 14-17=-789/1446, 6-11=-567/288

NOTES (10-11)
1) Unbalanced roof live loads have been considered for this design.
2) Wind: ASCE 7-05; 110mph (3-second gust); TCDL=4.2psf; BCDL=3.0psf; h=18ft; Cat. II; Exp B; enclosed; MWFRS (low-rise) and C-C Exterior(2) zone;C-C for members and forces & MWFRS for reactions shown; Lumber DOL=1.60 plate grip DOL=1.60
3) Provide adequate drainage to prevent water ponding.
4) This truss has been designed for a 10.0 psf bottom chord live load nonconcurrent with any other live loads.
5) * This truss has been designed for a live load of 20.0psf on the bottom chord in all areas where a rectangle 3-6-0 tall by 2-0-0 wide will fit between the bottom chord and any other members.
6) All bearings are assumed to be SYP No.2 .
7) Bearing at joint(s) 9 considers parallel to grain value using ANSI/TPI 1 angle to grain formula. Building designer should verify capacity of bearing surface.
8) Provide mechanical connection (by others) of truss to bearing plate capable of withstanding 100 lb uplift at joint(s) except (jt=lb) 9=140, 2=249.
9) "Semi-rigid pitchbreaks including heels" Member end fixity model was used in the analysis and design of this truss.
10) This manufactured product is designed as an individual building component. The suitability and use of this component for any particular building is the responsibility of the building designer per ANSI TPI 1 as referenced by the building code.
11) Truss Design Engineer: Julius Lee, PE: Florida P.E. License No. 34869: Address: 1109 Coastal Bay Blvd. Boynton Beach, FL 33435

LOAD CASE(S) Standard

JULIUS S.K. LEE
LICENSE
No 34869
STATE OF
FLORIDA
PROFESSIONAL ENGINEER

July 12,2010

Julius Lee
1109 Coastal Bay Blvd.
Boynton, FL 33435

Job	Truss	Truss Type	Qty	Ply	TROY LAND RES.
327354	T13	SPECIAL	1	1	I4395715
					Job Reference (optional)

Builders FrstSource, Lake City, FL 32055

7.140 s Oct 1 2009 MiTek Industries, Inc. Mon Jul 12 09:46:15 2010 Page 1

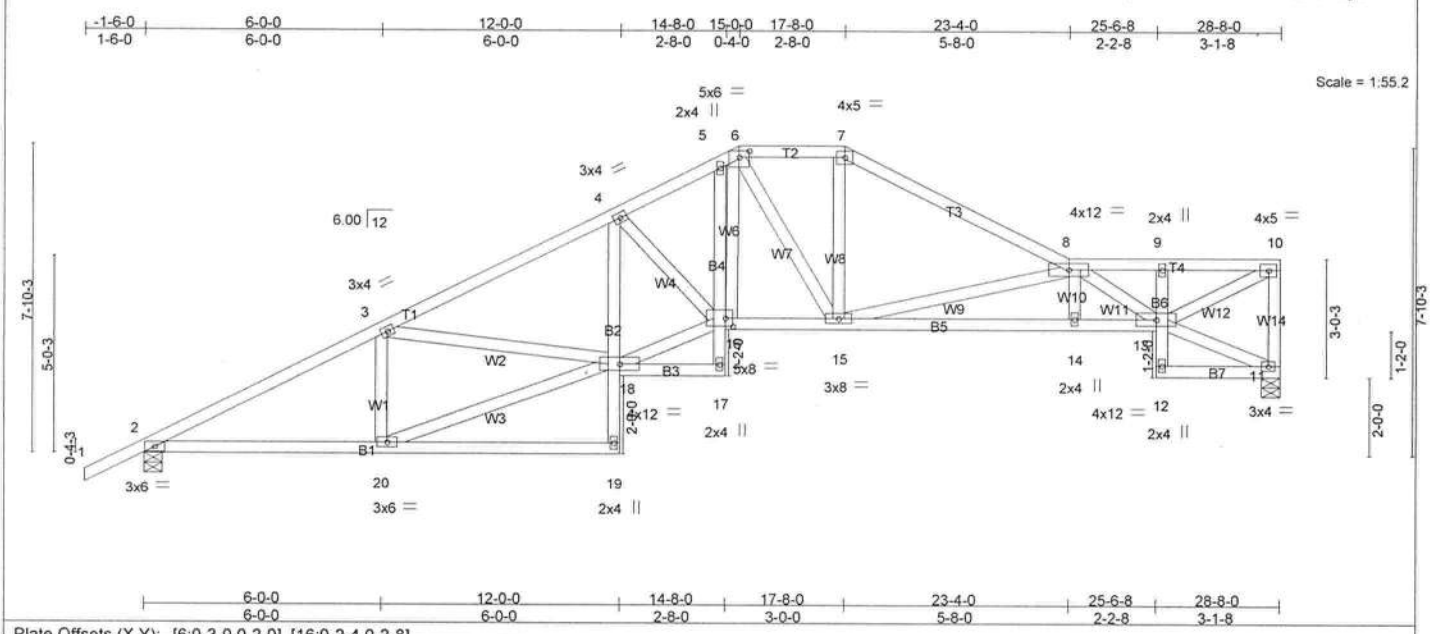

Plate Offsets (X,Y): [6:0-3-0,0-2-0], [16:0-2-4,0-2-8]

LOADING (psf)		SPACING	2-0-0	CSI		DEFL	in	(loc)	l/defl	L/d	PLATES	GRIP
TCLL	20.0	Plates Increase	1.25	TC	0.30	Vert(LL)	-0.14	14-15	>999	360	MT20	244/190
TCDL	7.0	Lumber Increase	1.25	BC	0.51	Vert(TL)	-0.28	14-15	>999	240		
BCLL	0.0 *	Rep Stress Incr	YES	WB	0.74	Horz(TL)	0.18	11	n/a	n/a		
BCDL	5.0	Code FBC2007/TPI2002		(Matrix)		Wind(LL)	0.18	16	>999	240	Weight: 187 lb	

LUMBER
TOP CHORD 2 X 4 SYP No.2
BOT CHORD 2 X 4 SYP No.2 *Except*
B2,B4,B6: 2 X 4 SYP No.3
WEBS 2 X 4 SYP No.3

BRACING
TOP CHORD Structural wood sheathing directly applied or 4-6-0 oc purlins, except end verticals.
BOT CHORD Rigid ceiling directly applied or 5-3-1 oc bracing.

MiTek recommends that Stabilizers and required cross bracing be installed during truss erection, in accordance with Stabilizer Installation guide.

REACTIONS (lb/size) 11=902/0-5-8, 2=1002/0-5-8
Max Horz 2=221(LC 6)
Max Uplift 11=-187(LC 7), 2=-268(LC 6)

FORCES (lb) - Max. Comp./Max. Ten. - All forces 250 (lb) or less except when shown.
TOP CHORD 2-3=-1658/845, 3-4=-1828/1068, 4-5=-1753/1098, 5-6=-1638/1073, 6-7=-1410/924, 7-8=-1625/954, 8-9=-1488/847, 9-10=-1436/822, 10-11=-868/508
BOT CHORD 2-20=-902/1407, 15-16=-813/1449, 14-15=-1429/2473, 13-14=-1424/2474
WEBS 3-20=-404/347, 18-20=-937/1448, 16-18=-997/1639, 6-16=-429/629, 7-15=-220/443, 8-15=-1115/679, 8-13=-1181/690, 10-13=-930/1624

NOTES (9-10)
1) Unbalanced roof live loads have been considered for this design.
2) Wind: ASCE 7-05; 110mph (3-second gust); TCDL=4.2psf; BCDL=3.0psf; h=18ft; Cat. II; Exp B; enclosed; MWFRS (low-rise) and C-C Exterior(2) zone;C-C for members and forces & MWFRS for reactions shown; Lumber DOL=1.60 plate grip DOL=1.60
3) Provide adequate drainage to prevent water ponding.
4) This truss has been designed for a 10.0 psf bottom chord live load nonconcurrent with any other live loads.
5) * This truss has been designed for a live load of 20.0psf on the bottom chord in all areas where a rectangle 3-6-0 tall by 2-0-0 wide will fit between the bottom chord and any other members.
6) All bearings are assumed to be SYP No.2 .
7) Provide mechanical connection (by others) of truss to bearing plate capable of withstanding 100 lb uplift at joint(s) except (jt=lb) 11=187, 2=268.
8) "Semi-rigid pitchbreaks including heels" Member end fixity model was used in the analysis and design of this truss.
9) This manufactured product is designed as an individual building component. The suitability and use of this component for any particular building is the responsibility of the building designer per ANSI TPI 1 as referenced by the building code.
10) Truss Design Engineer: Julius Lee, PE: Florida P.E. License No. 34869: Address: 1109 Coastal Bay Blvd. Boynton Beach, FL 33435

LOAD CASE(S) Standard

JULIUS S.K. LEE
LICENSE
No 34869
STATE OF FLORIDA
PROFESSIONAL ENGINEER

July 12,2010

Julius Lee
1109 Coastal Bay Blvd.
Boynton, FL 33435

Job	Truss	Truss Type	Qty	Ply	TROY LAND RES.
327354	T15	SPECIAL	1	1	I4395717
					Job Reference (optional)

Builders FrstSource, Lake City, FL 32055

7.140 s Oct 1 2009 MiTek Industries, Inc. Mon Jul 12 09:46:16 2010 Page 1

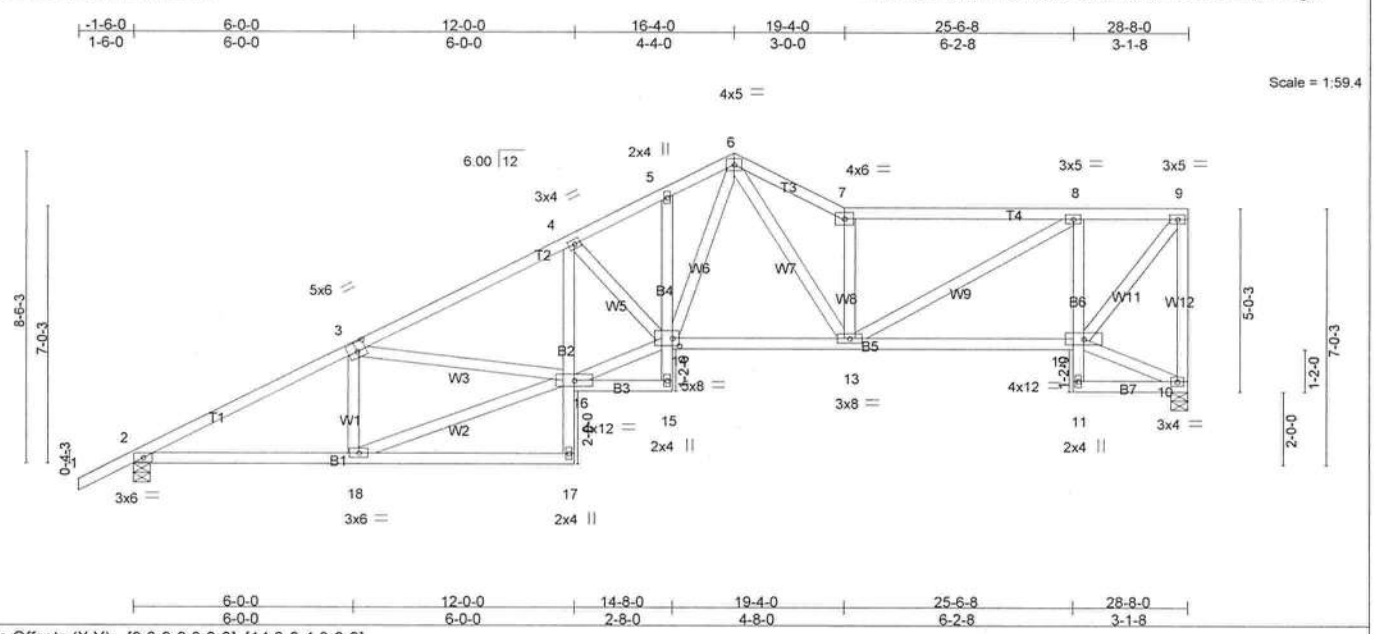

Plate Offsets (X,Y): [3:0-3-0,0-3-0], [14:0-2-4,0-2-8]

LOADING (psf)		SPACING	2-0-0	CSI		DEFL	in	(loc)	l/defl	L/d	PLATES	GRIP
TCLL	20.0	Plates Increase	1.25	TC	0.38	Vert(LL)	-0.12	13-14	>999	360	MT20	244/190
TCDL	7.0	Lumber Increase	1.25	BC	0.31	Vert(TL)	-0.23	13-14	>999	240		
BCLL	0.0 *	Rep Stress Incr	YES	WB	0.68	Horz(TL)	0.12	10	n/a	n/a		
BCDL	5.0	Code FBC2007/TPI2002		(Matrix)		Wind(LL)	0.16	13-14	>999	240	Weight: 192 lb	

LUMBER
TOP CHORD 2 X 4 SYP No.2
BOT CHORD 2 X 4 SYP No.2 *Except*
B2,B4,B6: 2 X 4 SYP No.3
WEBS 2 X 4 SYP No.3

BRACING
TOP CHORD Structural wood sheathing directly applied or 4-6-1 oc purlins, except end verticals.
BOT CHORD Rigid ceiling directly applied or 6-0-0 oc bracing.

MiTek recommends that Stabilizers and required cross bracing be installed during truss erection, in accordance with Stabilizer Installation guide.

REACTIONS (lb/size) 10=902/0-5-8, 2=1002/0-5-8
Max Horz 2=269(LC 6)
Max Uplift 10=-207(LC 7), 2=-265(LC 6)

FORCES (lb) - Max. Comp./Max. Ten. - All forces 250 (lb) or less except when shown.
TOP CHORD 2-3=-1657/801, 3-4=-1827/1059, 4-5=-1759/1108, 5-6=-1716/1143, 6-7=-1849/1151, 7-8=-1578/958, 8-9=-687/406, 9-10=-877/522
BOT CHORD 2-18=-964/1406, 13-14=-775/1242, 12-13=-424/718, 8-12=-809/533
WEBS 3-18=-405/370, 16-18=-1006/1453, 14-16=-1099/1656, 6-14=-598/859, 6-13=-398/716, 7-13=-1046/688, 8-13=-615/991, 9-12=-645/1091

NOTES (9-10)
1) Unbalanced roof live loads have been considered for this design.
2) Wind: ASCE 7-05; 110mph (3-second gust); TCDL=4.2psf; BCDL=3.0psf; h=18ft; Cat. II; Exp B; enclosed; MWFRS (low-rise) and C-C Exterior(2) zone;C-C for members and forces & MWFRS for reactions shown; Lumber DOL=1.60 plate grip DOL=1.60
3) Provide adequate drainage to prevent water ponding.
4) This truss has been designed for a 10.0 psf bottom chord live load nonconcurrent with any other live loads.
5) * This truss has been designed for a live load of 20.0psf on the bottom chord in all areas where a rectangle 3-6-0 tall by 2-0-0 wide will fit between the bottom chord and any other members.
6) All bearings are assumed to be SYP No.2 .
7) Provide mechanical connection (by others) of truss to bearing plate capable of withstanding 100 lb uplift at joint(s) except (jt=lb) 10=207, 2=265.
8) "Semi-rigid pitchbreaks including heels" Member end fixity model was used in the analysis and design of this truss.
9) This manufactured product is designed as an individual building component. The suitability and use of this component for any particular building is the responsibility of the building designer per ANSI TPI 1 as referenced by the building code.
10) Truss Design Engineer: Julius Lee, PE: Florida P.E. License No. 34869: Address: 1109 Coastal Bay Blvd. Boynton Beach, FL 33435

LOAD CASE(S) Standard

JULIUS S.K. LEE
LICENSE
No 34869
STATE OF FLORIDA
PROFESSIONAL ENGINEER

July 12,2010

Julius Lee
1109 Coastal Bay Blvd.
Boynton, FL 33435

Job	Truss	Truss Type	Qty	Ply	TROY LAND RES.
327354	T17	SPECIAL	1	1	I4395719
					Job Reference (optional)

Builders FirstSource, Lake City, FL 32055 — 7.140 s Oct 1 2009 MiTek Industries, Inc. Mon Jul 12 09:46:17 2010 Page 1

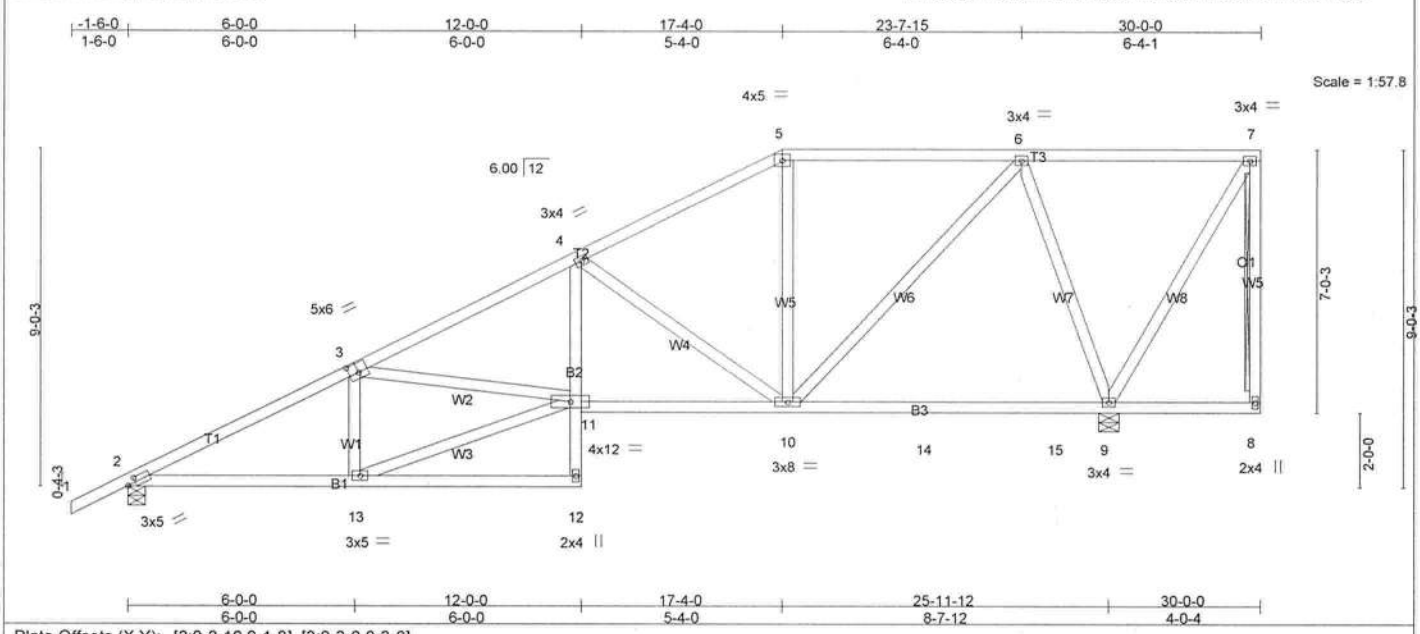

Plate Offsets (X,Y): [2:0-2-10,0-1-8], [3:0-3-0,0-3-0]

LOADING (psf)		SPACING	2-0-0	CSI		DEFL	in	(loc)	l/defl	L/d	PLATES	GRIP
TCLL	20.0	Plates Increase	1.25	TC	0.32	Vert(LL)	-0.15	9-10	>999	360	MT20	244/190
TCDL	7.0	Lumber Increase	1.25	BC	0.49	Vert(TL)	-0.24	9-10	>999	240		
BCLL	0.0 *	Rep Stress Incr	YES	WB	0.86	Horz(TL)	0.06	9	n/a	n/a		
BCDL	5.0	Code FBC2007/TPI2002		(Matrix)		Wind(LL)	0.11	12	>999	240	Weight: 188 lb	

LUMBER
TOP CHORD 2 X 4 SYP No.2
BOT CHORD 2 X 4 SYP No.2 *Except*
B2: 2 X 4 SYP No.3
WEBS 2 X 4 SYP No.3

BRACING
TOP CHORD Structural wood sheathing directly applied or 4-8-15 oc purlins, except end verticals.
BOT CHORD Rigid ceiling directly applied or 6-3-2 oc bracing.
WEBS T-Brace: 2 X 4 SYP No.3 - 7-8
Fasten T and I braces to narrow edge of web with 10d Common wire nails, 9in o.c.,with 4in minimum end distance.
Brace must cover 90% of web length.

MiTek recommends that Stabilizers and required cross bracing be installed during truss erection, in accordance with Stabilizer Installation guide.

REACTIONS (lb/size) 2=919/0-5-8, 9=1209/0-6-7
Max Horz 2=316(LC 6)
Max Uplift 2=-237(LC 6), 9=-284(LC 5)

FORCES (lb) - Max. Comp./Max. Ten. - All forces 250 (lb) or less except when shown.
TOP CHORD 2-3=-1478/606, 3-4=-1671/906, 4-5=-874/446, 5-6=-719/452
BOT CHORD 2-13=-893/1248, 4-11=-352/549, 10-11=-1023/1439, 10-14=-158/252, 14-15=-158/252, 9-15=-158/252
WEBS 3-13=-408/387, 11-13=-948/1309, 4-10=-882/695, 6-10=-436/688, 6-9=-953/636

NOTES (9-10)
1) Wind: ASCE 7-05; 110mph (3-second gust); TCDL=4.2psf; BCDL=3.0psf; h=18ft; Cat. II; Exp B; enclosed; MWFRS (low-rise) and C-C Exterior(2) zone;C-C for members and forces & MWFRS for reactions shown; Lumber DOL=1.60 plate grip DOL=1.60
2) Provide adequate drainage to prevent water ponding.
3) This truss has been designed for a 10.0 psf bottom chord live load nonconcurrent with any other live loads.
4) * This truss has been designed for a live load of 20.0psf on the bottom chord in all areas where a rectangle 3-6-0 tall by 2-0-0 wide will fit between the bottom chord and any other members, with BCDL = 5.0psf.
5) All bearings are assumed to be SYP No.2 .
6) Provide mechanical connection (by others) of truss to bearing plate capable of withstanding 100 lb uplift at joint(s) except (jt=lb) 2=237, 9=284.
7) "Semi-rigid pitchbreaks including heels" Member end fixity model was used in the analysis and design of this truss.
8) Warning: Additional permanent and stability bracing for truss system (not part of this component design) is always required.
9) This manufactured product is designed as an individual building component. The suitability and use of this component for any particular building is the responsibility of the building designer per ANSI TPI 1 as referenced by the building code.
10) Truss Design Engineer: Julius Lee, PE: Florida P.E. License No. 34869: Address: 1109 Coastal Bay Blvd. Boynton Beach, FL 33435

LOAD CASE(S) Standard

JULIUS S.K. LEE
LICENSE
No 34869
STATE OF FLORIDA
PROFESSIONAL ENGINEER

July 12,2010

Julius Lee
1109 Coastal Bay Blvd.
Boynton, FL 33435

LOAD CASE(S) Standard

1) Regular: Lumber Increase=1.25, Plate Increase=1.25

Uniform Loads (plf)

Vert: 1-18=-54, 5-19=-54, 5-9=-54, 2-20=-10, 20-21=-50, 21-22=-10, 22-23=-50, 23-24=-10, 24-25=-50, 8-25=-10

Concentrated Loads (lb)

Vert: 18=-138(F)

Trapezoidal Loads (plf)

Vert: 18=-206(F=-152)-to-19=-137(F=-83)

JULIUS S.K. LEE
LICENSE
No 34869
STATE OF
FLORIDA
PROFESSIONAL ENGINEER

July 12,2010

Julius Lee
1109 Coastal Bay Blvd.
Boynton, FL 33435

LOAD CASE(S) Standard

1) Regular: Lumber Increase=1.25, Plate Increase=1.25
   Uniform Loads (plf)
   Vert: 1-6=-87(F=-33), 6-7=-87(F=-33), 7-12=-54, 2-47=-10, 47-48=-50, 48-49=-10, 49-50=-50, 50-51=-10, 51-52=-50, 11-52=-10

JULIUS S.K. LEE
LICENSE
No 34869
STATE OF
FLORIDA
PROFESSIONAL ENGINEER

July 12,2010

Julius Lee
1109 Coastal Bay Blvd.
Boynton, FL 33435

Job	Truss	Truss Type	Qty	Ply	TROY LAND RES.
327354	T20	COMMON	1	1	I4395723 Job Reference (optional)

Builders FrstSource, Lake City, FL 32055 — 7.140 s Oct 1 2009 MiTek Industries, Inc. Mon Jul 12 09:46:20 2010 Page 1

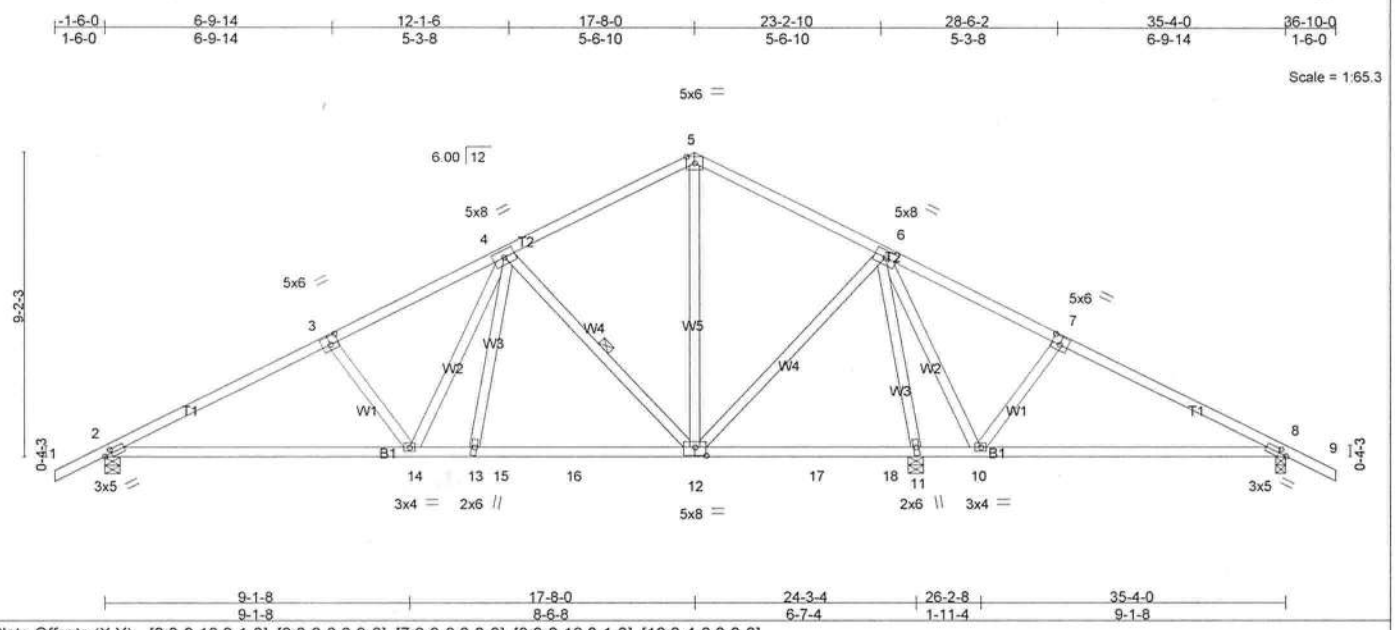

Plate Offsets (X,Y): [2:0-2-10,0-1-8], [3:0-3-0,0-3-0], [7:0-3-0,0-3-0], [8:0-2-10,0-1-8], [12:0-4-0,0-3-0]

LOADING (psf)		SPACING 2-0-0		CSI		DEFL	in	(loc)	l/defl	L/d	PLATES	GRIP
TCLL	20.0	Plates Increase	1.25	TC	0.37	Vert(LL)	-0.16	2-14	>999	360	MT20	244/190
TCDL	7.0	Lumber Increase	1.25	BC	0.47	Vert(TL)	-0.30	2-14	>964	240		
BCLL	0.0 *	Rep Stress Incr	YES	WB	0.89	Horz(TL)	0.02	11	n/a	n/a		
BCDL	5.0	Code FBC2007/TPI2002		(Matrix)		Wind(LL)	0.36	8-10	>359	240	Weight: 201 lb	

LUMBER
TOP CHORD 2 X 4 SYP No.2
BOT CHORD 2 X 4 SYP No.2
WEBS 2 X 4 SYP No.3

BRACING
TOP CHORD Structural wood sheathing directly applied or 5-3-12 oc purlins.
BOT CHORD Rigid ceiling directly applied or 6-0-0 oc bracing.
WEBS 1 Row at midpt 4-12

MiTek recommends that Stabilizers and required cross bracing be installed during truss erection, in accordance with Stabilizer Installation guide.

REACTIONS (lb/size) 2=831/0-5-8, 8=257/0-3-8, 11=1508/0-5-8
Max Horz 2=-131(LC 7)
Max Uplift 2=-237(LC 6), 8=-276(LC 7), 11=-401(LC 6)
Max Grav 2=831(LC 1), 8=331(LC 11), 11=1508(LC 1)

FORCES (lb) - Max. Comp./Max. Ten. - All forces 250 (lb) or less except when shown.
TOP CHORD 2-3=-1237/624, 3-4=-1029/597, 4-5=-427/346, 5-6=-427/346, 6-7=0/330
BOT CHORD 2-14=-397/1029, 13-14=-150/738, 13-15=-151/723, 15-16=-151/723, 12-16=-151/723, 12-17=-185/322, 17-18=-185/322, 11-18=-185/322, 10-11=-371/478
WEBS 6-12=-261/716, 6-10=-701/363, 7-10=-309/323, 4-12=-590/415, 4-14=-196/356, 3-14=-279/282, 6-11=-1393/1167

NOTES (8-9)
1) Unbalanced roof live loads have been considered for this design.
2) Wind: ASCE 7-05; 110mph (3-second gust); TCDL=4.2psf; BCDL=3.0psf; h=18ft; Cat. II; Exp B; enclosed; MWFRS (low-rise) and C-C Exterior(2) zone; porch right exposed;C-C for members and forces & MWFRS for reactions shown; Lumber DOL=1.60 plate grip DOL=1.60
3) This truss has been designed for a 10.0 psf bottom chord live load nonconcurrent with any other live loads.
4) * This truss has been designed for a live load of 20.0psf on the bottom chord in all areas where a rectangle 3-6-0 tall by 2-0-0 wide will fit between the bottom chord and any other members, with BCDL = 5.0psf.
5) All bearings are assumed to be SYP No.2 .
6) Provide mechanical connection (by others) of truss to bearing plate capable of withstanding 237 lb uplift at joint 2, 276 lb uplift at joint 8 and 401 lb uplift at joint 11.
7) "Semi-rigid pitchbreaks including heels" Member end fixity model was used in the analysis and design of this truss.
8) This manufactured product is designed as an individual building component. The suitability and use of this component for any particular building is the responsibility of the building designer per ANSI TPI 1 as referenced by the building code.
9) Truss Design Engineer: Julius Lee, PE: Florida P.E. License No. 34869: Address: 1109 Coastal Bay Blvd. Boynton Beach, FL 33435

LOAD CASE(S) Standard

JULIUS S.K. LEE
LICENSE
No 34869
STATE OF FLORIDA
PROFESSIONAL ENGINEER

July 12,2010

Julius Lee
1109 Coastal Bay Blvd.
Boynton, FL 33435

LOAD CASE(S) Standard

1) Regular: Lumber Increase=1.25, Plate Increase=1.25
   Uniform Loads (plf)
   Vert: 1-6=-87(F=-33), 6-7=-87(F=-33), 7-11=-54, 2-38=-10, 38-39=-50, 10-39=-10

JULIUS S.K. LEE
LICENSE
No 34[illegible]69
STATE OF
FLORIDA
PROFESSIONAL ENGINEER

July 12,2010

Julius Lee
1109 Coastal Bay Blvd.
Boynton, FL 33435

Job	Truss	Truss Type	Qty	Ply	TROY LAND RES.
327354	T21G	GABLE	1	1	I4395726
					Job Reference (optional)

Builders FrstSource, Lake City, FL 32055 — 7.140 s Oct 1 2009 MiTek Industries, Inc. Mon Jul 12 09:46:22 2010 Page 1

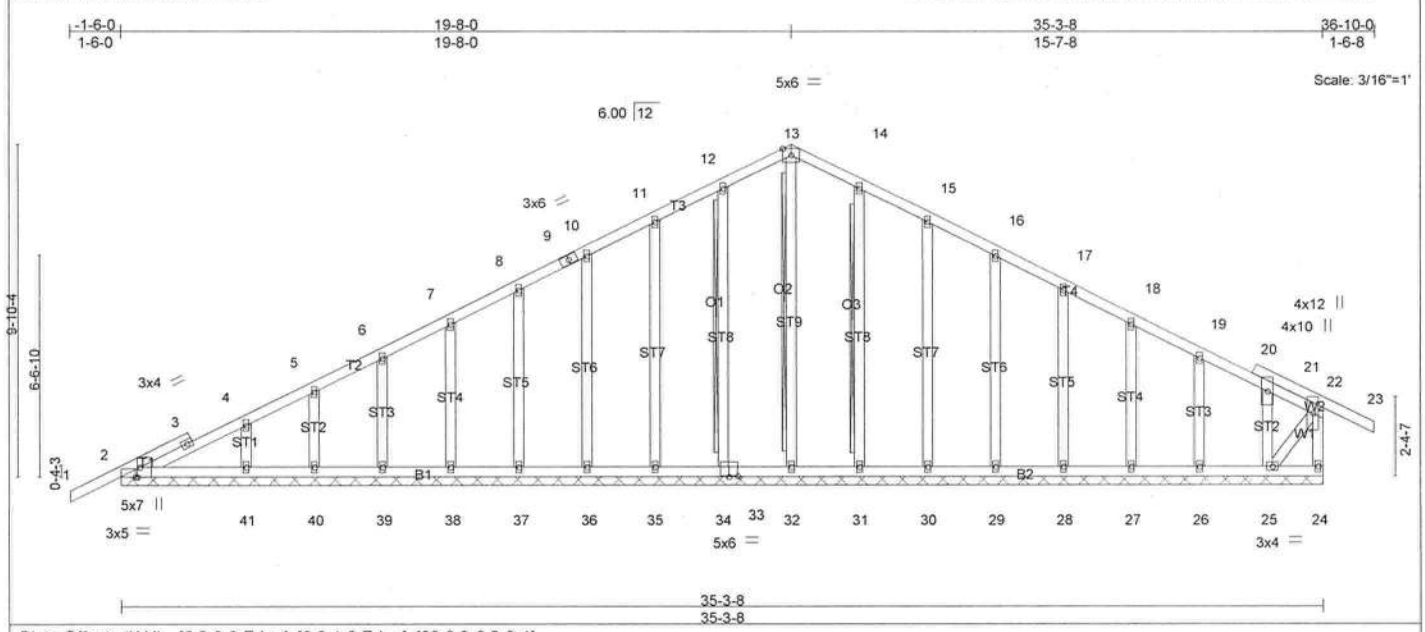

Plate Offsets (X,Y): [2:0-3-8,Edge], [2:0-1-8,Edge], [33:0-3-0,0-0-4]

LOADING (psf)		SPACING	2-0-0	CSI		DEFL	in	(loc)	l/defl	L/d	PLATES	GRIP
TCLL	20.0	Plates Increase	1.25	TC	0.26	Vert(LL)	-0.01	23	n/r	120	MT20	244/190
TCDL	7.0	Lumber Increase	1.25	BC	0.07	Vert(TL)	-0.02	23	n/r	90		
BCLL	0.0 *	Rep Stress Incr	NO	WB	0.17	Horz(TL)	0.01	24	n/a	n/a		
BCDL	5.0	Code FBC2007/TPI2002		(Matrix)							Weight: 254 lb	

LUMBER
TOP CHORD 2 X 4 SYP No.2
BOT CHORD 2 X 4 SYP No.2
WEBS 2 X 4 SYP No.2 *Except*
W1: 2 X 4 SYP No.3
OTHERS 2 X 4 SYP No.3

BRACING
TOP CHORD Structural wood sheathing directly applied or 6-0-0 oc purlins, except end verticals.
BOT CHORD Rigid ceiling directly applied or 6-0-0 oc bracing.
WEBS T-Brace: 2 X 4 SYP No.3 - 13-32, 12-34, 14-31
Fasten T and I braces to narrow edge of web with 10d Common wire nails, 9in o.c.,with 4in minimum end distance.
Brace must cover 90% of web length.

MiTek recommends that Stabilizers and required cross bracing be installed during truss erection, in accordance with Stabilizer Installation guide.

REACTIONS All bearings 35-3-8.
(lb) - Max Horz 2=226(LC 6)
Max Uplift All uplift 100 lb or less at joint(s) 24 except 2=-130(LC 6), 34=-116(LC 6), 35=-123(LC 6), 36=-119(LC 6), 37=-119(LC 6), 38=-119(LC 6), 39=-120(LC 6), 40=-116(LC 6), 41=-132(LC 6), 31=-113(LC 7), 30=-124(LC 7), 29=-118(LC 7), 28=-119(LC 7), 27=-120(LC 7), 26=-118(LC 7), 25=-225(LC 7)
Max Grav All reactions 250 lb or less at joint(s) 32, 34, 35, 36, 37, 38, 39, 40, 31, 30, 29, 28, 27, 26, 25 except 2=314(LC 10), 24=269(LC 1), 41=295(LC 10)

FORCES (lb) - Max. Comp./Max. Ten. - All forces 250 (lb) or less except when shown.
TOP CHORD 11-12=-38/250, 12-13=-43/304, 13-14=-40/304, 14-15=-36/250, 22-24=-264/56
WEBS 4-41=-257/177

NOTES (14-15)
1) Unbalanced roof live loads have been considered for this design.
2) Wind: ASCE 7-05; 110mph (3-second gust); TCDL=4.2psf; BCDL=3.0psf; h=18ft; Cat. II; Exp B; enclosed; MWFRS (low-rise) gable end zone and C-C Exterior(2) zone;C-C for members and forces & MWFRS for reactions shown; Lumber DOL=1.60 plate grip DOL=1.60
3) Truss designed for wind loads in the plane of the truss only. For studs exposed to wind (normal to the face), see Standard Industry Gable End Details as applicable, or consult qualified building designer as per ANSI/TPI 1-2002.
4) All plates are 2x4 MT20 unless otherwise indicated.
5) Gable requires continuous bottom chord bearing.
6) Gable studs spaced at 2-0-0 oc.
7) This truss has been designed for a 10.0 psf bottom chord live load nonconcurrent with any other live loads.
8) * This truss has been designed for a live load of 20.0psf on the bottom chord in all areas where a rectangle 3-6-0 tall by 2-0-0 wide will fit between the bottom chord and any other members.
9) All bearings are assumed to be SYP No.2 .
10) Provide mechanical connection (by others) of truss to bearing plate capable of withstanding 100 lb uplift at joint(s) 24 except (jt=lb) 2=130, 34=116, 35=123, 36=119, 37=119, 38=119, 39=120, 40=116, 41=132, 31=113, 30=124, 29=118, 28=119, 27=120, 26=118, 25=225.
11) "Semi-rigid pitchbreaks including heels" Member end fixity model was used in the analysis and design of this truss.
12) Warning: Additional permanent and stability bracing for truss system (not part of this component design) is always required.

Continued on page 2

JULIUS S.K. LEE
LICENSE
No 34809
STATE OF
FLORIDA
PROFESSIONAL ENGINEER

July 12,2010

Julius Lee
1109 Coastal Bay Blvd.
Boynton, FL 33435

Job	Truss	Truss Type	Qty	Ply	TROY LAND RES.
327354	T22	KINGPOST	10	1	I4395727
					Job Reference (optional)

Builders FrstSource, Lake City, FL 32055 — 7.140 s Oct 1 2009 MiTek Industries, Inc. Mon Jul 12 09:46:22 2010 Page 1

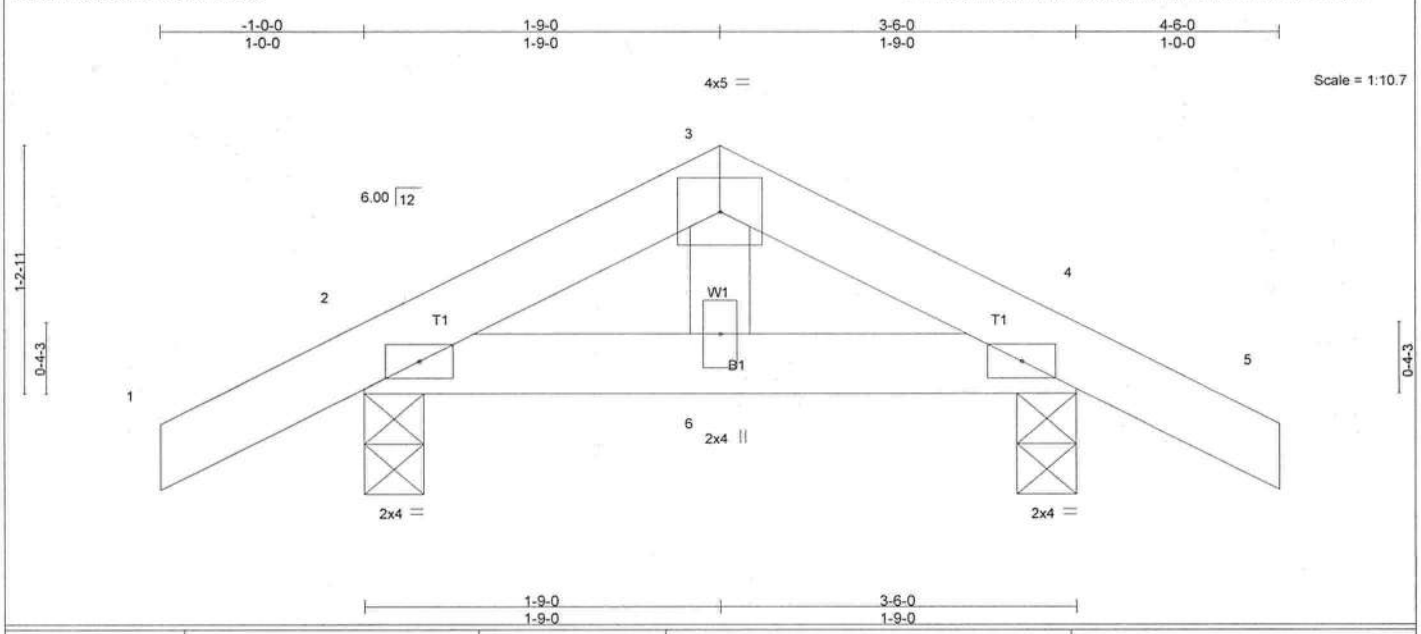

LOADING (psf)		SPACING	2-0-0	CSI		DEFL	in	(loc)	l/defl	L/d	PLATES	GRIP
TCLL	20.0	Plates Increase	1.25	TC	0.08	Vert(LL)	-0.00	6	>999	360	MT20	244/190
TCDL	7.0	Lumber Increase	1.25	BC	0.02	Vert(TL)	-0.00	6	>999	240		
BCLL	0.0 *	Rep Stress Incr	YES	WB	0.02	Horz(TL)	0.00	4	n/a	n/a		
BCDL	5.0	Code FBC2007/TPI2002		(Matrix)		Wind(LL)	0.00	2	>999	240	Weight: 16 lb	

LUMBER
TOP CHORD 2 X 4 SYP No.2
BOT CHORD 2 X 4 SYP No.2
WEBS 2 X 4 SYP No.3

BRACING
TOP CHORD Structural wood sheathing directly applied or 3-6-0 oc purlins.
BOT CHORD Rigid ceiling directly applied or 10-0-0 oc bracing.

MiTek recommends that Stabilizers and required cross bracing be installed during truss erection, in accordance with Stabilizer Installation guide.

REACTIONS (lb/size) 2=165/0-3-8, 4=165/0-3-8
Max Horz 2=-31(LC 7)
Max Uplift 2=-117(LC 6), 4=-117(LC 7)

FORCES (lb) - Max. Comp./Max. Ten. - All forces 250 (lb) or less except when shown.

NOTES (8-9)
1) Unbalanced roof live loads have been considered for this design.
2) Wind: ASCE 7-05; 110mph (3-second gust); TCDL=4.2psf; BCDL=3.0psf; h=18ft; Cat. II; Exp B; enclosed; MWFRS (low-rise) gable end zone and C-C Exterior(2) zone;C-C for members and forces & MWFRS for reactions shown; Lumber DOL=1.60 plate grip DOL=1.60
3) This truss has been designed for a 10.0 psf bottom chord live load nonconcurrent with any other live loads.
4) * This truss has been designed for a live load of 20.0psf on the bottom chord in all areas where a rectangle 3-6-0 tall by 2-0-0 wide will fit between the bottom chord and any other members.
5) All bearings are assumed to be SYP No.2 .
6) Provide mechanical connection (by others) of truss to bearing plate capable of withstanding 100 lb uplift at joint(s) except (jt=lb) 2=117, 4=117.
7) "Semi-rigid pitchbreaks including heels" Member end fixity model was used in the analysis and design of this truss.
8) This manufactured product is designed as an individual building component. The suitability and use of this component for any particular building is the responsibility of the building designer per ANSI TPI 1 as referenced by the building code.
9) Truss Design Engineer: Julius Lee, PE: Florida P.E. License No. 34869: Address: 1109 Coastal Bay Blvd. Boynton Beach, FL 33435

LOAD CASE(S) Standard

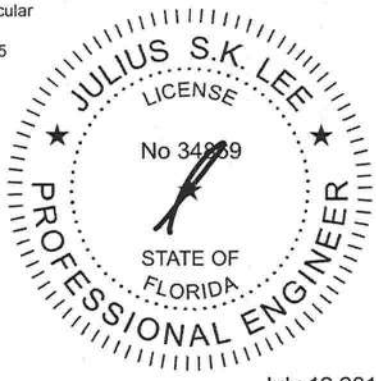

July 12,2010

Julius Lee
1109 Coastal Bay Blvd.
Boynton, FL 33435

STEPDOWN CORNER SET

TOP CHORD 2X4 SO. PINE #2 or Better
BOT CHORD 2X4 SO. PINE #2 or Better
WEBS 2X4 SO. PINE #3 or Better

120 MPH MAX

Setback 7' or Less

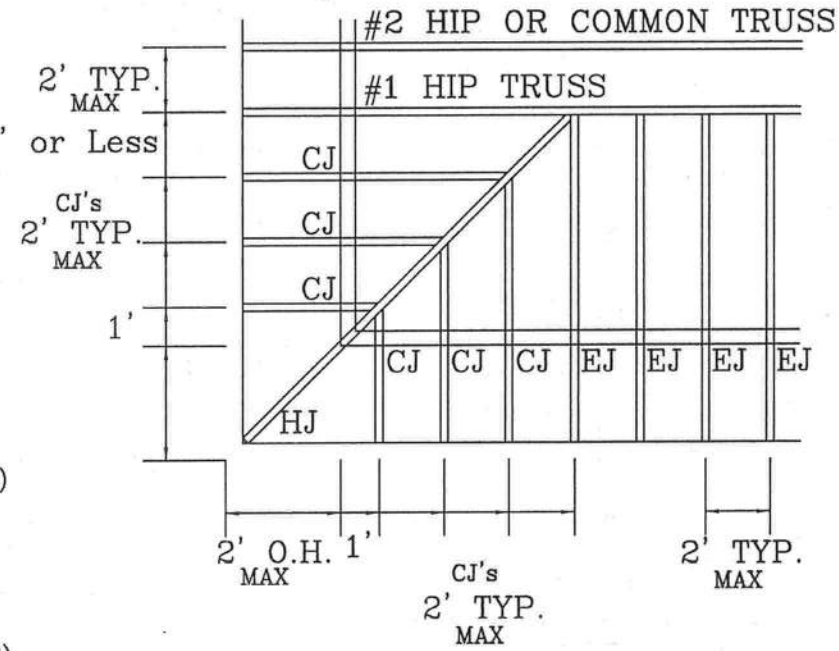

PROVIDE UPLIFT CONNECTIONS AT BEARINGS AS INDICATED.
UPLIFT: 400# or Less
BRG LOC: *
UPLIFT BASED ON 7.2 PSF TOTAL DEAD LOAD. WIND SPEED=120 "C" MPH. MEAN HGT=28 FT. ENCLOSED. (ASCE 7-02)

PROVIDE UPLIFT CONNECTIONS AT BEARINGS AS INDICATED. TILE
UPLIFT: 400# or Less
BRG LOC: *
UPLIFT BASED ON 15.0 PSF TOTAL DEAD LOAD. WIND SPEED=120 "C" MPH. MEAN HGT (of jacks)=28 FT. ENCLOSED. (ASCE 7-02)

PROVIDE UPLIFT CONNECTIONS AT BEARINGS AS INDICATED.
UPLIFT: 400# or Less
BRG LOC: *
UPLIFT BASED ON 7.2 PSF TOTAL DEAD LOAD. WIND SPEED=120 "B" MPH. MEAN HGT (of jacks)=28 FT. ENCLOSED. (ASCE 7-02)

* (3) 16d TOENAILS

** SEE EOR FOR TIE DOWN

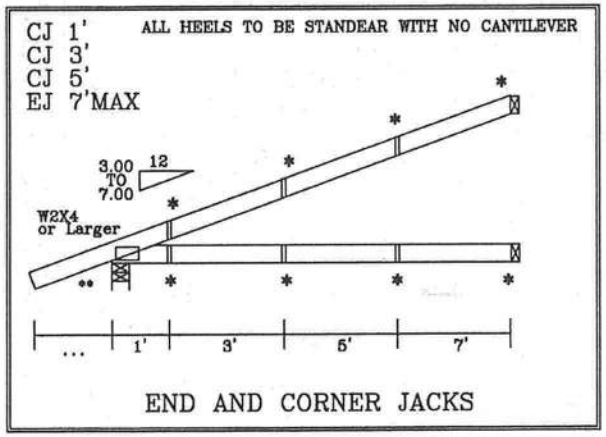

END AND CORNER JACKS

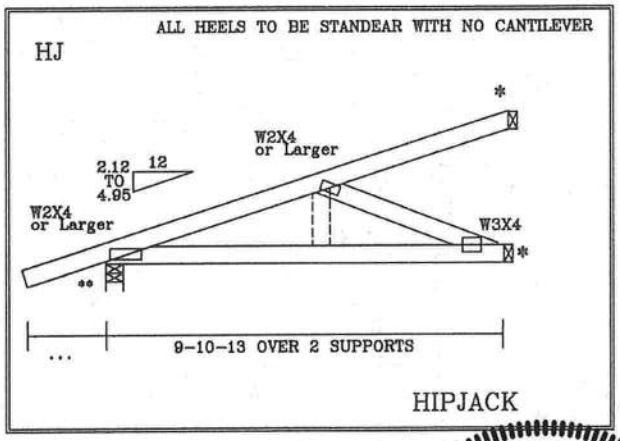

HIPJACK

UPLIFT VALUES DO TAKE INTO ACCOUNT PORCHES EXPOSED
BC LIVE LOAD IS NON CONCURRENT 10*

SHINGLE			
TC	LL	20	MAX PSF
TC	DL	7	MAX PSF
BC	LL	10*	MAX PSF
BC	DL	5	MAX PSF
TILE			
TC	LL	20	MAX PSF
TC	DL	20	MAX PSF
BC	LL	10*	MAX PSF
BC	DL	5	MAX PSF
DUR. FAC.		1.25	
SPACING		2' MAX	

REF	7'MAX STBK CS
DATE	Jun./27/2008
DRWG	
-ENG	

REVIEWED
By julius lee at 10:52 am, Jun 27, 2008

CORNER SET SETBACK
7'0" MAX

WARNING TRUSSES REQUIRE EXTREME CARE IN FABRICATING, HANDLING, SHIPPING, INSTALLING AND BRACING. REFER TO BCSI 1-03 (BUILDING COMPONENT SAFETY INFORMATION), PUBLISHED BY TPI (TRUSS PLATE INSTITUTE, 583 D'ONOFRIO DR., SUITE 200, MADISON, WI. 53719) AND WTCA (WOOD TRUSS COUNCIL OF AMERICA, 6300 ENTERPRISE LN, MADISON, WI 53719) FOR SAFETY PRACTICES PRIOR TO PERFORMING THESE FUNCTIONS. UNLESS OTHERWISE INDICATED, TOP CHORD SHALL HAVE PROPERLY ATTACHED STRUCTURAL PANELS AND BOTTOM CHORD SHALL HAVE A PROPERLY ATTACHED RIGID CEILING.

IMPORTANT FURNISH COPY OF THIS DESIGN TO INSTALLATION CONTRACTOR. ALPINE ENGINEERED PRODUCTS, INC., SHALL NOT BE RESPONSIBLE FOR ANY DEVIATION FROM THIS DESIGN; ANY FAILURE TO BUILD THE TRUSS IN CONFORMANCE WITH TPI; OR FABRICATING, HANDLING, SHIPPING, INSTALLING & BRACING OF TRUSSES. DESIGN CONFORMS WITH APPLICABLE PROVISIONS OF NDS (NATIONAL DESIGN SPEC BY AF&PA) AND TPI. ALPINE CONNECTOR PLATES ARE MADE OF 20/18/16GA (W,H/S/K) ASTM A653 GRADE 40/60 (W,K/H,S) GALV. STEEL. APPLY PLATES TO EACH FACE OF TRUSS AND, UNLESS OTHERWISE LOCATED ON THIS DESIGN, POSITION PER DRAWINGS 160A-Z. ANY INSPECTION OF PLATES FOLLOWED BY (I) SHALL BE PER ANNEX A3 OF TPI 1-2002 SEC. 3. A SEAL ON THIS DRAWING INDICATES ACCEPTANCE OF PROFESSIONAL ENGINEERING RESPONSIBILITY SOLELY FOR THE TRUSS COMPONENT DESIGN SHOWN. THE SUITABILITY AND USE OF THIS COMPONENT FOR ANY BUILDING IS THE RESPONSIBILITY OF THE BUILDING DESIGNER, PER ANSI/TPI 1 SEC. 2.

JULIUS LEE
CONS. ENGINEERS, P.A.
1455 SW 4th AVENUE
DELRAY BEACH, FL 33444-2181

JULIUS LEE NO. 34869 STATE OF FLORIDA PROFESSIONAL ENGINEER

ASCE 7-02: 130 MPH WIND SPEED, 30' MEAN HEIGHT, ENCLOSED, I = 1.00, EXPOSURE C

MAX GABLE VERTICAL LENGTH

2X4 GABLE VERTICAL SPACING	SPECIES	GRADE \ BRACE	NO BRACES	(1) 1X4 "L" BRACE * GROUP A	(1) 1X4 "L" BRACE * GROUP B	(1) 2X4 "L" BRACE * GROUP A	(1) 2X4 "L" BRACE * GROUP B	(2) 2X4 "L" BRACE ** GROUP A	(2) 2X4 "L" BRACE ** GROUP B	(1) 2X6 "L" BRACE * GROUP A	(1) 2X6 "L" BRACE * GROUP B	(2) 2X6 "L" BRACE ** GROUP A	(2) 2X6 "L" BRACE ** GROUP B
24" O.C.	SPF HF	#1 / #2	3' 2"	5' 6"	6' 8"	6' 6"	6' 9"	7' 10"	8' 0"	10' 3"	10' 7"	12' 3"	12' 7"
		#3	3' 1"	4' 5"	4' 5"	5' 10"	5' 10"	7' 10"	7' 10"	9' 1"	9' 1"	12' 3"	12' 3"
		STUD	3' 1"	4' 5"	4' 5"	5' 10"	5' 10"	7' 10"	7' 10"	9' 1"	9' 1"	12' 3"	12' 3"
		STANDARD	2' 11"	3' 9"	3' 9"	5' 0"	5' 0"	6' 9"	6' 9"	7' 10"	7' 10"	10' 7"	10' 7"
	SP DFL	#1	3' 6"	5' 8"	5' 11"	6' 8"	7' 0"	7' 10"	8' 5"	10' 3"	11' 1"	12' 3"	13' 2"
		#2	3' 5"	5' 6"	5' 11"	6' 6"	7' 0"	7' 10"	8' 5"	10' 3"	11' 1"	12' 3"	13' 2"
		#3	3' 3"	4' 6"	4' 6"	6' 0"	6' 0"	7' 10"	8' 1"	9' 4"	9' 4"	12' 3"	12' 6"
		STUD	3' 3"	4' 6"	4' 6"	5' 11"	5' 11"	7' 10"	8' 0"	9' 3"	9' 3"	12' 3"	12' 6"
		STANDARD	3' 0"	3' 10"	3' 10"	5' 1"	5' 1"	6' 11"	6' 11"	8' 0"	8' 0"	10' 10"	10' 10"
16" O.C.	SPF HF	#1 / #2	3' 8"	6' 4"	6' 6"	7' 6"	7' 8"	8' 11"	9' 2"	11' 9"	12' 1"	14' 0"	14' 0"
		#3	3' 7"	5' 5"	5' 5"	7' 2"	7' 2"	8' 11"	8' 11"	11' 2"	11' 2"	14' 0"	14' 0"
		STUD	3' 7"	5' 5"	5' 5"	7' 2"	7' 2"	8' 11"	8' 11"	11' 1"	11' 1"	14' 0"	14' 0"
		STANDARD	3' 7"	4' 8"	4' 8"	6' 2"	6' 2"	8' 3"	8' 3"	9' 7"	9' 7"	12' 11"	12' 11"
	SP DFL	#1	4' 0"	8' 4"	8' 10"	7' 8"	8' 1"	8' 11"	9' 7"	11' 9"	12' 8"	14' 0"	14' 0"
		#2	3' 11"	8' 4"	8' 10"	7' 8"	8' 1"	8' 11"	9' 7"	11' 9"	12' 8"	14' 0"	14' 0"
		#3	3' 9"	5' 7"	5' 7"	7' 4"	7' 4"	8' 11"	9' 5"	11' 5"	11' 5"	14' 0"	14' 0"
		STUD	3' 9"	5' 6"	5' 6"	7' 3"	7' 3"	8' 11"	9' 5"	11' 4"	11' 4"	14' 0"	14' 0"
		STANDARD	3' 8"	4' 9"	4' 9"	6' 3"	6' 3"	8' 5"	8' 5"	9' 9"	9' 9"	13' 3"	13' 3"
12" O.C.	SPF HF	#1 / #2	4' 0"	6' 11"	7' 2"	8' 3"	8' 6"	9' 10"	10' 1"	12' 11"	13' 4"	14' 0"	14' 0"
		#3	3' 11"	6' 3"	6' 3"	8' 3"	8' 3"	9' 10"	9' 10"	12' 11"	12' 11"	14' 0"	14' 0"
		STUD	3' 11"	6' 3"	6' 3"	8' 3"	8' 3"	9' 10"	9' 10"	12' 10"	12' 10"	14' 0"	14' 0"
		STANDARD	3' 11"	5' 4"	5' 4"	7' 1"	7' 1"	9' 6"	9' 6"	11' 1"	11' 1"	14' 0"	14' 0"
	SP DFL	#1	4' 5"	6' 11"	7' 6"	8' 3"	8' 11"	9' 10"	10' 7"	12' 11"	13' 11"	14' 0"	14' 0"
		#2	4' 4"	6' 11"	7' 6"	8' 3"	8' 11"	9' 10"	10' 7"	12' 11"	13' 11"	14' 0"	14' 0"
		#3	4' 2"	6' 5"	6' 5"	8' 3"	8' 6"	9' 10"	10' 4"	12' 11"	13' 3"	14' 0"	14' 0"
		STUD	4' 2"	6' 4"	6' 4"	8' 3"	8' 5"	9' 10"	10' 4"	12' 11"	13' 1"	14' 0"	14' 0"
		STANDARD	4' 0"	5' 6"	5' 6"	7' 3"	7' 3"	9' 9"	9' 9"	11' 4"	11' 4"	14' 0"	14' 0"

BRACING GROUP SPECIES AND GRADES:

GROUP A:

SPRUCE-PINE-FIR	
#1 / #2	STANDARD
#3	STUD

HEM-FIR	
#2	STUD
#3	STANDARD

DOUGLAS FIR-LARCH
#3
STUD
STANDARD

SOUTHERN PINE
#3
STUD
STANDARD

GROUP B:

HEM-FIR
#1 & BTR
#1

SOUTHERN PINE
#1
#2

DOUGLAS FIR-LARCH
#1
#2

GABLE TRUSS DETAIL NOTES:

LIVE LOAD DEFLECTION CRITERIA IS L/240.

PROVIDE UPLIFT CONNECTIONS FOR 180 PLF OVER CONTINUOUS BEARING (5 PSF TC DEAD LOAD).

GABLE END SUPPORTS LOAD FROM 4' 0" OUTLOOKERS WITH 2' 0" OVERHANG, OR 12" PLYWOOD OVERHANG.

ATTACH EACH "L" BRACE WITH 10d NAILS.
* FOR (1) "L" BRACE: SPACE NAILS AT 2" O.C. IN 18" END ZONES AND 4" O.C. BETWEEN ZONES.
** FOR (2) "L" BRACES: SPACE NAILS AT 3" O.C. IN 18" END ZONES AND 6" O.C. BETWEEN ZONES.

"L" BRACING MUST BE A MINIMUM OF 80% OF WEB MEMBER LENGTH.

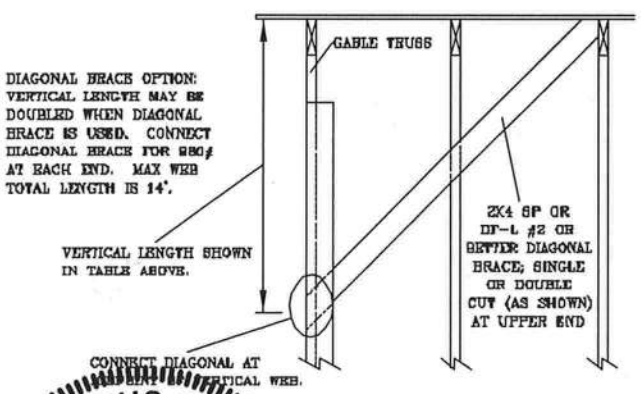

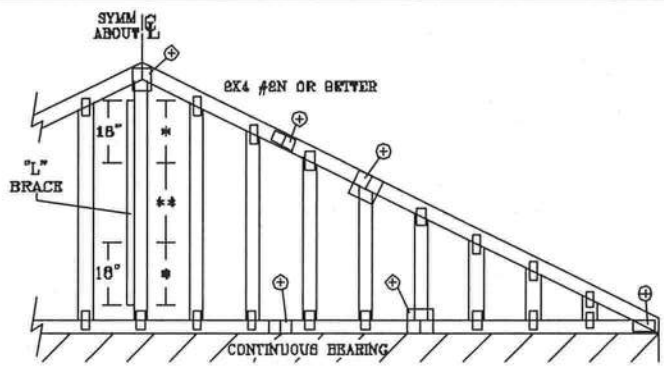

REFER TO CHART ABOVE FOR MAX GABLE VERTICAL LENGTH.

GABLE VERTICAL PLATE SIZES

VERTICAL LENGTH	ND SPLICE
LESS THAN 4' 0"	1X4 OR 2X3
GREATER THAN 4' 0", BUT LESS THAN 11' 8"	2X4
GREATER THAN 11' 8"	2.5X4

\+ REFER TO COMMON TRUSS DESIGN FOR PEAK, SPLICE, AND HEEL PLATES.

JULIUS LEE LICENSED NO. 34869 STATE OF FLORIDA PROFESSIONAL ENGINEER

WARNING TRUSSES REQUIRE EXTREME CARE IN FABRICATING, HANDLING, SHIPPING, INSTALLING AND BRACING. REFER TO BCSI 1-03 (BUILDING COMPONENT SAFETY INFORMATION), PUBLISHED BY TPI (TRUSS PLATE INSTITUTE, 583 D'ONOFRIO DR., SUITE 200, MADISON, WI 53719) AND WTCA (WOOD TRUSS COUNCIL AMERICA, 6300 ENTERPRISE LN, MADISON, WI 53719) FOR SAFETY PRACTICES PRIOR TO PERFORMING THESE FUNCTIONS. UNLESS OTHERWISE INDICATED, TOP CHORD SHALL HAVE PROPERLY ATTACHED STRUCTURAL PANELS AND BOTTOM CHORD SHALL HAVE A PROPERLY ATTACHED RIGID CEILING.

REVIEWED
By julius lee at 12:00 pm, Jun 11, 2008

JULIUS LEE'S
CONS. ENGINEERS P.A.
1456 SW 4th AVENUE
DELRAY BEACH, FL. 33444-2161

No: 34869
STATE OF FLORIDA

MAX. TOT. LD. 60 PSF

MAX. SPACING 24.0"

REF ASCE7-02-GAB13030
DATE 11/26/03
DWG MIVEK SYD GABLE 90' E H7
-ENG

PIGGYBACK DETAIL

TOP CHORD 2X4 #2 OR BETTER
BOT CHORD 2X4 #2 OR BETTER
WEBS 2X4 #3 OR BETTER

REFER TO SEALED DESIGN FOR DASHED PLATES.

SPACE PIGGYBACK VERTICALS AT 4' OC MAX.

TOP AND BOTTOM CHORD SPLICES MUST BE STAGGERED SO THAT ONE SPLICE IS NOT DIRECTLY OVER ANOTHER.

PIGGYBACK BOTTOM CHORD MAY BE OMITTED. ATTACH VERTICAL WEBS TO TRUSS TOP CHORD WITH 1.5X3 PLATE.

ATTACH PURLINS TO TOP OF FLAT TOP CHORD. IF PIGGYBACK IS SOLID LUMBER OR THE BOTTOM CHORD IS OMITTED, PURLINS MAY BE APPLIED BENEATH THE TOP CHORD OF SUPPORTING TRUSS.

REFER TO ENGINEER'S SEALED DESIGN FOR REQUIRED PURLIN SPACING.

THIS DETAIL IS APPLICABLE FOR THE FOLLOWING WIND CONDITIONS:

- 110 MPH WIND, 30' MEAN HGT, ASCE 7-02, CLOSED BLDG, LOCATED ANYWHERE IN ROOF, 1 MI FROM COAST CAT I, EXP C, WIND TC DL=5 PSF, WIND BC DL=5 PSF
- 110 MPH WIND, 30' MEAN HGT, FBC ENCLOSED BLDG, LOCATED ANYWHERE IN ROOF WIND TC DL=5 PSF, WIND BC DL=5 PSF
- 130 MPH WIND, 30' MEAN HGT, ASCE 7-02, CLOSED BLDG, LOCATED ANYWHERE IN ROOF, CAT II, EXP. C, WIND TC DL=5 PSF, WIND BC DL=5 PSF

FRONT FACE (E,*) PLATES MAY BE OFFSET FROM BACK FACE PLATES AS LONG AS BOTH FACES ARE SPACED 4' OC MAX.

JOINT TYPE	SPANS UP TO			
	30'	34'	38'	52'
A	2X4	2.5X4	2.5X4	3X5
B	4X6	5X6	5X6	5X6
C	1.5X3	1.5X4	1.5X4	1.5X4
D	5X4	5X5	5X5	5X6
E	4X8 OR 3X6 TRULOX AT 4' OC, ROTATED VERTICALLY			

ATTACH TRULOX PLATES WITH (8) 0.120" X 1.375" NAILS, OR EQUAL, PER FACE PER PLY. (4) NAILS IN EACH MEMBER TO BE CONNECTED. REFER TO DRAWING 160 TL FOR TRULOX INFORMATION.

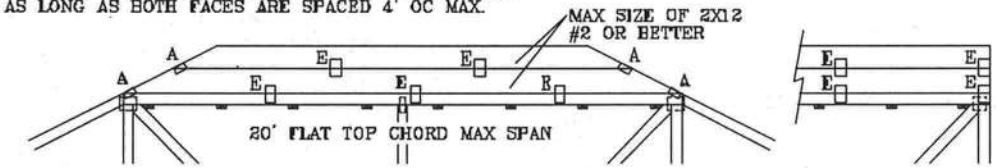

WEB BRACING CHART	
WEB LENGTH	REQUIRED BRACING
0' TO 7'9"	NO BRACING
7'9" TO 10'	1x4 "T" BRACE. SAME GRADE, SPECIES AS WEB MEMBER, OR BETTER, AND 80% LENGTH OF WEB MEMBER. ATTACH WITH 8d NAILS AT 4" OC.
10' TO 14'	2x4 "T" BRACE. SAME GRADE, SPECIES AS WEB MEMBER, OR BETTER, AND 80% LENGTH OF WEB MEMBER. ATTACH WITH 16d NAILS AT 4" OC.

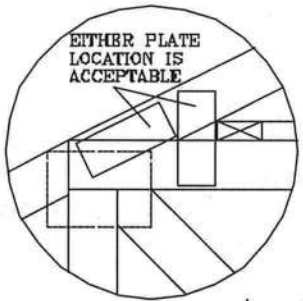

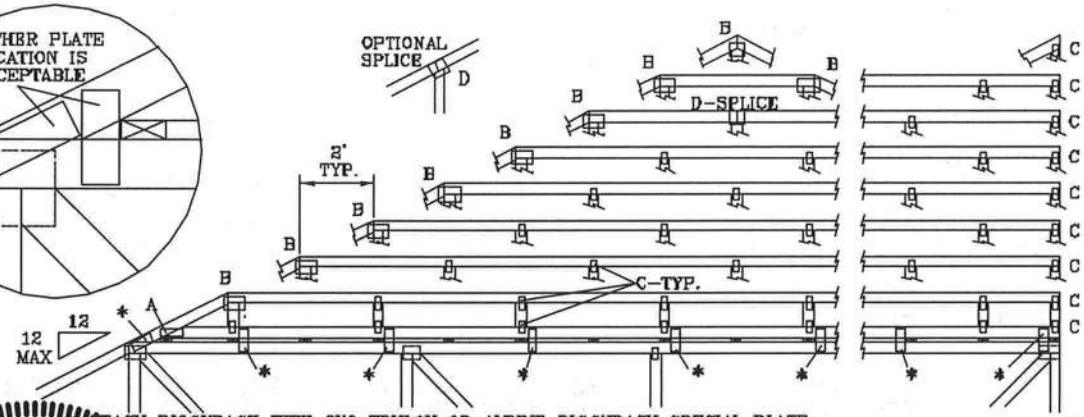

ATTACH PIGGYBACK WITH 3X6 TRULOX OR ALPINE PIGGYBACK SPECIAL PLATE.

* PIGGYBACK SPECIAL PLATE

ATTACH TEETH TO THE PIGGYBACK AT THE TIME OF FABRICATION. ATTACH TO SUPPORTING TRUSS WITH (4) 0.120" X 1.375" NAILS PER FACE PER PLY. APPLY PIGGYBACK SPECIAL PLATE TO EACH TRUSS FACE AND SPACE 4' OC OR LESS.

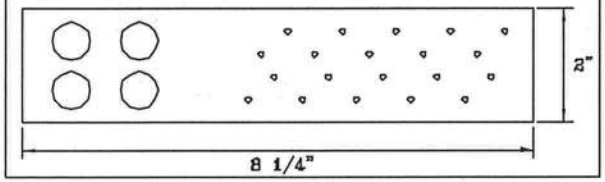

THIS DRAWING REPLACES DRAWINGS 634,016 634,017 & 847,045

JULIUS LEE LICENSE NO. 34869 STATE OF FLORIDA PROFESSIONAL ENGINEER

WARNING: TRUSSES REQUIRE EXTREME CARE IN FABRICATING, HANDLING, SHIPPING, INSTALLING AND BRACING. REFER TO BCSI (-03 (BUILDING COMPONENT SAFETY INFORMATION), PUBLISHED BY TPI (TRUSS PLATE INSTITUTE, 583 D'ONOFRIO DR., SUITE 200, MADISON, WI. 53719) AND WTCA (WOOD TRUSS COUNCIL OF AMERICA, 6300 ENTERPRISE LN, MADISON, WI 53719) FOR SAFETY PRACTICES PRIOR TO PERFORMING THESE FUNCTIONS. UNLESS OTHERWISE INDICATED, TOP CHORD SHALL HAVE PROPERLY ATTACHED STRUCTURAL PANELS AND BOTTOM CHORD SHALL HAVE A PROPERLY ATTACHED RIGID CEILING.

REVIEWED
By julius lee at 11:59 am, Jun 11, 2008

JULIUS LEE'S
CONS. ENGINEERS P.A.
1466 SW 4th AVENUE
DELRAY BEACH, FL. 33444-2161

No: 34869
STATE OF FLORIDA

MAX LOADING
55 PSF AT 1.33 DUR. FAC.
50 PSF AT 1.25 DUR. FAC.
47 PSF AT 1.15 DUR. FAC.

SPACING 24.0"

REF PIGGYBACK
DATE 09/12/07
DRWG MITEK STD PIGGY
-ENG JL

TOE-NAIL DETAIL

TOE-NAILS TO BE DRIVEN AT AN ANGLE OF APPROXIMATELY THIRTY DEGREES WITH THE PIECE AND STARTED APPROXIMATELY ONE-THIRD THE LENGTH OF THE NAIL FROM THE END OF THE MEMBER.

PER ANSI/AF&PA NDS-2001 SECTION 12.4.1 – EDGE DISTANCE, END DISTANCE, SPACING: "EDGE DISTANCES, END DISTANCES AND SPACINGS FOR NAILS AND SPIKES SHALL BE SUFFICIENT TO PREVENT SPLITTING OF THE WOOD."

THE NUMBER OF TOE-NAILS TO BE USED IN A SPECIFIC APPLICATION IS DEPENDENT UPON PROPERTIES FOR THE CHORD SIZE, LUMBER SPECIES, AND NAIL TYPE. PROPER CONSTRUCTION PRACTICES AS WELL AS GOOD JUDGEMENT SHOULD DETERMINE THE NUMBER OF NAILS TO BE USED.

THIS DETAIL DISPLAYS A TOE-NAILED CONNECTION FOR JACK FRAMING INTO A SINGLE OR DOUBLE PLY SUPPORTING GIRDER.

MAXIMUM VERTICAL RESISTANCE OF 16d (0.162"X3.5") COMMON TOE-NAILS

NUMBER OF TOE-NAILS	SOUTHERN PINE		DOUGLAS FIR-LARCH		HEM-FIR		SPRUCE PINE FIR	
	1 PLY	2 PLIES	1 PLY	2 PLIES	1 PLY	2 PLIES	1 PLY	2 PLIES
2	197#	256#	181#	234#	156#	203#	154#	199#
3	296#	383#	271#	351#	234#	304#	230#	298#
4	394#	511#	361#	468#	312#	406#	307#	397#
5	493#	639#	452#	585#	390#	507#	384#	496#

ALL VALUES MAY BE MULTIPLIED BY APPROPRIATE DURATION OF LOAD FACTOR.

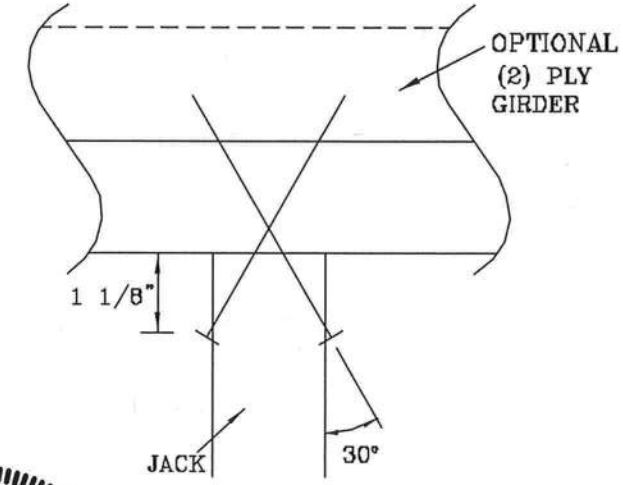

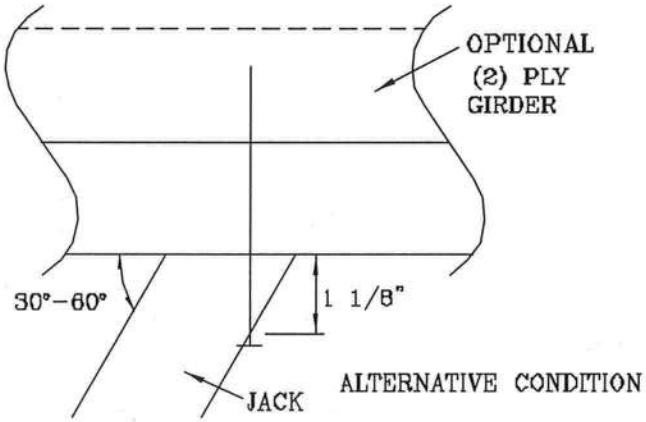

ALTERNATIVE CONDITION

THIS DRAWING REPLACES DRAWING 784040

JULIUS LEE LICENSE NO. 34869 STATE OF FLORIDA PROFESSIONAL ENGINEER

WARNING TRUSSES REQUIRE EXTREME CARE IN FABRICATING, HANDLING, SHIPPING, INSTALLING AND BRACING. REFER TO BCSI 1-03 BUILDING COMPONENT SAFETY INFORMATION, PUBLISHED BY TPI (TRUSS PLATE INSTITUTE, 583 D'ONOFRIO DR., SUITE 200, MADISON, WI 53719) AND WTCA (WOOD TRUSS COUNCIL OF AMERICA, 6300 ENTERPRISE LN, MADISON, WI 53719) FOR SAFETY PRACTICES PRIOR TO PERFORMING THESE FUNCTIONS. UNLESS OTHERWISE INDICATED, TOP CHORD SHALL HAVE PROPERLY ATTACHED STRUCTURAL PANELS AND BOTTOM CHORD SHALL HAVE A PROPERLY ATTACHED RIGID CEILING.

REVIEWED
By julius lee at 11:59 am, Jun 11, 2008

JULIUS LEE'S
CONS. ENGINEERS P.A.
1455 SW 4th AVENUE
DELRAY BEACH, FL 33444-2161

No: 34869
STATE OF FLORIDA

TC LL	PSF	REF TOE-NAIL
TC DL	PSF	DATE 09/12/07
BC DL	PSF	DRWG CNTONAIL1103
BC LL	PSF	-ENG JL
TOT. LD.	PSF	
DUR. FAC.	1.00	
SPACING		

TRULOX CONNECTION DETAIL

11 GAUGE (0.120" X 1.375") NAILS REQUIRED FOR TRULOX PLATE ATTACHMENT. FILL ROWS COMPLETELY WHERE SHOWN (⊕).

* NAILS MAY BE OMITTED FROM THESE ROWS.

THIS DETAIL MAY BE USED WITH SO. PINE, DOUGLAS-FIR OR HEM-FIR CHORDS WITH A MINIMUM 1.00 DURATION OF LOAD OR SPRUCE-PINE-FIR CHORDS WITH A MINIMUM 1.15 DURATION OF LOAD. CHORD SIZE OF BOTH TRUSSES MUST EXCEED THE TRULOX PLATE WIDTH.

TRULOX PLATE IS CENTERED ON THE CHORDS AND BENT BETWEEN NAIL ROWS.

REFER TO ENGINEER'S SEALED DESIGN REFERENCING THIS DETAIL FOR LUMBER, PLATES, AND OTHER INFORMATION NOT SHOWN.

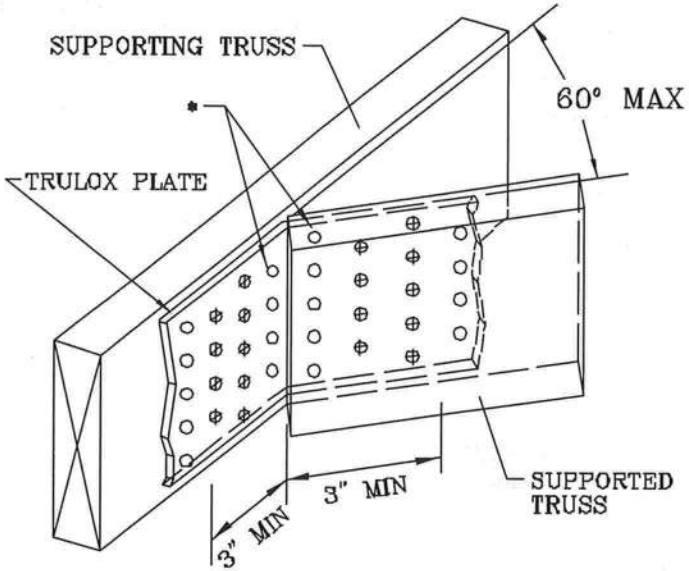

MINIMUM 3X6 TRULOX PLATE

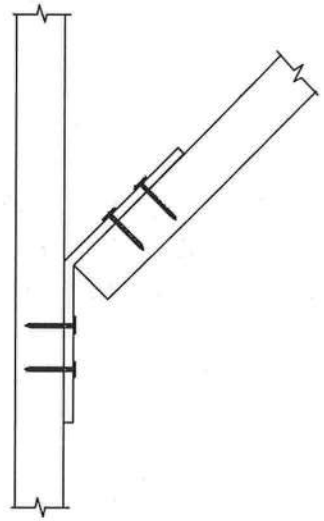

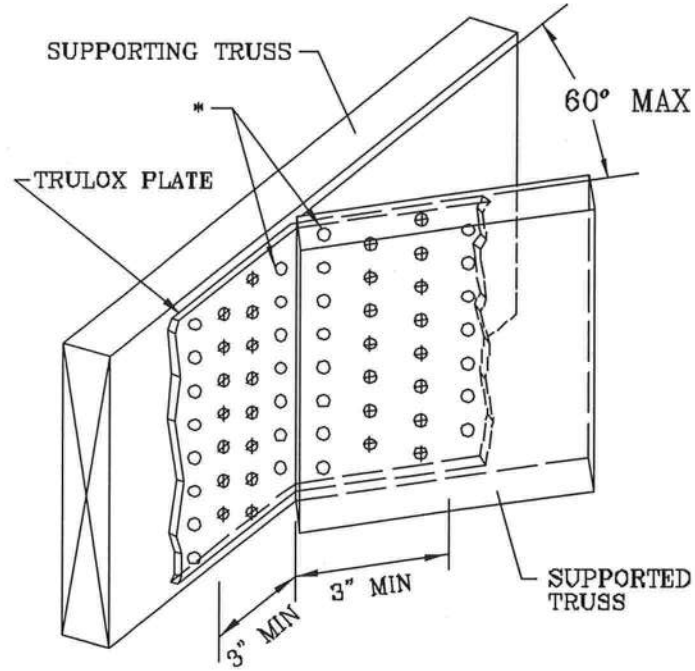

MINIMUM 5X6 TRULOX PLATE

TRULOX PLATE SIZE	REQUIRED NAILS PER TRUSS	MAXIMUM LOAD UP OR DOWN
3X6	9	350#
5X6	15	990#

THIS DRAWING REPLACES DRAWINGS 1,158,989 1,158,989/R 1,154,944 1,152,217 1,152,017 1,159,154 & 1,151,524

JULIUS LEE LICENSE NO. 34869 STATE OF FLORIDA PROFESSIONAL ENGINEER

*WARNING*** TRUSSES REQUIRE EXTREME CARE IN FABRICATING, HANDLING, SHIPPING, INSTALLING AND BRACING. REFER TO BCSI 1-03 (BUILDING COMPONENT SAFETY INFORMATION, PUBLISHED BY TPI (TRUSS PLATE INSTITUTE, 583 D'ONOFRIO DR., SUITE 200, MADISON, WI 53719) AND WTCA (WOOD TRUSS COUNCIL OF AMERICA, 6300 ENTERPRISE LN, MADISON, WI 53719) FOR SAFETY PRACTICES PRIOR TO PERFORMING THESE FUNCTIONS. UNLESS OTHERWISE INDICATED, TOP CHORD SHALL HAVE PROPERLY ATTACHED STRUCTURAL PANELS AND BOTTOM CHORD SHALL HAVE A PROPERLY ATTACHED RIGID CEILING.

JULIUS LEE'S
CONS. ENGINEERS P.A.
1455 SW 4th AVENUE
DELRAY BEACH, FL 33444-2181

No: 34869
STATE OF FLORIDA

REF	TRULOX
DATE	11/26/03
DRWG	CNTRULOX1103
-ENG	JL

MULTIPLE-MEMBER CONNECTIONS FOR SIDE-LOADED BEAMS

Maximum Uniform Load Applied to Either Outside Member (PLF)

Connector Type	Number of Rows	Connector On-Center Spacing	Connector Pattern					
			Assembly A	Assembly B	Assembly C	Assembly D	Assembly E	Assembly F
				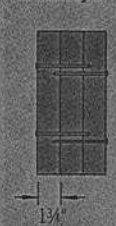	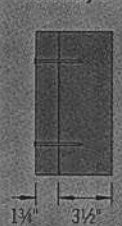	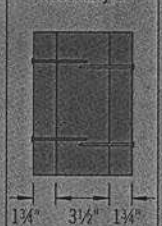	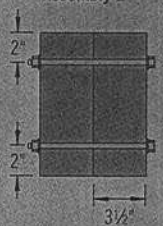	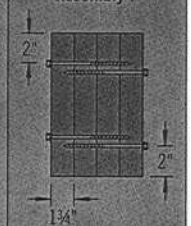
			3½" 2-ply	5¼" 3-ply	5¼" 2-ply	7" 3-ply	7" 2-ply	7" 4-ply
10d (0.128" x 3") Nail(1)	2	12"	370	***280***	280	***245***		
	3	12"	555	***415***	415	***370***		
½" A307 Through Bolts(2)(4)	2	24"	505	380	520	465	860	340
		19.2"	635	475	655	580	1,075	425
		16"	760	570	785	695	1,290	505
SDS ¼" x 3½"(4)	2	24"	680	***510***	510	***455***		
		19.2"	850	***640***	640	***565***		
		16"	1,020	***765***	765	***680***		
SDS ¼" x 6"(3)(4)	2	24"				***455***	***465***	***455***
		19.2"				***565***	***580***	***565***
		16"				***680***	***695***	***680***
USP WS35 (4)	2	24"	480	***360***	360	***320***		
		19.2"	600	***450***	450	***400***		
		16"	715	***540***	540	***480***		
USP WS6 (3)(4)	2	24"				***350***	***525***	***350***
		19.2"				***440***	***660***	***440***
		16"				***525***	***790***	***525***
3⅜" TrussLok(4)	2	24"	635	***475***	475	***425***		
		19.2"	795	***595***	595	***530***		
		16"	955	***715***	715	***635***		
5" TrussLok(4)	2	24"		***500***	500	***445***	***480***	***445***
		19.2"		***625***	625	***555***	***600***	***555***
		16"		***750***	750	***665***	***725***	***665***
6¾" TrussLok(4)	2	24"				445	620	445
		19.2"				555	770	555
		16"				665	925	665

(1) Nailed connection values may be doubled for 6" on-center or tripled for 4" on-center nail spacing.

(2) Washers required. Bolt holes to be 9/16" maximum.

(3) 6" SDS or WS screws can be used with Parallam® PSL and Microllam® LVL, but are not recommended for TimberStrand® LSL.

(4) 24" on-center bolted and screwed connection values may be doubled for 12" on-center spacing.

General Notes

- Connections are based on NDS® 2005 or manufacturer's code report.
- Use specific gravity of 0.5 when designing lateral connections.
- Values listed are for 100% stress level. Increase 15% for snow-loaded roof conditions or 25% for non-snow roof conditions, where code allows.
- ***Bold Italic*** cells indicate **Connector Pattern** must be installed on both sides. Stagger fasteners on opposite side of beam by ½ the required **Connector Spacing**.
- Verify adequacy of beam in allowable load tables on pages 16–33.
- 7" wide beams should be side-loaded only when loads are applied to both sides of the members (to minimize rotation).
- Minimum end distance for bolts and screws is 6".
- Beams wider than 7" require special consideration by the design professional.

Uniform Load Design Example

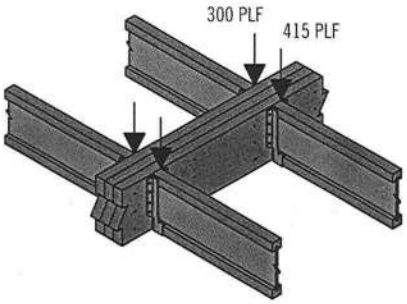

First, check the allowable load tables on pages 16–33 to verify that three pieces can carry the total load of 715 plf with proper live load deflection criteria. Maximum load applied to either outside member is 415 plf. For a 3-ply 1¾" assembly, two rows of 10d (0.128" x 3") nails at 12" on-center is good for only 280 plf. Therefore, use three rows of 10d (0.128" x 3") nails at 12" on-center (good for 415 plf).

Alternates:
Two rows of ½" bolts or SDS ¼" x 3½" screws at 19.2" on-center.

Point Load—Maximum Point Load Applied to Either Outside Member (lbs)

Connector Type	Number of Connectors	Connector Pattern: Assembly A	Assembly B	Assembly C	Assembly D	Assembly E	Assembly F
		3½" 2-ply	5¼" 3-ply	5¼" 2-ply	7" 3-ply	7" 2-ply	7" 4-ply
10d (0.128" x 3") Nail	6	1,110	***835***	835	***740***		
	12	2,225	***1,670***	1,670	***1,485***		
	18	3,335	***2,505***	2,505	***2,225***		
	24	4,450	***3,335***	3,335	***2,965***		
SDS Screws ¼" x 3½" or WS35 ¼" x 6" or WS6(1)	4	1,915	1,435(4)	1,435	***1,275***	***1,860(2)***	***1,405(2)***
	6	2,870	2,150 (4)	2,150	***1,915***	***2,785(2)***	***2,110(2)***
	8	3,825	2,870 (4)	2,870	***2,550***	***3,715(2)***	***2,810(2)***
3⅜" or 5" TrussLok™	4	2,545	1,910 (4)	1,910	***1,695***	***1,925(3)***	***1,775(3)***
	6	3,815	2,860 (4)	2,860	***2,545***	***2,890(3)***	***2,665(3)***
	8	5,090	3,815 (4)	3,815	***3,390***	***3,855(3)***	***3,550(3)***

(1) 6" SDS or WS screws can be used with Parallam® PSL and Microllam® LVL, but are not recommended for TimberStrand® LSL.

(2) 6" long screws required.

(3) 5" long screws required.

(4) 3½" and 3⅝" long screws must be installed on both sides.

See General Notes on page 38

Connections

4 or 6 or Screw Connection

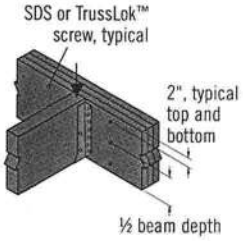

8 Screw Connection

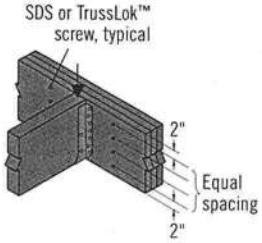

Nail Connection

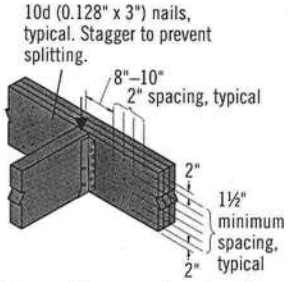

There must be an equal number of nails on each side of the connection

Point Load Design Example

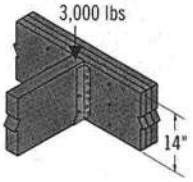

First, verify that a 3-ply 1¾" x 14" beam is capable of supporting the 3,000 lb point load as well as all other loads applied. The 3,000 lb point load is being transferred to the beam with a face mount hanger. For a 3-ply 1¾" assembly, eight 3⅜" TrussLok™ screws are good for 3,815 lbs with a face mount hanger.

MULTIPLE-MEMBER CONNECTIONS FOR TOP-LOADED BEAMS

1¾" Wide Pieces

- Minimum of three rows of 10d (0.128" x 3") nails at 12" on-center.
- Minimum of four rows of 10d (0.128" x 3") nails at 12" on-center for 14" or deeper.
- If using 12d–16d (0.148"–0.162" diameter) nails, the number of nailing rows may be reduced by one.
- Minimum of two rows of SDS, WS, or TrussLok™ screws at 16" on-center. Use 3⅜" minimum length with two or three plies; 5" minimum for 4-ply members. 6" SDS and WS screws are not recommended for use with TimberStrand® LSL. For 3- or 4-ply members, connectors must be installed on both sides. Stagger fasteners on opposite side of beam by ½ of the required connector spacing.
- Load must be applied evenly across entire beam width. Otherwise, use connections for side-loaded beams.

3½" Wide Pieces

- Minimum of two rows of SDS, WS, or TrussLok™ screws, 5" minimum length, at 16" on-center. 6" SDS and WS screws are not recommended for use with TimberStrand® LSL. Connectors must be installed on both sides. Stagger fasteners on opposite side of beam by ½ of the required connector spacing.
- Load must be applied evenly across entire beam width. Otherwise, use connections for side-loaded beams.
- Minimum of two rows of ½" bolts at 24" on-center staggered.

Multiple pieces can be nailed or bolted together to form a header or beam of the required size, up to a maximum width of 7"

STRONG BACK DETAIL
SYSTEM-42 OR FLAT TRUSS

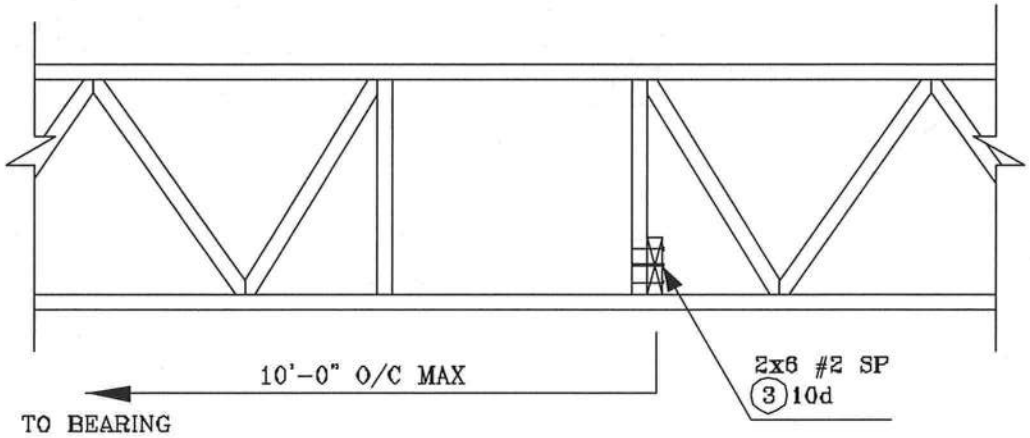

ALTERNATE DETAIL FOR STRONG BACK WITH VERTICAL NOT LINING UP

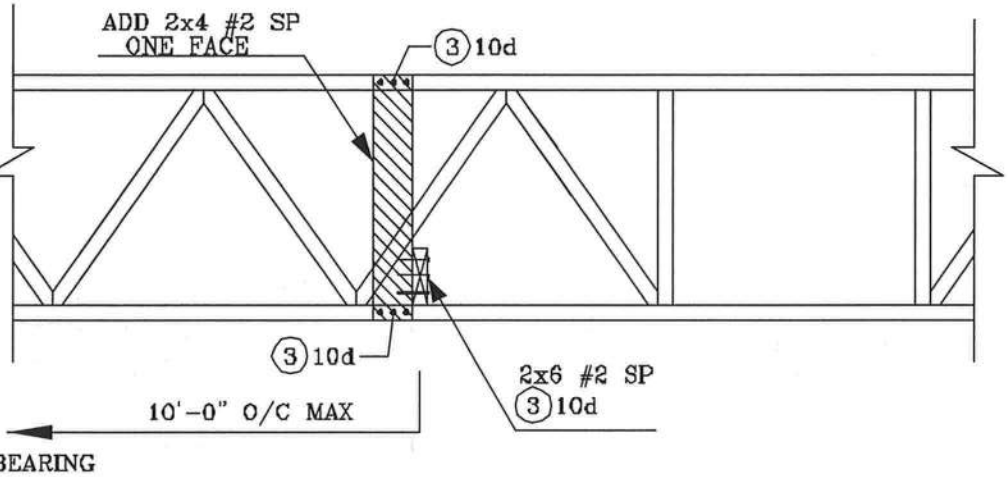

REVIEWED
By julius lee at 11:58 am, Jun 11, 2008

JULIUS LEE
LICENSE
NO. 34869
STATE OF
FLORIDA
PROFESSIONAL ENGINEER

JULIUS LEE'S
CONS. ENGINEERS P.A.
1456 SW 4th AVENUE
DELRAY BEACH, FL 33444-2161

No: 34869
STATE OF FLORIDA

1/2" DIAMETER BOLT SPACING FOR LOAD APPLIED PARALLEL TO GRAIN.

* GRADE AND SPECIES AS SPECIFIED ON THE ALPINE DESIGN.

BOLT HOLES SHALL BE A MINIMUM OF 1/32" TO A MAXIMUM OF 1/16" LARGER THAN BOLT DIAMETER.

TYPICAL LOCATION OF 1/2" DIAMETER THRU BOLTS. BOLT QUANTITIES AS NOTED ON SEALED DESIGN MUST BE APPLIED IN ONE OF THE PATTERNS SHOWN BELOW.

WASHERS REQUIRED UNDER BOLT HEAD AND NUT

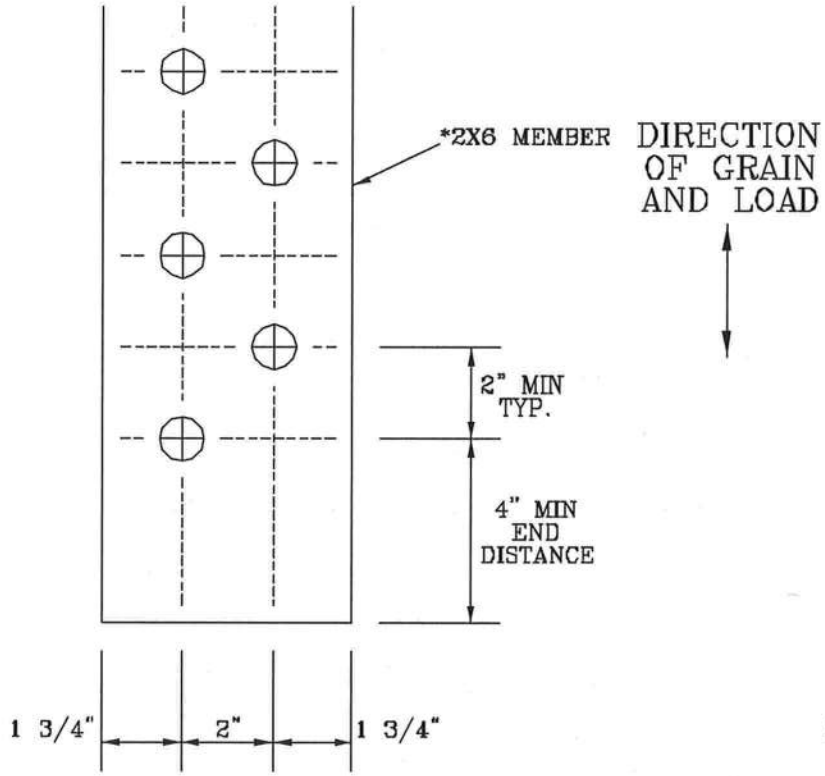

2X6 DETAIL

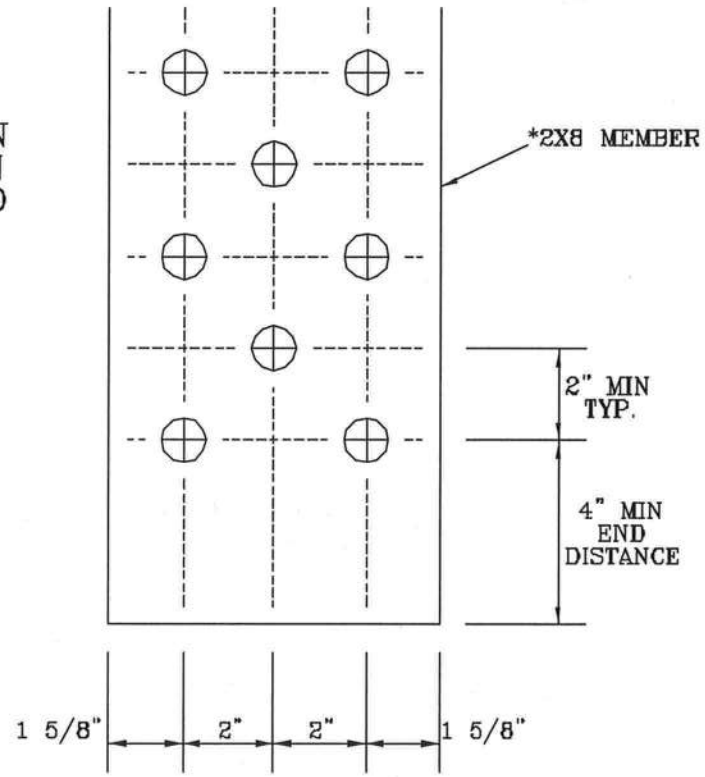

2X8 DETAIL

THIS DRAWING REPLACES DRAWING A628,016

JULIUS LEE LICENSE NO. 34869 STATE OF FLORIDA PROFESSIONAL ENGINEER

WARNING TRUSSES REQUIRE EXTREME CARE IN FABRICATING, HANDLING, SHIPPING, INSTALLING AND BRACING. REFER TO BCSI (-03 (BUILDING COMPONENT SAFETY INFORMATION), PUBLISHED BY TPI (TRUSS PLATE INSTITUTE, 583 D'ONOFRIO DR., SUITE 200, MADISON, WI, 53719) AND WTCA (WOOD TRUSS COUNCIL OF AMERICA, 6300 ENTERPRISE LN, MADISON, WI 53719) FOR SAFETY PRACTICES PRIOR TO PERFORMING THESE FUNCTIONS. UNLESS OTHERWISE INDICATED, TOP CHORD SHALL HAVE PROPERLY ATTACHED STRUCTURAL PANELS AND BOTTOM CHORD SHALL HAVE A PROPERLY ATTACHED RIGID CEILING.

REVIEWED
By julius lee at 11:59 am, Jun 11, 2008

JULIUS LEE'S CONS. ENGINEERS P.A.
1450 SW 4th AVENUE
DELRAY BEACH, FL 33444-2161

No: 34869
STATE OF FLORIDA

TC LL	PSF	
TC DL	PSF	
BC DL	PSF	
BC LL	PSF	
TOT. LD.	PSF	
DUR. FAC.		
SPACING		

REF	BOLT SPACING
DATE	11/26/03
DRWG	CNBOLTSP1103
-ENG	JL

VALLEY TRUSS DETAIL

TOP CHORD 2X4 SP #2 OR SPF #1/#2 OR BETTER.
BOT CHORD 2X3(*) OR 2X4 SP #2N OR SPF #1/#2 OR BETTER.
WEBS 2X4 SP #3 OR BETTER.

* 2X3 MAY BE RIPPED FROM A 2X6 (PITCHED OR SQUARE).

** ATTACH EACH VALLEY TO EVERY SUPPORTING TRUSS WITH: (2) 16d BOX (0.135" X 3.5") NAILS TOE-NAILED FOR FBC 2004 110 MPH, ASCE 7-02 110 MPH WIND OR (3) 16d FOR ASCE 7-02 130 MPH WIND. 15' MEAN HEIGHT, ENCLOSED BUILDING, EXP. C, RESIDENTIAL, WIND TC DL=5 PSF.

UNLESS SPECIFIED ON ENGINEER'S SEALED DESIGN, APPLY 1X4 "T"-BRACE, 80% LENGTH OF WEB, VALLEY WEB, SAME SPECIES AND GRADE OR BETTER, ATTACHED WITH 8d BOX (0.113" X 2.5") NAILS AT 6" OC, OR CONTINUOUS LATERAL BRACING, EQUALLY SPACED, FOR VERTICAL VALLEY WEBS GREATER THAN 7'9".

MAXIMUM VALLEY VERTICAL HEIGHT MAY NOT EXCEED 12'0".

TOP CHORD OF TRUSS BENEATH VALLEY SET MUST BE BRACED WITH:
PROPERLY ATTACHED, RATED SHEATHING APPLIED PRIOR TO VALLEY TRUSS INSTALLATION
OR
PURLINS AT 24" OC OR AS OTHERWISE SPECIFIED ON ENGINEERS' SEALED DESIGN
OR
BY VALLEY TRUSSES USED IN LIEU OF PURLIN SPACING AS SPECIFIED ON ENGINEERS' SEALED DESIGN.

*** NOTE THAT THE PURLIN SPACING FOR BRACING THE TOP CHORD OF THE TRUSS BENEATH THE VALLEY IS MEASURED ALONG THE SLOPE OF THE TOP CHORD.

++ LARGER SPANS MAY BE BUILT AS LONG AS THE VERTICAL HEIGHT DOES NOT EXCEED 12'0".

BOTTOM CHORD MAY BE SQUARE OR PITCHED CUT AS SHOWN.

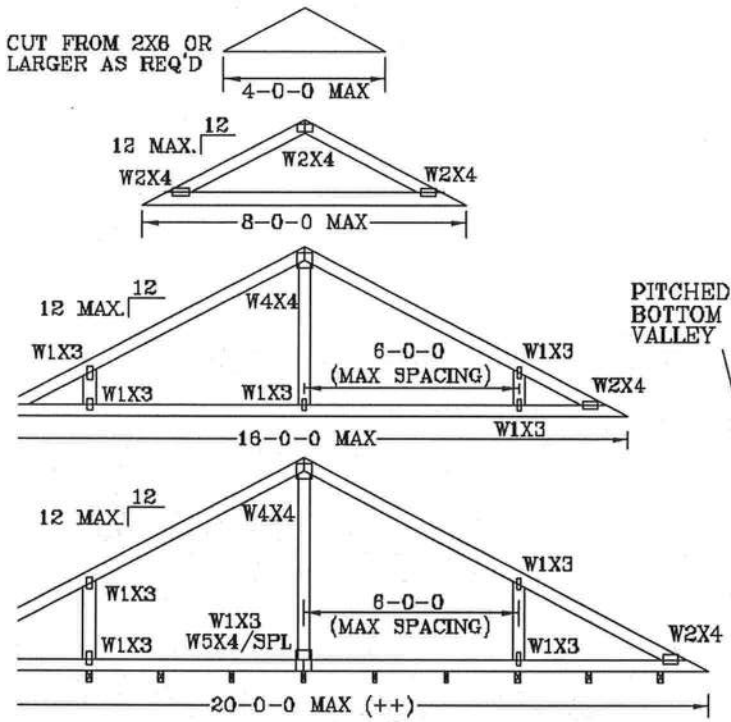

SUPPORTING TRUSSES AT 24" OC MAXIMUM SPACING.

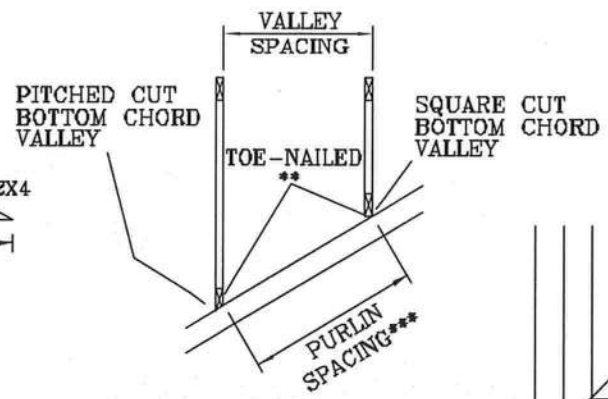

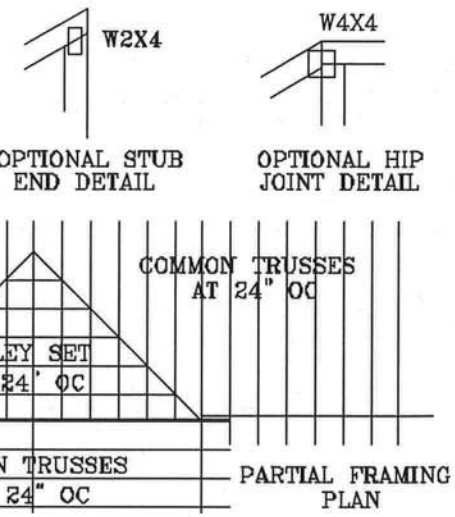

THIS DRAWING REPLACES DRAWING A105

JULIUS LEE LICENSE NO. 34869 STATE OF FLORIDA PROFESSIONAL ENGINEER

REVIEWED
By julius lee at 11:59 am, Jun 11, 2008

JULIUS LEE'S
CONS. ENGINEERS P.A.
1455 SW 4th AVENUE
DELRAY BEACH, FL 33444-2161
No: 34869
STATE OF FLORIDA

TC LL	20	20	PSF	REF	VALLEY DETAIL
TC DL	7	15	PSF	DATE	11/26/03
BC DL	5	5	PSF	DRWG	VALTRUSS1103
BC LL	0	0	PSF	-ENG	JL
TOT. LD.	32	40	PSF		
DUR.FAC.	1.25	1.25			
SPACING		24"			

TYPICAL ATTIC TRUSS BRACING

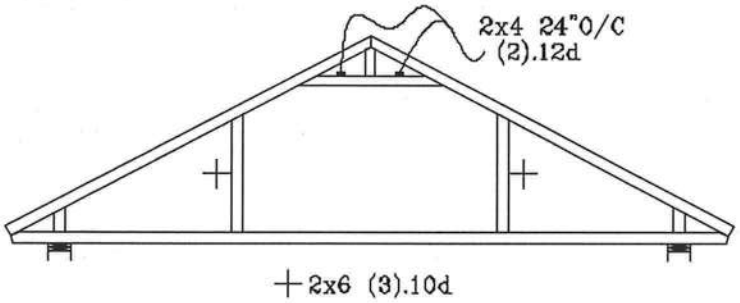

GABLE END TRUSS DETAIL

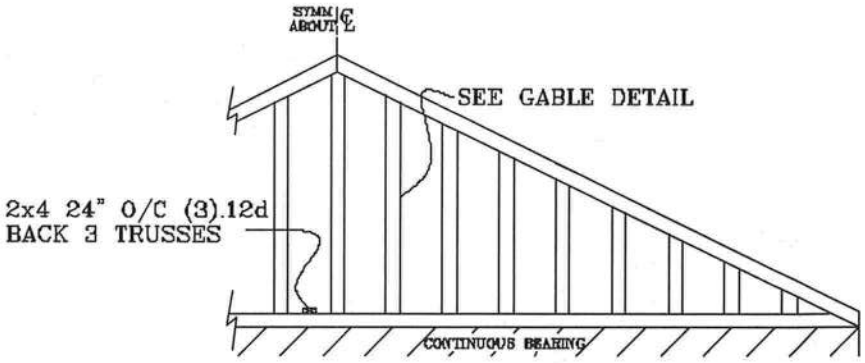

MINIMUM BC BRACING ON GABLE TRUSS. OTHER PERMANENT BRACING DESIGNS BY ARCHITECT OR EOR

TYPICAL ALTERNATE BRACING DETAIL FOR EXTERIOR FLAT GIRDER TRUSS

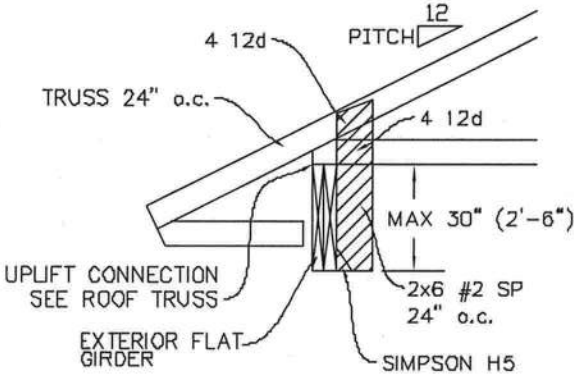

TYPICAL WALL GIRDER VERTICAL WEB BRACING DETAIL

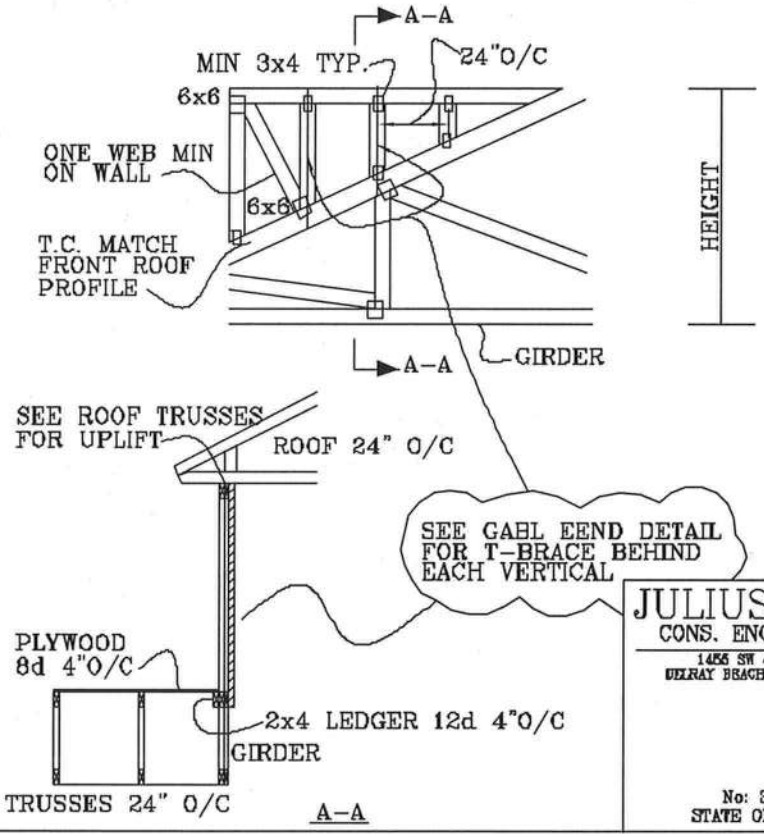

REVIEWED
By julius lee at 11:59 am, Jun 11, 2008

JULIUS LEE
LICENSE
NO. 34869
STATE OF
FLORIDA
PROFESSIONAL ENGINEER

JULIUS LEE'S
CONS. ENGINEERS P.A.
1455 SW 4th AVENUE
DELRAY BEACH, FL 33444-2161

No: 34869
STATE OF FLORIDA

ASCE 7-02: 130 MPH WIND SPEED, 15' MEAN HEIGHT, ENCLOSED, I = 1.00, EXPOSURE C

MAX GABLE VERTICAL LENGTH

2X4 GABLE VERTICAL SPACING	SPECIES	GRADE \ BRACE	NO BRACES	(1) 1X4 "L" BRACE * GROUP A	(1) 1X4 "L" BRACE * GROUP B	(1) 2X4 "L" BRACE * GROUP A	(1) 2X4 "L" BRACE * GROUP B	(2) 2X4 "L" BRACE ** GROUP A	(2) 2X4 "L" BRACE ** GROUP B	(1) 2X6 "L" BRACE * GROUP A	(1) 2X6 "L" BRACE * GROUP B	(2) 2X6 "L" BRACE ** GROUP A	(2) 2X6 "L" BRACE ** GROUP B
24" O.C.	SPF HF	#1 / #2	3' 4"	6' 10"	6' 0"	6' 11"	7' 1"	8' 3"	8' 6"	10' 10"	11' 2"	12' 11"	13' 3"
		#3	3' 3"	4' 11"	4' 11"	6' 6"	6' 6"	8' 3"	8' 3"	10' 1"	10' 1"	12' 11"	12' 11"
		STUD	3' 3"	4' 11"	4' 11"	6' 5"	6' 5"	8' 3"	8' 3"	10' 0"	10' 0"	12' 11"	12' 11"
		STANDARD	3' 3"	4' 2"	4' 2"	5' 6"	5' 6"	7' 5"	7' 5"	8' 8"	8' 8"	11' 8"	11' 8"
	SP DFL	#1	3' 8"	5' 10"	6' 3"	6' 11"	7' 5"	8' 3"	8' 11"	10' 10"	11' 8"	12' 11"	13' 11"
		#2	3' 7"	5' 10"	6' 3"	6' 11"	7' 5"	8' 3"	8' 11"	10' 10"	11' 8"	12' 11"	13' 11"
		#3	3' 6"	5' 0"	5' 0"	6' 8"	6' 8"	8' 3"	8' 8"	10' 4"	10' 4"	12' 11"	13' 7"
		STUD	3' 6"	5' 0"	5' 0"	6' 7"	6' 7"	8' 3"	8' 8"	10' 3"	10' 3"	12' 11"	13' 7"
		STANDARD	3' 4"	4' 3"	4' 3"	5' 8"	5' 8"	7' 8"	7' 8"	8' 10"	8' 10"	12' 0"	12' 0"
16" O.C.	SPF HF	#1 / #2	3' 10"	6' 8"	6' 10"	7' 11"	8' 1"	9' 5"	9' 8"	12' 5"	12' 9"	14' 0"	14' 0"
		#3	3' 9"	6' 0"	6' 0"	7' 11"	7' 11"	9' 5"	9' 5"	12' 4"	12' 4"	14' 0"	14' 0"
		STUD	3' 9"	6' 0"	6' 0"	7' 11"	7' 11"	9' 5"	9' 5"	12' 4"	12' 4"	14' 0"	14' 0"
		STANDARD	3' 9"	5' 2"	5' 2"	6' 10"	6' 10"	9' 2"	9' 2"	10' 7"	10' 7"	14' 0"	14' 0"
	SP DFL	#1	4' 3"	6' 8"	7' 2"	7' 11"	8' 6"	9' 5"	10' 2"	12' 5"	13' 5"	14' 0"	14' 0"
		#2	4' 2"	6' 8"	7' 2"	7' 11"	8' 6"	9' 5"	10' 2"	12' 5"	13' 5"	14' 0"	14' 0"
		#3	4' 0"	6' 2"	6' 2"	7' 11"	8' 2"	9' 5"	9' 11"	12' 5"	12' 8"	14' 0"	14' 0"
		STUD	4' 0"	6' 1"	6' 1"	7' 11"	8' 1"	9' 5"	9' 11"	12' 5"	12' 8"	14' 0"	14' 0"
		STANDARD	3' 10"	5' 3"	5' 3"	6' 11"	6' 11"	9' 4"	9' 4"	10' 10"	10' 10"	14' 0"	14' 0"
12" O.C.	SPF HF	#1 / #2	4' 3"	7' 4"	7' 7"	8' 9"	8' 11"	10' 5"	10' 8"	13' 8"	14' 0"	14' 0"	14' 0"
		#3	4' 2"	6' 11"	6' 11"	8' 9"	8' 9"	10' 5"	10' 5"	13' 8"	13' 8"	14' 0"	14' 0"
		STUD	4' 2"	6' 11"	6' 11"	8' 9"	8' 9"	10' 5"	10' 5"	13' 8"	13' 8"	14' 0"	14' 0"
		STANDARD	4' 2"	5' 11"	5' 11"	7' 10"	7' 10"	10' 5"	10' 5"	12' 3"	12' 3"	14' 0"	14' 0"
	SP DFL	#1	4' 8"	7' 4"	7' 11"	8' 9"	9' 5"	10' 5"	11' 2"	13' 8"	14' 0"	14' 0"	14' 0"
		#2	4' 7"	7' 4"	7' 11"	8' 9"	9' 5"	10' 5"	11' 2"	13' 8"	14' 0"	14' 0"	14' 0"
		#3	4' 4"	7' 2"	7' 2"	8' 9"	9' 2"	10' 5"	10' 11"	13' 8"	14' 0"	14' 0"	14' 0"
		STUD	4' 4"	7' 1"	7' 1"	8' 9"	9' 2"	10' 5"	10' 11"	13' 8"	14' 0"	14' 0"	14' 0"
		STANDARD	4' 3"	6' 1"	6' 1"	8' 0"	8' 0"	10' 5"	10' 8"	12' 6"	12' 6"	14' 0"	14' 0"

BRACING GROUP SPECIES AND GRADES:

GROUP A:

SPRUCE-PINE-FIR: #1 / #2 STANDARD; #3 STUD

HEM-FIR: #2 STUD; #3 STANDARD

DOUGLAS FIR-LARCH: #3; STUD; STANDARD

SOUTHERN PINE: #3; STUD; STANDARD

GROUP B:

HEM-FIR: #1 & BTR; #1

SOUTHERN PINE: #1; #2

DOUGLAS FIR-LARCH: #1; #2

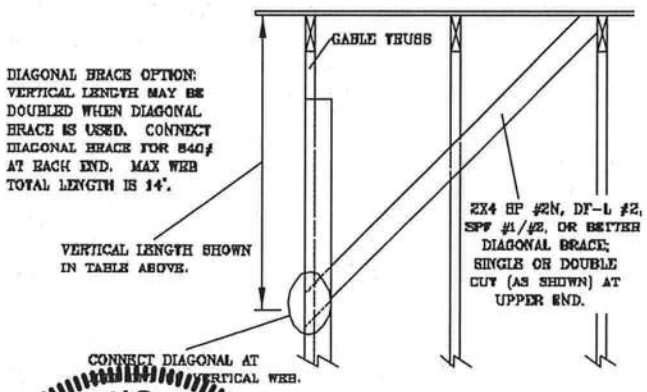

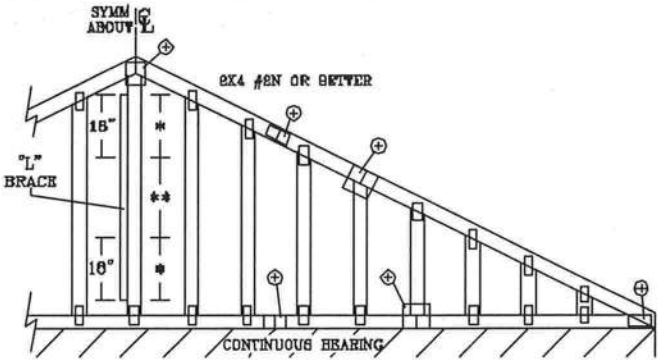

REFER TO CHART ABOVE FOR MAX GABLE VERTICAL LENGTH.

GABLE TRUSS DETAIL NOTES:

LIVE LOAD DEFLECTION CRITERIA IS L/240.

PROVIDE UPLIFT CONNECTIONS FOR 136 PLF OVER CONTINUOUS BEARING (5 PSF TC DEAD LOAD).

GABLE END SUPPORTS LOAD FROM 4' 0" OUTLOOKERS WITH 2' 0" OVERHANG, OR 12" PLYWOOD OVERHANG.

ATTACH EACH "L" BRACE WITH 10d NAILS.
* FOR (1) "L" BRACE: SPACE NAILS AT 2" O.C. IN 18" END ZONES AND 4" O.C. BETWEEN ZONES.
** FOR (2) "L" BRACES: SPACE NAILS AT 3" O.C. IN 18" END ZONES AND 6" O.C. BETWEEN ZONES.

"L" BRACING MUST BE A MINIMUM OF 80% OF WEB MEMBER LENGTH.

GABLE VERTICAL PLATE SIZES

VERTICAL LENGTH	NO SPLICE
LESS THAN 4' 0"	1X4 OR 2X3
GREATER THAN 4' 0", BUT LESS THAN 11' 8"	2X4
GREATER THAN 11' 8"	2.5X4

+ REFER TO COMMON TRUSS DESIGN FOR PEAK, SPLICE, AND HEEL PLATES.

JULIUS LEE LICENSE NO. 34869 STATE OF FLORIDA PROFESSIONAL ENGINEER

WARNING TRUSSES REQUIRE EXTREME CARE IN FABRICATING, HANDLING, SHIPPING, INSTALLING AND BRACING. REFER TO BCSI 1-03 (BUILDING COMPONENT SAFETY INFORMATION), PUBLISHED BY TPI (TRUSS PLATE INSTITUTE, 583 D'ONOFRIO DR, SUITE 200, MADISON, WI 53719) AND WTCA (WOOD TRUSS COUNCIL OF AMERICA, 6300 ENTERPRISE LN, MADISON, WI 53719) FOR SAFETY PRACTICES PRIOR TO PERFORMING THESE FUNCTIONS. UNLESS OTHERWISE INDICATED, TOP CHORD SHALL HAVE PROPERLY ATTACHED STRUCTURAL PANELS AND BOTTOM CHORD SHALL HAVE A PROPERLY ATTACHED RIGID CEILING.

REVIEWED
By julius lee at 12:00 pm, Jun 11, 2008

JULIUS LEE'S
CONS. ENGINEERS P.A.
1455 SW 4th AVENUE
DELRAY BEACH, FL 33444-2161

No: 34869
STATE OF FLORIDA

MAX. TOT. LD. 60 PSF

MAX. SPACING 24.0"

REF	ASCE7-02-GAB13015
DATE	11/26/03
DRWG	MITEK STD GABLE 15 E HT
-ENG	

Symbols

PLATE LOCATION AND ORIENTATION

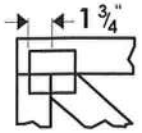

Center plate on joint unless x, y offsets are indicated. Dimensions are in ft-in-sixteenths. Apply plates to both sides of truss and fully embed teeth.

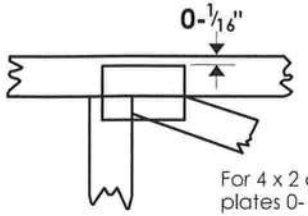

For 4 x 2 orientation, locate plates 0-1/16" from outside edge of truss.

This symbol indicates the required direction of slots in connector plates.

*** Plate location details available in MiTek 20/20 software or upon request.**

PLATE SIZE

4 x 4

The first dimension is the plate width measured perpendicular to slots. Second dimension is the length parallel to slots.

LATERAL BRACING LOCATION

Indicated by symbol shown and/or by text in the bracing section of the output. Use T, I or Eliminator bracing if indicated.

BEARING

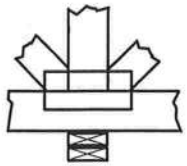

Indicates location where bearings (supports) occur. Icons vary but reaction section indicates joint number where bearings occur.

Industry Standards:

ANSI/TPI1: National Design Specification for Metal Plate Connected Wood Truss Construction.
DSB-89: Design Standard for Bracing.
BCSI1: Building Component Safety Information, Guide to Good Practice for Handling, Installing & Bracing of Metal Plate Connected Wood Trusses.

Numbering System

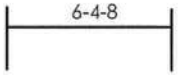

dimensions shown in ft-in-sixteenths (Drawings not to scale)

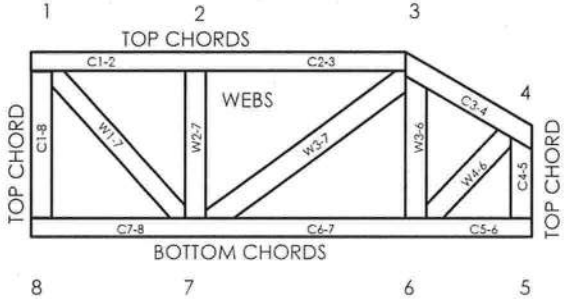

JOINTS ARE GENERALLY NUMBERED/LETTERED CLOCKWISE AROUND THE TRUSS STARTING AT THE JOINT FARTHEST TO THE LEFT.

CHORDS AND WEBS ARE IDENTIFIED BY END JOINT NUMBERS/LETTERS.

PRODUCT CODE APPROVALS

ICC-ES Reports:

ESR-1311, ESR-1352, ER-5243, 9604B, 9730, 95-43, 96-31, 9667A
NER-487, NER-561
95110, 84-32, 96-67, ER-3907, 9432A

Julius Lee
1109 Coastal Bay Blvd.
Boynton, FL 33435

General Safety Notes

Failure to Follow Could Cause Property Damage or Personal Injury

1. Additional stability bracing for truss system, e.g. diagonal or X-bracing, is always required. See BCSI1.
2. Truss bracing must be designed by an engineer. For wide truss spacing, individual lateral braces themselves may require bracing, or alternative T, I, or Eliminator bracing should be considered.
3. Never exceed the design loading shown and never stack materials on inadequately braced trusses.
4. Provide copies of this truss design to the building designer, erection supervisor, property owner and all other interested parties.
5. Cut members to bear tightly against each other.
6. Place plates on each face of truss at each joint and embed fully. Knots and wane at joint locations are regulated by ANSI/TPI 1.
7. Design assumes trusses will be suitably protected from the environment in accord with ANSI/TPI 1.
8. Unless otherwise noted, moisture content of lumber shall not exceed 19% at time of fabrication.
9. Unless expressly noted, this design is not applicable for use with fire retardant, preservative treated, or green lumber.
10. Camber is a non-structural consideration and is the responsibility of truss fabricator. General practice is to camber for dead load deflection.
11. Plate type, size, orientation and location dimensions indicated are minimum plating requirements.
12. Lumber used shall be of the species and size, and in all respects, equal to or better than that specified.
13. Top chords must be sheathed or purlins provided at spacing indicated on design.
14. Bottom chords require lateral bracing at 10 ft. spacing, or less, if no ceiling is installed, unless otherwise noted.
15. Connections not shown are the responsibility of others.
16. Do not cut or alter truss member or plate without prior approval of an engineer.
17. Install and load vertically unless indicated otherwise.
18. Use of green or treated lumber may pose unacceptable environmental, health or performance risks. Consult with project engineer before use.
19. Review all portions of this design (front, back, words and pictures) before use. Reviewing pictures alone is not sufficient.
20. Design assumes manufacture in accordance with ANSI/TPI 1 Quality Criteria.

NOTES (14-15)

13) In the LOAD CASE(S) section, loads applied to the face of the truss are noted as front (F) or back (B).

14) This manufactured product is designed as an individual building component. The suitability and use of this component for any particular building is the responsibility of the building designer per ANSI TPI 1 as referenced by the building code.

15) Truss Design Engineer: Julius Lee, PE: Florida P.E. License No. 34869: Address: 1109 Coastal Bay Blvd. Boynton Beach, FL 33435

LOAD CASE(S) Standard

1) Regular: Lumber Increase=1.25, Plate Increase=1.25
   Uniform Loads (plf)
   Vert: 1-13=-87(F=-33), 13-22=-87(F=-33), 22-23=-87(F=-33), 2-24=-10

JULIUS S.K. LEE
LICENSE
No 34869
STATE OF
FLORIDA
PROFESSIONAL ENGINEER

July 12,2010

Julius Lee
1109 Coastal Bay Blvd.
Boynton, FL 33435

Job	Truss	Truss Type	Qty	Ply	TROY LAND RES.
327354	T21	COMMON	6	1	I4395725 Job Reference (optional)

Builders FrstSource, Lake City, FL 32055

7.140 s Oct 1 2009 MiTek Industries, Inc. Mon Jul 12 09:46:21 2010 Page 1

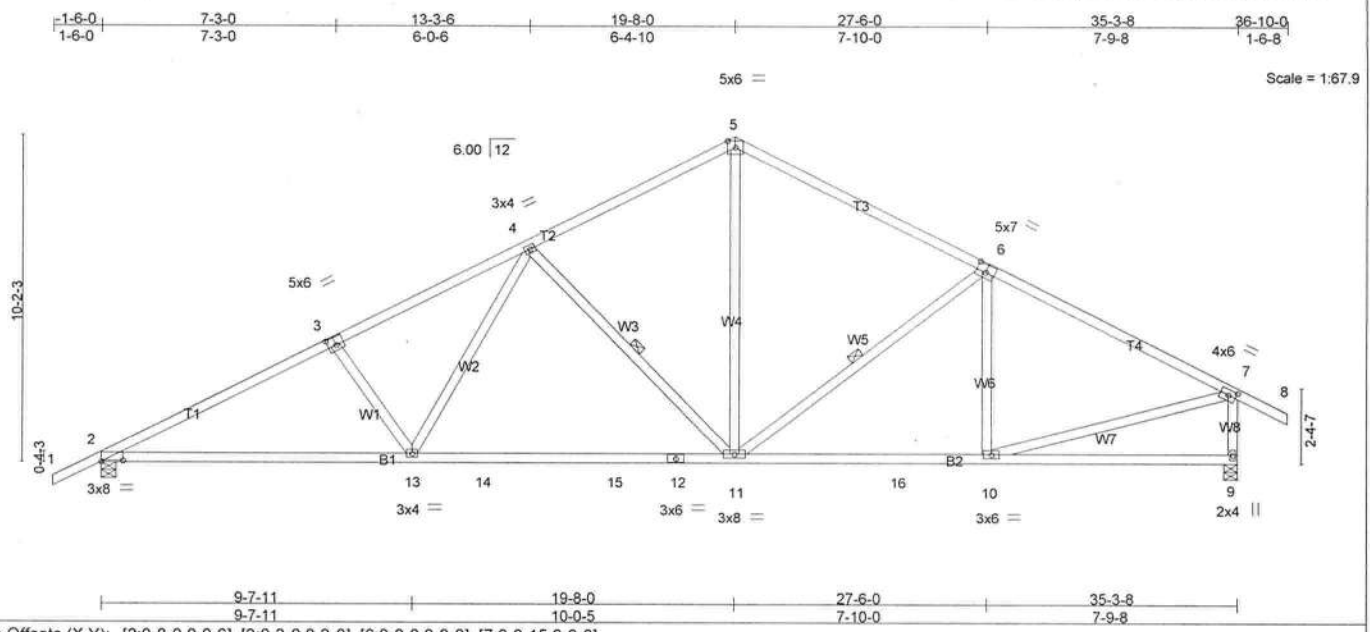

Plate Offsets (X,Y): [2:0-8-0,0-0-6], [3:0-3-0,0-3-0], [6:0-3-8,0-3-0], [7:0-2-15,0-2-0]

LOADING (psf)		SPACING 2-0-0	CSI		DEFL	in	(loc)	l/defl	L/d	PLATES	GRIP
TCLL	20.0	Plates Increase 1.25	TC	0.44	Vert(LL)	-0.40	11-13	>999	360	MT20	244/190
TCDL	7.0	Lumber Increase 1.25	BC	0.74	Vert(TL)	-0.58	11-13	>720	240		
BCLL	0.0 *	Rep Stress Incr YES	WB	0.77	Horz(TL)	0.08	9	n/a	n/a		
BCDL	5.0	Code FBC2007/TPI2002	(Matrix)		Wind(LL)	0.13	13	>999	240	Weight: 198 lb	

LUMBER
TOP CHORD 2 X 4 SYP No.2
BOT CHORD 2 X 4 SYP No.2
WEBS 2 X 4 SYP No.3 *Except*
W8: 2 X 4 SYP No.2

BRACING
TOP CHORD Structural wood sheathing directly applied or 3-8-12 oc purlins, except end verticals.
BOT CHORD Rigid ceiling directly applied or 6-9-3 oc bracing.
WEBS 1 Row at midpt 4-11, 6-11

MiTek recommends that Stabilizers and required cross bracing be installed during truss erection, in accordance with Stabilizer Installation guide.

REACTIONS (lb/size) 2=1340/0-5-8, 9=1356/0-5-0
Max Horz 2=166(LC 5)
Max Uplift 2=-328(LC 6), 9=-300(LC 7)

FORCES (lb) - Max. Comp./Max. Ten. - All forces 250 (lb) or less except when shown.
TOP CHORD 2-3=-2348/1143, 3-4=-2140/1129, 4-5=-1377/830, 5-6=-1402/820, 6-7=-1605/829, 7-9=-1320/776
BOT CHORD 2-13=-871/2008, 13-14=-589/1596, 14-15=-589/1596, 12-15=-589/1596, 11-12=-589/1596, 11-16=-490/1359, 10-16=-490/1359
WEBS 3-13=-292/312, 4-13=-227/528, 4-11=-647/462, 5-11=-449/805, 6-11=-334/277, 7-10=-512/1333

NOTES (8-9)
1) Unbalanced roof live loads have been considered for this design.
2) Wind: ASCE 7-05; 110mph (3-second gust); TCDL=4.2psf; BCDL=3.0psf; h=18ft; Cat. II; Exp B; enclosed; MWFRS (low-rise) and C-C Exterior(2) zone; end vertical right exposed;C-C for members and forces & MWFRS for reactions shown; Lumber DOL=1.60 plate grip DOL=1.60
3) This truss has been designed for a 10.0 psf bottom chord live load nonconcurrent with any other live loads.
4) * This truss has been designed for a live load of 20.0psf on the bottom chord in all areas where a rectangle 3-6-0 tall by 2-0-0 wide will fit between the bottom chord and any other members, with BCDL = 5.0psf.
5) All bearings are assumed to be SYP No.2 .
6) Provide mechanical connection (by others) of truss to bearing plate capable of withstanding 328 lb uplift at joint 2 and 300 lb uplift at joint 9.
7) "Semi-rigid pitchbreaks including heels" Member end fixity model was used in the analysis and design of this truss.
8) This manufactured product is designed as an individual building component. The suitability and use of this component for any particular building is the responsibility of the building designer per ANSI TPI 1 as referenced by the building code.
9) Truss Design Engineer: Julius Lee, PE: Florida P.E. License No. 34869: Address: 1109 Coastal Bay Blvd. Boynton Beach, FL 33435

LOAD CASE(S) Standard

JULIUS S.K. LEE
LICENSE
No 34869
STATE OF
FLORIDA
PROFESSIONAL ENGINEER

July 12,2010

Julius Lee
1109 Coastal Bay Blvd.
Boynton, FL 33435

Job	Truss	Truss Type	Qty	Ply	TROY LAND RES.
327354	T20G	GABLE	1	1	I4395724
					Job Reference (optional)

Builders FirstSource, Lake City, FL 32055

7.140 s Oct 1 2009 MiTek Industries, Inc. Mon Jul 12 09:46:20 2010 Page 1

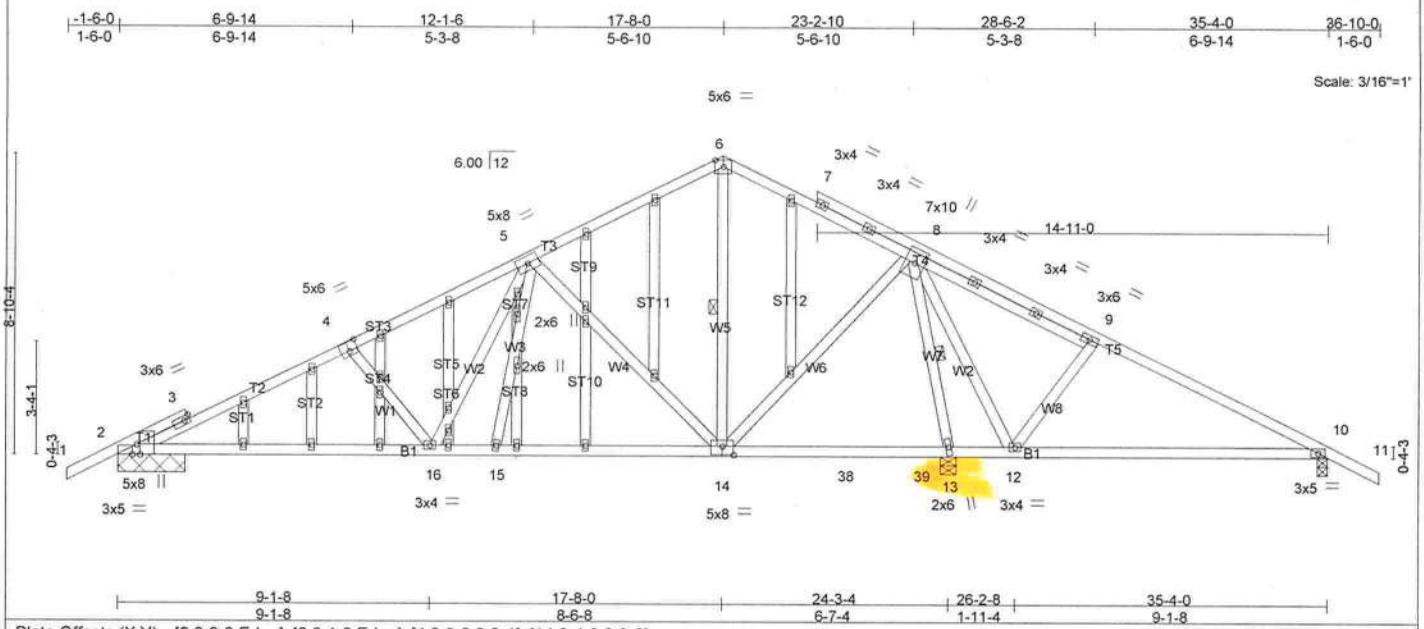

Plate Offsets (X,Y): [2:0-3-8,Edge], [2:0-1-8,Edge], [4:0-3-0,0-3-4], [14:0-4-0,0-3-0]

LOADING (psf)		SPACING 2-0-0		CSI		DEFL	in	(loc)	l/defl	L/d	PLATES	GRIP
TCLL	20.0	Plates Increase	1.25	TC	0.84	Vert(LL)	-0.19	2-16	>999	360	MT20	244/190
TCDL	7.0	Lumber Increase	1.25	BC	0.56	Vert(TL)	-0.39	2-16	>748	240		
BCLL	0.0 *	Rep Stress Incr	NO	WB	0.96	Horz(TL)	0.03	13	n/a	n/a		
BCDL	5.0	Code FBC2007/TPI2002		(Matrix)		Wind(LL)	0.36	10-12	>364	240	Weight: 262 lb	

LUMBER
TOP CHORD 2 X 4 SYP No.2
BOT CHORD 2 X 4 SYP No.2
WEBS 2 X 4 SYP No.3
OTHERS 2 X 4 SYP No.3

BRACING
TOP CHORD Structural wood sheathing directly applied or 3-1-9 oc purlins.
BOT CHORD Rigid ceiling directly applied or 6-0-0 oc bracing.
WEBS 1 Row at midpt 6-14, 8-13

MiTek recommends that Stabilizers and required cross bracing be installed during truss erection, in accordance with Stabilizer Installation guide.

REACTIONS (lb/size) 2=1111/1-11-8, 10=3/0-3-8, 13=2112/0-5-8
Max Horz 2=-148(LC 7)
Max Uplift 2=-580(LC 6), 10=-243(LC 10), 13=-1027(LC 6)
Max Grav 2=1111(LC 1), 10=153(LC 11), 13=2112(LC 1)

FORCES (lb) - Max. Comp./Max. Ten. - All forces 250 (lb) or less except when shown.
TOP CHORD 2-3=-1742/1046, 3-4=-1684/1041, 4-5=-1384/902, 5-6=-416/352, 6-7=-296/337, 7-8=-373/337, 8-9=-285/873, 9-10=-274/770
BOT CHORD 2-16=-816/1506, 15-16=-349/871, 14-15=-351/873, 14-38=-588/589, 38-39=-588/589, 13-39=-588/589, 12-13=-873/825, 10-12=-661/331
WEBS 8-14=-652/1208, 8-12=-709/373, 9-12=-336/336, 5-14=-850/658, 5-16=-384/629, 4-16=-581/492, 8-13=-1983/1634

NOTES (12-13)
1) Unbalanced roof live loads have been considered for this design.
2) Wind: ASCE 7-05; 110mph (3-second gust); TCDL=4.2psf; BCDL=3.0psf; h=18ft; Cat. II; Exp B; enclosed; MWFRS (low-rise) gable end zone and C-C Exterior(2) zone; porch right exposed;C-C for members and forces & MWFRS for reactions shown; Lumber DOL=1.60 plate grip DOL=1.60
3) Truss designed for wind loads in the plane of the truss only. For studs exposed to wind (normal to the face), see Standard Industry Gable End Details as applicable, or consult qualified building designer as per ANSI/TPI 1-2002.
4) All plates are 2x4 MT20 unless otherwise indicated.
5) Gable studs spaced at 2-0-0 oc.
6) This truss has been designed for a 10.0 psf bottom chord live load nonconcurrent with any other live loads.
7) * This truss has been designed for a live load of 20.0psf on the bottom chord in all areas where a rectangle 3-6-0 tall by 2-0-0 wide will fit between the bottom chord and any other members, with BCDL = 5.0psf.
8) All bearings are assumed to be SYP No.2 .
9) Provide mechanical connection (by others) of truss to bearing plate capable of withstanding 580 lb uplift at joint 2, 243 lb uplift at joint 10 and 1027 lb uplift at joint 13.
10) "Semi-rigid pitchbreaks including heels" Member end fixity model was used in the analysis and design of this truss.
11) In the LOAD CASE(S) section, loads applied to the face of the truss are noted as front (F) or back (B).
12) This manufactured product is designed as an individual building component. The suitability and use of this component for any particular building is the responsibility of the building designer per ANSI TPI 1 as referenced by the building code.
13) Truss Design Engineer: Julius Lee, PE: Florida P.E. License No. 34869: Address: 1109 Coastal Bay Blvd. Boynton Beach, FL 33435

JULIUS S.K. LEE
LICENSE
No 34869
STATE OF FLORIDA
PROFESSIONAL ENGINEER

LOAD CASE(S) Standard

Continued on page 2

July 12,2010

Julius Lee
1109 Coastal Bay Blvd.
Boynton, FL 33435

Job	Truss	Truss Type	Qty	Ply	TROY LAND RES.
327354	T19	COMMON	4	1	I4395722 Job Reference (optional)

Builders FrstSource, Lake City, FL 32055 — 7.140 s Oct 1 2009 MiTek Industries, Inc. Mon Jul 12 09:46:19 2010 Page 1

-1-6-0	6-9-14	12-1-6	17-8-0	23-2-10	28-6-2	35-4-0	36-10-0
1-6-0	6-9-14	5-3-8	5-6-10	5-6-10	5-3-8	6-9-14	1-6-0

Scale = 1:63.0

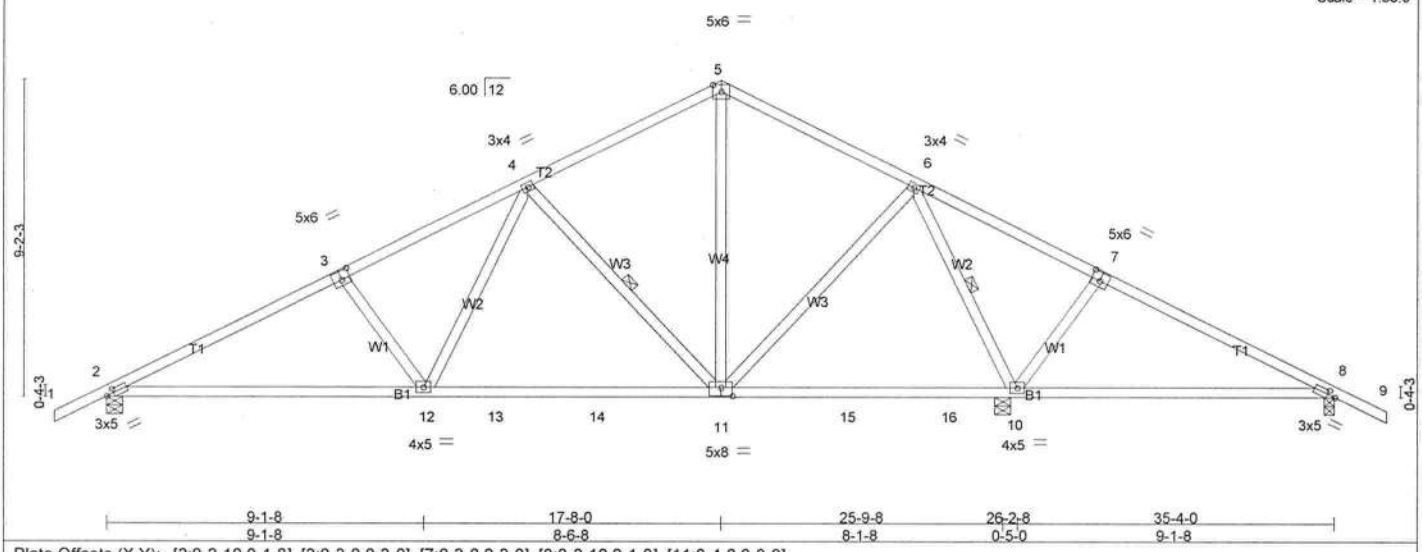

9-1-8	17-8-0	25-9-8	26-2-8	35-4-0
9-1-8	8-6-8	8-1-8	0-5-0	9-1-8

Plate Offsets (X,Y): [2:0-2-10,0-1-8], [3:0-3-0,0-3-0], [7:0-3-0,0-3-0], [8:0-2-10,0-1-8], [11:0-4-0,0-3-0]

LOADING (psf)		SPACING 2-0-0	CSI		DEFL	in	(loc)	l/defl	L/d	PLATES	GRIP
TCLL	20.0	Plates Increase 1.25	TC	0.42	Vert(LL)	-0.15	2-12	>999	360	MT20	244/190
TCDL	7.0	Lumber Increase 1.25	BC	0.46	Vert(TL)	-0.29	2-12	>999	240		
BCLL	0.0 *	Rep Stress Incr YES	WB	0.32	Horz(TL)	0.03	10	n/a	n/a		
BCDL	5.0	Code FBC2007/TPI2002	(Matrix)		Wind(LL)	0.43	8-10	>255	240	Weight: 184 lb	

LUMBER
TOP CHORD 2 X 4 SYP No.2
BOT CHORD 2 X 4 SYP No.2
WEBS 2 X 4 SYP No.3

BRACING
TOP CHORD Structural wood sheathing directly applied or 4-11-0 oc purlins.
BOT CHORD Rigid ceiling directly applied or 6-0-0 oc bracing.
WEBS 1 Row at midpt 6-10, 4-11

MiTek recommends that Stabilizers and required cross bracing be installed during truss erection, in accordance with Stabilizer Installation guide.

REACTIONS (lb/size) 2=921/0-5-8, 10=1569/0-5-8, 8=161/0-3-8
Max Horz 2=-131(LC 7)
Max Uplift 2=-250(LC 6), 10=-385(LC 7), 8=-228(LC 7)
Max Grav 2=921(LC 1), 10=1569(LC 1), 8=243(LC 11)

FORCES (lb) - Max. Comp./Max. Ten. - All forces 250 (lb) or less except when shown.
TOP CHORD 2-3=-1448/704, 3-4=-1240/677, 4-5=-612/418, 5-6=-612/417, 6-7=-123/524, 7-8=-88/339
BOT CHORD 2-12=-468/1215, 12-13=-205/860, 13-14=-205/860, 11-14=-205/860, 8-10=-279/201
WEBS 6-11=-107/532, 6-10=-1258/596, 7-10=-321/345, 4-11=-566/422, 4-12=-210/438, 3-12=-280/290

NOTES (8-9)
1) Unbalanced roof live loads have been considered for this design.
2) Wind: ASCE 7-05; 110mph (3-second gust); TCDL=4.2psf; BCDL=3.0psf; h=18ft; Cat. II; Exp B; enclosed; MWFRS (low-rise) and C-C Exterior(2) zone; porch right exposed;C-C for members and forces & MWFRS for reactions shown; Lumber DOL=1.60 plate grip DOL=1.60
3) This truss has been designed for a 10.0 psf bottom chord live load nonconcurrent with any other live loads.
4) * This truss has been designed for a live load of 20.0psf on the bottom chord in all areas where a rectangle 3-6-0 tall by 2-0-0 wide will fit between the bottom chord and any other members, with BCDL = 5.0psf.
5) All bearings are assumed to be SYP No.2 .
6) Provide mechanical connection (by others) of truss to bearing plate capable of withstanding 250 lb uplift at joint 2, 385 lb uplift at joint 10 and 228 lb uplift at joint 8.
7) "Semi-rigid pitchbreaks including heels" Member end fixity model was used in the analysis and design of this truss.
8) This manufactured product is designed as an individual building component. The suitability and use of this component for any particular building is the responsibility of the building designer per ANSI TPI 1 as referenced by the building code.
9) Truss Design Engineer: Julius Lee, PE: Florida P.E. License No. 34869: Address: 1109 Coastal Bay Blvd. Boynton Beach, FL 33435

LOAD CASE(S) Standard

JULIUS S.K. LEE
LICENSE
No 34869
STATE OF
FLORIDA
PROFESSIONAL ENGINEER

July 12,2010

Julius Lee
1109 Coastal Bay Blvd.
Boynton, FL 33435

Job	Truss	Truss Type	Qty	Ply	TROY LAND RES.
327354	T18G	GABLE	2	1	I4395721 Job Reference (optional)

Builders FrstSource, Lake City, FL 32055 — 7.140 s Oct 1 2009 MiTek Industries, Inc. Mon Jul 12 09:46:18 2010 Page 1

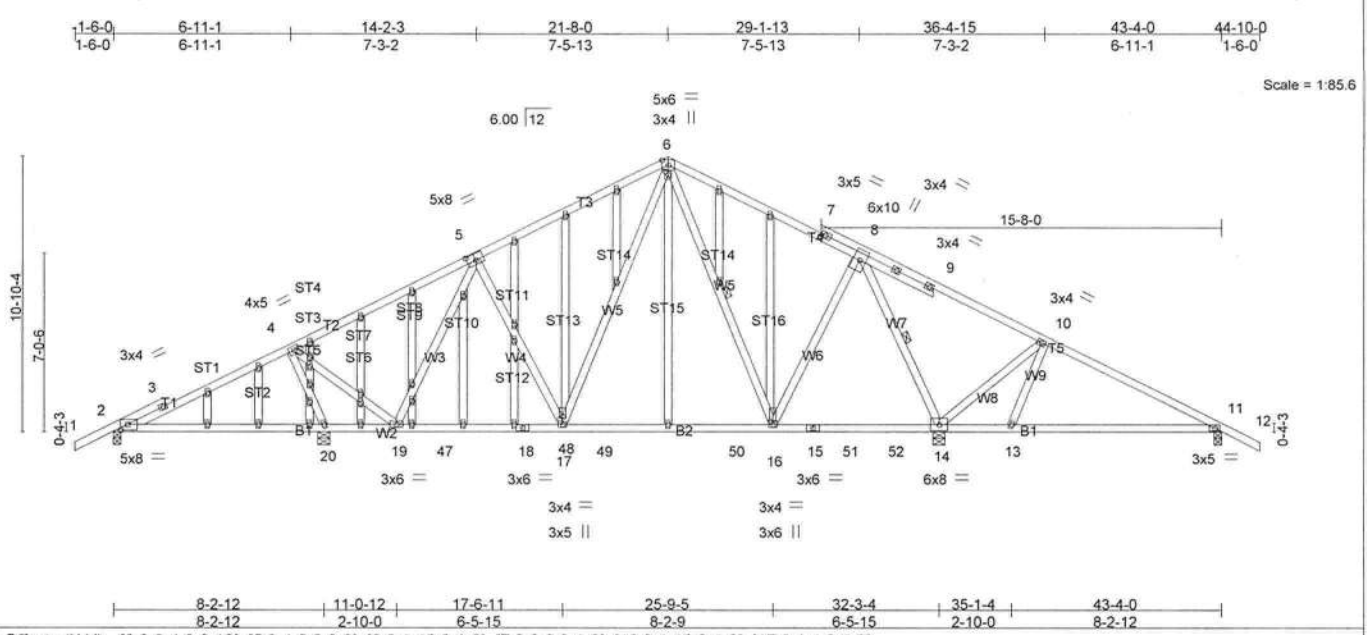

Plate Offsets (X,Y): [2:0-3-4,0-2-12], [5:0-4-0,0-3-0], [6:0-1-12,0-1-8], [7:0-2-0,0-1-8], [16:0-1-12,0-1-8], [17:0-1-1,0-1-8]

LOADING (psf)		SPACING 2-0-0	CSI		DEFL	in	(loc)	l/defl	L/d	PLATES	GRIP
TCLL	20.0	Plates Increase 1.25	TC	0.69	Vert(LL)	-0.17	16-17	>999	360	MT20	244/190
TCDL	7.0	Lumber Increase 1.25	BC	0.57	Vert(TL)	-0.24	16-17	>999	240		
BCLL	0.0 *	Rep Stress Incr NO	WB	0.96	Horz(TL)	0.01	14	n/a	n/a		
BCDL	5.0	Code FBC2007/TPI2002	(Matrix)		Wind(LL)	0.24	11-13	>542	240	Weight: 346 lb	

LUMBER

TOP CHORD	2 X 4 SYP No.2
BOT CHORD	2 X 4 SYP No.2
WEBS	2 X 4 SYP No.3
OTHERS	2 X 4 SYP No.3

BRACING

TOP CHORD	Structural wood sheathing directly applied or 5-4-3 oc purlins.
BOT CHORD	Rigid ceiling directly applied or 6-0-0 oc bracing.
WEBS	1 Row at midpt 6-16, 8-14

MiTek recommends that Stabilizers and required cross bracing be installed during truss erection, in accordance with Stabilizer Installation guide.

REACTIONS All bearings 0-3-8 except (jt=length) 14=0-5-8, 20=0-5-8.
(lb) - Max Horz 2=-176(LC 7)
Max Uplift All uplift 100 lb or less at joint(s) except 2=-271(LC 6), 14=-887(LC 7), 20=-993(LC 6), 11=-286(LC 7)
Max Grav All reactions 250 lb or less at joint(s) except 2=390(LC 10), 14=1819(LC 1), 20=1856(LC 1), 11=268(LC 11)

FORCES (lb) - Max. Comp./Max. Ten. - All forces 250 (lb) or less except when shown.

TOP CHORD 3-4=-207/250, 4-5=-504/175, 5-6=-965/585, 6-7=-596/452, 7-8=-714/451, 8-9=-213/493, 9-10=-240/344

BOT CHORD 2-20=-95/266, 19-20=-898/722, 19-47=-155/726, 47-48=-155/726, 18-48=-155/726, 17-18=-155/726, 17-49=-24/616, 49-50=-24/616, 16-50=-24/616, 15-16=0/309, 15-51=0/309, 51-52=0/309, 14-52=0/309

WEBS 8-16=-93/517, 8-14=-1615/896, 10-14=-411/694, 10-13=-315/236, 6-17=-143/331, 5-19=-957/592, 4-19=-683/1531, 4-20=-1934/1130

NOTES (12-13)

1) Unbalanced roof live loads have been considered for this design.
2) Wind: ASCE 7-05; 110mph (3-second gust); TCDL=4.2psf; BCDL=3.0psf; h=18ft; Cat. II; Exp B; enclosed; MWFRS (low-rise) gable end zone and C-C Exterior(2) zone; porch left and right exposed;C-C for members and forces & MWFRS for reactions shown; Lumber DOL=1.60 plate grip DOL=1.60
3) Truss designed for wind loads in the plane of the truss only. For studs exposed to wind (normal to the face), see Standard Industry Gable End Details as applicable, or consult qualified building designer as per ANSI/TPI 1-2002.
4) All plates are 2x4 MT20 unless otherwise indicated.
5) Gable studs spaced at 2-0-0 oc.
6) This truss has been designed for a 10.0 psf bottom chord live load nonconcurrent with any other live loads.
7) * This truss has been designed for a live load of 20.0psf on the bottom chord in all areas where a rectangle 3-6-0 tall by 2-0-0 wide will fit between the bottom chord and any other members, with BCDL = 5.0psf.
8) All bearings are assumed to be SYP No.2 .
9) Provide mechanical connection (by others) of truss to bearing plate capable of withstanding 271 lb uplift at joint 2, 887 lb uplift at joint 14, 993 lb uplift at joint 20 and 286 lb uplift at joint 11.
10) "Semi-rigid pitchbreaks including heels" Member end fixity model was used in the analysis and design of this truss.
11) In the LOAD CASE(S) section, loads applied to the face of the truss are noted as front (F) or back (B).
12) This manufactured product is designed as an individual building component. The suitability and use of this component for any particular building is the responsibility of the building designer per ANSI TPI 1 as referenced by the building code.
13) Truss Design Engineer: Julius Lee, PE: Florida P.E. License No. 34869: Address: 1109 Coastal Bay Blvd. Boynton Beach, FL 33435

Continued on page 2

JULIUS S.K. LEE LICENSE No 34869 STATE OF FLORIDA PROFESSIONAL ENGINEER

July 12,2010

Julius Lee
1109 Coastal Bay Blvd.
Boynton, FL 33435

Job	Truss	Truss Type	Qty	Ply	TROY LAND RES.
327354	T18	COMMON	9	1	I4395720 Job Reference (optional)

Builders FirstSource, Lake City, FL 32055 — 7.140 s Oct 1 2009 MiTek Industries, Inc. Mon Jul 12 09:46:17 2010 Page 1

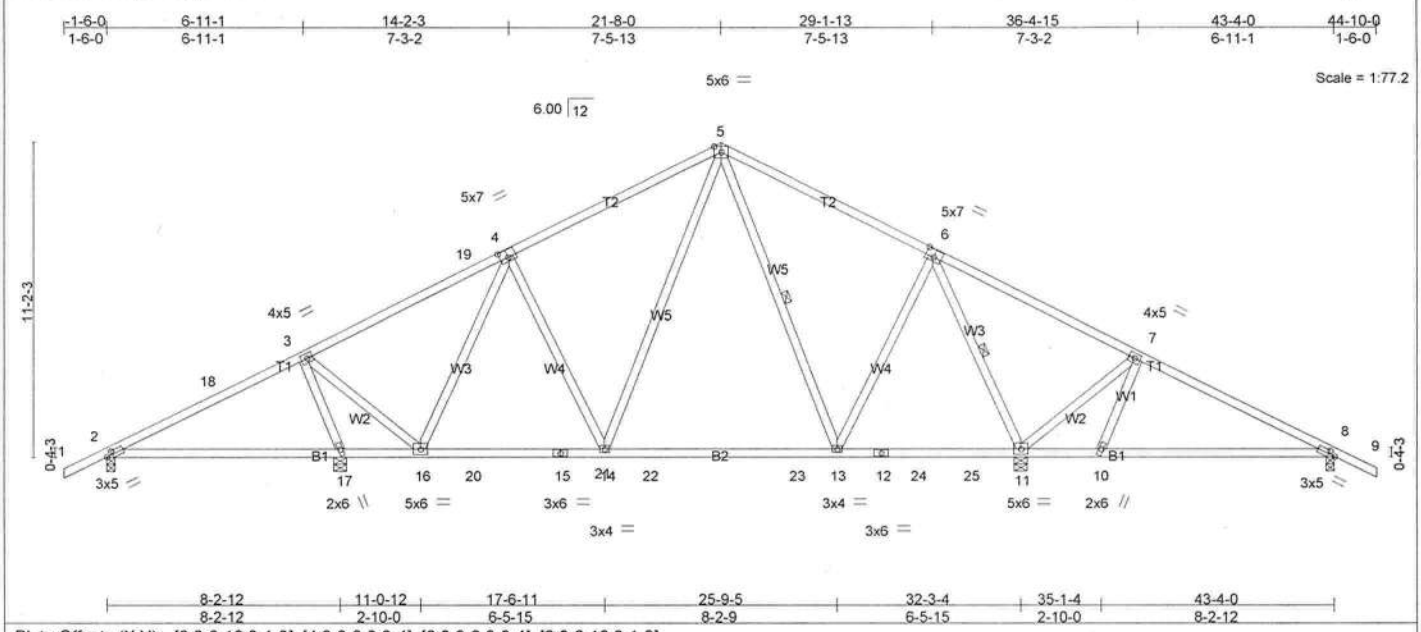

Plate Offsets (X,Y): [2:0-2-10,0-1-8], [4:0-3-8,0-3-4], [6:0-3-8,0-3-4], [8:0-2-10,0-1-8]

LOADING (psf)		SPACING 2-0-0	CSI		DEFL	in	(loc)	l/defl	L/d	PLATES	GRIP
TCLL	20.0	Plates Increase 1.25	TC	0.95	Vert(LL)	-0.17	13-14	>999	360	MT20	244/190
TCDL	7.0	Lumber Increase 1.25	BC	0.57	Vert(TL)	-0.23	13-14	>999	240		
BCLL	0.0 *	Rep Stress Incr NO	WB	0.81	Horz(TL)	0.02	8	n/a	n/a		
BCDL	5.0	Code FBC2007/TPI2002	(Matrix)		Wind(LL)	0.24	2-17	>399	240	Weight: 246 lb	

LUMBER
TOP CHORD 2 X 4 SYP No.2 *Except*
T1: 2 X 4 SYP No.1D
BOT CHORD 2 X 4 SYP No.2
WEBS 2 X 4 SYP No.3

BRACING
TOP CHORD Structural wood sheathing directly applied or 5-3-2 oc purlins.
BOT CHORD Rigid ceiling directly applied or 6-0-0 oc bracing.
WEBS 1 Row at midpt 5-13, 6-11

MiTek recommends that Stabilizers and required cross bracing be installed during truss erection, in accordance with Stabilizer Installation guide.

REACTIONS All bearings 0-3-8 except (jt=length) 11=0-5-8, 17=0-5-8.
(lb) - Max Horz 2=-155(LC 7)
Max Uplift All uplift 100 lb or less at joint(s) except 2=-266(LC 6), 11=-465(LC 7), 17=-787(LC 6), 8=-252(LC 7)
Max Grav All reactions 250 lb or less at joint(s) except 2=524(LC 10), 11=1548(LC 1), 17=2171(LC 1), 8=337(LC 11)

FORCES (lb) - Max. Comp./Max. Ten. - All forces 250 (lb) or less except when shown.
TOP CHORD 2-18=-506/310, 3-19=-721/390, 4-19=-270/201, 4-5=-830/543, 5-6=-613/418, 6-7=-132/360
BOT CHORD 2-17=-139/354, 16-17=-499/382, 16-20=-81/687, 20-21=-81/687, 15-21=-81/687, 14-15=-81/687, 14-22=0/511, 22-23=0/511, 13-23=0/511, 12-13=0/271, 12-24=0/271, 24-25=0/271, 11-25=0/271
WEBS 6-13=-27/436, 6-11=-1279/643, 7-11=-458/737, 7-10=-310/234, 5-14=-228/426, 4-14=-151/278, 4-16=-749/402, 3-16=-366/1150, 3-17=-2232/1315

NOTES (10-11)
1) Unbalanced roof live loads have been considered for this design.
2) Wind: ASCE 7-05; 110mph (3-second gust); TCDL=4.2psf; BCDL=3.0psf; h=18ft; Cat. II; Exp B; enclosed; MWFRS (low-rise) and C-C Exterior(2) zone; porch left and right exposed;C-C for members and forces & MWFRS for reactions shown; Lumber DOL=1.60 plate grip DOL=1.60
3) This truss has been designed for a 10.0 psf bottom chord live load nonconcurrent with any other live loads.
4) * This truss has been designed for a live load of 20.0psf on the bottom chord in all areas where a rectangle 3-6-0 tall by 2-0-0 wide will fit between the bottom chord and any other members, with BCDL = 5.0psf.
5) All bearings are assumed to be SYP No.2 .
6) Provide mechanical connection (by others) of truss to bearing plate capable of withstanding 266 lb uplift at joint 2, 465 lb uplift at joint 11 , 787 lb uplift at joint 17 and 252 lb uplift at joint 8.
7) "Semi-rigid pitchbreaks including heels" Member end fixity model was used in the analysis and design of this truss.
8) Hanger(s) or other connection device(s) shall be provided sufficient to support concentrated load(s) 138 lb down and 102 lb up at 4-0-6 on top chord. The design/selection of such connection device(s) is the responsibility of others.
9) In the LOAD CASE(S) section, loads applied to the face of the truss are noted as front (F) or back (B).
10) This manufactured product is designed as an individual building component. The suitability and use of this component for any particular building is the responsibility of the building designer per ANSI TPI 1 as referenced by the building code.
11) Truss Design Engineer: Julius Lee, PE: Florida P.E. License No. 34869: Address: 1109 Coastal Bay Blvd. Boynton Beach, FL 33435

JULIUS S.K. LEE LICENSE No 34869 STATE OF FLORIDA PROFESSIONAL ENGINEER

July 12,2010

LOAD CASE(S) Standard

Continued on page 2

Julius Lee
1109 Coastal Bay Blvd.
Boynton, FL 33435

Job	Truss	Truss Type	Qty	Ply	TROY LAND RES.
327354	T16	SPECIAL	1	1	I4395718
					Job Reference (optional)

Builders FirstSource, Lake City, FL 32055

7.140 s Oct 1 2009 MiTek Industries, Inc. Mon Jul 12 09:46:16 2010 Page 1

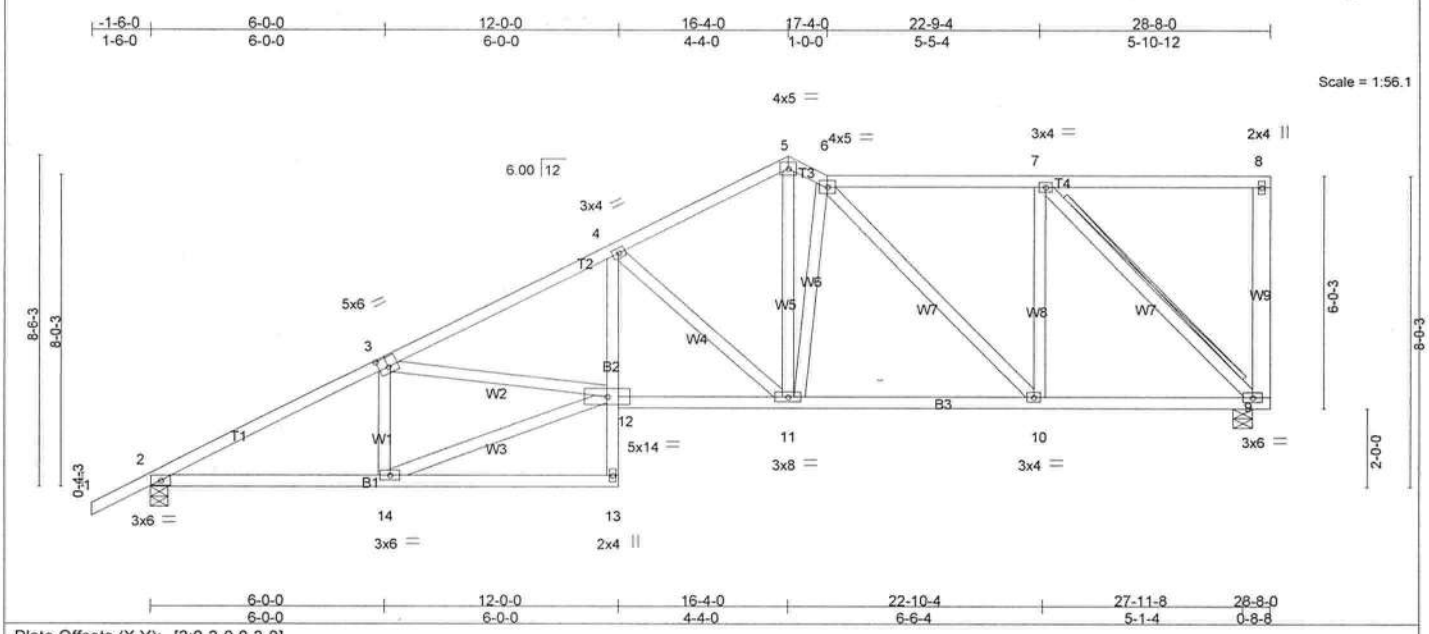

Plate Offsets (X,Y): [3:0-3-0,0-3-0]

LOADING (psf)		SPACING	2-0-0	CSI		DEFL	in	(loc)	l/defl	L/d	PLATES	GRIP
TCLL	20.0	Plates Increase	1.25	TC	0.30	Vert(LL)	-0.10	12	>999	360	MT20	244/190
TCDL	7.0	Lumber Increase	1.25	BC	0.37	Vert(TL)	-0.20	11-12	>999	240		
BCLL	0.0 *	Rep Stress Incr	YES	WB	0.71	Horz(TL)	0.09	9	n/a	n/a		
BCDL	5.0	Code FBC2007/TPI2002		(Matrix)		Wind(LL)	0.14	12	>999	240	Weight: 190 lb	

LUMBER

TOP CHORD 2 X 4 SYP No.2
BOT CHORD 2 X 4 SYP No.2 *Except*
B2: 2 X 4 SYP No.3
WEBS 2 X 4 SYP No.3 *Except*
W9: 2 X 6 SYP No.1D

BRACING

TOP CHORD Structural wood sheathing directly applied or 4-4-6 oc purlins, except end verticals.
BOT CHORD Rigid ceiling directly applied or 5-10-15 oc bracing.
WEBS T-Brace: 2 X 4 SYP No.3 - 7-9
Fasten T and I braces to narrow edge of web with 10d Common wire nails, 9in o.c.,with 4in minimum end distance.
Brace must cover 90% of web length.

MiTek recommends that Stabilizers and required cross bracing be installed during truss erection, in accordance with Stabilizer Installation guide.

REACTIONS (lb/size) 9=900/0-5-15, 2=999/0-5-8
Max Horz 2=290(LC 6)
Max Uplift 9=-221(LC 5), 2=-259(LC 6)

FORCES (lb) - Max. Comp./Max. Ten. - All forces 250 (lb) or less except when shown.
TOP CHORD 2-3=-1651/763, 3-4=-1950/1122, 4-5=-1193/710, 5-6=-1124/730, 6-7=-748/452
BOT CHORD 2-14=-981/1401, 4-12=-399/640, 11-12=-1158/1685, 10-11=-681/1063, 9-10=-452/748
WEBS 3-14=-470/422, 12-14=-1042/1476, 3-12=-171/275, 4-11=-891/670, 5-11=-506/834, 6-11=-329/164, 6-10=-457/333, 7-10=-198/420, 7-9=-1041/631

NOTES (10-11)

1) Unbalanced roof live loads have been considered for this design.
2) Wind: ASCE 7-05; 110mph (3-second gust); TCDL=4.2psf; BCDL=3.0psf; h=18ft; Cat. II; Exp B; enclosed; MWFRS (low-rise) and C-C Exterior(2) zone;C-C for members and forces & MWFRS for reactions shown; Lumber DOL=1.60 plate grip DOL=1.60
3) Provide adequate drainage to prevent water ponding.
4) This truss has been designed for a 10.0 psf bottom chord live load nonconcurrent with any other live loads.
5) * This truss has been designed for a live load of 20.0psf on the bottom chord in all areas where a rectangle 3-6-0 tall by 2-0-0 wide will fit between the bottom chord and any other members.
6) All bearings are assumed to be SYP No.2 .
7) Provide mechanical connection (by others) of truss to bearing plate capable of withstanding 100 lb uplift at joint(s) except (jt=lb) 9=221, 2=259.
8) "Semi-rigid pitchbreaks including heels" Member end fixity model was used in the analysis and design of this truss.
9) Warning: Additional permanent and stability bracing for truss system (not part of this component design) is always required.
10) This manufactured product is designed as an individual building component. The suitability and use of this component for any particular building is the responsibility of the building designer per ANSI TPI 1 as referenced by the building code.
11) Truss Design Engineer: Julius Lee, PE: Florida P.E. License No. 34869: Address: 1109 Coastal Bay Blvd. Boynton Beach, FL 33435

LOAD CASE(S) Standard

JULIUS S.K. LEE
LICENSE
No 34869
STATE OF
FLORIDA
PROFESSIONAL ENGINEER

July 12,2010

Julius Lee
1109 Coastal Bay Blvd.
Boynton, FL 33435

Job	Truss	Truss Type	Qty	Ply	TROY LAND RES.
327354	T14	SPECIAL	1	1	I4395716
					Job Reference (optional)

Builders FrstSource, Lake City, FL 32055 — 7.140 s Oct 1 2009 MiTek Industries, Inc. Mon Jul 12 09:46:15 2010 Page 1

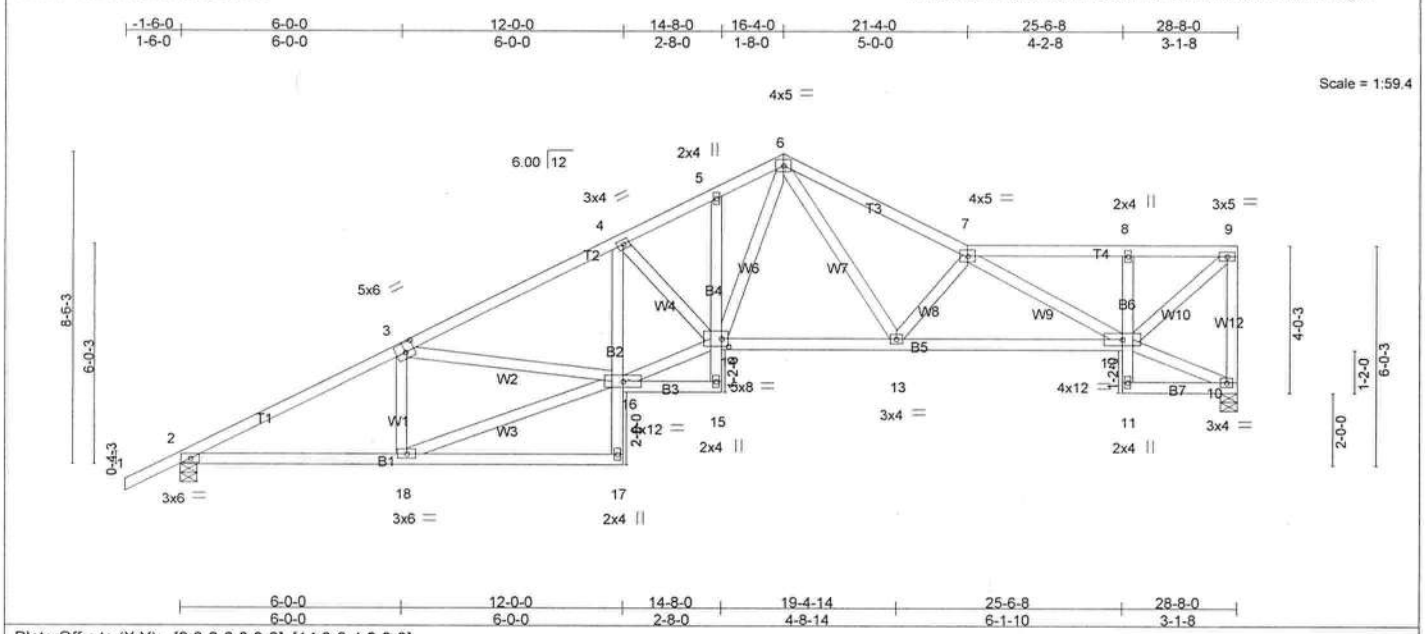

Plate Offsets (X,Y): [3:0-3-0,0-3-0], [14:0-2-4,0-2-8]

LOADING (psf)		SPACING 2-0-0	CSI	DEFL in (loc) l/defl L/d	PLATES GRIP
TCLL 20.0		Plates Increase 1.25	TC 0.30	Vert(LL) -0.12 13-14 >999 360	MT20 244/190
TCDL 7.0		Lumber Increase 1.25	BC 0.36	Vert(TL) -0.24 13-14 >999 240	
BCLL 0.0	*	Rep Stress Incr YES	WB 0.66	Horz(TL) 0.14 10 n/a n/a	
BCDL 5.0		Code FBC2007/TPI2002	(Matrix)	Wind(LL) 0.17 13-14 >999 240	Weight: 185 lb

LUMBER
TOP CHORD 2 X 4 SYP No.2
BOT CHORD 2 X 4 SYP No.2 *Except*
B2,B4,B6: 2 X 4 SYP No.3
WEBS 2 X 4 SYP No.3

BRACING
TOP CHORD Structural wood sheathing directly applied or 4-5-13 oc purlins, except end verticals.
BOT CHORD Rigid ceiling directly applied or 5-11-4 oc bracing.

MiTek recommends that Stabilizers and required cross bracing be installed during truss erection, in accordance with Stabilizer Installation guide.

REACTIONS (lb/size) 10=902/0-5-8, 2=1002/0-5-8
Max Horz 2=249(LC 6)
Max Uplift 10=-200(LC 7), 2=-269(LC 6)

FORCES (lb) - Max. Comp./Max. Ten. - All forces 250 (lb) or less except when shown.
TOP CHORD 2-3=-1657/829, 3-4=-1827/1074, 4-5=-1759/1116, 5-6=-1706/1137, 6-7=-1806/1096, 7-8=-939/540, 8-9=-911/528, 9-10=-878/517
BOT CHORD 2-18=-938/1406, 13-14=-743/1249, 12-13=-1150/1908
WEBS 3-18=-405/361, 16-18=-979/1453, 14-16=-1060/1656, 6-14=-558/830, 6-13=-324/606, 7-13=-569/396, 7-12=-1123/707, 9-12=-707/1219

NOTES (9-10)
1) Unbalanced roof live loads have been considered for this design.
2) Wind: ASCE 7-05; 110mph (3-second gust); TCDL=4.2psf; BCDL=3.0psf; h=18ft; Cat. II; Exp B; enclosed; MWFRS (low-rise) and C-C Exterior(2) zone;C-C for members and forces & MWFRS for reactions shown; Lumber DOL=1.60 plate grip DOL=1.60
3) Provide adequate drainage to prevent water ponding.
4) This truss has been designed for a 10.0 psf bottom chord live load nonconcurrent with any other live loads.
5) * This truss has been designed for a live load of 20.0psf on the bottom chord in all areas where a rectangle 3-6-0 tall by 2-0-0 wide will fit between the bottom chord and any other members.
6) All bearings are assumed to be SYP No.2 .
7) Provide mechanical connection (by others) of truss to bearing plate capable of withstanding 100 lb uplift at joint(s) except (jt=lb) 10=200, 2=269.
8) "Semi-rigid pitchbreaks including heels" Member end fixity model was used in the analysis and design of this truss.
9) This manufactured product is designed as an individual building component. The suitability and use of this component for any particular building is the responsibility of the building designer per ANSI TPI 1 as referenced by the building code.
10) Truss Design Engineer: Julius Lee, PE: Florida P.E. License No. 34869: Address: 1109 Coastal Bay Blvd. Boynton Beach, FL 33435

LOAD CASE(S) Standard

JULIUS S.K. LEE
LICENSE
No 34869
STATE OF
FLORIDA
PROFESSIONAL ENGINEER

July 12,2010

Julius Lee
1109 Coastal Bay Blvd.
Boynton, FL 33435

Job	Truss	Truss Type	Qty	Ply	TROY LAND RES.
327354	T12	SPECIAL	1	1	I4395714
					Job Reference (optional)

Builders FrstSource, Lake City, FL 32055 — 7.140 s Oct 1 2009 MiTek Industries, Inc. Mon Jul 12 09:46:14 2010 Page 1

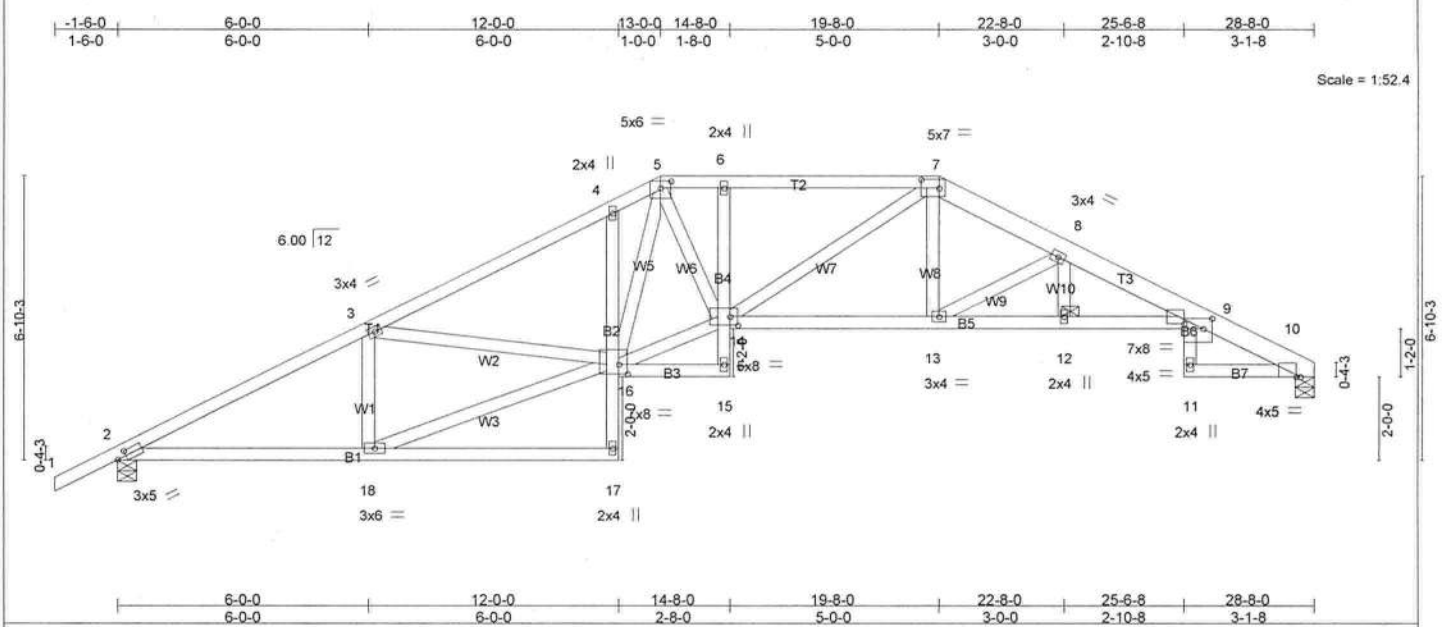

Plate Offsets (X,Y): [2:0-2-10,0-1-8], [5:0-3-0,0-2-0], [7:0-5-4,0-2-8], [9:0-2-8,0-3-0], [9:0-5-8,0-1-8], [10:0-1-4,0-0-0], [14:0-2-4,0-2-8], [16:0-2-8,0-2-12]

LOADING (psf)		SPACING	2-0-0	CSI		DEFL	in	(loc)	l/defl	L/d	PLATES	GRIP
TCLL	20.0	Plates Increase	1.25	TC	0.93	Vert(LL)	-0.23	9-12	>999	360	MT20	244/190
TCDL	7.0	Lumber Increase	1.25	BC	0.96	Vert(TL)	-0.44	9-12	>761	240		
BCLL	0.0 *	Rep Stress Incr	YES	WB	0.54	Horz(TL)	0.36	10	n/a	n/a		
BCDL	5.0	Code FBC2007/TPI2002		(Matrix)		Wind(LL)	0.28	9-12	>999	240	Weight: 173 lb	

LUMBER
TOP CHORD 2 X 4 SYP No.2 *Except*
T3: 2 X 6 SYP No.1D
BOT CHORD 2 X 4 SYP No.2 *Except*
B2,B4,B6: 2 X 4 SYP No.3
WEBS 2 X 4 SYP No.3

BRACING
TOP CHORD Structural wood sheathing directly applied or 2-1-8 oc purlins.
BOT CHORD Rigid ceiling directly applied or 2-2-0 oc bracing. Except:
5-8-0 oc bracing: 9-13

MiTek recommends that Stabilizers and required cross bracing be installed during truss erection, in accordance with Stabilizer Installation guide.

REACTIONS (lb/size) 10=893/0-5-8, 2=989/0-5-8
Max Horz 2=154(LC 6)
Max Uplift 10=-157(LC 7), 2=-263(LC 6)

FORCES (lb) - Max. Comp./Max. Ten. - All forces 250 (lb) or less except when shown.
TOP CHORD 2-3=-1631/855, 3-4=-1786/1005, 4-5=-1768/1128, 5-6=-1828/1081, 6-7=-1854/1092, 7-8=-1838/1029, 8-9=-2439/1316, 9-10=-699/398
BOT CHORD 2-18=-773/1383, 4-16=-276/278, 13-14=-713/1593, 12-13=-1172/2344, 9-12=-1172/2344
WEBS 3-18=-397/304, 16-18=-804/1425, 14-16=-720/1566, 5-14=-369/788, 7-14=-176/406, 7-13=-238/483, 8-13=-887/540

NOTES (10-11)
1) Unbalanced roof live loads have been considered for this design.
2) Wind: ASCE 7-05; 110mph (3-second gust); TCDL=4.2psf; BCDL=3.0psf; h=18ft; Cat. II; Exp B; enclosed; MWFRS (low-rise) and C-C Exterior(2) zone;C-C for members and forces & MWFRS for reactions shown; Lumber DOL=1.60 plate grip DOL=1.60
3) Provide adequate drainage to prevent water ponding.
4) This truss has been designed for a 10.0 psf bottom chord live load nonconcurrent with any other live loads.
5) * This truss has been designed for a live load of 20.0psf on the bottom chord in all areas where a rectangle 3-6-0 tall by 2-0-0 wide will fit between the bottom chord and any other members.
6) All bearings are assumed to be SYP No.2 .
7) Bearing at joint(s) 10 considers parallel to grain value using ANSI/TPI 1 angle to grain formula. Building designer should verify capacity of bearing surface.
8) Provide mechanical connection (by others) of truss to bearing plate capable of withstanding 100 lb uplift at joint(s) except (jt=lb) 10=157, 2=263.
9) "Semi-rigid pitchbreaks including heels" Member end fixity model was used in the analysis and design of this truss.
10) This manufactured product is designed as an individual building component. The suitability and use of this component for any particular building is the responsibility of the building designer per ANSI TPI 1 as referenced by the building code.
11) Truss Design Engineer: Julius Lee, PE: Florida P.E. License No. 34869: Address: 1109 Coastal Bay Blvd. Boynton Beach, FL 33435

LOAD CASE(S) Standard

JULIUS S.K. LEE
LICENSE
No 34869
STATE OF FLORIDA
PROFESSIONAL ENGINEER

July 12,2010

Julius Lee
1109 Coastal Bay Blvd.
Boynton, FL 33435

Job	Truss	Truss Type	Qty	Ply	TROY LAND RES.
327354	T10	SPECIAL	1	1	I4395712
					Job Reference (optional)

Builders FirstSource, Lake City, FL 32055

7.140 s Oct 1 2009 MiTek Industries, Inc. Mon Jul 12 09:46:13 2010 Page 1

-1-6-0	4-9-5	9-0-0	12-0-0	14-8-0	19-0-4	23-8-0	25-6-8	28-8-0	30-2-0
1-6-0	4-9-5	4-2-11	3-0-0	2-8-0	4-4-4	4-7-12	1-10-8	3-1-8	1-6-0

Scale = 1:53.1

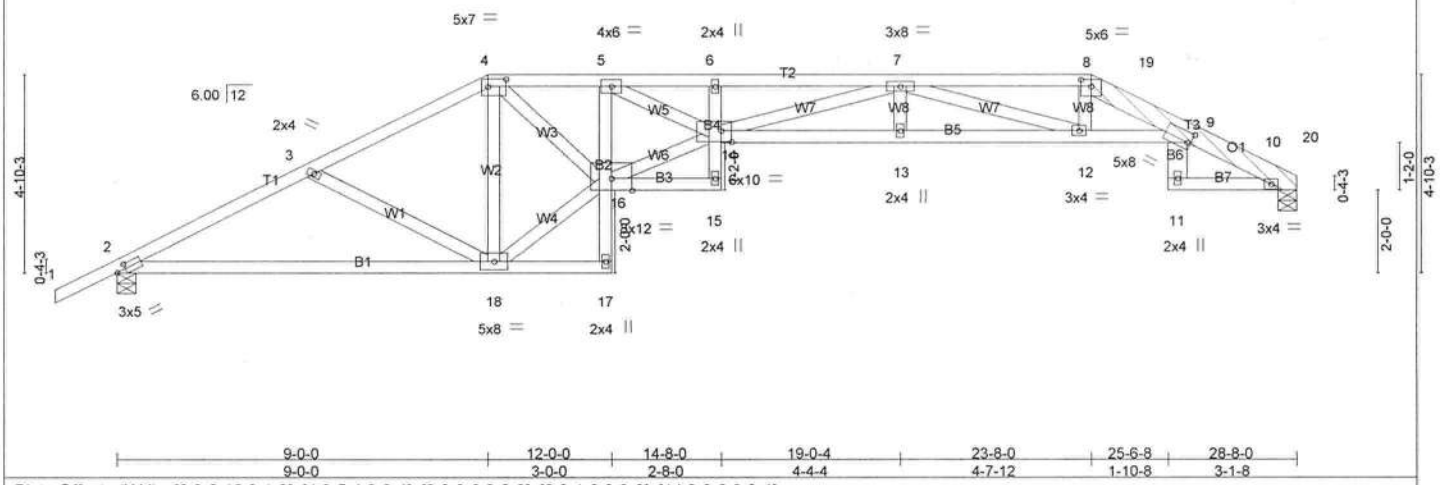

9-0-0	12-0-0	14-8-0	19-0-4	23-8-0	25-6-8	28-8-0
9-0-0	3-0-0	2-8-0	4-4-4	4-7-12	1-10-8	3-1-8

Plate Offsets (X,Y): [2:0-2-10,0-1-8], [4:0-5-4,0-2-4], [8:0-3-0,0-2-0], [9:0-1-0,0-3-0], [14:0-3-0,0-3-4]

LOADING (psf)		SPACING	2-0-0	CSI		DEFL	in	(loc)	l/defl	L/d	PLATES	GRIP
TCLL	20.0	Plates Increase	1.25	TC	0.54	Vert(LL)	-0.44	14	>756	360	MT20	244/190
TCDL	7.0	Lumber Increase	1.25	BC	0.76	Vert(TL)	-0.85	13-14	>395	240		
BCLL	0.0 *	Rep Stress Incr	YES	WB	0.78	Horz(TL)	0.47	10	n/a	n/a		
BCDL	5.0	Code FBC2007/TPI2002		(Matrix)		Wind(LL)	0.53	14	>636	240	Weight: 168 lb	

LUMBER

TOP CHORD 2 X 4 SYP No.2 *Except*
T3: 2 X 6 SYP No.1D
BOT CHORD 2 X 4 SYP No.2 *Except*
B2,B4: 2 X 4 SYP No.3, B6: 2 X 6 SYP No.1D
WEBS 2 X 4 SYP No.3
OTHERS 2 X 6 SYP No.1D
LBR SCAB 8-10 2 X 6 SYP No.1D one side

BRACING

TOP CHORD Structural wood sheathing directly applied or 2-8-3 oc purlins.
BOT CHORD Rigid ceiling directly applied or 4-6-0 oc bracing.

MiTek recommends that Stabilizers and required cross bracing be installed during truss erection, in accordance with Stabilizer Installation guide.

REACTIONS (lb/size) 10=892/0-5-8, 2=989/0-5-8
Max Horz 2=130(LC 6)
Max Uplift 10=-174(LC 4), 2=-239(LC 6)

FORCES (lb) - Max. Comp./Max. Ten. - All forces 250 (lb) or less except when shown.

TOP CHORD 2-3=-1629/874, 3-4=-1381/740, 4-5=-2341/1309, 5-6=-4316/2296, 6-7=-4436/2358, 7-8=-2545/1339, 8-19=-2496/1295, 9-19=-2534/1287, 9-20=-406/262, 10-20=-452/257
BOT CHORD 2-18=-801/1388, 5-16=-1186/627, 13-14=-1955/3942, 12-13=-1955/3942, 9-12=-1191/2499
WEBS 3-18=-238/256, 4-18=-638/349, 16-18=-685/1412, 4-16=-825/1586, 14-16=-1216/2418, 5-14=-1103/2207, 7-14=-285/563, 7-12=-1520/780, 8-12=-185/448

NOTES (11-12)

1) Attached 5-8-15 scab 8 to 10, front face(s) 2 X 6 SYP No.1D with 2 row(s) of 10d (0.131"x3") nails spaced 9" o.c.except : starting at 0-0-5 from end at joint 8, nail 2 row(s) at 4" o.c. for 5-1-1.
2) Unbalanced roof live loads have been considered for this design.
3) Wind: ASCE 7-05; 110mph (3-second gust); TCDL=4.2psf; BCDL=3.0psf; h=18ft; Cat. II; Exp B; enclosed; MWFRS (low-rise) and C-C Exterior(2) zone;C-C for members and forces & MWFRS for reactions shown; Lumber DOL=1.60 plate grip DOL=1.60
4) Provide adequate drainage to prevent water ponding.
5) This truss has been designed for a 10.0 psf bottom chord live load nonconcurrent with any other live loads.
6) * This truss has been designed for a live load of 20.0psf on the bottom chord in all areas where a rectangle 3-6-0 tall by 2-0-0 wide will fit between the bottom chord and any other members.
7) All bearings are assumed to be SYP No.2 .
8) Bearing at joint(s) 10 considers parallel to grain value using ANSI/TPI 1 angle to grain formula. Building designer should verify capacity of bearing surface.
9) Provide mechanical connection (by others) of truss to bearing plate capable of withstanding 100 lb uplift at joint(s) except (jt=lb) 10=174, 2=239.
10) "Pin all pitchbreaks" Member end fixity model was used in the analysis and design of this truss.
11) This manufactured product is designed as an individual building component. The suitability and use of this component for any particular building is the responsibility of the building designer per ANSI TPI 1 as referenced by the building code.
12) Truss Design Engineer: Julius Lee, PE: Florida P.E. License No. 34869: Address: 1109 Coastal Bay Blvd. Boynton Beach, FL 33435

JULIUS S.K. LEE
LICENSE
No 34869
STATE OF
FLORIDA
PROFESSIONAL ENGINEER

July 12,2010

LOAD CASE(S) Standard

Julius Lee
1109 Coastal Bay Blvd.
Boynton, FL 33435

Job	Truss	Truss Type	Qty	Ply	TROY LAND RES.
327354	T09	SPECIAL	1	1	I4395711 Job Reference (optional)

Builders FrstSource, Lake City, FL 32055

7.140 s Oct 1 2009 MiTek Industries, Inc. Mon Jul 12 09:46:12 2010 Page 1

-1-6-0	7-0-0	12-0-0	16-2-10	20-10-7	25-8-0	28-8-0	30-2-0
1-6-0	7-0-0	5-0-0	4-2-10	4-7-13	4-9-10	3-0-0	1-6-0

Scale = 1:54.7

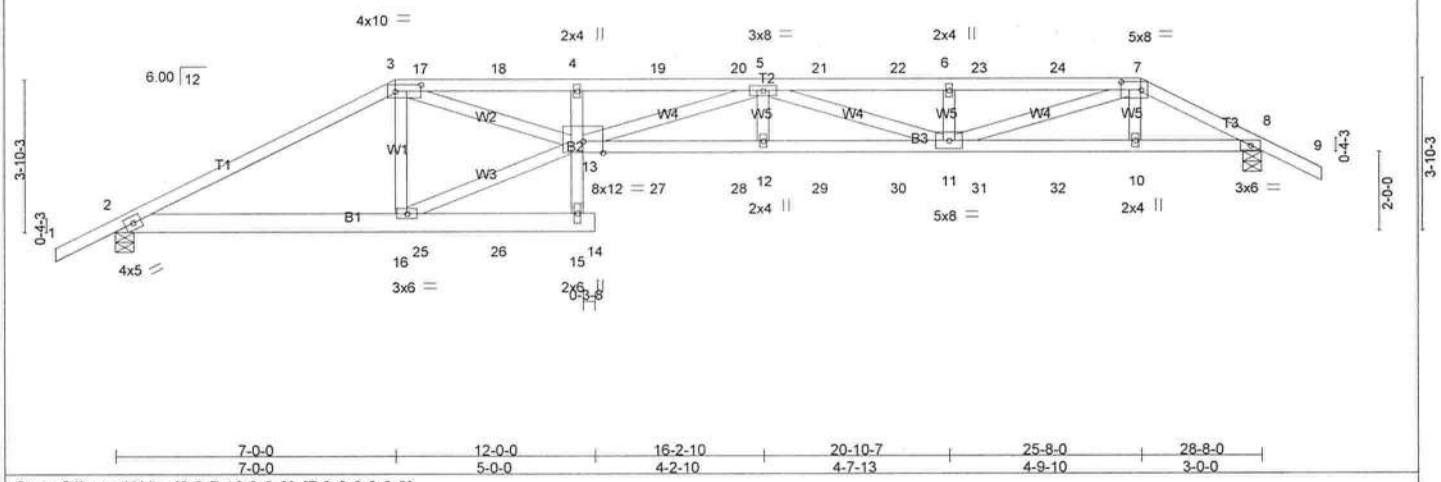

7-0-0	12-0-0	16-2-10	20-10-7	25-8-0	28-8-0
7-0-0	5-0-0	4-2-10	4-7-13	4-9-10	3-0-0

Plate Offsets (X,Y): [3:0-7-12,0-2-0], [7:0-6-0,0-2-8]

LOADING (psf)			SPACING	2-0-0	CSI		DEFL	in	(loc)	l/defl	L/d	PLATES	GRIP
TCLL	20.0		Plates Increase	1.25	TC	0.57	Vert(LL)	-0.42	12-13	>803	360	MT20	244/190
TCDL	7.0		Lumber Increase	1.25	BC	0.88	Vert(TL)	-0.85	12-13	>401	240		
BCLL	0.0	*	Rep Stress Incr	NO	WB	0.85	Horz(TL)	0.24	8	n/a	n/a		
BCDL	5.0		Code FBC2007/TPI2002		(Matrix)		Wind(LL)	0.55	12-13	>610	240	Weight: 151 lb	

LUMBER

TOP CHORD 2 X 4 SYP No.2
BOT CHORD 2 X 4 SYP No.2 *Except*
B1: 2 X 6 SYP No.1D, B2: 2 X 4 SYP No.3
WEBS 2 X 4 SYP No.3

BRACING

TOP CHORD Structural wood sheathing directly applied or 2-9-9 oc purlins.
BOT CHORD Rigid ceiling directly applied or 4-3-6 oc bracing. Except:
10-0-0 oc bracing: 13-15

MiTek recommends that Stabilizers and required cross bracing be installed during truss erection, in accordance with Stabilizer Installation guide.

REACTIONS (lb/size) 2=1077/0-5-8, 8=995/0-5-8
Max Horz 2=110(LC 5)
Max Uplift 2=-552(LC 5), 8=-436(LC 6)
Max Grav 2=1078(LC 9), 8=995(LC 1)

FORCES (lb) - Max. Comp./Max. Ten. - All forces 250 (lb) or less except when shown.

TOP CHORD 2-3=-1801/991, 3-17=-4015/2432, 17-18=-4015/2432, 4-18=-4015/2432, 4-19=-4150/2488, 19-20=-4150/2488, 5-20=-4150/2488, 5-21=-3233/1616, 21-22=-3233/1616, 6-22=-3233/1616, 6-23=-3233/1616, 23-24=-3233/1616, 7-24=-3234/1616, 7-8=-1688/794
BOT CHORD 2-16=-872/1523, 13-27=-2161/4111, 27-28=-2161/4111, 12-28=-2161/4111, 12-29=-2161/4111, 29-30=-2161/4111, 11-30=-2161/4111, 11-31=-656/1453, 31-32=-656/1453, 10-32=-656/1453, 8-10=-659/1447
WEBS 3-16=-382/217, 13-16=-845/1496, 3-13=-1617/2648, 5-13=-338/43, 5-11=-927/614, 7-11=-970/1872

NOTES (11-12)

1) Unbalanced roof live loads have been considered for this design.
2) Wind: ASCE 7-05; 110mph (3-second gust); TCDL=4.2psf; BCDL=3.0psf; h=18ft; Cat. II; Exp B; enclosed; MWFRS (low-rise); Lumber DOL=1.60 plate grip DOL=1.60
3) Provide adequate drainage to prevent water ponding.
4) This truss has been designed for a 10.0 psf bottom chord live load nonconcurrent with any other live loads.
5) * This truss has been designed for a live load of 20.0psf on the bottom chord in all areas where a rectangle 3-6-0 tall by 2-0-0 wide will fit between the bottom chord and any other members.
6) All bearings are assumed to be SYP No.2 .
7) Provide mechanical connection (by others) of truss to bearing plate capable of withstanding 100 lb uplift at joint(s) except (jt=lb) 2=552, 8=436.
8) "Semi-rigid pitchbreaks including heels" Member end fixity model was used in the analysis and design of this truss.
9) Hanger(s) or other connection device(s) shall be provided sufficient to support concentrated load(s) 18 lb up at 7-7-4, 1 lb down and 75 lb up at 9-7-4, 1 lb down and 75 lb up at 11-7-4, 22 lb up at 13-7-4, 22 lb up at 15-7-4, 22 lb up at 17-7-4, 22 lb up at 19-7-4, 22 lb up at 21-7-4, and 22 lb up at 23-7-4, and 22 lb down and 59 lb up at 25-8-0 on top chord, and 146 lb down and 146 lb up at 7-7-4, 8 lb down and 52 lb up at 9-7-4, 8 lb down and 52 lb up at 11-6-12, 11 lb down at 13-7-4, 11 lb down at 15-7-4, 11 lb down at 17-7-4, 11 lb down at 19-7-4, 11 lb down at 21-7-4, and 11 lb down at 23-7-4, and 29 lb down at 25-7-4 on bottom chord. The design/selection of such connection device(s) is the responsibility of others.
10) In the LOAD CASE(S) section, loads applied to the face of the truss are noted as front (F) or back (B).

JULIUS S.K. LEE
LICENSE
No 34859
STATE OF
FLORIDA
PROFESSIONAL ENGINEER

July 12,2010

Continued on page 2

Julius Lee
1109 Coastal Bay Blvd.
Boynton, FL 33435

Job	Truss	Truss Type	Qty	Ply	TROY LAND RES.
327354	T08	SPECIAL	1	1	I4395710 Job Reference (optional)

Builders FirstSource, Lake City, FL 32055 — 7.140 s Oct 1 2009 MiTek Industries, Inc. Mon Jul 12 09:46:12 2010 Page 1

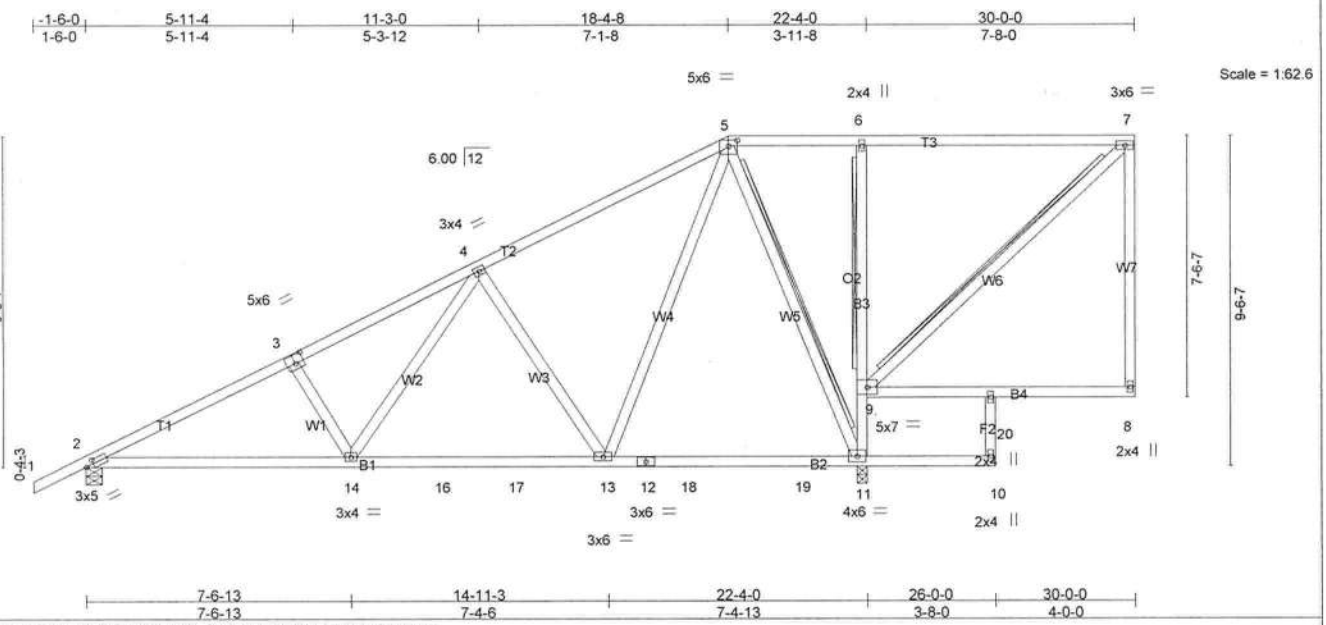

Plate Offsets (X,Y): [2:0-2-10,0-1-8], [3:0-3-0,0-3-0], [5:0-3-0,0-2-0]

LOADING (psf)		SPACING 2-0-0		CSI		DEFL	in	(loc)	l/defl	L/d	PLATES	GRIP
TCLL	20.0	Plates Increase	1.25	TC	0.71	Vert(LL)	-0.25	13-14	>999	360	MT20	244/190
TCDL	7.0	Lumber Increase	1.25	BC	0.83	Vert(TL)	-0.38	13-14	>702	240		
BCLL	0.0 *	Rep Stress Incr	NO	WB	0.88	Horz(TL)	0.03	11	n/a	n/a		
BCDL	5.0	Code FBC2007/TPI2002		(Matrix)		Wind(LL)	0.16	13-14	>999	240	Weight: 194 lb	

LUMBER
TOP CHORD 2 X 4 SYP No.2
BOT CHORD 2 X 4 SYP No.2
WEBS 2 X 4 SYP No.3

BRACING
TOP CHORD Structural wood sheathing directly applied or 4-9-2 oc purlins, except end verticals.
BOT CHORD Rigid ceiling directly applied or 6-9-12 oc bracing. Except:
T-Brace: 2 X 4 SYP No.3 - 6-9
5-2-0 oc bracing: 9-11
WEBS T-Brace: 2 X 4 SYP No.3 - 5-11, 7-9
Fasten T and I braces to narrow edge of web with 10d Common wire nails, 9in o.c.,with 4in minimum end distance.
Brace must cover 90% of web length.

MiTek recommends that Stabilizers and required cross bracing be installed during truss erection, in accordance with Stabilizer Installation guide.

REACTIONS (lb/size) 2=961/0-5-8, 11=1895/0-3-8
Max Horz 2=333(LC 6)
Max Uplift 2=-236(LC 6), 11=-343(LC 5)

FORCES (lb) - Max. Comp./Max. Ten. - All forces 250 (lb) or less except when shown.
TOP CHORD 2-3=-1597/530, 3-4=-1448/543, 4-5=-701/272, 5-6=-92/280, 6-7=-102/308
BOT CHORD 2-14=-849/1347, 14-16=-581/901, 16-17=-581/901, 13-17=-581/901, 9-11=-800/354, 6-9=-402/272
WEBS 4-14=-285/635, 4-13=-667/495, 5-13=-512/1141, 5-11=-1090/588, 7-9=-446/147

NOTES (10-11)
1) Wind: ASCE 7-05; 110mph (3-second gust); TCDL=4.2psf; BCDL=3.0psf; h=18ft; Cat. II; Exp B; enclosed; MWFRS (low-rise) and C-C Exterior(2) zone;C-C for members and forces & MWFRS for reactions shown; Lumber DOL=1.60 plate grip DOL=1.60
2) Provide adequate drainage to prevent water ponding.
3) This truss has been designed for a 10.0 psf bottom chord live load nonconcurrent with any other live loads.
4) * This truss has been designed for a live load of 20.0psf on the bottom chord in all areas where a rectangle 3-6-0 tall by 2-0-0 wide will fit between the bottom chord and any other members, with BCDL = 5.0psf.
5) All bearings are assumed to be SYP No.2 .
6) Provide mechanical connection (by others) of truss to bearing plate capable of withstanding 100 lb uplift at joint(s) except (jt=lb) 2=236, 11=343.
7) "Semi-rigid pitchbreaks including heels" Member end fixity model was used in the analysis and design of this truss.
8) Warning: Additional permanent and stability bracing for truss system (not part of this component design) is always required.
9) In the LOAD CASE(S) section, loads applied to the face of the truss are noted as front (F) or back (B).
10) This manufactured product is designed as an individual building component. The suitability and use of this component for any particular building is the responsibility of the building designer per ANSI TPI 1 as referenced by the building code.
11) Truss Design Engineer: Julius Lee, PE: Florida P.E. License No. 34869: Address: 1109 Coastal Bay Blvd. Boynton Beach, FL 33435

JULIUS S.K. LEE
LICENSE
No 34869
STATE OF FLORIDA
PROFESSIONAL ENGINEER

LOAD CASE(S) Standard

July 12,2010

Continued on page 2

Julius Lee
1109 Coastal Bay Blvd.
Boynton, FL 33435

Job	Truss	Truss Type	Qty	Ply	TROY LAND RES.
327354	T07	SPECIAL	1	1	I4395709 Job Reference (optional)

Builders FrstSource, Lake City, FL 32055 — 7.140 s Oct 1 2009 MiTek Industries, Inc. Mon Jul 12 09:46:11 2010 Page 1

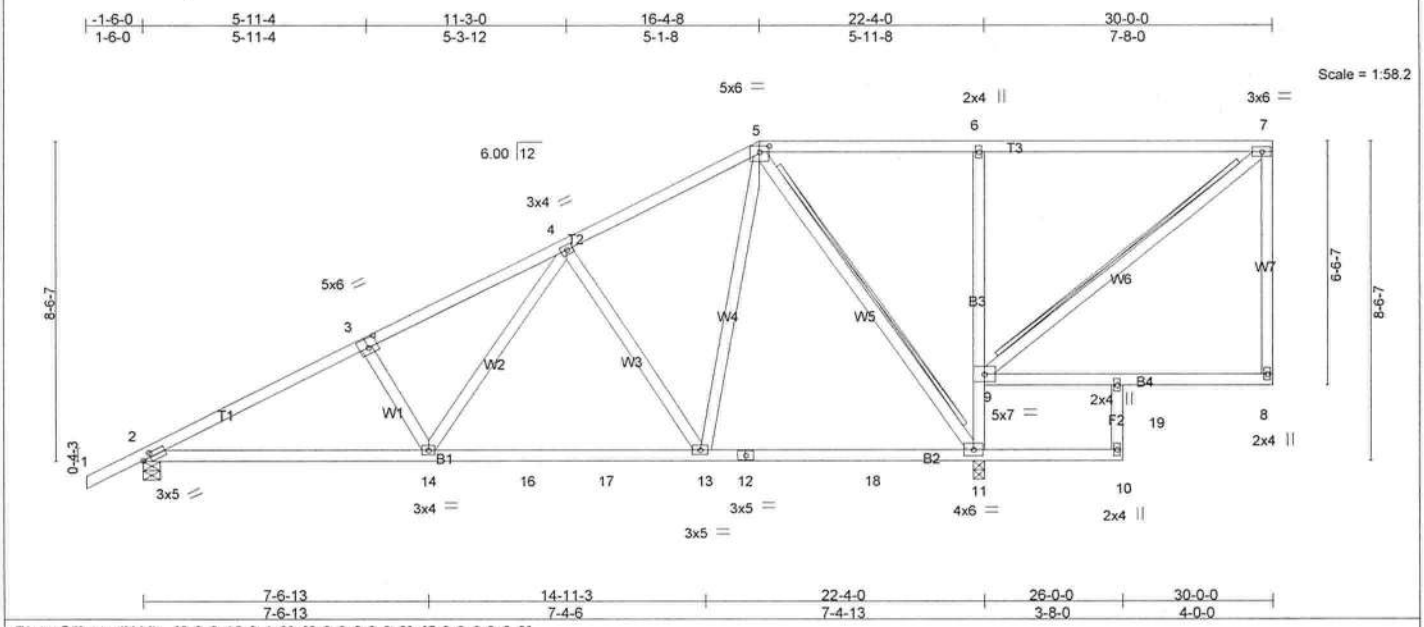

Plate Offsets (X,Y): [2:0-2-10,0-1-8], [3:0-3-0,0-3-0], [5:0-3-0,0-2-0]

LOADING (psf)		SPACING 2-0-0	CSI		DEFL	in	(loc)	l/defl	L/d	PLATES	GRIP
TCLL	20.0	Plates Increase 1.25	TC	0.79	Vert(LL)	-0.25	13-14	>999	360	MT20	244/190
TCDL	7.0	Lumber Increase 1.25	BC	0.86	Vert(TL)	-0.38	13-14	>687	240		
BCLL	0.0 *	Rep Stress Incr NO	WB	0.69	Horz(TL)	0.03	11	n/a	n/a		
BCDL	5.0	Code FBC2007/TPI2002	(Matrix)		Wind(LL)	0.16	13-14	>999	240	Weight: 188 lb	

LUMBER
TOP CHORD 2 X 4 SYP No.2
BOT CHORD 2 X 4 SYP No.2
WEBS 2 X 4 SYP No.3

BRACING
TOP CHORD Structural wood sheathing directly applied or 4-9-9 oc purlins, except end verticals.
BOT CHORD Rigid ceiling directly applied or 6-10-0 oc bracing. Except:
5-0-0 oc bracing: 9-11
WEBS T-Brace: 2 X 4 SYP No.3 - 5-11, 7-9
Fasten T and I braces to narrow edge of web with 10d Common wire nails, 9in o.c.,with 4in minimum end distance.
Brace must cover 90% of web length.

MiTek recommends that Stabilizers and required cross bracing be installed during truss erection, in accordance with Stabilizer Installation guide.

REACTIONS (lb/size) 2=968/0-5-8, 11=1839/0-3-8
Max Horz 2=300(LC 6)
Max Uplift 2=-243(LC 6), 11=-348(LC 5)

FORCES (lb) - Max. Comp./Max. Ten. - All forces 250 (lb) or less except when shown.
TOP CHORD 2-3=-1617/577, 3-4=-1468/589, 4-5=-701/295, 5-6=-99/298, 6-7=-115/339
BOT CHORD 2-14=-841/1368, 14-16=-550/895, 16-17=-550/895, 13-17=-550/895, 12-13=-237/382, 12-18=-237/382, 11-18=-237/382, 9-11=-819/395, 6-9=-449/315
WEBS 3-14=-231/255, 4-14=-308/662, 4-13=-610/436, 5-13=-436/1037, 5-11=-1179/583, 7-9=-461/156

NOTES (10-11)
1) Wind: ASCE 7-05; 110mph (3-second gust); TCDL=4.2psf; BCDL=3.0psf; h=18ft; Cat. II; Exp B; enclosed; MWFRS (low-rise) and C-C Exterior(2) zone;C-C for members and forces & MWFRS for reactions shown; Lumber DOL=1.60 plate grip DOL=1.60
2) Provide adequate drainage to prevent water ponding.
3) This truss has been designed for a 10.0 psf bottom chord live load nonconcurrent with any other live loads.
4) * This truss has been designed for a live load of 20.0psf on the bottom chord in all areas where a rectangle 3-6-0 tall by 2-0-0 wide will fit between the bottom chord and any other members, with BCDL = 5.0psf.
5) All bearings are assumed to be SYP No.2 .
6) Provide mechanical connection (by others) of truss to bearing plate capable of withstanding 100 lb uplift at joint(s) except (jt=lb) 2=243, 11=348.
7) "Semi-rigid pitchbreaks including heels" Member end fixity model was used in the analysis and design of this truss.
8) Warning: Additional permanent and stability bracing for truss system (not part of this component design) is always required.
9) In the LOAD CASE(S) section, loads applied to the face of the truss are noted as front (F) or back (B).
10) This manufactured product is designed as an individual building component. The suitability and use of this component for any particular building is the responsibility of the building designer per ANSI TPI 1 as referenced by the building code.
11) Truss Design Engineer: Julius Lee, PE: Florida P.E. License No. 34869: Address: 1109 Coastal Bay Blvd. Boynton Beach, FL 33435

JULIUS S.K. LEE
LICENSE
No 34869
STATE OF
FLORIDA
PROFESSIONAL ENGINEER

LOAD CASE(S) Standard

July 12,2010

Continued on page 2

Julius Lee
1109 Coastal Bay Blvd.
Boynton, FL 33435

Job	Truss	Truss Type	Qty	Ply	TROY LAND RES.
327354	T06	SPECIAL	1	1	I4395708 Job Reference (optional)

Builders FrstSource, Lake City, FL 32055

7.140 s Oct 1 2009 MiTek Industries, Inc. Mon Jul 12 09:46:11 2010 Page 1

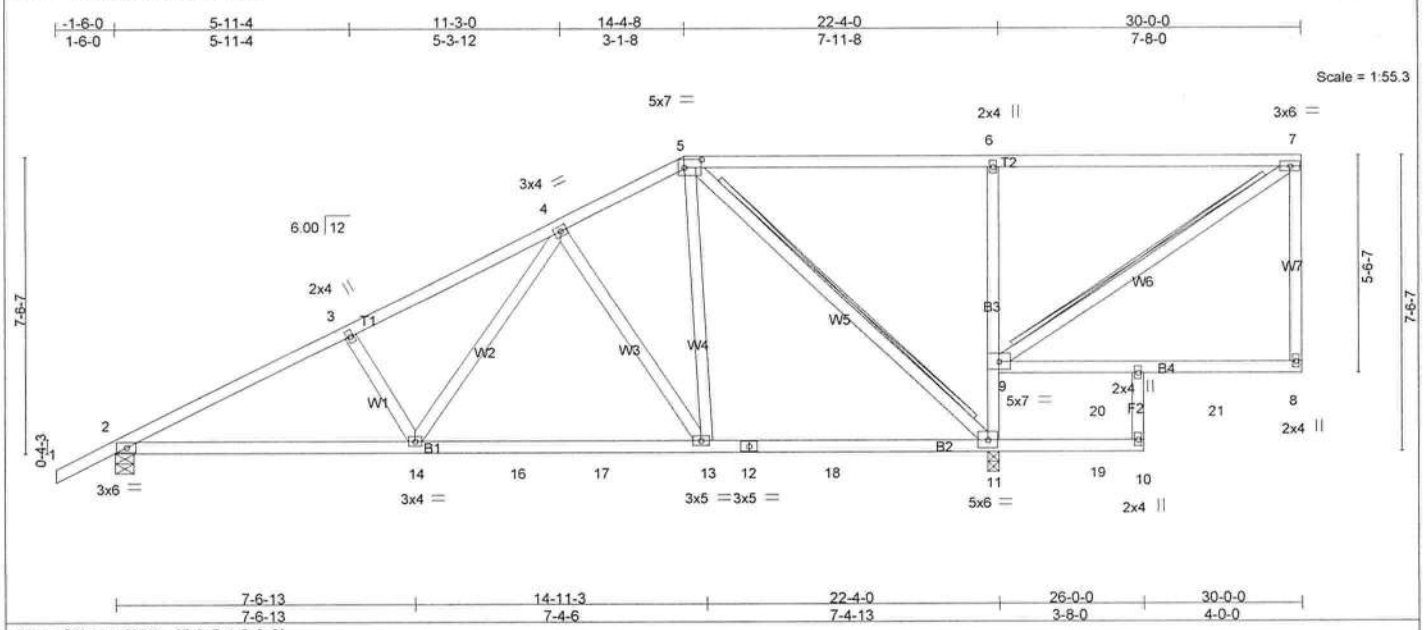

Plate Offsets (X,Y): [5:0-5-4,0-2-8]

LOADING (psf)		SPACING	2-0-0	CSI		DEFL	in	(loc)	l/defl	L/d	PLATES	GRIP
TCLL	20.0	Plates Increase	1.25	TC	0.68	Vert(LL)	-0.29	13-14	>922	360	MT20	244/190
TCDL	7.0	Lumber Increase	1.25	BC	0.82	Vert(TL)	-0.42	13-14	>627	240		
BCLL	0.0 *	Rep Stress Incr	NO	WB	0.85	Horz(TL)	0.04	11	n/a	n/a		
BCDL	5.0	Code FBC2007/TPI2002		(Matrix)		Wind(LL)	0.16	13-14	>999	240	Weight: 183 lb	

LUMBER
TOP CHORD 2 X 4 SYP No.2
BOT CHORD 2 X 4 SYP No.2
WEBS 2 X 4 SYP No.3

BRACING
TOP CHORD Structural wood sheathing directly applied or 4-9-5 oc purlins, except end verticals.
BOT CHORD Rigid ceiling directly applied or 6-10-11 oc bracing. Except: 5-4-0 oc bracing: 9-11
WEBS T-Brace: 2 X 4 SYP No.3 - 5-11, 7-9
Fasten T and I braces to narrow edge of web with 10d Common wire nails, 9in o.c.,with 4in minimum end distance.
Brace must cover 90% of web length.

MiTek recommends that Stabilizers and required cross bracing be installed during truss erection, in accordance with Stabilizer Installation guide.

REACTIONS (lb/size) 2=977/0-5-8, 11=1871/0-3-8
Max Horz 2=268(LC 6)
Max Uplift 2=-247(LC 6), 11=-353(LC 5)

FORCES (lb) - Max. Comp./Max. Ten. - All forces 250 (lb) or less except when shown.
TOP CHORD 2-3=-1648/617, 3-4=-1495/624, 4-5=-710/319, 5-6=-103/306, 6-7=-131/349
BOT CHORD 2-14=-828/1396, 14-16=-521/900, 16-17=-521/900, 13-17=-521/900, 12-13=-346/676, 12-18=-346/676, 11-18=-346/676, 9-11=-864/433, 6-9=-499/358
WEBS 3-14=-244/268, 4-14=-318/687, 4-13=-548/374, 5-13=-376/961, 5-11=-1339/612, 7-9=-454/167

NOTES (10-11)
1) Wind: ASCE 7-05; 110mph (3-second gust); TCDL=4.2psf; BCDL=3.0psf; h=18ft; Cat. II; Exp B; enclosed; MWFRS (low-rise) and C-C Exterior(2) zone;C-C for members and forces & MWFRS for reactions shown; Lumber DOL=1.60 plate grip DOL=1.60
2) Provide adequate drainage to prevent water ponding.
3) This truss has been designed for a 10.0 psf bottom chord live load nonconcurrent with any other live loads.
4) * This truss has been designed for a live load of 20.0psf on the bottom chord in all areas where a rectangle 3-6-0 tall by 2-0-0 wide will fit between the bottom chord and any other members, with BCDL = 5.0psf.
5) All bearings are assumed to be SYP No.2 .
6) Provide mechanical connection (by others) of truss to bearing plate capable of withstanding 100 lb uplift at joint(s) except (jt=lb) 2=247, 11=353.
7) "Semi-rigid pitchbreaks including heels" Member end fixity model was used in the analysis and design of this truss.
8) Warning: Additional permanent and stability bracing for truss system (not part of this component design) is always required.
9) In the LOAD CASE(S) section, loads applied to the face of the truss are noted as front (F) or back (B).
10) This manufactured product is designed as an individual building component. The suitability and use of this component for any particular building is the responsibility of the building designer per ANSI TPI 1 as referenced by the building code.
11) Truss Design Engineer: Julius Lee, PE: Florida P.E. License No. 34869: Address: 1109 Coastal Bay Blvd. Boynton Beach, FL 33435

JULIUS S.K. LEE
LICENSE
No 34869
STATE OF
FLORIDA
PROFESSIONAL ENGINEER

LOAD CASE(S) Standard

July 12,2010

Continued on page 2

Julius Lee
1109 Coastal Bay Blvd.
Boynton, FL 33435

Job	Truss	Truss Type	Qty	Ply	TROY LAND RES.
327354	T05	SPECIAL	1	1	I4395707 Job Reference (optional)

Builders FrstSource, Lake City, FL 32055 — 7.140 s Oct 1 2009 MiTek Industries, Inc. Mon Jul 12 09:46:11 2010 Page 1

-1-6-0	5-11-13	12-4-8	18-5-0	22-0-8	26-0-0	30-0-0
1-6-0	5-11-13	6-4-11	6-0-8	3-7-8	3-11-9	4-0-0

Scale = 1:55.3

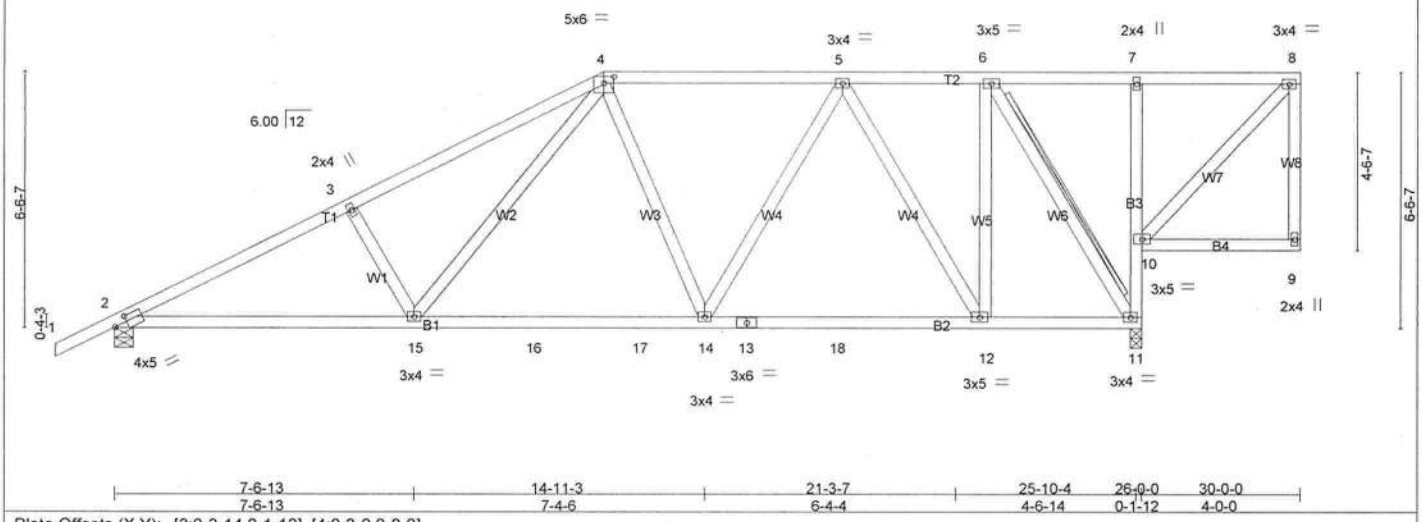

7-6-13	14-11-3	21-3-7	25-10-4	26-0-0	30-0-0
7-6-13	7-4-6	6-4-4	4-6-14	0-1-12	4-0-0

Plate Offsets (X,Y): [2:0-3-14,0-1-12], [4:0-3-0,0-2-0]

LOADING (psf)		SPACING 2-0-0	CSI		DEFL in (loc) l/defl L/d	PLATES GRIP
TCLL	20.0	Plates Increase 1.25	TC	0.36	Vert(LL) -0.33 14-15 >943 360	MT20 244/190
TCDL	7.0	Lumber Increase 1.25	BC	0.89	Vert(TL) -0.48 14-15 >639 240	
BCLL	0.0 *	Rep Stress Incr NO	WB	0.86	Horz(TL) 0.05 11 n/a n/a	
BCDL	5.0	Code FBC2007/TPI2002	(Matrix)		Wind(LL) 0.20 14-15 >999 240	Weight: 182 lb

LUMBER
TOP CHORD 2 X 4 SYP No.2
BOT CHORD 2 X 4 SYP No.2 *Except*
B3: 2 X 4 SYP No.3
WEBS 2 X 4 SYP No.3

BRACING
TOP CHORD Structural wood sheathing directly applied or 4-0-10 oc purlins, except end verticals.
BOT CHORD Rigid ceiling directly applied or 6-0-0 oc bracing.
WEBS T-Brace: 2 X 4 SYP No.3 - 6-11
Fasten T and I braces to narrow edge of web with 10d Common wire nails, 9in o.c.,with 4in minimum end distance.
Brace must cover 90% of web length.

MiTek recommends that Stabilizers and required cross bracing be installed during truss erection, in accordance with Stabilizer Installation guide.

REACTIONS (lb/size) 2=1237/0-5-8, 11=1391/0-3-8
Max Horz 2=236(LC 6)
Max Uplift 2=-277(LC 6), 11=-327(LC 5)

FORCES (lb) - Max. Comp./Max. Ten. - All forces 250 (lb) or less except when shown.
TOP CHORD 2-3=-2215/893, 3-4=-2063/907, 4-5=-1297/586, 5-6=-541/248
BOT CHORD 2-15=-1024/1900, 15-16=-645/1310, 16-17=-645/1310, 14-17=-645/1310, 13-14=-479/1010, 13-18=-479/1010, 12-18=-479/1010, 11-12=-248/541, 10-11=-385/221, 7-10=-260/183
WEBS 3-15=-268/304, 4-15=-381/754, 5-14=-219/588, 5-12=-934/461, 6-12=-347/847, 6-11=-1162/535

NOTES (10-11)
1) Wind: ASCE 7-05; 110mph (3-second gust); TCDL=4.2psf; BCDL=3.0psf; h=18ft; Cat. II; Exp B; enclosed; MWFRS (low-rise) and C-C Exterior(2) zone;C-C for members and forces & MWFRS for reactions shown; Lumber DOL=1.60 plate grip DOL=1.60
2) Provide adequate drainage to prevent water ponding.
3) This truss has been designed for a 10.0 psf bottom chord live load nonconcurrent with any other live loads.
4) * This truss has been designed for a live load of 20.0psf on the bottom chord in all areas where a rectangle 3-6-0 tall by 2-0-0 wide will fit between the bottom chord and any other members, with BCDL = 5.0psf.
5) All bearings are assumed to be SYP No.2 .
6) Provide mechanical connection (by others) of truss to bearing plate capable of withstanding 100 lb uplift at joint(s) except (jt=lb) 2=277, 11=327.
7) "Semi-rigid pitchbreaks including heels" Member end fixity model was used in the analysis and design of this truss.
8) Warning: Additional permanent and stability bracing for truss system (not part of this component design) is always required.
9) In the LOAD CASE(S) section, loads applied to the face of the truss are noted as front (F) or back (B).
10) This manufactured product is designed as an individual building component. The suitability and use of this component for any particular building is the responsibility of the building designer per ANSI TPI 1 as referenced by the building code.
11) Truss Design Engineer: Julius Lee, PE: Florida P.E. License No. 34869: Address: 1109 Coastal Bay Blvd. Boynton Beach, FL 33435

JULIUS S.K. LEE
LICENSE
No 34869
STATE OF
FLORIDA
PROFESSIONAL ENGINEER

LOAD CASE(S) Standard

July 12,2010

Continued on page 2

Julius Lee
1109 Coastal Bay Blvd.
Boynton, FL 33435

LOAD CASE(S) Standard

Uniform Loads (plf)

Vert: 1-4=-54, 4-5=-54, 5-8=-54, 2-15=-10, 14-15=-70(F=-60), 12-14=-10, 11-12=-10, 9-10=-10

JULIUS S.K. LEE
LICENSE
No 34[illegible]69
STATE OF
FLORIDA
PROFESSIONAL ENGINEER

July 12,2010

Julius Lee
1109 Coastal Bay Blvd.
Boynton, FL 33435

LOAD CASE(S) Standard

1) Regular: Lumber Increase=1.25, Plate Increase=1.25

Uniform Loads (plf)

Vert: 1-4=-54, 4-5=-54, 5-8=-54, 2-15=-10, 15-20=-70(F=-60), 20-21=-110(F=-60), 14-21=-70(F=-60), 9-14=-10

Concentrated Loads (lb)

Vert: 16=-97(F) 17=-97(F) 18=-97(F) 19=-97(F) 22=-20(F) 23=-20(F) 24=-20(F) 25=-20(F)

JULIUS S.K. LEE
LICENSE
No 34369
STATE OF
FLORIDA
PROFESSIONAL ENGINEER

July 12,2010

Julius Lee
1109 Coastal Bay Blvd.
Boynton, FL 33435

Job	Truss	Truss Type	Qty	Ply	TROY LAND RES.
327354	T01G	GABLE	1	1	I4395703 Job Reference (optional)

Builders FirstSource, Lake City, FL 32055 — 7.140 s Oct 1 2009 MiTek Industries, Inc. Mon Jul 12 09:46:09 2010 Page 1

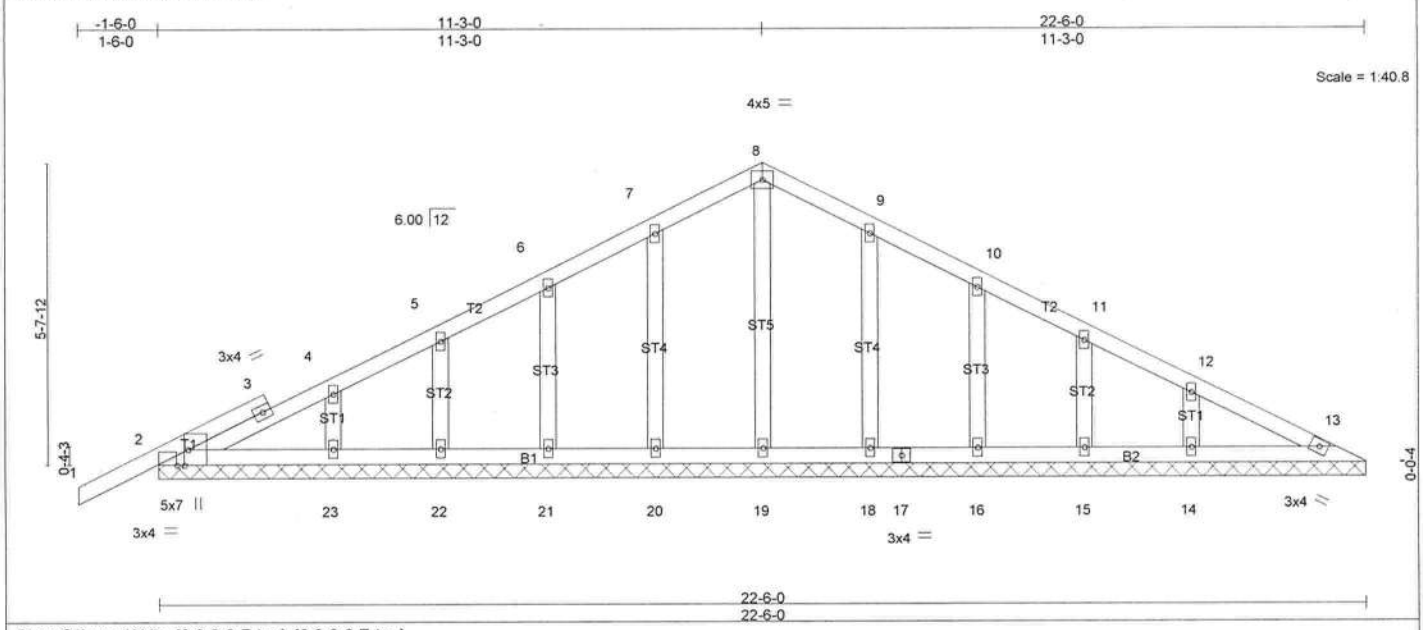

Plate Offsets (X,Y): [2:0-3-8,Edge], [2:0-2-8,Edge]

LOADING (psf)		SPACING	2-0-0	CSI		DEFL	in	(loc)	l/defl	L/d	PLATES	GRIP
TCLL	20.0	Plates Increase	1.25	TC	0.21	Vert(LL)	-0.00	1	n/r	120	MT20	244/190
TCDL	7.0	Lumber Increase	1.25	BC	0.05	Vert(TL)	-0.01	1	n/r	90		
BCLL	0.0 *	Rep Stress Incr	NO	WB	0.08	Horz(TL)	0.00	13	n/a	n/a		
BCDL	5.0	Code FBC2007/TPI2002		(Matrix)							Weight: 113 lb	

LUMBER
TOP CHORD 2 X 4 SYP No.2
BOT CHORD 2 X 4 SYP No.2
OTHERS 2 X 4 SYP No.3

BRACING
TOP CHORD Structural wood sheathing directly applied or 6-0-0 oc purlins.
BOT CHORD Rigid ceiling directly applied or 10-0-0 oc bracing.

MiTek recommends that Stabilizers and required cross bracing be installed during truss erection, in accordance with Stabilizer Installation guide.

REACTIONS All bearings 22-6-0.
(lb) - Max Horz 2=121(LC 6)
Max Uplift All uplift 100 lb or less at joint(s) 13 except 2=-175(LC 6), 20=-123(LC 6), 21=-119(LC 6), 22=-120(LC 6), 23=-120(LC 6), 18=-121(LC 7), 16=-123(LC 7), 15=-104(LC 7), 14=-166(LC 7)
Max Grav All reactions 250 lb or less at joint(s) 13, 19, 20, 21, 22, 18, 16, 15 except 2=307(LC 1), 23=254(LC 1), 14=271(LC 1)

FORCES (lb) - Max. Comp./Max. Ten. - All forces 250 (lb) or less except when shown.

NOTES (13-14)
1) Unbalanced roof live loads have been considered for this design.
2) Wind: ASCE 7-05; 110mph (3-second gust); TCDL=4.2psf; BCDL=3.0psf; h=18ft; Cat. II; Exp B; enclosed; MWFRS (low-rise) gable end zone and C-C Exterior(2) zone;C-C for members and forces & MWFRS for reactions shown; Lumber DOL=1.60 plate grip DOL=1.60
3) Truss designed for wind loads in the plane of the truss only. For studs exposed to wind (normal to the face), see Standard Industry Gable End Details as applicable, or consult qualified building designer as per ANSI/TPI 1-2002.
4) All plates are 2x4 MT20 unless otherwise indicated.
5) Gable requires continuous bottom chord bearing.
6) Gable studs spaced at 2-0-0 oc.
7) This truss has been designed for a 10.0 psf bottom chord live load nonconcurrent with any other live loads.
8) * This truss has been designed for a live load of 20.0psf on the bottom chord in all areas where a rectangle 3-6-0 tall by 2-0-0 wide will fit between the bottom chord and any other members.
9) All bearings are assumed to be SYP No.2 .
10) Provide mechanical connection (by others) of truss to bearing plate capable of withstanding 100 lb uplift at joint(s) 13 except (jt=lb) 2=175, 20=123, 21=119, 22=120, 23=120, 18=121, 16=123, 15=104, 14=166.
11) "Semi-rigid pitchbreaks including heels" Member end fixity model was used in the analysis and design of this truss.
12) In the LOAD CASE(S) section, loads applied to the face of the truss are noted as front (F) or back (B).
13) This manufactured product is designed as an individual building component. The suitability and use of this component for any particular building is the responsibility of the building designer per ANSI TPI 1 as referenced by the building code.
14) Truss Design Engineer: Julius Lee, PE: Florida P.E. License No. 34869: Address: 1109 Coastal Bay Blvd. Boynton Beach, FL 33435

LOAD CASE(S) Standard
1) Regular: Lumber Increase=1.25, Plate Increase=1.25
Uniform Loads (plf)
Vert: 1-8=-87(F=-33), 8-13=-87(F=-33), 2-13=-10

JULIUS S.K. LEE
LICENSE
No 34869
STATE OF
FLORIDA
PROFESSIONAL ENGINEER

July 12,2010

Julius Lee
1109 Coastal Bay Blvd.
Boynton, FL 33435

Job	Truss	Truss Type	Qty	Ply	TROY LAND RES.
327354	HJ4	JACK	1	1	I4395701 Job Reference (optional)

Builders FrstSource, Lake City, FL 32055

7.140 s Oct 1 2009 MiTek Industries, Inc. Mon Jul 12 09:46:08 2010 Page 1

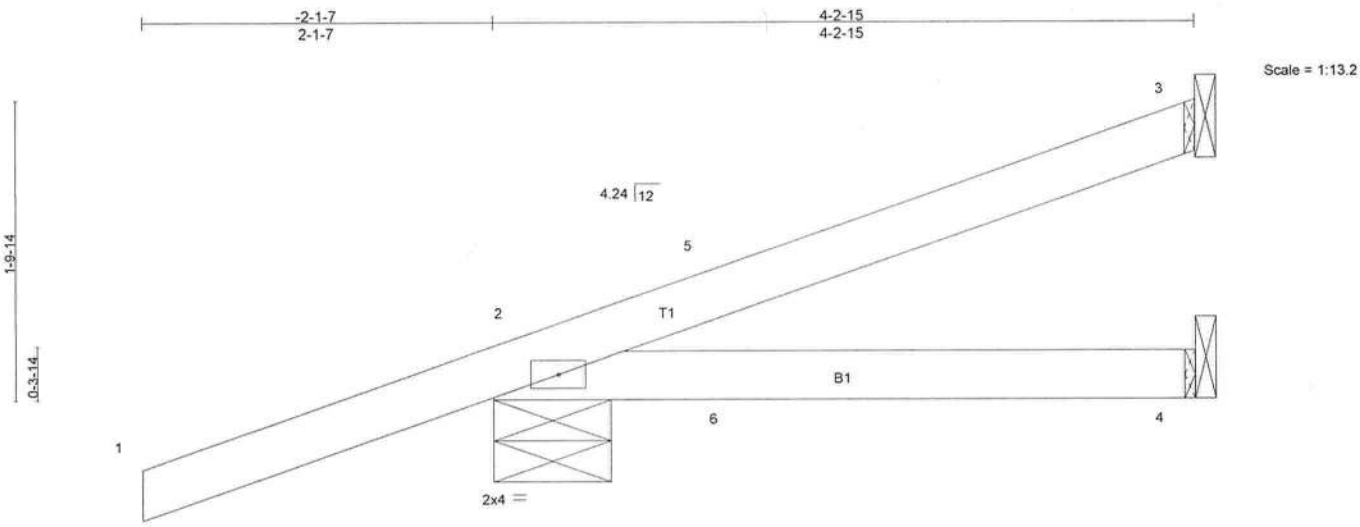

LOADING (psf)			SPACING 2-0-0	CSI		DEFL	in	(loc)	l/defl	L/d	PLATES	GRIP
TCLL	20.0		Plates Increase 1.25	TC	0.35	Vert(LL)	-0.01	2-4	>999	360	MT20	244/190
TCDL	7.0		Lumber Increase 1.25	BC	0.08	Vert(TL)	-0.01	2-4	>999	240		
BCLL	0.0	*	Rep Stress Incr NO	WB	0.00	Horz(TL)	-0.00	3	n/a	n/a		
BCDL	5.0		Code FBC2007/TPI2002	(Matrix)		Wind(LL)	0.00	2	****	240	Weight: 16 lb	

LUMBER
TOP CHORD 2 X 4 SYP No.2
BOT CHORD 2 X 4 SYP No.2

BRACING
TOP CHORD Structural wood sheathing directly applied or 4-2-15 oc purlins.
BOT CHORD Rigid ceiling directly applied or 10-0-0 oc bracing.

MiTek recommends that Stabilizers and required cross bracing be installed during truss erection, in accordance with Stabilizer Installation guide.

REACTIONS (lb/size) 3=47/Mechanical, 2=255/0-8-8, 4=16/Mechanical
Max Horz 2=116(LC 3)
Max Uplift 3=-49(LC 6), 2=-259(LC 3)
Max Grav 3=47(LC 1), 2=255(LC 1), 4=48(LC 2)

FORCES (lb) - Max. Comp./Max. Ten. - All forces 250 (lb) or less except when shown.

NOTES (10-11)
1) Wind: ASCE 7-05; 110mph (3-second gust); TCDL=4.2psf; BCDL=3.0psf; h=18ft; Cat. II; Exp B; enclosed; MWFRS (low-rise) gable end zone; Lumber DOL=1.60 plate grip DOL=1.60
2) This truss has been designed for a 10.0 psf bottom chord live load nonconcurrent with any other live loads.
3) * This truss has been designed for a live load of 20.0psf on the bottom chord in all areas where a rectangle 3-6-0 tall by 2-0-0 wide will fit between the bottom chord and any other members.
4) All bearings are assumed to be SYP No.2 .
5) Refer to girder(s) for truss to truss connections.
6) Provide mechanical connection (by others) of truss to bearing plate capable of withstanding 100 lb uplift at joint(s) 3 except (jt=lb) 2=259.
7) "Semi-rigid pitchbreaks including heels" Member end fixity model was used in the analysis and design of this truss.
8) Hanger(s) or other connection device(s) shall be provided sufficient to support concentrated load(s) 25 lb up at 1-5-12, and 25 lb up at 1-5-12 on top chord, and 16 lb up at 1-5-12, and 16 lb up at 1-5-12 on bottom chord. The design/selection of such connection device(s) is the responsibility of others.
9) In the LOAD CASE(S) section, loads applied to the face of the truss are noted as front (F) or back (B).
10) This manufactured product is designed as an individual building component. The suitability and use of this component for any particular building is the responsibility of the building designer per ANSI TPI 1 as referenced by the building code.
11) Truss Design Engineer: Julius Lee, PE: Florida P.E. License No. 34869: Address: 1109 Coastal Bay Blvd. Boynton Beach, FL 33435

LOAD CASE(S) Standard
1) Regular: Lumber Increase=1.25, Plate Increase=1.25
Uniform Loads (plf)
Vert: 1-3=-54, 2-4=-10
Concentrated Loads (lb)
Vert: 5=50(F=25, B=25) 6=11(F=5, B=5)

JULIUS S.K. LEE
LICENSE
No 34869
STATE OF
FLORIDA
PROFESSIONAL ENGINEER

July 12,2010

Julius Lee
1109 Coastal Bay Blvd.
Boynton, FL 33435

Job	Truss	Truss Type	Qty	Ply	TROY LAND RES.	I4395699
327354	EJ7	MONO HIP	1	1	Job Reference (optional)	

Builders FirstSource, Lake City, FL 32055

7.140 s Oct 1 2009 MiTek Industries, Inc. Mon Jul 12 09:46:07 2010 Page 1

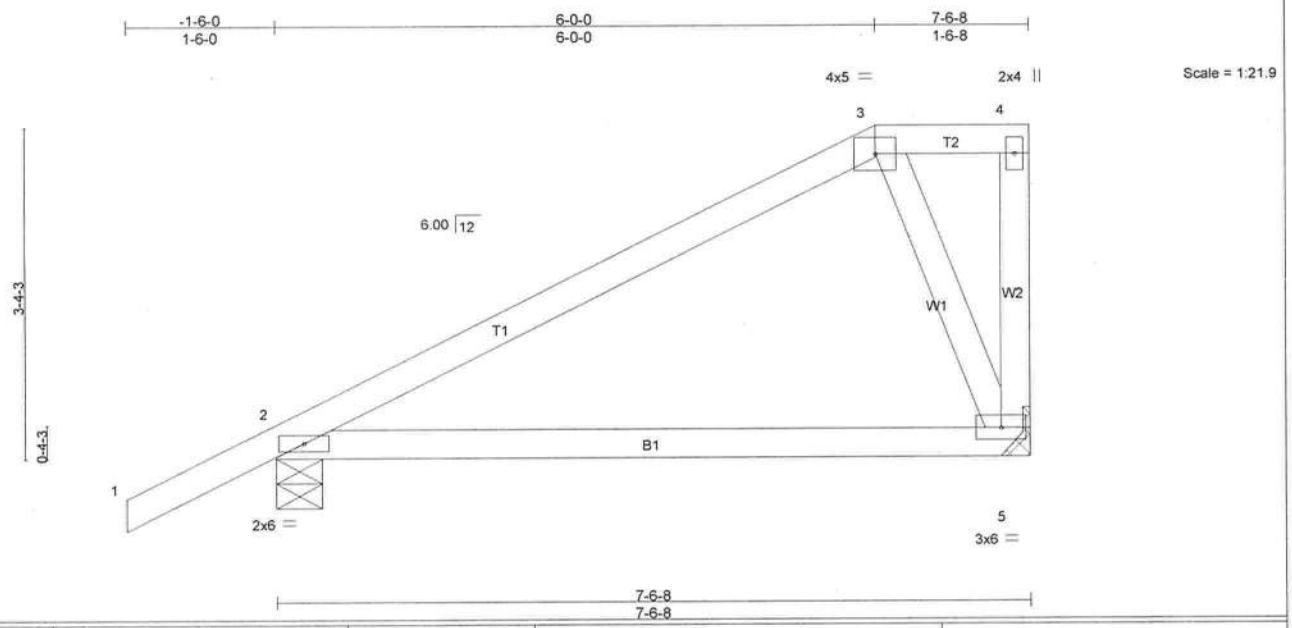

LOADING (psf)		SPACING	2-0-0	CSI		DEFL	in	(loc)	l/defl	L/d	PLATES	GRIP
TCLL	20.0	Plates Increase	1.25	TC	0.24	Vert(LL)	-0.08	2-5	>999	360	MT20	244/190
TCDL	7.0	Lumber Increase	1.25	BC	0.19	Vert(TL)	-0.16	2-5	>555	240		
BCLL	0.0 *	Rep Stress Incr	YES	WB	0.07	Horz(TL)	-0.00	5	n/a	n/a		
BCDL	5.0	Code FBC2007/TPI2002		(Matrix)		Wind(LL)	0.03	2-5	>999	240	Weight: 35 lb	

LUMBER
TOP CHORD 2 X 4 SYP No.2
BOT CHORD 2 X 4 SYP No.2
WEBS 2 X 4 SYP No.3

BRACING
TOP CHORD Structural wood sheathing directly applied or 6-0-0 oc purlins, except end verticals.
BOT CHORD Rigid ceiling directly applied or 10-0-0 oc bracing.

MiTek recommends that Stabilizers and required cross bracing be installed during truss erection, in accordance with Stabilizer Installation guide.

REACTIONS (lb/size) 5=218/Mechanical, 2=334/0-5-8
Max Horz 2=134(LC 6)
Max Uplift 5=-59(LC 6), 2=-124(LC 6)

FORCES (lb) - Max. Comp./Max. Ten. - All forces 250 (lb) or less except when shown.
WEBS 3-5=-215/279

NOTES (9-11)
1) Wind: ASCE 7-05; 110mph (3-second gust); TCDL=4.2psf; BCDL=3.0psf; h=18ft; Cat. II; Exp B; enclosed; MWFRS (low-rise) and C-C Exterior(2) zone;C-C for members and forces & MWFRS for reactions shown; Lumber DOL=1.60 plate grip DOL=1.60
2) Provide adequate drainage to prevent water ponding.
3) This truss has been designed for a 10.0 psf bottom chord live load nonconcurrent with any other live loads.
4) * This truss has been designed for a live load of 20.0psf on the bottom chord in all areas where a rectangle 3-6-0 tall by 2-0-0 wide will fit between the bottom chord and any other members.
5) All bearings are assumed to be SYP No.2 .
6) Refer to girder(s) for truss to truss connections.
7) Provide mechanical connection (by others) of truss to bearing plate capable of withstanding 59 lb uplift at joint 5 and 124 lb uplift at joint 2.
8) "Semi-rigid pitchbreaks including heels" Member end fixity model was used in the analysis and design of this truss.
9) This manufactured product is designed as an individual building component. The suitability and use of this component for any particular building is the responsibility of the building designer per ANSI TPI 1 as referenced by the building code.
10) Truss Design Engineer: Julius Lee, PE: Florida P.E. License No. 34869: Address: 1109 Coastal Bay Blvd. Boynton Beach, FL 33435
11) Use Simpson HTU26 to attach Truss to Carrying member

LOAD CASE(S) Standard

JULIUS S.K. LEE
LICENSE
No 34869
STATE OF
FLORIDA
PROFESSIONAL ENGINEER

July 12,2010

Julius Lee
1109 Coastal Bay Blvd.
Boynton, FL 33435

Job	Truss	Truss Type	Qty	Ply	TROY LAND RES.
327354	EJ3B	JACK	1	1	I4395697 Job Reference (optional)

Builders FrstSource, Lake City, FL 32055 — 7.140 s Oct 1 2009 MiTek Industries, Inc. Mon Jul 12 09:46:07 2010 Page 1

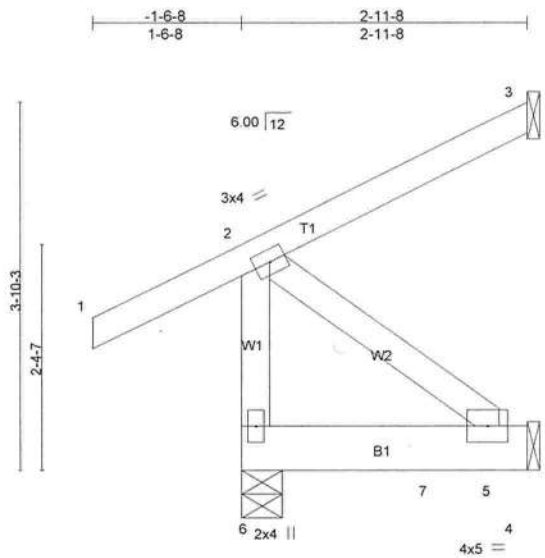

LOADING (psf)		SPACING	2-0-0	CSI		DEFL	in	(loc)	l/defl	L/d	PLATES	GRIP
TCLL	20.0	Plates Increase	1.25	TC	0.17	Vert(LL)	-0.00	5-6	>999	360	MT20	244/190
TCDL	7.0	Lumber Increase	1.25	BC	0.10	Vert(TL)	-0.00	5-6	>999	240		
BCLL	0.0 *	Rep Stress Incr	NO	WB	0.05	Horz(TL)	-0.00	3	n/a	n/a		
BCDL	5.0	Code FBC2007/TPI2002		(Matrix)		Wind(LL)	0.00	5-6	>999	240	Weight: 22 lb	

LUMBER
TOP CHORD 2 X 4 SYP No.2
BOT CHORD 2 X 6 SYP No.1D
WEBS 2 X 4 SYP No.3

BRACING
TOP CHORD Structural wood sheathing directly applied or 2-11-8 oc purlins, except end verticals.
BOT CHORD Rigid ceiling directly applied or 10-0-0 oc bracing.

MiTek recommends that Stabilizers and required cross bracing be installed during truss erection, in accordance with Stabilizer Installation guide.

REACTIONS (lb/size) 6=342/0-5-0, 3=46/Mechanical, 4=156/Mechanical
Max Horz 6=165(LC 5)
Max Uplift 6=-108(LC 5), 3=-31(LC 6), 4=-141(LC 5)

FORCES (lb) - Max. Comp./Max. Ten. - All forces 250 (lb) or less except when shown.

NOTES (10-11)
1) Wind: ASCE 7-05; 110mph (3-second gust); TCDL=4.2psf; BCDL=3.0psf; h=18ft; Cat. II; Exp B; enclosed; MWFRS (low-rise) gable end zone; end vertical left exposed; Lumber DOL=1.60 plate grip DOL=1.60
2) This truss has been designed for a 10.0 psf bottom chord live load nonconcurrent with any other live loads.
3) * This truss has been designed for a live load of 20.0psf on the bottom chord in all areas where a rectangle 3-6-0 tall by 2-0-0 wide will fit between the bottom chord and any other members.
4) All bearings are assumed to be SYP No.2 .
5) Refer to girder(s) for truss to truss connections.
6) Provide mechanical connection (by others) of truss to bearing plate capable of withstanding 108 lb uplift at joint 6, 31 lb uplift at joint 3 and 141 lb uplift at joint 4.
7) "Semi-rigid pitchbreaks including heels" Member end fixity model was used in the analysis and design of this truss.
8) Hanger(s) or other connection device(s) shall be provided sufficient to support concentrated load(s) 68 lb down and 32 lb up at 0-1-12, and 208 lb down and 65 lb up at 2-0-4 on bottom chord. The design/selection of such connection device(s) is the responsibility of others.
9) In the LOAD CASE(S) section, loads applied to the face of the truss are noted as front (F) or back (B).
10) This manufactured product is designed as an individual building component. The suitability and use of this component for any particular building is the responsibility of the building designer per ANSI TPI 1 as referenced by the building code.
11) Truss Design Engineer: Julius Lee, PE: Florida P.E. License No. 34869: Address: 1109 Coastal Bay Blvd. Boynton Beach, FL 33435

LOAD CASE(S) Standard
1) Regular: Lumber Increase=1.25, Plate Increase=1.25
Uniform Loads (plf)
Vert: 1-2=-54, 2-3=-54, 4-6=-10
Concentrated Loads (lb)
Vert: 6=-68 7=-208(F)

JULIUS S.K. LEE
LICENSE
No 34869
STATE OF
FLORIDA
PROFESSIONAL ENGINEER

July 12,2010

Julius Lee
1109 Coastal Bay Blvd.
Boynton, FL 33435

Job	Truss	Truss Type	Qty	Ply	TROY LAND RES.
327354	EJ3	JACK	7	1	I4395695 Job Reference (optional)

Builders FrstSource, Lake City, FL 32055 — 7.140 s Oct 1 2009 MiTek Industries, Inc. Mon Jul 12 09:46:06 2010 Page 1

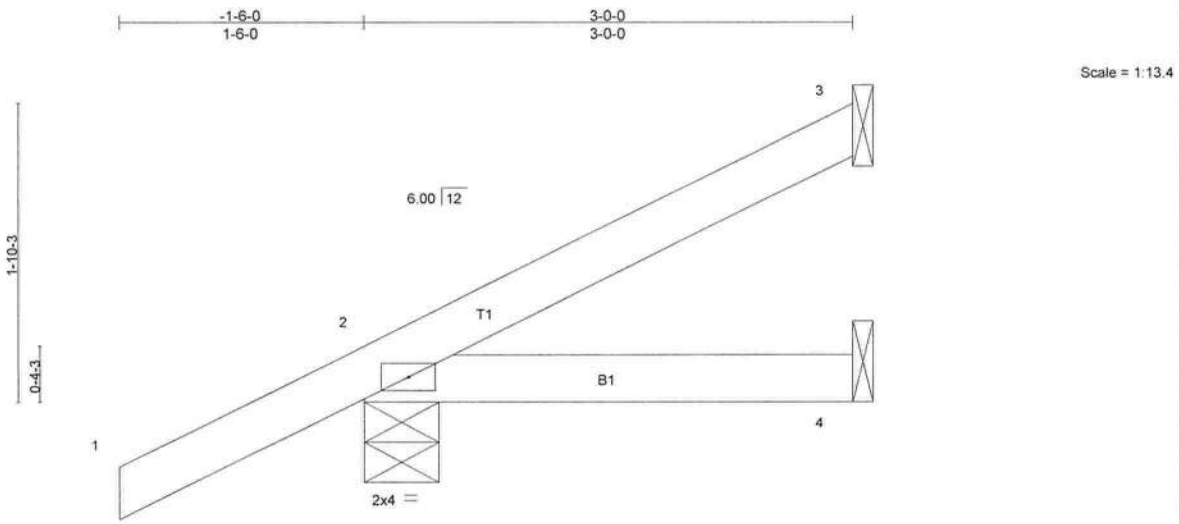

LOADING (psf)		SPACING	2-0-0	CSI		DEFL	in	(loc)	l/defl	L/d	PLATES	GRIP
TCLL	20.0	Plates Increase	1.25	TC	0.18	Vert(LL)	-0.00	2-4	>999	360	MT20	244/190
TCDL	7.0	Lumber Increase	1.25	BC	0.05	Vert(TL)	-0.00	2-4	>999	240		
BCLL	0.0 *	Rep Stress Incr	YES	WB	0.00	Horz(TL)	-0.00	3	n/a	n/a		
BCDL	5.0	Code FBC2007/TPI2002		(Matrix)		Wind(LL)	0.00	2	****	240	Weight: 12 lb	

LUMBER
TOP CHORD 2 X 4 SYP No.2
BOT CHORD 2 X 4 SYP No.2

BRACING
TOP CHORD Structural wood sheathing directly applied or 3-0-0 oc purlins.
BOT CHORD Rigid ceiling directly applied or 10-0-0 oc bracing.

MiTek recommends that Stabilizers and required cross bracing be installed during truss erection, in accordance with Stabilizer Installation guide.

REACTIONS (lb/size) 3=43/Mechanical, 2=210/0-5-8, 4=14/Mechanical
Max Horz 2=115(LC 6)
Max Uplift 3=-34(LC 7), 2=-158(LC 6)
Max Grav 3=43(LC 1), 2=210(LC 1), 4=41(LC 2)

FORCES (lb) - Max. Comp./Max. Ten. - All forces 250 (lb) or less except when shown.

NOTES (8-9)
1) Wind: ASCE 7-05; 110mph (3-second gust); TCDL=4.2psf; BCDL=3.0psf; h=18ft; Cat. II; Exp B; enclosed; MWFRS (low-rise) gable end zone and C-C Exterior(2) zone;C-C for members and forces & MWFRS for reactions shown; Lumber DOL=1.60 plate grip DOL=1.60
2) This truss has been designed for a 10.0 psf bottom chord live load nonconcurrent with any other live loads.
3) * This truss has been designed for a live load of 20.0psf on the bottom chord in all areas where a rectangle 3-6-0 tall by 2-0-0 wide will fit between the bottom chord and any other members.
4) All bearings are assumed to be SYP No.2 .
5) Refer to girder(s) for truss to truss connections.
6) Provide mechanical connection (by others) of truss to bearing plate capable of withstanding 34 lb uplift at joint 3 and 158 lb uplift at joint 2.
7) "Semi-rigid pitchbreaks including heels" Member end fixity model was used in the analysis and design of this truss.
8) This manufactured product is designed as an individual building component. The suitability and use of this component for any particular building is the responsibility of the building designer per ANSI TPI 1 as referenced by the building code.
9) Truss Design Engineer: Julius Lee, PE: Florida P.E. License No. 34869: Address: 1109 Coastal Bay Blvd. Boynton Beach, FL 33435

LOAD CASE(S) Standard

JULIUS S.K. LEE
LICENSE
No 34869
STATE OF
FLORIDA
PROFESSIONAL ENGINEER

July 12,2010

Julius Lee
1109 Coastal Bay Blvd.
Boynton, FL 33435

RE: 327354 - TROY LAND RES.

Site Information:

Project Customer: SKYLINE HOMES Project Name: 327354 Model: TROY LAND RES.
Lot/Block: Subdivision:
Address: 100 NW LOWER SPRINGS RD
City: COLUMBIA CTY State: FL

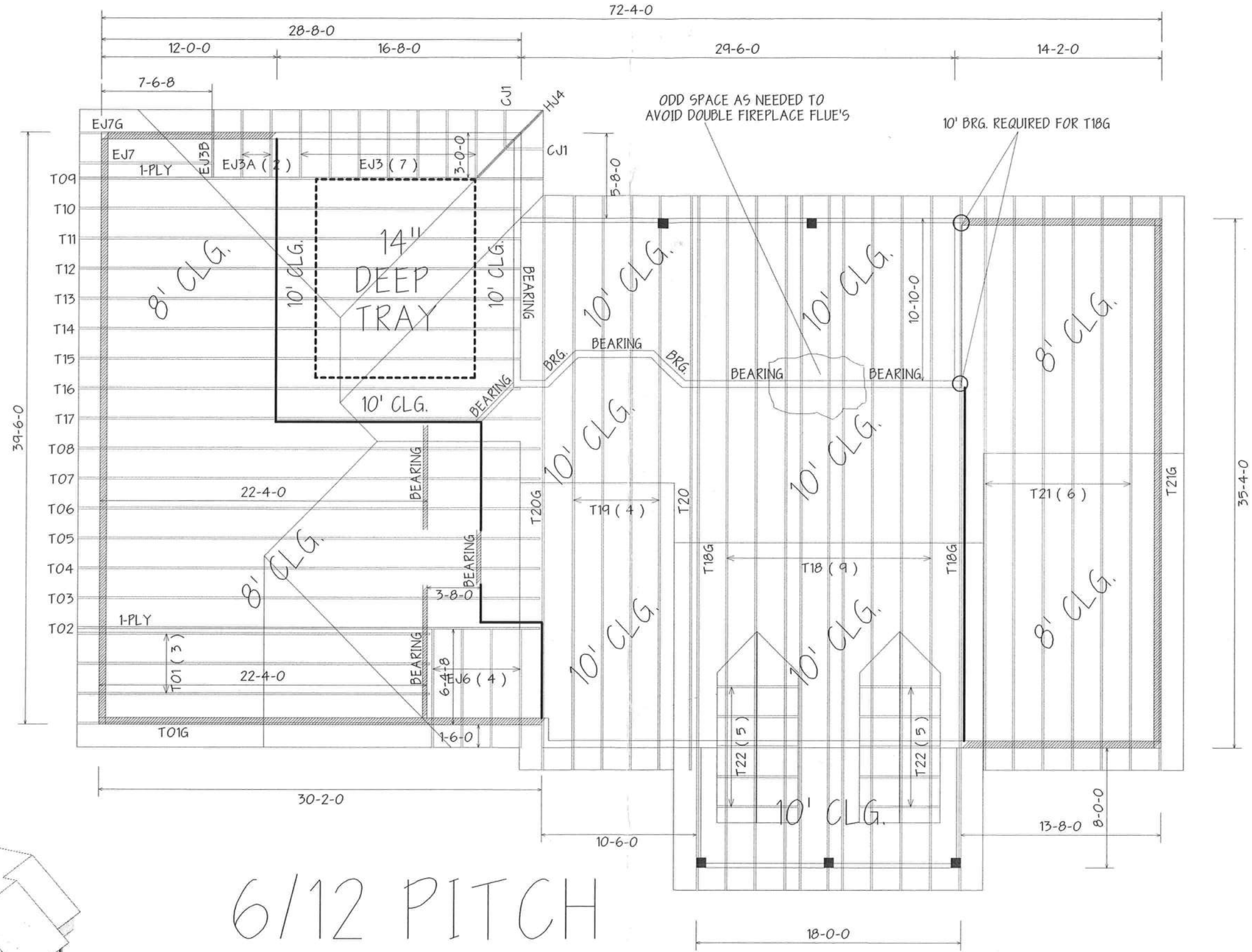

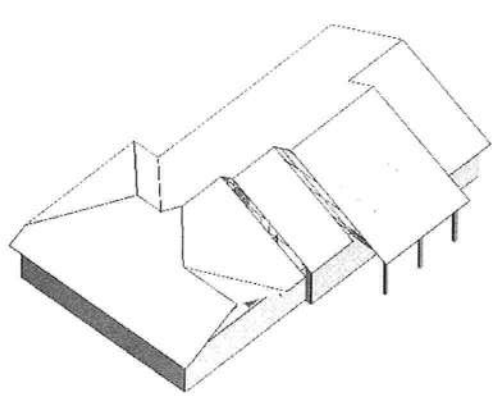

6/12 PITCH
18" O/H

MASTER BEDROOM TRAY
MAXIMUM 14" DEEP

BEARING HEIGHT SCHEDULE

	10' 1-1/8"
	8' 1-1/8"

NOTES:

1) REFER TO HIB 91 (RECOMMENDATIONS FOR HANDLING INSTALLATION AND TEMPORARY BRACING.) REFER TO ENGINEERED DRAWINGS FOR PERMANENT BRACING REQUIRED.
2.) ALL TRUSSES (INCLUDING TRUSSES UNDER VALLEY FRAMING) MUST BE COMPLETELY DECKED OR REFER TO DETAIL V105 FOR ALTERNATE BRACING REQUIREMENTS.
3.) ALL VALLEYS ARE TO BE CONVENTIONALLY FRAMED BY BUILDER.
4.) ALL TRUSSES ARE DESIGNED FOR 2' o.c. MAXIMUM SPACING, UNLESS OTHERWISE NOTED.
5.) ALL WALLS SHOWN ON PLACEMENT PLAN ARE CONSIDERED TO BE LOAD BEARING, UNLESS OTHERWISE NOTED.
6.) 5Y42 TRUSSES MUST BE INSTALLED WITH THE TOP BEING UP.
7.) ALL ROOF TRUSS HANGERS TO BE SIMPSON HTU26 UNLESS OTHERWISE NOTED. ALL FLOOR TRUSS HANGERS TO BE SIMPSON THA422 UNLESS OTHERWISE NOTED.
8.) BEAM/HEADER/LINTEL (HDR) TO BE FURNISHED BY BUILDER.

SHOP DRAWING APPROVAL

THIS LAYOUT IS THE SOLE SOURCE FOR FABRICATION OF TRUSSES AND VOIDS ALL PREVIOUS ARCHITECTURAL OR OTHER TRUSS LAYOUTS. REVIEW AND APPROVAL OF THIS LAYOUT MUST BE RECEIVED BEFORE ANY TRUSSES WILL BE BUILT. VERIFY ALL CONDITIONS TO INSURE AGAINST CHANGES THAT WILL RESULT IN EXTRA CHARGES TO YOU.

Requested Delivery Date: _____

Approved By: _____ Date: _____

Builders FirstSource

Bunnell
PHONE: 904-437-3349 FAX: 904-437-3994

Jacksonville
PHONE: 904-772-6100 FAX: 904-772-1973

Lake City
PHONE: 386-755-6894 FAX: 386-755-7973

Sanford
PHONE: 407-322-0059 FAX: 407-322-5553

BUILDER: SKYLINE HOMES		
LEGAL ADDRESS: TROY LAND RES.		
MODEL:		REVISION:
		SCALE: NTS
DATE: 6-16-10	DRAWN BY: K.L.H.	JOB #: 327354