Duct System Summary
Entire House
Bounds Heating & Air

Job: 2249 sqft
Date: 08/30/05
By: RG

P.O. BOX 1617, Newberry, FL 32669 Phone: (352)472-2761 Fax: (352) 472-1809

Project Information

For: Buckhaulter
Stewart Residence,

	Heating	Cooling
External static pressure	1.00 in H2O	***1.00*** in H2O
Pressure losses	0.30 in H2O	0.30 in H2O
Available static pressure	0.70 in H2O	0.70 in H2O
Supply / return available pressure	0.35 / 0.35 in H2O	0.35 / 0.35 in H2O
Lowest friction rate	***0.100*** in/100ft	***0.100*** in/100ft
Actual air flow	1567 cfm	1567 cfm
Total effective length (TEL)	0 ft	

Supply Branch Detail Table

Name		Design (Btuh)	Htg (cfm)	Clg (cfm)	Design FR	Diam (in)	Rect Size (in)	Duct Matl	Actual Ln (ft)	Ftg.Eqv Ln (ft)	Trunk
Master Bath	h	3736	161	78	0.100	6	16x 4	VIFx	0.0	0.0	
Master Bedroom-A	c	2321	92	116	0.100	7	16x 3	VIFx	0.0	0.0	
Master Bedroom	c	2321	92	116	0.100	7	16x 3	VIFx	0.0	0.0	
Breakfast Nook	h	3032	131	126	0.100	7	16x 3	VIFx	0.0	0.0	
Kitchen	c	1822	10	91	0.100	6	16x 2	VIFx	0.0	0.0	
Great Room	h	5274	227	173	0.100	8	16x 5	VIFx	0.0	0.0	
Living Room	c	3742	146	188	0.100	8	16x 4	VIFx	0.0	0.0	
Foyer	h	1002	43	28	0.100	5	16x 1	VIFx	0.0	0.0	
Den	h	3690	159	122	0.100	8	16x 4	VIFx	0.0	0.0	
Bath	c	164	4	8	0.100	4	16x 0	VIFx	0.0	0.0	
Bedroom 2	c	2125	88	107	0.100	7	16x 3	VIFx	0.0	0.0	
Hall	c	134	4	7	0.100	4	16x 0	VIFx	0.0	0.0	
Bedroom 3	h	3730	161	123	0.100	8	16x 4	VIFx	0.0	0.0	
Utility	c	1838	27	92	0.100	6	16x 2	VIFx	0.0	0.0	
Dining Room	h	5157	222	192	0.100	8	16x 5	VIFx	0.0	0.0	

Return Branch Detail Table

Name	Grill Size (in)	Htg (cfm)	Clg (cfm)	TEL (ft)	Design FR	Veloc (fpm)	Diam (in)	RectSize (in)	Stud/Joist Opening (in)	Duct Matl	Trunk
rb1	0x 0	1567	1567	0.0	0.050	381	26	16x 37		VIFx	

Bold/italic values have been manually overridden

Short Form
Entire House
Bounds Heating & Air

Job: 2249 sqft
Date: 08/30/05
By: RG

P.O. BOX 1617, Newberry, FL 32669 Phone: (352)472-2761 Fax: (352) 472-1809

Project Information

For: Buckhaulter
Stewart Residence,

Design Information

	Htg	Clg
Outside db (°F)	33	94
Inside db (°F)	70	75
Design TD (°F)	37	19
Daily range	-	M
Inside humidity (%)	-	50
Moisture difference (gr/lb)	-	49

Infiltration

Method	Simplified
Construction quality	Tight
Fireplaces	0

HEATING EQUIPMENT

Make	Goodman Mfg.	
Trade	Janitrol, GMC, Franklin	
Model	~~PHK~~J048-1A GMS-80-1	
Efficiency	7.5 HSPF	
Heating input		
Heating output	43000	Btuh @ 47°F
Temperature rise	25	°F
Actual air flow	1567	cfm
Air flow factor	0.043	cfm/Btuh
Static pressure	1.00	in H2O
Space thermostat		

COOLING EQUIPMENT

Make	Goodman Mfg.	
Trade	Janitrol, GMC, Franklin CKJ 48	
Cond	~~PHKJ048-1A~~	
Coil	~~ARUC 48~~ A49	
Efficiency	12 SEER	
Sensible cooling	32900	Btuh
Latent cooling	14100	Btuh
Total cooling	47000	Btuh
Actual air flow	1567	cfm
Air flow factor	0.050	cfm/Btuh
Static pressure	1.00	in H2O
Load sensible heat ratio	0.85	

ROOM NAME	Area (ft²)	Htg load (Btuh)	Clg load (Btuh)	Htg AVF (cfm)	Clg AVF (cfm)
Master Bath	192	3736	1552	161	78
Master Bedroom	295	4269	4641	184	233
Breakfast Nook	140	3032	2504	131	126
Kitchen	182	237	1822	10	91
Great Room	320	5274	3442	227	173
Living Room	209	3374	3742	146	188
Foyer	78	1002	566	43	28
Den	143	3690	2433	159	122
Bath	78	102	164	4	8
Bedroom 2	204	2032	2125	88	107
Hall	64	83	134	4	7
Bedroom 3	187	3730	2448	161	123
Utility	30	617	1838	27	92
Dining Room	128	5157	3839	222	192

Printout certified by ACCA to meet all requirements of Manual J 8th Ed.

Entire House d Other equip loads Equip. @ 0.99 RSM Latent cooling		2249	36336 3793	31252 1948 32868 5772	1567	1567
TOTALS		2249	40129	38639	1567	1567

Printout certified by ACCA to meet all requirements of Manual J 8th Ed.

ATTENTION: ROBERT

HERITAGE 30 AR®

PRODUCT DATA

LAMINATED ASPHALT SHINGLES

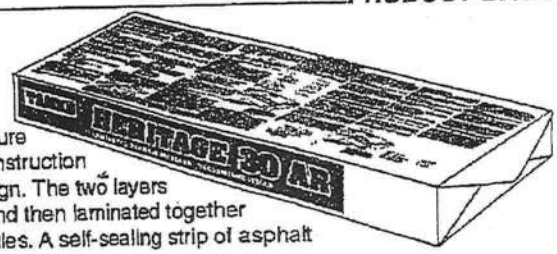

Manufactured in Tuscaloosa, AL.

HERITAGE 30 AR® shingles feature a double-layer fiberglass mat construction with a random-cut sawtooth design. The two layers of mat are coated with asphalt and then laminated together and surfaced with ceramic granules. A self-sealing strip of asphalt helps provide added wind resistance.

USES

For application to roof decks with inclines of not less than 2 inches per foot. For slopes between 2 inches and 4 inches per foot, refer to wrapper instructions.

ADVANTAGES

- 30-year limited warranty, 5-year FULL START, limited transferability, winds up to 70 MPH.
- Superior fire resistance compared to organic shingles.
- Rustic beauty of wood shakes.
- Shadowtone feature adds depth and dimensional appearance.
- 10-year Algae-Relief (AR) limited warranty that provides for cleaning of discoloration caused by certain algae growth that may occur in areas with high humidity.

CERTIFICATIONS

UL Class A Fire Rating	ASTM D 3018, Type I
UL Wind Resistant	ASTM E 108, Class A
	ASTM D 3161, Type I

Fed. Spec.: Exceeds SS-S-001534, Class A, Type I

COLORS

Classic Heritage Colors:

- Weathered Wood
- Rustic Cedar
- Oxford Grey
- Rustic Hickory
- Shadow Grey
- Rustic Black

PRODUCT DATA*

Shingle size	12" X 37"
Exposure	5"
Shingles per square	78
Bundles per square	3

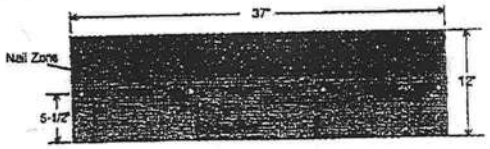

*All values stated as nominal

CAUTION: The National Institute for Occupational Safety and Health (NIOSH) has concluded that fumes of heated asphalt are a potential occupational carcinogen. Do not heat or burn this product.

TAMKO®
ROOFING PRODUCTS

Visit our Web Site at www.tamko.com

03/2003

Central District	220 West 4th St., Joplin, MO	64801	800-641-4691
Northeast District	4500 Tamko Dr., Frederick, MD	21701	800-368-2055
Southeast District	2300 35th St., Tuscaloosa, AL	35401	800-228-2656
Southwest District	7910 S. Central Exp., Dallas, TX	75216	800-443-1834
Western District	5300 East 43rd Ave., Denver, CO	80216	800-530-6866

orida Building Code Online

ULFSIDE SUPPLY, INC.

The Florida Department of Community Affairs
Building Code Information System

SITE NAVIGATION

Home
Florida Building Code
Manufact. Buildings
Prototype Building
Surcharges
Training
Product Approval
License Search
Mailing List
Florida Building Commission

PRODUCT APPROVAL

Product Type Detail

Overview | Product Search | Organization Search | Product Application | View Attachments

User: Public User - Not Associated with Organization -

Need Help ?

Application #:	FL1956
Date Submitted:	02/27/2004
Product Manufacturer:	TAMKO Roofing Products, Inc.
Address/Phone/email:	PO Box 1404 Joplin, MO 64802
Technical Representative:	Frederick J. O'Connor
Technical Representative Address/Phone/email:	PO Box 1404 Joplin, MO 64802 (800) 641-4691 fred_oconnor@tamko.com
Category:	Roofing
Subcategory:	Asphalt Shingles
Evaluation Method:	Certification Mark or Listing

Referenced Standards from the Florida Building Code:

Section	Standard	Year
	ASTM D 3462	2003

Certification Agency:	Underwriters Laboratories Inc.
Quality Assurance Entity:	
Validation Entity:	
Date Validated:	02/27/2004
Authorized Signature:	Frederick O'Connor fred_oconnor@tamko.com
Performance level of the product and conditions or limitations of use:	Asphalt shingles shall be used only on roof slopes of 2:12 or greater.
Evaluation/Test Reports Uploaded:	B

Florida Building Code Online

GULFSIDE SUPPLY, INC.

Installation Documents Uploaded:

Product Approval Method: Method 1 Option A

Application Status: Pending FBC Approval

Page: Page 1 / 1

Go

App/Seq #	Product Model # or Name	Model Description
1956.1	Elite Glass-Seal AR	A heavy weight 3 tab asphalt shingle.
1956.2	Glass-Seal AR	A 3 tab asphalt shingle.
1956.3	Heritage 30 AR	A heavy weight dimensional asphalt shingle.
1956.4	Heritage 40 AR	A heavy weight dimensional asphalt shingle.
1956.5	Heritage 50 AR	A heavy weight dimensional asphalt shingle.
1956.6	Heritage Declaration	A heavy weight triple laminate asphalt shingle.
1956.7	Heritage XL	A heavy weight dimensional asphalt shingle.

Next

THIS FENESTRATION PRODUCT COMPLIES* WITH THE

NEW FLORIDA BUILDING CODE

FOR RESIDENTIAL BUILDINGS WITH A MEAN ROOF HEIGHT OF 30 FT. OR LESS, *EXPOSURE "B"* (WHICH IS INLAND OF A LINE THAT IS 1500 FT. FROM THE COAST). AND *WALL ZONE "5"* (INSTALLED NEAR THE CORNER OF THE BUILDING).

PER *ASTM E1300*, THE CORRECT GLASS THICKNESS, BASED ON THE *NEGATIVE* DESIGN PRESSURE (DP) LISTED BELOW, HAS BEEN INSTALLED IN THIS UNIT. THE GLASS THICKNESS IS BASED ON ITS' WIDTH, HEIGHT, AND ASPECT RATIO.

WIND ZONE: 110 MPH

DESIGN PRESSURE (DP): + 21.8 / - 29.1

THIS PRODUCT MEETS THE REQUIREMENTS FOR STRUCTURAL LOADS, WATER AND AIR INFILTRATION PER ATTACHED ***AAMA*** PERFORMANCE LABEL. BE ADVISED THAT IF LOADS ARE PLACED UP TO OR EXCEEDING THE TESTED LEVELS, THIS PRODUCT MAY BE ALTERED IN SUCH A WAY THAT FUTURE PERFORMANCE WILL BE REDUCED.

* COMPLIANCE MUST INCLUDE INSTALLATION ACCORDING TO MANUFACTURER'S INSTRUCTIONS AND FLORIDA CODE REQUIREMENTS.

MIP-467

SERIES 740 110 MPH

WIDTHS	HEIGHTS: 2-0	2-4	2-8	3-0	3-4	3-8	4-0	4-4	4-8	5-0	5-4	5-8	6-0
	TIT HEIGHT = / GLASS HEIGHT =	TIT HEIGHT = / GLASS HEIGHT =	TIT HEIGHT = / GLASS HEIGHT =	TIT HEIGHT = / GLASS HEIGHT =	TIT HEIGHT = / GLASS HEIGHT =	TIT HEIGHT = / GLASS HEIGHT =	TIT HEIGHT = / GLASS HEIGHT =	TIT HEIGHT = / GLASS HEIGHT =	TIT HEIGHT = / GLASS HEIGHT =	TIT HEIGHT = / GLASS HEIGHT =	TIT HEIGHT = / GLASS HEIGHT =	TIT HEIGHT = / GLASS HEIGHT =	TIT HEIGHT = / GLASS HEIGHT =
2-0 TIT WIDTH = GLASS WIDTH =	SSB	SSB	SSB	SSB	SSB	SSB	SSB	SSB	SSB	SSB	SSB	SSB	SSB
2-4 TIT WIDTH = GLASS WIDTH =	SSB	SSB	SSB	SSB	SSB	SSB	SSB	SSB	SSB	SSB	SSB	SSB	SSB
2-6 TIT WIDTH = GLASS WIDTH =	SSB	SSB	SSB	SSB	SSB	SSB	SSB	SSB	SSB	SSB	SSB	SSB	SSB
2-8 TIT WIDTH = GLASS WIDTH =	SSB	SSB	SSB	SSB	SSB	SSB	SSB	SSB	SSB	SSB	SSB	SSB	SSB
3-0 TIT WIDTH = GLASS WIDTH =	SSB	SSB	SSB	SSB	SSB	SSB	SSB	SSB	SSB	SSB	SSB	SSB	DSB
3-4 TIT WIDTH = GLASS WIDTH =	SSB	SSB	SSB	SSB	SSB	SSB	SSB	SSB	SSB	DSB	DSB	DSB	DSB
3-8 TIT WIDTH = GLASS WIDTH =	SSB	SSB	SSB	SSB	DSB	DSB	DSB	DSB	DSB	DSB	DSB	DSB	DSB
4-0 TIT WIDTH = GLASS WIDTH =	SSB	SSB	SSB	DSB	DSB	DSB	DSB	DSB	DSB	DSB	DSB	DSB	DSB
4-4 TIT WIDTH = GLASS WIDTH =	SSB	SSB	SSB	DSB	DSB	DSB	DSB	DSB	DSB	DSB	DSB	DSB	DSB

SINGLE GLASS

BetterBilt
704 12th AVE.
SMYRNA, TN 37167
(800) 545-5413

#	DATE	ECN	DESCRIPTION	BY

GENERIC: PRODUCT INFORMATION

TITLE: GLAZING REQUIREMENTS

PRODUCT:

DRAWN BY: TC | DATE:

CHECKED | DATE:

SCALE: N/A | SHEET 1 OF 1

DWG. NO.

Old Series Number	New Series Number	Description
552	552	Fin insulated drop glazed picture window
→ 740C/700	740	Fin single glazed single hung
740D/770	740	Flange single glazed single hung
F53	740 transom	Fin single glazed transom
705	740PW/Sidelites	Fin single glazed drop glazed picture window
F54	740 Half rounds	Fin single glazed half round
F57	740 Quarter Rounds	Fin single glazed quarter round
F55	740 Circles	Fin single glazed circle
F58	740 Octagons	Fin single glazed octagon
F51 - Standard	740 Archtop/Eyebrow	Fin single glazed arch top
F5E - Specify Leg	740 Archtop/Eyebrow	Fin single glazed arch top
740/740A	740	Fin insulated single hung
740B/780	740	Flange insulated single hung
542	740 Picture window	Fin insulated picture window
585	740 Picture window	Flange insulated picture window
053/740T	740 transom	Fin insulated transom
083	740 transom	Flange insulated transom
542PW	740PW/Sidelites	Fin insulated picture window
054	740 Half rounds	Fin insulated half round
084	740 Half rounds	Flange insulated half round
057	740 Quarter Rounds	Fin insulated quarter round
087	740 Quarter Rounds	Flange insulated quarter round
055/085	740 Circles	Fin/Flange circles
058/088	740 Octagons	Fin/Flange octagons
051/ Standard	740 Archtop/Eyebrow	Fin insulated arch top picture windows
05E/ Specify Leg	740 Archtop/Eyebrow	Fin insulated arch top picture windows
081/ Standard	740 Archtop/Eyebrow	Flange insulated arch top picture windows
08E/ Specify Leg	740 Archtop/Eyebrow	Flange insulated arch top picture windows
704/744C	744	Fin single glazed single hung
F54	744 Half rounds	Fin single glazed circle top
774/744B	744	Flange single glazed single hung
744A/744	744	Fin insulated single hung
054	744 Half rounds	Fin insulated circle top
084	744 Half rounds	Flange insulated circle top
784/744B	744	Flange insulated single hung
053/083	744 Transoms	Fin/Flange insulated transoms

Note: All other Specialties use 740

760	760	Thermal break frame insulated single hung
073/760T	760 Transoms	Fin insulated transoms
074	760 Half rounds	Fin insulated half round
077	760 Quarter Rounds	Fin insulated quarter circle
use 740	760 Octagons	Fin insulated picture uindow
650	650 Slider	Fin single glazed 2-lite slider
855	650 Picture Slider	Fin single glazed 3-lite slider
840/847	850 Slider	Fin/Flange single glazed slider
845/849	850 Slider	Fin/Flange single glazed 3-lite slider
850/857	850 Slider	Fin/Flange insulated slider
855/859	850 Slider	Fin/Flange insulated 3-lite slider
543		740 Fin vertical mullion
583		740 Flange vertical mullion
582		Adjustable angle vertical mullion
H43		Horizontal fin structural mullion
H83		Horizontal Flange structural mullion
V83		Vertical Flange structural mullion
V43		Vertical Fin structural mullion

MI HOME PRODUCTS
- PRIME ALUMINUM WINDOWS -
INSTALLATION INSTRUCTIONS FOR "NAIL FIN" PRODUCTS

MI Home Products appreciates your recent purchase of a maintenance free prime window, which will no rust, rot, mildew, or warp. This is a quality product that left our factory in good condition – proper handling and installation are just as important as good design and workmanship. Please follow these recommendations to allow this product to complete its function.

1. Handle units one at a time in the closed and locked position and take care not to scratch frame or glass or to bend the nailing fin.

2. Set unit plumb and square into opening and make sure that there is 3/16" ± 1/16" clearance around the frame. Fasten unit into opening in the closed and locked position, making sure that fasteners are screwed in straight in order to avoid twisting or bowing of the frame. Make sure that sill is straight and level. Check operation of unit before any and all fasteners are set.

3. Use # 8 sheet metal or wood screws with a minimum of 1" penetration into the framing (stud). Place first screws (two at each corner) 3" from end of fin. For positive and negative DPs (design pressures) up to 35, do not exceed 24" spacing of additional screws. For DPs from 35.1 to 50, do not exceed 18". Install load bearing shim adjacent to each anchor. Use shim where space exceeds 1/16".

4. Flash over head and caulk outside perimeter in accordance with code requirements and good installation practices.

5. Fill voids between frame and construction with loose batten type insulation or non-expanding aerosol foam specifically formulated for windows and doors to eliminate drafts. The use of expanding aerosol type insulating foam, which can bow the frame, waives all stated warranties.

6. Remove plaster, mortar, paint and any other debris that may have collected on the unit and make sure that sash/vent tracks and interlocks are also clear. Do not use abrasives, solvents, ammonia, vinegar, alkaline, or acid solutions for clean-up, especially with insulated glass units as their use could cause chemical breakdown of the glass seal. Take care not to scratch glass; scratches severely weaken glass and it could eventually break from thermal expansion and contraction. Clean units with water and mild detergent as you would you automobile.

- CAUTION -

MI Home Products or its representatives are unable to control and cannot assume responsibility for the selection and placement of their products in a building or structure in a manner required by laws, statutes, and/or building codes. The purchaser is solely responsible for knowledge of and adherence to the same. MI Home Products window products are not provided with safety glazing unless specifically ordered with such. Many laws and codes require safety glazing near doors, bathtubs, and shower enclosures. Also be aware of emergency egress code requirements.

Corporate Headquarters:
650 West Market St.
Gratz, PA 17030-0370
(717) 365-3300

110 MPH DP RATINGS FOR FLORIDA

(Exposure B - Wall Zone 5)

	Effective Wind Area	+DP	-DP
2-0x5-0 HUNG			
	11	21.7	-28.9
2-0x6-0 & 3-0x4-0 HUNG	12	21.6	-28.7
4-4x3-0 PW	13	21.5	-28.5
	14	21.4	-28.3
3-0x5-0 HUNG		21.3	-28.2
4-0x4-0 PW	16	21.2	-28.0
4-4x4-0 PW	17	21.1	-27.8
3-0x6-0 HUNG	18	21.0	-27.6
	19	20.9	-27.4
4-0x5-0 PW			
	21	20.8	-27.1
4-4x5-0 PW	22	20.7	-27.0
	23	20.7	-26.9
4-0x6-0 PW	24	20.6	-26.9
	25	20.6	-26.8
4-4x6-0 PW	26	20.5	-26.7
	27	20.5	-26.6
	28	20.5	-26.5
	29	20.4	-26.4
	30	20.4	-26.3
	31	20.3	-26.2
	32	20.3	-26.2
5-0x6-8 SGD	33	20.2	-26.1
	34	20.2	-26.0
		20.2	-25.9
	36	20.1	-25.8
	37	20.1	-25.7
	38	20.0	-25.6
	39	20.0	-25.6
6-0x6-8 & 5-0x8-0 SGD	40	19.9	-25.5
	41	19.9	-25.4
	42	19.8	-25.3
	43	19.8	-25.2
	44	19.8	-25.1
	45	19.7	-25.0
	46	19.7	-24.9
	47	19.6	-24.9
6-0x8-0 SGD	48	19.6	-24.8
	49	19.5	-24.7
7-6x6-8 SGD			
	51	19.5	-24.6
	52	19.5	-24.5
8-0x6-8 SGD	53	19.4	-24.5
	54	19.4	-24.4
	55	19.4	-24.4

	Effective Wind Area	+DP	-DP
	56	19.4	-24.
	57	19.4	-24.
	58	19.3	-24.
	59	19.3	-24.
9-0x6-8 & 7-6x8-0 SGD	60	19.3	-24.
	61	19.3	-24.
	62	19.3	-24.
	63	19.2	-24.
8-0x8-0 SGD	64	19.2	-24.0
	65	19.2	-24.0
	66	19.2	-24.0
10-0x6-8 SGD	67	19.2	-23.9
	68	19.1	-23.9
	69	19.1	-23.8
	70	19.1	-23.8
	71	19.1	-23.8
9-0x8-0 SGD	72	19.1	-23.7
	73	19.0	-23.7
	74	19.0	-23.6
		19.0	-23.6
	76	19.0	-23.6
	77	19.0	-23.5
	78	18.9	-23.5
	79	18.9	-23.4
12-0x6-8 & 10-0x8-0 SGD	80	18.9	-23.4
	81	18.9	-23.4
	82	18.9	-23.3
	83	18.8	-23.3
	84	18.8	-23.2
	85	18.8	-23.2
	86	18.8	-23.2
	87	18.8	-23.1
	88	18.7	-23.1
	89	18.7	-23.0
	90	18.7	-23.0
	91	18.7	-23.0
	92	18.7	-22.9
	93	18.6	-22.9
	94	18.6	-22.8
	95	18.6	-22.8
12-0x8-0 SGD	96	18.6	-22.8
	97	18.6	-22.7
	98	18.5	-22.7
	99	18.5	-22.6
15-0x6-8 SGD			

Installation Instructions Pre-Hung Door Systems In High Wind Velocity Areas

These instructions apply to all Therma-Tru wood-framed door systems. Some apply specifically to:

Inswing Doors 

Outswing Doors 

Doors with sidelights 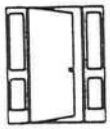

Double Doors 

Patio Doors 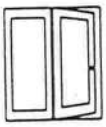

Read all instructions before starting.

THERMA TRU® DOORS

The Most Preferred Brand in the Business™

P.O. Box 8780 Maumee, Ohio 43537

Printed 3/02 Questions? Comments? Call 1-800-THERMATRU (1-800-843-7628) Part No. MSDRISTH

KEY DIFFERENCES CHECKLIST

Rough openings are 1/4" smaller on each side and 1/4" smaller on the header than standard Therma-Tru rough opening dimensions.

Use only a maximum of 1/4" thick shims.

Predrill the jambs and headers using 1/8" drill bit. Predrilling increases structural performance.

Use only 2-1/2" wood screws (#8 and #10) when securing the pre-hung frame to the rough opening buck. Drywall screws, deck screws, and nails are insufficient anchors, and should not be substituted for wood screws.

Be certain of the number and placement of all screws securing the frame to the rough opening buck. Consult the architect or engineer of record concerning fastening the buck to the rest of the building structure.

For structural strength, the rough opening buck must be either 2" x 4" or 2" x 6" construction, not "1 by" construction.

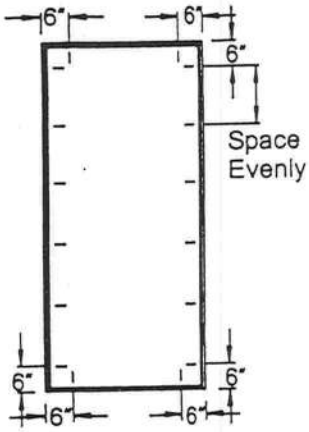

SINGLE DOOR

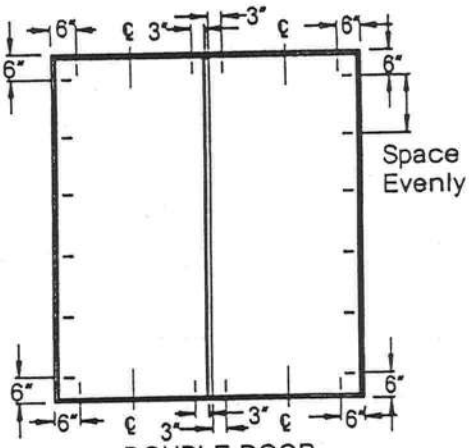

DOUBLE DOOR

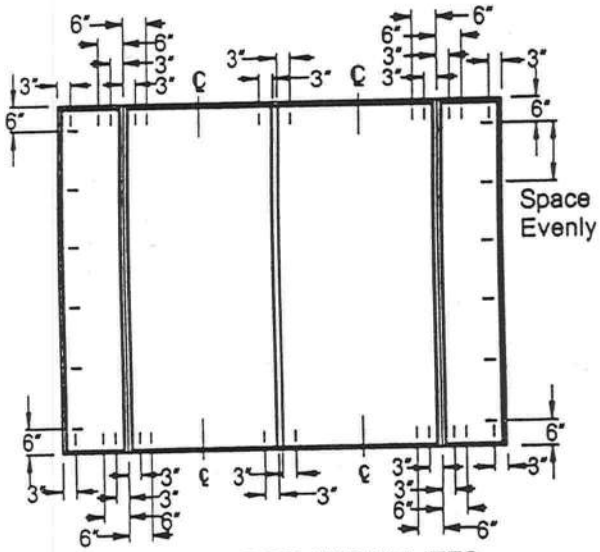

DOUBLE DOOR W/SIDELITES

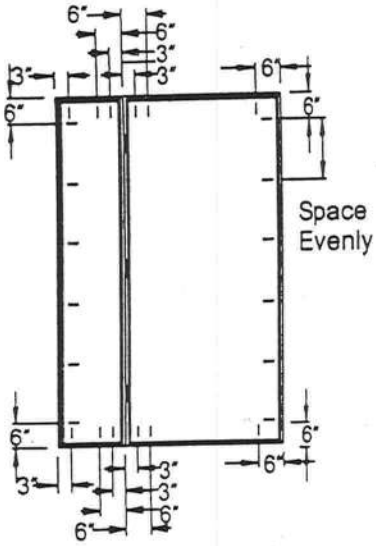

SINGLE DOOR W/SIDELITE

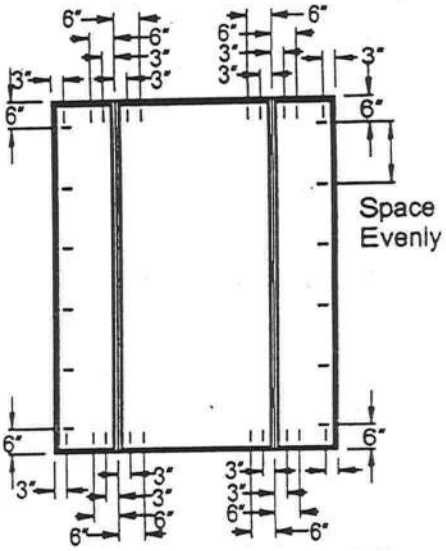

SINGLE DOOR W/SIDELITES

Therma-Tru® Construction/Premium Series Wood Edge In-swing Steel Door
Maximum Size Up To 8'4 x 6'8

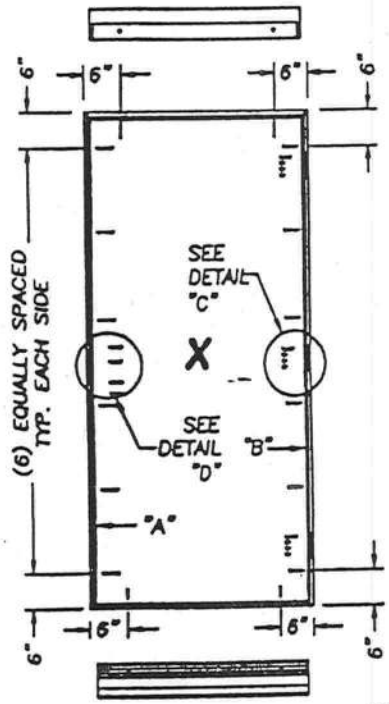

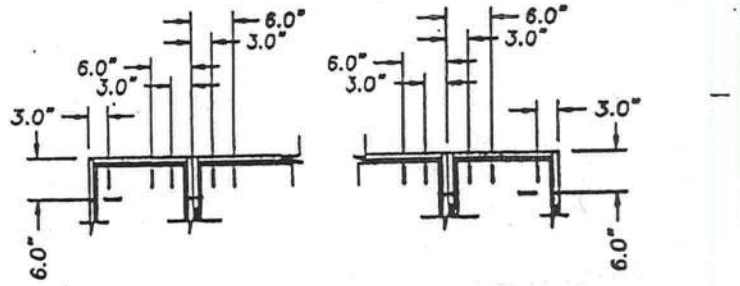

When attaching Sidelite the above anchoring applies.

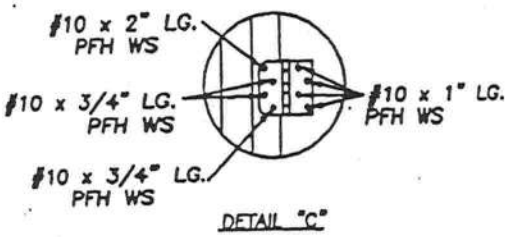

DETAIL "C"

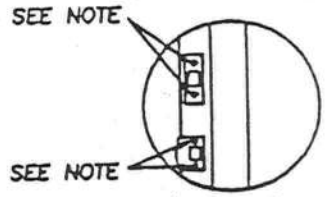

DETAIL "D"

Note:
When attaching the strike & deadbolt plates to the strike & buck use #10 x 2" Lg. PFH WS.
When attaching the strike & deadbolt plates to the astragal use #8 x 2 1/2" Lg. PFH WS.
When attaching the strike jamb & sidelite jamb use #10 x 1 3/4" Lg. PFH WS.

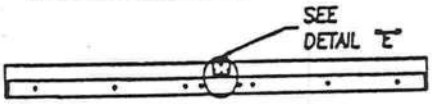

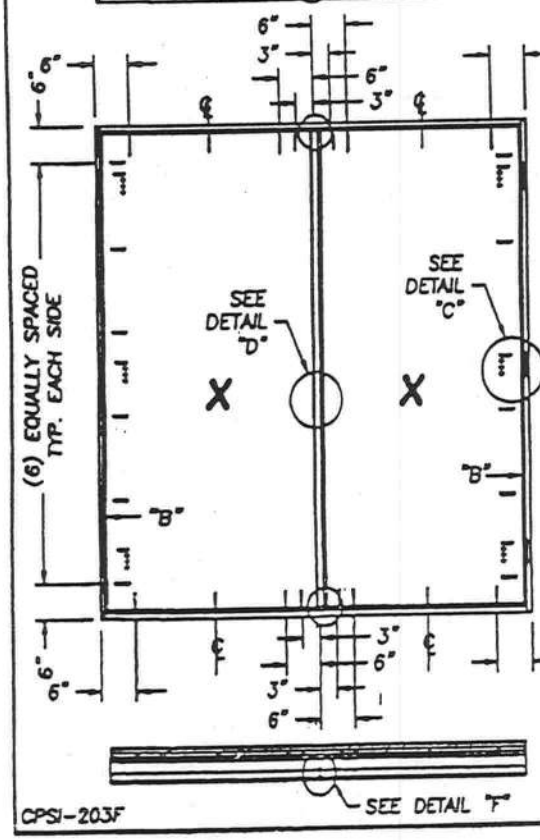

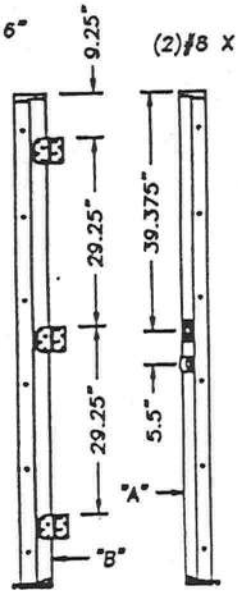

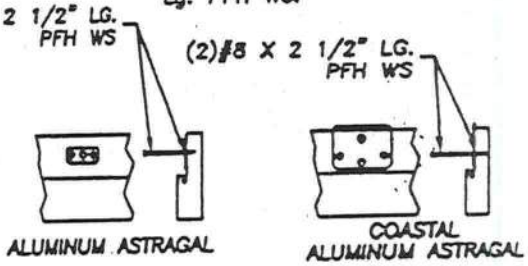

DETAIL "E"
ATTACH ASTRAGAL THROW BOLT STRIKE PLATE TO FRAME AS SHOWN.

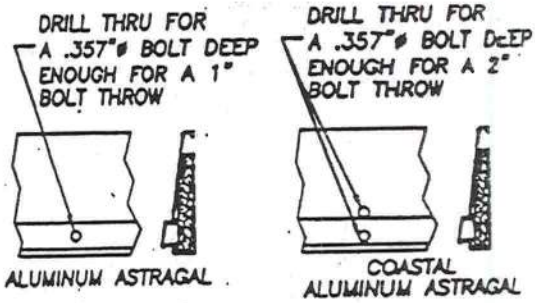

DETAIL "F"
ASTRAGAL THROW BOLTS AT THE THRESHOLD

CPSI-203F

R W B C

R W Building Consultants, Inc.

Consulting and Engineering Services for the Building Industry

P.O. Box 230 Valrico, FL 33594 Phone 813.684.3831 Facsimile 813.684.3954

ENGINEER'S NOTICE OF EVALUATION # CPSI-203F

Therma-Tru Corp.
108 Mutzfeld Road
Butler, IN 46721
Phone 219.868.5811 Facsimile 219.868.5190

DESCRIPTION OF UNIT

Model Designation: Construction / Premium Series Wood Edge Steel Door (Glazed) with or without Side-lites

Maximum Overall Nominal Size: up to 8'4 x 6'8 **Usable In-swing Configurations: X, OXO, XO, OX, XX & OXXO**

General Description: The head and jambs are wood measuring 4.5" x 1.25" with an extruded aluminum saddle threshold. The door panels and sidelite panels are 1.68" thick and consist of two 25 gauge (min 0.018") steel skins for the Construction Series and two 24 gauge (min. 0.022") steel skins for the Premium Series glued to wood stiles and rails with a urethane core. The glazed door panels and sidelites are routed to receive ½" insulated tempered lip lite inserts manufactured by Therma-Tru.

FBC Section 1707 Materials and Assembly Tests:
(1707.4.3 Exterior Door Assemblies; 1707.4.5 Mullions Door Assemblies)

Test	Description	Test Location	Date	Report No.	Certifying Engineer
ASTM E330	Uniform Static Air Pressure	ETC- Rochester, NY NCTL – Orlando, FL	July 11, 2001 May 25, 1998	01-741-11004.0 210-2030-1	Joseph L. Dolden, P.E. # 42929 Barry D. Portnoy, P.E. # 16258
TAS 202	Forced Entry	ETC- Rochester, NY NCTL – Orlando, FL	July 11, 2001 May 25, 1998	01-741-11004.0 210-2030-1	Joseph L. Dolden, P.E. # 42929 Barry D. Portnoy, P.E. # 16258
ASTM E331	* Water Penetration	ETC- Rochester, NY NCTL – Orlando, FL	July 11, 2001 May 25, 1998	01-741-11004.0 210-2030-1	Joseph L. Dolden, P.E. # 42929 Barry D. Portnoy, P.E. # 16258
ASTM E283	Air Infiltration	ETC- Rochester, NY NCTL – Orlando, FL	July 11, 2001 May 25, 1998	01-741-11004.0 210-2030-1	Joseph L. Dolden, P.E. # 42929 Barry D. Portnoy, P.E. # 16258
TAS 201/203	**Large Missile Impact/Cycling	NA	NA	NA	NA

* Sidelites are considered a window and meet 15% of Positive Design Pressure water infiltration criteria.
** This product must be shuttered to meet windborne debris criteria.

Design Pressure Ratings:

Configuration		Maximum Size	Design Pressure Ratings	
Glazed Single	X	Up To 3'0 x 6'8	+ 47.00 - 47.00	
Glazed Single with Sidelites	XO, OX, OXO	Up To 5'4 x 6'8	+ 47.00 - 47.00	
			Std Alum Astragal	Coastal Alum Astragal
Glazed Double	XX	Up To 6'0 x 6'8	+ 40.00 - 40.00	+ 47.00 - 47.00
Glazed Double with Sidelites	OXXO	Up To 8'4 x 6'8	+ 40.00 - 40.00	+ 47.00 - 47.00

Installation and Anchoring: See reverse side this page

Use

1. Evaluated for use in locations adhering to the Florida Building Code and where pressure requirements as determined by **ASCE 7 Minimum Design Loads for Buildings and Other Structures** do not exceed the design pressure ratings listed above.

2. For Masonry installations where the sub-buck is less than 1-1/2 inches (FBC section 1707.4.4 Anchorage Methods and sub-sections 1707.4.4.1 and 1707.4.4.2) same diameter Tapcon type concrete anchors must be substituted and the length must be such that a minimum 1-1/4" engagement of the Tapcon into the masonry wall is obtained.

Certification: Florida Professional Engineer - Seal No. 43409 April 22, 2002 Lyndon F. Schmidt

19506 French Lace Drive Lutz, FL 33558

1 CHECK DOOR UNIT.

Check width and height.

Measure size of frame (width and height), not brickmold.

Remove cleats and packaging, but keep door fastened closed with transport clip. Do not remove clip or open door until instructed to do so.

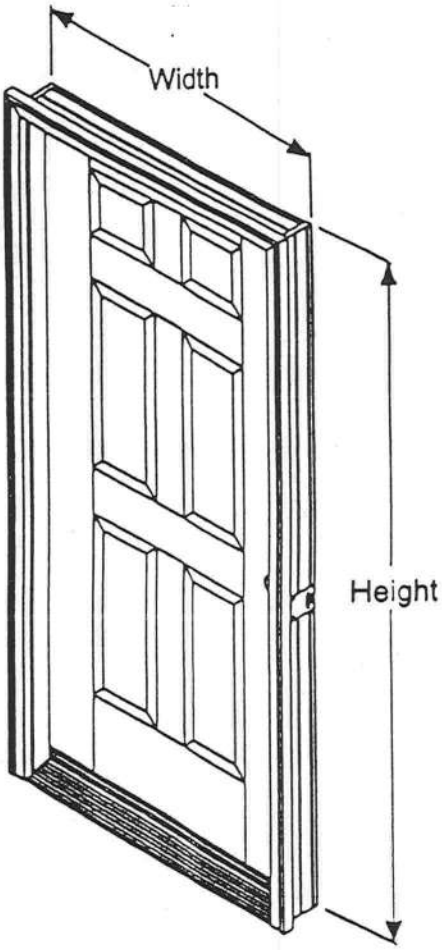

2 CHECK AND PREPARE OPENING.

Is subfloor level and solid? *Provide a flat, level, clea bearing surface so the sill may be caulked and sealed to the opening. Scrape, sand, or fill as required.*

Shim subfloor for floor covering clearance, if require *If shimming, caulk under shims.*

Is opening square? Check all corners with a framing square. Double-check by comparing diagonal measurements. *Fix any problems now.*

Are framing and walls plumb? Use a 6-foot level an check both sides of opening, both ways. *Fix any problems now.*

Are the wall surfaces around the opening in the sam plane? There must be no "warps" or "jogs". *Fix any problems now.*

Is the opening the correct size? Check it against the door frame size now, before installation. Opening should be frame height plus 1/4", and frame width plus 1/2". Remember to use only 1/4" shims.

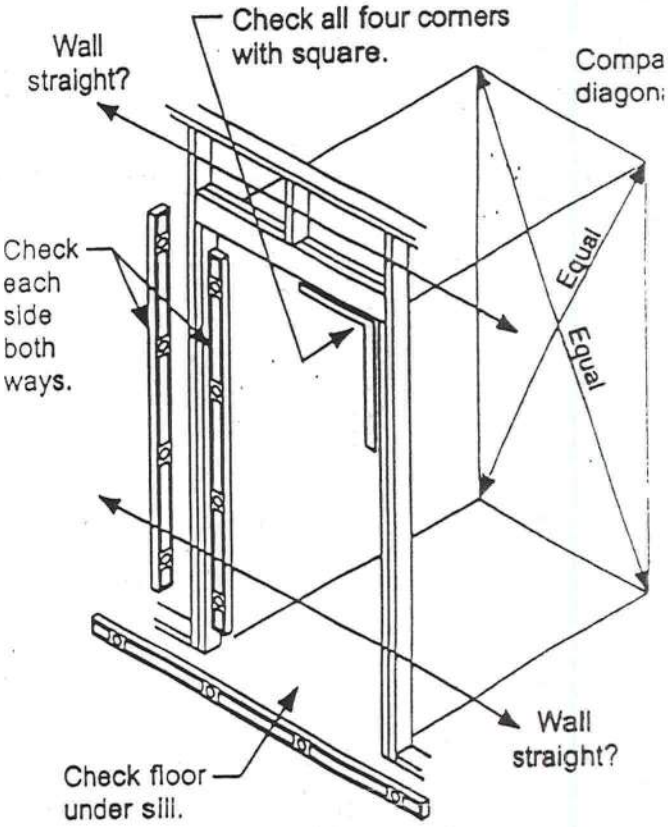

3 CAULK SUBFLOOR AND SILL BOTTOM.

Lay door unit on edge or face so that bottom side of sill can be caulked. Place very large beads of caulk across full width at front edge of sill. Place one or more very large caulk beads at parallel lines across bottom surfaces which will bear on subfloor.

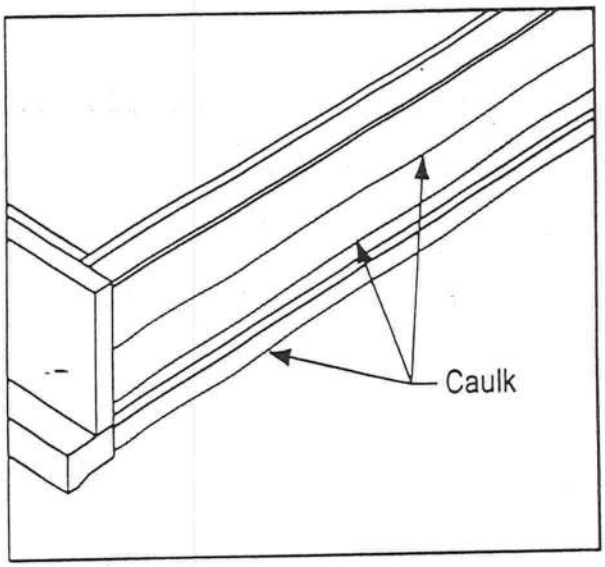

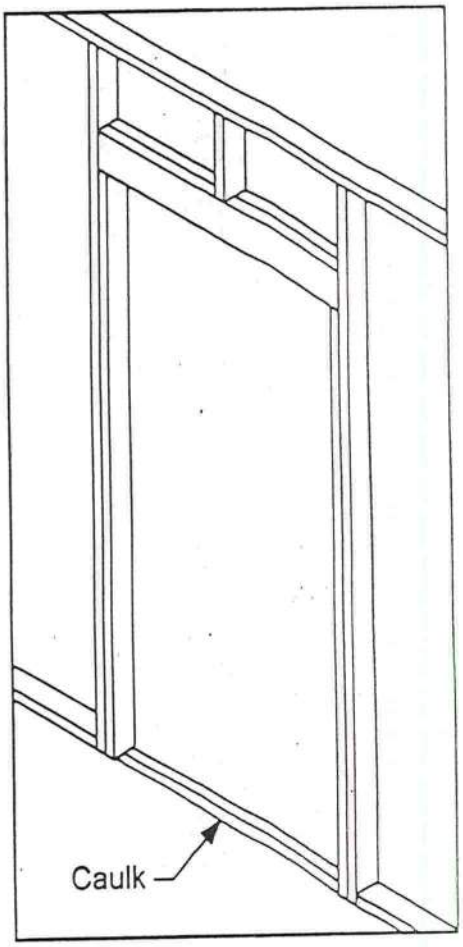

Avoid callbacks due to leaks! Use an entire tube of caulking to seal between sill and subfloor.

On subfloor at opening, place very large beads of caulk that will match with those placed on sill. Run beads full width of opening.

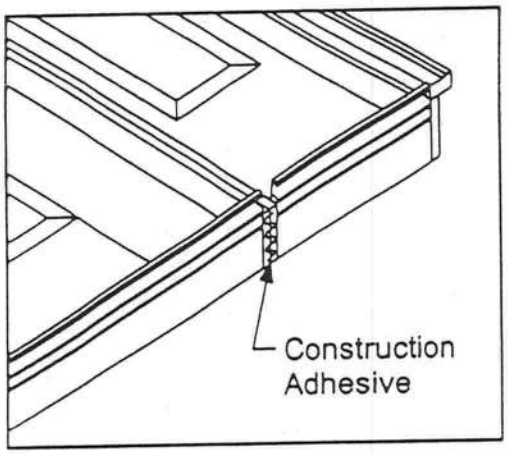

NOTE: If installing **units with sidelights,** place construction adhesive under points where door jambs will bear on floor. Complete installation before adhesive cures.

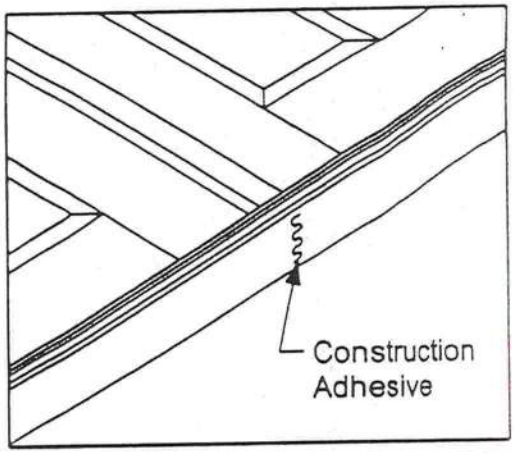

NOTE: If installing **double door** or **patio units,** place construction adhesive under mullion or point where doors meet at center. Complete installation before adhesive cures.

4 *PLACE UNIT IN OPENING AND TEMPORARILY FASTEN HINGE JAMB. DO NOT FASTEN THROUGH BRICKMOULD.*

If the jamb and head does not come with pilot holes, drill 1/8" pilot holes before using screws.

For single or double doors, note hinge locations and mark jamb faces near door surface, for fastener placement later.

Lift unit up. With top edge tilted away from opening, center unit and place sill down onto caulk beads. Tilt into place.

Work from the side of the door that is weather-stripped. (*outside* for **inswing** doors, *Inside* for **outswing** doors)

Plumb hinge side jamb both ways. Use a 6-foot level.

Use shims totaling a maximum of 1/4" thickness, not the usual 1/2".

Use 2-1/2" wood screws. Do NOT substitute nails, deck screws, or drywall screws. Place **six** #8 wood screws through jambs into "two-by" studs, at each location where shown in diagrams. **For single or double doors,** refer to marks on jambs and place fasteners *below* each hinge location, so that shims may be placed behind hinges. Fasteners will keep shims from falling down while adjustments are made.

Do not drive screws completely in at this time.

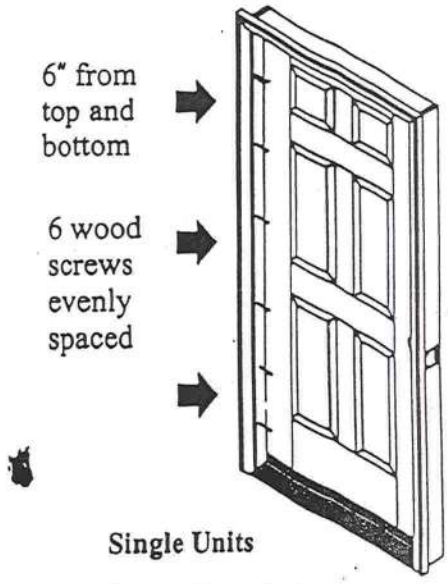

Single Units

Fasten hinge jamb.

All screws used outside should be coated or galvanized to prevent rusting and staining.

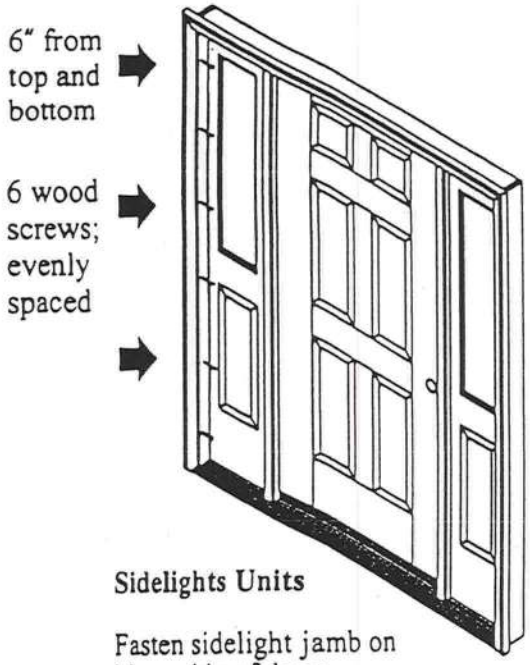

Sidelights Units

Fasten sidelight jamb on hinge side of door.

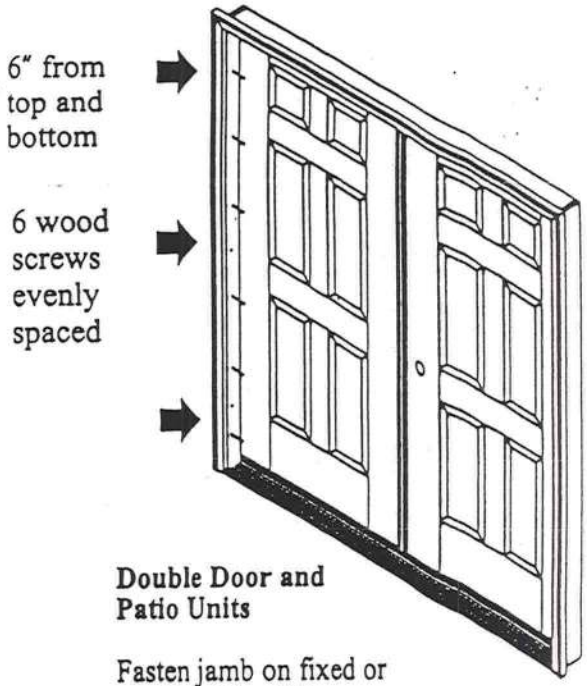

Double Door and Patio Units

Fasten jamb on fixed or passive side of door.

5 SHIM BEHIND HINGES AND SECURE HINGE JAMB.

Go through another opening to work on swing side of door.

Leave door fastened closed with transport clip.

Shim above fasteners, behind each hinge, between jamb and opening. Shim a total of 1/4" maximum per side.

Recheck hinge jamb to ensure it is plumb and straight. Use a 6-foot level.

Go back through another opening to other side of door to secure hinge jamb. Finish driving the wood screws.

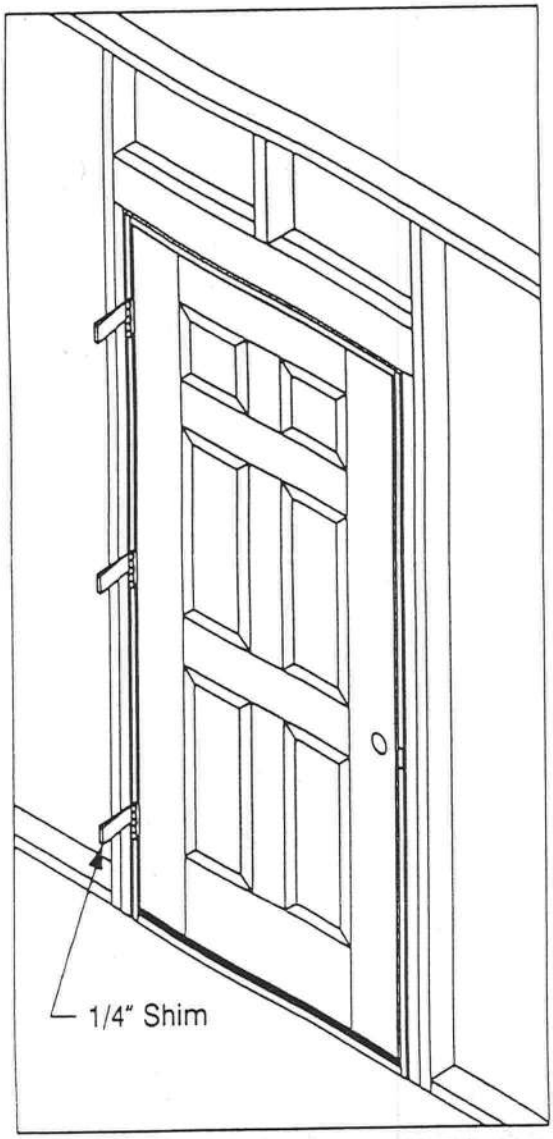

6 ADJUST REST OF FRAME AND FASTEN.

From swing side of door, shim near top and bottom of unfastened jamb.

Make frame adjustments so margins between door and frame are all even.

Adjust frame so frame face is flush with door face all around.

NOTE: For **double door units,** make adjustments that affect alignment and margins and weatherstrip contact *between doors.*

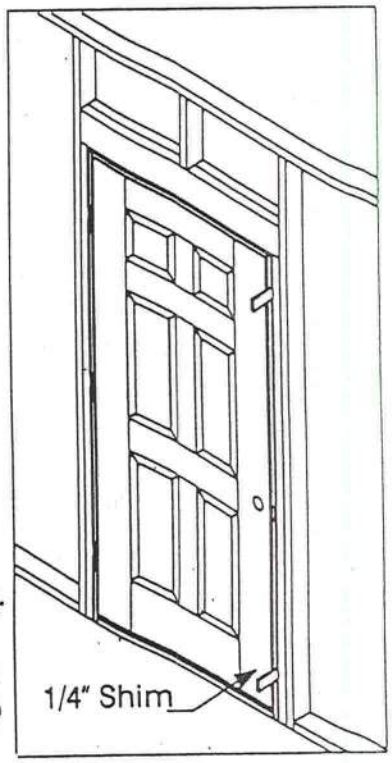

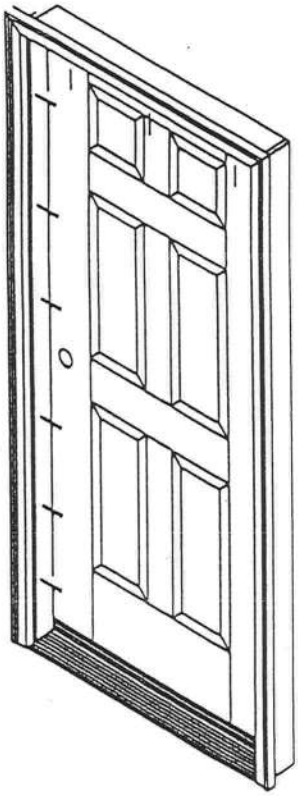

From weatherstrip side of door, check weatherstrip margins and contact.

Adjust frame as required so contact and margins are equal all around door.

Evenly space six screws per side. Review the figures on page 3.

For single doors, on the head, **use three screws** for each door: 6" from each end and at the center of the door.

When a sidelite is present, add an additional screw 3" from the end of each door and use three screws for each sidelite head: 3" from each end and 6" from door-side end. Finish driving the

7 UNCLIP AND OPEN DOOR. INSTALL HARDWARE. COMPLETE JAMB FASTENING.

Remove transport clip. Open and close door to ensure smooth operation.

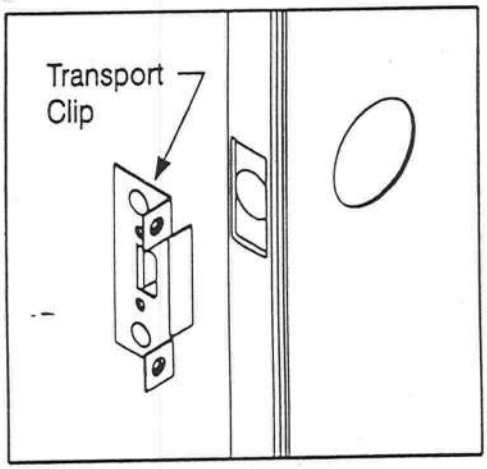

Remove small margin shim pads, located on the head and lock jambs, between door and jambs.

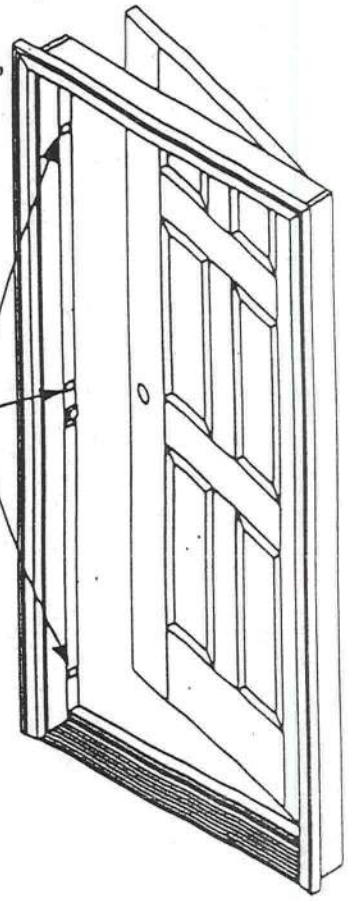

With door open, at hinges where labels indicate, drill 1/8" dia. pilot holes and fasten #10 x 2-1/2" screws (provided) through hinges to anchor door frame and prevent sagging.

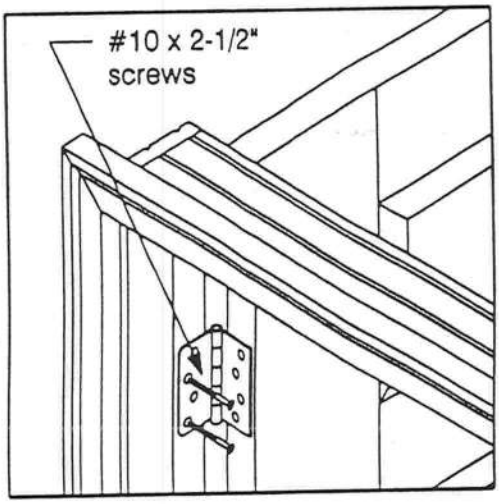

Close door. Carefully shim between jamb and opening behind latch area.

Open door and install lockset hardware.

Drill 1/8" dia. pilot holes and place (2) #8 x 2-1/2" screws (provided) through strike mounting holes to secure lock jamb center and provide security. Adjust strike in or out for proper door operation and tighten screws.

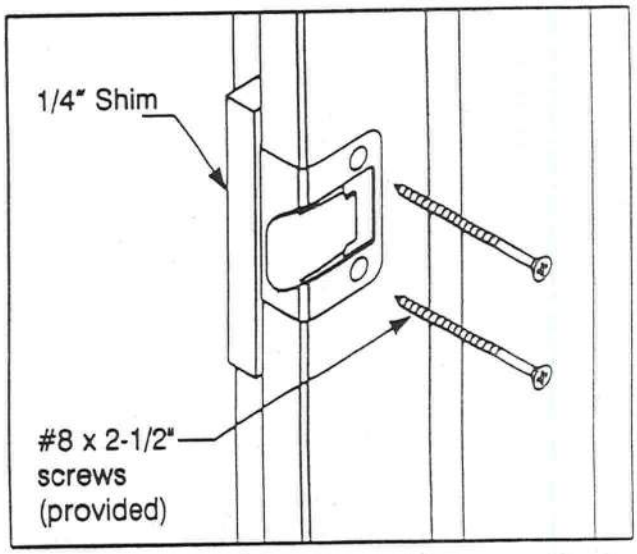

8 ANCHOR SILL, ADJUST SILL.

For sills prepared for anchor screws, place #10 screws through sill into subfloor. If not prepared, pre-drill 1/8" holes 6" from each end and at the center of each door. Countersink as needed.

If a sidelite is used, drill an additional pilot hole 3" from end where the door and sidelight meet.

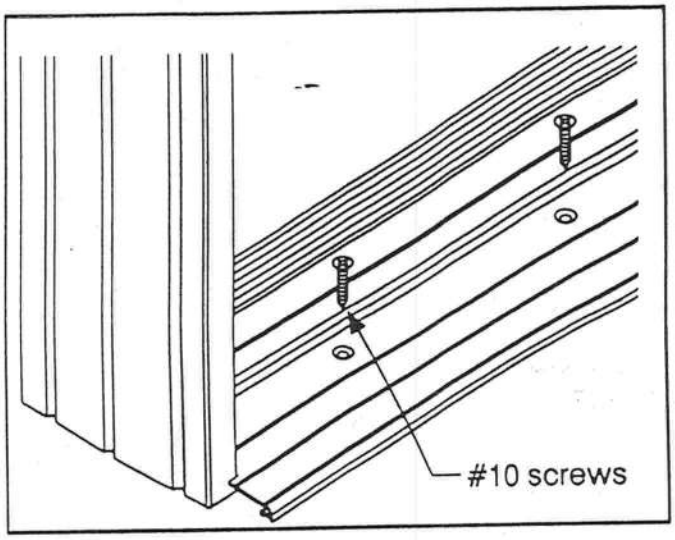

For sill with screw-adjustable thresholds, follow directions on sill to adjust threshold to meet door bottom gasket.

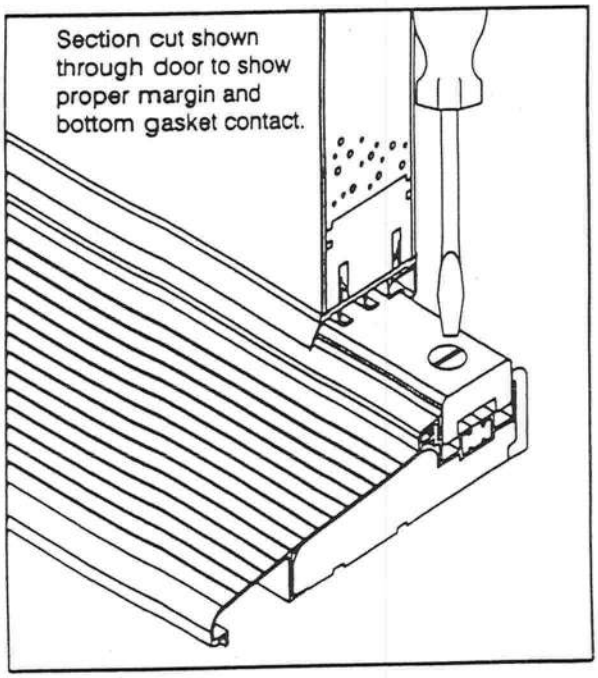

9 CHECK OR INSTALL CORNER SEAL PADS. (SWING-IN DOORS ONLY)

Corner seal pads are an important part of a swing-in door's weatherproofing integrity. Check to see that they are installed properly, in place and with sealant under the pad at the jamb and sill joint.

Self-Adjusting Sills (shop applied)

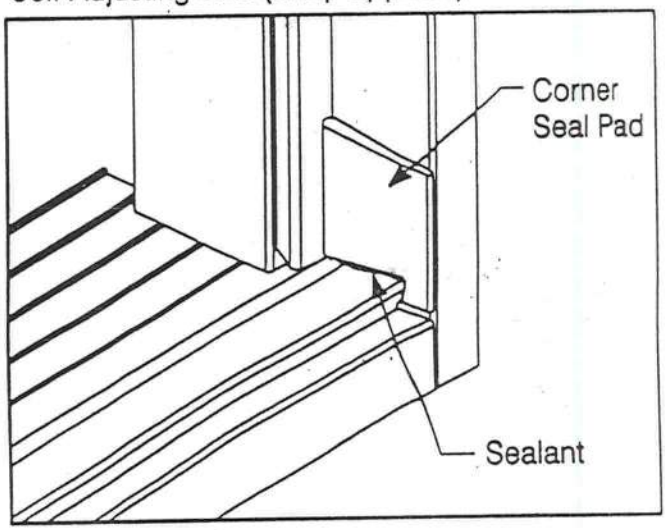

Adjustable Sills

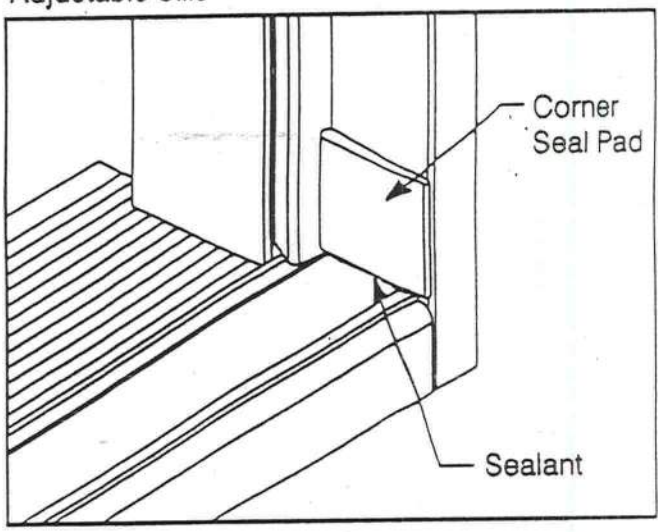

For sills with adjustable thresholds, pads are sent in a poly bag with unit, not installed. They are installed after final threshold adjustment. Follow directions with pads to install.

PROCEED TO STEP 10.

MI HOME PRODUCTS

- PRIME ALUMINUM WINDOWS -

INSTALLATION INSTRUCTIONS FOR "NAIL FIN" PRODUCTS

MI Home Products appreciates your recent purchase of a maintenance free prime window, which will not rust, rot, mildew, or warp. This is a quality product that left our factory in good condition – proper handling and installation are just as important as good design and workmanship. Please follow these recommendations to allow this product to complete its function.

1. Handle units one at a time in the closed and locked position and take care not to scratch frame or glass or to bend the nailing fin.

2. Set unit plumb and square into opening and make sure that there is 3/16" ± 1/16" clearance around the frame. Fasten unit into opening in the closed and locked position, making sure that fasteners are screwed in straight in order to avoid twisting or bowing of the frame. Make sure that sill is straight and level. Check operation of unit before any and all fasteners are set.

3. Use # 8 sheet metal or wood screws with a minimum of 1" penetration into the framing (stud). Place first screws (two at each corner) 3" from end of fin. For positive and negative DPs (design pressures) up to 35, do not exceed 24" spacing of additional screws. For DPs from 35.1 to 50, do not exceed 18". Install load bearing shim adjacent to each anchor. Use shim where space exceeds 1/16".

4. Flash over head and caulk outside perimeter in accordance with code requirements and good installation practices.

5. Fill voids between frame and construction with loose batten type insulation or non-expanding aerosol foam specifically formulated for windows and doors to eliminate drafts. The use of expanding aerosol type insulating foam, which can bow the frame, waives all stated warranties.

6. Remove plaster, mortar, paint and any other debris that may have collected on the unit and make sure that sash/vent tracks and interlocks are also clear. Do not use abrasives, solvents, ammonia, vinegar, alkaline, or acid solutions for clean-up, especially with insulated glass units as their use could cause chemical breakdown of the glass seal. Take care not to scratch glass; scratches severely weaken glass and it could eventually break from thermal expansion and contraction. Clean units with water and mild detergent as you would you automobile.

- CAUTION -

MI Home Products or its representatives are unable to control and cannot assume responsibility for the selection and placement of their products in a building or structure in a manner required by laws, statutes, and/or building codes. The purchaser is solely responsible for knowledge of and adherence to the same. MI Home Products window products are not provided with safety glazing unless specifically ordered with such. Many laws and codes require safety glazing near doors, bathtubs, and shower enclosures. Also be aware of emergency egress code requirements.

Corporate Headquarters:
650 West Market St.
Gratz, PA 17030-0370
(717) 365-3300

CENTRAL FLORIDA B.O.A.F

MANUFACTURER NAME: BETTER BILT / MI HOMES

MASTER FILE # 5

MI HOME PRODUCTS / BETTER-BILT

V83

VERTICAL MULLION DESIGN LOAD CAPACITIES

CA980512-A

FOR ALUMINUM TUBE MULLION (DIE # 5764; APROX. SIZE: 1 1/8" X 2 1/8" X 1/8")

07-Feb-2002

WHEN USED TO MULL FLANGE FRAME WINDOWS

98-0924

WDW. WTH. > MULL SPAN V	24.000	30.000	36.000	37.000	42.000	48.000	53.125
36.000	240.0	218.2	213.3	213.3	213.3	213.3	213.3
42.000	192.0	171.4	160.0	160.0	157.4	157.4	157.4
48.000	160.0	139.1	128.0	126.3	121.5	120.0	120.0
50.625	150.0	129.7	117.1	115.7	111.6	107.9	107.9
54.000	137.1	118.5	106.7	105.5	100.0	96.0	95.0
60.000	103.0	87.9	78.5	77.3	72.4	68.7	66.8
63.000	87.9	74.7	66.4	65.4	61.0	57.5	55.6
72.000	57.2	48.2	42.4	41.6	38.5	35.8	34.1

NOTES:

- CHART APPLIES ONLY TUBE MULLION #5764 WHEN USED TO VERTICAL MULL SERIES 586 PW AND / OR SERIES 770/774/780/784 SH WINDOWS.
- READ WINDOW WIDTH AND MULL SPAN IN INCHES.
- WINDOW WIDTH DIMENSIONS REPRESENT THE WIDTH OF EACH WINDOW IN A SINGLE OPENING, NOT THE OVERALL WIDTH OF THE OPENING.
- DESIGN PRESSURE VALUES ARE NOT LIMITED TO TWO WINDOWS IN A SINGLE OPENING, AND APPLY WHERE ANY NUMBER OF MULLIONS ARE EMPLOYED IN A SINGLE OPENING.
- DESIGN PRESSURE VALUES ON THIS CHART ARE IN PSF.
- Dmax = L/175
- MULLION MUST BE ANCHORED TO SUBSTRATE WITH CLIP NUMBER SECT5795 USING TWO #10 X 1-1/2 SCREWS IN WOOD OR TWO 3/16 IN DIA. X 1-1/2 RAWL TAPPERS OR APPROVED EQUAL IN MASONRY OR CONCRETE.

PREPARED BY:
PRODUCT & APPLICATION ENGINEERING, INC.
250 INTERNATIONAL PARKWAY
SUITE 250
HEATHROW, FLORIDA 32746
PHONE 407 805-0365 / FAX 407 805-0366

CENTRAL FLORIDA B.O.A.F.
MANUFACTURER NAME
BETTER BILT / MI HOMES
MASTER FILE # 8

12-12-02

The tested specimen meets (or exceeds) the performance levels specified in Table 2.1 of AAMA/NWWDA 101/I.S.2-97 for air infiltration. The listed results were secured by using the designated test methods and indicate compliance with the performance requirements of the referenced specification paragraphs for the SGD-C35 product designation.

Detailed drawings were available for laboratory records and compared to the test specimen at the time of this report. A copy of this report along with representative sections of the test specimen will be retained by NCTL for a period of four (4) years. The results obtained apply only to the specimen tested. No conclusions of any kind regarding the adequacy or inadequacy of the glass in the test specimen may be drawn from this test. This report does not constitute certification of the product which may only be granted by a certification program validator.

Michael E. Lane

MICHAEL E. LANE
Division Manager

Series V83 'STRUCTURAL' VERTICAL MULLION - Florida Flange

740/744

Step 1. Caulk inside mull as shown to seal frame jambs.

Step 2. Place windows and mullions together as shown below.

Step 3. Using the pre-punched installation holes in window jambs as a drill guide, drill 1/8" holes into mullions.

Step 4. Attach windows to mullion using # 8 x 3/4" sheet metal screws (not included) through drilled holes as shown below. To avoid jamb distortion, do not overtighten screws.

Step 5. Caulk any voids to prevent any leakage.

Step 6. Before lifting into rough opening, drill two holes in each clip and insert into each end of mull as shown below.

CENT ... FLO

MASTER FILE # 8

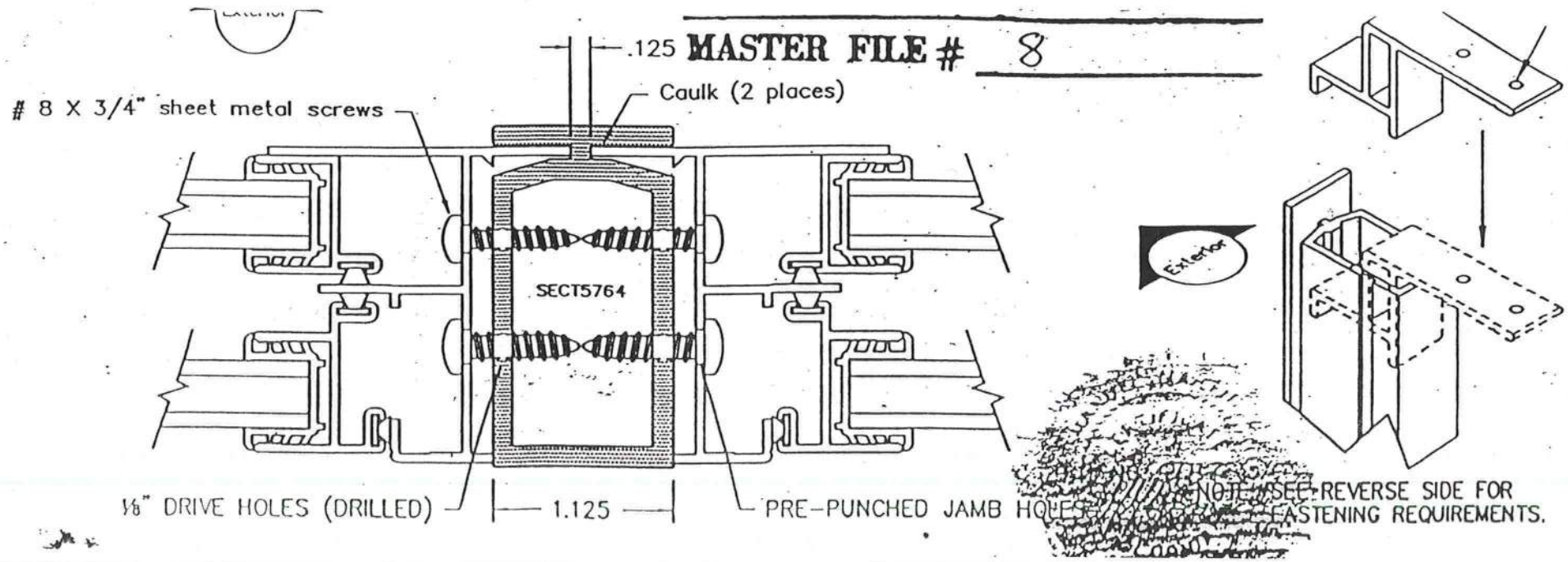

MULLV83A

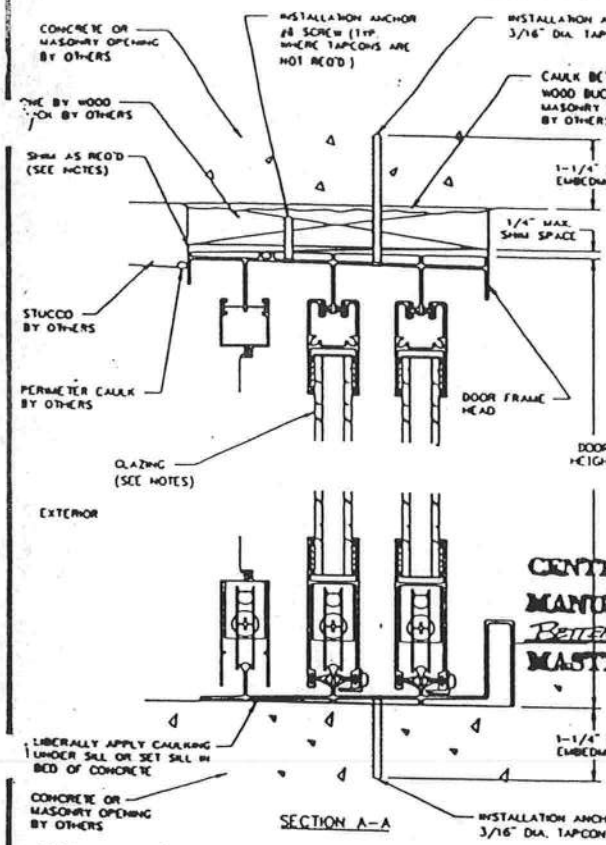

SECTION A-A

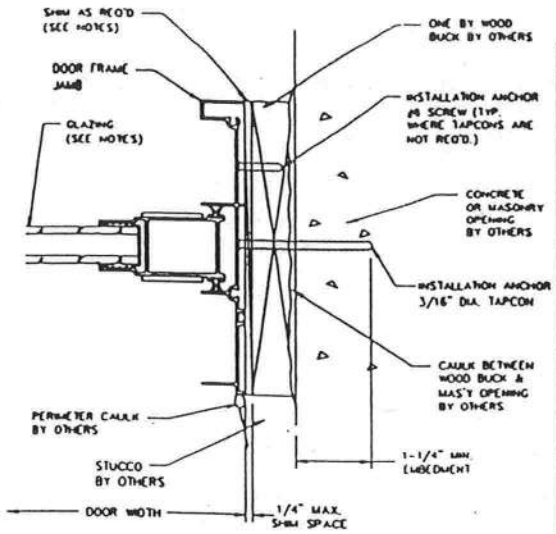

SECTION B-B

TAPCON INSTALLATION CHART

CALL SIZE	DOOR SIZE	LOCATION IN HEAD & SILL			EA. JAMB	QT'Y IN HOOK STRIP		
		UP TO 45 PSF DP	46 PSF TO 60 PSF DP	61 PSF TO 70 PSF DP	UP TO 70 PSF DP	UP TO 45 PSF DP	46 PSF TO 60 PSF DP	61 PSF TO 70 PSF DP
5068 XO, OX, XX	60 X 80	3	3	3	4	3	4	4
6068 XO, OX, XX	72 X 80	4	4	4	4	3	4	5
8068 XO, OX, XX	96 X 80	5	5	5	4	3	4	5
10068 XO, OX, XX	120 X 80	6	6	7	4	3	4	5
5080 XO, OX, XX	60 X 96	3	3	3	5	4	5	6
6080 XO, OX, XX	72 X 96	3	3	3	5	4	5	6
8080 XO, OX, XX	96 X 96	4	4	5	5	4	6	6
10080 XO OR XX	120 X 96	6	6	7	5	4	6	6
7668 OXO	91-3/4 X 80	5	5	5	4	3	4	5
9068 OXO	109-3/4 X 80	5	5	6	4	3	4	5
12068 OXO	145-3/4 X 80	7	7	9	4	3	4	5
15068 OXO	181-3/4 X 80	8	10	11	4	3	4	5
7680 OXO	91-3/4 X 96	5	5	5	5	4	6	6
9080 OXO	109-3/4 X 96	5	5	6	5	4	6	6
12080 OXO	145-3/4 X 96	7	8	9	5	4	6	6
15080 OXO	181-3/4 X 96	8	11	13	5	4	6	6
7668 XIX	88-9/16 X 80	5	5	5	4	3	4	5
9068 XIX	106-9/16 X 80	5	5	6	4	3	4	5
12068 XIX	142-9/16 X 80	7	7	8	4	3	4	5
15068 XIX	178-9/16 X 80	8	10	11	4	3	4	5
7680 XIX	88-9/16 X 96	5	5	5	5	4	6	6
9080 XIX	106-9/16 X 96	5	5	6	5	4	6	6
12080 XIX	142-9/16 X 96	7	8	9	5	4	6	6
15080 XIX	178-9/16 X 96	8	11	13	5	4	6	6
10068 OXXO, XXXX	120-3/8 X 80	6	6	7	4	3	4	5
12068 OXXO, XXXX	144-3/8 X 80	7	7	8	4	3	4	5
16068 OXXO, XXXX	192-3/8 X 80	9	10	12	4	3	4	5
10080 OXXO, XXXX	120-3/8 X 96	6	6	7	5	4	6	6
12080 OXXO, XXXX	144-3/8 X 96	7	8	9	5	4	6	6
16080 OXXO, XXXX	192-3/8 X 96	9	12	14	5	4	6	6

CENTRAL FLORIDA B.O.A.F.

MANUFACTURER NAME: *BETTER BILT / MI HOMES*

MASTER FILE # 1

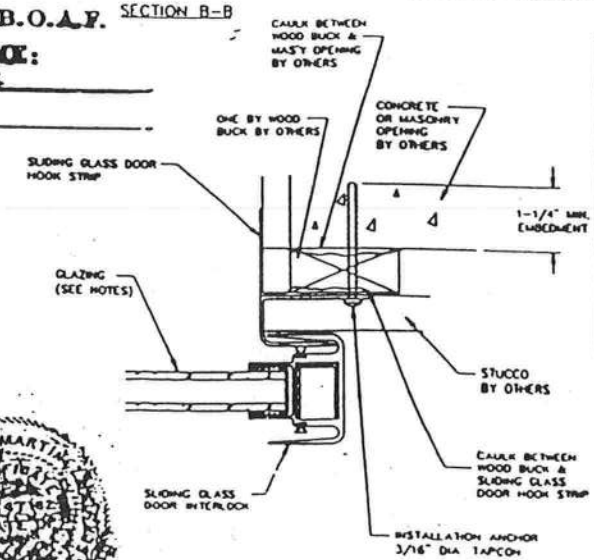

HOOK STRIP DETAIL

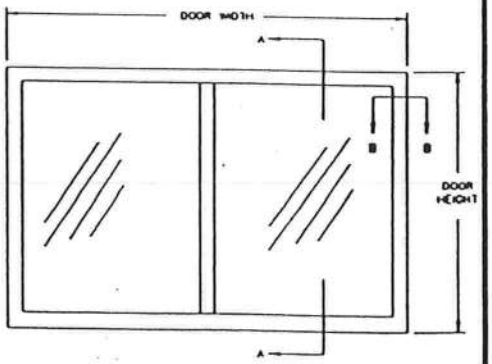

EXTERIOR ELEVATION

NOTES:

1) DOOR MATERIAL: ALUMINUM ALLOY 6063.
2) TAPCON TYPE INSTALLATION ANCHORS MUST BE OF SUFFICIENT LENGTH TO ACHIEVE MIN. EMBEDMENT OF 1-1/4" INTO MASONRY OR CONCRETE.
3) ALTERNATE TAPCON INSTALLATION ANCHORS FRONT TO BACK IN ALL FRAME MEMBERS.
4) USE LATEX CAULK FOR PERIMETER SEAL AROUND EXTERIOR OF DOOR.
5) IF EXACT DOOR SIZE IS NOT LISTED IN ANCHOR CHART, USE ANCHOR QUANTITY LISTED WITH NEXT LARGER SIZE, FOR THE APPROPRIATE DESIGN PRESSURE REQ'D.
6) FOR POCKET DOOR SIZES USE CLOSEST BYPASS DOOR SIZE & CONFIGURATION TO FINISHED OPENING.
7) INSULATED GLASS SHOWN. SINGLE GLAZING ALSO APPROVED. TEMPERED GLASS THICKNESS MAY VARY PER REQUIREMENTS OF ASTM E1300 GLASS CHARTS.
8) ALL FACTORY APPLIED HOLES NOT DESIGNED FOR TAPCON ANCHOR SHOULD BE FILLED WITH #8 SCREWS OF SUFFICIENT LENGTH TO PROVIDE MIN. 3/8" EMBEDMENT INTO WOOD BUCK.
9) JAMB / SILL CORNERS ARE TO BE SEALED WITH A SMALL JOINT BEAD SEALER.
10) SHIM AS REQ'D. AT EA. SET OF INSTALLATION ANCHORS. MAX ALLOWABLE SHIM STACK TO BE 1/4".
11) ALL INSTALLATION ANCHORS MUST BE MADE OF CORROSION RESISTANT MATERIALS.
12) WHERE "X" REPRESENTS MOVING PANEL AND "O" REPRESENTS FIXED PANEL APPROVED CONFIGURATIONS ARE AS LISTED ON INSTALLATION CHART.
13) NOT ALL CONFIGURATIONS LISTED ABOVE ARE SHOWN ON THIS DRAWING, HOWEVER INSTALLATION SECTIONS "A-A", "B-B" & HOOK STRIP DETAIL APPLY TO INSTALLATION OF ALL APPROVED CONFIGURATIONS.
14) MAX ALLOWABLE SPACING BETWEEN TAPCON ANCHORS TO BE 24" O.C.
15) SERIES 420 SLIDING GLASS DOOR IS SHOWN. THIS DETAIL ALSO APPLIES TO 430 & 440 SERIES.
16) WHERE DOOR IS INSTALLED IN WOOD FRAME STRUCTURE, USE #8 SCREWS OF SUFFICIENT LENGTH TO ACHIEVE 1-3/8" MIN. EMBEDMENT INTO SUBSTRATE. PLACE #8 SCREWS 6" FROM CORNERS & 24" O.C. MAX.

MANUEL MARTINEZ STATE OF FLORIDA 47182 STATE REGISTERED CIVIL ENGINEER

MI HOME PRODUCTS GRATZ, PA.		
TITLE: SERIES 420/430/440 SLIDING GLASS DOOR INSTALLATION WITH TAPCONS		
ENGINEER: MANUAL MARTINEZ	DRN: BB	DATE: 12/13/01
DISCIPLINE: CIVIL	SCALE: N.T.S.	DWG NO: MHP0013
FL REG NO 47182	REV LETTER	SHEET 1 OF 1

Cellu - Jacket

pg 1 of 2

REV	DATE	BY	DESCRIPTION
A-A	11-10-00	DM	ALL E&L B17

NOTES:

1. TESTED TO POSITIVE AND NEGATIVE 25 PSF DESIGN AND POSITIVE AND NEGATIVE 37.5 PSF TEST PRESSURES PER ASTM E-330
2. MAXIMUM SECTION HEIGHT = 21"
3. SECTION HEIGHTS OF 21.00" AND 19.50" ARE AVAILABLE AND MAY BE USED IN ANY COMBINATION TO ACHIEVE VARIOUS DOOR HEIGHTS
4. WINDOWS MAY BE INSTALLED IN THE TOP SECTION (AS TESTED WITH 1/8" DSB GLASS OR EQUIVALENT) OR IN THE SECTION IMMEDIATELY BELOW THE TOP SECTION
5. MINIMUM LENGTH OF ROLLER STEM IS 3.1" (7" AS TESTED)
6. THE STRUT PLACEMENT ON DOOR MUST BE CONSISTENT WITH THE DOOR SHOWN
7. STRUTS SECURED AT ALL LOCATIONS WITH TEK SCREWS
8. QUANTITY OF SIDE LOCKS CAN BE 0, 1, OR 2 AS TESTED.
9. △ DROP IN TYPE OF INSULATION IS OPTIONAL

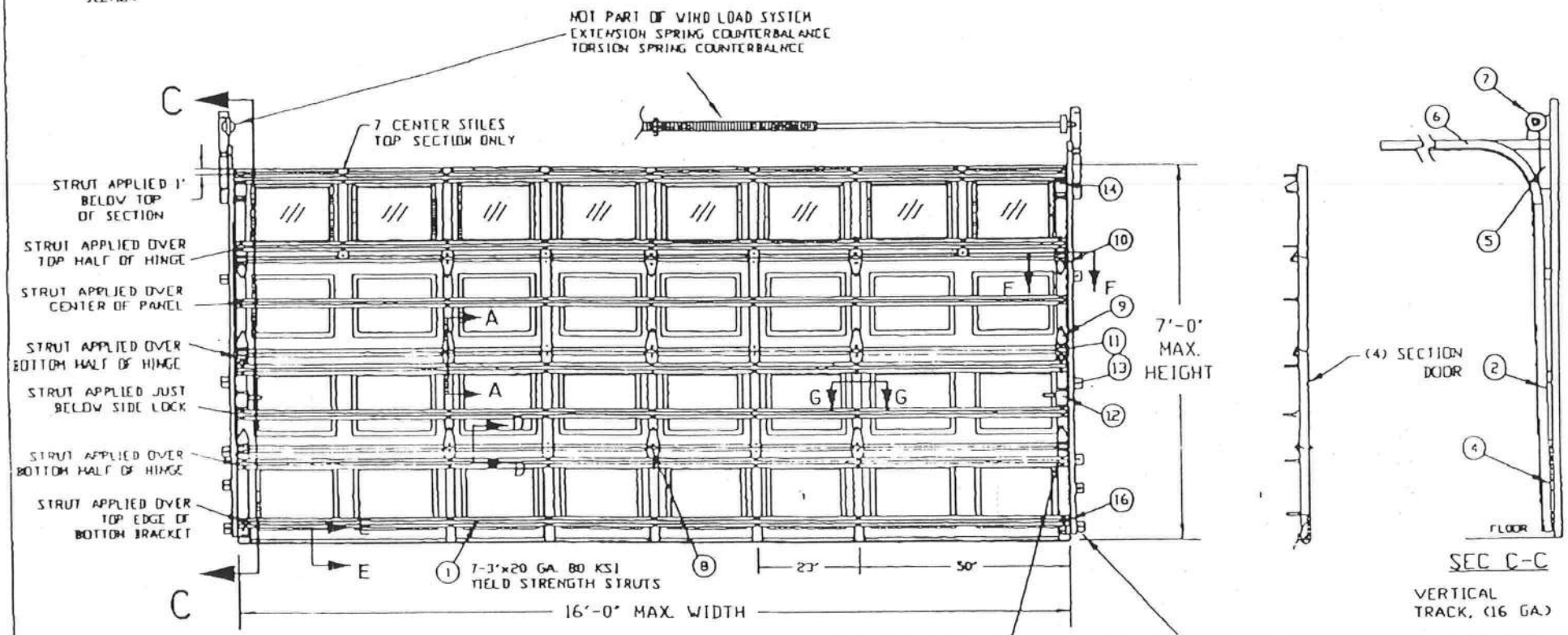

INSIDE ELEVATION

LISTED SBCI PST&CSI

REPORT No. 2202

TEST REPORTS ON FILE VIDEO 11/7/00 (00312)

DESIGN LOAD +25.0 PSF & -25.0 PSF
TEST LOAD +37.5 PSF & -37.5 PSF

GADCO DOORS
SERIES 7400, EXTERIOR STEEL = .017 MIN (AS TESTED)
SERIES 7825, EXTERIOR STEEL = .019" MIN △
SERIES 7524, EXTERIOR STEEL = .024" MIN △
(TESTED) WITH WINDOWS

MAXIMUM DOOR WIDTH	MAXIMUM DOOR HEIGHT	TYPICAL CTR. STILE SPACING	STRUTS 80 KSI		VERTICAL TRACK
			TOP	DTL	
16'	7'	23"	3"	7	2 IN

GADCO

GENERAL AMERICAN DOOR COMPANY
5050 BASELINE ROAD
MONTGOMERY, IL 60538

SCALE: 1:20 | APPROVED BY: | DRAWN BY: B. VITEMAN
DATE: 11-7-00 | REVISED (A) 11-10-00
DESCRIPTION: 16' x 7' MAX RAISED PANEL STEEL DOOR - WIND LOAD ±25 PSF
PART NAME: PAGE 1 OF 2 | DRAWING NUMBER: V1107-1

SEAL
PE No. 024280
NORTH CAROLINA PROFESSIONAL ENGINEER
ROBERT R. KEETYAN

The seal on this drawing only certifies that the product(s) illustrated and described herein represent the configuration(s), dimensions and installation(s) of the door as tested.

pg. 2 of 2

REV.	DATE	BY	DESCRIPTION
A	11-27-00	DMK	SEE ECN 8375
B	12-1-00	DMK	SEE ECN 8377

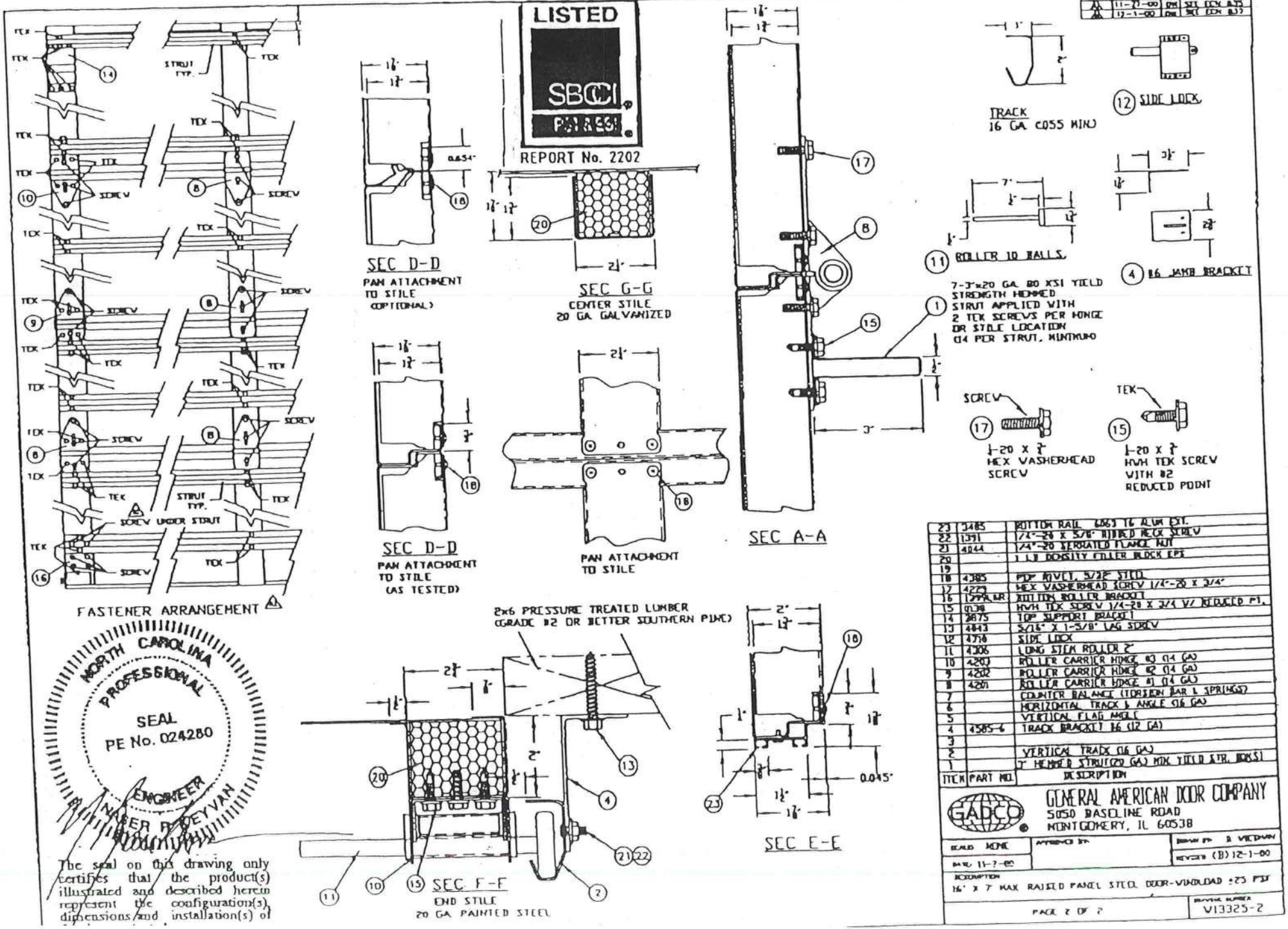

ITEM	PART NO.	DESCRIPTION
23	3485	BOTTOM RAIL 6063 T6 ALUM EXT.
22	1391	1/4"-20 X 5/8" RIBBED HEX SCREW
21	4044	1/4"-20 SERRATED FLANGE NUT
20		1 LB DENSITY FILLER BLOCK EPS
19		
18	4385	PDP ADV(T), 5/32" STEEL
17	4220	HEX WASHERHEAD SCREW 1/4"-20 X 3/4"
16	1299A,BR	BOTTOM ROLLER BRACKET
15	0138	HWH TEK SCREW 1/4-20 X 3/4 W/ REDUCED PT.
14	3875	TOP SUPPORT BRACKET
13	4843	5/16" X 1-5/8" LAG SCREW
12	4710	SIDE LOCK
11	4306	LONG STEM ROLLER 2"
10	4203	ROLLER CARRIER HINGE #3 (14 GA)
9	4202	ROLLER CARRIER HINGE #2 (14 GA)
8	4201	ROLLER CARRIER HINGE #1 (14 GA)
7		COUNTER BALANCE (TORSION BAR & SPRINGS)
6		HORIZONTAL TRACK & ANGLE (16 GA)
5		VERTICAL FLAG ANGLE
4	4585-6	TRACK BRACKET 16 (12 GA)
3		
2		VERTICAL TRACK (16 GA)
1		7" HEMMED STRUT(20 GA) MIN. YIELD STR. (80KSI)

GADCO
GENERAL AMERICAN DOOR COMPANY
5050 BASELINE ROAD
MONTGOMERY, IL 60538

SCALE NONE | APPROVED BY | DRAWN BY B. VIEDMAN
DATE 11-7-00 | REVISED (B) 12-1-00
DESCRIPTION
16' X 7' MAX RAISED PANEL STEEL DOOR-WINDLOAD ±25 PSF

PAGE 2 OF 2 | DRAWING NUMBER V13325-2

12/23/2003 03 23 1 00

GAF

"Quality You Can Trust Since 1886...from North America's Largest Roofing Manufacturer"

Codes and Testing Update

Number: CTU 03-03

TO: GAFMC Florida Steep Slope Sales Team, Certified Florida Contractors

FROM:
Christiane Smith
Codes and Testing Specialist
Email: chsmith@gaf.com

Date: 11/21/03

STATE OF FLORIDA PRODUCT APPROVAL

Background:	Beginning on 1 October 2003 the State of Florida implemented the Florida Product Approval System. The goal of this system was to provide uniformity and consistency in the enforcement of the Florida Building Code
Product Evaluation:	Products covered by the Florida Building Commission's rules are evaluated by nationally accredited and state approved entities or by state licensed engineers and architects in order to demonstrate compliance with the Florida Building Code.
Is state approval required?	No. Products may be evaluated and approved by the building officials within a local jurisdiction.
If a product has a state approval, are local jurisdictions required to accept the product?	Yes and No. Once the Florida Building Commission has approved a product, it must be accepted by local jurisdictions. However, certain jurisdictions (such as Dade County) have enhanced performance requirements and therefore local approval is still necessary. In other words, a valid Dade County Product Control Notice of Acceptance will still be required within the jurisdiction of the Miami Dade Building Code Compliance Office.
Is there documentation provided as part of the state approval?	No. Each approval is assigned an approval number; no specific document is issued by the State of Florida. All approved products are listed on the Florida Department of Community Affairs Building Code Information System web site at http://www.floridabuilding.org/. Each listing contains the manufacturer's approval number, basic information, product information, and supporting documentation.

Which GAFMC products and systems are approved?	
Roof System	**Florida State Approval #**
1. **GAFMC Fiberglass Asphalt Shingles:** Country Mansion™, Country Estates™, Grand Canyon™, Grand Sequoia®, Grand Slate™, Slateline®, Jumbo Royal Sovereign®, Timberline® Ultra, Timberline® Select 40™, Timberline® 30, Marquis® WeatherMax®, Royal Sovereign® and Sentinel®	1. FL183
2. **GAFMC Underlayments:** Weather Watch®, StormGuard™, Metal Mate™ and Liberty™ Base/Ply Sheet	2. FL196
3. **Cobra Ventilation Products:** Cobra® Ridge Vent, Cobra® Ridge Vent (nail gun application) and Cobra® Rigid Vent II™	3. FL197

MIAMI-DADE

BUILDING CODE C MPLIANCE OFFICE (BCCO)
PRODUCT CONTRI . DIVISION

MIAMI-DADE COUNTY, FLORIDA
METRO-DADE FLAGLER BUILDING
140 WEST FLAGLER STREET, SUITE 1603
MIAMI, FLORIDA 33130-1563
(305) 375-2901 FAX (305) 375-2908

NOTICE OF A CEPTANCE (NOA)

GAF Materials C rporation
1361 Alps Road.
Wayne, NJ 07470

SCOPE:

This NOA is bein ssued under the applicable rules and regulations governing the use of construction materials. The documentatio submitted has been reviewed by Miami-Dade County Product Control Division and accepted by the Board of R s and Appeals (BORA) to be used in Miami Dade County and other areas where allowed by the Authority Hav g Jurisdiction (AHJ).

This NOA shall n be valid after the expiration date stated below. The Miami-Dade County Product Control Division (In Miam Dade County) and/or the AHJ (in areas other than Miami Dade County) reserve the right to have this product material tested for quality assurance purposes. If this product or material fails to perform in the accepted mann , the manufacturer will incur the expense of such testing and the AHJ may immediately revoke, modify, or uspend the use of such product or material within their jurisdiction. BORA reserves the right to revoke this acce ance, if it is determined by Miami-Dade County Product Control Division that this product or material fails to m t the requirements of the applicable building code.

This product is ap oved as described herein, and has been designed to comply with the High Velocity Hurricane Zone of the Florid Building Code.

DESCRIPTION: GAF Royal Sovereign Shingle

LABELING: Eac unit shall bear a permanent label with the manufacturer's name or logo, city, state and following statem "Miami-Dade County Product Control Approved", unless otherwise noted herein.

RENEWAL of th NOA shall be considered after a renewal application has been filed and there has been no change in the appl ible building code negatively affecting the performance of this product.

TERMINATION f this NOA will occur after the expiration date or if there has been a revision or change in the materials, use, and r manufacture of the product or process. Misuse of this NOA as an endorsement of any product, for sales, lvertising or any other purposes shall automatically terminate this NOA. Failure to comply with any section o his NOA shall be cause for termination and removal of NOA.

ADVERTISEME T: The NOA number preceded by the words Miami-Dade County, Florida, and followed by the expiration date ay be displayed in advertising literature. If any portion of the NOA is displayed, then it shall be done in its entir y.

INSPECTION: A opy of this entire NOA shall be provided to the user by the manufacturer or its distributors and shall be availa c for inspection at the job site at the request of the Building Official.

This NOA consist f pages 1 through 3.
The submitted doc entation was reviewed by Frank Zuloaga, RRC

MIAMI-DADE

BUILDING CODE CC IPLIANCE OFFICE (BCCO)
PRODUCT CONTR L DIVISION

MIAMI-DADE COUNTY, FLORIDA
METRO-DADE FLAGLER BUILDING
140 WEST FLAGLER STREET, SUITE 1603
MIAMI, FLORIDA 33130-1563
(305) 375-2901 FAX (305) 375-2908

NOTICE OF AC EPTANCE (NOA)

GAF Materials Co .
1361 Alps Rd.
Wayne, NJ 07470

SCOPE:
This NOA is being ued under the applicable rules and regulations governing the use of construction materials. The documentation bmitted has been reviewed by the BCCO and accepted by the Building Code and Product Review Committee t be used in Miami Dade County and other areas where allowed by the Authority Having Jurisdiction (AHJ).

This NOA shall not e valid after the expiration date stated below. The BCCO (In Miami Dade County) and/or the AHJ (in areas other han Miami Dade County) reserve the right to have this product or material tested for quality assurance purposes. f this product or material fails to perform in the accepted manner, the manufacturer will incur the expense of such esting and the AHJ may immediately revoke, modify, or suspend the use of such product or material within thei urisdiction. BCCO reserves the right to revoke this acceptance, if it is determined by BCCO that this product or aterial fails to meet the requirements of the applicable building code.

This product is appr ved as described herein, and has been designed to comply with the South Florida Building Code, 1994 Edition r Miami-Dade County or Florida Building Code.

DESCRIPTION: 1 mberline 30

RENEWAL of this NOA shall be considered after a renewal application has been filed and there has been no change in the applic le building code negatively affecting the performance of this product.

TERMINATION this NOA will occur after the expiration date or if there has been a revision or change in the materials, use, and/c manufacture of the product or process. Misuse of this NOA as an endorsement of any product, for sales, ac ertising or any other purposes shall automatically terminate this NOA. Failure to comply with any section of this N A shall be cause for termination and removal of NOA.

ADVERTISEME : The NOA number preceded by the words Miami-Dade County, Florida, and followed by the expiration date may e displayed in advertising literature. If any portion of the NOA is displayed, then it shall be done in its entirety.

INSPECTION: A py of this entire NOA shall be provided to the user by the manufacturer or its distributors and shall be available fo nspection at the job site at the request of the Building Official.

This NOA consists pages 1 through 3.
The submitted docu mitation was reviewed by Frank Zuloaga, RRC

ROOFING A EMBLY APPROVAL

Category:	Roofing
Sub-Category:	07310 Asphalt Shingles
Materials	3-Tab
Deck Type:	Wood

1. SCOPE

This renews GA Royal Sovereign Shingle as manufactured by GAF Materials Corp described in Section 2 of this Notice of cceptance.

2. PRODUCT ESCRIPTION

Product	Dimensions	Test Specifications	Product Description
GAF Royal Sove gn	12" x 36"	PA 110	Fiberglas reinforced heavy weight asphalt roof shingle, with a 3-Tab profile

3. EVIDENCE UBMITTED:

Test	gency	Test Identifier	Test Name/Report	Date
Center for Applie	Engineering	PA 100		02/23/94
Underwriters Lab	atories, Inc.	PA 107	Modifed ASTM D 3161	04/13/94
Underwriters Lab	atories, Inc.	ASTM 3462	ASTM D3462	03/26/94
Center for Applie	Engineering	257966	ASTM D3462	03/21/97

4. LIMITATIO S

4.1 F classification is not part of this acceptance; refer to a current Approved Roofing M terials Directory for fire ratings of this product.

4.2 Sl ll not be installed on roof mean heights in excess of 33 ft.

5. INSTALLA ON

5.1 Sl ngles shall be installed in compliance with Roofing Application Standard RAS 115.

5.2 Fl shing shall be in accordance with Roofing Application Standard RAS 115

5.3 Tl manufacturer shall provide clearly written application instructions.

5.4 E osure and course layout shall be in compliance with Detail 'A', attached.

5.5 N ling shall be in compliance with Detail 'B', attached.

6. LABELING

6.1 Sl ngles shall be labeled with the Miami-Dade Logo or the wording "Miami-Dade County Pr luct Control Approved".

7. BUILDING P RMIT REQUIREMENTS

7.1 A lication for building permit shall be accompanied by copies of the following:

7.1.1 This Notice of Acceptance.

7.1.2 Any other documents required by the Building Official or the applicable code in order to properly evaluate the installation of this system.

DETAIL "A"

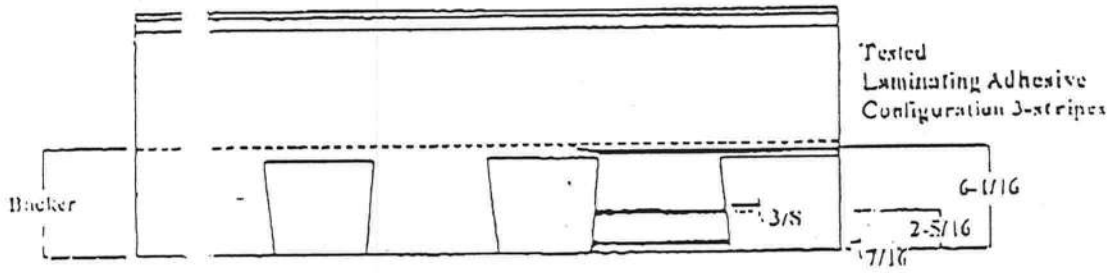

DETAIL "B"

Back of Shingle

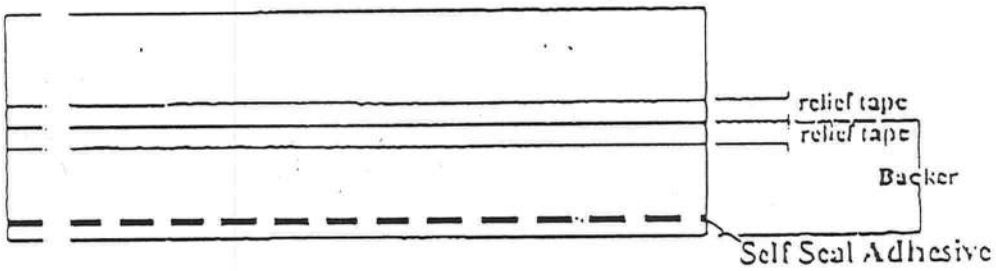

Face of Shingle

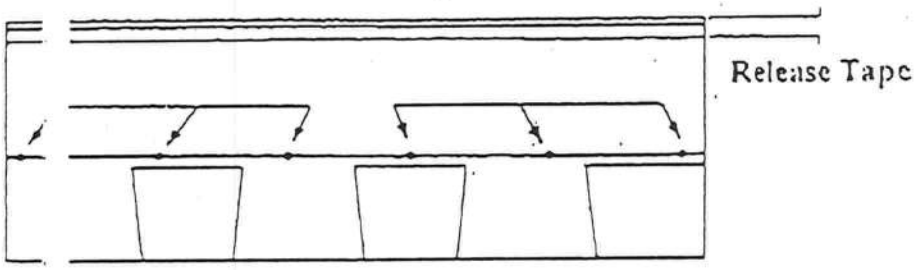

END OF THIS ACCEPTANCE

ROOFING A SEMBLY APPROVAL

Category: Roofing
Sub-Category: 07310 Asphalt Shingles

Materials 3-Tab
Deck Type: Wood

1. SCOPE
This renews C F Royal Sovereign Shingle as manufactured by GAF Materials Corp described in Section 2 of this Notice Acceptance.

2. PRODUC DESCRIPTION

Produc	Dimensions	Test Specifications	Product Description
GAF Royal So reign	12" x 36"	PA 110	Fiberglas reinforced heavy weight asphalt roof shingle, with a 3-Tab profile

3. EVIDEN E SUBMITTED:

I t Agency	Test Identifier	Test Name/Report	Date
Center for App ed Engineering	PA 100		02/23/94
Underwriters l boratories, Inc.	PA 107	Modifed ASTM D 3161	04/13/94
Underwriters l boratories, Inc.	ASTM 3462	ASTM D3462	03/26/94
Center for Ap ed Engineering	257966	ASTM D3462	03/21/97

4. LIMITA ONS
4.1 Fire classification is not part of this acceptance; refer to a current Approved Roofing Materials Directory for fire ratings of this product.
4.2 Shall not be installed on roof mean heights in excess of 33 ft.

5. INSTALL TION
5.1 Shingles shall be installed in compliance with Roofing Application Standard RAS 115.
5.2 Flashing shall be in accordance with Roofing Application Standard RAS 115
5.3 The manufacturer shall provide clearly written application instructions.
5.4 Exposure and course layout shall be in compliance with Detail 'A', attached.
5.5 Nailing shall be in compliance with Detail 'B', attached.

6. LABELI G
6.1 Shingles shall be labeled with the Miami-Dade Logo or the wording "Miami-Dade County Product Control Approved".

7. BUILDI G PERMIT REQUIREMENTS
7.1 Application for building permit shall be accompanied by copies of the following:
7. 1 This Notice of Acceptance.
7. 2 Any other documents required by the Building Official or the applicable code in order to properly evaluate the installation of this system.

DETAIL A

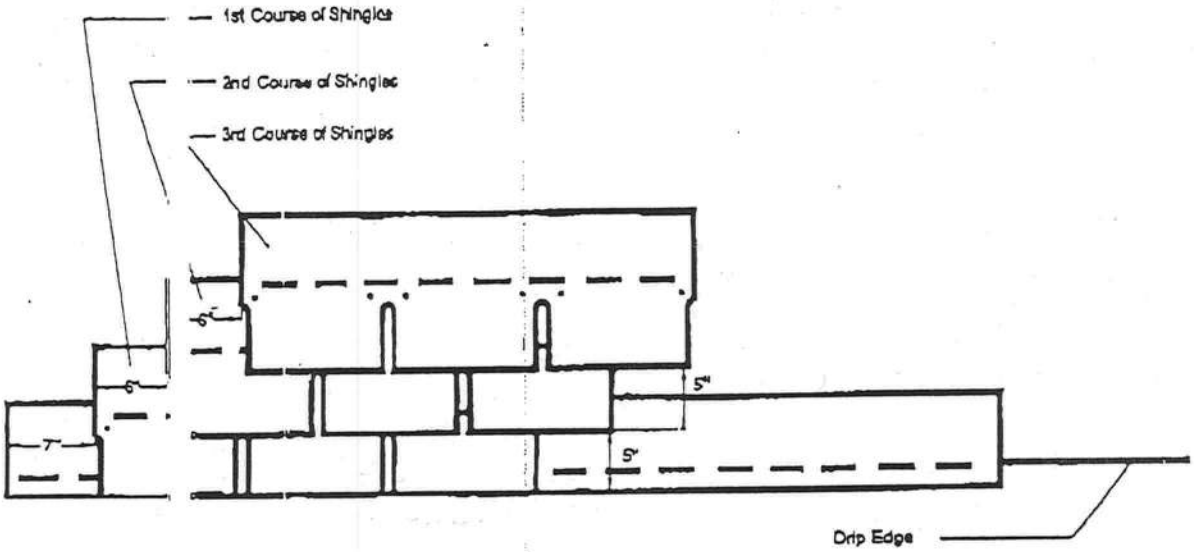

DETAIL B

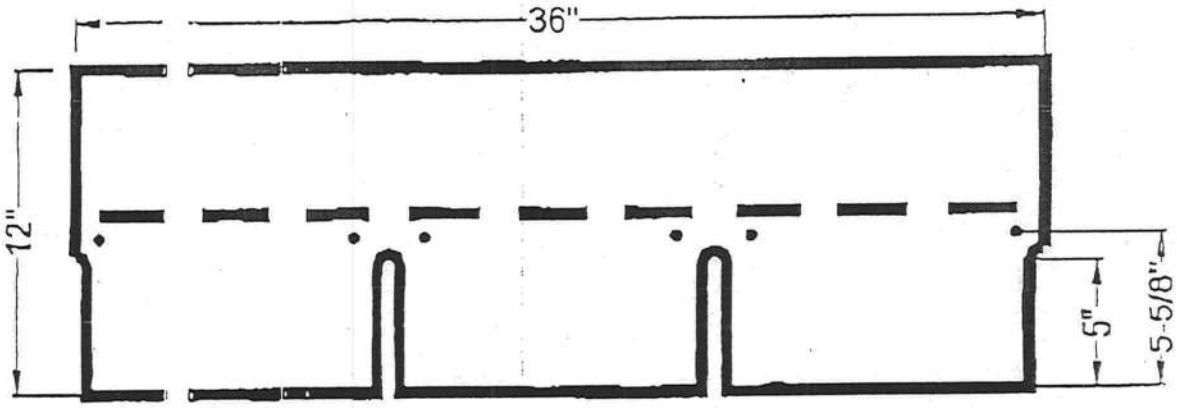

END OF THIS ACCEPTANCE

NOA No.:03-0219.04
Expiration Date: 04/22/08
Approval Date: 04/03/03
Page 3 of 3

Ridgway Roof Truss Company

(Trusses and Prefabricated Building Components)

Mailing: P.O. Box 1309 – Gainesville, Florida 32602
Physical: 235 SW 11th Place – Gainesville, Florida 32601

Telephone: (352) 376-4436
FAX: (352) 371-3316

Email: Sales@RidgwayTruss.com
www.RidgwayTruss.com

WARNING

THESE TRUSSES MUST BE HANDLED ACCORDING TO BCSI-B1 SUMMARY SHEETS

SEE TABLE OF CONTENTS

SEALED

DESIGN MANUAL

PROJECT NAME: STEWART RESIDENCE
JOB NUMBER: 05-0886
CONTRACTOR: EDIX INVESTMENTS
DATE: 09/16/2005
REVISIONS:
COMMENTS:

RIDGWAY ROOF TRUSS COMPANY

P.O. BOX 1309 GAINESVILLE, FL 32602, TELEPHONE: (352) 376-4436 FAX: (352) 371-3316

Job: **STEWART RESIDENCE**

Customer: **EDIX INVESTMENTS** **Jurisdiction:** **COLUMBIA**

Structural Eng. of Record: NONE **License # :** none building designer

Address of Eng. Of Record: none

SIGNATURE of Building Designer: *single family home*

I, Gary G. Dounson, Florida Professional Engineer No.35054, hereby certify that I am the truss engineer of record with responsibility for the design of the metal plate connected wood trusses listed herein. The design of these trusses have been performed under my responsible supervision, direction and control and are in accordance with the National Design Standard for Metal Plate Connected Wood Truss Construction (ANSI TPI 1). Building Designer of Record responsibilities shall be required in Article 2.2 of the aforementioned TPI 1 document and shall include but are not limited to the design and detailing of truss supports, anchorage, and permanent truss bracing.

Engineering Program is **Robbins Engineering Online Plus** **Building code and chapter:** ANSI/ASCE 7-98

Live load: 20 lbs **Dead load:** 17 lbs Roof **Wind speed:** 110 mph **Design criteria:** TPI 95

Mean Roof Height: 25 ' **Exposure:** B **Enclosure:** ENCLOSED **Category:** II

#	Mark	Run Date	#	Mark	Run Date	#	Mark	Run Date	#	Mark	Run Date	#	Mark	Run Date
1	**R1**	9/16/05	29	**R15**	8/17/05	57			85			107		
2	**R2**	8/17/05	30	**R16**	8/17/05	58			86			108		
3	**R2A**	9/16/05	31	**R17**	8/17/05	59			87			109		
4	**R2B**	8/17/05	32	**R18**	8/17/05	60			88			110		
5	**R2C**	8/17/05	33	**R19**	8/17/05	61			89			111		
6	**R2D**	8/17/05	34	**R20**	8/17/05	62			90			112		
7	**R2E**	8/17/05	35	**R21**	8/17/05	63			91			113		
8	**R2F**	8/17/05	36	**R22**	8/17/05	64			92			114		
9	**R3**	8/17/05	37	**R23**	9/1/05	65			93			115		
10	**R3A**	8/17/05	38	**R24**	9/1/05	66			94			116		
11	**R3B**	8/17/05	39	**R26**	8/17/05	67			95			117		
12	**R3C**	8/17/05	40	**R27**	8/17/05	68			96			118		
13	**R3D**	8/17/05	41	**R28**	8/17/05	69			97			119		
14	**R4**	8/17/05	42	**R29**	8/17/05	70			98			120		
15	**R4A**	8/17/05	43	**R30**	8/17/05	71			99			121		
16	**R4B**	8/17/05	44	**R31**	8/17/05	72			100			122		
17	**R5**	8/17/05	45	**R32**	8/17/05	73			101			123		
18	**R6**	8/17/05	46	**R33**	8/17/05	74			102			124		
19	**R7**	9/16/05	47	**R34**	8/17/05	75			103			125		
20	**R8**	9/16/05	48	**T1**	8/17/05	76			104			126		
21	**R9**	9/16/05	49	**T2**	8/17/05	77			105			127		
22	**R10**	8/17/05	50			78			106			128		
23	**R11**	8/17/05	51			79								
24	**R12**	8/17/05	52			80								
25	**R13**	9/16/05	53			81								
26	**R14**	9/16/05	54			82								
27	**R14A**	9/1/05	55			83								
28	**R14B**	9/16/05	56			84								

Delegated Engineer (Truss Designer)
GARY DOUNSON, PE 35054
GARY DOUNSON & ASSOCIATES, INC.
2830 NW 41st STREET SUITE D
GAINESVILLE, FL 32606
(352) 375-8593
CA 5201
9/16/2005

This Package includes 49 individual, dated Truss Design Drawings. With my Seal affixed to this sheet, I hereby certify that I am the Truss Design Engineer and this index sheet conforms to 61G15-31.003 section 5 of the Florida Board of Professional Engineers.

Note: The seal on this index sheet indicates acceptance of professional engineering responsibility solely for the Truss Design Drawings listed above and attached. The suitability and use of each component for any particular building is the responsibility of the Building Designer, per ANSI/TPI 1-1995 Section 2.

Gary Dounson 9-16-05

FILE: SealSheet

TABLE OF CONTENTS

ROBBINS ENG. GENERAL NOTES & SYMBOLS

PLATE LOCATION

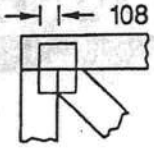

Center plates on joints unless otherwise noted in plate list or on drawing. Dimensions are given in inches (i.e. 1 1/2" or 1.5") or IN-16ths (i.e. 108).

PLATE SIZE

6.3 x 8.8

The first dimension is the width measured perpendicular to slots. The second dimension is the length measured parallel to slots.

LATERAL BRACING

1x4 continuous lateral bracing attached with (2) 8d nails each member where indicated or 2x4 "T" or "L" brace stiffener if applicable nailed flat to edge of web with 12d nails spaced 8" o.c. "T" or "L" brace must be extended at least 90% of web length.

PLATE ORIENTATION

When shown, indicates direction of slots in connector plate.

DIMENSIONS

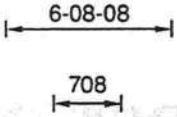

All dimensions are shown in FT-IN-SX (i.e. 6' 8 1/2" or 6-08-08). Dimensions less than one foot are shown in IN-SX only (i.e. 708).

BEARING

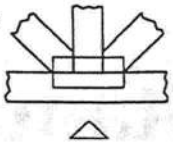

When truss is designed to bear on multiple supports, interior bearing locations should be marked on the truss. Interior support or temporary shoring must be in place before erecting this truss. If necessary, shim bearings to assure solid contact with truss.

ROBBINS LOCK connector plates (20 ga. galv. steel ASTM A653 SS Grade 40) shall be applied on both faces of truss at each joint. Center the plates, unless shown otherwise by circles (o) or dimensions. No loose knots or wanes in plate contact area. Splice only where shown. Overall spans assume 4" bearings at each end, unless indicated otherwise. Cutting and fabrication shall be performed on equipment which produces snug-fitting joints and plates. Unless otherwise noted, moisture content of lumber shall not exceed 19% at time of fabrication and these designs are not applicable for use with fire retardant lumber. This design was prepared in accordance with "National Design Specifications for Stress - Grade Lumber and Its Fastenings" (AFPA), "Design Specifications for Light Metal Plate Connected Wood Trusses" (TPI), and HUD Design Criteria for Trussed Rafters. Robbins Eng. Co. bears no responsibility for the erection of trusses, field bracing or permanent truss bracing. Refer to HIB-91 as published by the Truss Plate Institute, 583 D'Onofrio Drive, Suite 200, Madison, Wisconsin 53719. Persons erecting trusses are cautioned to seek professional advice concerning proper erection bracing to prevent toppling and "dominoing". Care should be taken to prevent damage during fabrication, storage, shipping and erection. Top and bottom chords shall be adequately braced in the absence of sheathing or rigid ceiling, respectively. It is the responsibility of others to ascertain that the design loads utilized on this drawing meet or exceed the actual dead loads imposed by the structure and the live loads imposed by the local building code or historical climatic records.

FURNISH A COPY OF THIS DESIGN TO ERECTION CONTRACTOR. IT IS THE RESPONSIBILITY OF BUILDING DESIGNER TO REVIEW THIS DRWG. & VERIFY THAT DATA INCLUDING DIM. & LOADS CONFORM TO ARCH. PLAN/SPECS & FAB. TRUSS LAYOUTS.

Robbins Engineering, Inc.

CORPORATE HEADQUARTERS

P.O. Box 280055
Tampa, FL 33682-0055
800-282-1299 • Fax: 813-971-6117

Wood Truss Council of America
5937 Meadowood Dr., Ste. 14 • Madison, WI 53711-4125 • 608/274-3329 (fax)

Standard Responsibilities in the Design Process Involving Metal Plate Connected Wood Trusses

WTCA 1-1995

Developed by the WTCA Engineering Review Committee
in cooperation with the Truss Plate Institute

1.0 SCOPEAND DEFINITIONS

1.1 This standard defines the design responsibilities of the individuals and organizations involved in the preparation, submittal, review and approval of each Truss Design Drawing and Truss Placement Plan associated with the use of metal plate connected wood trusses. These guidelines are presented as industry standard practice. The guidelines are not intended to preclude alternate provisions as agreed upon by the parties involved.

1.2 The following definitions shall apply:

1.2.1 "Architect" shall mean the individual registered architect responsible for the architectural design of the structure and who produces the architectural drawings included in the Construction Design Documents.

1.2.2 "Building Designer" is the individual or organization having responsibility for the overall building or structure design in accordance with the state's statutes and regulations governing the professional registration and certification of architects or engineers. This responsibility includes but is not limited to foundation design, structural member sizing, load transfer, bearing conditions, and the structure's compliance with the applicable building codes. Also referred to as registered architect or engineer, building designer, and registered building designer, but hereinafter will be referred to as Building Designer.

1.2.3 "Construction Design Documents" are the architectural drawings, structural drawings, mechanical drawings, electrical drawings, and any other drawings, specifications, and addenda which set forth the overall design of the structure and issued by the Building Designer.

1.2.4 "Contractor" shall mean the individual or organization responsible for the field storage, handling, and installation of trusses including, but not limited to, temporary bracing, permanent bracing, anchorage, connections and field assembly. The term "Contractor" shall include those subcontractors who have a direct contract with the Contractor to perform all or a portion of the storage, handling, and installation of the trusses.

1.2.5 "Engineer-of-Record" shall mean the registered professional engineer responsible for the structural design of the structure and who produces the structural drawings included in the Construction Design Documents.

1.2.6 "Owner" shall mean the individual or organization for whom the structure is designed.

1.2.7 "Truss" is an individual metal plate connected wood structural component manufactured by the Truss Manufacturer.

1.2.8 "Truss Designer" is the design professional, individual or organization, having responsibility for the design of metal plate connected wood trusses. This responsibility shall be in accordance with the state's statutes and regulations governing the professional registration and certification of architects or engineers. Also referred to as truss engineer, design engineer, registered engineer, and engineer, but hereinafter will be referred to as Truss Designer.

1.2.9 "Truss Design Drawing" shall mean the graphic depiction of an individual Truss prepared by the Truss Designer.

1.2.10 "Truss Manufacturer" shall mean an individual or organization regularly engaged in the manufacturing of Trusses.

1.2.11 "Truss Placement Plan" is the drawing identifying the location assumed for each Truss based on the Truss Manufacturer's interpretation of the Construction Design Documents.

2.0 OWNER RESPONSIBILITIES

2.1 Directly or through its representatives, which may include the Contractor and/or Building Designer; (a) review and approve each Truss Design Drawing; (b) review and approve the Truss Placement Plan; (c) resolve and approve all design issues arising out of the preparation of each Truss Design Drawing and Truss Placement Plan; and (d) coordinate the return of each approved Truss Design Drawing and Truss Placement Plan to the Truss Manufacturer prior to truss manufacturing.

3.0 BUILDING DESIGNER RESPONSIBILITIES

3.1 Design a structure suitable to ensure that the intended function of each Truss is not affected by adverse influences including, but not limited to, moisture, temperature, corrosive chemicals and gases;

3.2 Prepare the Construction Design Documents, showing all trussed areas, which must provide as a minimum the following:

3.2.1 All truss orientations and locations;

3.2.2 Information to fully determine all truss profiles;

3.2.3 Adequate support of the Truss and all truss bearing conditions;

3.2.4 Permanent bracing design for the structure including the Trusses, except as provided in 3.4 and 6.2.12.

3.2.5 The location, direction and magnitude of all dead and live loads applicable to each Truss including, but not limited to, loads attributable to: roof, floor, partition, mechanical, fire sprinkler, attic, storage, wind, snow drift and seismic;

3.2.6 All Truss anchorage designs required to resist uplift, gravity, and lateral loads;

3.2.7 Allowable vertical and horizontal deflection criteria;

3.2.8 Proper transfer of design loads affecting the Truss; and

3.2.9 Adequate connections between Truss and non-Truss components, except as noted in Section 6.2.9.

3.3 Review and approve the Truss Placement Plan and each Truss Design Drawing for conformance with the requirements and intent of the Construction Design Documents, the effect of each Truss Design Drawing and Truss Placement Plan on other parts of the structure, and the effect of the structure on each Truss.

3.4 Specify permanent lateral bracing where indicated by the Truss Designer on the Truss Design Drawings, to prevent buckling of the individual truss members due to design loads. The Building Designer shall specify how the permanent lateral bracing is to be anchored or restrained to prevent lateral movement if all truss members, so braced, buckle together. This shall be accomplished by: (a) anchorage to solid end walls; (b) permanent diagonal bracing in the plane of the web members; or (c) other means when demonstrated by the Building Designer to provide equivalent bracing.

4.0 CONTRACTOR RESPONSIBILITIES

4.1 Provide to the Truss Manufacturer the Construction Design Documents and all revisions and supplements thereto.

4.2 Review and approve the Truss Placement Plan and each Truss Design Drawing for conformance with the requirements and intent of the Construction Design Documents, and the effect of the Truss Placement Plan and each Truss Design Drawing on other trades involved in the construction of the structure and the effect of the other trades on the Trusses.

4.3 Coordinate the review, approval and return of each Truss Design Drawing and the Truss Placement Plan by the Owner and Building Designer.

4.4 Provide the approved Truss Design Drawings, approved Truss Placement Plans, and any supplemental information provided by the Truss Manufacturer to the individual or organization responsible for the installation of the Trusses.

4.5 Comply with the field storage, handling, installation, permanent bracing, anchorage, connections and field assembly requirements of the Construction Design Documents.

4.6 Determine and install the temporary bracing for the structure, including the Trusses.

5.0 TRUSS MANUFACTURER RESPONSIBILITIES

5.1 Communicate the design criteria from the Construction Design Documents to the Truss Designer.

5.2 Where required by the Construction Design Documents, prepare the Truss Placement Plan, providing as a minimum the location assumed for each Truss based on the Truss Manufacturer's interpretation of the Construction Design Documents.

5.3 Submit to the Contractor the Truss Placement Plan, as may be required, and each Truss Design Drawing for review and approval.

5.4 Manufacture the Trusses in accordance with the final approved Truss Design Drawings using the quality criteria for Metal Plate Connected Wood Trusses established by the ANSI/TPI 1-1995 "National Design Standard for Metal Plate Connected Wood Truss Construction."

6.0 TRUSS DESIGNER RESPONSIBILITIES

6.1 Prepare the Truss Design Drawings in conformance with the requirements set forth in the latest approved edition of ANSI/TPI 1-1995 "National Design Standard for Metal Plate Connected Wood Truss Construction."

6.2 For each Truss Design Drawing, set forth as a minimum the following:

6.2.1 Slope or depth, span and spacing;

6.2.2 Location of all joints;

6.2.3 Required bearing widths;

6.2.4 Design loads as applicable:

6.2.4.1 Top chord live load (including snow loads);

6.2.4.2 Top chord dead load;

6.2.4.3 Bottom chord live load;

6.2.4.4 Bottom chord dead load;

6.2.4.5 Concentrated loads and their points of application; and

6.2.4.6 Controlling wind and earthquake loads;

6.2.5 Adjustments to lumber and metal connector plate design values for conditions of use;

6.2.6 Each reaction force and direction;

6.2.7 Metal connector plate type, size, thickness or gage, and the dimensioned location of each metal connector plate except where symmetrically located relative to the joint interface;

6.2.8 Lumber size, species, and grade for each member;

6.2.9 Connection Requirements for:

(a) Truss to Truss girder;

(b) Truss ply to ply; and

(c) Field splices;

6.2.10 Calculated deflection ratio and/or maximum deflection for live and total load;

6.2.11 Maximum axial compression forces in the Truss members to enable the Building Designer to design the size, connections and anchorage of the permanent continuous lateral bracing. Forces may be shown on the Truss Design Drawing or on supplemental documents; and

6.2.12 Required permanent Truss member bracing location.

7.0 OTHER RESPONSIBILITIES

7.1 Any party who cuts or damages a truss shall be responsible for securing the engineering required for the repair and for subsequent costs.

Wood Truss Council of America's Objective

WTCA is committed to promoting the common interests of all engaged in the manufacture of wood trusses and related components to ensure growth, continuity, and increased professionalism in our industry. Fundamental to this is promoting the safe, economic, and structurally sound use of trusses in all applications.

Job	Mark	Quan	Type	Span	P1-H1	Left OH	Right OH	*Engineering*
050886	*R1*	1	HIPP	441100	6	2- 0- 0	0	

Stewart Model

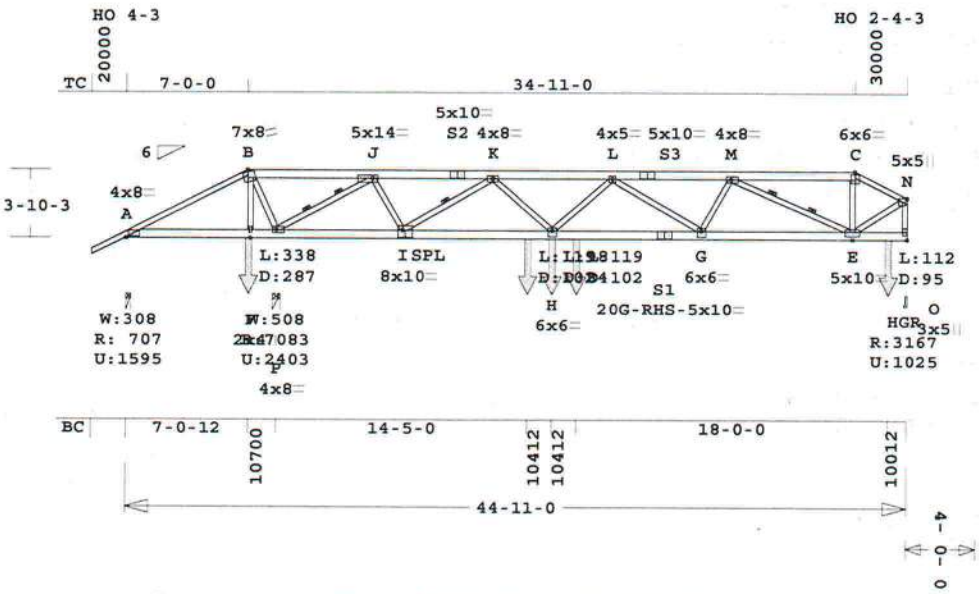

EXCEPT AS SHOWN ALL PLATES ARE LOCK20
+LOAD ASSIST USED TO CALCULATE LOADS+

Scale: 0.094" = 1'

Robbins Engineering, Inc./Online Plus™ APPROX. TRUSS WEIGHT: 356.7 LBS

Online Plus -- Version 18.0.007
RUN DATE: 16-SEP-05

	CSI	-Size-	----Lumber----
TC	0.93	2x 6	SP-#2
EX A -B		2x 4	SP-2400
EX C -N		2x 4	SP-#2
BC	0.80	2x 6	SP-2400
EX A -I		2x 6	SP-#2
WB	0.77	2x 4	SP-#3
EX P -J		2x 4	SP-#2
EX J -I		2x 4	SP-#2
EX E -N		2x 4	SP-#2

Brace truss as follows:

O.C.	From	To
TC Cont.	0- 0- 0	44-11- 0
BC Cont.	0- 0- 0	44-11- 0

WB 2 rows CLB on P -J
WB 1 rows CLB on I -K
WB 2 rows CLB on M -E
Attach CLB with (2)-10d nails at each web.

Loading	Live	Dead	(psf)
TC	20.0	7.0	
BC	0.0	10.0	
Total	20.0	17.0	37.0
Spacing			24.0"

Lumber Duration Factor 1.25
Plate Duration Factor 1.25
TC Fb=1.00 Fc=1.00 Ft=1.00
BC Fb=1.00 Fc=1.00 Ft=1.00

Load Case # 1 Standard Loading
Lumber Duration Factor 1.25
Plate Duration Factor 1.25

plf -	Live	Dead	From	To
TC V	40	14	0.0'	44.9'
BC V	0	20	0.0'	44.9'
BC V	70	60	8.1'	22.1'
BC V	70	59	26.9'	42.9'
BC V	338	287	7.1'	CL-LB
BC V	119	102	23.1'	CL-LB
BC V	98	84	24.5'	CL-LB
BC V	119	102	25.9'	CL-LB
BC V	112	95	43.9'	CL-LB

Plus 7 Wind Load Case(s)

Jt	React	Uplft	Size Req'd				
	Lbs	Lbs	In-Sx	In-Sx			
A	707	1596G	3- 8	1- 0			
			Hz =	117			
P	7084	2403	5- 8	7-13 **			
O	3167	1026	3- 8	2-10			
			Hz =	75			

G = Gravity Uplift

Membr	CSI	P Lbs	Axl	CSI-Bnd
----------Top Chords----------				
A -B	0.58	4012	T 0.31	0.27
B -J	0.93	4844	T 0.64	0.29
J -S2	0.21	2410	C 0.10	0.11
S2-K	0.19	2410	C 0.10	0.09
K -L	0.47	6991	C 0.23	0.24
L -S3	0.37	7144	C 0.24	0.13
S3-M	0.46	7144	C 0.24	0.22
M -C	0.38	2716	C 0.03	0.35
C -N	0.52	3000	C 0.07	0.45
--------Bottom Chords---------				
A -F	0.41	3604	C 0.04	0.37
F -P	0.75	3622	C 0.04	0.71
P -I	0.84	861	T 0.11	0.73
I -H	0.69	5375	T 0.27	0.42
H -S1	0.78	7274	T 0.36	0.42
S1-G	0.80	7274	T 0.36	0.44
G -E	0.76	6457	T 0.32	0.44
E -O	0.36	74	T 0.00	0.36
----------Webs----------				
F -B	0.19	607	T	
B -P	0.68	3019	C	
P -J	0.74	6684	C	2 Br
J -I	0.64	3486	T	
I -K	0.74	3550	C	1 Br
K -H	0.72	2264	T	
H -L	0.14	395	C	
L -G	0.08	155	C	
G -M	0.49	1546	T	
M -E	0.77	4153	C	2 Br
E -C	0.33	1038	T	
E -N	0.60	3279	T	
O -N	0.53	3196	C	

LL Defl -0.39" in H -S1 L/999
TL Defl -0.74" in H -S1 L/578
Shear // Grain in G -E 0.50

Plates for each ply each face.
ALL CONNECTOR PLATES
TO BE MANUFACTURED BY
ROBBINS ENGINEERING, INC.
Plate - LOCK 20 Ga, Gross Area
Plate - RHS 20 Ga, Gross Area

Jt	Type	Plt Size	X	Y	JSI
A	LOCK	4.0x 8.0	Ctr	-0.1	0.72
B	LOCK	7.0x 8.0	1.1	-4.8	0.84
J	LOCK	5.0x14.0	-3.5	-0.5	0.81
S2	LOCK	5.0x10.0	Ctr	Ctr	0.82
K	LOCK	4.0x 8.0	Ctr	Ctr	0.87
L	LOCK	4.0x 5.0	Ctr	Ctr	0.50
S3	LOCK	5.0x10.0	Ctr	Ctr	0.82
M	LOCK	4.0x 8.0	0.8	Ctr	0.84
C	LOCK	6.0x 6.0	Ctr	-0.6	0.72
N	LOCK	5.0x 5.0	Ctr	Ctr	0.88
F	LOCK	2.0x 4.0	Ctr	Ctr	0.65
P	LOCK	4.0x 8.0	1.1	Ctr	0.85
I	LOCK	8.0x10.0	Ctr	1.8	0.82
H	LOCK	6.0x 6.0	Ctr	-1.0	0.77
S1	RHS	5.0x10.0	Ctr	Ctr	0.87
G	LOCK	6.0x 6.0	Ctr	-1.0	0.63
E	LOCK	5.0x10.0	Ctr	-0.7	0.99
O	LOCK	3.0x 5.0	Ctr	Ctr	0.80

NOTES:
Trusses Manufactured by:
RIDGWAY ROOF TRUSS
Analysis Conforms To:
ANSI/TPI 95 & 02
OH Loading
Soffit psf 2.0
No wind exposure on right end.
Prevent truss rotation at all bearing locations.
Wind Loads - ANSI / ASCE 7-98
Truss is designed as
Components and Claddings*
for Exterior zone location.
Wind Speed: 110 mph
Mean Roof Height: 25-0
Exposure Category: B
Occupancy Factor : 1.00
Building Type: Enclosed
TC Dead Load: 4.0 psf
BC Dead Load: 6.0 psf
Max comp. force 7144 Lbs
Quality Control Factor 1.25

FABRICATOR NOTES:
1. Delegated Engineer (Truss Designer)
Gary Dounson, PE 35054
Gary Dounson & Associates, Inc.
2830 NW 41st Street Suite D
Gainesville, FL 32606
(352)375-8593
CA 5201

Job	Mark	Quan	Type	Span	P1-H1	Left OH	Right OH	Engineering
050886	R2	35	JACK	70000	6	2- 0- 0	0	

Stewart Model

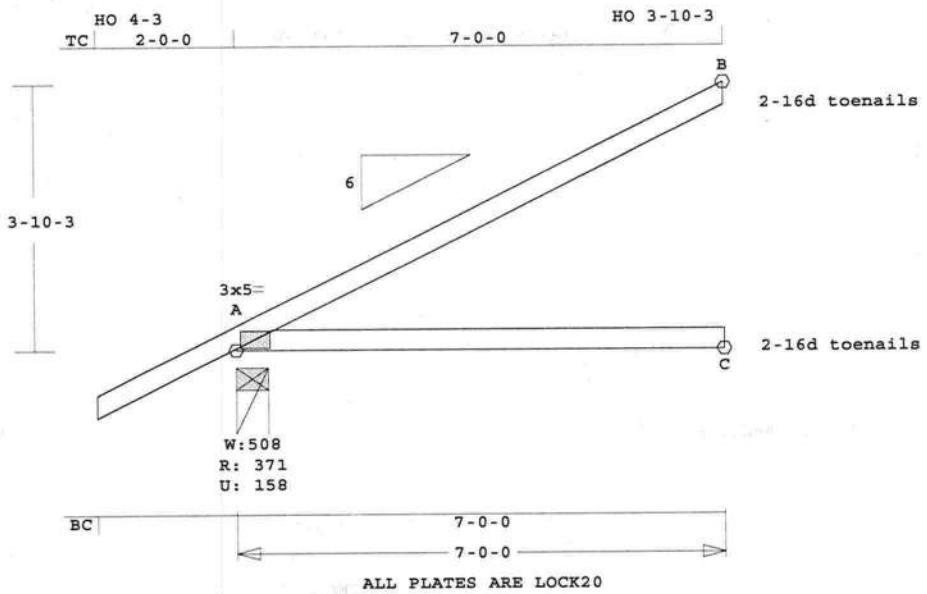

Scale: 0.375" = 1'

Robbins Engineering, Inc./Online Plus™ APPROX. TRUSS WEIGHT: 32.5 LBS

Online Plus -- Version 17.7.008
RUN DATE: 17-AUG-05

	CSI	-Size-	----Lumber----
TC	0.53	2x 4	SP-#2
BC	0.42	2x 4	SP-#2

Brace truss as follows:

O.C.	From	To
TC Cont.	0- 0- 0	7- 0- 0
BC Cont.	0- 0- 0	7- 0- 0

Loading	Live	Dead	(psf)
TC	20.0	7.0	
BC	0.0	10.0	
Total	20.0	17.0	37.0
Spacing			24.0"

Lumber Duration Factor 1.25
Plate Duration Factor 1.25
TC Fb=1.15 Fc=1.10 Ft=1.10
BC Fb=1.10 Fc=1.10 Ft=1.10

Plus 7 Wind Load Case(s)

Jt	React Lbs	Uplft Lbs	Size In-Sx	Req'd In-Sx
A	371	159	5- 8	1- 0
			Hz =	159
B	177	151	3- 8	1- 0
C	86	0	3- 8	1- 0
			Hz =	98

Membr	CSI	P Lbs	Axl-CSI-Bnd
----------Top Chords----------			
A -B	0.53	165 C	0.00 0.53
--------Bottom Chords---------			
A -C	0.42	97 T	0.00 0.42

LL Defl -0.07" in A -C L/999
TL Defl -0.17" in A -C L/454
Shear // Grain in A -B 0.27

Plates for each ply each face.
ALL CONNECTOR PLATES
TO BE MANUFACTURED BY
ROBBINS ENGINEERING, INC.
Plate - LOCK 20 Ga, Gross Area
Plate - RHS 20 Ga, Gross Area

Jt	Type	Plt Size	X	Y	JSI
A	LOCK	3.0x 5.0	Ctr	Ctr	0.50

For proper installation of
toe-nails, refer to the 2001
National Design Specification
(NDS) for Wood Construction

NOTES:
Trusses Manufactured by:
RIDGWAY ROOF TRUSS
Analysis Conforms To:
ANSI/TPI 95 & 02
OH Loading
Soffit psf 2.0
Wind Loads - ANSI / ASCE 7-98
Truss is designed as
Components and Claddings*
for Exterior zone location.
Wind Speed: 110 mph
Mean Roof Height: 25-0
Exposure Category: B
Occupancy Factor : 1.00
Building Type: Enclosed
TC Dead Load: 4.0 psf
BC Dead Load: 6.0 psf
Max comp. force 165 Lbs

Quality Control Factor 1.25

FABRICATOR NOTES:
1. Delegated Engineer (Truss Designer)
Gary Dounson, PE 35054
Gary Dounson & Associates, Inc.
2830 NW 41st Street Suite D
Gainesville, FL 32606
(352)375-8593
CA 5201

Job	Mark	Quan	Type	Span	P1-H1	Left OH	Right OH	Engineering
050886	R2A	1	JACK	70000	6	0	0	

Stewart Model

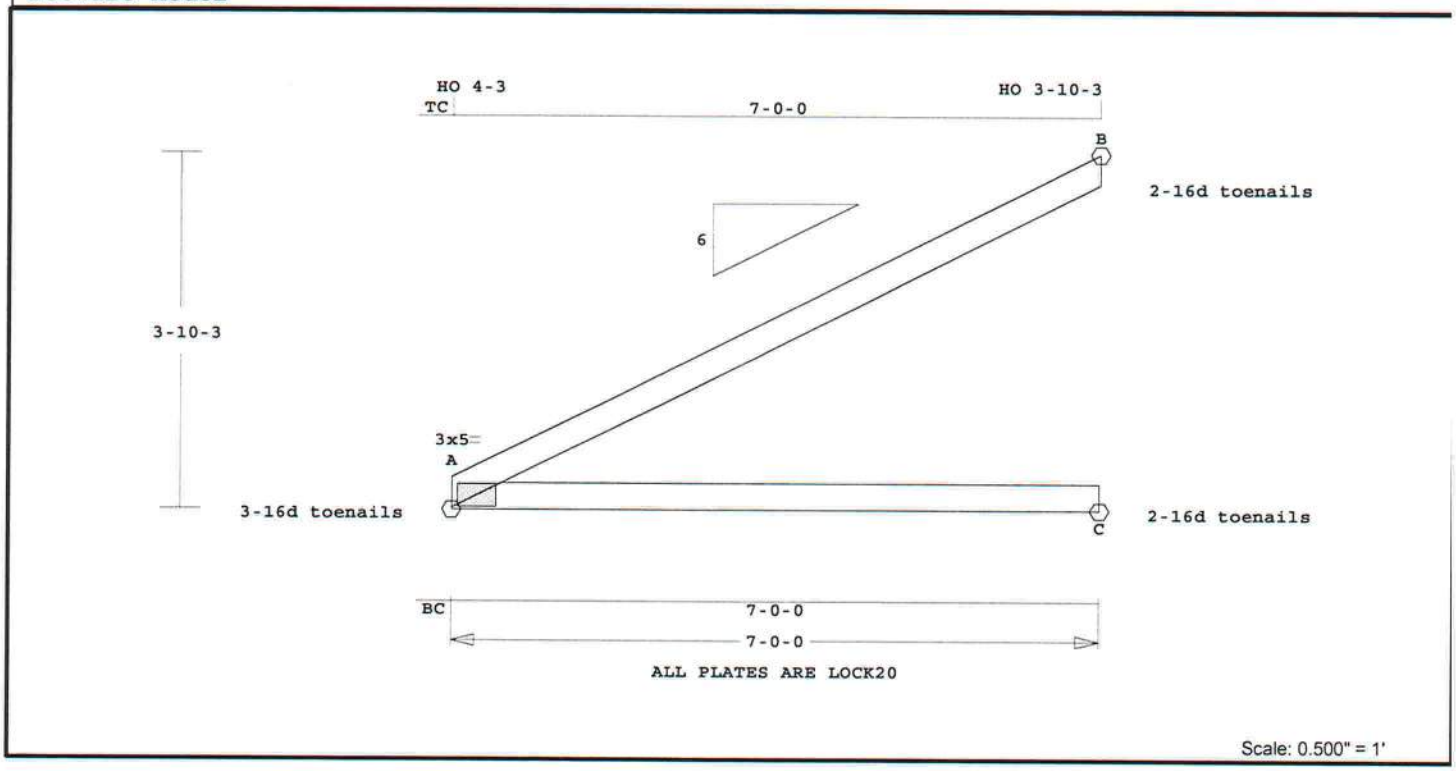

Robbins Engineering, Inc./Online Plus™ APPROX. TRUSS WEIGHT: 28.3 LBS

A -C 0.42 97 T 0.00 0.42 Quality Control Factor 1.25

Online Plus -- Version 18.0.007
RUN DATE: 16-SEP-05

	CSI	-Size-	----Lumber----
TC	0.53	2x 4	SP-#2
BC	0.42	2x 4	SP-#2

Brace truss as follows:

O.C.	From	To
TC Cont.	0- 0- 0	7- 0- 0
BC Cont.	0- 0- 0	7- 0- 0

Loading	Live	Dead	(psf)
TC	20.0	7.0	
BC	0.0	10.0	
Total	20.0	17.0	37.0
Spacing			24.0"

Lumber Duration Factor 1.25
Plate Duration Factor 1.25
TC Fb=1.15 Fc=1.10 Ft=1.10
BC Fb=1.10 Fc=1.10 Ft=1.10

Plus 7 Wind Load Case(s)

Jt	React Lbs	Uplft Lbs	Size In-Sx	Req'd In-Sx
A	255	45	3- 8	1- 0
			Hz =	159
B	177	151	3- 8	1- 0
C	86	0	3- 8	1- 0
			Hz =	98

Membr	CSI	P Lbs	Axl-CSI-Bnd
----------Top Chords----------			
A -B	0.53	165 C	0.00 0.53
--------Bottom Chords---------			

LL Defl -0.07" in A -C L/999
TL Defl -0.17" in A -C L/466
Shear // Grain in A -B 0.27

Plates for each ply each face.
ALL CONNECTOR PLATES
TO BE MANUFACTURED BY
ROBBINS ENGINEERING, INC.
Plate - LOCK 20 Ga, Gross Area
Plate - RHS 20 Ga, Gross Area

Jt	Type	Plt Size	X	Y	JSI
A	LOCK	3.0x 5.0	Ctr	Ctr	0.50

For proper installation of toe-nails, refer to the 2001 National Design Specification (NDS) for Wood Construction

NOTES:
Trusses Manufactured by:
RIDGWAY ROOF TRUSS
Analysis Conforms To:
ANSI/TPI 95 & 02
Wind Loads - ANSI / ASCE 7-98
Truss is designed as
Components and Claddings*
for Exterior zone location.
Wind Speed: 110 mph
Mean Roof Height: 25-0
Exposure Category: B
Occupancy Factor : 1.00
Building Type: Enclosed
TC Dead Load: 4.0 psf
BC Dead Load: 6.0 psf
Max comp. force 165 Lbs

FABRICATOR NOTES:
1. Delegated Engineer (Truss Designer)
Gary Dounson, PE 35054
Gary Dounson & Associates, Inc.
2830 NW 41st Street Suite D
Gainesville, FL 32606
(352)375-8593
CA 5201

Job	Mark	Quan	Type	Span	P1-H1	Left OH	Right OH	Engineering
050886	R2B	1	SP	70001	3.882	0	0	

Stewart Model

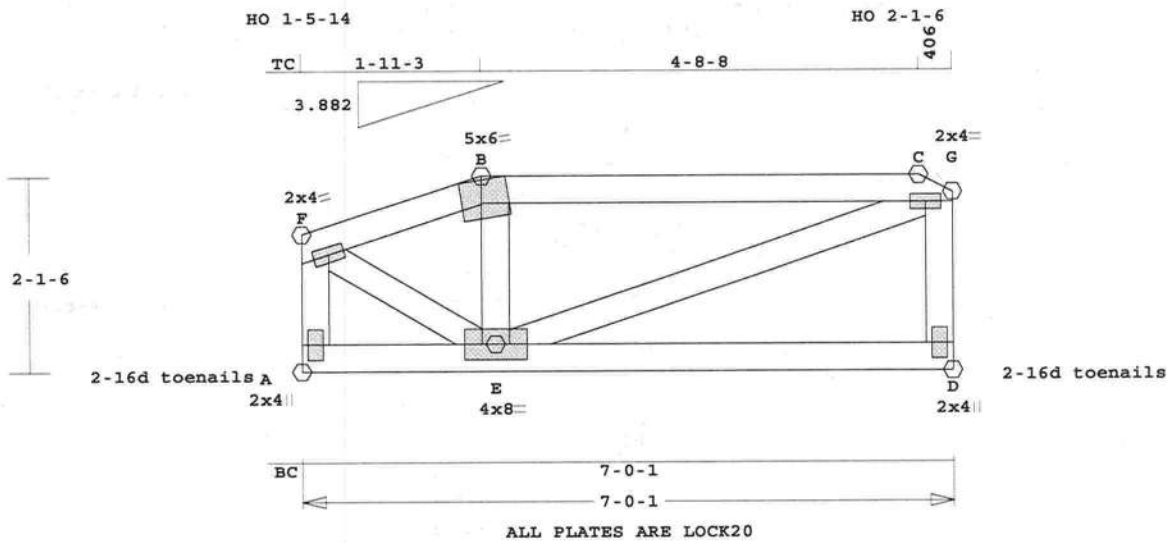

Scale: 0.500" = 1'

Robbins Engineering, Inc./Online Plus™ APPROX. TRUSS WEIGHT: 47.0 LBS

Online Plus -- Version 17.7.008
RUN DATE: 17-AUG-05

	CSI	-Size-	----Lumber----
TC	0.32	2x 4	SP-#2
BC	0.07	2x 4	SP-#2
WB	0.11	2x 4	SP-#3

Brace truss as follows:

O.C.	From	To
TC Cont.	0- 0- 0	7- 0- 1
BC Cont.	0- 0- 0	7- 0- 1

Loading	Live	Dead	(psf)
TC	20.0	7.0	
BC	0.0	10.0	
Total	20.0	17.0	37.0
Spacing			24.0"

Lumber Duration Factor 1.25
Plate Duration Factor 1.25
TC Fb=1.15 Fc=1.10 Ft=1.10
BC Fb=1.10 Fc=1.10 Ft=1.10

Plus 7 Wind Load Case(s)

Jt	React Lbs	Uplft Lbs	Size In-Sx	Req'd In-Sx
A	259	88	3- 8	1- 0
			Hz =	56
D	259	69	3- 8	1- 0
			Hz =	52

Membr	CSI	P Lbs	Axl	CSI-Bnd
----------Top Chords----------				
F -B	0.12	251 T	0.03	0.09
B -G	0.32	284 T	0.03	0.29
--------Bottom Chords---------				
A -E	0.06	94 C	0.00	0.06
E -D	0.07	51 T	0.00	0.07
----------Webs----------				
A -F	0.07	260 T	WindLd	
F -E	0.08	278 T		
E -B	0.07	293 T		
E -G	0.11	304 C		
D -G	0.06	264 T		

LL Defl 0.00" in E -D L/999
TL Defl -0.02" in E -D L/999
Shear // Grain in B -G 0.22

Plates for each ply each face.
ALL CONNECTOR PLATES
TO BE MANUFACTURED BY
ROBBINS ENGINEERING, INC.
Plate - LOCK 20 Ga, Gross Area
Plate - RHS 20 Ga, Gross Area

Jt	Type	Plt Size	X	Y	JSI
F	LOCK	2.0x 4.0	Ctr	Ctr	0.75
B	LOCK	5.0x 6.0	0.5	-2.9	0.75
G	LOCK	2.0x 4.0	Ctr	Ctr	0.75
A	LOCK	2.0x 4.0	Ctr	Ctr	0.38
E	LOCK	4.0x 8.0	Ctr	Ctr	0.61
D	LOCK	2.0x 4.0	Ctr	Ctr	0.38

For proper installation of toe-nails, refer to the 2001 National Design Specification (NDS) for Wood Construction

NOTES:
Trusses Manufactured by:
RIDGWAY ROOF TRUSS
Analysis Conforms To:
ANSI/TPI 95 & 02
No wind exposure on right end.
Wind Loads - ANSI / ASCE 7-98

Truss is designed as
Components and Claddings*
for Exterior zone location.
Wind Speed: 110 mph
Mean Roof Height: 25-0
Exposure Category: B
Occupancy Factor : 1.00
Building Type: Enclosed
TC Dead Load: 4.0 psf
BC Dead Load: 6.0 psf
Max comp. force 304 Lbs
Quality Control Factor 1.25

FABRICATOR NOTES:
1. Delegated Engineer (Truss Designer)
Gary Dounson, PE 35054
Gary Dounson & Associates, Inc.
2830 NW 41st Street Suite D
Gainesville, FL 32606
(352)375-8593
CA 5201

Job	Mark	Quan	Type	Span	P1-H1	Left OH	Right OH	Engineering
050886	R2C	1	JACK	40700	6	2- 0- 0	0	

Stewart Model

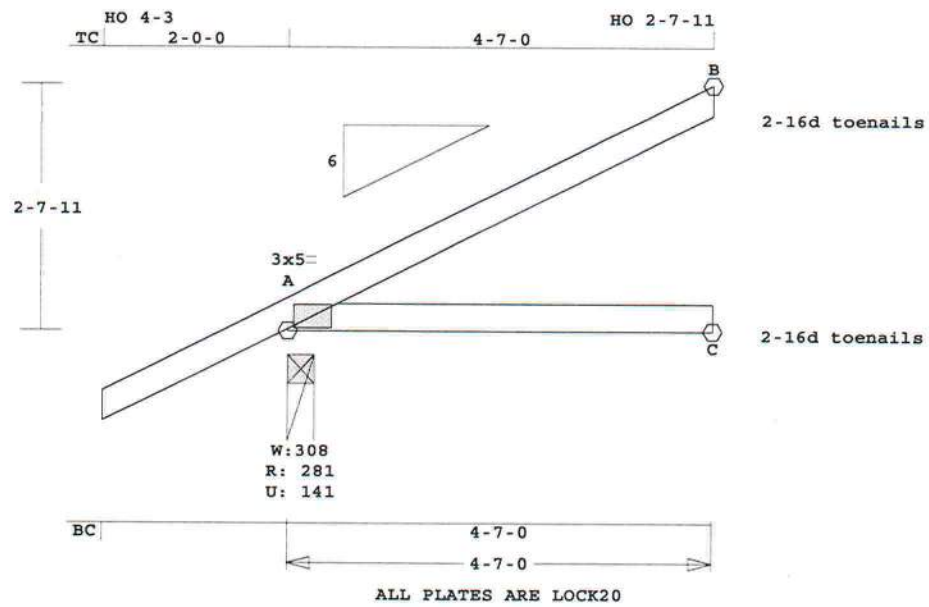

Scale: 0.500" = 1'

Robbins Engineering, Inc./Online Plus™ APPROX. TRUSS WEIGHT: 22.8 LBS

Online Plus -- Version 17.7.008
RUN DATE: 17-AUG-05

	CSI	-Size-	----Lumber----
TC	0.29	2x 4	SP-#2
BC	0.25	2x 4	SP-#2

Brace truss as follows:

O.C.	From	To
TC Cont.	0- 0- 0	4- 7- 0
BC Cont.	0- 0- 0	4- 7- 0

Loading	Live	Dead	(psf)
TC	20.0	7.0	
BC	0.0	10.0	
Total	20.0	17.0	37.0
Spacing			24.0"

Lumber Duration Factor 1.25
Plate Duration Factor 1.25
TC Fb=1.15 Fc=1.10 Ft=1.10
BC Fb=1.10 Fc=1.10 Ft=1.10

Plus 7 Wind Load Case(s)

Jt	React Lbs	Uplft Lbs	Size In-Sx	Req'd In-Sx
A	282	141	3- 8	1- 0
			Hz =	104
B	118	101	3- 8	1- 0
C	56	0	3- 8	1- 0
			Hz =	63

Membr	CSI	P Lbs	Axl-CSI-Bnd
----------Top Chords----------			
A -B	0.29	132 C	0.00 0.29
--------Bottom Chords---------			
A -C	0.25	63 T	0.00 0.25

LL Defl -0.01" in A -C L/999
TL Defl -0.03" in A -C L/999
Shear // Grain in A -B 0.24

Plates for each ply each face.
ALL CONNECTOR PLATES
TO BE MANUFACTURED BY
ROBBINS ENGINEERING, INC.
Plate - LOCK 20 Ga, Gross Area
Plate - RHS 20 Ga, Gross Area

Jt	Type	Plt Size	X	Y	JSI
A	LOCK	3.0x 5.0	Ctr	Ctr	0.47

For proper installation of toe-nails, refer to the 2001 National Design Specification (NDS) for Wood Construction

NOTES:
Trusses Manufactured by:
RIDGWAY ROOF TRUSS
Analysis Conforms To:
ANSI/TPI 95 & 02
OH Loading
Soffit psf 2.0
Wind Loads - ANSI / ASCE 7-98
Truss is designed as
Components and Claddings*
for Exterior zone location.
Wind Speed: 110 mph
Mean Roof Height: 25-0
Exposure Category: B
Occupancy Factor : 1.00
Building Type: Enclosed
TC Dead Load: 4.0 psf
BC Dead Load: 6.0 psf
Max comp. force 132 Lbs

Quality Control Factor 1.25

FABRICATOR NOTES:
1. Delegated Engineer (Truss Designer)
Gary Dounson, PE 35054
Gary Dounson & Associates, Inc.
2830 NW 41st Street Suite D
Gainesville, FL 32606
(352)375-8593
CA 5201

Job	Mark	Quan	Type	Span	P1-H1	Left OH	Right OH	Engineering
050886	R2D	1	JACK	21007	6	2- 0- 0	0	

Stewart Model

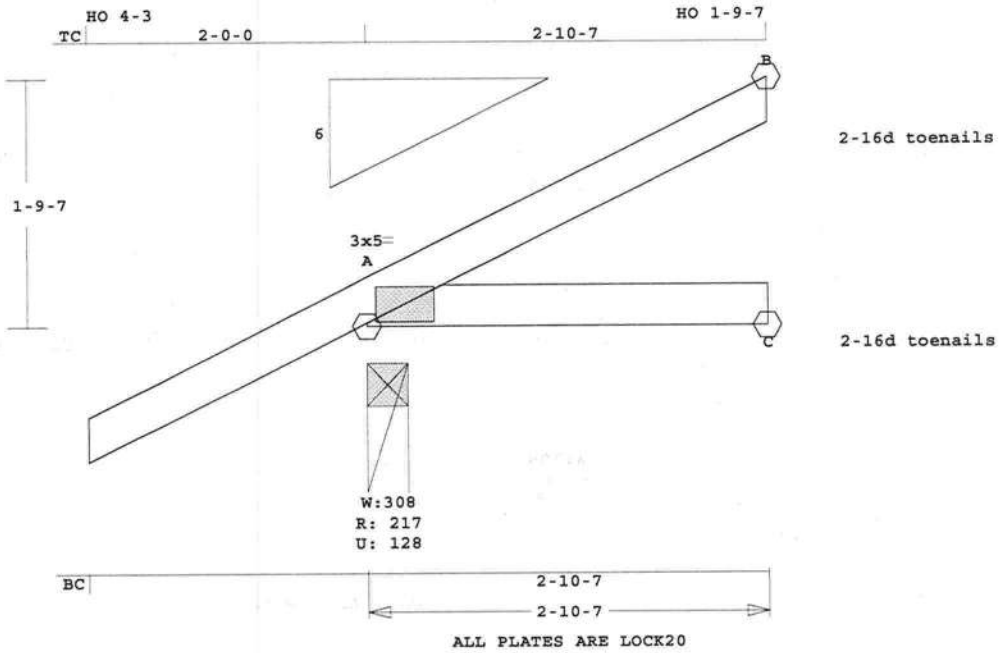

Scale: 0.750" = 1'

Robbins Engineering, Inc./Online Plus™ APPROX. TRUSS WEIGHT: 16.0 LBS

Online Plus -- Version 17.7.008
RUN DATE: 17-AUG-05

	CSI	-Size-	----Lumber----
TC	0.09	2x 4	SP-#2
BC	0.08	2x 4	SP-#2

Brace truss as follows:

O.C.	From	To
TC Cont.	0- 0- 0	2-10- 7
BC Cont.	0- 0- 0	2-10- 7

Loading	Live	Dead	(psf)
TC	20.0	7.0	
BC	0.0	10.0	
Total	20.0	17.0	37.0
Spacing			24.0"

Lumber Duration Factor 1.25
Plate Duration Factor 1.25
TC Fb=1.15 Fc=1.10 Ft=1.10
BC Fb=1.10 Fc=1.10 Ft=1.10

Plus 7 Wind Load Case(s)

Jt	React Lbs	Uplft Lbs	Size In-Sx	Req'd In-Sx
A	218	128	3- 8	1- 0
			Hz =	64
B	76	66	3- 8	1- 0
C	34	0	3- 8	1- 0
			Hz =	39

Membr	CSI	P Lbs	Axl	CSI-Bnd
----------Top Chords----------				
A -B	0.09	85 C	0.00	0.09
--------Bottom Chords---------				
A -C	0.08	39 T	0.00	0.08

LL Defl 0.00" in A -C L/999
TL Defl 0.00" in A -C L/999
Shear // Grain in A -B 0.12

Plates for each ply each face.
ALL CONNECTOR PLATES
TO BE MANUFACTURED BY
ROBBINS ENGINEERING, INC.
Plate - LOCK 20 Ga, Gross Area
Plate - RHS 20 Ga, Gross Area

Jt	Type	Plt Size	X	Y	JSI
A	LOCK	3.0x 5.0	Ctr	Ctr	0.47

For proper installation of
toe-nails, refer to the 2001
National Design Specification
(NDS) for Wood Construction

NOTES:
Trusses Manufactured by:
RIDGWAY ROOF TRUSS
Analysis Conforms To:
ANSI/TPI 95 & 02
OH Loading
Soffit psf 2.0
Wind Loads - ANSI / ASCE 7-98
Truss is designed as
Components and Claddings*
for Exterior zone location.
Wind Speed: 110 mph
Mean Roof Height: 25-0
Exposure Category: B
Occupancy Factor : 1.00
Building Type: Enclosed
TC Dead Load: 4.0 psf
BC Dead Load: 6.0 psf
Max comp. force 85 Lbs

Quality Control Factor 1.25

FABRICATOR NOTES:
1. Delegated Engineer (Truss Designer)
Gary Dounson, PE 35054
Gary Dounson & Associates, Inc.
2830 NW 41st Street Suite D
Gainesville, FL 32606
(352)375-8593
CA 5201

Job	Mark	Quan	Type	Span	P1-H1	Left OH	Right OH	Engineering
050886	R2E	2	JACK	40501	5.495	2- 2- 3	0	

Stewart Model

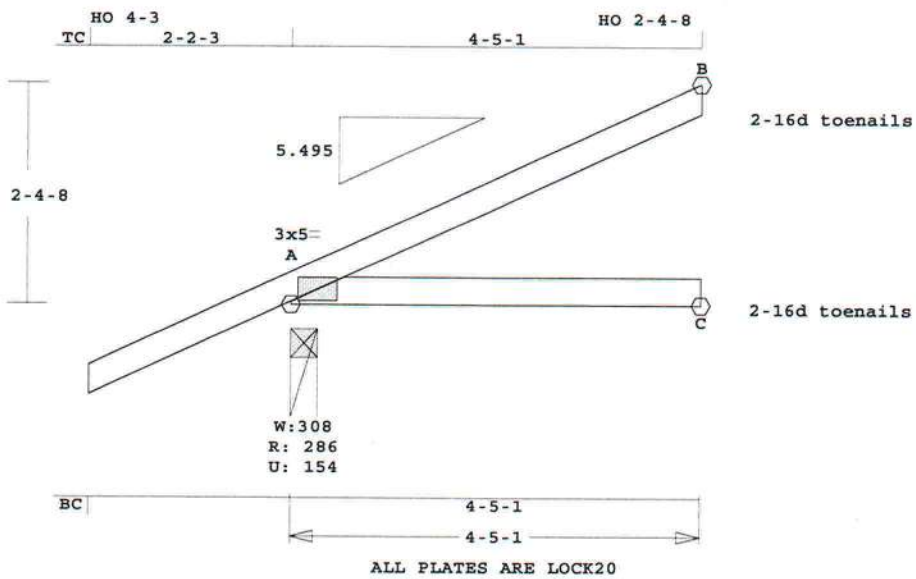

Scale: 0.500" = 1'

Robbins Engineering, Inc./Online Plus™ APPROX. TRUSS WEIGHT: 22.3 LBS

Online Plus -- Version 17.7.008
RUN DATE: 17-AUG-05

	CSI	-Size-	----Lumber----
TC	0.25	2x 4	SP-#2
BC	0.22	2x 4	SP-#2

Brace truss as follows:

O.C.	From	To
TC Cont.	0- 0- 0	4- 5- 1
BC Cont.	0- 0- 0	4- 5- 1

Loading	Live	Dead	(psf)
TC	20.0	7.0	
BC	0.0	10.0	
Total	20.0	17.0	37.0
Spacing			24.0"

Lumber Duration Factor 1.25
Plate Duration Factor 1.25
TC Fb=1.15 Fc=1.10 Ft=1.10
BC Fb=1.10 Fc=1.10 Ft=1.10

Plus 7 Wind Load Case(s)

Jt	React Lbs	Uplft Lbs	Size In-Sx	Req'd In-Sx
A	286	155	3- 8	1- 0
			Hz =	91
B	114	93	3- 8	1- 0
C	54	0	3- 8	1- 0
			Hz =	58

Membr	CSI	P Lbs	Axl	CSI-Bnd
----------Top Chords----------				
A -B	0.25	114	C 0.00	0.25
--------Bottom Chords---------				
A -C	0.22	58	T 0.00	0.22

LL Defl -0.01" in A -C L/999
TL Defl -0.02" in A -C L/999
Shear // Grain in A -B 0.22

Plates for each ply each face.
ALL CONNECTOR PLATES
TO BE MANUFACTURED BY
ROBBINS ENGINEERING, INC.
Plate - LOCK 20 Ga, Gross Area
Plate - RHS 20 Ga, Gross Area

Jt	Type	Plt Size	X	Y	JSI
A	LOCK	3.0x 5.0	Ctr	Ctr	0.48

For proper installation of toe-nails, refer to the 2001 National Design Specification (NDS) for Wood Construction

NOTES:
Trusses Manufactured by:
RIDGWAY ROOF TRUSS
Analysis Conforms To:
ANSI/TPI 95 & 02
OH Loading
Soffit psf 2.0
Wind Loads - ANSI / ASCE 7-98
Truss is designed as
Components and Claddings*
for Exterior zone location.
Wind Speed: 110 mph
Mean Roof Height: 25-0
Exposure Category: B
Occupancy Factor : 1.00
Building Type: Enclosed
TC Dead Load: 4.0 psf
BC Dead Load: 6.0 psf
Max comp. force 114 Lbs

Quality Control Factor 1.25

FABRICATOR NOTES:
1. Delegated Engineer (Truss Designer)
Gary Dounson, PE 35054
Gary Dounson & Associates, Inc.
2830 NW 41st Street Suite D
Gainesville, FL 32606
(352)375-8593
CA 5201

Job	Mark	Quan	Type	Span	P1-H1	Left OH	Right OH	*Engineering*
050886	*R2F*	3	JACK	20900	6	2- 0- 0	0	

Stewart Model

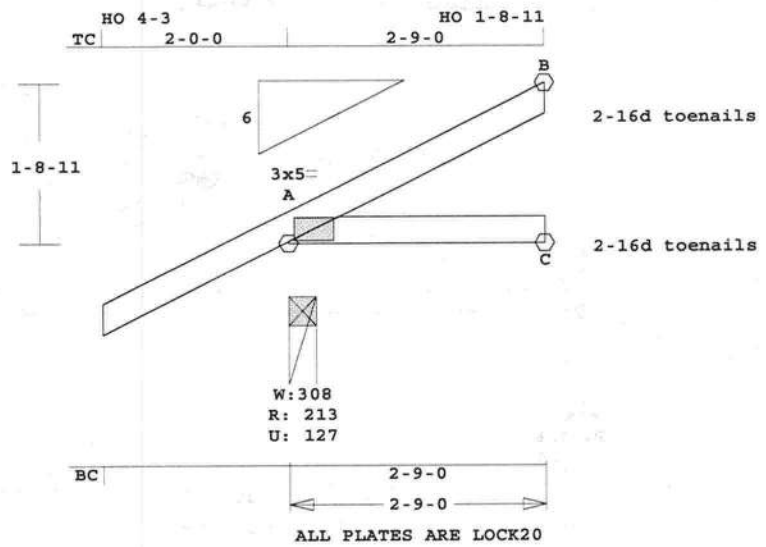

Scale: 0.500" = 1'

Robbins Engineering, Inc./Online Plus™ APPROX. TRUSS WEIGHT: 15.5 LBS

Online Plus -- Version 17.7.008
RUN DATE: 17-AUG-05

	CSI	-Size-	----Lumber----
TC	0.08	2x 4	SP-#2
BC	0.08	2x 4	SP-#2

Brace truss as follows:

O.C.	From	To
TC Cont.	0- 0- 0	2- 9- 0
BC Cont.	0- 0- 0	2- 9- 0

Loading	Live	Dead	(psf)
TC	20.0	7.0	
BC	0.0	10.0	
Total	20.0	17.0	37.0
Spacing			24.0"

Lumber Duration Factor 1.25
Plate Duration Factor 1.25
TC Fb=1.15 Fc=1.10 Ft=1.10
BC Fb=1.10 Fc=1.10 Ft=1.10

Plus 7 Wind Load Case(s)

Jt	React Lbs	Uplft Lbs	Size In-Sx	Req'd In-Sx
A	213	127	3- 8	1- 0
			Hz =	61
B	73	63	3- 8	1- 0
C	33	0	3- 8	1- 0
			Hz =	38

Membr	CSI	P Lbs	Axl-CSI-Bnd
----------Top Chords----------			
A -B	0.08	82 C	0.00 0.08
--------Bottom Chords---------			
A -C	0.08	37 T	0.00 0.08

LL Defl 0.00" in A -C L/999
TL Defl 0.00" in A -C L/999
Shear // Grain in A -B 0.12

Plates for each ply each face.
ALL CONNECTOR PLATES
TO BE MANUFACTURED BY
ROBBINS ENGINEERING, INC.
Plate - LOCK 20 Ga, Gross Area
Plate - RHS 20 Ga, Gross Area

Jt	Type	Plt Size	X	Y	JSI
A	LOCK	3.0x 5.0	Ctr	Ctr	0.47

For proper installation of
toe-nails, refer to the 2001
National Design Specification
(NDS) for Wood Construction

NOTES:
Trusses Manufactured by:
RIDGWAY ROOF TRUSS
Analysis Conforms To:
ANSI/TPI 95 & 02
OH Loading
Soffit psf 2.0
Wind Loads - ANSI / ASCE 7-98
Truss is designed as
Components and Claddings*
for Exterior zone location.
Wind Speed: 110 mph
Mean Roof Height: 25-0
Exposure Category: B
Occupancy Factor : 1.00
Building Type: Enclosed
TC Dead Load: 4.0 psf
BC Dead Load: 6.0 psf
Max comp. force 82 Lbs

Quality Control Factor 1.25

FABRICATOR NOTES:
1. Delegated Engineer (Truss Designer)
Gary Dounson, PE 35054
Gary Dounson & Associates, Inc.
2830 NW 41st Street Suite D
Gainesville, FL 32606
(352)375-8593
CA 5201

Job	Mark	Quan	Type	Span	P1-H1	Left OH	Right OH	Engineering
050886	R3	2	KING	91013	4.243	2- 9-15	0	

Stewart Model

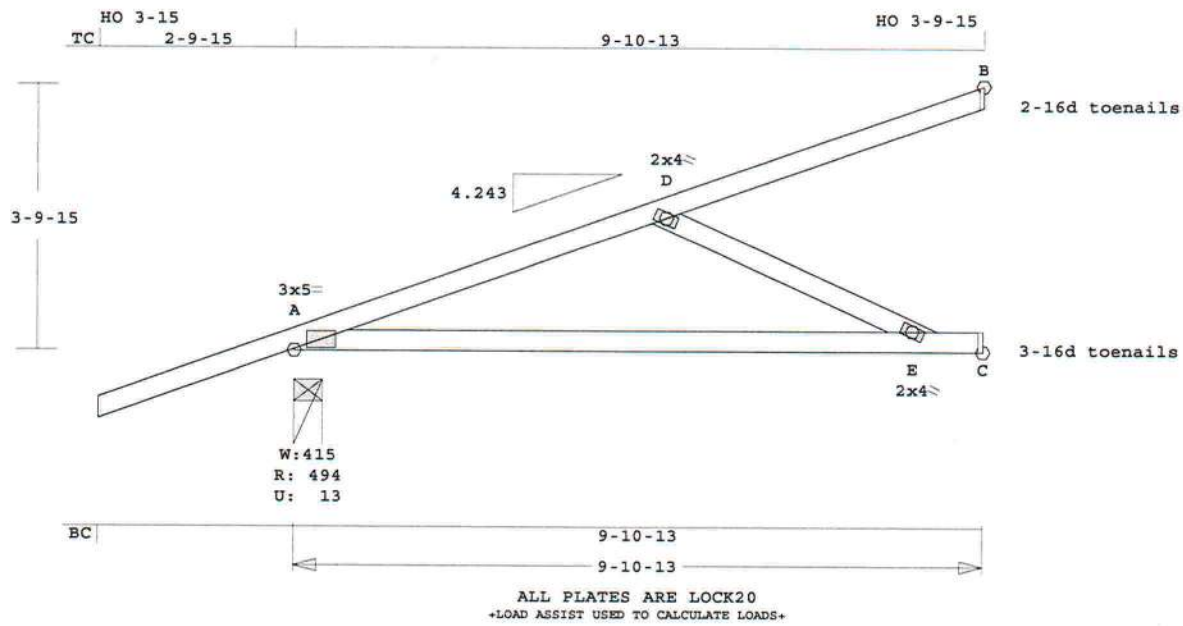

Scale: 0.375" = 1'

Robbins Engineering, Inc./Online Plus™ APPROX. TRUSS WEIGHT: 52.7 LBS

Online Plus -- Version 17.7.008
RUN DATE: 17-AUG-05

	CSI	-Size-	----Lumber----
TC	0.46	2x 4	SP-#2
BC	0.70	2x 4	SP-#2
WB	0.19	2x 4	SP-#3

Brace truss as follows:

O.C.	From	To
TC Cont.	0- 0- 0	9-10-13
BC Cont.	0- 0- 0	9-10-13

Loading	Live	Dead	(psf)
TC	20.0	7.0	
BC	0.0	10.0	
Total	20.0	17.0	37.0
Spacing			24.0"

Lumber Duration Factor 1.25
Plate Duration Factor 1.25
TC Fb=1.00 Fc=1.00 Ft=1.00
BC Fb=1.00 Fc=1.00 Ft=1.00

Load Case # 1 Girder Loading
Lumber Duration Factor 1.25
Plate Duration Factor 1.25

plf -	Live	Dead	From	To
TC V	40	14	0.0'	9.9'
BC V	0	20	0.0'	9.9'
TC V	-40	-14	0.0'	
	59	21		9.9'
BC V	0	-20	0.0'	
	0	30		9.9'

Plus 7 Wind Load Case(s)

Jt	React Lbs	Uplft Lbs	Size In-Sx	Req'd In-Sx
A	494	13	4-15	1- 0
			Hz =	200
B	245	206	3- 8	1- 0
C	368	62	3- 8	1- 0
			Hz =	138

Membr	CSI	P Lbs	Axl	CSI	Bnd
----------Top Chords----------					
A -D	0.37	529	C	0.00	0.37
D -B	0.46	142	C	0.00	0.46
--------Bottom Chords---------					
A -E	0.70	555	C	0.09	0.61
E -C	0.40	138	T	0.00	0.40
----------Webs----------					
D -E	0.19	610	T		

LL Defl -0.07" in A -E L/999
TL Defl -0.44" in A -E L/250
Shear // Grain in E -C 0.47

Plates for each ply each face.
ALL CONNECTOR PLATES
TO BE MANUFACTURED BY
ROBBINS ENGINEERING, INC.
Plate - LOCK 20 Ga, Gross Area
Plate - RHS 20 Ga, Gross Area

Jt	Type	Plt Size	X	Y	JSI
A	LOCK	3.0x 5.0	Ctr	Ctr	0.59
D	LOCK	2.0x 4.0	Ctr	Ctr	0.37
E	LOCK	2.0x 4.0	Ctr	Ctr	0.39

For proper installation of toe-nails, refer to the 2001 National Design Specification (NDS) for Wood Construction

NOTES:
Trusses Manufactured by:
RIDGWAY ROOF TRUSS
Analysis Conforms To:
ANSI/TPI 95 & 02
Girder King Jack
Loading TC and BC
Setback 7- 0- 0
OH Loading
Soffit psf 2.0
Use properly rated hangers for loads framing into girder truss.
Wind Loads - ANSI / ASCE 7-98
Truss is designed as Components and Claddings* for Exterior zone location.
Wind Speed: 110 mph
Mean Roof Height: 25-0
Exposure Category: B
Occupancy Factor : 1.00
Building Type: Enclosed
TC Dead Load: 4.0 psf
BC Dead Load: 6.0 psf
Max comp. force 584 Lbs
Quality Control Factor 1.25

FABRICATOR NOTES:
1. Delegated Engineer (Truss Designer)
Gary Dounson, PE 35054
Gary Dounson & Associates, Inc.
2830 NW 41st Street Suite D
Gainesville, FL 32606
(352)375-8593
CA 5201

Job	Mark	Quan	Type	Span	P1-H1	Left OH	Right OH	Engineering
050886	R3A	2	MONO	30211	5.125	2- 4- 9	0	

Stewart Model

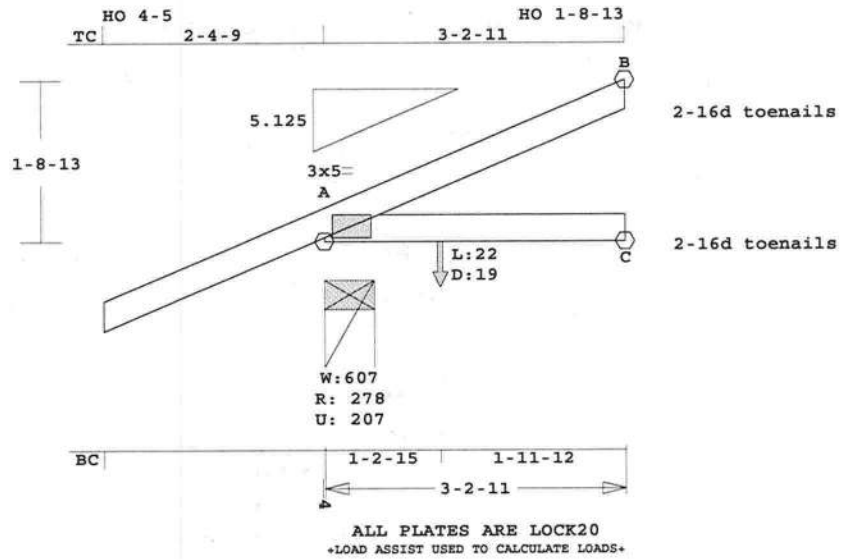

Scale: 0.500" = 1'

Robbins Engineering, Inc./Online Plus™ APPROX. TRUSS WEIGHT: 17.8 LBS

Online Plus -- Version 17.7.008
RUN DATE: 17-AUG-05

	CSI	-Size-	----Lumber----
TC	0.15	2x 4	SP-#2
BC	0.11	2x 4	SP-#2

Brace truss as follows:

O.C.	From	To
TC Cont.	0- 0- 0	3- 2-11
BC Cont.	0- 0- 0	3- 2-11

Loading	Live	Dead	(psf)
TC	20.0	7.0	
BC	0.0	10.0	
Total	20.0	17.0	37.0
Spacing			24.0"

Lumber Duration Factor 1.25
Plate Duration Factor 1.25
TC Fb=1.00 Fc=1.00 Ft=1.00
BC Fb=1.00 Fc=1.00 Ft=1.00

Load Case # 1 Standard Loading
Lumber Duration Factor 1.25
Plate Duration Factor 1.25

plf -	Live	Dead	From	To
TC V	40	14	0.0'	3.2'
BC V	0	20	0.0'	3.2'
BC V	22	19	1.2'	CL-LB

Plus 7 Wind Load Case(s)

Jt	React Lbs	Uplft Lbs	Size In-Sx	Req'd In-Sx
A	278	207	6- 7	1- 0
			Hz =	62
B	90	69	3- 8	1- 0
C	49	0	3- 8	1- 0
			Hz =	41

Membr	CSI	P Lbs	Axl-CSI-Bnd
----------Top Chords----------			
A -B	0.15	81 C	0.00 0.15
--------Bottom Chords---------			
A -C	0.11	40 T	0.00 0.11

LL Defl 0.00" in A -C L/999
TL Defl -0.01" in A -C L/999
Shear // Grain in A -B 0.14

Plates for each ply each face.
ALL CONNECTOR PLATES
TO BE MANUFACTURED BY
ROBBINS ENGINEERING, INC.
Plate - LOCK 20 Ga, Gross Area
Plate - RHS 20 Ga, Gross Area

Jt	Type	Plt Size	X	Y	JSI
A	LOCK	3.0x 5.0	Ctr	Ctr	0.49

For proper installation of toe-nails, refer to the 2001 National Design Specification (NDS) for Wood Construction

NOTES:
Trusses Manufactured by:
RIDGWAY ROOF TRUSS
Analysis Conforms To:
ANSI/TPI 95 & 02
OH Loading
Soffit psf 2.0
Wind Loads - ANSI / ASCE 7-98
Truss is designed as
Components and Claddings*
for Exterior zone location.
Wind Speed: 110 mph
Mean Roof Height: 25-0
Exposure Category: B
Occupancy Factor : 1.00
Building Type: Enclosed
TC Dead Load: 4.0 psf
BC Dead Load: 6.0 psf
Max comp. force 81 Lbs
Quality Control Factor 1.25

FABRICATOR NOTES:
1. Delegated Engineer (Truss Designer)
Gary Dounson, PE 35054
Gary Dounson & Associates, Inc.
2830 NW 41st Street Suite D
Gainesville, FL 32606
(352)375-8593
CA 5201

Job	Mark	Quan	Type	Span	P1-H1	Left OH	Right OH	Engineering
050886	R3B	1	MONO	30303	5.267	2- 3-11	0	

Stewart Model

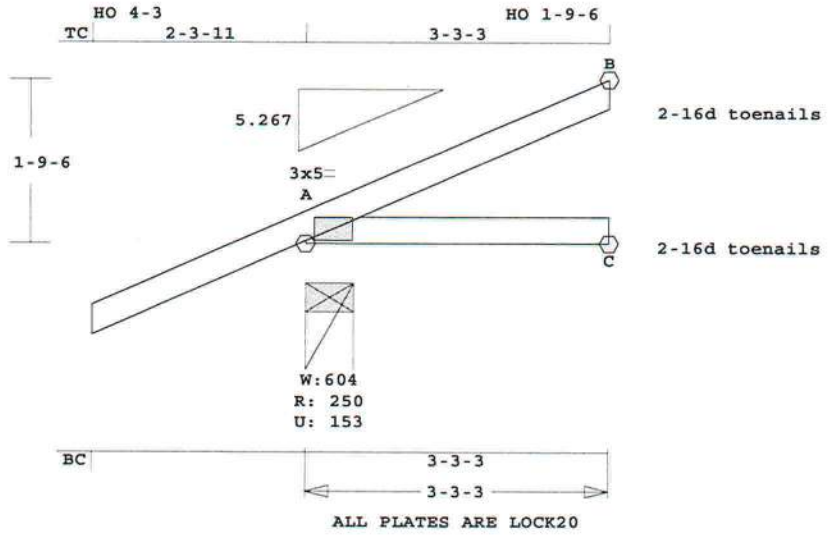

Scale: 0.500" = 1'

Robbins Engineering, Inc./Online Plus™ APPROX. TRUSS WEIGHT: 17.9 LBS

Online Plus -- Version 17.7.008
RUN DATE: 17-AUG-05

	CSI	-Size-	----Lumber----
TC	0.12	2x 4	SP-#2
BC	0.11	2x 4	SP-#2

Brace truss as follows:

O.C.	From	To
TC Cont.	0- 0- 0	3- 3- 3
BC Cont.	0- 0- 0	3- 3- 3

Loading	Live	Dead	(psf)
TC	20.0	7.0	
BC	0.0	10.0	
Total	20.0	17.0	37.0
Spacing			24.0"

Lumber Duration Factor 1.25
Plate Duration Factor 1.25
TC Fb=1.15 Fc=1.10 Ft=1.10
BC Fb=1.10 Fc=1.10 Ft=1.10

Plus 7 Wind Load Case(s)

Jt	React Lbs	Uplft Lbs	Size In-Sx	Req'd In-Sx
A	250	154	6- 4	1- 0
			Hz =	64
B	86	69	3- 8	1- 0
C	39	0	3- 8	1- 0
			Hz =	42

Membr	CSI	P Lbs	Axl	CSI-Bnd
----------Top Chords----------				
A -B	0.12	82	C 0.00	0.12
--------Bottom Chords---------				
A -C	0.11	41	T 0.00	0.11

LL Defl 0.00" in A -C L/999
TL Defl -0.01" in A -C L/999
Shear // Grain in A -B 0.14

Plates for each ply each face.
ALL CONNECTOR PLATES
TO BE MANUFACTURED BY
ROBBINS ENGINEERING, INC.
Plate - LOCK 20 Ga, Gross Area
Plate - RHS 20 Ga, Gross Area

Jt	Type	Plt Size	X	Y	JSI
A	LOCK	3.0x 5.0	Ctr	Ctr	0.49

For proper installation of toe-nails, refer to the 2001 National Design Specification (NDS) for Wood Construction

NOTES:
Trusses Manufactured by:
RIDGWAY ROOF TRUSS
Analysis Conforms To:
ANSI/TPI 95 & 02
OH Loading
Soffit psf 2.0
Wind Loads - ANSI / ASCE 7-98
Truss is designed as
Components and Claddings*
for Exterior zone location.
Wind Speed: 110 mph
Mean Roof Height: 25-0
Exposure Category: B
Occupancy Factor : 1.00
Building Type: Enclosed
TC Dead Load: 4.0 psf
BC Dead Load: 6.0 psf
Max comp. force 82 Lbs

Quality Control Factor 1.25

FABRICATOR NOTES:
1. Delegated Engineer (Truss Designer)
Gary Dounson, PE 35054
Gary Dounson & Associates, Inc.
2830 NW 41st Street Suite D
Gainesville, FL 32606
(352)375-8593
CA 5201

Job	Mark	Quan	Type	Span	P1-H1	Left OH	Right OH	*Engineering*
050886	*R3C*	2	MONO	30411	5.27	2- 3-12	0	

Stewart Model

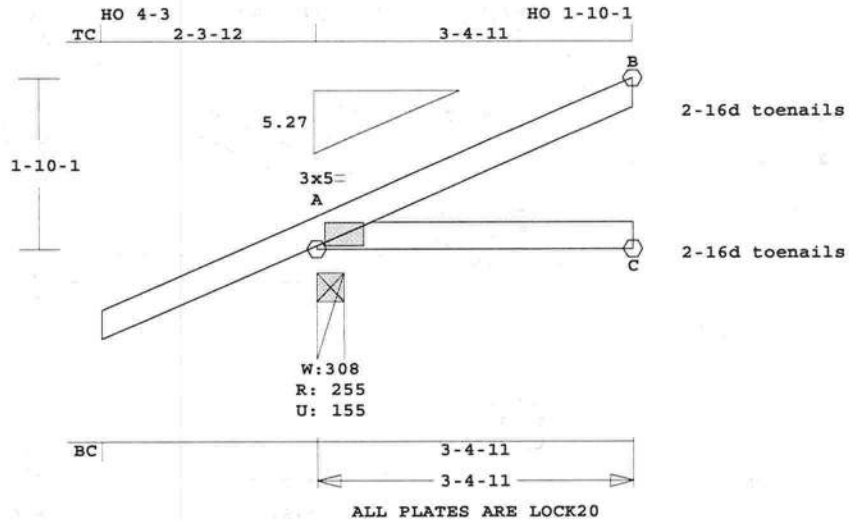

Scale: 0.500" = 1'

Robbins Engineering, Inc./Online Plus™ APPROX. TRUSS WEIGHT: 18.4 LBS

Online Plus -- Version 17.7.008
RUN DATE: 17-AUG-05

	CSI	-Size-	----Lumber----
TC	0.13	2x 4	SP-#2
BC	0.12	2x 4	SP-#2

Brace truss as follows:

O.C.	From	To
TC Cont.	0- 0- 0	3- 4-11
BC Cont.	0- 0- 0	3- 4-11

Loading	Live	Dead	(psf)
TC	20.0	7.0	
BC	0.0	10.0	
Total	20.0	17.0	37.0
Spacing			24.0"

Lumber Duration Factor 1.25
Plate Duration Factor 1.25
TC Fb=1.15 Fc=1.10 Ft=1.10
BC Fb=1.10 Fc=1.10 Ft=1.10

Plus 7 Wind Load Case(s)

Jt	React Lbs	Uplft Lbs	Size In-Sx	Req'd In-Sx
A	255	155	3- 8	1- 0
			Hz =	67
B	89	72	3- 8	1- 0
C	41	0	3- 8	1- 0
			Hz =	43

Membr	CSI	P Lbs	Axl	CSI-Bnd
----------Top Chords----------				
A -B	0.13	84	C 0.00	0.13
--------Bottom Chords---------				
A -C	0.12	43	T 0.00	0.12

LL Defl 0.00" in A -C L/999
TL Defl -0.01" in A -C L/999
Shear // Grain in A -B 0.15

Plates for each ply each face.
ALL CONNECTOR PLATES
TO BE MANUFACTURED BY
ROBBINS ENGINEERING, INC.
Plate - LOCK 20 Ga, Gross Area
Plate - RHS 20 Ga, Gross Area

Jt	Type	Plt Size	X	Y	JSI
A	LOCK	3.0x 5.0	Ctr	Ctr	0.49

For proper installation of
toe-nails, refer to the 2001
National Design Specification
(NDS) for Wood Construction

NOTES:
Trusses Manufactured by:
RIDGWAY ROOF TRUSS
Analysis Conforms To:
ANSI/TPI 95 & 02
OH Loading
Soffit psf 2.0
Wind Loads - ANSI / ASCE 7-98
Truss is designed as
Components and Claddings*
for Exterior zone location.
Wind Speed: 110 mph
Mean Roof Height: 25-0
Exposure Category: B
Occupancy Factor : 1.00
Building Type: Enclosed
TC Dead Load: 4.0 psf
BC Dead Load: 6.0 psf
Max comp. force 84 Lbs

Quality Control Factor 1.25

FABRICATOR NOTES:
1. Delegated Engineer (Truss Designer)
Gary Dounson, PE 35054
Gary Dounson & Associates, Inc.
2830 NW 41st Street Suite D
Gainesville, FL 32606
(352)375-8593
CA 5201

Job	Mark	Quan	Type	Span	P1-H1	Left OH	Right OH	Engineering
050886	R3D	2	MONO	50210	5.27	2- 3-12	0	

Stewart Model

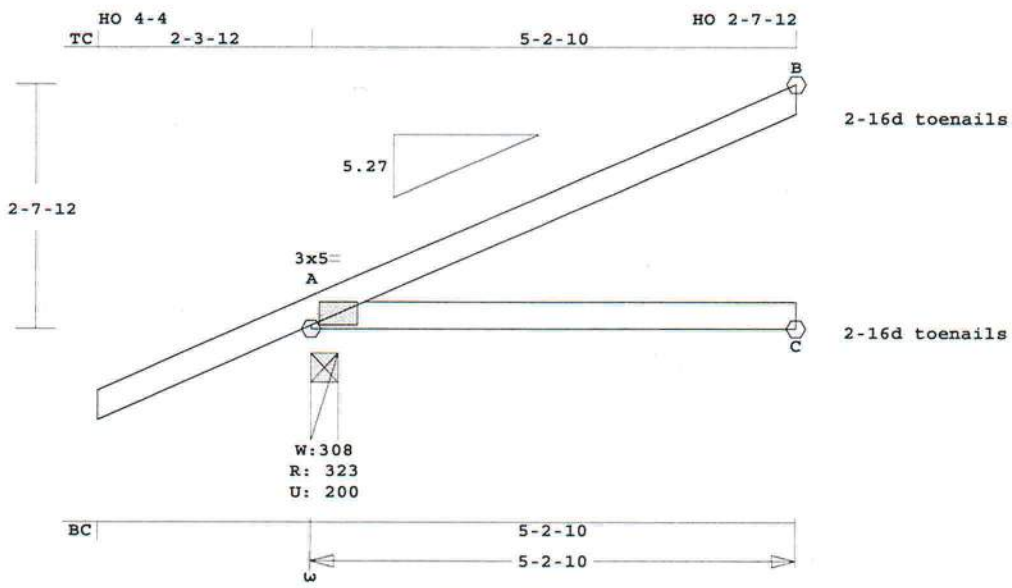

ALL PLATES ARE LOCK20

Scale: 0.500" = 1'

Robbins Engineering, Inc./Online Plus™ APPROX. TRUSS WEIGHT: 25.6 LBS

Online Plus -- Version 17.7.008
RUN DATE: 17-AUG-05

	CSI	-Size-	----Lumber----
TC	0.37	2x 4	SP-#2
BC	0.32	2x 4	SP-#2

Brace truss as follows:

O.C.	From	To
TC Cont.	0- 0- 0	5- 2-10
BC Cont.	0- 0- 0	5- 2-10

Loading	Live	Dead	(psf)
TC	20.0	7.0	
BC	0.0	10.0	
Total	20.0	17.0	37.0
Spacing			24.0"

Lumber Duration Factor 1.25
Plate Duration Factor 1.25
TC Fb=1.15 Fc=1.10 Ft=1.10
BC Fb=1.10 Fc=1.10 Ft=1.10

Plus 7 Wind Load Case(s)

Jt	React Lbs	Uplft Lbs	Size In-Sx	Req'd In-Sx
A	323	200	3- 8	1- 0
			Hz =	104
B	134	107	3- 8	1- 0
C	63	0	3- 8	1- 0
			Hz =	67

Membr	CSI	P Lbs	Axl-CSI-Bnd
----------Top Chords----------			
A -B	0.37	127 C	0.00 0.37
--------Bottom Chords---------			
A -C	0.32	67 T	0.00 0.32

LL Defl -0.02" in A -C L/999
TL Defl -0.05" in A -C L/999
Shear // Grain in A -B 0.28

Plates for each ply each face.
ALL CONNECTOR PLATES
TO BE MANUFACTURED BY
ROBBINS ENGINEERING, INC.
Plate - LOCK 20 Ga, Gross Area
Plate - RHS 20 Ga, Gross Area

Jt	Type	Plt Size	X	Y	JSI
A	LOCK	3.0x 5.0	Ctr	Ctr	0.49

For proper installation of toe-nails, refer to the 2001 National Design Specification (NDS) for Wood Construction

NOTES:
Trusses Manufactured by:
RIDGWAY ROOF TRUSS
Analysis Conforms To:
ANSI/TPI 95 & 02
OH Loading
Soffit psf 2.0
Wind Loads - ANSI / ASCE 7-98
Truss is designed as
Components and Claddings*
for Exterior zone location.
Wind Speed: 110 mph
Mean Roof Height: 25-0
Exposure Category: B
Occupancy Factor : 1.00
Building Type: Enclosed
TC Dead Load: 4.0 psf
BC Dead Load: 6.0 psf
Max comp. force 127 Lbs

Quality Control Factor 1.25

FABRICATOR NOTES:
1. Delegated Engineer (Truss Designer)
Gary Dounson, PE 35054
Gary Dounson & Associates, Inc.
2830 NW 41st Street Suite D
Gainesville, FL 32606
(352)375-8593
CA 5201

Job	Mark	Quan	Type	Span	P1-H1	Left OH	Right OH	*Engineering*
050886	*R4*	4	JACK1	10007	6	2- 0- 0	0	

Stewart Model

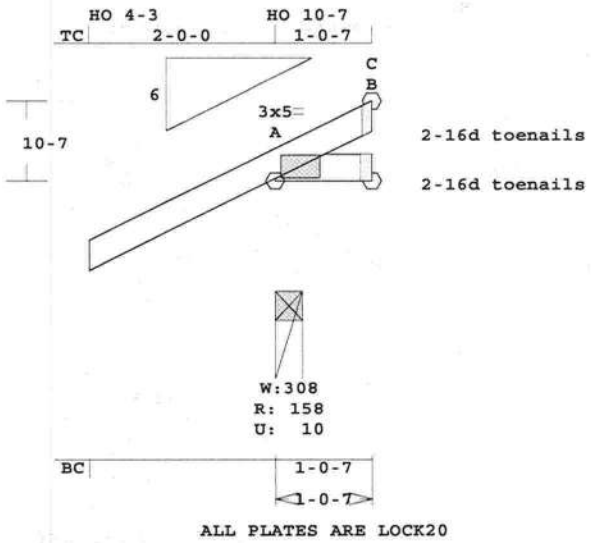

Scale: 0.500" = 1'

Robbins Engineering, Inc./Online Plus™ APPROX. TRUSS WEIGHT: 8.6 LBS

Online Plus -- Version 17.7.008
RUN DATE: 17-AUG-05

	CSI	-Size-	----Lumber----
TC	0.01	2x 4	SP-#2
BC	0.01	2x 4	SP-#2

Brace truss as follows:

O.C.	From	To
TC Cont.	0- 0- 0	1- 0- 7
BC Cont.	0- 0- 0	1- 0- 7

Loading	Live	Dead	(psf)
TC	20.0	7.0	
BC	0.0	10.0	
Total	20.0	17.0	37.0
Spacing			24.0"

Lumber Duration Factor 1.25
Plate Duration Factor 1.25
TC Fb=1.15 Fc=1.10 Ft=1.10
BC Fb=1.10 Fc=1.10 Ft=1.10

Plus 7 Wind Load Case(s)

Jt	React Lbs	Uplft Lbs	Size In-Sx	Req'd In-Sx
A	158	11	3- 8	1- 0
			Hz =	51
B	19	46	1- 8	1- 0
C	11	11	1- 8	1- 0

Membr	CSI	P Lbs	Axl	CSI-Bnd
----------Top Chords----------				
A -B	0.01	21 C	0.00	0.01
--------Bottom Chords---------				
A -C	0.01	12 T	0.00	0.01

LL Defl 0.00" in A -C L/999
TL Defl 0.00" in A -C L/999
Shear // Grain in A -B 0.04

Plates for each ply each face.
ALL CONNECTOR PLATES
TO BE MANUFACTURED BY
ROBBINS ENGINEERING, INC.
Plate - LOCK 20 Ga, Gross Area
Plate - RHS 20 Ga, Gross Area

Jt	Type	Plt Size	X	Y	JSI
A	LOCK	3.0x 5.0	Ctr	Ctr	0.47

For proper installation of
toe-nails, refer to the 2001
National Design Specification
(NDS) for Wood Construction

NOTES:
Trusses Manufactured by:
RIDGWAY ROOF TRUSS
Analysis Conforms To:
ANSI/TPI 95 & 02
OH Loading
Soffit psf 2.0
Wind Loads - ANSI / ASCE 7-98
Truss is designed as
Components and Claddings*
for Exterior zone location.
Wind Speed: 110 mph
Mean Roof Height: 25-0
Exposure Category: B
Occupancy Factor : 1.00
Building Type: Enclosed
TC Dead Load: 4.0 psf
BC Dead Load: 6.0 psf
Max comp. force 21 Lbs

Quality Control Factor 1.25

FABRICATOR NOTES:
1. Delegated Engineer (Truss Designer)
Gary Dounson, PE 35054
Gary Dounson & Associates, Inc.
2830 NW 41st Street Suite D
Gainesville, FL 32606
(352)375-8593
CA 5201

Job	Mark	Quan	Type	Span	P1-H1	Left OH	Right OH	*Engineering*
050886	*R4A*	2	MONO	1007	6	2- 0- 0	0	

Stewart Model

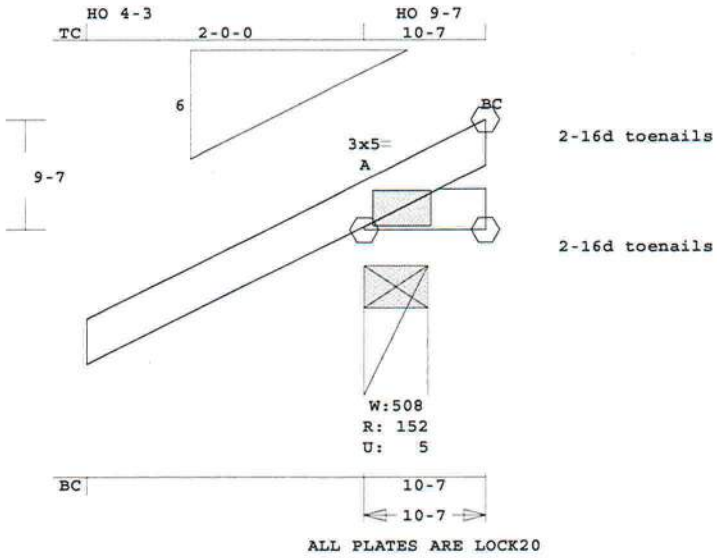

Scale: 0.750" = 1'

Robbins Engineering, Inc./Online Plus™ APPROX. TRUSS WEIGHT: 8.0 LBS

Online Plus -- Version 17.7.008
RUN DATE: 17-AUG-05

	CSI	-Size-	----Lumber----
TC	0.00	2x 4	SP-#2
BC	0.00	2x 4	SP-#2

Brace truss as follows:

O.C.	From	To
TC Cont.	0- 0- 0	0-10- 7
BC Cont.	0- 0- 0	0-10- 7

Loading	Live	Dead	(psf)
TC	20.0	7.0	
BC	0.0	10.0	
Total	20.0	17.0	37.0
Spacing			24.0"

Lumber Duration Factor 1.25
Plate Duration Factor 1.25
TC Fb=1.15 Fc=1.10 Ft=1.10
BC Fb=1.10 Fc=1.10 Ft=1.10

Plus 7 Wind Load Case(s)

Jt	React Lbs	Uplft Lbs	Size In-Sx	Req'd In-Sx
A	152	5	3- 8	1- 0
			Hz =	41
B	15	36	1- 8	1- 0
C	9	11	1- 8	1- 0

Membr	CSI	P Lbs	Axl-CSI-Bnd
----------Top Chords----------			
A -B	0.00	16	C
--------Bottom Chords---------			
A -C	0.00	10	T

LL Defl 0.00" in A -C L/999
TL Defl 0.00" in A -C L/999
Shear // Grain in B -B 0.03

Plates for each ply each face.
ALL CONNECTOR PLATES
TO BE MANUFACTURED BY
ROBBINS ENGINEERING, INC.
Plate - LOCK 20 Ga, Gross Area
Plate - RHS 20 Ga, Gross Area

Jt	Type	Plt Size	X	Y	JSI
A	LOCK	3.0x 5.0	Ctr	Ctr	0.47

For proper installation of
toe-nails, refer to the 2001
National Design Specification
(NDS) for Wood Construction

NOTES:
Trusses Manufactured by:
RIDGWAY ROOF TRUSS
Analysis Conforms To:
ANSI/TPI 95 & 02
OH Loading
Soffit psf 2.0
Wind Loads - ANSI / ASCE 7-98
Truss is designed as
Components and Claddings*
for Exterior zone location.
Wind Speed: 110 mph
Mean Roof Height: 25-0
Exposure Category: B
Occupancy Factor : 1.00
Building Type: Enclosed
TC Dead Load: 4.0 psf
BC Dead Load: 6.0 psf
Max comp. force 16 Lbs

Quality Control Factor 1.25

FABRICATOR NOTES:
1. Delegated Engineer (Truss Designer)
Gary Dounson, PE 35054
Gary Dounson & Associates, Inc.
2830 NW 41st Street Suite D
Gainesville, FL 32606
(352)375-8593
CA 5201

Job	Mark	Quan	Type	Span	P1-H1	Left OH	Right OH	*Engineering*
050886	*R4B*	3	MONO	10915	5.275	2- 3- 5	0	

Stewart Model

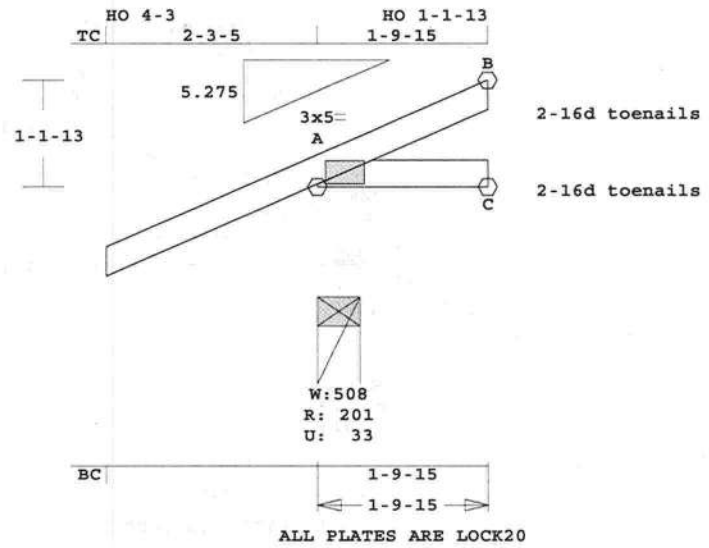

Scale: 0.500" = 1'

Robbins Engineering, Inc./Online Plus™ APPROX. TRUSS WEIGHT: 12.2 LBS

Online Plus -- Version 17.7.008
RUN DATE: 17-AUG-05

	CSI	-Size-	----Lumber----
TC	0.03	2x 4	SP-#2
BC	0.03	2x 4	SP-#2

Brace truss as follows:

O.C.	From	To
TC Cont.	0- 0- 0	1- 9-15
BC Cont.	0- 0- 0	1- 9-15

Loading	Live	Dead	(psf)
TC	20.0	7.0	
BC	0.0	10.0	
Total	20.0	17.0	37.0
Spacing			24.0"

Lumber Duration Factor 1.25
Plate Duration Factor 1.25
TC Fb=1.15 Fc=1.10 Ft=1.10
BC Fb=1.10 Fc=1.10 Ft=1.10

Plus 7 Wind Load Case(s)

Jt	React Lbs	Uplft Lbs	Size In-Sx	Req'd In-Sx
A	201	33	3- 8	1- 0
			Hz =	87
B	44	99	1- 8	1- 0
C	20	12	1- 8	1- 0

Membr	CSI	P Lbs	Axl	CSI	Bnd
----------Top Chords----------					
A -B	0.03	42	C	0.00	0.03
--------Bottom Chords---------					
A -C	0.03	22	T	0.00	0.03

LL Defl 0.00" in A -C L/999
TL Defl 0.00" in A -C L/999
Shear // Grain in A -B 0.07

Plates for each ply each face.
ALL CONNECTOR PLATES
TO BE MANUFACTURED BY
ROBBINS ENGINEERING, INC.
Plate - LOCK 20 Ga, Gross Area
Plate - RHS 20 Ga, Gross Area

Jt	Type	Plt Size	X	Y	JSI
A	LOCK	3.0x 5.0	Ctr	Ctr	0.49

For proper installation of
toe-nails, refer to the 2001
National Design Specification
(NDS) for Wood Construction

NOTES:
Trusses Manufactured by:
RIDGWAY ROOF TRUSS
Analysis Conforms To:
ANSI/TPI 95 & 02
OH Loading
Soffit psf 2.0
Wind Loads - ANSI / ASCE 7-98
Truss is designed as
Components and Claddings*
for Exterior zone location.
Wind Speed: 110 mph
Mean Roof Height: 25-0
Exposure Category: B
Occupancy Factor : 1.00
Building Type: Enclosed
TC Dead Load: 4.0 psf
BC Dead Load: 6.0 psf
Max comp. force 42 Lbs

Quality Control Factor 1.25

FABRICATOR NOTES:
1. Delegated Engineer (Truss Designer)
Gary Dounson, PE 35054
Gary Dounson & Associates, Inc.
2830 NW 41st Street Suite D
Gainesville, FL 32606
(352)375-8593
CA 5201

Job	Mark	Quan	Type	Span	P1-H1	Left OH	Right OH	*Engineering*
050886	*R5*	4	JACK1	30007	6	2- 0- 0	0	

Stewart Model

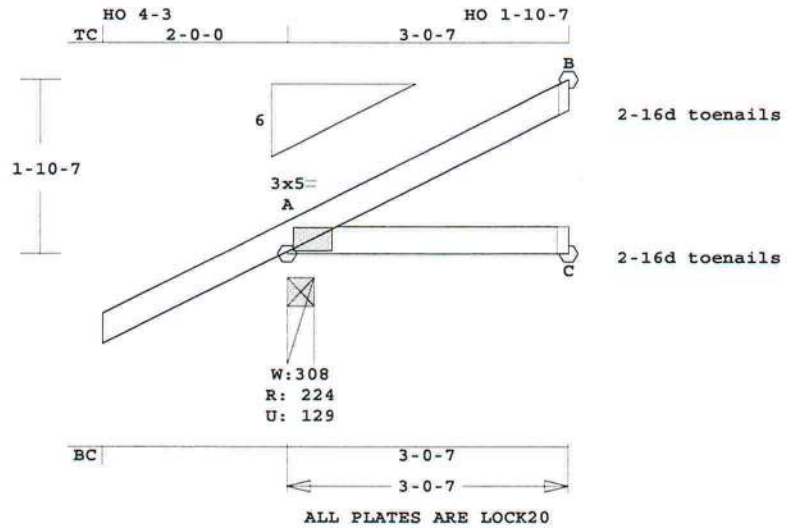

Scale: 0.500" = 1'

Robbins Engineering, Inc./Online Plus™ APPROX. TRUSS WEIGHT: 16.6 LBS

Online Plus -- Version 17.7.008
RUN DATE: 17-AUG-05

	CSI	-Size-	----Lumber----
TC	0.11	2x 4	SP-#2
BC	0.10	2x 4	SP-#2

Brace truss as follows:

O.C.	From	To
TC Cont.	0- 0- 0	3- 0- 7
BC Cont.	0- 0- 0	3- 0- 7

Loading	Live	Dead	(psf)
TC	20.0	7.0	
BC	0.0	10.0	
Total	20.0	17.0	37.0
Spacing			24.0"

Lumber Duration Factor 1.25
Plate Duration Factor 1.25
TC Fb=1.15 Fc=1.10 Ft=1.10
BC Fb=1.10 Fc=1.10 Ft=1.10

Plus 7 Wind Load Case(s)

Jt	React Lbs	Uplft Lbs	Size In-Sx	Req'd In-Sx
A	224	129	3- 8	1- 0
			Hz =	68
B	80	69	3- 8	1- 0
C	36	0	3- 8	1- 0
			Hz =	42

Membr	CSI	P Lbs	Axl-CSI-Bnd
----------Top Chords----------			
A -B	0.11	90 C	0.00 0.11
--------Bottom Chords---------			
A -C	0.10	41 T	0.00 0.10

LL Defl 0.00" in A -C L/999
TL Defl 0.00" in A -C L/999
Shear // Grain in A -B 0.13

Plates for each ply each face.
ALL CONNECTOR PLATES
TO BE MANUFACTURED BY
ROBBINS ENGINEERING, INC.
Plate - LOCK 20 Ga, Gross Area
Plate - RHS 20 Ga, Gross Area

Jt	Type	Plt Size	X	Y	JSI
A	LOCK	3.0x 5.0	Ctr	Ctr	0.47

For proper installation of toe-nails, refer to the 2001 National Design Specification (NDS) for Wood Construction

NOTES:
Trusses Manufactured by:
RIDGWAY ROOF TRUSS
Analysis Conforms To:
ANSI/TPI 95 & 02
OH Loading
Soffit psf 2.0
Wind Loads - ANSI / ASCE 7-98
Truss is designed as
Components and Claddings*
for Exterior zone location.
Wind Speed: 110 mph
Mean Roof Height: 25-0
Exposure Category: B
Occupancy Factor : 1.00
Building Type: Enclosed
TC Dead Load: 4.0 psf
BC Dead Load: 6.0 psf
Max comp. force 90 Lbs

Quality Control Factor 1.25

FABRICATOR NOTES:
1. Delegated Engineer (Truss Designer)
Gary Dounson, PE 35054
Gary Dounson & Associates, Inc.
2830 NW 41st Street Suite D
Gainesville, FL 32606
(352)375-8593
CA 5201

Job	Mark	Quan	Type	Span	P1-H1	Left OH	Right OH	*Engineering*
050886	*R6*	4	JACK1	50007	6	2- 0- 0	0	

Stewart Model

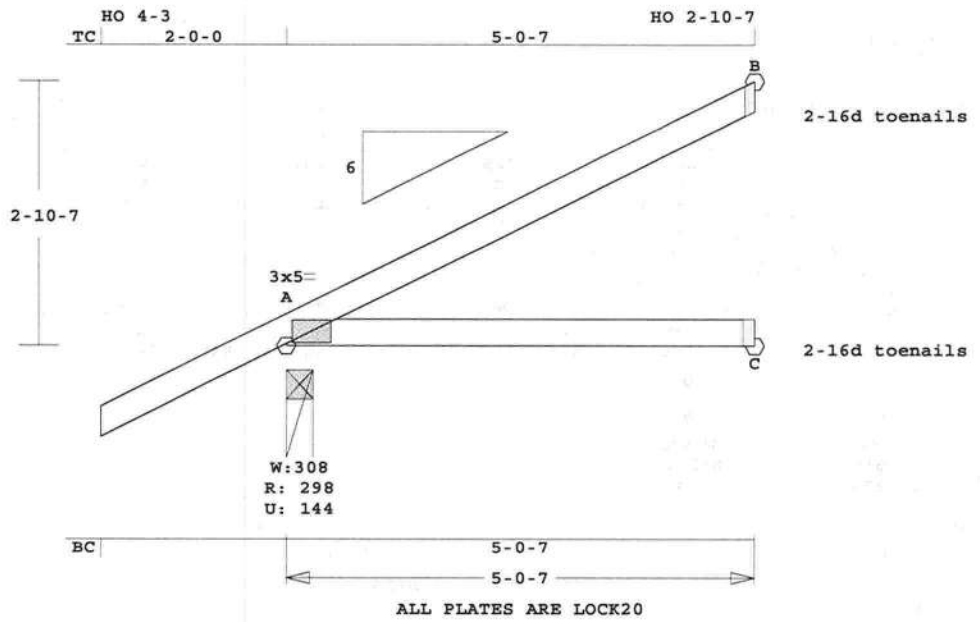

Scale: 0.500" = 1'

Robbins Engineering, Inc./Online Plus™ APPROX. TRUSS WEIGHT: 24.6 LBS

Online Plus -- Version 17.7.008
RUN DATE: 17-AUG-05

	CSI	-Size-	----Lumber----
TC	0.36	2x 4	SP-#2
BC	0.31	2x 4	SP-#2

Brace truss as follows:

O.C.	From	To
TC Cont.	0- 0- 0	5- 0- 7
BC Cont.	0- 0- 0	5- 0- 7

Loading	Live	Dead	(psf)
TC	20.0	7.0	
BC	0.0	10.0	
Total	20.0	17.0	37.0
Spacing			24.0"

Lumber Duration Factor 1.25
Plate Duration Factor 1.25
TC Fb=1.15 Fc=1.10 Ft=1.10
BC Fb=1.10 Fc=1.10 Ft=1.10

Plus 7 Wind Load Case(s)

Jt	React Lbs	Uplft Lbs	Size In-Sx	Req'd In-Sx
A	298	144	3- 8	1- 0
			Hz =	114
B	129	110	3- 8	1- 0
C	61	0	3- 8	1- 0
			Hz =	70

Membr	CSI	P Lbs	Axl	CSI-Bnd
----------Top Chords----------				
A -B	0.36	144 C	0.00	0.36
--------Bottom Chords---------				
A -C	0.31	69 T	0.00	0.31

LL Defl -0.02" in A -C L/999
TL Defl -0.04" in A -C L/999
Shear // Grain in A -B 0.28

Plates for each ply each face.
ALL CONNECTOR PLATES
TO BE MANUFACTURED BY
ROBBINS ENGINEERING, INC.
Plate - LOCK 20 Ga, Gross Area
Plate - RHS 20 Ga, Gross Area

Jt	Type	Plt Size	X	Y	JSI
A	LOCK	3.0x 5.0	Ctr	Ctr	0.47

For proper installation of
toe-nails, refer to the 2001
National Design Specification
(NDS) for Wood Construction

NOTES:
Trusses Manufactured by:
RIDGWAY ROOF TRUSS
Analysis Conforms To:
ANSI/TPI 95 & 02
OH Loading
Soffit psf 2.0
Wind Loads - ANSI / ASCE 7-98
Truss is designed as
Components and Claddings*
for Exterior zone location.
Wind Speed: 110 mph
Mean Roof Height: 25-0
Exposure Category: B
Occupancy Factor : 1.00
Building Type: Enclosed
TC Dead Load: 4.0 psf
BC Dead Load: 6.0 psf
Max comp. force 144 Lbs

Quality Control Factor 1.25

FABRICATOR NOTES:
1. Delegated Engineer (Truss Designer)
Gary Dounson, PE 35054
Gary Dounson & Associates, Inc.
2830 NW 41st Street Suite D
Gainesville, FL 32606
(352)375-8593
CA 5201

Job	Mark	Quan	Type	Span	P1-H1	Left OH	Right OH	*Engineering*
050886	*R7*	1	HIPP	441100	6	2- 0- 0	0	

Stewart Model

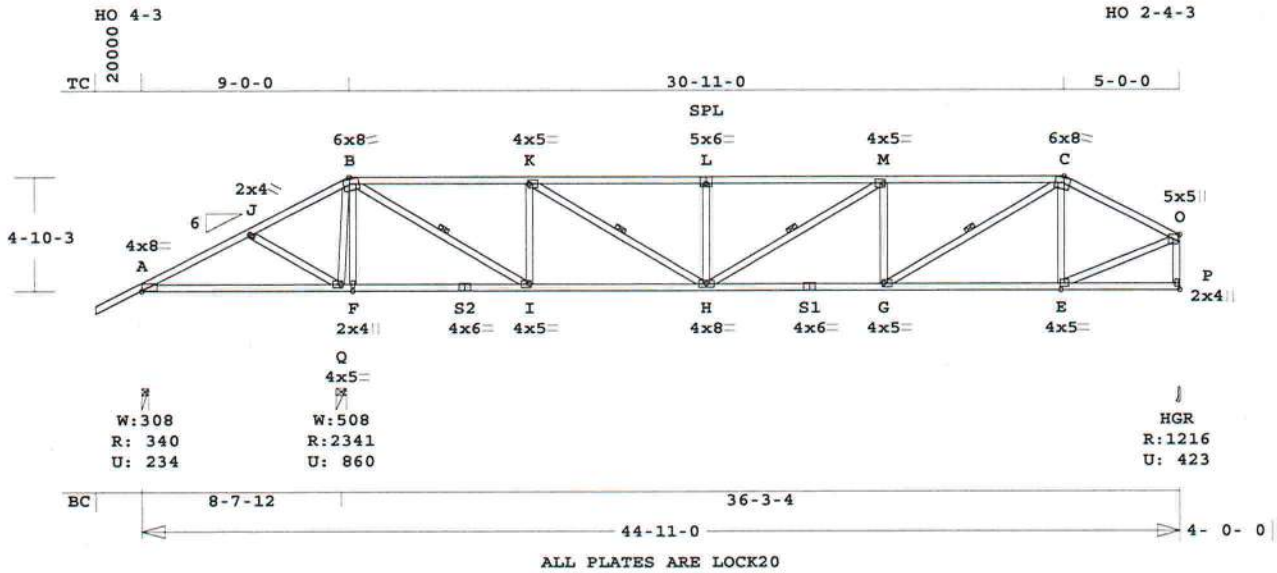

Scale: 0.125" = 1'

Robbins Engineering, Inc./Online Plus™ APPROX. TRUSS WEIGHT: 311.6 LBS

Online Plus -- Version 18.0.007
RUN DATE: 16-SEP-05

CSI	-Size-	----Lumber----
TC 0.55	2x 4	SP-#2
BC 0.52	2x 4	SP-#2
WB 0.73	2x 4	SP-#3

Brace truss as follows:

O.C.	From	To
TC Cont.	0- 0- 0	44-11- 0
BC Cont.	0- 0- 0	44-11- 0

WB 1 rows CLB on B -I
WB 1 rows CLB on K -H
WB 1 rows CLB on H -M
WB 1 rows CLB on G -C
Attach CLB with (2)-10d nails at each web.

Loading	Live	Dead	(psf)
TC	20.0	7.0	
BC	0.0	10.0	
Total	20.0	17.0	37.0
Spacing			24.0"

Lumber Duration Factor 1.25
Plate Duration Factor 1.25
TC Fb=1.15 Fc=1.10 Ft=1.10
BC Fb=1.10 Fc=1.10 Ft=1.10

Plus 7 Wind Load Case(s)

Jt	React Lbs	Uplft Lbs	Size In-Sx	Req'd In-Sx
A	341	234G	3- 8	1- 0
			Hz =	139
Q	2342	860	5- 8	2- 9
P	1216	424	3- 8	1- 7
			Hz =	91

G = Gravity Uplift

Membr	CSI	P Lbs	Axl-CSI-Bnd
----------Top Chords----------			
A -J	0.51	839 T	0.14 0.37
J -B	0.55	1167 T	0.18 0.37
B -K	0.55	1118 C	0.00 0.55
K -L	0.48	2097 C	0.02 0.46
L -M	0.50	2097 C	0.02 0.48
M -C	0.50	2125 C	0.02 0.48
C -O	0.27	1277 C	0.06 0.21
--------Bottom Chords--------			
A -Q	0.39	720 C	0.00 0.39
Q -F	0.39	883 C	0.00 0.39
F -S2	0.15	884 C	0.00 0.15
S2-I	0.17	884 C	0.00 0.17
I -H	0.35	1118 T	0.18 0.17
H -S1	0.51	2125 T	0.35 0.16
S1-G	0.52	2125 T	0.35 0.17
G -E	0.36	1157 T	0.19 0.17
E -P	0.15	91 T	0.00 0.15
----------Webs----------			
J -Q	0.14	414 C	
Q -B	0.57	1777 C	
F -B	0.05	173 C	
B -I	0.73	2303 T	1 Br
I -K	0.31	981 C	
K -H	0.36	1139 T	1 Br
H -L	0.13	414 C	
H -M	0.01	34 T	1 Br
G -M	0.13	408 C	
G -C	0.35	1120 T	1 Br
E -C	0.11	344 C	
E -O	0.40	1247 T	
P -O	0.20	1179 C	

LL Defl -0.16" in H -S1 L/999
TL Defl -0.08" in A -Q L/999
Shear // Grain in Q -F 0.33

Plates for each ply each face.
ALL CONNECTOR PLATES
TO BE MANUFACTURED BY
ROBBINS ENGINEERING, INC.
Plate - LOCK 20 Ga, Gross Area
Plate - RHS 20 Ga, Gross Area

Jt	Type	Plt Size	X	Y	JSI
A	LOCK	4.0x 8.0	0.8	0.3	0.76
J	LOCK	2.0x 4.0	Ctr	Ctr	0.51
B	LOCK	6.0x 8.0	1.1	-3.8	1.00
K	LOCK	4.0x 5.0	Ctr	Ctr	0.60
L	LOCK	5.0x 6.0	Ctr	-0.8	0.75
M	LOCK	4.0x 5.0	Ctr	Ctr	0.60
C	LOCK	6.0x 8.0	-0.9	-3.8	0.77
O	LOCK	5.0x 5.0	Ctr	Ctr	0.73
Q	LOCK	4.0x 5.0	Ctr	Ctr	0.60
F	LOCK	2.0x 4.0	Ctr	Ctr	0.51
S2	LOCK	4.0x 6.0	Ctr	0.2	0.75
I	LOCK	4.0x 5.0	Ctr	Ctr	0.87
H	LOCK	4.0x 8.0	Ctr	Ctr	0.52
S1	LOCK	4.0x 6.0	Ctr	0.2	0.75
G	LOCK	4.0x 5.0	Ctr	Ctr	0.60
E	LOCK	4.0x 5.0	Ctr	Ctr	0.60
P	LOCK	2.0x 4.0	Ctr	Ctr	0.61

NOTES:
Trusses Manufactured by:
RIDGWAY ROOF TRUSS
Analysis Conforms To:
ANSI/TPI 95 & 02
OH Loading
Soffit psf 2.0
No wind exposure on right end.
Prevent truss rotation at all bearing locations.
Wind Loads - ANSI / ASCE 7-98
Truss is designed as
Components and Claddings*
for Exterior zone location.
Wind Speed: 110 mph
Mean Roof Height: 25-0
Exposure Category: B
Occupancy Factor : 1.00
Building Type: Enclosed
TC Dead Load: 4.0 psf
BC Dead Load: 6.0 psf
Max comp. force 2125 Lbs
Quality Control Factor 1.25

FABRICATOR NOTES:
1. Delegated Engineer (Truss Designer)
Gary Dounson, PE 35054
Gary Dounson & Associates, Inc.
2830 NW 41st Street Suite D
Gainesville, FL 32606
(352)375-8593
CA 5201

Job	Mark	Quan	Type	Span	P1-H1	Left OH	Right OH	Engineering
050886	R8	1	HIPP	441100	6	2- 0- 0	2- 0- 0	

Stewart Model

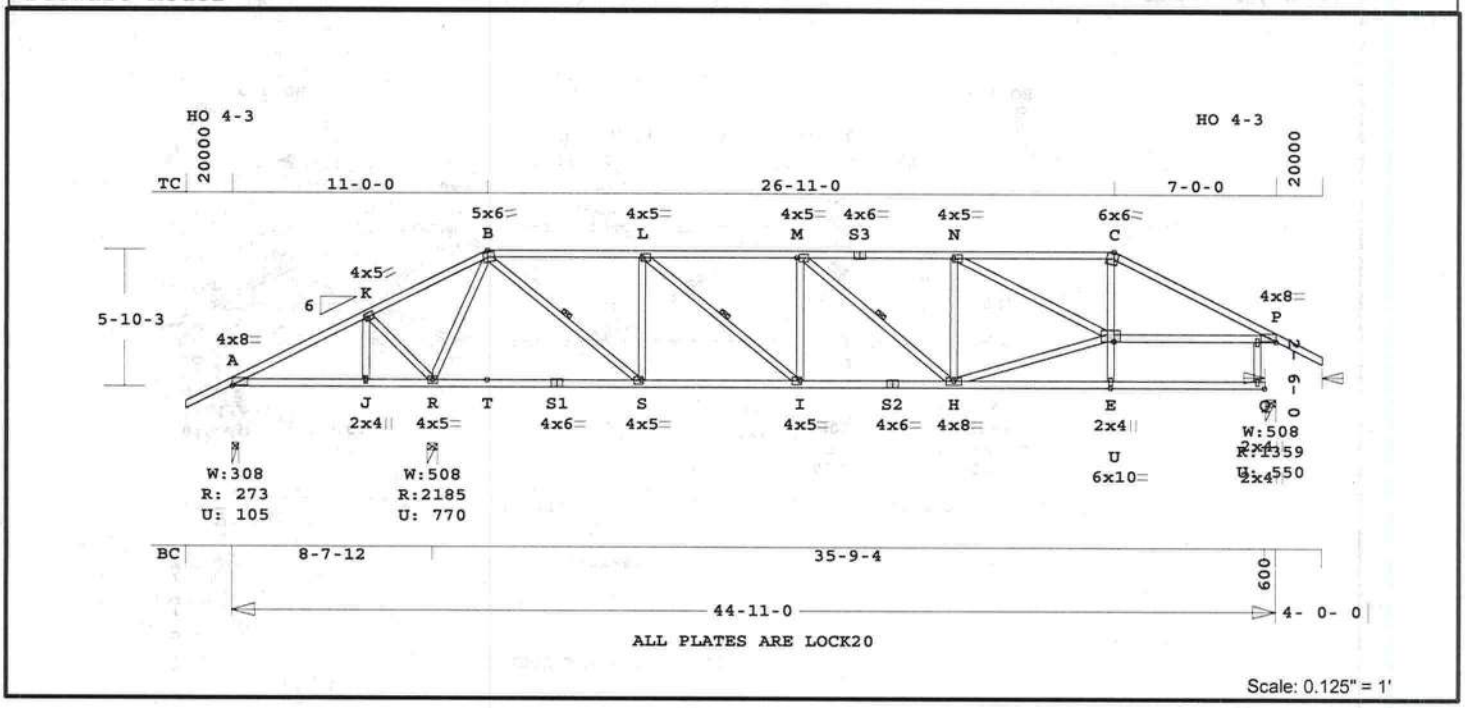

Robbins Engineering, Inc./Online Plus™ APPROX. TRUSS WEIGHT: 334.6 LBS

Online Plus -- Version 18.0.007
RUN DATE: 16-SEP-05

	CSI	-Size-	----Lumber----
TC	0.59	2x 4	SP-#2
BC	0.47	2x 4	SP-#2
CW	0.19	2x 4	SP-#3
WB	0.99	2x 4	SP-#3

Brace truss as follows:

	O.C.	From	To
TC Cont.		0- 0- 0	44-11- 0
BC Cont.		0- 0- 0	44-11- 0

WB 1 rows CLB on B -S
WB 1 rows CLB on L -I
WB 1 rows CLB on M -H
Attach CLB with (2)-10d nails at each web.

Loading	Live	Dead	(psf)
TC	20.0	7.0	
BC	0.0	10.0	
Total	20.0	17.0	37.0
Spacing			24.0"

Lumber Duration Factor 1.25
Plate Duration Factor 1.25
TC Fb=1.15 Fc=1.10 Ft=1.10
BC Fb=1.10 Fc=1.10 Ft=1.10

Plus 7 Wind Load Case(s)

Jt	React Lbs	Uplft Lbs	Size In-Sx	Req'd In-Sx
A	273	105G	3- 8	1- 0
			Hz =	160
R	2185	770	5- 8	2- 7
P	1360	551	5- 8	1-10
			Hz =	106

G = Gravity Uplift

Membr	CSI	P Lbs		Axl-CSI-Bnd	
----------Top Chords----------					
A -K	0.56	601	T	0.11	0.45
K -B	0.59	912	T	0.14	0.45
B -L	0.54	1168	C	0.00	0.54
L -M	0.38	1804	C	0.02	0.36
M -S3	0.38	1845	C	0.02	0.36
S3-N	0.41	1845	C	0.02	0.39
N -C	0.41	1939	C	0.02	0.39
C -P	0.41	2183	C	0.09	0.32
--------Bottom Chords---------					
A -J	0.17	516	C	0.00	0.17
J -R	0.24	516	C	0.00	0.24
R -S1	0.24	103	C	0.00	0.24
S1-S	0.19	103	C	0.00	0.19
S -I	0.38	1168	T	0.19	0.19
I -S2	0.40	1804	T	0.30	0.10
S2-H	0.46	1804	T	0.30	0.16
H -E	0.16	21	C	0.00	0.16
U -P	0.47	1955	T	0.32	0.15
----------Chord-Webs----------					
E -U	0.12	54	T	0.00	0.12
U -C	0.19	620	T	0.19	0.00
----------Webs----------					
J -K	0.02	83	T		
K -R	0.13	469	C		
R -B	0.99	1863	C		
B -S	0.52	1627	T		1 Br
S -L	0.39	853	C		
L -I	0.26	821	T		1 Br
I -M	0.18	399	C		
M -H	0.01	53	T		1 Br
H -N	0.19	429	C		
H -U	0.61	1918	T		
N -U	0.04	106	T		

LL Defl -0.13" in I -S2 L/999
TL Defl -0.27" in H -E L/999
Shear // Grain in N -C 0.26

Plates for each ply each face.
ALL CONNECTOR PLATES
TO BE MANUFACTURED BY
ROBBINS ENGINEERING, INC.
Plate - LOCK 20 Ga, Gross Area
Plate - RHS 20 Ga, Gross Area

Jt	Type	Plt Size	X	Y	JSI
A	LOCK	4.0x 8.0	0.8	0.3	0.76
K	LOCK	4.0x 5.0	Ctr	Ctr	0.67
B	LOCK	5.0x 6.0	0.9	-3.6	0.84
L	LOCK	4.0x 5.0	Ctr	Ctr	0.60
M	LOCK	4.0x 5.0	Ctr	Ctr	0.60
S3	LOCK	4.0x 6.0	Ctr	-0.2	0.75
N	LOCK	4.0x 5.0	Ctr	Ctr	0.60
C	LOCK	6.0x 6.0	0.9	-3.6	0.72
P	LOCK	4.0x 8.0	-0.8	0.3	0.76
J	LOCK	2.0x 4.0	Ctr	Ctr	0.51
R	LOCK	4.0x 5.0	Ctr	Ctr	0.58
S1	LOCK	4.0x 6.0	Ctr	0.2	0.75
S	LOCK	4.0x 5.0	Ctr	Ctr	0.60
I	LOCK	4.0x 5.0	Ctr	Ctr	0.60
S2	LOCK	4.0x 6.0	Ctr	0.2	0.75
H	LOCK	4.0x 8.0	Ctr	Ctr	0.91
E	LOCK	2.0x 4.0	Ctr	Ctr	0.63
U	LOCK	6.0x10.0	Ctr	1.2	0.70

NOTES:
Trusses Manufactured by:
RIDGWAY ROOF TRUSS
Analysis Conforms To:
ANSI/TPI 95 & 02
OH Loading
Soffit psf 2.0
Prevent truss rotation at all bearing locations.
Wind Loads - ANSI / ASCE 7-98
Truss is designed as
Components and Claddings*
for Exterior zone location.
Wind Speed: 110 mph
Mean Roof Height: 25-0
Exposure Category: B
Occupancy Factor : 1.00
Building Type: Enclosed
TC Dead Load: 4.0 psf
BC Dead Load: 6.0 psf
Max comp. force 2183 Lbs
Quality Control Factor 1.25

FABRICATOR NOTES:
1. Delegated Engineer (Truss Designer)
Gary Dounson, PE 35054
Gary Dounson & Associates, Inc.
2830 NW 41st Street Suite D
Gainesville, FL 32606
(352)375-8593
CA 5201

Job	Mark	Quan	Type	Span	P1-H1	Left OH	Right OH	Engineering
050886	R9	1	HIPP	441100	6	2- 0- 0	2- 0- 0	

Stewart Model

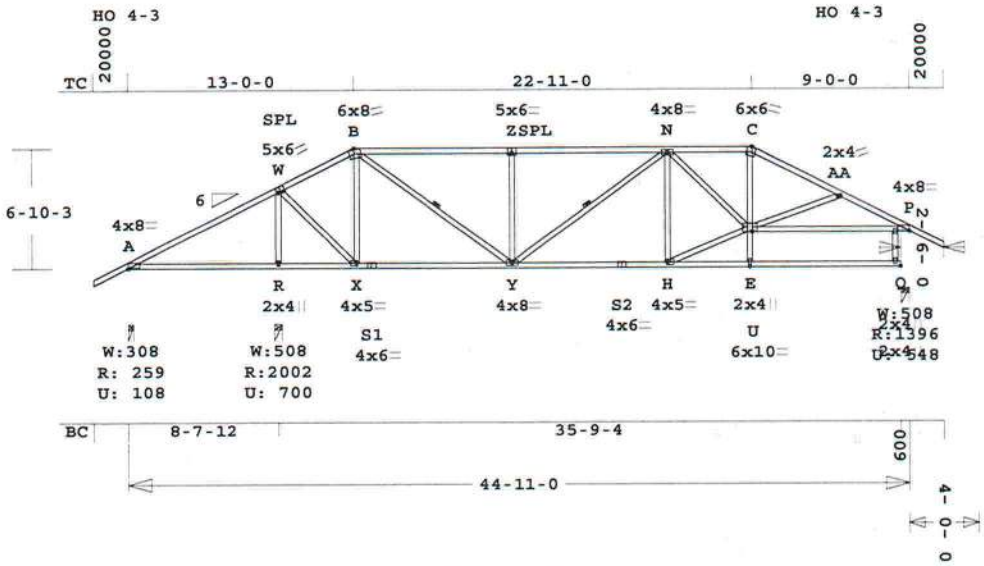

ALL PLATES ARE LOCK20

Scale: 0.094" = 1'

Robbins Engineering, Inc./Online Plus™ APPROX. TRUSS WEIGHT: 340.6 LBS

Online Plus -- Version 18.0.007
RUN DATE: 16-SEP-05

	CSI	-Size-	----Lumber----
TC	0.75	2x 4	SP-#2
BC	0.55	2x 4	SP-#2
CW	0.22	2x 4	SP-#3
WB	0.57	2x 4	SP-#3

Brace truss as follows:

O.C.	From	To
TC Cont.	0- 0- 0	44-11- 0
BC Cont.	0- 0- 0	44-11- 0

WB 1 rows CLB on B -Y
WB 1 rows CLB on Y -N
Attach CLB with (2)-10d nails at each web.

Loading	Live	Dead	(psf)
TC	20.0	7.0	
BC	0.0	10.0	
Total	20.0	17.0	37.0
Spacing			24.0"

Lumber Duration Factor 1.25
Plate Duration Factor 1.25
TC Fb=1.15 Fc=1.10 Ft=1.10
BC Fb=1.10 Fc=1.10 Ft=1.10

Plus 7 Wind Load Case(s)

Jt	React Lbs	Uplft Lbs	Size In-Sx	Req'd In-Sx
A	260	108	3- 8	1- 0
			Hz =	180
R	2003	700	5- 8	2- 3
P	1396	548	5- 8	1-10
			Hz =	121

Membr	CSI	P Lbs	Axl-CSI-Bnd	
----------Top Chords----------				
A -W	0.69	501 T	0.10	0.59
W -B	0.59	582 C	0.00	0.59
B -Z	0.75	1574 C	0.01	0.74
Z -N	0.75	1574 C	0.01	0.74
N -C	0.48	1860 C	0.02	0.46
C -AA	0.29	2089 C	0.11	0.18
AA-P	0.27	2379 C	0.14	0.13
--------Bottom Chords---------				
A -R	0.43	434 C	0.00	0.43
R -X	0.36	434 C	0.00	0.36
X -S1	0.20	504 T	0.08	0.12
S1-Y	0.36	504 T	0.08	0.28
Y -S2	0.55	1648 T	0.27	0.28
S2-H	0.45	1648 T	0.27	0.18
H -E	0.18	36 C	0.00	0.18
U -P	0.53	2129 T	0.35	0.18
----------Chord-Webs----------				
E -U	0.20	26 T	0.00	0.20
U -C	0.22	698 T	0.22	0.00
----------Webs----------				
R -W	0.55	1801 C		
W -X	0.41	1292 T		
X -B	0.50	803 C		
B -Y	0.42	1320 T		1 Br
Y -Z	0.32	523 C		
Y -N	0.04	91 C		1 Br
H -N	0.34	550 C		
H -U	0.57	1802 T		
N -U	0.09	294 T		
U -AA	0.13	337 T		

LL Defl -0.10" in A -R L/942
TL Defl -0.25" in A -R L/383
Shear // Grain in B -Z 0.34

Plates for each ply each face.
ALL CONNECTOR PLATES
TO BE MANUFACTURED BY
ROBBINS ENGINEERING, INC.
Plate - LOCK 20 Ga, Gross Area
Plate - RHS 20 Ga, Gross Area

Jt	Type	Plt Size	X	Y	JSI
A	LOCK	4.0x 8.0	0.8	0.3	0.76
W	LOCK	5.0x 6.0	0.3	-0.7	0.75
B	LOCK	6.0x 8.0	0.9	-3.8	0.73
Z	LOCK	5.0x 6.0	Ctr	-0.8	0.75
N	LOCK	4.0x 8.0	Ctr	Ctr	0.51
C	LOCK	6.0x 6.0	-0.9	-3.6	0.72
AA	LOCK	2.0x 4.0	Ctr	Ctr	0.51
P	LOCK	4.0x 8.0	-0.8	0.3	0.76
R	LOCK	2.0x 4.0	Ctr	Ctr	0.70
X	LOCK	4.0x 5.0	Ctr	Ctr	0.60
S1	LOCK	4.0x 6.0	Ctr	0.2	0.75
Y	LOCK	4.0x 8.0	Ctr	Ctr	0.53
S2	LOCK	4.0x 6.0	Ctr	0.2	0.75
H	LOCK	4.0x 5.0	Ctr	Ctr	0.75
E	LOCK	2.0x 4.0	Ctr	Ctr	0.63
U	LOCK	6.0x10.0	Ctr	1.2	0.85

NOTES:
Trusses Manufactured by:
RIDGWAY ROOF TRUSS
Analysis Conforms To:
ANSI/TPI 95 & 02
OH Loading
Soffit psf 2.0
Prevent truss rotation at all bearing locations.
Wind Loads - ANSI / ASCE 7-98
Truss is designed as
Components and Claddings*
for Exterior zone location.
Wind Speed: 110 mph
Mean Roof Height: 25-0
Exposure Category: B
Occupancy Factor : 1.00
Building Type: Enclosed
TC Dead Load: 4.0 psf
BC Dead Load: 6.0 psf
Max comp. force 2379 Lbs
Quality Control Factor 1.25

FABRICATOR NOTES:
1. Delegated Engineer (Truss Designer)
Gary Dounson, PE 35054
Gary Dounson & Associates, Inc.
2830 NW 41st Street Suite D
Gainesville, FL 32606
(352)375-8593
CA 5201

Job	Mark	Quan	Type	Span	P1-H1	Left OH	Right OH	Engineering
050886	R10	1	SP	420400	6	2- 0- 0	0	

Stewart Model

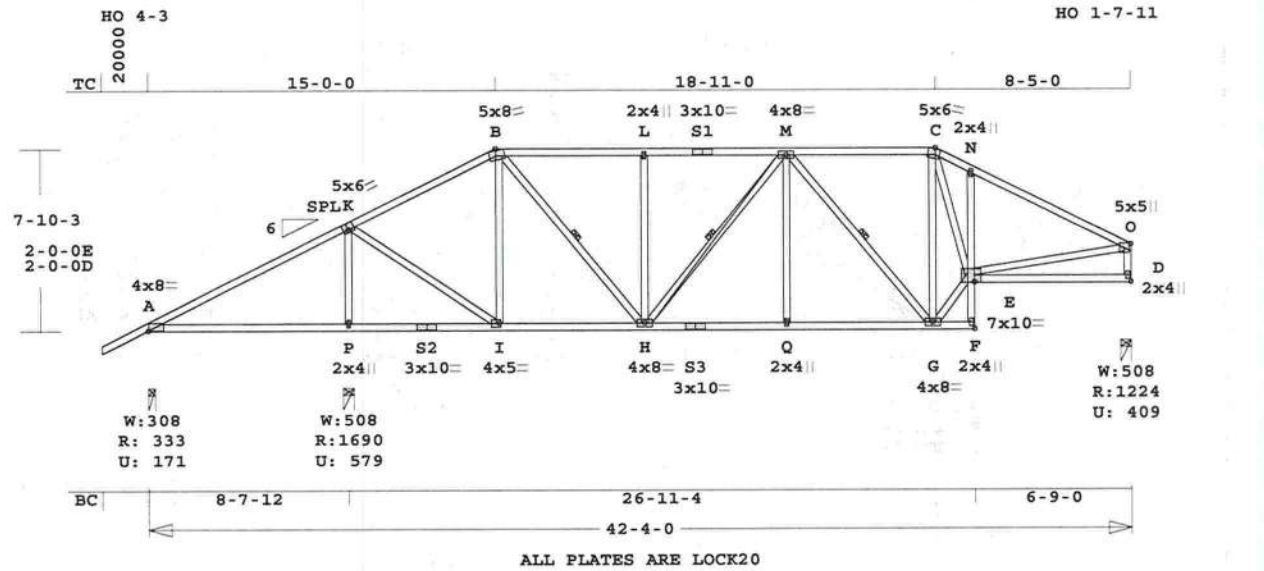

Robbins Engineering, Inc./Online Plus™ APPROX. TRUSS WEIGHT: 341.7 LBS

Online Plus -- Version 17.7.008
RUN DATE: 17-AUG-05

	CSI	-Size-	----Lumber----
TC	0.66	2x 4	SP-#2
BC	0.37	2x 4	SP-#2
CW	0.20	2x 4	SP-#3
WB	0.59	2x 4	SP-#3

Brace truss as follows:

	O.C.	From	To
TC	Cont.	0- 0- 0	42- 4- 0
BC	Cont.	0- 0- 0	42- 4- 0

WB 1 rows CLB on B -H
WB 1 rows CLB on H -M
WB 1 rows CLB on M -G
Attach CLB with (2)-8d nails at each web.

Loading	Live	Dead	(psf)
TC	20.0	7.0	
BC	0.0	10.0	
Total	20.0	17.0	37.0
Spacing			24.0"

Lumber Duration Factor 1.25
Plate Duration Factor 1.25
TC Fb=1.15 Fc=1.10 Ft=1.10
BC Fb=1.10 Fc=1.10 Ft=1.10

Plus 7 Wind Load Case(s)

Jt	React Lbs	Uplft Lbs	Size In-Sx	Req'd In-Sx
A	333	171	3- 8	1- 0
			Hz =	233
P	1691	580	5- 8	1-14
D	1225	409	5- 8	1- 7
			Hz =	153

Membr	CSI	P Lbs	Axl	CSI	Bnd
----------Top Chords----------					
A -K	0.66	116	C	0.03	0.63
K -B	0.63	885	C	0.00	0.63
B -L	0.31	1253	C	0.01	0.30
L -S1	0.31	1253	C	0.01	0.30
S1-M	0.38	1253	C	0.01	0.37
M -C	0.37	1018	C	0.00	0.37
C -N	0.48	1581	C	0.11	0.37
N -O	0.53	1566	C	0.05	0.48
--------Bottom Chords--------					
A -P	0.37	133	T	0.00	0.37
P -S2	0.35	133	T	0.00	0.35
S2-I	0.08	133	T	0.00	0.08
I -H	0.25	779	T	0.13	0.12
H -S3	0.34	1336	T	0.22	0.12
S3-Q	0.32	1336	T	0.22	0.10
Q -G	0.36	1336	T	0.22	0.14
G -F	0.14	34	C	0.00	0.14
E -D	0.17	152	T	0.00	0.17
----------Chord-Webs----------					
F -E	0.20	27	C	0.00	0.20
E -N	0.10	423	T	0.10	0.00
----------Webs----------					
P -K	0.45	1478	C		
K -I	0.33	1036	T		
I -B	0.39	478	C		
B -H	0.23	739	T		1 Br
H -L	0.27	335	C		
H -M	0.04	131	C		1 Br
Q -M	0.03	118	T		
M -G	0.18	499	C		1 Br
G -C	0.59	717	C		
G -E	0.51	1598	T		
C -E	0.42	1314	T		
E -O	0.46	1442	T		
D -O	0.18	1161	C		

LL Defl -0.10" in A -P L/999
TL Defl -0.23" in A -P L/417
Shear // Grain in A -K 0.29

Plates for each ply each face.
ALL CONNECTOR PLATES
TO BE MANUFACTURED BY
ROBBINS ENGINEERING, INC.
Plate - LOCK 20 Ga, Gross Area
Plate - RHS 20 Ga, Gross Area

Jt	Type	Plt Size	X	Y	JSI
A	LOCK	4.0x 8.0	0.8	0.3	0.74
K	LOCK	5.0x 6.0	0.7	-0.5	0.77
B	LOCK	5.0x 8.0	0.8	-3.4	0.75
L	LOCK	2.0x 4.0	Ctr	Ctr	0.49
S1	LOCK	3.0x10.0	Ctr	Ctr	0.88
M	LOCK	4.0x 8.0	Ctr	Ctr	0.50
C	LOCK	5.0x 6.0	0.7	-3.1	0.88
N	LOCK	2.0x 4.0	Ctr	Ctr	0.24
O	LOCK	5.0x 5.0	Ctr	Ctr	0.70
P	LOCK	2.0x 4.0	Ctr	Ctr	0.64
S2	LOCK	3.0x10.0	Ctr	Ctr	0.88
I	LOCK	4.0x 5.0	Ctr	Ctr	0.60
H	LOCK	4.0x 8.0	Ctr	Ctr	0.50
S3	LOCK	3.0x10.0	Ctr	Ctr	0.88
Q	LOCK	2.0x 4.0	Ctr	Ctr	0.49
G	LOCK	4.0x 8.0	Ctr	Ctr	0.70
F	LOCK	2.0x 4.0	Ctr	Ctr	0.61
E	LOCK	7.0x10.0	Ctr	1.8	0.99
D	LOCK	2.0x 4.0	Ctr	Ctr	0.58

NOTES:
Trusses Manufactured by:
RIDGWAY ROOF TRUSS
Analysis Conforms To:
ANSI/TPI 95 & 02
OH Loading
Soffit psf 2.0
No wind exposure on right end.
Wind Loads - ANSI / ASCE 7-98
Truss is designed as
Components and Claddings*
for Exterior zone location.
Wind Speed: 110 mph
Mean Roof Height: 25-0
Exposure Category: B
Occupancy Factor : 1.00
Building Type: Enclosed
TC Dead Load: 4.0 psf
BC Dead Load: 6.0 psf
Max comp. force 1581 Lbs
Quality Control Factor 1.25

FABRICATOR NOTES:
1. Delegated Engineer (Truss Designer)
Gary Dounson, PE 35054
Gary Dounson & Associates, Inc.
2830 NW 41st Street Suite D
Gainesville, FL 32606
(352)375-8593
CA 5201

Job	Mark	Quan	Type	Span	P1-H1	Left OH	Right OH	*Engineering*
050886	*R11*	1	SP	420400	6	2- 0- 0	0	

Stewart Model

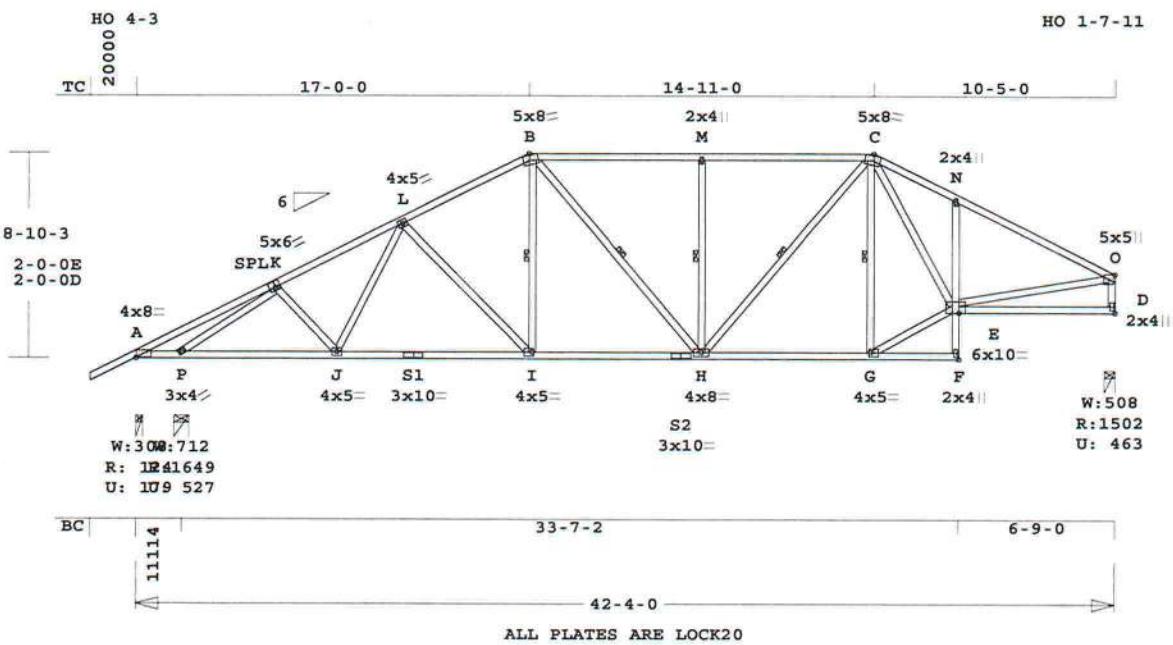

Scale: 0.125" = 1'

Robbins Engineering, Inc./Online Plus™ APPROX. TRUSS WEIGHT: 349.5 LBS

Online Plus -- Version 17.7.008
RUN DATE: 17-AUG-05

	CSI	-Size-	----Lumber----
TC	0.63	2x 4	SP-#2
BC	0.53	2x 4	SP-#2
CW	0.20	2x 4	SP-#3
WB	0.98	2x 4	SP-#3

Brace truss as follows:

O.C.	From	To
TC Cont.	0- 0- 0	42- 4- 0
BC Cont.	0- 0- 0	42- 4- 0

WB 1 rows CLB on I -B
WB 1 rows CLB on B -H
WB 1 rows CLB on H -M
WB 1 rows CLB on H -C
WB 1 rows CLB on G -C
Attach CLB with (2)-8d nails at each web.

Loading	Live	Dead	(psf)
TC	20.0	7.0	
BC	0.0	10.0	
Total	20.0	17.0	37.0
Spacing			24.0"

Lumber Duration Factor 1.25
Plate Duration Factor 1.25
TC Fb=1.15 Fc=1.10 Ft=1.10
BC Fb=1.10 Fc=1.10 Ft=1.10

Plus 7 Wind Load Case(s)

Jt	React Lbs	Uplft Lbs	Size In-Sx	Req'd In-Sx
A	124	180	3- 8	1- 0
			Hz =	253
P	1649	528	7-12	1-14
D	1503	464	5- 8	1-12
			Hz =	167

Membr	CSI	P Lbs	Axl-CSI-Bnd	
----------Top Chords----------				
A -K	0.24	56 T	0.01	0.23
K -L	0.37	2158 C	0.14	0.23
L -B	0.35	1874 C	0.12	0.23
B -M	0.58	1778 C	0.01	0.57
M -C	0.58	1778 C	0.01	0.57
C -N	0.47	2006 C	0.14	0.33
N -O	0.63	2001 C	0.09	0.54
--------Bottom Chords---------				
A -P	0.22	162 C	0.00	0.22
P -J	0.53	1861 T	0.31	0.22
J -S1	0.45	1897 T	0.31	0.14
S1-I	0.51	1897 T	0.31	0.20
I -S2	0.48	1675 T	0.28	0.20
S2-H	0.43	1675 T	0.28	0.15
H -G	0.37	1352 T	0.22	0.15
G -F	0.14	34 C	0.00	0.14
E -D	0.17	166 T	0.00	0.17
----------Chord-Webs----------				
F -E	0.20	15 T	0.00	0.20
E -N	0.11	407 T	0.11	0.00
-------------Webs-------------				
P -K	0.98	2328 C		
K -J	0.03	155 T		
J -L	0.02	118 T		
L -I	0.29	346 T		
I -B	0.12	388 T		1 Br
B -H	0.07	159 C		1 Br
H -M	0.14	463 C		1 Br
H -C	0.20	647 T		1 Br
G -C	0.18	606 C		1 Br
G -E	0.49	1539 T		
C -E	0.39	875 T		
E -O	0.59	1839 T		
D -O	0.23	1439 C		

LL Defl -0.12" in S1-I L/999
TL Defl -0.28" in S1-I L/999
Shear // Grain in B -M 0.30

Plates for each ply each face.
ALL CONNECTOR PLATES
TO BE MANUFACTURED BY
ROBBINS ENGINEERING, INC.
Plate - LOCK 20 Ga, Gross Area
Plate - RHS 20 Ga, Gross Area

Jt	Type	Plt Size	X	Y	JSI
A	LOCK	4.0x 8.0	0.8	0.3	0.74
K	LOCK	5.0x 6.0	0.1-1.1		0.82
L	LOCK	4.0x 5.0	Ctr	Ctr	0.60
B	LOCK	5.0x 8.0	0.8-3.4		0.75
M	LOCK	2.0x 4.0	Ctr	Ctr	0.49
C	LOCK	5.0x 8.0	0.8-3.4		0.75
N	LOCK	2.0x 4.0	Ctr	Ctr	0.24
O	LOCK	5.0x 5.0	Ctr	Ctr	0.70
P	LOCK	3.0x 4.0	Ctr	Ctr	0.71
J	LOCK	4.0x 5.0	Ctr	Ctr	0.56
S1	LOCK	3.0x10.0	Ctr	Ctr	0.88
I	LOCK	4.0x 5.0	Ctr	Ctr	0.60
S2	LOCK	3.0x10.0	Ctr	Ctr	0.88
H	LOCK	4.0x 8.0	Ctr	Ctr	0.50
G	LOCK	4.0x 5.0	Ctr	Ctr	0.60
F	LOCK	2.0x 4.0	Ctr	Ctr	0.61
E	LOCK	6.0x10.0	Ctr	1.3	0.94
D	LOCK	2.0x 4.0	Ctr	Ctr	0.59

NOTES:
Trusses Manufactured by:
RIDGWAY ROOF TRUSS
Analysis Conforms To:
ANSI/TPI 95 & 02
OH Loading
Soffit psf 2.0
No wind exposure on right end.
Wind Loads - ANSI / ASCE 7-98
Truss is designed as
Components and Claddings*
for Exterior zone location.
Wind Speed: 110 mph
Mean Roof Height: 25-0
Exposure Category: B
Occupancy Factor : 1.00
Building Type: Enclosed
TC Dead Load: 4.0 psf
BC Dead Load: 6.0 psf
Max comp. force 2328 Lbs
Quality Control Factor 1.25

FABRICATOR NOTES:
1. Delegated Engineer (Truss Designer)
Gary Dounson, PE 35054
Gary Dounson & Associates, Inc.
2830 NW 41st Street Suite D
Gainesville, FL 32606
(352)375-8593
CA 5201

Job	Mark	Quan	Type	Span	P1-H1	Left OH	Right OH	Engineering
050886	R12	1	SP	441100	6	2- 0- 0	0	

Stewart Model

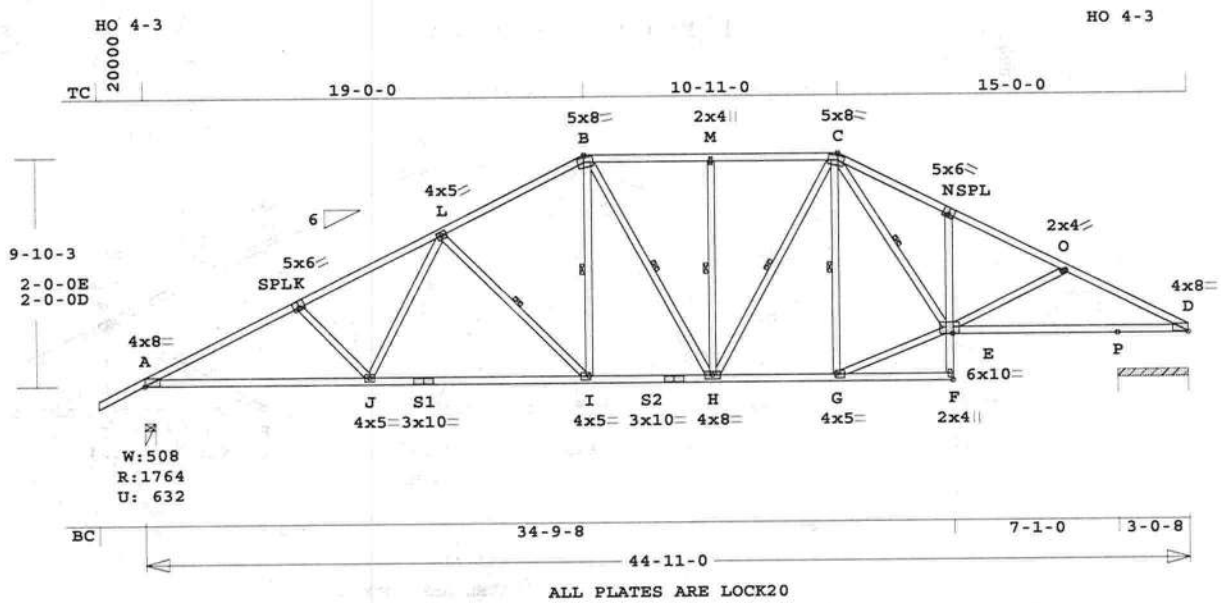

Robbins Engineering, Inc./Online Plus™ APPROX. TRUSS WEIGHT: 361.1 LBS

Online Plus -- Version 17.7.008
RUN DATE: 17-AUG-05

	CSI	-Size-	----Lumber----
TC	0.53	2x 4	SP-#2
BC	0.78	2x 4	SP-#2
CW	0.29	2x 4	SP-#3
WB	0.56	2x 4	SP-#3

Brace truss as follows:

	O.C.	From	To
TC	Cont.	0- 0- 0	44-11- 0
BC	Cont.	0- 0- 0	44-11- 0

WB 1 rows CLB on L -I
WB 1 rows CLB on I -B
WB 1 rows CLB on B -H
WB 1 rows CLB on H -M
WB 1 rows CLB on H -C
WB 1 rows CLB on G -C
WB 1 rows CLB on C -E
Attach CLB with (2)-8d nails at each web.

Loading	Live	Dead	(psf)
TC	20.0	7.0	
BC	0.0	10.0	
Total	20.0	17.0	37.0
Spacing			24.0"

Lumber Duration Factor 1.25
Plate Duration Factor 1.25
TC Fb=1.15 Fc=1.10 Ft=1.10
BC Fb=1.10 Fc=1.10 Ft=1.10

Plus 7 Wind Load Case(s)

Jt	React Lbs	Uplft Lbs	Size In-Sx	Req'd In-Sx
A	1765	633	5- 8	2- 1
			Hz =	240
Cont. Brg	41-10- 8 to 44-11- 0			
	1675	492	Hz =	147

Membr	CSI	P Lbs	Axl-CSI-Bnd
----------Top Chords----------			
A -K	0.47	3052 C	0.20 0.27
K -L	0.51	2812 C	0.19 0.32
L -B	0.47	2101 C	0.15 0.32
B -M	0.34	1898 C	0.02 0.32
M -C	0.34	1898 C	0.02 0.32
C -N	0.37	2683 C	0.20 0.17
N -O	0.35	2695 C	0.18 0.17
O -D	0.53	2950 C	0.06 0.47
--------Bottom Chords---------			
A -J	0.72	2732 T	0.45 0.27
J -S1	0.65	2310 T	0.38 0.27
S1-I	0.58	2310 T	0.38 0.20
I -S2	0.51	1871 T	0.31 0.20
S2-H	0.35	1871 T	0.31 0.04
H -G	0.40	1677 T	0.28 0.12
G -F	0.12	49 C	0.00 0.12
E -P	0.78	2619 T	0.43 0.35
P -D	0.78	2619 T	0.43 0.35
----------Chord-Webs----------			
F -E	0.29	35 T	0.01 0.28
E -N	0.10	319 T	0.10 0.00
----------Webs----------			
K -J	0.10	372 T	
J -L	0.15	472 T	
L -I	0.20	619 C	1 Br
I -B	0.19	603 T	1 Br
B -H	0.06	153 C	1 Br
H -M	0.13	353 C	1 Br
H -C	0.14	446 T	1 Br
G -C	0.20	549 C	1 Br
G -E	0.56	1772 T	
C -E	0.42	1320 T	1 Br
E -O	0.11	336 T	

LL Defl -0.20" in I -S2 L/999
TL Defl -0.47" in S1-I L/999
Shear // Grain in M -C 0.23

Plates for each ply each face.
ALL CONNECTOR PLATES
TO BE MANUFACTURED BY
ROBBINS ENGINEERING, INC.
Plate - LOCK 20 Ga, Gross Area
Plate - RHS 20 Ga, Gross Area

Jt	Type	Plt Size	X	Y	JSI
A	LOCK	4.0x 8.0	0.8	0.3	0.76
K	LOCK	5.0x 6.0	0.3	-0.7	0.75
L	LOCK	4.0x 5.0	Ctr	Ctr	0.60
B	LOCK	5.0x 8.0	0.9	-3.8	0.87
M	LOCK	2.0x 4.0	Ctr	Ctr	0.51
C	LOCK	5.0x 8.0	-0.9	-3.8	0.87
N	LOCK	5.0x 6.0	-0.3	-0.7	0.75
O	LOCK	2.0x 4.0	Ctr	Ctr	0.51
D	LOCK	4.0x 8.0	-0.8	0.3	0.76
J	LOCK	4.0x 5.0	Ctr	Ctr	0.56
S1	LOCK	3.0x10.0	Ctr	Ctr	0.88
I	LOCK	4.0x 5.0	Ctr	Ctr	0.60
S2	LOCK	3.0x10.0	Ctr	Ctr	0.88
H	LOCK	4.0x 8.0	Ctr	Ctr	0.55
G	LOCK	4.0x 5.0	Ctr	Ctr	0.74
F	LOCK	2.0x 4.0	Ctr	Ctr	0.63
E	LOCK	6.0x10.0	Ctr	1.2	0.80

NOTES:
Trusses Manufactured by:
RIDGWAY ROOF TRUSS
Analysis Conforms To:
ANSI/TPI 95 & 02
OH Loading
Soffit psf 2.0
Wind Loads - ANSI / ASCE 7-98
Truss is designed as
Components and Claddings*
for Exterior zone location.
Wind Speed: 110 mph
Mean Roof Height: 25-0
Exposure Category: B
Occupancy Factor : 1.00
Building Type: Enclosed
TC Dead Load: 4.0 psf
BC Dead Load: 6.0 psf
Max comp. force 3052 Lbs
Quality Control Factor 1.25

FABRICATOR NOTES:
1. Delegated Engineer (Truss Designer)
Gary Dounson, PE 35054
Gary Dounson & Associates, Inc.
2830 NW 41st Street Suite D
Gainesville, FL 32606
(352)375-8593
CA 5201

Job	Mark	Quan	Type	Span	P1-H1	Left OH	Right OH	Engineering
050886	R13	2	SP	441100	6	2- 0- 0	2- 0- 0	

Stewart Model

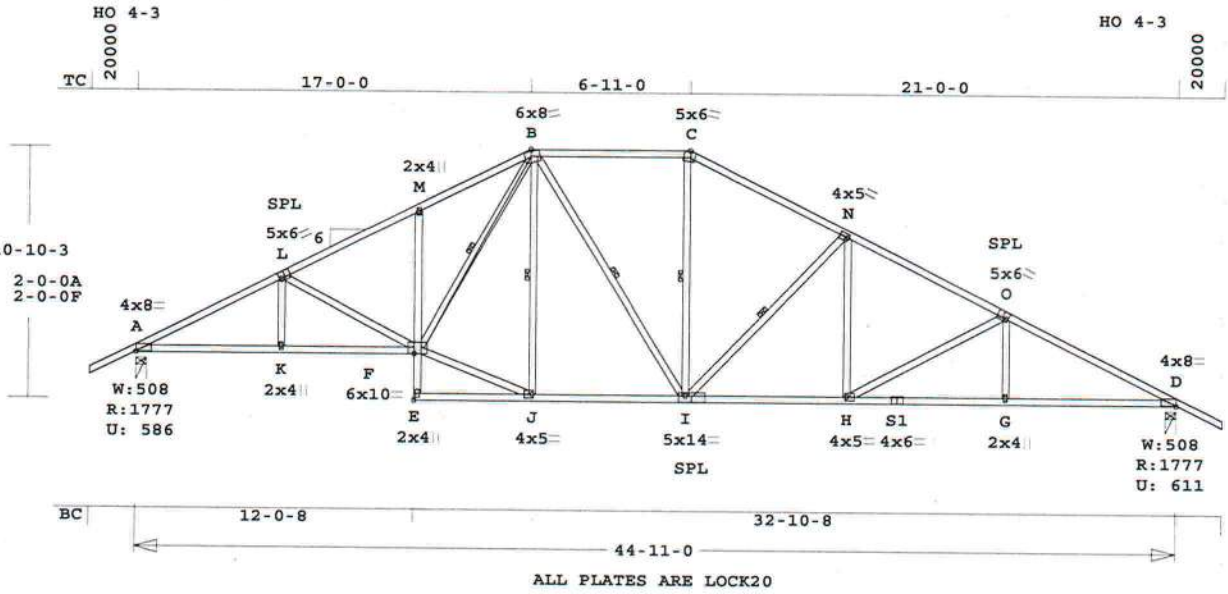

Scale: 0.125" = 1'

Robbins Engineering, Inc./Online Plus™ APPROX. TRUSS WEIGHT: 360.3 LBS

Online Plus -- Version 18.0.007
RUN DATE: 16-SEP-05

	CSI	-Size-	----Lumber----
TC	0.56	2x 4	SP-#2
BC	0.60	2x 4	SP-#2
CW	0.14	2x 4	SP-#3
WB	0.56	2x 4	SP-#3

Brace truss as follows:

	O.C.	From	To
TC	Cont.	0- 0- 0	44-11- 0
BC	Cont.	0- 0- 0	44-11- 0

WB 1 rows CLB on F -B
WB 1 rows CLB on J -B
WB 1 rows CLB on B -I
WB 1 rows CLB on I -C
WB 1 rows CLB on I -N
Attach CLB with (2)-10d nails at each web.

Loading	Live	Dead	(psf)
TC	20.0	7.0	
BC	0.0	10.0	
Total	20.0	17.0	37.0
Spacing			24.0"

Lumber Duration Factor 1.25
Plate Duration Factor 1.25
TC Fb=1.15 Fc=1.10 Ft=1.10
BC Fb=1.10 Fc=1.10 Ft=1.10

Plus 7 Wind Load Case(s)

Jt	React Lbs	Uplft Lbs	Size In-Sx	Req'd In-Sx
A	1778	586	5- 8	2- 2
			Hz =	-146
D	1778	611	5- 8	2- 2
			Hz =	-259

Membr	CSI	P Lbs	Axl	CSI-Bnd
----------Top Chords----------				
A -L	0.47	3130	C	0.20 0.27
L -M	0.45	2667	C	0.18 0.27
M -B	0.45	2639	C	0.04 0.41
B -C	0.52	1758	C	0.04 0.48
C -N	0.52	1967	C	0.15 0.37
N -O	0.55	2533	C	0.18 0.37
O -D	0.56	3075	C	0.20 0.36
--------Bottom Chords---------				
A -K	0.58	2799	T	0.47 0.11
K -F	0.59	2799	T	0.47 0.12
E -J	0.13	24	C	0.00 0.13
J -I	0.41	1651	T	0.27 0.14
I -H	0.52	2266	T	0.38 0.14
H -S1	0.60	2752	T	0.46 0.14
S1-G	0.56	2752	T	0.46 0.10
G -D	0.58	2752	T	0.46 0.12
----------Chord-Webs----------				
E -F	0.13	34	T	0.00 0.13
F -M	0.14	331	T	0.14 0.00
----------Webs----------				
K -L	0.03	109	T	
L -F	0.30	475	C	
F -B	0.45	1414	T	1 Br
F -J	0.56	1764	T	
J -B	0.23	530	C	1 Br
B -I	0.10	197	T	1 Br
I -C	0.15	490	T	1 Br
I -N	0.28	727	C	1 Br
H -N	0.12	405	T	
H -O	0.47	553	C	
G -O	0.04	135	T	

LL Defl -0.20" in E -F L/999
TL Defl -0.39" in I -H L/999
Shear // Grain in B -C 0.24

Plates for each ply each face.
ALL CONNECTOR PLATES
TO BE MANUFACTURED BY
ROBBINS ENGINEERING, INC.
Plate - LOCK 20 Ga, Gross Area
Plate - RHS 20 Ga, Gross Area

Jt	Type	Plt Size	X	Y	JSI
A	LOCK	4.0x 8.0	0.8	0.3	0.76
L	LOCK	5.0x 6.0	0.3-0.7		0.75
M	LOCK	2.0x 4.0	Ctr	Ctr	0.24
B	LOCK	6.0x 8.0	0.9-3.8		0.72
C	LOCK	5.0x 6.0	-0.7-3.1		0.72
N	LOCK	4.0x 5.0	Ctr	Ctr	0.67
O	LOCK	5.0x 6.0	-0.3-0.7		0.75
D	LOCK	4.0x 8.0	-0.8	0.3	0.76
K	LOCK	2.0x 4.0	Ctr	Ctr	0.51
F	LOCK	6.0x10.0	Ctr	1.2	0.82
E	LOCK	2.0x 4.0	Ctr	Ctr	0.63
J	LOCK	4.0x 5.0	Ctr	Ctr	0.74
I	LOCK	5.0x14.0	Ctr	0.8	0.75
H	LOCK	4.0x 5.0	Ctr	Ctr	0.60
S1	LOCK	4.0x 6.0	Ctr	0.2	0.75
G	LOCK	2.0x 4.0	Ctr	Ctr	0.51

NOTES:
Trusses Manufactured by:
RIDGWAY ROOF TRUSS
Analysis Conforms To:
ANSI/TPI 95 & 02
OH Loading
Soffit psf 2.0
Wind Loads - ANSI / ASCE 7-98
Truss is designed as
Components and Claddings*
for Exterior zone location.
Wind Speed: 110 mph
Mean Roof Height: 25-0
Exposure Category: B
Occupancy Factor : 1.00
Building Type: Enclosed
TC Dead Load: 4.0 psf
BC Dead Load: 6.0 psf
Max comp. force 3130 Lbs
Quality Control Factor 1.25

FABRICATOR NOTES:
1. Delegated Engineer (Truss Designer)
Gary Dounson, PE 35054
Gary Dounson & Associates, Inc.
2830 NW 41st Street Suite D
Gainesville, FL 32606
(352)375-8593
CA 5201

Job	Mark	Quan	Type	Span	P1-H1	Left OH	Right OH	Engineering
050886	R14	3	SP	441100	6	2- 0- 0	0	

Stewart Model

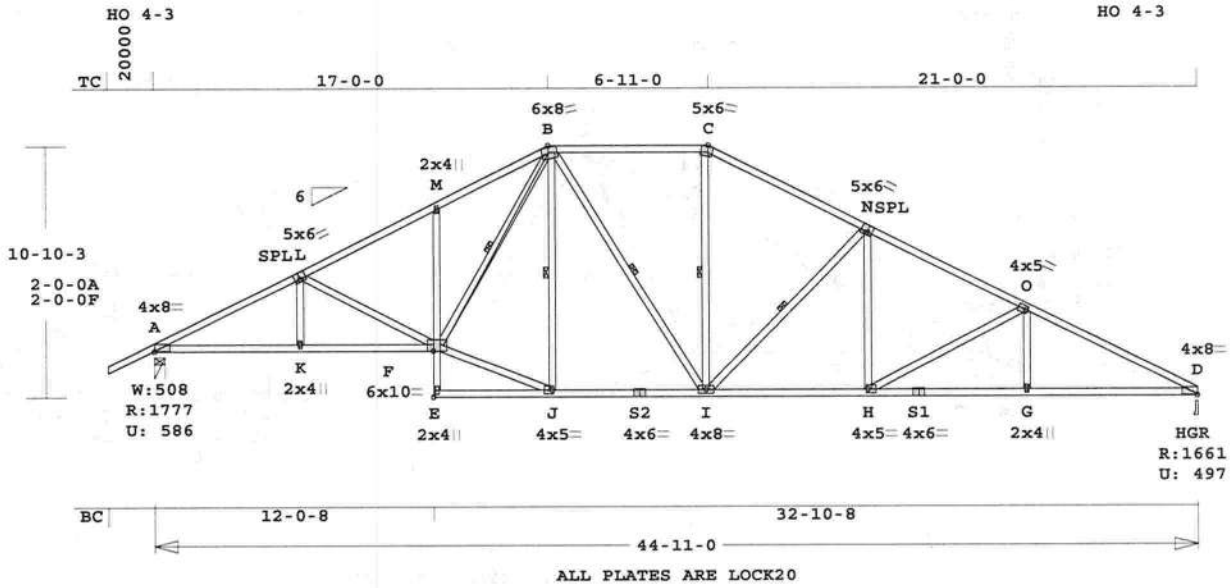

Robbins Engineering, Inc./Online Plus™ APPROX. TRUSS WEIGHT: 356.1 LBS

Online Plus -- Version 18.0.007
RUN DATE: 16-SEP-05

	CSI	-Size-	----Lumber----
TC	0.56	2x 4	SP-#2
BC	0.60	2x 4	SP-#2
CW	0.14	2x 4	SP-#3
WB	0.56	2x 4	SP-#3

Brace truss as follows:

O.C.	From	To
TC Cont.	0- 0- 0	44-11- 0
BC Cont.	0- 0- 0	44-11- 0

WB 1 rows CLB on F -B
WB 1 rows CLB on J -B
WB 1 rows CLB on B -I
WB 1 rows CLB on I -C
WB 1 rows CLB on I -N
Attach CLB with (2)-10d nails at each web.

Loading	Live	Dead	(psf)
TC	20.0	7.0	
BC	0.0	10.0	
Total	20.0	17.0	37.0
Spacing			24.0"

Lumber Duration Factor 1.25
Plate Duration Factor 1.25
TC Fb=1.15 Fc=1.10 Ft=1.10
BC Fb=1.10 Fc=1.10 Ft=1.10

Plus 7 Wind Load Case(s)

Jt	React Lbs	Uplft Lbs	Size In-Sx	Req'd In-Sx
A	1778	586	5- 8	2- 2
			Hz =	-146
D	1662	497	5- 8	1-15
			Hz =	-259

Membr	CSI	P Lbs	Axl-CSI-Bnd
----------Top Chords----------			
A -L	0.47	3130 C	0.20 0.27
L -M	0.45	2667 C	0.18 0.27
M -B	0.45	2639 C	0.04 0.41
B -C	0.52	1758 C	0.04 0.48
C -N	0.52	1967 C	0.15 0.37
N -O	0.55	2533 C	0.18 0.37
O -D	0.56	3075 C	0.20 0.36
--------Bottom Chords---------			
A -K	0.57	2798 T	0.46 0.11
K -F	0.58	2798 T	0.46 0.12
E -J	0.13	24 C	0.00 0.13
J -S2	0.40	1650 T	0.27 0.13
S2-I	0.41	1650 T	0.27 0.14
I -H	0.52	2266 T	0.38 0.14
H -S1	0.60	2752 T	0.46 0.14
S1-G	0.56	2752 T	0.46 0.10
G -D	0.58	2752 T	0.46 0.12
----------Chord-Webs----------			
E -F	0.13	34 T	0.00 0.13
F -M	0.14	331 T	0.14 0.00
----------Webs----------			
K -L	0.03	109 T	
L -F	0.30	475 C	
F -B	0.45	1414 T	1 Br
F -J	0.56	1764 T	
J -B	0.23	530 C	1 Br
B -I	0.10	197 T	1 Br
I -C	0.15	490 T	1 Br
I -N	0.28	727 C	1 Br
H -N	0.12	405 T	
H -O	0.47	553 C	
G -O	0.04	135 T	

LL Defl -0.20" in E -F L/999
TL Defl -0.39" in I -H L/999
Shear // Grain in B -C 0.24

Plates for each ply each face.
ALL CONNECTOR PLATES
TO BE MANUFACTURED BY
ROBBINS ENGINEERING, INC.
Plate - LOCK 20 Ga, Gross Area
Plate - RHS 20 Ga, Gross Area

Jt	Type	Plt Size	X	Y	JSI
A	LOCK	4.0x 8.0	0.8	0.3	0.76
L	LOCK	5.0x 6.0	0.7	-0.5	0.75
M	LOCK	2.0x 4.0	Ctr	Ctr	0.24
B	LOCK	6.0x 8.0	0.9	-3.8	0.72
C	LOCK	5.0x 6.0	-0.7	-3.1	0.72
N	LOCK	5.0x 6.0	-0.7	-0.5	0.75
O	LOCK	4.0x 5.0	Ctr	Ctr	0.67
D	LOCK	4.0x 8.0	-0.8	0.3	0.76
K	LOCK	2.0x 4.0	Ctr	Ctr	0.51
F	LOCK	6.0x10.0	Ctr	1.2	0.82
E	LOCK	2.0x 4.0	Ctr	Ctr	0.63
J	LOCK	4.0x 5.0	Ctr	Ctr	0.74
S2	LOCK	4.0x 6.0	Ctr	0.2	0.75
I	LOCK	4.0x 8.0	Ctr	Ctr	0.54
H	LOCK	4.0x 5.0	Ctr	Ctr	0.60
S1	LOCK	4.0x 6.0	Ctr	0.2	0.75
G	LOCK	2.0x 4.0	Ctr	Ctr	0.51

NOTES:
Trusses Manufactured by:
RIDGWAY ROOF TRUSS
Analysis Conforms To:
ANSI/TPI 95 & 02
OH Loading
Soffit psf 2.0
Wind Loads - ANSI / ASCE 7-98
Truss is designed as
Components and Claddings*
for Exterior zone location.
Wind Speed: 110 mph
Mean Roof Height: 25-0
Exposure Category: B
Occupancy Factor : 1.00
Building Type: Enclosed
TC Dead Load: 4.0 psf
BC Dead Load: 6.0 psf
Max comp. force 3130 Lbs
Quality Control Factor 1.25

FABRICATOR NOTES:
1. Delegated Engineer (Truss Designer)
Gary Dounson, PE 35054
Gary Dounson & Associates, Inc.
2830 NW 41st Street Suite D
Gainesville, FL 32606
(352)375-8593
CA 5201

Job	Mark	Quan	Type	Span	P1-H1	Left OH	Right OH	Engineering
050886	R14A	1	SP	441100	6	2- 0- 0	0	

Stewart Model

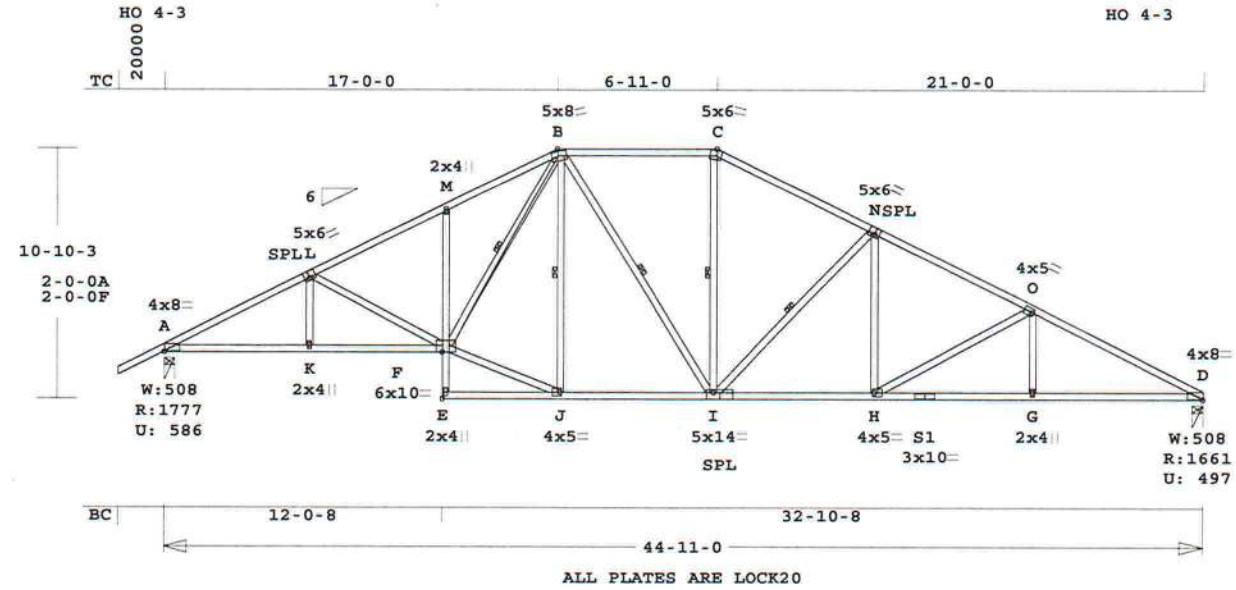

Scale: 0.125" = 1'

Robbins Engineering, Inc./Online Plus™ APPROX. TRUSS WEIGHT: 356.1 LBS

Online Plus -- Version 17.7.008
RUN DATE: 01-SEP-05

	CSI	-Size-	----Lumber----
TC	0.56	2x 4	SP-#2
BC	0.60	2x 4	SP-#2
CW	0.14	2x 4	SP-#3
WB	0.56	2x 4	SP-#3

Brace truss as follows:

	O.C.	From	To
TC	Cont.	0- 0- 0	44-11- 0
BC	Cont.	0- 0- 0	44-11- 0

WB 1 rows CLB on F -B
WB 1 rows CLB on J -B
WB 1 rows CLB on B -I
WB 1 rows CLB on I -C
WB 1 rows CLB on I -N
Attach CLB with (2)-8d nails at each web.

Loading	Live	Dead	(psf)
TC	20.0	7.0	
BC	0.0	10.0	
Total	20.0	17.0	37.0
Spacing			24.0"

Lumber Duration Factor 1.25
Plate Duration Factor 1.25
TC Fb=1.15 Fc=1.10 Ft=1.10
BC Fb=1.10 Fc=1.10 Ft=1.10

Plus 7 Wind Load Case(s)

Jt	React Lbs	Uplft Lbs	Size In-Sx	Req'd In-Sx
A	1778	586	5- 8	2- 2
			Hz =	-146
D	1662	497	5- 8	1-15
			Hz =	-259

Membr	CSI	P Lbs	Axl	CSI-Bnd
----------Top Chords----------				
A -L	0.47	3130 C	0.20	0.27
L -M	0.45	2667 C	0.18	0.27
M -B	0.45	2639 C	0.04	0.41
B -C	0.52	1758 C	0.04	0.48
C -N	0.52	1967 C	0.15	0.37
N -O	0.55	2533 C	0.18	0.37
O -D	0.56	3075 C	0.20	0.36
--------Bottom Chords---------				
A -K	0.57	2798 T	0.46	0.11
K -F	0.58	2798 T	0.46	0.12
E -J	0.13	24 C	0.00	0.13
J -I	0.41	1650 T	0.27	0.14
I -H	0.52	2266 T	0.38	0.14
H -S1	0.60	2752 T	0.46	0.14
S1-G	0.56	2752 T	0.46	0.10
G -D	0.58	2752 T	0.46	0.12
----------Chord-Webs----------				
E -F	0.13	34 T	0.00	0.13
F -M	0.14	331 T	0.14	0.00
-------------Webs-------------				
K -L	0.03	109 T		
L -F	0.30	475 C		
F -B	0.45	1414 T		1 Br
F -J	0.56	1764 T		
J -B	0.23	530 C		1 Br
B -I	0.10	197 T		1 Br
I -C	0.15	490 T		1 Br
I -N	0.28	727 C		1 Br
H -N	0.12	405 T		
H -O	0.47	553 C		
G -O	0.04	135 T		

LL Defl -0.20" in E -F L/999
TL Defl -0.39" in I -H L/999
Shear // Grain in B -C 0.24

Plates for each ply each face.
ALL CONNECTOR PLATES
TO BE MANUFACTURED BY
ROBBINS ENGINEERING, INC.
Plate - LOCK 20 Ga, Gross Area
Plate - RHS 20 Ga, Gross Area

Jt	Type	Plt Size	X	Y	JSI
A	LOCK	4.0x 8.0	0.8	0.3	0.76
L	LOCK	5.0x 6.0	0.7	-0.5	0.75
M	LOCK	2.0x 4.0	Ctr	Ctr	0.24
B	LOCK	5.0x 8.0	0.9	-3.8	0.87
C	LOCK	5.0x 6.0	-0.7	-3.1	0.75
N	LOCK	5.0x 6.0	-0.7	-0.5	0.75
O	LOCK	4.0x 5.0	Ctr	Ctr	0.67
D	LOCK	4.0x 8.0	-0.8	0.3	0.76
K	LOCK	2.0x 4.0	Ctr	Ctr	0.51
F	LOCK	6.0x10.0	Ctr	1.2	0.82
E	LOCK	2.0x 4.0	Ctr	Ctr	0.63
J	LOCK	4.0x 5.0	Ctr	Ctr	0.74
I	LOCK	5.0x14.0	Ctr	0.8	0.75
H	LOCK	4.0x 5.0	Ctr	Ctr	0.60
S1	LOCK	3.0x10.0	Ctr	Ctr	0.88
G	LOCK	2.0x 4.0	Ctr	Ctr	0.51

NOTES:
Trusses Manufactured by:
RIDGWAY ROOF TRUSS
Analysis Conforms To:
ANSI/TPI 95 & 02
OH Loading
Soffit psf 2.0
Wind Loads - ANSI / ASCE 7-98
Truss is designed as
Components and Claddings*
for Exterior zone location.
Wind Speed: 110 mph
Mean Roof Height: 25-0
Exposure Category: B
Occupancy Factor : 1.00
Building Type: Enclosed
TC Dead Load: 4.0 psf
BC Dead Load: 6.0 psf
Max comp. force 3130 Lbs
Quality Control Factor 1.25

FABRICATOR NOTES:
1. Delegated Engineer (Truss Designer)
Gary Dounson, PE 35054
Gary Dounson & Associates, Inc.
2830 NW 41st Street Suite D
Gainesville, FL 32606
(352)375-8593
CA 5201

Job	Mark	Quan	Type	Span	P1-H1	Left OH	Right OH	Engineering
050886	R14B	3	SP	441008	6	2- 0- 8	0	

Stewart Model

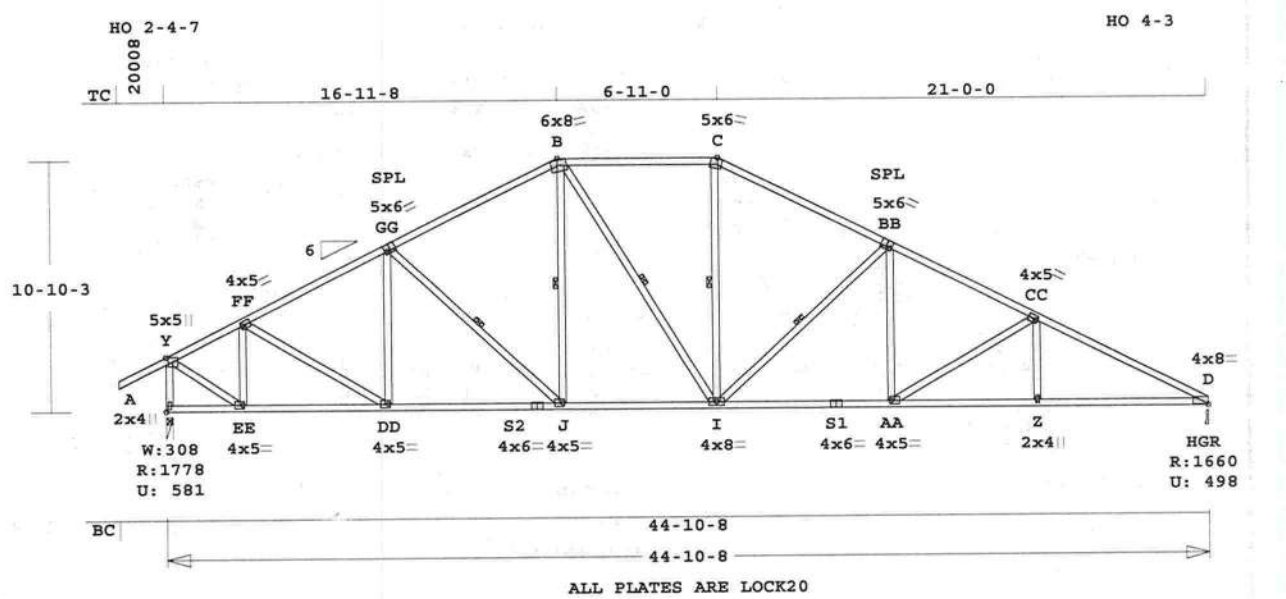

Robbins Engineering, Inc./Online Plus™ APPROX. TRUSS WEIGHT: 355.8 LBS

Online Plus -- Version 18.0.007
RUN DATE: 16-SEP-05

	CSI	-Size-	----Lumber----
TC	0.60	2x 4	SP-#2
BC	0.60	2x 4	SP-#2
WB	0.52	2x 4	SP-#3

Brace truss as follows:

O.C.	From	To
TC Cont.	0- 0- 0	44-10- 8
BC Cont.	0- 0- 0	44-10- 8

WB 1 rows CLB on GG-J
WB 1 rows CLB on J -B
WB 1 rows CLB on B -I
WB 1 rows CLB on I -C
WB 1 rows CLB on I -BB
Attach CLB with (2)-10d nails at each web.

Loading	Live	Dead	(psf)
TC	20.0	7.0	
BC	0.0	10.0	
Total	20.0	17.0	37.0
Spacing			24.0"

Lumber Duration Factor 1.25
Plate Duration Factor 1.25
TC Fb=1.15 Fc=1.10 Ft=1.10
BC Fb=1.10 Fc=1.10 Ft=1.10

Plus 7 Wind Load Case(s)

Jt	React Lbs	Uplft Lbs	Size In-Sx	Req'd In-Sx
A	1779	582	3- 8	2- 2
			Hz =	-213
D	1660	498	5- 8	1-15
			Hz =	-209

Membr	CSI	P Lbs	Axl	CSI	Bnd
----------Top Chords----------					
Y -FF	0.28	1488	C	0.10	0.18
FF-GG	0.57	2044	C	0.14	0.43
GG-B	0.57	1861	C	0.14	0.43
B -C	0.40	1756	C	0.04	0.36
C -BB	0.55	1966	C	0.15	0.40
BB-CC	0.58	2574	C	0.18	0.40
CC-D	0.60	3065	C	0.20	0.40
--------Bottom Chords---------					
A -EE	0.06	178	T	0.00	0.06
EE-DD	0.37	1345	T	0.22	0.15
DD-S2	0.45	1836	T	0.30	0.15
S2-J	0.45	1836	T	0.30	0.15
J -I	0.43	1659	T	0.27	0.16
I -S1	0.54	2305	T	0.38	0.16
S1-AA	0.52	2305	T	0.38	0.14
AA-Z	0.60	2741	T	0.46	0.14
Z -D	0.59	2741	T	0.46	0.13
----------Webs----------					
A -Y	0.27	1636	C	WindLd	
Y -EE	0.52	1621	T		
EE-FF	0.19	807	C		
FF-DD	0.18	570	T		
DD-GG	0.10	178	T		
GG-J	0.09	297	T		1 Br
J -B	0.09	298	T		1 Br
B -I	0.10	181	T		1 Br
I -C	0.15	491	T		1 Br
I -BB	0.30	743	C		1 Br
AA-BB	0.12	398	T		
AA-CC	0.38	506	C		
Z -CC	0.04	128	T		

LL Defl -0.16" in S1-AA L/999
TL Defl -0.33" in I -S1 L/999
Shear // Grain in GG-B 0.23

Plates for each ply each face.
ALL CONNECTOR PLATES
TO BE MANUFACTURED BY
ROBBINS ENGINEERING, INC.
Plate - LOCK 20 Ga, Gross Area
Plate - RHS 20 Ga, Gross Area

Jt	Type	Plt Size	X	Y	JSI
Y	LOCK	5.0x 5.0	Ctr	Ctr	0.73
FF	LOCK	4.0x 5.0	Ctr	Ctr	0.67
GG	LOCK	5.0x 6.0	0.3	-0.7	0.75
B	LOCK	6.0x 8.0	0.9	-3.8	0.72
C	LOCK	5.0x 6.0	-0.7	-3.1	0.72
BB	LOCK	5.0x 6.0	-0.3	-0.7	0.75
CC	LOCK	4.0x 5.0	Ctr	Ctr	0.67
D	LOCK	4.0x 8.0	-0.8	0.3	0.76
A	LOCK	2.0x 4.0	Ctr	Ctr	0.67
EE	LOCK	4.0x 5.0	Ctr	Ctr	0.60
DD	LOCK	4.0x 5.0	Ctr	Ctr	0.60
S2	LOCK	4.0x 6.0	Ctr	0.2	0.75
J	LOCK	4.0x 5.0	Ctr	Ctr	0.60
I	LOCK	4.0x 8.0	Ctr	Ctr	0.54
S1	LOCK	4.0x 6.0	Ctr	0.2	0.75
AA	LOCK	4.0x 5.0	Ctr	Ctr	0.60
Z	LOCK	2.0x 4.0	Ctr	Ctr	0.51

NOTES:
Trusses Manufactured by:
RIDGWAY ROOF TRUSS
Analysis Conforms To:
ANSI/TPI 95 & 02
OH Loading
Soffit psf 2.0
Wind Loads - ANSI / ASCE 7-98
Truss is designed as
Components and Claddings*
for Exterior zone location.
Wind Speed: 110 mph
Mean Roof Height: 25-0
Exposure Category: B
Occupancy Factor : 1.00
Building Type: Enclosed
TC Dead Load: 4.0 psf
BC Dead Load: 6.0 psf
Max comp. force 3065 Lbs
Quality Control Factor 1.25

FABRICATOR NOTES:
1. Delegated Engineer (Truss Designer)
Gary Dounson, PE 35054
Gary Dounson & Associates, Inc.
2830 NW 41st Street Suite D
Gainesville, FL 32606
(352)375-8593
CA 5201

Job	Mark	Quan	Type	Span	P1-H1	Left OH	Right OH	Engineering
050886	R15	1	HIPP	380700	6	0	0	

Stewart Model

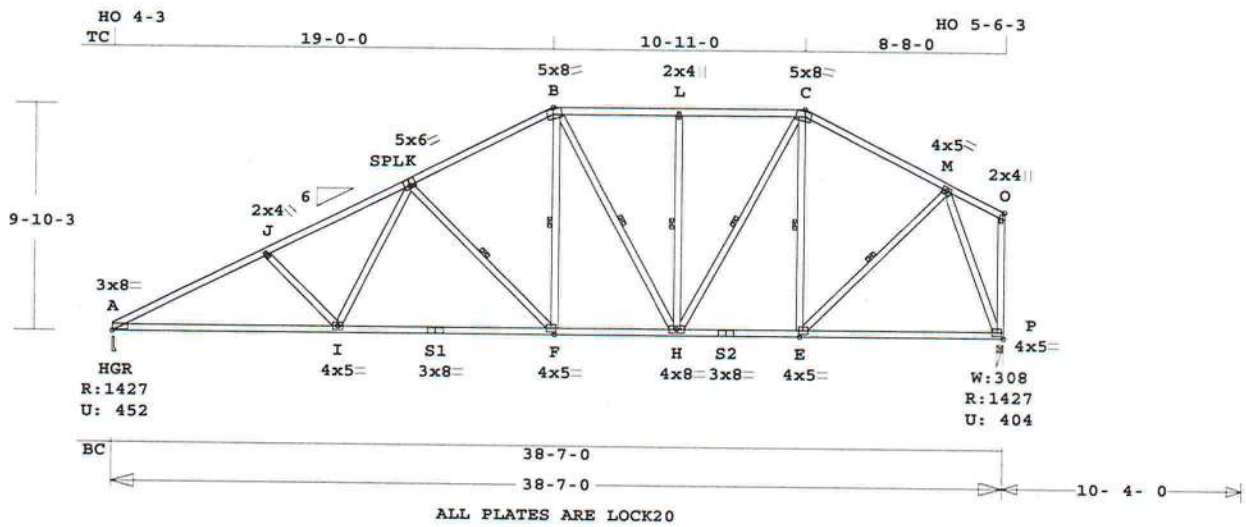

Scale: 0.125" = 1'

Robbins Engineering, Inc./Online Plus™ APPROX. TRUSS WEIGHT: 320.9 LBS

Online Plus -- Version 17.7.008
RUN DATE: 17-AUG-05

	CSI	-Size-	----Lumber----
TC	0.47	2x 4	SP-#2
BC	0.67	2x 4	SP-#2
WB	0.97	2x 4	SP-#3

Brace truss as follows:

	O.C.	From	To
TC	Cont.	0- 0- 0	38- 7- 0
BC	Cont.	0- 0- 0	38- 7- 0

WB 1 rows CLB on K -F
WB 1 rows CLB on F -B
WB 1 rows CLB on B -H
WB 1 rows CLB on H -L
WB 1 rows CLB on H -C
WB 1 rows CLB on E -C
WB 1 rows CLB on E -M
Attach CLB with (2)-8d nails at each web.

Loading	Live	Dead	(psf)
TC	20.0	7.0	
BC	0.0	10.0	
Total	20.0	17.0	37.0
Spacing			24.0"

Lumber Duration Factor 1.25
Plate Duration Factor 1.25
TC Fb=1.15 Fc=1.10 Ft=1.10
BC Fb=1.10 Fc=1.10 Ft=1.10

Plus 7 Wind Load Case(s)

Jt	React Lbs	Uplft Lbs	Size In-Sx	Req'd In-Sx
A	1428	452	3- 8	1-11
			Hz =	322
P	1428	404	3- 8	1-11
			Hz =	207

Membr	CSI	P Lbs	Axl-CSI-Bnd
----------Top Chords----------			
A -J	0.44	2574 C	0.16 0.28
J -K	0.47	2327 C	0.15 0.32
K -B	0.43	1612 C	0.11 0.32
B -L	0.27	1331 C	0.01 0.26
L -C	0.27	1331 C	0.01 0.26
C -M	0.35	1140 C	0.08 0.27
M -O	0.27	28 T	0.00 0.27
--------Bottom Chords---------			
A -I	0.67	2307 T	0.38 0.29
I -S1	0.60	1878 T	0.31 0.29
S1-F	0.51	1878 T	0.31 0.20
F -H	0.44	1434 T	0.24 0.20
H -S2	0.19	1018 T	0.17 0.02
S2-E	0.43	1018 T	0.17 0.26
E -P	0.34	489 T	0.08 0.26
----------Webs----------			
J -I	0.11	377 T	
I -K	0.15	478 T	
K -F	0.21	627 C	1 Br
F -B	0.19	609 T	1 Br
B -H	0.09	211 C	1 Br
H -L	0.11	314 C	1 Br
H -C	0.20	642 T	1 Br
E -C	0.13	356 C	1 Br
E -M	0.24	751 T	1 Br
M -P	0.97	1431 C	
P -O	0.00	8 C	

LL Defl -0.12" in I -S1 L/999
TL Defl -0.29" in S1-F L/999
Shear // Grain in B -L 0.21

Plates for each ply each face.
ALL CONNECTOR PLATES
TO BE MANUFACTURED BY
ROBBINS ENGINEERING, INC.
Plate - LOCK 20 Ga, Gross Area
Plate - RHS 20 Ga, Gross Area

Jt	Type	Plt Size	X	Y	JSI
A	LOCK	3.0x 8.0	0.8	0.3	0.84
J	LOCK	2.0x 4.0	Ctr	Ctr	0.47
K	LOCK	5.0x 6.0	0.3	-0.7	0.75
B	LOCK	5.0x 8.0	0.8	-3.4	0.75
L	LOCK	2.0x 4.0	Ctr	Ctr	0.47
C	LOCK	5.0x 8.0	-0.8	-3.4	0.75
M	LOCK	4.0x 5.0	Ctr	Ctr	0.60
O	LOCK	2.0x 4.0	Ctr	Ctr	0.53
I	LOCK	4.0x 5.0	Ctr	Ctr	0.57
S1	LOCK	3.0x 8.0	Ctr	Ctr	0.88
F	LOCK	4.0x 5.0	Ctr	Ctr	0.60
H	LOCK	4.0x 8.0	Ctr	Ctr	0.55
S2	LOCK	3.0x 8.0	Ctr	Ctr	0.88
E	LOCK	4.0x 5.0	Ctr	Ctr	0.60
P	LOCK	4.0x 5.0	Ctr	Ctr	0.80

NOTES:
Trusses Manufactured by:
RIDGWAY ROOF TRUSS
Analysis Conforms To:
ANSI/TPI 95 & 02
Provide connection to bearing for 321 Lbs Horiz Reaction
No wind exposure on right end.
Wind Loads - ANSI / ASCE 7-98
Truss is designed as
Components and Claddings*
for Exterior zone location.
Wind Speed: 110 mph
Mean Roof Height: 25-0
Exposure Category: B
Occupancy Factor : 1.00
Building Type: Enclosed
TC Dead Load: 4.0 psf
BC Dead Load: 6.0 psf
Max comp. force 2574 Lbs
Quality Control Factor 1.25

FABRICATOR NOTES:
1. Delegated Engineer (Truss Designer)
Gary Dounson, PE 35054
Gary Dounson & Associates, Inc.
2830 NW 41st Street Suite D
Gainesville, FL 32606
(352)375-8593
CA 5201

Job	Mark	Quan	Type	Span	P1-H1	Left OH	Right OH	Engineering
050886	R16	1	HIPP	380700	6	0	0	

Stewart Model

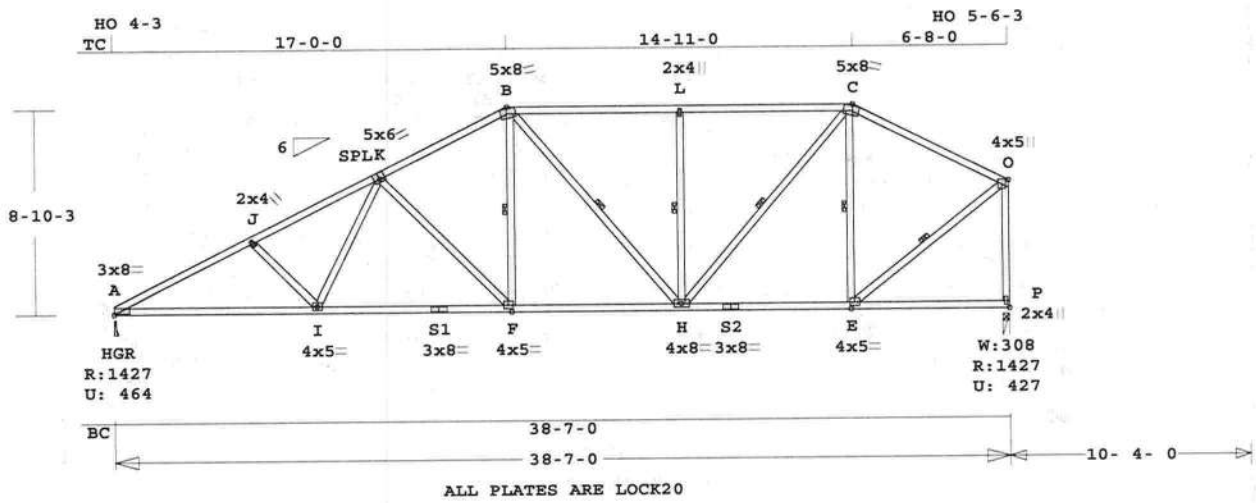

Robbins Engineering, Inc./Online Plus™ APPROX. TRUSS WEIGHT: 297.9 LBS

Online Plus -- Version 17.7.008
RUN DATE: 17-AUG-05

	CSI	-Size-	----Lumber----
TC	0.52	2x 4	SP-#2
BC	0.59	2x 4	SP-#2
WB	0.58	2x 4	SP-#3

Brace truss as follows:

O.C.	From	To
TC Cont.	0- 0- 0	38- 7- 0
BC Cont.	0- 0- 0	38- 7- 0

WB 1 rows CLB on F -B
WB 1 rows CLB on B -H
WB 1 rows CLB on H -L
WB 1 rows CLB on H -C
WB 1 rows CLB on E -C
WB 1 rows CLB on E -O
Attach CLB with (2)-8d nails at each web.

Loading	Live	Dead	(psf)
TC	20.0	7.0	
BC	0.0	10.0	
Total	20.0	17.0	37.0
Spacing			24.0"

Lumber Duration Factor 1.25
Plate Duration Factor 1.25
TC Fb=1.15 Fc=1.10 Ft=1.10
BC Fb=1.10 Fc=1.10 Ft=1.10

Plus 7 Wind Load Case(s)

Jt	React Lbs	Uplft Lbs	Size In-Sx	Req'd In-Sx
A	1428	465	3- 8	1-11
			Hz =	302
P	1428	427	3- 8	1-11
			Hz =	193

Membr	CSI	P Lbs	Axl	CSI	Bnd
----------Top Chords----------					
A -J	0.38	2612	C	0.16	0.22
J -K	0.38	2394	C	0.15	0.23
K -B	0.34	1774	C	0.11	0.23
B -L	0.52	1511	C	0.01	0.51
L -C	0.52	1511	C	0.01	0.51
C -O	0.47	1038	C	0.01	0.46
--------Bottom Chords---------					
A -I	0.59	2338	T	0.39	0.20
I -S1	0.52	1964	T	0.32	0.20
S1-F	0.51	1964	T	0.32	0.19
F -H	0.45	1584	T	0.26	0.19
H -S2	0.29	942	T	0.15	0.14
S2-E	0.34	942	T	0.15	0.19
E -P	0.19	192	T	0.00	0.19
----------Webs----------					
J -I	0.08	335	T		
I -K	0.13	414	T		
K -F	0.50	536	C		
F -B	0.17	543	T		1 Br
B -H	0.05	112	C		1 Br
H -L	0.13	435	C		1 Br
H -C	0.27	872	T		1 Br
E -C	0.18	583	C		1 Br
E -O	0.38	1193	T		1 Br
P -O	0.58	1373	C		

LL Defl -0.13" in I -S1 L/999
TL Defl -0.27" in I -S1 L/999
Shear // Grain in B -L 0.29

Plates for each ply each face.
ALL CONNECTOR PLATES
TO BE MANUFACTURED BY
ROBBINS ENGINEERING, INC.
Plate - LOCK 20 Ga, Gross Area
Plate - RHS 20 Ga, Gross Area

Jt	Type	Plt Size	X	Y	JSI
A	LOCK	3.0x 8.0	0.8	0.3	0.84
J	LOCK	2.0x 4.0	Ctr	Ctr	0.47
K	LOCK	5.0x 6.0	0.3	-0.7	0.75
B	LOCK	5.0x 8.0	0.8	-3.4	0.75
L	LOCK	2.0x 4.0	Ctr	Ctr	0.47
C	LOCK	5.0x 8.0	-0.8	-3.4	0.75
O	LOCK	4.0x 5.0	Ctr	Ctr	0.80
I	LOCK	4.0x 5.0	Ctr	Ctr	0.57
S1	LOCK	3.0x 8.0	Ctr	Ctr	0.88
F	LOCK	4.0x 5.0	Ctr	Ctr	0.60
H	LOCK	4.0x 8.0	Ctr	Ctr	0.50
S2	LOCK	3.0x 8.0	Ctr	Ctr	0.88
E	LOCK	4.0x 5.0	Ctr	Ctr	0.60
P	LOCK	2.0x 4.0	Ctr	Ctr	0.56

NOTES:
Trusses Manufactured by:
RIDGWAY ROOF TRUSS
Analysis Conforms To:
ANSI/TPI 95 & 02
Provide connection to bearing for 301 Lbs Horiz Reaction
No wind exposure on right end.
Wind Loads - ANSI / ASCE 7-98
Truss is designed as Components and Claddings* for Exterior zone location.
Wind Speed: 110 mph
Mean Roof Height: 25-0
Exposure Category: B
Occupancy Factor : 1.00
Building Type: Enclosed
TC Dead Load: 4.0 psf
BC Dead Load: 6.0 psf
Max comp. force 2612 Lbs
Quality Control Factor 1.25

FABRICATOR NOTES:
1. Delegated Engineer (Truss Designer)
Gary Dounson, PE 35054
Gary Dounson & Associates, Inc.
2830 NW 41st Street Suite D
Gainesville, FL 32606
(352)375-8593
CA 5201

Job	Mark	Quan	Type	Span	P1-H1	Left OH	Right OH	Engineering
050886	R17	1	HIPP	380700	6	0	0	

Stewart Model

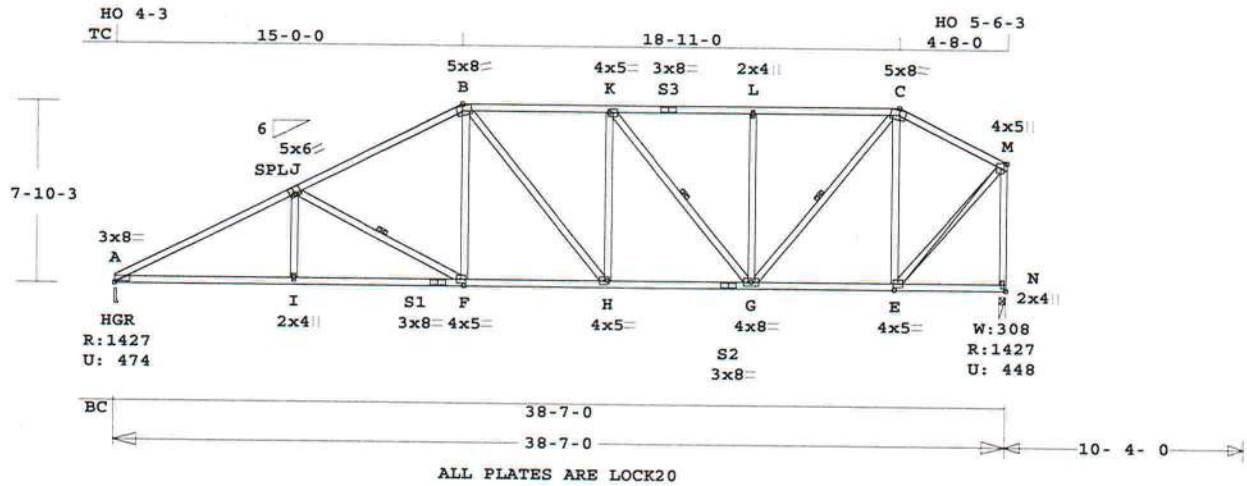

Scale: 0.125" = 1'

Robbins Engineering, Inc./Online Plus™ APPROX. TRUSS WEIGHT: 302.9 LBS

Online Plus -- Version 17.7.008
RUN DATE: 17-AUG-05

	CSI	-Size-	----Lumber----
TC	0.62	2x 4	SP-#2
BC	0.55	2x 4	SP-#2
WB	0.63	2x 4	SP-#3

Brace truss as follows:

	O.C.	From	To
TC	Cont.	0- 0- 0	38- 7- 0
BC	Cont.	0- 0- 0	38- 7- 0

WB 1 rows CLB on J -F
WB 1 rows CLB on K -G
WB 1 rows CLB on G -C
Attach CLB with (2)-8d nails at each web.

Loading	Live	Dead	(psf)
TC	20.0	7.0	
BC	0.0	10.0	
Total	20.0	17.0	37.0
Spacing			24.0"

Lumber Duration Factor 1.25
Plate Duration Factor 1.25
TC Fb=1.15 Fc=1.10 Ft=1.10
BC Fb=1.10 Fc=1.10 Ft=1.10

Plus 7 Wind Load Case(s)

Jt	React Lbs	Uplft Lbs	Size In-Sx	Req'd In-Sx
A	1428	475	3- 8	1-11
			Hz =	282
N	1428	448	3- 8	1-11
			Hz =	178

Membr	CSI	P Lbs	Axl	CSI	Bnd
----------Top Chords----------					
A -J	0.62	2554	C	0.15	0.47
J -B	0.58	1945	C	0.11	0.47
B -K	0.36	1806	C	0.02	0.34
K -S3	0.35	1489	C	0.01	0.34
S3-L	0.31	1489	C	0.01	0.30
L -C	0.31	1489	C	0.01	0.30
C -M	0.24	868	C	0.05	0.19
--------Bottom Chords---------					
A -I	0.55	2290	T	0.38	0.17
I -S1	0.55	2290	T	0.38	0.17
S1-F	0.52	2290	T	0.38	0.14
F -H	0.43	1729	T	0.29	0.14
H -S2	0.40	1806	T	0.30	0.10
S2-G	0.41	1806	T	0.30	0.11
G -E	0.24	790	T	0.13	0.11
E -N	0.11	177	T	0.00	0.11
----------Webs----------					
I -J	0.05	159	T		
J -F	0.18	628	C		1 Br
F -B	0.13	431	T		
B -H	0.19	146	C		
H -K	0.04	185	T		
K -G	0.18	499	C		1 Br
G -L	0.27	333	C		
G -C	0.35	1095	T		1 Br
E -C	0.63	761	C		
E -M	0.37	1178	T		
N -M	0.59	1390	C		

LL Defl -0.12" in S1-F L/999
TL Defl -0.25" in I -S1 L/999
Shear // Grain in A -J 0.24

Plates for each ply each face.
ALL CONNECTOR PLATES
TO BE MANUFACTURED BY
ROBBINS ENGINEERING, INC.
Plate - LOCK 20 Ga, Gross Area
Plate - RHS 20 Ga, Gross Area

Jt	Type	Plt Size	X	Y	JSI
A	LOCK	3.0x 8.0	0.8	0.3	0.84
J	LOCK	5.0x 6.0	0.7	-0.5	0.75
B	LOCK	5.0x 8.0	0.8	-3.4	0.75
K	LOCK	4.0x 5.0	Ctr	Ctr	0.60
S3	LOCK	3.0x 8.0	Ctr	Ctr	0.88
L	LOCK	2.0x 4.0	Ctr	Ctr	0.47
C	LOCK	5.0x 8.0	-0.8	-3.4	0.89
M	LOCK	4.0x 5.0	Ctr	Ctr	0.80
I	LOCK	2.0x 4.0	Ctr	Ctr	0.47
S1	LOCK	3.0x 8.0	Ctr	Ctr	0.88
F	LOCK	4.0x 5.0	Ctr	Ctr	0.60
H	LOCK	4.0x 5.0	Ctr	Ctr	0.60
S2	LOCK	3.0x 8.0	Ctr	Ctr	0.88
G	LOCK	4.0x 8.0	Ctr	Ctr	0.50
E	LOCK	4.0x 5.0	Ctr	Ctr	0.60
N	LOCK	2.0x 4.0	Ctr	Ctr	0.53

NOTES:
Trusses Manufactured by:
RIDGWAY ROOF TRUSS
Analysis Conforms To:
ANSI/TPI 95 & 02
No wind exposure on right end.
Wind Loads - ANSI / ASCE 7-98
Truss is designed as
Components and Claddings*
for Exterior zone location.
Wind Speed: 110 mph
Mean Roof Height: 25-0
Exposure Category: B
Occupancy Factor : 1.00
Building Type: Enclosed
TC Dead Load: 4.0 psf
BC Dead Load: 6.0 psf
Max comp. force 2554 Lbs
Quality Control Factor 1.25

FABRICATOR NOTES:
1. Delegated Engineer (Truss Designer)
Gary Dounson, PE 35054
Gary Dounson & Associates, Inc.
2830 NW 41st Street Suite D
Gainesville, FL 32606
(352)375-8593
CA 5201

Job	Mark	Quan	Type	Span	P1-H1	Left OH	Right OH	Engineering
050886	R18	1	HIPP	380700	6	0	0	

Stewart Model

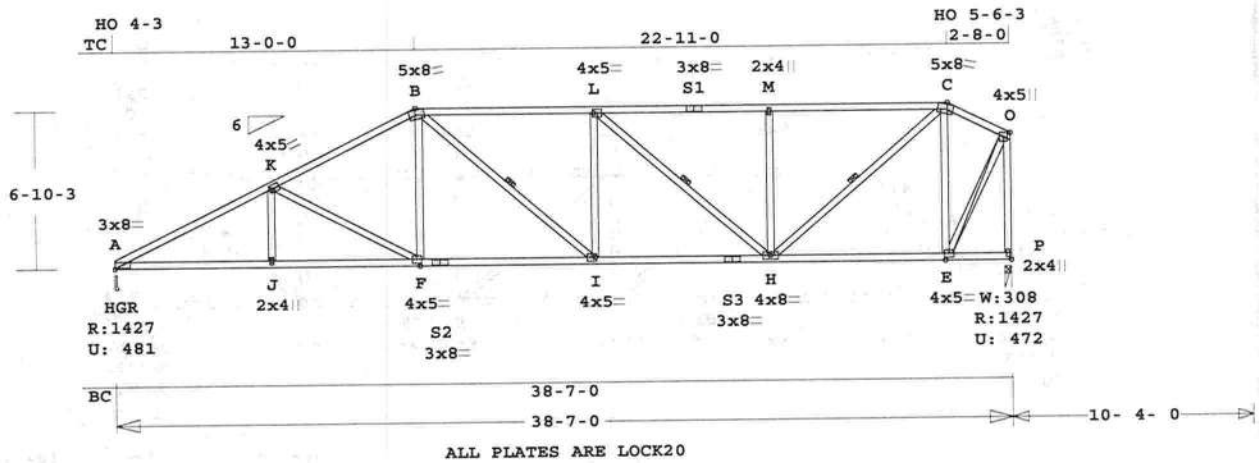

Robbins Engineering, Inc./Online Plus™ APPROX. TRUSS WEIGHT: 290.5 LBS

Online Plus -- Version 17.7.008
RUN DATE: 17-AUG-05

	CSI	-Size-	----Lumber----
TC	0.56	2x 4	SP-#2
BC	0.54	2x 4	SP-#2
WB	0.60	2x 4	SP-#3

Brace truss as follows:

	O.C.	From	To
TC	Cont.	0- 0- 0	38- 7- 0
BC	Cont.	0- 0- 0	38- 7- 0

WB 1 rows CLB on B -I
WB 1 rows CLB on L -H
WB 1 rows CLB on H -C
Attach CLB with (2)-8d nails at each web.

Loading	Live	Dead	(psf)
TC	20.0	7.0	
BC	0.0	10.0	
Total	20.0	17.0	37.0
Spacing			24.0"

Lumber Duration Factor 1.25
Plate Duration Factor 1.25
TC Fb=1.15 Fc=1.10 Ft=1.10
BC Fb=1.10 Fc=1.10 Ft=1.10

Plus 7 Wind Load Case(s)

Jt	React Lbs	Uplft Lbs	Size In-Sx	Req'd In-Sx
A	1428	482	5- 8	1-11
			Hz =	262
P	1428	473	3- 8	1-11
			Hz =	163

Membr	CSI	P Lbs	Axl	CSI	Bnd
----------Top Chords----------					
A -K	0.48	2597	C	0.15	0.33
K -B	0.45	2106	C	0.12	0.33
B -L	0.56	2114	C	0.09	0.47
L -S1	0.52	1670	C	0.01	0.51
S1-M	0.47	1670	C	0.01	0.46
M -C	0.47	1670	C	0.01	0.46
C -O	0.07	609	C	0.03	0.04
--------Bottom Chords---------					
A -J	0.49	2323	T	0.39	0.10
J -F	0.54	2323	T	0.39	0.15
F -S2	0.46	1879	T	0.31	0.15
S2-I	0.48	1879	T	0.31	0.17
I -S3	0.52	2114	T	0.35	0.17
S3-H	0.52	2114	T	0.35	0.17
H -E	0.26	561	T	0.09	0.17
E -P	0.13	163	T	0.00	0.13
----------Webs----------					
J -K	0.03	122	T		
K -F	0.37	497	C		
F -B	0.12	378	T		
B -I	0.09	310	T		1 Br
I -L	0.05	232	T		
L -H	0.23	588	C		1 Br
H -M	0.25	411	C		
H -C	0.46	1460	T		1 Br
E -C	0.60	957	C		
E -O	0.38	1212	T		
P -O	0.60	1424	C		

LL Defl -0.14" in S2-I L/999
TL Defl -0.30" in S2-I L/999
Shear // Grain in B -L 0.29

Plates for each ply each face.
ALL CONNECTOR PLATES
TO BE MANUFACTURED BY
ROBBINS ENGINEERING, INC.
Plate - LOCK 20 Ga, Gross Area
Plate - RHS 20 Ga, Gross Area

Jt	Type	Plt Size	X	Y	JSI
A	LOCK	3.0x 8.0	0.8	0.3	0.84
K	LOCK	4.0x 5.0	Ctr	Ctr	0.67
B	LOCK	5.0x 8.0	0.8	-3.4	0.75
L	LOCK	4.0x 5.0	Ctr	Ctr	0.60
S1	LOCK	3.0x 8.0	Ctr	Ctr	0.88
M	LOCK	2.0x 4.0	Ctr	Ctr	0.47
C	LOCK	5.0x 8.0	-1.0	-3.4	0.97
O	LOCK	4.0x 5.0	Ctr	Ctr	0.80
J	LOCK	2.0x 4.0	Ctr	Ctr	0.47
F	LOCK	4.0x 5.0	Ctr	Ctr	0.60
S2	LOCK	3.0x 8.0	Ctr	Ctr	0.88
I	LOCK	4.0x 5.0	Ctr	Ctr	0.60
S3	LOCK	3.0x 8.0	Ctr	Ctr	0.88
H	LOCK	4.0x 8.0	Ctr	Ctr	0.60
E	LOCK	4.0x 5.0	Ctr	Ctr	0.60
P	LOCK	2.0x 4.0	Ctr	Ctr	0.53

NOTES:
Trusses Manufactured by:
RIDGWAY ROOF TRUSS
Analysis Conforms To:
ANSI/TPI 95 & 02
No wind exposure on right end.
Wind Loads - ANSI / ASCE 7-98
Truss is designed as
Components and Claddings*
for Exterior zone location.
Wind Speed: 110 mph
Mean Roof Height: 25-0
Exposure Category: B
Occupancy Factor : 1.00
Building Type: Enclosed
TC Dead Load: 4.0 psf
BC Dead Load: 6.0 psf
Max comp. force 2597 Lbs
Quality Control Factor 1.25

FABRICATOR NOTES:
1. Delegated Engineer (Truss Designer)
Gary Dounson, PE 35054
Gary Dounson & Associates, Inc.
2830 NW 41st Street Suite D
Gainesville, FL 32606
(352)375-8593
CA 5201

Job	Mark	Quan	Type	Span	P1-H1	Left OH	Right OH	Engineering
050886	R19	1	HIPP	380700	6	2- 0- 0	0	

Stewart Model

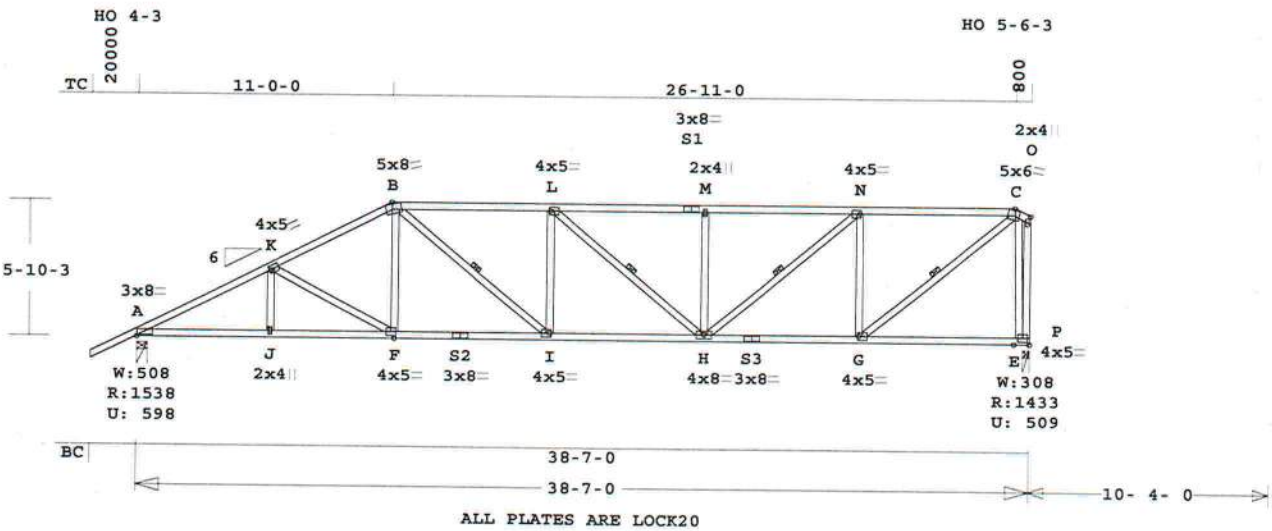

Scale: 0.125" = 1'

Robbins Engineering, Inc./Online Plus™ APPROX. TRUSS WEIGHT: 291.1 LBS

Online Plus -- Version 17.7.008
RUN DATE: 17-AUG-05

	CSI	-Size-	----Lumber----
TC	0.44	2x 4	SP-#2
BC	0.54	2x 4	SP-#2
WB	0.59	2x 4	SP-#3

Brace truss as follows:

	O.C.	From	To
TC	Cont.	0- 0- 0	38- 7- 0
BC	Cont.	0- 0- 0	38- 7- 0

WB 1 rows CLB on B -I
WB 1 rows CLB on L -H
WB 1 rows CLB on H -N
WB 1 rows CLB on G -C
Attach CLB with (2)-8d nails at each web.

Loading	Live	Dead	(psf)
TC	20.0	7.0	
BC	0.0	10.0	
Total	20.0	17.0	37.0
Spacing			24.0"

Lumber Duration Factor 1.25
Plate Duration Factor 1.25
TC Fb=1.15 Fc=1.10 Ft=1.10
BC Fb=1.10 Fc=1.10 Ft=1.10

Plus 7 Wind Load Case(s)

Jt	React Lbs	Uplft Lbs	Size In-Sx	Req'd In-Sx
A	1538	599	5- 8	1-13
			Hz =	243
P	1433	510	3- 8	1-11
			Hz =	149

Membr	CSI	P Lbs	Axl	CSI-Bnd
----------Top Chords----------				
A -K	0.35	2625	C 0.14	0.21
K -B	0.33	2244	C 0.12	0.21
B -L	0.44	2462	C 0.04	0.40
L -S1	0.43	2277	C 0.03	0.40
S1-M	0.36	2277	C 0.03	0.33
M -N	0.39	2277	C 0.03	0.36
N -C	0.37	1515	C 0.01	0.36
C -O	0.21	137	C 0.00	0.21
--------Bottom Chords---------				
A -J	0.47	2344	T 0.39	0.08
J -F	0.50	2344	T 0.39	0.11
F -S2	0.44	2006	T 0.33	0.11
S2-I	0.46	2006	T 0.33	0.13
I -H	0.54	2462	T 0.41	0.13
H -S3	0.35	1515	T 0.25	0.10
S3-G	0.43	1515	T 0.25	0.18
G -P	0.18	138	T 0.00	0.18
----------Webs----------				
J -K	0.02	87	T	
K -F	0.20	377	C	
F -B	0.09	309	T	
B -I	0.18	587	T	1 Br
I -L	0.10	265	T	
L -H	0.07	240	C	1 Br
H -M	0.16	353	C	
H -N	0.31	990	T	1 Br
G -N	0.46	1000	C	
G -C	0.59	1863	T	1 Br
C -P	0.46	1028	C	
P -O	0.14	343	C	

LL Defl -0.16" in I -H L/999
TL Defl -0.33" in I -H L/999
Shear // Grain in C -O 0.39

Plates for each ply each face.
ALL CONNECTOR PLATES
TO BE MANUFACTURED BY
ROBBINS ENGINEERING, INC.
Plate - LOCK 20 Ga, Gross Area
Plate - RHS 20 Ga, Gross Area

Jt	Type	Plt Size	X	Y	JSI
A	LOCK	3.0x 8.0	0.8	0.3	0.84
K	LOCK	4.0x 5.0	Ctr	Ctr	0.67
B	LOCK	5.0x 8.0	0.8	-3.4	0.75
L	LOCK	4.0x 5.0	Ctr	Ctr	0.60
S1	LOCK	3.0x 8.0	Ctr	Ctr	0.88
M	LOCK	2.0x 4.0	Ctr	Ctr	0.47
N	LOCK	4.0x 5.0	Ctr	Ctr	0.60
C	LOCK	5.0x 6.0	-0.7	-3.1	0.75
O	LOCK	2.0x 4.0	Ctr	Ctr	0.53
J	LOCK	2.0x 4.0	Ctr	Ctr	0.47
F	LOCK	4.0x 5.0	Ctr	Ctr	0.60
S2	LOCK	3.0x 8.0	Ctr	Ctr	0.88
I	LOCK	4.0x 5.0	Ctr	Ctr	0.60
H	LOCK	4.0x 8.0	Ctr	Ctr	0.50
S3	LOCK	3.0x 8.0	Ctr	Ctr	0.88
G	LOCK	4.0x 5.0	Ctr	Ctr	0.69
P	LOCK	4.0x 5.0	Ctr	Ctr	0.80

NOTES:
Trusses Manufactured by:
RIDGWAY ROOF TRUSS
Analysis Conforms To:
ANSI/TPI 95 & 02
OH Loading
Soffit psf 2.0
No wind exposure on right end.
Wind Loads - ANSI / ASCE 7-98
Truss is designed as
Components and Claddings*
for Exterior zone location.
Wind Speed: 110 mph
Mean Roof Height: 25-0
Exposure Category: B
Occupancy Factor : 1.00
Building Type: Enclosed
TC Dead Load: 4.0 psf
BC Dead Load: 6.0 psf
Max comp. force 2625 Lbs
Quality Control Factor 1.25

FABRICATOR NOTES:
1. Delegated Engineer (Truss Designer)
Gary Dounson, PE 35054
Gary Dounson & Associates, Inc.
2830 NW 41st Street Suite D
Gainesville, FL 32606
(352)375-8593
CA 5201

Job	Mark	Quan	Type	Span	P1-H1	Left OH	Right OH	Engineering
050886	R20	1	HHIP	380700	6	2- 0- 0	0	

Stewart Model

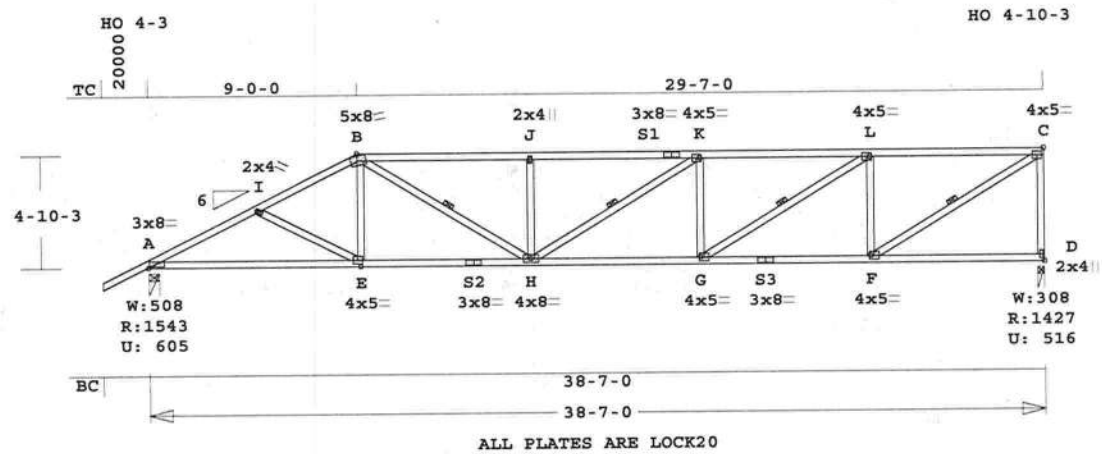

Scale: 0.125" = 1'

Robbins Engineering, Inc./Online Plus™ APPROX. TRUSS WEIGHT: 263.8 LBS

Online Plus -- Version 17.7.008
RUN DATE: 17-AUG-05

	CSI	-Size-	----Lumber----
TC	0.63	2x 4	SP-#2
BC	0.62	2x 4	SP-#2
WB	0.72	2x 4	SP-#3

Brace truss as follows:

	O.C.	From	To
TC	Cont.	0- 0- 0	38- 7- 0
BC	Cont.	0- 0- 0	38- 7- 0

WB 1 rows CLB on B -H
WB 1 rows CLB on H -K
WB 1 rows CLB on G -L
WB 1 rows CLB on F -C
Attach CLB with (2)-8d nails at each web.

Loading	Live	Dead	(psf)
TC	20.0	7.0	
BC	0.0	10.0	
Total	20.0	17.0	37.0
Spacing			24.0"

Lumber Duration Factor 1.25
Plate Duration Factor 1.25
TC Fb=1.15 Fc=1.10 Ft=1.10
BC Fb=1.10 Fc=1.10 Ft=1.10

Plus 7 Wind Load Case(s)

Jt	React Lbs	Uplft Lbs	Size In-Sx	Req'd In-Sx
A	1544	605	5- 8	1-13
			Hz =	206
D	1428	516	3- 8	1-11
			Hz =	126

Membr	CSI	P Lbs	Axl	CSI	Bnd
----------Top Chords----------					
A -I	0.29	2640	C	0.15	0.14
I -B	0.28	2419	C	0.03	0.25
B -J	0.63	2985	C	0.16	0.47
J -S1	0.53	2985	C	0.06	0.47
S1-K	0.43	2985	C	0.06	0.37
K -L	0.58	2872	C	0.05	0.53
L -C	0.60	1928	C	0.07	0.53
--------Bottom Chords---------					
A -E	0.57	2356	T	0.39	0.18
E -S2	0.54	2169	T	0.36	0.18
S2-H	0.50	2169	T	0.36	0.14
H -G	0.62	2872	T	0.48	0.14
G -S3	0.45	1928	T	0.32	0.13
S3-F	0.51	1928	T	0.32	0.19
F -D	0.19	126	T	0.00	0.19
----------Webs----------					
I -E	0.08	279	T		
E -B	0.08	255	T		
B -H	0.30	955	T		1 Br
H -J	0.13	422	C		
H -K	0.04	132	T		1 Br
G -K	0.14	445	C		
G -L	0.35	1112	T		1 Br
F -L	0.33	1035	C		
F -C	0.72	2270	T		1 Br
D -C	0.44	1365	C		

LL Defl -0.22" in H -G L/999
TL Defl -0.45" in H -G L/999
Shear // Grain in L -C 0.31

Plates for each ply each face.
ALL CONNECTOR PLATES
TO BE MANUFACTURED BY
ROBBINS ENGINEERING, INC.
Plate - LOCK 20 Ga, Gross Area
Plate - RHS 20 Ga, Gross Area

Jt	Type	Plt Size	X	Y	JSI
A	LOCK	3.0x 8.0	0.8	0.3	0.84
I	LOCK	2.0x 4.0	Ctr	Ctr	0.47
B	LOCK	5.0x 8.0	0.8	-3.4	0.75
J	LOCK	2.0x 4.0	Ctr	Ctr	0.47
S1	LOCK	3.0x 8.0	Ctr	Ctr	0.88
K	LOCK	4.0x 5.0	Ctr	Ctr	0.60
L	LOCK	4.0x 5.0	Ctr	Ctr	0.60
C	LOCK	4.0x 5.0	Ctr	Ctr	0.85
E	LOCK	4.0x 5.0	Ctr	Ctr	0.60
S2	LOCK	3.0x 8.0	Ctr	Ctr	0.88
H	LOCK	4.0x 8.0	Ctr	Ctr	0.52
G	LOCK	4.0x 5.0	Ctr	Ctr	0.60
S3	LOCK	3.0x 8.0	Ctr	Ctr	0.88
F	LOCK	4.0x 5.0	Ctr	Ctr	0.85
D	LOCK	2.0x 4.0	Ctr	Ctr	0.53

NOTES:
Trusses Manufactured by:
RIDGWAY ROOF TRUSS
Analysis Conforms To:
ANSI/TPI 95 & 02
OH Loading
Soffit psf 2.0
No wind exposure on right end.
Wind Loads - ANSI / ASCE 7-98
Truss is designed as
Components and Claddings*
for Exterior zone location.
Wind Speed: 110 mph
Mean Roof Height: 25-0
Exposure Category: B
Occupancy Factor : 1.00
Building Type: Enclosed
TC Dead Load: 4.0 psf
BC Dead Load: 6.0 psf
Max comp. force 2985 Lbs
Quality Control Factor 1.25

FABRICATOR NOTES:
1. Delegated Engineer (Truss Designer)
Gary Dounson, PE 35054
Gary Dounson & Associates, Inc.
2830 NW 41st Street Suite D
Gainesville, FL 32606
(352)375-8593
CA 5201

Job	Mark	Quan	Type	Span	P1-H1	Left OH	Right OH	Engineering
050886	R21	1	HHIP	380700	6	2- 0- 0	0	

Stewart Model

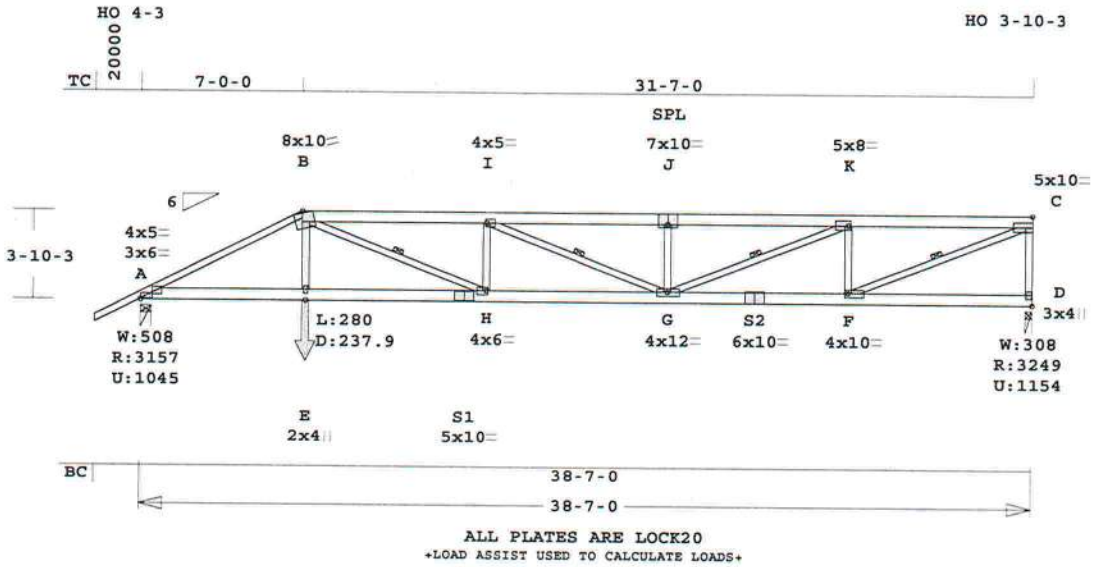

Scale: 0.125" = 1'

Robbins Engineering, Inc./Online Plus™ APPROX. TRUSS WEIGHT: 306.9 LBS

Online Plus -- Version 17.7.008
RUN DATE: 17-AUG-05

	CSI	-Size-	----Lumber----
TC	0.62	2x 6	SP-2400
EX A -B		2x 4	SP-#2D
BC	0.57	2x 6	SP-2400
EX A -S1		2x 6	SP-#2
WB	0.98	2x 4	SP-#3
EX B -H		2x 4	SP-#2
EX F -C		2x 4	SP-2400

Brace truss as follows:

O.C.	From	To
TC Cont.	0- 0- 0	38- 7- 0
BC Cont.	0- 0- 0	38- 7- 0

WB 1 rows CLB on B -H
WB 1 rows CLB on I -G
WB 1 rows CLB on G -K
WB 1 rows CLB on F -C
Attach CLB with (2)-8d nails at each web.

Loading	Live	Dead	(psf)
TC	20.0	7.0	
BC	0.0	10.0	
Total	20.0	17.0	37.0
Spacing			24.0"

Lumber Duration Factor 1.25
Plate Duration Factor 1.25
TC Fb=1.00 Fc=1.00 Ft=1.00
BC Fb=1.00 Fc=1.00 Ft=1.00

Load Case # 1 Girder Loading
Lumber Duration Factor 1.25
Plate Duration Factor 1.25

plf -	Live	Dead	From	To
TC V	40	14	0.0'	38.6'
BC V	0	20	0.0'	38.6'
TC V	50	18	7.0'	38.6'
BC V	0	25	7.1'	38.6'
BC V	280	238	7.1'	CL-LB

Plus 7 Wind Load Case(s)

Jt	React Lbs	Uplft Lbs	Size In-Sx	Req'd In-Sx
A	3158	1045	5- 8	3-12
			Hz =	154
D	3249	1154	3- 8	2-11
			Hz =	94

Membr	CSI	P Lbs	Axl	CSI-Bnd
----------Top Chords----------				
A -B	0.87	6238	C 0.51	0.36
B -I	0.62	9021	C 0.24	0.38
I -J	0.51	9008	C 0.24	0.27
J -K	0.54	9008	C 0.19	0.35
K -C	0.49	6193	C 0.11	0.38
--------Bottom Chords---------				
A -E	0.84	5591	T 0.74	0.10
E -S1	0.99	5561	T 0.74	0.25
S1-H	0.36	5561	T 0.28	0.08
H -G	0.57	9022	T 0.45	0.12
G -S2	0.42	6193	T 0.31	0.11
S2-F	0.42	6193	T 0.31	0.11
F -D	0.13	94	T 0.00	0.13
----------Webs----------				
E -B	0.24	756	T	
B -H	0.69	3737	T	1 Br
H -I	0.21	1033	C	
I -G	0.01	69	T	1 Br
G -J	0.18	891	C	
G -K	0.98	3067	T	1 Br
F -K	0.47	2291	C	
F -C	0.53	6750	T	1 Br
D -C	0.64	3090	C	

LL Defl -0.55" in H -G L/821
TL Defl -1.05" in H -G L/433
Shear // Grain in K -C 0.43

Plates for each ply each face.
ALL CONNECTOR PLATES
TO BE MANUFACTURED BY
ROBBINS ENGINEERING, INC.
Plate - LOCK 20 Ga, Gross Area
Plate - RHS 20 Ga, Gross Area

Jt	Type	Plt Size	X	Y	JSI
A	LOCK	3.0x 6.0	0.4	0.2	0.95
A	LOCK	4.0x 5.0	0.7	0.3	0.80
B	LOCK	8.0x10.0	1.2	-5.0	0.90
I	LOCK	4.0x 5.0	Ctr	Ctr	0.60
J	LOCK	7.0x10.0	Ctr	-0.8	0.75
K	LOCK	5.0x 8.0	-1.0	0.2	0.97
C	LOCK	5.0x10.0	-1.5	Ctr	0.94
E	LOCK	2.0x 4.0	Ctr	Ctr	0.81
S1	LOCK	5.0x10.0	Ctr	Ctr	0.83
H	LOCK	4.0x 6.0	-0.5	Ctr	0.92
G	LOCK	4.0x12.0	0.5	Ctr	0.98
S2	LOCK	6.0x10.0	Ctr	0.2	0.77
F	LOCK	4.0x10.0	1.5	Ctr	0.94
D	LOCK	3.0x 4.0	Ctr	Ctr	0.88

NOTES:
Trusses Manufactured by:
RIDGWAY ROOF TRUSS
Analysis Conforms To:
ANSI/TPI 95 & 02
Girder Half Hip
Framing King Jacks
Jack Open Faced
Setback 7- 0- 0
OH Loading
Soffit psf 2.0
No wind exposure on right end.
Prevent truss rotation at all bearing locations.
Wind Loads - ANSI / ASCE 7-98
Truss is designed as
Components and Claddings*
for Exterior zone location.
Wind Speed: 110 mph
Mean Roof Height: 25-0
Exposure Category: B
Occupancy Factor : 1.00
Building Type: Enclosed
TC Dead Load: 4.0 psf
BC Dead Load: 6.0 psf
Max comp. force 9021 Lbs
Quality Control Factor 1.25

FABRICATOR NOTES:
1. Delegated Engineer (Truss Designer)
Gary Dounson, PE 35054
Gary Dounson & Associates, Inc.
2830 NW 41st Street Suite D
Gainesville, FL 32606
(352)375-8593
CA 5201

Job	Mark	Quan	Type	Span	P1-H1	Left OH	Right OH	Engineering
050886	R22	1	TR	220000	6	0	0	

Stewart Model

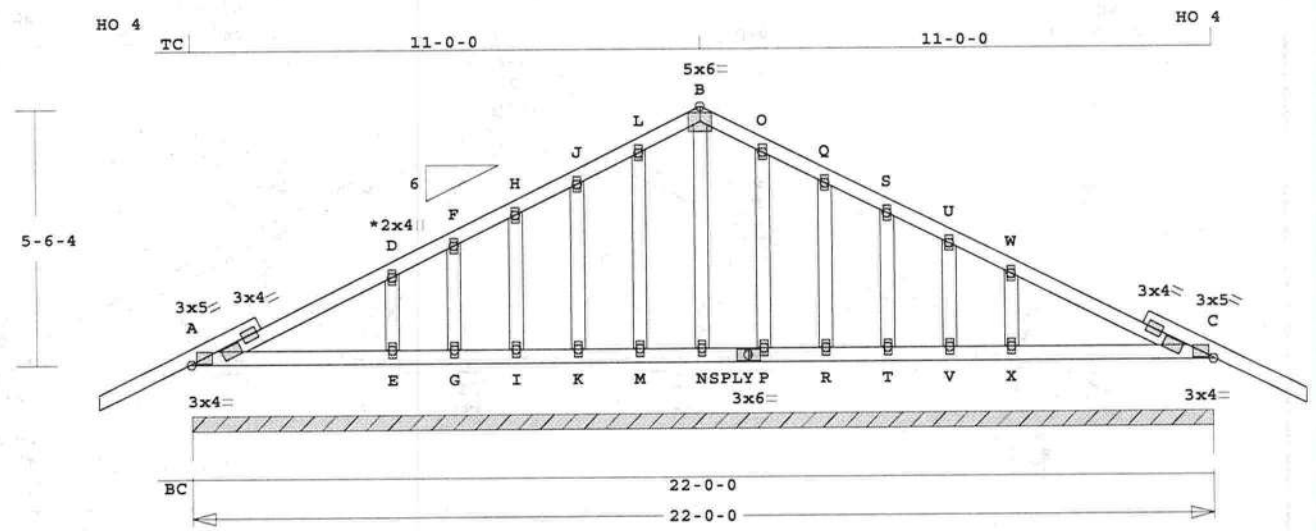

ALL PLATES ARE LOCK20

See Joint D For Typical Gable Plate Size and Placement

Scale: 0.250" = 1'

Robbins Engineering, Inc./Online Plus™ APPROX. TRUSS WEIGHT: 166.0 LBS

Online Plus -- Version 17.7.008
RUN DATE: 17-AUG-05

	CSI	-Size-	----Lumber----
TC	0.07	2x 4	SP-#2
BC	0.02	2x 4	SP-#2
GW	0.04	2x 4	SP-#3

Brace truss as follows:

O.C.	From	To
TC Cont.	0- 0- 0	22- 0- 0
BC Cont.	0- 0- 0	22- 0- 0

Loading	Live	Dead	(psf)
TC	20.0	7.0	
BC	0.0	10.0	
Total	20.0	17.0	37.0
Spacing			24.0"

Lumber Duration Factor 1.25
Plate Duration Factor 1.25
TC Fb=1.15 Fc=1.10 Ft=1.10
BC Fb=1.10 Fc=1.10 Ft=1.10

Plus 7 Wind Load Case(s)

Jt	React Lbs	Uplft Lbs	Size In-Sx	Req'd In-Sx
Cont.	Brg	0- 0- 0 to	22- 0- 0	
	1543	337	Hz =	103

Membr	CSI	P Lbs	Axl	CSI	Bnd
----------Top Chords----------					
A -D	0.07	116	C	0.00	0.07
D -F	0.06	47	C	0.00	0.06
F -H	0.01	27	T	0.00	0.01
H -J	0.01	49	T	0.00	0.01
J -L	0.02	94	T	0.01	0.01
L -B	0.01	133	T	0.00	0.01
B -O	0.01	133	T	0.00	0.01
O -Q	0.02	94	T	0.01	0.01
Q -S	0.01	49	T	0.00	0.01
S -U	0.01	27	T	0.00	0.01
U -W	0.06	47	C	0.00	0.06
W -C	0.07	116	C	0.00	0.07
--------Bottom Chords---------					
A -E	0.02	0	T	0.00	0.02
E -G	0.02	0	T	0.00	0.02
G -I	0.00	0	T		
I -K	0.00	0	T		
K -M	0.00	0	T		
M -N	0.00	0	T		
N -Y	0.00	0	T		
Y -P	0.00	0	T		
P -R	0.00	0	T		
R -T	0.00	0	T		
T -V	0.00	0	T		
V -X	0.02	0	T	0.00	0.02
X -C	0.02	0	T	0.00	0.02
----------Gable Webs----------					
E -D	0.04	177	T		
G -F	0.01	55	T		
I -H	0.02	88	T		
K -J	0.02	90	T		
M -L	0.02	78	T		
N -B	0.02	56	C		
P -O	0.02	78	T		
R -Q	0.02	90	T		
T -S	0.02	88	T		
V -U	0.01	55	T		
X -W	0.04	177	T		

LL Defl 0.00" in X -C L/999
TL Defl 0.00" in X -C L/999
Shear // Grain in A -D 0.10

Plates for each ply each face.
ALL CONNECTOR PLATES
TO BE MANUFACTURED BY
ROBBINS ENGINEERING, INC.
Plate - LOCK 20 Ga, Gross Area
Plate - RHS 20 Ga, Gross Area

Jt	Type	Plt Size	X	Y	JSI
A	LOCK	3.0x 5.0	Ctr	Ctr	0.72
D	LOCK	2.0x 4.0	Ctr	Ctr	0.00
F	LOCK	2.0x 4.0	Ctr	Ctr	0.00
H	LOCK	2.0x 4.0	Ctr	Ctr	0.00
J	LOCK	2.0x 4.0	Ctr	Ctr	0.00
L	LOCK	2.0x 4.0	Ctr	Ctr	0.00
B	LOCK	5.0x 6.0	Ctr	-0.1	0.75
O	LOCK	2.0x 4.0	Ctr	Ctr	0.00
Q	LOCK	2.0x 4.0	Ctr	Ctr	0.00
S	LOCK	2.0x 4.0	Ctr	Ctr	0.00
U	LOCK	2.0x 4.0	Ctr	Ctr	0.00
W	LOCK	2.0x 4.0	Ctr	Ctr	0.00
C	LOCK	3.0x 5.0	Ctr	Ctr	0.72
E	LOCK	2.0x 4.0	Ctr	Ctr	0.00
G	LOCK	2.0x 4.0	Ctr	Ctr	0.00
I	LOCK	2.0x 4.0	Ctr	Ctr	0.00
K	LOCK	2.0x 4.0	Ctr	Ctr	0.00
M	LOCK	2.0x 4.0	Ctr	Ctr	0.00
N	LOCK	2.0x 4.0	Ctr	Ctr	0.00
Y	LOCK	3.0x 6.0	Ctr	Ctr	0.88
P	LOCK	2.0x 4.0	Ctr	Ctr	0.00
R	LOCK	2.0x 4.0	Ctr	Ctr	0.00
T	LOCK	2.0x 4.0	Ctr	Ctr	0.00
V	LOCK	2.0x 4.0	Ctr	Ctr	0.00
X	LOCK	2.0x 4.0	Ctr	Ctr	0.00

NOTES:
Trusses Manufactured by:
RIDGWAY ROOF TRUSS
Analysis Conforms To:
ANSI/TPI 95 & 02
Refer to Gen Det 3 series for web bracing and plating.
Wind Loads - ANSI / ASCE 7-98
Truss is designed as Components and Claddings* for Exterior zone location.
Wind Speed: 110 mph
Mean Roof Height: 25-0
Exposure Category: B
Occupancy Factor : 1.00
Building Type: Enclosed
TC Dead Load: 4.0 psf
BC Dead Load: 6.0 psf
Max comp. force 148 Lbs
Quality Control Factor 1.25

FABRICATOR NOTES:
1. Delegated Engineer (Truss Designer)
Gary Dounson, PE 35054
Gary Dounson & Associates, Inc.
2830 NW 41st Street Suite D
Gainesville, FL 32606
(352)375-8593
CA 5201

Job	Mark	Quan	Type	Span	P1-H1	Left OH	Right OH	Engineering
050886	R23	8	TR	220000	6	2- 0- 0	2- 0- 0	

Stewart Model

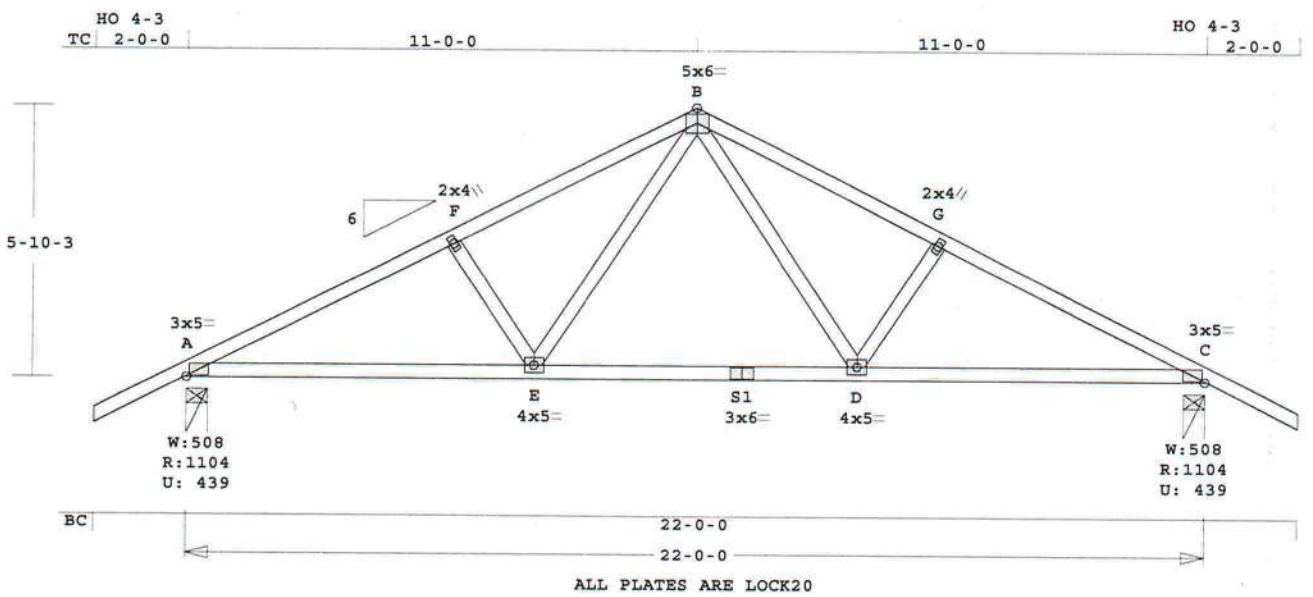

Scale: 0.250" = 1'

Robbins Engineering, Inc./Online Plus™ APPROX. TRUSS WEIGHT: 132.7 LBS

Online Plus -- Version 17.7.008
RUN DATE: 01-SEP-05

	CSI	-Size-	----Lumber----
TC	0.38	2x 4	SP-#2
BC	0.70	2x 4	SP-#2
WB	0.28	2x 4	SP-#3

Brace truss as follows:

O.C.	From	To
TC Cont.	0- 0- 0	22- 0- 0
BC Cont.	0- 0- 0	22- 0- 0

Loading	Live	Dead	(psf)
TC	20.0	7.0	
BC	0.0	10.0	
Total	20.0	17.0	37.0
Spacing			24.0"

Lumber Duration Factor 1.25
Plate Duration Factor 1.25
TC Fb=1.00 Fc=1.00 Ft=1.00
BC Fb=1.00 Fc=1.00 Ft=1.00

Load Case # 1 Standard Loading
Lumber Duration Factor 1.25
Plate Duration Factor 1.25

plf -	Live	Dead	From	To
TC V	40	14	0.0'	22.0'
BC V	0	20	0.0'	22.0'
BC V	40	10	7.5'	14.5'

Plus 7 Wind Load Case(s)

Jt	React Lbs	Uplft Lbs	Size In-Sx	Req'd In-Sx
A	1104	439	5- 8	1- 5
			Hz =	107
C	1105	439	5- 8	1- 5
			Hz =	-106

Membr	CSI	P Lbs	Axl	CSI-Bnd	
----------Top Chords----------					
A -F	0.38	1726	C	0.16	0.22
F -B	0.38	1574	C	0.16	0.22
B -G	0.38	1574	C	0.16	0.22
G -C	0.38	1726	C	0.16	0.22
--------Bottom Chords---------					
A -E	0.70	1544	T	0.28	0.42
E -S1	0.64	1033	T	0.19	0.45
S1-D	0.61	1033	T	0.19	0.42
D -C	0.70	1544	T	0.28	0.42
----------Webs----------					
F -E	0.07	308	T		
E -B	0.28	674	T		
B -D	0.28	674	T		
D -G	0.07	308	T		

LL Defl -0.18" in E -S1 L/999
TL Defl -0.26" in E -S1 L/955
Shear // Grain in E -S1 0.31

Plates for each ply each face.
ALL CONNECTOR PLATES
TO BE MANUFACTURED BY
ROBBINS ENGINEERING, INC.
Plate - LOCK 20 Ga, Gross Area
Plate - RHS 20 Ga, Gross Area

Jt	Type	Plt Size	X	Y	JSI
A	LOCK	3.0x 5.0	Ctr	Ctr	0.72
F	LOCK	2.0x 4.0	Ctr	Ctr	0.37
B	LOCK	5.0x 6.0	Ctr	-0.1	0.75
G	LOCK	2.0x 4.0	Ctr	Ctr	0.37
C	LOCK	3.0x 5.0	Ctr	Ctr	0.72
E	LOCK	4.0x 5.0	Ctr	Ctr	0.52
S1	LOCK	3.0x 6.0	Ctr	Ctr	0.93
D	LOCK	4.0x 5.0	Ctr	Ctr	0.52

NOTES:
Trusses Manufactured by:
RIDGWAY ROOF TRUSS
Analysis Conforms To:
ANSI/TPI 95 & 02
OH Loading
Soffit psf 2.0
Wind Loads - ANSI / ASCE 7-98
Truss is designed as
Components and Claddings*
for Exterior zone location.
Wind Speed: 110 mph
Mean Roof Height: 25-0
Exposure Category: B
Occupancy Factor : 1.00
Building Type: Enclosed
TC Dead Load: 4.0 psf
BC Dead Load: 6.0 psf
Max comp. force 1726 Lbs
Quality Control Factor 1.25

FABRICATOR NOTES:
1. Delegated Engineer (Truss Designer)
Gary Dounson, PE 35054
Gary Dounson & Associates, Inc.
2830 NW 41st Street Suite D
Gainesville, FL 32606
(352)375-8593
CA 5201

Job	Mark	Quan	Type	Span	P1-H1	Left OH	Right OH	Engineering
050886	R24	3	TR	200908	6	2- 0- 0	0	

Stewart Model

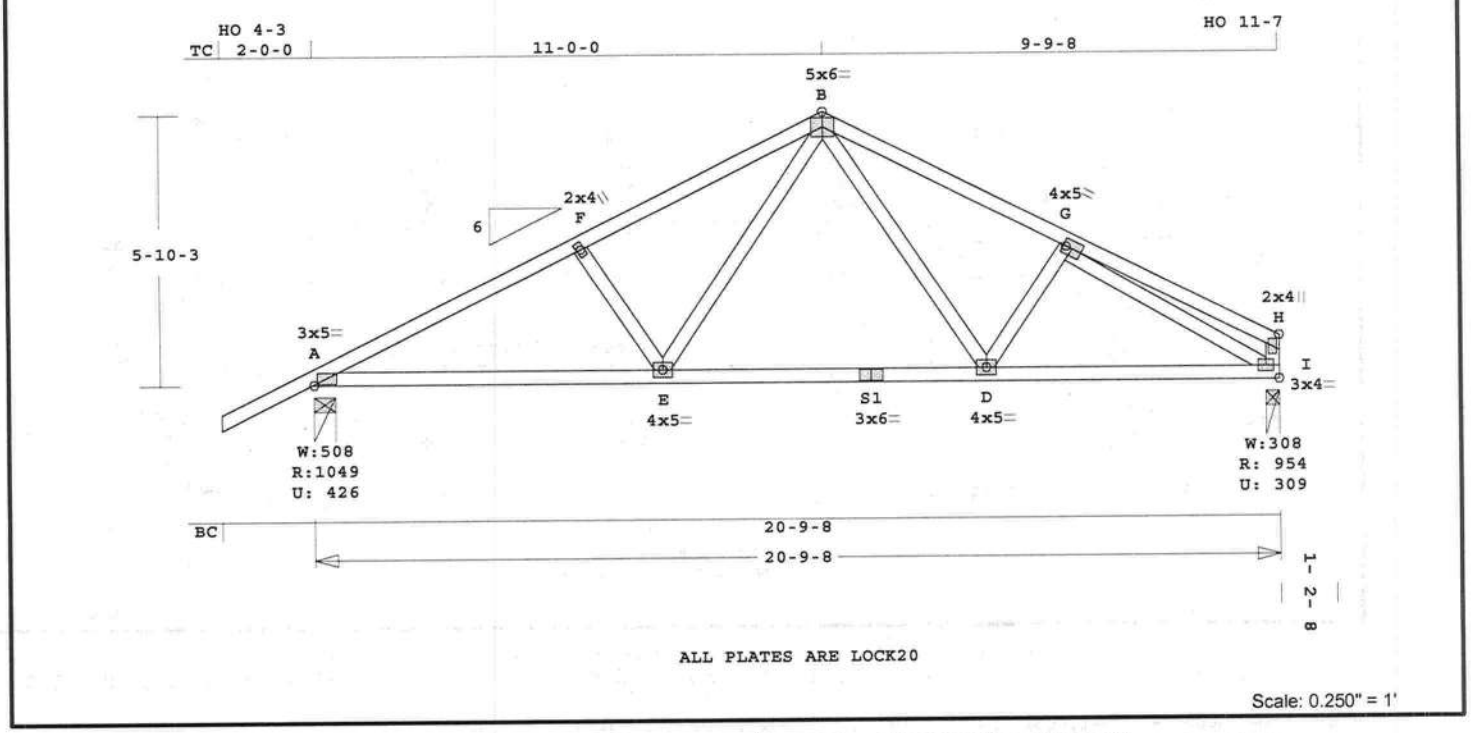

Robbins Engineering, Inc./Online Plus™ APPROX. TRUSS WEIGHT: 133.8 LBS

Online Plus -- Version 17.7.008
RUN DATE: 01-SEP-05

	CSI	-Size-	----Lumber----
TC	0.38	2x 4	SP-#2
BC	0.69	2x 4	SP-#2
WB	0.59	2x 4	SP-#3

Brace truss as follows:

O.C.	From	To
TC Cont.	0- 0- 0	20- 9- 8
BC Cont.	0- 0- 0	20- 9- 8

Loading	Live	Dead	(psf)
TC	20.0	7.0	
BC	0.0	10.0	
Total	20.0	17.0	37.0
Spacing			24.0"

Lumber Duration Factor 1.25
Plate Duration Factor 1.25
TC Fb=1.00 Fc=1.00 Ft=1.00
BC Fb=1.00 Fc=1.00 Ft=1.00

Load Case # 1 Standard Loading
Lumber Duration Factor 1.25
Plate Duration Factor 1.25

plf -	Live	Dead	From	To
TC V	40	14	0.0'	20.8'
BC V	0	20	0.0'	20.8'
BC V	40	10	7.5'	14.5'

Plus 7 Wind Load Case(s)

Jt	React Lbs	Uplft Lbs	Size In-Sx	Req'd In-Sx
A	1049	427	5- 8	1- 4
			Hz =	122
I	954	310	3- 8	1- 2
			Hz =	86

Membr	CSI	P Lbs	Axl-CSI-Bnd	
----------Top Chords----------				
A -F	0.38	1607 C	0.15	0.23
F -B	0.38	1456 C	0.15	0.23
B -G	0.38	1344 C	0.14	0.24
G -H	0.25	62 T	0.01	0.24
--------Bottom Chords---------				
A -E	0.69	1439 T	0.26	0.43
E -S1	0.62	927 T	0.17	0.45
S1-D	0.59	927 T	0.17	0.42
D -I	0.64	1240 T	0.22	0.42
-------------Webs-------------				
F -E	0.07	308 T		
E -B	0.28	676 T		
B -D	0.21	491 T		
D -G	0.05	204 T		
G -I	0.59	1487 C		
I -H	0.03	119 T		

LL Defl -0.17" in E -S1 L/999
TL Defl -0.24" in E -S1 L/982
Shear // Grain in E -S1 0.31

Plates for each ply each face.
ALL CONNECTOR PLATES
TO BE MANUFACTURED BY
ROBBINS ENGINEERING, INC.
Plate - LOCK 20 Ga, Gross Area
Plate - RHS 20 Ga, Gross Area

Jt	Type	Plt Size	X	Y	JSI
A	LOCK	3.0x 5.0	Ctr	Ctr	0.71
F	LOCK	2.0x 4.0	Ctr	Ctr	0.37
B	LOCK	5.0x 6.0	Ctr	-0.1	0.75
G	LOCK	4.0x 5.0	Ctr	Ctr	0.75
H	LOCK	2.0x 4.0	Ctr	Ctr	0.38
E	LOCK	4.0x 5.0	Ctr	Ctr	0.52
S1	LOCK	3.0x 6.0	Ctr	Ctr	0.94
D	LOCK	4.0x 5.0	Ctr	Ctr	0.52
I	LOCK	3.0x 4.0	Ctr	Ctr	0.70

NOTES:
Trusses Manufactured by:
RIDGWAY ROOF TRUSS
Analysis Conforms To:
ANSI/TPI 95 & 02
OH Loading
Soffit psf 2.0
No wind exposure on right end.
Wind Loads - ANSI / ASCE 7-98
Truss is designed as
Components and Claddings*
for Exterior zone location.
Wind Speed: 110 mph
Mean Roof Height: 25-0
Exposure Category: B
Occupancy Factor : 1.00
Building Type: Enclosed
TC Dead Load: 4.0 psf
BC Dead Load: 6.0 psf
Max comp. force 1607 Lbs
Quality Control Factor 1.25

FABRICATOR NOTES:
1. Delegated Engineer (Truss Designer)
Gary Dounson, PE 35054
Gary Dounson & Associates, Inc.
2830 NW 41st Street Suite D
Gainesville, FL 32606
(352)375-8593
CA 5201

Job	Mark	Quan	Type	Span	P1-H1	Left OH	Right OH	Engineering
050886	R26	1*2P	HIPP	150100	3.73	0	0	

Stewart Model

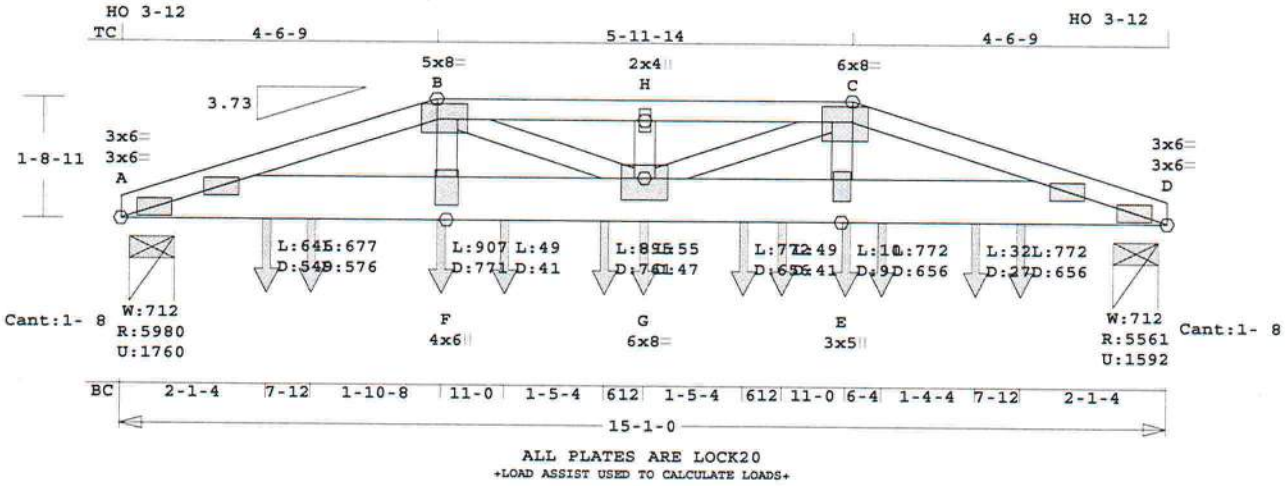

Robbins Engineering, Inc./Online Plus™ APPROX. TRUSS WEIGHT: 101.5 LBS

Online Plus -- Version 17.7.008
RUN DATE: 17-AUG-05
****
* 2-Ply Truss *
****

	CSI	-Size-	----Lumber----
TC	0.99	2x 4	SP-#2
EX A -B		2x 4	SP-#2D
BC	0.69	2x 8	SP-2400
WB	0.50	2x 4	SP-#3

Brace truss as follows:

O.C.	From	To
TC Cont.	0- 0- 0	15- 1- 0
BC Cont.	0- 0- 0	15- 1- 0

Loading	Live	Dead	(psf)
TC	20.0	7.0	
BC	0.0	10.0	
Total	20.0	17.0	37.0
Spacing			24.0"

Lumber Duration Factor 1.25
Plate Duration Factor 1.25
TC Fb=1.00 Fc=1.00 Ft=1.00
BC Fb=1.00 Fc=1.00 Ft=1.00

Load Case # 1 Standard Loading
Lumber Duration Factor 1.25
Plate Duration Factor 1.25

plf -	Live	Dead	From	To
TC V	40	14	0.0'	15.1'
BC V	0	20	0.0'	15.1'
BC V	646	549	2.1'	CL-LB
BC V	677	576	2.8'	CL-LB
BC V	907	771	4.6'	CL-LB
BC V	49	41	5.5'	CL-LB
BC V	895	761	7.0'	CL-LB
BC V	55	47	7.5'	CL-LB
BC V	772	656	9.0'	CL-LB
BC V	49	41	9.5'	CL-LB
BC V	10	9	10.5'	CL-LB
BC V	772	656	11.0'	CL-LB
BC V	32	27	12.3'	CL-LB
BC V	772	656	13.0'	CL-LB

Plus 7 Wind Load Case(s)

Jt	React Lbs	Uplft Lbs	Size In-Sx	Req'd In-Sx
A	5980	1760	7-12	2- 8
			Hz =	25
D	5562	1592	7-12	2- 5
			Hz =	-24

Membr	CSI	P Lbs	Axl	CSI-Bnd
----------Top Chords----------				
A -B	0.96	15678	C	0.40 0.56
B -H	0.92	17043	C	0.65 0.27
H -C	0.91	17043	C	0.65 0.26
C -D	0.99	15010	C	0.47 0.52
--------Bottom Chords--------				
A -F	0.69	15119	T	0.28 0.41
F -G	0.61	14759	T	0.28 0.33
G -E	0.60	14144	T	0.27 0.33
E -D	0.61	14458	T	0.27 0.34
----------Webs----------				
F -B	0.49	3060	T	
B -G	0.39	2467	T	
G -H	0.01	79	T	
G -C	0.50	3132	T	
E -C	0.42	2662	T	

LL Defl -0.28" in F -G L/587
TL Defl -0.51" in F -G L/316
Shear // Grain in E -D 0.48

Plates for each ply each face.
ALL CONNECTOR PLATES
TO BE MANUFACTURED BY
ROBBINS ENGINEERING, INC.
Plate - LOCK 20 Ga, Gross Area
Plate - RHS 20 Ga, Gross Area

Jt	Type	Plt Size	X	Y	JSI
A	LOCK	3.0x 6.0	Ctr	Ctr	0.96
A	LOCK	3.0x 6.0	Ctr	Ctr	0.92
B	LOCK	5.0x 8.0	-0.5	0.1	0.99
H	LOCK	2.0x 4.0	Ctr	Ctr	0.38
C	LOCK	6.0x 8.0	0.5	-0.4	0.99
D	LOCK	3.0x 6.0	Ctr	Ctr	0.92
D	LOCK	3.0x 6.0	Ctr	Ctr	0.84
F	LOCK	4.0x 6.0	Ctr	-1.7	0.82
G	LOCK	6.0x 8.0	Ctr	-0.6	0.72
E	LOCK	3.0x 5.0	Ctr	-1.1	0.95

NOTES:
Trusses Manufactured by:
RIDGWAY ROOF TRUSS
Analysis Conforms To:
ANSI/TPI 95 & 02
2 COMPLETE TRUSSES REQUIRED.
Fasten together in staggered pattern. (1/2" bolts -OR- SDS3 screws -OR- 10d nails as each layer is applied.)

	Rows	----Spacing (In)---- Nails	Screws	Bolts
TC	1	12	24	0
BC	2	12	24	0
WB	1	4	4	

Plus clusters of nails where shown.
Prevent truss rotation at all bearing locations.
Wind Loads - ANSI / ASCE 7-98
Truss is designed as Components and Claddings* for Exterior zone location.
Wind Speed: 110 mph
Mean Roof Height: 25-0
Exposure Category: B
Occupancy Factor : 1.00
Building Type: Enclosed
TC Dead Load: 4.0 psf
BC Dead Load: 6.0 psf
Max comp. force 17043 Lbs
Quality Control Factor 1.25

FABRICATOR NOTES:
1. Delegated Engineer (Truss Designer)
Gary Dounson, PE 35054
Gary Dounson & Associates, Inc.
2830 NW 41st Street Suite D
Gainesville, FL 32606
(352)375-8593
CA 5201

Job	Mark	Quan	Type	Span	P1-H1	Left OH	Right OH	Engineering
050886	R27	1*2P	SP	130200	6	2- 0- 0	2- 0- 0	

Stewart Model

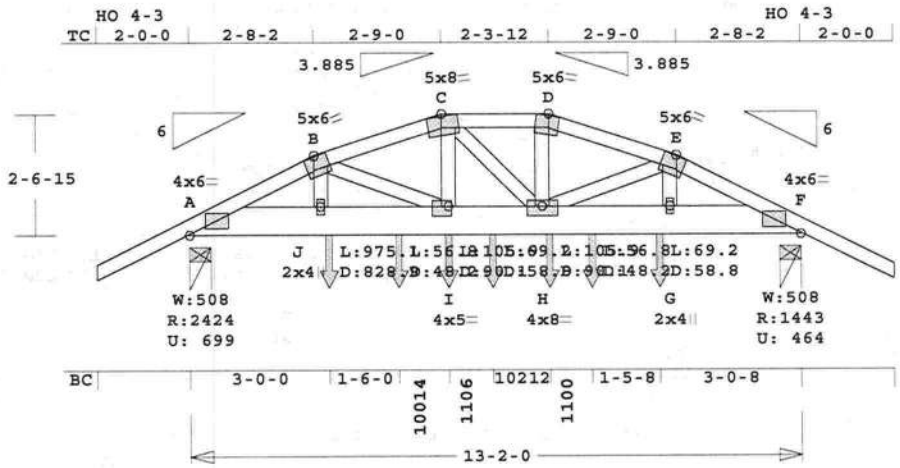

ALL PLATES ARE LOCK20
+LOAD ASSIST USED TO CALCULATE LOADS+

Scale: 0.250" = 1'

Robbins Engineering, Inc./Online Plus™ APPROX. TRUSS WEIGHT: 109.7 LBS

Online Plus -- Version 17.7.008
RUN DATE: 17-AUG-05
****
* 2-Ply Truss *
****

	CSI	-Size-	----Lumber----
TC	0.25	2x 4	SP-#2
BC	0.19	2x 8	SP-2400
WB	0.20	2x 4	SP-#3

Brace truss as follows:

O.C.	From	To
TC Cont.	0- 0- 0	13- 2- 0
BC Cont.	0- 0- 0	13- 2- 0

Loading	Live	Dead	(psf)
TC	20.0	7.0	
BC	0.0	10.0	
Total	20.0	17.0	37.0
Spacing			24.0"

Lumber Duration Factor 1.25
Plate Duration Factor 1.25
TC Fb=1.00 Fc=1.00 Ft=1.00
BC Fb=1.00 Fc=1.00 Ft=1.00

Load Case # 1 Standard Loading
Lumber Duration Factor 1.25
Plate Duration Factor 1.25

plf -	Live	Dead	From	To
TC V	40	14	0.0'	13.2'
BC V	0	20	0.0'	13.2'
BC V	975	829	3.0'	CL-LB
BC V	69	59	10.1'	CL-LB
BC V	57	48	4.5'	CL-LB
BC V	57	48	8.7'	CL-LB
BC V	106	90	5.6'	CL-LB
BC V	106	90	7.8'	CL-LB
BC V	69	59	6.5'	CL-LB

Plus 7 Wind Load Case(s)

Jt	React Lbs	Uplft Lbs	Size In-Sx	Req'd In-Sx
A	2424	700	5- 8	1- 0
			Hz =	42
F	1444	464	5- 8	1- 0
			Hz =	-41

Membr	CSI	P Lbs	Axl	CSI-Bnd
----------Top Chords----------				
A -B	0.25	4447	C	0.19 0.06
B -C	0.19	3066	C	0.13 0.06
C -D	0.14	2586	C	0.11 0.03
D -E	0.14	2709	C	0.11 0.03
E -F	0.13	2615	C	0.12 0.01
--------Bottom Chords---------				
A -J	0.19	4052	T	0.07 0.12
J -I	0.19	3936	T	0.07 0.12
I -H	0.07	2895	T	0.05 0.02
H -G	0.07	2349	T	0.04 0.03
G -F	0.07	2357	T	0.04 0.03
----------Webs----------				
J -B	0.20	1297	T	
B -I	0.08	1074	C	
I -C	0.17	1067	T	
C -H	0.03	442	C	
H -D	0.10	646	T	
H -E	0.04	257	T	
G -E	0.01	94	T	

LL Defl -0.03" in J -I L/999
TL Defl -0.06" in J -I L/999
Shear // Grain in A -B 0.13

Plates for each ply each face.
ALL CONNECTOR PLATES
TO BE MANUFACTURED BY
ROBBINS ENGINEERING, INC.
Plate - LOCK 20 Ga, Gross Area
Plate - RHS 20 Ga, Gross Area

Jt	Type	Plt Size	X	Y	JSI
A	LOCK	4.0x 6.0	Ctr	Ctr	0.68
B	LOCK	5.0x 6.0	1.0	-2.5	0.75
C	LOCK	5.0x 8.0	0.5	-3.1	0.75
D	LOCK	5.0x 6.0	-0.5	-2.9	0.75
E	LOCK	5.0x 6.0	-1.0	-2.5	0.75
F	LOCK	4.0x 6.0	Ctr	Ctr	0.68
J	LOCK	2.0x 4.0	Ctr	Ctr	0.69
I	LOCK	4.0x 5.0	Ctr	-0.5	0.67
H	LOCK	4.0x 8.0	Ctr	-0.5	0.69
G	LOCK	2.0x 4.0	Ctr	Ctr	0.38

NOTES:
Trusses Manufactured by:
RIDGWAY ROOF TRUSS
Analysis Conforms To:
ANSI/TPI 95 & 02
2 COMPLETE TRUSSES REQUIRED.
Fasten together in staggered pattern. (1/2" bolts -OR- SDS3 screws -OR- 10d nails as each layer is applied.)

	Rows	----Spacing (In)---- Nails	Screws	Bolts
TC	1	12	24	0
BC	2	12	24	0
WB	1	4	4	

Plus clusters of nails where shown.
OH Loading
Soffit psf 2.0
Prevent truss rotation at all bearing locations.
Wind Loads - ANSI / ASCE 7-98
Truss is designed as Components and Claddings* for Exterior zone location.
Wind Speed: 110 mph
Mean Roof Height: 25-0
Exposure Category: B
Occupancy Factor : 1.00
Building Type: Enclosed
TC Dead Load: 4.0 psf
BC Dead Load: 6.0 psf
Max comp. force 4447 Lbs
Quality Control Factor 1.25

FABRICATOR NOTES:
1. Delegated Engineer (Truss Designer)
Gary Dounson, PE 35054
Gary Dounson & Associates, Inc.
2830 NW 41st Street Suite D
Gainesville, FL 32606
(352)375-8593
CA 5201

Job	Mark	Quan	Type	Span	P1-H1	Left OH	Right OH	Engineering
050886	R28	1	HHIP	80207	3.882	0	0	

Stewart Model

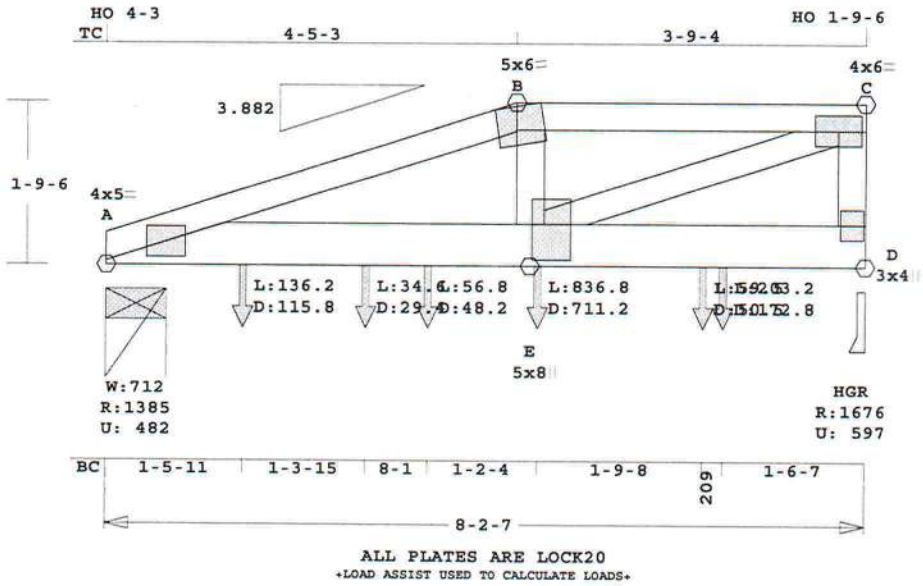

Scale: 0.500" = 1'

Robbins Engineering, Inc./Online Plus™ APPROX. TRUSS WEIGHT: 49.6 LBS

Online Plus -- Version 17.7.008
RUN DATE: 17-AUG-05

	CSI	-Size-	----Lumber----
TC	0.66	2x 4	SP-#2
BC	0.72	2x 6	SP-#2
WB	0.35	2x 4	SP-#3
EX E -C		2x 4	SP-#2

Brace truss as follows:

O.C.	From	To
TC Cont.	0- 0- 0	8- 2- 7
BC Cont.	0- 0- 0	8- 2- 7

Loading	Live	Dead	(psf)
TC	20.0	7.0	
BC	0.0	10.0	
Total	20.0	17.0	37.0
Spacing			24.0"

Lumber Duration Factor 1.25
Plate Duration Factor 1.25
TC Fb=1.00 Fc=1.00 Ft=1.00
BC Fb=1.00 Fc=1.00 Ft=1.00

Load Case # 1 Standard Loading
Lumber Duration Factor 1.25
Plate Duration Factor 1.25

plf -	Live	Dead	From	To
TC V	40	14	0.0'	8.2'
BC V	0	20	0.0'	8.2'
BC V	136	116	1.5'	CL-LB
BC V	35	29	2.8'	CL-LB
BC V	57	48	3.5'	CL-LB
BC V	837	711	4.7'	CL-LB
BC V	60	51	6.5'	CL-LB
BC V	203	173	6.7'	CL-LB

Plus 7 Wind Load Case(s)

Jt	React Lbs	Uplft Lbs	Size In-Sx	Req'd In-Sx
A	1386	483	7-12	1-10
			Hz =	63
D	1676	598	3- 8	2- 0
			Hz =	42

Membr	CSI	P Lbs	Axl	CSI	Bnd
----------Top Chords----------					
A -B	0.66	3242	T	0.46	0.20
B -C	0.62	3155	T	0.45	0.17
--------Bottom Chords---------					
A -E	0.72	3155	C	0.40	0.32
E -D	0.45	42	T	0.00	0.45
----------Webs----------					
E -B	0.23	737	T		
E -C	0.60	3404	C		
D -C	0.35	1420	T		

LL Defl -0.05" in A -E L/999
TL Defl -0.09" in A -E L/999
Shear // Grain in E -D 0.27

Plates for each ply each face.
ALL CONNECTOR PLATES
TO BE MANUFACTURED BY
ROBBINS ENGINEERING, INC.
Plate - LOCK 20 Ga, Gross Area
Plate - RHS 20 Ga, Gross Area

Jt	Type	Plt Size	X	Y	JSI
A	LOCK	4.0x 5.0	Ctr	Ctr	0.88
B	LOCK	5.0x 6.0	0.5-2.9		0.75
C	LOCK	4.0x 6.0	Ctr	Ctr	0.93
E	LOCK	5.0x 8.0	1.0-0.7		1.00
D	LOCK	3.0x 4.0	Ctr	Ctr	0.77

NOTES:
Trusses Manufactured by:
RIDGWAY ROOF TRUSS
Analysis Conforms To:
ANSI/TPI 95 & 02
No wind exposure on right end.
Wind Loads - ANSI / ASCE 7-98
Truss is designed as
Components and Claddings*
for Exterior zone location.
Wind Speed: 110 mph
Mean Roof Height: 25-0
Exposure Category: B
Occupancy Factor : 1.00
Building Type: Enclosed
TC Dead Load: 4.0 psf
BC Dead Load: 6.0 psf
Max comp. force 3404 Lbs
Quality Control Factor 1.25

FABRICATOR NOTES:
1. Delegated Engineer (Truss Designer)
Gary Dounson, PE 35054
Gary Dounson & Associates, Inc.
2830 NW 41st Street Suite D
Gainesville, FL 32606
(352)375-8593
CA 5201

Job	Mark	Quan	Type	Span	P1-H1	Left OH	Right OH	Engineering
050886	R29	1	TR	70800	6	0	0	

Stewart Model

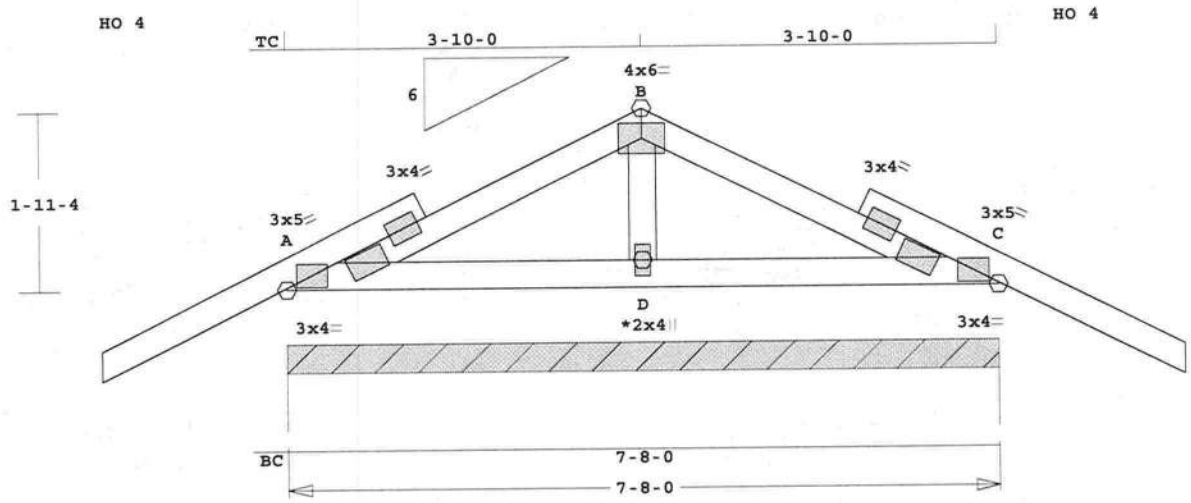

ALL PLATES ARE LOCK20
See Joint D For Typical Gable Plate Size and Placement

Scale: 0.500" = 1'

Robbins Engineering, Inc./Online Plus™ APPROX. TRUSS WEIGHT: 45.7 LBS

Online Plus -- Version 17.7.008
RUN DATE: 17-AUG-05

	CSI	-Size-	----Lumber----
TC	0.06	2x 4	SP-#2
BC	0.02	2x 4	SP-#2
GW	0.03	2x 4	SP-#3

Brace truss as follows:

O.C.	From	To
TC Cont.	0- 0- 0	7- 8- 0
BC Cont.	0- 0- 0	7- 8- 0

Loading	Live	Dead	(psf)
TC	20.0	7.0	
BC	0.0	10.0	
Total	20.0	17.0	37.0
Spacing			24.0"

Lumber Duration Factor 1.25
Plate Duration Factor 1.25
TC Fb=1.15 Fc=1.10 Ft=1.10
BC Fb=1.10 Fc=1.10 Ft=1.10

Plus 7 Wind Load Case(s)

Jt	React Lbs	Uplft Lbs	Size In-Sx	Req'd In-Sx
Cont.	Brg 482	0- 0- 0 105	to Hz =	7- 8- 0 31

Membr	CSI	P Lbs	Axl	CSI	Bnd
----------Top Chords----------					
A -B	0.06	65 T	0.00	0.06	
B -C	0.06	65 T	0.00	0.06	
--------Bottom Chords---------					
A -D	0.02	0 T	0.00	0.02	
D -C	0.02	0 T	0.00	0.02	
----------Gable Webs----------					
D -B	0.03	127 T			

LL Defl 0.00" in D -C L/999
TL Defl 0.00" in D -C L/999
Shear // Grain in A -B 0.11

Plates for each ply each face.
ALL CONNECTOR PLATES
TO BE MANUFACTURED BY
ROBBINS ENGINEERING, INC.
Plate - LOCK 20 Ga, Gross Area
Plate - RHS 20 Ga, Gross Area

Jt	Type	Plt Size	X	Y	JSI
A	LOCK	3.0x 5.0	Ctr	Ctr	0.51
B	LOCK	4.0x 6.0	Ctr	Ctr	0.84
C	LOCK	3.0x 5.0	Ctr	Ctr	0.51
D	LOCK	2.0x 4.0	Ctr	Ctr	0.00

NOTES:
Trusses Manufactured by:
RIDGWAY ROOF TRUSS
Analysis Conforms To:
ANSI/TPI 95 & 02
Refer to Gen Det 3 series for web bracing and plating.
Wind Loads - ANSI / ASCE 7-98
Truss is designed as
Components and Claddings*
for Exterior zone location.
Wind Speed: 110 mph
Mean Roof Height: 25-0
Exposure Category: B
Occupancy Factor : 1.00
Building Type: Enclosed
TC Dead Load: 4.0 psf
BC Dead Load: 6.0 psf
Max comp. force 107 Lbs
Quality Control Factor 1.25

FABRICATOR NOTES:
1. Delegated Engineer (Truss Designer)
Gary Dounson, PE 35054
Gary Dounson & Associates, Inc.
2830 NW 41st Street Suite D
Gainesville, FL 32606
(352)375-8593
CA 5201

Job	Mark	Quan	Type	Span	P1-H1	Left OH	Right OH	Engineering
050886	R30	1	TR	70800	6	2- 0- 0	2- 0- 0	

Stewart Model

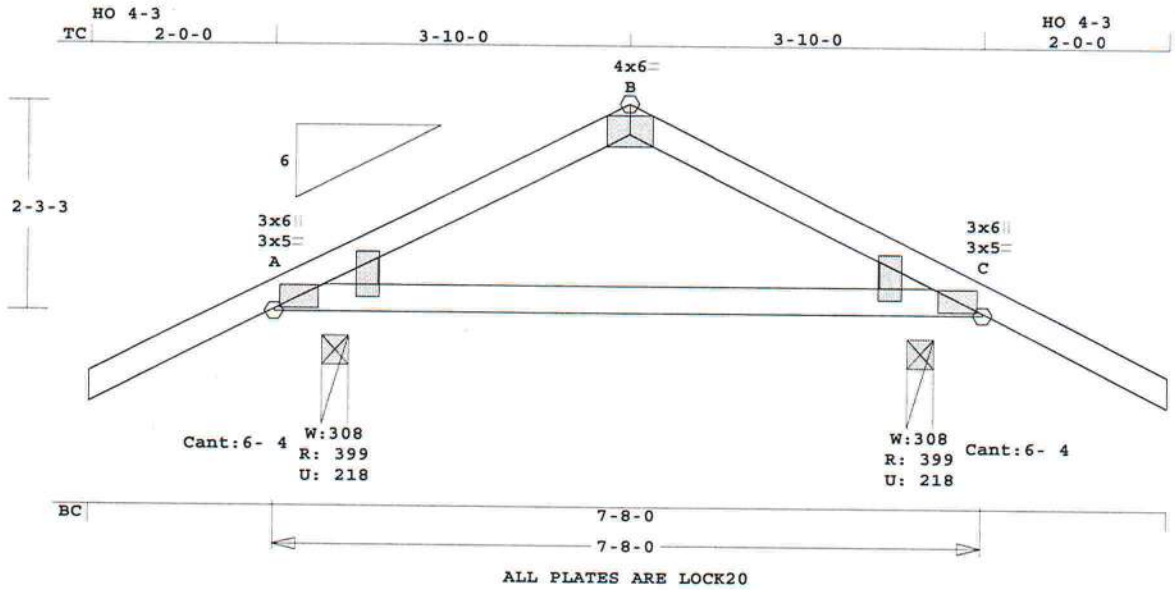

Scale: 0.500" = 1'

Robbins Engineering, Inc./Online Plus™ APPROX. TRUSS WEIGHT: 41.9 LBS

Online Plus -- Version 17.7.008
RUN DATE: 17-AUG-05

	CSI	-Size-	----Lumber----
TC	0.09	2x 4	SP-#2
BC	0.11	2x 4	SP-#2
WG	---	2x 4	SP-#3

Brace truss as follows:

O.C.	From	To
TC Cont.	0- 0- 0	7- 8- 0
BC Cont.	0- 0- 0	7- 8- 0

Loading	Live	Dead	(psf)
TC	20.0	7.0	
BC	0.0	10.0	
Total	20.0	17.0	37.0
Spacing			24.0"

Lumber Duration Factor 1.25
Plate Duration Factor 1.25
TC Fb=1.15 Fc=1.10 Ft=1.10
BC Fb=1.10 Fc=1.10 Ft=1.10

Plus 7 Wind Load Case(s)

Jt	React Lbs	Uplft Lbs	Size In-Sx	Req'd In-Sx
A	400	218	3- 8	1- 0
			Hz =	36
C	400	218	3- 8	1- 0
			Hz =	-35

Membr	CSI	P Lbs	Axl-CSI-Bnd
----------Top Chords----------			
A -B	0.09	225 T	0.00 0.09
B -C	0.09	225 T	0.00 0.09
--------Bottom Chords---------			
A -C	0.11	201 T	0.03 0.08

LL Defl 0.00" in A -C L/999
TL Defl -0.03" in A -C L/999
Shear // Grain in A -B 0.10

Plates for each ply each face.
ALL CONNECTOR PLATES
TO BE MANUFACTURED BY
ROBBINS ENGINEERING, INC.
Plate - LOCK 20 Ga, Gross Area
Plate - RHS 20 Ga, Gross Area

Jt	Type	Plt Size	X	Y	JSI
A	LOCK	3.0x 5.0	Ctr	Ctr	0.51
A	LOCK	3.0x 6.0	Ctr	Ctr	0.00
B	LOCK	4.0x 6.0	Ctr	-1.5	0.75
C	LOCK	3.0x 5.0	Ctr	Ctr	0.51
C	LOCK	3.0x 6.0	Ctr	Ctr	0.00

NOTES:
Trusses Manufactured by:
RIDGWAY ROOF TRUSS
Analysis Conforms To:
ANSI/TPI 95 & 02
OH Loading
Soffit psf 2.0
Wind Loads - ANSI / ASCE 7-98
Truss is designed as
Components and Claddings*
for Exterior zone location.
Wind Speed: 110 mph
Mean Roof Height: 25-0
Exposure Category: B
Occupancy Factor : 1.00
Building Type: Enclosed
TC Dead Load: 4.0 psf
BC Dead Load: 6.0 psf
Max comp. force 215 Lbs

Quality Control Factor 1.25

FABRICATOR NOTES:
1. Delegated Engineer (Truss Designer)
Gary Dounson, PE 35054
Gary Dounson & Associates, Inc.
2830 NW 41st Street Suite D
Gainesville, FL 32606
(352)375-8593
CA 5201

Job	Mark	Quan	Type	Span	P1-H1	Left OH	Right OH	Engineering
050886	R31	1	SP	70800	6	0	0	

Stewart Model

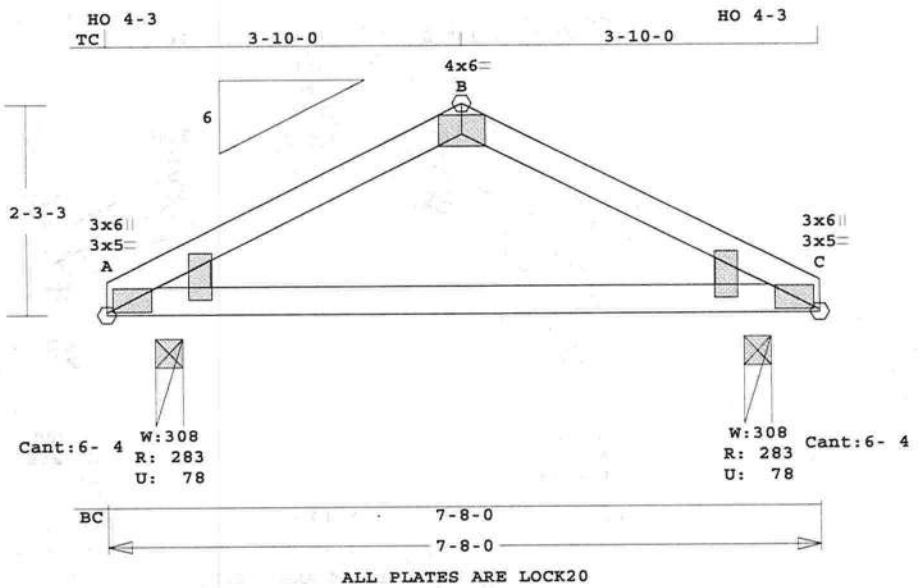

Scale: 0.500" = 1'

Robbins Engineering, Inc./Online Plus™ APPROX. TRUSS WEIGHT: 33.4 LBS

Online Plus -- Version 17.7.008
RUN DATE: 17-AUG-05

	CSI	-Size-	----Lumber----
TC	0.09	2x 4	SP-#2
BC	0.11	2x 4	SP-#2
WG	---	2x 4	SP-#3

Brace truss as follows:

O.C.	From	To
TC Cont.	0- 0- 0	7- 8- 0
BC Cont.	0- 0- 0	7- 8- 0

Loading	Live	Dead	(psf)
TC	20.0	7.0	
BC	0.0	10.0	
Total	20.0	17.0	37.0
Spacing			24.0"

Lumber Duration Factor 1.25
Plate Duration Factor 1.25
TC Fb=1.15 Fc=1.10 Ft=1.10
BC Fb=1.10 Fc=1.10 Ft=1.10

Plus 7 Wind Load Case(s)

Jt	React Lbs	Uplft Lbs	Size In-Sx	Req'd In-Sx
A	284	79	3- 8	1- 0
			Hz =	36
C	284	79	3- 8	1- 0
			Hz =	-35

Membr	CSI	P Lbs	Axl	CSI-Bnd
----------Top Chords----------				
A -B	0.09	225 T	0.00	0.09
B -C	0.09	225 T	0.00	0.09
--------Bottom Chords---------				
A -C	0.11	201 T	0.03	0.08

LL Defl 0.00" in A -C L/999
TL Defl -0.03" in A -C L/999
Shear // Grain in A -B 0.10

Plates for each ply each face.
ALL CONNECTOR PLATES
TO BE MANUFACTURED BY
ROBBINS ENGINEERING, INC.
Plate - LOCK 20 Ga, Gross Area
Plate - RHS 20 Ga, Gross Area

Jt	Type	Plt Size	X	Y	JSI
A	LOCK	3.0x 5.0	Ctr	Ctr	0.51
A	LOCK	3.0x 6.0	Ctr	Ctr	0.00
B	LOCK	4.0x 6.0	Ctr	-1.5	0.75
C	LOCK	3.0x 5.0	Ctr	Ctr	0.51
C	LOCK	3.0x 6.0	Ctr	Ctr	0.00

NOTES:
Trusses Manufactured by:
RIDGWAY ROOF TRUSS
Analysis Conforms To:
ANSI/TPI 95 & 02
Wind Loads - ANSI / ASCE 7-98
Truss is designed as
Components and Claddings*
for Exterior zone location.
Wind Speed: 110 mph
Mean Roof Height: 25-0
Exposure Category: B
Occupancy Factor : 1.00
Building Type: Enclosed
TC Dead Load: 4.0 psf
BC Dead Load: 6.0 psf
Max comp. force 215 Lbs
Quality Control Factor 1.25

FABRICATOR NOTES:
1. Delegated Engineer (Truss Designer)
Gary Dounson, PE 35054
Gary Dounson & Associates, Inc.
2830 NW 41st Street Suite D
Gainesville, FL 32606
(352)375-8593
CA 5201

Job	Mark	Quan	Type	Span	P1-H1	Left OH	Right OH	*Engineering*
050886	*R32*	1	SP	51008	6	0	0	

Stewart Model

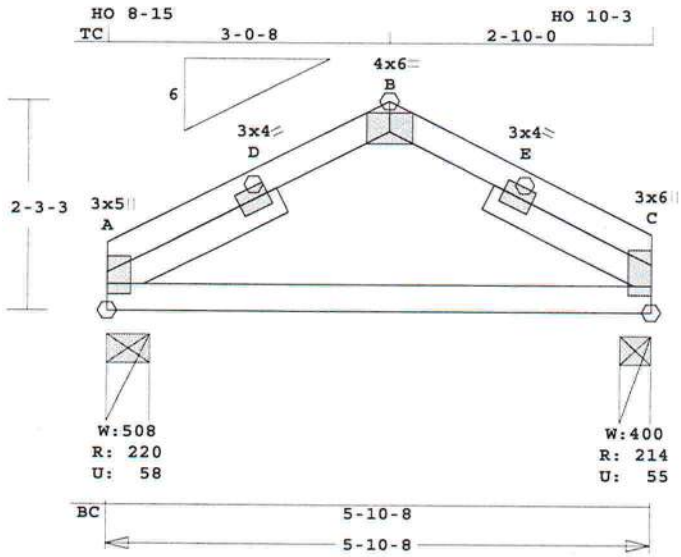

ALL PLATES ARE LOCK20

Scale: 0.500" = 1'

Robbins Engineering, Inc./Online Plus™ APPROX. TRUSS WEIGHT: 31.8 LBS

Online Plus -- Version 17.7.008
RUN DATE: 17-AUG-05

	CSI	-Size-	----Lumber----
TC	0.07	2x 4	SP-#2
BC	0.10	2x 4	SP-#2
SL	0.03	2x 4	SP-#3

Brace truss as follows:

O.C.	From	To
TC Cont.	0- 0- 0	5-10- 8
BC Cont.	0- 0- 0	5-10- 8

Loading	Live	Dead	(psf)
TC	20.0	7.0	
BC	0.0	10.0	
Total	20.0	17.0	37.0
Spacing			24.0"

Lumber Duration Factor 1.25
Plate Duration Factor 1.25
TC Fb=1.15 Fc=1.10 Ft=1.10
BC Fb=1.10 Fc=1.10 Ft=1.10

Plus 7 Wind Load Case(s)

Jt	React Lbs	Uplft Lbs	Size In-Sx	Req'd In-Sx
A	221	58	5- 8	1- 0
			Hz =	32
C	214	55	4- 0	1- 0
			Hz =	-23

Membr	CSI	P Lbs	Axl-CSI-Bnd
----------Top Chords----------			
A -D	0.05	165 C	0.00 0.05
D -B	0.07	198 T	0.02 0.05
B -E	0.05	202 T	0.02 0.03
E -C	0.04	138 C	0.00 0.04
--------Bottom Chords---------			
A -C	0.10	147 T	0.02 0.08
----------Sliders----------			
A -D	0.02	112 T	
E -C	0.03	140 T	

LL Defl 0.00" in A -C L/999
TL Defl -0.02" in A -C L/999
Shear // Grain in A -D 0.09

Plates for each ply each face.
ALL CONNECTOR PLATES
TO BE MANUFACTURED BY
ROBBINS ENGINEERING, INC.
Plate - LOCK 20 Ga, Gross Area
Plate - RHS 20 Ga, Gross Area

Jt	Type	Plt Size	X	Y	JSI
A	LOCK	3.0x 5.0	1.5	0.4	0.87
D	LOCK	3.0x 4.0	Ctr	Ctr	0.50
B	LOCK	4.0x 6.0	Ctr	-1.5	0.75
E	LOCK	3.0x 4.0	Ctr	Ctr	0.50
C	LOCK	3.0x 6.0	-1.5	0.4	0.96

NOTES:
Trusses Manufactured by:
RIDGWAY ROOF TRUSS
Analysis Conforms To:
ANSI/TPI 95 & 02
Wind Loads - ANSI / ASCE 7-98
Truss is designed as
Components and Claddings*
for Exterior zone location.
Wind Speed: 110 mph
Mean Roof Height: 25-0
Exposure Category: B
Occupancy Factor : 1.00
Building Type: Enclosed

TC Dead Load: 4.0 psf
BC Dead Load: 6.0 psf
Max comp. force 165 Lbs
Quality Control Factor 1.25

FABRICATOR NOTES:
1. Delegated Engineer (Truss Designer)
Gary Dounson, PE 35054
Gary Dounson & Associates, Inc.
2830 NW 41st Street Suite D
Gainesville, FL 32606
(352)375-8593
CA 5201

Job	Mark	Quan	Type	Span	P1-H1	Left OH	Right OH	Engineering
050886	R33	1	GMBL1	100201	6	0	0	

Stewart Model

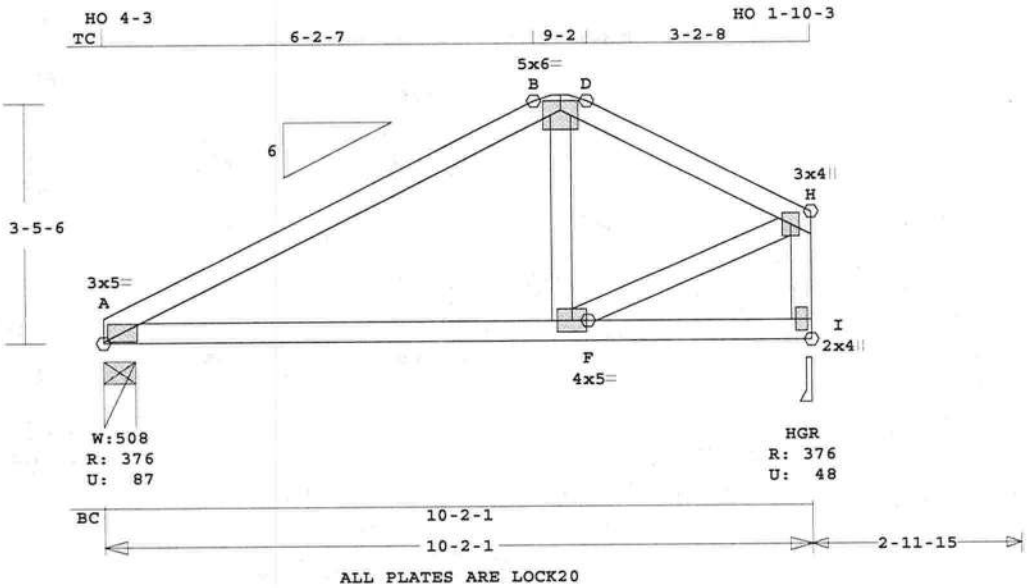

Scale: 0.375" = 1'

Robbins Engineering, Inc./Online Plus™ APPROX. TRUSS WEIGHT: 55.9 LBS

Online Plus -- Version 17.7.008
RUN DATE: 17-AUG-05

	CSI	-Size-	----Lumber----
TC	0.33	2x 4	SP-#2
BC	0.26	2x 4	SP-#2
WB	0.10	2x 4	SP-#3

Brace truss as follows:

O.C.	From	To
TC Cont.	0- 0- 0	10- 2- 1
BC Cont.	0- 0- 0	10- 2- 1

Loading	Live	Dead	(psf)
TC	20.0	7.0	
BC	0.0	10.0	
Total	20.0	17.0	37.0
Spacing			24.0"

Lumber Duration Factor 1.25
Plate Duration Factor 1.25
TC Fb=1.15 Fc=1.10 Ft=1.10
BC Fb=1.10 Fc=1.10 Ft=1.10

Plus 7 Wind Load Case(s)

Jt	React Lbs	Uplft Lbs	Size In-Sx	Req'd In-Sx
A	376	87	5- 8	1- 0
			Hz =	99
I	376	49	3- 8	1- 0
			Hz =	64

Membr	CSI	P Lbs	Axl-CSI-Bnd	
----------Top Chords----------				
A -B	0.33	343 C	0.02	0.31
B -H	0.20	332 C	0.02	0.18
--------Bottom Chords---------				
A -F	0.26	309 T	0.05	0.21
F -I	0.18	64 T	0.00	0.18
----------Webs----------				
F -B	0.01	77 T		
F -H	0.10	341 T		
I -H	0.06	367 C		

LL Defl -0.04" in A -F L/999
TL Defl -0.08" in A -F L/999
Shear // Grain in A -B 0.22

Plates for each ply each face.
ALL CONNECTOR PLATES
TO BE MANUFACTURED BY
ROBBINS ENGINEERING, INC.
Plate - LOCK 20 Ga, Gross Area
Plate - RHS 20 Ga, Gross Area

Jt	Type	Plt Size	X	Y	JSI
A	LOCK	3.0x 5.0	Ctr	Ctr	0.55
B	LOCK	5.0x 6.0	Ctr	-0.9	0.94
H	LOCK	3.0x 4.0	Ctr	Ctr	0.54
F	LOCK	4.0x 5.0	Ctr	Ctr	0.60
I	LOCK	2.0x 4.0	Ctr	Ctr	0.38

NOTES:
Trusses Manufactured by:
RIDGWAY ROOF TRUSS
Analysis Conforms To:
ANSI/TPI 95 & 02
No wind exposure on right end.
Wind Loads - ANSI / ASCE 7-98
Truss is designed as
Components and Claddings*
for Exterior zone location.
Wind Speed: 110 mph
Mean Roof Height: 25-0
Exposure Category: B
Occupancy Factor : 1.00

Building Type: Enclosed
TC Dead Load: 4.0 psf
BC Dead Load: 6.0 psf
Max comp. force 367 Lbs
Quality Control Factor 1.25

FABRICATOR NOTES:
1. Delegated Engineer (Truss Designer)
Gary Dounson, PE 35054
Gary Dounson & Associates, Inc.
2830 NW 41st Street Suite D
Gainesville, FL 32606
(352)375-8593
CA 5201

Job	Mark	Quan	Type	Span	P1-H1	Left OH	Right OH	Engineering
050886	R34	1*2P	SP	100201	6	0	0	

Stewart Model

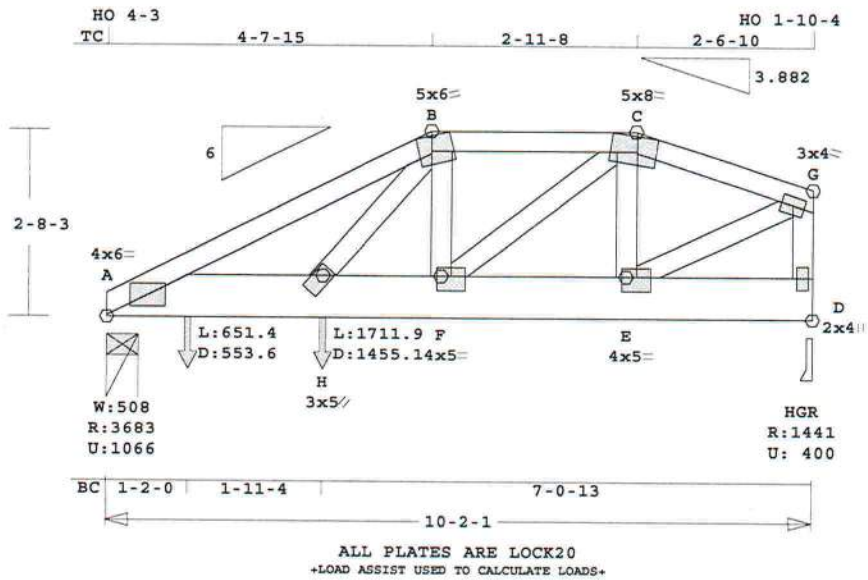

Scale: 0.375" = 1'

Robbins Engineering, Inc./Online Plus™ APPROX. TRUSS WEIGHT: 83.1 LBS

Online Plus -- Version 17.7.008
RUN DATE: 17-AUG-05
****
* 2-Ply Truss *
****

	CSI	-Size-	----Lumber----
TC	0.41	2x 4	SP-#2
BC	0.29	2x 8	SP-2400
WB	0.48	2x 4	SP-#3

Brace truss as follows:

O.C.	From	To
TC Cont.	0- 0- 0	10- 2- 1
BC Cont.	0- 0- 0	10- 2- 1

Loading	Live	Dead	(psf)
TC	20.0	7.0	
BC	0.0	10.0	
Total	20.0	17.0	37.0
Spacing			24.0"

Lumber Duration Factor 1.25
Plate Duration Factor 1.25
TC Fb=1.00 Fc=1.00 Ft=1.00
BC Fb=1.00 Fc=1.00 Ft=1.00

Load Case # 1 Standard Loading
Lumber Duration Factor 1.25
Plate Duration Factor 1.25

plf -	Live	Dead	From	To
TC V	40	14	0.0'	10.2'
BC V	0	20	0.0'	10.2'
BC V	1712	1455	3.1'	CL-LB
BC V	651	554	1.2'	CL-LB

Plus 7 Wind Load Case(s)

Jt	React Lbs	Uplft Lbs	Size In-Sx	Req'd In-Sx
A	3684	1066	5- 8	1- 8
			Hz =	80
D	1441	401	3- 8	1- 0
			Hz =	25

Membr	CSI	P Lbs		Axl-CSI-Bnd	
----------Top Chords----------					
A -B	0.41	5415	C	0.27	0.14
B -C	0.21	2855	C	0.14	0.07
C -G	0.11	1568	C	0.08	0.03
--------Bottom Chords---------					
A -H	0.25	4897	T	0.09	0.16
H -F	0.29	2853	T	0.05	0.24
F -E	0.03	1532	T	0.02	0.01
E -D	0.00	25	T		
----------Webs----------					
H -B	0.48	3021	T		
F -B	0.00	68	T		
F -C	0.27	1696	T		
E -C	0.08	841	C		
E -G	0.27	1714	T		
D -G	0.12	1402	C		

LL Defl -0.03" in H -F L/999
TL Defl -0.06" in H -F L/999
Shear // Grain in H -F 0.63

Plates for each ply each face.
ALL CONNECTOR PLATES
TO BE MANUFACTURED BY
ROBBINS ENGINEERING, INC.
Plate - LOCK 20 Ga, Gross Area
Plate - RHS 20 Ga, Gross Area

Jt	Type	Plt Size	X	Y	JSI
A	LOCK	4.0x 6.0	Ctr	Ctr	0.68
B	LOCK	5.0x 6.0	0.7-3.1		0.90
C	LOCK	5.0x 8.0	-0.5-3.1		0.81
G	LOCK	3.0x 4.0	Ctr	Ctr	0.54
H	LOCK	3.0x 5.0	-0.7-0.8		0.57
F	LOCK	4.0x 5.0	Ctr-0.5		0.60
E	LOCK	4.0x 5.0	Ctr-0.5		0.62
D	LOCK	2.0x 4.0	Ctr	Ctr	0.60

NOTES:

Trusses Manufactured by:
RIDGWAY ROOF TRUSS
Analysis Conforms To:
ANSI/TPI 95 & 02
2 COMPLETE TRUSSES REQUIRED.
Fasten together in staggered pattern. (1/2" bolts -OR- SDS3 screws -OR- 10d nails as each layer is applied.)

	Rows	Nails	Screws	Bolts
		----Spacing (In)----		
TC	1	12	24	0
BC	2	12	24	0
WB	1	4	4	

Plus clusters of nails where shown.
No wind exposure on right end.
Prevent truss rotation at all bearing locations.
Wind Loads - ANSI / ASCE 7-98
Truss is designed as Components and Claddings* for Exterior zone location.
Wind Speed: 110 mph
Mean Roof Height: 25-0
Exposure Category: B
Occupancy Factor : 1.00
Building Type: Enclosed
TC Dead Load: 4.0 psf
BC Dead Load: 6.0 psf
Max comp. force 5415 Lbs
Quality Control Factor 1.25

FABRICATOR NOTES:
1. Delegated Engineer (Truss Designer)
Gary Dounson, PE 35054
Gary Dounson & Associates, Inc.
2830 NW 41st Street Suite D
Gainesville, FL 32606
(352)375-8593
CA 5201

Job	Mark	Quan	Type	Span	P1-H1	Left OH	Right OH	Engineering
050886	T1	2	PBH	61100	6	0	0	

Stewart Model

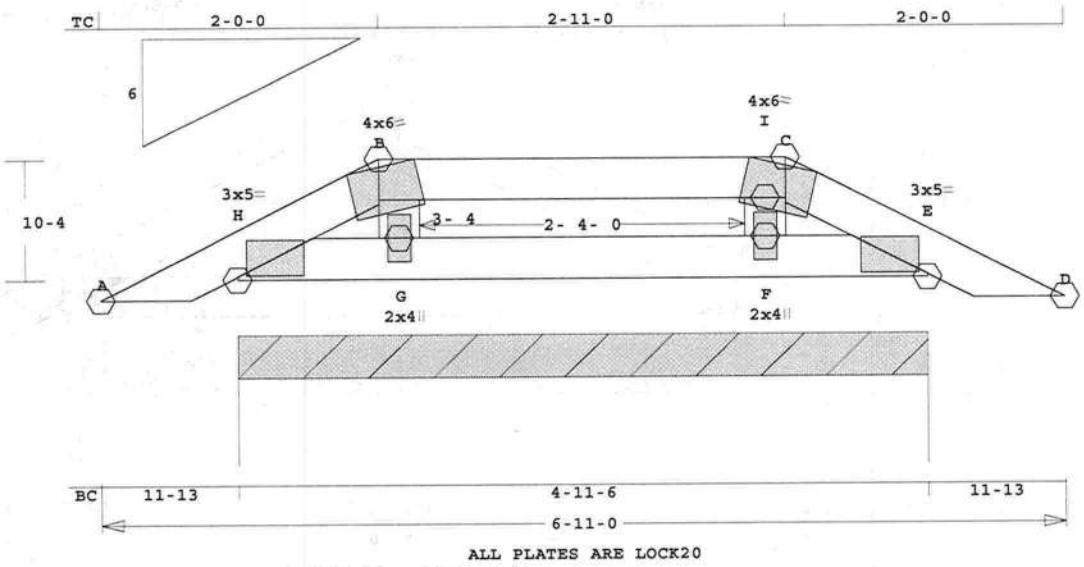

ALL PLATES ARE LOCK20

Scale: 0.750" = 1'

Robbins Engineering, Inc./Online Plus™ APPROX. TRUSS WEIGHT: 24.3 LBS

Online Plus -- Version 17.7.008
RUN DATE: 17-AUG-05

	CSI	-Size-	----Lumber----
TC	0.07	2x 4	SP-#2
BC	0.01	2x 4	SP-#2
WB	0.04	2x 4	SP-#3

Brace truss as follows:

O.C.	From	To
TC Cont.	0- 0- 0	6-11- 0
BC Cont.	0- 0- 0	6-11- 0

Loading	Live	Dead	(psf)
TC	20.0	7.0	
BC	0.0	10.0	
Total	20.0	17.0	37.0
Spacing			24.0"

Lumber Duration Factor 1.25
Plate Duration Factor 1.25
TC Fb=1.15 Fc=1.10 Ft=1.10
BC Fb=1.10 Fc=1.10 Ft=1.10

Plus 7 Wind Load Case(s)

Jt	React Lbs	Uplft Lbs	Size In-Sx	Req'd In-Sx
Cont.	Brg 480	0- 0- 0 250	to Hz =	4-11- 6 8

Membr	CSI	P Lbs	Axl	CSI	Bnd
----------Top Chords----------					
H -B	0.01	27 T	0.00	0.01	
B -I	0.07	52 T	0.00	0.07	
I -E	0.01	27 T	0.00	0.01	
--------Bottom Chords---------					
H -G	0.01	2 T	0.00	0.01	
G -F	0.01	0 T	0.00	0.01	
F -E	0.01	2 T	0.00	0.01	
----------Webs----------					
G -B	0.04	165 T			
F -I	0.04	165 T			

LL Defl 0.00" in H -G L/999
TL Defl 0.00" in G -F L/999
Shear // Grain in B -I 0.10

Plates for each ply each face.
ALL CONNECTOR PLATES
TO BE MANUFACTURED BY
ROBBINS ENGINEERING, INC.
Plate - LOCK 20 Ga, Gross Area
Plate - RHS 20 Ga, Gross Area

Jt	Type	Plt Size	X	Y	JSI
H	LOCK	3.0x 5.0	Ctr	Ctr	0.47
B	LOCK	4.0x 6.0	0.6	-2.6	0.74
I	LOCK	4.0x 6.0	-0.6	-2.6	0.74
E	LOCK	3.0x 5.0	Ctr	Ctr	0.47
G	LOCK	2.0x 4.0	Ctr	Ctr	0.38
F	LOCK	2.0x 4.0	Ctr	Ctr	0.38

NOTES:
Trusses Manufactured by:
RIDGWAY ROOF TRUSS
Analysis Conforms To:
ANSI/TPI 95 & 02
OH Loading
Soffit psf 2.0
Refer to Gen Det 3 series for web bracing and plating.
Wind Loads - ANSI / ASCE 7-98
Truss is designed as
Components and Claddings* for Exterior zone location.
Wind Speed: 110 mph

Mean Roof Height: 25-0
Exposure Category: B
Occupancy Factor : 1.00
Building Type: Enclosed
TC Dead Load: 4.0 psf
BC Dead Load: 6.0 psf
Max comp. force 101 Lbs
Quality Control Factor 1.25

FABRICATOR NOTES:
1. Delegated Engineer (Truss Designer)
Gary Dounson, PE 35054
Gary Dounson & Associates, Inc.
2830 NW 41st Street Suite D
Gainesville, FL 32606
(352)375-8593
CA 5201

Job	Mark	Quan	Type	Span	P1-H1	Left OH	Right OH	Engineering
050886	T2	3	PB	61100	6	0	0	

Stewart Model

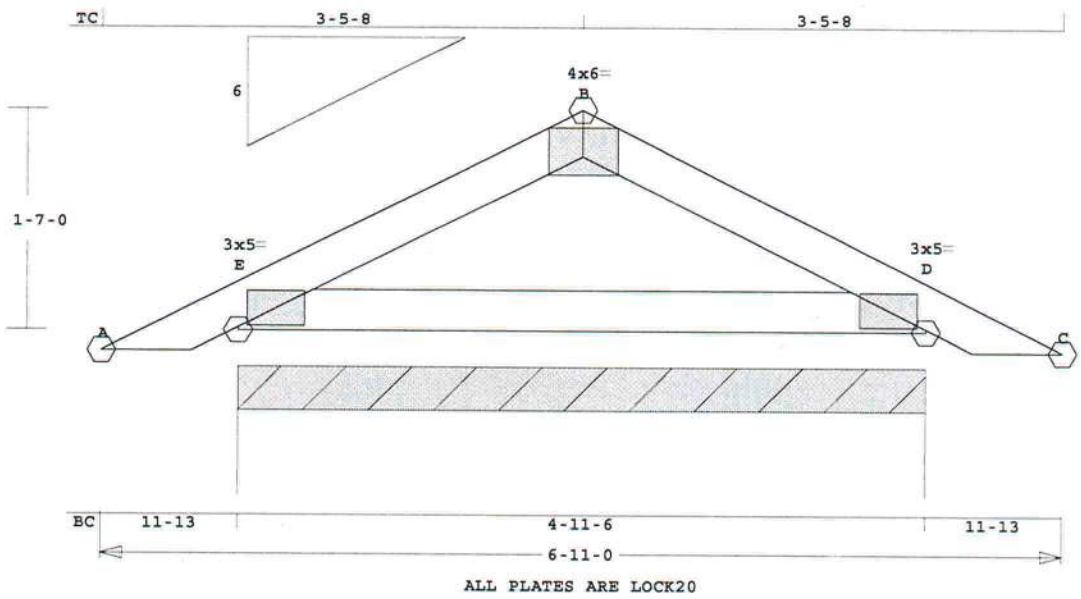

Scale: 0.750" = 1'

Robbins Engineering, Inc./Online Plus™ APPROX. TRUSS WEIGHT: 23.9 LBS

Online Plus -- Version 17.7.008
RUN DATE: 17-AUG-05

	CSI	-Size-	----Lumber----
TC	0.05	2x 4	SP-#2
BC	0.05	2x 4	SP-#2

Brace truss as follows:

	O.C.	From	To
TC	Cont.	0- 0- 0	6-11- 0
BC	Cont.	0- 0- 0	6-11- 0

Loading	Live	Dead	(psf)
TC	20.0	7.0	
BC	0.0	10.0	
Total	20.0	17.0	37.0
Spacing			24.0"
Lumber Duration Factor			1.25
Plate Duration Factor			1.25

TC Fb=1.15 Fc=1.10 Ft=1.10
BC Fb=1.10 Fc=1.10 Ft=1.10

Plus 7 Wind Load Case(s)

Jt	React Lbs	Uplft Lbs	Size In-Sx	Req'd In-Sx
Cont.	Brg 480	0- 0- 0 221	to Hz =	4-11- 6 23

Membr	CSI	P Lbs	Axl-CSI-Bnd	
----------Top Chords----------				
E -B	0.05	171 T	0.00	0.05
B -D	0.05	171 T	0.00	0.05
--------Bottom Chords---------				
E -D	0.05	6 C	0.00	0.05

LL Defl 0.00" in E -D L/999

TL Defl -0.01" in E -D L/999
Shear // Grain in E -B 0.08

Plates for each ply each face.
ALL CONNECTOR PLATES
TO BE MANUFACTURED BY
ROBBINS ENGINEERING, INC.
Plate - LOCK 20 Ga, Gross Area
Plate - RHS 20 Ga, Gross Area

Jt	Type	Plt Size	X	Y	JSI
E	LOCK	3.0x 5.0	Ctr	Ctr	0.47
B	LOCK	4.0x 6.0	Ctr	-1.5	0.74
D	LOCK	3.0x 5.0	Ctr	Ctr	0.47

NOTES:
Trusses Manufactured by:
RIDGWAY ROOF TRUSS
Analysis Conforms To:
ANSI/TPI 95 & 02
OH Loading
Soffit psf 2.0
Refer to Gen Det 3 series for web bracing and plating.
Wind Loads - ANSI / ASCE 7-98
Truss is designed as
Components and Claddings*
for Exterior zone location.
Wind Speed: 110 mph
Mean Roof Height: 25-0
Exposure Category: B
Occupancy Factor : 1.00
Building Type: Enclosed
TC Dead Load: 4.0 psf
BC Dead Load: 6.0 psf
Max comp. force 161 Lbs
Quality Control Factor 1.25

FABRICATOR NOTES:

1. Delegated Engineer (Truss Designer)
Gary Dounson, PE 35054
Gary Dounson & Associates, Inc.
2830 NW 41st Street Suite D
Gainesville, FL 32606
(352)375-8593
CA 5201

BCSI-B1 SUMMARY SHEET 1 of 2

GENERAL NOTES

Trusses are not marked in any way to identify the frequency or location of temporary bracing. Follow the recommendations for handling, installing and temporary bracing of trusses. Refer to BCSI 1-03 Guide to Good Practice for Handling, Installing & Bracing of Metal Plate Connected Wood Trusses for more detailed information.

Truss Design Drawings may specify locations of permanent bracing on individual compression members. Refer to the BCSI-B3 Summary Sheet - Web Member Permanent Bracing/Web Reinforcement for more information. All other permanent bracing design is the responsibility of the Building Designer.

NOTAS GENERALES

Los trusses no están marcados de ningún modo que identifique la frecuencia o localización de los arriostres (bracing) temporales. Use las recomendaciones de manejo, instalación y arriostre temporal de los trusses. Vea el folleto BCSI 1-03 Guía de Buena Práctica para el Manejo, Instalación y Arriostre de los Trusses de Madera Conectados con Placas de Metalpara para mayor información.

Los dibujos de diseño de los trusses pueden especificar las localizaciones de los arriostres permanentes en los miembros individuales en compresión. Vea la hoja resúmen BCSI-B3 para los arriostres permanentes y refuerzos de los miembros secundarios (webs) para mayor información. El resto de arriostres permanentes son la responsabilidad del Diseñador del Edificio.

⚠ The consequences of improper handling, installing and bracing may be a collapse of the structure, or worse, serious personal injury or death.

El resultado de un manejo, instalación y arriostre inadecuados, puede ser la caída de la estructura o aun peor, muertos o heridos.

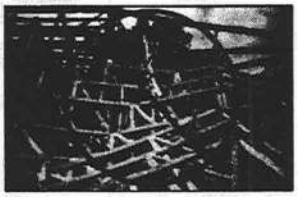

⚠ Banding and truss plates have sharp edges. Wear gloves when handling and safety glasses when cutting banding.

Empaques y placas de metal tienen bordes afilados. Use guantes y lentes protectores cuando corte los empaques.

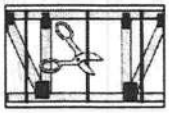

HANDLING — MANEJO

☑ Allow no more than 3" of deflection for every 10' of span.

No permita mas de 3 pulgadas de pandeo por cada 10 pies de tramo.

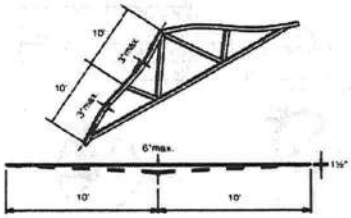

☑ Pick up vertical bundles at the top chord.

Levante de la cuerda superior los grupos verticales de trusses.

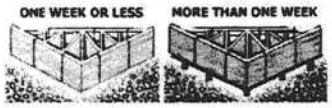

☑ Bundles stored on the ground for one week or more should be raised by blocking at 8' to 10' on center.

Los paquetes almacenados en la tierra por una semana o más deben ser elevados con bloques a cada 8 o 10 pies.

☑ For long term storage, cover bundles to prevent moisture gain but allow for ventilation.

Para almacen-amiento por mayor tiempo, cubra los paquetes para prevenir aumento de humedad pero permita ventilación.

⚠ Use special care in windy weather or near power lines and airports.

Utilice cuidado especial en días ventosos o cerca de cables eléctricos o de aeropuertos.

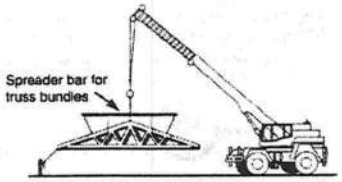

☑ Check banding prior to moving bundles.

Revise los empaques antes de mover los paquetes de trusses.

⚠ Avoid lateral bending. — Evite la flexión lateral.

⊘ Do not store unbraced bundles upright.

No almacene verticalmente los trusses sueltos.

⊘ Do not store on uneven ground.

No almacene en tierra desigual.

HAND ERECTION — LEVANTAMIENTO A MANO

☑ Trusses 20' or less, support at peak.

Levante del pico los trusses de 20 pies o menos.

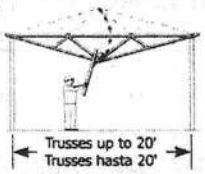

☑ Trusses 30' or less, support at quarter points.

Levante de los cuartos de tramo los trusses de 30 pies o menos.

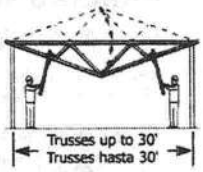

HOISTING — LEVANTAMIENTO

☑ Hold each truss in position with the erection equipment until temporary bracing is installed and truss is fastened to the bearing points.

Sostenga cada truss en posición con la grúa hasta que el arriostre temporal esté instalado y el truss asegurado en los soportes.

⊘ Do not lift trusses over 30' by the peak.

No levante del pico los trusses de más de 30 pies.

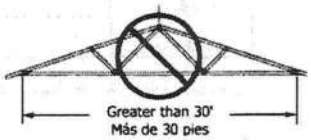

HOISTING RECOMMENDATIONS BY TRUSS SPAN

RECOMMENDACIONES DE LEVANTAMIENTO POR LONGITUD DEL TRUSS

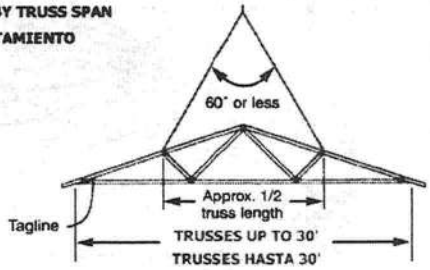

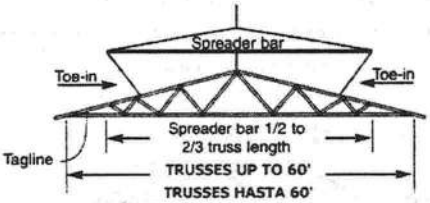

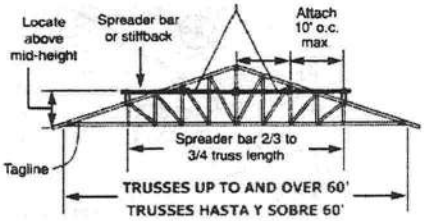

BRACING — ARRIOSTRE

⚠ Refer to BCSI-B2 Summary Sheet - Truss Installation and Temporary Bracing for more information.

Vea el resúmen BCSI-B2 - Instalación de Trusses y Arriostre Temporal para mayor información.

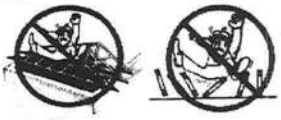

⊘ Do not walk on unbraced trusses.

No camine en trusses sueltos.

☑ Locate ground braces for first truss directly in line with all rows of top chord temporary lateral bracing.

Coloque los arriostres de tierra para el primer truss directamente en línea con cada una de las filas de arriostres laterales temporales de la cuerda superior.

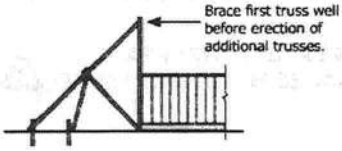

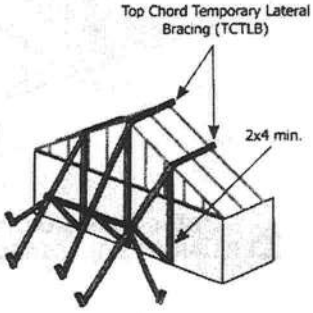

BCSI-B1 SUMMARY SHEET 2 of 2

BRACING FOR THREE PLANES OF ROOF
EL ARRIOSTRE EN TRES PLANOS DE TECHO

☑ This bracing method is for all trusses except 3x2 and 4x2 parallel chord trusses.
Este metodo de arriostre es para todo trusses excepto trusses de cuerdas paralelas 3x2 y 4x2

1) TOP CHORD — CUERDA SUPERIOR

Truss Span Longitud de Tramo	Top Chord Temporary Lateral Brace (TCTLB) Spacing Espaciamiento del Arriostre Temporal de la Cuerda Superior
Up to 30' Hasta 30 pies	10' o.c. max. 10 pies máximo
30' to 45' 30 a 45 pies	8' o.c. max. 8 pies máximo
45' to 60' 45 a 60 pies	6' o.c. max. 6 pies máximo
60' to 80'* 60 a 80 pies*	4' o.c. max. 4 pies máximo

*Consult a Professional Engineer for trusses longer than 60'.
*Consulte a un ingeniero para trusses de mas de 60 pies.

☑ See BCSI-B2 for TCTLB options.
Vea el BCSI-B2 para las opciones de TCTLB.

⚠ Refer to BCSI-B6 Summary Sheet - Gable End Frame Bracing.
Vea el resúmen BCSI-B6 - Arriostre del truss terminal de un techo a dos aguas.

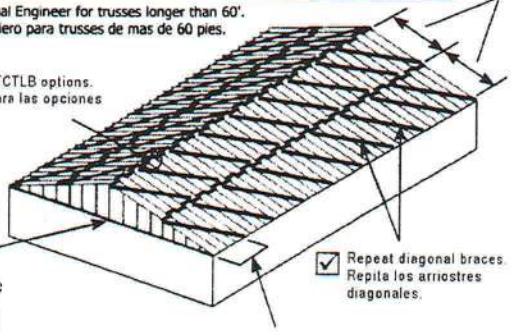

☑ Repeat diagonal braces.
Repita los arriostres diagonales.

☑ Set first five trusses with spacer pieces, then add diagonals. Repeat process on groups of four trusses until all trusses are set.

Instale los cinco primeros trusses con espaciadores, luego los arriostres diagonales. Repita este procedimiento en grupos de cuatro trusses hasta que todos los trusses esten instalados.

2) BOTTOM CHORD — CUERDA INFERIOR

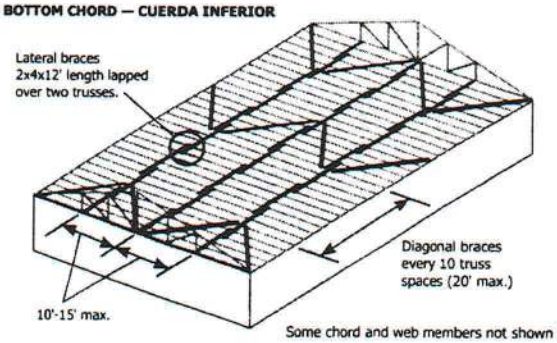

Some chord and web members not shown for clarity.

3) WEB MEMBER PLANE — PLANO DE LOS MIEMBROS SECUNDARIOS

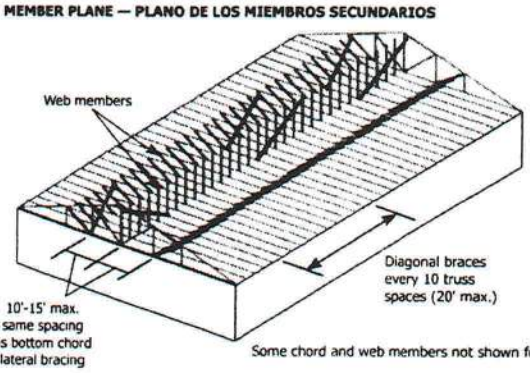

Some chord and web members not shown for clarity.

⚠ DIAGONAL BRACING IS VERY IMPORTANT
¡EL ARRIOSTRE DIAGONAL ES MUY IMPORTANTE! ⚠

BRACING FOR 3x2 AND 4x2 PARALLEL CHORD TRUSSES
EL ARRIOSTRE PARA TRUSSES DE CUERDAS PARALELAS 3x2 Y 4x2

⚠ Refer to BCSI-B7 Summary Sheet - Temporary and Permanent Bracing for Parallel Chord Trusses for more information.

Vea el resumen BCSI-B7 - Arriostre temporal y permanente de trusses de cuerdas paralelas para mayor información.

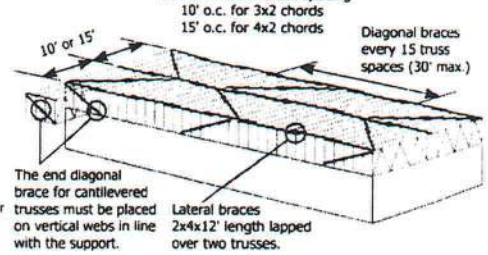

INSTALLING — INSTALACION

☑ Tolerances for Out-of_Plane. Tolerancias para Fuera-de-Plano.

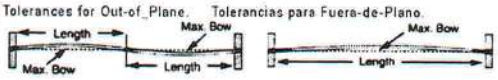

Max. Bow	Truss Length
3/4"	12.5'
7/8"	14.6'
1"	16.7'
1-1/8"	18.8'
1-1/4"	20.8'
1-3/8"	22.9'
1-1/2"	25.0'
1-3/4"	29.2'
2"	≥33.3'

☑ Tolerances for Out-of-Plumb

Tolerances para Fuerta-de-Plomada.

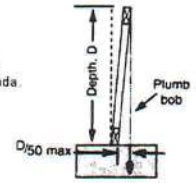

D/50	D (ft.)
1/4"	1'
1/2"	2'
3/4"	3'
1"	4'
1-1/4"	5'
1-1/2"	6'
1-3/4"	7'
2"	≥ 8'

CONSTRUCTION LOADING — CARGA DE CONSTRUCCION

⚠ Do not proceed with construction until all bracing is securely and properly in place.

No proceda con la construcción hasta que todos los arriostres estén colocados en forma apropiada y segura.

⊘ Do not exceed maximum stack heights. Refer to BCSI-B4 Summary Sheet - Construction Loading for more information.

No exceda las máximas alturas recomendadas. Vea el resúmen BCSI-B4 Carga de Construcción para mayor información.

Maximum Stack Height for Materials on Trusses

Material	Height (h)
Gypsum Board	12'
Plywood or OSB	16'
Asphalt Shingles	2 bundles
Concrete Block	8'
Clay Tile	3-4 tiles high

⊘ Do not overload small groups or single trusses.

No sobrecargue pequeños grupos o trusses individuales.

☑ Place loads over as many trusses as possible
Cologue las cargas sobre tantos trusses como sea posible.

☑ Position loads over load bearing walls.
Coloque las cargas sobre las paredes soportantes.

ALTERATIONS — ALTERACIONES

⚠ Refer to BCSI-B5 Summary Sheet - Truss Damage, Jobsite Modifications and Installation Errors.
Vea el resúmen BCSI-B5 Daños de trusses, Modificaciones en la Obra y Errores de Instalación.

⊘ Do not cut, alter, or drill any structural member of a truss unless specifically permitted by the Truss Design Drawing.

No corte, altere o perfore ningún miembro estructural de los trusses, a menos que esté especificamente permitido en el dibujo del diseño del truss.

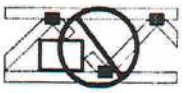

⚠ Trusses that have been overloaded during construction or altered without the Truss Manufacturer's prior approval may render the Truss Manufacturer's limited warranty null and void.

Trusses que se han sobrecargado durante la construcción o han sido alterados sin una autorización previa del Fabricante de Trusses, pueden reducir o eliminar la garantía del Fabricante de Trusses.

WOOD TRUSS COUNCIL OF AMERICA
One WTCA Center • 6300 Enterprise Lane • Madison, WI 53719
608/274-4849 • www.woodtruss.com

TRUSS PLATE INSTITUTE
583 D'Onofrio Drive • Madison, WI 53719
608/833-5900 • www.tpinst.org

General detail for repair of broken webs that meet the following conditions.

* Web size and grade must be maximum 2x4, #3, standard, or stud grade of any species.
* Truss must be single ply.
* No more than one crack or break per web and no more than two broken or cracked webs per truss.

B = Maximum length of damaged area not to exceed 12".
M = Minimum length of scab at each end of break area to be 34".
S = Overall length of scab member (shaded) must be greater of:
S = 68" + B
S = 80% of original web length.

For all lumber, plates, web bracing, etc. refer to original drawing sealed by Robbins Engineering Inc.

1) Apply all nails so as to avoid damaging of lumber and loosening of plates at joints.
2) Attach 2x4 scab (shaded), minimum same size and grade as original web member, to one face of truss using 2 rows of 10d common nails 2" on center each row and staggered.

Truss manufacturer must be notified if field conditions do not match this general detail.

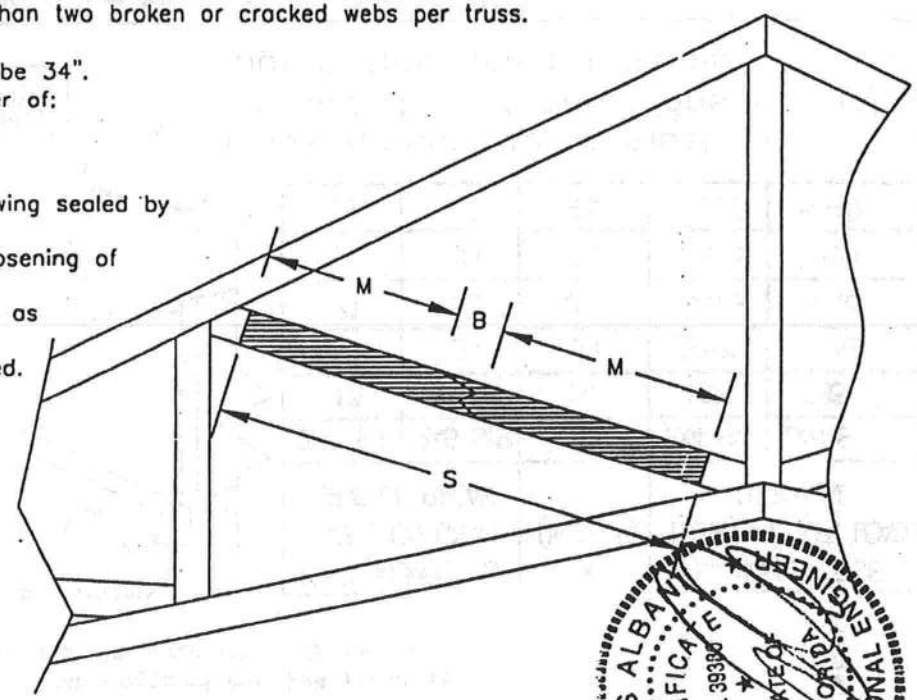

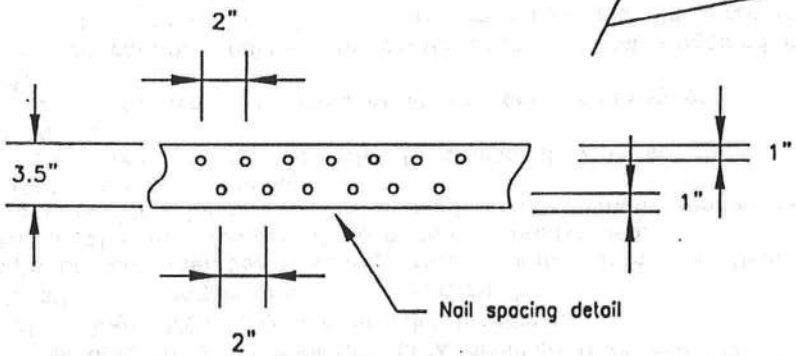

THOMAS ALBANESE
CERTIFICATE No. 39386
STATE OF FLORIDA
PROFESSIONAL ENGINEER

ROBBINS

Engineering Inc.

P.O.Box 280055, Tampa, FL 33682

ROBBINS LOCK connector plates (20 ga. galv. steel-ASTM A653 SS Grade 40) shall be applied on both faces of truss at each joint. Center the plates,unless shown otherwise by circles (o) or dimensions. Unless otherwise indicated by a "+", all slots in plates run parallel with the chords or horizontally at the peak and / or heel. No loose knots or voids in plate contact area. Splice only where shown. Overall spans assume 4" bearings at each end, unless indicated otherwise. Cutting and fabrications shall be performed on equipment which produces snug-fitting joints and plates. This design was prepared in accordance with "National Design Specifications for Stress-Grade lumber and its Fastenings" (AFPA), "Design Specifications for Light Metal Plate Connected Wood Trusses" (TPI), and HUD Design Criteria for Trussed Rafters.

Robbins Mfg., Co. bears no responsibility for the erection of trusses, field bracing or permanent truss bracing. Refer to HIB-91 as published by the Truss Plate Institute,583 D'Onofrio Drive,Suite 200, Madison, Wisconsin 53719. Persons erecting trusses are cautioned to seek professional advice concerning proper erection bracing to prevent toppling and "dominoing". Care should be taken to prevent damage during fabrication, storage, shipping and erection. Top and bottom chords shall be adequately braced in the absence of sheathing or rigid ceiling, respectively. It is the responsibility of others to ascertain that the design loads utilized on this drawing meet or exceed the actual dead loads imposed by the structure and the live loads imposed by the local building code or historical climatic records.

FURNISH A COPY OF THIS DESIGN TO ERECTION CONTRACTOR
IT IS THE RESPONSIBILITY OF THE BUILDING DESIGNER AND TRUSS FAB. TO REVIEW THIS DRWG. & VERIFY THAT DATA INCLUDING DIM. & LOADS CONFORM TO ARCH. PLAN/SPECS & FAB. TRUSS LAYOUTS.

Designed By: MG

Checked By: TAA

Date: 5/23/02

Dwg. No: GD-41

General detail for repair of broken chords and damaged or missing chord splices that meet the following conditions:

* Chord size must be maximum 2x6 and southern pine species.
* Scab must be the same size and grade as broken chord.
* Truss must be single ply.
* No more than two broken or cracked chords per truss.
* Perimeter of break area must be minimum of X distance from any heel or peak, and minimum of 6" away from any interior joint locations.

C = Maximum length of damaged area not to exceed 12".
S = Overall length of scab member (shaded) must be equal or greater than 2(X)+C.
X = Minimum length of scab member at each end of break area.
Refer to following table for minimum length of scab, and minimum number of nails at each end of break area and maximum axial force of broken member.
For all lumber, plates, web bracing, etc. refer to original drawing sealed by Robbins Engineering Inc.

1) Apply all nails so as to avoid damaging of lumber and loosening of plates at joints.
2) Use 2 rows of 10d common nails 3" on center each row and staggered into 2x4 members.
   Use 3 rows of 10d common nails 3" on center each row and staggered into 2x6 members.
   Use 6" spacing if scabs applied to each face of truss.
   Minimum end distance of 2" must be provided for all scab members.

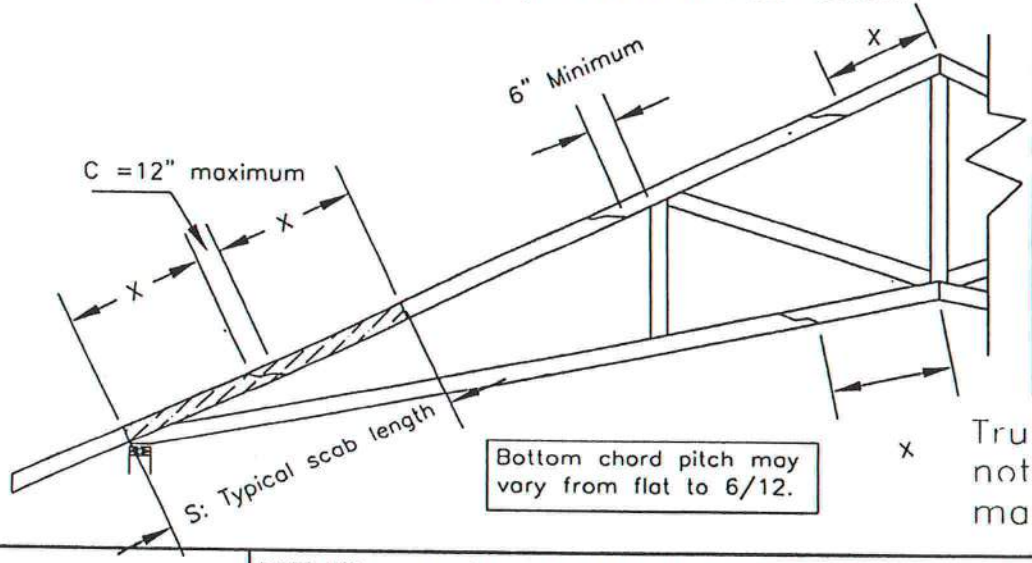

Bottom chord pitch may vary from flat to 6/12.

TOTAL NUMBER OF NAILS ON EACH SIDE OF BREAK		X (INCHES)	MAXIMUM FORCE (LBS.) AT 33% LOAD DURATION	
2X4 SYP	2X6 SYP		2X4 SYP	2X6 SYP
13	20	24"	1924	2886
17	26	30"	2501	3752
21	32	36"	3079	4618
25	38	42"	3656	5484
29	44	48"	4233	6349

Truss manufacturer must be notified if field conditions do not match this general detail.

THOMAS ALBANI
CERTIFICATE No. 29386
STATE OF FLORIDA
PROFESSIONAL ENGINEER

ROBBINS
Engineering Inc.
P.O.Box 280055, Tampa, FL 33682

ROBBINS LOCK connector plates (20 ga. galv. steel-ASTM A653 SS Grade 40) shall be applied on both faces of truss at each joint. Center the plates,unless shown otherwise by circles (o) or dimensions. Unless otherwise indicated by a "v", all slots in plates run parallel with the chords or horizontally at the peak and / or heel. No loose knots or wanes in plate contact area. Splice only where shown. Overall spans assume 4" bearings at each end, unless indicated otherwise. Cutting and fabrications shall be performed on equipment which produces snug-fitting joints and plates. This design was prepared in accordance with "National Design Specifications for Stress-Grade lumber and its Fastenings" (AFPA), "Design Specifications for Light Metal Plate Connected Wood Trusses" (TPI), and HUD Design Criteria for Trussed Rafters.

Robbins Mfg., Co. bears no responsibility for the erection of trusses, field bracing or permanent truss bracing. Refer to HIB-91 as published by the Truss Plate Institute,583 D'Onofrio Drive,Suite 200, Madison, Wisconsin 53719. Persons erecting trusses are cautioned to seek professional advice concerning proper erection bracing to prevent toppling and "dominoing". Care should be taken to prevent damage during fabrication, storage, shipping and erection. Top and bottom chords shall be adequately braced in the absence of sheathing or rigid ceiling, respectively. It is the responsibility of others to ascertain that the design loads utilized on this drawing meet or exceed the actual dead loads imposed by the structure and the live loads imposed by the local building code or historical climatic records.

FURNISH A COPY OF THIS DESIGN TO ERECTION CONTRACTOR
IT IS THE RESPONSIBILITY OF THE BUILDING DESIGNER AND TRUSS FAB. TO REVIEW THIS DRWG. & VERIFY THAT DATA INCLUDING DIM. & LOADS CONFORM TO ARCH. PLAN/SPECS & FAB. TRUSS LAYOUTS.

Designed By: MG
Checked By: TAA
Rev. Date: 12/01/03
Dwg. No: GD-62-33

General detail for repair of broken, damaged or cut chords of PC42 floor trusses that meet the following conditions.

* Chord size must be maximum 4x2 and southern pine species.
* Scab must be at minimum the same size and grade as broken chord. Wide face of scab must be attached to narrow face of chord member.
* Truss must be single ply.
* No more than two broken or cracked chords per truss.
* Perimeter of break area must be minimum of X distance from end of truss. and minimum of 4" away from any plates at panel points. All plates must be intact and fully embedded.

C = Maximum length of damaged area or cut section not to exceed 12".
S = Overall length of scab member must be equal or greater than 2(X)+C.
X = Minimum length of scab member at each end of break area.

Refer to following table for minimum length of scab, and minimum number of nails at each end of break area and maximum axial force of broken member.

For all lumber, plates, web bracing, etc. refer to original drawing sealed by Robbins Engineering Inc.

1) Apply all nails so as to avoid damaging of lumber and loosening of plates at joints.
2) Attach the scab with one row of 10d common nails at 3" on center into 4x2 chord members. Axial force and number of nails may be doubled or X distance divided by 2, if scabs applied to each face of truss at the same location. Minimum end distance of 3" must be provided for all members.

THOMAS ALBANI CERTIFICATE No. 39330 STATE OF FLORIDA PROFESSIONAL ENGINEER

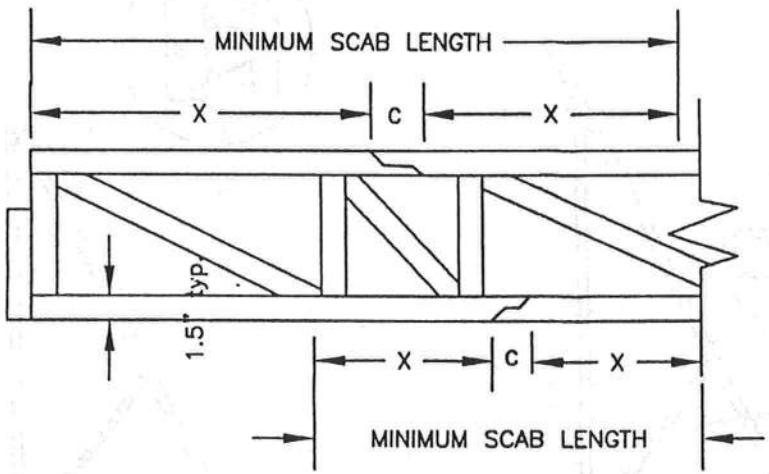

TOTAL NUMBER OF NAILS AT EACH END OF	X (INCHES)	MAXIMUM AXIAL FORCE IN CHORD MEMBER (LBS.)
3	16	384
6	24	768
8	30	1024
10	36	1280
12	42	1536
14	48	1792
16	54	2048
18	60	2304
20	66	2560
22	72	2816

Truss manufacturer must be notified if field conditions do not match this general detail.

DEC 10 2003

ROBBINS
Engineering Inc.
P.O.Box 280055, Tampa, FL 33682

ROBBINS LOCK connector plates (20 ga. galv. steel-ASTM A653 SS Grade 40) shall be applied on both faces of truss at each joint. Center the plates,unless shown otherwise by circles (o) or dimensions. Unless otherwise indicated by a "v", all slots in plates run parallel with the chords or horizontally at the peak and / or heel. No loose knots or waves in plate contact area. Splice only where shown. Overall spans assume 4" bearings at each end, unless indicated otherwise. Cutting and fabrications shall be performed on equipment which produces snug-fitting joints and plates. This design was prepared in accordance with "National Design Specifications for Stress-Grade lumber and its Fastenings" (AFPA), "Design Specifications for Light Metal Plate Connected Wood Trusses" (TPI), and HUD Design Criteria for Trussed Rafters.

Robbins Mfg., Co. bears no responsibility for the erection of trusses, field bracing or permanent truss bracing. Refer to HIB-91 as published by the Truss Plate Institute,583 D'Onofrio Drive,Suite 200, Madison, Wisconsin 53719. Persons erecting trusses are cautioned to seek professional advice concerning proper erection bracing to prevent toppling and "dominoing". Care should be taken to prevent damage during fabrication, storage, shipping and erection. Top and bottom chords shall be adequately braced in the absence of sheathing or rigid ceiling, respectively. It is the responsibility of others to ascertain that the design loads utilized on this drawing meet or exceed the actual dead loads imposed by the structure and the live loads imposed by the local building code or historical climatic records.

FURNISH A COPY OF THIS DESIGN TO ERECTION CONTRACTOR
IT IS THE RESPONSIBILITY OF THE BUILDING DESIGNER AND TRUSS FAB. TO REVIEW THIS DRWG. & VERIFY THAT DATA INCLUDING DIM. & LOADS CONFORM TO ARCH. PLAN/SPECS & FAB. TRUSS LAYOUTS.

Designed By: MG
Checked By: TAA
Rev. Date: 12/09/03
Dwg. No: GD-62-FL

PERMANENT WEB BRACING

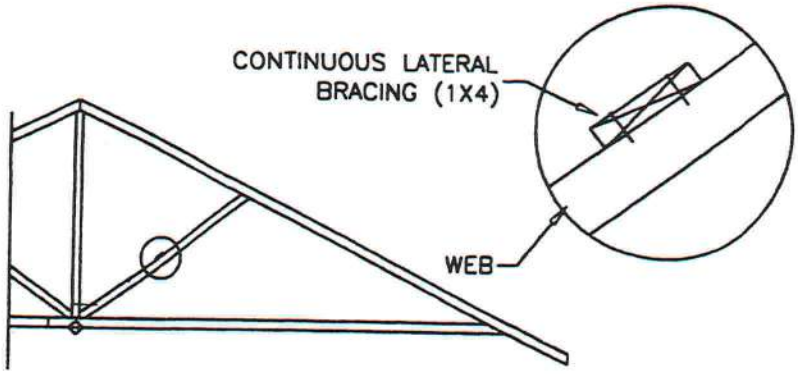

CONTINUOUS LATERAL BRACING

1x4 #3 HEM–FIR OR BETTER CONTINUOUS LATERAL BRACING TO BE EQUALLY SPACED. ATTACH WITH (2) 8d NAILS. BRACING MATERIAL TO BE SUPPLIED AND ATTACHED AT BOTH ENDS TO A SUITABLE SUPPORT BY ERECTION CONTRACTOR.

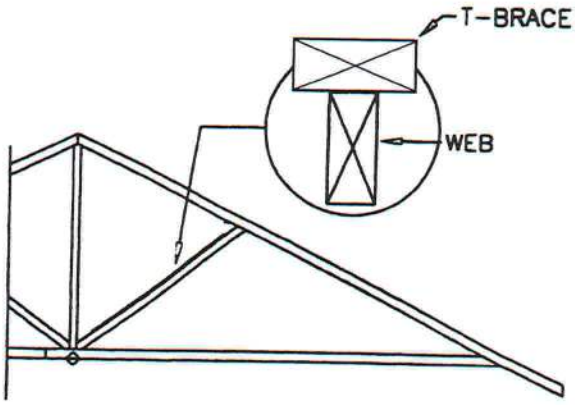

T-BRACE

THESE DETAILS APPLY TO 1.5" WIDE WOOD TRUSSES.

- USE A 2x4 T-BRACE IF THE TRUSS DESIGN SPECIFIES ONE LATERAL BRACE (MID POINT OF WEB).
- USE A 2x6 T-BRACE IF THE TRUSS DESIGN SPECIFIES TWO LATERAL BRACES (AT THE THIRD POINTS OF THE WEB).
- USE A CONTINUOUS PIECE FOR THE T-BRACE, OF THE SAME GRADE AS THE WEB AND COVERING AT LEAST 90% OF THE WEB LENGTH.
- CENTER THE T-BRACE ON THE WEB AND FASTEN WITH 10d COMMON NAILS SPACED 4" ON CENTER.

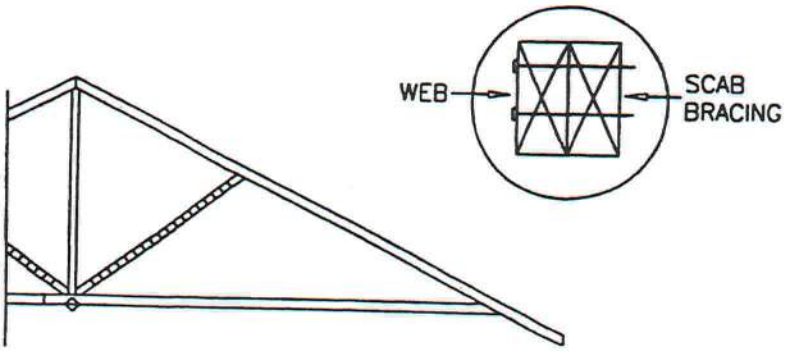

SCAB BRACE

SCAB BRACE SAME SIZE, GRADE, AND LENGTH AS WEB MEMBER. ATTACH WITH 10d NAILS @ 4" O.C. BRACING MATERIAL TO BE SUPPLIED BY ERECTION CONTRACTOR.

COLUMBIA COUNTY BUILDING DEPARTMENT

RESIDENTIAL MINIMUM PLAN REQUIREMENTS AND CHECKLIST FOR FLORIDA BUILDING CODE 2001 ONE (1) AND TWO (2) FAMILY DWELLINGS

ALL REQUIREMENTS ARE SUBJECT TO CHANGE

EFFECTIVE MARCH 1, 2002

ALL BUILDING PLANS MUST INDICATE THE FOLLOWING ITEMS AND INDICATE COMPLIANCE WITH CHAPTER 1606 OF THE FLORIDA BUILDING CODE 2001 BY PROVIDING CALCULATIONS AND DETAILS THAT HAVE THE SEAL AND SIGNATURE OF A CERTIFIED ARCHITECT OR ENGINEER REGISTERED IN THE STATE OF FLORIDA, OR ALTERNATE METHODOLOGIES, APPROVED BY THE STATE OF FLORIDA BUILDING COMMISSION FOR ONE-AND-TWO FAMILY DWELLINGS. FOR DESIGN PURPOSES THE FOLLOWING BASIC WIND SPEED AS PER FIGURE 1606 SHALL BE USED.

WIND SPEED LINE SHALL BE DEFINED AS FOLLOWS: THE CENTERLINE OF INTERSTATE 75.

1. ALL BUILDINGS CONSTRUCTED EAST OF SAID LINE SHALL BE -------- 100 MPH
2. ALL BUILDINGS CONSTRUCTED WEST OF SAID LINE SHALL BE --------110 MPH
3. NO AREA IN COLUMBIA COUNTY IS IN A WIND BORNE DEBRIS REGION

APPLICANT – PLEASE CHECK ALL APPLICABLE BOXES BEFORE SUBMITTAL

GENERAL REQUIREMENTS: Two (2) complete sets of plans containing the following:

Applicant	Plans Examiner	
☑	☐	All drawings must be clear, concise and drawn to scale ("Optional " details that are not used shall be marked void or crossed off). Square footage of different areas shall be shown on plans.
☑	☐	Designers name and signature on document (FBC 104.2.1). If licensed architect or engineer, official seal shall be affixed.
☑	☐	**Site Plan including:** a) Dimensions of lot b) Dimensions of building set backs c) Location of all other buildings on lot, well and septic tank if applicable, and all utility easements. d) Provide a full legal description of property.
☑	☐	**Wind-load Engineering Summary, calculations and any details required** a) Plans or specifications must state compliance with FBC Section 1606 b) The following information must be shown as per section 1606.1.7 FBC a. Basic wind speed (MPH) b. Wind importance factor (I) and building category c. Wind exposure – if more than one wind exposure is used, the wind exposure and applicable wind direction shall be indicated d. The applicable internal pressure coefficient e. Components and Cladding. The design wind pressure in terms of psf (kN/m²), to be used for the design of exterior component and cladding materials not specifically designed by the registered design professional
☑	☐	**Elevations including:**
☑	☐	a) All sides
☑	☐	b) Roof pitch
☑	☐	c) Overhang dimensions and detail with attic ventilation
☐ N/A	☐	d) Location, size and height above roof of chimneys
☐ N/A	☐	e) Location and size of skylights
☑	☐	f) Building height
☑	☐	e) Number of stories

Floor Plan including:

- ☑ ☐ a) Rooms labeled and dimensioned
- ☑ ☐ b) Shear walls
- ☑ ☐ c) Windows and doors (including garage doors) showing size, mfg., approval listing and attachment specs. (FBC 1707) and safety glazing where needed (egress windows in bedrooms to be shown)
- ☐ N/A ☐ d) Fireplaces (gas appliance) (vented or non-vented) or wood burning with hearth
- ☐ N/A ☐ e) Stairs with dimensions (width, tread and riser) and details of guardrails and handrails
- ☑ ☐ f) Must show and identify accessibility requirements (accessible bathroom)

Foundation Plan including:

- ☑ ☐ a) Location of all load-bearing wall with required footings indicated as standard Or monolithic and dimensions and reinforcing
- ☑ ☐ b) All posts and/or column footing including size and reinforcing
- ☐ N/A ☐ c) Any special support required by soil analysis such as piling
- ☑ ☐ d) Location of any vertical steel

Roof System:

- ☑ ☐ a) Truss package including:
  1. Truss layout and truss details signed and sealed by Fl. Pro. Eng.
  2. Roof assembly (FBC 104.2.1 Roofing system, materials, manufacturer, fastening requirements and product evaluation with wind resistance rating)
- ☐ N/A ☐ b) Conventional Framing Layout including:
  1. Rafter size, species and spacing
  2. Attachment to wall and uplift
  3. Ridge beam sized and valley framing and support details
  4. Roof assembly (FBC 104.2.1 Roofing systems, materials, manufacturer, fastening requirements and product evaluation with wind resistance rating)

Wall Sections including:

- ☐ N/A ☐ a) Masonry wall
  1. All materials making up wall
  2. Block size and mortar type with size and spacing of reinforcement
  3. Lintel, tie-beam sizes and reinforcement
  4. Gable ends with rake beams showing reinforcement or gable truss and wall bracing details
  5. All required connectors with uplift rating and required number and size of fasteners for continuous tie from roof to foundation
  6. Roof assembly shown here or on roof system detail (FBC 104.2.1 Roofing system, materials, manufacturer, fastening requirements and product evaluation with resistance rating)
  7. Fire resistant construction (if required)
  8. Fireproofing requirements
  9. Shoe type of termite treatment (termicide or alternative method)
  10. Slab on grade
      a. Vapor retardant (6mil. Polyethylene with joints lapped 6 inches and sealed)
      b. Must show control joints, synthetic fiber reinforcement or Welded fire fabric reinforcement and supports
  11. Indicate where pressure treated wood will be placed
  12. Provide insulation R value for the following:
      a. Attic space
      b. Exterior wall cavity
      c. Crawl space (if applicable)

✓ ☐ **b) Wood frame wall**

1. All materials making up wall
2. Size and species of studs
3. Sheathing size, type and nailing schedule
4. Headers sized
5. Gable end showing balloon framing detail or gable truss and wall hinge bracing detail
6. All required fasteners for continuous tie from roof to foundation (truss anchors, straps, anchor bolts and washers)
7. Roof assembly shown here or on roof system detail (FBC104.2.1 Roofing system, materials, manufacturer, fastening requirements and product evaluation with wind resistance rating)
8. Fire resistant construction (if applicable)
9. Fireproofing requirements
10. Show type of termite treatment (termicide or alternative method)
11. Slab on grade
    a. Vapor retardant (6Mil. Polyethylene with joints lapped 6 inches and sealed
    b. Must show control joints, synthetic fiber reinforcement or welded wire fabric reinforcement and supports
12. Indicate where pressure treated wood will be placed
13. Provide insulation R value for the following:
    a. Attic space
    b. Exterior wall cavity
    c. Crawl space (if applicable)

☐ N/A ☐ c) Metal frame wall and roof (designed, signed and sealed by Florida Prof. Engineer or Architect)

Floor Framing System:

☐ N/A ☐ a) Floor truss package including layout and details, signed and sealed by Florida Registered Professional Engineer

☐ N/A ☐ b) Floor joist size and spacing

☐ N/A ☐ c) Girder size and spacing

☐ N/A ☐ d) Attachment of joist to girder

☐ N/A ☐ e) Wind load requirements where applicable

✓ ☐ **Plumbing Fixture layout**

Electrical layout including:

✓ ☐ a) Switches, outlets/receptacles, lighting and all required GFCI outlets identified

✓ ☐ b) Ceiling fans

✓ ☐ c) Smoke detectors

✓ ☐ d) Service panel and sub-panel size and location(s)

✓ ☐ e) Meter location with type of service entrance (overhead or underground)

✓ ☐ f) Appliances and HVAC equipment

✓ ☐ g) Arc Fault Circuits (AFCI) in bedrooms

HVAC information

✓ ☐ a) Manual J sizing equipment or equivalent computation

✓ ☐ b) Exhaust fans in bathroom

✓ ☐ **Energy Calculations** (dimensions shall match plans)

☐ N/A ☐ **Gas System** Type (LP or Natural) Location and BTU demand of equipment

☐ N/A ☐ **Disclosure Statement for Owner Builders**

☐ ☐ ***__Notice Of Commencement Required Before Any Inspections Will Be Done__

☐ ☐ **Private Potable Water**

a) Size of pump motor

b) Size of pressure tank

c) Cycle stop valve if used

?

RICARDO CAVALLINO + ASSOCIATES
ARCHITECTURE · PLANNING · INTERIORS
22 SouthEast 5th Avenue, Gainesville, Florida 32601
Phone: 352-377-1751 · Fax: 352-377-1765 · Email: Architect@gru.net

Wind Load Calculations

SR 441, Lot 2, Lake City, Florida

9/15/05

Owner:	Eddix Development
Building:	Residential Single family, One Story
Model / Lot/Owner:	Stewart
Location:	SR 441, Lot 2, Lake City
Date:	9-9-05
Prepared by:	Ricardo Cavallino, AIA

This report establishes minimum requirements for wind load stability.
It is the Owner/Contractor's responsibility to provide all other construction materials, such as windows, doors, roof shingles, etc. to comply with the minimum code requirements for the wind velocity used. All wind load specified hardware shall be nailed as per manufacturer's directions.

Wind resistant of the referenced building has been designed using a wind velocity of **100 mph** as required by FBC 2001, Section 1606, and ASCE7-98.

Basic Wind Speed: 100 MPH for exposure B
Importance Factor: I=1. (Category II, ASCE7-98)
Internal Pressure Coefficient: 0.18(enclosed)
Wind Component and Cladding Loads: 36 psf (walls), 42.1 psf (roof) 68.3 psf (roof overhang)

See attached pre-engineered/pre-fabricated wood truss configuration as prepared by truss manufacturer.
In addition to this document, the Owner/Contractor shall comply with all requirements and method of construction of the FBC 2001

1. Roof Framing:

Sheathing:
1/2 plywood (CDX) or OSB, 4'x8" sheets, installed perpendicular to trusses, without blocking.

Nailing:
Fastened to roof framing with 8d common nails at 4" O.C. at all edges and 8" O.C. at field. Typical.

Wood Trusses: Roof slope 6/12
See Attached. Wood trusses sizes and connections shall be designed and sealed by a P.E. as part of the manufacturer's obligation. Maximum space to wood trusses is 24"o.c.

Wood Blocking:
Minimum 2x4, Group III lumber, grade 2 or better, nailed with minimum two 16d nails at each end or 4" O.C. cont.

Overhang:
2'-0" typical.

2. Wood walls:

Perimeter Bearing Walls:
2x6 Southern Yellow Pine, wood stud wall at 16" O.C., with 7/16" structural sheathing fastened with 8 d common nails at 3" O.C. at all edges and 6" O.C. at field. Provide 1/2" diameter x 8" long anchor bolt with 2" squarer washer at max. 6" from corners, jamb openings, all other anchors at max. 24" O.C.
All top plates shall be Southern Yellow Pine (SYP)

Interior Bearing Walls: (acting as interior shear wall)
2x4 SYP, wood atud wall at 16").C., with OSB 7/16" structural sheathing shall be continuous through the entire interior bearing walls and shall cover the top plate. Nail with 8d common nails at 3" o.c. at edges and 6" o.c. at field. Provide continuous horizontal 2x4 wood blocking at structural sheathing horizontal brakes. Shear wall segments: Longitudinal: 27'

Exterior Shear Walls:
Perimeter walls are acting as shear walls; structural sheathing shall be continuous through all the perimeter walls and shall cover the top plate. Nail with 8d common nails at 3" o.c. at edges and 6" o.c. at field. Provide continuous horizontal 2x6 wood blocking at structural sheathing horizontal brakes. Shear wall segments: Longitudinal: 91' and Transversal: 82'

Window and Door Headers:
All top plates, beams and headers shall be Southern Yellow Pine (SYP) Typical
See attached windows and doors schedule. All headers to be 3-2x12

Garage door Header:
Provide 12"x 3 ½" pre-fabricated, pre-engineered wood beam. Provide at each side of the garage door 5-2x6 cripples and 4-2x6 full studs. Provide at each side of the garage door, Simpson HTT22 with 5/8" x 8" epoxied anchor bolt. Nail cripples and jambs together with 16 d staggered at 8" o.c. (for each cripple and jamb). Provide at each side of the garage door, five Simpson LSTA36 at the top of the cripples and four Simpson LSTA 12 at the top of the jambs (extend and wrap top plates a minimum of 6"), and six Simpson SPH6 at the bottom of the cripples and jambs.

3. Connectors:

Wood Trusses:
Single ply trusses: Simpson H10 or equal at each end of each truss (unless otherwise noted).

Truss R7:
Provide at exterior bearing, two SYP studs below centerline of truss with 2 Simpson SPH6 at top and bottom. Provide two Simpson H10 at this bearing.

Girder trusses:

Girder R1:
Great room bearing: one Simpson LGT2. Provide one 3½"x 6" Versalam column directly below the truss centerline, with one Simpson HTT22. Secured with 5/8" x 8" epoxied anchor bolt to slab and 32 16d sinkers to column.
Porch bearing: two Simpson H10

Girder R26:
Provide at each end of girder, one Simpson LGT2. Provide one 3½"x 6" Versalam column directly below the truss center line, with one Simpson HTT22. Secured with 5/8" x 8" epoxied anchor bolt to slab and 32 16d sinkers to column.
Girder R21:
Provide at exterior bearing, one Simpson H15. Provide one 3½"x 31/2"" Versalam column directly below the truss center line, with one Simpson HTT22. Secured with 5/8" x 8" epoxied anchor bolt to slab and 32 16d sinkers to column.
Girder R27:
Provide two SYP studs below centerline of girder with 2 Simpson SPH6 at top and bottom.

Wood Walls to Footings:

Perimeter walls:	One 5/8" diam. x 8" anchor bolt with 2" square washer at 32" o.c. maximum and 6" from corners and jamb openings.
Interior Bearing wall:	One 5/8" diam x 6" expansion bolt with 2" square washer at 4'-0" o.c. and 6" from corners.

Wood walls to bottom and top plate:
Provide 1 Simpson SPH6 at top and bottom plates at 32" o.c.

Front and Rear Porch:
Column: Simpson ABU66 at each column bottom with 5/8" diam. x 8" long epoxied anchor bolt and two Simpson MSTI36 at column beam connection.
Beam: 3-2x12, two Simpson MSTI36 (or equal twist strap) at connections with walls.

Windows and doors openings:
See attached detail

4. Footings:

Materials:
3000 psi concrete. All reinforcement steel to be min. grade 40 in accordance with ASTM A 615, 616, 617, or A 706.

Perimeter Thickened Slab Edge:
20" high x 16" wide x cont. with 2-#5 cont.

Slab:
4" thick slab with 6x6, 1.4w x 1.4w wwf, or fiber reinforced concrete.

From:	The Columbia County Building Department Plans Review 135 NE Hernando Av. P. O Box 1529 Lake City Florida, 32056-1529

Reference to: Build permit application Number: **0509-95 SanJuan Construction, Owners Edix Investment of proposed parcel # 22-5S-17-09328-012**

On the date of October 3, 2005 application 0509-95 and plans for construction of a single family dwelling were reviewed and the following information or alteration to the plans will be required to continue processing this application. If you should have any question please contact the above address, or contact phone number (386) 758-1163 or fax any information to (386) 754-7088.

Please include application number 0509-95 when making reference to this application.

1. If a potable water well does not exist please provide a letter from the potable well water contractor giving the following information: size of pump motor, size of pressure tank and cycle stop valve if used.

2. Please provide a copy of the release, of the waste water disposal system from the Columbia County Environmental Department.

3. Please submit a recorded notice of commencement with this department prior to requesting any inspections on this dwelling.

4. On the elevation plan show the total structure height from establish finished grade to the highest ridge of the roof line.

5. Please show compliance with sections R322.1.1 of the FRC-2004

All new single-family houses, duplexes, triplexes, condominiums and townhouses shall provide at least one bathroom, located with maximum possible privacy, where bath rooms are provided on habitable grade levels, with a door that has a 29-inch (737 mm)

bearing value of the soils (PSF) upon which this structure foundation will be placed upon.

6. Please show compliance with sections R602.8 of the FRC-2004: Fireblocking required. Fireblocking shall be provided to cut off all concealed draft openings (both vertical and horizontal) and to form an effective fire barrier between stories, and between a top story and the roof space. Fireblocking shall be provided in wood-frame construction in the following locations.

1. In concealed spaces of stud walls and partitions, including furred spaces and parallel rows of studs or staggered studs; as follows:

1.1. Vertically at the ceiling and floor levels.

1.2. Horizontally at intervals not exceeding 10 feet (3048 mm).

8. Please show compliance with sections R313.1 of the FRC-2004: Smoke alarms. Smoke alarms shall be installed in the following locations:

1. In each sleeping room.

2. Outside each separate sleeping area in the immediate vicinity of the bedrooms.

3. On each additional story of the dwelling, including basements but not including crawl spaces and uninhabitable attics. In dwellings or dwelling units with split levels and without an intervening door between the adjacent levels, a smoke alarm installed on the upper level shall suffice for the adjacent lower level provided that the lower level is less than one full story below the upper level.

When more than one smoke alarm is required to be installed within an individual dwelling unit the alarm devices shall be interconnected in such a manner that the actuation of one alarm will activate all of the alarms in the individual unit. The alarm

bearing value of the soils (PSF) upon which this structure foundation will be placed upon.

5. Please show compliance with sections R602.8 of the IRC 2006. Firestopping requirements. Firestopping shall be provided to cut off all concealed draft openings (both vertical and horizontal) and to form an effective fire barrier between stories, and between a top story and the roof space. Firestopping shall be provided in wood-frame construction in the following locations:

1. In concealed spaces of stud walls and partitions, including furred spaces and parallel rows of studs or staggered studs, as follows:

1.1. Vertically at the ceiling and floor levels.

1.2. Horizontally at intervals not exceeding 10 feet (3048 mm).

6. Please show compliance with sections R313.1 of the IRC 2006. Smoke alarms. Smoke alarms shall be installed in the following locations:

1. In each sleeping room.

2. Outside each separate sleeping area in the immediate vicinity of the bedrooms.

3. On each additional story of the dwelling, including basements but not including crawl spaces and uninhabitable attics. In dwellings or dwelling units with split levels and without an intervening door between the adjacent levels, a smoke alarm installed on the upper level shall suffice for the adjacent lower level provided that the lower level is less than one full story below the upper level.

When more than one smoke alarm is required to be installed within an individual dwelling unit the alarm devices shall be interconnected in such a manner that the actuation of one alarm will activate all of the alarms in the individual unit. The alarm

shall be clearly audible in all bedrooms over background noise levels with all intervening doors closed.

All smoke alarms shall be listed and installed in accordance with the provisions of this code and the household fire warning equipment provisions of NFPA 72.

9. Show on the floor plan the total ampere rating of the electrical service panel.

10. Show compliance with sections 303.4 of the FMC-2004 for the protection of the HVAC unit and WH appliance located in the garage area: Protection from damage. Appliances shall not be installed in a location where subject to mechanical damage unless protected by approved barriers.

11. The Florida Energy Efficiency Code for Building Construction (form 600-A2001) line six: condition floor area 2441 and the structural plans condition floor area 2249 along with the application 0509-96 condition floor area 2249, condition floor area do not coincide please correct the Florida Energy Efficiency Code for Building Construction (form 600-A2001) line six.

Thank you,

Joe Haltiwanger
Plan Examiner
Columbia County Building Department

shall be clearly audible in all bedrooms over background noise levels with all intervening doors closed.

All smoke alarms shall be listed and installed in accordance with the provisions of this code and the household fire warning equipment provisions of NFPA 74.

9. Show on the floor plan the ampere rating of the electrical service panel.

10. Show compliance with sections 303.4 of the FMC-2004 for the protection of the HVAC unit and WH appliance located in the garage area. Protection from damage. Appliances shall not be installed in a location where subject to mechanical damage unless protected by approved barriers.

11. The Florida Energy Efficiency Code for Building Construction (form 600-A2001) line six, condition floor area 2445, and the structural plans condition floor area 2245 along with the application 06-346 condition floor area 2249, condition floor area do not coincide please verify the Florida Energy Efficiency Code for Building Construction (form 600-A2001) line six.

Thank you.

Joe Halliwanger
Plan Examiner
Columbia County Building Department

Cal-Tech Testing, Inc.
• Engineering
• Geotechnical
• Environmental
LABORATORIES

P.O. Box 1625 • Lake City, FL 32056-1625
6919 Distribution Avenue S., Unit #5 • Jacksonville, FL 32257

Tel. (386) 755-3633 • Fax (386) 752-5456
Tel. (904) 262-4046 • Fax (904) 262-4047

December 9, 2005

San Juan Construction
P. O. Box 140565
Gainesville, Florida 32614

Attention: Germain Sanchez

Reference: Bearing Capacity Evaluation
Proposed Residences
Niya II, Lots 1 and 2
Mason City, Florida
Cal-Tech Project No. 05-624

Dear Mr. Sanchez,

Cal-Tech Testing, Inc. has completed the subsurface investigation and engineering evaluation of the sites for two residences to be constructed at the referenced location in Mason City, Florida. The purposes of our investigation were to determine the general subsurface conditions at the two building sites and to evaluate the suitability of the existing site soils for an allowable bearing capacity of 2,000 psf.

We were provided site plans and understand each residence will be single-story and of wood frame construction. We believe support for the structures will be provided by conventional, shallow spread footings or by monolithic foundations.

Site Investigation

Subsurface conditions were investigated by performing four (4) Standard Penetration test borings advanced to depths of 7 feet. The borings were performed at the approximate locations indicated on the attached Location Plan. These locations were selected by Cal-Tech Testing, Inc. with your assistance.

The Standard Penetration Test (ASTM D-1586) is performed by driving a standard split-barrel sampler into the soil by blows of a 140-pound hammer falling 30 inches. The number of blows required to drive the sampler 1 foot, after seating 6 inches, is designated the penetration resistance, or N-value; this value is an index to soil density or consistency.

Findings

The soil borings generally encountered two soil strata. The first layer consists of 2.5 to 4.0 feet of very loose to loose, gray, tannish gray or grayish tan sand with silt (SP/SM). The N-values of this layer range from 2 to 9 blows per foot.

The second layer consists of an undetermined thickness of loose to medium dense, generally gray and orange, clayey sand (SC). The N-values for this layer range from 5 to 19 blows per foot. Groundwater was not encountered at the time of our investigation. For a more detailed description of the subsurface conditions encountered, please refer to the attached Boring Logs.

Discussion

We have performed a bearing capacity analysis for the subgrade soils and have assumed an 18-inch strip foundation the bottom of which is embedded 14 inches below the existing surface grade. We obtained an allowable bearing capacity of 2,000 pounds per square foot for this foundation with a factor of safety of about 1.4 against a bearing capacity failure.

For the assumed foundation, the site soils are suitable for an allowable bearing pressure of 2,000 pounds per square foot; however, we recommend you improve the bearing soils to provide a higher factor of safety.

We recommend the building limits and at least 3 feet beyond be stripped of grass, roots and other deleterious materials. Excavation should then be performed as required to establish the appropriate foundation and floor grades. This area should then be proof-rolled using heavy, rubber-tired equipment (a large, loaded, front-end loader, for example). The subgrade should then be proof-compacted to a minimum of 95% of the Modified Proctor maximum dry density to a depth of at least 2 feet below the bottoms of foundations and 1 foot below the bottoms of floor slabs.

Preparation of the site as described above should increase the factor of safety to approximately 2.0 and reduce the likelihood of detrimental foundation settling.

We appreciate the opportunity to be of service and look forward to a continued association. Please do not hesitate to contact us should you have questions concerning this report or if we may be of further assistance.

Respectfully submitted,
Cal-Tech Testing, Inc.

Linda Creamer

Linda Creamer
President / CEO

John C. Dorman, Jr., Ph.D., P.E.
Geotechnical Engineer 12/9/05
52612

B-1

Water Table: N/A

Depth (ft)	N-value	Soil Description
0		Dark Grey Sand with Silt, Trace Organics (SP/SM)
	4	Loose, Tannish Grey Sand with Silt, Trace Organics (SP/SM)
	9	Loose, Light Tannish Grey Sand with Silt (SP/SM)
5	16	Medium Dense, Light Tannish Grey and Orange, Clayey Sand (SC)
	19	Medium Dense, Light Tannish Grey, Orange and Red, Clayey Sand (SC)

B-2

Water Table: N/A

Depth (ft)	N-value	Soil Description
0		Dark Tannish Grey Sand with Silt, Trace Organics (SP/SM)
	3	Very Loose, Tannish Grey Sand with Silt (SP/SM)
	5	
5	19	Loose to Medium Dense, Light Tannish Grey, Orange and Red, Clayey Sand (SC)
	24	

B-3

Water Table: N/A

Depth (ft)	N-value	Soil Description
0		Dark Tannish Grey Sand with Silt, Trace Organics (SP/SM)
	2	Very Loose, Tannish Grey Sand with Silt (SP/SM)
	4	Loose, Light Greyish Tan Sand with Silt and Clay (SP/SM)
5	12	Medium Dense, Light Tannish Grey, Orange and Red, Very Clayey Sand (SC)
	19	

B-4

Water Table: N/A

Depth (ft)	N-value	Soil Description
0		Dark Tannish Grey Sand with Silt, Trace Organics (SP/SM)
	2	Very Loose, Tannish Grey Sand with Silt (SP/SM)
	2	Very Loose, Greyish Tan Sand with Clay (SP/SC)
5	7	Loose, Light Tannish Grey, Orange and Red, Clayey Sand (SC)
	11	Medium Dense, Light Grey and Orange, Very Clayey Sand (SC)

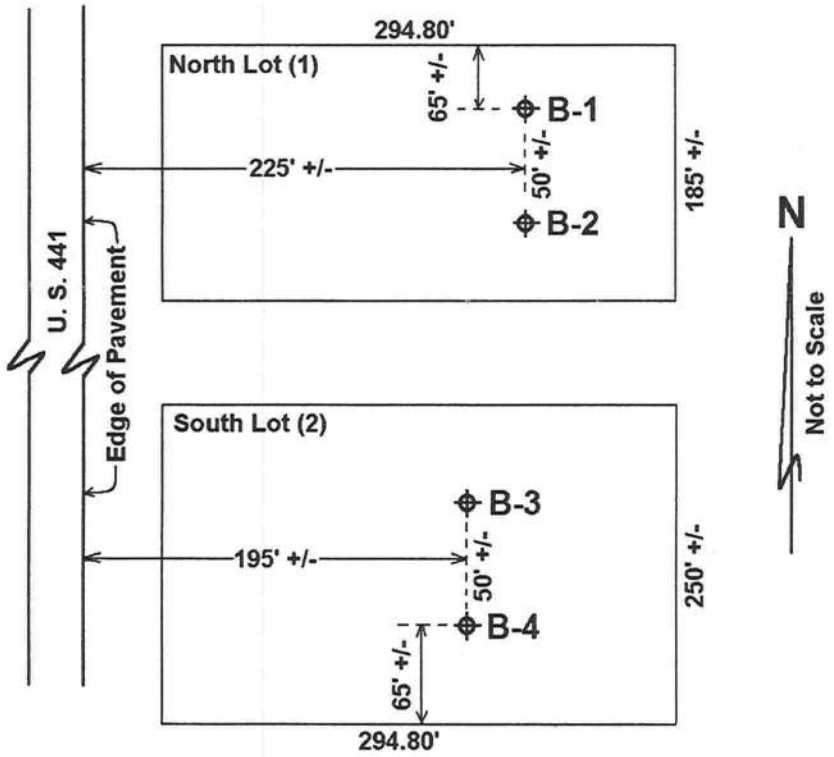

Boring Logs and Location Plan: Proposed Residences
Mason City, Florida

CERTIFICATE OF

OCCUPANCY

COLUMBIA COUNTY, FLORIDA

Department of Building and Zoning Inspection

This Certificate of Occupancy is issued to the below named permit holder for the building and premises at the below named location, and certifies that the work has been completed in accordance with the Columbia County Building Code.

Parcel Number 22-5S-17-09328-008

Building permit No. 000023991

Use Classification SFD,UTILITY

Fire: 23.68

Permit Holder SAN JUAN CONSTRUCTION

Waste: 49.00

Owner of Building EDIX INVESTMENT

Total: 72.68

Location: 10985 S US HWY 441

Date: 06/08/2006

Building Inspector

POST IN A CONSPICUOUS PLACE
(Business Places Only)