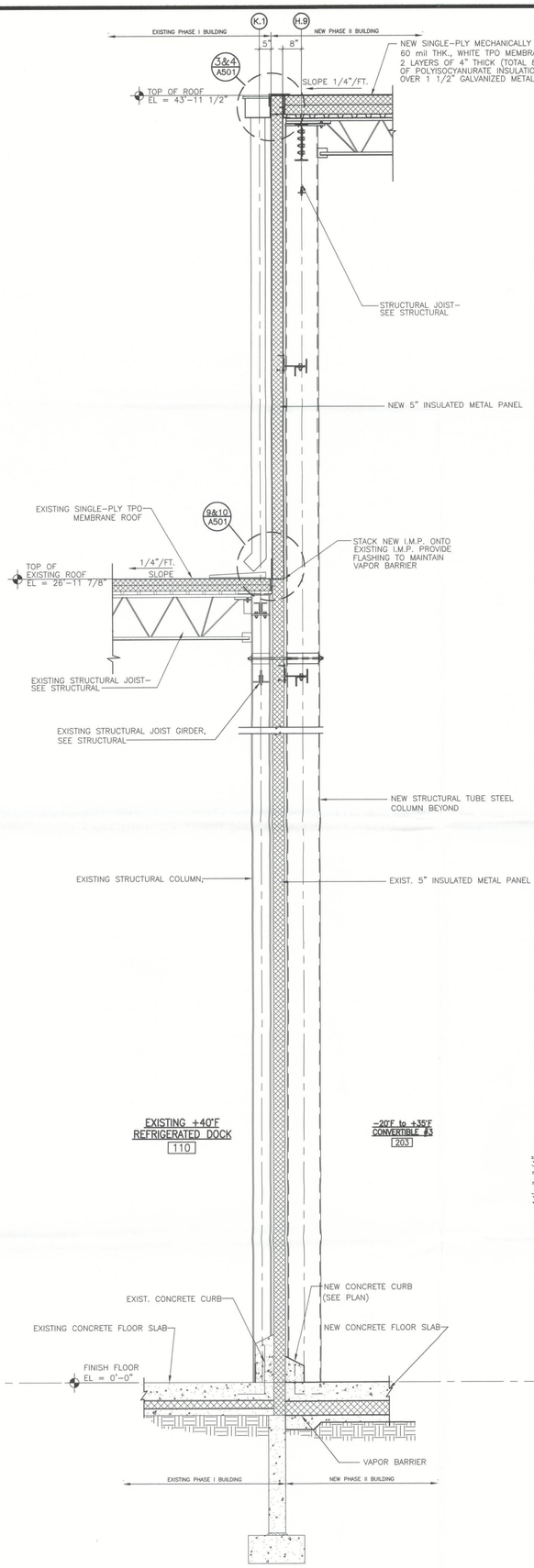

15 WALL SECTION
1/2" = 1'-0"

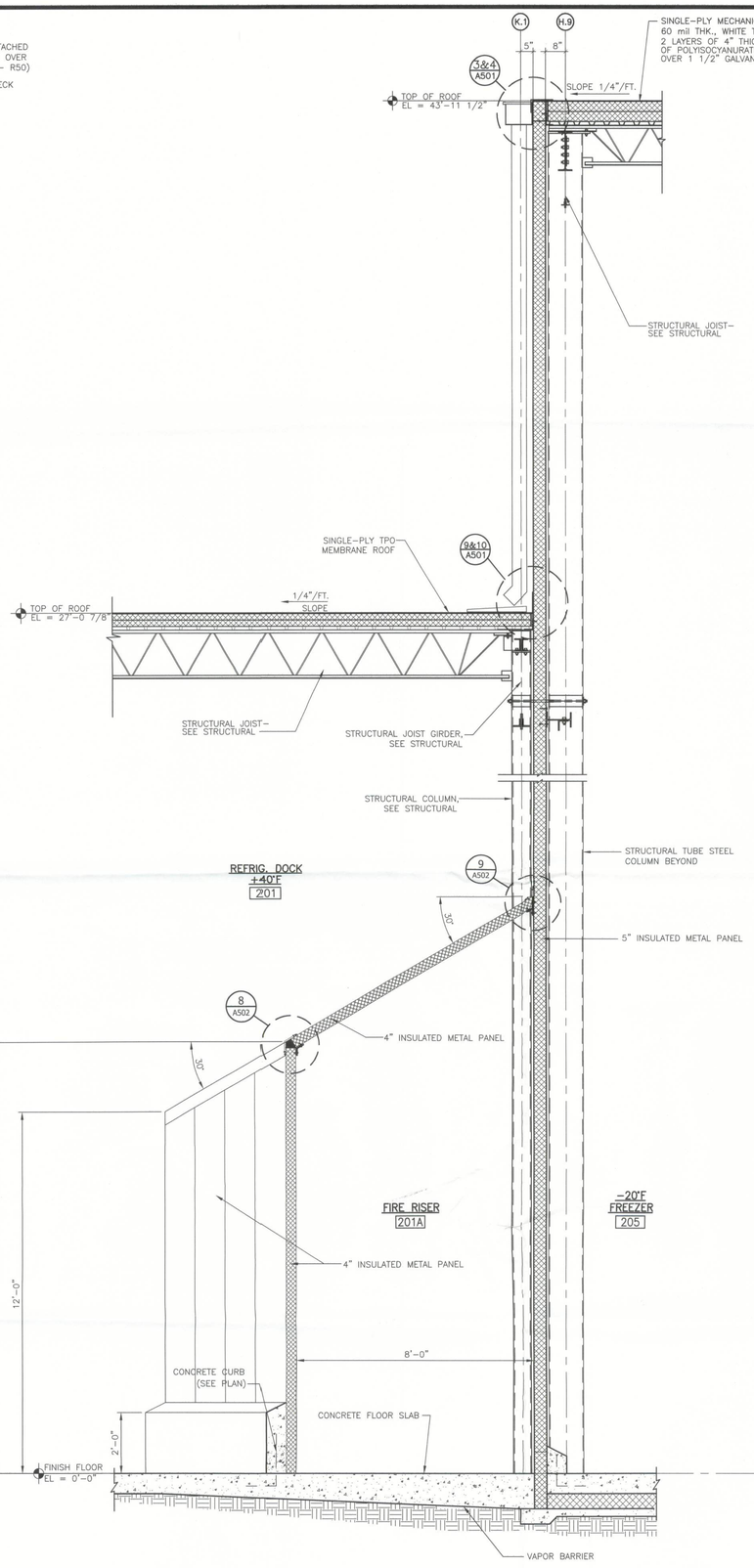

16 WALL SECTION
1/2" = 1'-0"

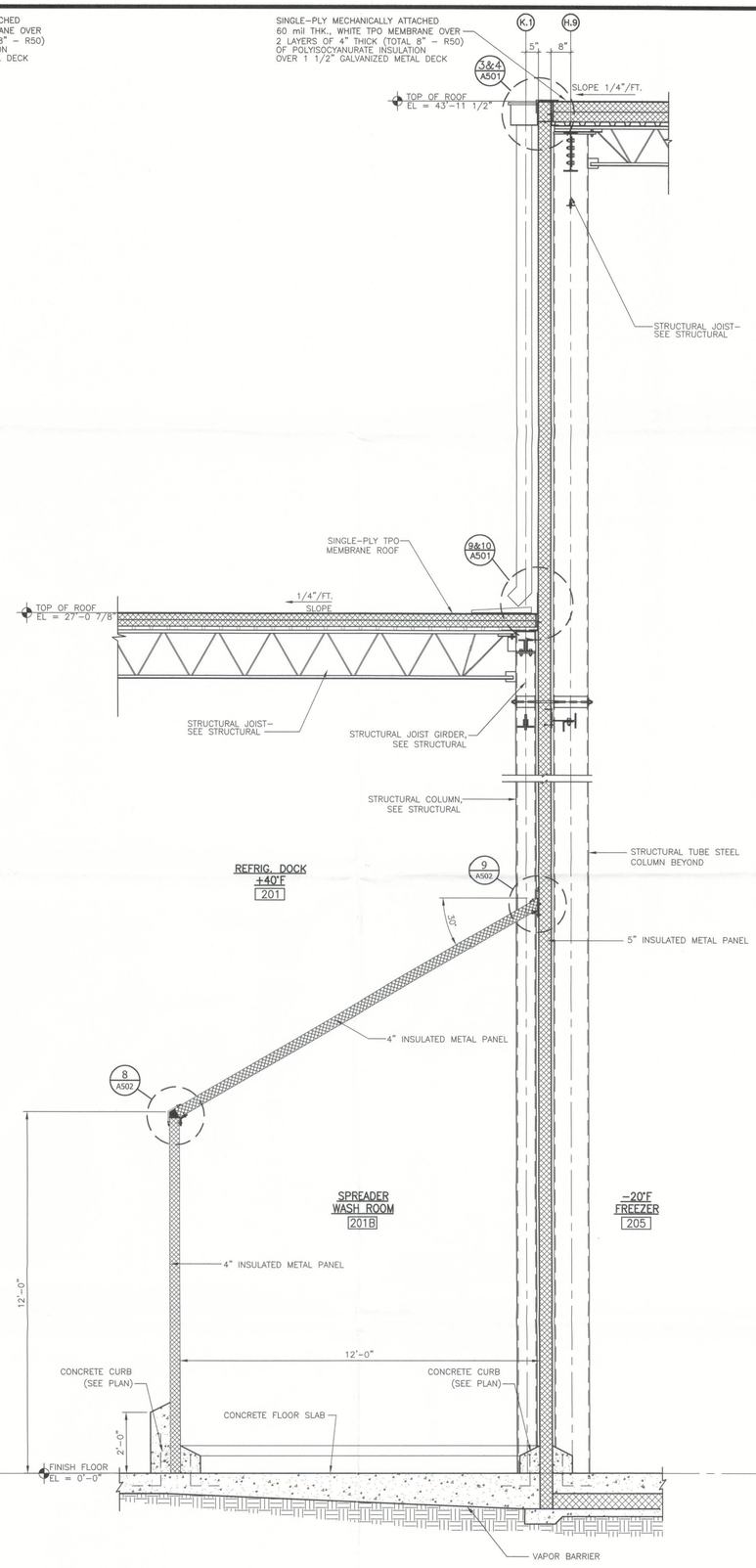

17 WALL SECTION
1/2" = 1'-0"

stellar
CREATIVE AS THE STELLAR GROUP
2900 HARTLEY ROAD, JACKSONVILLE, FL 32257 (904) 285-2600
WWW.STELLAR.NET
FLORIDA ARCHITECTURAL BUSINESS NO. AA-#7000112
FLORIDA ENGINEERING LICENSE NO. 5930

12-18-12

UNITED STATES COLD STORAGE, INC.
PHASE II EXPANSION
LAKE CITY, FLORIDA

WALL SECTIONS

REV.	DATE	BY	DESCRIPTION
A	12-18-12	BB	PERMIT ISSUE

JOB NO.	710-04224
DRAWN:	BB
CHECKED:	BB
SCALE:	1/2"=1'-0"

A303
DRAWING NO.

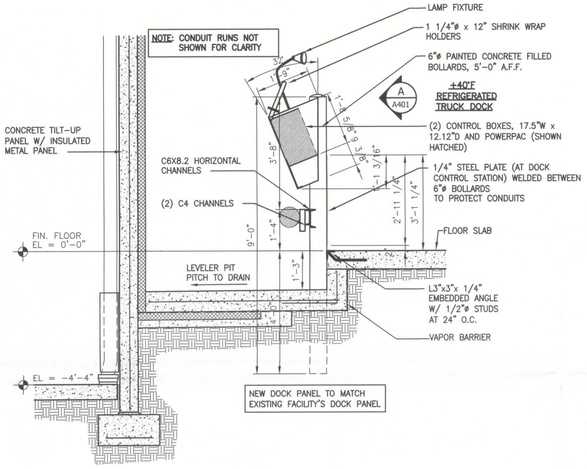

CONTROL PANEL SECTION

1 — 1/2" = 1'-0"

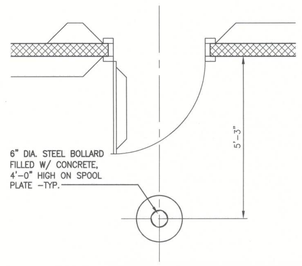

TYPICAL BOLLARD LOCATION AT THE DOOR

2 — 1/2" = 1'-0"

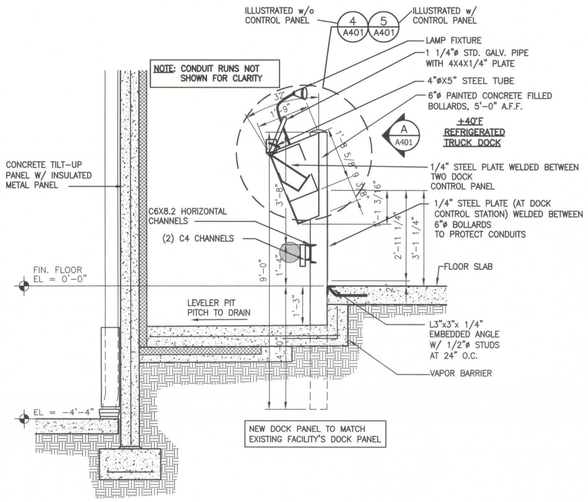

PLATE PANEL SECTION

3 — 1/2" = 1'-0"

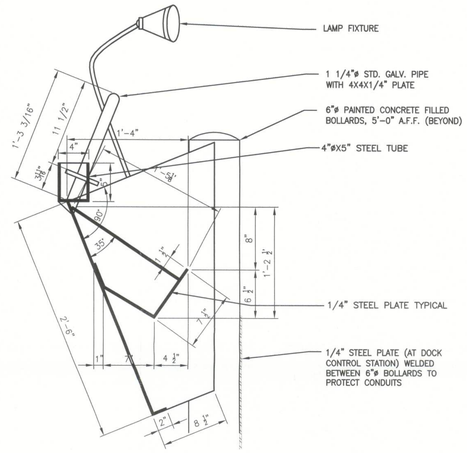

CONTROL PANEL DETAIL

4 — 1 1/2" = 1'-0"

NEW DOCK PANEL TO MATCH EXISTING FACILITY'S DOCK PANEL

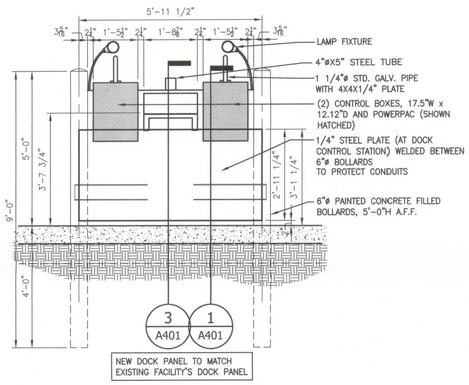

CONTROL PANEL ELEVATION

A — 1/2" = 1'-0"

NEW DOCK PANEL TO MATCH EXISTING FACILITY'S DOCK PANEL

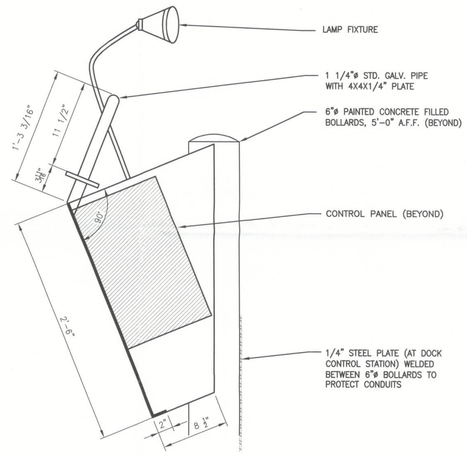

CONTROL PANEL DETAIL

5 — 1 1/2" = 1'-0"

NEW DOCK PANEL TO MATCH EXISTING FACILITY'S DOCK PANEL

stellar

OPERATING AS THE STELLAR GROUP
3900 HARTLEY ROAD, JACKSONVILLE, FL 32257 (904) 262-3000
WWW.STELLAR.NET
FLORIDA ARCHITECTURAL LICENSE NO. AA-C000112
FLORIDA ENGINEERING LICENSE NO. 8-2625

12-18-12

UNITED STATES COLD STORAGE, INC.
PHASE II EXPANSION
LAKE CITY, FLORIDA

DOCK PLANS, SECTIONS & DETAILS

REV.	DATE	BY	DESCRIPTION
A	12-18-12	BB	PERMIT ISSUE

JOB NO.	710-04224
DRAWN:	BB
CHECKED:	BB
SCALE:	AS NOTED

A401
DRAWING NO.

Filename: T:\Jobs\04200-04299\04224 United States Cold Storage Phase II Facility Expansion_FL\Design\Active\Arch\04224A401.dwg Last Saved By: BBARREN Date: 12/14/2012 2:14:33 PM Plotted: 12/14/2012 2:14:40 PM

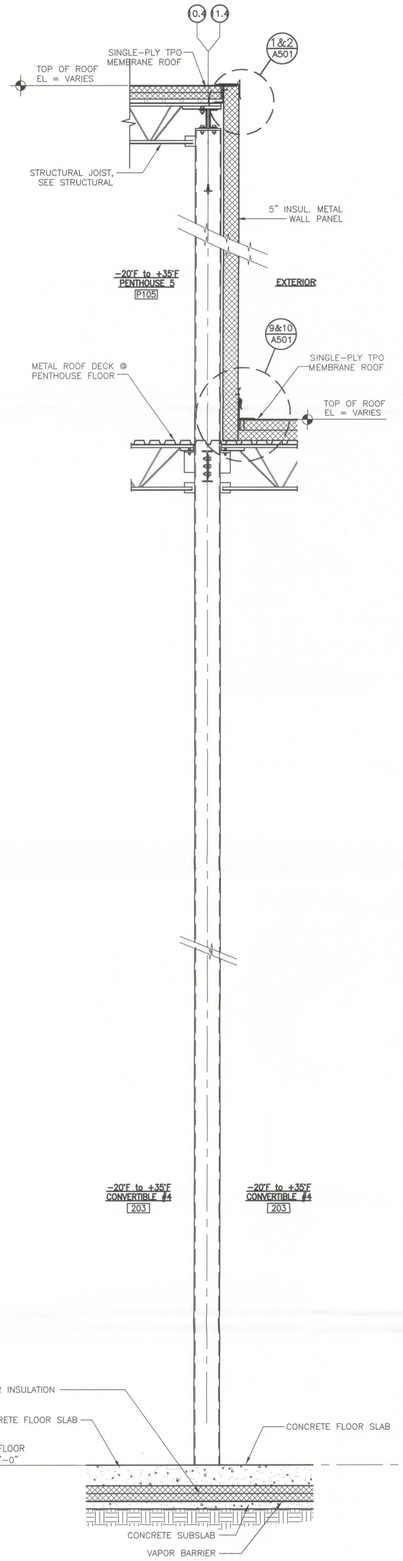

11 WALL SECTION
1/2" = 1'-0"

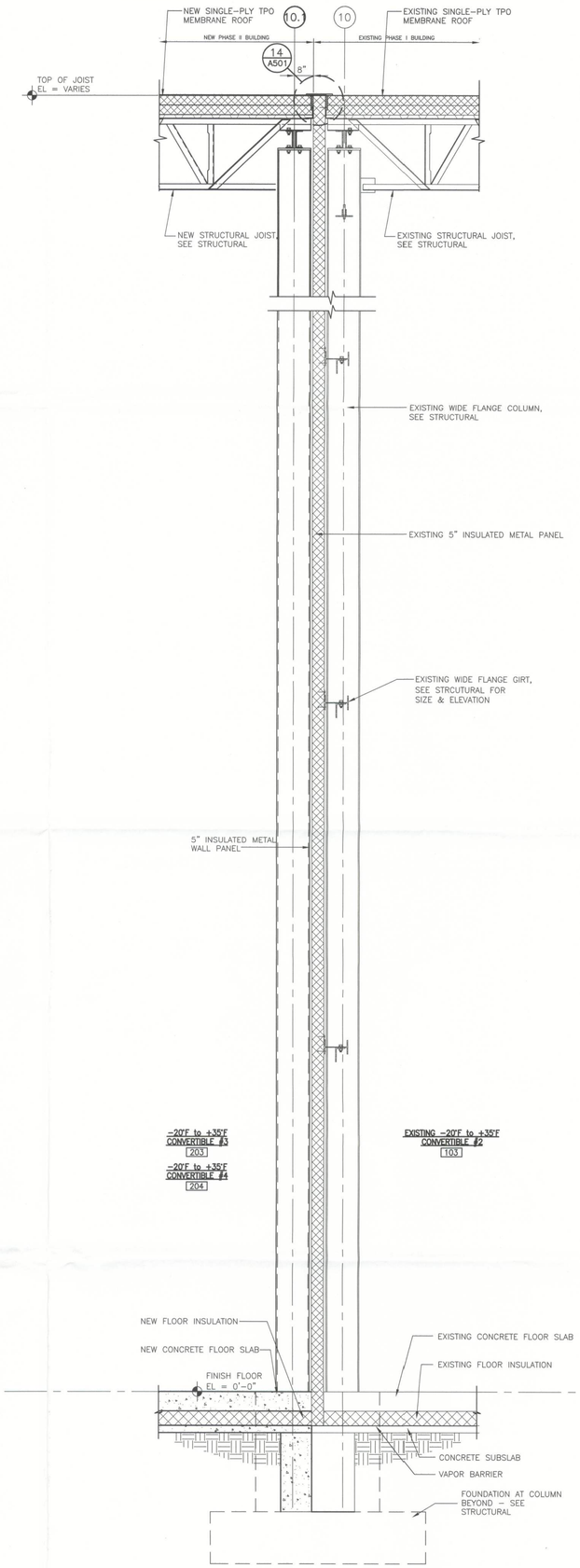

12 WALL SECTION
1/2" = 1'-0"

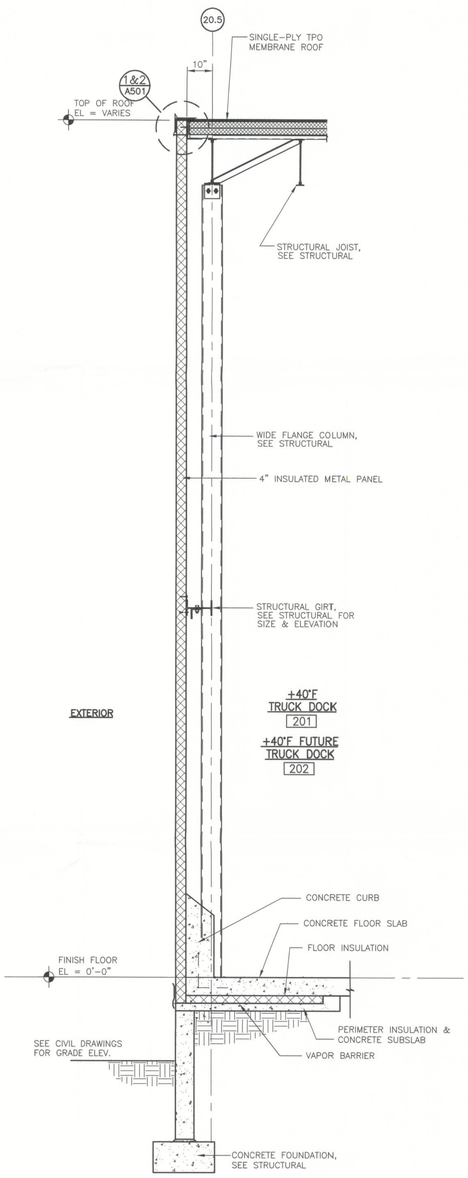

13 WALL SECTION
1/2" = 1'-0"

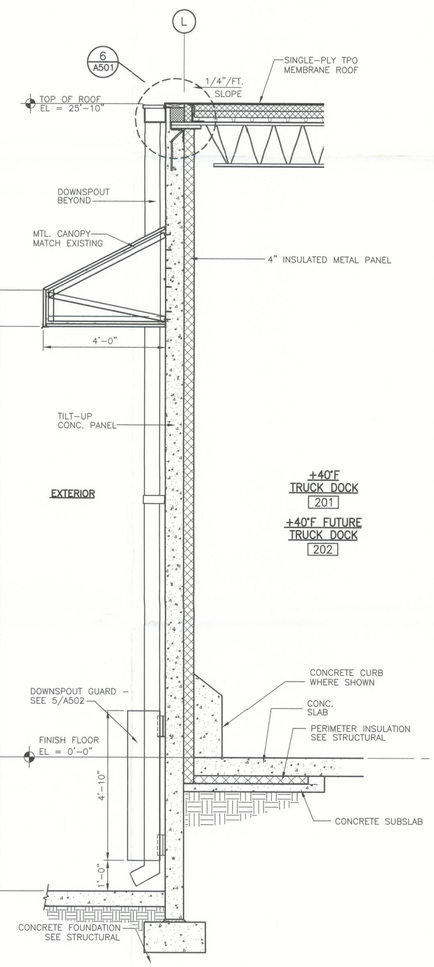

14 WALL SECTION
1/2" = 1'-0"

stellar
CONTINUE AT THE STELLAR GROUP
2500 HARTLEY ROAD, JACKSONVILLE, FL 32257 (904) 290-2000
WWW.STELLAR.NET
FLORIDA ARCHITECTURE BUSINESS, AA-C000112
FLORIDA ENGINEERING LICENSE NO. 9930

12-18-12

UNITED STATES COLD STORAGE, INC.
PHASE II EXPANSION
LAKE CITY, FLORIDA

WALL SECTIONS

REV.	DATE	BY	DESCRIPTION
A	12-19-12	BB	PERMIT ISSUE

JOB NO.	710-04224
DRAWN:	BB
CHECKED:	BB
SCALE:	1/2"=1'-0"

A302
DRAWING NO.

Filename: T:\Jobs\04200-04299\04224 United States Cold Storage Phase II Facility Expansion_FL\Design\Active\Arch\04224A302.dwg Last Saved By: BBARREN Date: 12/14/2012 10:11:47 AM Plotted: 12/14/2012 2:13:00 PM

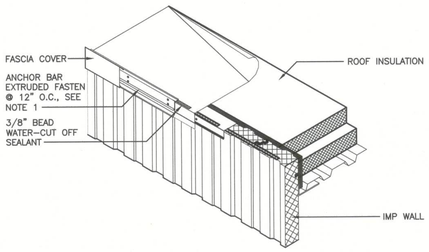

1 ROOF EDGE DRIP DETAIL
3/4"=1'-0"

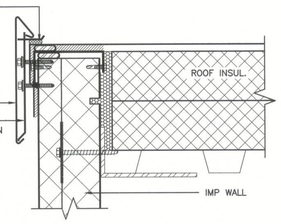

2 ROOF EDGE DRIP DETAIL
3"=1'-0"

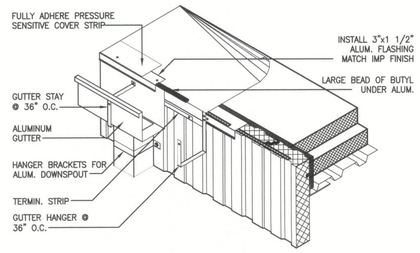

3 ROOF EDGE GUTTER DETAIL
3/4"=1'-0"

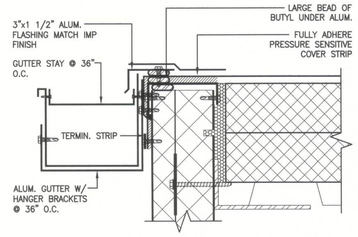

4 ROOF EDGE GUTTER DETAIL
3"=1'-0"

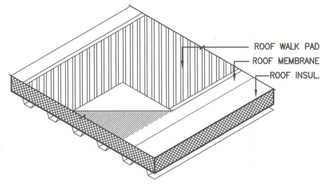

5 WALK PAD DETAIL
3/4"=1'-0"

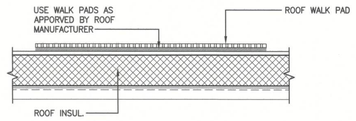

6 WALK PAD DETAIL
1 1/2"=1'-0"

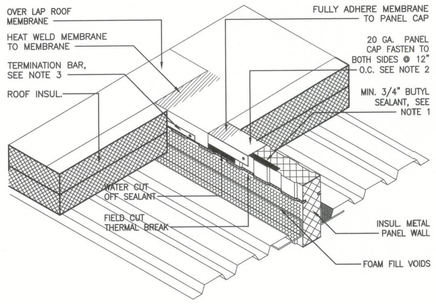

7 WALL / ROOF JUNCTION DETAIL
1"=1'-0"

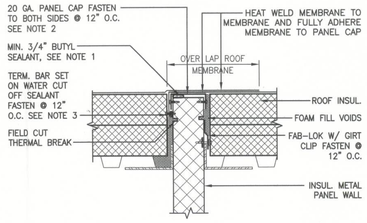

8 WALL / ROOF JUNCTION DETAIL
1 1/2"=1'-0"

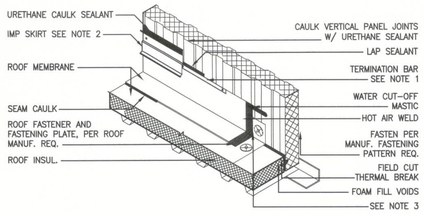

9 BASE FLASHING DETAIL
3/4"=1'-0"

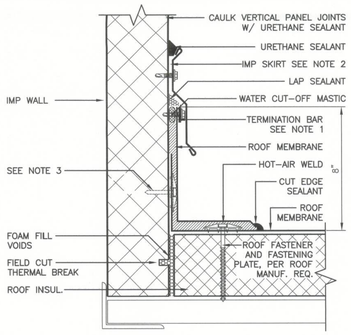

10 BASE FLASHING DETAIL
3"=1'-0"

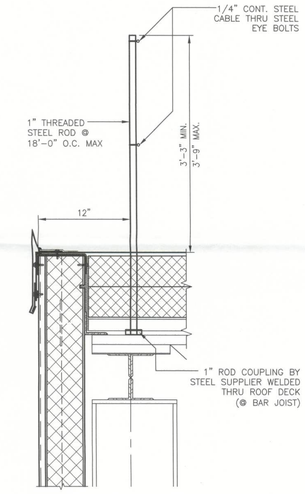

ALL EXCEPT ROD COUPLING SUPPLIED & INSTALLED BY ROOFING/INSULATION SUBCONTRACTOR ROOFING/INSULATION SUBCONTRACTOR TO REMOVE & PATCH ROOF ON COMPLETION OF THE ROOF WORK

15 TEMPORARY EDGE WARNING DETAIL
1 1/2"=1'-0"

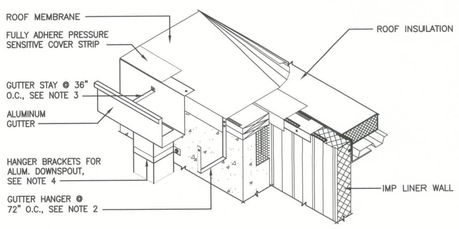

11 ROOF EDGE GUTTER DETAIL
3/4"=1'-0"

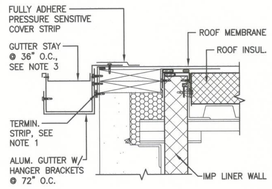

12 ROOF EDGE GUTTER DETAIL
1 1/2"=1'-0"

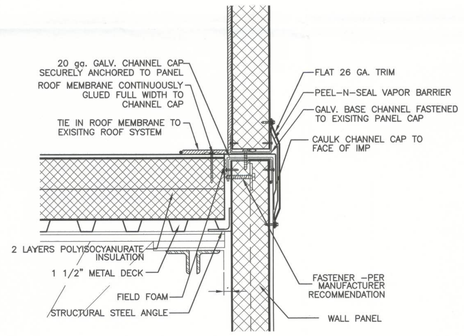

13 PANEL STACK DETAIL
1 1/2"=1'-0"

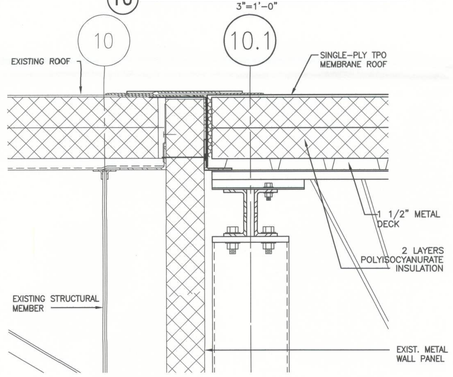

14 EXISTING TO NEW ROOF DETAIL
1 1/2"=1'-0"

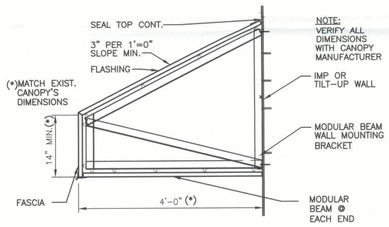

NOTE:
VERIFY ALL DIMENSIONS WITH CANOPY MANUFACTURER

NOTE:
PRE-FINISHED METAL CANOPY – STRUCTURAL DESIGN BY CANOPY SUPPLIER. DESIGN TO RESIST 110 MPH WIND LOAD AND 90 #/FT. SNOW LOAD. PROVIDE SHOP DRAWINGS SIGNED & SEALED BY ENGINEER REGISTERED IN THE STATE OF FLORIDA INCLUDING DETAILS FOR CONNECTIONS. PROVIDE ALL NECCESSARY ACCESSORIES: BRACKETS, HANGERS, FLASHING, BOLTS AND FASTENERS, ETC. AS REQUIRED FOR A COMPLETE INSTALLATION.

16 TRUCK DOCK CANOPY DETAIL
3/4"=1'-0"

stellar
OPERATING AS THE STELLAR GROUP
2900 HARTLEY ROAD, JACKSONVILLE, FL. 32257 (904) 260-2900
FLORIDA ARCHITECTURAL LICENSE NO. AA-C000112
FLORIDA ENGINEERING LICENSE NO. 9930

12-18-12

UNITED STATES COLD STORAGE, INC.
PHASE II EXPANSION
LAKE CITY, FLORIDA

ROOF DETAILS

REV.	DATE	BY	PERMIT ISSUE DESCRIPTION
A	12-18-12	BB	

JOB NO. 710-04224
DRAWN: BB
CHECKED: BB
SCALE: AS NOTED

A501
DRAWING NO.

Filename: T:\Jobs\04200-04299\04224 United States Cold Storage Phase II Facility Expansion_FL\Design\Active\Arch\04224A501.dwg Last Saved By: BBARREN Date: 12/14/2012 10:11:40 AM Plotted: 12/14/2012 2:14:56 PM

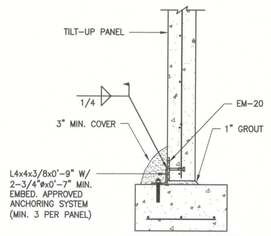

TILT-UP PANEL TO FTG.
ANCHOR ATTACHMENT
SCALE: 3/4" = 1'-0" (1)

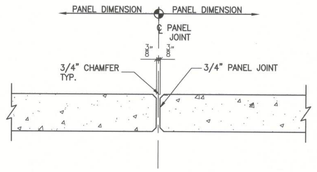

TYPICAL PANEL JOINT
SCALE: 1"=1'-0" (2)

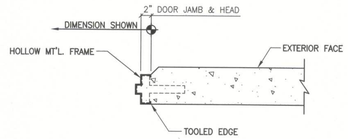

TYPICAL STRUCTURAL PANEL

TYPICAL H.M. DOOR FRAME
SCALE: 1"=1'-0" (3)

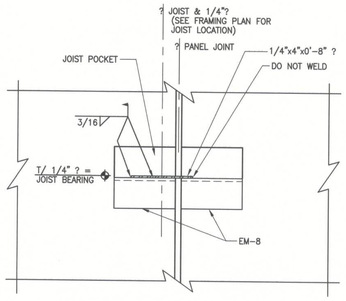

DBL. JOIST POCKET DETAIL
@ PANEL JOINT
SCALE: 1 1/2"=1'-0" (4)

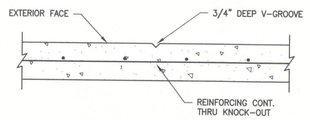

V-GROOVE
FOR KNOCK-OUT
SCALE: 1"=1'-0" (5)

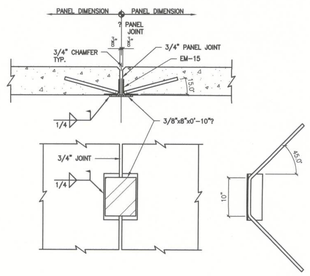

STICH PLATE DETAIL
SCALE: 3/4" = 1'-0" (6)

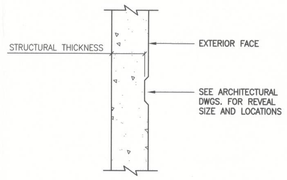

TYPICAL PANEL REVEAL
SCALE: 1"=1'-0" (7)

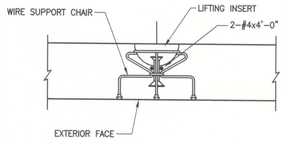

TYPICAL LIFTING INSERT DETAIL
SCALE: N.T.S. (8)

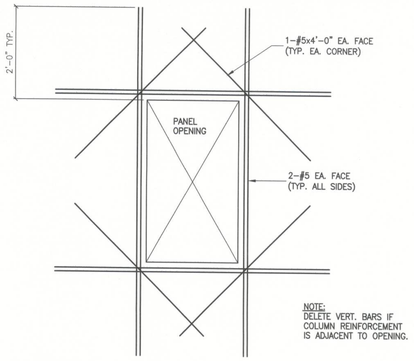

TYPICAL REINF. AROUND OPNG.
SCALE: N.T.S. (9)

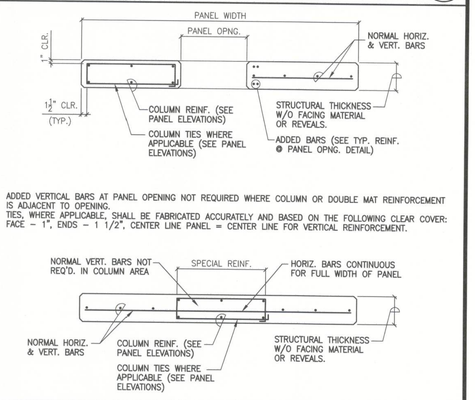

TYPICAL PANEL REINF. LAYOUT
SCALE: N.T.S. (10)

MARK	SIZE
EM-1	3/8"x6"x0'-6" ? W/ 2-1/2"øx0'-4" HD STUDS
EM-2	3/8"x8"x0'-8" ? W/ 2-3/4"øx0'-6" HD STUDS
EM-3	1/2"x6"x0'-6" ? W/ 2-1/2"øx0'-4" HD STUDS
EM-4	1/2"x6"x0'-8" ? W/ 2-1/2"øx0'-4" HD STUDS
EM-5	1/2"x6"x1'-0" ? W/ 3-1/2"øx0'-4" HD STUDS
EM-6	1/2"x6"x1'-0" ? W/ 6-1/2"øx0'-4" HD STUDS
EM-7	1/2"x6"x1'-0" ? W/ 6-3/4"øx0'-6" HD STUDS
EM-8	L4x4x1/4x0'-8" W/ 2-1/2"øx18" D.B.A.
EM-9	L5x5x3/8x1'-0" W/ 3-1/2"øx18" D.B.A.
EM-10	L6x6x3/8x1'-0" W/ 3-1/2"øx18" D.B.A.
EM-11	1/2"x8"x0'-8" ? W/ 4-1/2"øx0'-4" HD STUDS
EM-13	1/2"x8"x1'-0" ? W/ 9-1/2"øx0'-6" HD STUDS
EM-15	L4x4x1/4x1'-0" W/ 1-1/2"øx24" D.B.A.
EM-16	L5x5x3/8x1'-4" W/ 3-1/2"øx18" D.B.A.
EM-17	1/2"x8"x1'-0" ? W/ 9-1/2"øx0'-4" HD STUDS
EM-18	L6x6x3/8x1'-6" W/ 3-1/2"øx18" D.B.A.

EMBED PLATE SCHEDULE
SCALE: N.T.S. (11)

stellar
OPERATING AS THE STELLAR GROUP
2900 HARTLEY ROAD, JACKSONVILLE, FL. 32257 (904) 292-2900
FLORIDA ARCHITECTURAL LICENSE NO. AA-C000112
FLORIDA ENGINEERING LICENSE NO. 5930

James T. Matelski 12/20/12
JAMES T. MATELSKI
FL. LICENSE #52121

UNITED STATES COLD STORAGE, INC.
PHASE II EXPANSION
LAKE CITY, FLORIDA

TILT-UP
SECTIONS
& DETAILS

REV.	DATE	BY	DESCRIPTION
A	12/20/12	SM	PERMIT ISSUE

JOB NO. 710-04224
DRAWN: SM
CHECKED: DK
SCALE: AS NOTED

S515
DRAWING NO.

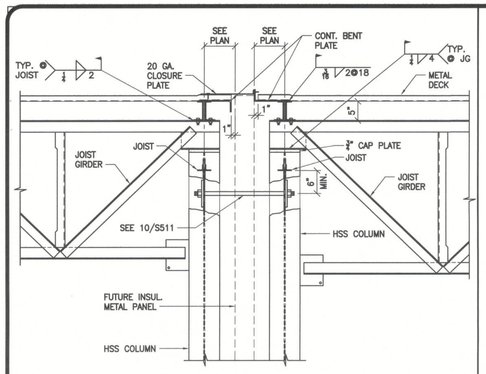

SECTION
FUTURE COMMON WALL
SCALE: 3/4"=1'-0"
1

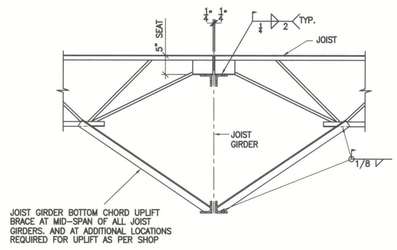

JOIST GIRDER BOTTOM CHORD UPLIFT BRACE AT MID-SPAN OF ALL JOIST GIRDERS, AND AT ADDITIONAL LOCATIONS REQUIRED FOR UPLIFT AS PER SHOP

NOTE
JOIST GIRDER BOTTOM CHORD BRACE TO BE DESIGNED AND FURNISHED BY THE JOIST GIRDER MANUFACTURER.

SECTION
SCALE: 3/4"=1'-0"
2

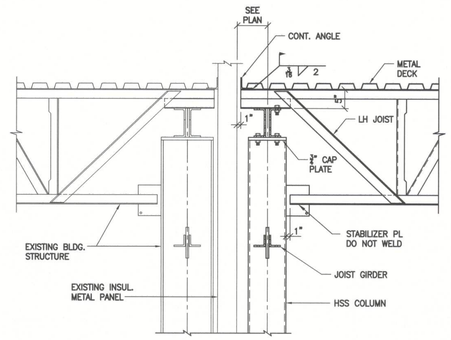

SECTION
SCALE: 3/4"=1'-0"
3

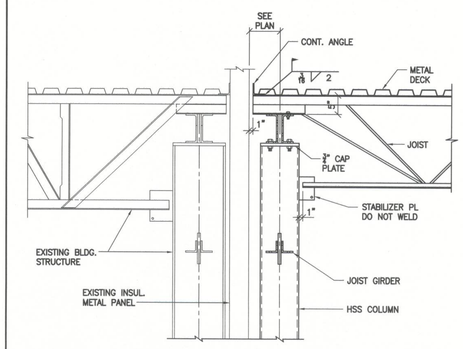

SECTION
SCALE: 3/4"=1'-0"
4

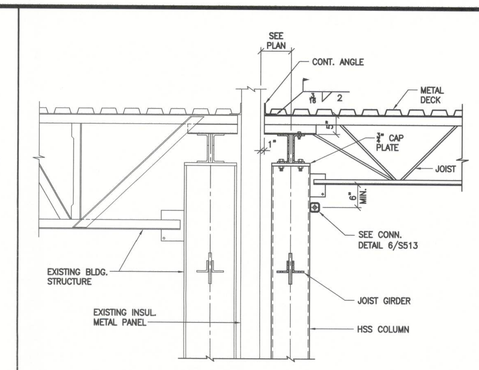

SECTION
SCALE: 3/4"=1'-0"
5

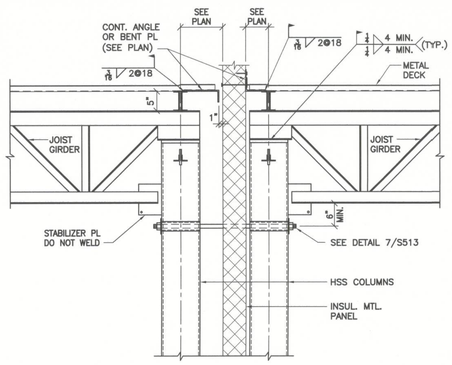

SECTION
SCALE: 3/4"=1'-0"
6

NOTE:
WELD COLDER SIDE NUT AFTER PANEL INSTALLATION AND PRIOR TO TEMPERATURE PULL DOWN. BACK WARM SIDE NUT OFF 1 1/2 TURNS MIN. PRIOR TO TO TEMPERATURE PULL DOWN. AFTER COMPLETION OF PULL DOWN, TIGHTEN ALL NUTS SNUG AND WELD.

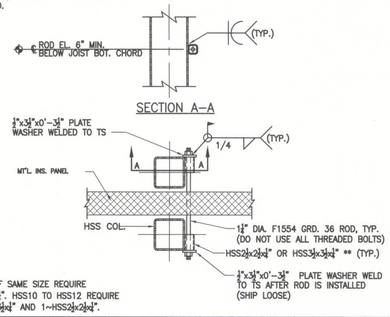

** HSS OF SAME SIZE REQUIRE HSS2 1/2x2 1/2x1/4". HSS10 TO HSS12 REQUIRE 1-HSS3 1/2x3 1/2x1/4" AND 1-HSS2 1/2x2 1/2x1/4".

DETAIL
COLUMN/COLUMN CONN.
SCALE: 3/4"=1'-0"
7

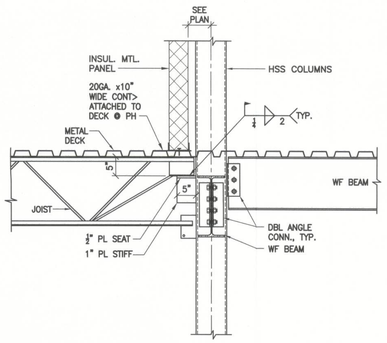

SECTION
SCALE: 3/4"=1'-0"
8

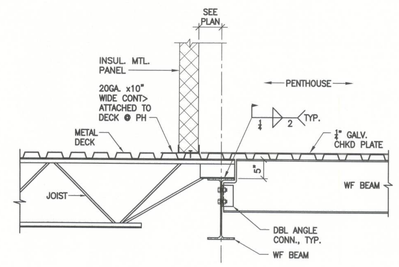

SECTION
SCALE: 3/4"=1'-0"
9

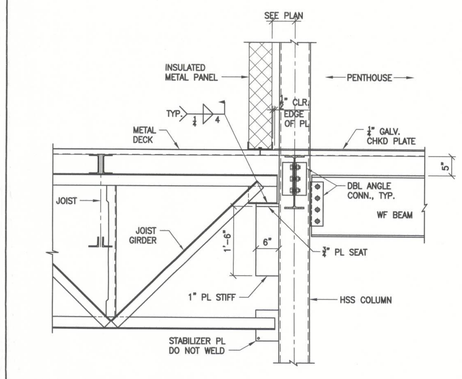

SECTION
SCALE: 3/4" = 1'-0"
10

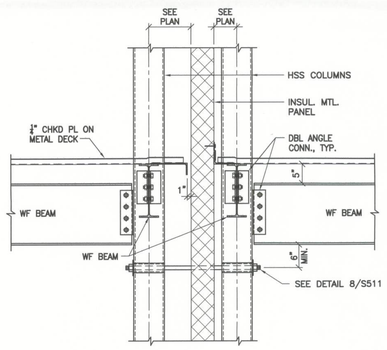

SECTION
SCALE: 3/4" = 1'-0"
11

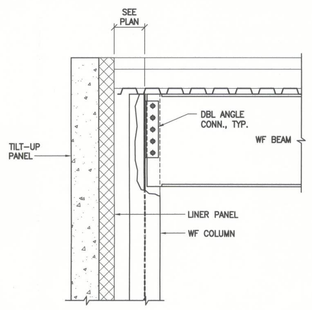

SECTION
SCALE: 3/4" = 1'-0"
12

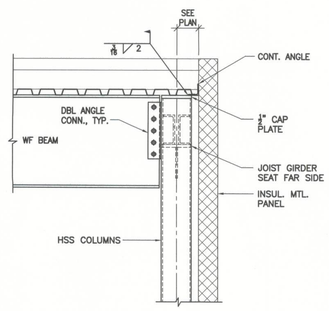

SECTION
SCALE: 3/4" = 1'-0"
13

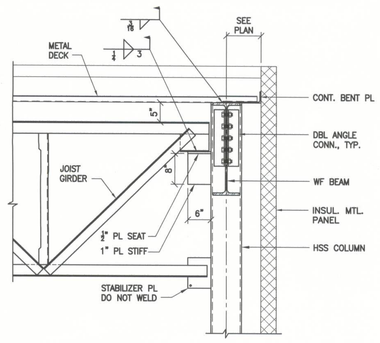

SECTION
SCALE: 3/4" = 1'-0"
14

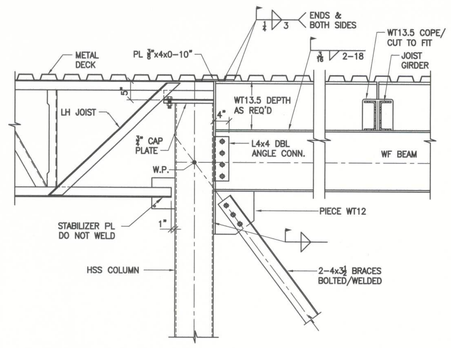

SECTION
SCALE: 3/4" = 1'-0"
15

stellar
OPERATING AS THE STELLAR GROUP
2900 HARTLEY ROAD, JACKSONVILLE, FL 32257 (904) 290-2600
WWW.STELLAR.NET
FLORIDA ARCHITECTURE BUSINESS NO. AA-C000112
FLORIDA ENGINEERING LICENSE NO. 9030

JAMES F. MATELSKI
PE LICENSE #63121

UNITED STATES COLD STORAGE, INC.
PHASE II EXPANSION
LAKE CITY, FLORIDA

SECTIONS & DETAILS

REV.	DATE	BY	DESCRIPTION
A	12/20/12	SM	PERMIT ISSUE

JOB NO. 710-04224
DRAWN: SM
CHECKED: DK
SCALE: AS NOTED

S513
DRAWING NO.

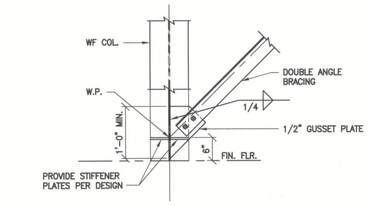

NOTES:
PROVIDE TWO BOLT MINIMUM CONNECTIONS OR ONE ERECTION BOLT FOR FIELD WELDED CONNECTIONS. CONNECTION OF BRACE TO GUSSET PLATE AND GUSSET PLATE TO COLUMN BY FABRICATOR TO DEVELOP BRACE FORCE SHOWN IN BRACING SCHEDULE

BRACING DETAIL
BOTTOM GUSSET PLATE — SCALE: 3/4"=1'-0" — (1)

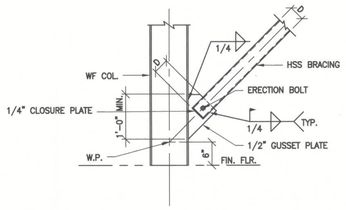

NOTES:
PROVIDE ONE ERECTION BOLT TO BE REMOVED AND HOLE PLUG WELDED AFTER BRACING CONNECTION TO GUSSET PLATE HAS BEEN MADE. CONNECTION OF BRACE TO GUSSET PLATE AND GUSSET PLATE TO COLUMN BY FABRICATOR TO DEVELOP BRACE FORCE SHOWN IN BRACING SCHEDULE

BRACING DETAIL
BOTTOM GUSSET PLATE — SCALE: 3/4"=1'-0" — (2)

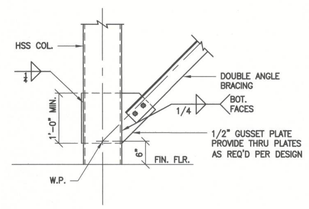

NOTES:
PROVIDE TWO BOLT MINIMUM CONNECTIONS OR ONE ERECTION BOLT FOR FIELD WELDED CONNECTIONS. CONNECTION OF BRACE TO GUSSET PLATE AND GUSSET PLATE TO COLUMN BY FABRICATOR TO DEVELOP BRACE FORCE SHOWN IN BRACING SCHEDULE

BRACING DETAIL
BOTTOM GUSSET PLATE — SCALE: 3/4"=1'-0" — (3)

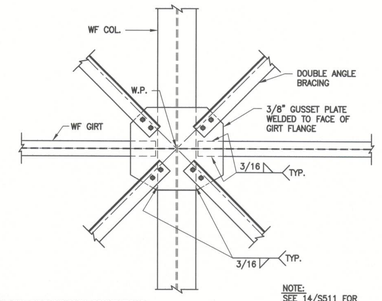

NOTES:
PROVIDE TWO BOLT MINIMUM CONNECTIONS OR ONE ERECTION BOLT FOR FIELD WELDED CONNECTIONS. CONNECTION OF BRACE TO GUSSET PLATE AND GUSSET PLATE TO GIRT AND COLUMN BY FABRICATOR TO DEVELOP BRACE FORCE SHOWN IN BRACING SCHEDULE

NOTE:
SEE 14/S511 FOR GIRT ATTACHMENT TO COLUMN.

BRACING DETAIL
BRACE/COL./GIRT INTER. — SCALE: 3/4"=1'-0" — (4)

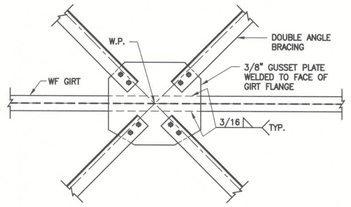

NOTES:
PROVIDE TWO BOLT MINIMUM CONNECTIONS OR ONE ERECTION BOLT FOR FIELD WELDED CONNECTIONS. CONNECTION OF BRACE TO GUSSET PLATE AND GUSSET PLATE TO GIRT BY FABRICATOR TO DEVELOP BRACE FORCE SHOWN IN BRACING SCHEDULE

BRACING DETAIL
BRACE/GIRT INTER. — SCALE: 3/4"=1'-0" — (5)

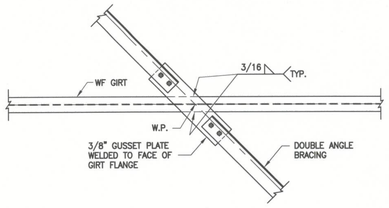

NOTES:
PROVIDE TWO BOLT MINIMUM CONNECTIONS OR ONE ERECTION BOLT FOR FIELD WELDED CONNECTIONS. CONNECTION OF BRACE TO GUSSET PLATE AND GUSSET PLATE TO GIRT BY FABRICATOR TO DEVELOP BRACE FORCE SHOWN IN BRACING SCHEDULE

BRACING DETAIL
@ BRACE & GIRT INTER. — SCALE: 3/4"=1'-0" — (6)

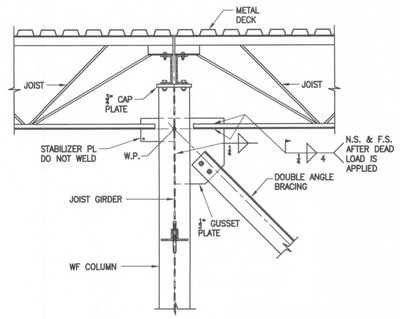

BRACING DETAIL - ANGLE BRACING
WF COL. / JOIST — SCALE: 3/4"=1'-0" — (7)

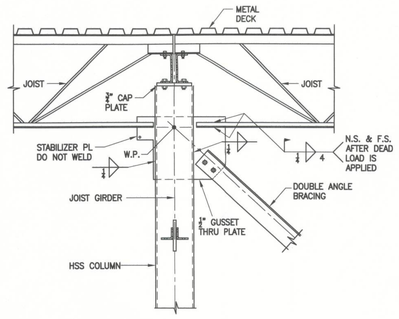

BRACING DETAIL - ANGLE BRACING
HSS COL. / JOIST — SCALE: 3/4"=1'-0" — (8)

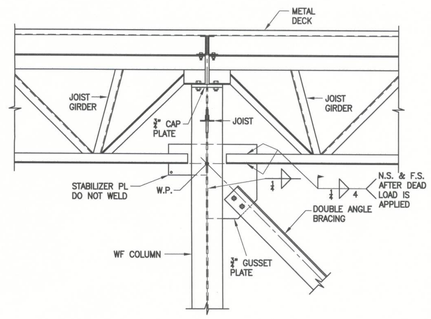

BRACING DETAIL - ANGLE BRACING
WF COL. / JOIST GIRDER — SCALE: 3/4"=1'-0" — (9)

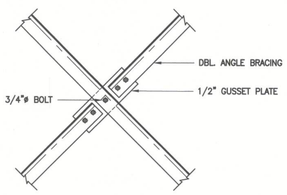

NOTES:
PROVIDE TWO BOLT MINIMUM CONNECTIONS OR ONE ERECTION BOLT FOR FIELD WELDED CONNECTIONS. CONNECTION OF BRACE TO GUSSET PLATE BY FABRICATOR TO DEVELOP BRACE FORCE SHOWN IN BRACING SCHEDULE

BRACING DETAIL
@ BRACE INTERSECTION — SCALE: 3/4"=1'-0" — (10)

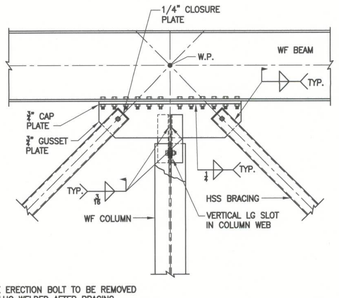

NOTES:
PROVIDE ONE ERECTION BOLT TO BE REMOVED AND HOLE PLUG WELDED AFTER BRACING CONNECTION TO GUSSET PLATE HAS BEEN MADE. CONNECTION OF BRACE TO GUSSET PLATE AND GUSSET PLATE TO COLUMN BY FABRICATOR TO DEVELOP BRACE FORCE SHOWN IN BRACING SCHEDULE

BRACING DETAIL
SCALE: 3/4"=1'-0" — (11)

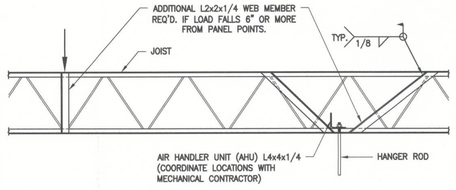

NOTE:
MAXIMUM POINT LOAD NOT REQUIRING JOIST REINFORCEMENT AS SPECIFIED BY JOIST SUPPLIER.

CONCENTRATED LOAD ON JOIST
SCALE: 3/4"=1'-0" — (12)

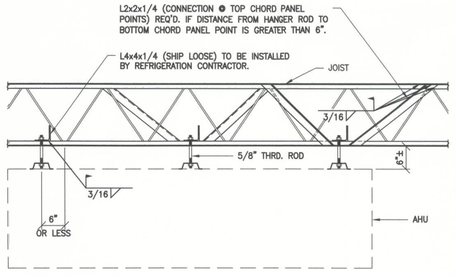

NOTE:
COORDINATE LOCATIONS WITH REFRIGERATION CONTRACTOR

TYPICAL AHU SUPPORT
SCALE: 3/4"=1'-0" — (13)

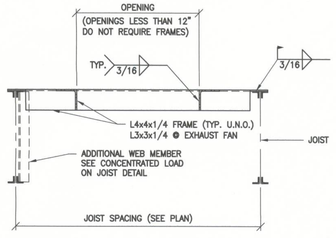

NOTES:
1. PROVIDE SUPPORT ANGLE FOR OPENINGS AND CURBS.
2. VERIFY SIZE AND LOCATION OF OPENING WITH ARCHITECTURAL AND MECHANICAL DRAWINGS PRIOR TO FABRICATION AND ERECTION.
3. FRAME DIMENSIONS SHALL BE COORDINATED WITH UNIT CUT SHEETS.

TYPICAL ROOF FRAME
SCALE: 1"=1'-0" — (14)

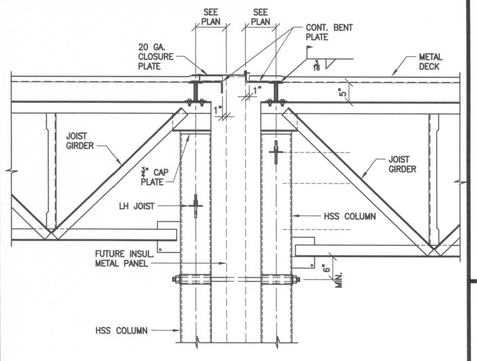

SECTION
@ FUTURE COMMON WALL — SCALE: 3/4"=1'-0" — (15)

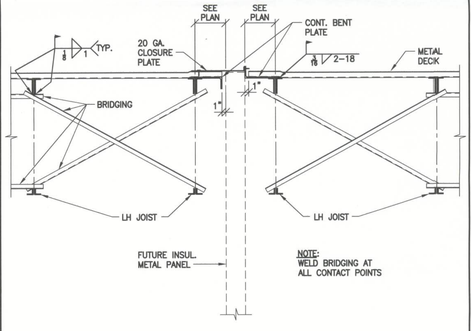

NOTE:
WELD BRIDGING AT ALL CONTACT POINTS

SECTION
@ FUTURE COMMON WALL — SCALE: 3/4"=1'-0" — (16)

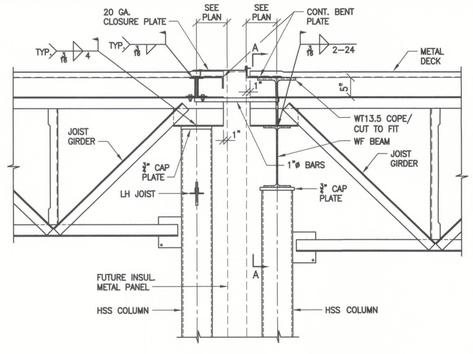

HSS COLUMN

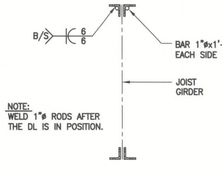

NOTE:
WELD 1"ø RODS AFTER THE DL IS IN POSITION.

SECTION A-A

SECTION APPLIES @ COLUMN GRIDS A.6 & A.7/11.1, 15 & 16

SECTION
@ FUTURE COMMON WALL — SCALE: 3/4"=1'-0" — (17)

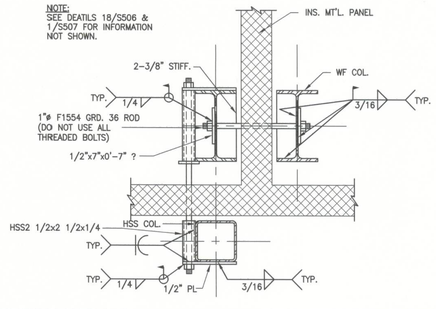

NOTE:
SEE DEATILS 18/S506 & 1/S507 FOR INFORMATION NOT SHOWN.

CONNECTION DETAIL
SCALE: 1"=1'-0" — (19)

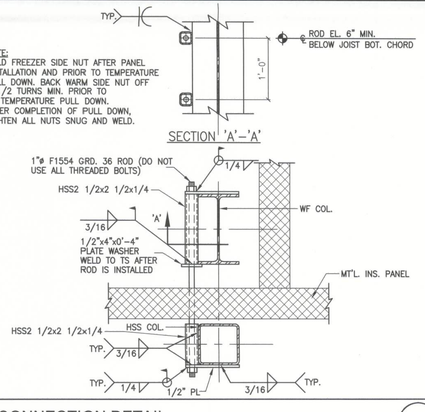

NOTE:
WELD FREEZER SIDE NUT AFTER PANEL INSTALLATION AND PRIOR TO TEMPERATURE PULL DOWN. BACK WARM SIDE NUT OFF 1 1/2 TURNS MIN. PRIOR TO TO TEMPERATURE PULL DOWN. AFTER COMPLETION OF PULL DOWN, TIGHTEN ALL NUTS SNUG AND WELD.

CONNECTION DETAIL
SCALE: 1"=1'-0" — (20)

stellar
OPERATING AS THE STELLAR GROUP
2800 HARTLEY ROAD, JACKSONVILLE, FLORIDA 32257 (904) 262-3600
WWW.STELLAR.NET
FLORIDA ARCHITECTURAL LICENSE NO. AA-C000112
FLORIDA ENGINEERING LICENSE NO. 8988

James F. Mattioli 12/20/12
JAMES F. MATTIOLI
FL. LICENSE NO. 63121

UNITED STATES COLD STORAGE, INC.
PHASE II EXPANSION
LAKE CITY, FLORIDA

SECTIONS & DETAILS

REV.	DATE	BY	DESCRIPTION
C	12/20/12	SM	PERMIT ISSUE
B	12/13/12	SM	FOUNDATION PERMIT ISSUE
A	12/11/12	SM	RELEASED FOR STEEL DETAILING

JOB NO.	710-04224
DRAWN:	SM
CHECKED:	DK
SCALE:	AS NOTED

S512
DRAWING NO.

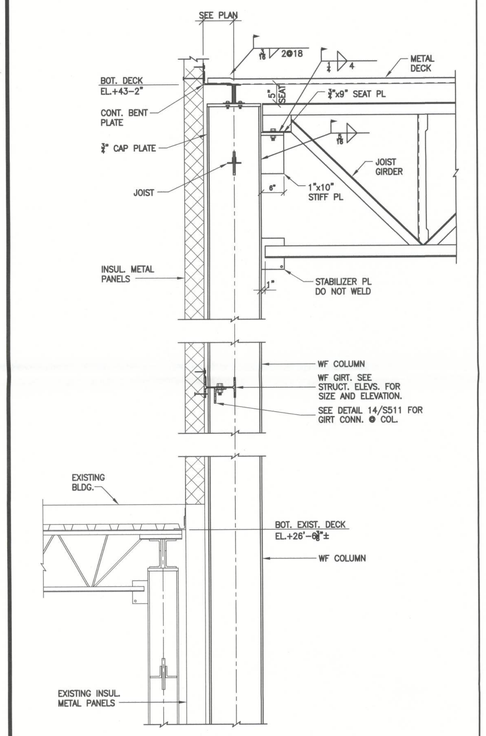

SECTION 1
SCALE: 3/4"=1'-0"

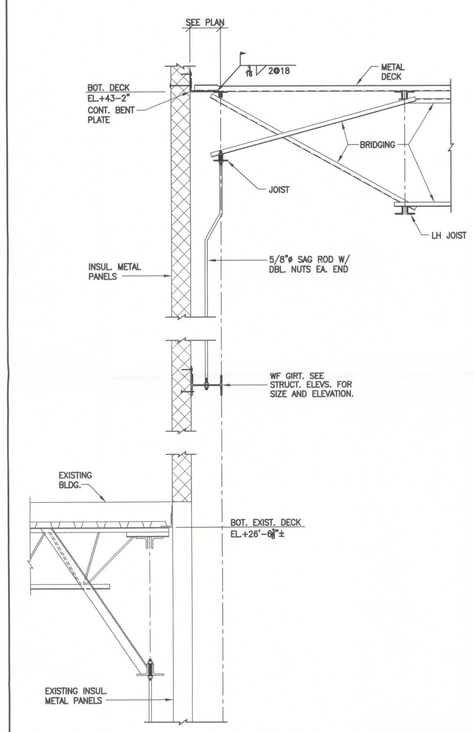

SECTION 2
SCALE: 3/4"=1'-0"

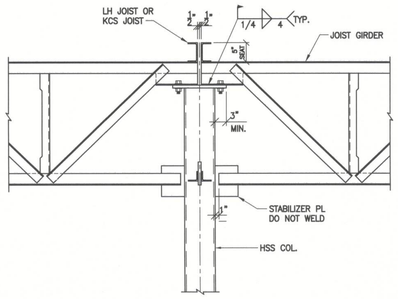

GIRDER – HSS COL. 3
SCALE: 3/4"=1'-0"

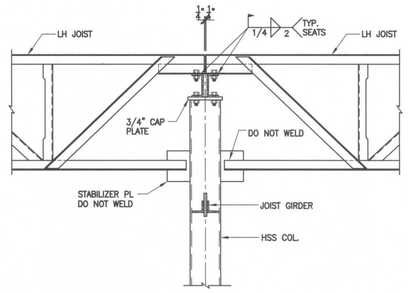

LH JOIST – GIRDER – HSS COL. 4
SCALE: 3/4"=1'-0"

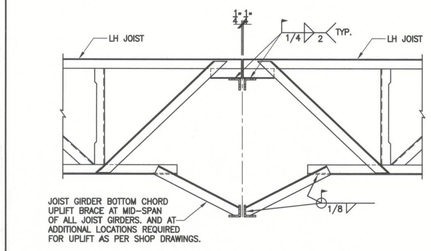

NOTE:
JOIST GIRDER BOTTOM CHORD BRACE TO BE DESIGNED AND FURNISHED BY THE JOIST GIRDER MANUFACTURER.

LH JOIST GIRDER UPLIFT BRACE @ MID-SPAN 5
SCALE: 3/4"=1'-0"

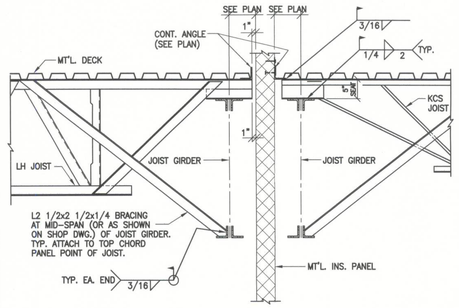

LH JOIST & GIRDER FRAMING 6
SCALE: 3/4"=1'-0"

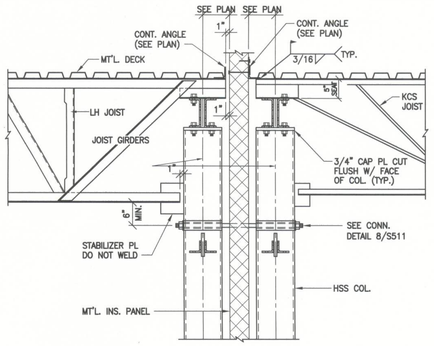

LH JOIST/KCS JOIST /JOIST GIRDER CONN. 7
SCALE: 3/4"=1'-0"

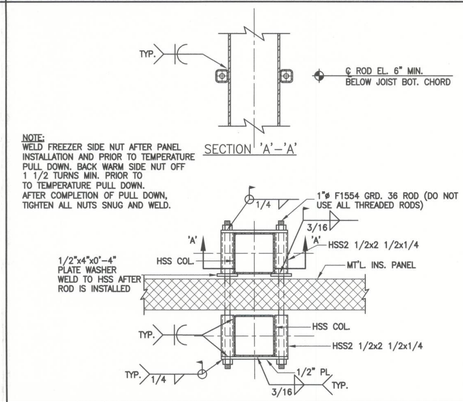

NOTE:
WELD FREEZER SIDE NUT AFTER PANEL INSTALLATION AND PRIOR TO TEMPERATURE PULL DOWN. BACK WARM SIDE NUT OFF 1 1/2 TURNS MIN. PRIOR TO TO TEMPERATURE PULL DOWN. AFTER COMPLETION OF PULL DOWN, TIGHTEN ALL NUTS SNUG AND WELD.

COL. TO COL. CONN. 8
SCALE: 1"=1'-0"

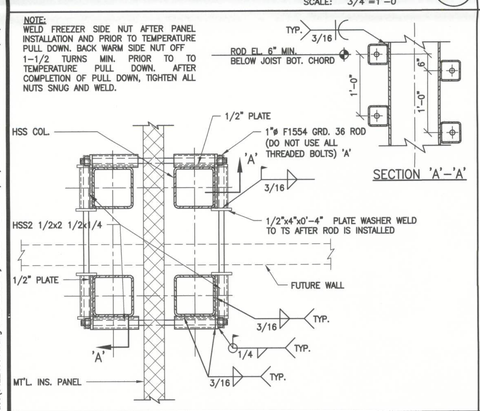

NOTE:
WELD FREEZER SIDE NUT AFTER PANEL INSTALLATION AND PRIOR TO TEMPERATURE PULL DOWN. BACK WARM SIDE NUT OFF 1-1/2 TURNS MIN. PRIOR TO TO TEMPERATURE PULL DOWN. AFTER COMPLETION OF PULL DOWN, TIGHTEN ALL NUTS SNUG AND WELD.

COL. TO COL. CONN. 9
SCALE: 1"=1'-0"

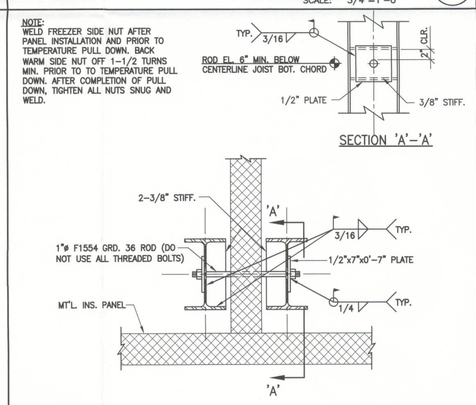

NOTE:
WELD FREEZER SIDE NUT AFTER PANEL INSTALLATION AND PRIOR TO TEMPERATURE PULL DOWN. BACK WARM SIDE NUT OFF 1-1/2 TURNS MIN. PRIOR TO TO TEMPERATURE PULL DOWN. AFTER COMPLETION OF PULL DOWN, TIGHTEN ALL NUTS SNUG AND WELD.

COL. TO COL. CONN. 10
SCALE: 1"=1'-0"

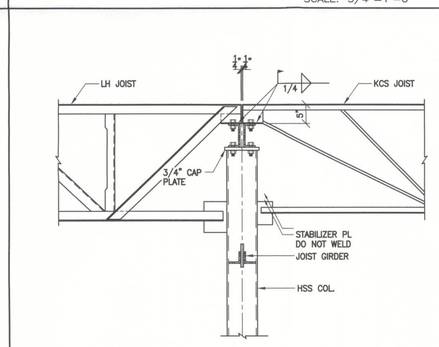

LH JOIST/KCS JOIST/GIRDER HSS COLUMN CONN. 11
SCALE: 3/4"=1'-0"

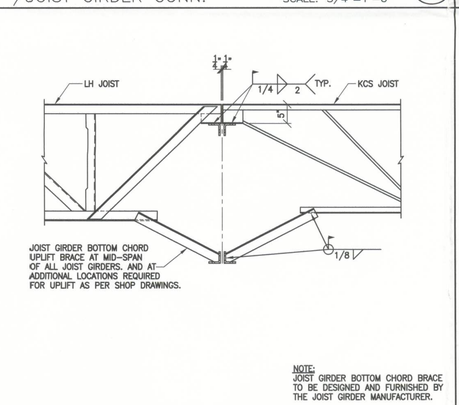

NOTE:
JOIST GIRDER BOTTOM CHORD BRACE TO BE DESIGNED AND FURNISHED BY THE JOIST GIRDER MANUFACTURER.

LH JOIST/KCS JOIST/GIRDER UPLIFT @ MID-SPAN 12
SCALE: 3/4"=1'-0"

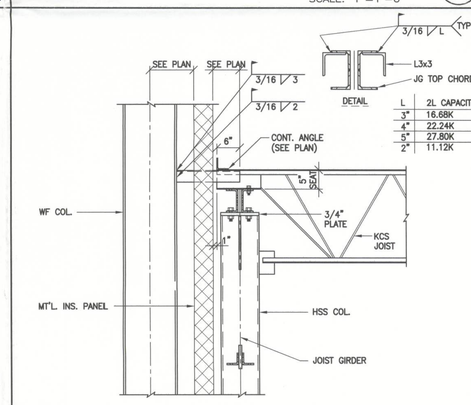

SECTION 13
SCALE: 3/4"=1'-0"

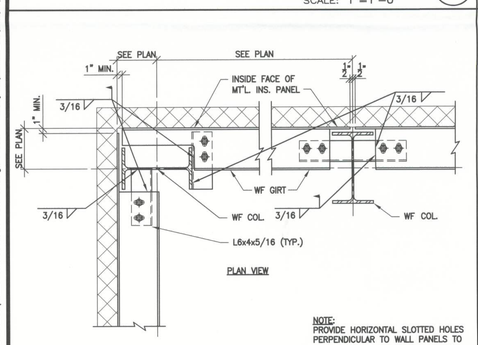

NOTE:
PROVIDE HORIZONTAL SLOTTED HOLES PERPENDICULAR TO WALL PANELS TO ALLOW FOR 1" ADJUSTMENT IN GIRT LOCATION. VERTICALLY ALIGN OUTSIDE FACE OF ALL GIRTS WITH EDGE ANGLE ABOVE. HAND TIGHTEN BOLTS, THEN WELD IN PLACE AS SHOWN OR USE A325SC BOLTS AS AN ALTERNATE.

GIRT - COL. CONN. DETAIL @ WF COL. 14
SCALE: 1"=1'-0"

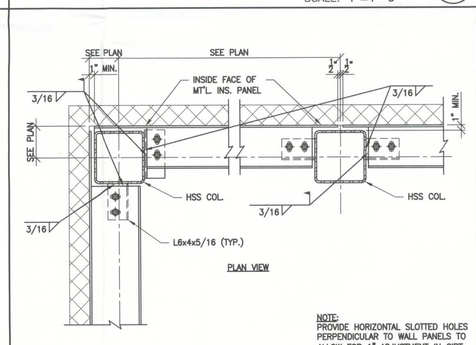

NOTE:
PROVIDE HORIZONTAL SLOTTED HOLES PERPENDICULAR TO WALL PANELS TO ALLOW FOR 1" ADJUSTMENT IN GIRT LOCATION. VERTICALLY ALIGN OUTSIDE FACE OF ALL GIRTS WITH EDGE ANGLE ABOVE. HAND TIGHTEN BOLTS, THEN WELD IN PLACE AS SHOWN OR USE A325SC BOLTS AS AN ALTERNATE.

GIRT - COL. CONN. DETAIL @ HSS COL. 15
SCALE: 1"=1'-0"

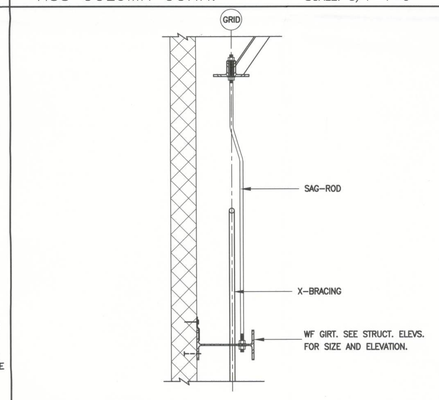

OFFSET SAGROD DETAIL @ X-BRACE 16
SCALE: 1"=1'-0"

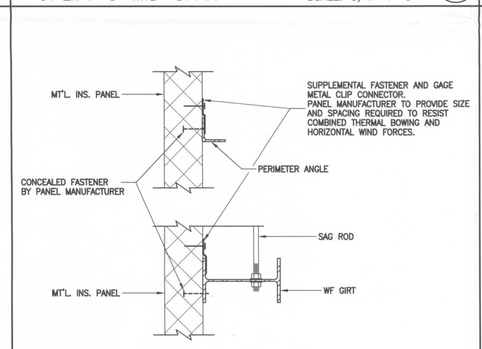

TYP. PANEL ATTACHMENT DETAIL 17
SCALE: 1 1/2"=1'-0"

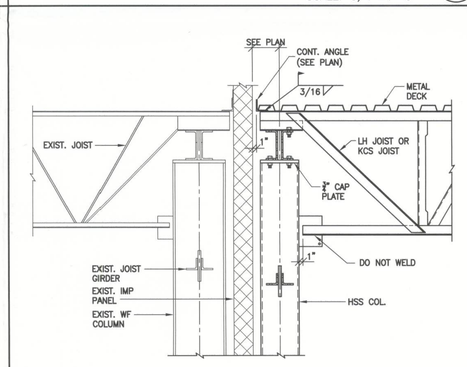

LH JOIST/JOIST GIRDER CONN. @ EXIST. IMP WALL 17
SCALE: 3/4"=1'-0"

stellar
CONSULTING AS THE STELLAR GROUP
2900 HARTLEY ROAD, JACKSONVILLE, FL. 32257 (904) 260-2900
WWW.STELLARJAX.NET
FLORIDA ARCHITECTURAL BUSINESS LICENSE NO. AA-C000112
FLORIDA ENGINEERING LICENSE NO. 5030

James F. Matelski 12/20/12
JAMES F. MATELSKI
FL LICENSE #53121

UNITED STATES COLD STORAGE, INC.
PHASE II EXPANSION
LAKE CITY, FLORIDA

SECTIONS & DETAILS

REV.	DATE	BY	DESCRIPTION
C	12/20/12	SM	PERMIT ISSUE
B	12/07/12	SM	FOUNDATION PERMIT ISSUE
A	12/21/12	SM	RELEASED FOR STEEL DETAILING

JOB NO.	710-04224
DRAWN:	SM
CHECKED:	DK
SCALE:	AS NOTED

S511
DRAWING NO.

Filename: T:\Jobs\04200-04299\04224 United States Cold Storage Phase II Facility Expansion_FL\Design\Active\Struct\04224S511.dwg Last Saved By: SMARTIN Date: 12/20/2012 2:46:07 PM Plotted: 12/20/2012 2:46:19 PM

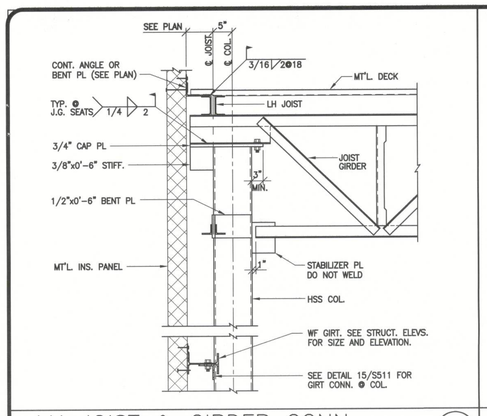

LH JOIST & GIRDER CONN. @ OFFSET COL. (HSS) SCALE: 3/4"=1'-0" (1)

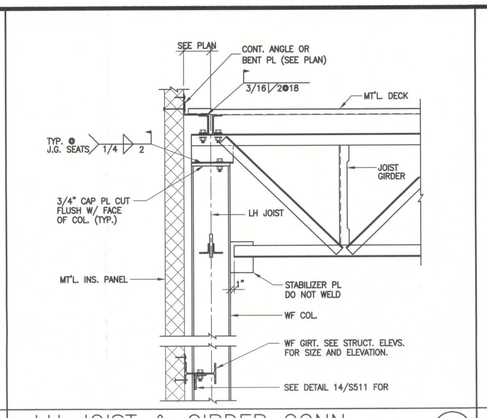

LH JOIST & GIRDER CONN. SCALE: 3/4"=1'-0" (2)

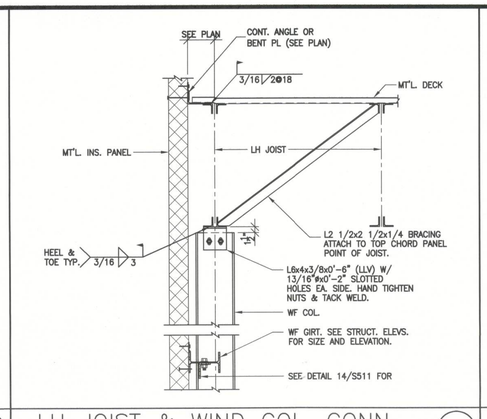

LH JOIST & WIND COL. CONN. SCALE: 3/4"=1'-0" (3)

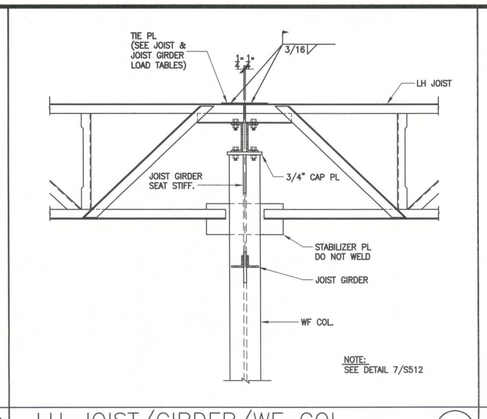

LH JOIST/GIRDER/WF COL. MOM. CONN./BRACED BAYS SCALE: 3/4"=1'-0" (4)

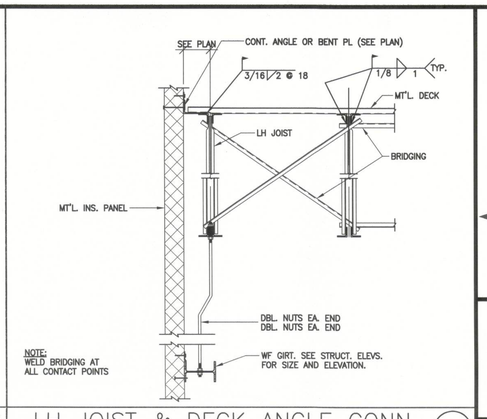

LH JOIST & DECK ANGLE CONN. SCALE: 3/4"=1'-0" (5)

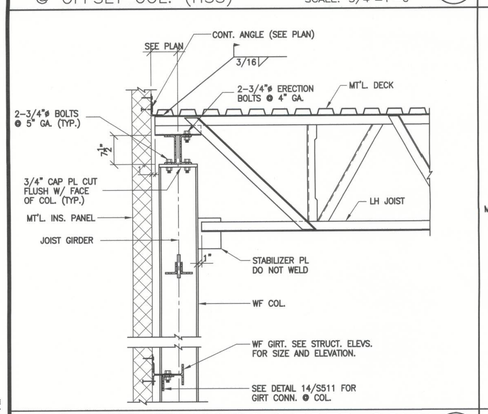

LH JOIST TO JOIST GIRDER CONN. SCALE: 3/4"=1'-0" (6)

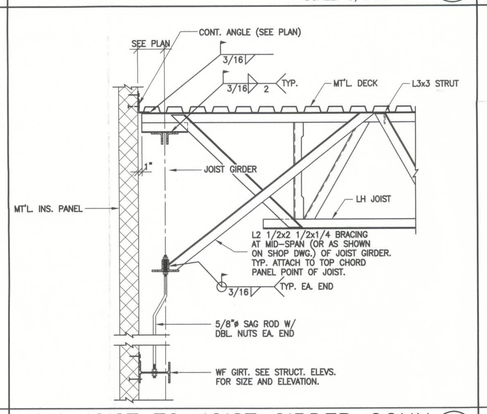

LH JOIST TO JOIST GIRDER CONN. SCALE: 3/4"=1'-0" (7)

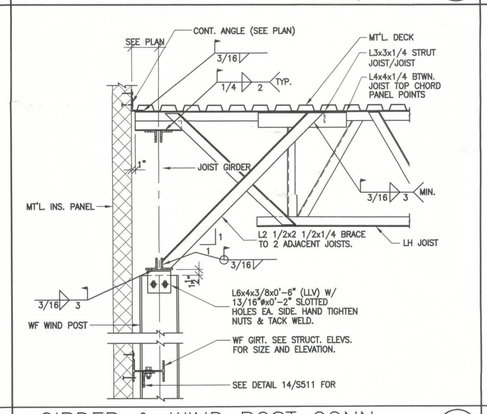

GIRDER & WIND POST CONN. SCALE: 3/4"=1'-0" (8)

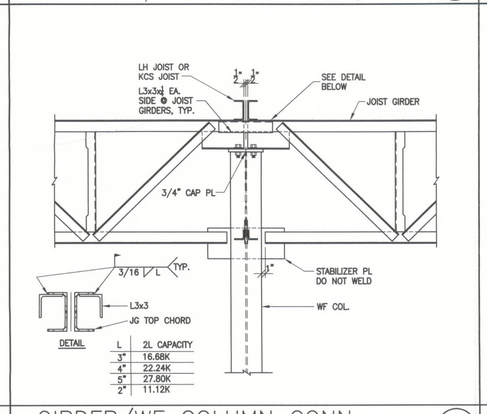

GIRDER/WF COLUMN CONN. SCALE: 3/4"=1'-0" (9)

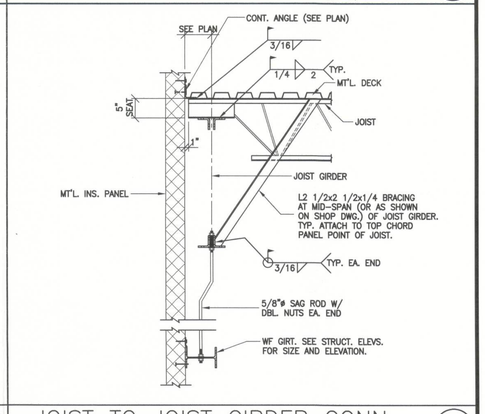

JOIST TO JOIST GIRDER CONN. SCALE: 3/4"=1'-0" (10)

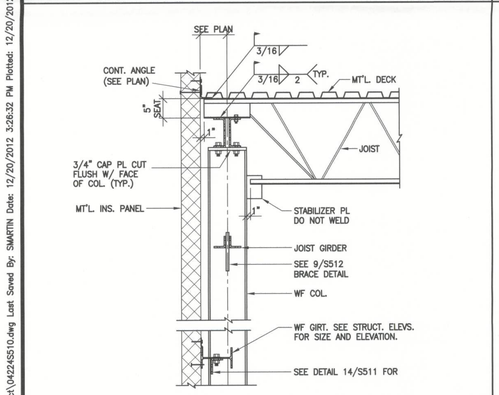

JOIST TO JOIST GIRDER CONN. SCALE: 3/4"=1'-0" (11)

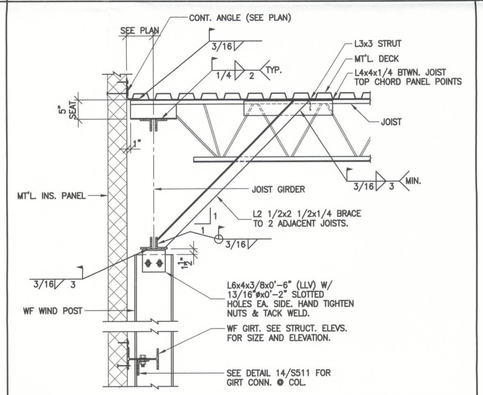

GIRDER & WIND POST CONN. SCALE: 3/4"=1'-0" (12)

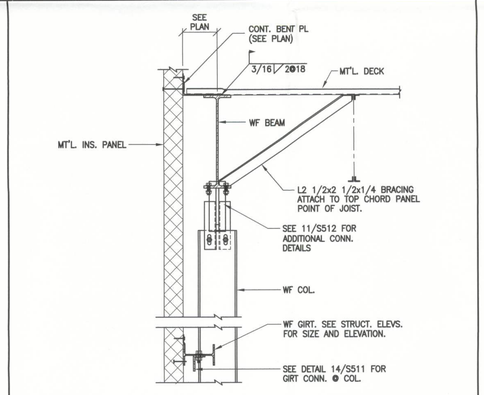

JOIST & WIND COL. CONN. SCALE: 3/4"=1'-0" (13)

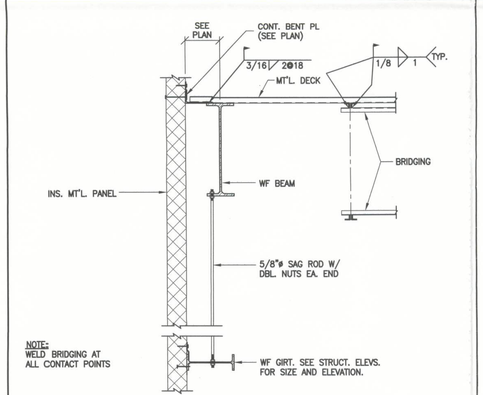

JOIST, DECK ANGLE & BRIDGING @ IMP WALL SCALE: 3/4"=1'-0" (14)

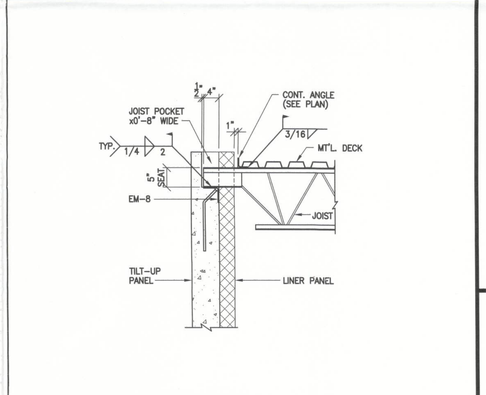

TYP. JOIST POCKET SCALE: 3/4"=1'-0" (15)

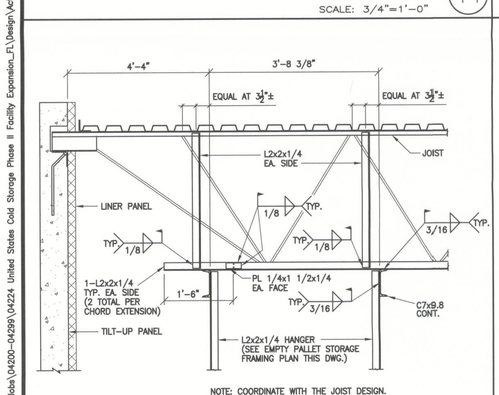

EMPTY PALLET STORAGE RACK JOIST EXT. & WEB REINF. SCALE: 3/4"=1'-0" (16)

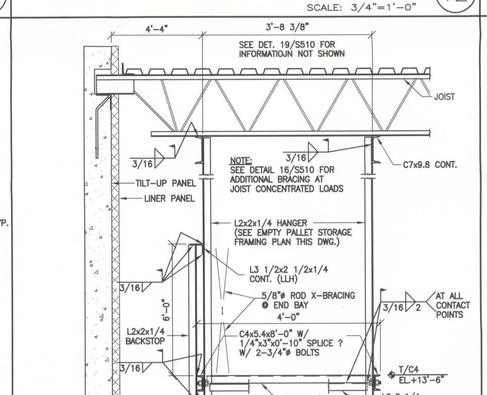

EMPTY PALLET STORAGE RACK SCALE: 3/4"=1'-0" (17)

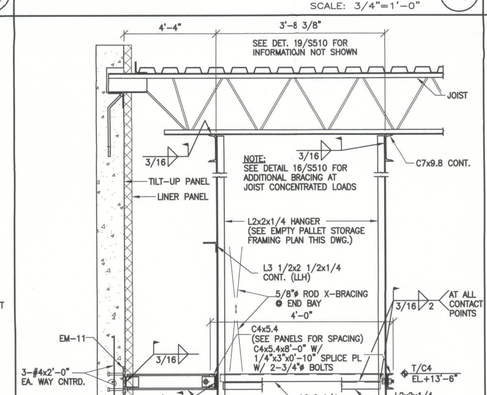

EMPTY PALLET STORAGE RACK SCALE: 3/4"=1'-0" (18)

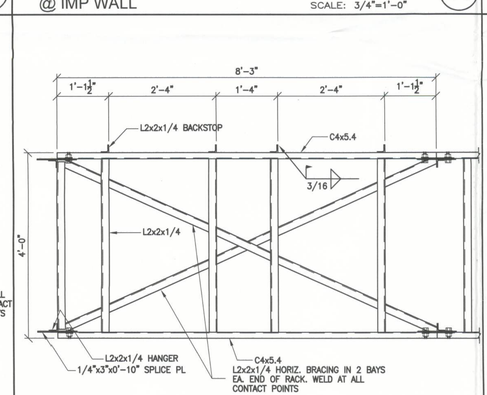

EMPTY PALLET STORAGE RACK FRAMING PLAN SCALE: 3/4"=1'-0" (19)

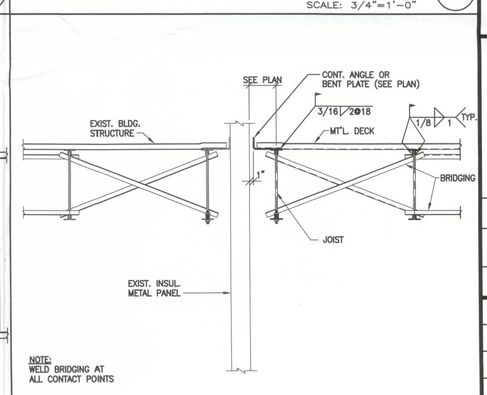

SECTION SCALE: 3/4"=1'-0" (20)

stellar

2900 HARTLEY ROAD, SUITE 100, JACKSONVILLE, FLORIDA 32257 (904) 260-2600
WWW.STELLARNET
STELLAR ARCHITECTURE, INC. AA-C000112
FLORIDA ARCHITECTURE LICENSE NO. 5930

James F. Matelski 12/20/12

JAMES F. MATELSKI
FL LICENSE #63121

UNITED STATES COLD STORAGE, INC.
PHASE II EXPANSION
LAKE CITY, FLORIDA

SECTIONS & DETAILS

REV.	DATE	BY	DESCRIPTION
C	12/20/12	SM	PERMIT ISSUE
B	12/13/12	SM	FOUNDATION PERMIT ISSUE
A	11/16/12	SM	RELEASED FOR DETAILING

JOB NO.	710-04224
DRAWN:	SM
CHECKED:	DK
SCALE:	AS NOTED

S510
DRAWING NO.

Filename: T:\Jobs\04200-04299\04224 United States Cold Storage Phase II Facility Expansion_FL\Design\Active\Struct\04224S510.dwg Last Saved By: SMARTIN Date: 12/20/2012 3:26:32 PM Plotted: 12/20/2012 3:26:48 PM

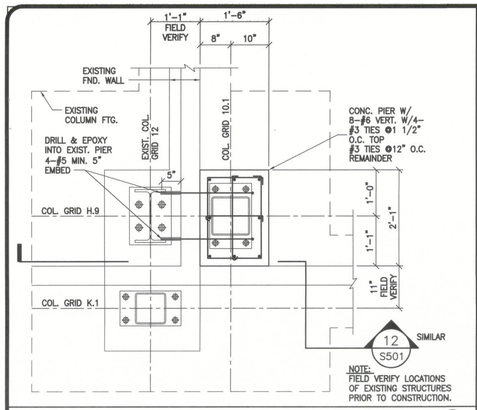

CONC. PIER DETAIL (1)
SCALE: 3/4" = 1'-0"

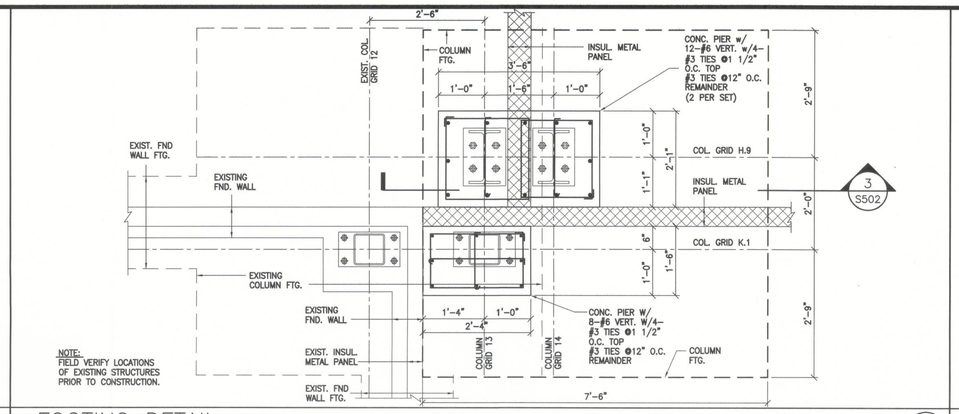

FOOTING DETAIL (2)
SCALE: 3/4" = 1'-0"

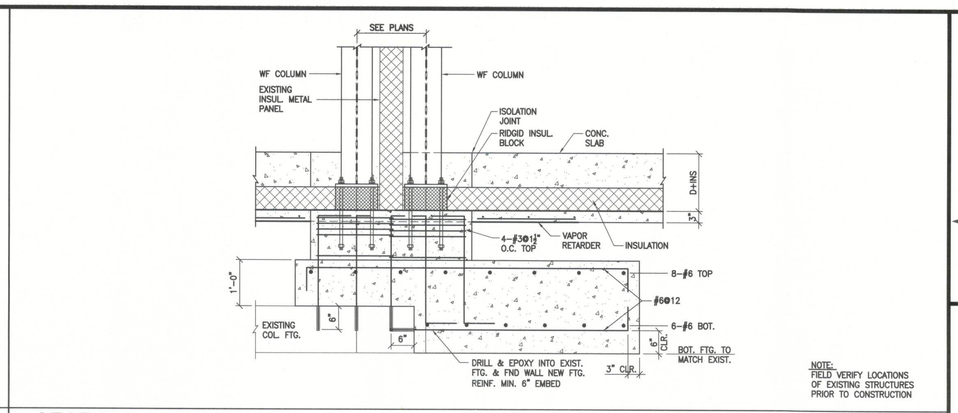

SECTION (3)
SCALE: 3/4" = 1'-0"

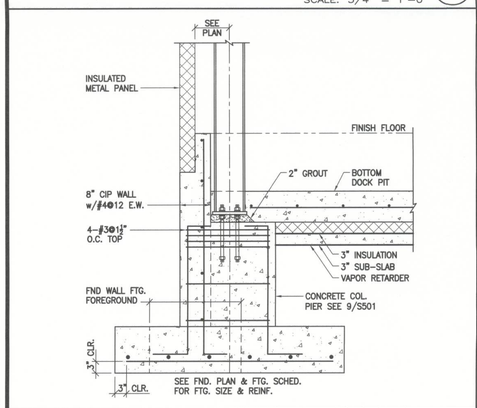

SECTION (4)
SCALE: 3/4" = 1'-0"

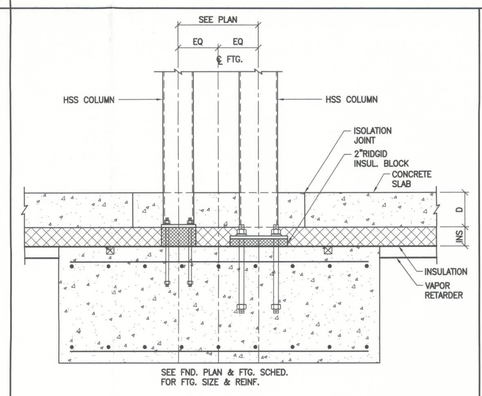

SECTION (5)
SCALE: 3/4" = 1'-0"

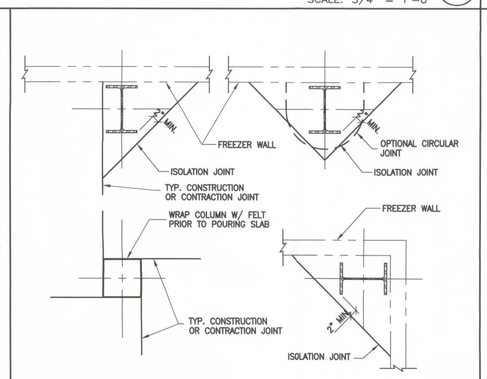

TYPICAL ISOLATION JOINTS @ FREEZER (6)
SCALE: N.T.S.

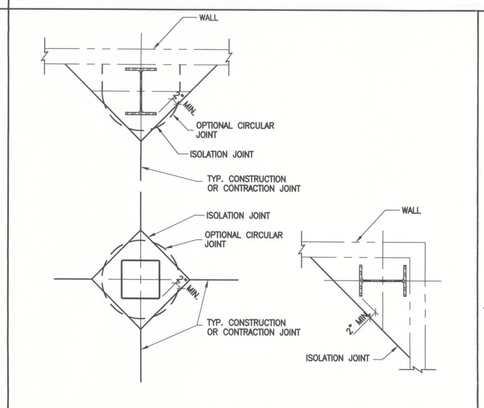

TYPICAL ISOLATION JOINTS (7)
SCALE: N.T.S.

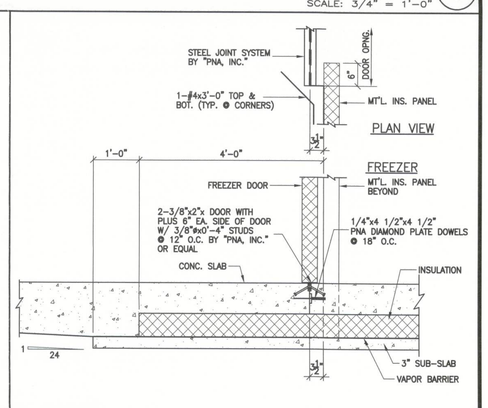

THRESHOLD DETAIL @ FREEZER DOORS (8)
SCALE: 3/4" = 1'-0"

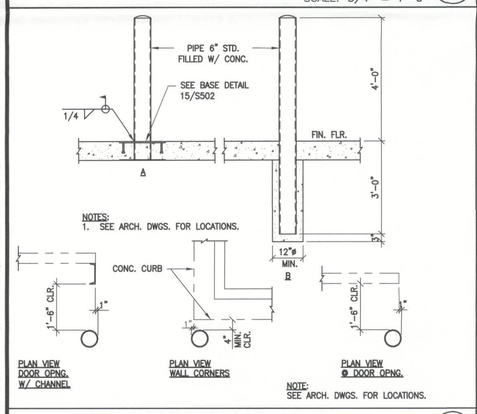

TYPICAL BOLLARD DETAIL AT DOCK DOORS (9)
SCALE: 1/2"=1'-0"

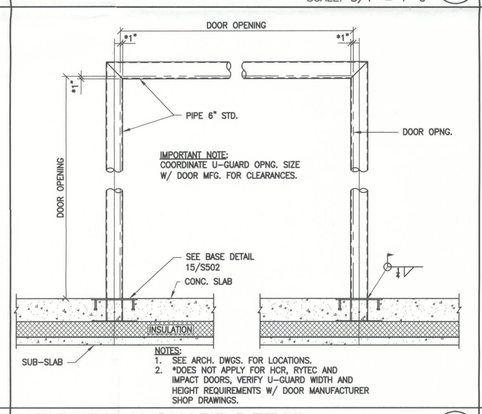

TYPICAL U-GUARD DETAIL FOR FREEZER FLOORS (10)
SCALE: 1/2"=1'-0"

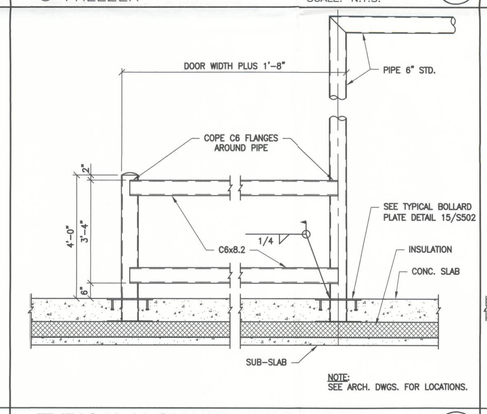

TYPICAL U-GUARD WING DETAIL FOR FREEZER FLOORS (11)
SCALE: 1/2"=1'-0"

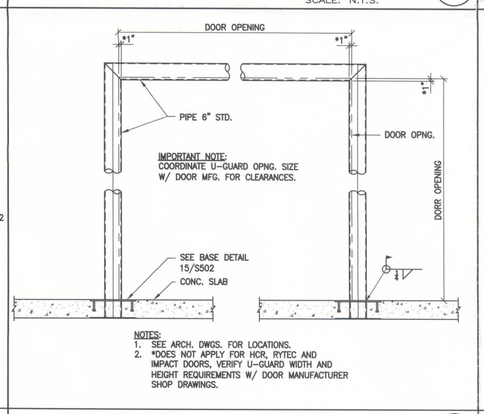

U-GUARD DETAIL FOR NON-FREEZER FLOORS (12)
SCALE: 1/2"=1'-0"

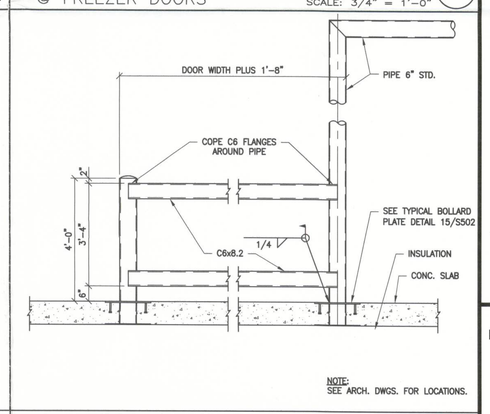

U-GUARD WING DETAIL FOR NON-FREEZER FLOORS (13)
SCALE: 1/2"=1'-0"

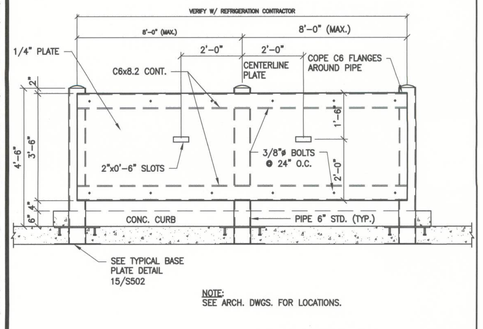

TYPICAL GLYCOL STATION GUARD (14)
SCALE: 1/2"=1'-0"

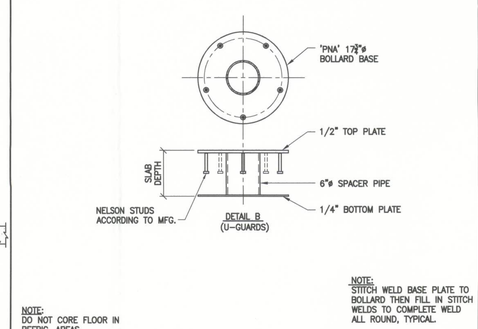

BASE DETAILS BOLLARDS & U- GUARDS (15)
SCALE: 1"=1'-0"

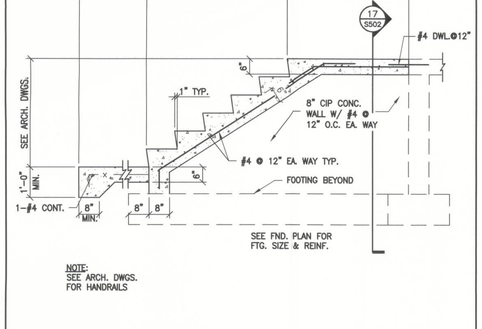

CONC. STAIR DETAIL (16)
SCALE: 1/2"=1'-0"

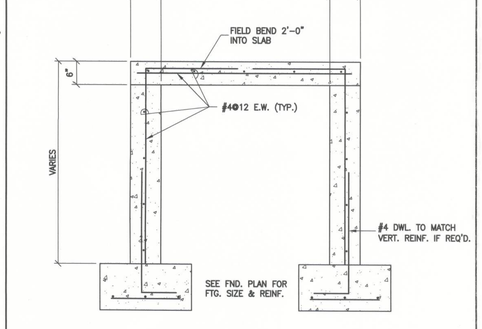

SECTION THRU STAIR LANDING (17)
SCALE: 3/4"=1'-0"

stellar
OPERATING AS THE STELLAR GROUP
2900 WHITLEY ROAD, WINTER PARK, FL 32837 (904) 330-0900
WWW.STELLAR.NET
FLORIDA ARCHITECTURAL LICENSE NO. AA-C000112
FLORIDA ENGINEERING LICENSE NO. 9000

James F. Matteson 12/20/12
JAMES F. MATESON
FL. LICENSE #63121

UNITED STATES COLD STORAGE, INC.
PHASE II EXPANSION
LAKE CITY, FLORIDA

FOUNDATION SECTIONS & DETAILS

REV.	DATE	BY	PERMIT ISSUE DESCRIPTION
A	12/20/12	SM	

JOB NO.	710-04224
DRAWN:	SM
CHECKED:	DK
SCALE:	AS NOTED

S502
DRAWING NO.

Filename: T:\Jobs\04200-04299\04224 United States Cold Storage Phase II Facility Expansion_FL\Design\Active\Struct\04224S502.dwg Last Saved By: SMARTIN Date: 12/20/2012 2:43:50 PM Plotted: 12/20/2012 2:44:01 PM

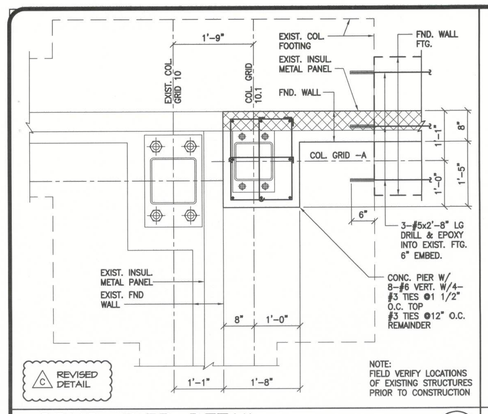

NOTE: FIELD VERIFY LOCATIONS OF EXISTING STRUCTURES PRIOR TO CONSTRUCTION

CONC. PIER DETAIL (1) SCALE: 3/4" = 1'-0"

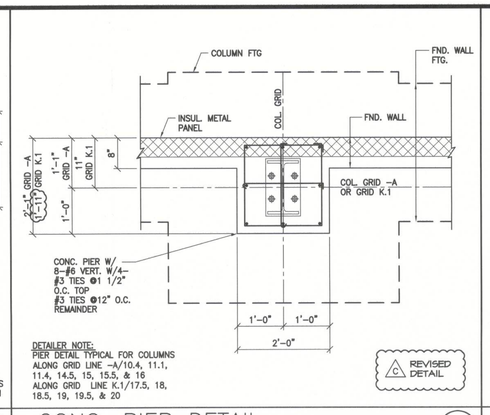

DETAILER NOTE: PIER DETAIL TYPICAL FOR COLUMNS ALONG GRID LINE -A/10.4, 11.1, 11.4, 14.5, 15, 15.5, & 16 ALONG GRID LINE K.1/17.5, 18, 18.5, 19, 19.5, & 20

CONC. PIER DETAIL (2) SCALE: 3/4" = 1'-0"

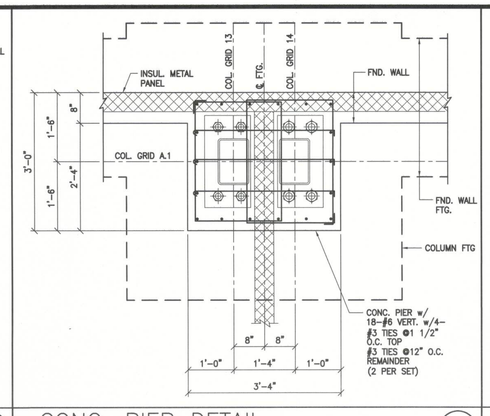

CONC. PIER DETAIL (3) SCALE: 3/4" = 1'-0"

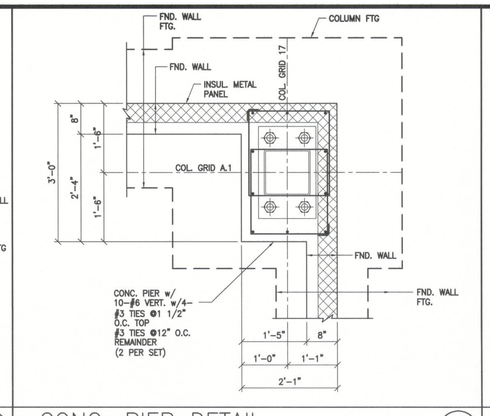

CONC. PIER DETAIL (4) SCALE: 3/4" = 1'-0"

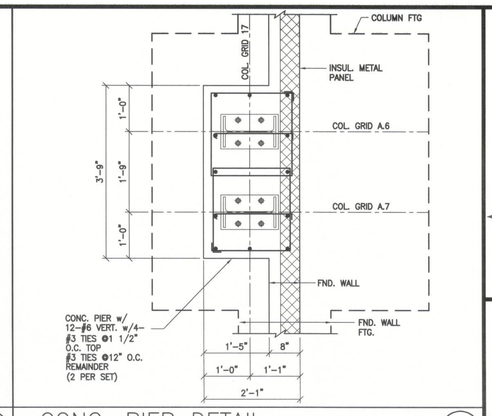

CONC. PIER DETAIL (5) SCALE: 3/4" = 1'-0"

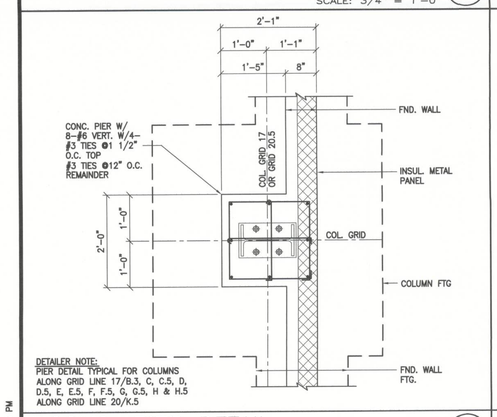

DETAILER NOTE: PIER DETAIL TYPICAL FOR COLUMNS ALONG GRID LINE 17/B.3, C, C.5, D, D.5, E, E.5, F, F.5, G, G.5, H & H.5 ALONG GRID LINE 20/K.5

CONC. PIER DETAIL (6) SCALE: 3/4" = 1'-0"

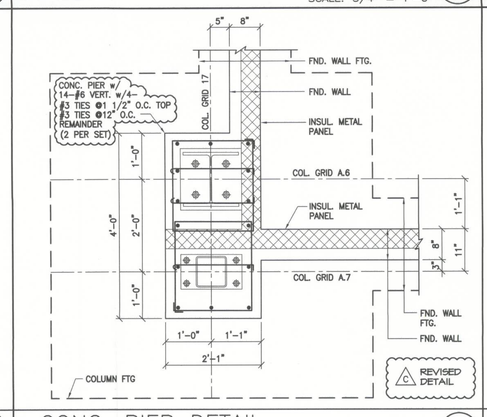

CONC. PIER DETAIL (7) SCALE: 3/4" = 1'-0"

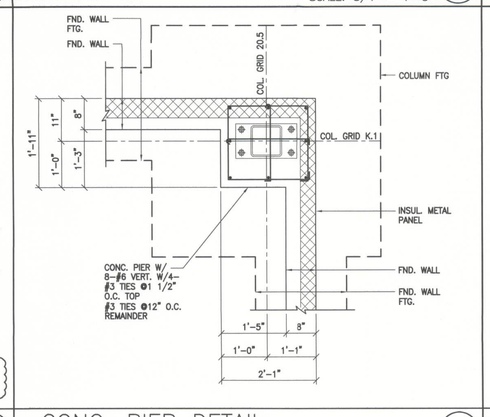

CONC. PIER DETAIL (8) SCALE: 3/4" = 1'-0"

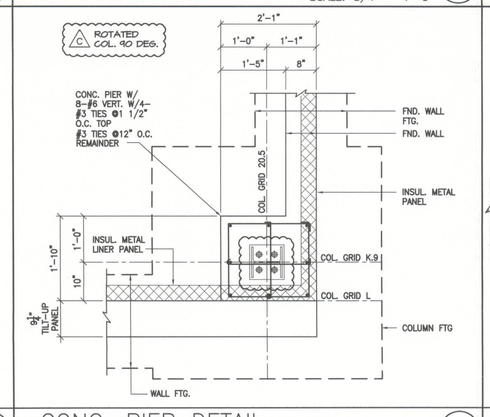

CONC. PIER DETAIL (9) SCALE: 3/4" = 1'-0"

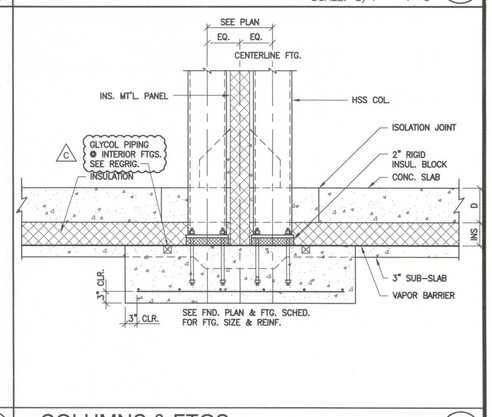

COLUMNS & FTGS. @ IMP PARTITION WALL (10) SCALE: 3/4" = 1'-0"

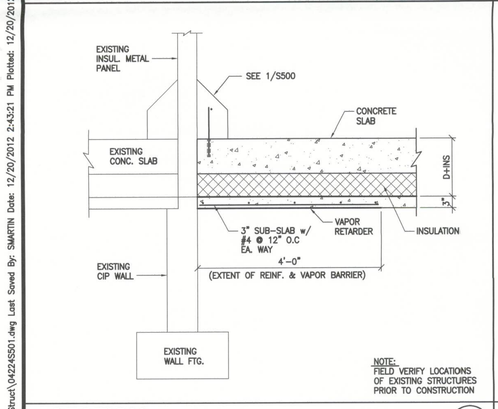

NOTE: FIELD VERIFY LOCATIONS OF EXISTING STRUCTURES PRIOR TO CONSTRUCTION

SECTION (11) SCALE: 3/4" = 1'-0"

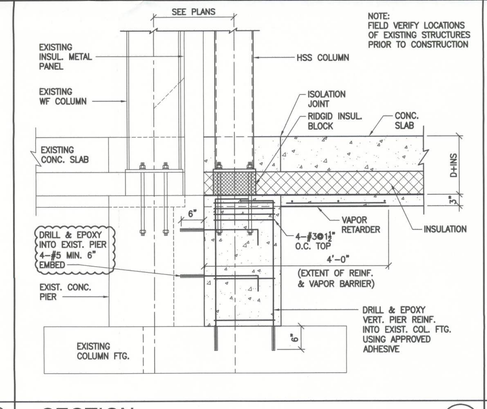

NOTE: FIELD VERIFY LOCATIONS OF EXISTING STRUCTURES PRIOR TO CONSTRUCTION

SECTION (12) SCALE: 3/4" = 1'-0"

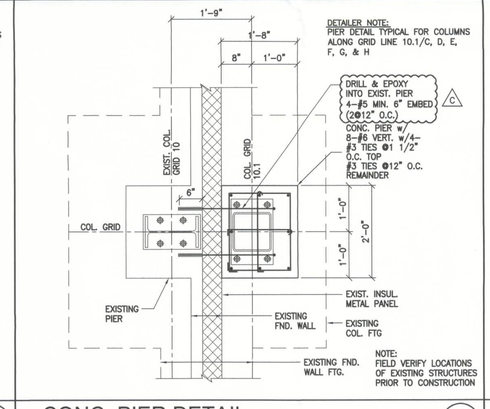

NOTE: FIELD VERIFY LOCATIONS OF EXISTING STRUCTURES PRIOR TO CONSTRUCTION

CONC. PIER DETAIL (13) SCALE: 3/4" = 1'-0"

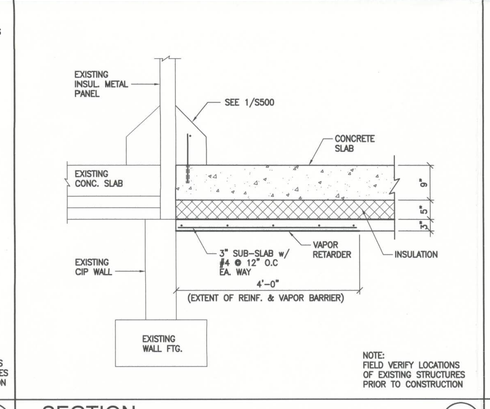

NOTE: FIELD VERIFY LOCATIONS OF EXISTING STRUCTURES PRIOR TO CONSTRUCTION

SECTION (14) SCALE: 3/4" = 1'-0"

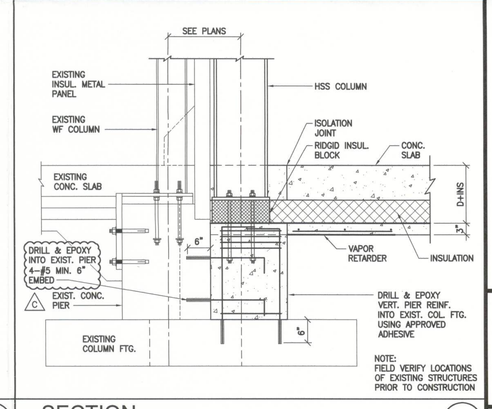

NOTE: FIELD VERIFY LOCATIONS OF EXISTING STRUCTURES PRIOR TO CONSTRUCTION

SECTION (15) SCALE: 3/4" = 1'-0"

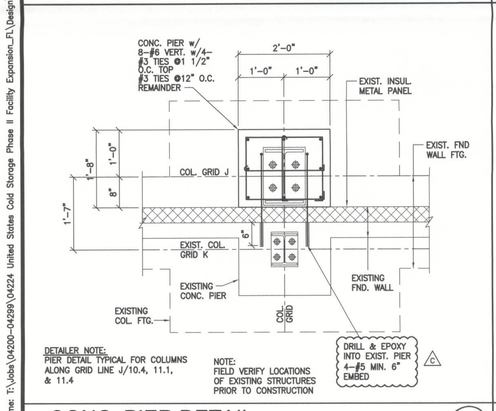

DETAILER NOTE: PIER DETAIL TYPICAL FOR COLUMNS ALONG GRID LINE J/10.4, 11.1, & 11.4

NOTE: FIELD VERIFY LOCATIONS OF EXISTING STRUCTURES PRIOR TO CONSTRUCTION

CONC. PIER DETAIL (16) SCALE: 3/4" = 1'-0"

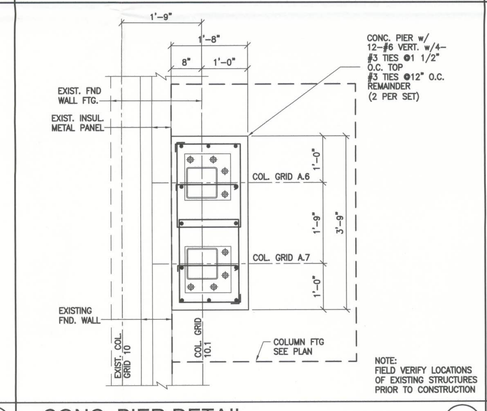

NOTE: FIELD VERIFY LOCATIONS OF EXISTING STRUCTURES PRIOR TO CONSTRUCTION

CONC. PIER DETAIL (17) SCALE: 3/4" = 1'-0"

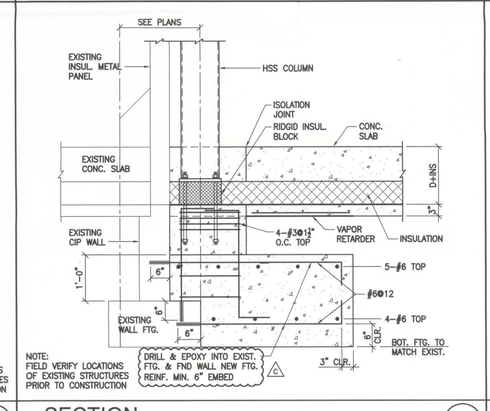

NOTE: FIELD VERIFY LOCATIONS OF EXISTING STRUCTURES PRIOR TO CONSTRUCTION

SECTION (18) SCALE: 3/4" = 1'-0"

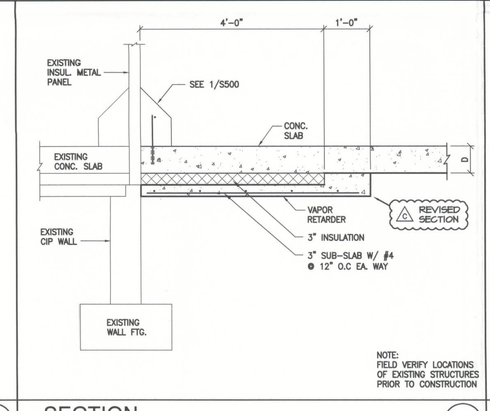

NOTE: FIELD VERIFY LOCATIONS OF EXISTING STRUCTURES PRIOR TO CONSTRUCTION

SECTION (19) SCALE: 3/4" = 1'-0"

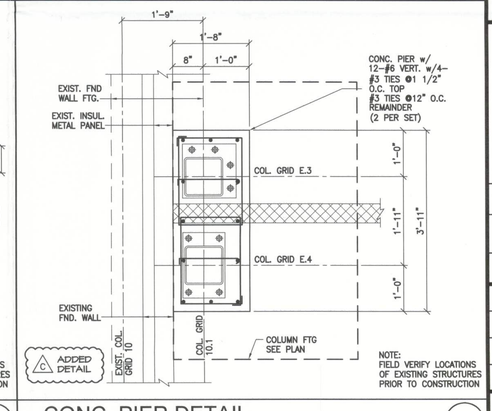

NOTE: FIELD VERIFY LOCATIONS OF EXISTING STRUCTURES PRIOR TO CONSTRUCTION

CONC. PIER DETAIL (20) SCALE: 3/4" = 1'-0"

stellar
OPERATING AS THE STELLAR GROUP
2900 HARTLEY ROAD, JACKSONVILLE, FL 32257 (904) 260-2600
WWW.STELLAR.NET STELLAR, INC. LICENSE NO. AA-0000112
FLORIDA ARCHITECTURAL LICENSE NO. AA-0000112
FLORIDA ENGINEERING LICENSE NO. 9226

JAMES T. MATTEI
FL. LICENSE #53121

UNITED STATES COLD STORAGE, INC.
PHASE II EXPANSION
LAKE CITY, FLORIDA

FOUNDATION SECTIONS & DETAILS

REV.	DATE	BY	DESCRIPTION
C	12/20/12	SM	PERMIT ISSUE
B	12/12/12	SM	FOUNDATION PERMIT ISSUE
A	12/21/12	SM	RELEASED FOR STEEL DETAILING

JOB NO.	710-04224
DRAWN:	SM
CHECKED:	DK
SCALE:	AS NOTED

S501
DRAWING NO.

Filename: T:\Jobs\04200-04299\04224 United States Cold Storage Phase II Facility Expansion_FL\Design\Active\Struct\04224S501.dwg Last Saved By: SMARTIN Date: 12/20/2012 2:43:21 PM Plotted: 12/20/2012 2:43:33 PM

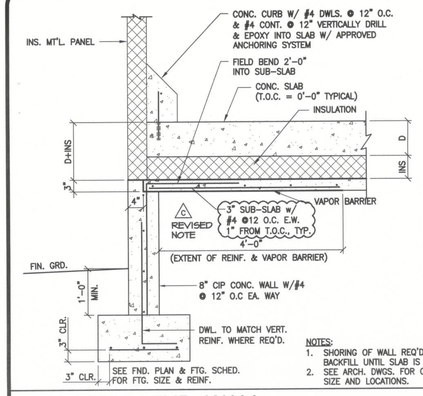

NOTES:
1. SHORING OF WALL REQ'D. DURING BACKFILL UNTIL SLAB IS IN PLACE.
2. SEE ARCH. DWGS. FOR CURB SIZE AND LOCATIONS.

EXTERIOR FND. WALL @ FREEZER FLOOR — SCALE: 3/4" = 1'-0" — 1

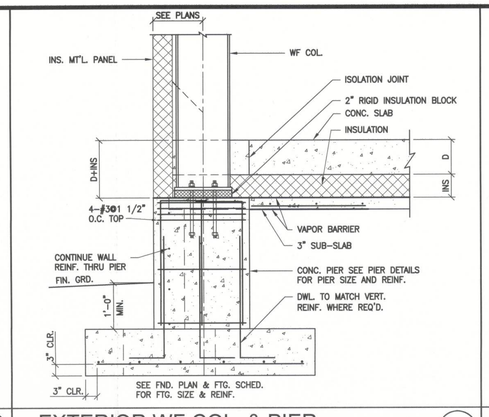

EXTERIOR WF COL. & PIER @ FREEZER FLOOR — SCALE: 3/4" = 1'-0" — 2

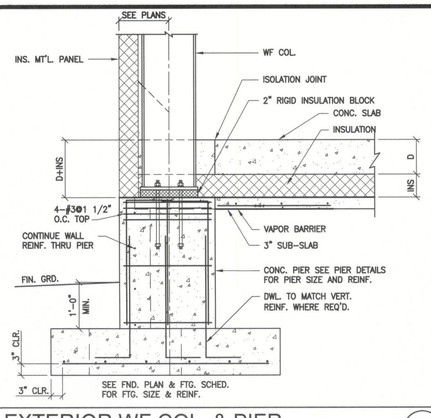

EXTERIOR WF COL. & PIER @ FREEZER FLOOR — SCALE: 3/4" = 1'-0" — 3

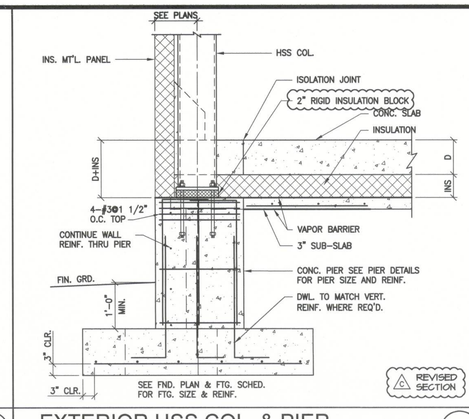

EXTERIOR HSS COL. & PIER @ FREEZER FLOOR — SCALE: 3/4" = 1'-0" — 4

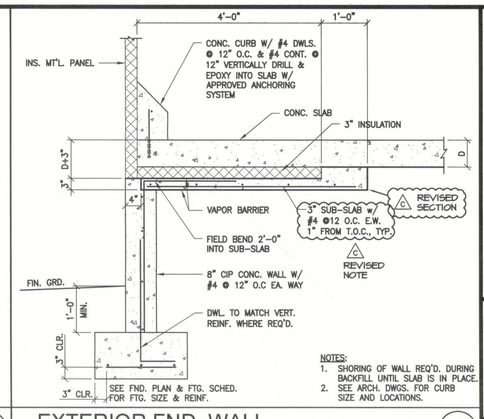

NOTES:
1. SHORING OF WALL REQ'D. DURING BACKFILL UNTIL SLAB IS IN PLACE.
2. SEE ARCH. DWGS. FOR CURB SIZE AND LOCATIONS.

EXTERIOR FND. WALL @ REFRIGERATED FLOOR — SCALE: 3/4" = 1'-0" — 5

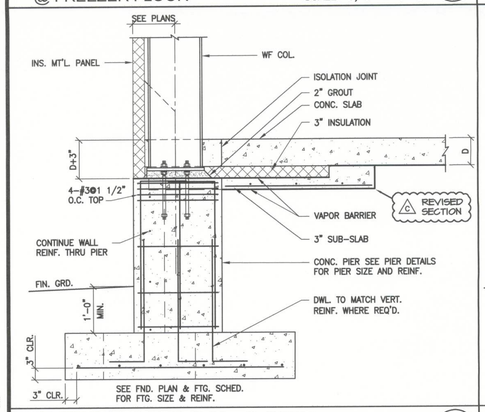

EXTERIOR WF COL. & PIER @ REFRIGERATED FLOOR — SCALE: 3/4" = 1'-0" — 6

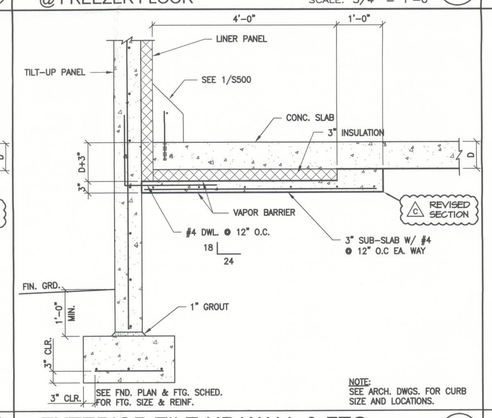

NOTE:
SEE ARCH. DWGS. FOR CURB SIZE AND LOCATIONS.

EXTERIOR TILT-UP WALL & FTG. @ REFRIGERATED AREA — SCALE: 3/4" = 1'-0" — 7

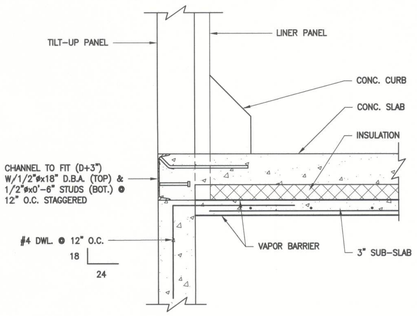

PROTECTIVE CHANNEL @ DOOR OPNG. — SCALE: 1"=1'-0" — 8

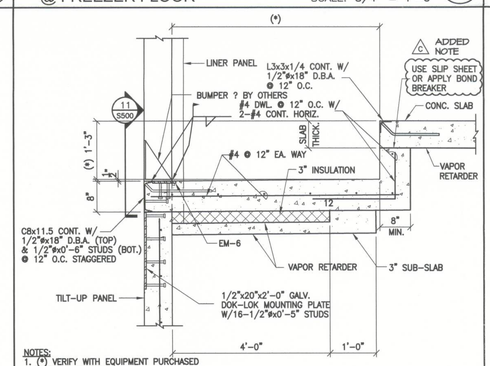

NOTES:
1. (*) VERIFY WITH EQUIPMENT PURCHASED PRIOR TO FORMING
2. SEE DET. 15/S501 FOR PANEL ATTACHMENT TO CONT. FTG.

SECTION THRU DOCK PIT @ REFRIGERATED DOCKS — SCALE: 3/4" = 1'-0" — 9

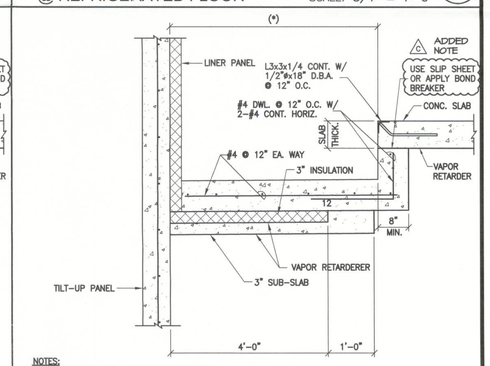

NOTES:
1. (*) VERIFY WITH EQUIPMENT PURCHASED PRIOR TO FORMING
2. SEE DET. 15/S501 FOR PANEL ATTACHMENT TO CONT. FTG.

SECTION THRU DOCK PIT @ BTWN.DOCK DOORS — SCALE: 3/4" = 1'-0" — 10

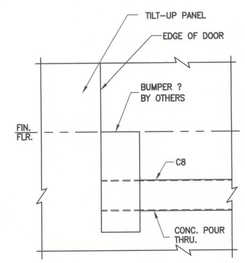

ELEVATION @ DOCK PIT — SCALE: 3/4" = 1'-0" — 11

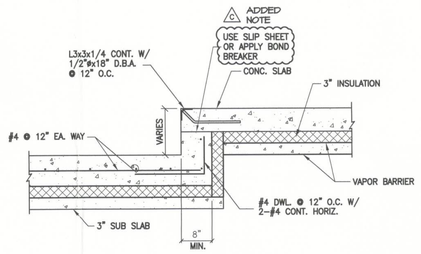

SECTION THRU DOCK PIT @ REFRIGERATED DOCKS — SCALE: 3/4" = 1'-0" — 12

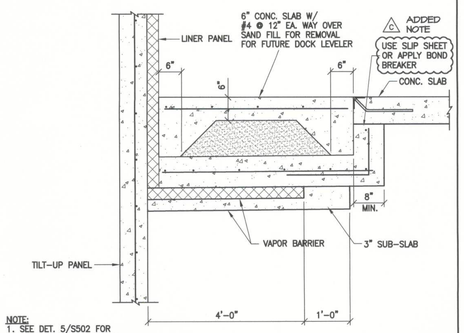

NOTE:
1. SEE DET. 5/S502 FOR INFORMATION NOT SHOWN.

SECTION THRU FUTURE PIT @ BTWN.DOCK DOORS — SCALE: 3/4" = 1'-0" — 13

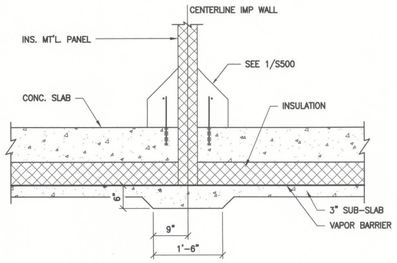

NOTE:
SEE ARCH. DWGS. FOR CURB SIZE AND LOCATIONS.

IMP PARTITION WALL IN FREEZER — SCALE: 3/4" = 1'-0" — 14

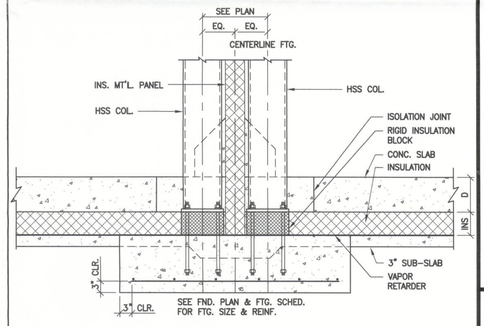

COLUMNS & FTGS. @ IMP PARTITION WALL — SCALE: 3/4" = 1'-0" — 15

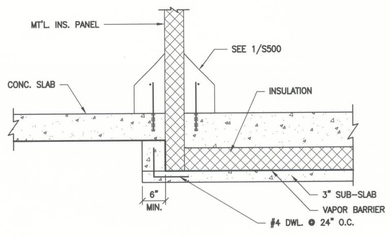

NOTE:
SEE ARCH. DWGS. FOR CURB SIZE AND LOCATIONS.

IMP PARTITION WALL @ FREEZER SEPARATION WALL — SCALE: 3/4" = 1'-0" — 16

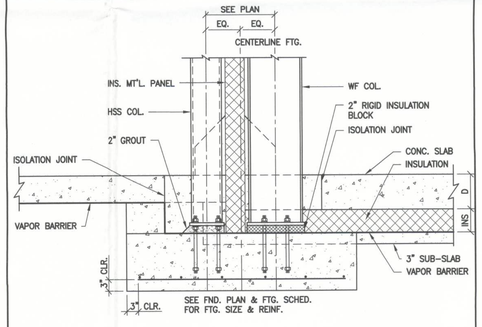

BRACED COLUMN @ FREEZER SEPARATION WALL — SCALE: 3/4" = 1'-0" — 17

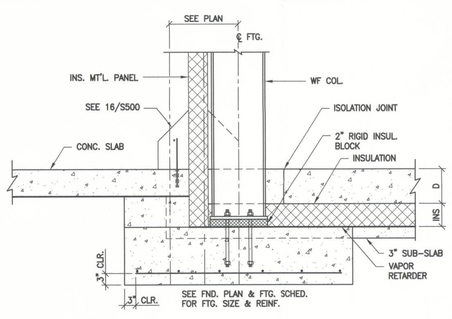

BRACED COLUMN @ FREEZER SEPARATION WALL — SCALE: 3/4" = 1'-0" — 18

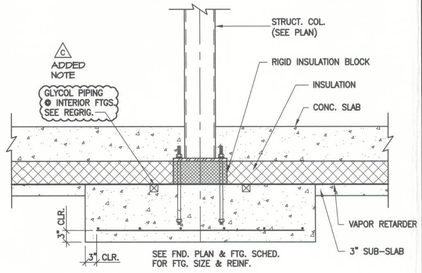

COLUMN & FTG. DETAIL @ FREEZER — SCALE: 3/4" = 1'-0" — 19

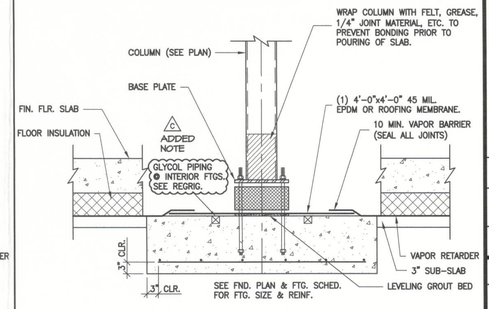

NOTE:
DO NOT USE 1/4" JOINT MAT'L. AT BRACED COLUMNS OR AT TIE BEAMS.

FREEZER COLUMN — SCALE: N.T.S. — 20

stellar
OPERATING AS THE STELLAR GROUP
2900 HARTLEY ROAD, JACKSONVILLE, FL 32257 (904) 260-2900
FLORIDA ARCHITECTURAL LICENSE NO. AA-C000112
FLORIDA ENGINEERING LICENSE NO. 5830
James F. Matelski 12/20/12
JAMES F. MATELSKI
FL. LICENSE #63121

UNITED STATES COLD STORAGE, INC.
PHASE II EXPANSION
LAKE CITY, FLORIDA

FOUNDATION SECTIONS & DETAILS

REV	DATE	BY	DESCRIPTION
C	12/20/12	SM	PERMIT ISSUE
B	12/03/12	SM	FOUNDATION REVIEW ISSUE
A	12/11/12	SM	RELEASED FOR STEEL DETAILING

JOB NO. 710-04224
DRAWN: SM
CHECKED: DK
SCALE: AS NOTED

S500
DRAWING NO.

Filename: T:\Jobs\04200-04299\04224 United States Cold Storage Phase II Facility Expansion_FL\Design\Active\Struct\04224S500.dwg Last Saved By: SMARTIN Date: 12/20/2012 2:42:51 PM Plotted: 12/20/2012 2:43:07 PM

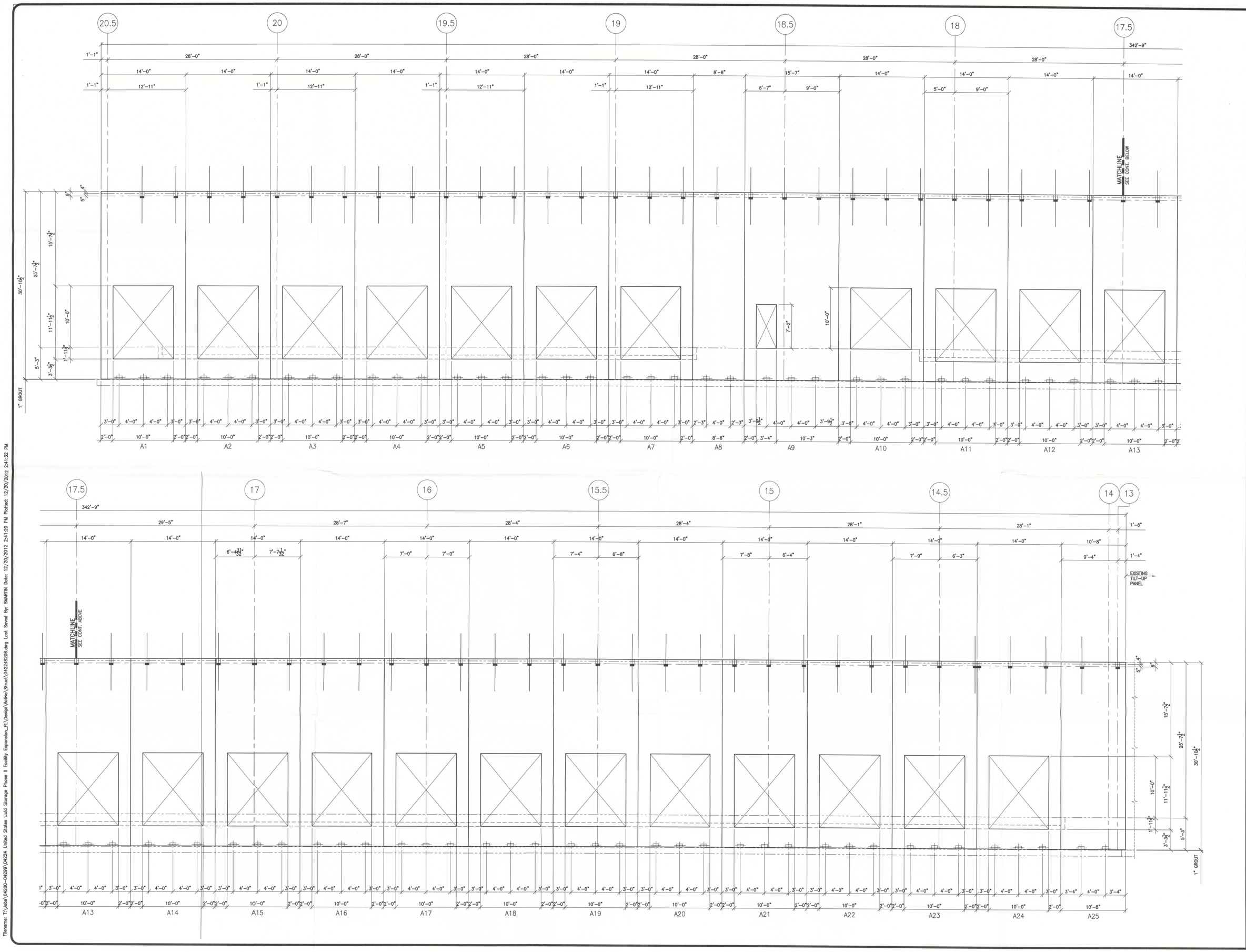

stellar

CONTINUE AS THE STELLAR GROUP
2900 HARTLEY ROAD, JACKSONVILLE, FL. 32257 (904) 260-2000
WWW.STELLARJAX.COM
FLORIDA ARCHITECTURE BUSINESS LICENSE NO. AA-C000112
FLORIDA ENGINEERING LICENSE NO. 5630

James F. Matelski
reference

JAMES F. MATELSKI
FL. LICENSE # 63121

UNITED STATES COLD STORAGE, INC.
PHASE II EXPANSION
LAKE CITY, FLORIDA

TILT-UP PANEL ELEVATIONS EMBEDS

REV.	DATE	BY	DESCRIPTION
A	12/20/12	SM	PERMIT ISSUE

JOB NO.	710-04224
DRAWN:	SM
CHECKED:	DK
SCALE:	AS NOTED

S206
DRAWING NO.

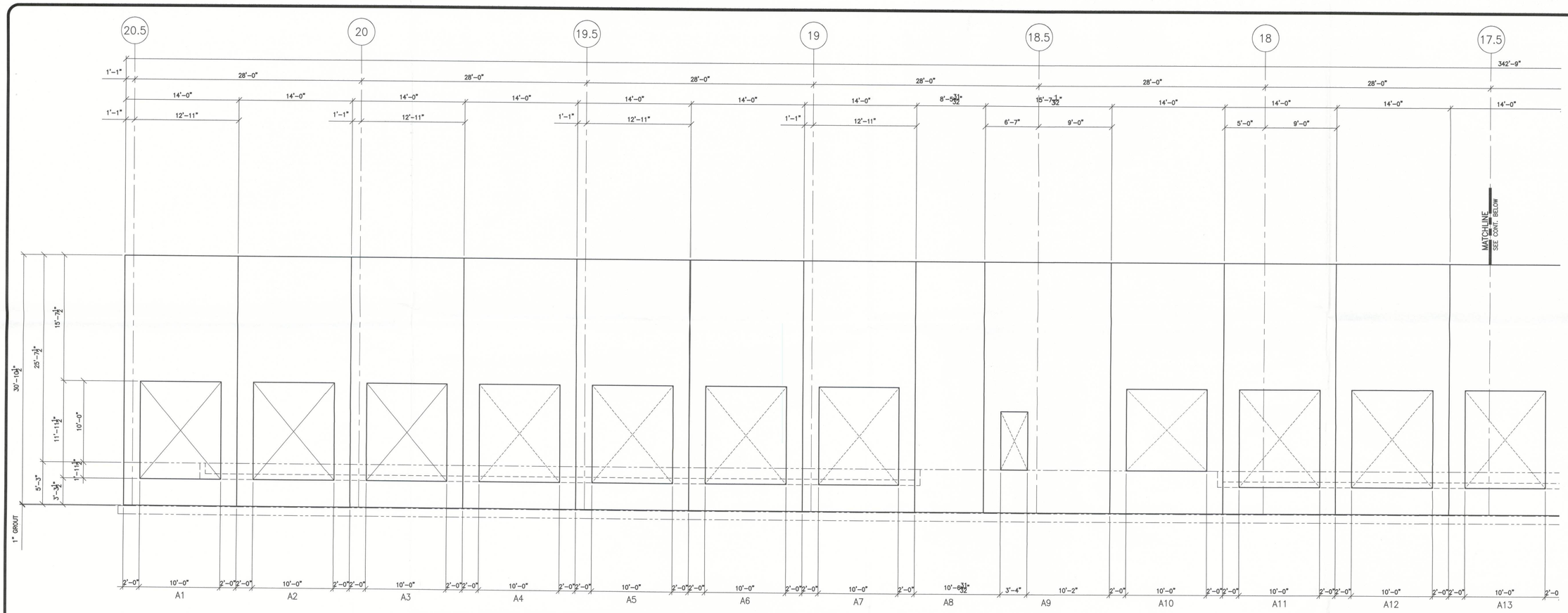

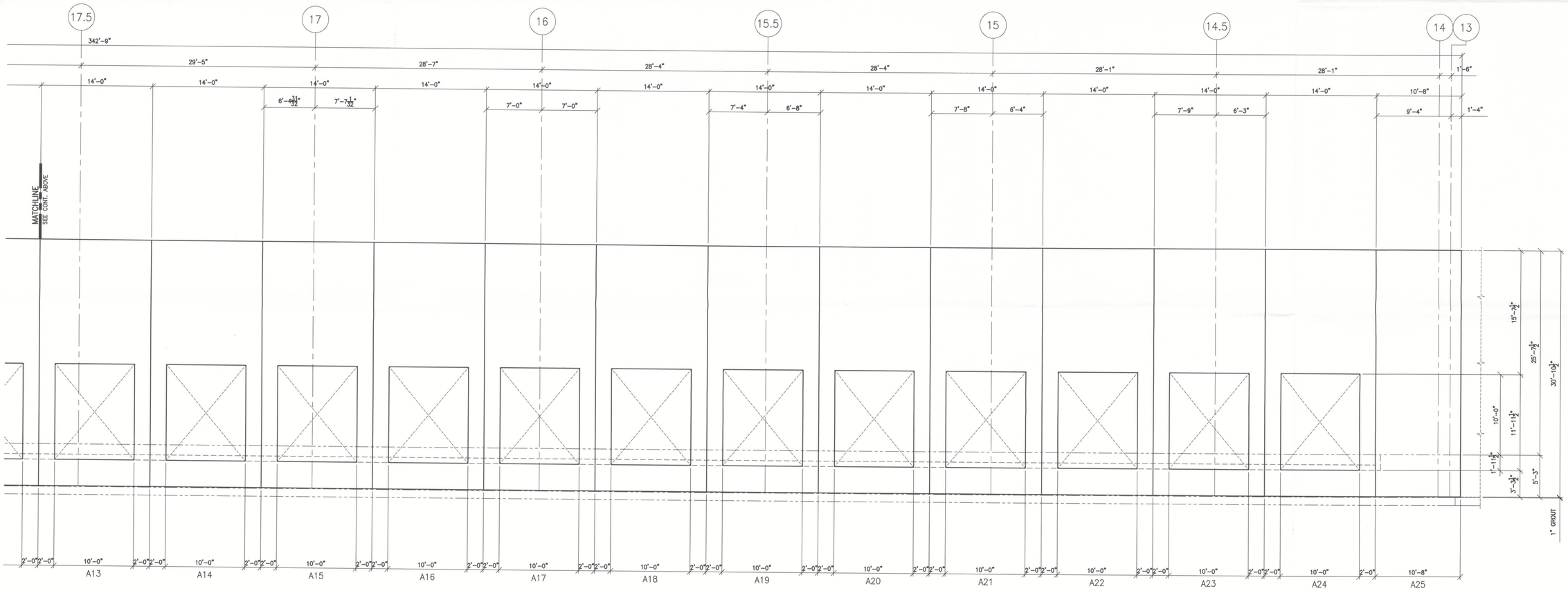

stellar
OPERATING AS THE STELLAR GROUP
2800 WHITLEY ROAD, JACKSONVILLE, FL 32207 (904) 350-2800
WWW.STELLARNET
FLORIDA ARCHITECTURAL LICENSE NO. AA-C000112
FLORIDA ENGINEERING LICENSE NO. 9009

James F. Mateloke
12/20/12

JAMES F. MATELOKE
FL LICENSE #63121

UNITED STATES COLD STORAGE, INC.
PHASE II EXPANSION
LAKE CITY, FLORIDA

TILT-UP PANEL ELEVATIONS AND REINFORCING

REV.	DATE	BY	DESCRIPTION
A	12/20/12	SM	PERMIT ISSUE

JOB NO.	710-04224
DRAWN:	SM
CHECKED:	DK
SCALE:	AS NOTED

S205
DRAWING NO.

Filename: T:\Jobs\04200-04299\04224 United States Cold Storage Phase II Facility Expansion_FL\Design\Active\Struct\04224S205.dwg Last Saved By: SMARTIN Date: 12/20/2012 2:40:54 PM Plotted: 12/20/2012 2:41:05 PM

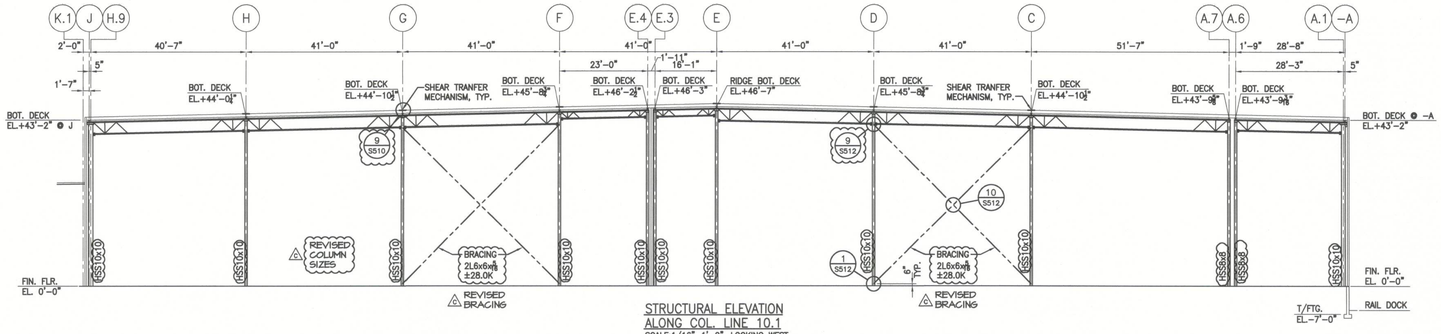

STRUCTURAL ELEVATION ALONG COL. LINE 10.1
SCALE:1/16"=1'–0" LOOKING WEST

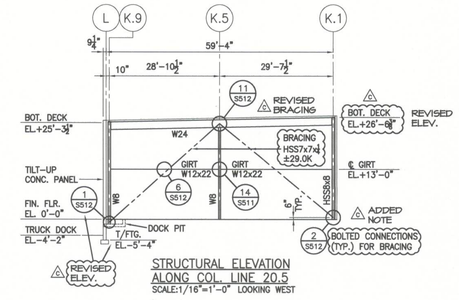

STRUCTURAL ELEVATION ALONG COL. LINE 20.5
SCALE:1/16"=1'–0" LOOKING WEST

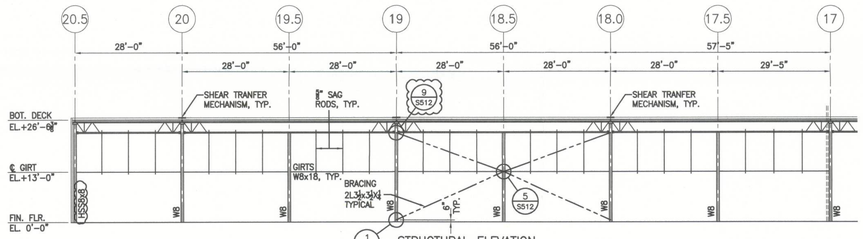

STRUCTURAL ELEVATION ALONG COL. LINE K.1
SCALE:1/16"=1'–0" LOOKING SOUTH

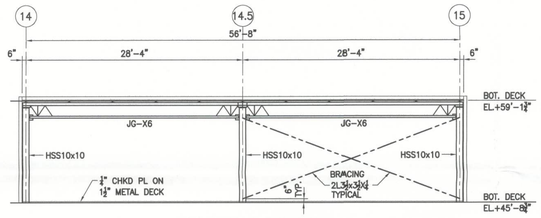

PENTHOUSE 6 ELEVATION
SCALE: ⅛"=1'–0" ALONG LINE F LOOKING NORTH

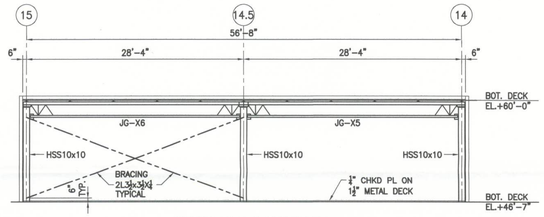

PENTHOUSE 6 ELEVATION
SCALE: ⅛"=1'–0" ALONG LINE E LOOKING SOUTH

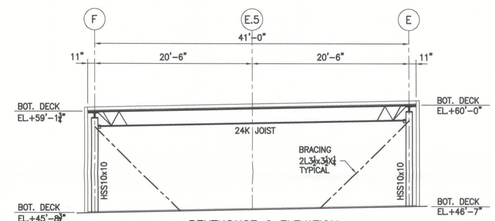

PENTHOUSE 6 ELEVATION
SCALE: ⅛"=1'–0" ALONG LINE 15 LOOKING WEST

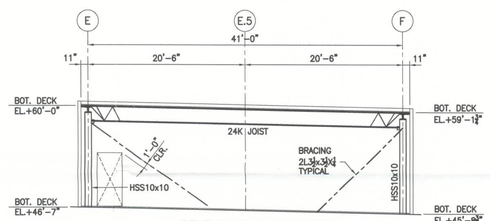

PENTHOUSE 6 ELEVATION
SCALE: ⅛"=1'–0" ALONG LINE 15 LOOKING EAST

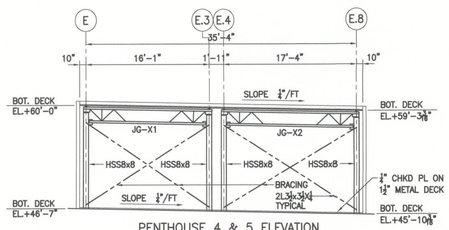

PENTHOUSE 4 & 5 ELEVATION
SCALE: ⅛"=1'–0" ALONG LINE 10.4 LOOKING EAST

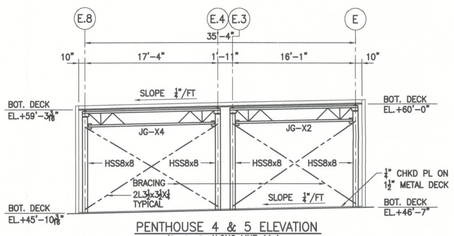

PENTHOUSE 4 & 5 ELEVATION
SCALE: ⅛"=1'–0" ALONG LINE 11.4 LOOKING WEST

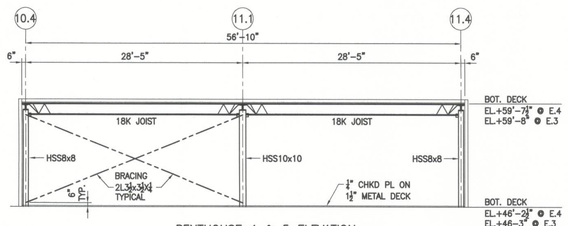

PENTHOUSE 4 & 5 ELEVATION
SCALE: ⅛"=1'–0" ALONG LINE E.4 LOOKING NORTH
ALONG LINE E.3 LOOKING SOUTH
OPPOSITE HAND

C ADDED PENTHOUSE ELEVATIONS

stellar
OPERATING AS THE STELLAR GROUP
3900 WHITLEY ROAD, JACKSONVILLE, FL. 32207 (904) 390-2800
WWW.STELLARGROUP.COM
FLORIDA ARCHITECTURAL LICENSE NO. AA-C000112
FLORIDA ENGINEERING LICENSE NO. 5630

James F. Matelski 12/19/12

JAMES F. MATELSKI
FL. LICENSE #53121

UNITED STATES COLD STORAGE, INC.
PHASE II EXPANSION
LAKE CITY, FLORIDA

STRUCTURAL ELEVATIONS

REV.	DATE	BY	DESCRIPTION
C	12/20/12	SM	PERMIT ISSUE
B	12/13/12	SM	FOUNDATION PERMIT ISSUE
A	12/11/12	SM	RELEASED FOR STEEL DETAILING

JOB NO.	710-04224
DRAWN:	SM
CHECKED:	DK
SCALE:	AS NOTED

S201
DRAWING NO.

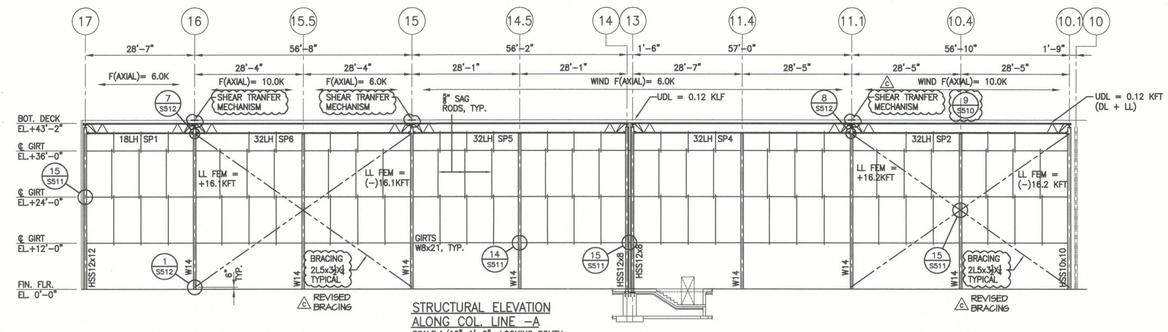

STRUCTURAL ELEVATION
ALONG COL. LINE -A
SCALE:1/16"=1'-0" LOOKING SOUTH
F (A)= F(AXIAL) = WIND FORCE (ASD) (TYP.)

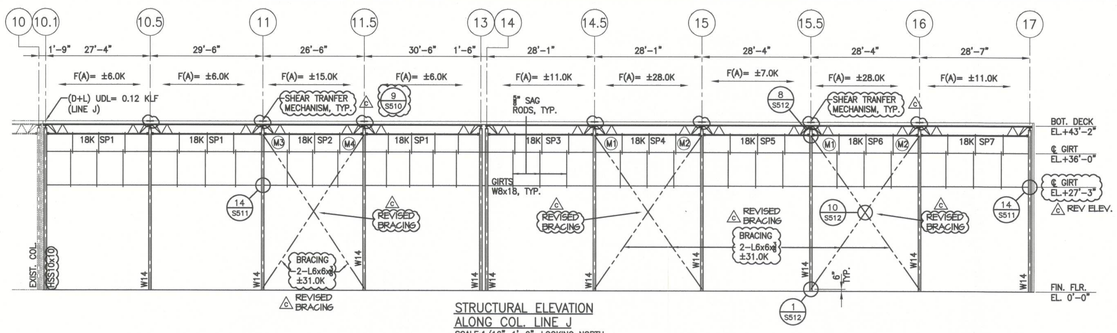

STRUCTURAL ELEVATION
ALONG COL. LINE J
SCALE:1/16"=1'-0" LOOKING NORTH
(M1) = LL FEM = +4.0 KLF
(M2) = LL FEM = (-)4.0 KLF
(M3) = LL FEM = +3.5 KLF
(M4) = LL FEM = (-)3.5 KLF

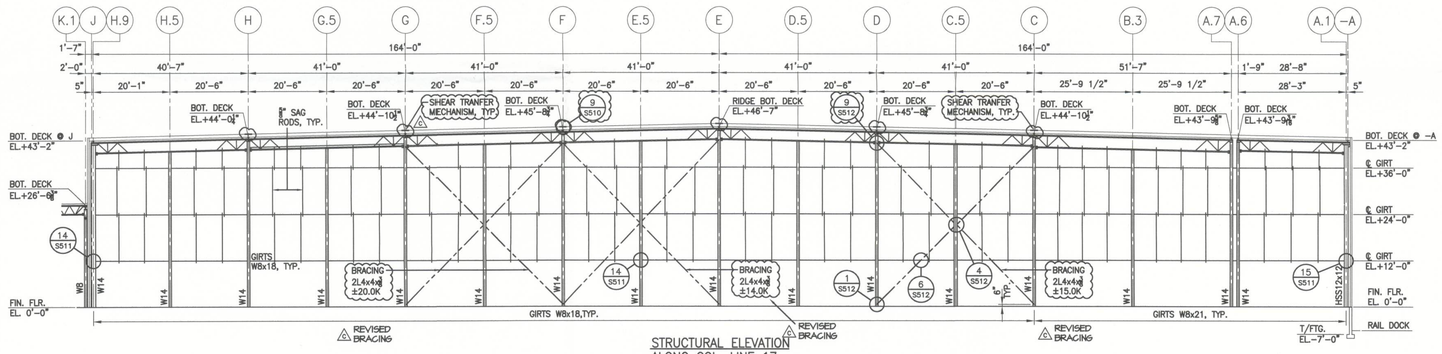

STRUCTURAL ELEVATION
ALONG COL. LINE 17
SCALE:1/16"=1'-0" LOOKING WEST

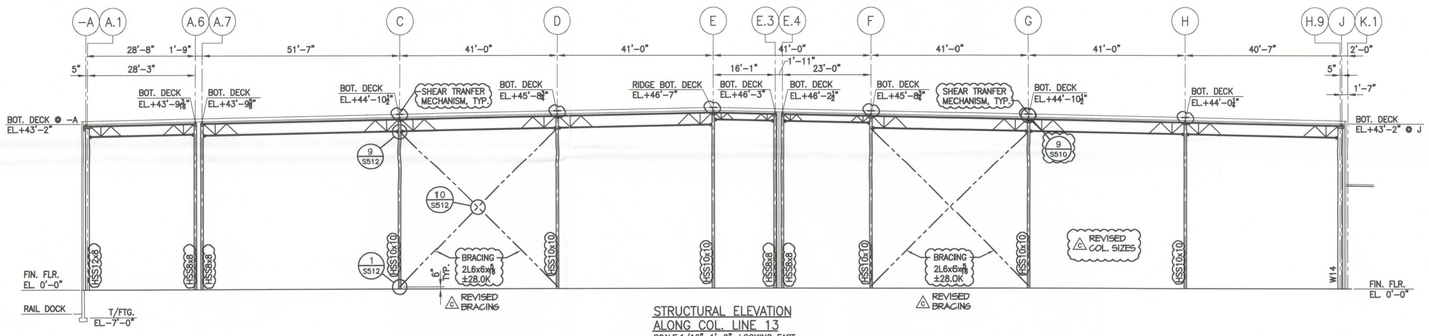

STRUCTURAL ELEVATION
ALONG COL. LINE 13
SCALE:1/16"=1'-0" LOOKING EAST

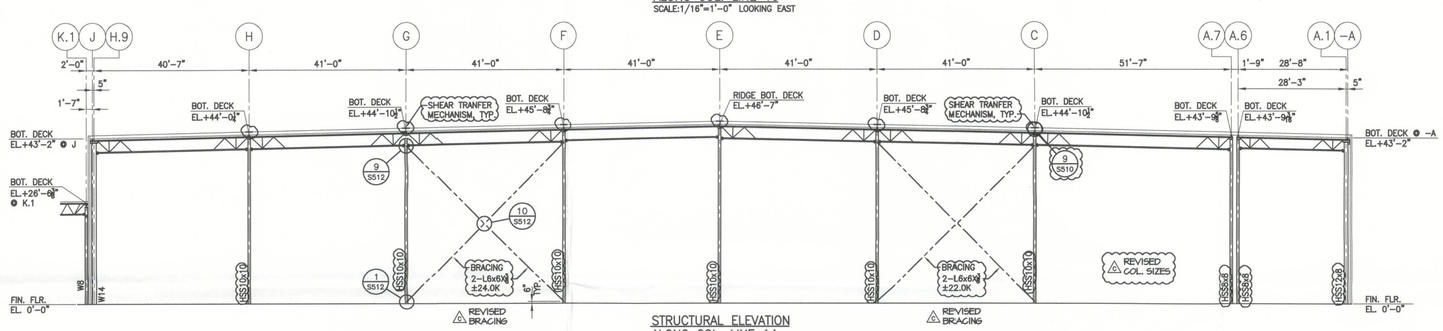

STRUCTURAL ELEVATION
ALONG COL. LINE 14
SCALE:1/16"=1'-0" LOOKING WEST

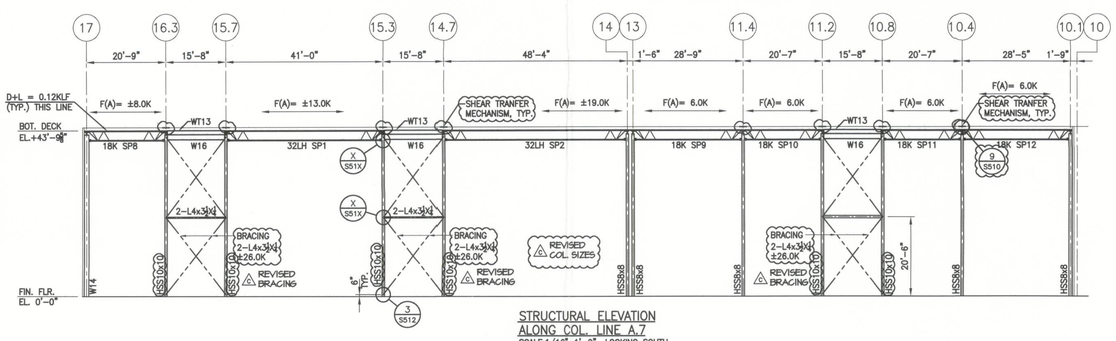

STRUCTURAL ELEVATION
ALONG COL. LINE A.7
SCALE:1/16"=1'-0" LOOKING SOUTH

stellar
WWW.STELLARNET
HOUSTON, TX 77056 (713) 961-3337 (FAX) 280-2600
2900 WAYLEY, SUITE 200
FLORIDA ARCHITECTURE BUSINESS LICENSE NO. AA-C000112
FLORIDA ENGINEERING LICENSE NO. 5630

James F. Matetski 12/20/12
JAMES F. MATETSKI
FL LICENSE #63121

UNITED STATES COLD STORAGE, INC.
PHASE II EXPANSION
LAKE CITY, FLORIDA

STRUCTURAL ELEVATIONS

REV.	DATE	BY	DESCRIPTION
C	12/20/12	SM	PERMIT ISSUE
B	12/12/12	SM	FOUNDATION PERMIT ISSUE
A	12/11/12	SM	RELEASED FOR STEEL DETAILING

JOB NO.	710-04224
DRAWN:	SM
CHECKED:	DK
SCALE:	AS NOTED

S200
DRAWING NO.

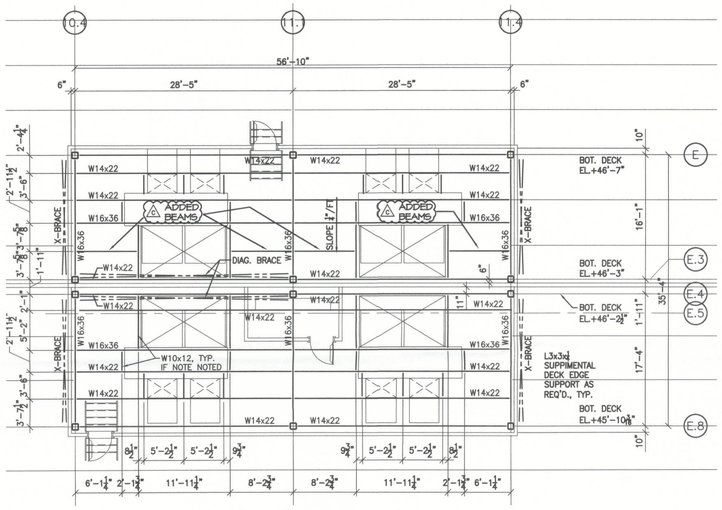

PENTHOUSE 4 & 5 FLOOR FRAMING PLAN

SCALE: 1/8" = 1'-0"

PENTHOUSE FRAMING NOTES:

1. PENTHOUSES SHALL BE 1 1/4" STEEL DECK (TYPE B22) WITH 1/4" THICK CHECKERED PLATE ATTACHED TO THE DECK WITH #12 TEKX/PRE-DRILLED HOLES.
2. FLOOR LIVE LOAD = 40 PSF.

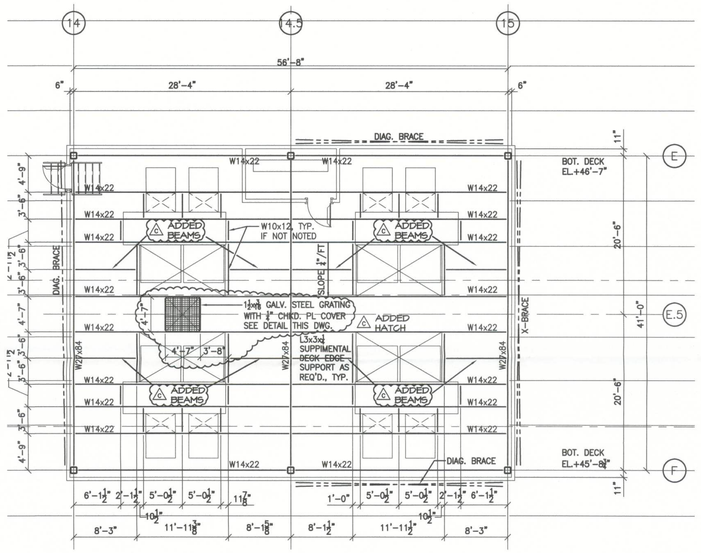

PENTHOUSE 6 FLOOR FRAMING PLAN

SCALE: 1/8" = 1'-0"

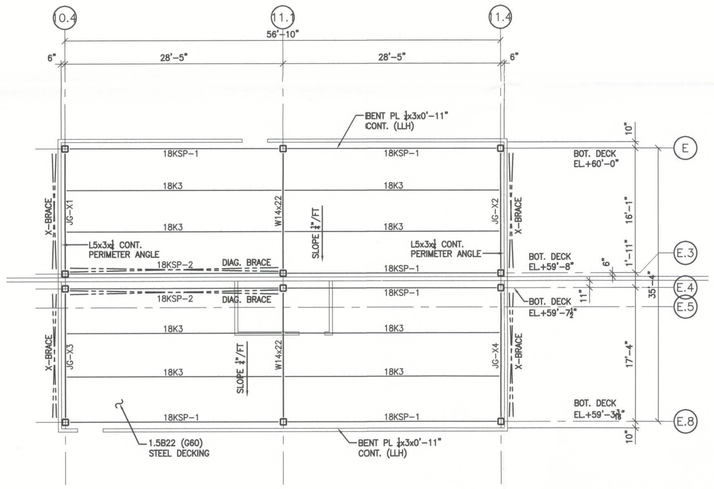

PENTHOUSE 4 & 5 ROOF FRAMING PLAN

SCALE: 1/8" = 1'-0"

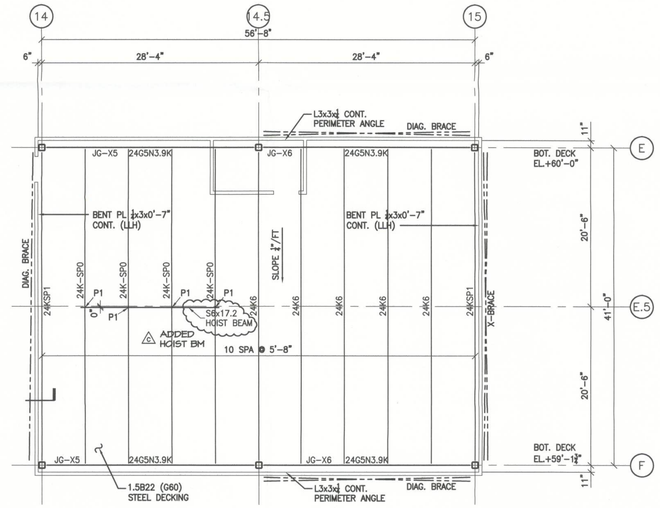

PENTHOUSE 6 ROOF FRAMING PLAN

SCALE: 1/8" = 1'-0"

NOTES:

1. HOIST CAPACITY = 1.0 TONS
2. 24K-SP0 = SPECISL JOIST
   DESIGN UDL = 0.21 KLF (D+L)
   P1 = HANGER LOAD = 2.0 KIPS

stellar

OPERATING AS THE STELLAR GROUP
3800 HARTLEY ROAD, JACKSONVILLE, FL 32257 (904) 260-3800
FLORIDA ARCHITECTURAL LICENSE NO. AA-0000112
FLORIDA ENGINEERING LICENSE NO. 8-3835

James J. Matlock 12/20/12

JAMES F. MATLOCK
FL. LICENSE #50127

UNITED STATES COLD STORAGE, INC.

PHASE II EXPANSION

LAKE CITY, FLORIDA

PENTHOUSE FRAMING PLANS

REV.	DATE	BY	DESCRIPTION
C	12/20/12	SM	PERMIT ISSUE
B	12/12/12	SM	FOUNDATION PERMIT ISSUE
A	10/17/12	SM	RELEASED FOR STEEL DETAILING

JOB NO.	710-04224
DRAWN:	SM
CHECKED:	DK
SCALE:	AS NOTED

S104

DRAWING NO.

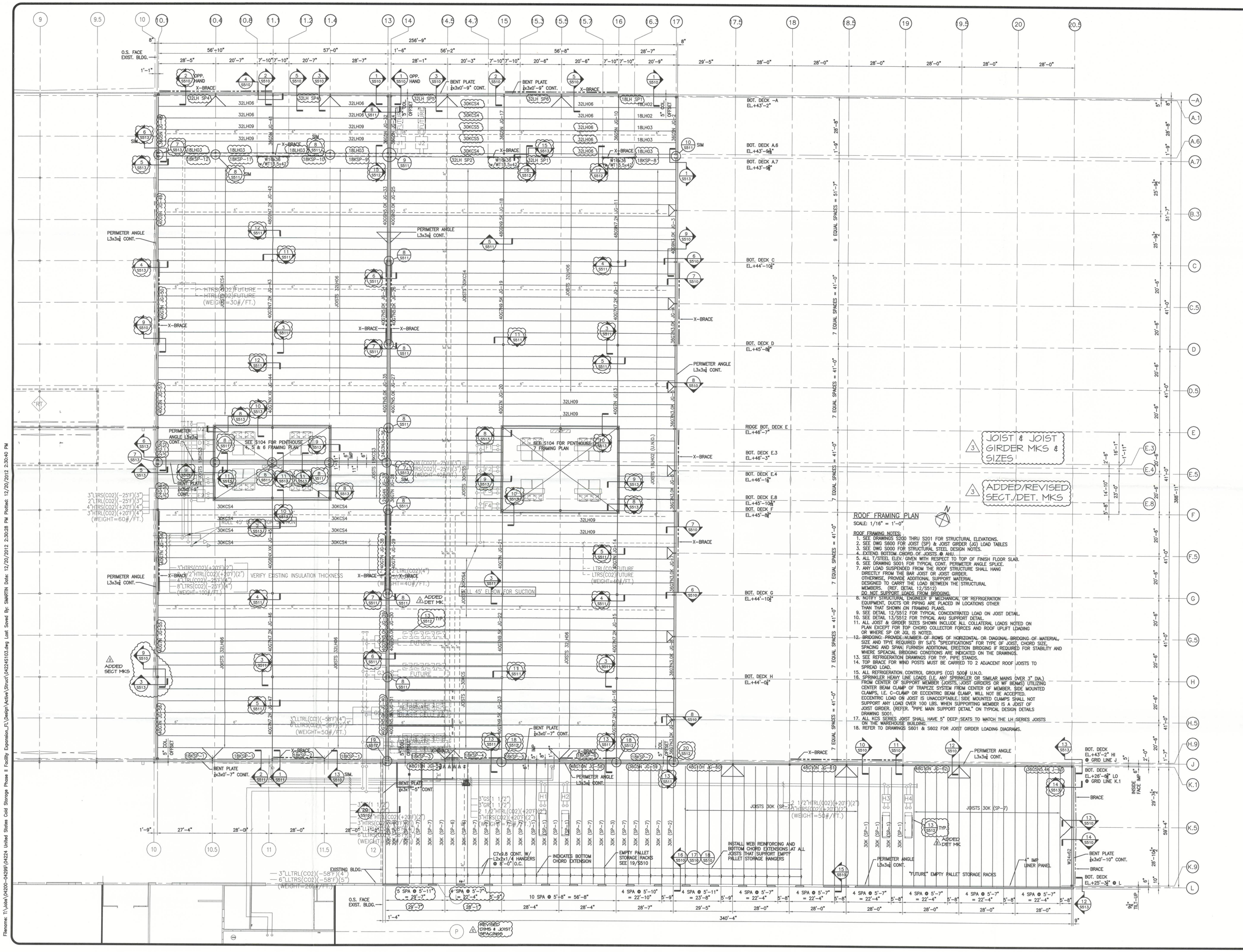

stellar
OPERATING AS THE STELLAR GROUP
2900 METRO DRIVE, SUITE 100, BLOOMINGTON, MN 55425 (952) 200-2600
WWW.STELLAR.NET
FLORIDA CERTIFICATE OF AUTHORIZATION NO. 6986
FLORIDA ENGINEERING LICENSE NO. 8879

James F. Matelski 12/20/12

JAMES F. MATELSKI
FL. LICENSE #63121

UNITED STATES COLD STORAGE, INC.
PHASE II EXPANSION
LAKE CITY, FLORIDA

ROOF FRAMING PLAN

REV.	DATE	BY	DESCRIPTION
C	12/20/12	SM	PERMIT ISSUE
B	12/12/12	SM	FOUNDATION PERMIT ISSUE
A	12/11/12	SM	RELEASED FOR STEEL DETAILING

JOB NO. 710-04224
DRAWN: SM
CHECKED: DK
SCALE: AS NOTED

S103
DRAWING NO.

Filename: T:\Jobs\04200-04299\04224 United States Cold Storage Phase II Facility Expansion_FL\Design\Active\Struct\04224S103.dwg Last Saved By: SMARTIN Date: 12/20/2012 2:30:28 PM Plotted: 12/20/2012 2:30:40 PM

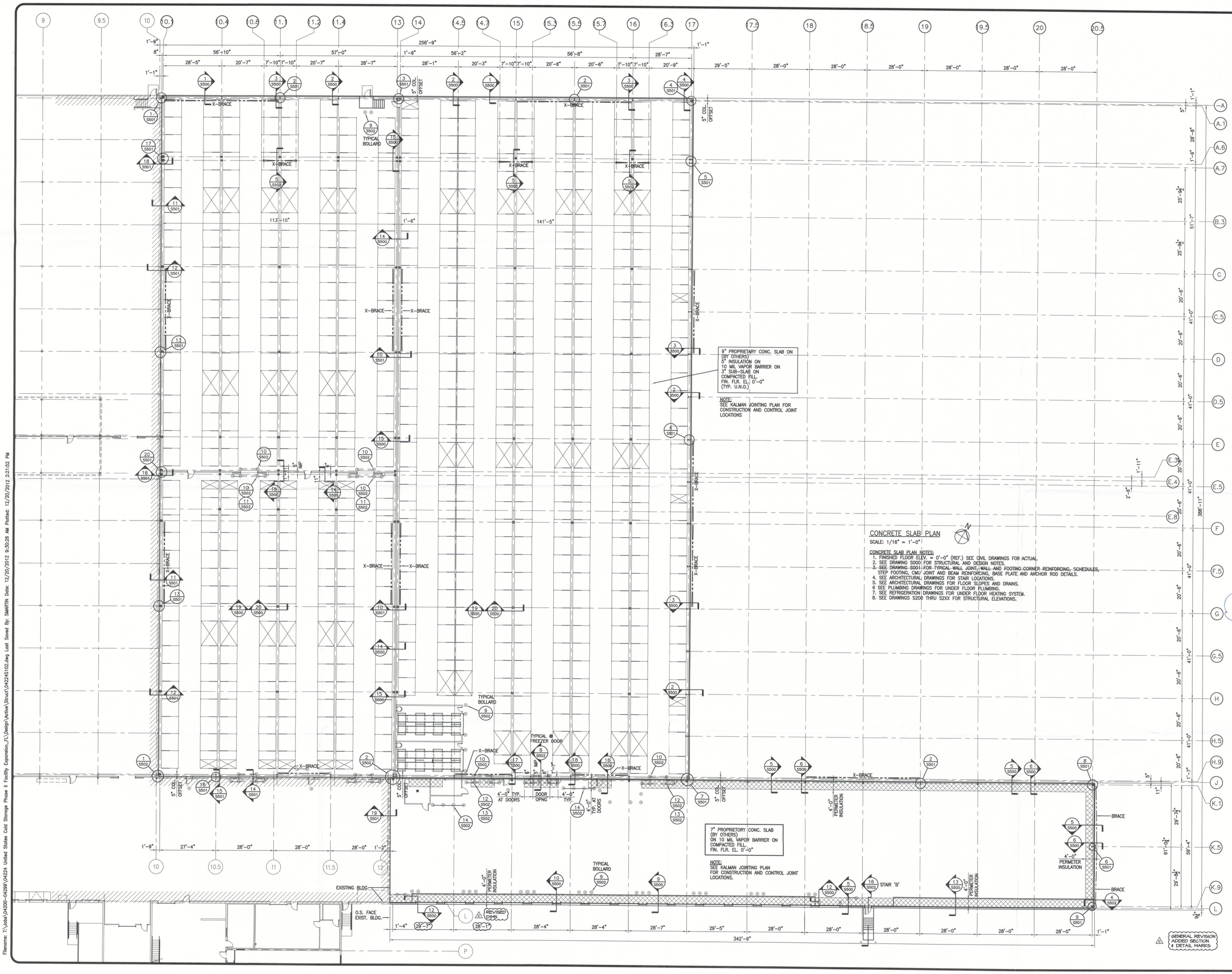

Filename: T:\jobs\04200-04299\04224 United States Cold Storage Phase II Facility Expansion_FL\Design\Active\Struct\0422AS102.dwg Last Saved By: SMARTIN Date: 12/20/2012 9:30:26 AM Plotted: 12/20/2012 2:21:52 PM

GENERAL REVISION ADDED SECTION & DETAIL MARKS

stellar

OPERATING AS THE STELLAR GROUP
3000 HARTLEY ROAD, JACKSONVILLE, FL 32257 (904) 260-2600
FLORIDA ARCHITECTURAL LICENSE NO. AA-C000112
FLORIDA ENGINEERING LICENSE NO. 5920

James F. Matelski 12/20/12
JAMES F. MATELSKI
FL LICENSE #63121

UNITED STATES COLD STORAGE, INC.
PHASE II EXPANSION
LAKE CITY, FLORIDA

Sheet S-101 with Foundation only permit

CONCRETE SLAB PLAN

REV.	DATE	BY	DESCRIPTION
C	12/20/12	SM	PERMIT ISSUE
B	12/14/12	SM	FOUNDATION ISSUE
A	12/11/12	SM	RELEASED FOR STEEL DETAILING

JOB NO.	710-04224
DRAWN:	SM
CHECKED:	DK
SCALE:	AS NOTED

S102
DRAWING NO.

REINFORCED CONCRETE NOTES

1. ALL CONCRETE WORK SHALL CONFORM TO ACI 318, "BUILDING CODE REQUIREMENTS FOR REINFORCED CONCRETE".
2. THE USE OF FLY ASH IS PROHIBITED. CONCRETE MIX DESIGNS SHALL BE SUBMITTED AND APPROVED PRIOR TO CASTING ANY CONCRETE.
3. ALL CONCRETE PLACED SHALL BE VIBRATED BY MECHANICAL VIBRATORS.
4. COMPLETE FABRICATION AND PLACING DRAWINGS FOR REINFORCING STEEL SHALL BE SUBMITTED FOR APPROVAL. NO FABRICATION MAY BEGIN UNTIL DRAWINGS ARE COMPLETED AND APPROVED.
5. LAP SPLICES FOR REINFORCING STEEL SHALL BE IN ACCORDANCE WITH ACI 318. SPLICES SHALL BE AS CALLED FOR IN THE LATEST EDITION OF THE CRSI "MANUAL OF STANDARD PRACTICE".
6. REINFORCING OF ALL CONCRETE MEMBERS SHALL HAVE THE FOLLOWING CLEAR CONCRETE COVER.

CAST-IN-PLCAE CONCRETE:	COVER (INCHES)
CONCRETE CAST AGAINST AND PERMANENTLY EXPOSED TO EARTH:	3
CONCRETE EXPOSED TO EARTH OR WEATHER:	
#6 BARS THROUGH #18 BARS	2
#5 BARS OR SMALLER	1 1/2
CONCRETE NOT EXPOSED TO WEATHER OR IN CONTACT WITH EARTH:	
SLAB AND WALLS:	
#14 AND #18 BARS	1 1/2
#11 BARS AND SMALLER	3/4
COLUMNS:	
PRIMARY REINFORCEMENT, TIES, STIRRUPS AND SPIRALS	1 1/2

7. THE CONTRACTOR SHALL PROVIDE CHAIRS AT 4'-0" CENTER TO CENTER TO SUPPORT WIRE MESH WHILE CASTING SLAB. PULL FABRIC UP BETWEEN SUPPORTS TO PROVIDE 2" CLEARANCE TO TOP OF SLAB. MINIMUM SIDE AND END LAP ON FABRIC SHALL BE ONE WIRE SPACE.
8. SPLICE WELDING OF REINFORCING STEEL SHALL BE DONE IN STRICT ACCORDANCE WITH THE AMERICAN WELDING SOCIETY "REINFORCING STEEL WELDING CODE". PREHEATING OF THE REINFORCING SHALL BE BASED ON THE CARBON EQUIVALENCY DETERMINED FROM REINFORCING MILL REPORTS. GRADE 40 REINFORCING SHALL BE WELDED WITH E90XX LOW HYDROGEN ELECTRODES.
9. MANUAL WELDING OF REINFORCING BARS FOR EMBEDS IS NOT ALLOWED.
10. CONCRETE WALLS SHALL BE REINFORCED AROUND ALL OPENINGS WITH 2-#5 BARS ON ALL SIDES AND EXTENDED 2'-0" BEYOND OPENING UNLESS NOTED OTHERWISE.
11. THE LONGITUDINAL REINFORCING STEEL IN BOND BEAMS, WALLS AND FOOTINGS SHALL BE CONTINUOUS AROUND CORNERS. SEE TYPICAL DETAILS THIS SHEET.
12. CHAMFER EXPOSED EDGES OF COLUMNS AND BEAMS 3/4".
13. SAWN JOINTS IN SLABS-ON-GRADE SHALL SHALL BE CUT AS SOON AS POSSIBLE AFTER THE CONCRETE HARDENS. JOINTS CAN BE CUT WITH A POWER BLADE WITHIN 4 TO 12 HOURS AFTER THE SLAB HAS BEEN PLACED AND FINISHED. JOINTS MUST BE CUT AS SOON AS THE CONCRETE IS FIRM ENOUGH NOT TO BE TORN OR DAMAGED BY THE BLADE. THE CONCRETE IS HARD ENOUGH WHEN THE BLADE DOES NOT DISLODGE ANY AGGREGATE AND WHEN THE EDGES OF THE CUT DO NOT RAVEL.
14. CONTROL JOINTS IN ALL FOUNDATION AND RETAINING WALLS SHALL BE PLACED NOT MORE THAN 15'-0" APART AND SHALL BE 3/4" V-CHAMFERED ON BOTH SIDES, UNLESS NOTED OTHERWISE. EXPANSION JOINTS SHALL BE LOCATED AS NOTED ON THE PLANS. SEE DETAILS THIS SHEET.

STRUCTURAL STEEL GENERAL NOTES

1. ALL STRUCTURAL STEEL WORK SHALL CONFORM TO 1989 "SPECIFICATIONS FOR STRUCTURAL STEEL BUILDINGS" OF THE A.I.S.C.
2. FABRICATORS AND ERECTORS SHALL BE MEMBERS OF THE A.I.S.C. OR CERTIFIED FOR CATEGORY I, A.I.S.C. QUALITY CERTIFICATION PROGRAM OR HAVE HAD AT LEAST 10 YEARS EXPERIENCE IN FABRICATION AND ERECTION OF SIMILAR STEEL STRUCTURES.
3. SHOP DRAWINGS FOR ALL STRUCTURAL STEEL SHALL BE SUBMITTED AND APPROVED PRIOR TO ANY FABRICATION.
4. STEEL FRAMING CONNECTIONS SHALL BE BOLTED OR WELDED. ALL CONNECTIONS SHALL HAVE A MINIMUM OF 2-3/4" DIAMETER ASTM A325N BOLTS OR EQUIVALENT WELD. ALL BOLTED CONNECTIONS SHALL BE "SNUG TIGHT" UNLESS NOTED OTHERWISE. TC BOLTS MAY BE USED.
5. THE CONTACT SURFACES WITHIN SLIP CRITICAL JOINTS SHALL BE FREE FROM OIL, PAINT, LACQUER OR GALVANIZING.
6. ROOF DECKING SHALL BE INSTALLED IN ACCORDANCE WITH THE STEEL DECK INSTITUTE AND MANUFACTURER'S RECOMMENDATIONS. DECKING SHALL BE PLACED IN A THREE-SPAN CONTINUOUS CONDITION. SINGLE OR DOUBLE SPAN CONDITIONS REQUIRE PRIOR APPROVAL BY THE STRUCTURAL ENGINEER.
7. BEAMS SHALL BE FABRICATED AND ERECTED WITH NATURAL CAMBER UP.
8. ALL WELDS SHALL CONFORM TO AWS D1.1-2000, "STRUCTURAL WELDING CODE". ALL GROOVE WELDS SHOWN ON CONTRACT DOCUMENTS SHALL BE FULL PENETRATION UNLESS NOTED OTHERWISE. WELDING SHALL BE DONE WITH E-70XX ELECTRODES UNLESS NOTED OTHERWISE.
9. STRUCTURAL STEEL EMBEDDING IN CONCRETE SHALL NOT BE PAINTED.
10. GROUT USED IN GROUT BEDS UNDER COLUMN BASE PLATES SHALL BE CEMENT BASED, NON-SHRINK GROUT. THE GROUT SHALL EXHIBIT NO SHRINKAGE IN ACCORDANCE WITH ASTM C827-82, "TEST METHOD FOR EARLY VOLUME CHANGE OF CEMENTITIOUS MIXTURES" AND SHALL HAVE A MINIMUM 28-DAY COMPRESSIVE STRENGTH OF 5000 PSI WHEN TESTED IN ACCORDANCE WITH ASTM C-109-80, "TEST METHOD FOR COMPRESSIVE STRENGTH OF HYDRAULIC CEMENT MORTARS".
11. SHOP OR FIELD SPLICES NOT SHOWN ON THE CONTRACT DOCUMENTS SHALL BE SUBMITTED TO THE STRUCTURAL ENGINEER FOR APPROVAL.
12. STRUCTURAL STEEL FRAMING SHALL BE ERECTED TRUE AND PLUMB IN ACCORDANCE WITH A.I.S.C. CODE OF STANDARD PRACTICE. ANY FRAMING EXCEEDING TOLERANCES OF THE CODE OF STANDARD PRACTICE SHALL BE CORRECTED AS DIRECTED BY THE STRUCTURAL ENGINEER.
13. THE STRUCTURAL STEEL ERECTOR SHALL PROVIDE TEMPORARY BRACING OF THE STRUCTURAL STEEL FRAME WORK AGAINST LATERAL LOADINGS SUCH AS WIND. THE BRACING SHALL REMAIN IN PLACE UNTIL THE FINAL SYSTEM FOR RESISTING LATERAL LOADS IS IN PLACE AND EFFECTIVE AS APPROVED BY THE STRUCTURAL ENGINEER.
14. UNLESS OTHERWISE SHOWN, ALL BEAM CONNECTIONS SHALL BE STANDARD FRAMED OR SEATED CONNECTIONS. DESIGN ALL FRAMED BEAM END CONNECTIONS FOR THE REACTIONS SHOWN IN THE PLANS.
IN NO CASE, HOWEVER, SHALL THE LENGTH OF THE FRAMED CONNECTIONS BE LESS THAN ONE-HALF OF THE "T" DISTANCE OF THE BEAM WEB.
15. GUSSET PLATES SHALL BE 3/8" THICK MINIMUM.
16. WHERE PRACTICAL, UNLESS SHOWN DIFFERENTLY ON DRAWINGS, ALL BRACING CONNECTIONS SHALL BE DESIGNED AND DETAILED SO THAT ALL FORCE COMPONENTS CAN BE DELIVERED DIRECTLY TO THE CENTERLINE OF INTERSECTING MEMBERS. WHERE THIS IS NOT DONE, CONNECTIONS SHALL BE DESIGNED TO ACCOUNT FOR RESULTING ECCENTRICITIES.
17. (- OR T) INDICATES TENSION IN MEMBERS.
(+ OR C) INDICATES COMPRESSION IN MEMBERS.
18. BAR JOISTS SHALL BE FABRICATED AND ERECTED, BRACED WITH RIGID BRIDGING AND ANCHORED TO THE SUPPORTING MEMBERS IN STRICT ACCORDANCE WITH THE STANDARD SPECIFICATIONS OF THE STEEL JOIST INSTITUTE LATEST EDITION.
19. PROVIDE JOISTS AS SHOWN ON PLANS. EXTEND BOTTOM CHORD OF JOISTS AT COLUMNS.
20. JOISTS AND JOIST GIRDERS SHALL BE DESIGNED FOR LOADS INDICATED ON PLANS. SEE DRAWING S600 FOR JOIST (SP) AND JOIST GIRDER (JGL) LOAD TABLES.
21. JOIST AND GIRDER FABRICATOR SHALL SUBMIT SIGNED AND SEALED CALCULATIONS BY A REGISTERED ENGINEER SHOWING ALL LOADS AND SPECIAL CONDITIONS TOGETHER WITH SHOP DRAWINGS PRIOR TO ERECTION OF JOISTS AND GIRDERS.
22. JOISTS AND GIRDERS SHALL BE DESIGNED FOR UPLIFT AS INDICATED ON PLANS. BOTTOM CHORD BRACES AND UPLIFT BRIDGING SHALL BE DESIGNED AND FURNISHED BY THE JOIST GIRDER MANUFACTURER.
23. WIND POSTS TERMINATE 1 1/2" BELOW JOIST AND JOIST GIRDER BOTTOM CHORD.
24. ALL JOIST GIRDERS SHALL HAVE BOTTOM CHORD BRACES AT MID SPANS TYPICALLY. (MINIMUM) TO BE DESIGNED BY JOIST SUPPLIER.
25. ALL SAG RODS ARE 5/8"ø.
26. ALL STRUCTURAL STEEL, MISCELLANEOUS STEEL AND STEEL JOISTS U.N.O. SHALL BE GIVEN ONE SHOP COAT AND ONE FIELD TOUCH UP PAINT, GRAY COLOR.

INSPECTIONS

1. ANCHOR RODS:
STEEL INSPECTOR TO VERIFY SIZE, PROJECTION, SPACING AND LOCATION OF ANCHOR RODS BEFORE CONCRETE IS PLACED.
2. STRUCTURAL STEEL:
A. STEEL INSPECTOR TO VERIFY THAT BOLTED CONNECTIONS ARE TIGHTENED PER SPECIFICATIONS, THAT ROD BRACING IS TIGHT AND NOT RUBBING AGAINST GIRT HOLES.
B. WELDING ADJACENT TO METAL PANELS TO BE INSPECTED BEFORE PANELS ARE SET.

DESIGN RESPONSIBILITY

1. FABRICATOR SHALL BE RESPONSIBLE FOR THE DESIGN OF ALL STRUCTURAL STEEL CONNECTIONS.
2. CONNECTIONS SHOWN ON THE DRAWINGS ARE SCHEMATIC AND ARE ONLY INTENDED TO SHOW THE RELATIONSHIP OF MEMBERS CONNECTED.
3. ALL WELDS SHALL BE 1/4 INCH FILLET WELDS UNLESS ATTACHED MATERIAL IS 3/16" THICK OR LESS.
4. ALL STRUCTURAL STEEL CONNECTIONS SHALL PROVIDE FOR THE DESIGN LOADS INDICATED ON THE MEMBERS OR 50% TENSION CAPACITY OF THE TRUSS WEB MEMBERS AND BRACING MEMBERS.
5. FABRICATOR SHALL DESIGN AND PROVIDE GUSSET PLATES & STIFFENER PLATES AS REQUIRED PER CONNECTION DESIGN.
6. PLUG ALL HOLES IN STRUCTURAL STEEL MEMBERS.
7. SLOTS FOR TUBE/PIPE MEMBERS AT THE GUSSETS SHALL BE WELDED OVER THE ENTIRE LENGTH.
8. ALL JOINTS SHALL BE SEAL WELDED.
9. FABRICATOR SHALL SUBMIT CONNECTION DESIGN CALCULATIONS, SIGNED AND AND SEALED BY A PROFESSIONAL ENGINEER, PRIOR TO FABRICATION OF STEEL MEMBERS.

DESIGN NOTES

DESIGN DATA: FLORIDA BUILDING CODE 2010.	
WIND DESIGN	BASIC WIND SPEED: 120 MPH (ULTIMATE) IMPORTANCE FACTOR: 1.0 CATEGORY: ENCLOSED BUILDING EXPOSURE: C INTERNAL PRESSURE COEFFICIENT: ±0.18 FOR COMPONENTS & CLADDING PRESSURES REFER TABLES DRAWING S601
SEISMIC	(SEISMIC NOT CONSIDERED PER CODE)
SOIL BEARING CAPACITY	2500 PSF UNIVERSAL ENGINEERING SCIENCES REPORT NO. 458560, DATED: MARCH 29, 2006
LIVE LOADS:	
ROOF	20 PSF (WITH TRIBUTARY REDUCTIONS)
PENTHOUSE	40 PSF
STAIRS AND LANDINGS	100 PSF
INTERIOR WALLS	5 PSF
GROUND SNOW LOAD	0 PSF
DEAD LOADS:	
SINGLE PLY ROOF MEMBRANE	1 PSF
ROOF INSULATION	2 PSF
METAL ROOF DECK	2 PSF
JOIST	3 PSF
MECH/ELEC/PLUMB	3 PSF
CEILING	2 PSF
SPRINKLER	CONVENTIONAL 3 PSF
MATERIALS:	
WIDE FLANGE STEEL	A572 OR A992 (50 KSI)
CHANNELS, ANGLES & PLATES	A36 (36 KSI)
RECTANGULAR STRUCTURAL TUBING	A500 GRADE B (46 KSI)
STANDARD PIPE	A53 GRADE B
HIGH STRENGTH BOLTS	A325N, A325TC
ANCHOR RODS	A36, A308 OR F1554 GRADE 36
STEEL JOISTS & JOIST GIRDERS	S.J.I.
METAL ROOF DECK	1 1/2", G60, TYPE B, 22 GA.
WELDING ELECTRODES	E70XX
RIGID UNDER FLOOR INSULATION	MIN. COMPRESSIVE STRENGTH = 25 PSI
RIGID INSULATION BLOCK (LAST-A-FOAM R9330)	MIN. COMPRESSIVE STRENGTH = 1000 PSI
STEEL GRATING	A569
RAISED-PATTERN FLOOR PLATE	A786
CONCRETE (28 DAYS):	
FOOTINGS	3000 PSI
WEAR SLAB/SLAB-ON-GRADE	4000 PSI
SUB-SLAB	3000 PSI
TILT-UP PANELS	4000 PSI (2500 PSI AT 7 DAYS)
ALL OTHER CONCRETE	3000 PSI
REINFORCING STEEL	A615 GRADE 60
DEFORMED BAR ANCHORS (DBA)	A496
HEADED STUDS	A108
WELDED WIRE FABRIC	A185
ADHESIVE ANCHORING	REDHEAD A7 (ICC ER-5560) OR HILTI HIT HY150 (ICC ER-5193)
RACK DESIGN DATA:	
MAXIMUM RACK POSTLOAD	3000#/PALLET, 5 HIGH
RACK LAYOUT	48" x 106"
UTILIZATION ASSUMED	85%
BASE PLATE	6" x 8" MIN. @ INT. POST

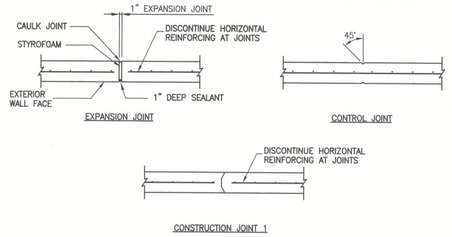

FOUNDATION WALL JOINT DETAILS
N.T.S.

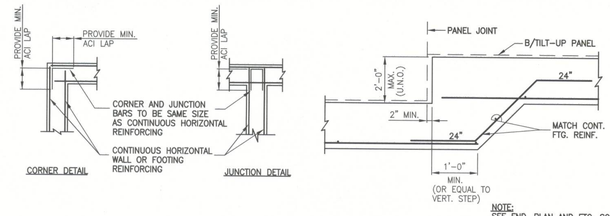

NOTE:
SEE FND. PLAN AND FTG. SCHED. FOR FTG. SIZE AND REINF.

TYPICAL WALL AND FOOTING DETAILS
N.T.S.

TYPICAL STEP FOOTING DETAIL
N.T.S.

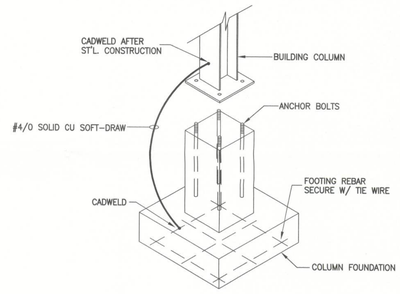

TYPICAL PERIMETER GROUNDED @ COLUMN DETAIL
N.T.S.
NOTE:
SEE GROUNDING LOCATION DETAILS ON ELECTRICAL DRAWINGS.

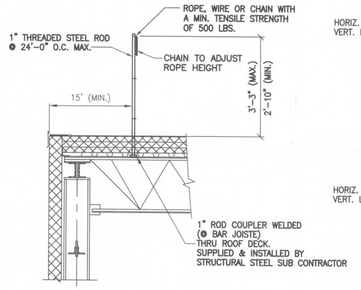

TEMPORARY CONSTRUCTION WARNING LINE DETAIL @ ROOF EDGE
N.T.S.

NOTES:
1. THE COUPLING, FOR 1" ROD STANCHIONS, NEEDS TO BE WELDED DIRECTLY TO THE BAR JOIST 24' O.C. MAX.
2. TOP EDGE NEEDS TO BE NOT LESS THAN 34" OR EXCEED 39" FROM THE WALKING/WORKING SURFACE.
3. THE TOP ROPE SHALL BE ATTACHED AT EACH STANCHION IN SUCH A WAY THAT PULLING ON ONE SECTION OF THE LINE WILL NOT RESULT IN SLACK BEING TAKEN UP IN ADJACENT SECTIONS.
4. THE ROPE USED AT THE TOP SHALL BE FLAGGED @ 6' INTERVALS WITH HIGH-VISIBILITY MATERIAL.
5. AT CORNER POST, WELD DIAGONAL BRACE (1" ROD) EACH WAY FROM TOP OF POST DOWN TO ROOF STRUCTURE AT 1 TO 1 SLOPE.
6. AT END POST, WELD DIAGONAL BRACE (1" ROD) FORM TOP OF POST DOWN TO ROOF STRUCTURE AT 1 TO 1 SLOPE.
7. WARNING LINE OR APPROVED EAQUAL SHALL COMPLY WITH ALL REGULATIONS SET FORTH BY OSHA.

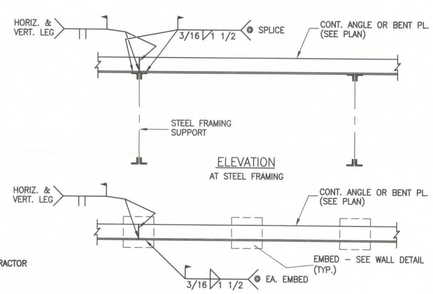

DIAPHRAM CHORD ANGLE SPLICE DETAIL
N.T.S.

SPECIAL INSPECTION SCHEDULE

ESTABLISHED PER 2009 IBC SECTION 109 AND CHAPTER 17

ITEM	CONTINOUS	PERIODIC	REFERENCE	COMMENTS
PRE-FAB CONSTRUCTION (IBC 1704.2)			REFERENCE NOTES P1 & P2	P1. SPECIAL INSPECTION IS NOT REQUIRED WHERE THE WORK IS DONE ON THE PREMISES OF A FABRICATOR REGISTERED AND APPROVED TO PEFORM WORK WITHOUT SPECIAL INSPECTION PROVIDED THE FABRICATOR COMPLIES WITH IBC. P2. INSPECTION FOR PREFABRICATED CONSTRUCTION SHALL BE THE SAME AS IF THE MATERIAL USED IN THE CONSTRUCTION TOOK PLACE ON SITE. SPECIAL INSPECTION WILL NOT BE REQUIRED DURING PREFABRICATION IF THE APPROVED AGENCY CERTIFIES THE CONSTRUCTION AND FURNISHES EVIDENCE OF COMPLIANCE (SEE NOTE 2)
STEEL CONSTRUCTION (IBC 1704.3)			SEE IBC TABLE 1704.3	S1. WELDING INSPECTIONS SHALL BE IN COMPLIANCE WITH AWS D1.1. S2. ALL WELDS SHALL BE VISUALLY INSPECTED. ALL MATERIALS WELDING PROCEDURES, AND QUALIFICATIONS OF WELDERS SHALL BE VERIFIED PRIOR TO THE START OF WORK (IBC 1704.3) S3. ALL COMPLETE PENETRATION WELDS SHALL BE TESTED ULTRASONICALLY OR BY USING ANOTHER APPROVED METHOD. (IBC 1708.4). S4. PERIODIC SPECIAL INSPECTION IS ALLOWED FOR VERIFICATION OF THE WELDABILITY IF REINFORCING STEEL OTHER THAN ASTM A 706 IN ACCORDANCE WITH ANSI/AWS D1.4 CONTINOUS SPECIAL INSPECTION IS REQUIRED FOR REINFORCING STEEL RESISTING FLEXURAL AND AXIAL FORCES IN INTERMEDIATE AND SPECIAL MOMENT FRAMES, BOUNDARY ELEMENTS OF SPECIAL REINFORCED CONCRETE SHEAR WALLS AND SHEAR REINFORCEMENT. PERIODIC SPECIAL INSPECTION IS ALLOWED FOR WELDING OF OTHER ASTM A 706 REINFORCING STEEL NOT INCLUDED IN THE CONTINOUS SPECIAL INSPECTION REQUIREMENTS NOTED ABOVE. S5. SLIP-CRITICAL CONNECTION MAY HAVE PERIODIC SPECIAL INSPECTON PROVIDED THAT THE TURN-OF-THE-NUT METHOD WITH MATCH MARKING TECHNIQUES IS USED.
SHOP AND FIELD WELDING			REFERENCE NOTE S1	
SINGLE PASS FIELD WELD < 5/16"		X	REFERENCE NOTE S2	
FILLET WELDS > 5/16"	X		REFERENCE NOTE S2	
MULTI-PASS FILLET WELDS	X		REFERENCE NOTE S2	
PARTIAL/COMPLETE PENETRATION WELDS	X		REFERENCE NOTE S3	
LIGHT GAUGE METAL FRAMING WELDING		X	REFERENCE NOTE S2	
FLOOR AND ROOF DECK WELDING		X	REFERENCE NOTE S2	
FLOOR AND ROOF DECK MECH. FASTENERS		X		
SIDE SEAM SCREWS,BUTTON PUNCHES ETC.		X		
INSPECTION OF STEEL FRAME JOINT DETAILS		X		
EMBEDDED PLATES		X		
HIGH STRENGTH BOLTING (IBC 1704.3.3)				
VERIFY MATERIALS OF NUTS,BOLTS & WASHERS		X		
BEARING TYPE CONNECTIONS		X		
SLIP-CRITICAL CONNECTIONS	X	X	REFERENCE NOTE S5	
CONCRETE CONSTRUCTION				
INSPECTION OF REINFORCING STEEL,INCLUDING PRESTRESSING TENDONS,AND PLACEMENT.		X		
INSPECT BOLTS TO BE INSTALLED IN CONCRETE PRIOR TO AND DURING PLACEMENT OF CONCRETE WHERE ALLOWABLE LOADS HAVE BEEN INCREASED	X			
VERIFYING USE OF REQUIRED DESIGN MIX.		X		
AT THE TIME FRESH CONCRETE IS SAMPLED TO FABRICATE SPECIMENS FOR STRENGTH TESTS, PERFORM SLUMP AND AIR CONTENT TESTS,AND DETERMINE THE TEMPERATURE OF THE CONCRETE.	X			
INSPECTION FOR MAINTENANCE OF SPECIFIED CURING TEMPERATURE AND TECHNIQUES.		X		

GENERAL SPECIAL INSPECTION NOTES:

1. THE ITEMS MARKED WITH A "X" IN THE SPECIAL INSPECTION SCHEDULE SHALL BE INSPECTED IN ACCORDANCE WITH IBC CHAPTER 17 BY A CERTIFIED SPECIAL INSPECTOR FROM AN ESTABLISHED TESTING AGENCY, FOR MATERIAL SAMPLING AND TESTING REQUIREMENTS, REFER TO THE MATERIAL SAMPLING AND TESTING SECTION,THE PROJECT SPECIFICATIONS, AND THE SPECIFIC GENERAL NOTES SECTIONS. THE TESTING AGENCY SHALL SEND COPIES OF ALL STRUCTURAL TESTING AND INSPECTION REPORTS DIRECTLY TO THE ARCHITECT,ENGINEER,CONTRACTOR,AND BUILDING OFFICIAL. ANY ITEMS WHICH FAIL TO COMPLY WITH THE APPROVED CONSTRUCTION DOCUMENTS SHALL IMMEDIATELY BE BROUGHT TO THE ATTENTION OF THE CONTRACTOR FOR CORRECTION. IF DISCREPANCIES ARE NOT CORRECTED, THEY SHALL BE BROUGHT TO THE ATTENTION OF THE BUILDING OFFICIAL,ARCHITECT,AND ENGINEER PRIOR TO COMPLETION OF THAT PHASE OF CONSTRUCTION.
2. ANY CONSTRUCTION OR MATERIAL THAT HAS FAILED INSPECTION SHALL BE SUBJECT TO REMOVAL AND REPLACEMENT.
3. CONTINUOUS SPECIAL INSPECTION MEANS THE FULL-TIME OBSERVATION OF WORK REQUIRING SPECIAL INSPECTION BY AN APPROVED SPECIAL INSPECTOR WHO IS PRESENT IN THE AREA WHERE HE WORK IS BEING PERFORMED. PERIODIC SPECIAL INSPECTION MEANS THE PART-TIME OR INTERMITTENT OBSERVATION OF WORK REQUIRING SPECIAL INSPECTION BY AN APPROVED SPECIAL INSPECTOR WHO IS PRESENT IN THE AREA WHERE THE WORK HAS BEEN OR IS BEING PERFORMED AND AT THE COMPLETIONOF THE WORK (IBC SECTION 1702)
SPECIAL INSTRUCTION TESTING REQUIREMENTS APPLY EQUALLY TO ALL BIDDER DESIGNED COMPONENTS.

ANCHOR ROD DETAIL
SET ANCHORS TO ENSURE PROPER EMBEDMENT FROM TOP OF PIER OR FOOTING

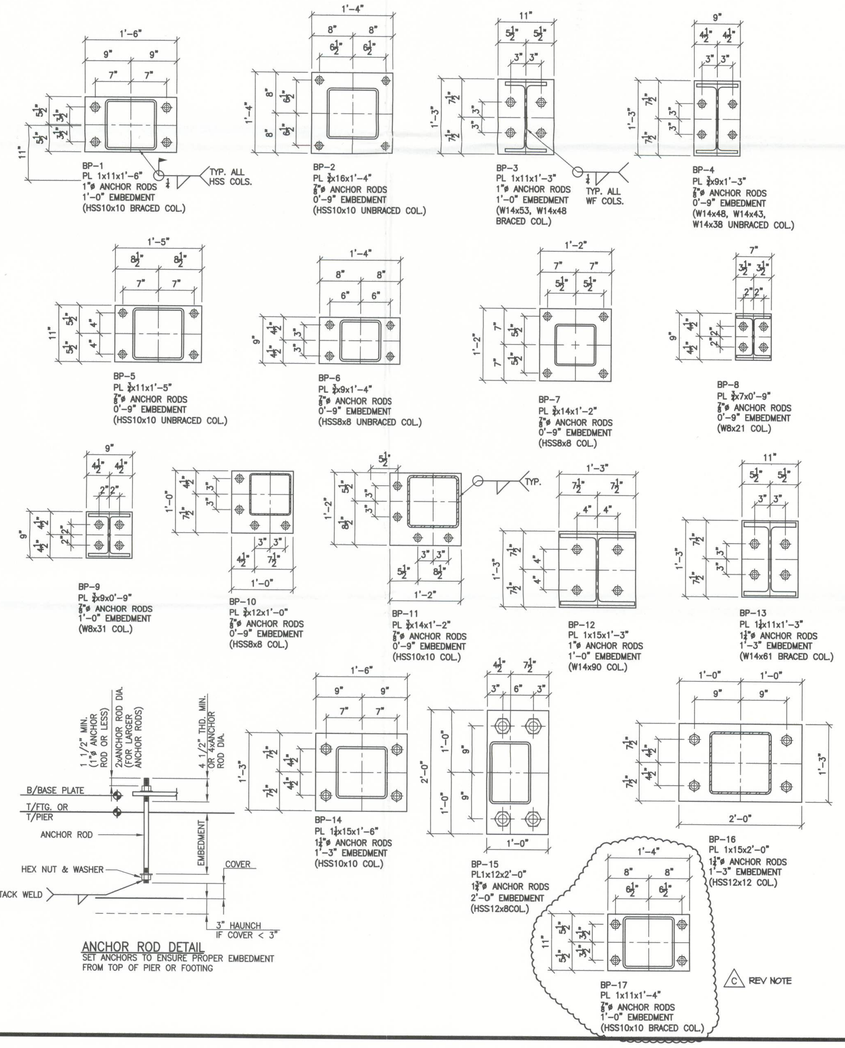

stellar
OPERATING AS THE STELLAR GROUP
2900 HARTLEY ROAD, JACKSONVILLE, FL 32257 (904) 300-2900
FLORIDA ARCHITECTURAL LICENSE NO. AA-C000112
FLORIDA ENGINEERING LICENSE No. 9300
James F. Matelski 12/20/12
JAMES F. MATELSKI
FL. LICENSE #53121

UNITED STATES COLD STORAGE, INC.
PHASE II EXPANSION
LAKE CITY, FLORIDA

STRUCTURAL GENERAL NOTES

REV.	DATE	BY	DESCRIPTION
C	12/20/12	SM	FOUNDATION PERMIT ISSUE
B	12/17/12	SM	RELEASED FOR STEEL DETAILING
A	12/11/12	SM	ISSUE

JOB NO.	710-04224
DRAWN:	SM
CHECKED:	DK
SCALE:	AS NOTED

S000
DRAWING NO.

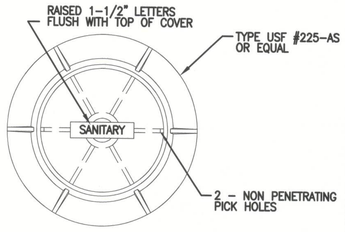

PLAN

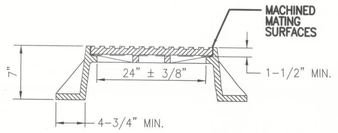

ELEVATION

1 SANITARY MANHOLE COVER

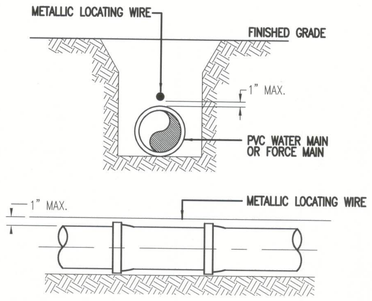

NOTES:
PVC PIPE SHALL REQUIRE INSULATED METALLIC LOCATING WIRE (14 GAUGE COPPER) CAPABLE OF DETECTION BY A CABLE LOCATOR AND SHALL BE BURIED DIRECTLY ABOVE THE CENTERLINE OF THE PIPE. LOCATING WIRE SHALL TERMINATE AT THE TOP OF EACH VALVE BOX AND BE CAPABLE OF EXTENDING 12" ABOVE TOP OF BOX IN SUCH A MANNER SO AS NOT TO INTERFERE WITH VALVE OPERATION. USE DUCT TAPE AS NECESSARY TO HOLD WIRE DIRECTLY ON THE TOP OF THE PIPE.

2 PVC PIPE LOCATING WIRE

3

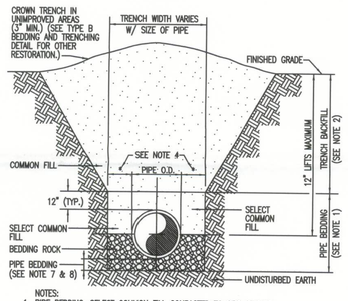

NOTES:
1. PIPE BEDDING: SELECT COMMON FILL COMPACTED TO 95% OF THE MAXIMUM DENSITY AS PER AASHTO T-180.
2. TRENCH BACKFILL: COMMON FILL COMPACTED TO 95% OF THE MAXIMUM DENSITY AS PER AASHTO T-180.
3. USE TYPE A BEDDING TO BE DETERMINED IN THE FIELD AS DIRECTED BY THE CITY OF LAKE CITY.
4. (*): 15" MAX. FOR PIPE DIAMETER LESS THAN 24", AND 24" MAX. FOR PIPE DIAMETER 24" AND LARGER.
5. WATER SHALL NOT BE PERMITTED IN THE TRENCH DURING CONSTRUCTION.
6. ALL PIPE TO BE INSTALLED WITH BELL FACING UPSTREAM TO THE DIRECTION OF THE FLOW.
7. REFER TO SECTION 32.5 OF THE MANUAL FOR SHEETING AND BRACING IN EXCAVATIONS.
7. GRAVITY SEWERS SHALL UTILIZE TYPE A BEDDING, IF REQUIRED BY THE COUNTY. BEDDING DEPTH SHALL BE 4" MINIMUM FOR PIPE DIAMETER LESS THAN 15", AND 6" MINIMUM FOR PIPE DIAMETER 16" AND LARGER.
8. DEPTH FOR REMOVAL OF UNSUITABLE MATERIAL SHALL GOVERN DEPTH OF BEDDING ROCK BELOW THE PIPE. APPLICABLE GOVERNING AGENCY SHALL DETERMINE IN THE FIELD REQUIRED REMOVAL OF UNSUITABLE MATERIAL TO REACH SUITABLE FOUNDATION.

4 TYPE A BEDDING AND TRENCHING

5

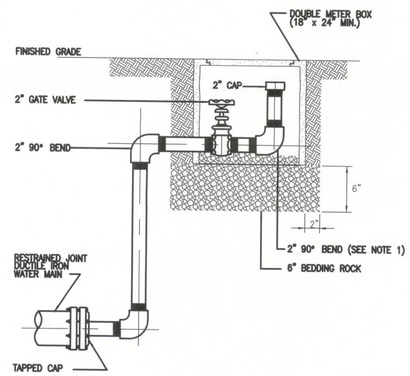

NOTES:
1. ALL 2" PIPE AND FITTINGS SHALL BE SCHEDULE 40 GALVANIZED STEEL OR BRASS WITH THREADED (NPT) JOINTS.
2. BEND SHALL BE ROTATED APPROXIMATELY 20° FROM VERTICAL.

6 BLOW OFF VALVE

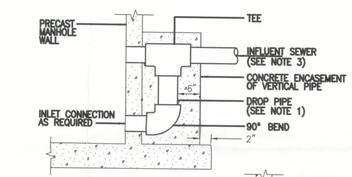

STANDARD DROP DETAIL

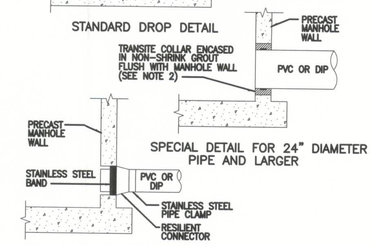

SPECIAL DETAIL FOR 24" DIAMETER PIPE AND LARGER

STANDARD PRECAST MANHOLE PIPE CONNECTION

NOTES:
1. DROP PIPE AND FITTINGS SHALL BE OF EQUAL SIZE AND MATERIAL AS THE INFLUENT SEWER.
2. THE CITY MAY APPROVE ALTERNATE WATER TIGHT CONNECTION DETAILS FOR CONNECTION OF 24" DIAMETER PIPES AND LARGER.
3. AN OUTSIDE DROP CONNECTION SHALL BE REQUIRED FOR ALL INFLUENT WHICH HAVE AN INVERT 2' OR MORE ABOVE THE MANHOLE INVERT.

7 MANHOLE CONNECTION

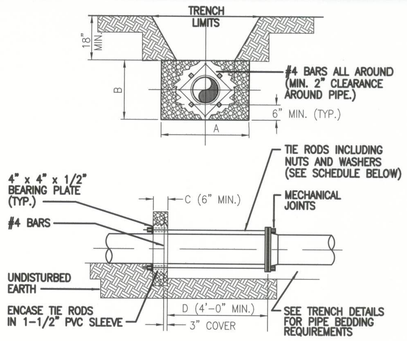

NOTES:
1. ADDITIONAL REINFORCEMENTS SHALL BE AS SPECIFIED BY THE ENGINEER.
2. MINIMUM COMPRESSIVE STRENGTH FOR CONCRETE SHALL BE 2500 PSI.
3. BEDDING, BACKFILL, AND COMPACTION SHALL BE AS SPECIFIED ELSEWHERE IN THE STANDARD DRAWINGS.
4. ALL FORM BOARDS SHALL BE REMOVED PRIOR TO BACKFILL.
5. NO ALLOWANCE SHALL BE MADE FOR FRICTION BETWEEN THE PIPE WALL AND THE THRUST COLLAR.
6. DESIGN PRESSURE:_____ P.S.I.*

WATER MAIN THRUST COLLAR

8

9

stellar
OPERATING AS THE STELLAR GROUP
2900 HARTLEY ROAD, JACKSONVILLE, FL 32257 (904) 260-2900
FLORIDA ARCHITECTURAL LICENSE NO. AA-C000112
FLORIDA ENGINEERING LICENSE NO. 8630

James R Hale
12/18/12

UNITED STATES COLD STORAGE, INC
NEW FACILITY
LAKE CITY, FLORIDA

SITE DETAILS

REV.	DATE	BY	DESCRIPTION
B	12-18-12	JRH	REVISED AS NOTED
A	11-30-12	JRH	PERMIT ISSUE

JOB NO. 710 04224
DRAWN:
CHECKED: JRH
SCALE: NTS

C502
DRAWING NO.

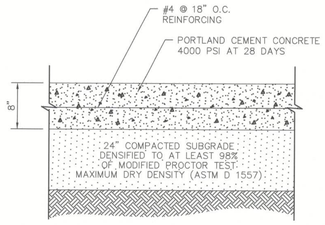

CONCRETE TRUCK PAVEMENT SECTION (1)

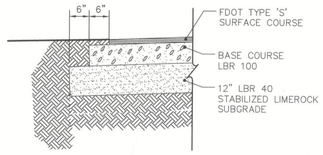

PAVEMENT STRUCTURE THICKNESS TABLE			
TYPE	SURFACE COURSE	BASE COURSE	STABILIZED SUBGRADE
AUTO PAVEMENT	1.5"	6.0"	12.0"

ASPHALT PAVEMENT SECTION (2)

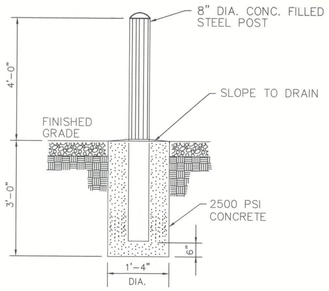

GUARD POST (3)

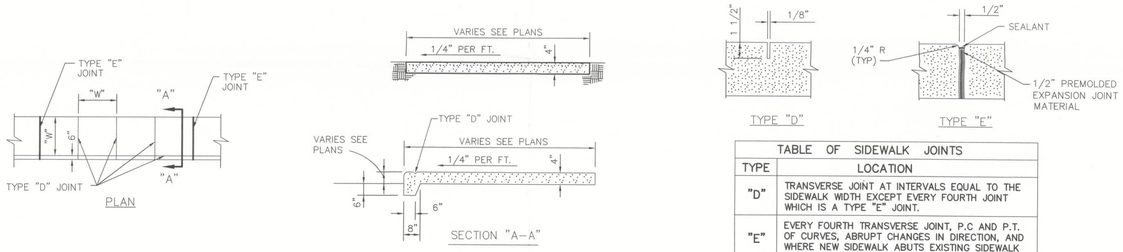

TABLE OF SIDEWALK JOINTS	
TYPE	LOCATION
"D"	TRANSVERSE JOINT AT INTERVALS EQUAL TO THE SIDEWALK WIDTH EXCEPT EVERY FOURTH JOINT WHICH IS A TYPE "E" JOINT.
"E"	EVERY FOURTH TRANSVERSE JOINT, P.C AND P.T. OF CURVES, ABRUPT CHANGES IN DIRECTION, AND WHERE NEW SIDEWALK ABUTS EXISTING SIDEWALK OR OTHER EXIST. CONCRETE SURFACE STRUCTURES.

NOTE: TYPE "D" JOINT MAY BE EITHER TOOLED IN WET CONCRETE OR SAWCUT WITHIN 18 HOURS OF PLACEMENT OF CONCRETE.

SIDEWALK CONSTRUCTION (5)

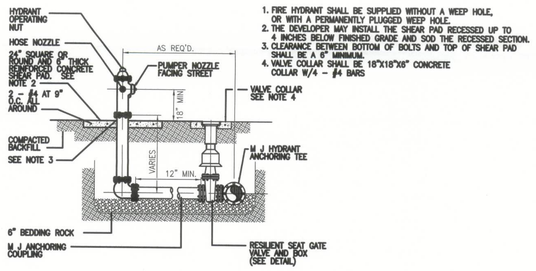

1. FIRE HYDRANT SHALL BE SUPPLIED WITHOUT A WEEP HOLE, OR WITH A PERMANENTLY PLUGGED WEEP HOLE.
2. THE DEVELOPER MAY INSTALL THE SHEAR PAD RECESSED UP TO 4 INCHES BELOW FINISHED GRADE AND SOD THE RECESSED SECTION.
3. CLEARANCE BETWEEN BOTTOM OF BOLTS AND TOP OF SHEAR PAD SHALL BE A 6" MINIMUM.
4. VALVE COLLAR SHALL BE 18"X18"X6" CONCRETE COLLAR W/4 - #4 BARS

FIRE HYDRANT (6)

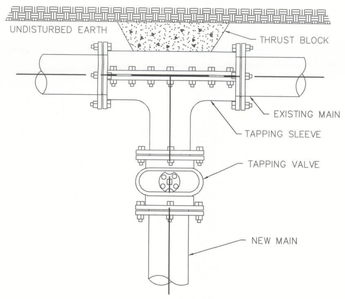

TAPPING SLEEVE AND VALVE (7)

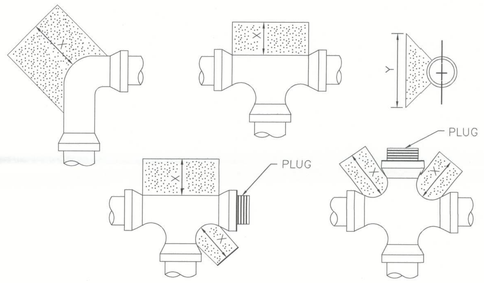

SIZE OF PIPE, IN.	6	8	10	12	14
CONC. REQ'D.,CU,FT.	4.5	8	12	24	32
DIMENSION "X", IN.	18	18	18	24	24
DIMENSION "Y", IN.	24	30	42	48	54

NOTE: CONCRETE THRUST BLOCK SHALL BEAR AGAINST UNDISTURBED EARTH.

THRUST BLOCKS (8)

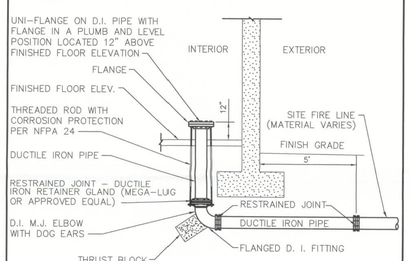

NOTE: ALL PIPE SHALL BE LAID, RESTRAINED AND TESTED PER NFPA 24.

FIRE RISER (9)

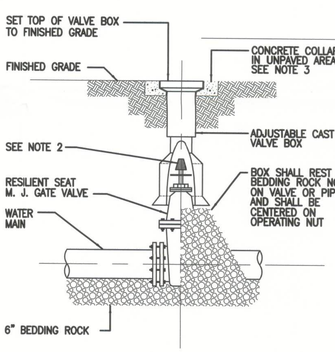

NOTES:
1. PVC EXTENSIONS SHALL NOT BE USED ON VALVE BOX INSTALLATION.
2. THE ACTUATING NUT FOR DEEPER VALVES SHALL BE EXTENDED TO COME UP TO 4 FOOT DEPTH BELOW FINISHED GRADE.
3. VALVE COLLAR SHALL BE 18"X18"X6" CONCRETE COLLAR W/4 - #4 BARS.

GATE VALVE (12)

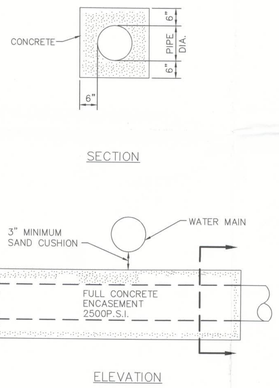

NOTES:
1. WATER LINES MUST NOT LIE WITHIN TEN FEET HORIZONTALLY OF ANY SANITARY SEWER LINES.
2. IF THE VERTICAL DISTANCE BETWEEN WATER AND SANITARY SEWER LINES AT A CROSSING IS LESS THAN 18" AT THE POINT OF CROSSING, OR THE WATER LINE PASSES UNDER THE SEWER LINE, COMPLETELY ENCASE THE SEWER LINE IN CONCRETE FOR A MINIMUM DISTANCE OF 10' ON EACH SIDE OF THE POINT OF CROSSING.
3. CAST IRON OR DUCTILE IRON PIPE OR THE USE OF PRESSURE PIPE WITH RUBBER GASKETED JOINTS FOR THE SANITARY LINE PRECLUDES THE NEED FOR ENCASEMENT PROVIDED THE CROSSING POINT IS CENTERED BETWEEN TWO JOINTS IN THE WATER LINE.

WATER/SEWER SEPERATION (13)

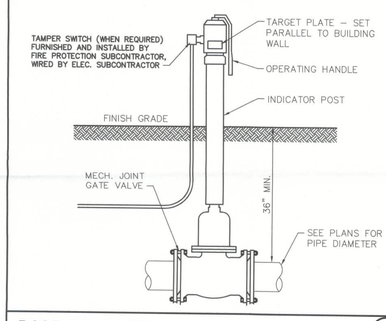

POST INDICATOR VALVE (10)

RIPRAP PAD		
Do	La	W
2.0'	12.0'	14.0'
3.0'	18.0'	21.0'

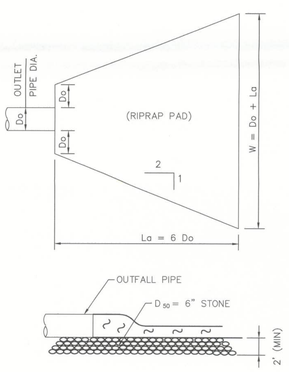

RIPRAP PROTECTION (15)

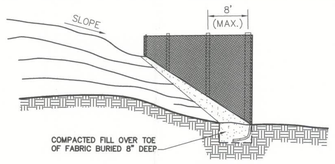

NOTES:
1. POSTS TO BE 1"x 2" PINE WITH A MINIMUM LENGTH OF 4 FEET; LOCATE POSTS ON DOWNSLOPE SIDE OF FILTER FABRIC.
2. BURY TOE OF FENCE APPROXIMATELY 8" DEEP TO PREVENT UNDERCUTTING.
3. WHEN JOINTS ARE NECESSARY, SECURLY FASTEN THE FABRIC AT A SUPPORT POST WITH OVERLAP TO THE NEXT POST.
4. FILTER FABRIC TO BE NYLON, POLYESTER, PROPYLENE OR ETHYLENE YARN WITH EXTRA STRENGTH - 50LB/LIN. IN. (MINIMUM) - AND WITH A FLOW RATE OF AT LEAST 0.3 GAL./SQ. FT./MINUTE. FABRIC SHOULD CONTAIN ULTRAVIOLET RAY INHIBITORS AND STABILIZERS.

SILT FENCE (11)

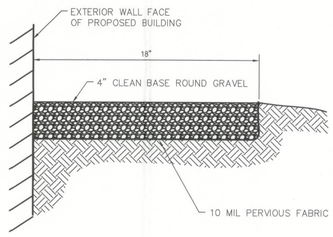

RODENT STRIP (16)

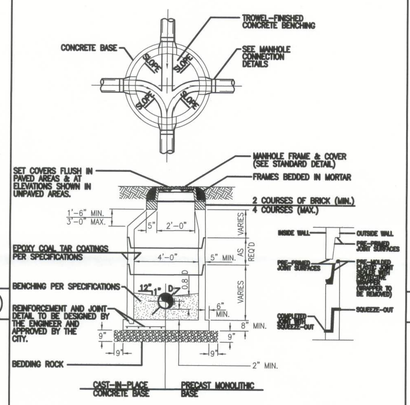

NOTES:
1. MANHOLE SHOWN IS FOR SEWER SIZE 8" THRU 24", SEE UTILITIES STANDARDS HANDBOOK FOR MANHOLE DIAMETER FOR SEWERS LARGER THAN 24".
2. DROP CONNECTIONS ARE REQUIRED WHENEVER INVERT OF INFLUENT SEWER IS 24" OR MORE ABOVE THE INVERT OF THE MANHOLE. SEE MANHOLE CONNECTION DETAILS.
3. APPROVED CONCENTRIC CONE DESIGN MAY BE USED AS AN ALTERNATIVE.

SEWER MANHOLE (17)

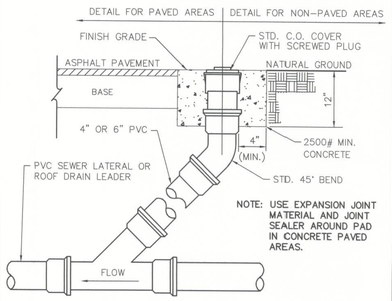

NOTE: USE EXPANSION JOINT MATERIAL AND JOINT SEALER AROUND PAD IN CONCRETE PAVED AREAS.

CLEANOUT (18)

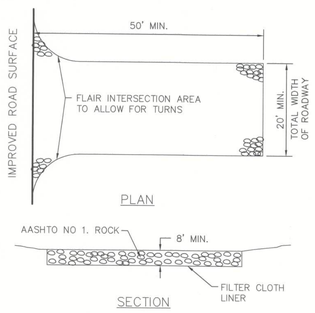

CONSTRUCTION ENTRANCE (20)

stellar
ARCHITECTS AT THE STELLAR GROUP
2900 HARTLEY ROAD, JACKSONVILLE, FL 32257 (904) 296-2800
WWW.STELLAR.NET
FLORIDA ARCHITECTURE BUSINESS CERTIFICATE No. AA-C000112
FLORIDA ENGINEERING LICENSE NO. 9930

James R Hale 12/18/12

UNITED STATES COLD STORAGE, INC
PHASE II
LAKE CITY, FLORIDA

SITE DETAILS

REV.	DATE	BY	DESCRIPTION
B	12-18-12	JRH	REVISED AS NOTED
A	11-16-12	JRH	PERMIT ISSUE

JOB NO. 710 04224
DRAWN:
CHECKED: JRH
SCALE: NTS

C501
DRAWING NO.

EROSION AND SEDIMENT CONTROL NOTES:

1. THE PLAN APPROVING AUTHORITY MUST BE NOTIFIED ONE WEEK PRIOR TO THE PRE-CONSTRUCTION CONFERENCE, ONE WEEK PRIOR TO THE COMMENCEMENT OF LAND DISTURBING ACTIVITY, AND ONE WEEK PRIOR TO THE FINAL INSPECTION.
2. ALL EROSION AND SEDIMENT CONTROL MEASURES ARE TO BE PLACED PRIOR TO OR AS THE FIRST STEP IN CLEARING.
3. A COPY OF THE APPROVED EROSION AND SEDIMENT CONTROL PLAN SHALL BE MAINTAINED ON THE SITE AT ALL TIMES.
4. PRIOR TO COMMENCING LAND DISTURBING ACTIVITIES IN AREAS OTHER THAN INDICATED ON THESE PLANS (INCLUDING, BUT NOT LIMITED TO, OFF-SITE BORROW OR WASTE AREAS), THE CONTRACTOR SHALL SUBMIT A SUPPLEMENTARY EROSION CONTROL PLAN TO THE OWNER FOR REVIEW AND APPROVAL BY THE PLAN APPROVING AUTHORITY.
5. THE CONTRACTOR IS RESPONSIBLE FOR INSTALLATION OF ANY ADDITIONAL EROSION CONTROL MEASURES NECESSARY TO PREVENT EROSION AND SEDIMENTATION AS DETERMINED BY THE PLAN APPROVING AUTHORITY.
6. ALL DISTURBED AREAS ARE TO DRAIN TO APPROVED SEDIMENT CONTROL AT ALL TIMES DURING LAND DISTURBING ACTIVITIES AND DURING SITE DEVELOPEMENT UNTIL FINAL STABILIZATION IS ACHIEVED.
7. DURING DEWATERING OPERATIONS, WATER SHALL BE PUMPED INTO AN APPROVED FILTERING DEVICE.
8. THE CONTRACTOR SHALL INSPECT ALL EROSION CONTROL MEASURES PERIODICALLY AND AFTER EACH RUNOFF-PRODUCING RAINFALL EVENT. ANY NECESSARY REPAIRS OR CLEANUP TO MAINTAIN THE EFFECTIVENESS OF THE EROSION CONTROL DEVICES SHALL BE MADE IMMEDIATELY.
9. THE SITEWORK CONTRACTOR WILL BE REQUIRED TO INCORPORATE ALL TEMPORARY AND PERMANENT EROSION CONTROL MEASURES INTO THE PROJECT AT THE EARLIEST PRACTICAL TIME DURING CONSTRUCTION. THE EROSION CONTROL MEASURE DETAILED HEREIN SHALL BE CONTINUED UNTIL THE PERMANENT DRAINAGE FACILITIES HAVE BEEN CONSTRUCTED AND UNTIL ALL DISTRUBED AREAS HAVE BEEN REESTABLISHED SO AS TO ESTABLISH AN EFFECTIVE EROSION DETERRENT. ALL COLLECTED SEDIMENT REMOVED FROM IMPOUNDMENT AREAS SHALL BE EVENLY DISTRIBUTED AND PERMANENTLY ESTABLISHED.
10. TEMPORARY AND PERMANENT VEGETATIVE COVER SHALL BE INSTALLED IN ACCORDANCE WITH ALL LOCAL AND STATE REQUIREMENTS.
11. SITEWORK CONTRACTOR SHALL CLEAN OUT ALL ACCUMULATED SILT IN DETENTION PONDS AT END OF CONSTRUCTION WHEN DISTURBED AREAS HAVE BEEN STABILIZED.
12. ALL DISTURBED AREAS OUTSIDE OF EXISTING AND PROPOSED PAVEMENT SHALL RECEIVE TEMPORARY AND PERMANENT SEEDING IN ACCORDANCE WITH LOCAL REGULATIONS.

STORMWATER POLLUTION PREVENTION PLAN NOTES:

SITE DESCRIPTION:
A. 108,000 SF ADDITION TO THE EXISTING FACILITY WITH ASSOCIATED PAVEMENT.
B. SITE HAS BEEN CLEARED AN GRUBBED DURING PHASE 1. BUILDING AND PAVING CONSTRUCTION WILL OCCUR IMMEDIATELY.
C. TOTAL SITE AREA = 29.21 ACRES. DISTURBED AREA = 6.5 ACRES.
D. DRAINAGE SYSTEMS (WET PONDS) IN PLACE HAVE BEEN PREVIOUSLY SIZED FOR PHASE 2 EXPANSION AND NO MODIFICATION IS NEEDED.
E. STORMWATER TO FLOW AWAY FROM BUILDING EITHER NORTH THROUGH SWALE ALONG NORTHERN BOUNDARY OR DIRECTLY SOUTH INTO THE WET DETENTION POND.
F. EXISTING DISCHARGE POINT LOCATED ON SITE PLAN. RECEIVING WATER IS RAILROAD DITCH ALONG NORTHERN BOUNDARY LINE.

CONTROLS:
A. SILT FENCE SHALL BE INSTALLED AROUND THE PERIMETER OF CONSTRUCTION/DISTURBED ACTIVITIES AT THE BEGINNING ON CONSTRUCTION AND SHALL BE MAINTAINED BY CONTRACTOR UNTIL FINAL STABILIZATION PRIMARILY THROUGH PERMANENT SEEDING. HAY BALES SHALL BE INSTALLED DURING CONSTRUCTION ACTIVITIES ACROSS SWALES.
B. INITIAL SITE DESIGN TO USE EXISTING BMP'a AS STORMWATER HAS BEEN MASTER PLANNED FOR PHASE 2 CONSTRUCTION. EXISTING BMP's ARE TO BE MAINTAINED PERMANENTLY IN WORKING ORDER ACCORDING TO THE REQUIREMENTS SET FORTH IN THE STATE OF FLORIDA ENVIRONMENTAL RESOURCE PERMIT ISSUED UNDER PART IV, CHAPTER 373, F.S.
C. CONTRACTOR SUPERINTENDENT SHALL ENSURE THAT FERTILIZERS, HERBICIDES, PESTICIDES, & NUTRIENTS ARE APPLIED PROPERLY AND WASTE MATERIALS & TOXIC SUBSTANCES ARE PROPERLY DISPOSED OF ACCORDING TO ALL LOCAL AND APPLICABLE LAWS IN WHICH BUSINESS IS CONDUCTED.

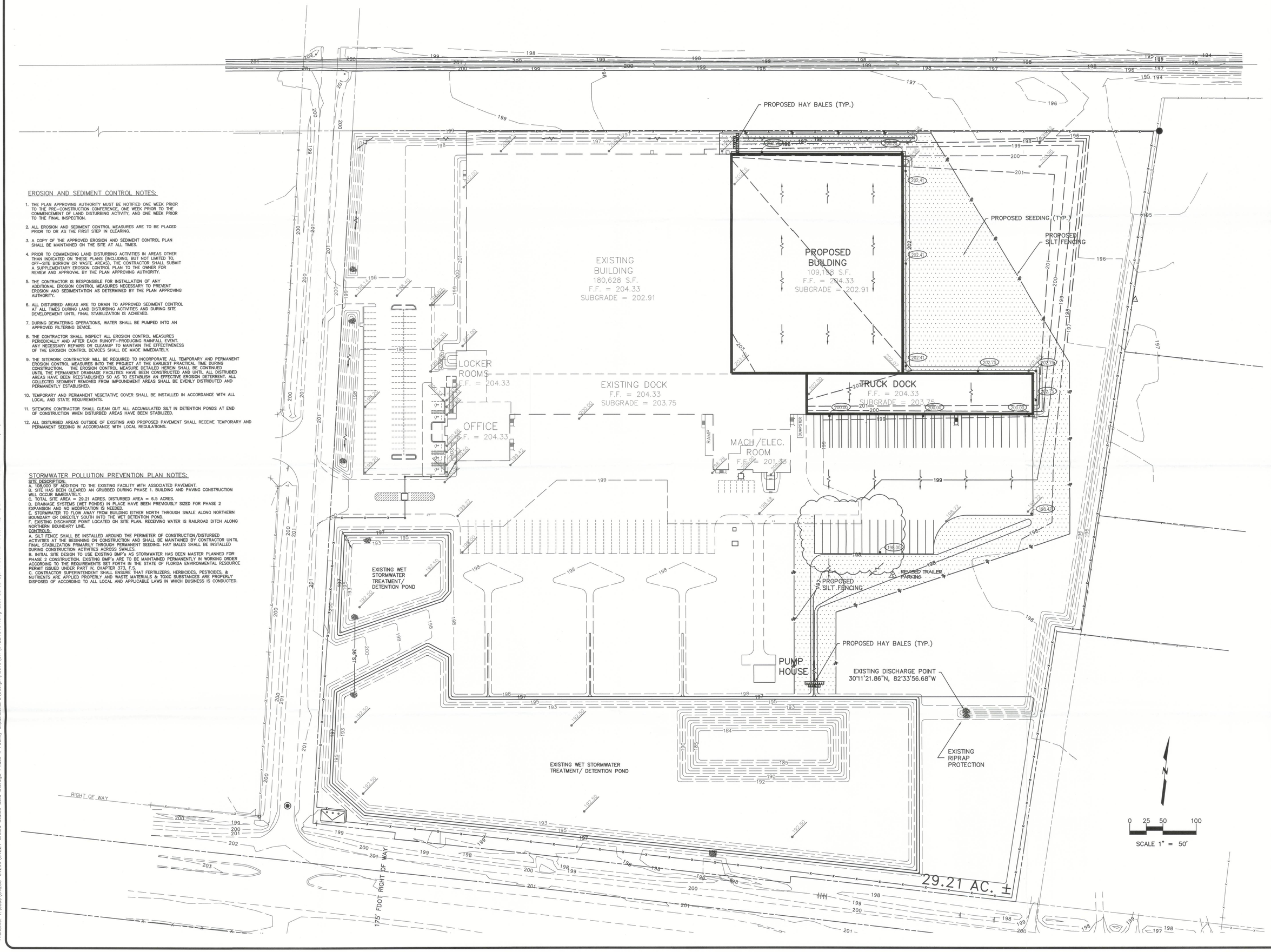

stellar
OPERATING AS THE STELLAR GROUP
3000 HARTLEY ROAD, JACKSONVILLE, FL. 32257 (904) 380-2800
FLORIDA ARCHITECTURAL LICENSE NO. AA-C000112
FLORIDA ENGINEERING LICENSE NO. 8825

12/18/12

UNITED STATES COLD STORAGE, INC
PHASE II
LAKE CITY, FLORIDA

EROSION & SEDIMENT CONTROL PLAN

REV.	DATE	BY	DESCRIPTION
B	12-18-12	JRH	REVISED AS NOTED
A	11-30-12	JRH	PERMIT ISSUE

JOB NO. 710 04224
DRAWN:
CHECKED: JRH
SCALE: 1"=50'

C104
DRAWING NO.

Filename: T:\Jobs\04200-04299\04224 United States Cold Storage Phase II Facility Expansion_FL\Design\Active\Civ\04224C104.dwg Last Saved By: RFOURNIER Date: 12/18/2012 8:38:52 AM Plotted: 12/18/2012 10:03:16 AM

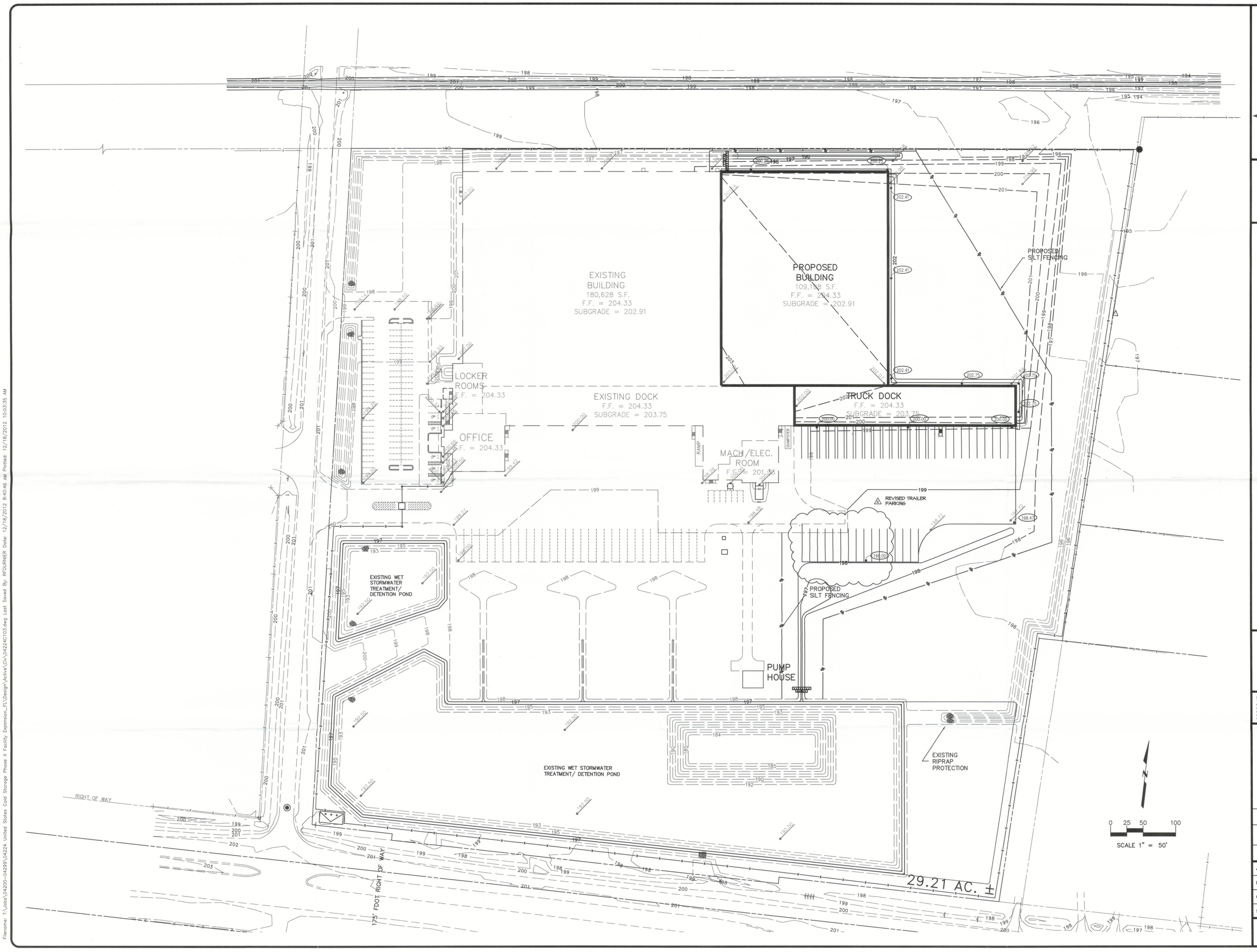

Filename: T:\Jobs\04200-04299\04224 United States Cold Storage Phase II Facility Expansion_FL\Design\Active\Civ\04224C103.dwg Last Saved By: RFOURNIER Date: 12/18/2012 8:40:46 AM Plotted: 12/18/2012 10:03:35 AM

stellar

CONTACT AT THE STELLAR GROUP
2900 HARTLEY ROAD, JACKSONVILLE, FL. 32257 (904) 285-2900
WWW.STELLAR.NET
FLORIDA ARCHITECTURAL BUSINESS NO. AA-26001112
FLORIDA ENGINEERING LICENSE NO. 5630

James R. Hale
12/18/12

UNITED STATES COLD STORAGE, INC
PHASE II
LAKE CITY, FLORIDA

GRADING & DRAINAGE PLAN

REV.	DATE	BY	DESCRIPTION
C	12-18-12	JRH	REVISED AS NOTED
B	11-30-12	JRH	PERMIT ISSUE
A	11-7-12	JRH	SRWMD SUBMITTAL

JOB NO. 710 04224

DRAWN:

CHECKED: JRH

SCALE: 1"=50'

C103
DRAWING NO.

UTILITY NOTES:

1. MAINTAIN MINIMUM 42" COVER ON ALL WATER MAINS UNLESS OTHERWISE NOTED.
2. THE UTILITIES SUBCONTRACTOR SHALL INDICATE THE LOCATION OF THE TERMINATION OF EACH WATER SERVICE WITH STAKES OR MARKERS.
3. ALL LINED FITTINGS SHALL BE TESTED FOR DEFECTS, PRIOR TO INSTALLATION.
4. A PRE-CONSTRUCTION CONFERENCE IS REQUIRED.
5. THE WATER MAIN SHALL BE PRESSURE TESTED IN ACCORDANCE WITH THE SPECIFICATIONS.
6. SUBCONTRACTOR SHALL SUBMIT SHOP DRAWINGS OF ALL MATERIALS TO BE USED FOR CONSTRUCTION TO THE ENGINEER.
7. WATER LINES ARE DESIGNED TO FINISHED GRADE ELEVATIONS, AND SHALL BE PROTECTED FROM DAMAGE UNTIL ALL SITEWORK HAS BEEN COMPLETED.
8. ALL UNDERGROUND VALVES SHALL BE INSTALLED WITH AN ADJUSTABLE CAST IRON VALVE BOX, WITH TOP SET TO FINAL GRADE.
9. WATER MAINS SHALL BE CONSTRUCTED TO PROVIDE HORIZONTAL AND VERTICAL SEPERATION FROM SANITARY SEWERS, FORCE MAINS, STORM SEWERS, AND RECLAIMED WATER MAINS WATER MAINS ARE TO BE SEPARATED 10 FEET HORIZONTALLY AND 1.5 FEET VERTICALY, AT ALL CROSSINGS. WHERE PARALLEL SEPARATION OF 10 FEET IS NOT POSSIBLE, PROVIDE 5 FEET HORIZONTAL AND 1.5 FEET VERTICAL SEPARATION WITH THE WATER MAIN PLACED ON AN UNDISTURBED SHELF. THE VERTICAL SEPARATION MAY BE REDUCED TO 0.5 FT., IF BOTH CROSSING PIPES ARE WATER MAIN EQUIVALENT AND A 10 FEET JOINT SEPARATION IS PROVIDED , AND IF APPROVED BY HRS AND THE ENGINEER.
10. IF GASOLINE FUMES OR OTHER CONTAMINATION IS ENCOUNTERED DURING EXCAVATION, THE CONTRACTOR, SHALL IDENTIFY THE CONTAMINATION AND DOCUMENT SUCH TO THE ENGINEER IN WRITING. SPECIAL PIPE AND JOINT GASKETS MAY BE REQUIRED IN THIS INSTANCE. IF CONTAMINATION IS ENCOUNTERED, CONSTRUCTION SHALL STOP, UNTIL THE SUBCONTRACTOR RECEIVES FURTHER DIRECTION THE ENGINEER.
11. IF SOLVENT CONTAMINATION IS FOUND IN THE PIPE TRENCH, WORK SHALL BE STOPPED AND THE PROPER AUTHORITIES NOTIFIED. WITH APPROVAL OF THE PERMITTING AGENCY, DUCTILE IRON PIPE, FITTINGS AND SOLVENT RESISTANT GASKET MATERIAL SHALL BE USED IN THE CONTAMINATED AREA. THE DUCTILE IRON PIPE SHALL EXTEND AT LEAST 100 FEET BEYOND ANY SOLVENT NOTED.

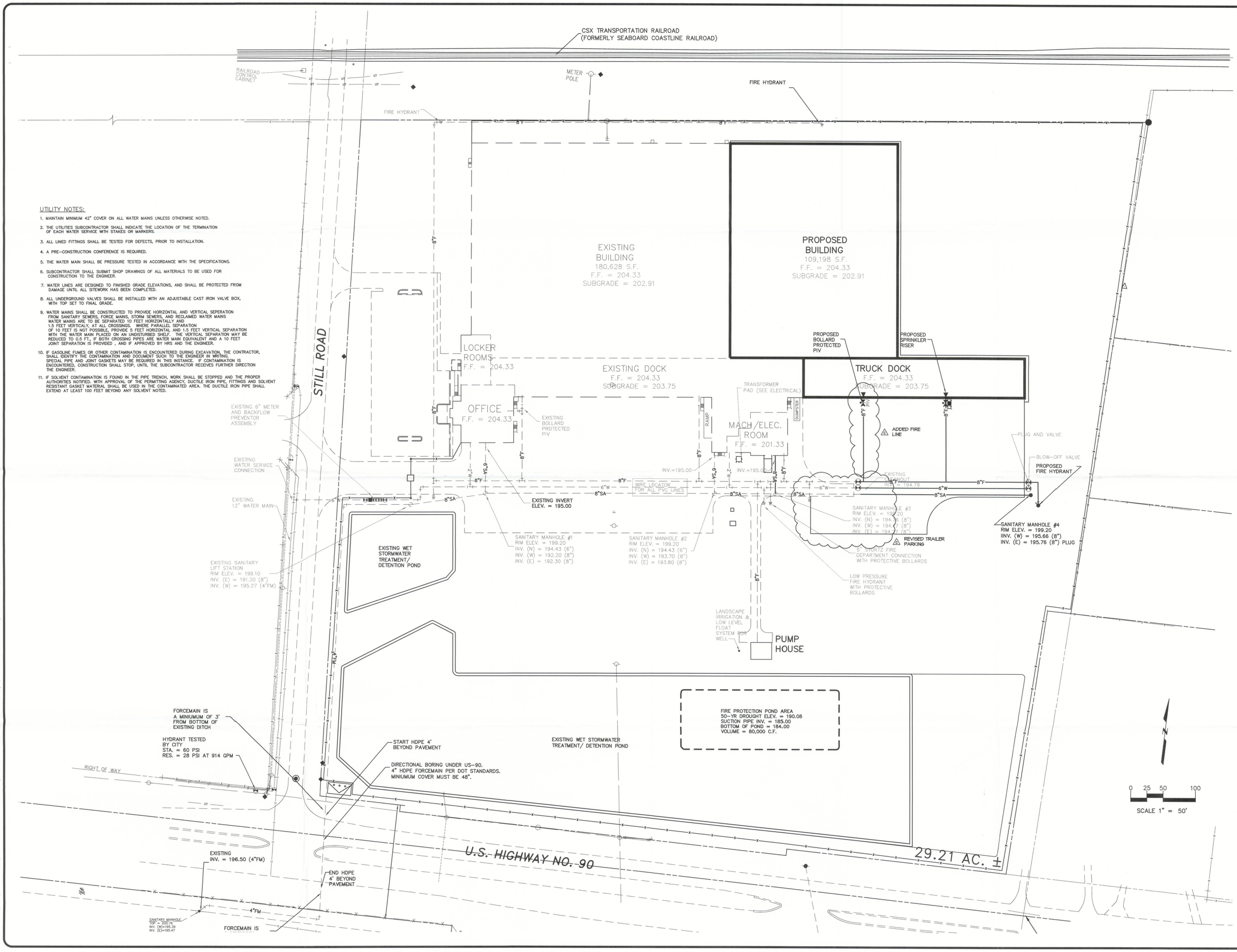

stellar
OPERATING AS THE STELLAR GROUP
3900 HARTLEY ROAD, JACKSONVILLE, FL 32257 (904) 260-2600
WWW.STELLAR.NET
FLORIDA ARCHITECTURAL LICENSE NO. AA-C000112
FLORIDA ENGINEERING LICENSE NO. 8988

12/18/12

UNITED STATES COLD STORAGE, INC
PHASE II
LAKE CITY, FLORIDA

SITE UTILITY PLAN

REV.	DATE	BY	DESCRIPTION
B	12-18-12	JRH	REVISED AS NOTED
A	11-30-12	JRH	PERMIT ISSUE

JOB NO. 710 04224
DRAWN:
CHECKED: JRH
SCALE: 1"=50'

C102
DRAWING NO.

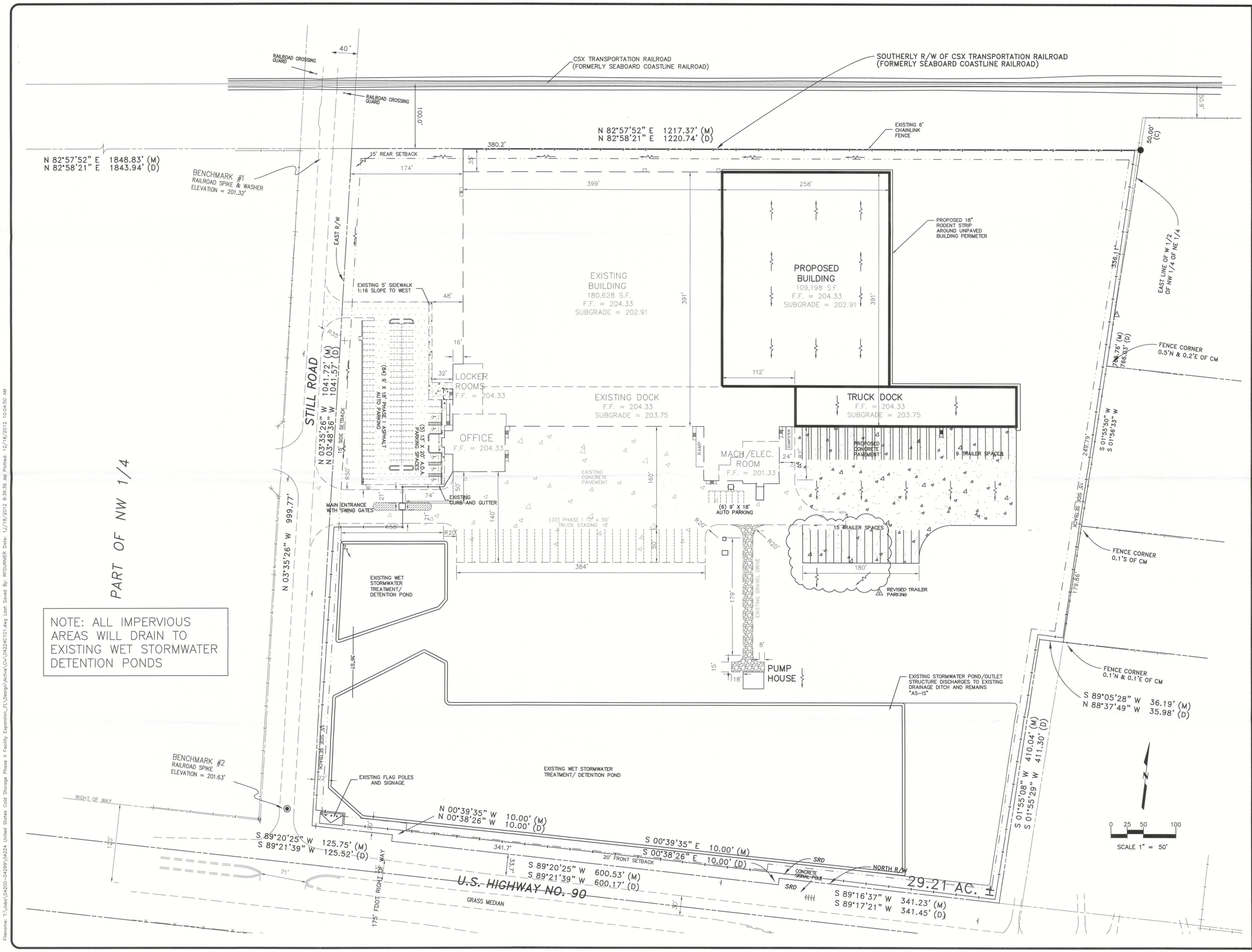

stellar
CONSULTING AT THE STELLAR GROUP
2900 HARTLEY ROAD JACKSONVILLE, FL 32257 (904) 380-2900
WWW.STELLAR.NET
FLORIDA ARCHITECTURE BUSINESS NO. AA-C000112.
FLORIDA ENGINEERING LICENSE NO. 9930

James R Hall
12/18/12

UNITED STATES COLD STORAGE, INC
PHASE II
LAKE CITY, FLORIDA

SITE GEOMETRY PLAN

REV.	DATE	BY	DESCRIPTION
C	12-24-12	JRH	REVISED AS NOTED
B	11-20-12	JRH	REVISED SRWMD & PERMIT ISSUE
A	11-7-12	JRH	SRWMD SUBMITTAL

JOB NO. 710 04224
DRAWN:
CHECKED: JRH
SCALE: 1"=50'

C101
DRAWING NO.

Filename: T:\Jobs\04200-04299\04224 United States Cold Storage Phase II Facility Expansion_FL\Design\Active\Civ\04224C101.dwg Last Saved By: RFOURNIER Date: 12/18/2012 8:36:36 AM Plotted: 12/18/2012 10:04:50 AM

BUILDING CODE ANALYSIS

BUILDING CODE: Florida Building Code, 2010 (2009 IBC)
ACCESSIBILITY CODE: Florida Accessibility Code, 2012
FIRE CODE: Florida Fire Prevention Code, 2010
ENERGY CODE: Florida Building Code, 2010 (2009 IBC)
MECHANICAL CODE: Florida Building Code, 2010 (2009 IBC)
PLUMBING CODE: Florida Building Code, 2010 (2009 IBC)
FUEL/GAS CODE: Florida Building Code, 2010 (2009 IBC)
ELECTRICAL CODE: NFPA 70

EXISTING AREA SUMMARY

EXISTING FACILITY----------180,238 S.F.

NEW AREA SUMMARY

NEW +40'F TRUCK DOCK----------20,854 S.F.
NEW -20'F to +35'F CONVERTIBLE #3---------16,972 S.F.
NEW -20'F to +35'F CONVERTIBLE #4---------20,949 S.F
NEW -20'F FREEZER----------47,378 S.F.

TOTAL NEW AREA----------106.153 S.F.

TOTAL EXISTING & NEW AREA----------286,391 S.F.

Occupancy Classification:

311.2 Moderate-hazard storage, Group S-1

Chapter 6 – Types of Construction:

Type IIB

TABLE 601 FIRE-RESISTANCE RATING REQUIREMENTS FOR BUILDING ELEMENTS (hours)

BUILDING ELEMENT	TYPE I A	TYPE I B	TYPE II A[d]	TYPE II B	TYPE III A[d]	TYPE III B	TYPE IV HT	TYPE V A[d]	TYPE V B
Primary structural frame[g] (see Section 202)	3[a]	2[a]	1	0	1	0	HT	1	0
Bearing walls Exterior[f,g] Interior	3 3[a]	2 2[a]	1 1	0 0	2 1	2 0	2 1/HT	1 1	0 0
Nonbearing walls and partitions Exterior	See Table 602								
Nonbearing walls and partitions Interior[e]	0	0	0	0	0	0	See Section 602.4.6	0	0
Floor construction and secondary members (see Section 202)	2	2	1	0	1	0	HT	1	0
Roof construction and secondary members (see Section 202)	1½[b]	1[b,c]	1[b,c]	0[c]	1[b,c]	0	HT	1[b,c]	0

TABLE 602 FIRE-RESISTANCE RATING REQUIREMENTS FOR EXTERIOR WALLS BASED ON FIRE SEPARATION DISTANCE[a,e]

FIRE SEPARATION DISTANCE = X (feet)	TYPE OF CONSTRUCTION	OCCUPANCY GROUP H[f], L	OCCUPANCY GROUP F-1, M, S 1	OCCUPANCY GROUP A, B, E, F-2, I, R[h], S-2[g], U[b,h]
x < 5[c]	All	3	2	1
5 ≤x< 10	IA Others	3 2	2 1	1 1
10 ≤x< 30	IA, IB IIB, VB Others	2 1 1	1 0 1	1[d] 0 1[d]
≥ 30	All	0	0	0

Chapter 5 – General Building Heights and Areas

TABLE 503 ALLOWABLE BUILDING HEIGHTS AND AREAS[a]

a. See the following sections for general exceptions to Table 503:

SECTION 507 UNLIMITED AREA BUILDINGS

507.1 General. The area of buildings of the occupancies and configurations specified herein shall not be limited.

507.3 Sprinklered, one story. The area of a Group S building no more than one story above grade plane shall not be limited when the building is provided with an automatic sprinkler system throughout in accordance with Section 903.3.1.1 and is surrounded and adjoined by public ways or yards not less than 60 feet (18 288 mm) in width.

507.4 Two story. The area of a Group S building no more than two stories above grade plane shall not be limited when the building is equipped throughout with an automatic sprinkler system in accordance with Section 903.3.1.1, and is surrounded and adjoined by public ways or yards not less than 60 feet (18 288 mm) in width.

508.2.4 Separation of occupancies. No separation is required between accessory occupancies and the main occupancy.

Exceptions:

1. Group H-2, H-3, H-4, H-5, I-2, I2.1, I-3 and L occupancies shall be separated from all other occupancies in accordance with Section 508.4.
2. Incidental accessory occupancies required to be separated or protected by Section 508.2.5.

508.2.5 Separation of incidental accessory occupancies. The incidental accessory occupancies listed in Table 508.2.5 shall be separated from the remainder of the building or equipped with an automatic fire-extinguishing system, or both, in accordance with Table 508.2.5.

TABLE 508.4 REQUIRED SEPARATION OF OCCUPANCIES (HOURS)

OCCUPANCY	A[d] S	A[d] NS	E S	I-4, R-2.1 NS	I-2, I-2.1 NS	I-2, I-2.1 S	I-3 NS	I-3 S	R-1, R-2, R-3, R-3.1, R-4 NS	F-2, S-2,[b] U S	F-2, S-2,[b] U NS	B, F-1,[g] M, S-1 S	B, F-1,[g] M, S-1 NS	L S	L NS	H-1 S	H-1 NS	H-2 S	H-2 NS	H-3, H-4, H-5 S	H-3, H-4, H-5 NS
B, F-1, M, S-1	–	–	–	–	–	–	–	–	–	–	–	N	N	1	NP	NP	NP	2	3	1	2[g]

SECTION 1004 OCCUPANT LOAD

TABLE 1004.1.1 MAXIMUM FLOOR AREA ALLOWANCES PER OCCUPANT

FUNCTION OF SPACE	FLOOR AREA IN SQ. FT. PER OCCUPANT
Accessory storage areas, mechanical equipment room	300 gross
Business areas	100 gross
Warehouses	500 gross

1004.1.1 Occupant Load:

Table 1004.1.1 Warehouses – 500 gross square foot per occupant. 106,153 s.f. of new warehouse divided by 500 gross square feet = 212 new occupants.

212 new occupants x 0.2 = 42.4 exit inches required. 72 new exit inches provided in new addition.

1014.3 Common path of egress travel. In occupancies other than Groups H-1, H-2 and H-3, the common path of egress travel shall not exceed 75 feet (22 860 mm). In Group H-1, H-2 and H-3 occupancies, the common path of egress travel shall not exceed 25 feet (7620 mm). For common path of egress travel in Group A occupancies and assembly occupancies accessory to Group E occupancies having fixed seating, see Section 1028.8.

Exceptions:

1. The length of a common path of egress travel in Group B, F and S occupancies shall not be more than 100 feet (30 480 mm), provided that the building is equipped throughout with an automatic sprinkler system installed in accordance with Section 903.3.1.1.

TABLE 1016.1 EXIT ACCESS TRAVEL DISTANCE

OCCUPANCY	WITHOUT SPRINKLER SYSTEM (feet)	WITH SPRINKLER SYSTEM (feet)
A, E, F-1, M, R, S-1	200	400[c]

c. Buildings equipped throughout with an automatic sprinkler system in accordance with Section 903.3.1.1.

1018.4 Dead ends. Where more than one exit or exit access doorway is required, the exit access shall be arranged such that there are no dead ends in corridors more than 20 feet (6096 mm) in length.

Exceptions:

2. In occupancies in Groups B, E, F, M, R-1, R-2, R-2.1, R-4, S and U, where the building is equipped throughout with an automatic sprinkler system in accordance with Section 903.3.1.1, the length of the dead-end corridors shall not exceed 50 feet (15 240 mm).

SECTION 1021 NUMBER OF EXITS AND CONTINUITY

1021.1 Exits from stories. All spaces within each story shall have access to the minimum number of approved independent exits as specified in Table 1021.1 based on the occupant load of the story. For the purposes of this chapter, occupied roofs shall be provided with exits as required for stories.

TABLE 1021.1 MINIMUM NUMBER OF EXITS FOR OCCUPANT LOAD

OCCUPANT LOAD (persons per story)	MINIMUM NUMBER OF EXITS (per story)
1–500	2

SECTION 1101 GENERAL

1101.1 Scope. The provisions of this chapter shall control the design and construction of facilities for accessibility to physically disabled persons.

1101.1.1 Criteria. Buildings shall be designed and constructed in accordance with the Florida Building Code, Accessibility.

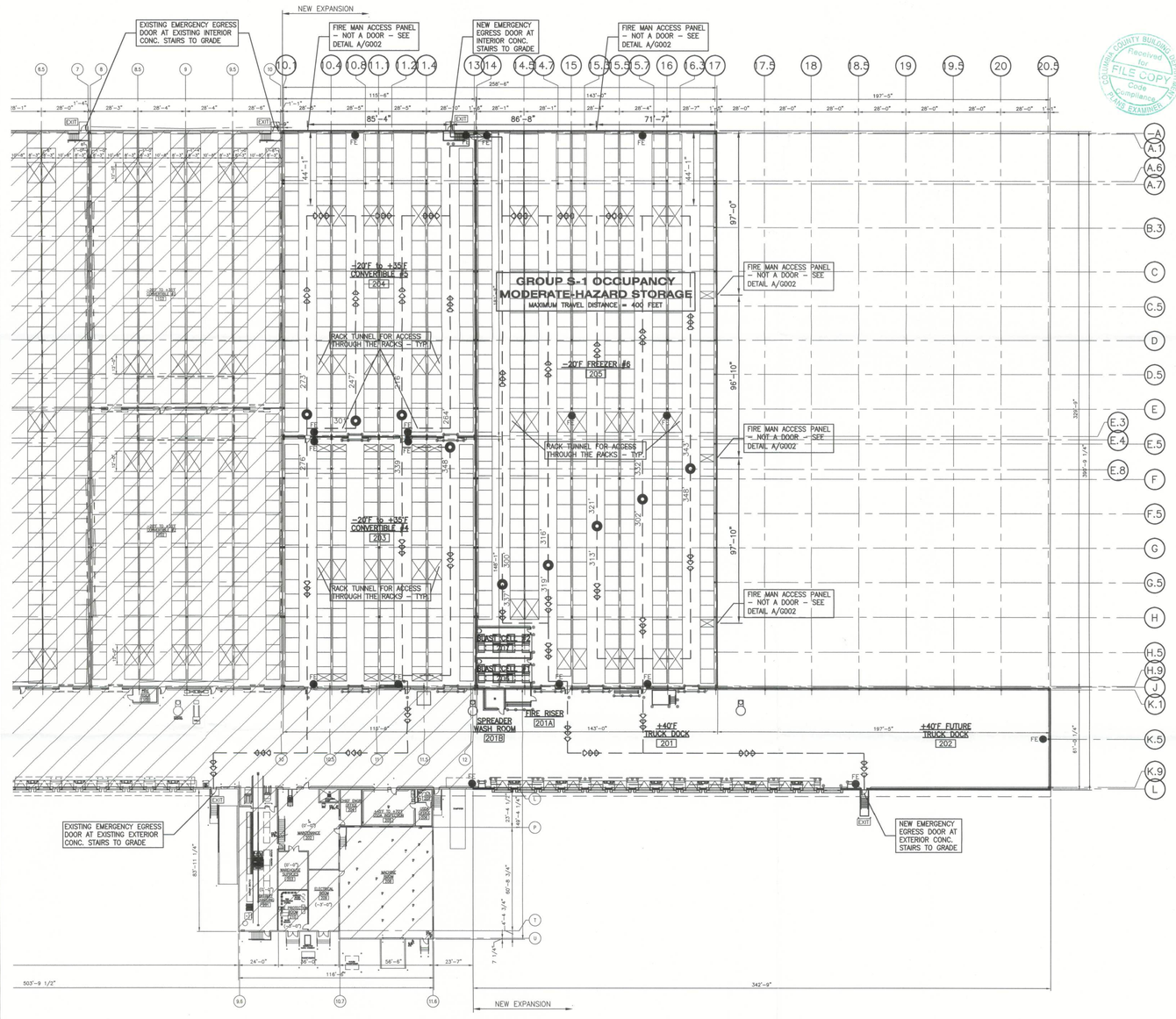

NEW EXPANSION LIFE SAFETY PLAN

1/32"=1'-0"

N

LEGEND

249'	DENOTES ACTUAL TRAVEL DISTANCE IN FEET
●	DENOTES STARTING POINT FOR TRAVEL DISTANCE
◁◁◁	DENOTES PATHS OF EXIT TRAVEL.
● FE	DENOTES FIRE EXTINGUISHER LOCATIONS.
EXIT	DENOTES EMERGENCY EXIT DOOR

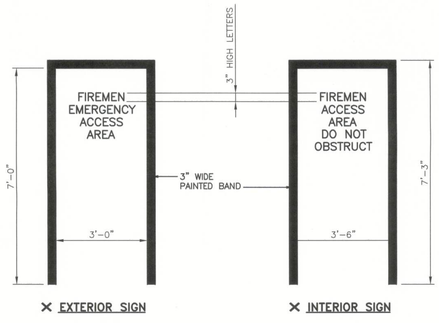

(A) FIREMAN ACCESS PANEL GRAPHIC ELEVATIONS

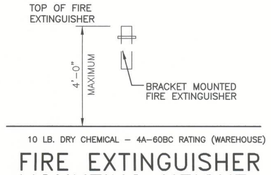

FIRE EXTINGUISHER MOUNTING HEIGHT

3/8" = 1'-0"

EXISTING AREA SUMMARY

EXISTING FACILITY----------180,238 S.F.

NEW AREA SUMMARY

NEW +40'F TRUCK DOCK----------20,854 S.F.
NEW -20'F to +35'F CONVERTIBLE #3--------16,972 S.F.
NEW -20'F to +35'F CONVERTIBLE #4--------20,949 S.F
NEW -20'F FREEZER----------47,378 S.F.

TOTAL NEW AREA----------106.153 S.F.

TOTAL EXISTING & NEW AREA----------286,391 S.F.

stellar
OPERATING AS THE STELLAR GROUP
2900 HARTLEY ROAD, JACKSONVILLE, FL 32257 (904) 292-2900
FLORIDA ARCHITECTURAL LICENSE NO. AA-C000112
FLORIDA ENGINEERING LICENSE NO. 5820

12-18-12

UNITED STATES COLD STORAGE, INC.
PHASE II EXPANSION
LAKE CITY, FLORIDA

BUILDING CODE ANALYSIS & LIFE SAFETY FLOOR PLAN

REV.	DATE	BY	DESCRIPTION
A	12-18-12	BB	PERMIT ISSUE

JOB NO.	710-04224
DRAWN:	BB
CHECKED:	BB
SCALE:	AS NOTED

G002
DRAWING NO.

UNITED STATES COLD STORAGE, INC.

PHASE II EXPANSION
LAKE CITY, FLORIDA

710-04224

GENERAL

CIVIL

STRUCTURAL

ARCHITECTURAL

PLUMBING

ELECTRICAL

REFRIGERATION

Sheet Identification

A101X01

- Unit or Floor number (large projects only)
- Sheet Sequence Number
- Sheet Type Designator
- Discipline Designator

DISCIPLINE DESIGNATORS	SHEET TYPE DESIGNATORS
G GENERAL	0 GENERAL
H HAZARDOUS MATERIALS	1 PLANS
C CIVIL	2 ELEVATIONS
L LANDSCAPE	3 SECTIONS
S STRUCTURAL	4 LARGE SCALE VIEWS
A ARCHITECTURAL	5 DETAILS
I INTERIOR	6 SCHEDULES AND DIAGRAMS
F FIRE PROTECTION	7 USER DEFINED
P PLUMBING	8 USER DEFINED
Q PROCESS EQUIPMENT AND PIPING	9 3D REPRESENTATIONS
U UTILITY – PROCESS PIPING	
M MECHANICAL	
E ELECTRICAL	
T TELECOMMUNICATIONS	
R REFRIGERATION	
X RESOURCE	

stellar
OPERATING AS THE STELLAR GROUP
2900 HARTLEY ROAD, JACKSONVILLE, FL. 32257 (904) 260-2900
WWW.STELLAR.NET
FLORIDA ENGINEERING LICENSE NO. 5630

PERMIT ISSUE 12-19-12