Columbia County Building Permit

PERMIT
000023854

DATE 11/16/2005

This Permit Expires One Year From the Date of Issue

APPLICANT SUSAN FAIR PHONE 752-5218
ADDRESS 180 NW AMENITY STREET LAKE CITY FL 32055
OWNER RITA MAZDZER PHONE 867-0633
ADDRESS 154 SE GREGORY GLEN LAKE CITY FL 32025
CONTRACTOR BRYAN ZECHER PHONE 752-8653
LOCATION OF PROPERTY BAYA, TR ON OLD COUNTRY CLUB RD, TL ON GREGORY GLEN, 2ND LOT ON RIGHT

TYPE DEVELOPMENT SFD,UTILITY ESTIMATED COST OF CONSTRUCTION 75000.00
HEATED FLOOR AREA 1500.00 TOTAL AREA 1974.00 HEIGHT .00 STORIES 1
FOUNDATION CONC WALLS FRAMED ROOF PITCH 6/12 FLOOR SLAB
LAND USE & ZONING RSF-2 MAX. HEIGHT 18
Minimum Set Back Requirments: STREET-FRONT 25.00 REAR 15.00 SIDE 10.00
NO. EX.D.U. 0 FLOOD ZONE XPP DEVELOPMENT PERMIT NO.

PARCEL ID 15-4S-17-08359-130 SUBDIVISION COUNTRY CLUB EST.
LOT 30 BLOCK PHASE UNIT TOTAL ACRES

000000887 Culvert Permit No.
Culvert Waiver
CBC054575 Contractor's License Number
Susan Fair Applicant/Owner/Contractor
CULVERT Driveway Connection
05-1065-N Septic Tank Number
BK LU & Zoning checked by
JH Approved for Issuance
Y New Resident

COMMENTS: ONE FOOT ABOVE THE ROAD, NOC ON FILE, ALTERNATE TERMIT TREAT RECEIVED

Check # or Cash 2074

FOR BUILDING & ZONING DEPARTMENT ONLY

(footer/Slab)

Temporary Power date/app. by
Foundation date/app. by
Monolithic date/app. by
Under slab rough-in plumbing date/app. by
Slab date/app. by
Sheathing/Nailing date/app. by
Framing date/app. by
Rough-in plumbing above slab and below wood floor date/app. by
Electrical rough-in date/app. by
Heat & Air Duct date/app. by
Peri. beam (Lintel) date/app. by
Permanent power date/app. by
C.O. Final date/app. by
Culvert date/app. by
M/H tie downs, blocking, electricity and plumbing date/app. by
Pool date/app. by
Reconnection date/app. by
Pump pole date/app. by
Utility Pole date/app. by
M/H Pole date/app. by
Travel Trailer date/app. by
Re-roof date/app. by

BUILDING PERMIT FEE $ 375.00 CERTIFICATION FEE $ 9.87 SURCHARGE FEE $ 9.87
MISC. FEES $ .00 ZONING CERT. FEE $ 50.00 FIRE FEE $ .00 WASTE FEE $
FLOOD DEVELOPMENT FEE $ FLOOD ZONE FEE $ N/C CULVERT FEE $ 25.00 **TOTAL FEE** 469.74
INSPECTORS OFFICE CLERKS OFFICE CH

NOTICE: IN ADDITION TO THE REQUIREMENTS OF THIS PERMIT, THERE MAY BE ADDITIONAL RESTRICTIONS APPLICABLE TO THIS PROPERTY THAT MAY BE FOUND IN THE PUBLIC RECORDS OF THIS COUNTY. AND THERE MAY BE ADDITIONAL PERMITS REQUIRED FROM OTHER GOVERNMENTAL ENTITIES SUCH AS WATER MANAGEMENT DISTRICTS, STATE AGENCIES, OR FEDERAL AGENCIES.

"WARNING TO OWNER: YOUR FAILURE TO RECORD A NOTICE OF COMMENCEMENT MAY RESULT IN YOUR PAYING TWICE F IMPROVEMENTS TO YOUR PROPERTY. IF YOU INTEND TO OBTAIN FINANCING, CONSULT WITH YOUR LENDER OR AN ATTOF BEFORE RECORDING YOUR NOTICE OF COMMENCEMENT."

This Permit Must Be Prominently Posted on Premises During Construction

PLEASE NOTIFY THE COLUMBIA COUNTY BUILDING DEPARTMENT AT LEAST 24 HOURS IN ADVANCE OF EACH INSPECTION, IN ORDER THAT IT MAY BE MADE WITHOUT DELAY OR INCONVIENCE, PHONE 758-1008. THIS PERMIT IS NOT VALID UNLESS THE WORK AUTHORIZED BY IT IS COMMENCED WITHIN 6 MONTHS AFTER ISSUANCE.

The Issuance of this Permit Does Not Waive Compliance by Permittee with Deed Restrictions

UNIVERSAL
ENGINEERING SCIENCES
Consultant In: Geotechnical Engineering,
Environmental Sciences, Construction Materials Testing
4475 SW 35th Terrace, Gainesville, Florida 32608 (352) 372-3392

Order No.: 27915-001-01
Report No.: 6380
Date: November 14, 2005

REPORT ON IN-PLACE DENSITY TESTS

23854

Client: Cornerstone Development
P.O. Box 1867
Lake City, FL 32056

Project: Country Side Estates, Lot No. 30, Permit Not Posted, Lake City, Columbia County, FL

Area Tested: Fill Beneath Proposed Building Pad

Course: Final Grade

Depth of Test: 0-1'

Type of Test: ASTM D-2922

Date Tested: 11-09-05

Remarks: The tests below meet the minimum 95 percent relative soil compaction requirement of Laboratory Modified Proctor maximum dry density (ASTM D-1557).

TEST LOCATION	LABORATORY RESULTS		FIELD TEST RESULTS		
Description of Test Location	Maximum Density (pcf)	Optimum Moisture (%)	Dry Density (pcf)	Field Moisture (%)	Soil Compaction (%)
1. Approximate Center of Pad	112.0	11.0	106.5	8.4	95.1
2. Approximate Center of North End of Pad	112.0	11.0	106.8	8.0	95.4
3. Approximate Center of East Side of Pad	112.0	11.0	106.4	8.8	95.0

11/15/05

Technician: TI/ec

Andrew T. Schmid, P.E.
FL Professional Engineer No. 56022

OLD APPLICATION

Columbia County Building Permit Application

For Office Use Only Application # 0511-28 Date Received 7/11/05 By NW Permit # 887/23854

Application Approved by - Zoning Official BLK Date 15.11.05 Plans Examiner OK JTH Date 11-10-05

Flood Zone X Per PLAT Development Permit N/A Zoning RSF-2 Land Use Plan Map Category Residential

Comments

Applicants Name ~~CHRIS COX~~ SUSAN FAIR Phone 386-867-0633

Address 252 NW IVY GLEN LAKE CITY FL. 32055

Owners Name RITA MAZDZER Phone

911 Address 154 SE GREGORY GLEN, LAKE CITY, FL 32025

Contractors Name BRYAN ZECHER CONSTRUCTION Phone 386-752-8653

Address P.O. BOX 815, LAKE CITY, FL 32056

Fee Simple Owner Name & Address N/A

Bonding Co. Name & Address N/A

Architect/Engineer Name & Address MARK DISOSWAY PO BOX 868 LAKE CITY FL 32056

Mortgage Lenders Name & Address N/A

Property ID Number 15-4S-17-08359-130 Estimated Cost of Construction 60,000.00

Subdivision Name COUNTRYSIDE ESTATES Lot 30 Block ___ Unit ___ Phase ___

Driving Directions BAYA TO COUNTRY CLUB ROAD, GO SOUTH ON COUNTRY CLUB ROAD 1½-2 miles, SUBDIVISION IS ON THE LEFT. TAKE LEFT AT SE GREGORY GLEN.

Type of Construction FRAME & HARDY Number of Existing Dwellings on Property 1

Total Acreage 42 Lot Size .50 acre Do you need a - Culvert Permit or Culvert Waiver or Have an Existing D

Actual Distance of Structure from Property Lines - Front 27' Side 57' Side 57' Rear 62'

Total Building Height 18'9" Number of Stories 1 Heated Floor Area 1500 Roof Pitch 6/12

Porch 44 GARAGE 430 TOTAL 1974

Application is hereby made to obtain a permit to do work and installations as indicated. I certify that no work or installation has commenced prior to the issuance of a permit and that all work be performed to meet the standards all laws regulating construction in this jurisdiction.

OWNERS AFFIDAVIT: I hereby certify that all the foregoing information is accurate and all work will be done in compliance with all applicable laws and regulating construction and zoning.

WARNING TO OWNER: YOUR FAILURE TO RECORD A NOTICE OF COMMENCMENT MAY RESULT IN YOU PAYIN TWICE FOR IMPROVEMENTS TO YOUR PROPERTY. IF YOU INTEND TO OBTAIN FINANCING, CONSULT WITH YO LENDER OR ATTORNEY BEFORE RECORDING YOUR NOTICE OF COMMENCEMENT.

Owner Builder or Agent (Including Contractor)

X

Contractor Signature

Contractors License Number CBC05457

Competency Card Number

STATE OF FLORIDA
COUNTY OF COLUMBIA.

Sworn to (or affirmed) and subscribed before me this 2ND day of NOVEMBER 20 05.

Personally known ✓ or Produced Identification ___

NOTARY STAMP/SEAL

Chris W. C
Commission #DD30
Expires: Apr 17,
Bonded Thru
Atlantic Bonding Co

Notary Signature

Warranty Deed

Inst:2005025015 Date:10/07/2005 Time:
Doc Stamp-Deed : 175.00
DC,P.DeWitt Cason,Columbia County B:1 P:355

COLUMBIA COUNTY, FLORIDA CLERK CIRCUIT COURT

STATE OF FLORIDA, COUNTY OF COLUMBIA
I HEREBY CERTIFY, that the above and foregoing is a true copy of the original filed in this office.
P. DeWITT CASON, CLERK OF COURTS
By _____ Deputy Clerk
Date 10/07/05

This Indenture, made , October 7, 2005 A.D.
Between
Cornerstone Development Group, LLC whose post office address is: 180 Northwest Amenity Court, Lake City, Florida 32055 a Limited Liability Company existing under the laws of the State of Florida, Grantor

and **Rita Mazdzer** whose post office address is: 152 Southeast Hubble Street, Lake City, Florida 32025, Grantee,

Witnesseth, that the said Grantor, for and in consideration of the sum of Ten and No/100 Dollars ($10.00), to it in hand paid by the said Grantee, the receipt whereof is hereby acknowledged, has granted, bargained and sold to the said Grantee forever, the following described land, situate, lying and being in the County of Columbia, State of Florida, to wit:

Lot 30, of Country Side Estates, a Subdivision, according to the Plat thereof, as recorded in Plat Book 8, at Pages 1 and 2, of the Public Records of Columbia County, Florida

Subject to taxes for the current year, covenants, restrictions and easements of record, if any.

Parcel Identification Number: **R08359-016**

And the said Grantor does hereby fully warrant the title to said land, and will defend the same against the lawful claims of al persons whomsoever.

In Witness Whereof, the said Grantor has caused this instrument to be executed in its name by its duly authorized office and caused its corporate seal to be affixed the day and year first above written.

Signed and Sealed in Our Presence:

Cornerstone Development Group, LLC

Witness: Lyndi Skinner LYNDI SKINNER

By: _____
Frank Soucinek, Managing Member

Witness: Megan Marable Megan Marable

By: _____
Bryan Zecher, Member

State of Florida
County of Columbia

The foregoing instrument was acknowledged before me this 7th day of October, 2005, by Frank Soucinek, the Managing Member Bryan Zecher, Member of Cornerstone Development Group, LLC A Limited Liability Company existing under the laws of the Stat Florida. They are personally known to me or has produced Known as identification.

Lyndi Skinner (Seal
Notary Public
Notary Printed Name: _____

My Commission Expires:

Lyndi Skinner
My Commission DD150708
Expires September 17, 2006

Prepared by:
Lyndi Skinner/Elaine R. Davis, an employee of
American Title Services of Lake City, Inc.,
330 SW Main Boulevard
Lake City, Florida 32025

File Number: 05-718

STATE OF FLORIDA
DEPARTMENT OF HEALTH
APPLICATION FOR ONSITE SEWAGE DISPOSAL SYSTEM CONSTRUCTION PERMIT

Permit Application Number 05-1065N

---------- PART II - SITEPLAN ----------

LOT 30

Scale: 1 inch = 50 feet.

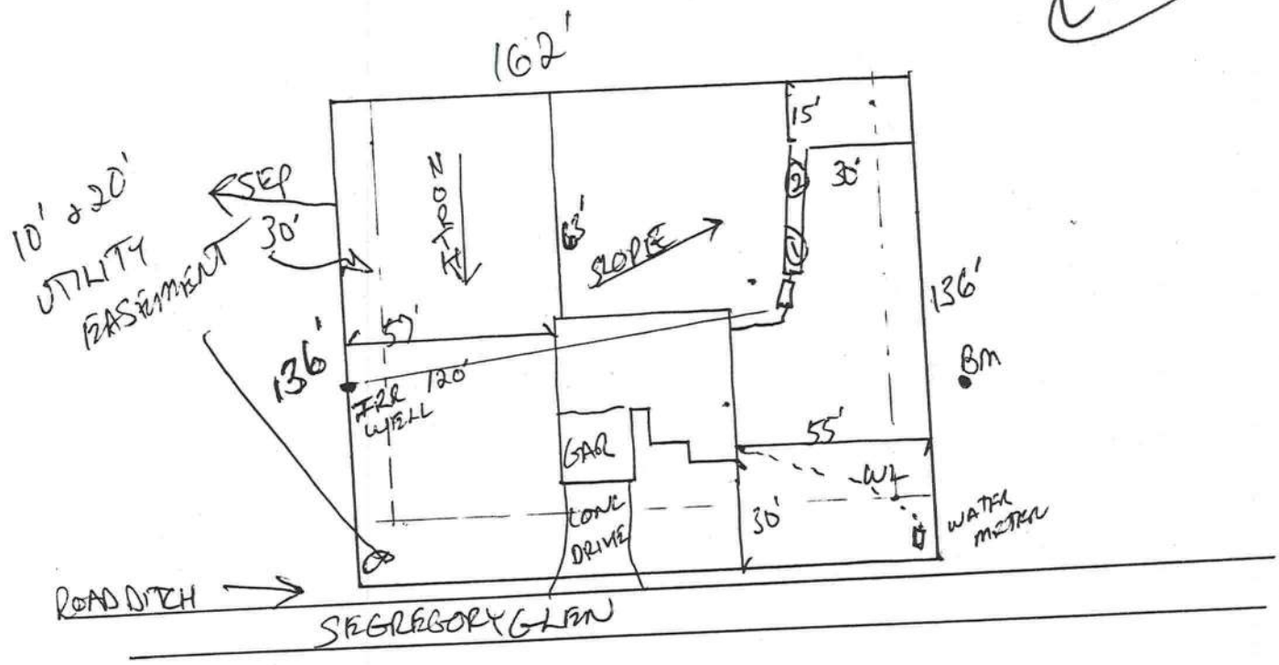

Notes: _____

Site Plan submitted by: Robert D Zeigler — MASTER CONTRACTOR

Date 10-18-05

Plan Approved ✓ Not Approved ____

By [illegible] Columbia County Health Departme

ALL CHANGES MUST BE APPROVED BY THE COUNTY HEALTH DEPARTMENT

DH 4015, 10/96 (Replaces HRS-H Form 4016 which may be used)
(Stock Number: 5744-002-4015-6)

Permit Number:

Tax Folio Number: R08359-016

State of: **Florida**
County of: **Columbia**

File Number: **05-718**

CLERK CIRCUIT COURT COLUMBIA COUNTY, FLORIDA

STATE OF FLORIDA, COUNTY OF COLUMBIA
I HEREBY CERTIFY, that the above and foregoing is a true copy of the original filed in this office.
P. DeWITT CASON, CLERK OF COURTS
By _____ Deputy Clerk
Date 10/07/05

Inst:2005025017 Date:10/07/2005 Time:13:20
_____DC,P.DeWitt Cason,Columbia County B:1061 P:369

NOTICE OF COMMENCEMENT

The undersigned hereby gives notice that improvement will be made to certain real property, and, in accordance with Chapter 713, Florida Statutes, the following information is provided in this Notice of Commencement.

1. Description of Property:

   Lot 30, of Country Side Estates, a Subdivision, according to the Plat thereof, as recorded in Plat Book 8, at Pages 1 and 2, of the Public Records of Columbia County, Florida

2. General Description of Improvements: Construction of Dwelling

3. Owner Information:
   a. Name and Address: Rita Mazdzer
      152 Southeast Hubble Street, Lake City, FL 32025
   b. Interest in property: Fee Simple
   c. Names and address of fee simple title holder (if other than owner):

4. Contractor: Bryan Zecher Contruction

5. Surety: N/A

6. Lender: First Federal Savings Bank of Florida, 4705 West U. S. Highway 90
Post Office Box 2029 (32056), Lake City, Florida 32055

7. Persons within the State of Florida designated by Owner upon whom notices or other documents may be served as provided by Section 713.13(1) (a)7., Florida Statutes.NONE

8. In addition to himself, Owner designates the following persons to receive a copy of the Lienor's Notice as

COLUMBIA COUNTY 9-1-1 ADDRESSING

263 NW Lake City Ave. * P. O. Box 2949 * Lake City, FL 32056-2949
PHONE: (386) 752-8787 * FAX (386) 758-1365 * Email: ron_croft@columbiacountyfla.com

32025

Addresses for Country Side Estates Subdivision:

Lot #:	Address Assigned:
1	165 SE Victoria Glen
2	195 SE Victoria Glen
3	223 SE Victoria Glen
4	251 SE Victoria Glen
5	281 SE Victoria Glen
6	311 SE Victoria Glen
7	329 SE Victoria Glen
8	328 SE Victoria Glen
9	306 SE Victoria Glen
10	274 SE Victoria Glen
11	244 SE Victoria Glen
12	214 SE Victoria Glen
13	182 SE Victoria Glen
14	152 SE Victoria Glen
15	122 SE Victoria Glen
16	123 SE Gregory Glen
17	153 SE Gregory Glen
18	183 SE Gregory Glen
19	215 SE Gregory Glen
20	245 SE Gregory Glen
21	275 SE Gregory Glen
22	309 SE Gregory Glen
23	329 SE Gregory Glen
24	330 SE Gregory Glen
25	308 SE Gregory Glen
26	276 SE Gregory Glen
27	246 SE Gregory Glen
28	216 SE Gregory Glen
29	184 SE Gregory Glen
30	154 SE Gregory Glen
31	~~3239 SE Country Club Rd~~ 124 SE Gregory Glen

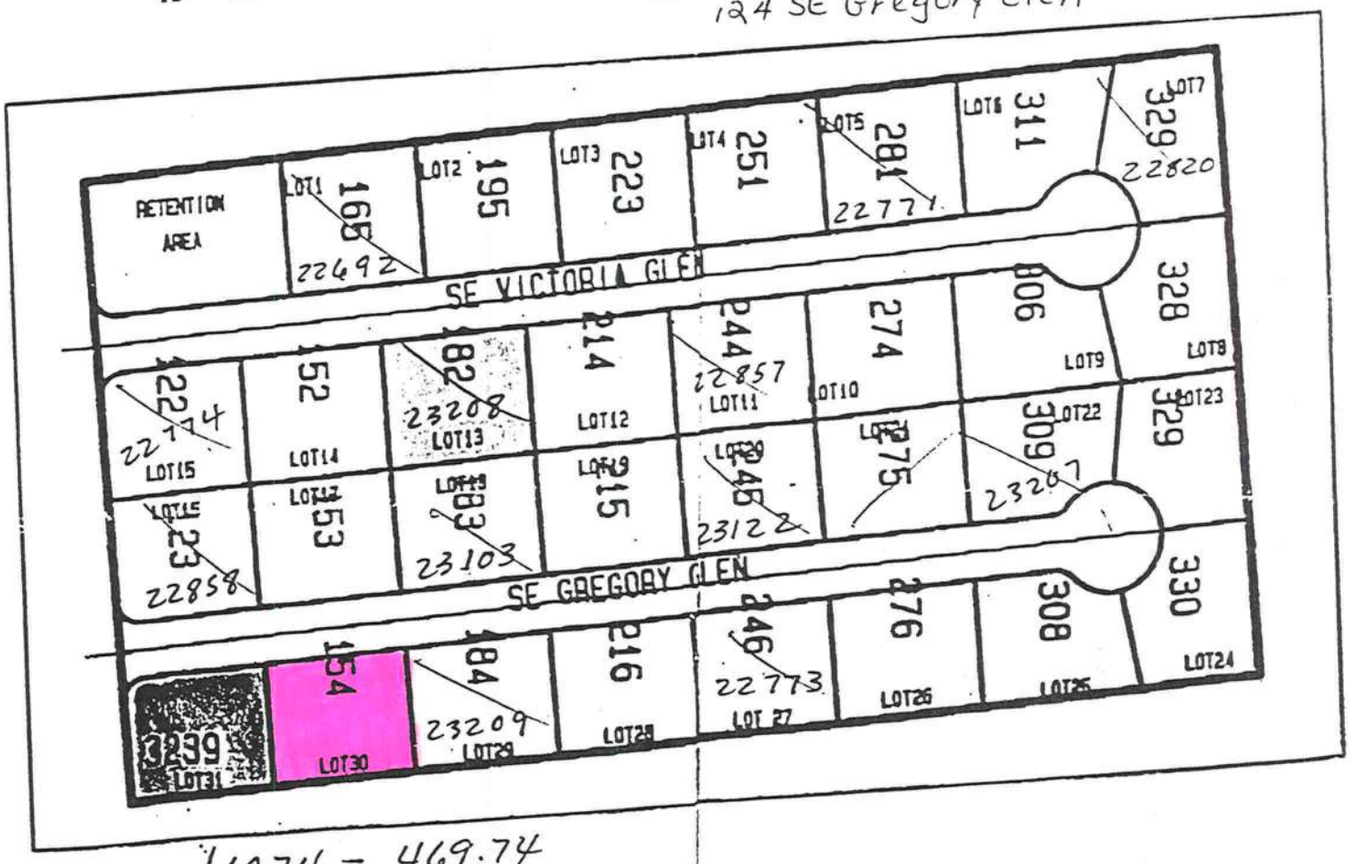

1500/1974 - 469.74
1200/1665 - 391.64

01/09/2005 15:47 3857582159 BLDG AND ZONING PAGE 02

COUNTRYSIDE ESTATES
COLUMBIA COUNTY
LOT 30 SITE PLAN

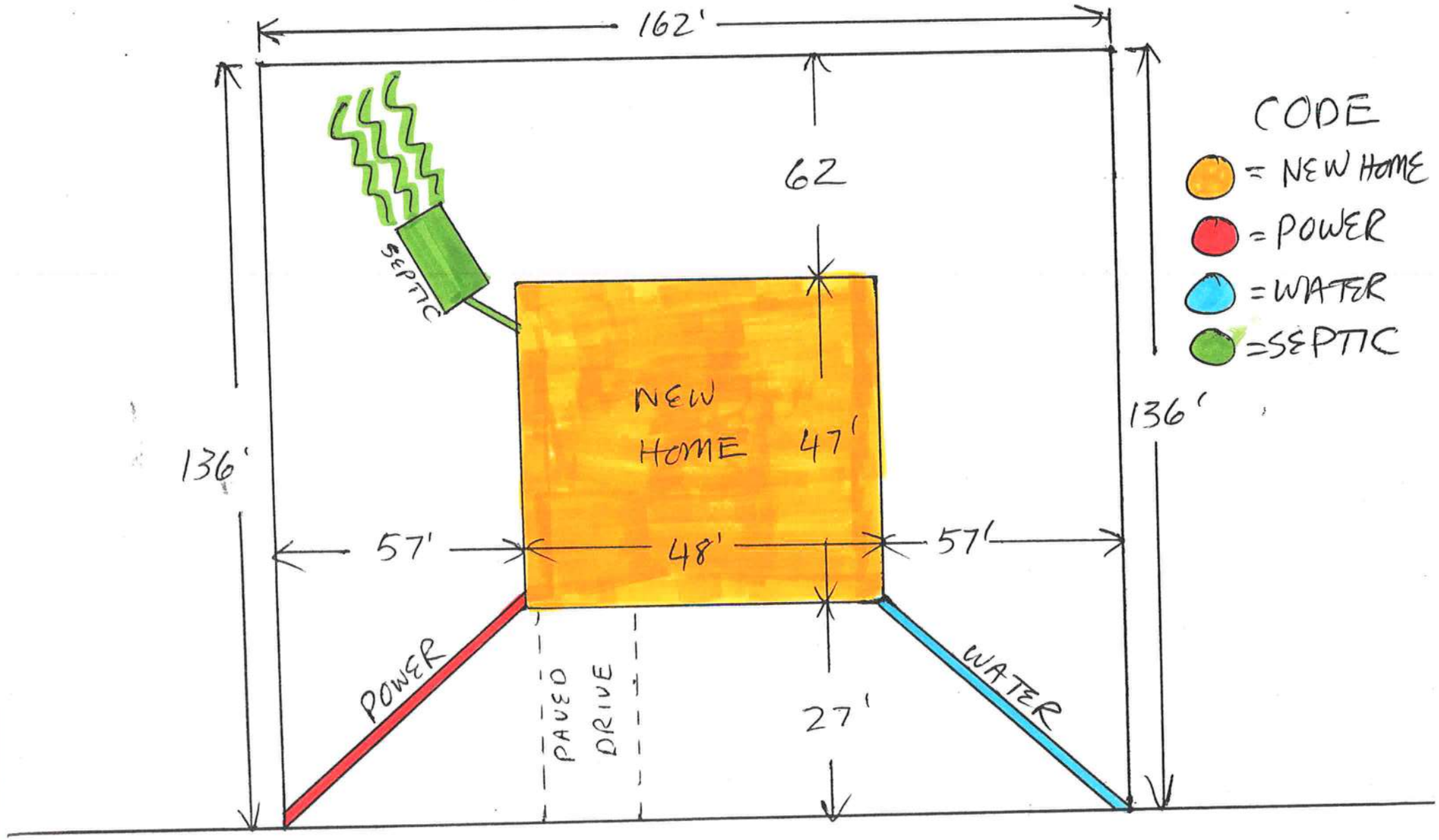

SE. GREGORY GLEN

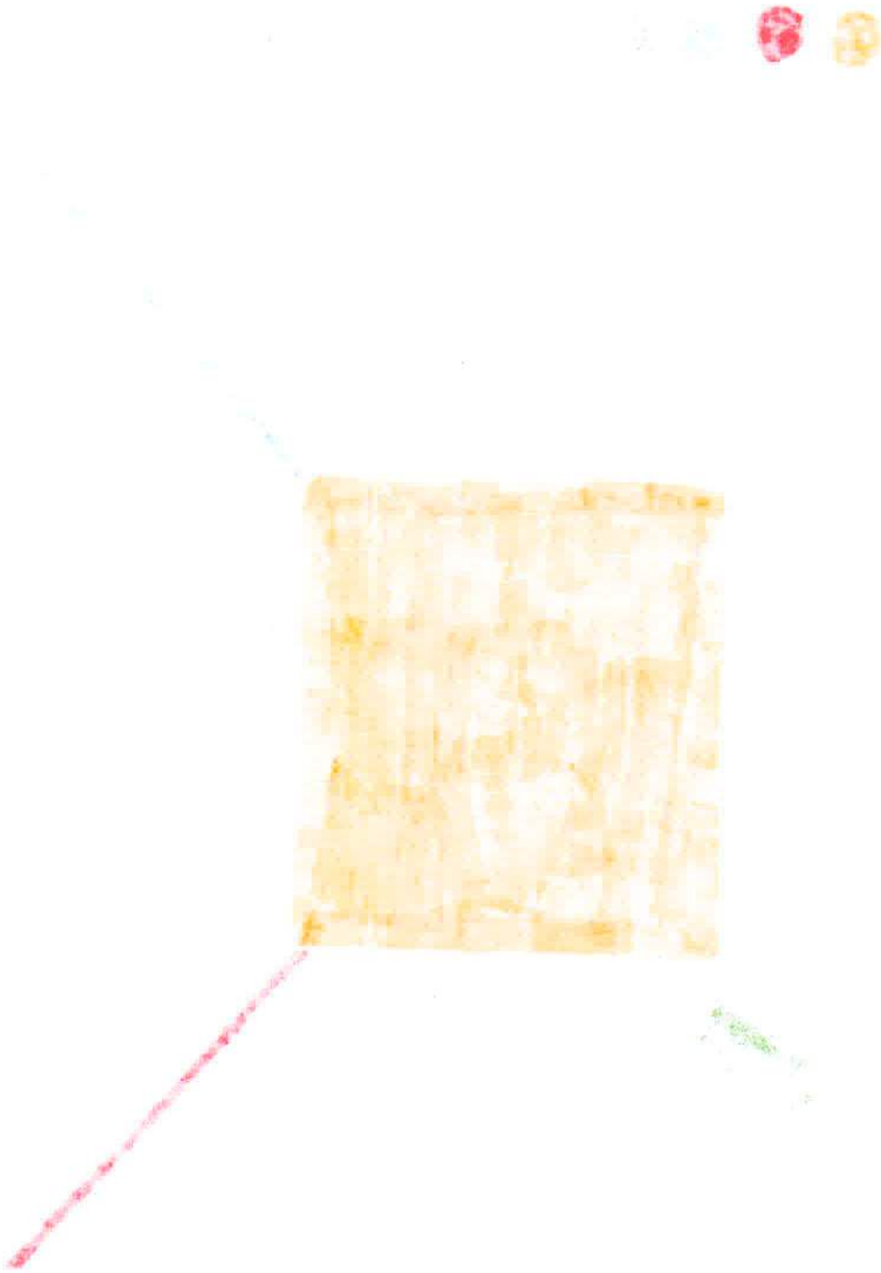

EnergyGauge® 4.0

FORM 600A-2004

FLORIDA ENERGY EFFICIENCY CODE FOR BUILDING CONSTRUCTION

Florida Department of Community Affairs

Residential Whole Building Performance Method A

Project Name:	TheSamuelModel	Builder:	Bryan Zecher Construction
Address:	Lot: , Sub: , Plat:	Permitting Office:	Columbia
City, State:	,	Permit Number:	23854
Owner:	Model Home	Jurisdiction Number:	221000
Climate Zone:	North		

1. New construction or existing	New	—
2. Single family or multi-family	Single family	—
3. Number of units, if multi-family	1	—
4. Number of Bedrooms	3	—
5. Is this a worst case?	Yes	—
6. Conditioned floor area (ft²)	1500 ft²	—
7. Glass type[1] and area: (Label reqd. by 13-104.4.5 if not default)		
a. U-factor: (or Single or Double DEFAULT)	Description Area 7a. (Dble Default) 110.0 ft²	—
b. SHGC: (or Clear or Tint DEFAULT)	7b. (Clear) 110.0 ft²	—
8. Floor types		
a. Slab-On-Grade Edge Insulation	R=0.0, 196.0(p) ft	—
b. N/A		—
c. N/A		—
9. Wall types		
a. Frame, Wood, Adjacent	R=13.0, 172.0 ft²	—
b. Frame, Wood, Exterior	R=13.0, 1121.0 ft²	—
c. N/A		—
d. N/A		—
e. N/A		—
10. Ceiling types		
a. Under Attic	R=30.0, 1754.0 ft²	
b. N/A		—
c. N/A		—
11. Ducts		
a. Sup: Unc. Ret: Unc. AH: Garage	Sup. R=6.0, 150.0 ft	
b. N/A		—

12. Cooling systems		
a. Central Unit	Cap: 34.0 kBtu/hr	—
	SEER: 12.00	—
b. N/A		—
		—
c. N/A		—
		—
13. Heating systems		
a. Electric Heat Pump	Cap: 34.0 kBtu/hr	—
	HSPF: 7.60	—
b. N/A		—
		—
c. N/A		—
		—
14. Hot water systems		
a. Electric Resistance	Cap: 40.0 gallons	—
	EF: 0.93	—
b. N/A		—
		—
c. Conservation credits (HR-Heat recovery, Solar DHP-Dedicated heat pump)		—
15. HVAC credits (CF-Ceiling fan, CV-Cross ventilation, HF-Whole house fan, PT-Programmable Thermostat, MZ-C-Multizone cooling, MZ-H-Multizone heating)		—

Glass/Floor Area: 0.14

Total as-built points: 23520

Total base points: 23819

PASS

I hereby certify that the plans and specifications covered by this calculation are in compliance with the Florida Energy Code.

PREPARED BY: _____

DATE: 11/3/05

I hereby certify that this building, as designed, is in compliance with the Florida Energy Code.

OWNER/AGENT: _____

DATE: 11-5-05

Review of the plans and specifications covered by this calculation indicates compliance with the Florida Energy Code. Before construction is completed this building will be inspected for compliance with Section 553.908 Florida Statutes.

GREAT SEAL OF THE STATE OF FLORIDA — IN GOD WE TRUST

BUILDING OFFICIAL: _____

DATE: _____

1 Predominant glass type. For actual glass type and areas, see Summer & Winter Glass output on pages 2&4.

SUMMER CALCULATIONS

Residential Whole Building Performance Method A - Details

ADDRESS: **Lot: , Sub: , Plat: , , ,** PERMIT #:

BASE

GLASS TYPES .18 X Conditioned Floor Area	X BSPM	= Points
.18 1500.0	20.04	5410.8

WALL TYPES	Area	X BSPM	= Points
Adjacent	172.0	0.70	120.4
Exterior	1121.0	1.70	1905.7
Base Total:	**1293.0**		**2026.1**

DOOR TYPES	Area	X BSPM	= Points
Adjacent	20.0	2.40	48.0
Exterior	40.0	6.10	244.0
Base Total:	**60.0**		**292.0**

CEILING TYPES	Area	X BSPM	= Points
Under Attic	1500.0	1.73	2595.0
Base Total:	**1500.0**		**2595.0**

FLOOR TYPES	Area	X BSPM	= Points
Slab	196.0(p)	-37.0	-7252.0
Raised	0.0	0.00	0.0
Base Total:			**-7252.0**

INFILTRATION	Area	X BSPM	= Points
	1500.0	10.21	15315.0

AS-BUILT

Type/SC	Overhang Ornt	Len	Hgt	Area	X SPM	X SOF	= Points
Double, Clear	S	2.0	5.5	45.0	35.87	0.75	1208.6
Double, Clear	SW	14.5	7.0	10.0	40.16	0.39	157.3
Double, Clear	S	12.0	5.3	45.0	35.87	0.44	716.2
Double, Clear	SE	8.5	7.0	10.0	42.75	0.46	195.4
Double, Clear	W	2.0	1.5	3.0	38.52	0.47	54.1
Double, Clear	N	9.5	7.5	6.0	19.20	0.67	77.7
Double, Clear	N	2.0	5.5	30.0	19.20	0.89	510.4
Double, Clear	N	2.0	8.0	30.0	19.20	0.94	540.7
Double, Clear	E	2.0	3.5	6.0	42.06	0.68	171.6
Double, Clear	E	2.0	5.5	30.0	42.06	0.82	1039.9
As-Built Total:				**215.0**			**4672.0**

Type	R-Value	Area	X SPM	= Points
Frame, Wood, Adjacent	13.0	172.0	0.60	103.2
Frame, Wood, Exterior	13.0	1121.0	1.50	1681.5
As-Built Total:		**1293.0**		**1784.7**

Type	Area	X SPM	= Points
Exterior Insulated	20.0	4.10	82.0
Exterior Insulated	20.0	4.10	82.0
Adjacent Insulated	20.0	1.60	32.0
As-Built Total:	**60.0**		**196.0**

Type	R-Value	Area	X SPM X SCM	= Points
Under Attic	30.0	1754.0	1.73 X 1.00	3034.4
As-Built Total:		**1754.0**		**3034.4**

Type	R-Value	Area	X SPM	= Points
Slab-On-Grade Edge Insulation	0.0	196.0(p	-41.20	-8075.2
As-Built Total:		**196.0**		**-8075.2**

Area	X SPM	= Points
1500.0	10.21	15315.0

SUMMER CALCULATIONS

Residential Whole Building Performance Method A - Details

ADDRESS: **Lot: , Sub: , Plat: , , ,** PERMIT #:

BASE			AS-BUILT						
Summer Base Points: 18386.9			**Summer As-Built Points:**						**16926.9**
Total Summer Points	X System Multiplier	= Cooling Points	Total Component (System - Points)	X Cap Ratio	X Duct Multiplier (DM x DSM x AHU)	X System Multiplier	X Credit Multiplier	= Cooling Points	
			(sys 1: Central Unit 34000 btuh ,SEER/EFF(12.0) Ducts:Unc(S),Unc(R),Gar(AH),R6.0(INS)						
			16927	1.00	(1.09 x 1.147 x 1.00)	0.284	1.000	6019.0	
18386.9	**0.4266**	**7843.9**	**16926.9**	**1.00**	**1.250**	**0.284**	**1.000**	**6019.0**	

WINTER CALCULATIONS

Residential Whole Building Performance Method A - Details

ADDRESS: **Lot: , Sub: , Plat: , , ,** PERMIT #:

BASE

GLASS TYPES .18 X Conditioned Floor Area	X BWPM	= Points
.18 1500.0	12.74	3439.8

WALL TYPES	Area	X BWPM	= Points
Adjacent	172.0	3.60	619.2
Exterior	1121.0	3.70	4147.7
Base Total:	**1293.0**		**4766.9**

DOOR TYPES	Area	X BWPM	= Points
Adjacent	20.0	11.50	230.0
Exterior	40.0	12.30	492.0
Base Total:	**60.0**		**722.0**

CEILING TYPES	Area	X BWPM	= Points
Under Attic	1500.0	2.05	3075.0
Base Total:	**1500.0**		**3075.0**

FLOOR TYPES	Area	X BWPM	= Points
Slab	196.0(p)	8.9	1744.4
Raised	0.0	0.00	0.0
Base Total:			**1744.4**

INFILTRATION	Area	X BWPM	= Points
	1500.0	-0.59	-885.0

AS-BUILT

Type/SC	Overhang Ornt	Len	Hgt	Area	X WPM	X WOF	= Points
Double, Clear	S	2.0	5.5	45.0	13.30	1.32	787.4
Double, Clear	SW	14.5	7.0	10.0	16.74	1.94	324.1
Double, Clear	S	12.0	5.3	45.0	13.30	3.57	2133.3
Double, Clear	SE	8.5	7.0	10.0	14.71	2.13	312.7
Double, Clear	W	2.0	1.5	3.0	20.73	1.20	74.3
Double, Clear	N	9.5	7.5	6.0	24.58	1.02	150.6
Double, Clear	N	2.0	5.5	30.0	24.58	1.01	741.4
Double, Clear	N	2.0	8.0	30.0	24.58	1.00	739.1
Double, Clear	E	2.0	3.5	6.0	18.79	1.15	129.3
Double, Clear	E	2.0	5.5	30.0	18.79	1.07	603.4
As-Built Total:				**215.0**			**5995.6**

Type	R-Value	Area	X WPM	= Points
Frame, Wood, Adjacent	13.0	172.0	3.30	567.6
Frame, Wood, Exterior	13.0	1121.0	3.40	3811.4
As-Built Total:		**1293.0**		**4379.0**

Type	Area	X WPM	= Points
Exterior Insulated	20.0	8.40	168.0
Exterior Insulated	20.0	8.40	168.0
Adjacent Insulated	20.0	8.00	160.0
As-Built Total:	**60.0**		**496.0**

Type	R-Value	Area	X WPM X WCM	= Points
Under Attic	30.0	1754.0	2.05 X 1.00	3595.7
As-Built Total:		**1754.0**		**3595.7**

Type	R-Value	Area	X WPM	= Points
Slab-On-Grade Edge Insulation	0.0	196.0(p	18.80	3684.8
As-Built Total:		**196.0**		**3684.8**

	Area	X WPM	= Points
	1500.0	-0.59	-885.0

WINTER CALCULATIONS

Residential Whole Building Performance Method A - Details

ADDRESS: **Lot: , Sub: , Plat: , , ,** PERMIT #:

BASE				AS-BUILT							
Winter Base Points:			**12863.1**	**Winter As-Built Points:**							**17266.1**
Total Winter Points	X System Multiplier	= Heating Points		Total Component (System - Points)	X Cap Ratio	X Duct Multiplier (DM x DSM x AHU)	X System Multiplier	X Credit Multiplier	= Heating Points		
				(sys 1: Electric Heat Pump 34000 btuh ,EFF(7.6) Ducts:Unc(S),Unc(R),Gar(AH),R6.0							
				17266.1	1.000	(1.069 x 1.169 x 1.00)	0.449	1.000	9681.1		
12863.1	**0.6274**	**8070.3**		**17266.1**	**1.00**	**1.250**	**0.449**	**1.000**	**9681.1**		

WATER HEATING & CODE COMPLIANCE STATUS

Residential Whole Building Performance Method A - Details

ADDRESS: **Lot: , Sub: , Plat: , , ,** PERMIT #:

BASE				AS-BUILT							
WATER HEATING											
Number of Bedrooms	X	Multiplier	= Total	Tank Volume	EF	Number of Bedrooms	X Tank Ratio	X Multiplier	X Credit Multiplier	= Total	
3		2635.00	7905.0	40.0	0.93	3	1.00	2606.67	1.00	7820.0	
				As-Built Total:						**7820.0**	

CODE COMPLIANCE STATUS

BASE				AS-BUILT			
Cooling Points +	Heating Points +	Hot Water Points =	Total Points	Cooling Points +	Heating Points +	Hot Water Points =	Total Points
7844	**8070**	**7905**	**23819**	**6019**	**9681**	**7820**	**23520**

PASS

Code Compliance Checklist

Residential Whole Building Performance Method A - Details

ADDRESS: **Lot: , Sub: , Plat: , , ,** PERMIT #:

6A-21 INFILTRATION REDUCTION COMPLIANCE CHECKLIST

COMPONENTS	SECTION	REQUIREMENTS FOR EACH PRACTICE	CHECK
Exterior Windows & Doors	606.1.ABC.1.1	Maximum:.3 cfm/sq.ft. window area; .5 cfm/sq.ft. door area.	
Exterior & Adjacent Walls	606.1.ABC.1.2.1	Caulk, gasket, weatherstrip or seal between: windows/doors & frames, surrounding wall; foundation & wall sole or sill plate; joints between exterior wall panels at corners; utility penetrations; between wall panels & top/bottom plates; between walls and floor. EXCEPTION: Frame walls where a continuous infiltration barrier is installed that extends from, and is sealed to, the foundation to the top plate.	
Floors	606.1.ABC.1.2.2	Penetrations/openings >1/8" sealed unless backed by truss or joint members. EXCEPTION: Frame floors where a continuous infiltration barrier is installed that is sealed to the perimeter, penetrations and seams.	
Ceilings	606.1.ABC.1.2.3	Between walls & ceilings; penetrations of ceiling plane of top floor; around shafts, chases, soffits, chimneys, cabinets sealed to continuous air barrier; gaps in gyp board & top plate; attic access. EXCEPTION: Frame ceilings where a continuous infiltration barrier is installed that is sealed at the perimeter, at penetrations and seams.	
Recessed Lighting Fixtures	606.1.ABC.1.2.4	Type IC rated with no penetrations, sealed; or Type IC or non-IC rated, installed inside a sealed box with 1/2" clearance & 3" from insulation; or Type IC rated with < 2.0 cfm from conditioned space, tested.	
Multi-story Houses	606.1.ABC.1.2.5	Air barrier on perimeter of floor cavity between floors.	
Additional Infiltration reqts	606.1.ABC.1.3	Exhaust fans vented to outdoors, dampers; combustion space heaters comply with NFPA, have combustion air.	

6A-22 OTHER PRESCRIPTIVE MEASURES (must be met or exceeded by all residences.)

COMPONENTS	SECTION	REQUIREMENTS	CHECK
Water Heaters	612.1	Comply with efficiency requirements in Table 612.1.ABC.3.2. Switch or clearly marked circuit breaker (electric) or cutoff (gas) must be provided. External or built-in heat trap required.	
Swimming Pools & Spas	612.1	Spas & heated pools must have covers (except solar heated). Non-commercial pools must have a pump timer. Gas spa & pool heaters must have a minimum thermal efficiency of 78%.	
Shower heads	612.1	Water flow must be restricted to no more than 2.5 gallons per minute at 80 PSIG.	
Air Distribution Systems	610.1	All ducts, fittings, mechanical equipment and plenum chambers shall be mechanically attached, sealed, insulated, and installed in accordance with the criteria of Section 610. Ducts in unconditioned attics: R-6 min. insulation.	
HVAC Controls	607.1	Separate readily accessible manual or automatic thermostat for each system.	
Insulation	604.1, 602.1	Ceilings-Min. R-19. Common walls-Frame R-11 or CBS R-3 both sides. Common ceiling & floors R-11.	

ENERGY PERFORMANCE LEVEL (EPL) DISPLAY CARD

ESTIMATED ENERGY PERFORMANCE SCORE* = 83.2

The higher the score, the more efficient the home.

Model Home, Lot: , Sub: , Plat: , , ,

1. New construction or existing	New		
2. Single family or multi-family	Single family		
3. Number of units, if multi-family	1		
4. Number of Bedrooms	3		
5. Is this a worst case?	Yes		
6. Conditioned floor area (ft²)	1500 ft²		
7. Glass type[1] and area: (Label reqd. by 13-104.4.5 if not default)	Description	Area	
a. U-factor: (or Single or Double DEFAULT)	7a. (Dble Default)	110.0 ft²	
b. SHGC: (or Clear or Tint DEFAULT)	7b. (Clear)	110.0 ft²	
8. Floor types			
a. Slab-On-Grade Edge Insulation	R=0.0, 196.0(p) ft		
b. N/A			
c. N/A			
9. Wall types			
a. Frame, Wood, Adjacent	R=13.0, 172.0 ft²		
b. Frame, Wood, Exterior	R=13.0, 1121.0 ft²		
c. N/A			
d. N/A			
e. N/A			
10. Ceiling types			
a. Under Attic	R=30.0, 1754.0 ft²		
b. N/A			
c. N/A			
11. Ducts			
a. Sup: Unc. Ret: Unc. AH: Garage	Sup. R=6.0, 150.0 ft		
b. N/A			

12. Cooling systems		
a. Central Unit	Cap: 34.0 kBtu/hr	
	SEER: 12.00	
b. N/A		
c. N/A		
13. Heating systems		
a. Electric Heat Pump	Cap: 34.0 kBtu/hr	
	HSPF: 7.60	
b. N/A		
c. N/A		
14. Hot water systems		
a. Electric Resistance	Cap: 40.0 gallons	
	EF: 0.93	
b. N/A		
c. Conservation credits (HR-Heat recovery, Solar DHP-Dedicated heat pump)		
15. HVAC credits (CF-Ceiling fan, CV-Cross ventilation, HF-Whole house fan, PT-Programmable Thermostat, MZ-C-Multizone cooling, MZ-H-Multizone heating)		

I certify that this home has complied with the Florida Energy Efficiency Code For Building Construction through the above energy saving features which will be installed (or exceeded) in this home before final inspection. Otherwise, a new EPL Display Card will be completed based on installed Code compliant features.

Builder Signature: Chris W. Cx Date: 11-5-05

Address of New Home: 154 SE GREGORY GLN City/FL Zip: LAKE CITY FL 32025

**NOTE: The home's estimated energy performance score is only available through the FLA/RES computer program. This is not a Building Energy Rating. If your score is 80 or greater (or 86 for a US EPA/DOE EnergyStar™ designation), your home may qualify for energy efficiency mortgage (EEM) incentives if you obtain a Florida Energy Gauge Rating. Contact the Energy Gauge Hotline at 321/638-1492 or see the Energy Gauge web site at www.fsec.ucf.edu for information and a list of certified Raters. For information about Florida's Energy Efficiency Code For Building Construction, contact the Department of Community Affairs at 850/487-1824.*

1 Predominant glass type. For actual glass type and areas, see Summer & Winter Glass output on pages 2&4.

EnergyGauge® (Version: FLRCSB v4.0)

Columbia County Building Department
Culvert Permit

Culvert Permit No.
000000887

DATE 11/16/2005 PARCEL ID # 15-4S-17-08359-130

APPLICANT SUSAN FAIR PHONE 752-5218

ADDRESS 180 NW AMENITY COURT LAKE CITY FL 32055

OWNER RITA MAZDZER PHONE

ADDRESS 154 SE GREGORY GLEN LAKE CITY FL 32025

CONTRACTOR BRYAN ZECHER PHONE 752-8653

LOCATION OF PROPERTY BAYA, TR ON OLD COUNTRY CLUB ROAD, TL ON GREGORY GLEN, 2ND LOT ON RIGHT

SUBDIVISION/LOT/BLOCK/PHASE/UNIT COUNTRY SIDE EST 30

SIGNATURE Susan Fair

INSTALLATION REQUIREMENTS

[X] Culvert size will be 18 inches in diameter with a total lenght of 32 feet, leaving 24 feet of driving surface. Both ends will be mitered 4 foot with a 4 : 1 slope and poured with a 4 inch thick reinforced concrete slab.

INSTALLATION NOTE: Turnouts will be required as follows:
a) a majority of the current and existing driveway turnouts are paved, or;
b) the driveway to be served will be paved or formed with concrete.
Turnouts shall be concrete or paved a minimum of 12 feet wide or the width of the concrete or paved driveway, whichever is greater. The width shall conform to the current and existing paved or concreted turnouts.

[ ] Culvert installation shall conform to the approved site plan standards.

[ ] Department of Transportation Permit installation approved standards.

[ ] Other

ALL PROPER SAFETY REQUIREMENTS SHOULD BE FOLLOWED DURING THE INSTALATION OF THE CULVERT.

135 NE Hernando Ave., Suite B-21
Lake City, FL 32055
Phone: 386-758-1008 Fax: 386-758-2160

Amount Paid 25.00

COLUMBIA COUNTY BUILDING DEPARTMENT

RESIDENTIAL MINIMUM PLAN REQUIREMENTS AND CHECKLIST FOR FLORIDA BUILDING CODE 2001
ONE (1) AND TWO (2) FAMILY DWELLINGS

ALL REQUIREMENTS ARE SUBJECT TO CHANGE

EFFECTIVE MARCH 1, 2002

ALL BUILDING PLANS MUST INDICATE THE FOLLOWING ITEMS AND INDICATE COMPLIANCE WITH CHAPTER 1606 OF THE FLORIDA BUILDING CODE 2001 BY PROVIDING CALCULATIONS AND DETAILS THAT HAVE THE SEAL AND SIGNATURE OF A CERTIFIED ARCHITECT OR ENGINEER REGISTERED IN THE STATE OF FLORIDA, OR ALTERNATE METHODOLOGIES, APPROVED BY THE STATE OF FLORIDA BUILDING COMMISSION FOR ONE-AND-TWO FAMILY DWELLINGS. FOR DESIGN PURPOSES THE FOLLOWING BASIC WIND SPEED AS PER FIGURE 1606 SHALL BE USED.

WIND SPEED LINE SHALL BE DEFINED AS FOLLOWS: THE CENTERLINE OF INTERSTATE 75.

1. ALL BUILDINGS CONSTRUCTED EAST OF SAID LINE SHALL BE -------- 100 MPH
2. ALL BUILDINGS CONSTRUCTED WEST OF SAID LINE SHALL BE --------110 MPH
3. NO AREA IN COLUMBIA COUNTY IS IN A WIND BORNE DEBRIS REGION

APPLICANT – PLEASE CHECK ALL APPLICABLE BOXES BEFORE SUBMITTAL

GENERAL REQUIREMENTS: Two (2) complete sets of plans containing the following:

Applicant	Plans Examiner	
☑	☑	All drawings must be clear, concise and drawn to scale ("Optional " details that are not used shall be marked void or crossed off). Square footage of different areas shall be shown on plans.
☑	☑	Designers name and signature on document (FBC 104.2.1). If licensed architect or engineer, official seal shall be affixed.
☑	☑	**Site Plan including:** a) Dimensions of lot b) Dimensions of building set backs c) Location of all other buildings on lot, well and septic tank if applicable, and all utility easements. d) Provide a full legal description of property.
☑	☑	**Wind-load Engineering Summary, calculations and any details required** a) Plans or specifications must state compliance with FBC Section 1606 b) The following information must be shown as per section 1606.1.7 FBC a. Basic wind speed (MPH) b. Wind importance factor (I) and building category c. Wind exposure – if more than one wind exposure is used, the wind exposure and applicable wind direction shall be indicated d. The applicable internal pressure coefficient e. Components and Cladding. The design wind pressure in terms of psf (kN/m²), to be used for the design of exterior component and cladding materials not specifally designed by the registered design professional
		See NOTE 1
☑	☑	**Elevations including:** a) All sides
☑	☑	b) Roof pitch
☑	☑	c) Overhang dimensions and detail with attic ventilation
☑	☑	d) Location, size and height above roof of chimneys
☑	☑	e) Location and size of skylights
☑	☑	f) Building height
☑	☑	e) Number of stories

Floor Plan including:

a) Rooms labeled and dimensioned

b) Shear walls

c) Windows and doors (including garage doors) showing size, mfg., approval listing and attachment specs. (FBC 1707) and safety glazing where needed (egress windows in bedrooms to be shown)

d) Fireplaces (gas appliance) (vented or non-vented) or wood burning with hearth

e) Stairs with dimensions (width, tread and riser) and details of guardrails and handrails

f) Must show and identify accessibility requirements (accessible bathroom)

Foundation Plan including:

a) Location of all load-bearing wall with required footings indicated as standard Or monolithic and dimensions and reinforcing

b) All posts and/or column footing including size and reinforcing

c) Any special support required by soil analysis such as piling

d) Location of any vertical steel

Roof System:

a) Truss package including:

1. Truss layout and truss details signed and sealed by Fl. Pro. Eng.
2. Roof assembly (FBC 104.2.1 Roofing system, materials, manufacturer, fastening requirements and product evaluation with wind resistance rating)

b) Conventional Framing Layout including:

NA

1. Rafter size, species and spacing
2. Attachment to wall and uplift
3. Ridge beam sized and valley framing and support details
4. Roof assembly (FBC 104.2.1 Roofing systems, materials, manufacturer, fastening requirements and product evaluation with wind resistance rating)

Wall Sections including: N/A

a) Masonry wall

NA

1. All materials making up wall
2. Block size and mortar type with size and spacing of reinforcement
3. Lintel, tie-beam sizes and reinforcement
4. Gable ends with rake beams showing reinforcement or gable truss and wall bracing details
5. All required connectors with uplift rating and required number and size of fasteners for continuous tie from roof to foundation
6. Roof assembly shown here or on roof system detail (FBC 104.2.1 Roofing system, materials, manufacturer, fastening requirements and product evaluation with resistance rating)
7. Fire resistant construction (if required)
8. Fireproofing requirements
9. Shoe type of termite treatment (termiticide or alternative method)
10. Slab on grade
    a. Vapor retarder (6mil. Polyethylene with joints lapped 6 inches and sealed)
    b. Must show control joints, synthetic fiber reinforcement or Welded fire fabric reinforcement and supports
11. Indicate where pressure treated wood will be placed
12. Provide insulation R value for the following:
    a. Attic space
    b. Exterior wall cavity
    c. Crawl space (if applicable)

b) Wood frame wall

1. All materials making up wall
2. Size and species of studs
3. Sheathing size, type and nailing schedule
4. Headers sized
5. Gable end showing balloon framing detail or gable truss and wall hinge bracing detail
6. All required fasteners for continuous tie from roof to foundation (truss anchors, straps, anchor bolts and washers)
7. Roof assembly shown here or on roof system detail (FBC104.2.1 Roofing system, materials, manufacturer, fastening requirements and product evaluation with wind resistance rating)
8. Fire resistant construction (if applicable)
9. Fireproofing requirements
10. Show type of termite treatment (termiticide or alternative method)
11. Slab on grade
    a. Vapor retarder (6Mil. Polyethylene with joints lapped 6 inches and sealed
    b. Must show control joints, synthetic fiber reinforcement or welded wire fabric reinforcement and supports
12. Indicate where pressure treated wood will be placed
13. Provide insulation R value for the following:
    a. Attic space
    b. Exterior wall cavity
    c. Crawl space (if applicable)

NA

c) Metal frame wall and roof (designed, signed and sealed by Florida Prof. Engineer or Architect) N/A

Floor Framing System: N/A

NA

a) Floor truss package including layout and details, signed and sealed by Florida Registered Professional Engineer

b) Floor joist size and spacing

c) Girder size and spacing

d) Attachment of joist to girder

e) Wind load requirements where applicable

Plumbing Fixture layout

Electrical layout including:

a) Switches, outlets/receptacles, lighting and all required GFCI outlets identified

b) Ceiling fans

c) Smoke detectors

d) Service panel and sub-panel size and location(s)

e) Meter location with type of service entrance (overhead or underground)

f) Appliances and HVAC equipment

g) Arc Fault Circuits (AFCI) in bedrooms

HVAC information

See NOTE

a) Manual J sizing equipment or equivalent computation

b) Exhaust fans in bathroom

Energy Calculations (dimensions shall match plans)

Gas System Type (LP or Natural) Location and BTU demand of equipment N/A

Disclosure Statement for Owner Builders

Notice Of Commencement

Private Potable Water — Private water system

a) Size of pump motor

b) Size of pressure tank

c) Cycle stop valve if used

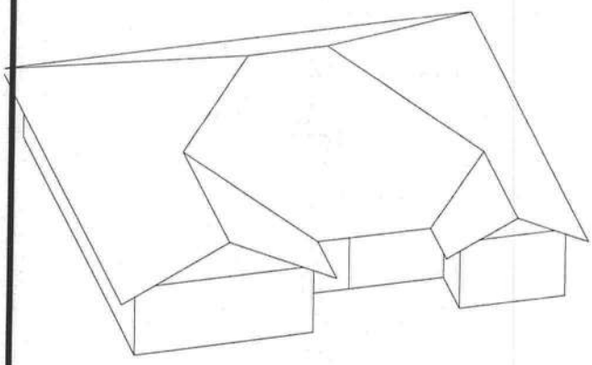

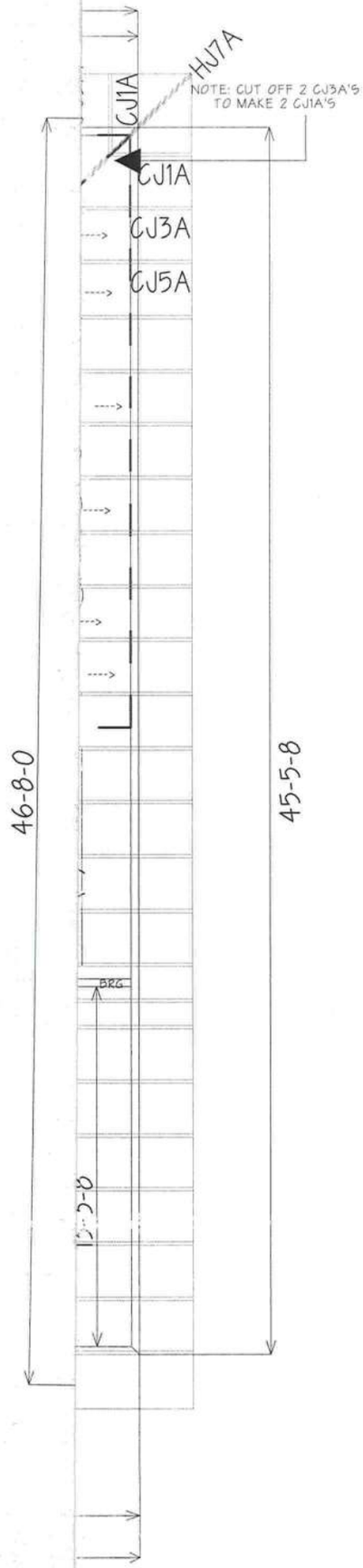

BEARING HEIGHT SCHEDULE

8'

2' O/H
6/12

NOTES:

1.) REFER TO HIB 91 (RECOMMENDATIONS FOR HANDLING INSTALLATION AND TEMPORARY BRACING.) REFER TO ENGINEERED DRAWINGS FOR PERMANENT BRACING REQUIRED.

2.) ALL TRUSSES (INCLUDING TRUSSES UNDER VALLEY FRAMING) MUST BE COMPLETELY DECKED OR REFER TO DETAIL V105 FOR ALTERNATE BRACING REQUIREMENTS.

3.) ALL VALLEYS ARE TO BE CONVENTIONALLY FRAMED BY BUILDER.

4.) ALL TRUSSES ARE DESIGNED FOR 2' o.c. MAXIMUM SPACING, UNLESS OTHERWISE NOTED.

5.) ALL WALLS SHOWN ON PLACEMENT PLAN ARE CONSIDERED TO BE LOAD BEARING, UNLESS OTHERWISE NOTED.

6.) SY42 TRUSSES MUST BE INSTALLED WITH THE TOP BEING UP.

7.) ALL ROOF TRUSS HANGERS TO BE SIMPSON HUS26 UNLESS OTHERWISE NOTED. ALL FLOOR TRUSS HANGERS TO BE SIMPSON THA422 UNLESS OTHERWISE NOTED.

8.) BEAM/HEADER/LINTEL (HDR) TO BE FURNISHED BY BUILDER.

SHOP DRAWING APPROVAL

THIS LAYOUT IS THE SOLE SOURCE FOR FABRICATION OF TRUSSES AND VOIDS ALL PREVIOUS ARCHITECTURAL OR OTHER TRUSS LAYOUTS. REVIEW AND APPROVAL OF THIS LAYOUT MUST BE RECEIVED BEFORE ANY TRUSSES WILL BE BUILT. VERIFY ALL CONDITIONS TO INSURE AGAINST CHANGES THAT WILL RESULT IN EXTRA CHARGES TO YOU.

Requested Delivery Date :_____

Approved by: _____ Date: _____

Builders FirstSource

Bunnell
PHONE: 904-437-3349 FAX: 904-437-3994

Jacksonville
PHONE: 904-772-6100 FAX: 904-772-1973

Lake City
PHONE: 904-755-6894 FAX: 904-755-7973

Sanford
PHONE: 407-322-0059 FAX: 407-322-5553

BUILDER: BRYAN ZECHER		
LEGAL ADDRESS: LOT 30-1 CSE		
MODEL: THE SAMUEL		REVISION:
		SCALE: NTS
DATE: 10-14-05	DRAWN BY: JRD	JOB #: L136745

Project Information for: L136745
Builder: BRYAN ZECHER
Lot: N/A
Subdivision: LOT 30-1 COUNTRY SIDE ES
County or City: COLUMBIA COUNTY
Truss Page Count: 30

Date: 10/17/2005
Start Number: 120

Truss Design Load Information (UNO) Design Program: MiTek 5.2 / 6.2

Gravity		Wind		Building Code:	FBC2004
Roof (psf):	42	Wind Standard:	ASCE 7-02		
Floor (psf):	55	Wind Speed (mph):	110		

Note: See individual truss drawings for special loading conditions

Building Designer, responsible for Structural Engineering: (See attached)
ZECHER, BRYAN C. CBC 054575
Address: PO BOX 815
ALACHUA,FL 32615
Designer: 132

Truss Design Engineer: Thomas, E. Miller, P.E., 56877 - Byron K. Anderson, PE FL 60987
Company: Structural Engineering and Inspections, Inc. EB 9196
Address 16105 N. Florida Ave, Ste B, Lutz, FL 33549

Notes:
1. Truss Design Engineer is responsible for the individual trusses as components only.
2. Determination as to the suitability and use of these truss components for the structure is the responsibility of the Building Designer of Record, as defined in ANSI/TPI
3. The seal date shown on the individual truss component drawings must match the seal date on this index sheet.

#	Truss ID	Dwg. #	Seal Date	#	Truss ID	Dwg. #	Seal Date
1	CJ1	101705120	10/17/2005				
2	CJ3	101705121	10/17/2005				
3	CJ3A	101705122	10/17/2005				
4	CJ5	101705123	10/17/2005				
5	CJ5A	101705124	10/17/2005				
6	EJ7	101705125	10/17/2005				
7	EJ7A	101705126	10/17/2005				
8	HJ7	101705127	10/17/2005				
9	HJ7A	101705128	10/17/2005				
10	T01	101705129	10/17/2005				
11	T01G	101705130	10/17/2005				
12	T02	101705131	10/17/2005				
13	T03	101705132	10/17/2005				
14	T04	101705133	10/17/2005				
15	T05	101705134	10/17/2005				
16	T06	101705135	10/17/2005				
17	T07	101705136	10/17/2005				
18	T08	101705137	10/17/2005				
19	T09	101705138	10/17/2005				
20	T09	101705139	10/17/2005				
21	T10	101705140	10/17/2005				
22	T11	101705141	10/17/2005				
23	T12	101705142	10/17/2005				
24	T13	101705143	10/17/2005				
25	T14	101705144	10/17/2005				
26	T15	101705145	10/17/2005				
27	T16	101705146	10/17/2005				
28	T17	101705147	10/17/2005				
29	T18	101705148	10/17/2005				
30	T18G	101705149	10/17/2005				

OCT 17 2005

Dwg.#101705119

Licensee Details

Licensee Information

Name:	**ZECHER, BRYAN CHRISTIAN (Primary Name)** **BRYAN ZECHER CONSTRUCTION INC (DBA**
Main Address:	**P O BOX 815** **LAKE CITY, Florida 32056**
Lic. Location:	**465 NW ORANGE ST** **LAKE CITY, FL 32055 United States** **Columbia**

License Information

License Type:	**Certified Building Contractor**
Rank:	**Cert Building**
License Number:	**CBC054575**
Status:	**Current, Active**
Licensure Date:	**12/05/1991**
Expires:	**08/31/2006**

Special Qualifications	Effective Date
Bldg Code Core Course Credit	
Qualified Business License Required	04/13/2004

View Related License Information

View License Complaint

New Search

OCTOBER 17,2005 TRUSS DESIGN ENGINEER:
THOMAS E. MILLER PE 56877, BYRON K. ANDERSON PE 60987
STRUCTURAL ENGINEERING AND INSPECTIONS, INC.; EB 9186
16105 N. FLORIDA AVE. STE B, LUTZ, FL 33549

Job	Truss	Truss Type	Qty	Ply	BRYAN ZECHER- LOT30-1 CSE	Dwg.#101705120
L136745	CJ1	MONO TRUSS	2	1	Job Reference (optional)	

Builders FirstSource, Lake City, Fl 32055

6.200 s Jul 13 2005 MiTek Industries, Inc. Fri Oct 14 14:13:19 2005 Page 1

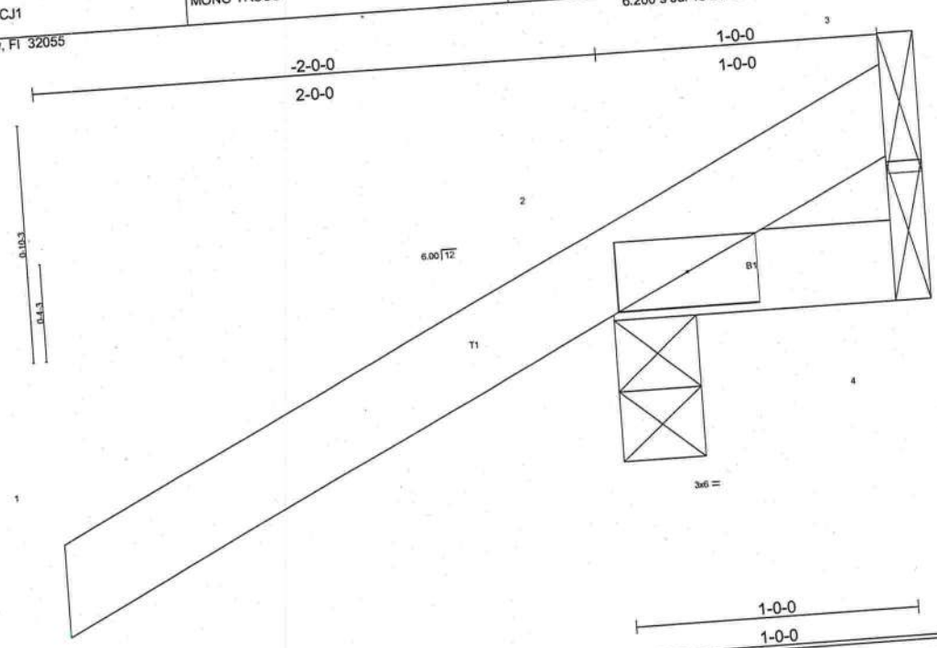

LOADING (psf)		SPACING	2-0-0	CSI		DEFL	in	(loc)	l/defl	L/d	PLATES	GRIP
TCLL	20.0	Plates Increase	1.25	TC	0.28	Vert(LL)	-0.00	2	>999	240	MT20	244/190
TCDL	7.0	Lumber Increase	1.25	BC	0.01	Vert(TL)	-0.00	2	>999	180		
BCLL	10.0	Rep Stress Incr	YES	WB	0.00	Horz(TL)	0.00	3	n/a	n/a	Weight: 7 lb	
BCDL	5.0	Code FBC2004/TPI2002		(Matrix)								

BRACING
TOP CHORD Structural wood sheathing directly applied or 1-0-0 oc purlins.
BOT CHORD Rigid ceiling directly applied or 10-0-0 oc bracing.

LUMBER
TOP CHORD 2 X 4 SYP No.2
BOT CHORD 2 X 4 SYP No.2

REACTIONS (lb/size) 2=266/0-3-8, 4=14/Mechanical, 3=-90/Mechanical
Max Horz 2=87(load case 5)
Max Uplift2=-274(load case 5), 3=-90(load case 1)
Max Grav 2=266(load case 1), 4=14(load case 1), 3=127(load case 5)

FORCES (lb) - Maximum Compression/Maximum Tension
TOP CHORD 1-2=0/47, 2-3=-69/75
BOT CHORD 2-4=0/0

NOTES
1) Wind: ASCE 7-02; 110mph (3-second gust); h=20ft; TCDL=4.2psf; BCDL=3.0psf; Category II; Exp B; enclosed; MWFRS gable end zone and C-C Exterior(2) zone; Lumber DOL=1.60 plate grip DOL=1.60. This truss is designed for C-C for members and forces, and for MWFRS for reactions specified.
2) Refer to girder(s) for truss to truss connections.
3) Provide mechanical connection (by others) of truss to bearing plate capable of withstanding 274 lb uplift at joint 2 and 90 lb uplift at joint 3.

LOAD CASE(S) Standard

OCTOBER 17,2005 TRUSS DESIGN ENGINEER:
THOMAS E. MILLER PE 56877, BYRON K. ANDERSON PE 60987
STRUCTURAL ENGINEERING AND INSPECTIONS, INC. EB 9196
16105 N. FLORIDA AVE. STE B, LUTZ, FL 33549

Job	Truss	Truss Type	Qty	Ply	BRYAN ZECHER- LOT30-1 CSE	Dwg.#I01705121
L136745	CJ3	MONO TRUSS	2	1	Job Reference (optional)	

Builders FirstSource, Lake City, Fl 32055 — 6.200 s Jul 13 2005 MiTek Industries, Inc. Fri Oct 14 14:13:20 2005 Page 1

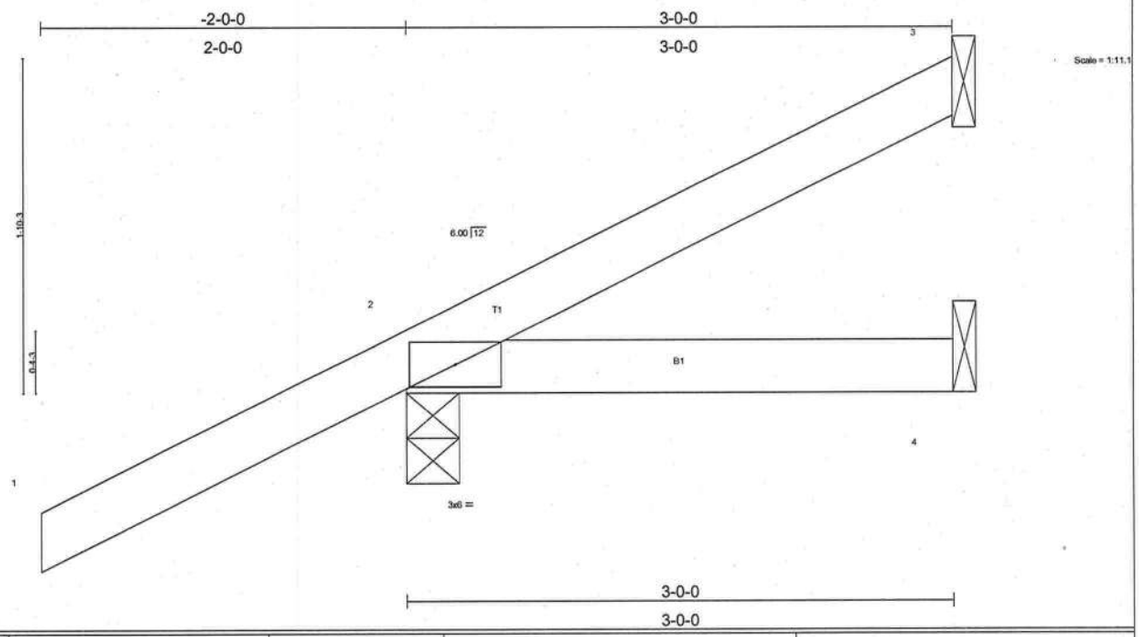

LOADING (psf)		SPACING	2-0-0	CSI		DEFL	in	(loc)	l/defl	L/d	PLATES	GRIP
TCLL	20.0	Plates Increase	1.25	TC	0.29	Vert(LL)	-0.00	2-4	>999	240	MT20	244/190
TCDL	7.0	Lumber Increase	1.25	BC	0.06	Vert(TL)	-0.01	2-4	>999	180		
BCLL	10.0	Rep Stress Incr	YES	WB	0.00	Horz(TL)	-0.00	3	n/a	n/a		
BCDL	5.0	Code FBC2004/TPI2002		(Matrix)							Weight: 13 lb	

LUMBER
TOP CHORD 2 X 4 SYP No.2
BOT CHORD 2 X 4 SYP No.2

BRACING
TOP CHORD Structural wood sheathing directly applied or 3-0-0 oc purlins.
BOT CHORD Rigid ceiling directly applied or 10-0-0 oc bracing.

REACTIONS (lb/size) 3=31/Mechanical, 2=278/0-3-8, 4=42/Mechanical
Max Horz 2=132(load case 5)
Max Uplift3=-28(load case 6), 2=-203(load case 5)

FORCES (lb) - Maximum Compression/Maximum Tension
TOP CHORD 1-2=0/47, 2-3=-57/7
BOT CHORD 2-4=0/0

NOTES
1) Wind: ASCE 7-02; 110mph (3-second gust); h=20ft; TCDL=4.2psf; BCDL=3.0psf; Category II; Exp B; enclosed; MWFRS gable end zone and C-C Exterior(2) zone; Lumber DOL=1.60 plate grip DOL=1.60. This truss is designed for C-C for members and forces, and for MWFRS for reactions specified.
2) Refer to girder(s) for truss to truss connections.
3) Provide mechanical connection (by others) of truss to bearing plate capable of withstanding 28 lb uplift at joint 3 and 203 lb uplift at joint 2.

LOAD CASE(S) Standard

OCTOBER 17,2005 TRUSS DESIGN ENGINEER:
THOMAS E. MILLER PE 56877, BYRON K. ANDERSON PE 60987
STRUCTURAL ENGINEERING AND INSPECTIONS, INC. EB 9196
16105 N. FLORIDA AVE. STE B, LUTZ, FL 33549

Job	Truss	Truss Type	Qty	Ply	BRYAN ZECHER- LOT30-1 CSE	Dwg.#101705122
L136745	CJ3A	MONO SCISSOR	4	1	Job Reference (optional)	

Builders FirstSource, Lake City, Fl 32055 — 6.200 s Jul 13 2005 MiTek Industries, Inc. Fri Oct 14 14:13:21 2005 Page 1

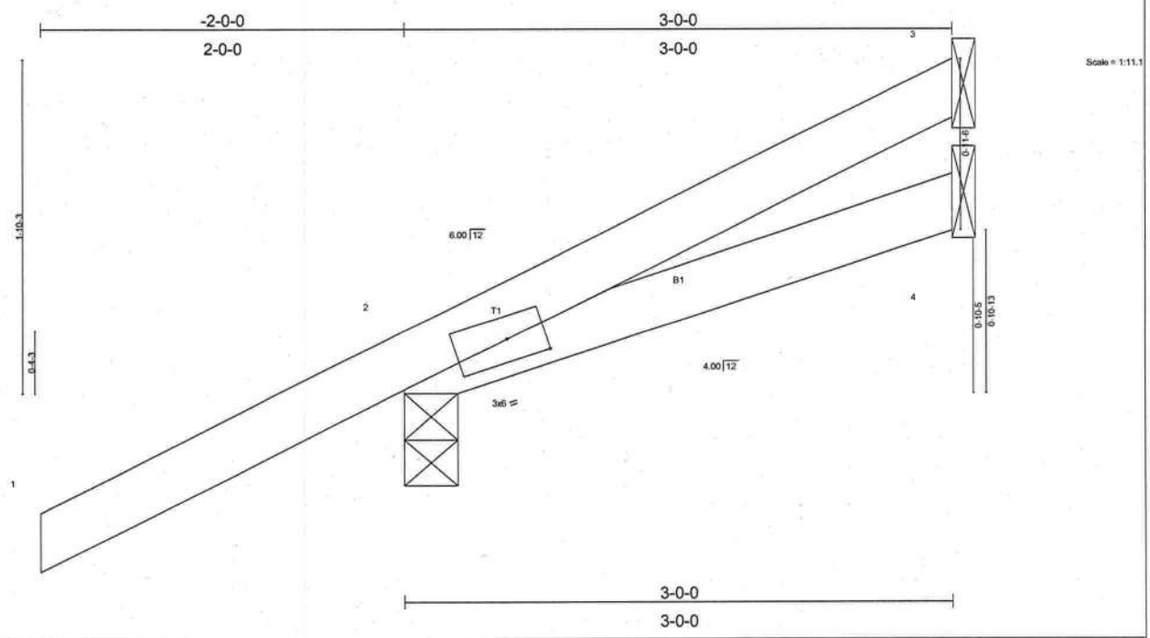

Plate Offsets (X,Y): [2:0-2-8,0-1-8]

LOADING (psf)		SPACING	2-0-0	CSI		DEFL	in	(loc)	l/defl	L/d	PLATES	GRIP
TCLL	20.0	Plates Increase	1.25	TC	0.29	Vert(LL)	-0.00	2-4	>999	240	MT20	244/190
TCDL	7.0	Lumber Increase	1.25	BC	0.06	Vert(TL)	-0.01	2-4	>999	180		
BCLL	10.0	Rep Stress Incr	YES	WB	0.00	Horz(TL)	-0.00	3	n/a	n/a		
BCDL	5.0	Code FBC2004/TPI2002		(Matrix)							Weight: 13 lb	

LUMBER
TOP CHORD 2 X 4 SYP No.2
BOT CHORD 2 X 4 SYP No.2

BRACING
TOP CHORD Structural wood sheathing directly applied or 3-0-0 oc purlins.
BOT CHORD Rigid ceiling directly applied or 10-0-0 oc bracing.

REACTIONS (lb/size) 3=31/Mechanical, 2=278/0-3-8, 4=42/Mechanical
Max Horz 2=131(load case 5)
Max Uplift3=-29(load case 6), 2=-201(load case 5)

FORCES (lb) - Maximum Compression/Maximum Tension
TOP CHORD 1-2=0/46, 2-3=-58/8
BOT CHORD 2-4=-11/11

NOTES
1) Wind: ASCE 7-02; 110mph (3-second gust); h=20ft; TCDL=4.2psf; BCDL=3.0psf; Category II; Exp B; enclosed; MWFRS gable end zone and C-C Exterior(2) zone; Lumber DOL=1.60 plate grip DOL=1.60. This truss is designed for C-C for members and forces, and for MWFRS for reactions specified.
2) Refer to girder(s) for truss to truss connections.
3) Bearing at joint(s) 2 considers parallel to grain value using ANSI/TPI 1 angle to grain formula. Building designer should verify capacity of bearing surface.
4) Provide mechanical connection (by others) of truss to bearing plate capable of withstanding 29 lb uplift at joint 3 and 201 lb uplift at joint 2.

LOAD CASE(S) Standard

OCTOBER 17,2005 TRUSS DESIGN ENGINEER:
THOMAS E. MILLER PE 56877, BYRON K. ANDERSON PE 60987
STRUCTURAL ENGINEERING AND INSPECTIONS, INC. EB 9196
16105 N. FLORIDA AVE. STE B, LUTZ, FL 33549

Job	Truss	Truss Type	Qty	Ply	BRYAN ZECHER- LOT30-1 CSE	Dwg.#101705123
L136745	CJ5	MONO TRUSS	2	1	Job Reference (optional)	

Builders FirstSource, Lake City, Fl 32055 — 6.200 s Jul 13 2005 MiTek Industries, Inc. Fri Oct 14 14:13:21 2005 Page 1

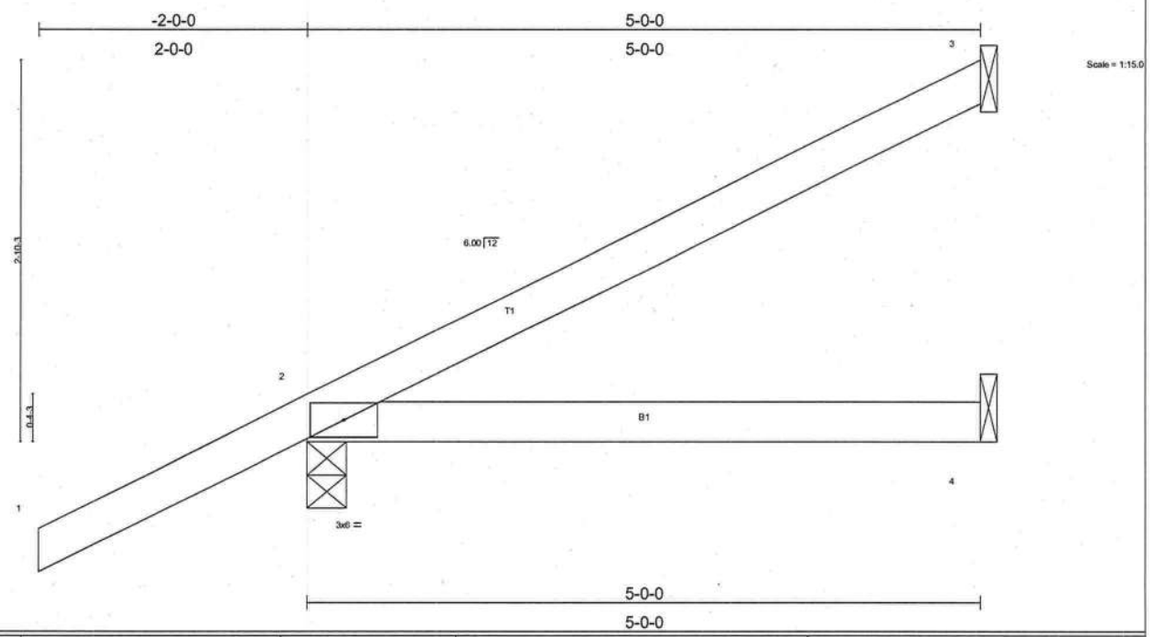

LOADING (psf)		SPACING	2-0-0	CSI		DEFL	in	(loc)	l/defl	L/d	PLATES	GRIP
TCLL	20.0	Plates Increase	1.25	TC	0.29	Vert(LL)	-0.03	2-4	>999	240	MT20	244/190
TCDL	7.0	Lumber Increase	1.25	BC	0.16	Vert(TL)	-0.05	2-4	>999	180		
BCLL	10.0	Rep Stress Incr	YES	WB	0.00	Horz(TL)	-0.00	3	n/a	n/a		
BCDL	5.0	Code FBC2004/TPI2002		(Matrix)							Weight: 19 lb	

LUMBER
TOP CHORD 2 X 4 SYP No.2
BOT CHORD 2 X 4 SYP No.2

BRACING
TOP CHORD Structural wood sheathing directly applied or 5-0-0 oc purlins.
BOT CHORD Rigid ceiling directly applied or 10-0-0 oc bracing.

REACTIONS (lb/size) 3=103/Mechanical, 2=343/0-3-8, 4=72/Mechanical
Max Horz 2=178(load case 5)
Max Uplift3=-87(load case 5), 2=-199(load case 5)

FORCES (lb) - Maximum Compression/Maximum Tension
TOP CHORD 1-2=0/47, 2-3=-88/36
BOT CHORD 2-4=0/0

NOTES
1) Wind: ASCE 7-02; 110mph (3-second gust); h=20ft; TCDL=4.2psf; BCDL=3.0psf; Category II; Exp B; enclosed; MWFRS gable end zone and C-C Exterior(2) zone; Lumber DOL=1.60 plate grip DOL=1.60. This truss is designed for C-C for members and forces, and for MWFRS for reactions specified.
2) Refer to girder(s) for truss to truss connections.
3) Provide mechanical connection (by others) of truss to bearing plate capable of withstanding 87 lb uplift at joint 3 and 199 lb uplift at joint 2.

LOAD CASE(S) Standard

OCTOBER 17,2005 TRUSS DESIGN ENGINEER:
THOMAS E. MILLER PE 56877, BYRON K. ANDERSON PE 60987
STRUCTURAL ENGINEERING AND INSPECTIONS, INC. EB 9196
16105 N. FLORIDA AVE. STE B, LUTZ, FL 33549

Job	Truss	Truss Type	Qty	Ply	BRYAN ZECHER- LOT30-1 CSE	Dwg.#101705124
L136745	CJ5A	MONO SCISSOR	2	1	Job Reference (optional)	

Builders FirstSource, Lake City, Fl 32055 — 6.200 s Jul 13 2005 MiTek Industries, Inc. Fri Oct 14 14:13:22 2005 Page 1

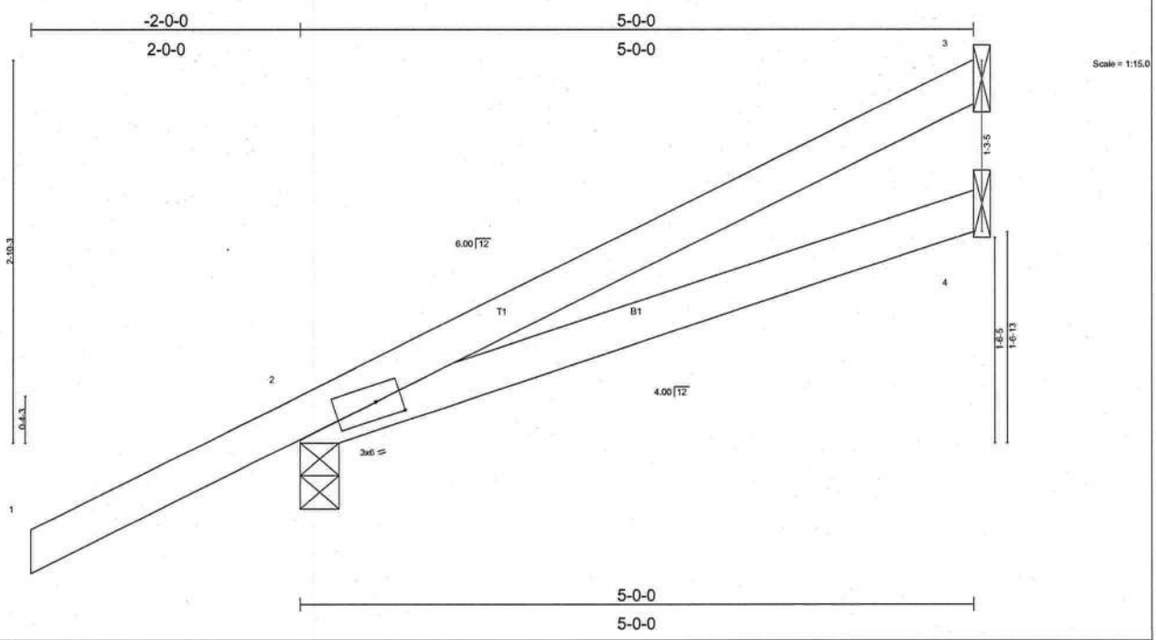

Plate Offsets (X,Y): [2:0-2-4,0-1-8]

LOADING (psf)		SPACING	2-0-0	CSI		DEFL	in	(loc)	l/defl	L/d	PLATES	GRIP
TCLL	20.0	Plates Increase	1.25	TC	0.29	Vert(LL)	-0.03	2-4	>999	240	MT20	244/190
TCDL	7.0	Lumber Increase	1.25	BC	0.16	Vert(TL)	-0.05	2-4	>999	180		
BCLL	10.0	Rep Stress Incr	YES	WB	0.00	Horz(TL)	-0.00	3	n/a	n/a		
BCDL	5.0	Code FBC2004/TPI2002		(Matrix)							Weight: 20 lb	

LUMBER
TOP CHORD 2 X 4 SYP No.2
BOT CHORD 2 X 4 SYP No.2

BRACING
TOP CHORD Structural wood sheathing directly applied or 5-0-0 oc purlins.
BOT CHORD Rigid ceiling directly applied or 10-0-0 oc bracing.

REACTIONS (lb/size) 3=103/Mechanical, 2=343/0-3-8, 4=72/Mechanical
Max Horz 2=177(load case 5)
Max Uplift3=-89(load case 5), 2=-198(load case 5)

FORCES (lb) - Maximum Compression/Maximum Tension
TOP CHORD 1-2=0/46, 2-3=-90/36
BOT CHORD 2-4=-18/18

NOTES
1) Wind: ASCE 7-02; 110mph (3-second gust); h=20ft; TCDL=4.2psf; BCDL=3.0psf; Category II; Exp B; enclosed; MWFRS gable end zone and C-C Exterior(2) zone; Lumber DOL=1.60 plate grip DOL=1.60. This truss is designed for C-C for members and forces, and for MWFRS for reactions specified.
2) Refer to girder(s) for truss to truss connections.
3) Bearing at joint(s) 2 considers parallel to grain value using ANSI/TPI 1 angle to grain formula. Building designer should verify capacity of bearing surface.
4) Provide mechanical connection (by others) of truss to bearing plate capable of withstanding 89 lb uplift at joint 3 and 198 lb uplift at joint 2.

LOAD CASE(S) Standard

OCTOBER 17,2005 TRUSS DESIGN ENGINEER:
THOMAS E. MILLER PE 56877, BYRON K. ANDERSON PE 60987
STRUCTURAL ENGINEERING AND INSPECTIONS, INC. EB 9196
16105 N. FLORIDA AVE. STE B, LUTZ, FL 33549

Job	Truss	Truss Type	Qty	Ply	BRYAN ZECHER- LOT30-1 CSE
L136745	EJ7	MONO TRUSS	15	1	Job Reference (optional)

Dwg.#101705125

Builders FirstSource, Lake City, Fl 32055

6.200 s Jul 13 2005 MiTek Industries, Inc. Fri Oct 14 14:13:22 2005 Page 1

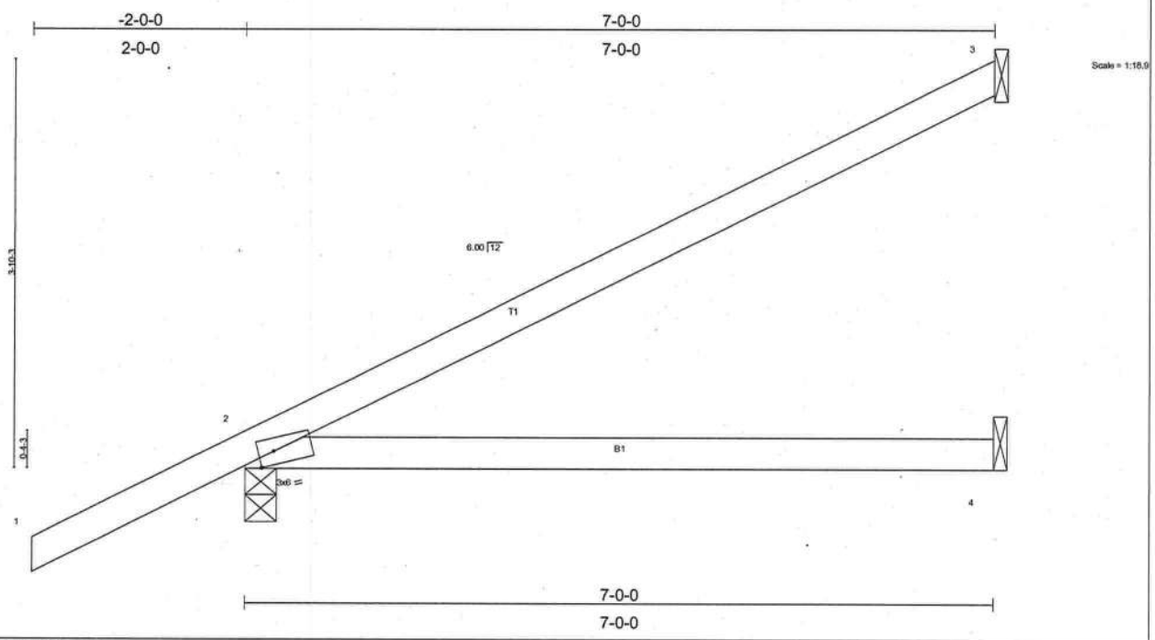

Plate Offsets (X,Y): [2:0-1-12,Edge]

LOADING (psf)		SPACING	2-0-0	CSI		DEFL	in	(loc)	l/defl	L/d	PLATES	GRIP
TCLL	20.0	Plates Increase	1.25	TC	0.48	Vert(LL)	-0.12	2-4	>664	240	MT20	244/190
TCDL	7.0	Lumber Increase	1.25	BC	0.35	Vert(TL)	-0.21	2-4	>397	180		
BCLL	10.0	Rep Stress Incr	YES	WB	0.00	Horz(TL)	-0.00	3	n/a	n/a		
BCDL	5.0	Code FBC2004/TPI2002		(Matrix)							Weight: 26 lb	

LUMBER
TOP CHORD 2 X 4 SYP No.2
BOT CHORD 2 X 4 SYP No.2

BRACING
TOP CHORD Structural wood sheathing directly applied or 6-0-0 oc purlins.
BOT CHORD Rigid ceiling directly applied or 10-0-0 oc bracing.

REACTIONS (lb/size) 3=162/Mechanical, 2=419/0-3-8, 4=104/Mechanical
Max Horz 2=224(load case 5)
Max Uplift3=-134(load case 5), 2=-210(load case 5)

FORCES (lb) - Maximum Compression/Maximum Tension
TOP CHORD 1-2=0/47, 2-3=-119/58
BOT CHORD 2-4=0/0

NOTES
1) Wind: ASCE 7-02; 110mph (3-second gust); h=20ft; TCDL=4.2psf; BCDL=3.0psf; Category II; Exp B; enclosed; MWFRS gable end zone and C-C Exterior(2) zone; Lumber DOL=1.60 plate grip DOL=1.60. This truss is designed for C-C for members and forces, and for MWFRS for reactions specified.
2) Refer to girder(s) for truss to truss connections.
3) Provide mechanical connection (by others) of truss to bearing plate capable of withstanding 134 lb uplift at joint 3 and 210 lb uplift at joint 2.

LOAD CASE(S) Standard

OCTOBER 17,2005 TRUSS DESIGN ENGINEER:
THOMAS E. MILLER PE 56877, BYRON K. ANDERSON PE 60987
STRUCTURAL ENGINEERING AND INSPECTIONS, INC. EB 9196
16105 N. FLORIDA AVE. STE B, LUTZ, FL 33549

Job	Truss	Truss Type	Qty	Ply	BRYAN ZECHER- LOT30-1 CSE
L136745	EJ7A	SPECIAL	8	1	Job Reference (optional)

Dwg.#101705126

Builders FirstSource, Lake City, Fl 32055

6.200 s Jul 13 2005 MiTek Industries, Inc. Fri Oct 14 14:13:23 2005 Page 1

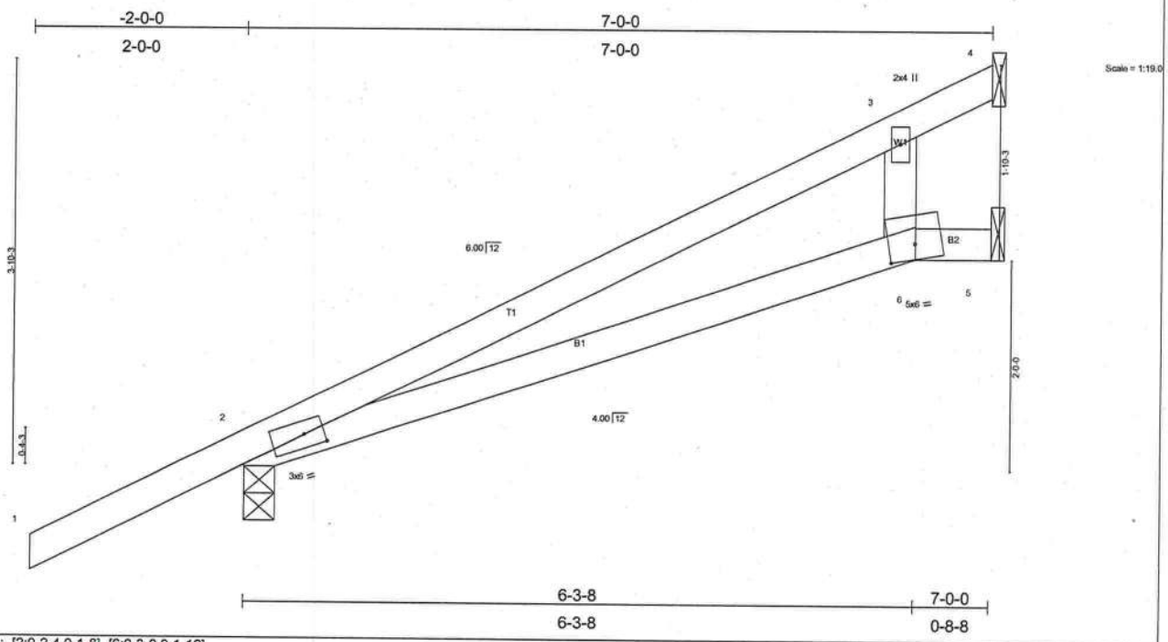

Plate Offsets (X,Y): [2:0-2-4,0-1-8], [6:0-3-0,0-1-12]

LOADING (psf)		SPACING	2-0-0	CSI		DEFL	in	(loc)	l/defl	L/d	PLATES	GRIP
TCLL	20.0	Plates Increase	1.25	TC	0.38	Vert(LL)	-0.15	2-6	>554	240	MT20	244/190
TCDL	7.0	Lumber Increase	1.25	BC	0.40	Vert(TL)	-0.24	2-6	>338	180		
BCLL	10.0	Rep Stress Incr	YES	WB	0.08	Horz(TL)	0.03	5	n/a	n/a		
BCDL	5.0	Code FBC2004/TPI2002		(Matrix)							Weight: 28 lb	

LUMBER
TOP CHORD 2 X 4 SYP No.2
BOT CHORD 2 X 4 SYP No.2
WEBS 2 X 4 SYP No.3

BRACING
TOP CHORD Structural wood sheathing directly applied or 6-0-0 oc purlins.
BOT CHORD Rigid ceiling directly applied or 6-0-0 oc bracing.

REACTIONS (lb/size) 4=39/Mechanical, 2=419/0-3-8, 5=228/Mechanical
Max Horz 2=223(load case 5)
Max Uplift2=-209(load case 5), 5=-179(load case 5)
Max Grav 4=52(load case 5), 2=419(load case 1), 5=228(load case 1)

FORCES (lb) - Maximum Compression/Maximum Tension
TOP CHORD 1-2=0/46, 2-3=-104/32, 3-4=-0/31
BOT CHORD 2-6=-39/33, 5-6=-1/2
WEBS 3-6=-141/310

NOTES
1) Wind: ASCE 7-02; 110mph (3-second gust); h=20ft; TCDL=4.2psf; BCDL=3.0psf; Category II; Exp B; enclosed; MWFRS gable end zone and C-C Exterior(2) zone; Lumber DOL=1.60 plate grip DOL=1.60. This truss is designed for C-C for members and forces, and for MWFRS for reactions specified.
2) Refer to girder(s) for truss to truss connections.
3) Bearing at joint(s) 2 considers parallel to grain value using ANSI/TPI 1 angle to grain formula. Building designer should verify capacity of bearing surface.
4) Provide mechanical connection (by others) of truss to bearing plate capable of withstanding 209 lb uplift at joint 2 and 179 lb uplift at joint 5.

LOAD CASE(S) Standard

OCTOBER 17,2005 TRUSS DESIGN ENGINEER:
THOMAS E. MILLER PE 56877, BYRON K. ANDERSON PE 60987
STRUCTURAL ENGINEERING AND INSPECTIONS, INC. EB 9196
16105 N. FLORIDA AVE. STE B, LUTZ, FL 33549

Job	Truss	Truss Type	Qty	Ply	BRYAN ZECHER- LOT30-1 CSE	Dwg.#101705127
L136745	HJ7	MONO TRUSS	1	1	Job Reference (optional)	

Builders FirstSource, Lake City, Fl 32055 — 6.200 s Jul 13 2005 MiTek Industries, Inc. Fri Oct 14 14:13:24 2005 Page 1

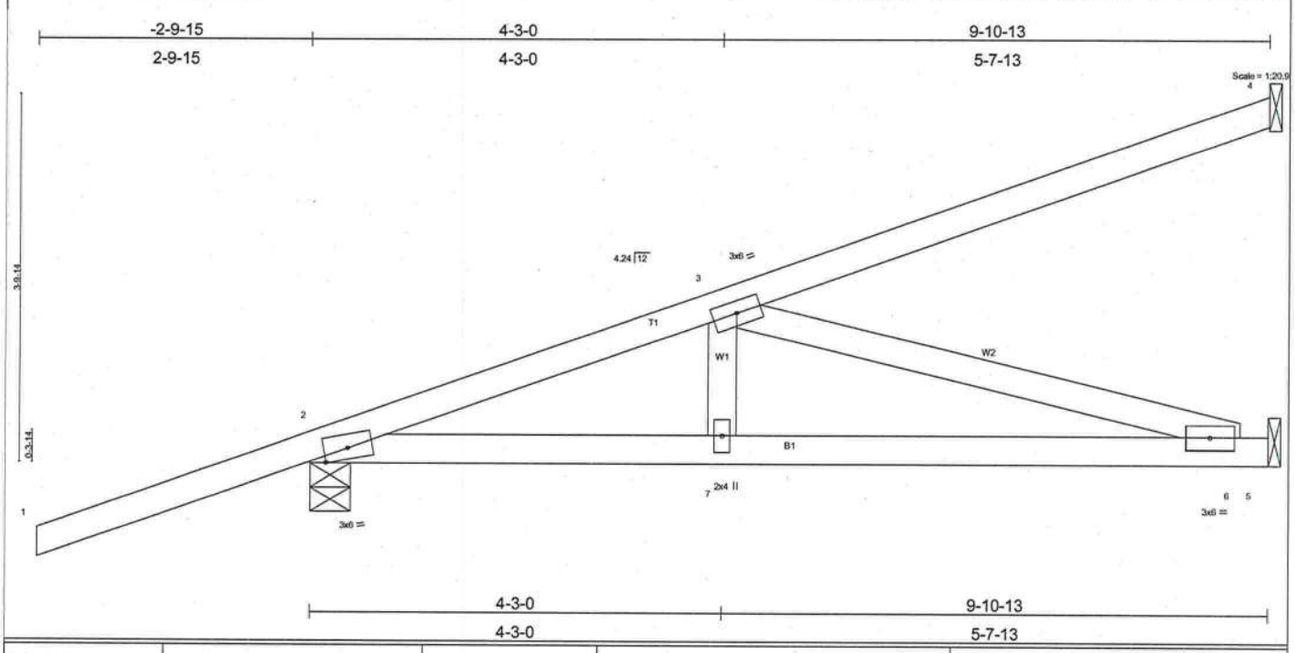

LOADING (psf)		SPACING	2-0-0	CSI		DEFL	in	(loc)	l/defl	L/d	PLATES	GRIP
TCLL	20.0	Plates Increase	1.25	TC	0.61	Vert(LL)	-0.10	6-7	>999	240	MT20	244/190
TCDL	7.0	Lumber Increase	1.25	BC	0.57	Vert(TL)	-0.17	6-7	>686	180		
BCLL	10.0	Rep Stress Incr	NO	WB	0.49	Horz(TL)	0.01	5	n/a	n/a		
BCDL	5.0	Code FBC2004/TPI2002		(Matrix)							Weight: 45 lb	

LUMBER
TOP CHORD 2 X 4 SYP No.2
BOT CHORD 2 X 4 SYP No.2
WEBS 2 X 4 SYP No.3

BRACING
TOP CHORD Structural wood sheathing directly applied or 6-0-0 oc purlins.
BOT CHORD Rigid ceiling directly applied or 10-0-0 oc bracing.

REACTIONS (lb/size) 4=269/Mechanical, 2=532/0-4-15, 5=377/Mechanical
Max Horz 2=269(load case 2)
Max Uplift4=-231(load case 2), 2=-278(load case 2), 5=-63(load case 2)

FORCES (lb) - Maximum Compression/Maximum Tension
TOP CHORD 1-2=0/50, 2-3=-888/121, 3-4=-105/66
BOT CHORD 2-7=-309/823, 6-7=-309/823, 5-6=0/0
WEBS 3-7=0/180, 3-6=-856/321

NOTES
1) Wind: ASCE 7-02; 110mph (3-second gust); h=20ft; TCDL=4.2psf; BCDL=3.0psf; Category II; Exp B; enclosed; MWFRS gable end zone; Lumber DOL=1.60 plate grip DOL=1.60.
2) Refer to girder(s) for truss to truss connections.
3) Provide mechanical connection (by others) of truss to bearing plate capable of withstanding 231 lb uplift at joint 4, 278 lb uplift at joint 2 and 63 lb uplift at joint 5.
4) In the LOAD CASE(S) section, loads applied to the face of the truss are noted as front (F) or back (B).

LOAD CASE(S) Standard
1) Regular: Lumber Increase=1.25, Plate Increase=1.25
Uniform Loads (plf)
Vert: 1-2=-54
Trapezoidal Loads (plf)
Vert: 2=-3(F=26, B=26)-to-4=-134(F=-40, B=-40), 2=-0(F=15, B=15)-to-5=-74(F=-22, B=-22)

OCTOBER 17,2005 TRUSS DESIGN ENGINEER:
THOMAS E. MILLER PE 56877, BYRON K. ANDERSON PE 60987
STRUCTURAL ENGINEERING AND INSPECTIONS, INC. EB 9196
16105 N. FLORIDA AVE. STE B, LUTZ, FL 33549

Job	Truss	Truss Type	Qty	Ply	BRYAN ZECHER- LOT30-1 CSE	Dwg.#101705128
L136745	HJ7A	SPECIAL	1	1	Job Reference (optional)	

Builders FirstSource, Lake City, Fl 32055 — 6.200 s Jul 13 2005 MiTek Industries, Inc. Fri Oct 14 14:13:24 2005 Page 1

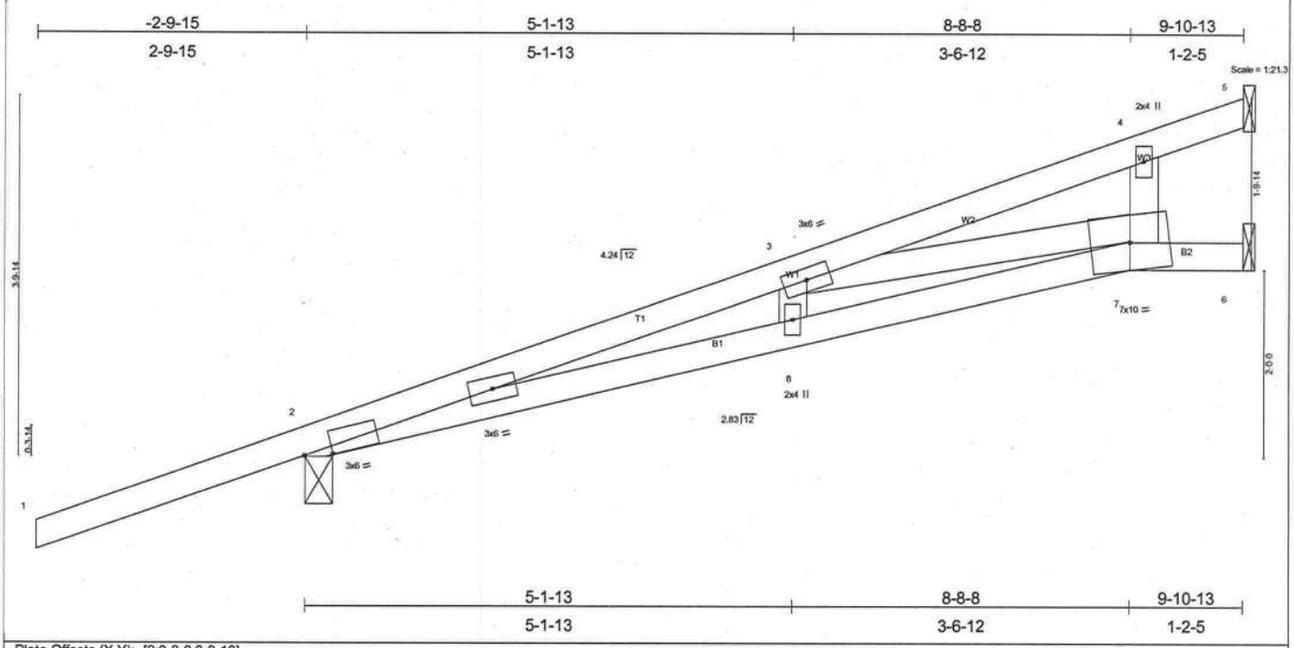

Plate Offsets (X,Y): [2:0-3-8,0-0-10]

LOADING (psf)		SPACING	2-0-0	CSI		DEFL	in	(loc)	l/defl	L/d	PLATES	GRIP
TCLL	20.0	Plates Increase	1.25	TC	0.69	Vert(LL)	-0.19	7-8	>601	240	MT20	244/190
TCDL	7.0	Lumber Increase	1.25	BC	0.93	Vert(TL)	-0.31	7-8	>375	180		
BCLL	10.0	Rep Stress Incr	NO	WB	0.47	Horz(TL)	0.07	6	n/a	n/a		
BCDL	5.0	Code FBC2004/TPI2002		(Matrix)							Weight: 43 lb	

LUMBER
TOP CHORD 2 X 4 SYP No.2
BOT CHORD 2 X 4 SYP No.2
WEBS 2 X 4 SYP No.3

BRACING
TOP CHORD Structural wood sheathing directly applied or 4-5-5 oc purlins.
BOT CHORD Rigid ceiling directly applied or 7-2-2 oc bracing.

REACTIONS (lb/size) 5=356/Mechanical, 2=527/0-3-8, 6=294/Mechanical
Max Horz 2=268(load case 2)
Max Uplift5=-157(load case 2), 2=-272(load case 2), 6=-140(load case 2)

FORCES (lb) - Maximum Compression/Maximum Tension
TOP CHORD 1-2=0/49, 2-3=-1850/514, 3-4=-114/0, 4-5=-59/114
BOT CHORD 2-8=-670/1761, 7-8=-672/1757, 6-7=0/0
WEBS 3-8=0/197, 3-7=-1694/669, 4-7=0/138

NOTES
1) Wind: ASCE 7-02; 110mph (3-second gust); h=20ft; TCDL=4.2psf; BCDL=3.0psf; Category II; Exp B; enclosed; MWFRS gable end zone; Lumber DOL=1.60 plate grip DOL=1.60.
2) Refer to girder(s) for truss to truss connections.
3) Bearing at joint(s) 2 considers parallel to grain value using ANSI/TPI 1 angle to grain formula. Building designer should verify capacity of bearing surface.
4) Provide mechanical connection (by others) of truss to bearing plate capable of withstanding 157 lb uplift at joint 5, 272 lb uplift at joint 2 and 140 lb uplift at joint 6.
5) In the LOAD CASE(S) section, loads applied to the face of the truss are noted as front (F) or back (B).

LOAD CASE(S) Standard
1) Regular: Lumber Increase=1.25, Plate Increase=1.25
Uniform Loads (plf)
Vert: 1-2=-54
Trapezoidal Loads (plf)
Vert: 2=-2(F=26, B=26)-to-5=-134(F=-40, B=-40), 2=0(F=15, B=15)-to-7=-66(F=-18, B=-18), 7=-66(F=-18, B=-18)-to-6=-74(F=-22, B=-22)

OCTOBER 17,2005 TRUSS DESIGN ENGINEER:
THOMAS E. MILLER PE 56877, BYRON K. ANDERSON PE 60987
STRUCTURAL ENGINEERING AND INSPECTIONS, INC. EB 9196
16105 N. FLORIDA AVE. STE B, LUTZ, FL 33549

Job	Truss	Truss Type	Qty	Ply	BRYAN ZECHER- LOT30-1 CSE	Dwg.#101705129
L136745	T01	COMMON	10	1	Job Reference (optional)	

Builders FirstSource, Lake City, Fl 32055 — 6.200 s Jul 13 2005 MiTek Industries, Inc. Fri Oct 14 14:13:25 2005 Page 1

-2-0-0	3-9-13	9-9-12	15-9-11	19-7-8	21-7-8
2-0-0	3-9-13	5-11-15	5-11-15	3-9-13	2-0-0

Scale = 1:38.8

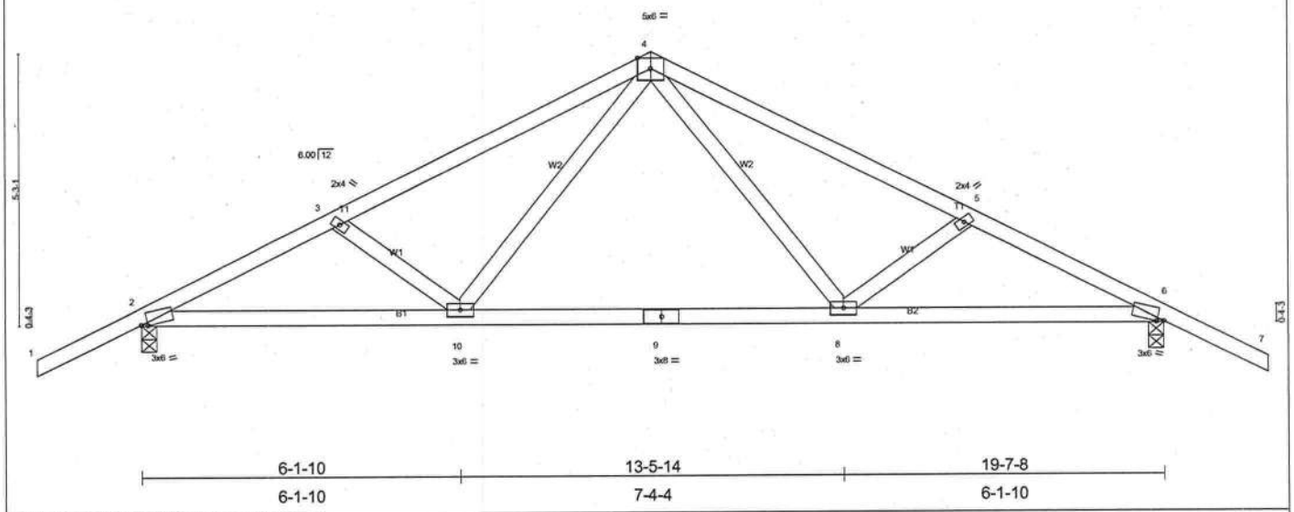

6-1-10	13-5-14	19-7-8
6-1-10	7-4-4	6-1-10

Plate Offsets (X,Y): [2:0-1-9,0-0-7], [6:0-1-9,0-0-7]

LOADING (psf)		SPACING	2-0-0	CSI		DEFL	in	(loc)	l/defl	L/d	PLATES	GRIP
TCLL	20.0	Plates Increase	1.25	TC	0.36	Vert(LL)	-0.25	8-10	>930	240	MT20	244/190
TCDL	7.0	Lumber Increase	1.25	BC	0.84	Vert(TL)	-0.40	8-10	>573	180		
BCLL	10.0	Rep Stress Incr	NO	WB	0.22	Horz(TL)	0.04	6	n/a	n/a		
BCDL	5.0	Code FBC2004/TPI2002		(Matrix)							Weight: 95 lb	

LUMBER
TOP CHORD 2 X 4 SYP No.2
BOT CHORD 2 X 4 SYP No.2
WEBS 2 X 4 SYP No.3

BRACING
TOP CHORD Structural wood sheathing directly applied or 4-6-3 oc purlins.
BOT CHORD Rigid ceiling directly applied or 8-2-5 oc bracing.

REACTIONS (lb/size) 2=1112/0-3-8, 6=1112/0-3-8
Max Horz 2=-107(load case 6)
Max Uplift2=-459(load case 5), 6=-459(load case 6)

FORCES (lb) - Maximum Compression/Maximum Tension
TOP CHORD 1-2=0/47, 2-3=-1848/803, 3-4=-1679/740, 4-5=-1679/740, 5-6=-1848/803, 6-7=0/47
BOT CHORD 2-10=-567/1590, 9-10=-275/1046, 8-9=-275/1046, 6-8=-567/1590
WEBS 3-10=-216/201, 4-10=-222/686, 4-8=-222/686, 5-8=-216/201

NOTES
1) Unbalanced roof live loads have been considered for this design.
2) Wind: ASCE 7-02; 110mph (3-second gust); h=20ft; TCDL=4.2psf; BCDL=3.0psf; Category II; Exp B; enclosed; MWFRS gable end zone and C-C Exterior(2) zone; Lumber DOL=1.60 plate grip DOL=1.60. This truss is designed for C-C for members and forces, and for MWFRS for reactions specified.
3) Provide mechanical connection (by others) of truss to bearing plate capable of withstanding 459 lb uplift at joint 2 and 459 lb uplift at joint 6.
4) In the LOAD CASE(S) section, loads applied to the face of the truss are noted as front (F) or back (B).

LOAD CASE(S) Standard
1) Regular: Lumber Increase=1.25, Plate Increase=1.25
Uniform Loads (plf)
Vert: 2-10=-30, 8-10=-80(F=-50), 6-8=-30, 1-4=-54, 4-7=-54

OCTOBER 17,2005 TRUSS DESIGN ENGINEER:
THOMAS E. MILLER PE 56877, BYRON K. ANDERSON PE 60987
STRUCTURAL ENGINEERING AND INSPECTIONS, INC. EB 9196
16105 N. FLORIDA AVE. STE B, LUTZ, FL 33549

Job	Truss	Truss Type	Qty	Ply	BRYAN ZECHER- LOT30-1 CSE	Dwg.#101705130
L136745	T01G	DROP TC GABLE	1	1	Job Reference (optional)	

Builders FirstSource, Lake City, Fl 32055 — 6.200 s Jul 13 2005 MiTek Industries, Inc. Fri Oct 14 14:13:26 2005 Page 1

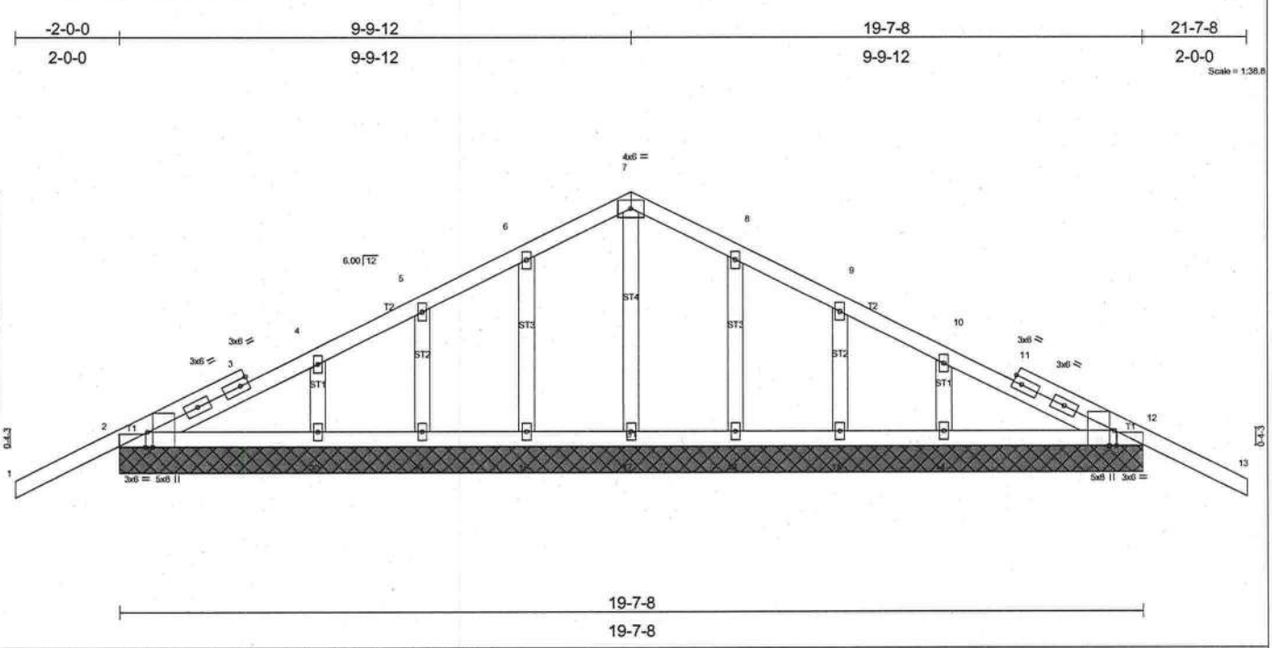

Plate Offsets (X,Y): [2:0-3-8,Edge], [2:0-0-8,Edge], [12:0-3-8,Edge], [12:0-0-8,Edge]

LOADING (psf)		SPACING	2-0-0	CSI		DEFL	in	(loc)	l/defl	L/d	PLATES	GRIP
TCLL	20.0	Plates Increase	1.25	TC	0.49	Vert(LL)	-0.04	13	n/r	120	MT20	244/190
TCDL	7.0	Lumber Increase	1.25	BC	0.06	Vert(TL)	-0.06	13	n/r	90		
BCLL	10.0	Rep Stress Incr	NO	WB	0.09	Horz(TL)	0.00	12	n/a	n/a		
BCDL	5.0	Code FBC2004/TPI2002		(Matrix)							Weight: 103 lb	

LUMBER
TOP CHORD 2 X 4 SYP No.2
BOT CHORD 2 X 4 SYP No.2
OTHERS 2 X 4 SYP No.3

BRACING
TOP CHORD Structural wood sheathing directly applied or 6-0-0 oc purlins.
BOT CHORD Rigid ceiling directly applied or 6-0-0 oc bracing.

REACTIONS (lb/size) 2=536/19-7-8, 12=536/19-7-8, 17=283/19-7-8, 18=299/19-7-8, 19=248/19-7-8, 20=416/19-7-8, 16=299/19-7-8, 15=248/19-7-8, 14=416/19-7-8
Max Horz 2=102(load case 5)
Max Uplift2=-280(load case 5), 12=-297(load case 6), 17=-4(load case 5), 18=-129(load case 5), 19=-135(load case 5), 20=-138(load case 5), 16=-127(load case 6), 15=-134(load case 6), 14=-143(load case 6)
Max Grav 2=536(load case 1), 12=536(load case 1), 17=283(load case 1), 18=304(load case 9), 19=248(load case 1), 20=416(load case 9), 16=304(load case 10), 15=248(load case 1), 14=416(load case 10)

FORCES (lb) - Maximum Compression/Maximum Tension
TOP CHORD 1-2=-20/99, 2-3=-88/52, 3-4=-65/85, 4-5=-59/96, 5-6=-48/139, 6-7=-52/193, 7-8=-52/193, 8-9=-48/139, 9-10=-59/84, 10-11=-23/85, 11-12=-88/28, 12-13=-20/99
BOT CHORD 2-20=-1/122, 19-20=-1/122, 18-19=-1/122, 17-18=-1/122, 16-17=-1/122, 15-16=-1/122, 14-15=-1/122, 12-14=-1/122
WEBS 7-17=-225/16, 6-18=-239/167, 5-19=-202/169, 4-20=-321/202, 8-16=-239/167, 9-15=-202/169, 10-14=-321/202

NOTES
1) Unbalanced roof live loads have been considered for this design.
2) Wind: ASCE 7-02; 110mph (3-second gust); h=20ft; TCDL=4.2psf; BCDL=3.0psf; Category II; Exp B; enclosed; MWFRS gable end zone and C-C Exterior(2) zone; Lumber DOL=1.60 plate grip DOL=1.60. This truss is designed for C-C for members and forces, and for MWFRS for reactions specified.
3) Truss designed for wind loads in the plane of the truss only. For studs exposed to wind (normal to the face), see MiTek "Standard Gable End Detail"
4) All plates are 2x4 MT20 unless otherwise indicated.
5) Gable requires continuous bottom chord bearing.
6) Gable studs spaced at 2-0-0 oc.
7) Provide mechanical connection (by others) of truss to bearing plate capable of withstanding 280 lb uplift at joint 2, 297 lb uplift at joint 12, 4 lb uplift at joint 17, 129 lb uplift at joint 18, 135 lb uplift at joint 19, 138 lb uplift at joint 20, 127 lb uplift at joint 16, 134 lb uplift at joint 15 and 143 lb uplift at joint 14.
8) In the LOAD CASE(S) section, loads applied to the face of the truss are noted as front (F) or back (B).

LOAD CASE(S) Standard
1) Regular: Lumber Increase=1.25, Plate Increase=1.25
Uniform Loads (plf)
Vert: 1-7=-114(F=-60), 7-13=-114(F=-60), 2-12=-30

OCTOBER 17,2005 TRUSS DESIGN ENGINEER:
THOMAS E. MILLER PE 56877, BYRON K. ANDERSON PE 60987
STRUCTURAL ENGINEERING AND INSPECTIONS, INC. EB 9196
16105 N. FLORIDA AVE. STE B, LUTZ, FL 33549

Job	Truss	Truss Type	Qty	Ply	BRYAN ZECHER- LOT30-1 CSE
L136745	T02	MONO HIP	1	1	Job Reference (optional)

Dwg.#101705131

Builders FirstSource, Lake City, Fl 32055 — 6.200 s Jul 13 2005 MiTek Industries, Inc. Fri Oct 14 14:13:27 2005 Page 1

-2-0-0	7-0-0	13-5-15	19-10-1	26-4-0
2-0-0	7-0-0	6-5-15	6-4-3	6-5-15

Scale: 1/4"=1'

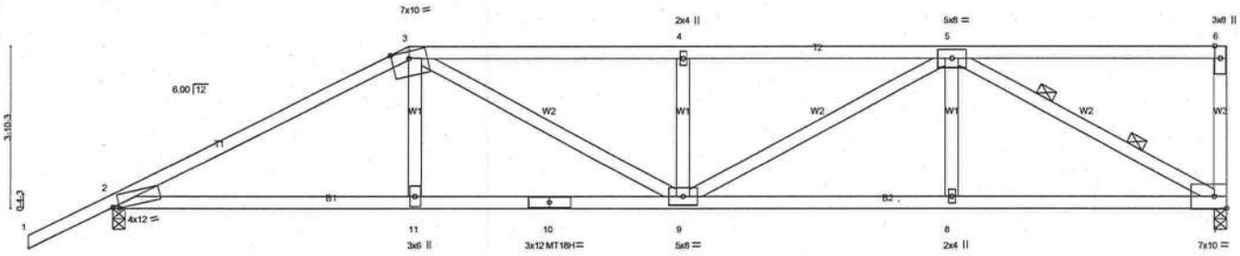

7-0-0	13-5-15	19-10-1	26-4-0
7-0-0	6-5-15	6-4-3	6-5-15

Plate Offsets (X,Y): [2:0-1-13,Edge]

LOADING (psf)		SPACING	2-0-0	CSI		DEFL	in	(loc)	l/defl	L/d	PLATES	GRIP
TCLL	20.0	Plates Increase	1.25	TC	0.94	Vert(LL)	-0.32	9-11	>979	240	MT20	244/190
TCDL	7.0	Lumber Increase	1.25	BC	0.94	Vert(TL)	-0.52	9-11	>604	180	MT18H	244/190
BCLL	10.0	Rep Stress Incr	NO	WB	0.87	Horz(TL)	0.14	7	n/a	n/a		
BCDL	5.0	Code FBC2004/TPI2002		(Matrix)							Weight: 133 lb	

LUMBER
TOP CHORD 2 X 4 SYP No.2
BOT CHORD 2 X 4 SYP No.2 *Except*
B2 2 X 4 SYP No.1D
WEBS 2 X 4 SYP No.3 *Except*
W3 2 X 4 SYP No.2

BRACING
TOP CHORD Structural wood sheathing directly applied, except end verticals.
BOT CHORD Rigid ceiling directly applied or 4-10-9 oc bracing.
WEBS 2 Rows at 1/3 pts 5-7

REACTIONS (lb/size) 7=2431/0-3-8, 2=2304/0-3-8
Max Horz 2=227(load case 4)
Max Uplift7=-1094(load case 3), 2=-993(load case 4)

FORCES (lb) - Maximum Compression/Maximum Tension
TOP CHORD 1-2=0/47, 2-3=-4309/1821, 3-4=-4702/2113, 4-5=-4701/2114, 5-6=-154/72, 6-7=-362/287
BOT CHORD 2-11=-1667/3765, 10-11=-1675/3800, 9-10=-1675/3800, 8-9=-1557/3465, 7-8=-1557/3465
WEBS 3-11=-214/863, 3-9=-565/1027, 4-9=-761/645, 5-9=-638/1417, 5-8=0/406, 5-7=-3795/1703

NOTES
1) Wind: ASCE 7-02; 110mph (3-second gust); h=20ft; TCDL=4.2psf; BCDL=3.0psf; Category II; Exp B; enclosed; MWFRS gable end zone; Lumber DOL=1.60 plate grip DOL=1.60.
2) Provide adequate drainage to prevent water ponding.
3) All plates are MT20 plates unless otherwise indicated.
4) Provide mechanical connection (by others) of truss to bearing plate capable of withstanding 1094 lb uplift at joint 7 and 993 lb uplift at joint 2.
5) Girder carries hip end with 0-0-0 right side setback, 7-0-0 left side setback, and 7-0-0 end setback.
6) Hanger(s) or other connection device(s) shall be provided sufficient to support concentrated load(s) 539 lb down and 277 lb up at 7-0-0 on bottom chord. The design/selection of such connection device(s) is the responsibility of others.
7) In the LOAD CASE(S) section, loads applied to the face of the truss are noted as front (F) or back (B).

LOAD CASE(S) Standard
1) Regular: Lumber Increase=1.25, Plate Increase=1.25
Uniform Loads (plf)
Vert: 1-3=-54, 3-6=-118(F=-64), 2-11=-30, 7-11=-65(F=-35)
Concentrated Loads (lb)
Vert: 11=-539(F)

OCTOBER 17,2005 TRUSS DESIGN ENGINEER:
THOMAS E. MILLER PE 56877, BYRON K. ANDERSON PE 60987
STRUCTURAL ENGINEERING AND INSPECTIONS, INC. EB 9196
16105 N. FLORIDA AVE. STE B, LUTZ, FL 33549

Job	Truss	Truss Type	Qty	Ply	BRYAN ZECHER- LOT30-1 CSE	Dwg.#101705132
L136745	T03	MONO HIP	1	1	Job Reference (optional)	

Builders FirstSource, Lake City, Fl 32055 — 6.200 s Jul 13 2005 MiTek Industries, Inc. Fri Oct 14 14:13:27 2005 Page 1

-2-0-0	4-9-4	9-0-0	14-8-3	20-4-5	26-4-0
2-0-0	4-9-4	4-2-12	5-8-3	5-8-3	5-11-11

Scale: 1/4"=1'

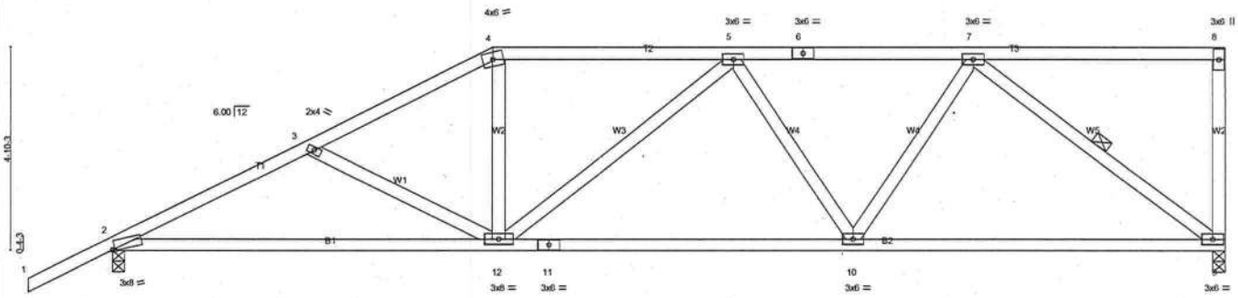

9-0-0	17-6-4	26-4-0
9-0-0	8-6-4	8-9-12

Plate Offsets (X,Y): [2:0-0-10,Edge]

LOADING (psf)		SPACING 2-0-0		CSI		DEFL	in	(loc)	l/defl	L/d	PLATES	GRIP
TCLL	20.0	Plates Increase	1.25	TC	0.55	Vert(LL)	-0.16	2-12	>999	240	MT20	244/190
TCDL	7.0	Lumber Increase	1.25	BC	0.54	Vert(TL)	-0.28	2-12	>999	180		
BCLL	10.0	Rep Stress Incr	YES	WB	0.38	Horz(TL)	0.06	9	n/a	n/a		
BCDL	5.0	Code FBC2004/TPI2002		(Matrix)							Weight: 139 lb	

LUMBER
TOP CHORD 2 X 4 SYP No.2
BOT CHORD 2 X 4 SYP No.2
WEBS 2 X 4 SYP No.3

BRACING
TOP CHORD Structural wood sheathing directly applied or 4-3-10 oc purlins, except end verticals.
BOT CHORD Rigid ceiling directly applied or 6-11-8 oc bracing.
WEBS 1 Row at midpt 7-9

REACTIONS (lb/size) 9=1089/0-3-8, 2=1214/0-3-8
Max Horz 2=272(load case 5)
Max Uplift9=-396(load case 4), 2=-442(load case 5)

FORCES (lb) - Maximum Compression/Maximum Tension
TOP CHORD 1-2=0/47, 2-3=-1908/743, 3-4=-1670/641, 4-5=-1463/629, 5-6=-1403/557, 6-7=-1403/557, 7-8=-59/10, 8-9=-153/102
BOT CHORD 2-12=-809/1658, 11-12=-669/1549, 10-11=-669/1549, 9-10=-477/1095
WEBS 3-12=-236/204, 4-12=-66/449, 5-12=-113/162, 5-10=-278/213, 7-10=-150/581, 7-9=-1315/593

NOTES
1) Wind: ASCE 7-02; 110mph (3-second gust); h=20ft; TCDL=4.2psf; BCDL=3.0psf; Category II; Exp B; enclosed; MWFRS gable end zone and C-C Exterior(2) zone; Lumber DOL=1.60 plate grip DOL=1.60. This truss is designed for C-C for members and forces, and for MWFRS for reactions specified.
2) Provide adequate drainage to prevent water ponding.
3) Provide mechanical connection (by others) of truss to bearing plate capable of withstanding 396 lb uplift at joint 9 and 442 lb uplift at joint 2.

LOAD CASE(S) Standard

OCTOBER 17,2005 TRUSS DESIGN ENGINEER:
THOMAS E. MILLER PE 56877, BYRON K. ANDERSON PE 60987
STRUCTURAL ENGINEERING AND INSPECTIONS, INC. EB 9196
16105 N. FLORIDA AVE. STE B, LUTZ, FL 33549

Job	Truss	Truss Type	Qty	Ply	BRYAN ZECHER- LOT30-1 CSE	Dwg.#101705133
L136745	T04	MONO HIP	1	1	Job Reference (optional)	

Builders FirstSource, Lake City, Fl 32055 — 6.200 s Jul 13 2005 MiTek Industries, Inc. Fri Oct 14 14:13:28 2005 Page 1

-2-0-0	5-9-4	11-0-0	18-8-0	26-4-0
2-0-0	5-9-4	5-2-12	7-8-0	7-8-0

Scale: 1/4"=1'

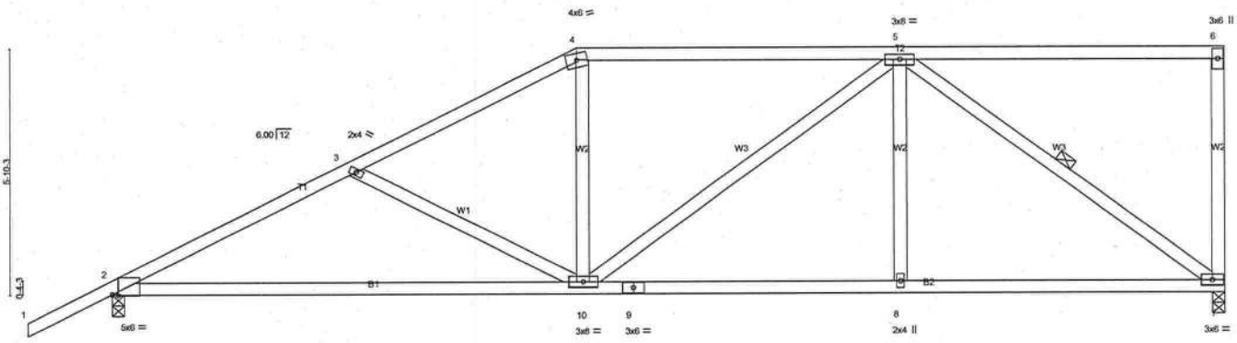

11-0-0	18-8-0	26-4-0
11-0-0	7-8-0	7-8-0

Plate Offsets (X,Y): [2:0-1-11,Edge]

LOADING (psf)		SPACING	2-0-0	CSI		DEFL	in	(loc)	l/defl	L/d	PLATES	GRIP
TCLL	20.0	Plates Increase	1.25	TC	0.61	Vert(LL)	-0.34	2-10	>922	240	MT20	244/190
TCDL	7.0	Lumber Increase	1.25	BC	0.69	Vert(TL)	-0.58	2-10	>535	180		
BCLL	10.0	Rep Stress Incr	YES	WB	0.55	Horz(TL)	0.06	7	n/a	n/a		
BCDL	5.0	Code FBC2004/TPI2002		(Matrix)							Weight: 143 lb	

LUMBER
TOP CHORD 2 X 4 SYP No.2
BOT CHORD 2 X 4 SYP No.2
WEBS 2 X 4 SYP No.3

BRACING
TOP CHORD Structural wood sheathing directly applied or 4-0-12 oc purlins, except end verticals.
BOT CHORD Rigid ceiling directly applied or 6-10-3 oc bracing.
WEBS 1 Row at midpt 5-7

REACTIONS (lb/size) 7=1089/0-3-8, 2=1214/0-3-8
Max Horz 2=318(load case 5)
Max Uplift7=-388(load case 4), 2=-450(load case 5)

FORCES (lb) - Maximum Compression/Maximum Tension
TOP CHORD 1-2=0/47, 2-3=-1841/728, 3-4=-1526/585, 4-5=-1317/588, 5-6=-52/19, 6-7=-185/131
BOT CHORD 2-10=-836/1602, 9-10=-485/1118, 8-9=-485/1118, 7-8=-485/1118
WEBS 3-10=-329/279, 4-10=0/309, 5-10=-131/246, 5-8=0/202, 5-7=-1326/579

NOTES
1) Wind: ASCE 7-02; 110mph (3-second gust); h=20ft; TCDL=4.2psf; BCDL=3.0psf; Category II; Exp B; enclosed; MWFRS gable end zone and C-C Exterior(2) zone; Lumber DOL=1.60 plate grip DOL=1.60. This truss is designed for C-C for members and forces, and for MWFRS for reactions specified.
2) Provide adequate drainage to prevent water ponding.
3) Provide mechanical connection (by others) of truss to bearing plate capable of withstanding 388 lb uplift at joint 7 and 450 lb uplift at joint 2.

LOAD CASE(S) Standard

OCTOBER 17,2005 TRUSS DESIGN ENGINEER:
THOMAS E. MILLER PE 56877, BYRON K. ANDERSON PE 60987
STRUCTURAL ENGINEERING AND INSPECTIONS, INC. EB 9196
16105 N. FLORIDA AVE. STE B, LUTZ, FL 33549

Job	Truss	Truss Type	Qty	Ply	BRYAN ZECHER- LOT30-1 CSE
L136745	T05	HIP	1	1	Job Reference (optional)

Dwg.#101705134 J1481240

Builders FirstSource, Lake City, Fl 32055

6.200 s Jul 13 2005 MiTek Industries, Inc. Fri Oct 14 14:13:29 2005 Page 1

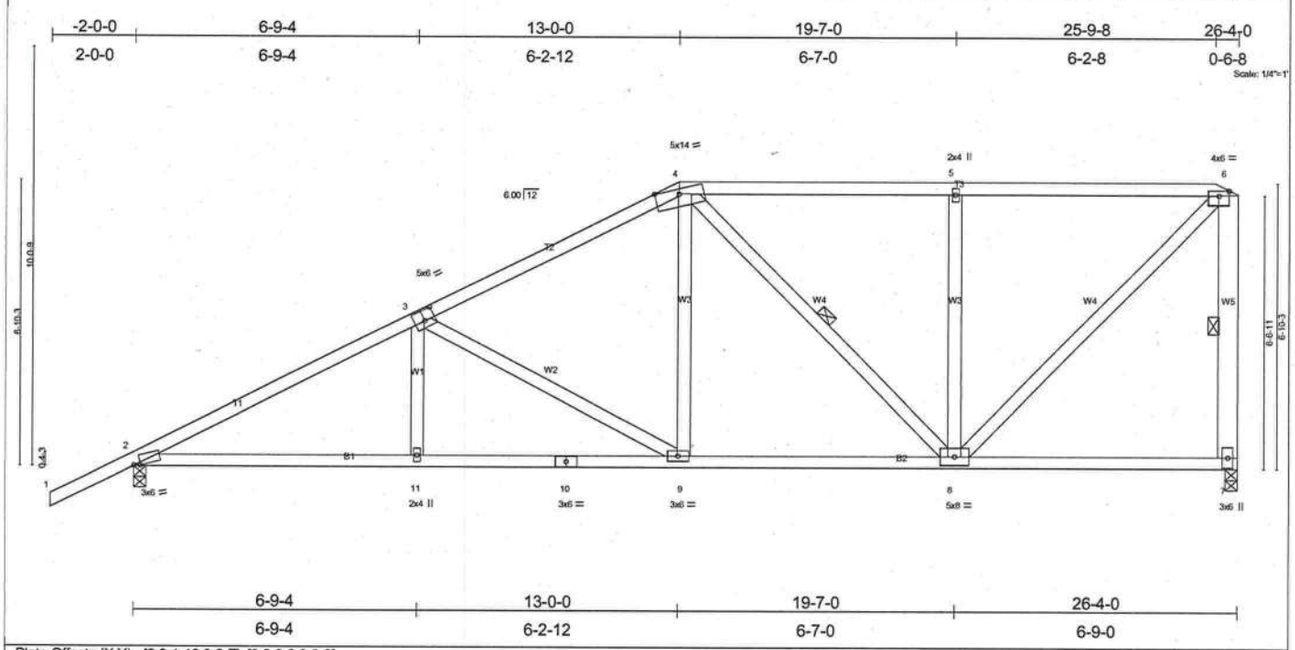

Plate Offsets (X,Y): [2:0-1-13,0-0-7], [3:0-3-0,0-3-0]

LOADING (psf)		SPACING	2-0-0	CSI		DEFL	in	(loc)	l/defl	L/d	PLATES	GRIP
TCLL	20.0	Plates Increase	1.25	TC	0.30	Vert(LL)	-0.10	2-11	>999	240	MT20	244/190
TCDL	7.0	Lumber Increase	1.25	BC	0.43	Vert(TL)	-0.16	2-11	>999	180		
BCLL	10.0	Rep Stress Incr	YES	WB	0.75	Horz(TL)	0.05	7	n/a	n/a		
BCDL	5.0	Code FBC2004/TPI2002		(Matrix)							Weight: 158 lb	

LUMBER
TOP CHORD 2 X 4 SYP No.2
BOT CHORD 2 X 4 SYP No.2
WEBS 2 X 4 SYP No.3 *Except*
W5 2 X 6 SYP No.1D

BRACING
TOP CHORD Structural wood sheathing directly applied or 4-2-15 oc purlins, except end verticals.
BOT CHORD Rigid ceiling directly applied or 6-11-9 oc bracing.
WEBS 1 Row at midpt 4-8, 6-7

REACTIONS (lb/size) 2=1211/0-3-8, 7=1085/0-3-8
Max Horz 2=364(load case 5)
Max Uplift2=-454(load case 5), 7=-377(load case 4)

FORCES (lb) - Maximum Compression/Maximum Tension
TOP CHORD 1-2=0/47, 2-3=-1914/665, 3-4=-1312/520, 4-5=-852/379, 5-6=-852/379, 6-7=-985/487
BOT CHORD 2-11=-824/1632, 10-11=-824/1632, 9-10=-824/1632, 8-9=-535/1115, 7-8=-18/44
WEBS 3-11=0/213, 3-9=-599/331, 4-9=-123/472, 4-8=-371/220, 5-8=-359/265, 6-8=-512/1146

NOTES
1) Wind: ASCE 7-02; 110mph (3-second gust); h=20ft; TCDL=4.2psf; BCDL=3.0psf; Category II; Exp B; enclosed; MWFRS gable end zone and C-C Exterior(2) zone; Lumber DOL=1.60 plate grip DOL=1.60. This truss is designed for C-C for members and forces, and for MWFRS for reactions specified.
2) Provide adequate drainage to prevent water ponding.
3) Provide mechanical connection (by others) of truss to bearing plate capable of withstanding 454 lb uplift at joint 2 and 377 lb uplift at joint 7.

LOAD CASE(S) Standard

OCTOBER 17,2005 TRUSS DESIGN ENGINEER:
THOMAS E. MILLER PE 56877, BYRON K. ANDERSON PE 60987
STRUCTURAL ENGINEERING AND INSPECTIONS, INC. EB 9196
16105 N. FLORIDA AVE. STE B, LUTZ, FL 33549

Job	Truss	Truss Type	Qty	Ply	BRYAN ZECHER- LOT30-1 CSE	Dwg.#101705135
L136745	T06	HIP	1	1	Job Reference (optional)	

Builders FirstSource, Lake City, Fl 32055 — 6.200 s Jul 13 2005 MiTek Industries, Inc. Fri Oct 14 14:13:29 2005 Page 1

-2-0-0	7-9-4	15-0-0	19-4-12	23-9-8	26-4-0
2-0-0	7-9-4	7-2-12	4-4-12	4-4-12	2-6-8

Scale: 1/4"=1'

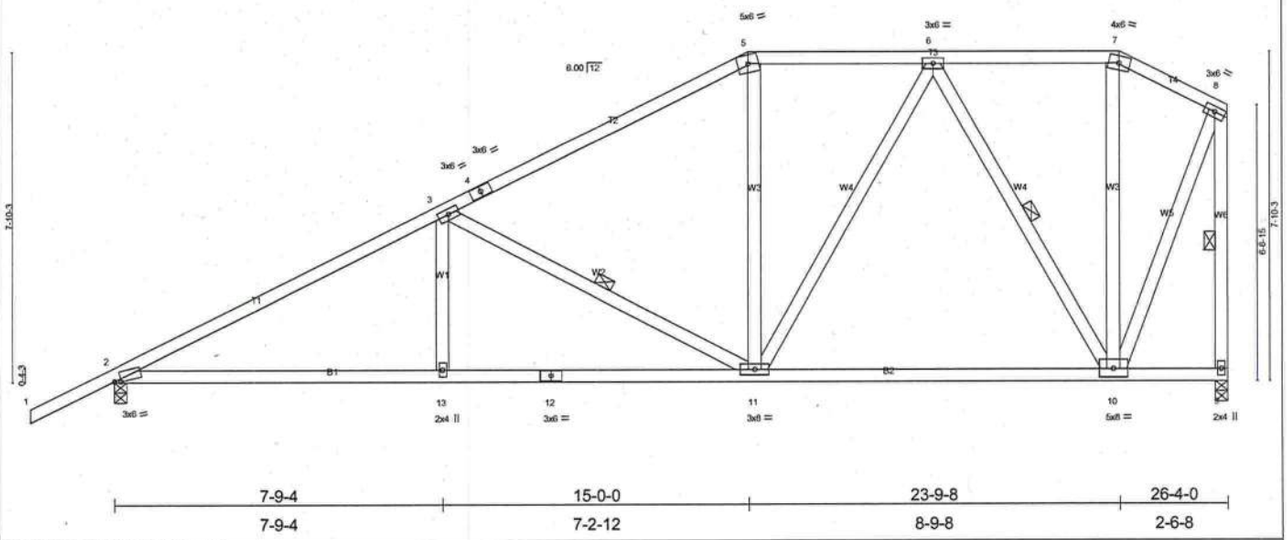

7-9-4	15-0-0	23-9-8	26-4-0
7-9-4	7-2-12	8-9-8	2-6-8

Plate Offsets (X,Y): [2:0-1-13,0-0-7]

LOADING (psf)		SPACING	2-0-0	CSI		DEFL	in	(loc)	l/defl	L/d	PLATES	GRIP
TCLL	20.0	Plates Increase	1.25	TC	0.39	Vert(LL)	-0.15	2-13	>999	240	MT20	244/190
TCDL	7.0	Lumber Increase	1.25	BC	0.49	Vert(TL)	-0.24	2-13	>999	180		
BCLL	10.0	Rep Stress Incr	YES	WB	0.31	Horz(TL)	0.05	9	n/a	n/a		
BCDL	5.0	Code FBC2004/TPI2002		(Matrix)							Weight: 168 lb	

LUMBER
TOP CHORD 2 X 4 SYP No.2
BOT CHORD 2 X 4 SYP No.2
WEBS 2 X 4 SYP No.3

BRACING
TOP CHORD Structural wood sheathing directly applied or 4-1-5 oc purlins, except end verticals.
BOT CHORD Rigid ceiling directly applied or 7-0-0 oc bracing.
WEBS 1 Row at midpt 3-11, 6-10, 8-9

REACTIONS (lb/size) 2=1214/0-3-8, 9=1089/0-3-8
Max Horz 2=371(load case 5)
Max Uplift2=-466(load case 5), 9=-324(load case 5)

FORCES (lb) - Maximum Compression/Maximum Tension
TOP CHORD 1-2=0/47, 2-3=-1875/672, 3-4=-1161/455, 4-5=-1066/480, 5-6=-956/503, 6-7=-357/205, 7-8=-418/192, 8-9=-1104/472
BOT CHORD 2-13=-808/1593, 12-13=-808/1593, 11-12=-808/1593, 10-11=-330/716, 9-10=-4/2
WEBS 3-13=0/243, 3-11=-725/414, 5-11=0/188, 6-11=-227/494, 6-10=-740/380, 7-10=-46/74, 8-10=-379/953

NOTES
1) Unbalanced roof live loads have been considered for this design.
2) Wind: ASCE 7-02; 110mph (3-second gust); h=20ft; TCDL=4.2psf; BCDL=3.0psf; Category II; Exp B; enclosed; MWFRS gable end zone and C-C Exterior(2) zone; Lumber DOL=1.60 plate grip DOL=1.60. This truss is designed for C-C for members and forces, and for MWFRS for reactions specified.
3) Provide adequate drainage to prevent water ponding.
4) Provide mechanical connection (by others) of truss to bearing plate capable of withstanding 466 lb uplift at joint 2 and 324 lb uplift at joint 9.

LOAD CASE(S) Standard

OCTOBER 17,2005 TRUSS DESIGN ENGINEER:
THOMAS E. MILLER PE 56877, BYRON K. ANDERSON PE 60987
STRUCTURAL ENGINEERING AND INSPECTIONS, INC. EB 9196
16105 N. FLORIDA AVE. STE B, LUTZ, FL 33549

Job	Truss	Truss Type	Qty	Ply	BRYAN ZECHER- LOT30-1 CSE
L136745	T07	HIP	1	1	Job Reference (optional)

Dwg.#101705136 J1481242

Builders FirstSource, Lake City, Fl 32055 — 6.200 s Jul 13 2005 MiTek Industries, Inc. Fri Oct 14 14:13:30 2005 Page 1

-2-0-0	8-9-4	17-0-0	21-9-8	26-4-0
2-0-0	8-9-4	8-2-12	4-9-8	4-6-8

Scale: 1/4"=1'

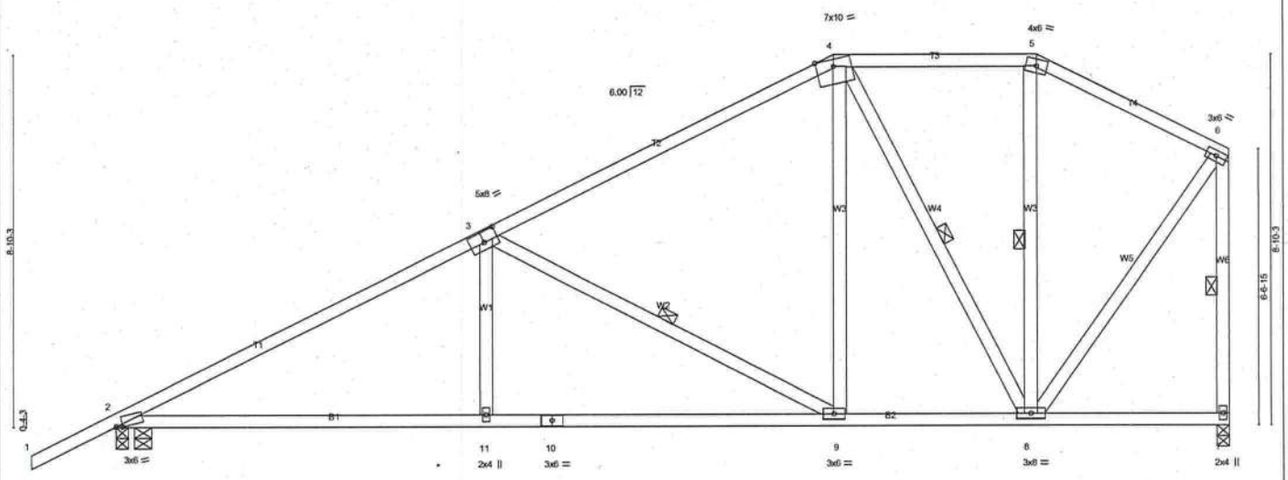

0-7-12	8-9-4	17-0-0	21-9-8	26-4-0
0-7-12	8-1-8	8-2-12	4-9-8	4-6-8

Plate Offsets (X,Y): [2:0-1-13,0-0-7], [3:0-4-0,0-3-0]

LOADING (psf)		SPACING	2-0-0	CSI		DEFL	in	(loc)	l/defl	L/d	PLATES	GRIP
TCLL	20.0	Plates Increase	1.25	TC	0.50	Vert(LL)	-0.21	2-11	>999	240	MT20	244/190
TCDL	7.0	Lumber Increase	1.25	BC	0.70	Vert(TL)	-0.34	2-11	>919	180		
BCLL	10.0	Rep Stress Incr	YES	WB	0.37	Horz(TL)	0.05	7	n/a	n/a		
BCDL	5.0	Code FBC2004/TPI2002		(Matrix)							Weight: 164 lb	

LUMBER
TOP CHORD 2 X 4 SYP No.2
BOT CHORD 2 X 4 SYP No.2
WEBS 2 X 4 SYP No.3

BRACING
TOP CHORD Structural wood sheathing directly applied or 3-10-11 oc purlins, except end verticals.
BOT CHORD Rigid ceiling directly applied or 6-11-8 oc bracing.
WEBS 1 Row at midpt 3-9, 4-8, 5-8, 6-7

REACTIONS (lb/size) 2=1214/0-3-8, 2=1214/0-3-8, 7=1089/0-3-8
Max Horz 2=385(load case 5)
Max Uplift2=-472(load case 5), 7=-345(load case 5)

FORCES (lb) - Maximum Compression/Maximum Tension
TOP CHORD 1-2=0/47, 2-3=-1835/666, 3-4=-988/433, 4-5=-489/320, 5-6=-597/303, 6-7=-1019/501
BOT CHORD 2-11=-793/1550, 10-11=-791/1557, 9-10=-791/1557, 8-9=-364/796, 7-8=-10/16
WEBS 3-11=0/299, 3-9=-867/485, 4-9=-181/593, 4-8=-672/327, 5-8=-79/102, 6-8=-340/811

NOTES
1) Unbalanced roof live loads have been considered for this design.
2) Wind: ASCE 7-02; 110mph (3-second gust); h=20ft; TCDL=4.2psf; BCDL=3.0psf; Category II; Exp B; enclosed; MWFRS gable end zone and C-C Exterior(2) zone; porch left exposed; Lumber DOL=1.60 plate grip DOL=1.60. This truss is designed for C-C for members and forces, and for MWFRS for reactions specified.
3) Provide adequate drainage to prevent water ponding.
4) Provide mechanical connection (by others) of truss to bearing plate capable of withstanding 472 lb uplift at joint 2 and 345 lb uplift at joint 7.

LOAD CASE(S) Standard

OCTOBER 17,2005 TRUSS DESIGN ENGINEER:
THOMAS E. MILLER PE 56877, BYRON K. ANDERSON PE 60987
STRUCTURAL ENGINEERING AND INSPECTIONS, INC. EB 9196
16105 N. FLORIDA AVE. STE B, LUTZ, FL 33549

Job	Truss	Truss Type	Qty	Ply	BRYAN ZECHER- LOT30-1 CSE	Dwg.#101705137
L136745	T08	HIP	1	1	Job Reference (optional)	

Builders FirstSource, Lake City, Fl 32055

6.200 s Jul 13 2005 MiTek Industries, Inc. Fri Oct 14 14:13:31 2005 Page 1

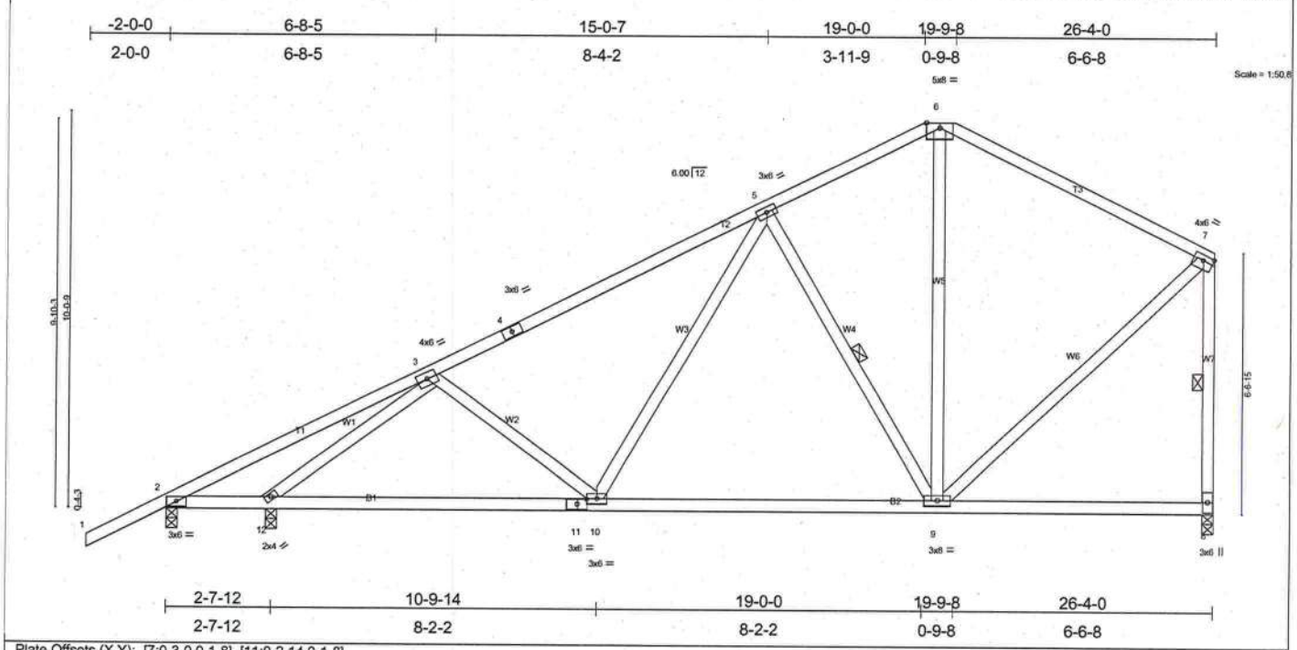

Plate Offsets (X,Y): [7:0-3-0,0-1-8], [11:0-2-14,0-1-8]

LOADING (psf)		SPACING	2-0-0	CSI		DEFL	in	(loc)	l/defl	L/d	PLATES	GRIP
TCLL	20.0	Plates Increase	1.25	TC	0.55	Vert(LL)	-0.11	9-10	>999	240	MT20	244/190
TCDL	7.0	Lumber Increase	1.25	BC	0.43	Vert(TL)	-0.19	9-10	>999	180		
BCLL	10.0	Rep Stress Incr	YES	WB	0.66	Horz(TL)	0.03	8	n/a	n/a		
BCDL	5.0	Code FBC2004/TPI2002		(Matrix)							Weight: 163 lb	

LUMBER
TOP CHORD 2 X 4 SYP No.2
BOT CHORD 2 X 4 SYP No.2
WEBS 2 X 4 SYP No.3

BRACING
TOP CHORD Structural wood sheathing directly applied or 5-3-12 oc purlins, except end verticals.
BOT CHORD Rigid ceiling directly applied or 7-6-3 oc bracing.
WEBS 1 Row at midpt 5-9, 7-8

REACTIONS (lb/size) 2=241/0-3-8, 8=995/0-3-8, 12=1068/0-3-8
Max Horz 2=402(load case 5)
Max Uplift2=-221(load case 5), 8=-347(load case 5), 12=-342(load case 5)

FORCES (lb) - Maximum Compression/Maximum Tension
TOP CHORD 1-2=0/47, 2-3=-113/49, 3-4=-1199/489, 4-5=-1094/518, 5-6=-650/400, 6-7=-670/360, 7-8=-903/484
BOT CHORD 2-12=-182/36, 11-12=-709/1066, 10-11=-709/1066, 9-10=-427/795, 8-9=-25/36
WEBS 3-12=-1323/695, 3-10=-122/276, 5-10=-132/383, 5-9=-571/403, 7-9=-275/671, 6-9=-108/335

NOTES
1) Unbalanced roof live loads have been considered for this design.
2) Wind: ASCE 7-02; 110mph (3-second gust); h=20ft; TCDL=4.2psf; BCDL=3.0psf; Category II; Exp B; enclosed; MWFRS gable end zone and C-C Exterior(2) zone; porch left exposed; Lumber DOL=1.60 plate grip DOL=1.60. This truss is designed for C-C for members and forces, and for MWFRS for reactions specified.
3) Provide mechanical connection (by others) of truss to bearing plate capable of withstanding 221 lb uplift at joint 2, 347 lb uplift at joint 8 and 342 lb uplift at joint 12.

LOAD CASE(S) Standard

OCTOBER 17,2005 TRUSS DESIGN ENGINEER:
THOMAS E. MILLER PE 56877, BYRON K. ANDERSON PE 60987
STRUCTURAL ENGINEERING AND INSPECTIONS, INC. EB 9196
16105 N. FLORIDA AVE. STE B, LUTZ, FL 33549

Job	Truss	Truss Type	Qty	Ply	BRYAN ZECHER- LOT30-1 CSE	Dwg.#101705138
L136745	T09	SPECIAL	1	2	Job Reference (optional)	J1481244

Builders FirstSource, Lake City, Fl 32055 — 6.200 s Jul 13 2005 MiTek Industries, Inc. Fri Oct 14 14:13:32 2005 Page 1

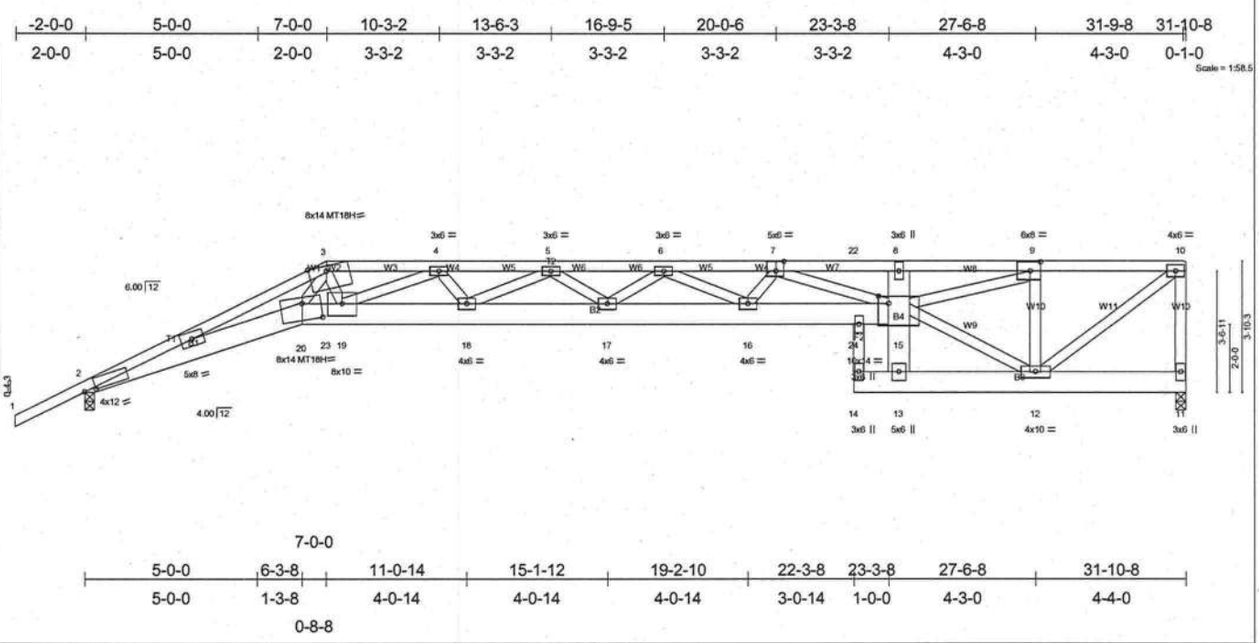

Plate Offsets (X,Y): [2:0-4-1,0-0-5], [3:0-6-3,Edge], [7:0-2-12,0-3-4], [9:0-3-8,0-3-0], [15:0-3-8,0-2-8], [20:0-6-8,0-5-12]

LOADING (psf)		SPACING	2-0-0	CSI		DEFL	in	(loc)	l/defl	L/d	PLATES	GRIP
TCLL	20.0	Plates Increase	1.25	TC	0.68	Vert(LL)	-1.01	17	>376	240	MT20	244/190
TCDL	7.0	Lumber Increase	1.25	BC	0.76	Vert(TL)	-1.61	17	>235	180	MT18H	244/190
BCLL	10.0	Rep Stress Incr	NO	WB	0.75	Horz(TL)	0.78	11	n/a	n/a		
BCDL	5.0	Code FBC2004/TPI2002		(Matrix)							Weight: 447 lb	

LUMBER
TOP CHORD 2 X 4 SYP No.1D *Except*
T3 2 X 4 SYP No.2
BOT CHORD 2 X 8 SYP 2400F 2.0E *Except*
B3 2 X 8 SYP No.1D
WEBS 2 X 4 SYP No.3 *Except*
W8 2 X 4 SYP No.1D, W11 2 X 4 SYP No.2

BRACING
TOP CHORD Structural wood sheathing directly applied or 3-0-8 oc purlins, except end verticals.
BOT CHORD Rigid ceiling directly applied or 10-0-0 oc bracing.

REACTIONS (lb/size) 2=2863/0-3-8, 11=3063/0-3-8
Max Horz 2=228(load case 4)
Max Uplift2=-1023(load case 4), 11=-1222(load case 3)

FORCES (lb) - Maximum Compression/Maximum Tension
TOP CHORD 1-2=0/52, 2-3=-12552/4510, 3-4=-12183/4495, 4-5=-15102/5614, 5-6=-16741/6264, 6-7=-16132/6078, 7-22=-12452/4729, 8-22=-12452/4729, 8-9=-10131/3872, 9-10=-3283/1285, 10-11=-2823/1187
BOT CHORD 2-20=-4227/11590, 20-23=-3949/10706, 19-23=-3948/10703, 18-19=-5417/14528, 17-18=-6104/16242, 16-17=-6289/16660, 16-24=-5891/15536, 15-24=-5891/15536, 13-15=-85/514, 8-15=-349/300, 13-14=0/0, 12-13=-1043/2690, 11-12=-48/83
WEBS 4-19=-2623/1097, 4-18=-399/1141, 5-18=-1315/586, 5-17=-237/657, 6-17=-23/106, 6-16=-609/243, 7-16=-372/1185, 7-15=-3315/1248, 12-15=-271/664, 9-15=-2745/7267, 9-12=-3036/1370, 10-12=-1593/4122, 3-19=-1726/4669, 3-20=-253/926

NOTES
1) Hanger(s) or other connection device(s) shall be provided sufficient to support concentrated load(s) 400 lb down and 151 lb up at 7-0-0 on bottom chord. The design/selection of such connection device(s) is the responsibility of others.
2) 2-ply truss to be connected together with 0.131"x3" Nails as follows:
Top chords connected as follows: 2 X 4 - 1 row at 0-9-0 oc.
Bottom chords connected as follows: 2 X 8 - 2 rows at 0-9-0 oc.
Webs connected as follows: 2 X 4 - 1 row at 0-9-0 oc.
Hanger(s) or other connection device(s) shall be provided sufficient to support concentrated load(s) 400 lb down and 151 lb up at 7-0-0 on bottom chord. The design/selection of such connection device(s) is the responsibility of others.
3) All loads are considered equally applied to all plies, except if noted as front (F) or back (B) face in the LOAD CASE(S) section. Ply to ply connections have been provided to distribute only loads noted as (F) or (B), unless otherwise indicated.
4) Wind: ASCE 7-02; 110mph (3-second gust); h=20ft; TCDL=4.2psf; BCDL=3.0psf; Category II; Exp B; enclosed; MWFRS gable end zone; Lumber DOL=1.60 plate grip DOL=1.60.
5) Provide adequate drainage to prevent water ponding.
6) All plates are MT20 plates unless otherwise indicated.
7) Bearing at joint(s) 2 considers parallel to grain value using ANSI/TPI 1 angle to grain formula. Building designer should verify capacity of bearing surface.
8) Provide mechanical connection (by others) of truss to bearing plate capable of withstanding 1023 lb uplift at joint 2 and 1222 lb uplift at joint 11.
9) Girder carries tie-in span(s): 3-0-0 from 7-0-0 to 22-3-8; 7-0-0 from 7-0-0 to 22-3-8
10) Girder carries hip end with 0-0-0 right side setback, 22-3-8 left side setback, and 7-0-0 end setback.
11) Hanger(s) or other connection device(s) shall be provided sufficient to support concentrated load(s) 400 lb down and 151 lb up at 7-0-0 on bottom chord. The design/selection of such connection device(s) is the responsibility of others.

LOAD CASE(S) Standard
1) Regular: Lumber Increase=1.25, Plate Increase=1.25
Uniform Loads (plf)
Vert: 1-3=-54, 3-22=-69(F=-15), 10-22=-118(F=-64), 2-20=-30, 20-23=-30, 23-24=-129(F=-99), 15-24=-65(F=-35), 13-14=-65(F=-35), 11-13=-65(F=-35)

Continued on page 2

OCTOBER 17,2005 TRUSS DESIGN ENGINEER:
THOMAS E. MILLER PE 56877, BYRON K. ANDERSON PE 60987
STRUCTURAL ENGINEERING AND INSPECTIONS, INC. EB 9196
16105 N. FLORIDA AVE. STE B, LUTZ, FL 33549

LOAD CASE(S) Standard
Concentrated Loads (lb)
Vert: 23=-400(F)

OCTOBER 17,2005 TRUSS DESIGN ENGINEER:
THOMAS E. MILLER PE 56877, BYRON K. ANDERSON PE 60987
STRUCTURAL ENGINEERING AND INSPECTIONS, INC. EB 9196
16105 N. FLORIDA AVE. STE B, LUTZ, FL 33549

Job	Truss	Truss Type	Qty	Ply	BRYAN ZECHER- LOT30-1 CSE
L136745	T10	SPECIAL	1	1	Job Reference (optional)

Dwg.#101705140 J148124S

Builders FirstSource, Lake City, Fl 32055

6.200 s Jul 13 2005 MiTek Industries, Inc. Fri Oct 14 14:13:33 2005 Page 1

-2-0-0	3-8-9	6-3-8	9-0-0	15-11-12	22-9-12	29-9-8	31-10-8
2-0-0	3-8-9	2-6-15	2-8-8	6-11-12	6-10-0	6-11-12	2-1-0

Scale = 1:57.6

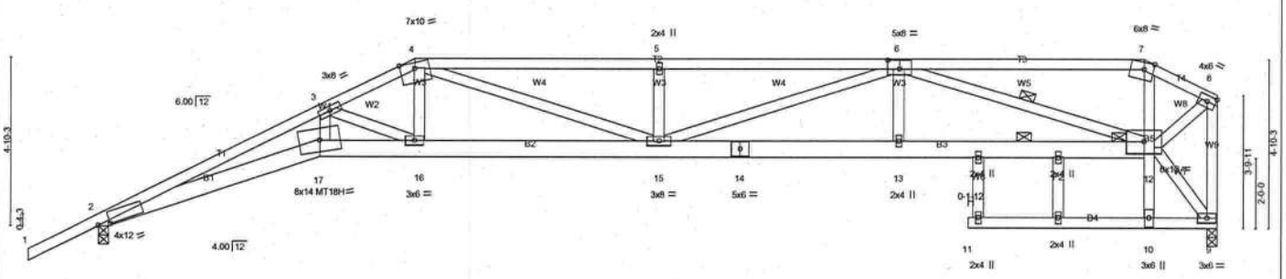

3-8-9	6-3-8	9-0-0	15-11-12	22-9-12	24-9-8	27-2-8	29-9-8	31-10-8
3-8-9	2-6-15	2-8-8	6-11-12	6-10-0	1-11-12	2-5-0	2-7-0	2-1-0

Plate Offsets (X,Y): [2:0-4-1,0-0-11], [6:0-4-0,0-3-0], [7:0-3-3,Edge]

LOADING (psf)		SPACING	2-0-0	CSI		DEFL	in	(loc)	l/defl	L/d	PLATES	GRIP
TCLL	20.0	Plates Increase	1.25	TC	0.90	Vert(LL)	-0.77	11	>494	240	MT20	244/190
TCDL	7.0	Lumber Increase	1.25	BC	0.98	Vert(TL)	-1.30	11	>292	180	MT18H	244/190
BCLL	10.0	Rep Stress Incr	YES	WB	0.73	Horz(TL)	0.57	9	n/a	n/a		
BCDL	5.0	Code FBC2004/TPI2002		(Matrix)							Weight: 203 lb	

LUMBER
TOP CHORD 2 X 4 SYP No.2
BOT CHORD 2 X 6 SYP No.1D *Except*
B5 2 X 4 SYP No.3, B4 2 X 4 SYP No.2
WEBS 2 X 4 SYP No.3

BRACING
TOP CHORD Structural wood sheathing directly applied or 1-7-12 oc purlins, except end verticals.
BOT CHORD Rigid ceiling directly applied or 2-2-0 oc bracing. Except:
1 Row at midpt 12-13
WEBS 1 Row at midpt 6-12
JOINTS 1 Brace at Jt(s): 12

REACTIONS (lb/size) 2=1468/0-3-8, 9=1456/0-3-8
Max Horz 2=241(load case 5)
Max Uplift2=-497(load case 5), 9=-399(load case 3)

FORCES (lb) - Maximum Compression/Maximum Tension
TOP CHORD 1-2=0/49, 2-3=-6098/2395, 3-4=-3985/1610, 4-5=-4389/1736, 5-6=-4389/1736, 6-7=-1336/427, 7-8=-1410/381, 8-9=-1685/449
BOT CHORD 2-17=-2317/5634, 16-17=-2144/5162, 15-16=-1452/3636, 14-15=-1357/3705, 13-14=-1357/3705, 12-13=-1357/3703, 10-12=0/319, 7-12=0/347, 10-11=0/0, 9-10=-118/0
WEBS 3-17=-530/1518, 3-16=-1739/782, 4-16=-431/1182, 4-15=-395/948, 5-15=-367/271, 6-15=-350/734, 6-13=0/208, 6-12=-2514/1038, 8-12=-428/1661, 9-12=0/158

NOTES
1) Unbalanced roof live loads have been considered for this design.
2) Wind: ASCE 7-02; 110mph (3-second gust); h=20ft; TCDL=4.2psf; BCDL=3.0psf; Category II; Exp B; enclosed; MWFRS gable end zone and C-C Exterior(2) zone; Lumber DOL=1.60 plate grip DOL=1.60. This truss is designed for C-C for members and forces, and for MWFRS for reactions specified.
3) Provide adequate drainage to prevent water ponding.
4) All plates are MT20 plates unless otherwise indicated.
5) Bearing at joint(s) 2 considers parallel to grain value using ANSI/TPI 1 angle to grain formula. Building designer should verify capacity of bearing surface.
6) Provide mechanical connection (by others) of truss to bearing plate capable of withstanding 497 lb uplift at joint 2 and 399 lb uplift at joint 9.

LOAD CASE(S) Standard

OCTOBER 17,2005 TRUSS DESIGN ENGINEER:
THOMAS E. MILLER PE 56877, BYRON K. ANDERSON PE 60987
STRUCTURAL ENGINEERING AND INSPECTIONS, INC. EB 9196
16105 N. FLORIDA AVE. STE B, LUTZ, FL 33549

Job	Truss	Truss Type	Qty	Ply	BRYAN ZECHER- LOT30-1 CSE	Dwg.#101705141
L136745	T11	SPECIAL	1	1	Job Reference (optional)	

Builders FirstSource, Lake City, Fl 32055 — 6.200 s Jul 13 2005 MiTek Industries, Inc. Fri Oct 14 14:13:33 2005 Page 1

-2-0-0	3-8-9	6-3-8	11-0-0	16-7-12	22-1-12	27-9-8	31-10-8
2-0-0	3-8-9	2-6-15	4-8-8	5-7-12	5-6-0	5-7-12	4-1-0

Scale = 1:57.6

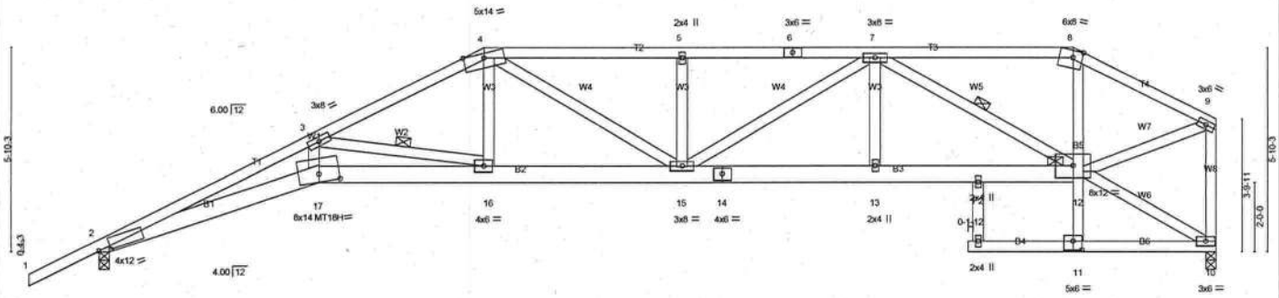

3-8-9	6-3-8	11-0-0	16-7-12	22-1-12	24-9-8	27-2-8 27-9-8	31-10-8
3-8-9	2-6-15	4-8-8	5-7-12	5-6-0	2-7-12	2-5-0 0-7-0	4-1-0

Plate Offsets (X,Y): [2:0-4-1,0-0-11], [8:0-3-3,Edge], [11:0-3-0,0-3-0], [17:0-7-0,0-2-11]

LOADING (psf)		SPACING	2-0-0	CSI		DEFL	in	(loc)	l/defl	L/d	PLATES	GRIP
TCLL	20.0	Plates Increase	1.25	TC	0.79	Vert(LL)	-0.55	16-17	>694	240	MT20	244/190
TCDL	7.0	Lumber Increase	1.25	BC	0.98	Vert(TL)	-0.88	16-17	>433	180	MT18H	244/190
BCLL	10.0	Rep Stress Incr	YES	WB	0.53	Horz(TL)	0.50	10	n/a	n/a		
BCDL	5.0	Code FBC2004/TPI2002		(Matrix)							Weight: 207 lb	

LUMBER
TOP CHORD 2 X 4 SYP No.2
BOT CHORD 2 X 6 SYP No.1D *Except*
B5 2 X 4 SYP No.3, B6 2 X 4 SYP No.2, B4 2 X 4 SYP No.2
WEBS 2 X 4 SYP No.3

BRACING
TOP CHORD Structural wood sheathing directly applied or 1-10-15 oc purlins, except end verticals.
BOT CHORD Rigid ceiling directly applied or 2-2-0 oc bracing.
WEBS 1 Row at midpt 3-16, 7-12
JOINTS 1 Brace at Jt(s): 12

REACTIONS (lb/size) 2=1446/0-3-8, 10=1323/0-3-8
Max Horz 2=255(load case 5)
Max Uplift2=-518(load case 5), 10=-371(load case 3)

FORCES (lb) - Maximum Compression/Maximum Tension
TOP CHORD 1-2=0/49, 2-3=-5980/2466, 3-4=-3153/1329, 4-5=-3010/1301, 5-6=-3010/1301, 6-7=-3010/1301, 7-8=-1332/622, 8-9=-1517/638, 9-10=-1264/554
BOT CHORD 2-17=-2387/5525, 16-17=-2360/5478, 15-16=-1160/2833, 14-15=-1022/2595, 13-14=-1022/2595, 12-13=-1022/2595, 11-12=0/57, 8-12=-81/426, 10-11=-6/21
WEBS 3-17=-574/1622, 3-16=-2742/1240, 4-16=-338/956, 4-15=-223/386, 5-15=-297/214, 7-15=-210/509, 7-13=0/194, 7-12=-1495/584, 9-12=-545/1393, 10-12=-13/9

NOTES
1) Unbalanced roof live loads have been considered for this design.
2) Wind: ASCE 7-02; 110mph (3-second gust); h=20ft; TCDL=4.2psf; BCDL=3.0psf; Category II; Exp B; enclosed; MWFRS gable end zone and C-C Exterior(2) zone; Lumber DOL=1.60 plate grip DOL=1.60. This truss is designed for C-C for members and forces, and for MWFRS for reactions specified.
3) Provide adequate drainage to prevent water ponding.
4) All plates are MT20 plates unless otherwise indicated.
5) Bearing at joint(s) 2 considers parallel to grain value using ANSI/TPI 1 angle to grain formula. Building designer should verify capacity of bearing surface.
6) Provide mechanical connection (by others) of truss to bearing plate capable of withstanding 518 lb uplift at joint 2 and 371 lb uplift at joint 10.

LOAD CASE(S) Standard

OCTOBER 17,2005 TRUSS DESIGN ENGINEER:
THOMAS E. MILLER PE 56877, BYRON K. ANDERSON PE 60987
STRUCTURAL ENGINEERING AND INSPECTIONS, INC. EB 9196
16105 N. FLORIDA AVE. STE B, LUTZ, FL 33549

Job	Truss	Truss Type	Qty	Ply	BRYAN ZECHER- LOT30-1 CSE	Dwg.#101705142
L136745	T12	SPECIAL	1	1	Job Reference (optional)	

Builders FirstSource, Lake City, Fl 32055 — 6.200 s Jul 13 2005 MiTek Industries, Inc. Fri Oct 14 14:13:34 2005 Page 1

-2-0-0	4-8-7	6-3-8	13-0-0	19-4-12	25-9-8	28-2-8	33-2-12	38-9-8	40-9-8
2-0-0	4-8-7	1-7-1	6-8-8	6-4-12	6-4-12	2-5-0	5-0-4	5-6-12	2-0-0

Scale = 1:71.7

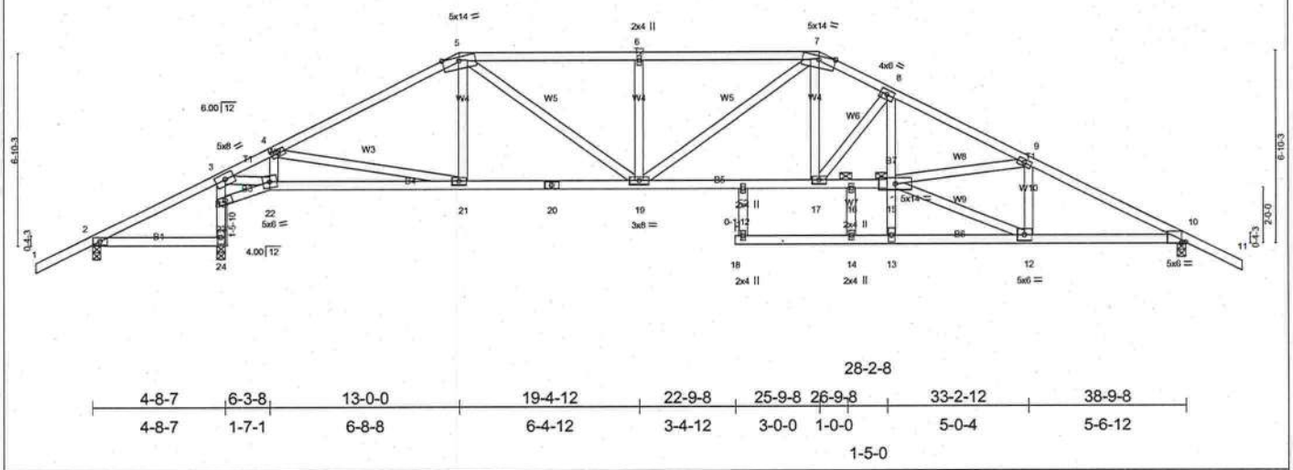

4-8-7	6-3-8	13-0-0	19-4-12	22-9-8	25-9-8	26-9-8	33-2-12	38-9-8
4-8-7	1-7-1	6-8-8	6-4-12	3-4-12	3-0-0	1-0-0	5-0-4	5-6-12

28-2-8

1-5-0

Plate Offsets (X,Y): [10:0-1-11,Edge]

LOADING (psf)		SPACING	2-0-0	CSI		DEFL	in	(loc)	l/defl	L/d	PLATES	GRIP
TCLL	20.0	Plates Increase	1.25	TC	0.45	Vert(LL)	-0.51	18	>803	240	MT20	244/190
TCDL	7.0	Lumber Increase	1.25	BC	0.85	Vert(TL)	-0.86	18	>478	180		
BCLL	10.0	Rep Stress Incr	YES	WB	0.79	Horz(TL)	0.19	10	n/a	n/a		
BCDL	5.0	Code FBC2004/TPI2002		(Matrix)							Weight: 229 lb	

LUMBER
TOP CHORD 2 X 4 SYP No.2
BOT CHORD 2 X 4 SYP No.2 *Except*
B7 2 X 4 SYP No.3
WEBS 2 X 4 SYP No.3

BRACING
TOP CHORD Structural wood sheathing directly applied or 3-0-14 oc purlins.
BOT CHORD Rigid ceiling directly applied or 3-1-15 oc bracing.
JOINTS 1 Brace at Jt(s): 15, 16

REACTIONS (lb/size) 2=122/0-3-8, 24=1870/0-3-8, 10=1598/0-3-8
Max Horz 2=-129(load case 6)
Max Uplift2=-213(load case 5), 24=-552(load case 5), 10=-556(load case 6)
Max Grav 2=141(load case 9), 24=1870(load case 1), 10=1598(load case 1)

FORCES (lb) - Maximum Compression/Maximum Tension
TOP CHORD 1-2=0/47, 2-3=-119/455, 3-4=-1632/668, 4-5=-2318/896, 5-6=-2726/1094, 6-7=-2726/1094, 7-8=-3010/1104, 8-9=-3784/1327, 9-10=-2802/1030, 10-11=0/47
BOT CHORD 2-24=-337/121, 23-24=-1842/669, 3-23=-1483/495, 22-23=-884/396, 21-22=-449/1529, 20-21=-463/2010, 19-20=-463/2010, 17-19=-624/2722, 16-17=-871/3325, 15-16=-868/3338, 13-15=-202/13, 8-15=-276/953, 14-18=0/0, 13-14=0/0, 12-13=-53/163, 10-12=-749/2427
WEBS 3-22=-776/2306, 4-22=-628/348, 4-21=-162/601, 5-21=0/141, 5-19=-284/970, 6-19=-359/258, 7-19=-191/174, 7-17=-249/1049, 8-17=-996/399, 12-15=-759/2470, 9-15=-175/907, 9-12=-827/354, 14-16=0/439

NOTES
1) Unbalanced roof live loads have been considered for this design.
2) Wind: ASCE 7-02; 110mph (3-second gust); h=20ft; TCDL=4.2psf; BCDL=3.0psf; Category II; Exp B; enclosed; MWFRS gable end zone and C-C Exterior(2) zone; porch left exposed; Lumber DOL=1.60 plate grip DOL=1.60. This truss is designed for C-C for members and forces, and for MWFRS for reactions specified.
3) Provide adequate drainage to prevent water ponding.
4) All plates are 3x6 MT20 unless otherwise indicated.
5) Provide mechanical connection (by others) of truss to bearing plate capable of withstanding 213 lb uplift at joint 2, 552 lb uplift at joint 24 and 556 lb uplift at joint 10.

LOAD CASE(S) Standard

OCTOBER 17,2005 TRUSS DESIGN ENGINEER:
THOMAS E. MILLER PE 56877, BYRON K. ANDERSON PE 60987
STRUCTURAL ENGINEERING AND INSPECTIONS, INC. EB 9196
16105 N. FLORIDA AVE. STE B, LUTZ, FL 33549

Job	Truss	Truss Type	Qty	Ply	BRYAN ZECHER- LOT30-1 CSE	Dwg.#101705143
L136745	T13	SPECIAL	1	1	Job Reference (optional)	

Builders FirstSource, Lake City, Fl 32055 — 6.200 s Jul 13 2005 MiTek Industries, Inc. Fri Oct 14 14:13:35 2005 Page 1

-2-0-0	6-3-8	10-7-12	15-0-0	19-4-12	23-9-8	28-2-8	33-2-12	38-9-8	40-9-8
2-0-0	6-3-8	4-4-4	4-4-4	4-4-12	4-4-12	4-5-0	5-0-4	5-6-12	2-0-0

Scale = 1:71.7

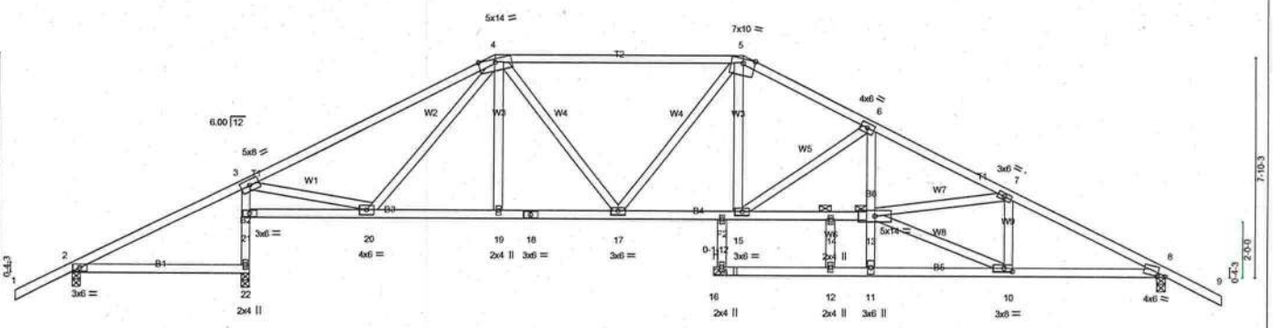

6-1-12	6-3-8	10-7-12	15-0-0	19-4-12	22-9-8	23-9-8	27-2-8	28-2-8	33-2-12	38-9-8
6-1-12	0-1-12	4-4-4	4-4-4	4-4-12	3-4-12	1-0-0	3-5-0	1-0-0	5-0-4	5-6-12

Plate Offsets (X,Y): [8:0-3-5,0-0-11], [10:0-3-8,0-1-8]

LOADING (psf)		SPACING 2-0-0		CSI		DEFL	in	(loc)	l/defl	L/d	PLATES	GRIP
TCLL	20.0	Plates Increase	1.25	TC	0.59	Vert(LL)	-0.52	16	>750	240	MT20	244/190
TCDL	7.0	Lumber Increase	1.25	BC	0.84	Vert(TL)	-0.88	16	>442	180		
BCLL	10.0	Rep Stress Incr	YES	WB	0.78	Horz(TL)	0.14	8	n/a	n/a		
BCDL	5.0	Code FBC2004/TPI2002		(Matrix)							Weight: 231 lb	

LUMBER
TOP CHORD 2 X 4 SYP No.2
BOT CHORD 2 X 4 SYP No.2 *Except*
B2 2 X 4 SYP No.3, B6 2 X 4 SYP No.3
WEBS 2 X 4 SYP No.3

BRACING
TOP CHORD Structural wood sheathing directly applied or 3-1-11 oc purlins.
BOT CHORD Rigid ceiling directly applied or 4-0-13 oc bracing.
JOINTS 1 Brace at Jt(s): 13, 14

REACTIONS (lb/size) 2=323/0-3-8, 22=1723/0-3-8, 8=1544/0-3-8
Max Horz 2=-143(load case 6)
Max Uplift2=-282(load case 5), 22=-557(load case 5), 8=-563(load case 6)
Max Grav 2=332(load case 9), 22=1723(load case 1), 8=1544(load case 1)

FORCES (lb) - Maximum Compression/Maximum Tension
TOP CHORD 1-2=0/47, 2-3=-50/262, 3-4=-1761/734, 4-5=-1974/858, 5-6=-2423/951, 6-7=-3642/1276, 7-8=-2683/1005, 8-9=0/47
BOT CHORD 2-22=-31/0, 21-22=-1633/604, 3-21=-1547/608, 20-21=-148/86, 19-20=-355/1686, 18-19=-354/1690, 17-18=-354/1690, 15-17=-455/2172, 14-15=-835/3215, 13-14=-830/3234, 11-13=-135/28, 6-13=-234/1075, 12-16=0/0, 11-12=0/0, 10-11=-68/99, 8-10=-727/2322
WEBS 3-20=-163/1473, 4-20=-329/102, 4-19=0/148, 4-17=-78/539, 5-17=-401/107, 5-15=-226/926, 6-15=-1297/469, 10-13=-719/2426, 7-13=-122/885, 7-10=-815/337, 12-14=0/377

NOTES
1) Unbalanced roof live loads have been considered for this design.
2) Wind: ASCE 7-02; 110mph (3-second gust); h=20ft; TCDL=4.2psf; BCDL=3.0psf; Category II; Exp B; enclosed; MWFRS gable end zone and C-C Exterior(2) zone; porch left exposed; Lumber DOL=1.60 plate grip DOL=1.60. This truss is designed for C-C for members and forces, and for MWFRS for reactions specified.
3) Provide adequate drainage to prevent water ponding.
4) Provide mechanical connection (by others) of truss to bearing plate capable of withstanding 282 lb uplift at joint 2, 557 lb uplift at joint 22 and 563 lb uplift at joint 8.

LOAD CASE(S) Standard

OCTOBER 17,2005 TRUSS DESIGN ENGINEER:
THOMAS E. MILLER PE 56877, BYRON K. ANDERSON PE 60987
STRUCTURAL ENGINEERING AND INSPECTIONS, INC. EB 9196
16105 N. FLORIDA AVE. STE B, LUTZ, FL 33549

Job	Truss	Truss Type	Qty	Ply	BRYAN ZECHER- LOT30-1 CSE
L136745	T14	SPECIAL	1	1	Job Reference (optional)

Dwg.#101705144 J1481249

Builders FirstSource, Lake City, Fl 32055

6.200 s Jul 13 2005 MiTek Industries, Inc. Fri Oct 14 14:13:36 2005 Page 1

-2-0-0	6-3-8	10-8-6	17-0-0	21-9-8	28-2-8	33-2-12	38-9-8	40-9-8
2-0-0	6-3-8	4-4-13	6-3-10	4-9-8	6-5-0	5-0-4	5-6-12	2-0-0

Scale = 1:71.7

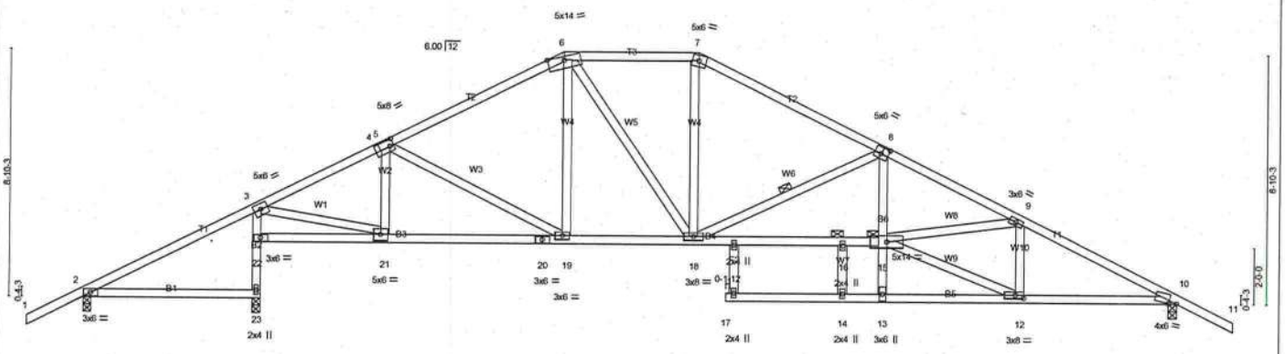

6-1-12	6-3-8	10-8-6	17-0-0	21-9-8	22-9-8	28-1-15	28-2-8	33-2-12	38-9-8
6-1-12	0-1-12	4-4-13	6-3-10	4-9-8	1-0-0	5-4-6	0-0-10	5-0-4	5-6-12

Plate Offsets (X,Y): [4:0-1-12,0-3-0], [8:0-3-0,0-3-0], [10:0-3-5,0-0-11], [12:0-3-8,0-1-8]

LOADING (psf)		SPACING 2-0-0		CSI		DEFL	in	(loc)	l/defl	L/d	PLATES	GRIP
TCLL	20.0	Plates Increase	1.25	TC	0.33	Vert(LL)	-0.57	17	>686	240	MT20	244/190
TCDL	7.0	Lumber Increase	1.25	BC	0.84	Vert(TL)	-0.97	17	>403	180		
BCLL	10.0	Rep Stress Incr	YES	WB	0.78	Horz(TL)	0.15	10	n/a	n/a		
BCDL	5.0	Code FBC2004/TPI2002		(Matrix)							Weight: 233 lb	

LUMBER
TOP CHORD 2 X 4 SYP No.2
BOT CHORD 2 X 4 SYP No.2 *Except*
B2 2 X 4 SYP No.3, B6 2 X 4 SYP No.3
WEBS 2 X 4 SYP No.3

BRACING
TOP CHORD Structural wood sheathing directly applied or 3-2-0 oc purlins.
BOT CHORD Rigid ceiling directly applied or 4-0-9 oc bracing.
WEBS 1 Row at midpt 8-18
JOINTS 1 Brace at Jt(s): 15, 16

REACTIONS (lb/size) 2=329/0-3-8, 23=1715/0-3-8, 10=1545/0-3-8
Max Horz 2=157(load case 5)
Max Uplift2=-279(load case 5), 23=-576(load case 5), 10=-576(load case 6)
Max Grav 2=340(load case 9), 23=1715(load case 1), 10=1545(load case 1)

FORCES (lb) - Maximum Compression/Maximum Tension
TOP CHORD 1-2=0/47, 2-3=-58/277, 3-4=-1855/798, 4-5=-1745/799, 5-6=-1847/800, 6-7=-1815/842, 7-8=-2096/861, 8-9=-3681/1292, 9-10=-2681/1018, 10-11=0/47
BOT CHORD 2-23=-33/0, 22-23=-1623/603, 3-22=-1551/609, 21-22=-126/85, 20-21=-417/1610, 19-20=-417/1610, 18-19=-272/1588, 16-18=-887/3296, 15-16=-883/3317, 13-15=-100/50, 8-15=-211/1137, 14-17=0/0, 13-14=0/0, 12-13=-94/77, 10-12=-737/2319
WEBS 3-21=-517/1787, 5-21=-265/166, 5-19=-99/166, 6-19=-49/203, 6-18=-129/503, 7-18=-154/598, 8-18=-1662/625, 12-15=-701/2446, 9-15=-131/929, 9-12=-826/327, 14-16=-7/345

NOTES
1) Unbalanced roof live loads have been considered for this design.
2) Wind: ASCE 7-02; 110mph (3-second gust); h=20ft; TCDL=4.2psf; BCDL=3.0psf; Category II; Exp B; enclosed; MWFRS gable end zone and C-C Exterior(2) zone; porch left exposed; Lumber DOL=1.60 plate grip DOL=1.60. This truss is designed for C-C for members and forces, and for MWFRS for reactions specified.
3) Provide adequate drainage to prevent water ponding.
4) Provide mechanical connection (by others) of truss to bearing plate capable of withstanding 279 lb uplift at joint 2, 576 lb uplift at joint 23 and 576 lb uplift at joint 10.

LOAD CASE(S) Standard

OCTOBER 17,2005 TRUSS DESIGN ENGINEER:
THOMAS E. MILLER PE 56877, BYRON K. ANDERSON PE 60987
STRUCTURAL ENGINEERING AND INSPECTIONS, INC. EB 9196
16105 N. FLORIDA AVE. STE B, LUTZ, FL 33549

Job	Truss	Truss Type	Qty	Ply	BRYAN ZECHER- LOT30-1 CSE
L136745	T15	SPECIAL	1	1	Job Reference (optional)

Dwg.#101705145

Builders FirstSource, Lake City, Fl 32055

6.200 s Jul 13 2005 MiTek Industries, Inc. Fri Oct 14 14:13:37 2005 Page 1

-2-0-0	6-3-8	14-0-5	19-0-0	19-9-8	24-7-8	28-2-8	33-2-12	38-9-8	40-9-8
2-0-0	6-3-8	7-8-13	4-11-11	0-9-8	4-10-0	3-7-0	5-0-4	5-6-12	2-0-0

Scale = 1:71.7

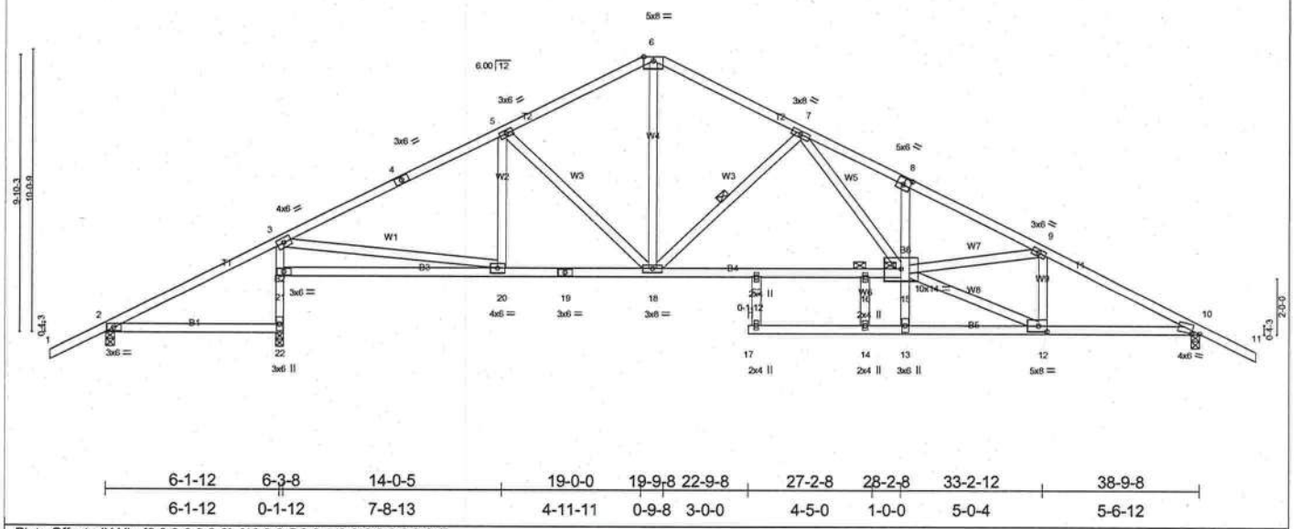

6-1-12	6-3-8	14-0-5	19-0-0	19-9-8	22-9-8	27-2-8	28-2-8	33-2-12	38-9-8
6-1-12	0-1-12	7-8-13	4-11-11	0-9-8	3-0-0	4-5-0	1-0-0	5-0-4	5-6-12

Plate Offsets (X,Y): [8:0-3-0,0-3-0], [10:0-3-5,0-0-11], [12:0-3-8,0-2-8]

LOADING (psf)		SPACING	2-0-0	CSI		DEFL	in	(loc)	l/defl	L/d	PLATES	GRIP
TCLL	20.0	Plates Increase	1.25	TC	0.47	Vert(LL)	-0.76	17	>513	240	MT20	244/190
TCDL	7.0	Lumber Increase	1.25	BC	1.00	Vert(TL)	-1.29	17	>303	180		
BCLL	10.0	Rep Stress Incr	YES	WB	0.84	Horz(TL)	0.15	10	n/a	n/a		
BCDL	5.0	Code FBC2004/TPI2002		(Matrix)							Weight: 231 lb	

LUMBER
TOP CHORD 2 X 4 SYP No.2
BOT CHORD 2 X 4 SYP No.2 *Except*
B2 2 X 4 SYP No.3, B6 2 X 4 SYP No.3
WEBS 2 X 4 SYP No.3

BRACING
TOP CHORD Structural wood sheathing directly applied or 3-1-7 oc purlins.
BOT CHORD Rigid ceiling directly applied or 4-1-15 oc bracing.
WEBS 1 Row at midpt 7-18
JOINTS 1 Brace at Jt(s): 15, 16

REACTIONS (lb/size) 2=332/0-3-8, 22=1712/0-3-8, 10=1546/0-3-8
Max Horz 2=174(load case 5)
Max Uplift2=-280(load case 6), 22=-600(load case 5), 10=-588(load case 6)
Max Grav 2=339(load case 9), 22=1712(load case 1), 10=1546(load case 1)

FORCES (lb) - Maximum Compression/Maximum Tension
TOP CHORD 1-2=0/47, 2-3=-62/306, 3-4=-1991/827, 4-5=-1887/841, 5-6=-1729/805, 6-7=-1719/798, 7-8=-3702/1391, 8-9=-3675/1295, 9-10=-2681/1038, 10-11=0/47
BOT CHORD 2-22=-45/0, 21-22=-1619/612, 3-21=-1481/634, 20-21=-102/216, 19-20=-397/1688, 18-19=-397/1688, 16-18=-551/2257, 15-16=-551/2257, 13-15=0/88, 8-15=-222/209, 14-17=0/0, 13-14=0/0, 12-13=-134/0, 10-12=-756/2321
WEBS 3-20=-298/1500, 5-20=-54/85, 5-18=-350/273, 7-18=-1082/494, 7-15=-509/1734, 12-15=-747/2625, 9-15=-109/918, 9-12=-863/333, 6-18=-495/1203, 14-16=0/178

NOTES
1) Unbalanced roof live loads have been considered for this design.
2) Wind: ASCE 7-02; 110mph (3-second gust); h=20ft; TCDL=4.2psf; BCDL=3.0psf; Category II; Exp B; enclosed; MWFRS gable end zone and C-C Exterior(2) zone; porch left exposed; Lumber DOL=1.60 plate grip DOL=1.60. This truss is designed for C-C for members and forces, and for MWFRS for reactions specified.
3) Provide mechanical connection (by others) of truss to bearing plate capable of withstanding 280 lb uplift at joint 2, 600 lb uplift at joint 22 and 588 lb uplift at joint 10.

LOAD CASE(S) Standard

OCTOBER 17,2005 TRUSS DESIGN ENGINEER:
THOMAS E. MILLER PE 56877, BYRON K. ANDERSON PE 60987
STRUCTURAL ENGINEERING AND INSPECTIONS, INC. EB 9196
16105 N. FLORIDA AVE. STE B, LUTZ, FL 33549

Job	Truss	Truss Type	Qty	Ply	BRYAN ZECHER- LOT30-1 CSE
L136745	T16	SPECIAL	1	1	Job Reference (optional)

Dwg.#101705146

Builders FirstSource, Lake City, Fl 32055

6.200 s Jul 13 2005 MiTek Industries, Inc. Fri Oct 14 14:13:38 2005 Page 1

-2-0-0	6-3-8	14-0-3	19-4-12	24-7-7	28-2-8	33-2-12	38-9-8	40-9-8
2-0-0	6-3-8	7-8-11	5-4-9	5-2-12	3-7-1	5-0-4	5-6-12	2-0-0

Scale = 1:71.0

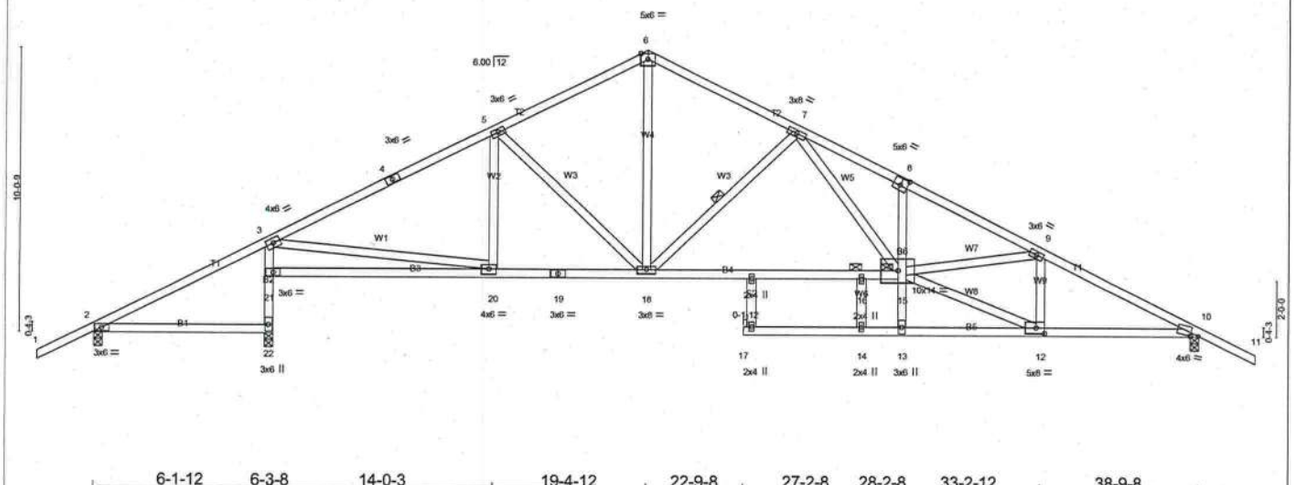

6-1-12	6-3-8	14-0-3	19-4-12	22-9-8	27-2-8	28-2-8	33-2-12	38-9-8
6-1-12	0-1-12	7-8-11	5-4-9	3-4-12	4-5-0	1-0-0	5-0-4	5-6-12

Plate Offsets (X,Y): [8:0-3-0,0-3-0], [10:0-3-5,0-0-11], [12:0-3-8,0-2-8]

LOADING (psf)		SPACING	2-0-0	CSI		DEFL	in	(loc)	l/defl	L/d	PLATES	GRIP
TCLL	20.0	Plates Increase	1.25	TC	0.47	Vert(LL)	-0.76	17	>513	240	MT20	244/190
TCDL	7.0	Lumber Increase	1.25	BC	1.00	Vert(TL)	-1.29	17	>303	180		
BCLL	10.0	Rep Stress Incr	YES	WB	0.84	Horz(TL)	0.15	10	n/a	n/a		
BCDL	5.0	Code FBC2004/TPI2002		(Matrix)							Weight: 231 lb	

LUMBER
TOP CHORD 2 X 4 SYP No.2
BOT CHORD 2 X 4 SYP No.2 *Except*
B2 2 X 4 SYP No.3, B6 2 X 4 SYP No.3
WEBS 2 X 4 SYP No.3

BRACING
TOP CHORD Structural wood sheathing directly applied or 3-1-7 oc purlins.
BOT CHORD Rigid ceiling directly applied or 4-1-15 oc bracing.
WEBS 1 Row at midpt 7-18
JOINTS 1 Brace at Jt(s): 15, 16

REACTIONS (lb/size) 2=332/0-3-8, 22=1712/0-3-8, 10=1546/0-3-8
Max Horz 2=174(load case 5)
Max Uplift2=-280(load case 6), 22=-600(load case 5), 10=-588(load case 6)
Max Grav 2=339(load case 9), 22=1712(load case 1), 10=1546(load case 1)

FORCES (lb) - Maximum Compression/Maximum Tension
TOP CHORD 1-2=0/47, 2-3=-62/306, 3-4=-1991/827, 4-5=-1887/841, 5-6=-1729/805, 6-7=-1719/798, 7-8=-3702/1391, 8-9=-3675/1295, 9-10=-2681/1038, 10-11=0/47
BOT CHORD 2-22=-45/0, 21-22=-1619/612, 3-21=-1481/634, 20-21=-101/215, 19-20=-398/1688, 18-19=-398/1688, 16-18=-551/2256, 15-16=-551/2256, 13-15=0/88, 8-15=-222/210, 14-17=0/0, 13-14=0/0, 12-13=-134/0, 10-12=-756/2321
WEBS 3-20=-299/1501, 5-20=-55/85, 5-18=-350/273, 6-18=-494/1203, 7-18=-1082/493, 7-15=-509/1735, 12-15=-747/2625, 9-15=-109/918, 9-12=-863/333, 14-16=0/178

NOTES
1) Unbalanced roof live loads have been considered for this design.
2) Wind: ASCE 7-02; 110mph (3-second gust); h=20ft; TCDL=4.2psf; BCDL=3.0psf; Category II; Exp B; enclosed; MWFRS gable end zone and C-C Exterior(2) zone; porch left exposed; Lumber DOL=1.60 plate grip DOL=1.60. This truss is designed for C-C for members and forces, and for MWFRS for reactions specified.
3) Provide mechanical connection (by others) of truss to bearing plate capable of withstanding 280 lb uplift at joint 2, 600 lb uplift at joint 22 and 588 lb uplift at joint 10.

LOAD CASE(S) Standard

OCTOBER 17,2005 TRUSS DESIGN ENGINEER:
THOMAS E. MILLER PE 56877, BYRON K. ANDERSON PE 60987
STRUCTURAL ENGINEERING AND INSPECTIONS, INC. EB 9196
16105 N. FLORIDA AVE. STE B, LUTZ, FL 33549

Job	Truss	Truss Type	Qty	Ply	BRYAN ZECHER- LOT30-1 CSE
L136745	T17	SPECIAL	3	1	Job Reference (optional)

Dwg.#101705147

Builders FirstSource, Lake City, Fl 32055

6.200 s Jul 13 2005 MiTek Industries, Inc. Fri Oct 14 14:13:39 2005 Page 1

-2-0-0	6-3-8	14-0-3	19-4-12	24-7-8	31-0-0	38-9-8	40-9-8
2-0-0	6-3-8	7-8-11	5-4-9	5-2-12	6-4-8	7-9-8	2-0-0

Scale = 1:71.0

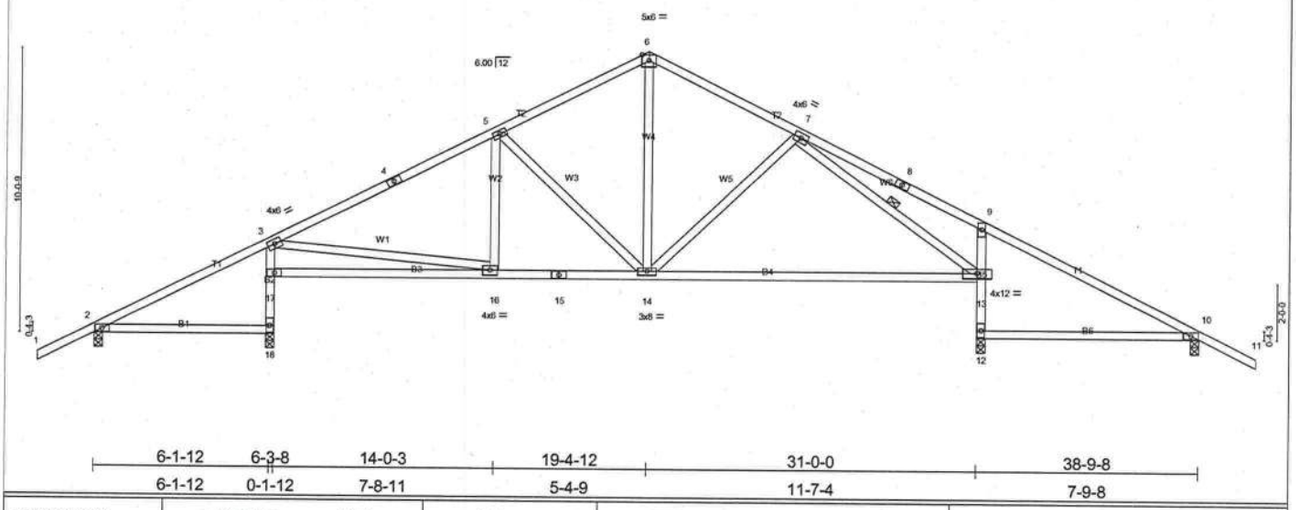

6-1-12	6-3-8	14-0-3	19-4-12	31-0-0	38-9-8
6-1-12	0-1-12	7-8-11	5-4-9	11-7-4	7-9-8

LOADING (psf)		SPACING	2-0-0	CSI		DEFL	in	(loc)	l/defl	L/d	PLATES	GRIP
TCLL	20.0	Plates Increase	1.25	TC	0.43	Vert(LL)	0.16	10-12	>559	240	MT20	244/190
TCDL	7.0	Lumber Increase	1.25	BC	0.81	Vert(TL)	-0.56	13-14	>532	180		
BCLL	10.0	Rep Stress Incr	YES	WB	0.38	Horz(TL)	0.03	10	n/a	n/a		
BCDL	5.0	Code FBC2004/TPI2002		(Matrix)							Weight: 201 lb	

LUMBER
TOP CHORD 2 X 4 SYP No.2
BOT CHORD 2 X 4 SYP No.2 *Except*
B2 2 X 4 SYP No.3, B5 2 X 4 SYP No.3
WEBS 2 X 4 SYP No.3

BRACING
TOP CHORD Structural wood sheathing directly applied or 4-11-14 oc purlins.
BOT CHORD Rigid ceiling directly applied or 4-3-1 oc bracing.
WEBS 1 Row at midpt 7-13

REACTIONS (lb/size) 2=355/0-3-8, 18=1306/0-3-8, 12=1414/0-3-8, 10=391/0-3-8
Max Horz 2=174(load case 5)
Max Uplift2=-287(load case 6), 18=-536(load case 5), 12=-464(load case 6), 10=-413(load case 6)
Max Grav 2=355(load case 1), 18=1306(load case 1), 12=1414(load case 1), 10=391(load case 10)

FORCES (lb) - Maximum Compression/Maximum Tension
TOP CHORD 1-2=0/47, 2-3=-96/320, 3-4=-1354/663, 4-5=-1250/677, 5-6=-1023/613, 6-7=-1017/608, 7-8=-123/432, 8-9=-206/410, 9-10=-85/306, 10-11=0/47
BOT CHORD 2-18=-54/27, 17-18=-1209/499, 3-17=-1073/523, 16-17=-133/286, 15-16=-273/1120, 14-15=-273/1120, 13-14=-210/899, 12-13=-1283/492, 9-13=-472/376, 10-12=-92/2
WEBS 3-16=-156/842, 5-16=0/71, 5-14=-402/310, 6-14=-333/580, 7-14=-123/254, 7-13=-1010/248

NOTES
1) Unbalanced roof live loads have been considered for this design.
2) Wind: ASCE 7-02; 110mph (3-second gust); h=20ft; TCDL=4.2psf; BCDL=3.0psf; Category II; Exp B; enclosed; MWFRS gable end zone and C-C Exterior(2) zone; porch left and right exposed; Lumber DOL=1.60 plate grip DOL=1.60. This truss is designed for C-C for members and forces, and for MWFRS for reactions specified.
3) All plates are 3x6 MT20 unless otherwise indicated.
4) Provide mechanical connection (by others) of truss to bearing plate capable of withstanding 287 lb uplift at joint 2, 536 lb uplift at joint 18, 464 lb uplift at joint 12 and 413 lb uplift at joint 10.

LOAD CASE(S) Standard

OCTOBER 17,2005 TRUSS DESIGN ENGINEER:
THOMAS E. MILLER PE 56877, BYRON K. ANDERSON PE 60987
STRUCTURAL ENGINEERING AND INSPECTIONS, INC. EB 9196
16105 N. FLORIDA AVE. STE B, LUTZ, FL 33549

Job	Truss	Truss Type	Qty	Ply	BRYAN ZECHER- LOT30-1 CSE	Dwg.#101705148
L136745	T18	COMMON	7	1	Job Reference (optional)	

Builders FirstSource, Lake City, Fl 32055

6.200 s Jul 13 2005 MiTek Industries, Inc. Fri Oct 14 14:13:39 2005 Page 1

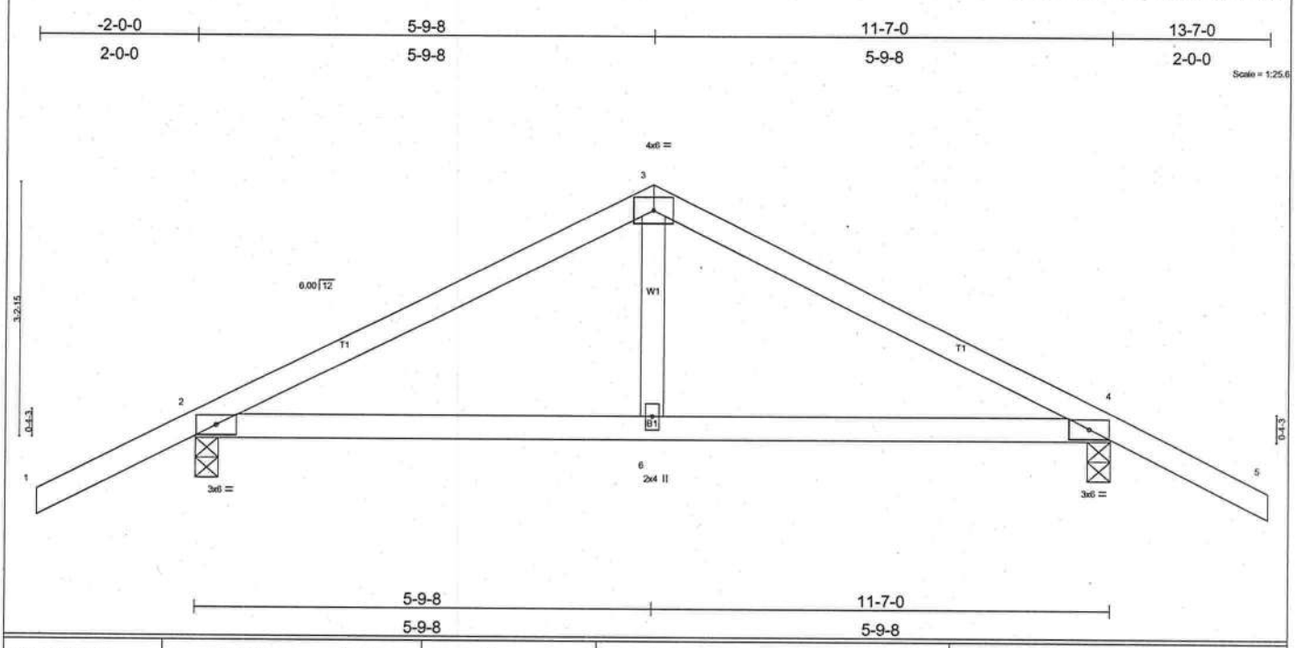

LOADING (psf)		SPACING	2-0-0	CSI		DEFL	in	(loc)	l/defl	L/d	PLATES	GRIP
TCLL	20.0	Plates Increase	1.25	TC	0.29	Vert(LL)	-0.03	2-6	>999	240	MT20	244/190
TCDL	7.0	Lumber Increase	1.25	BC	0.21	Vert(TL)	-0.05	2-6	>999	180		
BCLL	10.0	Rep Stress Incr	YES	WB	0.06	Horz(TL)	0.01	4	n/a	n/a		
BCDL	5.0	Code FBC2004/TPI2002		(Matrix)							Weight: 47 lb	

LUMBER
TOP CHORD 2 X 4 SYP No.2
BOT CHORD 2 X 4 SYP No.2
WEBS 2 X 4 SYP No.3

BRACING
TOP CHORD Structural wood sheathing directly applied or 6-0-0 oc purlins.
BOT CHORD Rigid ceiling directly applied or 10-0-0 oc bracing.

REACTIONS (lb/size) 2=590/0-3-8, 4=590/0-3-8
Max Horz 2=-79(load case 6)
Max Uplift2=-284(load case 5), 4=-284(load case 6)

FORCES (lb) - Maximum Compression/Maximum Tension
TOP CHORD 1-2=0/47, 2-3=-630/247, 3-4=-630/247, 4-5=0/47
BOT CHORD 2-6=-66/501, 4-6=-66/501
WEBS 3-6=0/193

NOTES
1) Unbalanced roof live loads have been considered for this design.
2) Wind: ASCE 7-02; 110mph (3-second gust); h=20ft; TCDL=4.2psf; BCDL=3.0psf; Category II; Exp B; enclosed; MWFRS gable end zone and C-C Exterior(2) zone; Lumber DOL=1.60 plate grip DOL=1.60. This truss is designed for C-C for members and forces, and for MWFRS for reactions specified.
3) Provide mechanical connection (by others) of truss to bearing plate capable of withstanding 284 lb uplift at joint 2 and 284 lb uplift at joint 4.

LOAD CASE(S) Standard

OCTOBER 17,2005 TRUSS DESIGN ENGINEER:
THOMAS E. MILLER PE 56877, BYRON K. ANDERSON PE 60987
STRUCTURAL ENGINEERING AND INSPECTIONS, INC. EB 9196
16105 N. FLORIDA AVE. STE B, LUTZ, FL 33549

Job	Truss	Truss Type	Qty	Ply	BRYAN ZECHER- LOT30-1 CSE
L136745	T18G	DROP TC GABLE	1	1	Job Reference (optional)

Dwg.#101705149

Builders FirstSource, Lake City, Fl 32055

6.200 s Jul 13 2005 MiTek Industries, Inc. Fri Oct 14 14:13:40 2005 Page 1

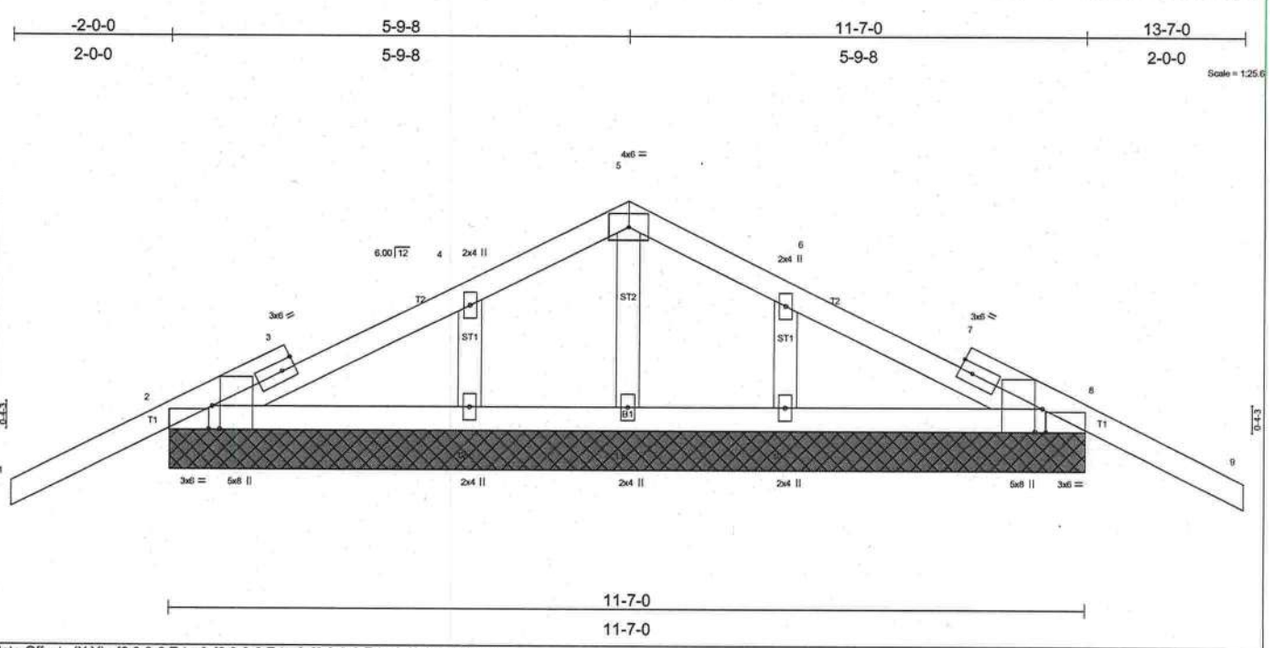

Plate Offsets (X,Y): [2:0-3-8,Edge], [2:0-0-8,Edge], [8:0-3-8,Edge], [8:0-0-8,Edge]

LOADING (psf)		SPACING	2-0-0	CSI		DEFL	in	(loc)	l/defl	L/d	PLATES	GRIP
TCLL	20.0	Plates Increase	1.25	TC	0.49	Vert(LL)	-0.03	9	n/r	120	MT20	244/190
TCDL	7.0	Lumber Increase	1.25	BC	0.07	Vert(TL)	-0.05	9	n/r	90		
BCLL	10.0	Rep Stress Incr	NO	WB	0.06	Horz(TL)	0.00	8	n/a	n/a		
BCDL	5.0	Code FBC2004/TPI2002		(Matrix)							Weight: 54 lb	

LUMBER
TOP CHORD 2 X 4 SYP No.2
BOT CHORD 2 X 4 SYP No.2
OTHERS 2 X 4 SYP No.3

BRACING
TOP CHORD Structural wood sheathing directly applied or 10-0-0 oc purlins.
BOT CHORD Rigid ceiling directly applied or 6-0-0 oc bracing.

REACTIONS (lb/size) 2=502/11-7-0, 8=502/11-7-0, 11=259/11-7-0, 12=431/11-7-0, 10=431/11-7-0
Max Horz 2=74(load case 5)
Max Uplift2=-290(load case 5), 8=-301(load case 6), 11=-49(load case 5), 12=-147(load case 5), 10=-151(load case 6)
Max Grav 2=505(load case 9), 8=505(load case 10), 11=259(load case 1), 12=434(load case 9), 10=434(load case 10)

FORCES (lb) - Maximum Compression/Maximum Tension
TOP CHORD 1-2=-25/99, 2-3=-23/32, 3-4=-34/158, 4-5=0/114, 5-6=0/114, 6-7=-15/158, 7-8=-11/32, 8-9=-25/99
BOT CHORD 2-12=-70/116, 11-12=-70/116, 10-11=-70/116, 8-10=-70/116
WEBS 5-11=-231/63, 4-12=-330/251, 6-10=-330/251

NOTES
1) Unbalanced roof live loads have been considered for this design.
2) Wind: ASCE 7-02; 110mph (3-second gust); h=20ft; TCDL=4.2psf; BCDL=3.0psf; Category II; Exp B; enclosed; MWFRS gable end zone and C-C Exterior(2) zone; Lumber DOL=1.60 plate grip DOL=1.60. This truss is designed for C-C for members and forces, and for MWFRS for reactions specified.
3) Truss designed for wind loads in the plane of the truss only. For studs exposed to wind (normal to the face), see MiTek "Standard Gable End Detail"
4) Gable requires continuous bottom chord bearing.
5) Gable studs spaced at 2-0-0 oc.
6) Provide mechanical connection (by others) of truss to bearing plate capable of withstanding 290 lb uplift at joint 2, 301 lb uplift at joint 8, 49 lb uplift at joint 11, 147 lb uplift at joint 12 and 151 lb uplift at joint 10.
7) In the LOAD CASE(S) section, loads applied to the face of the truss are noted as front (F) or back (B).

LOAD CASE(S) Standard
1) Regular: Lumber Increase=1.25, Plate Increase=1.25
Uniform Loads (plf)
Vert: 1-5=-114(F=-60), 5-9=-114(F=-60), 2-8=-30

OCTOBER 17,2005 TRUSS DESIGN ENGINEER:
THOMAS E. MILLER PE 56877, BYRON K. ANDERSON PE 60987
STRUCTURAL ENGINEERING AND INSPECTIONS, INC. EB 9196
16105 N. FLORIDA AVE. STE B, LUTZ, FL 33549

Symbols

PLATE LOCATION AND ORIENTATION

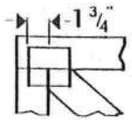

• Center plate on joint unless dimensions indicate otherwise. Dimensions are in inches. Apply plates to both sides of truss and securely seat.

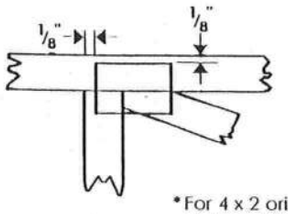

• For 4 x 2 orientation, locate plates 1/8" from outside edge of truss and vertical web.

• This symbol indicates the required direction of slots in connector plates.

PLATE SIZE

4 x 4

The first dimension is the width perpendicular to slots. Second dimension is the length parallel to slots.

LATERAL BRACING

Indicates location of required continuous lateral bracing.

BEARING

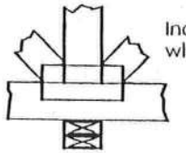

Indicates location of joints at which bearings (supports) occur.

Numbering System

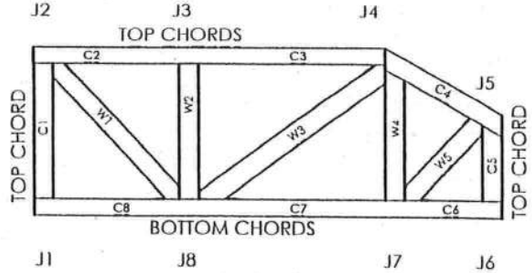

JOINTS AND CHORDS ARE NUMBERED CLOCKWISE AROUND THE TRUSS STARTING AT THE LOWEST JOINT FARTHEST TO THE LEFT.

WEBS ARE NUMBERED FROM LEFT TO RIGHT

CONNECTOR PLATE CODE APPROVALS

BOCA	96-31, 96-67
ICBO	3907, 4922
SBCCI	9667, 9432A
WISC/DILHR	960022-W, 970036-N
NER	561

MiTek Engineering Reference Sheet: MII-7473

General Safety Notes

Failure to Follow Could Cause Property Damage or Personal Injury

1. Provide copies of this truss design to the building designer, erection supervisor, property owner and all other interested parties.
2. Cut members to bear tightly against each other.
3. Place plates on each face of truss at each joint and embed fully. Avoid knots and wane at joint locations.
4. Unless otherwise noted, locate chord splices at ¼ panel length (± 6" from adjacent joint.)
5. Unless otherwise noted, moisture content of lumber shall not exceed 19% at time of fabrication.
6. Unless expressly noted, this design is not applicable for use with fire retardant or preservative treated lumber.
7. Camber is a non-structural consideration and is the responsibility of truss fabricator. General practice is to camber for dead load deflection.
8. Plate type, size and location dimensions shown indicate minimum plating requirements.
9. Lumber shall be of the species and size, and in all respects, equal to or better than the grade specified.
10. Top chords must be sheathed or purlins provided at spacing shown on design.
11. Bottom chords require lateral bracing at 10 ft. spacing, or less, if no ceiling is installed, unless otherwise noted.
12. Anchorage and / or load transferring connections to trusses are the responsibility of others unless shown.
13. Do not overload roof or floor trusses with stacks of construction materials.
14. Do not cut or alter truss member or plate without prior approval of a professional engineer.
15. Care should be exercised in handling, erection and installation of trusses.

Residential System Sizing Calculation

Summary

Model Home

Project Title:
TheSamuelModel

Class 3 Rating
Registration No. 0
Climate: North

11/3/2005

Location for weather data: Gainesville - Defaults: Latitude(29) Temp Range(M)
Humidity data: Interior RH (50%) Outdoor wet bulb (77F) Humidity difference(51gr.)

Winter design temperature	31	F	Summer design temperature	93	F
Winter setpoint	70	F	Summer setpoint	75	F
Winter temperature difference	39	F	Summer temperature difference	18	F
Total heating load calculation	**29218**	**Btuh**	**Total cooling load calculation**	**27764**	**Btuh**
Submitted heating capacity	% of calc	Btuh	Submitted cooling capacity	% of calc	Btuh
Total (Electric Heat Pump)	116.4	34000	Sensible (SHR = 0.75)	125.6	25500
Heat Pump + Auxiliary(0.0kW)	116.4	34000	Latent	113.9	8500
			Total (Electric Heat Pump)	122.5	34000

WINTER CALCULATIONS

Winter Heating Load (for 1500 sqft)

Load component			Load	
Window total	215	sqft	6085	Btuh
Wall total	1293	sqft	3750	Btuh
Door total	60	sqft	921	Btuh
Ceiling total	1754	sqft	2280	Btuh
Floor total	196	ft	6194	Btuh
Infiltration	200	cfm	8597	Btuh
Subtotal			**27827**	**Btuh**
Duct loss			1391	Btuh
TOTAL HEAT LOSS			**29218**	**Btuh**

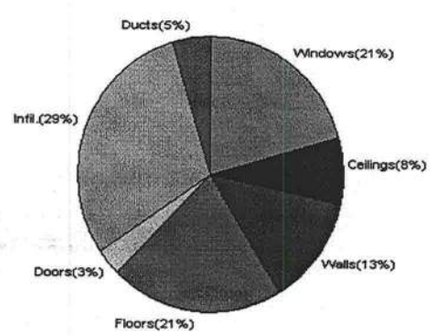

SUMMER CALCULATIONS

Summer Cooling Load (for 1500 sqft)

Load component			Load	
Window total	215	sqft	6757	Btuh
Wall total	1293	sqft	2129	Btuh
Door total	60	sqft	608	Btuh
Ceiling total	1754	sqft	2491	Btuh
Floor total			0	Btuh
Infiltration	175	cfm	3472	Btuh
Internal gain			3000	Btuh
Subtotal(sensible)			**18457**	**Btuh**
Duct gain			1846	Btuh
Total sensible gain			**20303**	**Btuh**
Latent gain(infiltration)			6081	Btuh
Latent gain(internal)			1380	Btuh
Total latent gain			**7461**	**Btuh**
TOTAL HEAT GAIN			**27764**	**Btuh**

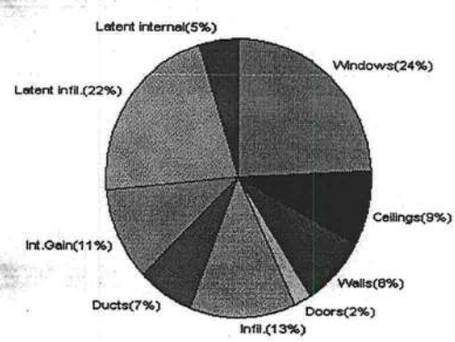

EnergyGauge® System Sizing based on ACCA Manual J.
PREPARED BY: _____
DATE: 11/3/05

System Sizing Calculations - Winter

Residential Load - Component Details

Model Home

Project Title:
TheSamuelModel

Class 3 Rating
Registration No. 0
Climate: North

Reference City: Gainesville (Defaults) Winter Temperature Difference: 39.0 F

11/3/2005

Window	Panes/SHGC/Frame/U	Orientation	Area X	HTM=	Load
1	2, Clear, Metal, DEF	N	45.0	28.3	1274 Btuh
2	2, Clear, Metal, DEF	NE	10.0	28.3	283 Btuh
3	2, Clear, Metal, DEF	N	45.0	28.3	1274 Btuh
4	2, Clear, Metal, DEF	NW	10.0	28.3	283 Btuh
5	2, Clear, Metal, DEF	E	3.0	28.3	85 Btuh
6	2, Clear, Metal, DEF	S	6.0	28.3	170 Btuh
7	2, Clear, Metal, DEF	S	30.0	28.3	849 Btuh
8	2, Clear, Metal, DEF	S	30.0	28.3	849 Btuh
9	2, Clear, Metal, DEF	W	6.0	28.3	170 Btuh
10	2, Clear, Metal, DEF	W	30.0	28.3	849 Btuh
	Window Total		215		6085 Btuh
Walls	Type	R-Value	Area X	HTM=	Load
1	Frame - Adjacent	13.0	172	1.6	275 Btuh
2	Frame - Exterior	13.0	1121	3.1	3475 Btuh
	Wall Total		1293		3750 Btuh
Doors	Type		Area X	HTM=	Load
1	Insulated - Exter		20	18.3	367 Btuh
2	Insulated - Exter		20	18.3	367 Btuh
3	Insulated - Adjac		20	9.4	188 Btuh
	Door Total		60		921Btuh
Ceilings	Type	R-Value	Area X	HTM=	Load
1	Under Attic	30.0	1754	1.3	2280 Btuh
	Ceiling Total		1754		2280Btuh
Floors	Type	R-Value	Size X	HTM=	Load
1	Slab-On-Grade Edge Insul	0	196.0 ft(p)	31.6	6194 Btuh
	Floor Total		196		6194 Btuh
Infiltration	Type	ACH X	Building Volume	CFM=	Load
	Natural	0.80	15000(sqft)	200	8597 Btuh
	Mechanical			0	0 Btuh
	Infiltration Total			200	8597 Btuh

Totals for Heating	**Subtotal**	**27827 Btuh**
	Duct Loss(using duct multiplier of 0.05)	**1391 Btuh**
	Total Btuh Loss	**29218 Btuh**

Manual J Winter Calculations

Residential Load - Component Details (continued)

Model Home

Project Title:
TheSamuelModel

Class 3 Rating
Registration No. 0
Climate: North

,

11/3/2005

Key: Window types (SHGC - Shading coefficient of glass as SHGC numerical value or as clear or tint)
(Frame types - metal, wood or insulated metal)
(U - Window U-Factor or 'DEF' for default)
(HTM - ManualJ Heat Transfer Multiplier)
Key: Floor size (perimeter(p) for slab-on-grade or area for all other floor types)

System Sizing Calculations - Summer

Residential Load - Component Details

Model Home

Project Title:
TheSamuelModel

Class 3 Rating
Registration No. 0
Climate: North

Reference City: Gainesville (Defaults) Summer Temperature Difference: 18.0 F 11/3/2005

Window	Type Panes/SHGC/U/InSh/ExSh	Ornt	Overhang Len	Overhang Hgt	Window Area(sqft) Gross	Shaded	Unshaded	HTM Shaded	HTM Unshaded	Load
1	2, Clear, DEF, N, N	N	1.5	5.5	45.0	0.0	45.0	22	22	990 Btuh
2	2, Clear, DEF, N, N	NE	14	7	10.0	0.0	10.0	22	50	500 Btuh
3	2, Clear, DEF, N, N	N	11.5	5.25	45.0	0.0	45.0	22	22	990 Btuh
4	2, Clear, DEF, N, N	NW	8	7	10.0	0.0	10.0	22	50	500 Btuh
5	2, Clear, DEF, N, N	E	1.5	1.5	3.0	2.5	0.5	22	72	92 Btuh
6	2, Clear, DEF, N, N	S	9	7.5	6.0	6.0	0.0	22	37	132 Btuh
7	2, Clear, DEF, N, N	S	1.5	5.5	30.0	30.0	0.0	22	37	660 Btuh
8	2, Clear, DEF, N, N	S	1.5	8	30.0	30.0	0.0	22	37	660 Btuh
9	2, Clear, DEF, N, N	W	1.5	3.5	6.0	0.5	5.5	22	72	408 Btuh
10	2, Clear, DEF, N, N	W	1.5	5.5	30.0	6.7	23.3	22	72	1825 Btuh
	Window Total				215					6757 Btuh

Walls	Type	R-Value	Area	HTM	Load
1	Frame - Adjacent	13.0	172.0	1.0	179 Btuh
2	Frame - Exterior	13.0	1121.0	1.7	1951 Btuh
	Wall Total		1293.0		2129 Btuh

Doors	Type	Area	HTM	Load
1	Insulated - Exter	20.0	10.1	203 Btuh
2	Insulated - Exter	20.0	10.1	203 Btuh
3	Insulated - Adjac	20.0	10.1	203 Btuh
	Door Total	60.0		608 Btuh

Ceilings	Type/Color	R-Value	Area	HTM	Load
1	Under Attic/Dark	30.0	1754.0	1.4	2491 Btuh
	Ceiling Total		1754.0		2491 Btuh

Floors	Type	R-Value	Size	HTM	Load
1	Slab-On-Grade Edge Insulation	0.0	196.0 ft(p)	0.0	0 Btuh
	Floor Total		196.0		0 Btuh

Infiltration	Type	ACH	Volume	CFM=	Load
	Natural	0.70	15000	175.4	3472 Btuh
	Mechanical			0	0 Btuh
	Infiltration Total			175	3472 Btuh

Internal gain	Occupants		Btuh/occupant		Appliance	Load
	6	X	300	+	1200	3000 Btuh

Manual J Summer Calculations

Residential Load - Component Details (continued)

Model Home

Project Title:
TheSamuelModel

Class 3 Rating
Registration No. 0
Climate: North

11/3/2005

Totals for Cooling	Subtotal	18457	Btuh
	Duct gain(using duct multiplier of 0.10)	1846	Btuh
	Total sensible gain	20303	Btuh
	Latent infiltration gain (for 51 gr. humidity difference)	6081	Btuh
	Latent occupant gain (6 people @ 230 Btuh per person)	1380	Btuh
	Latent other gain	0	Btuh
	TOTAL GAIN	27764	Btuh

Key: Window types (SHGC - Shading coefficient of glass as SHGC numerical value or as clear or tint)
(U - Window U-Factor or 'DEF' for default)
(InSh - Interior shading device: none(N), Blinds/Daperies(B) or Roller Shades(R))
(ExSh - Exterior shading device: none(N) or numerical value)
(Ornt - compass orientation)

Anthony Power Header®

GARAGE HEADER (84)

$26F_b$ - 1.9E

ENGINEERED WOOD SECTION PROPERTIES AND LOAD CAPACITIES

ALLOWABLE DESIGN STRESSES (PSI):

FLEXURAL STRESS (F_b) =	2600
COMPRESSION PERP. TO GRAIN ($F_{c\perp}$) =	740
HORIZONTAL SHEAR (F_v) =	225
MODULUS OF ELASTICITY (MOE) =	1.9×10^6

[illegible]							
[illegible]	7.7	9.0	10.4	11.7	12.9	14.2	15.5
[illegible]	326	514	789	1115	1521	2014	2604
[illegible]	8865	12015	15996	20145	24772	29877	35460
[illegible]	3908	4550	5250	5892	6533	7175	7817

NOTES:

1. Beam weights are based on 38 pcf.
2. Moment capacities are based on a span of 21 feet and must be modified for other spans.
3. Flexural Stress, F_b, shall be modified by the Volume Factor, C_v, as outlined in AITC 117 - Design 1993 and the NDS for Wood Construction 1997.
4. Allowable design properties and load capacities are based on a load duration of 100 percent and dry use conditions.
5. The AITC NER 466 was used in calculating the above allowable design stresses for Power Header®.

GARAGE HEADER COMPARISONS

[illegible]						
[illegible]	810 / 540	3-1/2" x 8-3/8"	3-1/2" x 9-5/8"	3-1/2" x 9"	3-1/2" x 9-1/4"	3-1/2" x 11-1/4"
[illegible]	990 / 720	3-1/2" x 9-3/4"	3-1/2" x 9-5/8"	3-1/2" x 10-1/2"	3-1/2" x 9-1/4"	3-1/2" x 11-1/4"
[illegible]	640 / 400	3-1/2" x 12-5/8"	3-1/2" x 13-3/4"	3-1/2" x 13-1/2"	3-1/2" x 14"	3-1/2" x 14"
[illegible]	765 / 510	3-1/2" x 14"	3-1/2" x 15-1/8"	3-1/2" x 15"	3-1/2" x 14"	3-1/2" x 16"
[illegible]	750 / 480	3-1/2" x 15-3/8"	3-1/2" x 16-1/2"	3-1/2" x 16-1/2"	3-1/2" x 16"	3-1/2" x 18"
[illegible]	900 / 600	3-1/2" x 16-3/4"	3-1/2" x 17-7/8"	3-1/2" x 18"	3-1/2" x 16"	—

For more information on Power Header®, or other laminated structural products from Anthony Forest Products Company please call 1-800-221-2326 or FAX at 870-862-6502.

Power Header® is a trademark of
Anthony Forest Products Company
Post Office Box 1877 • El Dorado, Arkansas 71731
Internet address: http:// www.anthonyforest.com
e-mail: info@anthonyforest.com

Distributed by:

WOODFORD PLYWOOD, INC.
"Structural Wood Products"
11960 West Beaver Street
Jacksonville, Florida 32220
(904) 695-9080
(800) 447-6566
FAX (904) 695-9160

Anthony POWER HEADER®

$26F_b$ - 1.9E

3-1/2" WIDTH GARAGE HEADER PLF CAPACITY

844	896		1216		1573							
161	207	254	330	390	510	552	669	752	824			
114	145	180	231	277	359	391	510	534	653	707	789	

844	975		1322								
161	207	254	330	390	510	552	724	752	897		
114	145	180	231	277	359	391	510	534	699	693	

562	778	888	1056	1363	1367		1582					
107	153	169	245	260	380	368	540	501	715	664	864	840
76	107	120	171	185	267	261	380	356	521	471	684	609	813

NOTES:

1. Values shown are the maximum uniform loads in pounds per lineal foot (PLF) that can be applied to the header. Header weight has been subtracted from the allowable total load.
2. Tables are based on simple span uniform load conditions using a design span equal to the center-to-center of bearing. Non-shaded areas are based on 3" of bearing at each support, shaded areas on 4.5" of bearing, and shaded & outlined areas on 6" of bearing at supports.
3. Headers are assumed to be loaded on the top edge with continuous lateral support along compression edge.
4. When no live load is listed, total load controls.
5. Deflection limits are listed within the PLF table heading.

GARAGE HEADER SIZING USING PLF TABLES:

To size a garage header supporting roof only, determine the total load & live load in pounds per lineal foot (PLF). Check the appropriate PLF table for a header supporting roof loads only (125% Non-Snow vs. 115% Snow) and select a member with a total load and live load capacity which meets or exceeds the design load for the rough opening size. For a garage header supporting roof, wall, and floor framing, determine the total load and live load in pounds per lineal foot (PLF). Select a header size from the roof, wall, and floor table (100% load duration) which has a total load <u>and</u> live load capacity equal to or greater than the design load for the appropriate rough opening.

XX
Glazed Inswing Unit

COP-WL-JH4142-02

WOOD-EDGE STEEL DOORS

APPROVED ARRANGEMENT:

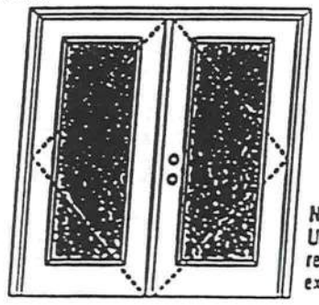

Warnock Hersey

Test Data Review Certificate #3026447A and CCP/Test Report Validation Matrix #3026447A-001 provides additional information - available from the ITS/WH website (www.itsweb.com), the Masonite website (www.masonite.com) or the Masonite technical center

Note:
Units of other sizes are covered by this report as long as the panels used do not exceed 3'0" x 6'8".

Double Door
Minimum unit size - 6'3" x 5'3"

Design Pressure
+40.5/-40.5
Unit must meet special structural design criteria

Large Missile Impact Resistance
Hurricane protective system (shutters) is REQUIRED

Actual design pressure and impact resistance requirements to be specified during design and determined based on building location, size of door, building doors specify the actual requirements

MINIMUM ASSEMBLY DETAIL:

Compliance requires that minimum assembly details have been followed - see MAO-WL-MAC000-02 and MAO-WL-MAC041-02

MINIMUM INSTALLATION DETAIL:

Compliance requires that minimum installation details have been followed - see MAO-WL-MAC000-02

APPROVED DOOR STYLES:

1/4 GLASS:

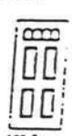
100 Series


123, 125 Series


126 Series

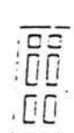
530 Series

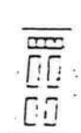
[illegible] Series

1/2 GLASS:


105 Series*


105, 160 Series*

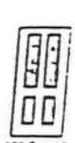
129 Series*

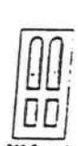
200 Series*

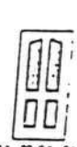
12 R.L, 23 R.L, 24 R.L Series*


107 Series*


108 Series


304 Series

*This glass kit may also be used in the following door styles: 5-panel, 5-panel with scroll, Eyebrow 5-panel, Eyebrow 5-panel with scroll.

Johnson EntrySystems

June 17, 2002
Our continuing program of product improvement makes specifications, design and products subject to change without notice

PREMDOOR Premium Quality Doors

Exclusively from Masonite
Masonite International Corporation

XX
Glazed Inswing Unit

COP-WL-JH4142-02

WOOD-EDGE STEEL DOORS

APPROVED DOOR STYLES:

3/4 GLASS:


404 Series


410 Series


450 Series

FULL GLASS:


109 Series


114, 120, 122 Series


152 Series


149 Series


300 Series

CERTIFIED TEST REPORTS:

NCTL 210-1897-7, 8, 9, 10, 11, 12; NCTL 210-1861-4, 5, 6, 10, 11, 12, NCTL 210-2185-1, 2, 3

Certifying Engineer and License Number: Barry D. Portney, P.E. / 16253

Unit Tested in Accordance with Miami-Dade BCCO PA202.

Evaluation report NCTL-210-2794-1

Door panels constructed from 26-gauge 0.017" thick steel skins. Both stiles constructed from wood. Top end rails constructed of 0.041" steel. Bottom end rails constructed of 0.021" steel. Interior cavity of slab filled with rigid polyurethane foam core. Slab glazed with insulated glass mounted in a rigid plastic lip lite surround.

Frame constructed of wood with an extruded aluminum threshold.

PRODUCT COMPLIANCE LABELING:

TESTED IN
ACCORDANCE WITH
MIAMI-DADE BCCO PA202

COMPANY NAME
CITY, STATE

To the best of my knowledge and ability the above side-hinged exterior door unit conforms to the requirements of the 2001 Florida Building Code, Chapter 17 (Structural Tests and Inspections).

Kurt L Balthazor

State of Florida, Professional Engineer
Kurt Balthazor, P.E. – License Number 56533

Warnock Hersey

Test Data Review Certificate #3025447A and COP/Test Report Validation Matrix #3025447A-001 provides additional information - available from the ITS/WH website (www.itsamtac.com), the Masonite website (www.masonite.com) or the Masonite technical center.

Johnson
EntrySystems

June 17, 2002

PREMDOOR California

Exclusively from Masonite
Masonite International Corporation

X
Opaque Inswing Unit

COP-WL-JH4101-02

WOOD-EDGE STEEL DOORS

APPROVED ARRANGEMENT:

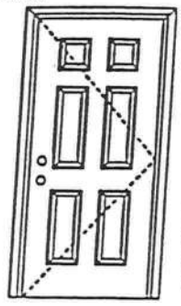

Warnock Hersey

Test Data Review Certificate #3026447A and COP/Test Report Validation Matrix #3026447A-001 provides additional information - available from the ITS/WH website (www.etsemko.com), the Masonite website (www.masonite.com) or the Masonite technical center

Note:
Units of other sizes are covered by this report as long as the panel used does not exceed 3'0" x 6'8".

Single Door
Maximum unit size = 3'0" x 6'8"

Design Pressure
+66.0/-66.0
limited water unless special threshold design is used

Large Missile Impact Resistance
Hurricane protective system (shutters) is NOT REQUIRED.

Actual design pressure and impact resistant requirements for a specific building design and geographic location is determined by ASCE 7 national, state or local building codes specify the edition required

MINIMUM ASSEMBLY DETAIL:

Compliance requires that minimum assembly details have been followed – see MAD-WL-MAD001-02

MINIMUM INSTALLATION DETAIL:

Compliance requires that minimum installation details have been followed – see MID-WL-MID001-02

APPROVED DOOR STYLES:

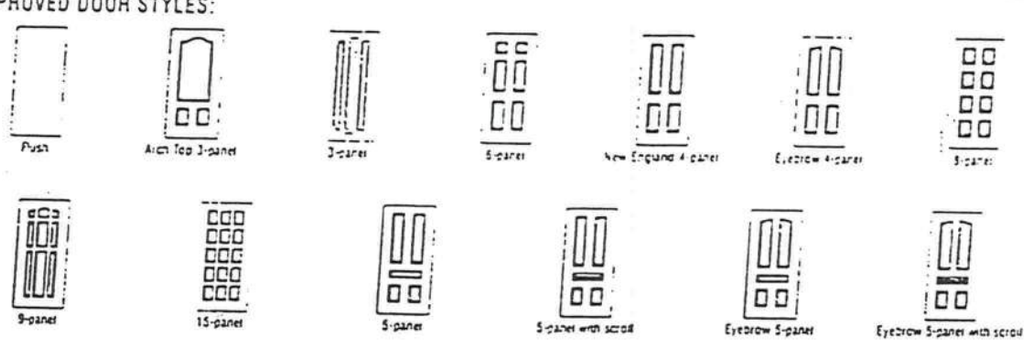

Johnson EntrySystems

June 17, 2002
Our continuing program of product improvement makes specifications, design and product detail subject to change without notice

PREMDOR Collection Premium Quality Doors

Exclusively from Masonite
Masonite International Corporation

X
Opaque Inswing Unit

COP-WL-JH4101-02

WOOD-EDGE STEEL DOORS

CERTIFIED TEST REPORTS:

NCTL 210-2185-1, 2, 3

Certifying Engineer and License Number: Barry D. Portney, P.E. / 16258.

Unit Tested in Accordance with Miami-Dade BCCO PA201, PA202 and PA203.

Door panels constructed from 26-gauge 0.017" thick steel skins. Both stiles constructed from wood. Top end rails constructed of 0.041" steel. Bottom end rails constructed of 0.021" steel. Interior cavity of slab filled with rigid polyurethane foam core.

Frame constructed of wood with an extruded aluminum threshold.

PRODUCT COMPLIANCE LABELING:

TESTED IN ACCORDANCE WITH
MIAMI-DADE BCCO
PA201, PA202 & PA203

COMPANY NAME
CITY STATE

To the best of my knowledge and ability the above side-hinged exterior door unit conforms to the requirements of the 2001 Florida Building Code, Chapter 17 (Structural Tests and Inspections).

Kurt L Balthazor

State of Florida, Professional Engineer
Kurt Balthazor, P.E. – License Number 56533

Warnock Hersey

Test Data Review Certificate #3026447A and COP/Test Report Validation Matrix #3026447A-001 provides additional information - available from the ITS/WH website (www.itsweb.com), the Masonite website (www.masonite.com) or the Masonite technical center.

Johnson EntrySystems

June 17, 2002
Our continuing program of product improvement makes specifications, design and product data subject to change without notice.

PREMDOOR Premium Quality Doors

Exclusively from Masonite
Masonite International Corporation

WINDOWS

AAMA/NWWDA 101/I.S.2-97
TEST REPORT SUMMARY

Rendered to:

MI HOME PRODUCTS, INC.

SERIES/MODEL: 650 Fin
TYPE: Aluminum Single Hung Window

Title of Test	Results
Rating	H-R40 52 x 72
Overall Design Pressure	+45.0 psf -47.2 psf
Operating Force	11 lb max.
Air Infiltration	0.13 cfm/ft²
Water Resistance	6.00 psf
Structural Test Pressure	+67.5 psf -70.8 psf
Deglazing	Passed
Forced Entry Resistance	Grade 10

Reference should be made to Report No. 01-41134.01 dated 03/26/02 for complete test specimen description and data.

For ARCHITECTURAL TESTING, INC.

Mark A. Hess, Technician

MAH:nlb

Allen N. Reeves
1 APRIL 2002

ALLEN N. REEVES
LICENSE
NO. 18054
STATE OF
FLORIDA
PROFESSIONAL ENGINEER

Architectural Testing

AAMA/NWWDA 101/I.S.2-97 TEST REPORT

Rendered to

MI HOME PRODUCTS, INC.
650 West Market Street
P.O. Box 370
Gratz, Pennsylvania 17030-0370

Report No: 01-41134.01
Test Date: 03/07/02
Report Date: 03/26/02
Expiration Date: 03/07/06

Project Summary: Architectural Testing, Inc. (ATI) was contracted by MI Home Products, Inc. to perform tests on Series/Model 650 Fin, aluminum single hung window at their facility located in Elizabethville, Pennsylvania. The samples tested successfully met the performance requirements for a H-R40 52 x 72 rating.

Test Specification: The test specimen was evaluated in accordance with AAMA/NWWDA 101/I.S.2-97, *Voluntary Specifications for Aluminum, Vinyl (PVC) and Wood Windows and Glass Doors.*

Test Specimen Description

Series/Model: 650 Fin

Type: Aluminum Single Hung Window

Overall Size: 4' 4-1/4" wide by 6' 0-3/8" high

Active Sash Size: 4' 1-3/4" wide by 3' 0-5/8" high

Daylight Opening Size: 3' 11-3/8" wide by 2' 9-1/2" high

Screen Size: 4' 0-1/4" wide by 2' 11-1/8" high

Finish: All aluminum was white.

Glazing Details: The active and fixed lites utilized 5/8" thick, sealed insulating glass constructed from two sheets of 1/8" thick, clear annealed glass and a metal reinforced butyl spacer system. The active sash was channel glazed utilizing a flexible vinyl wrap around gasket. The fixed lite was interior glazed against double-sided adhesive foam tape and secured with PVC snap-in glazing beads.

130 Derry Court
York, PA 17402-9405
phone: 717.764.7700
fax: 717.764.4129
www.archtest.com

Allen M. Reeves
1 APRIL 2002

REEVES
No. 19354
STATE OF FLORIDA
PROFESSIONAL ENGINEER

Test Specimen Description: (Continued)

Weatherstripping:

Description	Quantity	Location
0.230" high by 0.270" backed polypile with center fin	1 Row	Fixed meeting rail
0.250" high by 0.187" backed polypile with center fin	2 Rows	Active sash stiles
1/2" x 1/2" dust plug	4 Pieces	Active sash, top and bottom of stiles
1/4" foam-filled vinyl bulb seal	1 Row	Active sash, bottom rail

Frame Construction: The frame was constructed of extruded aluminum with coped, butted, and sealed corners fastened with two #8 x 1" screws through the head and sill into each jamb screw boss. End caps were utilized on the ends of the fixed meeting rail and secured with two 1-1/4" screws per cap. Meeting rail was secured to the frame utilizing two 1-1/4" screws.

Sash Construction: The sash was constructed of extruded aluminum with coped, butted, and sealed corners fastened with two #8 x 1-1/2" screws through the rails into each jamb screw boss.

Screen Construction: The screen was constructed from roll-formed aluminum with keyed corners. The fiberglass mesh was secured with a flexible spline.

Hardware:

Description	Quantity	Location
Metal cam lock with keeper		Midspan, active meeting rail with keeper adjacent on fixed meeting rail
Plastic tilt latch	2	Active sash, meeting rail ends
Metal tilt pin	2	Active sash, bottom rail ends
Balance assembly	2	One in each jamb
Screen plunger	2	4" from rail ends on top rail

ALLEN H. REEVES, III
CERTIFICATE NO. 13[illegible]
STATE OF FLORIDA
PROFESSIONAL ENGINEER

Allen H. Reeves
1 APRIL 2002

Test Specimen Description: (Continued)

Weatherstripping:

Description	Quantity	Location
0.230" high by 0.270" backed polypile with center fin	1 Row	Fixed meeting rail
0.250" high by 0.187" backed polypile with center fin	2 Rows	Active sash stiles
1/2" x 1/2" dust plug	4 Pieces	Active sash, top and bottom of stiles
1/4" foam-filled vinyl bulb seal	1 Row	Active sash, bottom rail

Frame Construction: The frame was constructed of extruded aluminum with coped, butted, and sealed corners fastened with two #8 x 1" screws through the head and sill into each jamb screw boss. End caps were utilized on the ends of the fixed meeting rail and secured with two 1-1/4" screws per cap. Meeting rail was secured to the frame utilizing two 1-1/4" screws.

Sash Construction: The sash was constructed of extruded aluminum with coped, butted, and sealed corners fastened with two #8 x 1-1/2" screws through the rails into each jamb screw boss.

Screen Construction: The screen was constructed from roll-formed aluminum with keyed corners. The fiberglass mesh was secured with a flexible spline.

Hardware:

Description	Quantity	Location
Metal cam lock with keeper		Midspan, active meeting rail with keeper adjacent on fixed meeting rail
Plastic tilt latch	2	Active sash, meeting rail ends
Metal tilt pin	2	Active sash, bottom rail ends
Balance assembly	2	One in each jamb
Screen plunger	2	4" from rail ends on top rail

ALLEN H. REEVES, JR. CERTIFICATE NO. 13[illegible] STATE OF FLORIDA PROFESSIONAL ENGINEER

Allen H. Reeves
1 APRIL 2002

Test Specimen Description: (Continued)

Drainage: Sloped sill

Reinforcement: No reinforcement was utilized.

Installation: The test specimen was installed into a 2 x 8 #2 Spruce-Pine-Fir wood test buck with #8 x 1-5/8" drywall screws every 8" on center around the nail fin. Polyurethane was used as a sealant under the nail fin and around the exterior perimeter.

Test Results:

The results are tabulated as follows:

Paragraph	Title of Test - Test Method	Results	Allowed
2.2.1.6.1	Operating Force	11 lbs	30 lbs max
	Air Infiltration (ASTM E 283-91) @ 1.57 psf (25 mph)	0.13 cfm/ft^2	0.3 cfm/ft^2 max

Note #1: The tested specimen meets the performance levels specified in AAMA/NWWDA 101/I.S. 2-97 for air infiltration.

	Water Resistance (ASTM E 547-00) (with and without screen) WTP = 2.86 psf	No leakage	No leakage
2.1.4.1	Uniform Load Deflection (ASTM E 330-97) (Measurements reported were taken on the meeting rail) (Loads were held for 33 seconds)		
	@ 25.9 psf (positive)	0.42"*	0.26" max.
	@ 34.7 psf (negative)	0.43"*	0.26" max.

**Exceeds L/175 for deflection, but passes all other test requirements.*

2.1.4.2	Uniform Load Structural (ASTM E 330-97) (Measurements reported were taken on the meeting rail) (Loads were held for 10 seconds)		
	@ 38.9 psf (positive)	0.02"	0.18" max.
	@ 52.1 psf (negative)	0.02"	0.18" max.

Allen M. Reeves
1 APRIL 2002

ALLEN M. REEVES
CERTIFICATE NO. 33377
STATE OF FLORIDA
PROFESSIONAL ENGINEER

Test Specimen Description: (Continued)

Paragraph	Title of Test - Test Method	Results	Allowed
2.2.1.6.2	Deglazing Test (ASTM E 987)		
	In operating direction at 70 lbs		
	Meeting rail	0.12"/25%	0.50"/100%
	Bottom rail	0.12"/25%	0.50"/100%
	In remaining direction at 50 lbs		
	Left stile	0.06"/12%	0.50"/100%
	Right stile	0.06"/12%	0.50"/100%
	Forced Entry Resistance (ASTM F 588-97)		
	Type: A Grade: 10		
	Lock Manipulation Test	No entry	No entry
	Tests A1 through A5	No entry	No entry
	Test A7	No entry	No entry
	Lock Manipulation Test	No entry	No entry

Optional Performance

4.3	Water Resistance (ASTM E 547-00) (with and without screen) WTP = 6.00 psf	No leakage	No leakage
	Uniform Load Deflection (ASTM E 330-97) (Measurements reported were taken on the meeting rail) (Loads were held for 33 seconds)		
	@ 45.0 psf (positive)	0.47"*	0.26" max.
	@ 47.2 psf (negative)	0.46"*	0.26" max.

Exceeds L/175 for deflection, but passes all other test requirements.

	Uniform Load Structural (ASTM E 330-97) (Measurements reported were taken on the meeting rail) (Loads were held for 10 seconds)		
	@ 67.5 psf (positive)	0.05"	0.18" max.
	@ 70.8 psf (negative)	0.05"	0.18" max.

Allen M. Reuter
1 APRIL 2002

ALLEN M. REUTER
LICENSE NO. 18036
STATE OF FLORIDA
PROFESSIONAL ENGINEER

Detailed drawings, representative samples of the test specimen, and a copy of this report will be retained by ATI for a period of four years. The above results were secured by using the designated test methods and they indicate compliance with the performance requirements of the above referenced specification. This report does not constitute certification of this product, which may only be granted by the certification program administrator.

For ARCHITECTURAL TESTING, INC:

Mark A. Hess
Technician

Allen N. Reeves, P.E.
Director - Engineering Services
1 APRIL 2002

MAH:nlb
01-41134.01

ALLEN N. REEVES
CERTIFICATE NO. 13954
STATE OF FLORIDA
PROFESSIONAL ENGINEER

SHINGLES

ELK Premium Roofing

March 6, 2002

Subject: Elk Product Approval Information

All Prestique® and Capstone® products manufactured in Tuscaloosa, AL are certified under the Miami – Dade County Building Code Office (BCCO). These products also meet the requirements for the Florida Building Code since they are MD approved. The following test protocols must be passed by each of the products in order for MD product certification:

ASTM D3462
PA 100 (110 mph uplift and wind driven rain resistance)
PA 107 (Modified ASTM D3161 - 110 mph wind uplift resistance)

The nailing patterns that were used during the PA 100 and PA 107 wind test protocols for the Prestique and Capstone products are listed below. Also listed below are the Miami – Dade Notice of Acceptance Numbers (NOA).

Raised Profile, Prestique High Definition, Prestique 25, or Prestique 30 –
- PA 100 = 4 nails
- PA 107 = 5 nails
- MD NOA# = 01-1226.04

Prestique I 35 or Prestique I* –
- PA 100 = 4 nails
- PA 107 = 5 nails
- MD NOA# = 01-1226.05

Prestique Plus or Prestique Gallery Collection* –
- PA 100 = 4 nails
- PA 107 = 4 nails
- MD NOA# = 01-1226.03

Capstone*
- PA 100 = 4 Nails
- PA 107 = 4 Nails
- MD NOA# = 01-0523.01

* As per the Elk Limited Warranty, six nails are required for the Elk high wind warranty

If there are any questions please contact:

Mike Reed – Technical Manager or Daniel DeJarnette – QA Engineer
(205) 342-0287 (205) 342-0298

DIRECTIONS FOR APPLICATION

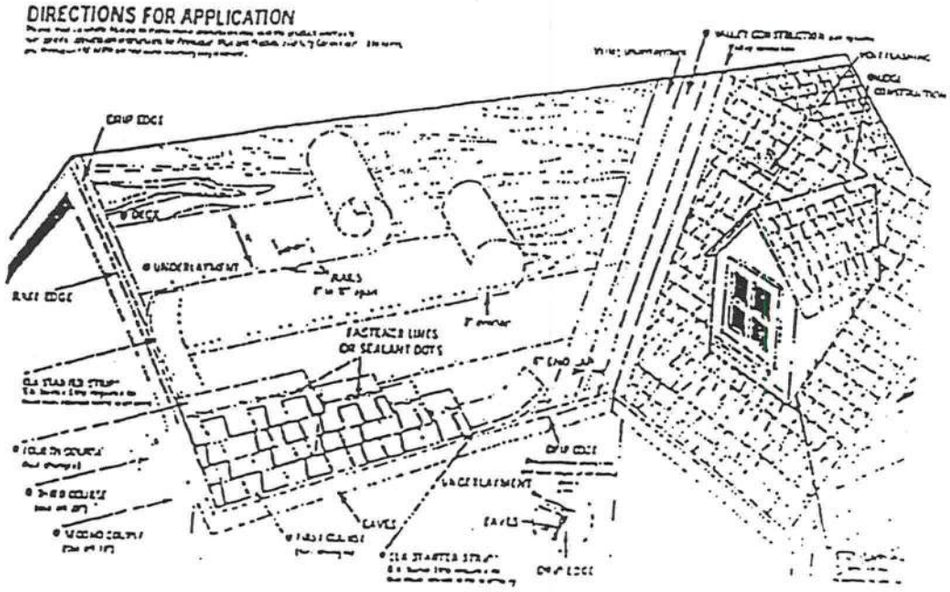

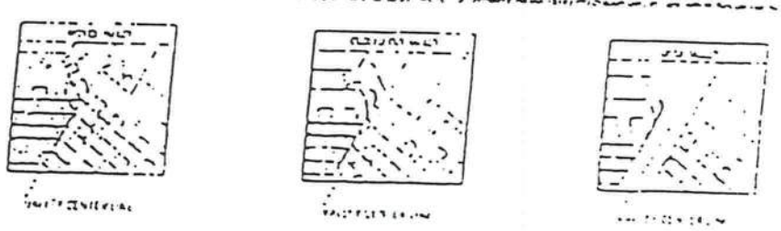

DIRECTIONS FOR APPLICATION

[illegible]

LAKE FLASHING FOR ICE DAMS (ASK A ROOFING CONTRACTOR REFER TO ARMA MANUAL OR CHECK LOCAL CODES)

[illegible]

STARTER SHINGLE COURSE

[illegible]

FIRST COURSE

[illegible]

SECOND COURSE

[illegible]

THIRD COURSE

[illegible]

FOURTH COURSE

[illegible]

VALLEY CONSTRUCTION

[illegible]

ROOF CONSTRUCTION

[illegible]

FACTRACK

[illegible]

HAZARDS APPLICATIONS

[illegible]

LIMITED WARRANTY

[illegible]

CAUTION TO WHOLESALER

[illegible]

ELK

www.elkcorp.com

ROOFING PRODUCTS SPECIFICATIONS – TUSCALOOSA, AL

PRESTIQUE®
HIGH DEFINITION®

RAISED PROFILE™

[illegible]

Product Size	[illegible]	[illegible]
Exposure	[illegible]	
Pieces/Bundle	16	
Bundles/Square	[illegible]	
Squares/Pallet	[illegible]	

Product Size	[illegible]	[illegible]
Exposure	[illegible]	
Pieces/Bundle	22	
Bundles/Square	[illegible]	
Squares/Pallet	16	

[illegible]

Product Size	[illegible]	[illegible]
Exposure	[illegible]	
Pieces/Bundle	16	
Bundles/Square	[illegible]	
Squares/Pallet	16	

HIP AND RIDGE SHINGLES

[illegible]

[illegible]

Product Size	[illegible]	[illegible]
Exposure	[illegible]	
Pieces/Bundle	22	
Bundles/Square	[illegible]	
Squares/Pallet	16	

[illegible]

[illegible]

[illegible]

[illegible]

All Prestique and Raised Profile shingles meet UL® Wind Resistant (UL 997) and Class "A" Fire Ratings (UL 790) and ASTM Specifications D 3018, Type I, D 3161, Type I, E 108 and the requirements of ASTM D 3462.

All Prestique and Raised Profile shingles meet the latest Metro Dade building code requirements.

[illegible]

[illegible]

[illegible]

SOUTHEAST &
ATLANTIC OFFICE:
800.945.5551

CORPORATE HEADQUARTERS:
800.354.7732

PLANT LOCATION:
800.945.5545

ELK
www.elkcorp.com

RUCTED WITH 5 OR MORE SECTIONS MUST BE
E STRUTS FOR THE ADDITIONAL INTERMEDIATE
ON THE THIRD SECTION.
..L SECTIONS LESS THAN 20.812" MUST BE
THE ACTUAL SECTION HEIGHT & 20.812".
1 X 5/8" LONG TYPE AB HEX HEAD METAL SCREW
4 WIND WARNINGS ISSUED.

2.

GARAGE DOORS

REVISIONS			
LETTER	DESCRIPTION	DATE	
A	REV PER EN 10130	3/06/98	
B	REV PER EN 10141	3/13/98	
C	REV PER EN 10152	4/28/98	

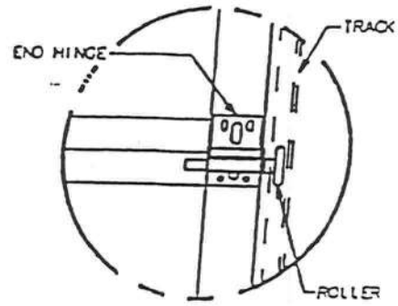

DETAIL "F"
SCALE: 1/4
(16" WIDE)

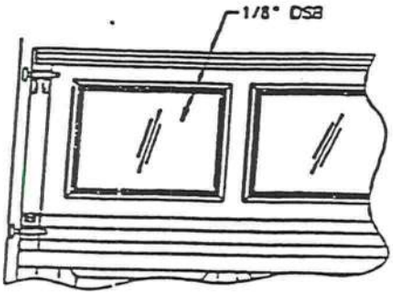

OPTIONAL WINDOW DETAIL
SCALE: 3/32

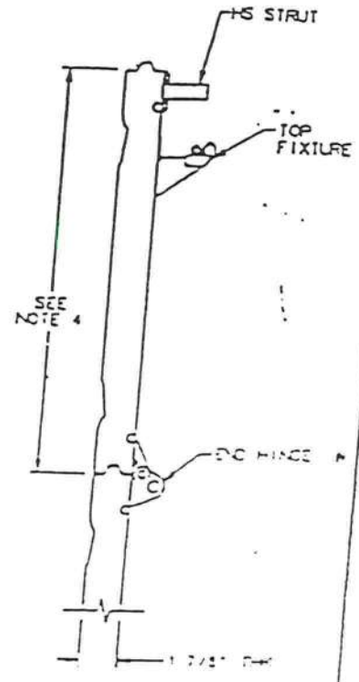

SECTION "A-A"
SCALE 1/4

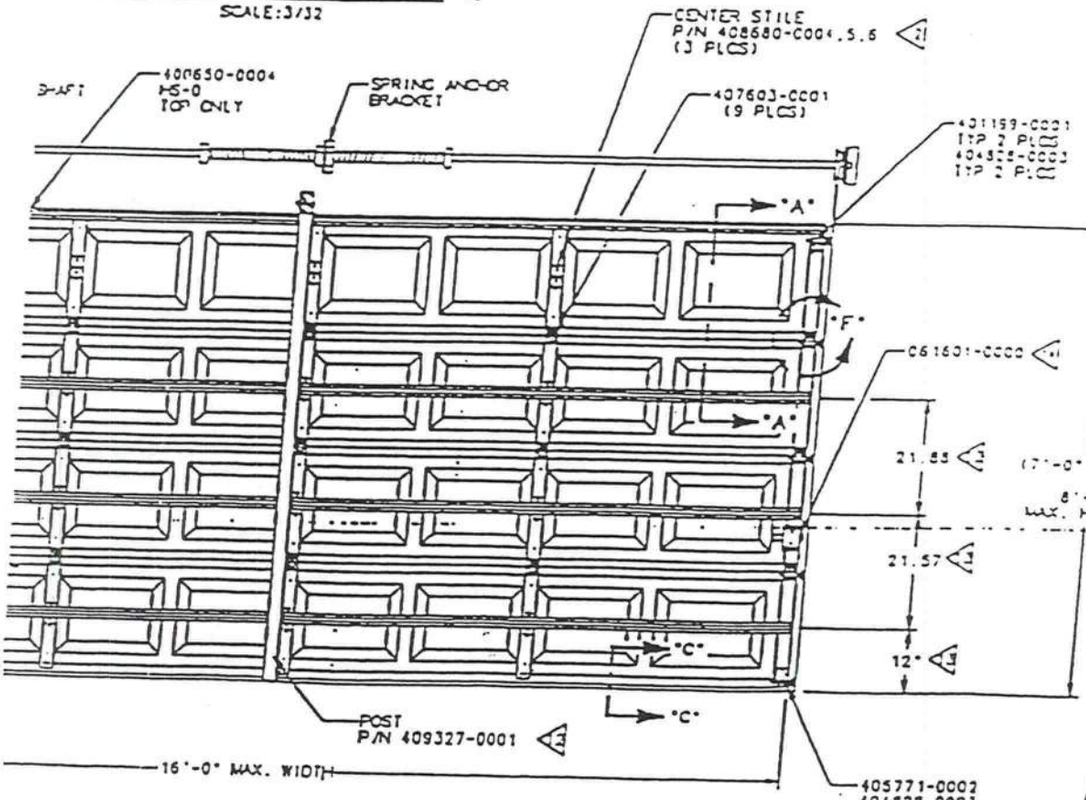

SCALE: 1/16"=1"
INTERIOR ELEVATION

DESIGN LOAD
25 PSF ±
TEST LOAD
37.5 PSF ±

10/01/01

THE DRAWING AND/OR TECHNICAL INFORMATION ON THIS SHEET IS THE PROPERTY OF SPONCAR DOOR CORPORATION OR ITS SUBSIDIARY AND IS LOANED FOR CONFIDENCE FOR ENGINEERING AND MUTUAL ASSISTANCE PURPOSES ONLY, AND MAY NOT BE REPRODUCED OR USED TO MANUFACTURE ANYTHING DISCLOSED HEREON IN WHOLE OR EXPRESS POSSESSION OF SPONCAR DOOR CORPORATION WHICH MAY RECALL THIS SHEET AT ANY TIME.

UNLESS OTHERWISE SPECIFIED						
DECIMAL DIMENSIONS	NOT DIMENSIONS	ANGLES ± 2°	SPONCAR DOOR	DRAWN BY: M. TOUNIS	DATE 01/13/98	DRAWING TITLE: SERIES 280 & 180 RESI STL DR. 16'-0" MAX WIDTH, WINDLOAD
			MATERIAL: N/A	CHECKED BY: DAVID FAX	02/19/98	
			APPLIED FINISH: NONE	UNIT OF MEASURE: EACH	APPROVED BY: DAVID FAX	02/19/98	DRAWING NUMBER: D- 409335

NOTES.

1. TESTED IN ACCORDANCE WITH STANDARD BUILDING CODE, CHAPTER 17, TO A POSITIVE AND NEGATIVE 37.5 PSF.
2. DASH NUMBERS REPRESENT VARIOUS SECTION HEIGHTS.
3. FOUR SECTION 7' HIGH DOOR SHOWN. 8' HIGH DOORS HAVE FIVE SECTIONS.
4. SECTION HEIGHT OF 20.312, 19.00 & 16.75 ARE AVAILABLE AND MAY BE USED IN COMBINATION TO ACHIEVE VARIOUS HEIGHT DOORS.
5. EMBOSSMENT PATTERN OF 14.50 X 20.375 SHOWN. ALTERNATE PATTERNS OF 12.50 X 43.375 AND 12.50 X 20.375 MAY BE USED.
6. TORSION SPRINGS SHOWN. EXTENSION SPRINGS AVAILABLE.
7. USE THIS BRACKET, REF. P/N 405964-0002, ON 8' HIGH DOORS ONLY.
8. WINDOW MAY BE INSTALLED IN THE TOP SECTION OR THE SECTION IMMEDIATELY BELOW THE TOP SECTION.
9. THE STRUT PLACEMENT ON D CONSISTENT WITH THE DOOR SECTIONS ARE TO BE PLACEI
10. THE STRUT PLACEMENT DIMEN REDUCED BY THE DIFFERENCE
11. SCREW P/N 605911-0001 IS
12. POST TO BE INSTALLED ONLY
13. STRUT PLACEMENTS CAN VARY
14. QUANTITY FOR LOCKS CAN BE

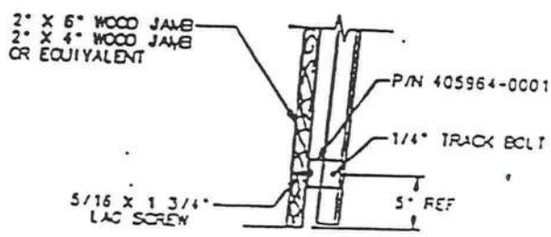

DETAIL "E"

SCALE: 1/3

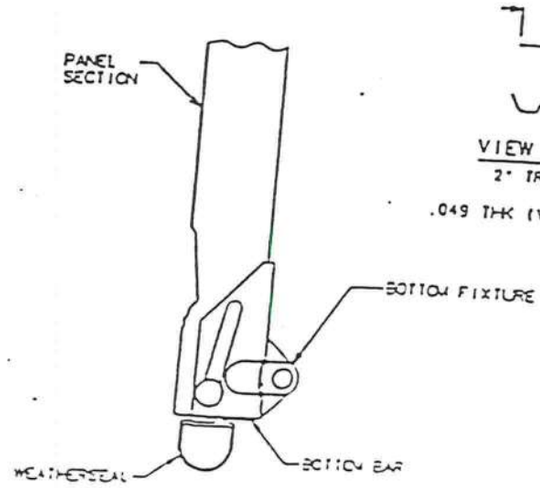

SECTION "C-C"

SCALE: 1/2

VIEW "D-

2" TRACK

.049 THK (VERTI

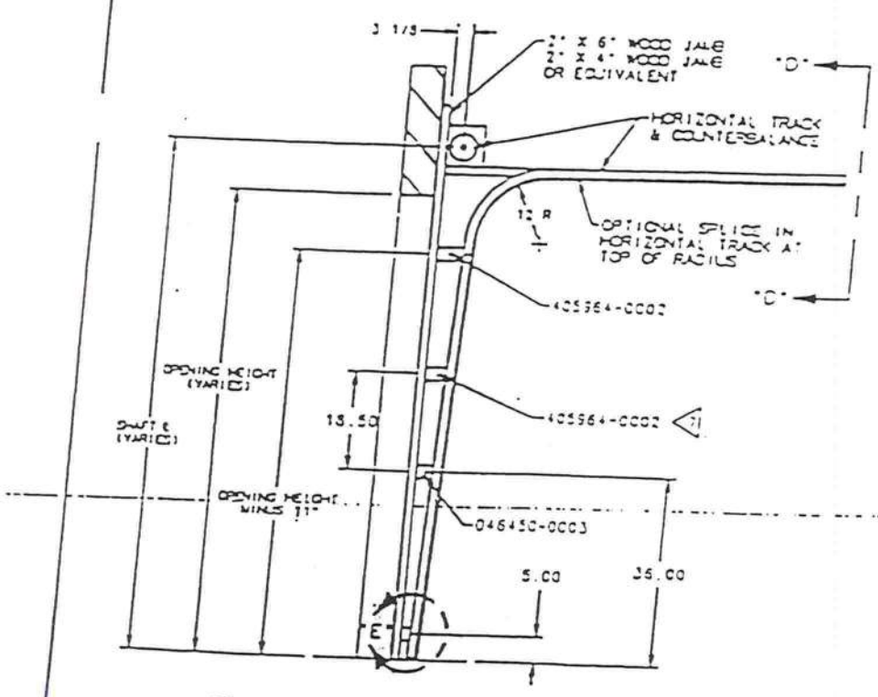

STANDARD TRACK DETAIL FOR 16'

SCALE: 1/16" = 1"

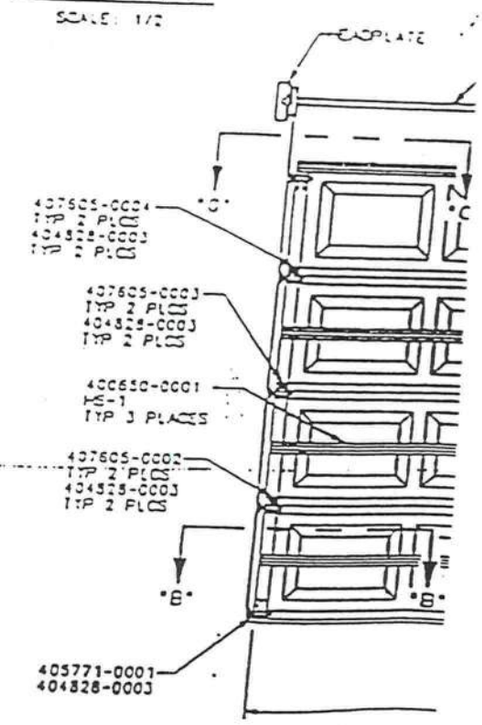

SERIES 280 THRU 289 ARE EQUIVALENT CONSTRUCTION 25GA STEEL
SERIES 180 ARE SAME CONSTRUCTION AS SERIES 280 ONLY 24GA STEEL AND END CAPS

DOOR TESTED WAS 251 SERIES.

DOOR WIDTH	CENTER STILE	END STILE	ROLLER SHAFT BRACKET	STRUTS/SECT.	ROLLER	VERTICAL TRACK GAGE .	JAMB LOAD (# PER FT-HT)	HARDWARE
16'	3	SINGLE		HS1 HS0	2" X 7/16"	.049"	100	STD.

Anthony POWER HEADER®

GARAGE HEADER (84)

$26F_b$ - 1.9E

ENGINEERED WOOD SECTION PROPERTIES AND LOAD CAPACITIES

ALLOWABLE DESIGN STRESSES (PSI):

FLEXURAL STRESS (F_b) =	2600
COMPRESSION PERP. TO GRAIN ($F_{c\perp}$) =	740
HORIZONTAL SHEAR (F_v) =	225
MODULUS OF ELASTICITY (MOE) =	1.9×10^6

[illegible]							
[illegible]	7.7	9.0	10.4	11.7	12.9	14.2	15.5
[illegible]	326	514	789	1115	1521	2014	2604
[illegible]	8865	12015	15996	20145	24772	29877	35460
[illegible]	3908	4550	5250	5892	6533	7175	7817

NOTES:

1. Beam weights are based on 38 pcf.
2. Moment capacities are based on a span of 21 feet and must be modified for other spans.
3. Flexural Stress, F_b, shall be modified by the Volume Factor, C_v, as outlined in AITC 117 - Design 1993 and the NDS for Wood Construction 1997.
4. Allowable design properties and load capacities are based on a load duration of 100 percent and dry use conditions.
5. The AITC NER 466 was used in calculating the above allowable design stresses for POWER HEADER®.

GARAGE HEADER COMPARISONS

[illegible]						
[illegible]	810 / 540	3-1/2" x 8-3/8"	3-1/2" x 9-5/8"	3-1/2" x 9"	3-1/2" x 9-1/4"	3-1/2" x 11-1/4"
[illegible]	990 / 720	3-1/2" x 9-3/4"	3-1/2" x 9-5/8"	3-1/2" x 10-1/2"	3-1/2" x 9-1/4"	3-1/2" x 11-1/4"
[illegible]	610 / 400	3-1/2" x 12-5/8"	3-1/2" x 13-3/4"	3-1/2" x 13-1/2"	3-1/2" x 14"	3-1/2" x 14"
[illegible]	765 / 510	3-1/2" x 14"	3-1/2" x 15-1/8"	3-1/2" x 15"	3-1/2" x 14"	3-1/2" x 16"
[illegible]	750 / 480	3-1/2" x 15-3/8"	3-1/2" x 16-1/2"	3-1/2" x 16-1/2"	3-1/2" x 16"	3-1/2" x 18"
[illegible]	900 / 600	3-1/2" x 16-3/4"	3-1/2" x 17-7/8"	3-1/2" x 18"	3-1/2" x 16"	—

For more information on POWER HEADER®, or other laminated structural products from Anthony Forest Products Company please call 1-800-221-2326 or FAX at 870-862-6502.

POWER HEADER® is a trademark of
Anthony Forest Products Company
Post Office Box 1877 • El Dorado, Arkansas 71731
Internet address: http:// www.anthonyforest.com
e-mail: info@anthonyforest.com

Distributed by:

WOODFORD PLYWOOD, INC.
"Structural Wood Products"

11960 West Beaver Street
Jacksonville, Florida 32220
(904) 695-9060
(800) 447-6568
FAX (904) 695-9160

Anthony POWER HEADER®

$26F_b$ - 1.9E

3-1/2" WIDTH GARAGE HEADER PLF CAPACITY

844	896		1216		1573							
161	207	254	330	390	510	552	669	752	824			
114	145	180	231	277	359	391	510	534	653	707	789	

844	975		1322							
161	207	254	330	390	510	552	724	752	897	
114	145	180	231	277	359	391	510	534	699	693

562	778	888	1056	1363	1367		1582					
107	153	169	245	260	380	368	540	501	715	664	864	840
76	107	120	171	185	267	261	380	356	521	471	684	609	813

NOTES:

1. Values shown are the maximum uniform loads in pounds per lineal foot (PLF) that can be applied to the header. Header weight has been subtracted from the allowable total load.
2. Tables are based on simple span uniform load conditions using a design span equal to the center-to-center of bearing. Non-shaded areas are based on 3" of bearing at each support, shaded areas on 4.5" of bearing, and shaded & outlined areas on 6" of bearing at supports.
3. Headers are assumed to be loaded on the top edge with continuous lateral support along compression edge.
4. When no live load is listed, total load controls.
5. Deflection limits are listed within the PLF table heading.

GARAGE HEADER SIZING USING PLF TABLES:

To size a garage header supporting roof only, determine the total load & live load in pounds per lineal foot (PLF). Check the appropriate PLF table for a header supporting roof loads only (125% Non-Snow vs. 115% Snow) and select a member with a total load and live load capacity which meets or exceeds the design load for the rough opening size. For a garage header supporting roof, wall, and floor framing, determine the total load and live load in pounds per lineal foot (PLF). Select a header size from the roof, wall, and floor table (100% load duration) which has a total load <u>and</u> live load capacity equal to or greater than the design load for the appropriate rough opening.

COP-WL-JH4142-02

XX
Glazed Inswing Unit

WOOD-EDGE STEEL DOORS

APPROVED ARRANGEMENT:

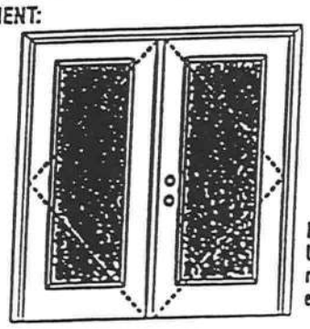

Warnock Hersey

Test Data Review Certificate #3026447A and CCF/Test Report Validation Matrix #3026447A-001 provides additional information - available from the ITS/WH website (www.itsemko.com), the Masonite website (www.masonite.com) or the Masonite technical center

Note:
Units of other sizes are covered by this report as long as the panels used do not exceed 3'0" x 6'8".

Double Door
Maximum unit size = 6'0" x 6'8"

Design Pressure
+40.5/-40.5
Unless water press special Dynamic design is used

Large Missile Impact Resistance
Hurricane protective system (shutters) is REQUIRED

Actual design pressure and impact resistant requirements is a function of wind zone, exposure, height and the specific system. Contact the Masonite Technical Center for door selection based on specific requirements

MINIMUM ASSEMBLY DETAIL:

Compliance requires that minimum assembly details have been followed - see MAD-WL-MA0000-00 and MAD-WL-MA0041-02

MINIMUM INSTALLATION DETAIL:

Compliance requires that minimum installation details have been followed - see MID-WL-MA0000-00

APPROVED DOOR STYLES.

1/4 GLASS:

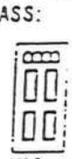
100 Series


123, 133 Series


136 Series


530 Series

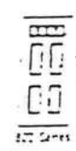
820 Series

1/2 GLASS:


105 Series*


106, 160 Series*


129 Series*

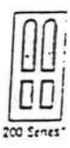
200 Series*

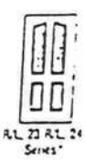
10 R/L, 23 R/L, 24 R/L Series*


107 Series*


108 Series


304 Series

*This glass kit may also be used in the following door styles: 5-panel, 5-panel with scroll, Eyebrow 5-panel, Eyebrow 5-panel with scroll.

Johnson
EntrySystems

June 17, 2002
Our continuing program of product improvement makes specifications, design and products subject to change without notice

PREHDOR Premium Quality Doors

Exclusively from Masonite
Masonite International Corporation

XX
Glazed Inswing Unit

COP-WL-JH4142-02

WOOD-EDGE STEEL DOORS

APPROVED DOOR STYLES:

3/4 GLASS:


404 Series


410 Series


450 Series

FULL GLASS:


109 Series


114, 120, 122 Series


152 Series

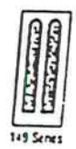
149 Series


300 Series

CERTIFIED TEST REPORTS:

NCTL 210-1897-7, 8, 9, 10, 11, 12; NCTL 210-1861-4, 5, 6, 10, 11, 12, NCTL 210-2185-1, 2, 3

Certifying Engineer and License Number: Barry D. Portney, P.E. / 16253

Unit Tested in Accordance with Miami-Dade ECCO PA202.

Evaluation report NCTL-210-2794-1

Door panels constructed from 26-gauge 0.017" thick steel skins. Both stiles constructed from wood. Top end rails constructed of 0.041" steel. Bottom end rails constructed of 0.021" steel. Interior cavity of slab filled with rigid polyurethane foam core. Slab glazed with insulated glass mounted in a rigid plastic lip lite surround.

Frame constructed of wood with an extruded aluminum threshold.

PRODUCT COMPLIANCE LABELING:

TESTED IN
ACCORDANCE WITH
MIAMI-DADE ECCO PA202

COMPANY NAME
CITY, STATE

To the best of my knowledge and ability the above side-hinged exterior door unit conforms to the requirements of the 2001 Florida Building Code, Chapter 17 (Structural Tests and Inspections).

Kurt L Balthazor

State of Florida, Professional Engineer
Kurt Balthazor, P.E. – License Number 56533

Test Data Review Certificate #3025447A and COP/Test Report Validation Matrix #3025447A-001 provides additional information - available from the ITS/WH website (www.itsamus.com), the Masonite website (www.masonite.com) or the Masonite technical center.

Johnson EntrySystems

June 17, 2002

Masonite International Corporation

X
Opaque Inswing Unit

COP-WL-JH4101-02

WOOD-EDGE STEEL DOORS

APPROVED ARRANGEMENT:

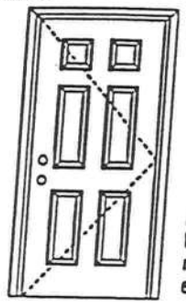

Note:
Units of other sizes are covered by this report as long as the panel used does not exceed 3'0" x 6'8".

Warnock Hersey

Test Data Review Certificate #3026447A and COP/Test Report Validation Matrix #3026447A-001 provides additional information - available from the ITS/WH website (www.etsemko.com), the Masonite website (www.masonite.com) or the Masonite technical center

Single Door
Maximum unit size = 3'0" x 6'8"

Design Pressure
+66.0/-66.0
limited water unless special threshold design is used

Large Missile Impact Resistance
Hurricane protective system (shutters) is NOT REQUIRED.

Actual design pressure and impact resistant requirements for a specific building design and geographic location are determined by ASCE 7 and the state or local building codes. Specify the option required.

MINIMUM ASSEMBLY DETAIL:

Compliance requires that minimum assembly details have been followed – see MAD-WL-MA2001-02

MINIMUM INSTALLATION DETAIL:

Compliance requires that minimum installation details have been followed – see MID-WL-MA2001-02

APPROVED DOOR STYLES:

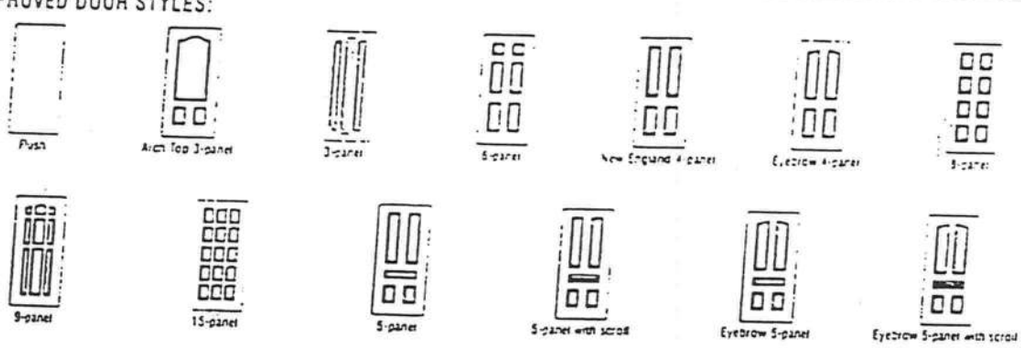

Johnson EntrySystems

June 17, 2002
Our continuing program of product improvement makes specifications, design and product detail subject to change without notice

PREMDOOR Collection Premium Quality Doors

Exclusively from Masonite
Masonite International Corporation

X
Opaque Inswing Unit

COP-WL-JH4101-02

WOOD-EDGE STEEL DOORS

CERTIFIED TEST REPORTS:

NCTL 210-2185-1, 2, 3

Certifying Engineer and License Number: Barry D. Portney, P.E. / 16258.

Unit Tested in Accordance with Miami-Dade BCCO PA201, PA202 and PA203.

Door panels constructed from 26-gauge 0.017" thick steel skins. Both stiles constructed from wood. Top end rails constructed of 0.041" steel. Bottom end rails constructed of 0.021" steel. Interior cavity of slab filled with rigid polyurethane foam core.

Frame constructed of wood with an extruded aluminum threshold.

PRODUCT COMPLIANCE LABELING:

TESTED IN ACCORDANCE WITH
MIAMI-DADE BCCO
PA201, PA202 & PA203

COMPANY NAME
CITY STATE

To the best of my knowledge and ability the above side-hinged exterior door unit conforms to the requirements of the 2001 Florida Building Code, Chapter 17 (Structural Tests and Inspections).

Kurt L Balthazor

State of Florida, Professional Engineer
Kurt Balthazor, P.E. – License Number 56533

Warnock Hersey

Test Data Review Certificate #3025447A and COP/Test Report Validation Matrix #3025447A-001 provides additional information - available from the ITS/WH website (www.itsemao.com), the Masonite website (www.masonite.com) or the Masonite technical center.

Johnson EntrySystems

June 17, 2002

Our continuing program of product improvement makes specifications, design and product data subject to change without notice.

PREMADOR Premium Quality Doors

Exclusively from Masonite
Masonite International Corporation

WINDOWS

AAMA/NWWDA 101/I.S.2-97
TEST REPORT SUMMARY

Rendered to:

MI HOME PRODUCTS, INC.

SERIES/MODEL: 650 Fin
TYPE: Aluminum Single Hung Window

Title of Test	Results
Rating	H-R40 52 x 72
Overall Design Pressure	+45.0 psf -47.2 psf
Operating Force	11 lb max.
Air Infiltration	0.13 cfm/ft²
Water Resistance	6.00 psf
Structural Test Pressure	+67.5 psf -70.8 psf
Deglazing	Passed
Forced Entry Resistance	Grade 10

Reference should be made to Report No. 01-41134.01 dated 03/26/02 for complete test specimen description and data.

For ARCHITECTURAL TESTING, INC.

Mark A. Hess, Technician

MAH:nlb

1 APRIL 2002

ALLEN M. REEVES
LICENSE NO. 15354
STATE OF FLORIDA
PROFESSIONAL ENGINEER

Architectural Testing

AAMA/NWWDA 101/I.S.2-97 TEST REPORT

Rendered to

MI HOME PRODUCTS, INC.
650 West Market Street
P.O. Box 370
Gratz, Pennsylvania 17030-0370

Report No: 01-41134.01
Test Date: 03/07/02
Report Date: 03/26/02
Expiration Date: 03/07/06

Project Summary: Architectural Testing, Inc. (ATI) was contracted by MI Home Products, Inc. to perform tests on Series/Model 650 Fin, aluminum single hung window at their facility located in Elizabethville, Pennsylvania. The samples tested successfully met the performance requirements for a H-R40 52 x 72 rating.

Test Specification: The test specimen was evaluated in accordance with AAMA/NWWDA 101/I.S.2-97, *Voluntary Specifications for Aluminum, Vinyl (PVC) and Wood Windows and Glass Doors.*

Test Specimen Description

Series/Model: 650 Fin

Type: Aluminum Single Hung Window

Overall Size: 4' 4-1/4" wide by 6' 0-3/8" high

Active Sash Size: 4' 1-3/4" wide by 3' 0-5/8" high

Daylight Opening Size: 3' 11-3/8" wide by 2' 9-1/2" high

Screen Size: 4' 0-1/4" wide by 2' 11-1/8" high

Finish: All aluminum was white.

Glazing Details: The active and fixed lites utilized 5/8" thick, sealed insulating glass constructed from two sheets of 1/8" thick, clear annealed glass and a metal reinforced butyl spacer system. The active sash was channel glazed utilizing a flexible vinyl wrap around gasket. The fixed lite was interior glazed against double-sided adhesive foam tape and secured with PVC snap-in glazing beads.

130 Derry Court
York, PA 17402-9405
phone: 717.764.7700
fax: 717.764.4129
www.archtest.com

Allen M. Reeves
1 APRIL 2002

REEVES ☆ PROFESSIONAL ENGINEER ☆ NO. 19354 ☆ STATE OF FLORIDA

Test Specimen Description: (Continued)

Weatherstripping:

Description	Quantity	Location
0.230" high by 0.270" backed polypile with center fin	1 Row	Fixed meeting rail
0.250" high by 0.187" backed polypile with center fin	2 Rows	Active sash stiles
1/2" x 1/2" dust plug	4 Pieces	Active sash, top and bottom of stiles
1/4" foam-filled vinyl bulb seal	1 Row	Active sash, bottom rail

Frame Construction: The frame was constructed of extruded aluminum with coped, butted, and sealed corners fastened with two #8 x 1" screws through the head and sill into each jamb screw boss. End caps were utilized on the ends of the fixed meeting rail and secured with two 1-1/4" screws per cap. Meeting rail was secured to the frame utilizing two 1-1/4" screws.

Sash Construction: The sash was constructed of extruded aluminum with coped, butted, and sealed corners fastened with two #8 x 1-1/2" screws through the rails into each jamb screw boss.

Screen Construction: The screen was constructed from roll-formed aluminum with keyed corners. The fiberglass mesh was secured with a flexible spline.

Hardware:

Description	Quantity	Location
Metal cam lock with keeper		Midspan, active meeting rail with keeper adjacent on fixed meeting rail
Plastic tilt latch	2	Active sash, meeting rail ends
Metal tilt pin	2	Active sash, bottom rail ends
Balance assembly	2	One in each jamb
Screen plunger	2	4" from rail ends on top rail

ALLEN H. REEVES, JR. CERTIFICATE NO. 13994 STATE OF FLORIDA PROFESSIONAL ENGINEER

Allen H. Reeves
1 APRIL 2002

Test Specimen Description: (Continued)

Weatherstripping:

Description	Quantity	Location
0.230" high by 0.270" backed polypile with center fin	1 Row	Fixed meeting rail
0.250" high by 0.187" backed polypile with center fin	2 Rows	Active sash stiles
1/2" x 1/2" dust plug	4 Pieces	Active sash, top and bottom of stiles
1/4" foam-filled vinyl bulb seal	1 Row	Active sash, bottom rail

Frame Construction: The frame was constructed of extruded aluminum with coped, butted, and sealed corners fastened with two #8 x 1" screws through the head and sill into each jamb screw boss. End caps were utilized on the ends of the fixed meeting rail and secured with two 1-1/4" screws per cap. Meeting rail was secured to the frame utilizing two 1-1/4" screws.

Sash Construction: The sash was constructed of extruded aluminum with coped, butted, and sealed corners fastened with two #8 x 1-1/2" screws through the rails into each jamb screw boss.

Screen Construction: The screen was constructed from roll-formed aluminum with keyed corners. The fiberglass mesh was secured with a flexible spline.

Hardware:

Description	Quantity	Location
Metal cam lock with keeper		Midspan, active meeting rail with keeper adjacent on fixed meeting rail
Plastic tilt latch	2	Active sash, meeting rail ends
Metal tilt pin	2	Active sash, bottom rail ends
Balance assembly	2	One in each jamb
Screen plunger	2	4" from rail ends on top rail

ALLEN H. REEVES, P.E.
CERTIFICATE NO. 13754
STATE OF FLORIDA
PROFESSIONAL ENGINEER

Allen H. Reeves
1 APRIL 2002

Test Specimen Description: (Continued)

Drainage: Sloped sill

Reinforcement: No reinforcement was utilized.

Installation: The test specimen was installed into a 2 x 8 #2 Spruce-Pine-Fir wood test buck with #8 x 1-5/8" drywall screws every 8" on center around the nail fin. Polyurethane was used as a sealant under the nail fin and around the exterior perimeter.

Test Results:

The results are tabulated as follows:

Paragraph	Title of Test - Test Method	Results	Allowed
2.2.1.6.1	Operating Force	11 lbs	30 lbs max
	Air Infiltration (ASTM E 283-91) @ 1.57 psf (25 mph)	0.13 cfm/ft²	0.3 cfm/ft² max

Note #1: The tested specimen meets the performance levels specified in AAMA/NWWDA 101/I.S. 2-97 for air infiltration.

	Water Resistance (ASTM E 547-00) (with and without screen) WTP = 2.86 psf	No leakage	No leakage
2.1.4.1	Uniform Load Deflection (ASTM E 330-97) (Measurements reported were taken on the meeting rail) (Loads were held for 33 seconds)		
	@ 25.9 psf (positive)	0.42"*	0.26" max.
	@ 34.7 psf (negative)	0.43"*	0.26" max.

**Exceeds L/175 for deflection, but passes all other test requirements.*

2.1.4.2	Uniform Load Structural (ASTM E 330-97) (Measurements reported were taken on the meeting rail) (Loads were held for 10 seconds)		
	@ 38.9 psf (positive)	0.02"	0.18" max.
	@ 52.1 psf (negative)	0.02"	0.18" max.

Allen H. Reeves
1 APRIL 2002

ALLEN H. REEVES
CERTIFICATE
NO. 1337
STATE OF
FLORIDA
PROFESSIONAL ENGINEER

Test Specimen Description: (Continued)

Paragraph	Title of Test - Test Method	Results	Allowed
2.2.1.6.2	Deglazing Test (ASTM E 987)		
	In operating direction at 70 lbs		
	Meeting rail	0.12"/25%	0.50"/100%
	Bottom rail	0.12"/25%	0.50"/100%
	In remaining direction at 50 lbs		
	Left stile	0.06"/12%	0.50"/100%
	Right stile	0.06"/12%	0.50"/100%
	Forced Entry Resistance (ASTM F 588-97)		
	Type: A		
	Grade: 10		
	Lock Manipulation Test	No entry	No entry
	Tests A1 through A5	No entry	No entry
	Test A7	No entry	No entry
	Lock Manipulation Test	No entry	No entry

Optional Performance

4.3	Water Resistance (ASTM E 547-00) (with and without screen) WTP = 6.00 psf	No leakage	No leakage
	Uniform Load Deflection (ASTM E 330-97) (Measurements reported were taken on the meeting rail) (Loads were held for 33 seconds)		
	@ 45.0 psf (positive)	0.47"*	0.26" max.
	@ 47.2 psf (negative)	0.46"*	0.26" max.

**Exceeds L/175 for deflection, but passes all other test requirements.*

Uniform Load Structural (ASTM E 330-97) (Measurements reported were taken on the meeting rail) (Loads were held for 10 seconds)		
@ 67.5 psf (positive)	0.05"	0.18" max.
@ 70.8 psf (negative)	0.05"	0.18" max.

Allen N. Reeves
1 APRIL 2002

ALLEN N. REEVES
LICENSE NUMBER
STATE OF FLORIDA
PROFESSIONAL ENGINEER

Detailed drawings, representative samples of the test specimen, and a copy of this report will be retained by ATI for a period of four years. The above results were secured by using the designated test methods and they indicate compliance with the performance requirements of the above referenced specification. This report does not constitute certification of this product, which may only be granted by the certification program administrator.

For ARCHITECTURAL TESTING, INC:

Mark A. Hess
Technician

Allen N. Reeves, P.E.
Director - Engineering Services
1 APRIL 2002

MAH:nlb
01-41134.01

ALLEN N. REEVES
CERTIFICATE
NO. 13959
STATE OF
FLORIDA
PROFESSIONAL ENGINEER

SHINGLES

ELK Premium Roofing

March 6, 2002

Subject: Elk Product Approval Information

All Prestique® and Capstone® products manufactured in Tuscaloosa, AL are certified under the Miami – Dade County Building Code Office (BCCO). These products also meet the requirements for the Florida Building Code since they are MD approved. The following test protocols must be passed by each of the products in order for MD product certification:

ASTM D3462
PA 100 (110 mph uplift and wind driven rain resistance)
PA 107 (Modified ASTM D3161 - 110 mph wind uplift resistance)

The nailing patterns that were used during the PA 100 and PA 107 wind test protocols for the Prestique and Capstone products are listed below. Also listed below are the Miami - Dade Notice of Acceptance Numbers (NOA).

Raised Profile, Prestique High Definition, Prestique 25, or Prestique 30 -
PA 100 = 4 nails
PA 107 = 5 nails
MD NOA# = 01-1226.04

Prestique I 35 or Prestique I* -
PA 100 = 4 nails
PA 107 = 5 nails
MD NOA# = 01-1226.05

Prestique Plus or Prestique Gallery Collection* -
PA 100 = 4 nails
PA 107 = 4 nails
MD NOA# = 01-1226.03

Capstone*
PA 100 = 4 Nails
PA 107 = 4 Nails
MD NOA# = 01-0523.01

* As per the Elk Limited Warranty, six nails are required for the Elk high wind warranty

If there are any questions please contact:

Mike Reed – Technical Manager or Daniel DeJarnette – QA Engineer
(205) 342-0287 (205) 342-0298

DIRECTIONS FOR APPLICATION

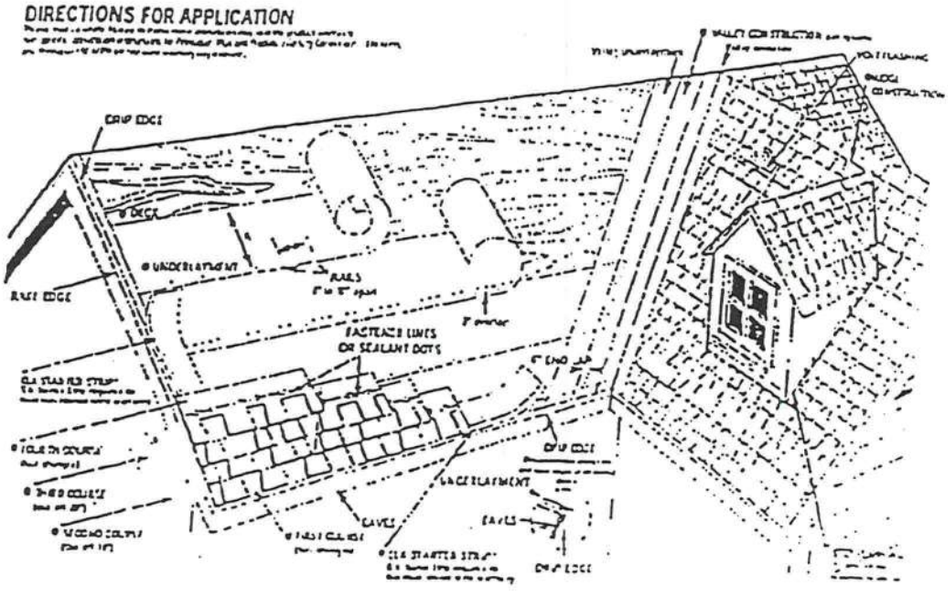

DIRECTIONS FOR APPLICATION

FASTENERS

HANGARD APPLICATIONS

LIMITED WIND WARRANTY

CAUTION TO WHOLESALER

ELK

www.elkcorp.com

ROOFING PRODUCTS SPECIFICATIONS – TUSCALOOSA, AL

PRESTIQUE®
HIGH DEFINITION®

RAISED PROFILE™

[illegible]

Product Size	[illegible]	[illegible]
Exposure	[illegible]	
Pieces/Bundle	16	
Bundles/Square	[illegible]	
Squares/Pallet	[illegible]	

Product Size	[illegible]	[illegible]
Exposure	[illegible]	
Pieces/Bundle	22	
Bundles/Square	[illegible]	
Squares/Pallet	16	

[illegible]

Product Size	[illegible]	[illegible]
Exposure	[illegible]	
Pieces/Bundle	16	
Bundles/Square	[illegible]	
Squares/Pallet	[illegible]	

HIP AND RIDGE SHINGLES

Size [illegible]
Exposure [illegible]
Pieces/Bundle [illegible]
Coverage [illegible]

[illegible]

Product Size	[illegible]	[illegible]
Exposure	[illegible]	
Pieces/Bundle	[illegible]	
Bundles/Square	[illegible]	
Squares/Pallet	16	

[illegible]

[illegible]

[illegible]

All Prestique and Raised Profile shingles meet UL Wind Resistant (UL 997) and Class "A" Fire Ratings (UL 790) and ASTM Specifications D 3018, Type I; D 3161, Type I; E 108 and the requirements of ASTM D 3462.

All Prestique and Raised Profile shingles meet the latest Metro Dade building code requirements.

[illegible]

[illegible]

[illegible]

[illegible]

[illegible]

[illegible]

For specifications in CS format, call [illegible]

SOUTHEAST &
ATLANTIC OFFICE:
800.945.5551

CORPORATE HEADQUARTERS:
800.354.7732

PLANT LOCATION:
800.945.5545

ELK
www.elkcorp.com

RUCTED WITH 5 OR MORE SECTIONS MUST BE
E STRUTS FOR THE ADDITIONAL INTERMEDIATE
ON THE THIRD SECTION.
..L SECTIONS LESS THAN 20.812" MUST BE
THE ACTUAL SECTION HEIGHT & 20.812".
1 x 5/8" LONG TYPE AB HEX HEAD METAL SCREW
1 WIND WARNINGS ISSUED.

2.

GARAGE DOORS

REVISIONS			
LETTER	DESCRIPTION	DATE	APPROVAL
A	REV PER EN 10130	3/06/98	DL
B	REV PER EN 10141	3/13/98	DL
C	REV PER EN 10152	4/8/99	DL

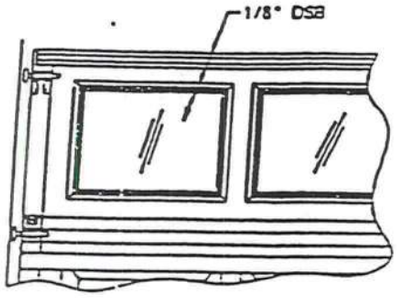

OPTIONAL WINDOW DETAIL
SCALE: 3/32

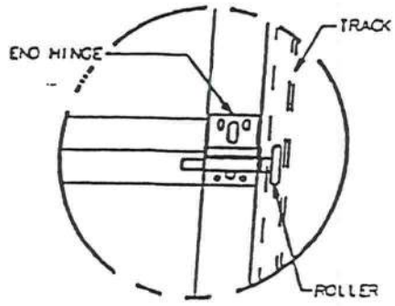

DETAIL "F"
SCALE: 1/4
(16" WIDE)

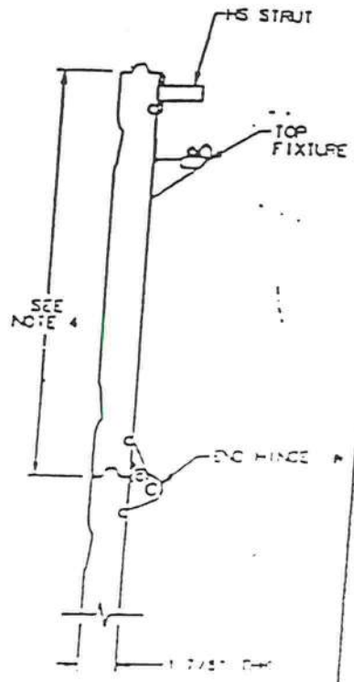

SECTION "A-A"
SCALE 1/4

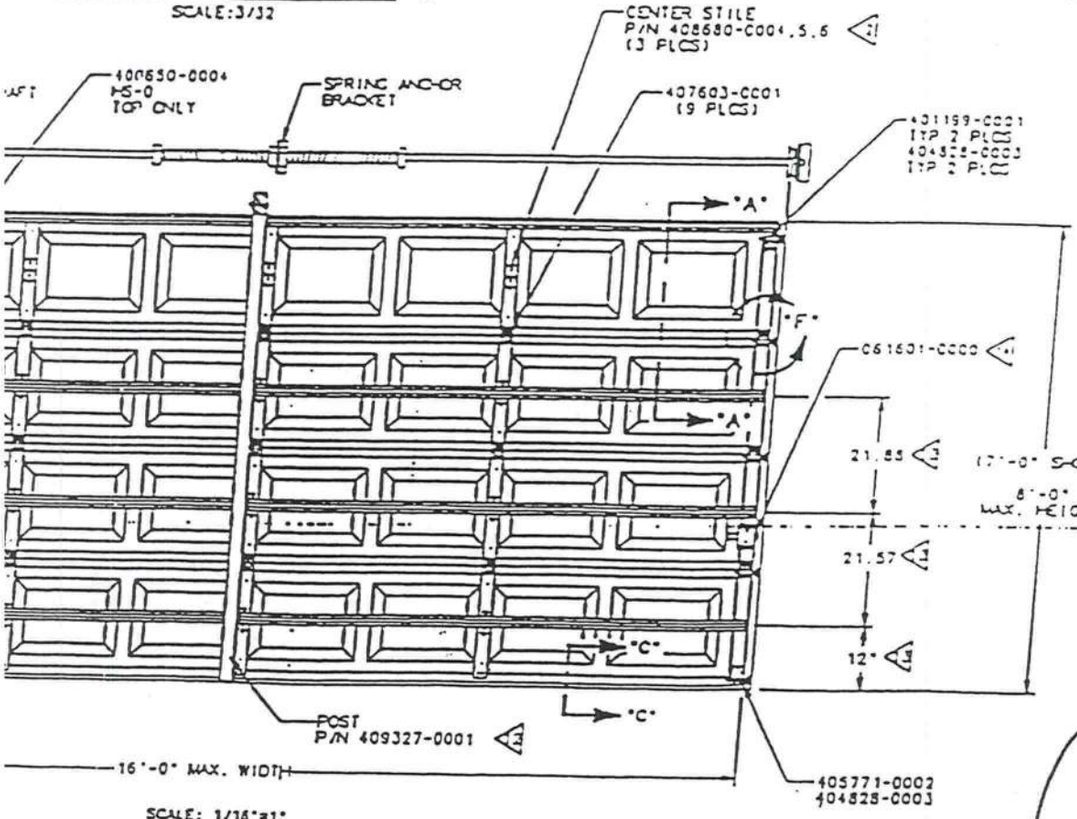

SCALE: 1/16"=1"
INTERIOR ELEVATION

DESIGN LOAD
25 PSF ±
TEST LOAD
37.5 PSF ±

10/01/01

DRAWN BY: M. TOUNIS	DATE 01/13/98	DRAWING TITLE: SERIES 280 & 180 RESI STL DR. 16'-0" MAX WIDTH, WINDLOAD	
MATERIAL: N/A	CHECKED BY: DAVID FAX	02/19/98	DRAWING NUMBER: D- 409335
FINISH: NONE	UNIT OF MEASURE: EACH	APPROVED BY: DAVID FAX	02/19/98

NOTES:

1. TESTED IN ACCORDANCE WITH STANDARD BUILDING CODE, CHAPTER 17, TO A POSITIVE AND NEGATIVE 37.5 PSF.
2. DASH NUMBERS REPRESENT VARIOUS SECTION HEIGHTS.
3. FOUR SECTION 7' HIGH DOOR SHOWN. 8' HIGH DOORS HAVE FIVE SECTIONS.
4. SECTION HEIGHT OF 20.312, 19.00 & 16.75 ARE AVAILABLE AND MAY BE USED IN COMBINATION TO ACHIEVE VARIOUS HEIGHT DOORS.
5. EMBOSSMENT PATTERN OF 14.50 X 20.375 SHOWN. ALTERNATE PATTERNS OF 12.50 X 43.375 AND 12.50 X 20.375 MAY BE USED.
6. TORSION SPRINGS SHOWN. EXTENSION SPRINGS AVAILABLE.
7. USE THIS BRACKET, REF. P/N 405964-0002, ON 8' HIGH DOORS ONLY.
8. WINDOW MAY BE INSTALLED IN THE TOP SECTION OR THE SECTION IMMEDIATELY BELOW THE TOP SECTION.
9. THE STRUT PLACEMENT ON DC CONSISTENT WITH THE DOOR SECTIONS ARE TO BE PLACED
10. THE STRUT PLACEMENT DIMEN REDUCED BY THE DIFFERENCE
11. SCREW P/N 605911-0001 IS A
12. POST TO BE INSTALLED ONLY
13. STRUT PLACEMENTS CAN VARY
14. QUANTITY FOR LOCKS CAN BE

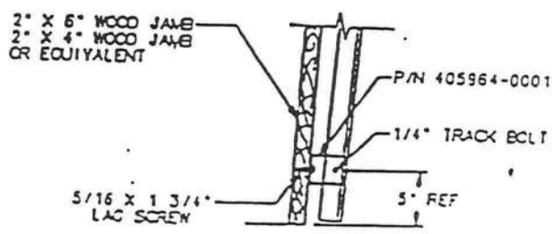

DETAIL "E"

SCALE: 1/3

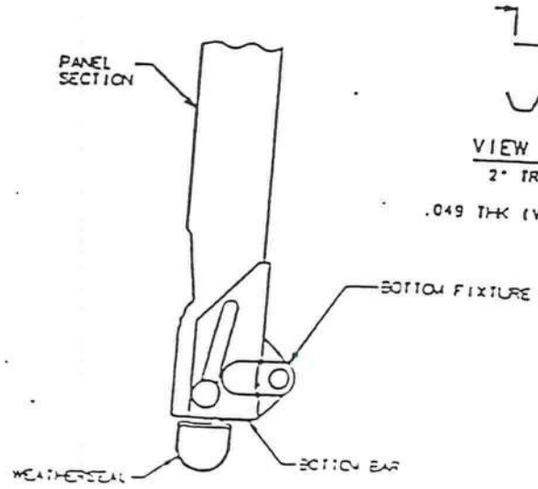

SECTION "C-C"

SCALE: 1/2

VIEW "D-

2" TRACK

.049 THK (VERTI

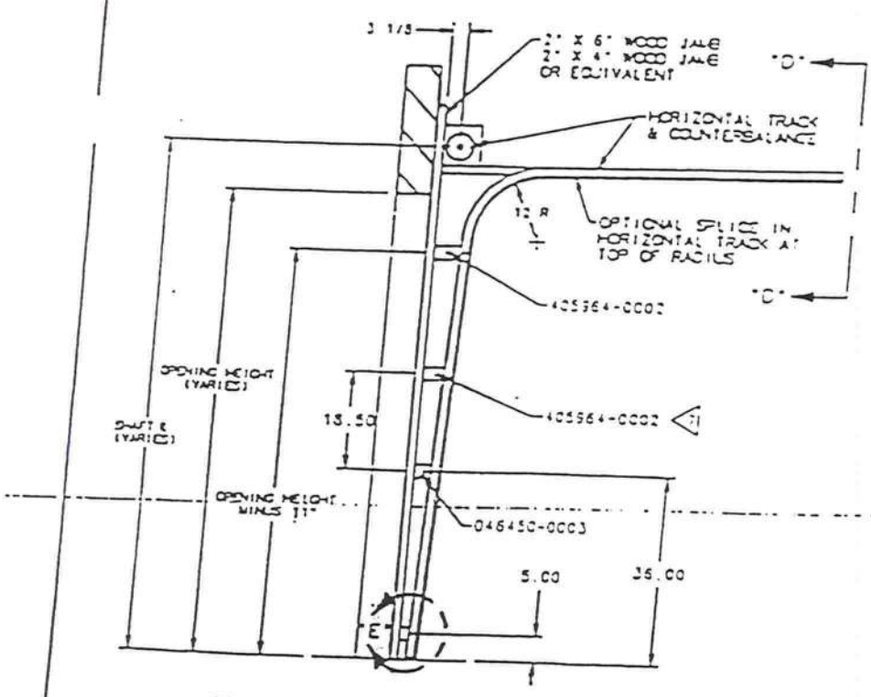

STANDARD TRACK DETAIL FOR 16'

SCALE: 1/16" = 1"

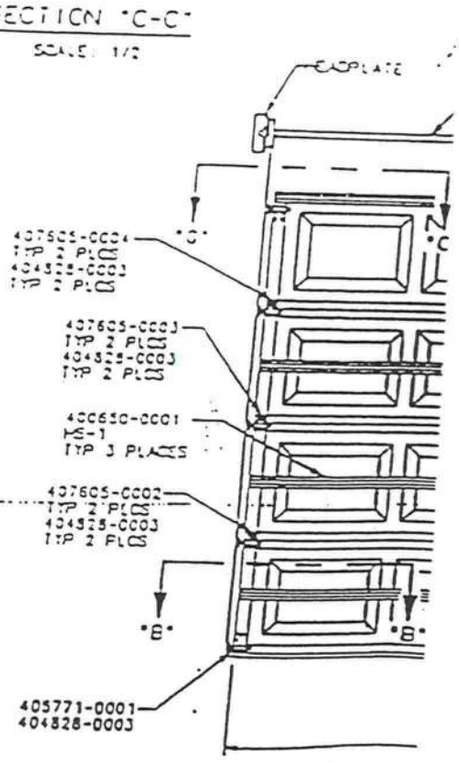

SERIES 280 THRU 289 ARE EQUIVALENT CONSTRUCTION 25GA STEEL
SERIES 180 ARE SAME CONSTRUCTION AS SERIES 280 ONLY 24GA STEEL AND END CAPS

DOOR TESTED WAS 281 SERIES.

DOOR WIDTH	CENTER STILE	END STILE	ROLLER SHAFT BRACKET	STRUTS/SECT.	ROLLER	VERTICAL TRACK GAGE	JAMB LOAD (# PER FT-HT)	HARDWARE
16'	3	SINGLE		HS1 HS0	2" X 7/16"	.049"	100	STD.

CERTIFICATE OF

OCCUPANCY

COLUMBIA COUNTY, FLORIDA

Department of Building and Zoning Inspection

This Certificate of Occupancy is issued to the below named permit holder for the building and premises at the below named location, and certifies that the work has been completed in accordance with the Columbia County Building Code.

Parcel Number 15-4S-17-08359-130 **Building permit No.** 000023854

Use Classification SFD,UTILITY **Fire:** 47.36

Permit Holder BRYAN ZECHER **Waste:** 98.00

Owner of Building RITA MAZDZER **Total:** 145.36

Location: 154 SE GREGORY GLEN(COUNTRY SIDE ESTATES,LOT 30)

Date: 02/24/2006

Building Inspector

POST IN A CONSPICUOUS PLACE
(Business Places Only)

Notice of Intent for Preventative Treatment for Termites

(As required by Florida Building Code 104.2.6)

Date: Oct. 7, 2005

154 SE Gregory Glen — Lake City

(Address of Treatment or Lot/Block of Treatment) — City

Florida Pest Control & Chemical Co.

www.flapest.com

Product to be used: Bora-Care Termiticide (Wood Treatment)

Chemical to be used: 23% Disodium Octaborate Tetrahydrate

Application will be performed onto structural wood at dried-in stage of construction. Bora-Care Termiticide application shall be applied according to EPA registered label directions as stated in the Florida Building Code Section 1861.1.8

(Information to be provided to local building code offices prior to concrete foundation installation.)

6/04 ©

Notice of Treatment

11758

Applicator: Florida Pest Control & Chemical Co. (www.flapest.com)

Address: Bayla Ave

City Lake City Phone 752-1703

Site Location: Subdivision Country side Estates

Lot # 30 Block# Permit # 22814

Address 154 SE Gregory Glen

Product used	Active Ingredient	% Concentration
☐ Premise	Imidacloprid	0.1%
☐ Termidor	Fipronil	0.12%
☐ Bora-Care	Disodium Octaborate Tetrahydrate	23.0%

Type treatment: ☐ Soil ☐ Wood

Area Treated	Square feet	Linear feet	Gallons Applied
Dwelling	1974	625	5

As per Florida Building Code 104.2.6 – If soil chemical barrier method for termite prevention is used, final exterior treatment shall be completed prior to final building approval.

If this notice is for the final exterior treatment, initial this line _____.

1/3/06 — Date

1100 — Time

Fay Gomez — Print Technician's Name

Remarks: _____

Applicator - White	Permit File - Canary	Permit Holder - Pink

10/05 ©