ITW Building Components Group, Inc.

1950 Marley Drive Haines City, FL 33844
Florida Engineering Certificate of Authorization Number: 0 278
Florida Certificate of Product Approval # FL1999
 Document ID:1UB4487-Z0115112723

WILLIAM H. KRICK
LICENSE
No. 70861
STATE OF FLORIDA
PROFESSIONAL ENGINEER
04/15/2011

Truss Fabricator:	Anderson Truss Company
Job Identification:	11-075--Fill in later FREEMAN DESIGNS/TALWAR -- , **
Truss Count:	8
Model Code:	Florida Building Code 2007 and 2009 Supplement
Truss Criteria:	FBC2007Res/TPI-2002(STD)
Engineering Software:	Alpine Software,Version 9.05.
Structural Engineer of Record:	The identity of the structural EOR did not exist as of
Address:	the seal date per section 61G15-31.003(5a) of the FAC
Minimum Design Loads:	Roof - 40.0 PSF @ 1.25 Duration
	Floor - N/A
	Wind - 110 MPH ASCE 7-05 -Closed

Notes:

1. Determination as to the suitability of these truss components for the structure is the responsibility of the building designer/engineer of record, as defined in ANSI/TPI 1
2. The drawing date shown on this index sheet must match the date shown on the individual truss component drawing.
3. As shown on attached drawings; the drawing number is preceded by: HCUSR487

William H. Krick
-Truss Design Engineer-

1950 Marley Drive
Haines City, FL 33844

Details: -

#	Ref Description	Drawing#	Date
1	34757--A	11105002	04/15/11
2	34758--H7A	11105001	04/15/11
3	34759--AG	11105002	04/15/11
4	34760--EJ7	11105005	04/15/11
5	34761--CJ5	11105001	04/15/11
6	34762--CJ3	11105004	04/15/11
7	34763--CJ1	11105003	04/15/11
8	34764--HJ7	11105006	04/15/11

COLUMBIA COUNTY BUILDING DEPARTMENT
Received for FILE COPY
Code Compliance
PLANS EXAMINER

FORM 1100A-08

FLORIDA ENERGY EFFICIENCY CODE FOR BUILDING CONSTRUCTION

Florida Department of Community Affairs Residential Performance Method A

Project Name:	Talwar Residence	Builder Name:	
Street:	506 NW Fat Cat Court	Permit Office:	COLUMB-J
City, State, Zip:	Lake City , Fl , 32055-	Permit Number:	
Owner:	Satbir Talwar	Jurisdiction:	221000
Design Location:	FL, Gainesville		

1. New construction or existing	Addition
2. Single family or multiple family	Single-family
3. Number of units, if multiple family	1
4. Number of Bedrooms	6
5. Is this a worst case?	No
6. Conditioned floor area (ft²)	3710

7. Windows	Description	Area
a. U-Factor:	Sgl, U=0.55	218.18 ft²
SHGC:	SHGC=0.60	
b. U-Factor:	Sgl, U=1.30	60.00 ft²
SHGC:	SHGC=0.75	
c. U-Factor:	N/A	ft²
SHGC:		
d. U-Factor:	N/A	ft²
SHGC:		
e. U-Factor:	N/A	ft²
SHGC:		

8. Floor Types	Insulation	Area
a. Slab-On-Grade Edge Insulation	R=0.0	3710.00 ft²
b. N/A	R=	ft²
c. N/A	R=	ft²

9. Wall Types	Insulation	Area
a. Frame - Wood, Exterior	R=13.0	2176.00 ft²
b. N/A	R=	ft²
c. N/A	R=	ft²
d. N/A	R=	ft²

10. Ceiling Types	Insulation	Area
a. Under Attic (Vented)	R=30.0	3710.00 ft²
b. N/A	R=	ft²
c. N/A	R=	ft²

11. Ducts -
a. Sup: Attic Ret: Attic AH: Interior Sup. R= 6, 742 ft²

12. Cooling systems - Existing/confirmed efficiency
a. Central Unit — Cap: N/A, SEER: 14

13. Heating systems - Existing/confirmed efficiency
a. Electric Heat Pump — Cap: N/A, HSPF: 7.7

14. Hot water systems -
a. Electric — Cap: 40 gallons, EF: 0.92
b. Conservation features
None

15. Credits — CV, Pstat

Glass/Floor Area: 0.075

Total As-Built Modified Loads: 38.83
Total Baseline Loads: 50.75

PASS

I hereby certify that the plans and specifications covered by this calculation are in compliance with the Florida Energy Code.

PREPARED BY: _____
DATE: _____

I hereby certify that this building, as designed, is in compliance with the Florida Energy Code.

OWNER/AGENT: _____
DATE: _____

Review of the plans and specifications covered by this calculation indicates compliance with the Florida Energy Code. Before construction is completed this building will be inspected for compliance with Section 553.908 Florida Statutes.

GREAT SEAL OF THE STATE OF FLORIDA — IN GOD WE TRUST

BUILDING OFFICIAL: _____
DATE: _____

COLUMBIA COUNTY BUILDING DEPARTMENT — Received for FILE COPY — Code Compliance — PLANS EXAMINER

- Compliance requires certification by the air handler unit manufacturer that the air handler enclosure qualifies as certified factory-sealed in accordance with N1110.A.3.

PROJECT

Title:	Talwar Residence	Bedrooms:	6	Adress Type:	Street Address
Building Type:	FLAsBuilt	Conditioned Area:	3710	Lot #	
Owner:	Satbir Talwar	Total Stories:	1	SubDivision:	
# of Units:	1	Worst Case:	No	PlatBook:	
Builder Name:		Rotate Angle:	0	Street:	506 NW Fat Cat Court
Permit Office:		Cross Ventilation:		County:	Columbia
Jurisdiction:		Whole House Fan:		City, State, Zip:	Lake City , Fl , 32055-
Family Type:	Single-family				
New/Existing:	Addition				
Comment:					

CLIMATE

√	Design Location	TMY Site	IECC Zone	Design Temp 97.5 %	Design Temp 2.5 %	Int Design Temp Winter	Int Design Temp Summer	Heating Degree Days	Design Moisture	Daily Temp Range
____	FL, Gainesville	FL_GAINESVILLE_REGI	2	32	92	75	70	1305.5	51	Medium

FLOORS

√	#	Floor Type	Perimeter	R-Value	Area	Tile	Wood	Carpet
____	1	Slab-On-Grade Edge Insulatio	292 ft	0	3710 ft²	0.3	0.3	0.4

ROOF

√	#	Type	Materials	Roof Area	Gable Area	Roof Color	Solar Absor.	Tested	Deck Insul.	Pitch
____	1	Hip	Composition shingles	4149 ft²	0 ft²	Medium	0.96	No	0	26.6 deg

ATTIC

√	#	Type	Ventilation	Vent Ratio (1 in)	Area	RBS	IRCC
____	1	Full attic	Vented	300	3710 ft²	N	N

CEILING

√	#	Ceiling Type	R-Value	Area	Framing Frac	Truss Type
____	1	Under Attic (Vented)	30	3710 ft²	0.11	Wood

WALLS

√	#	Ornt	Adjacent To	Wall Type	Cavity R-Value	Area	Sheathing R-Value	Framing Fraction	Solar Absor.
____	1	N	Exterior	Frame - Wood	13	584 ft²		0.23	0.75
____	2	S	Exterior	Frame - Wood	13	424 ft²		0.23	0.75
____	3	E	Exterior	Frame - Wood	13	584 ft²		0.23	0.75
____	4	W	Exterior	Frame - Wood	13	584 ft²		0.23	0.75

DOORS

√	#	Ornt	Door Type	Storms	U-Value	Area
____	1	E	Wood	None	0.460000	32.11111
____	2	W	Wood	None	0.460000	34 ft²
____	3	W	Wood	None	0.460000	34 ft²

WINDOWS

Orientation shown is the entered, asBuilt orientation.

√	#	Ornt	Frame	Panes	NFRC	U-Factor	SHGC	Storms	Area	Overhang Depth	Overhang Separation	Int Shade	Screening
____	1	N	Metal	Single (Clear)	Yes	0.55	0.6	N	30 ft²	1 ft 6 in	1 ft 6 in	HERS 2006	None
____	2	N	Metal	Single (Clear)	Yes	0.55	0.6	N	30 ft²	1 ft 6 in	1 ft 6 in	HERS 2006	None
____	3	S	Metal	Single (Clear)	Yes	0.55	0.6	N	30 ft²	1 ft 6 in	1 ft 6 in	HERS 2006	None
____	4	S	Metal	Single (Clear)	Yes	0.55	0.6	N	6 ft²	1 ft 6 in	1 ft 6 in	HERS 2006	None
____	5	E	Metal	Single (Clear)	Yes	0.55	0.6	N	50.18229	1 ft 6 in	1 ft 6 in	HERS 2006	None
____	6	E	Metal	Single (Clear)	Yes	0.55	0.6	N	36 ft²	1 ft 6 in	1 ft 6 in	HERS 2006	None
____	7	E	Metal	Single (Clear)	Yes	0.55	0.6	N	36 ft²	5 ft 0 in	1 ft 6 in	HERS 2006	None
____	8	W	Metal	Single (Clear)	Yes	1.3	0.75	N	60 ft²	1 ft 6 in	1 ft 6 in	HERS 2006	None

INFILTRATION & VENTING

√	Method	SLA	CFM 50	ACH 50	ELA	EqLA	---- Forced Ventilation ---- Supply CFM	Exhaust CFM	Run Time Fraction	Fan Watts
____	Default	0.00050	4866	9.84	267.1	502.4	0 cfm	0 cfm	0	0

COOLING SYSTEM

√	#	System Type	Subtype	Efficiency	Capacity	Air Flow	SHR	Ducts
____	1	Central Unit	None	SEER: 14	48 kBtu/hr	1440 cfm	0.75	sys#1

HEATING SYSTEM

√	#	System Type	Subtype	Efficiency	Capacity	Ducts
____	1	Electric Heat Pump	None	HSPF: 7.7	48 kBtu/hr	sys#1

HOT WATER SYSTEM

√	#	System Type	EF	Cap	Use	SetPnt	Conservation
____	1	Electric	0.92	40 gal	90 gal	120 deg	None

SOLAR HOT WATER SYSTEM

√	FSEC Cert #	Company Name	System Model #	Collector Model #	Collector Area	Storage Volume	FEF
____	None	None			ft²		

DUCTS

√	#	---- Supply ---- Location	R-Value	Area	---- Return ---- Location	Area	Leakage Type	Air Handler	CFM 25	Percent Leakage	QN	RLF
_____	1	Attic	6	742 ft²	Attic	185.5 ft	Default Leakage	Interior	(Default)	(Default) %		

TEMPERATURES

Programable Thermostat: Y

Ceiling Fans:

Cooling	[X] Jan	[X] Feb	[X] Mar	[X] Apr	[X] May	[X] Jun	[X] Jul	[X] Aug	[X] Sep	[X] Oct	[X] Nov	[X] Dec
Heating	[X] Jan	[X] Feb	[X] Mar	[X] Apr	[X] May	[X] Jun	[X] Jul	[X] Aug	[X] Sep	[X] Oct	[X] Nov	[X] Dec
Venting	[X] Jan	[X] Feb	[X] Mar	[X] Apr	[X] May	[X] Jun	[X] Jul	[X] Aug	[X] Sep	[X] Oct	[X] Nov	[X] Dec

Thermostat Schedule: HERS 2006 Reference

Schedule Type		Hours 1	2	3	4	5	6	7	8	9	10	11	12
Cooling (WD)	AM	78	78	78	78	78	78	78	78	80	80	80	80
	PM	80	80	78	78	78	78	78	78	78	78	78	78
Cooling (WEH)	AM	78	78	78	78	78	78	78	78	78	78	78	78
	PM	78	78	78	78	78	78	78	78	78	78	78	78
Heating (WD)	AM	66	66	66	66	66	68	68	68	68	68	68	68
	PM	68	68	68	68	68	68	68	68	68	68	66	66
Heating (WEH)	AM	66	66	66	66	66	68	68	68	68	68	68	68
	PM	68	68	68	68	68	68	68	68	68	68	66	66

Code Compliance Cheklist

Residential Whole Building Performance Method A - Details

ADDRESS: 506 NW Fat Cat Court Lake City, Fl, 32055-	PERMIT #:

INFILTRATION REDUCTION COMPLIANCE CHECKLIST

COMPONENTS	SECTION	REQUIREMENTS FOR EACH PRACTICE	CHECK
Exterior Windows & Doors	N1106.AB.1.1	Maximum: .3 cfm/sq.ft. window area; .5 cfm/sq.ft. door area.	
Exterior & Adjacent Walls	N1106.AB.1.2.1	Caulk, gasket, weatherstrip or seal between: windows/doors & frames, surrounding wall; foundation & wall sole or sill plate; joints between exterior wall panels at corners; utility penetrations; between wall panels & top/bottom plates; between walls and floor. EXCEPTION: Frame walls where a continuous infiltration barrier is installed that extends from, and is sealed to, the foundation to the top plate.	
Floors	N1106.AB.1.2.2	Penetrations/openings > 1/8" sealed unless backed by truss or joint members. EXCEPTION: Frame floors where a continuous infiltration barrier is installed that is sealed to the perimeter, penetrations and seams.	
Ceilings	N1106.AB.1.2.3	Between walls & ceilings; penetrations of ceiling plane to top floor; around shafts, chases, soffits, chimneys, cabinets sealed to continuous air barrier; gaps in gyp board & top plate; attic access. EXCEPTION: Frame ceilings where a continuous infiltration barrier is installed that is sealed at the perimeter, at penetrations and seams.	
Recessed Lighting Fixtures	N1106.AB.1.2.4	Type IC rated with no penetrations, sealed; or Type IC or non-IC rated, installed inside a sealed box with 1/2" clearance & 3" from insulation; or Type IC with < 2.0 cfm from conditioned space, tested.	
Multi-story Houses	N1106.AB.1.2.5	Air barrier on perimeter of floor cavity between floors.	
Additional Infiltration reqts	N1106.AB.1.3	Exhaust fans vented to outdoors, dampers; combustion space heaters comply with NFPA, have combustion air.	

OTHER PRESCRIPTIVE MEASURES (must be met or exceeded by all residences.)

COMPONENTS	SECTION	REQUIREMENTS	CHECK
Water Heaters	N1112.AB.3	Comply with efficiency requirements in Table N112.ABC.3. Switch or clearly marked circuit breaker (electric) or cutoff (gas) must be provided. External or built-in heat trap required.	
Swimming Pools & Spas	N1112.AB.2.3	Spas & heated pools must have covers (except solar heated). Non-commercial pools must have a pump timer. Gas spa & pool heaters must have a minimum thermal efficiency of 78%. Heat pump pool heaters shall have a minimum COP of 4.0.	
Shower heads	N1112.AB.2.4	Water flow must be restricted to no more than 2.5 gallons per minute at 80 PSIG.	
Air Distribution Systems	N1110.AB	All ducts, fittings, mechanical equipment and plenum chambers shall be mechanically attached, sealed, insulated and installed in accordance with the criteria of Section N1110.AB. Ducts in unconditioned attics: R-6 min. insulation.	
HVAC Controls	N1107.AB.2	Separate readily accessible manual or automatic thermostat for each system.	
Insulation	N1104.AB.1 N1102.B.1.1	Ceilings-Min. R-19. Common walls-frame R-11 or CBS R-3 both sides. Common ceiling & floors R-11.	

System Sizing Calculations - Winter

Residential Load - Whole House Component Details

Satbir Talwar
506 NW Fat Cat Court
Lake City, Fl 32055-

Project Title:
Talwar Residence
Building Type: User

4/20/2011

Reference City: Gainesville, FL (Defaults) Winter Temperature Difference: 37.0 F (MJ8 99%)

Component Loads for Whole House

Window	Panes/Type	Frame	U	Orientation	Area(sqft) X	HTM=	Load
1	1, NFRC 0.60	Metal	0.55	N	30.0	20.4	610 Btuh
2	1, NFRC 0.60	Metal	0.55	N	30.0	20.4	610 Btuh
3	1, NFRC 0.60	Metal	0.55	S	30.0	20.4	610 Btuh
4	1, NFRC 0.60	Metal	0.55	S	6.0	20.4	122 Btuh
5	1, NFRC 0.60	Metal	0.55	E	50.2	20.4	1021 Btuh
6	1, NFRC 0.60	Metal	0.55	E	36.0	20.4	733 Btuh
7	1, NFRC 0.60	Metal	0.55	E	36.0	20.4	733 Btuh
8	1, NFRC 0.75	Metal	1.30	W	60.0	48.1	2886 Btuh
	Window Total				278.2(sqft)		7326 Btuh
Walls	Type	Ornt.	Ueff.	R-Value (Cav/Sh)	Area X	HTM=	Load
1	Frame - Wood	- Ext	(0.089)	13.0/0.0	524	3.28	1721 Btuh
2	Frame - Wood	- Ext	(0.089)	13.0/0.0	388	3.28	1274 Btuh
3	Frame - Wood	- Ext	(0.089)	13.0/0.0	430	3.28	1411 Btuh
4	Frame - Wood	- Ext	(0.089)	13.0/0.0	456	3.28	1498 Btuh
	Wall Total				1798(sqft)		5904 Btuh
Doors	Type	Storm	Ueff.		Area X	HTM=	Load
1	Wood - Exterior,	n	(0.460)		32	17.0	547 Btuh
2	Wood - Exterior,	n	(0.460)		34	17.0	579 Btuh
3	Wood - Exterior,	n	(0.460)		34	17.0	579 Btuh
	Door Total				100(sqft)		1704Btuh
Ceilings	Type/Color/Surface		Ueff.	R-Value	Area X	HTM=	Load
1	Vented Attic/L/Shing		(0.032)	30.0/0.0	3710	1.2	4372 Btuh
	Ceiling Total				3710(sqft)		4372Btuh
Floors	Type		Ueff.	R-Value	Size X	HTM=	Load
1	Slab On Grade		(1.180)	0.0	292.0 ft(perim.)	43.7	12749 Btuh
	Floor Total				3710 sqft		12749 Btuh
					Envelope Subtotal:		32054 Btuh
Infiltration	Type		ACH	Volume(cuft)	Wall Ratio	CFM=	
	Natural		0.50	29680	1.00	247.3	10019 Btuh
Duct load	Average sealed, R6.0, Supply(Att), Return(Att)				(DLM of 0.199)		8374 Btuh
All Zones				**Sensible Subtotal All Zones**			**50446 Btuh**

Manual J Winter Calculations

Residential Load - Component Details (continued)

Satbir Talwar
506 NW Fat Cat Court
Lake City, Fl 32055-

Project Title:
Talwar Residence
Building Type: User

4/20/2011

WHOLE HOUSE TOTALS

Totals for Heating	Subtotal Sensible Heat Loss Ventilation Sensible Heat Loss Total Heat Loss	50446 Btuh 0 Btuh 50446 Btuh

EQUIPMENT

1. Electric Heat Pump	RUUD #APPB-048JAZ	48000 Btuh

Key: Window types - NFRC (Requires U-Factor and Shading coefficient(SHGC) of glass as numerical values)
or - Glass as 'Clear' or 'Tint' (Uses U-Factor and SHGC defaults)
U - (Window U-Factor)
HTM - (ManualJ Heat Transfer Multiplier)

Version 8

System Sizing Calculations - Summer

Residential Load - Whole House Component Details

Satbir Talwar
506 NW Fat Cat Court
Lake City, Fl 32055-

Project Title:
Talwar Residence

4/20/2011

Reference City: Gainesville, FL Temperature Difference: 17.0F(MJ8 99%) Humidity difference: 54gr.

Component Loads for Whole House

Window	Type* Panes	SHGC	U	InSh	IS	Ornt	Overhang Len	Hgt	Window Area(sqft) Gross	Shaded	Unshaded	HTM Shaded	Unshaded	Load
1	1 NFRC	0.60,	0.55	B-L	No	N	1.5ft	1.5ft	30.0	0.0	30.0	16	16	466 Btuh
2	1 NFRC	0.60,	0.55	B-L	No	N	1.5ft	1.5ft	30.0	0.0	30.0	16	16	466 Btuh
3	1 NFRC	0.60,	0.55	B-L	No	S	1.5ft	1.5ft	30.0	30.0	0.0	16	20	466 Btuh
4	1 NFRC	0.60,	0.55	B-L	No	S	1.5ft	1.5ft	6.0	6.0	0.0	16	20	93 Btuh
5	1 NFRC	0.60,	0.55	B-L	No	E	1.5ft	1.5ft	50.2	0.0	50.2	16	49	2451 Btuh
6	1 NFRC	0.60,	0.55	B-L	No	E	1.5ft	1.5ft	36.0	0.0	36.0	16	49	1758 Btuh
7	1 NFRC	0.60,	0.55	B-L	No	E	5.0ft	1.5ft	36.0	15.9	20.1	16	49	1229 Btuh
8	1 NFRC	0.75,	1.30	B-L	No	W	1.5ft	1.5ft	60.0	0.0	60.0	28	59	3515 Btuh
	Window Total								278 (sqft)					10444 Btuh

Walls	Type	U-Value	R-Value Cav/Sheath	Area(sqft)	HTM	Load
1	Frame - Wood - Ext	0.09	13.0/0.0	524.0	2.1	1093 Btuh
2	Frame - Wood - Ext	0.09	13.0/0.0	388.0	2.1	809 Btuh
3	Frame - Wood - Ext	0.09	13.0/0.0	429.7	2.1	896 Btuh
4	Frame - Wood - Ext	0.09	13.0/0.0	456.0	2.1	951 Btuh
	Wall Total			1798 (sqft)		3750 Btuh

Doors	Type	Area (sqft)	HTM	Load
1	Wood - Exterior	32.1	12.9	414 Btuh
2	Wood - Exterior	34.0	12.9	438 Btuh
3	Wood - Exterior	34.0	12.9	438 Btuh
	Door Total	100 (sqft)		1289 Btuh

Ceilings	Type/Color/Surface	U-Value	R-Value	Area(sqft)	HTM	Load
1	Vented Attic/Light/Shingle	0.032	30.0/0.0	3710.0	1.34	4962 Btuh
	Ceiling Total			3710 (sqft)		4962 Btuh

Floors	Type	R-Value	Size	HTM	Load
1	Slab On Grade	0.0	3710 (ft-perimeter)	0.0	0 Btuh
	Floor Total		3710.0 (sqft)		0 Btuh

	Envelope Subtotal:	20446 Btuh

Infiltration	Type	ACH	Volume(cuft)	Wall Ratio	CFM=	Load
	SensibleNatural	0.40	29680	1798	247.3	3683 Btuh

Internal gain	Occupants		Btuh/occupant		Appliance	Load
	7	X	230	+	2400	4010 Btuh

	Sensible Envelope Load:	28139 Btuh
Duct load	Average sealed, Supply(R6.0-Attic), Return(R6.0-Attic) (DGM of 0.320)	8997 Btuh
	Sensible Load All Zones	**37136 Btuh**

Manual J Summer Calculations

Residential Load - Component Details (continued)

Satbir Talwar
506 NW Fat Cat Court
Lake City, Fl 32055-

Project Title: Talwar Residence

Climate:FL_GAINESVILLE_REGIONAL_A

4/20/2011

WHOLE HOUSE TOTALS

	Sensible Envelope Load All Zones	**28139**	**Btuh**
	Sensible Duct Load	8997	Btuh
	Total Sensible Zone Loads	**37136**	**Btuh**
	Sensible ventilation	0	Btuh
	Blower	0	Btuh
Whole House	**Total sensible gain**	**37136**	**Btuh**
Totals for Cooling	Latent infiltration gain (for 54 gr. humidity difference)	7231	Btuh
	Latent ventilation gain	0	Btuh
	Latent duct gain	2312	Btuh
	Latent occupant gain (7 people @ 200 Btuh per person)	1400	Btuh
	Latent other gain	0	Btuh
	Latent total gain	**10943**	**Btuh**
	TOTAL GAIN	**48079**	**Btuh**

EQUIPMENT

1. Central Unit	RUUD #UHLA-HM4821JA	48000 Btuh

*Key: Window types (Panes - Number and type of panes of glass)
(SHGC - Shading coefficient of glass as SHGC numerical value)
(U - Window U-Factor)
(InSh - Interior shading device: none(No), Blinds(B), Draperies(D) or Roller Shades(R))
- For Blinds: Assume medium color, half closed
For Draperies: Assume medium weave, half closed
For Roller shades: Assume translucent, half closed
(IS - Insect screen: none(N), Full(F) or Half(½))
(Ornt - compass orientation)

Version 8

ENERGY PERFORMANCE LEVEL (EPL) DISPLAY CARD

ESTIMATED ENERGY PERFORMANCE INDEX* = 77

The lower the EnergyPerformance Index, the more efficient the home.

506 NW Fat Cat Court, Lake City, Fl, 32055-

1. New construction or existing	Addition
2. Single family or multiple family	Single-family
3. Number of units, if multiple family	1
4. Number of Bedrooms	6
5. Is this a worst case?	No
6. Conditioned floor area (ft²)	3710

7. Windows**	Description	Area
a. U-Factor:	Sgl, U=0.55	218.18 ft²
SHGC:	SHGC=0.60	
b. U-Factor:	Sgl, U=1.30	60.00 ft²
SHGC:	SHGC=0.75	
c. U-Factor:	N/A	ft²
SHGC:		
d. U-Factor:	N/A	ft²
SHGC:		
e. U-Factor:	N/A	ft²
SHGC:		

8. Floor Types	Insulation	Area
a. Slab-On-Grade Edge Insulation	R=0.0	3710.00 ft²
b. N/A	R=	ft²
c. N/A	R=	ft²

9. Wall Types	Insulation	Area
a. Frame - Wood, Exterior	R=13.0	2176.00 ft²
b. N/A	R=	ft²
c. N/A	R=	ft²
d. N/A	R=	ft²

10. Ceiling Types	Insulation	Area
a. Under Attic (Vented)	R=30.0	3710.00 ft²
b. N/A	R=	ft²
c. N/A	R=	ft²

11. Ducts -
a. Sup: Attic Ret: Attic AH: Interior Sup. R= 6, 742 ft²

12. Cooling systems - Existing/confirmed efficiency
a. Central Unit — Cap: N/A, SEER: 14

13. Heating systems - Existing/confirmed efficiency
a. Electric Heat Pump — Cap: N/A, HSPF: 7.7

14. Hot water systems -
a. Electric — Cap: 40 gallons, EF: 0.92

b. Conservation features
None

15. Credits — CV, Pstat

I certify that this home has complied with the Florida Energy Efficiency Code for Building Construction through the above energy saving features which will be installed (or exceeded) in this home before final inspection. Otherwise, a new EPL Display Card will be completed based on installed Code compliant features.

Builder Signature: _____ Date: _____

Address of New Home: _____ City/FL Zip: _____

*Note: The home's estimated Energy Performance Index is only available through the EnergyGauge USA - FlaRes2008 computer program. This is not a Building Energy Rating. If your Index is below 100, your home may qualify for incentives if you obtain a Florida Energy Gauge Rating. Contact the Energy Gauge Hotline at (321) 638-1492 or see the Energy Gauge web site at energygauge.com for information and a list of certified Raters. For information about Florida's Energy Efficiency Code for Building Construction, contact the Department of Community Affairs at (850) 487-1824.

**Label required by Section 13-104.4.5 of the Florida Building Code, Building, or Section B2.1.1 of Appendix G of the Florida Building Code, Residential, if not DEFAULT.

Residential System Sizing Calculation

Summary

Satbir Talwar
506 NW Fat Cat Court
Lake City, Fl 32055-

Project Title:
Talwar Residence

4/20/2011

Location for weather data: Gainesville, FL - Defaults: Latitude(29.7) Altitude(152 ft.) Temp Range(M)					
Humidity data: Interior RH (50%) Outdoor wet bulb (77F) Humidity difference(54gr.)					
Winter design temperature(MJ8 99%)	33	F	Summer design temperature(MJ8 99%)	92	F
Winter setpoint	70	F	Summer setpoint	75	F
Winter temperature difference	37	F	Summer temperature difference	17	F
Total heating load calculation	**50446**	**Btuh**	**Total cooling load calculation**	**48079**	**Btuh**
Submitted heating capacity	% of calc	Btuh	Submitted cooling capacity	% of calc	Btuh
Total (Electric Heat Pump)	95.2	48000	Sensible (SHR = 0.75)	96.9	36000
Heat Pump + Auxiliary(0.0kW)	95.2	48000	Latent	109.7	12000
			Total (Electric Heat Pump)	99.8	48000

WINTER CALCULATIONS

Winter Heating Load (for 3710 sqft)

Load component			Load	
Window total	278	sqft	7326	Btuh
Wall total	1798	sqft	5904	Btuh
Door total	100	sqft	1704	Btuh
Ceiling total	3710	sqft	4372	Btuh
Floor total	3710	sqft	12749	Btuh
Infiltration	247	cfm	10019	Btuh
Duct loss			8374	Btuh
Subtotal			**50446**	**Btuh**
Ventilation	0	cfm	0	Btuh
TOTAL HEAT LOSS			**50446**	**Btuh**

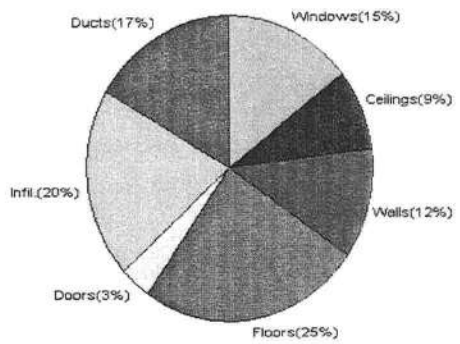

SUMMER CALCULATIONS

Summer Cooling Load (for 3710 sqft)

Load component			Load	
Window total	278	sqft	10444	Btuh
Wall total	1798	sqft	3750	Btuh
Door total	100	sqft	1289	Btuh
Ceiling total	3710	sqft	4962	Btuh
Floor total			0	Btuh
Infiltration	198	cfm	3683	Btuh
Internal gain			4010	Btuh
Duct gain			8997	Btuh
Sens. Ventilation	0	cfm	0	Btuh
Blower Load			0	Btuh
Total sensible gain			**37136**	**Btuh**
Latent gain(ducts)			2312	Btuh
Latent gain(infiltration)			7231	Btuh
Latent gain(ventilation)			0	Btuh
Latent gain(internal/occupants/other)			1400	Btuh
Total latent gain			**10943**	**Btuh**
TOTAL HEAT GAIN			**48079**	**Btuh**

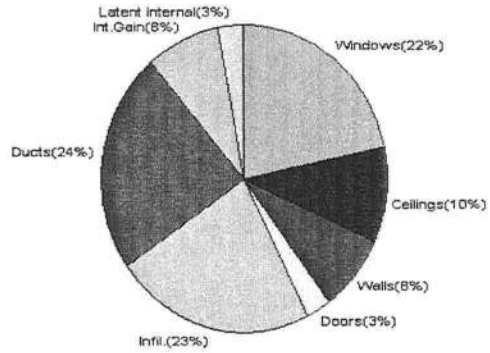

8th Edition

EnergyGauge® System Sizing
PREPARED BY: _____
DATE: _____

PRODUCT APPROVAL SPECIFICATION SHEET

Location: 506 NW Fat Cat Court **Project Name:** Talwar Addition

As required by Florida Statute 553.842 and Florida Administrative Code 9B-72, please provide the information and the product approval number(s) on the building components listed below if they will be utilized on the construction project for which you are **applying for a building permit on or after April 1, 2004.** We recommend you contact your local product supplier should you not know the product approval number for any of the applicable listed products. More information about statewide product approval can be obtained at www.floridabuilding.org

Category/Subcategory	Manufacturer	Product Description	Approval Number(s)
A. EXTERIOR DOORS			
1. Swinging	Therma Tru	Insulated door	8838.1
2. Sliding			
3. Sectional			
4. Roll up			
5. Automatic			
6. Other			
B. WINDOWS			
1. Single hung	PGT Ind.	SH 600	239.5
2. Horizontal Slider			
3. Casement			
4. Double Hung			
5. Fixed			
6. Awning			
7. Pass –through			
8. Projected			
9. Mullion			
10. Wind Breaker			
11 Dual Action			
12. Other			
C. PANEL WALL			
1. Siding			
2. Soffits			
3. EIFS			
4. Storefronts			
5. Curtain walls			
6. Wall louver			
7. Glass block			
8. Membrane			
9. Greenhouse			
10. Other			
D. ROOFING PRODUCTS			
1. Asphalt Shingles			
2. Underlayments			
3. Roofing Fasteners			
4. Non-structural Metal Rf			
5. Built-Up Roofing			
6. Modified Bitumen			
7. Single Ply Roofing Sys			
8. Roofing Tiles			
9. Roofing Insulation			
10. Waterproofing			
11. Wood shingles /shakes			
12. Roofing Slate			

COLUMBIA COUNTY BUILDING DEPARTMENT
Received for FILE COPY
Code Compliance
PLANS EXAMINER

Category/Subcategory (cont.)	Manufacturer	Product Description	Approval Number(s)
13. Liquid Applied Roof Sys			
14. Cements-Adhesives – Coatings			
15. Roof Tile Adhesive			
16. Spray Applied Polyurethane Roof			
17. Other			
E. SHUTTERS			
1. Accordion			
2. Bahama			
3. Storm Panels			
4. Colonial			
5. Roll-up			
6. Equipment			
7. Others			
F. SKYLIGHTS			
1. Skylight			
2. Other			
G. STRUCTURAL COMPONENTS			
1. Wood connector/anchor			
2. Truss plates			
3. Engineered lumber			
4. Railing			
5. Coolers-freezers			
6. Concrete Admixtures			
7. Material			
8. Insulation Forms			
9. Plastics			
10. Deck-Roof			
11. Wall			
12. Sheds			
13. Other			
H. NEW EXTERIOR ENVELOPE PRODUCTS			
1.			
2.			

The products listed below did not demonstrate product approval at plan review. I understand that at the time of inspection of these products, the following information must be available to the inspector on the jobsite; 1) copy of the product approval, 2) the performance characteristics which the product was tested and certified to comply with, 3) copy of the applicable manufacturers installation requirements.

I understand these products may have to be removed if approval cannot be demonstrated during inspection.

_____

_____

_____

_____

Contractor or Contractor's Authorized Agent Signature

Print Name

Date

Location

Columbia County Building Permit Application

For Office Use Only Application # 1105-14 Date Received 5/6 By JW Permit # 29434
Zoning Official BLK Date 12.05.11 Flood Zone A and X Land Use A-3 Zoning A-3
FEMA Map # N/A Elevation N/A MFE N/A River N/A Plans Examiner T.G Date 5-11-11
Comments Addition appears to be located in Zone X. Does not exceed 50% of Value of Structure
☑ NOC ☐ EH ☐ Deed or PA ☐ Site Plan ☐ State Road Info ☐ Well letter (EXISTING) ☑ 911 Sheet ☐ Parent Parcel #
☐ Dev Permit # ☐ In Floodway ☐ Letter of Auth. from Contractor ☐ F W Comp. letter
IMPACT FEES: EMS Fire Corr ☑ Sub VF Form
Road/Code School Addition to Existing dwelling = TOTAL (Suspended) ☐ App Fee Paid

Septic Permit No. -11-0209- *Released 2/Res Dwg* Fax

Name Authorized Person Signing Permit Satbir Talwar Phone 904-304-3093

Address 506 NW Fat Cat Court Lake City, FL

Owners Name Satbir Talwar Phone 904-304-3093

911 Address 506 NW Fat Cat Court Lake City, FL 32055

Contractors Name N/A Phone

Address

Fee Simple Owner Name & Address N/A

Bonding Co. Name & Address N/A

Architect/Engineer Name & Address William H. Freeman 128 SW Nassau St Lake City, FL

Mortgage Lenders Name & Address N/A

Circle the correct power company – FL Power & Light – Clay Elec. – Suwannee Valley Elec. – Progress Energy

Property ID Number 29-3S-16-02384-000 Estimated Cost of Construction 5000.

Subdivision Name Lot ____ Block ____ Unit ____ Phase ____

Driving Directions W on US 90 approximately 7 miles; turn Right onto Fat Cat Court, approx 1/4 on the R.

Number of Existing Dwellings on Property 1

Construction of 525 sq. Porch addition Total Acreage 8.770 Lot Size

Do you need a - Culvert Permit or Culvert Waiver or Have an Existing Drive Total Building Height 8'

Actual Distance of Structure from Property Lines - Front 69' (J+B Veiling) Side 150' (?) Side 116 Rear 97'

Number of Stories 1 Heated Floor Area 525 Total Floor Area 525 Roof Pitch 4/12

Application is hereby made to obtain a permit to do work and installations as indicated. I certify that no work or installation has commenced prior to the issuance of a permit and that all work be performed to meet the standards of all laws regulating construction in this jurisdiction. **CODE:** Florida Building Code 2007 with 2009 Supplements and the 2008 National Electrical Code.

"JW" Spoke Wm Freeman 5.14.11 re: "VF" NEEDED

TIME LIMITATIONS OF APPLICATION : An application for a permit for any proposed work shall be deemed to have been abandoned 180 days after the date of filing, unless such application has been pursued in good faith or a permit has been issued; except that the building official is authorized to grant one or more extensions of time for additional periods not exceeding 90 days each. The extension shall be requested in writing and justifiable cause demonstrated.

TIME LIMITATIONS OF PERMITS: Every permit issued shall become invalid unless the work authorized by such permit is commenced within 180 days after its issuance, or if the work authorized by such permit is suspended or abandoned for a period of 180 days after the time work is commenced. A valid permit receives an approved inspection every 180 days. Work shall be considered not suspended, abandoned or invalid when the permit has received an approved inspection within 180 days of the previous approved inspection.

FLORIDA'S CONSTRUCTION LIEN LAW: Protect Yourself and Your Investment: According to Florida Law, those who work on your property or provide materials, and are not paid-in-full, have a right to enforce their claim for payment against your property. This claim is known as a construction lien. If your contractor fails to pay subcontractors or material suppliers or neglects to make other legally required payments, the people who are owed money may look to your property for payment, even if you have paid your contractor in full.
This means if a lien is filed against your property, it could be sold against your will to pay for labor, materials or other services which your contractor may have failed to pay.

NOTICE OF RESPONSIBILITY TO BUILDING PERMITEE: ***YOU ARE HEREBY NOTIFIED*** as the recipient of a building permit from Columbia County, Florida, you will be held responsible to the County for any damage to sidewalks and/or road curbs and gutters, concrete features and structures, together with damage to drainage facilities, removal of sod, major changes to lot grades that result in ponding of water, or other damage to roadway and other public infrastructure facilities caused by you or your contractor, subcontractors, agents or representatives in the construction and/or improvement of the building and lot for which this permit is issued. No certificate of occupancy will be issued until all corrective work to these public infrastructures and facilities has been corrected.

WARNING TO OWNER: YOUR FAILURE TO RECORD A NOTICE OF COMMENCMENT MAY RESULT IN YOU PAYING TWICE FOR IMPROVEMENTS TO YOUR PROPERTY. A NOTICE OF COMMENCEMENT MUST BE RECORDED AND POSTED ON THE JOB SITE BEFORE THE FIRST INSPECTION. IF YOU INTEND TO OBTAIN FINANCING, CONSULT WITH YOUR LENDER OR ATTORNEY BEFORE RECORDING YOUR NOTICE OF COMMENCEMENT.

OWNERS CERTIFICATION: I CERTIFY THAT ALL THE FOREGOING INFORMATION IS ACCURATE AND THAT ALL WORK WILL BE DONE IN COMPLIANCE WITH ALL APPLICABLE LAWS REGULATING CONSTRUCTION AND ZONING.

NOTICE TO OWNER: There are some properties that may have deed restrictions recorded upon them. These restrictions may limit or prohibit the work applied for in your building permit. You must verify if your property is encumbered by any restrictions or face possible litigation and or fines.

Satbir Singh Talwar

(Owners Must Sign All Applications Before Permit Issuance.)

Owners Signature ****OWNER BUILDERS MUST PERSONALLY APPEAR AND SIGN THE BUILDING PERMIT.**

CONTRACTORS AFFIDAVIT: By my signature I understand and agree that I have informed and provided this written statement to the owner of all the above written responsibilities in Columbia County for obtaining this Building Permit including all application and permit time limitations.

Contractor's Signature (Permitee)

Contractor's License Number_____
Columbia County
Competency Card Number_____

Affirmed under penalty of perjury to by the Contractor and subscribed before me this ____ day of _____ 20___.

Personally known_____ or Produced Identification_____

SEAL:

State of Florida Notary Signature (For the Contractor)

SUBCONTRACTOR VERIFICATION FORM

APPLICATION NUMBER _____ CONTRACTOR _____ PHONE _____

THIS FORM MUST BE SUBMITTED PRIOR TO THE ISSUANCE OF A PERMIT

In Columbia County one permit will cover all trades doing work at the permitted site. It is REQUIRED that we have records of the subcontractors who actually did the trade specific work under the permit. Per Florida Statute 440 and Ordinance 89-6, a contractor shall require all subcontractors to provide evidence of workers' compensation or exemption, general liability insurance and a valid Certificate of Competency license in Columbia County.

Any changes, the permitted contractor is responsible for the corrected form being submitted to this office prior to the start of that subcontractor beginning any work. Violations will result in stop work orders and/or fines.

ok ELECTRICAL	Print Name Donald R. Hollingsworth License #: 13012377 EK	Signature [illegible] Phone #: 386-253-5544
x MECHANICAL/ A/C _____	Print Name Satbir Talwar License #:	Signature Satbir Talwar Phone #: 904-304-3093.
ok PLUMBING/ GAS 715	Print Name Cody Barnes License #: CFC1427145	Signature [illegible] Phone #: 386 623-0509
ROOFING	Print Name License #:	Signature Phone #:
SHEET METAL	Print Name License #:	Signature Phone #:
FIRE SYSTEM/ SPRINKLER	Print Name License#:	Signature Phone #:
SOLAR	Print Name License #:	Signature Phone #:

	Specialty License	License Number	Sub-Contractors Printed Name	Sub-Contractors Signature
x	MASON		Satbir Talwar	Satbir Talwar
x	CONCRETE FINISHER			
x	FRAMING			
x	INSULATION			
x	STUCCO			
x	DRYWALL			
	PLASTER			
x	CABINET INSTALLER			
x	PAINTING			
	ACOUSTICAL CEILING		Satbir Talwar	Satbir Talwar
	GLASS			
	CERAMIC TILE			
	FLOOR COVERING			
	ALUM/VINYL SIDING			
	GARAGE DOOR			
	METAL BLDG ERECTOR			

F. S. 440.103 Building permits; identification of minimum premium policy.--Every employer shall, as a condition to applying for and receiving a building permit, show proof and certify to the permit issuer that it has secured compensation for its employees under this chapter as provided in ss. 440.10 and 440.38, and shall be presented each time the employer applies for a building permit.

COLUMBIA COUNTY BUILDING DEPARTMENT
135 NE Hernando Ave., Suite B-21
Lake City, FL 32055
Office: 386-758-1008 Fax: 386-758-2160

OWNER BUILDER DISCLOSURE STATEMENT

I understand that state law requires construction to be done by a licensed contractor and have applied for an owner-builder permit under an exemption from the law. The exemption specifies that I, as the owner of the property listed, may act as my own contractor with certain restrictions even though I do not have a license.

I understand that building permits are not required to be signed by a property owner unless he or she is responsible for the construction and is not hiring a licensed contractor to assume responsibility.

I understand that, as an owner-builder, I am the responsible party of record on a permit. I understand that I may protect myself from potential financial risk by hiring a licensed contractor and having the permit filed in his or her name instead of my own name. I also understand that a contractor is required by law to be licensed and bonded in Florida and to list his or her license numbers on permits and contracts.

I understand that I may build or improve a one-family or two-family residence or farm outbuilding. I may also build or improve a commercial building if the costs do not exceed $75,000. The building or residence must be for my own use or occupancy. It may not be built or substantially improved for sale or lease. If a building or residence that I have built or substantially improved myself is sold or leased with in 1 year after the construction is complete, the law will presume that I built or substantially improved it for sale or lease, which violates the exemption.

I understand that, as the owner-builder, I must provide direct, onsite supervision of the construction.

I understand that I may not hire an unlicensed person to act as my contractor or to supervise persons working on my building or residence. It is my responsibility to ensure that the persons whom I employ have the licenses required by law and by county or municipal ordinance.

I understand that it is frequent practice of unlicensed persons to have the property owner obtain an owner-builder permit that erroneously implies that the property owner is providing his or her own labor and materials. I, as an owner-builder, may be held liable and subjected to serious financial risk for any injuries sustained by an unlicensed person or his or her employees while working on my property. My homeowner's insurance may not provide coverage for those injuries. I am willfully acting as an owner-builder and am aware of the limits of my insurance coverage for injuries to workers on my property.

I understand that I may not delegate the responsibility for supervising work to a licensed contractor who is not licensed to perform the work being done. Any person working on my building who is not licensed must work under my direct supervision and must be employed by me, which means that I must comply with laws requiring the withholding of federal income tax and social security contributions under the Federal Insurance Contributions Act (FICA) and must provide workers' compensation for the employee. I understand that my failure to follow these laws may subject me to serious financial risk.

I agree that, as the party legally and financially responsible for this proposed construction activity, I will abide by all applicable laws and requirements that govern owner-builders as well as employers. I also understand that the construction must comply with all applicable laws, ordinances, building codes, and zoning regulations.

I understand that I may obtain more information regarding my obligations as an employer from the Internal Revenue Service, the United States Small Business Administration, the Florida Department of Financial Services, and the Florida Department of Revenue. I also understand that I may contact the Florida Construction Industry Licensing Board at 850-487-1395 or Internet website address http://www.myflorida.com/dbpr/pro/cilb/index.html for more information about licensed contractors.

I am aware of, and consent to, an owner-builder building permit applied for in my name and understand that I am the party legally and financially responsible for the proposed construction activity at the following address:

506 NW Fat Cat Court.

I agree to notify Columbia County Building Department immediately of any additions, deletions, or changes to any of the information that I have provided on this disclosure. Licensed contractors are regulated by laws designed to protect the public. If you contract with a person who does not have a license, the Construction Industry Licensing Board and Department of Business and Professional Regulation may be unable to assist you with any financial loss that you sustain as a result of a complaint. Your only remedy against an unlicensed contractor may be in civil court. It is also important for you to understand that, if an unlicensed contractor or employee of an individual of firm is injured while working on your property, you may be held liable for damages. If you obtain an owner-builder permit and wish to hire a licensed contractor, you will be responsible for verifying whether the contractor is properly licensed and the status of the contractor's workers' compensation coverage.

I understand that if I hire subcontractors they must be licensed for that type of work in Columbia County, ex: framing, stucco, masonry, and state registered builders. Registered Contractors must have a minimum of $300,000.00 in General Liability insurance coverage and the proper workers' compensation. Specialty Contractors must have a minimum of $100,000.00 in General Liability insurance coverage and the proper workers' compensation coverage.

Before a building permit can be issued, this disclosure statement must be completed and signed by the property owner and returned to Columbia County Building Department.

TYPE OF CONSTRUCTION

( ) Single Family Dwelling ( ) Two-Family Residence ( ) Farm Outbuilding

(✓) Addition, Alteration, Modification or other Improvement

( ) Commercial, Cost of Construction_____ Construction of_____

( ) Other_____

I Satbir Talwar, have been advised of the above disclosure statement for exemption from contractor licensing as an owner/builder. I agree to comply with all requirements provided for in Florida Statutes allowing this exception for the construction permitted by Columbia County Building Permit.

Satbir S Talwar

Owner Builder Signature Date 04/13/2011

NOTARY OF OWNER BUILDER SIGNATURE

The above signer is personally known to me or produced identification drivers license

Notary Signature Debbie A Motes Date 4-13-11 (Seal)

DEBBIE A. MOTES
MY COMMISSION # DD 981109
EXPIRES: May 14, 2014
Bonded Thru Notary Public Underwriters

FOR BUILDING DEPARTMENT USE ONLY

I hereby certify that the above listed owner builder has been given notice of the restriction stated above.

Building Official/Representative Daniel Lewis

Revised: 7-23-09
DISCLOSURE STATEMENT 09
Documents: B&Z Forms

Prepared by and return to:
Janet Toro
Kahane & Associates, P.A.
8201 Peters Road, Suite 3000
Plantation, FL 33324

File Number: 09-08692
Loan Number: [redacted]
Consideration: $110,000.00

Inst:201012020228 Date:12/20/2010 Time:12:27 PM
Doc Stamp-Deed:770.00
DC,P DeWitt Cason,Columbia County Page 1 of 3 B:1206 P:2108

(space above this line for recording data)

Special Warranty Deed

This Special Warranty Deed made this 10 day of **December, 2010**, between **Deutsche Bank National Trust Company, as Trustee of the IndyMac INDX Mortgage Loan Trust 2007-AR1, Mortgage Pass-Through Certificates Series 2007-AR1 under the Pooling and Servicing Agreement dated June 1, 2007** whose post office address is **460 Sierra Madre Villa Avenue, Suite 101, Pasadena, CA 91107**, grantor, and **Satbir Talwar and Simarpreet Talwar, husband and wife** whose post office address is **506 NW Fat Cat Court, Lake City, FL 32055**, grantee:

(Whenever used herein the terms grantor and grantee include all the parties to this instrument and the heirs, legal representatives, and assigns of individuals, and the successors and assigns of corporations, trusts and trustees)

Witnesseth, that said grantor, for and in consideration of the sum of TEN AND NO/100 DOLLARS ($10.00) and other good and valuable considerations to said grantor in hand paid by said grantee, the receipt whereof is hereby acknowledged, has granted, bargained, and sold to the said grantee, and grantee's heirs and assigns forever, the following described land, situate, lying and being in **Columbia County, Florida**, to-wit:

SEE EXHIBIT "A" ATTACHED HERETO AND MADE A PART HEREOF.

Parcel Identification Number: 29-3S-16-02384-000

Together with all the tenements, hereditaments and appurtenances thereto belonging or in anywise appertaining.

To Have and to Hold, the same in fee simple forever.

And the grantor hereby covenants with said grantee that the grantor is lawfully seized of said land in fee simple; that the grantor has good right and lawful authority to sell and convey said land; that the grantor hereby fully warrants the title to said land and will defend the same against the lawful claims of all persons claiming by, through or under grantors.

In Witness Whereof, grantor has hereunto set grantor's hand and seal the day and year first above written.

Signed, sealed and delivered in our presence:

Witness Name: Josie Salazar

Witness Name: Meredith Grower

Deutsche Bank National Trust Company, as Trustee of the IndyMac INDX Mortgage Loan Trust 2007-AR1, Mortgage Pass-Through Certificates Series 2007-AR1 under the Pooling and Servicing Agreement dated June 1, 2007, by OneWest Bank, FSB, Attorney in Fact

By: Louise Chavez
AVP

State of: Texas
County of: Travis

The foregoing instrument was acknowledged before me this 10 day of **December, 2010**, by **Louise Chavez AVP**

_____ of **OneWest Bank, FSB, Attorney in Fact** for **Deutsche Bank National Trust Company, as Trustee of the IndyMac INDX Mortgage Loan Trust 2007-AR1, Mortgage Pass-Through Certificates Series 2007-AR1 under the Pooling and Servicing Agreement dated June 1, 2007,** who (**X**) is personally known to me or ( ) has produced _____ as identification.

KARLA AGUILAR
NOTARY PUBLIC
STATE OF TEXAS
EXPIRES
07-21-2012

Notary Public

Printed Name: _____

My Commission Expires: _____

STATE OF FLORIDA
DEPARTMENT OF HEALTH
APPLICATION FOR ONSITE SEWAGE DISPOSAL SYSTEM CONSTRUCTION PERMIT

Permit Application Number 11-0909E

TALWAR 210

PART II - SITEPLAN

Scale: 1 inch = 40 feet.

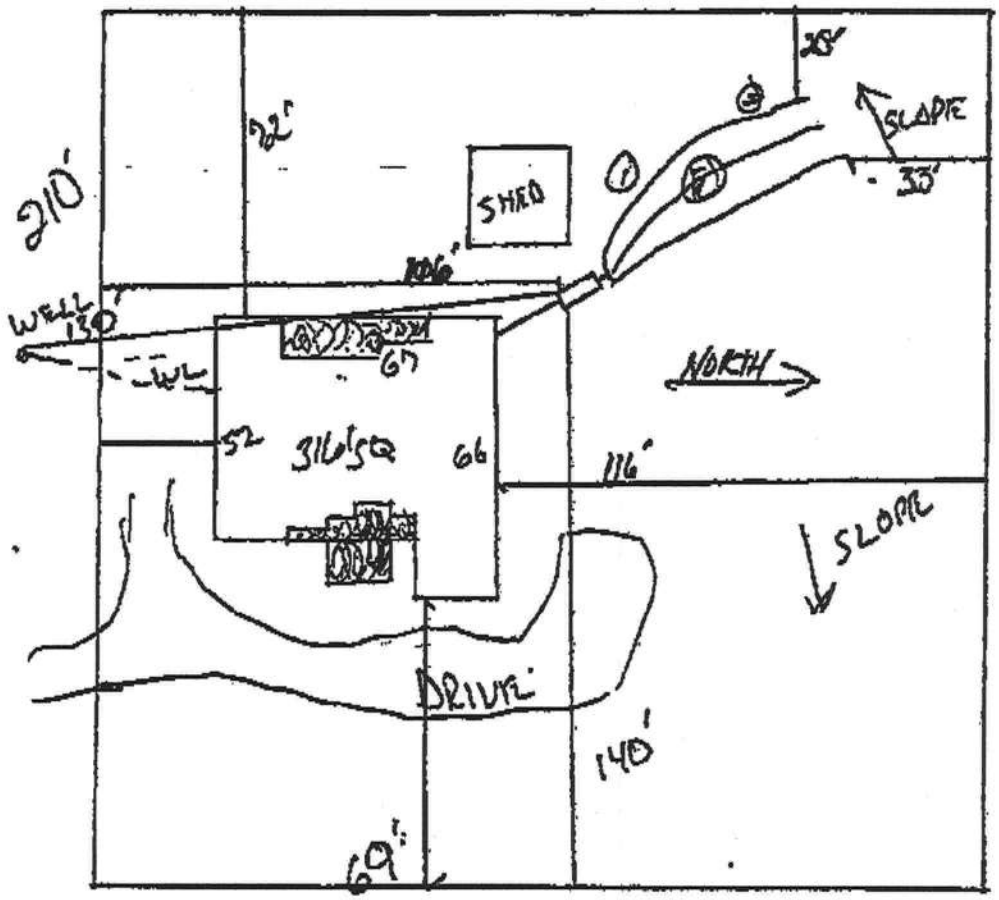

SEE ATTACHED

Notes: 1 of 8.77 Acres

Site Plan submitted by: Rocky [signature]

MASTER CONTRACTOR

Plan Approved

Not Approved

Date 5/6/11

Columbia County Health Department

ALL CHANGES MUST BE APPROVED BY THE COUNTY HEALTH DEPARTMENT

U-0209E

STATE OF FLORIDA
DEPARTMENT OF HEALTH
ONSITE SEWAGE TREATMENT AND DISPOSAL SYSTEM
APPLICATION FOR CONSTRUCTION PERMIT

PERMIT NO. 100343
DATE PAID: 4/28/11
FEE PAID: 120.00
RECEIPT #: 15916726

APPLICATION FOR:
[ ] New System [X] Existing System [ ] Holding Tank [ ] Innovative
[ ] Repair [ ] Abandonment [ ] Temporary [ ] _____

APPLICANT: Satbir Talwar

AGENT: _____ TELEPHONE: 904-304-3093

MAILING ADDRESS: 506 NW Fat Cat Court

TO BE COMPLETED BY APPLICANT OR APPLICANT'S AUTHORIZED AGENT. SYSTEMS MUST BE CONSTRUCTED BY A PERSON LICENSED PURSUANT TO 489.105(3)(m) OR 489.552, FLORIDA STATUTES. IT IS THE APPLICANT'S RESPONSIBILITY TO PROVIDE DOCUMENTATION OF THE DATE THE LOT WAS CREATED OR PLATTED (MM/DD/YY) IF REQUESTING CONSIDERATION OF STATUTORY GRANDFATHER PROVISIONS.

PROPERTY INFORMATION

LOT: _____ BLOCK: _____ SUBDIVISION: _____ PLATTED: _____

PROPERTY ID #: 29-3S-16-02384-000 ZONING: _____ I/M OR EQUIVALENT: [Y / N]

PROPERTY SIZE: 8.770 ACRES WATER SUPPLY: [ ] PRIVATE PUBLIC [ ]<=2000GPD [ ]>2000GPD

IS SEWER AVAILABLE AS PER 381.0065, FS? [Y / N] DISTANCE TO SEWER: _____ FT

PROPERTY ADDRESS: 506 NW Fat Cat Court

DIRECTIONS TO PROPERTY: 7 miles W on US 90 - Right on Fat Cat Court

BUILDING INFORMATION [X] RESIDENTIAL [ ] COMMERCIAL

Unit No	Type of Establishment	No. of Bedrooms	Building Area Sqft	Commercial/Institutional System Design Table 1, Chapter 64E-6, FAC
1	✓ Residence	✓ 5	✓ 3827	ORIGINAL ATTACHED
2				
3				
4				

[ ] Floor/Equipment Drains [ ] Other (Specify) _____

SIGNATURE: Satbir Singh Talwar DATE: 4-25-11

DH 4015, 08/09 (Obsoletes previous editions which may not be used)
Incorporated 64E-6.001, FAC

NOTICE OF COMMENCEMENT

Clerk's Office Stamp

Inst:201112006228 Date:4/26/2011 Time:2:17 PM
DC,P.DeWitt Cason,Columbia County Page 1 of 1 B:1213 P:1733

Tax Parcel Identification Number:

29-3S-16-02384-000

THE UNDERSIGNED hereby gives notice that improvements will be made to certain real property, and in accordance with Section 713.13 of the Florida Statutes, the following information is provided in this **NOTICE OF COMMENCEMENT.**

1. Description of property *(legal description)*: Part of Sec't 29, T3S, R16E
   a) Street *(job)* Address: 506 NW Fat Cat Court; Lake City, FL
2. General description of improvements: _____
3. Owner Information
   a) Name and address: Satbir Talwar 506 NW Fat Cat Court; Lake City, FL
   b) Name and address of fee simple titleholder (if other than owner) —
   c) Interest in property _____
4. Contractor Information
   a) Name and address: Same as owner
   b) Telephone No.: _____ Fax No. (Opt.) _____
5. Surety Information
   a) Name and address: N/A
   b) Amount of Bond: _____
   c) Telephone No.: _____ Fax No. (Opt.) _____
6. Lender
   a) Name and address: N/A
   b) Phone No. _____
7. Identity of person within the State of Florida designated by owner upon whom notices or other documents may be served:
   a) Name and address: _____
   b) Telephone No.: _____ Fax No. (Opt.) _____
8. In addition to himself, owner designates the following person to receive a copy of the Lienor's Notice as provided in Section 713.13(l)(b), Florida Statutes:
   a) Name and address: _____
   b) Telephone No.: _____ Fax No. (Opt.) _____
9. Expiration date of Notice of Commencement **(the expiration date is one year from the date of recording unless a different date is specified)**: _____

WARNING TO OWNER: ANY PAYMENTS MADE BY THE OWNER AFTER THE EXPIRATION OF THE NOTICE OF COMMENCEMENT ARE CONSIDERED IMPROPER PAYMENTS UNDER CHAPTER 713, PART I, SECTION 713.13, FLORIDA STATUTES, AND CAN RESULT IN YOUR PAYING TWICE FOR IMPROVEMENTS TO YOUR PROPERTY; A NOTICE OF COMMENCEMENT MUST BE RECORDED AND POSTED ON THE JOB SITE BEFORE THE FIRST INSPECTION. IF YOU INTEND TO OBTAIN FINANCING, CONSULT YOUR LENDER OR AN ATTORNEY BEFORE COMMENCING WORK OR RECORDING YOUR NOTICE OF COMMENCEMENT.

STATE OF FLORIDA
COUNTY OF COLUMBIA

10. Satbir Sigh Talwar
Signature of Owner or Owner's Authorized Office/Director/Partner/Manager

Satbir Talwar
Printed Name

The foregoing instrument was acknowledged before me, a Florida Notary, this 13th day of April, 2011, by:

_____ as _____ **(type of authority, e.g. officer, trustee, attorney fact) for** Satbir Talwar **(name of party on behalf of whom instrument was executed).**

Personally Known ____ OR Produced Identification ✓ Type drivers license

Notary Signature Debbie A Motes Notary Stamp or Seal:

DEBBIE A. MOTES
MY COMMISSION # DD 981109
EXPIRES: May 14, 2014
Bonded Thru Notary Public Underwriters

11. Verification pursuant to Section 92.525, Florida Statutes. Under penalties of perjury, I declare that I have read the foregoing and that the facts stated in it are true to the best of my knowledge and belief.

Satbir Sigh Talwar
Signature of Natural Person Signing (in line #10 above.)

Columbia County Property Appraiser

DB Last Updated: 5/3/2011

2010 Tax Year

Tax Collector | Tax Estimator | Property Card | Parcel List Generator | Interactive GIS Map | Print

Parcel: 29-3S-16-02384-000

<< Next Lower Parcel | Next Higher Parcel >>

Search Result: 1 of 1

Owner & Property Info

Owner's Name	TALWAR SATBIR & SIMARPREET		
Mailing Address	506 NW FAT CAT COURT LAKE CITY, FL 32055		
Site Address	506 NW FAT CAT CT		
Use Desc. (code)	SINGLE FAM (000100)		
Tax District	3 (County)	**Neighborhood**	29316
Land Area	8.770 ACRES	**Market Area**	01
Description	NOTE: This description is not to be used as the Legal Description for this parcel in any legal transaction.		

NE1/4 OF NW1/4 OF SW1/4, EX 1.25 AC OFF N SIDE & BEG SW COR OF NE1/4 OF NW1/4 OF SW1/4 RUN W 38.99 FT, N 599.74 FT, E 37.75 FT, S 599.78 FT TO POB DESC ORB 782-2060 & 808-128, CT 1004-33, WD 1022-2111 EX 0.51 AC DESC ORB 1031-996 (WATER RIGHTS DEED ORB 1188- 358),CT 1194-1897

Property & Assessment Values

2010 Certified Values		
Mkt Land Value	cnt: (0)	$45,509.00
Ag Land Value	cnt: (2)	$0.00
Building Value	cnt: (1)	$230,193.00
XFOB Value	cnt: (6)	$21,270.00
Total Appraised Value		$296,972.00
Just Value		$296,972.00
Class Value		$0.00
Assessed Value		$296,972.00
Exempt Value	(code: HX)	$50,000.00
Total Taxable Value		Cnty: $246,972 Other: $246,972 | Schl: $271,972

2011 Working Values

NOTE:
2011 Working Values are NOT certified values and therefore are subject to change before being finalized for ad valorem assessment purposes.

Show Working Values

Sales History

Show Similar Sales within 1/2 mile

Sale Date	OR Book/Page	OR Code	Vacant / Improved	Qualified Sale	Sale RCode	Sale Price
12/10/2010	1206/2108	WD	I	U	12	$110,000.00
5/5/2010	1194/1897	CT	I	U	11	$100.00
7/23/2004	1022/2111	WD	I	Q		$360,000.00
12/17/2003	1004/33	CT	I	U	03	$100.00
7/14/1995	808/128	WD	I	U	12	$58,000.00
11/22/1993	782/2060	WD	V	U	34	$0.00
1/1/1982	482/196	WD	I	Q		$50,000.00

Building Characteristics

Bldg Item	Bldg Desc	Year Blt	Ext. Walls	Heated S.F.	Actual S.F.	Bldg Value
3	SINGLE FAM (000100)	1997	WD FR STUC (16)	3161	3673	$98,108.00
	Note: All S.F. calculations are based on exterior building dimensions.					

Extra Features & Out Buildings

Code	Desc	Year Blt	Value	Units	Dims	Condition (% Good)
0210	GARAGE U	0	$10,080.00	0000504.000	21 x 24 x 0	(000.00)

1105-14

Addition Roof Plane Sheathing Area = 760 sq. ft

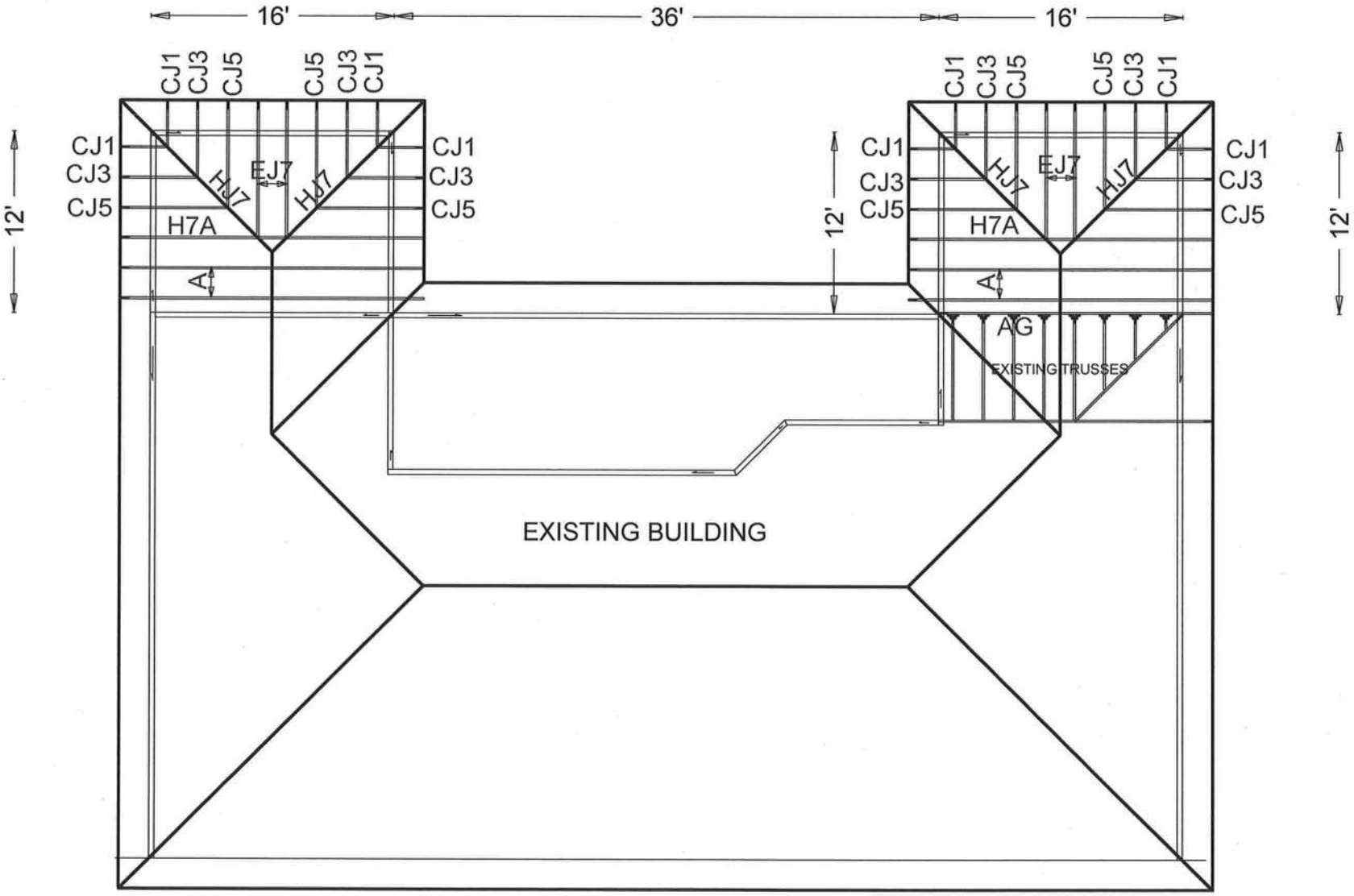

FREEMAN DESIGNS/ TALWAR

JOB DESCRIPTION:: Fill in later
/: FREEMAN DESIGNS/TALWAR

JOB NO:
11-075

PAGE NO:
1 OF 1

(11-075--Fill in later FREEMAN DESIGNS/TALWAR -- , ** - A)

Top chord 2x4 SP #2 Dense
Bot chord 2x4 SP #2 Dense
Webs 2x4 SP #3

Roof overhang supports 2.00 psf soffit load.

Bottom chord checked for 10.00 psf non-concurrent live load.

110 mph wind, 15.00 ft mean hgt, ASCE 7-05, CLOSED bldg, Located anywhere in roof, CAT II, EXP B, wind TC DL=5.0 psf, wind BC DL=5.0 psf. Iw=1.00 GCpi(+/-)=0.18

Wind reactions based on MWFRS pressures.

Deflection meets L/240 live and L/180 total load.

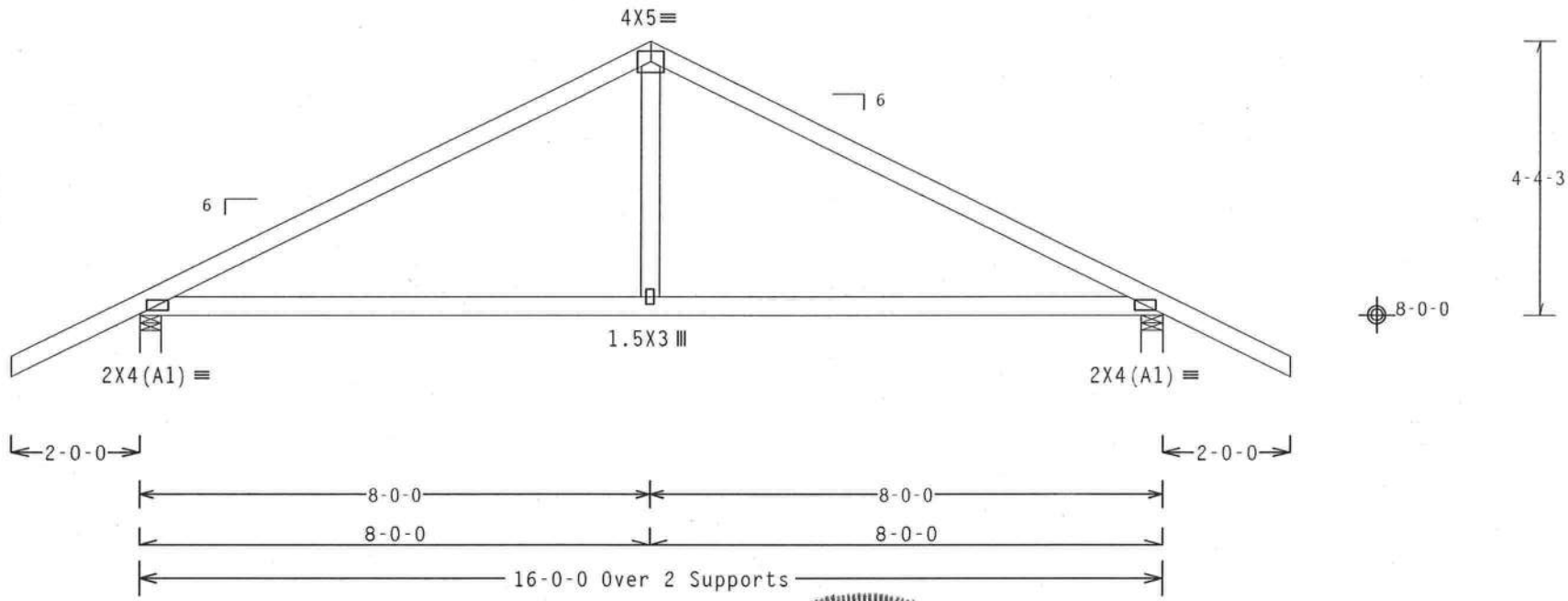

Design Crit: FBC2007Res/TPI-2002 (STD)

PLT TYP. Wave | FT/RT=10%(0%)/0(0%) | 9.05.03.0319.17 | QTY:4 | FL/-/4/-/-/R/- | Scale =.375"/Ft.

ALPINE
ITW Building Components Group Inc.
Haines City, FL 33844
FL COA #0 278

WARNING READ AND FOLLOW ALL NOTES ON THIS SHEET!
IMPORTANT FURNISH THIS DESIGN TO ALL CONTRACTORS INCLUDING INSTALLERS.

Trusses require extreme care in fabricating, handling, shipping, installing and bracing. Refer to and follow the latest edition of BCSI (Building Component Safety Information, by TPI and WTCA) for safety practices prior to performing these functions. Installers shall provide temporary bracing per BCSI. Unless noted otherwise, top chord shall have properly attached structural sheathing and bottom chord shall have a properly attached rigid ceiling. Locations shown for permanent lateral restraint of webs shall have bracing installed per BCSI sections B3, B7 or B10, as applicable.

ITW Building Components Group Inc. (ITWBCG) shall not be responsible for any deviation from this design, any failure to build the truss in conformance with ANSI/TPI 1, or for handling, shipping, installing and bracing of trusses. Apply plates to each face of truss and position as shown above and on the Truss Details, unless noted otherwise. Refer to drawings 160A-Z for standard plate positions. A seal on this drawing or cover page listing this drawing, indicates acceptance of professional engineering responsibility solely for the design shown. The suitability and use of this design for any structure is the responsibility of the Building Designer per ANSI/TPI 1 Sec.2. For more information see: this job general notes page; ITW-BCG: www.itwbcg.com; TPI: www.tpinst.org; WTCA: www.sbcindustry.com; ICC: www.iccsafe.org

WILLIAM H. KRICK LICENSE No. 70861 STATE OF FLORIDA PROFESSIONAL ENGINEER
04/15/2011

TC LL	20.0 PSF	REF	R487-- 34757
TC DL	10.0 PSF	DATE	04/15/11
BC DL	10.0 PSF	DRW	HCUSR487 11105002
BC LL	0.0 PSF	HC-ENG	KD/AP *
TOT.LD.	40.0 PSF	SEQN-	196879
DUR.FAC.	1.25		
SPACING	24.0"	JREF-	1UB4487_Z01

(11-075--Fill in later FREEMAN DESIGNS/TALWAR -- , ** - H7A)

Top chord 2x4 SP #2 Dense
Bot chord 2x4 SP #2 Dense
Webs 2x4 SP #3

Roof overhang supports 2.00 psf soffit load.

In lieu of structural panels use purlins to brace all flat TC @ 24" OC.

Deflection meets L/240 live and L/180 total load.

110 mph wind, 15.00 ft mean hgt, ASCE 7-05, CLOSED bldg, Located anywhere in roof, CAT II, EXP B, wind TC DL=5.0 psf, wind BC DL=5.0 psf. Iw=1.00 GCpi(+/-)=0.18

Wind reactions based on MWFRS pressures.

#1 hip supports 7-0-0 jacks with no webs.

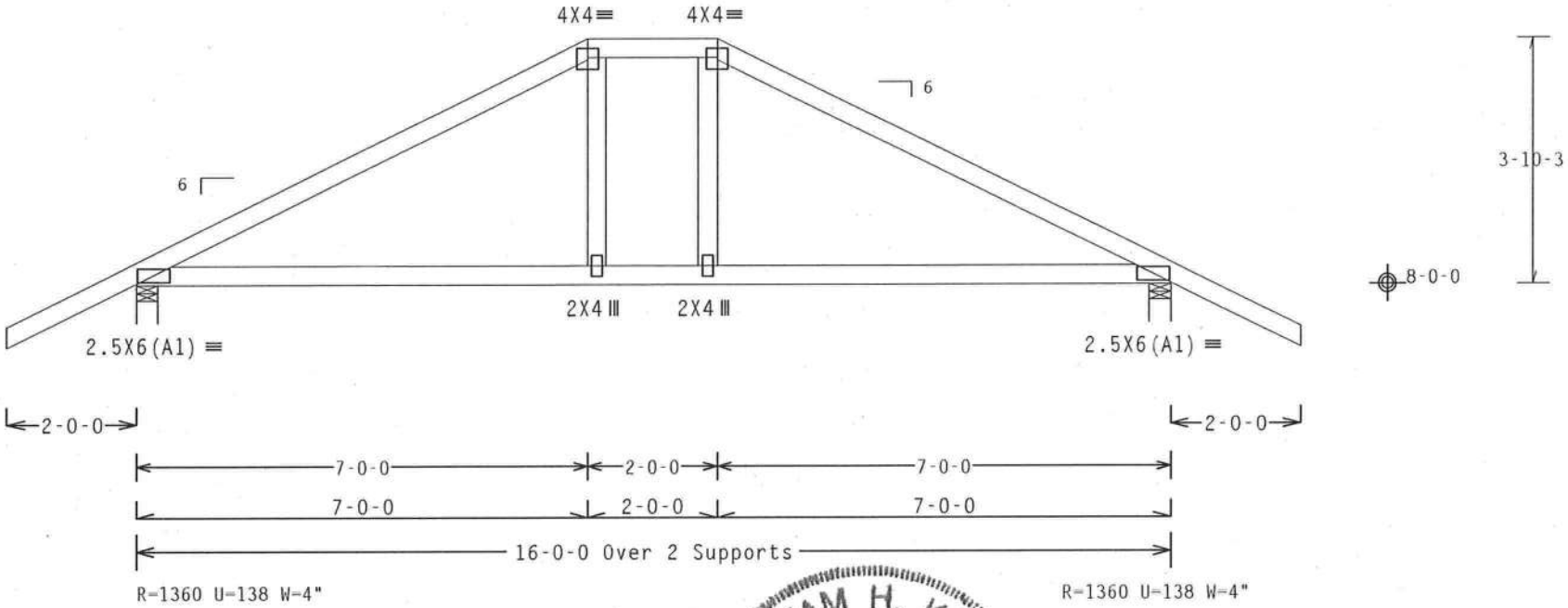

Design Crit: FBC2007Res/TPI-2002 (STD)

PLT TYP. Wave FT/RT=10%(0%)/0(0 9.05.03.0319.17 QTY:2 FL/-/4/-/-/R/- Scale =.375"/Ft.

ALPINE
ITW Building Components Group Inc.
Haines City, FL 33844
FL COA #0 278

WARNING READ AND FOLLOW ALL NOTES ON THIS SHEET!
IMPORTANT FURNISH THIS DESIGN TO ALL CONTRACTORS INCLUDING INSTALLERS.

Trusses require extreme care in fabricating, handling, shipping, installing and bracing. Refer to and follow the latest edition of BCSI (Building Component Safety Information, by TPI and SBCA) for safety practices prior to performing these functions. Installers shall provide temporary bracing per BCSI. Unless noted otherwise, top chord shall have properly attached structural sheathing and bottom chord shall have a properly attached rigid ceiling. Locations shown for permanent lateral restraint of webs shall have bracing installed per BCSI sections B3, B7 or B10, as applicable.

ITW Building Components Group Inc. (ITWBCG) shall not be responsible for any deviation from this design, any failure to build the truss in conformance with ANSI/TPI 1, or for handling, shipping, installing and bracing of trusses. Apply plates to each face of truss and position as shown above and on the joints. Details, unless noted otherwise. Refer to drawings 160A-2 for standard plate positions. A professional drawing or cover page listing this drawing, indicates acceptance of professional engineering responsibility solely for the design shown. The suitability and use of this design for any structure is the responsibility of the Building Designer per ANSI/TPI 1 Sec.2. For more information see: This job general notes page; ITW-BCG: www.itwbcg.com; TPI: www.tpinst.org; WTCA: www.sbcindustry.com; ICC: www.iccsafe.org

WILLIAM H. KRICK LICENSE No. 70801 STATE OF FLORIDA PROFESSIONAL ENGINEER

04/15/2011

TC LL	20.0 PSF	REF	R487-- 34758
TC DL	10.0 PSF	DATE	04/15/11
BC DL	10.0 PSF	DRW	HCUSR487 11105001
BC LL	0.0 PSF	HC-ENG	KD/AP
TOT.LD.	40.0 PSF	SEQN-	197610
DUR.FAC.	1.25		
SPACING	24.0"	JREF-	1UB4487_Z01

(11-075--Fill in later FREEMAN DESIGNS/TALWAR -- , ** - AG)

Top chord 2x4 SP #2 Dense
Bot chord 2x6 SP #2
Webs 2x4 SP #3

110 mph wind, 15.00 ft mean hgt, ASCE 7-05, CLOSED bldg, Located anywhere in roof, CAT II, EXP B, wind TC DL=5.0 psf, wind BC DL=5.0 psf.
Iw=1.00 GCpi(+/-)=0.18

Wind reactions based on MWFRS pressures.

Roof overhang supports 2.00 psf soffit load.

Deflection meets L/240 live and L/180 total load.

IT IS THE RESPONSIBILITY OF THE BUILDING DESIGNER AND TRUSS FABRICATOR TO REVIEW THIS DWG PRIOR TO CUTTING LUMBER TO VERIFY THAT ALL DATA, INCLUDING DIMENSIONS AND LOADS, CONFORM TO THE ARCHITECTURAL PLANS/SPECIFICATIONS AND FABRICATOR'S TRUSS LAYOUT.

Special loads
------(Lumber Dur.Fac.=1.25 / Plate Dur.Fac.=1.25)
TC- From 62 plf at 0.00 to 62 plf at 8.00
TC- From 62 plf at 8.00 to 62 plf at 18.00
BC- From 10 plf at 0.00 to 10 plf at 16.00
BC- From 4 plf at 16.00 to 4 plf at 18.00
BC- 293.50 lb Conc. Load at 0.94, 2.94, 4.94, 6.94
8.94
BC- 211.19 lb Conc. Load at 10.91
BC- 128.92 lb Conc. Load at 12.91
BC- 47.07 lb Conc. Load at 14.91

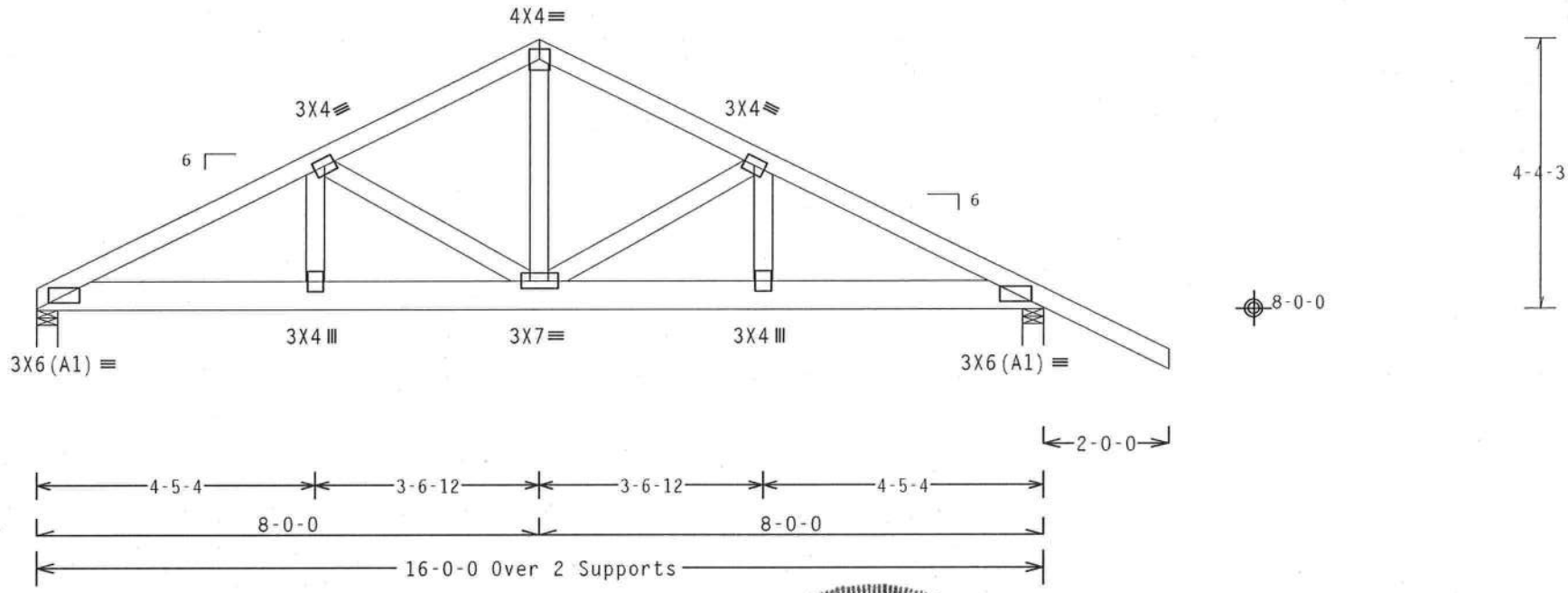

Design Crit: FBC2007Res/TPI-2002 (STD)

PLT TYP. Wave FT/RT=10%(0%)/0(0 9.05.03.0319.17 QTY:1 FL/-/4/-/-/R/- Scale =.375"/Ft.

ALPINE
ITW Building Components Group Inc.
Haines City, FL 33844
FL COA #0 278

WARNING READ AND FOLLOW ALL NOTES ON THIS SHEET!
IMPORTANT FURNISH THIS DESIGN TO ALL CONTRACTORS INCLUDING INSTALLERS.

Trusses require extreme care in fabricating, handling, shipping, installing and bracing. Refer to and follow the latest edition of BCSI (Building Component Safety Information, by TPI and SBCI) for safety practices prior to performing these functions. Installers shall provide temporary bracing per BCSI. Unless noted otherwise, top chord shall have properly attached structural sheathing and bottom chord shall have a properly attached rigid ceiling. Locations shown for permanent lateral restraint of webs shall have bracing installed per BCSI sections B3, B7 or B10, as applicable.

ITW Building Components Group Inc. (ITWBCG) shall not be responsible for any deviation from this design, any failure to build the truss in conformance with ANSI/TPI 1, or for handling, shipping, installation and bracing of trusses. Apply plates to each face of truss and position as shown above and otherwise per Details, unless noted otherwise. Refer to drawings 160A-2 for standard plate positions. A seal on this drawing or cover page listing this drawing, indicates acceptance of professional engineering responsibility solely for the design shown. The suitability and use of this design for any structure is the responsibility of the Building Designer per ANSI/TPI 1 Sec.2. For more information see: This 2 general notes page; ITW-BCG: www.itwbcg.com; TPI: www.tpinst.org; WICA: www.sbcindustry.com; ICC: www.iccsafe.org

WILLIAM H. KRICK LICENSE No. 70867 STATE OF FLORIDA PROFESSIONAL ENGINEER
04/15/2011

TC LL	20.0 PSF	REF R487-- 34759
TC DL	10.0 PSF	DATE 04/15/11
BC DL	10.0 PSF	DRW HCUSR487 11105002
BC LL	0.0 PSF	HC-ENG KD/AP
TOT.LD.	40.0 PSF	SEQN- 197616
DUR.FAC.	1.25	
SPACING	24.0"	JREF- 1UB4487_Z01

(11-075--Fill in later FREEMAN DESIGNS/TALWAR -- , ** - EJ7)

Top chord 2x4 SP #2 Dense
Bot chord 2x4 SP #2 Dense

Roof overhang supports 2.00 psf soffit load.

Bottom chord checked for 10.00 psf non-concurrent live load.

Provide (2) 16d common nails(0.162"x3.5"), toe nailed at Top chord.
Provide (2) 16d common nails(0.162"x3.5"), toe nailed at Bot chord.

110 mph wind, 15.00 ft mean hgt, ASCE 7-05, CLOSED bldg, not located within 4.50 ft from roof edge, CAT II, EXP B, wind TC DL=5.0 psf, wind BC DL=5.0 psf. Iw=1.00 GCpi(+/-)=0.18

Wind reactions based on MWFRS pressures.

Deflection meets L/240 live and L/180 total load.

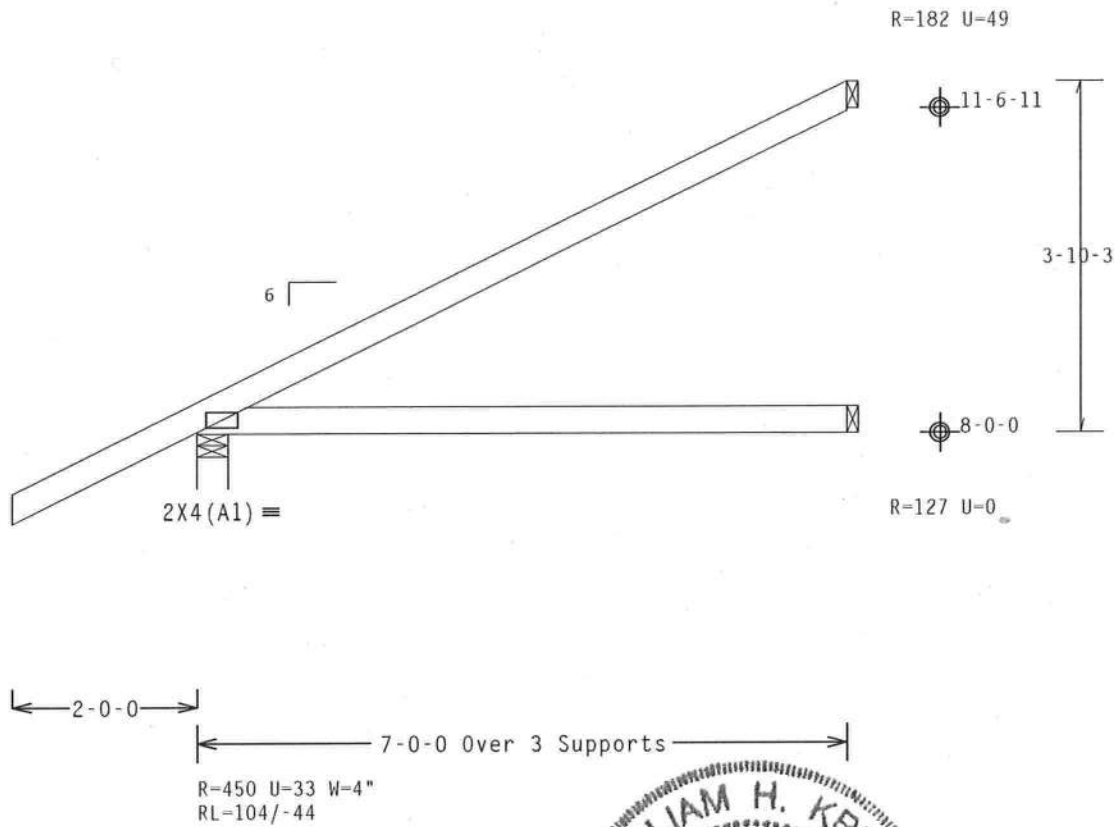

Design Crit: FBC2007Res/TPI-2002(STD)
FT/RT=10%(0%)/0(0%) 9.05.03.0319.17 QTY:4 FL/-/4/-/-/R/- Scale =.5"/Ft.

PLT TYP. Wave

ALPINE
ITW Building Components Group Inc.
Haines City, FL 33844
FL COA #0 278

WARNING READ AND FOLLOW ALL NOTES ON THIS SHEET!
IMPORTANT FURNISH THIS DESIGN TO ALL CONTRACTORS INCLUDING INSTALLERS.

Trusses require extreme care in fabricating, handling, shipping, installing and bracing. Refer to and follow the latest edition of BCSI (Building Component Safety Information, by TPI and ICC) for safety practices prior to performing these functions. Installers shall provide temporary bracing per BCSI. Unless noted otherwise, top chord shall have properly attached structural sheathing and bottom chord shall have a properly attached rigid ceiling. Locations shown for permanent lateral restraint of webs shall have bracing installed per BCSI sections B3, B7 or B10, as applicable.

ITW Building Components Group Inc. (ITWBCG) shall not be responsible for any deviation from this design, any failure to build the truss in conformance with ANSI/TPI 1, or for handling, shipping, installation and bracing of trusses. Apply plates to each face of truss and position as shown above and on the individual Truss Details, unless noted otherwise. Refer to drawings 160A-Z for standard plate positions. A seal on this drawing or cover page listing this drawing, indicates acceptance of professional engineering responsibility solely for the design shown. The suitability and use of this design for any structure is the responsibility of the Building Designer per ANSI/TPI 1 Sec.2. For more information see: This 3 general notes page; ITW-BCG: www.itwbcg.com; TPI: www.tpinst.org; WTCA: www.sbcindustry.com; ICC: www.iccsafe.org

WILLIAM H. KRICK LICENSE No. 70861 STATE OF FLORIDA PROFESSIONAL ENGINEER

04/15/2011

TC LL	20.0 PSF	REF R487-- 34760
TC DL	10.0 PSF	DATE 04/15/11
BC DL	10.0 PSF	DRW HCUSR487 11105005
BC LL	0.0 PSF	HC-ENG KD/AP
TOT.LD.	40.0 PSF	SEQN- 196861
DUR.FAC.	1.25	
SPACING	24.0"	JREF- 1UB4487_Z01

(11-075--Fill in later FREEMAN DESIGNS/TALWAR -- , ** - CJ5)

Top chord 2x4 SP #2 Dense
Bot chord 2x4 SP #2 Dense

Roof overhang supports 2.00 psf soffit load.

Bottom chord checked for 10.00 psf non-concurrent live load.

Provide (2) 16d common nails(0.162"x3.5"), toe nailed at Top chord.
Provide (2) 16d common nails(0.162"x3.5"), toe nailed at Bot chord.

110 mph wind, 15.00 ft mean hgt, ASCE 7-05, CLOSED bldg, not located within 4.50 ft from roof edge, CAT II, EXP B, wind TC DL=5.0 psf, wind BC DL=5.0 psf. Iw=1.00 GCpi(+/-)=0.18

Wind reactions based on MWFRS pressures.

Deflection meets L/240 live and L/180 total load.

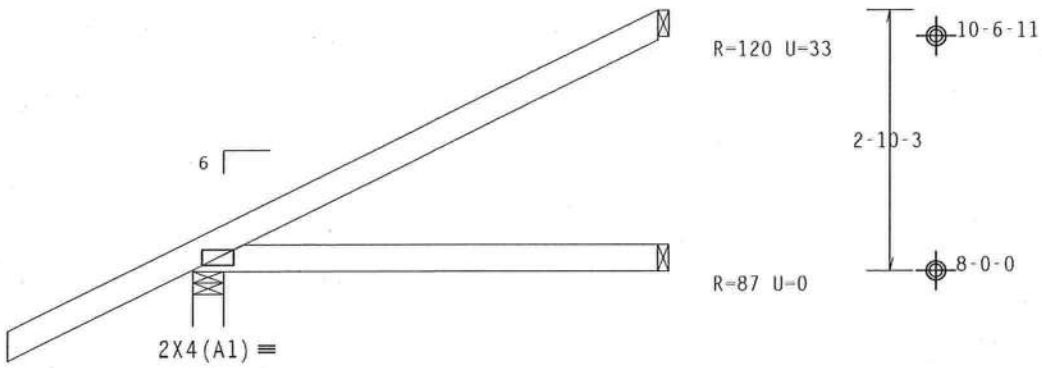

2-0-0

5-0-0 Over 3 Supports

R=377 U=34 W=4"
RL=80/-39

Design Crit: FBC2007Res/TPI-2002 STD
FT/RT=10%(0%)/0(0) 9.05.03.0319.17

PLT TYP. Wave QTY:8 FL/-/4/-/-/R/- Scale =.5"/Ft.

WILLIAM H. KRICK LICENSE No. 70861 STATE OF FLORIDA PROFESSIONAL ENGINEER
04/15/2011

ALPINE
ITW Building Components Group Inc.
Haines City, FL 33844
FL COA #0 278

WARNING READ AND FOLLOW ALL NOTES ON THIS SHEET!
IMPORTANT FURNISH THIS DESIGN TO ALL CONTRACTORS INCLUDING INSTALLERS.

Trusses require extreme care in fabricating, handling, shipping, installing and bracing. Refer to and follow the latest edition of BCSI (Building Component Safety Information, by TPI and [illegible]) for safety practices prior to performing these functions. Installers shall provide temporary bracing per BCSI. Unless noted otherwise, top chord shall have properly attached structural sheathing and bottom chord shall have a properly attached rigid ceiling. Locations shown for permanent lateral restraint of webs shall have bracing installed per BCSI sections B3, B7 or B10, as applicable.

ITW Building Components Group Inc. (ITWBCG) shall not be responsible for any deviation from this drawing, any failure to build the truss in conformance with ANSI/TPI 1, or for handling, shipping, installation and bracing of trusses. Apply plates to each face of truss and position as shown above and on individual Details, unless noted otherwise. Refer to drawings 160A-Z for standard plate positions. Approval of this drawing or cover page listing this drawing, indicates acceptance of professional engineering responsibility solely for the design shown. The suitability and use of this design for any structure is the responsibility of the Building Designer per ANSI/TPI 1 Sec.2. For more information see: This company's general notes page; ITW-BCG: www.itwbcg.com; TPI: www.tpinst.org; WTCA: www.sbcindustry.com; ICC: www.iccsafe.org

TC LL	20.0 PSF	REF R487-- 34761
TC DL	10.0 PSF	DATE 04/15/11
BC DL	10.0 PSF	DRW HCUSR487 11105001
BC LL	0.0 PSF	HC-ENG KD/AP
TOT.LD.	40.0 PSF	SEQN- 196864
DUR.FAC.	1.25	
SPACING	24.0"	JREF- 1UB4487_Z01

THIS DWG PREPARED FROM COMPUTER INPUT (LOADS & DIMENSIONS) SUBMITTED BY TRUSS MFR.

(11-075--Fill in later FREEMAN DESIGNS/TALWAR -- , ** - CJ3)

Top chord 2x4 SP #2 Dense
Bot chord 2x4 SP #2 Dense

Roof overhang supports 2.00 psf soffit load.

Bottom chord checked for 10.00 psf non-concurrent live load.

Provide (2) 16d common nails(0.162"x3.5"), toe nailed at Top chord.
Provide (2) 16d common nails(0.162"x3.5"), toe nailed at Bot chord.

110 mph wind, 15.00 ft mean hgt, ASCE 7-05, CLOSED bldg, Located anywhere in roof, CAT II, EXP B, wind TC DL=5.0 psf, wind BC DL=5.0 psf. Iw=1.00 GCpi(+/-)=0.18

Wind reactions based on MWFRS pressures.

Deflection meets L/240 live and L/180 total load.

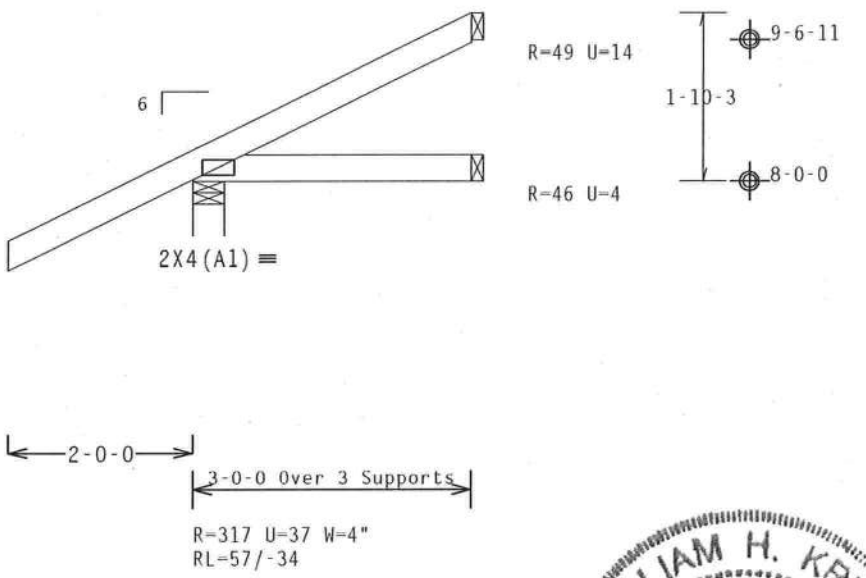

Design Crit: FBC2007Res/TPI-2002(STD)

PLT TYP. Wave FT/RT=10%(0%)/0(0 9.05.03.0319.17 QTY:8 FL/-/4/-/-/R/- Scale =.5"/Ft.

ALPINE
ITW Building Components Group Inc.
Haines City, FL 33844
FL COA #0 278

WARNING READ AND FOLLOW ALL NOTES ON THIS SHEET!
IMPORTANT FURNISH THIS DESIGN TO ALL CONTRACTORS INCLUDING INSTALLERS.

Trusses require extreme care in fabricating, handling, shipping, installing and bracing. Refer to and follow the latest edition of BCSI (Building Component Safety Information, by TPI and WTCA) for safety practices prior to performing these functions. Installers shall provide temporary bracing per BCSI. Unless noted otherwise, top chord shall have properly attached structural sheathing and bottom chord shall have a properly attached rigid ceiling. Locations shown for permanent lateral restraint of webs shall have bracing installed per BCSI sections B3, B7 or B10, as applicable.

ITW Building Components Group Inc. (ITWBCG) shall not be responsible for any deviation from this design, any failure to build the truss in conformance with ANSI/TPI 1, or for handling, shipping, installation and bracing of trusses. Apply plates to each face of truss and position as shown above and on the Joint Details, unless noted otherwise. Refer to drawings 160A-Z for standard plate positions. Appeal on this drawing or cover page listing this drawing, indicates acceptance of professional engineering responsibility solely for the design shown. The suitability and use of this design for any structure is the responsibility of the Building Designer per ANSI/TPI 1 Sec.2. For more information see: This design's general notes page; ITW-BCG: www.itwbcg.com; TPI: www.tpinst.org; WTCA: www.sbcindustry.com; ICC: www.iccsafe.org

WILLIAM H. KRICK LICENSE No. 70861 STATE OF FLORIDA PROFESSIONAL ENGINEER

04/15/2011

TC LL	20.0 PSF	REF	R487-- 34762
TC DL	10.0 PSF	DATE	04/15/11
BC DL	10.0 PSF	DRW	HCUSR487 11105004
BC LL	0.0 PSF	HC-ENG KD/AP	*
TOT.LD.	40.0 PSF	SEQN-	196867
DUR.FAC.	1.25		
SPACING	24.0"	JREF-	1UB4487_Z01

(11-075--Fill in later FREEMAN DESIGNS/TALWAR -- , ** - CJ1)

Top chord 2x4 SP #2 Dense
Bot chord 2x4 SP #2 Dense

Roof overhang supports 2.00 psf soffit load.

Bottom chord checked for 10.00 psf non-concurrent live load.

Provide (2) 16d common nails(0.162"x3.5"), toe nailed at Top chord.
Provide (2) 16d common nails(0.162"x3.5"), toe nailed at Bot chord.

110 mph wind, 15.00 ft mean hgt, ASCE 7-05, CLOSED bldg, Located anywhere in roof, CAT II, EXP B, wind TC DL=5.0 psf, wind BC DL=5.0 psf. Iw=1.00 GCpi(+/-)=0.18

Wind reactions based on MWFRS pressures.

Deflection meets L/240 live and L/180 total load.

R=-110 Rw=43 U=75

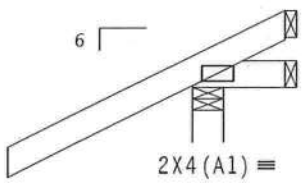

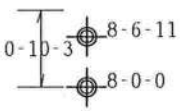

R=-35 Rw=20 U=26

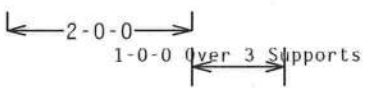

R=361 U=81 W=4"
RL=34/-28

Design Crit: FBC2007Res/TPI-2002(STD)

PLT TYP. Wave | FT/RT=10%(0%)/0(0) | 9.06.03.0319.17 | QTY:8 | FL/-/4/-/-/R/- | Scale =.5"/Ft.

ALPINE
ITW Building Components Group Inc.
Haines City, FL 33844
FL COA #0 278

WARNING READ AND FOLLOW ALL NOTES ON THIS SHEET!
IMPORTANT FURNISH THIS DESIGN TO ALL CONTRACTORS INCLUDING INSTALLERS.

Trusses require extreme care in fabricating, handling, shipping, installing and bracing. Refer to and follow the latest edition of BCSI (Building Component Safety Information, by TPI and SBCA) for safety practices prior to performing these functions. Installers shall provide temporary bracing per BCSI. Unless noted otherwise, top chord shall have properly attached structural sheathing and bottom chord shall have a properly attached rigid ceiling. Locations shown for permanent lateral restraint of webs shall have bracing installed per BCSI sections B3, B7 or B10, as applicable.

ITW Building Components Group Inc. (ITWBCG) shall not be responsible for any deviation from this design, any failure to build the truss in conformance with ANSI/TPI 1, or for handling, shipping, installation and bracing of trusses. Apply plates to each face of truss and position as shown above and on the joints. Details, unless noted otherwise. Refer to drawings 160A-2 for standard plate positions. A seal on this drawing or cover page listing this drawing, indicates acceptance of professional engineering responsibility solely for the design shown. The suitability and use of this design for any structure is the responsibility of the Building Designer per ANSI/TPI 1 Sec.2. For more information see: This job's general notes page; ITW-BCG: www.itwbcg.com; TPI: www.tpinst.org; WTCA: www.sbcindustry.com; ICC: www.iccsafe.org

WILLIAM H. KRICK LICENSE No. 70861 STATE OF FLORIDA PROFESSIONAL ENGINEER

04/15/2011

TC LL	20.0 PSF	REF R487-- 34763
TC DL	10.0 PSF	DATE 04/15/11
BC DL	10.0 PSF	DRW HCUSR487 11105003
BC LL	0.0 PSF	HC-ENG KD/AP
TOT.LD.	40.0 PSF	SEQN- 196870
DUR.FAC.	1.25	
SPACING	24.0"	JREF- 1UB4487_Z01

(11-075--Fill in later FREEMAN DESIGNS/TALWAR -- , ** - HJ7)

Top chord 2x4 SP #2 Dense
Bot chord 2x4 SP #2 Dense
Webs 2x4 SP #3

Hipjack supports 7-0-0 setback jacks with no webs.

Deflection meets L/240 live and L/180 total load.

110 mph wind, 15.00 ft mean hgt, ASCE 7-05, CLOSED bldg, Located anywhere in roof, CAT II, EXP B, wind TC DL=5.0 psf, wind BC DL=5.0 psf. Iw=1.00 GCpi(+/-)=0.18

Wind reactions based on MWFRS pressures.

Provide (2) 16d common nails(0.162"x3.5"), toe nailed at Top chord.
Provide (3) 16d common nails(0.162"x3.5"), toe nailed at Bot chord.

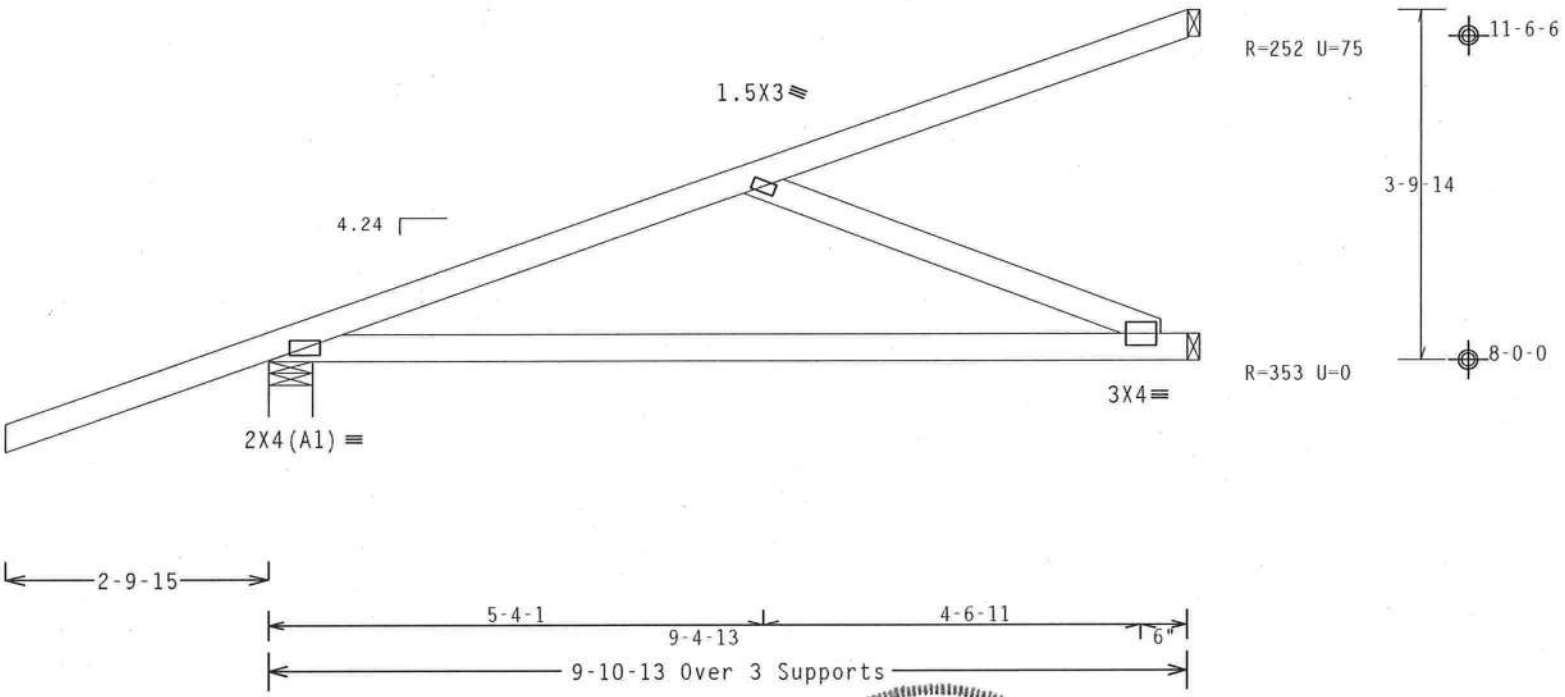

Design Crit: FBC2007Res/TPI-2002 (STD)

PLT TYP. Wave | FT/RT=10%(0%)/0(0) | 9.06.03.0319.17 | QTY:4 | FL/-/4/-/-/R/- | Scale =.5"/Ft.

ALPINE
ITW Building Components Group Inc.
Haines City, FL 33844
FL COA #0 278

WARNING READ AND FOLLOW ALL NOTES ON THIS SHEET!
IMPORTANT FURNISH THIS DESIGN TO ALL CONTRACTORS INCLUDING INSTALLERS.

Trusses require extreme care in fabricating, handling, shipping, installing and bracing. Refer to and follow the latest edition of BCSI (Building Component Safety Information, by TPI and SBCA) for safety practices prior to performing these functions. Installers shall provide temporary bracing per BCSI. Unless noted otherwise, top chord shall have properly attached structural sheathing and bottom chord shall have a properly attached rigid ceiling. Locations shown for permanent lateral restraint of webs shall have bracing installed per BCSI sections B3, B7 or B10, as applicable.

ITW Building Components Group Inc. (ITWBCG) shall not be responsible for any deviation from this design, any failure to build the truss in conformance with ANSI/TPI 1, or for handling, shipping, installing and bracing of trusses. Apply plates to each face of truss and position as shown above and on the joints. Details, unless noted otherwise. Refer to drawings 160A-Z for standard plate positions. A seal on this drawing or cover page listing this drawing, indicates acceptance of professional engineering responsibility solely for the design shown. The suitability and use of this design for any structure is the responsibility of the Building Designer per ANSI/TPI 1 Sec.2. For more information see: This job general notes page; ITW-BCG: www.itwbcg.com; TPI: www.tpinst.org; WTCA: www.sbcindustry.com; ICC: www.iccsafe.org

WILLIAM H. KRICK LICENSE No. 76861 STATE OF FLORIDA PROFESSIONAL ENGINEER

04/15/2011

TC LL	20.0 PSF	REF	R487-- 34764
TC DL	10.0 PSF	DATE	04/15/11
BC DL	10.0 PSF	DRW	HCUSR487 11105006
BC LL	0.0 PSF	HC-ENG	KD/AP
TOT.LD.	40.0 PSF	SEQN-	196873
DUR.FAC.	1.25		
SPACING	24.0"	JREF-	1UB4487_Z01

EXHIBIT "A"

The NE 1/4 of the NW 1/4 of the SW 1/4 of Section 29, Township 3 South Range 16 East, Columbia County, Florida.

Also: A part of the SW 1/4 of Section 29, Township 3 South, Range 16 East, Columbia County, Florida, more particularly described as follows: Commence at the Northwest corner of said SW 1/4 and run N.89°54'21" E., along the North line thereof, 648.74 feet; thence S.01°03'26" W., 76.78 feet for a point of beginning; thence N.89°39'24" E., 37.75 feet; thence S.00°36'19" W., 599.78 feet; thence S.89°45'17" W., 38.99 feet; thence N.01°03'26" E., 599.74 feet to the point of beginning.

Less and except: A part of the SW 1/4 of Section 29, Township 3 South, Range 16 East, Columbia County, Florida, more particularly described as follows: Commence at the Northwest corner of said SW 1/4 and run N. 89°54'21" E., along the North line thereof, 648.74 feet for a point of beginning; thence continue N.89°54'21" E., along said North line, 723.90 feet to the Northeast corner of the NW 1/4 of the SW 1/4 thence S. 00°56'11" W., along the East line thereof, 73.63 feet; thence S.89°39'24" W., 724.13 feet; thence N.01°03'26" E., 76.68 feet to the point of beginning.

And less and except: A part of the SW 1/4 of Section 29, Township 3 South, Range 16 East, Columbia County, Florida being more particularly described as follows: Commence at the Northwest corner of said SW 1/4 and run N.89°54'21" E., along the North line thereof, 648.74 feet; thence S.01°03'26" W., 321.10 feet for a point of beginning; thence N.89°44'57" E., 85.00 feet; thence S.01°03'26" W., 261.43 feet; thence s. 89°44'57" W., 85.00 feet; thence N.01°03'26" E., 261.43 feet; to the point of beginning.

Together with an: Easement in the SW 1/4 of Section 29, Township 3 South, Range 16 East, Columbia County, Florida, more particularly described as follows:
Commence at the Southwest corner of said SW 1/4 and N.00°56'27" E., along the West line thereof, 503.24 feet to a point on the South right-of-way line of U.S. Highway No. 90; thence N.72°27' 12" E., 316.14 feet to the point on the North right-of-way line of U.S. Highway No. 90 and the point of beginning; thence N.00°56'27" E., 361.20 feet to the point of curve of a curve to the left, having a radius of 1000.00 feet and an included angle of 12°11'56"; thence Northwesterly along the arc of said curve, an arc distance of 212.91 feet; thence N.11°15'29" W., 12.14 feet; thence N.32°46'14" E., 1016.77 feet; thence N.89°45'17" E., 35.79 feet; thence S.32°46'14" W., 1024.15 feet to a point on a curve to the right, having a radius of 1030.00 feet and an included angle of 12°11'56"; thence Southeasterly along the arc of said curve, an arc distance of 219.30 feet; thence S.00°56'27" W., 360.48 feet to a point on said North right-of-way line of U.S. Highway No. 90; thence S.89°33'54" W., along said North right-of-way line, 30.01 feet to the point of beginning.