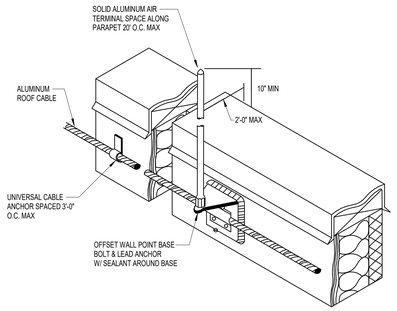

AIR TERMINAL ON PARAPET
No Scale
4

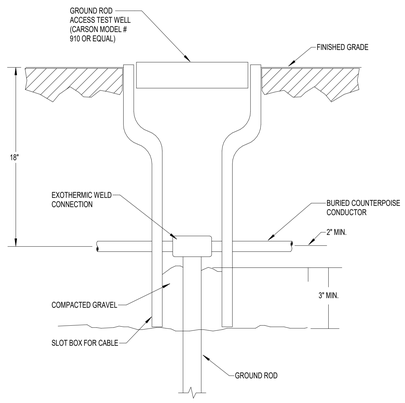

GROUND ROD INSPECTION WELLS
No Scale
3

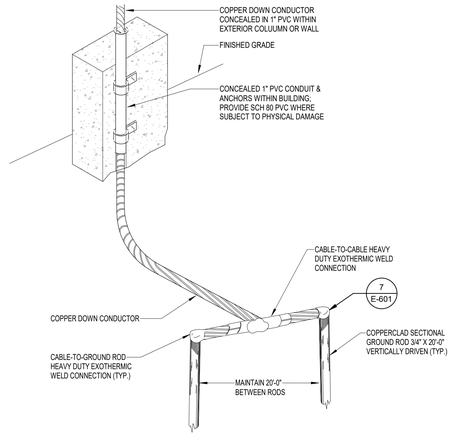

1. LOCATE GROUND RODS A MINIMUM OF 2'-0" FROM BUILDING FOUNDATION.
2. TOP OF GROUND ROD SHALL BE A MINIMUM OF 1'-0" BELOW FINISHED GRADE, LOCATED WITHIN ACCESSIBLE TEST WELLS.

DOWNLEAD TO GROUND ROD
No Scale
2

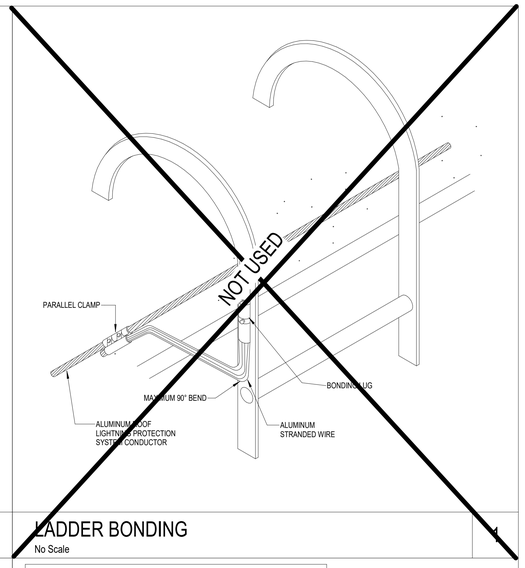

LADDER BONDING
No Scale
1

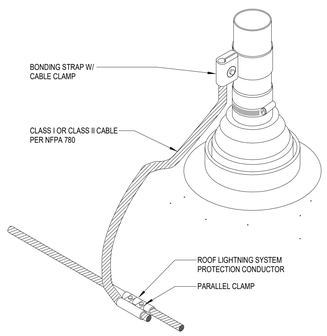

PLUMBING VENT GROUNDING
No Scale
8

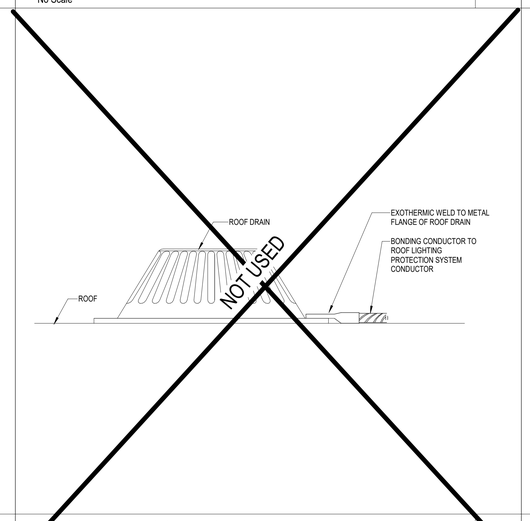

ROOF DRAIN CONNECTION
No Scale
7

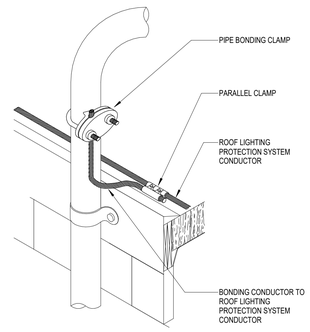

VERTICAL PIPE GROUNDING
No Scale
6

NOTES :
1. BOND ALL GROUNDED METAL SURFACES LOCATED WITHIN 6 FEET HORIZONTALLY OF THE DOWN CONDUCTOR TO EACH FLOOR'S BONDING CONDUCTOR TAIL.
2. BOND COLUMN REINFORCING BAR (REBAR) AT TOP AND BOTTOM, TO DOWN CONDUCTOR OF LIGHTING PROTECTION.
3. ALL CONDUCTORS SHALL BE IN ACCORDANCE WITH NFPA 780.

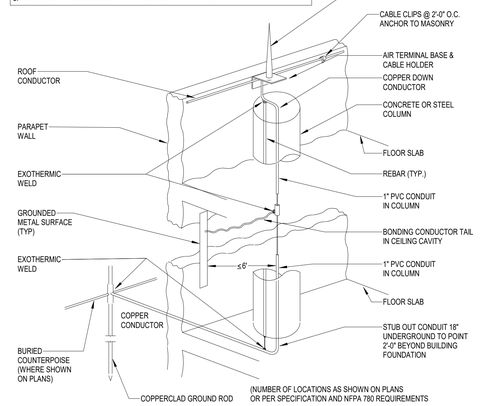

MULTIPLE FLOOR COLUMN BONDING
No Scale
5

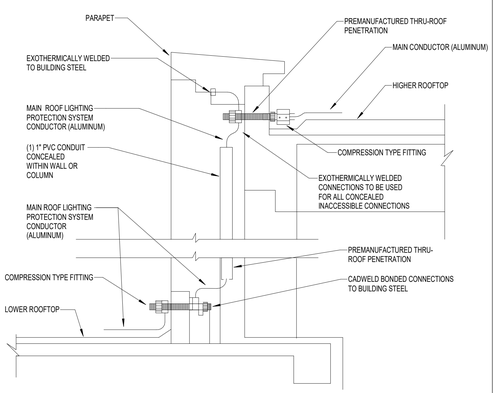

HIGHER TO LOWER ROOF CONDUCTOR
No Scale
12

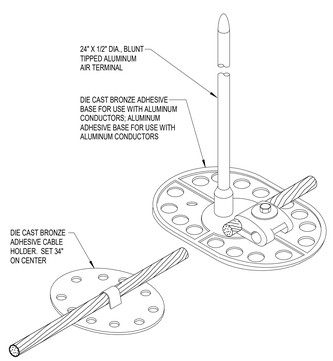

NOTE: ADHESIVE MUST BE SELECTED FOR COMPATIBILITY WITH THE SUPPORTING SURFACE. COORDINATE BETWEEN ROOFING CONTRACTOR AND ADHESIVE SUPPLIER TO SELECT CORRECT ADHESIVE.

AIR TERMINAL INTERIOR OF ROOF
No Scale
11

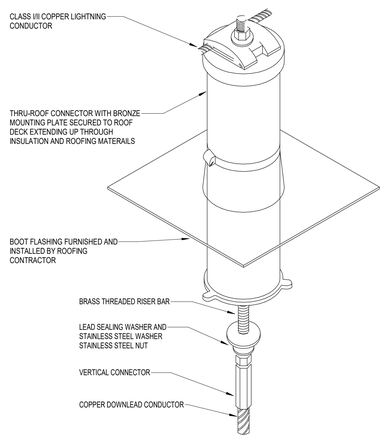

THRU-ROOF PENETRATION
No Scale
10

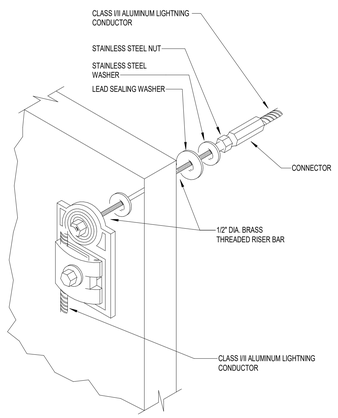

THRU-WALL PENETRATION
No Scale
9

Dewberry
800 North Magnolia Ave.
Suite 1000, Orlando, FL
32803-3251
t +1 407.843.5120
f +1 407.649.8664

Ajax
10365 Hood Road South Suite 203
Jacksonville, FL 32257
t +1 904-262-8660
f +1 904-262-8623

TLC ENGINEERING SOLUTIONS
Copyright 2020
255 S. Orange Avenue
Suite 1600
Orlando, FL 32801
P 407.841.9050
COA 15
www.tlcengineers.com
TLC No.:120018
THINK. LISTEN. CREATE.

Professional Seals

Wayne Edward Allred, P.E.
State of Florida
Professional Engineer
License No. 45800

This item has been electronically signed and sealed by the individual named above, using a dated Digital Signature in the space below, per F.A.C. Rule 61G15-23.004. Printed copies of this document are not considered signed and sealed, and the signature must be verified on any electronic copies.

Wayne E Allred

Digitally signed by Wayne E Allred
DN: C=US, o=tlc-e-f, Allred, cn=Wayne E Allred, 0.9.2342.19200300.100.1.1=A01410170000017 2F1A8A7BA0000DC2A
Reason: I have reviewed the accuracy and integrity of this document
Date: 2020.07.27 15:31:05-04'00'

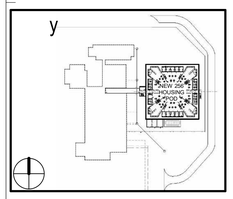

No.	Description	Date
	ISSUED FOR PERMIT	7-24-20

REVISIONS

DRAWN BY	O DORIA
APPROVED BY	W ALLRED
CHECKED BY	L WOLFE
DATE	JULY 24, 2020

SCALE 12" = 1'-0"

TITLE
ELECTRICAL DETAILS

PROJECT NO. 50101397

E-602
SHEET NO.

DESTROY AFTER USE