DATE 01/28/2008

Columbia County Building Permit

This Permit Must Be Prominently Posted on Premises During Construction

PERMIT
000026672

APPLICANT ERIN JOHNSON BARKER PHONE 352.317.1254

ADDRESS 5600 NE 60TH AVENUE HIGH SPRINGS FL 32643

OWNER SANDRA DERKSEN & FRANK N. OHIDY PHONE 352.238.0454

ADDRESS 4260 SW CR 138 FT.WHITE FL 32038

CONTRACTOR ROBERT A. JOHNSON PHONE 352.538.0335

LOCATION OF PROPERTY 47-S TO C-138,TL GO 2 MILES @ DRIVEWAY ON R W/DOUBLE METAL GATES BEFORE SCHOOL BUS.

TYPE DEVELOPMENT SFD/UTILITY ESTIMATED COST OF CONSTRUCTION 152400.00

HEATED FLOOR AREA 1938.00 TOTAL AREA 3048.00 HEIGHT 20.00 STORIES 1

FOUNDATION CONC WALLS FRAMED ROOF PITCH 6'12 FLOOR CONC

LAND USE & ZONING A-3 MAX. HEIGHT 35

Minimum Set Back Requirments: STREET-FRONT 30.00 REAR 25.00 SIDE 25.00

NO. EX.D.U. 0 FLOOD ZONE X DEVELOPMENT PERMIT NO.

PARCEL ID 22-7S-16-04291-010 SUBDIVISION

LOT BLOCK PHASE UNIT TOTAL ACRES 10.01

Culvert Permit No.	Culvert Waiver	Contractor's License Number	Applicant/Owner/Contractor
		CBC022214	

Driveway Connection	Septic Tank Number	LU & Zoning checked by	Approved for Issuance	New Resident
EXISTING.	08-0035	BLK	JTH	N

COMMENTS: FLOOR ONE FOOT ABOVE THE ROAD. NOC ON FILE.

Check # or Cash 17449

FOR BUILDING & ZONING DEPARTMENT ONLY

(footer/Slab)

Temporary Power _____ date/app. by Foundation _____ date/app. by Monolithic _____ date/app. by

Under slab rough-in plumbing _____ date/app. by Slab _____ date/app. by Sheathing/Nailing _____ date/app. by

Framing _____ date/app. by Rough-in plumbing above slab and below wood floor _____ date/app. by

Electrical rough-in _____ date/app. by Heat & Air Duct _____ date/app. by Peri. beam (Lintel) _____ date/app. by

Permanent power _____ date/app. by C.O. Final _____ date/app. by Culvert _____ date/app. by

M/H tie downs, blocking, electricity and plumbing _____ date/app. by Pool _____ date/app. by

Reconnection _____ date/app. by Pump pole _____ date/app. by Utility Pole _____ date/app. by

M/H Pole _____ date/app. by Travel Trailer _____ date/app. by Re-roof _____ date/app. by

BUILDING PERMIT FEE $ 765.00 CERTIFICATION FEE $ 15.24 SURCHARGE FEE $ 15.24

MISC. FEES $ 0.00 ZONING CERT. FEE $ 50.00 FIRE FEE $ 0.00 WASTE FEE $

FLOOD DEVELOPMENT FEE $ FLOOD ZONE FEE $ 25.00 CULVERT FEE $ **TOTAL FEE** 870.48

INSPECTORS OFFICE CLERKS OFFICE MSY

NOTICE: IN ADDITION TO THE REQUIREMENTS OF THIS PERMIT, THERE MAY BE ADDITIONAL RESTRICTIONS APPLICABLE TO THIS PROPERTY THAT MAY BE FOUND IN THE PUBLIC RECORDS OF THIS COUNTY. AND THERE MAY BE ADDITIONAL PERMITS REQUIRED FROM OTHER GOVERNMENTAL ENTITIES SUCH AS WATER MANAGEMENT DISTRICTS, STATE AGENCIES, OR FEDERAL AGENCIES.

"WARNING TO OWNER: YOUR FAILURE TO RECORD A NOTICE OF COMMENCEMENT MAY RESULT IN YOUR PAYING TWICE FOR IMPROVEMENTS TO YOUR PROPERTY. IF YOU INTEND TO OBTAIN FINANCING, CONSULT WITH YOUR LENDER OR AN ATTORNEY BEFORE RECORDING YOUR NOTICE OF COMMENCEMENT."

EVERY PERMIT ISSUED SHALL BECOME INVALID UNLESS THE WORK AUTHORIZED BY SUCH PERMIT IS COMMENCED WITHIN 180 DAYS AFTER ITS ISSUANCE, OR IF THE WORK AUTHORIZED BY SUCH PERMIT IS SUSPENDED OR ABANDONED FOR A PERIOD OF 180 DAYS AFTER THE TIME THE WORK IS COMMENCED. A VALID PERMIT RECIEVES AN APPROVED INSPECTION EVERY 180 DAYS. WORK SHALL BE CONSIDERED TO BE IN ACTIVE PROGESS WHEN THE PERMIT HAS RECIEVED AN APPROVED INSPECTION WITHIN 180 DAYS.

The Issuance of this Permit Does Not Waive Compliance by Permittee with Deed Restrictions.

Columbia County Building Permit Application

17449

For Office Use Only Application # 0801-36 Date Received 1/9/08 By G Permit # 26672

Zoning Official B2K Date 28.01.08 Flood Zone X FEMA Map # N/A Zoning A-3

Land Use A-3 Elevation N/A MFE 1ft above Rd River N/A Plans Examiner OKJTH Date 1-14-08

Comments

☐ NOC ☑ EH ☑ Deed or PA ☑ Site Plan on plans ☐ State Road Info ☐ Parent Parcel #

☐ Dev Permit # ☐ In Floodway ☑ Letter of Authorization from Contractor (in file)

☐ Unincorporated area ☐ Incorporated area ☐ Town of Fort White ☐ Town of Fort White Compliance letter

Septic Permit No. 08-0035 Fax 386-454-9613

Name Authorized Person Signing Permit ERIN JOHNSON BARKER Phone 352-317-1254

Address 5600 NE 60th AVE HIGH SPRINGS, FL 32643

Owners Name DERKSON, SANDRA KAY & OHIDY, FRANK NELSON Phone (352) 238-0454

911 Address 4260 SW CR 138 Fort White, FL 32038

Contractors Name Robert A. Johnson Construction LC Phone (352) 538-0335

Address 5600 NE 60th AVE HIGH SPRINGS, FL 32643

Fee Simple Owner Name & Address SANDRA K DERKSON & FRANK NELSON OHIDY
P.O. BOX 359 Fort White, FL 32038

Bonding Co. Name & Address — N/A

Architect/Engineer Name & Address Arch. Richrdo Cavallino / Eng. WSE Wayland 8200 SW 16th Place Gainesville 326

Mortgage Lenders Name & Address

Circle the correct power company – FL Power & Light – (Clay Elec.) – Suwannee Valley Elec. – Progress Energy

Property ID Number 22-7S-16-04291-010 Estimated Cost of Construction 200,000

Subdivision Name — Lot ___ Block ___ Unit ___ Phase ___

Driving Directions From Lake City take Hwy 47 South to CR 138. Make left and go aproximately 2 miles. DRIVEWAY on RIGHT. Double metal Gates before school Bus. Number of Existing Dwellings on Property Ø

Construction of New Residential Total Acreage 10.01 Lot Size

Do you need a - Culvert Permit or Culvert Waiver or (Have an Existing Drive) Total Building Height 20'

Actual Distance of Structure from Property Lines - Front ~~278~~ Side ~~316~~ Side ~~309~~ Rear ~~288~~

Number of Stories 1 Heated Floor Area 1937 Total Floor Area 3048 Roof Pitch 6/12

Application is hereby made to obtain a permit to do work and installations as indicated. I certify that no work or installation has commenced prior to the issuance of a permit and that all work be performed to meet the standards of all laws regulating construction in this jurisdiction.

WARNING TO OWNER: YOUR FAILURE TO RECORD A NOTICE OF COMMENCMENT MAY RESULT IN YOU PAYING TWICE FOR IMPROVEMENTS TO YOUR PROPERTY. A NOTICE OF COMMENCEMENT MUST BE RECORDED AND POSTED ON THE JOB SITE BEFORE THE FIRST INSPECTION. IF YOU INTEND TO OBTAIN FINANCING, CONSULT WITH YOUR LENDER OR ATTORNEY BEFORE RECORDING YOUR NOTICE OF COMMENCEMENT.

FLORIDA'S CONSTRUCTION LIEN LAW: Protect Yourself and Your Investment
According to Florida Law, those who work on your property or provide materials, and are not paid-in-full, have a right to enforce their claim for payment against your property. This claim is known as a construction lien. If your contractor fails to pay subcontractors or material suppliers or neglects to make other legally required payments, the people who are owed money may look to your property for payment, even if you have paid your contractor in full. This means if a lien is filed against your property, it could be sold against your will to pay for labor, materials or other services which your contractor may have failed to pay.

NOTICE OF RESPONSIBILITY TO BUILDING PERMITEE:
YOU ARE HEREBY NOTIFIED as the recipient of a building permit from Columbia County, Florida, you will be held responsible to the County for any damage to sidewalks and/or road curbs and gutters, concrete features and structures, together with damage to drainage facilities, removal of sod, major changes to lot grades that result in ponding of water, or other damage to roadway and other public infrastructure facilities caused by you or your contractor, subcontractors, agents or representatives in the construction and/or improvement of the building and lot for which this permit is issued. No certificate of occupancy will be issued until all corrective work to these public infrastructures and facilities has been corrected.

OWNERS CERTIFICATION: I hereby certify that all the foregoing information is accurate and all work will be done in compliance with all applicable laws and regulating construction and zoning. I further understand the above written responsibilities in Columbia County for obtaining this Building Permit.

Owners Signature

CONTRACTORS AFFIDAVIT: By my signature I understand and agree that I have informed and provided this written statement to the owner of all the above written responsibilities in Columbia County for obtaining this Building Permit.

Contractor's Signature (Permitee)

Contractor's License Number CBC022214
Columbia County
Competency Card Number_____

Affirmed under penalty of perjury to by the Contractor and subscribed before me this 9th **day of** January **20**08.
Personally known_____ **or Produced Identification** FLDL

State of Florida Notary Signature (For the Contractor)

SEAL:

Crystal L. Norton
Commission # DD565016
Expires June 18, 2010
Bonded Troy Fain - Insurance, Inc 800-385-7019

Sandra Derksen

From: Johnson Construction [rajohnson5600@windstream.net]
Sent: Monday, January 14, 2008 11:26 AM
To: Sandy Derksen
Subject: NOTICE OF COMMENCEMENT Derksen.Ohidy

Permit No. **0801-36**
Tax folio No. Portion of **22-7S-16-04291-010**

Inst:200812001686 Date:1/28/2008 Time:10:29 AM
DC,P.DeWitt Cason,Columbia County Page 1 of 2

NOTICE OF COMMENCEMENT

State of Florida
County of Columbia

The undersigned hereby gives notice that improvement(s) will be made to certain real property, and in accordance with Chapter 713, Florida Statutes, the following information is provided in the Notice of Commencement.

1. Legal Description of Property:
BEG INTERS E LINE OF W 745 FT OF N ½ OF SW ¼ & S R/W OF CR-138, RUN E ALONG S R/W 702.89 FT, S 620.69 FT, W 702.89 FT, N 620 FT TO POB, ORB 778-418, 795-491, JTWRS 885-576

2. General description of improvements(s):
Single Family Residences

3. Owner information:
   a. Name and address of owner of site of improvements(s):
   Sandra Kay Derksen and Frank Nelson Ohidy
   P.O. Box 359
   Fort White, FL 32038

   b. Interest in property: fee simple

   c. Name and address of fee simple title holder, if other than Owner: N/A

4. Contractor:
Robert A. Johnson Construction LC
5600 NE 60th Avenue
High Springs, Florida 32643

STATE OF FLORIDA, COUNTY OF COLUMBIA
I HEREBY CERTIFY, that the above and foregoing is a true copy of the original filed in this office.
P. DeWITT CASON, CLERK OF COURTS
By Sharon Teagle
Deputy Clerk
Date 01-28-2008

CLERK CIRCUIT COURT COLUMBIA COUNTY, FLORIDA

5. Surety:
   a. Name and address: NA
   b. Amount of bond $

6. Lender: (name and address)
None

7. Person within the State of Florida designed by Owner upon whom notices or other documents may be served as provided by Section 713.13(1)(a) 7., Florida Statutes:

8. Expiration date of notice of commencement (the expiration date is 1 year from the date of recording unless a different date is specified)_____.

Sandra Kay Derksen

Frank Nelson Ohidy

.o and subscribed before me this 18 day of Jan, 2008. Said persons are personally known to me or have produced ,llowing identification_____.

Notary Public
My commission expires:

LESTER SMILOWITZ
Notary Public, State of Florida
My comm. exp. Sept. 16, 2008
Comm. No. DD 355489

STATE OF FLORIDA
DEPARTMENT OF HEALTH

DERKSON/OHIDY RESIDENCE

APPLICATION FOR ONSITE SEWAGE DISPOSAL SYSTEM CONSTRUCTION PERMIT

Permit Application Number 08-0035

PART II - SITE PLAN

Scale: Each block represents 5 feet and 1 inch = 50 feet.

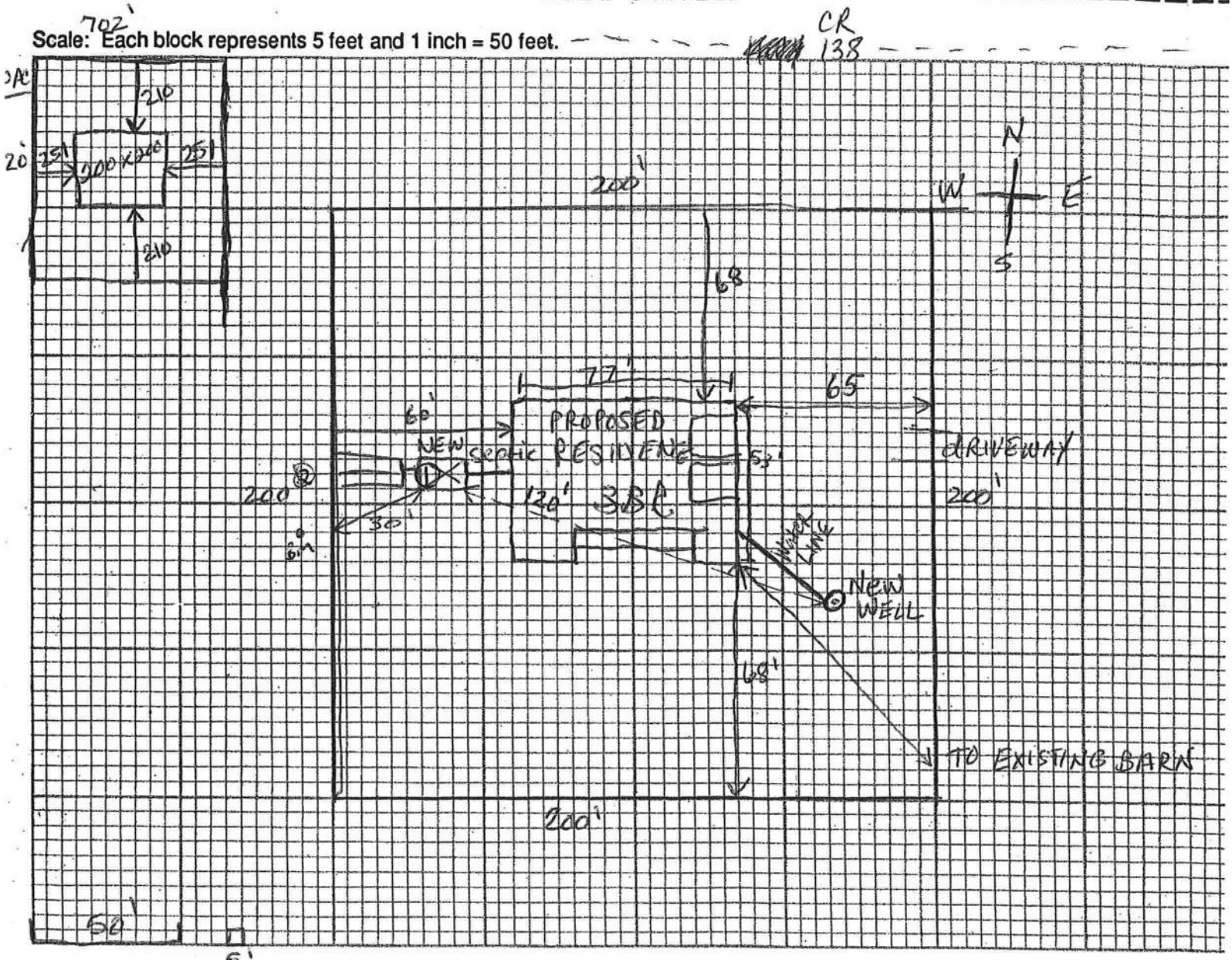

Notes:

Site Plan submitted by: 1-10-08 Agent
Signature Title

Plan Approved X APPROVED Not Approved ____ Date 1/14/8

By Columbia CHD County Health Departme

ALL CHANGES MUST BE APPROVED BY THE COUNTY HEALTH DEPARTMENT

DH 4015, 10/98 (Replaces HRS-H Form 4015 which may be used)

Return to (enclosed self addressed stamped envelope)
Name PINELLAS PARK TITLE COMPANY
5265 Park Blvd. Suite 101
Address Pinellas Park, Fl. 33781
FILE NO. 99A-461

This Instrument Prepared by:
PINELLAS PARK TITLE COMPANY - 13059
5265 Park Blvd. Suite 101
Address Pinellas Park, Fl. 33781

Property Appraisers Parcel Identification (Folio) Number(s):
22/75/16/04291.010
Grantee(s) S.S.#(s)

WARRANTY DEED
INDIVID. TO INDIVID.

FILED AND RECORDED IN PUBLIC RECORDS OF COLUMBIA COUNTY, F
1999 JUL 28 PM 2:43
RECORD VERIFIED
MK

SPACE ABOVE THIS LINE FOR PROCESSING DATA — SPACE ABOVE THIS LINE FOR RECORDING DATA

This Warranty Deed Made the 20th day of JULY, A.D. 19 99 by
WAYNE ZEPP AND JANET ZEPP, HIS WIFE
hereinafter called the grantor, to
SANDRA KAY DERKSEN AND FRANK NELSON OHIDY, AS JOINT TENANTS WITH FULL RIGHTS OF SURVIVORSHIP, 2307 Galahad Avenue, Spring Hill, FL 34608
whose post office address is
hereinafter called the grantee:
(Wherever used herein the terms "grantor" and "grantee" include all the parties to this instrument and the heirs, legal representatives and assigns of individuals, and the successors and assigns of corporations)

Witnesseth: That the grantor, for and in consideration of the sum of $ 10.00 and other valuable considerations, receipt whereof is hereby acknowledged, hereby grants, bargains, sells, aliens, remises, releases, conveys and confirms unto the grantee all that certain land situate in ~~XXXXXXXXXX~~ COLUMBIA County, State of FLORIDA, viz:

SEE ATTACHED EXHIBIT "A" FOR LEGAL DESCRIPTION

OR 0885 PG 0576
OFFICIAL RECORDS

Documentary Stamp $244.30
Intangible Tax
P. Dewitt Cason
Clerk of Court
By MK D.C.

Together, with all the tenements, hereditament and appurtenances thereto belonging or in anywise appertaining.

To Have and to Hold, the same in fee simple forever.

And the grantor hereby covenants with said grantee that the grantor is lawfully seized of said land in fee simple; that the grantor has good right and lawful authority to sell and convey said land, and hereby warrants the title to said land and will defend the same against the lawful claims of all persons whomsoever; and that said land is free of all encumbrances, except taxes accruing subsequent to December 31, 1998.

In Witness Whereof, the said grantor has signed and sealed these presents the day and year first above written.

Signed, sealed and delivered in the presence of:

Signature: Vicki L. Rogers
VICKI L. ROGERS
Printed Signature

Signature: Evelyn E. Cary
EVELYN E. CARY
Printed Signature

Signature
Printed Signature

Signature
Printed Signature

Signature: Wayne Zepp
WAYNE ZEPP
Printed Signature
Post Office Address

Signature: Janet Zepp
JANET ZEPP
Printed Signature
Post Office Address

STATE OF FLORIDA
COUNTY OF PINELLAS

I HEREBY CERTIFY that on this day, before me, an officer duly authorized in the State aforesaid and in the County aforesaid to take acknowledgments, personally appeared
WAYNE ZEPP AND JANET ZEPP PERSONALLY KNOWN (Identified by
who executed the foregoing instrument and , being duly sworn) to me known to be the person described in and acknowledged before me that executed the same.
WITNESS my hand and official seal in the County and State last aforesaid this 20th day of JULY, A.D. 1999.

Evelyn E. Cary
Commission # CC 739050
Expires June 14, 2002
BONDED THRU
ATLANTIC BONDING CO., INC.

My Commission Expires

Evelyn E. Cary
Notary Signature

EXHIBIT "A"

West half of NE 1/4 of SE 1/4 of SW 1/4, except right-of-way State Road S-138; Also, NW 1/4 of SE 1/4 of the SW 1/4, except right-of-way of State Road S-138; Also, North half of SW 1/4 of SW 1/4, EXCEPTING THEREFROM the West 745 feet thereof and also excepting therefrom the right-of-way of State Road S-138: All in Section 22, Township 7 South, Range 16 East, of Columbia County, Florida.

LESS AND EXCEPT:

East 165 feet of West 1/2 of Northeast 1/4 of Southeast 1/4 of Southwest 1/4, Section 22, Township 7 south, Range 16 East, Columbia County, Florida ; AND

Commence at the intersection of the East line of the SE 1/4 of SW 1/4, Section 22, Township 7 South, Range 16 East, Columbia County, Florida, with the South right-of-way line of State Road No. 138, and run thence South 89 deg.10'41" West along said South right-of-way line 495.45 feet to the POINT OF BEGINNING; thence continue South 89 deg.10'41" West along said South right-of-way line 112.00 feet; thence South 5 deg.20'37" East, 623.43 feet to the South line of the NE 1/4 of SE 1/4 of SW 1/4; thence North 89 deg.13'28: East along said South line, 60.00 feet; thence North 0 deg.33'32" West, 621.55 feet to the POINT OF BEGINNING.

ALSO LESS AND EXCEPT:

That certain parcel of land as described in Warranty Deed recorded in OR Book 795, Page 491, Public Records of Columbia County, Florida.

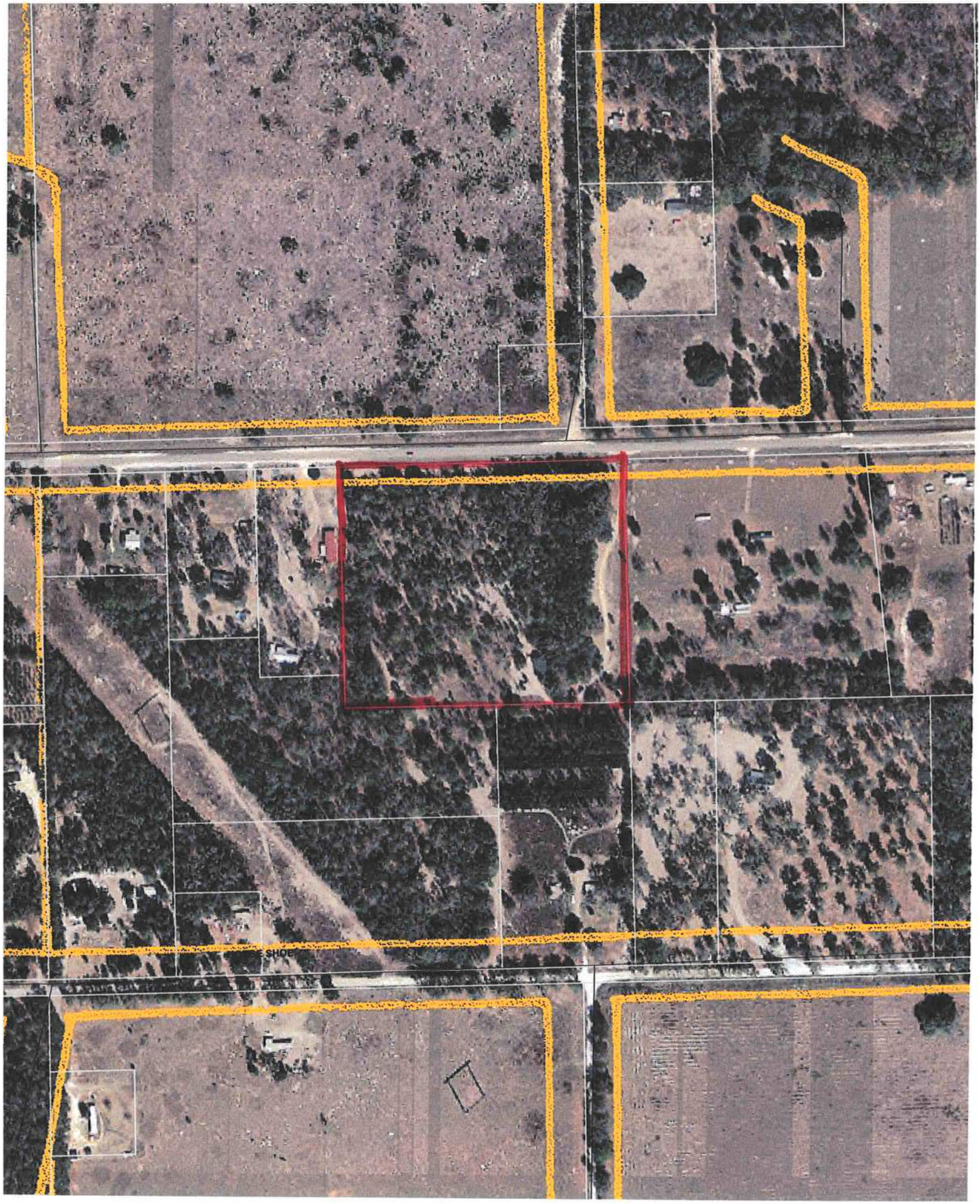

0801-36

258 - 3096 Andrew

FORM 600A-2004R

EnergyGauge® 4.5.2

FLORIDA ENERGY EFFICIENCY CODE FOR BUILDING CONSTRUCTION

Florida Department of Community Affairs

Residential Whole Building Performance Method A

Project Name:	**DERKSEN RES**	Builder:	
Address:		Permitting Office:	
City, State:	,	Permit Number:	
Owner:	**E.JOHNSON CONST**	Jurisdiction Number:	22/000
Climate Zone:	**North**		

1. New construction or existing	New	
2. Single family or multi-family	Single family	
3. Number of units, if multi-family	1	
4. Number of Bedrooms	3	
5. Is this a worst case?	Yes	
6. Conditioned floor area (ft²)	1937 ft²	
7. Glass type[1] and area: (Label reqd. by 13-104.4.5 if not default)		
a. U-factor:	Description Area	
(or Single or Double DEFAULT)	7a. (Dble, U=0.6) 390.0 ft²	
b. SHGC:		
(or Clear or Tint DEFAULT)	7b. (SHGC=0.35) 390.0 ft²	
8. Floor types		
a. Slab-On-Grade Edge Insulation	R=0.0, 283.0(p) ft	
b. N/A		
c. N/A		
9. Wall types		
a. Frame, Wood, Adjacent	R=13.0, 450.0 ft²	
b. Frame, Wood, Exterior	R=13.0, 2300.0 ft²	
c. N/A		
d. N/A		
e. N/A		
10. Ceiling types		
a. Under Attic	R=30.0, 1937.0 ft²	
b. Under Attic	R=19.0, 325.0 ft²	
c. N/A		
11. Ducts		
a. Sup: Unc. Ret: Unc. AH: Garage	Sup. R=6.0, 185.0 ft	
b. N/A		

12. Cooling systems		
a. Central Unit	Cap: 36.0 kBtu/hr	
	SEER: 13.00	
b. N/A		
c. N/A		
13. Heating systems		
a. Electric Heat Pump	Cap: 36.0 kBtu/hr	
	HSPF: 7.70	
b. N/A		
c. N/A		
14. Hot water systems		
a. Electric Resistance	Cap: 50.0 gallons	
	EF: 0.97	
b. N/A		
c. Conservation credits (HR-Heat recovery, Solar DHP-Dedicated heat pump)		
15. HVAC credits (CF-Ceiling fan, CV-Cross ventilation, HF-Whole house fan, PT-Programmable Thermostat, MZ-C-Multizone cooling, MZ-H-Multizone heating)	PT,	

Glass/Floor Area: 0.20

Total as-built points: 27541
Total base points: 28282

PASS

I hereby certify that the plans and specifications covered by this calculation are in compliance with the Florida Energy Code.

PREPARED BY: GALE

DATE: 12-31-07

I hereby certify that this building, as designed, is in compliance with the Florida Energy Code.

OWNER/AGENT: _____

DATE: _____

Review of the plans and specifications covered by this calculation indicates compliance with the Florida Energy Code. Before construction is completed this building will be inspected for compliance with Section 553.908 Florida Statutes.

GREAT SEAL OF THE STATE OF FLORIDA
IN GOD WE TRUST

BUILDING OFFICIAL: _____

DATE: _____

1 Predominant glass type. For actual glass type and areas, see Summer & Winter Glass output on pages 2&4.

SUMMER CALCULATIONS

Residential Whole Building Performance Method A - Details

ADDRESS: , , , PERMIT #:

BASE

GLASS TYPES .18 X Conditioned Floor Area	X BSPM	= Points
.18 1937.0	18.59	6482.0

WALL TYPES	Area	X BSPM	= Points
Adjacent	450.0	0.70	315.0
Exterior	2300.0	1.70	3910.0
Base Total:	**2750.0**		**4225.0**

DOOR TYPES	Area	X BSPM	= Points
Adjacent	18.0	2.40	43.2
Exterior	21.0	6.10	128.1
Base Total:	**39.0**		**171.3**

CEILING TYPES	Area	X BSPM	= Points
Under Attic	1937.0	1.73	3351.0
Base Total:	**1937.0**		**3351.0**

FLOOR TYPES	Area	X BSPM	= Points
Slab	283.0(p)	-37.0	-10471.0
Raised	0.0	0.00	0.0
Base Total:			**-10471.0**

INFILTRATION	Area	X BSPM	= Points
	1937.0	10.21	19776.8

AS-BUILT

Type/SC	Overhang Ornt	Len	Hgt	Area	X SPM	X SOF	= Points
1.Double,U=0.55,SHGC=0.35	W	0.0	0.0	160.0	18.88	1.00	3020.0
2.Double,U=0.55,SHGC=0.35	E	0.0	0.0	140.0	20.74	1.00	2903.0
3.Double,U=0.55,SHGC=0.35	N	0.0	0.0	50.0	8.69	1.00	434.0
4.Double,U=0.55,SHGC=0.35	S	0.0	0.0	40.0	17.49	1.00	699.0
As-Built Total:				**390.0**			**7056.0**

Type	R-Value	Area	X SPM	= Points
1. Frame, Wood, Adjacent	13.0	450.0	0.60	270.0
2. Frame, Wood, Exterior	13.0	2300.0	1.50	3450.0
As-Built Total:		**2750.0**		**3720.0**

Type	Area	X SPM	= Points
1.Exterior Insulated	21.0	4.10	86.1
2.Adjacent Insulated	18.0	1.60	28.8
As-Built Total:	**39.0**		**114.9**

Type	R-Value	Area	X SPM X SCM	= Points
1. Under Attic	30.0	1937.0	1.73 X 1.00	3351.0
2. Under Attic	19.0	325.0	2.34 X 1.00	760.5
As-Built Total:		**2262.0**		**4111.5**

Type	R-Value	Area	X SPM	= Points
1. Slab-On-Grade Edge Insulation	0.0	283.0(p	-41.20	-11659.6
As-Built Total:		**283.0**		**-11659.6**

Area	X SPM	= Points
1937.0	10.21	19776.8

SUMMER CALCULATIONS

Residential Whole Building Performance Method A - Details

ADDRESS: , , ,	PERMIT #:

BASE				AS-BUILT							
Summer Base Points: 23535.1				**Summer As-Built Points:**							**23119.6**
Total Summer Points	X System Multiplier	=	Cooling Points	Total Component (System - Points)	X Cap Ratio	X Duct Multiplier (DM x DSM x AHU)	X System Multiplier	X Credit Multiplier	=	Cooling Points	
				(sys 1: Central Unit 36000btuh ,SEER/EFF(13.0) Ducts:Unc(S),Unc(R),Gar(AH),R6.0(INS)							
				23120	1.00	(1.09 x 1.147 x 1.00)	0.260	0.950		7139.5	
23535.1	**0.3250**		**7648.9**	**23119.6**	**1.00**	**1.250**	**0.260**	**0.950**		**7139.5**	

WINTER CALCULATIONS

Residential Whole Building Performance Method A - Details

ADDRESS: , , , PERMIT #:

BASE

GLASS TYPES .18 X Conditioned Floor Area	X BWPM	= Points
.18 1937.0	20.17	7032.0

WALL TYPES	Area	X BWPM	= Points
Adjacent	450.0	3.60	1620.0
Exterior	2300.0	3.70	8510.0
Base Total:	**2750.0**		**10130.0**

DOOR TYPES	Area	X BWPM	= Points
Adjacent	18.0	11.50	207.0
Exterior	21.0	12.30	258.3
Base Total:	**39.0**		**465.3**

CEILING TYPES	Area	X BWPM	= Points
Under Attic	1937.0	2.05	3970.8
Base Total:	**1937.0**		**3970.8**

FLOOR TYPES	Area	X BWPM	= Points
Slab	283.0(p)	8.9	2518.7
Raised	0.0	0.00	0.0
Base Total:			**2518.7**

INFILTRATION	Area	X BWPM	= Points
	1937.0	-0.59	-1142.8

AS-BUILT

Type/SC	Overhang Ornt	Len	Hgt	Area X	WPM X	WOF =	Points
1.Double,U=0.55,SHGC=0.35	W	0.0	0.0	160.0	15.62	1.00	2499.0
2.Double,U=0.55,SHGC=0.35	E	0.0	0.0	140.0	14.63	1.00	2047.0
3.Double,U=0.55,SHGC=0.35	N	0.0	0.0	50.0	17.68	1.00	883.0
4.Double,U=0.55,SHGC=0.35	S	0.0	0.0	40.0	11.62	1.00	464.0
As-Built Total:				**390.0**			**5893.0**

Type	R-Value	Area X	WPM	= Points
1. Frame, Wood, Adjacent	13.0	450.0	3.30	1485.0
2. Frame, Wood, Exterior	13.0	2300.0	3.40	7820.0
As-Built Total:		**2750.0**		**9305.0**

Type	Area X	WPM	= Points
1.Exterior Insulated	21.0	8.40	176.4
2.Adjacent Insulated	18.0	8.00	144.0
As-Built Total:	**39.0**		**320.4**

Type	R-Value	Area X	WPM X	WCM =	Points
1. Under Attic	30.0	1937.0	2.05 X	1.00	3970.8
2. Under Attic	19.0	325.0	2.70 X	1.00	877.5
As-Built Total:		**2262.0**			**4848.3**

Type	R-Value	Area X	WPM	= Points
1. Slab-On-Grade Edge Insulation	0.0	283.0(p	18.80	5320.4
As-Built Total:		**283.0**		**5320.4**

Area X	WPM	= Points
1937.0	-0.59	-1142.8

WINTER CALCULATIONS

Residential Whole Building Performance Method A - Details

ADDRESS: , , ,	PERMIT #:

BASE				AS-BUILT							
Winter Base Points:			**22974.0**	**Winter As-Built Points:**							**24544.3**
Total Winter Points	X	System Multiplier	= Heating Points	Total Component (System - Points)	X	Cap Ratio	X Duct Multiplier (DM x DSM x AHU)	X System Multiplier	X Credit Multiplier	=	Heating Points
				(sys 1: Electric Heat Pump 36000 btuh ,EFF(7.7) Ducts:Unc(S),Unc(R),Gar(AH),R6.0							
				24544.3		1.000	(1.069 x 1.169 x 1.00)	0.443	0.950		12904.2
22974.0		**0.5540**	**12727.6**	**24544.3**		**1.00**	**1.250**	**0.443**	**0.950**		**12904.2**

WATER HEATING & CODE COMPLIANCE STATUS

Residential Whole Building Performance Method A - Details

ADDRESS: , , , PERMIT #:

BASE					AS-BUILT							
WATER HEATING												
Number of Bedrooms	X	Multiplier	=	Total	Tank Volume	EF	Number of Bedrooms	X	Tank Ratio	X Multiplier	X Credit Multiplier	= Total
3		2635.00		7905.0	50.0	0.97	3		1.00	2499.18	1.00	7497.5
					As-Built Total:							**7497.5**

CODE COMPLIANCE STATUS

BASE				AS-BUILT			
Cooling Points +	Heating Points +	Hot Water Points =	Total Points	Cooling Points +	Heating Points +	Hot Water Points =	Total Points
7649	**12728**	**7905**	**28282**	**7139**	**12904**	**7498**	**27541**

PASS

Code Compliance Checklist

Residential Whole Building Performance Method A - Details

ADDRESS: , , , PERMIT #:

6A-21 INFILTRATION REDUCTION COMPLIANCE CHECKLIST

COMPONENTS	SECTION	REQUIREMENTS FOR EACH PRACTICE	CHECK
Exterior Windows & Doors	606.1.ABC.1.1	Maximum:.3 cfm/sq.ft. window area; .5 cfm/sq.ft. door area.	
Exterior & Adjacent Walls	606.1.ABC.1.2.1	Caulk, gasket, weatherstrip or seal between: windows/doors & frames, surrounding wall; foundation & wall sole or sill plate; joints between exterior wall panels at corners; utility penetrations; between wall panels & top/bottom plates; between walls and floor. EXCEPTION: Frame walls where a continuous infiltration barrier is installed that extends from, and is sealed to, the foundation to the top plate.	
Floors	606.1.ABC.1.2.2	Penetrations/openings >1/8" sealed unless backed by truss or joint members. EXCEPTION: Frame floors where a continuous infiltration barrier is installed that is sealed to the perimeter, penetrations and seams.	
Ceilings	606.1.ABC.1.2.3	Between walls & ceilings; penetrations of ceiling plane of top floor; around shafts, chases, soffits, chimneys, cabinets sealed to continuous air barrier; gaps in gyp board & top plate; attic access. EXCEPTION: Frame ceilings where a continuous infiltration barrier is installed that is sealed at the perimeter, at penetrations and seams.	
Recessed Lighting Fixtures	606.1.ABC.1.2.4	Type IC rated with no penetrations, sealed; or Type IC or non-IC rated, installed inside a sealed box with 1/2" clearance & 3" from insulation; or Type IC rated with < 2.0 cfm from conditioned space, tested.	
Multi-story Houses	606.1.ABC.1.2.5	Air barrier on perimeter of floor cavity between floors.	
Additional Infiltration reqts	606.1.ABC.1.3	Exhaust fans vented to outdoors, dampers; combustion space heaters comply with NFPA, have combustion air.	

6A-22 OTHER PRESCRIPTIVE MEASURES (must be met or exceeded by all residences.)

COMPONENTS	SECTION	REQUIREMENTS	CHECK
Water Heaters	612.1	Comply with efficiency requirements in Table 612.1.ABC.3.2. Switch or clearly marked cir breaker (electric) or cutoff (gas) must be provided. External or built-in heat trap required.	
Swimming Pools & Spas	612.1	Spas & heated pools must have covers (except solar heated). Non-commercial pools must have a pump timer. Gas spa & pool heaters must have a minimum thermal efficiency of 78%.	
Shower heads	612.1	Water flow must be restricted to no more than 2.5 gallons per minute at 80 PSIG.	
Air Distribution Systems	610.1	All ducts, fittings, mechanical equipment and plenum chambers shall be mechanically attached, sealed, insulated, and installed in accordance with the criteria of Section 610. Ducts in unconditioned attics: R-6 min. insulation.	
HVAC Controls	607.1	Separate readily accessible manual or automatic thermostat for each system.	
Insulation	604.1, 602.1	Ceilings-Min. R-19. Common walls-Frame R-11 or CBS R-3 both sides. Common ceiling & floors R-11.	

ENERGY PERFORMANCE LEVEL (EPL) DISPLAY CARD

ESTIMATED ENERGY PERFORMANCE SCORE* = 85.0

The higher the score, the more efficient the home.

E.JOHNSON CONST, , , ,

1. New construction or existing	New	
2. Single family or multi-family	Single family	
3. Number of units, if multi-family	1	
4. Number of Bedrooms	3	
5. Is this a worst case?	Yes	
6. Conditioned floor area (ft²)	1937 ft²	
7. Glass type[1] and area: (Label reqd. by 13-104.4.5 if not default)		
a. U-factor: (or Single or Double DEFAULT)	Description Area 7a. (Dble, U=0.6) 390.0 ft²	
b. SHGC: (or Clear or Tint DEFAULT)	7b. (SHGC=0.35) 390.0 ft²	
8. Floor types		
a. Slab-On-Grade Edge Insulation	R=0.0, 283.0(p) ft	
b. N/A		
c. N/A		
9. Wall types		
a. Frame, Wood, Adjacent	R=13.0, 450.0 ft²	
b. Frame, Wood, Exterior	R=13.0, 2300.0 ft²	
c. N/A		
d. N/A		
e. N/A		
10. Ceiling types		
a. Under Attic	R=30.0, 1937.0 ft²	
b. Under Attic	R=19.0, 325.0 ft²	
c. N/A		
11. Ducts		
a. Sup: Unc. Ret: Unc. AH: Garage	Sup. R=6.0, 185.0 ft	
b. N/A		

12. Cooling systems		
a. Central Unit	Cap: 36.0 kBtu/hr SEER: 13.00	
b. N/A		
c. N/A		
13. Heating systems		
a. Electric Heat Pump	Cap: 36.0 kBtu/hr HSPF: 7.70	
b. N/A		
c. N/A		
14. Hot water systems		
a. Electric Resistance	Cap: 50.0 gallons EF: 0.97	
b. N/A		
c. Conservation credits (HR-Heat recovery, Solar DHP-Dedicated heat pump)		
15. HVAC credits (CF-Ceiling fan, CV-Cross ventilation, HF-Whole house fan, PT-Programmable Thermostat, MZ-C-Multizone cooling, MZ-H-Multizone heating)	PT,	

I certify that this home has complied with the Florida Energy Efficiency Code For Building Construction through the above energy saving features which will be installed (or exceeded) in this home before final inspection. Otherwise, a new EPL Display Card will be completed based on installed Code compliant features.

Builder Signature: _____ Date: _____

Address of New Home: _____ City/FL Zip: _____

**NOTE: The home's estimated energy performance score is only available through the FLA/RES computer program. This is not a Building Energy Rating. If your score is 80 or greater (or 86 for a US EPA/DOE EnergyStar™ designation), your home may qualify for energy efficiency mortgage (EEM) incentives if you obtain a Florida Energy Gauge Rating. Contact the Energy Gauge Hotline at 321/638-1492 or see the Energy Gauge web site at www.fsec.ucf.edu for information and a list of certified Raters. For information about Florida's Energy Efficiency Code For Building Construction, contact the Department of Community Affairs at 850/487-1824.*

1 Predominant glass type. For actual glass type and areas, see Summer & Winter Glass output on pages 2&4.

EnergyGauge® (Version: FLRCSB v4.5.2)

mailed 10/17/07

October 16, 2007

Columbia County Building Department
135 NE Hernando Avenue
Suite B-21
Lake City, FL 32055

Re: Update License & Authorized Personnel.

To Whom It May Concern:

Please **add Rhonda W. Johnson, Erin J. Johnson** name for being authorized to pull permits for Robert A. Johnson Construction LC.

State Building License Number # CB-C02214
Expiration Date: 8-31-08.

Thank You for your help.

Sincerely,

Robert A. Johnson

Robert A. Johnson MGRM
Robert A. Johnson Construction LC

~~Sworn to and subscribed~~ before me this 16 day of October 2007. Said person are Personally known to me or have produced the following identification_____.

Risa J. Wray
Notary Public
My Commission Expires:

Risa J. Wray
Commission # DD299894
Expires March 16, 2008
Bonded Troy Fain - Insurance, Inc. 800-385-7019

ROBERT McMILLAN
(386) 454-PUMP (7867)
(386) 462-PUMP (7867)

NORTH FLORIDA WATER SYSTEMS, INC.

PUMP SALES AND SERVICE

4" WELLS

11814 N.W. 202nd St., Alachua, Florida 32615

Private Well Affidavit

Customer: Johnson Const (Derksen)

Address: _____

Size of Pump Motor: 1

Size of Pressure Tank: 60

Cycle Stop Value: (Yes) Or No

Other: _____

x Robert C Mimillan
Installers Signature

RECEIVED 1/14/08

NORTH FLORIDA
WATER SYSTEMS, INC.
11814 N.W. 202nd ST.
ALACHUA, FLORIDA 32615

Columbia County well diagram

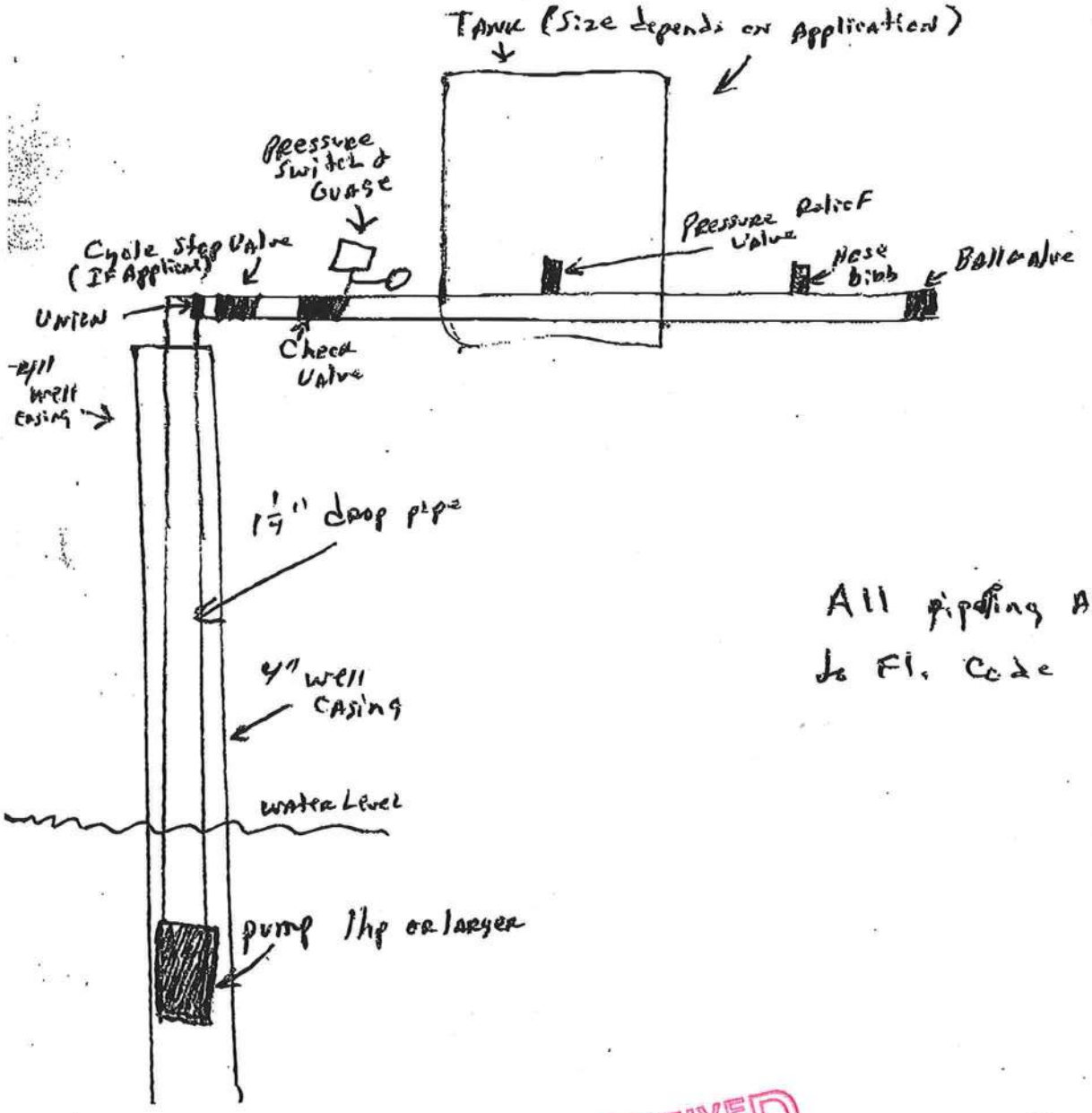

All piping and wiring to Fl. Code

Drawn by Robert Mimmellen

Ph # 386 462-7867

NORTH FLORIDA
WATER SYSTEMS, INC.
11814 N.W. 202nd ST.
ALACHUA, FLORIDA 32615

NORTH Florida Water Systems Inc. will Install per Florida Building Code

4" well

1 hp pump or larger, tank, 1½" sch #80 PVC drop pipe and All fittings

Robert C Mcmillan

PH # 386-462-7862

FAX # 386-418-0732

RECEIVED 1/14/08

Permit No. **0801-36** 26672
Tax folio No. Portion of **22-7S-16-04291-010**

NOTICE OF COMMENCEMENT
(Amendment to Recorded Notice of Commencement in OR Book 1141 page 1829)

State of Florida
County of Columbia

The undersigned hereby gives notice that improvement(s) will be made to certain real property, and in accordance with Chapter 713, Florida Statutes, the following information is provided in the Notice of Commencement.

1. Legal Description of Property:
BEG INTERS E LINE OF W 745 FT OF N ½ OF SW ¼ & S R/W OF CR-138, RUN E ALONG S R/W 702.89 FT, S 620.69 FT, W 702.89 FT, N 620 FT TO POB, ORB 778-418, 795-491, JTWRS 885-576

2. General description of improvements(s):
Single Family Residences

3. Owner information:
   a. Name and address of owner of site of improvements(s):
   Sandra Kay Derksen and Frank Nelson Ohidy
   P.O. Box 359
   Fort White, FL 32038

   b. Interest in property: fee simple

   c. Name and address of fee simple title holder, if other than Owner: N/A

4. Contractor:
Robert A. Johnson Construction LC
5600 NE 60th Avenue
High Springs, Florida 32643

Inst:200812008751 Date:5/5/2008 Time:1:06 PM
DC,P.DeWitt Cason,Columbia County Page 1 of 1 B:1149 P:1661

5. Surety:
   a. Name and address: NA
   b. Amount of bond $

6. Lender: **CitiMortgage**
c/o Granite Loan Management, LLC
10770 E. Briarwood Ave. Suite 280, Centennial, CO 80112

7. Person within the State of Florida designed by Owner upon whom notices or other documents may be served as provided by Section 713.13(1)(a) 7., Florida Statutes:

8. In addition to himself or herself, Owner designates **Granite Loan Management, LLC of 10770 E. Briarwood Ave. Suite 280, Centennial, CO 80012** to receive a copy of Lienor's Notice as provided in Section 713.13(1)(b), Florida Statutes.
   a. Phone Number: **(888) 456-4888**

9. Expiration date of notice of commencement 3 years from the date of recording.

Sandra Kay Derkson Owner

Frank Nelson Ohidy Owner

Sworn to and subscribed before me this 2nd day of May, 2008. Said persons are personally known to me or have produced the following identification_____.

LESTER SMILOWITZ
Notary Public, State of Florida
My comm. exp. Sept. 16, 2008
Comm. No. DD 355469

Notary Public Signature
My commission expires:

Print, Type, or Stamp Commissioned Name of Notary Public

26672

Clark Electric, Inc.
20523 NW 257th Terrace
High Springs, FL 32643
(352) 316-2563
State Cert. EC13003577

TO WANYE ROSS FAX 386 758 2160 PHONE 623 0170

#1 200 AMP METERCAN / PANEL
#2 200 AMP MANUAL TRANSFER SWITCH
#3 200 AMP PANEL
#4 200 AMP BREAKER ENCLOSURE FOR FURTURE GENARATOR
#5 2OO SER CABLE
This meets all nec codes

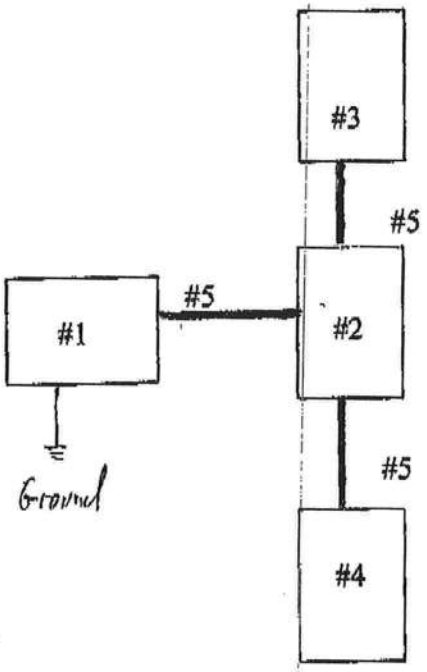

CERTIFICATE OF

OCCUPANCY

COLUMBIA COUNTY, FLORIDA

Department of Building and Zoning Inspection

This Certificate of Occupancy is issued to the below named permit holder for the building and premises at the below named location, and certifies that the work has been completed in accordance with the Columbia County Building Code.

Parcel Number 22-7S-16-04291-010 **Building permit No.** 000026672

Use Classification SFD/UTILITY **Fire:** 0.00

Permit Holder ROBERT A. JOHNSON **Waste:**

Owner of Building SANDRA DERKSEN & FRANK N. OHIDY **Total:** 0.00

Location: 4260 SW CR 138, FT. WHITE, FL

Date: 12/05/2008

Wayne A. Rust

Building Inspector

POST IN A CONSPICUOUS PLACE
(Business Places Only)

WIND ENGINEERING

FOR

DERKSEN-OHIDY RESIDENCE
Columbia County, Florida

w s e

WAYLAND

STRUCTURAL ENGINEERING

8200 SW 16th Place Gainesville, FL 32607
Phone/Fax 352-331-0727
FL COA #8236

Project Number
07132

December 10, 2007

For
RICARDO CAVALLINO + ASSOCIATES
22 SE 5th Avenue
Gainesville, FL 32601

TABLE OF CONTENTS

GREGORY S. WAYLAND, PE
FL PE #54396

12/11/07

STRUCTURAL SPECIFICATION

A. GENERAL

1. This STRUCTURAL SPECIFICATION shall be considered part of the contract documents for this project and shall be attached to the drawings prepared by: **RICARDO CAVALLINO + ASSOCIATES** Date:
2. Roof truss layout, uplift loads and gravity loads relied upon for design of supporting walls, lintels, headers, footings, etc. prepared by: **MAYO TRUSS CO., Inc. Rt 2, Box 40 Mayo, FL** Date: 12/30/2003
3. Information and materials specified in this STRUCTURAL SPECIFICATION shall take precedence over that shown on the drawings.
4. Signing and sealing this document and/or the construction drawings by Wayland Structural Engineering certifies only the structural systems for this building, and is not a certification of the site plan, architectural, electrical, mechanical, plumbing or other systems that may be shown on the same drawing. WSE is not responsible for changes made to this document by others without written consent.
5. It is assumed that this building site is not located within a 100 year floodplain and is not designed for hydrostatic or moving water loads.

B. GOVERNING CODE

FLORIDA BUILDING CODE, 2006 SUPPLEMENT

C. DESIGN LOADS

1. Dead Loads		(Section 1606)
Roof Top Chord	10	psf
Roof Bottom Chord	10	psf
Floor	10	psf
2. Live Loads		(Section 1607)
Floor Live Load	40	psf
Balconies	60	psf
Attics w/o storage	10	psf
Attics w storage	20	psf
3. Roof Live Loads		(Section 1607.11.2)
12:12 pitch	12	psf
10:12 pitch	14	psf
8:12 pitch	16	psf
6:12 pitch	18	psf
Flat to 4:12 pitch	20	psf

4. Wind Loads (Section 1609)

Enclosure Classification	Enclosed	
Basic Wind Speed (3 sec. gust)	110	mph
Wind Importance Factor, Iw	1.0	
Exposure Category	B	
Internal Pressure Coefficients:	+0.18, -0.18	

Design Wind Pressures for Doors and Windows:

Opening Area (sf)	Inward Pressure (psf)	Outward Pressure (psf)
0-10	21.8	-29.1
11-20	20.8	-27.2
21-50	19.5	-24.6
51-100	18.5	-22.6

D. EARTHWORK

1. **General:**
   a. **OWNER/CONTRACTOR CAUTION**: A geotechnical or soil investigation has not been performed for this site. It is recommended that the Owner or Contractor employ the services of a geotechnical engineer to perform soil borings and provide recommendations for preparation of the soils specific to this building site, and confirm the soil type assumed in this specification. WSE has no knowledge of the on-site soils and therefore accepts no responsibility for their bearing capacity or performance.
   b. Bearing soil is therefore presumed to be sandy soil with no organics, peat, clay, expansive clays, or boulders.
   c. It is assumed that seasonal high groundwater table is well below footing bearing elevation.
   d. The allowable soil bearing pressure is assumed to be 1,000 pounds per square foot.
   e. If the Contractor or Building Inspector encounters organics, clays, silts, boulders or high grounwater levels during foundation excavation, engineer of record and/or geotechnical engineer shall be contacted and/or employed to assess conditions first hand and give direction for additional corrective work or modifications to the design that may need to be performed.
2. **Site Preparation:**
   a. Strip all trees, grasses, topsoil and other organics from building footprint. Use root rake or similar equipment to remove roots.
   b. Proofcompact existing grade with loaded dump truck or compactor to densify existing soils and identify soft or loose soils.
   c. If soft soils are encountered during proofcompaction, overcut unsuitable material and replace with well graded sand. (See 1e. above)
3. **Excavation:**
   a. Excavations are to be performed in accordance with current OSHA standards. Contractor is responsible for excavation safety.
   b. Compact all excavation bottoms to firm unyielding condition. See B.6.c. for compaction requirement.
4. **Footing Bearing:**
   a. All foundations are to bear on undisturbed sandy soil soil or compacted fill as described herein.
   b. Bottom of footings are to extend at least 12 inches below grade.
5. **Ground/Surface Water Control:**
   a. Excavation and backfill operations are to be maintained in a dry condition.
   b. Slope or crown building subgrades to promote run-off and prevent ponding.
   c. Surface and infiltrating water are to be removed by grading and pumping from sumps if required.
6. **Backfill and Compaction:**
   a. Use only clean, well graded sand with no more than 10% passing #200 sieve for fill and backfill within building footprint.
   b. Mechanically compact all backfill within building footprint in maximum 12" loose lifts to firm unyielding consistency.
   c. Suggest compact to 95% of maximum dry density per Modified Proctor Test, ASTM D-1557.
7. **Pest Control:**
   a. Treat all slab subgrades for termites in accordance with the Florida Building Code and local ordinances.
8. **Exterior Grading:**
   a. Exterior grade is to be kept at least 6 inches below wood siding and/or foam insulation.
   b. Slope exterior grade away from building to promote drainage.

STRUCTURAL SPECIFICATION (Continued)

E. CONCRETE

1. General: Comply with Florida Building Code, 2006 Supplement, Chapter 19, and ACI 301-99 Specifications for Structural Concrete.

2. Concrete:
- a. Cement: ASTM C150, Type I Portland cement
- b. Aggregate: ASTM C33, maximum aggregate size = 1 inch
- c. Water/cement ratio: 0.50 maximum
- d. Slump: 4 inches +/- 1 inch.
- e. Air entraining: ASTM C 260, concrete is to be air entrained for mild exposure, 3 - 6%.

COMPRESSIVE STRENGTH, (psi) min. at 28 days	
Member	Strength
Footings, slabs-on-grade	2,500

3. Reinforcing: ASTM A615, Grade 40.

LAPS, BENDS, HOOKS			
Bar Size	Lap Length	Bend Diameter	Hook Length
#3	15"	2 1/4"	6"
#4	20"	3"	8"
#5	25"	3 3/4"	10"
#6	30"	4 1/2"	12"

BAR COVER	
Condition	Minimum Cover
Cast against and exposed to earth	3"
Exposed to earth or weather	1 1/2"
Not exposed to weather or earth	
Slabs, walls, joists	3/4"
Beams, columns (stirrups, ties)	1 1/2"

4. Footings:

BEARING WALL FOOTINGS			
Type	Width	Depth	Rein-forcing
Stem wall	24"	12"	(3) #5
Monolithic	16"	18"	(2) #5

Corner bars: Provide 90 degree bend at all footing corners.

5. Slabs-On-Grade:
- a. Thickness: 4 in.
- b. Vapor retarder: 6 mil polyethylene, lap edges 6 inches.
- c. Reinforcing: Welded Wire Reinforcing (WWR): ASTM A185, 6x6-W1.4xW1.4 (6x6-10/10) sheets, lap edges minimum 10 inches, support on chairs @ 3'-0" o.c. each way. WWR need not be installed on chairs if used in conjunction with fiber reinforcement. (Optional) Fibrous Reinforcing: ASTM C 1116, Fibermesh "Stealth" or "Inforce e3" polypropylene fibers by SI Concrete Systems or equivalent. Add to concrete mix at rate of 1.5 lb/cy.
- d. Protection: Cure all slabs for 7 days using sprayed-on curing compound or continuous water sprinkling.
- e. Slab joints: As concrete slabs cure and dry out, they will shrink causing cracks to form in surface of slab. Slab reinforcement is placed in slab to help limit width of cracks that do form. All slabs left exposed should be saw-cut in roughly 10'-0" squares.

F. MASONRY

1. General: Comply with the Florida Building Code, 2006 Supplement, Chapter 21 and ACI 530.1-02 Specifications for Masonry Structures.

2. Masonry: ASTM C90, Type 1, two core, normal weight units, 1,900 psi net area compressive strength.

3. Mortar: ASTM C270, Type M or S.

4. Grout: ASTM C476, fine or coarse grout, minimum 3,000 psi compressive strength at 28 days, 8-9 inch slump.

5. Joint Reinf.: (Optional) ASTM A951, truss type, hot-dip galvanized per ASTM A153, class B, 9 gauge wires spaced 16" o.c. vertically.

6. Reinforcing: ASTM A615, Grade 40. Provide clean-out at base of wall for pours over 5 feet high, lap bars 48 bar diameters.
- a. Vertical: Provide #5 bars @ 4'-0" o.c. and at all corners and ends of walls.
- b. Horizontal: Provide one #5 bar continuous in bond beam at top of stem wall.
- c. Hooks: Provide standard 90 degree hook into footing at bottom and into bond beam at top of wall.
- d. Corners: Provide 90 degree bend corner bars at all wall corners and intersections.

STRUCTURAL SPECIFICATION (Continued)

G. **WOOD FRAMING**

1. General: Comply with the Florida Building Code, 2006 Supplement, Chapter 23.

2. Studs:

Wall height	Member	Spacing	Grade	Species
Up to 10 ft.	2x4	16" o.c.	No. 2	Spruce-Pine-Fir (SPF)
10 - 16 ft.	2x6	16" o.c.	No. 2	Spruce-Pine-Fir (SPF)

3. Headers, Joists, Beams: No. 2, Southern Pine (SP).

4. Posts: No. 2, Southern Pine (SP).

5. LVL Beams: Laminated Veneer Lumber "G-P LAM LVL" by Georgia Pacific, Fb = 2,950 psi, Fv = 285 psi, E = 2,000,000 psi.

6. Trusses:

a. Wayland Structural Engineering is not responsible for design and detailing or installation of engineered wood roof trusses.

b. Truss engineering drawings to be signed and sealed by Professional Engineer registered in State of Florida.

c. Truss manufacturer to Engineer trusses to support dead, live and wind loads per Florida Building Code, 2004 or ASCE 7-02.

d. Engineer trusses to comply with ANSI/TPI 1 "National Design Standard for Metal Plate Connected Wood Truss Construction.

e. Comply with TPI HIB "Commentary and Recommendations for Handling, Installing and Bracing of Metal Plate Connected Wood Trusses."

f. Comply with TPI DSB "Recommended Design Specification for Temporary Bracing of Metal Plate Connected Wood Trusses."

g. Truss spacing = 2'-0" o.c. maximium.

7. Fascia Board: No. 2, Spruce-Pine-Fir (SPF).

8. Sheathing:

a. Roof Sheathing: 7/16" thick, Oriented Strand Board (OSB), Sheathing Grade, Exposure 1.
Fasten with 8d ring-shank nails.
(0.113 in. nominal shank dia., ring dia. 0.012 in. over shank dia., 16-20 rings/inch, 0.280 in. head dia., 2 1/2 in. length)
Fasten @ 6" o.c at panel edges, 12" o.c. at panel interior, and 6" o.c. (edge & interior) within 5 ft. of gable ends.
Lay panels perpendicular to supports, stagger joints one-half panel length. Provide "H" panel clips between panel supports.
Nail panel edges to fascia board.

b. Wall Sheathing: 7/16" thick, Oriented Strand Board (OSB), Sheathing Grade, Exposure 1.
Fasten with 8d nails @ 6" o.c at panel edges, 12" o.c. along intermediate supports.
Install panels vertically. Nail top edge to top plate. Provide solid blocking at all panel edges.

9. Fasteners:

a. Nails: Comply with Florida Building Code, 2006 Supplement, Table 2304.9.1, "Fastening Schedule."

b. Anchor bolts: ASTM F1554 or ASTM A307, Grade 36, 1/2" diameter x 8" J-bolts, 2"x2" washer.
or: (Alternative) ASTM A307, 1/2" diameter threaded rod set in epoxy adhesive, min. 5 inches embedment.
Note: Bolts installed in curbs shall be longer such that embedment in base concrete below curb is same as elsewhere.
Note: <u>Expansion anchors are not allowed due to likelihood of spalling and edge blow-out.</u>
1.) Exterior Sheathed Walls: Install anchor bolts @ 48" o.c., and within 8" of ends, corners, openings.
2.) Interior Unsheathed Walls: Install anchor bolts @ 24" o.c., and within 8" of ends, corners, openings.

c. Epoxy: Simpson "SET" or Hilti "HIT HY150" Epoxy Adhesive. Follow manufacturer's installation instructions exactly.

d. Bolts: ASTM A307, hot-dip galvanized, see plan for size and quantity.

e. Uplift Anchors & Ties: Simpson Strong-Tie,

f. Corrosion Protection: All fasteners exposed to weather or in contact with preservative treated wood shall be hot-dip galvanized to G185. For Simpson connectors, provide "Z-Max" coating.

H. **WINDOWS, DOORS, SKYLIGHTS**

1. Design: Wayland Structural Engineering is not responsible for the design, construction, or attachment of windows, doors or skylights. The building envelope is designed assuming a fully enclosed condition, therefore windows, doors and skylights must be designed to support the same wind pressures that walls and roofs are designed for.

2. Certification: Window, door and skylight manufacturer shall submit certification indicating that window or door units can adequately support design wind pressures for the specified wind zone as shown in section C.4. above.

3. Fastenings: Window, door and skylight manufacturer is to provide fastening information for attachment to supporting construction.

WAYLAND STRUCTURAL ENGINEERING			Date: 12/10/2007
Gregory S. Wayland, PE	FL PE #54396	FL COA #8236	By: GSW
8200 SW 16th Place Gainesville, FL 32607	Ph/Fax 352-331-0727		Page: 4
Project Name: **DERKSEN-OHIDY RESIDENCE**		For:	
WSE Project Number: 07132			3/32" = 1'0"
Project Location: Columbia County, FL			

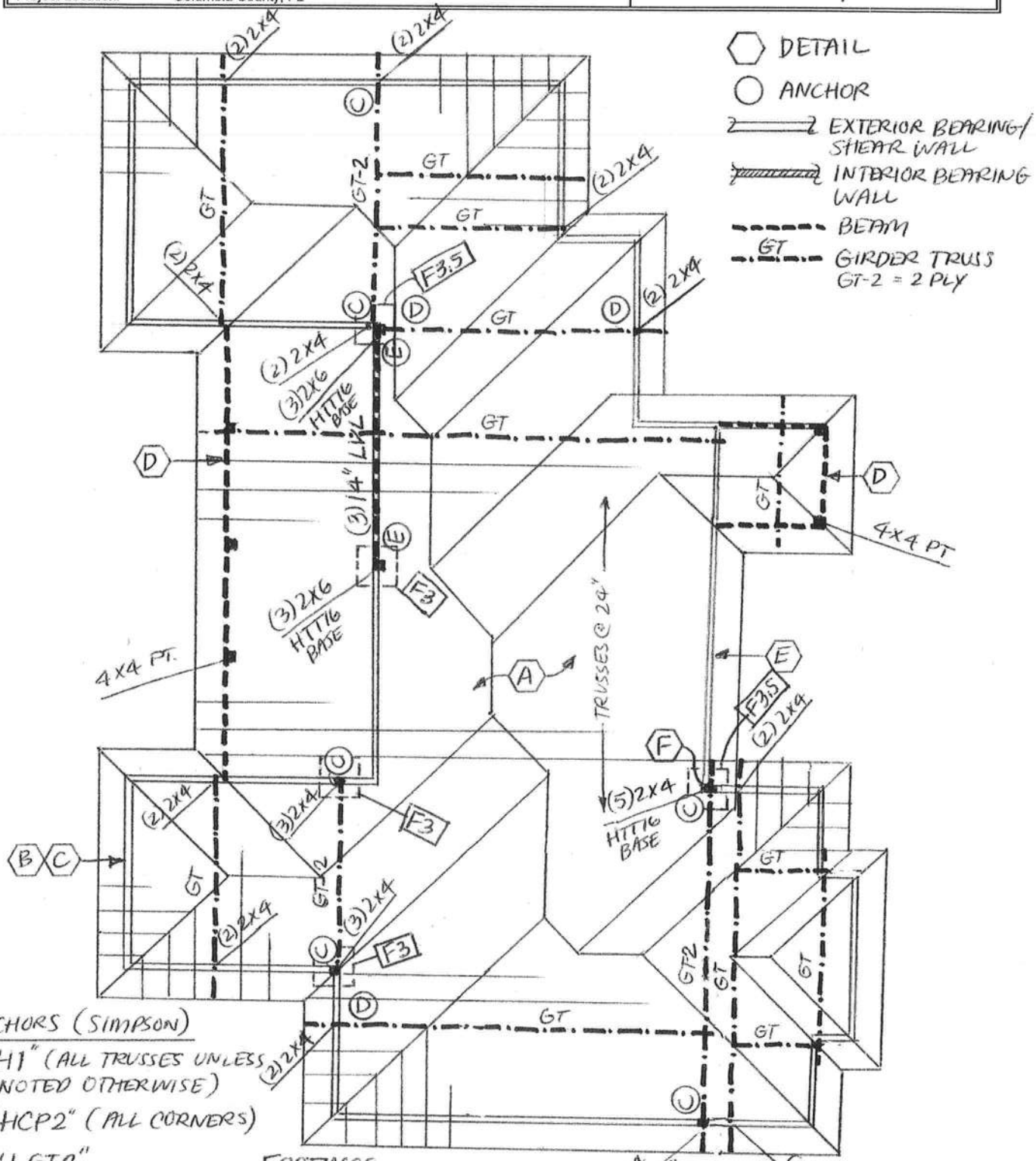

ANCHORS (SIMPSON)

(A) "H1" (ALL TRUSSES UNLESS NOTED OTHERWISE)

(B) "HCP2" (ALL CORNERS)

(C) "LGT2"

(D) "H10"

(E) (3) "MSTA18"

FOOTINGS

F3 - 3'-0 x 3'-0 x 12 w/ (4) #5 EW

F3.5 3'-6 x 3'-6 x 12 w/ (4) #5 EW

ROOF NAILING SCHEDULE

ROOF SHEATHING NAILING ZONE	NAIL SPACING							
	100 MPH		110 MPH		120 MPH		130 MPH	
	EDGE	FIELD	EDGE	FIELD	EDGE	FIELD	EDGE	FIELD
1	6"	12"	6"	12"	6"	12"	6"	12"
2	6"	12"	6"	12"	6"	12"	6"	6"
3	6"	6"	6"	6"	6"	6"	4"	4"

8d RING SHANK NAILS:

1. 0.113" NOMINAL SHANK DIAMETER
2. RING DIA. 0.012" OVER SHANK DIA.
3. 16 TO 20 RINGS PER INCH
4. 0.280" HEAD DIAMETER
5. 2 1/2" NAIL LENGTH

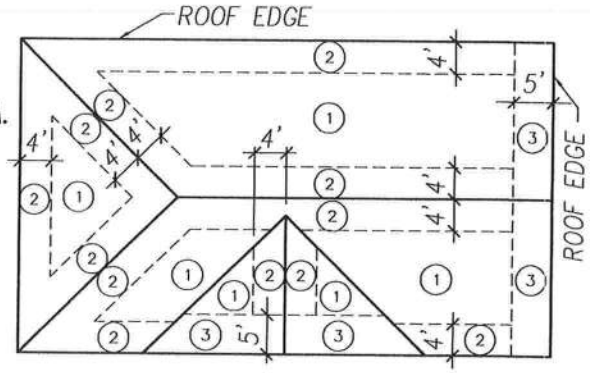

ROOF SHEATHING NAILING ZONES

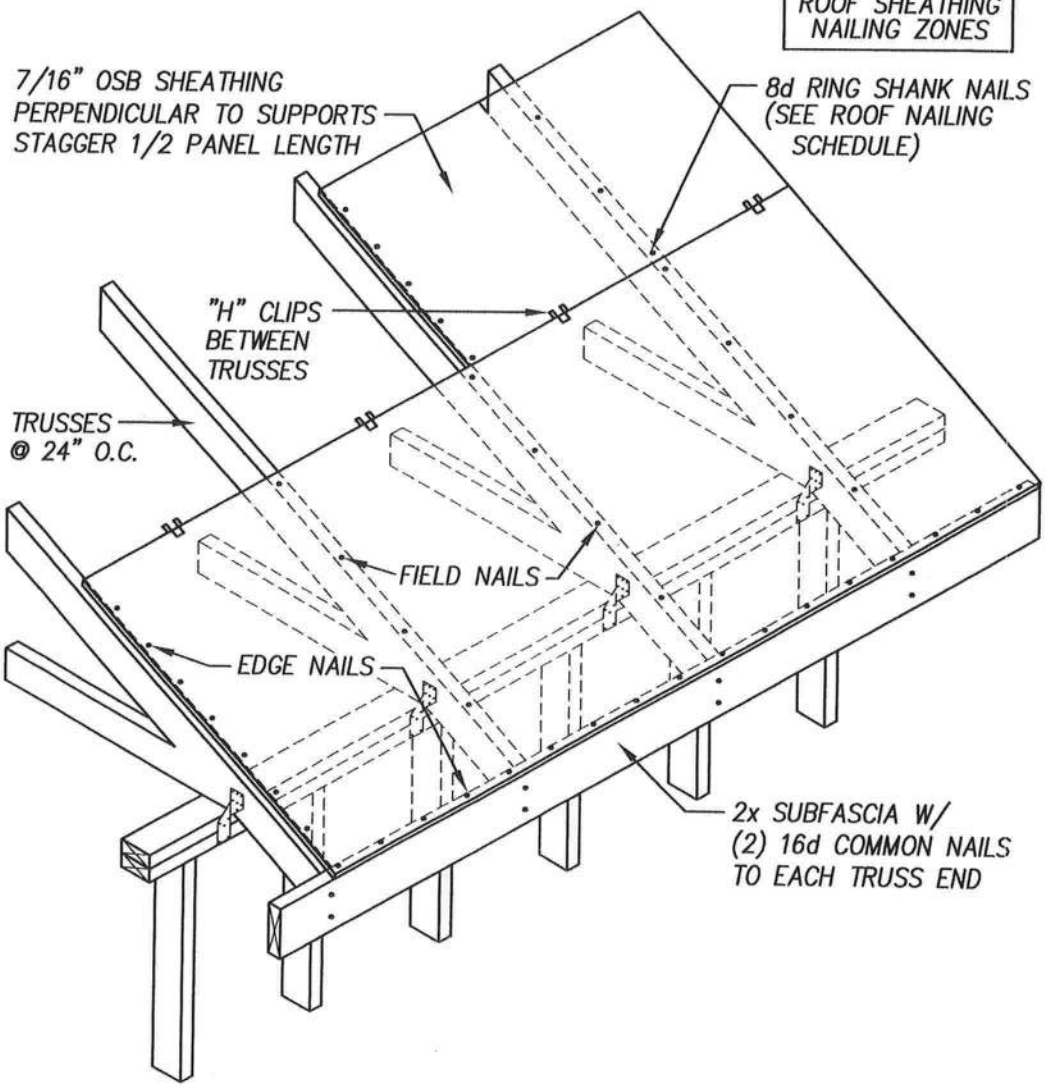

A

Typical Roof Sheathing Detail

1/2" = 1'-0"

WOOD-R000

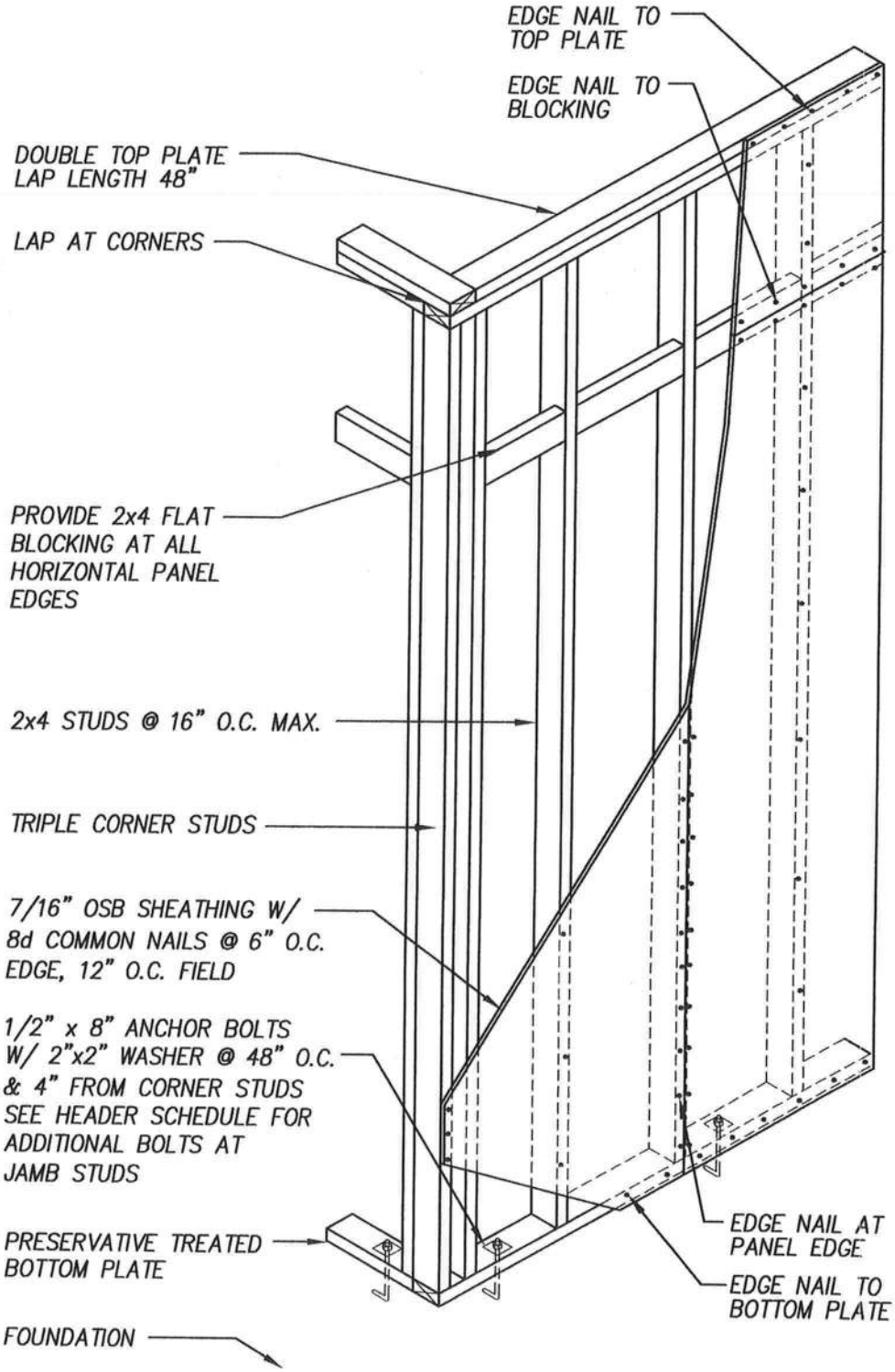

B

Typical Exterior Bearing Wall

1/2" = 1'-0"

WOOD-W400

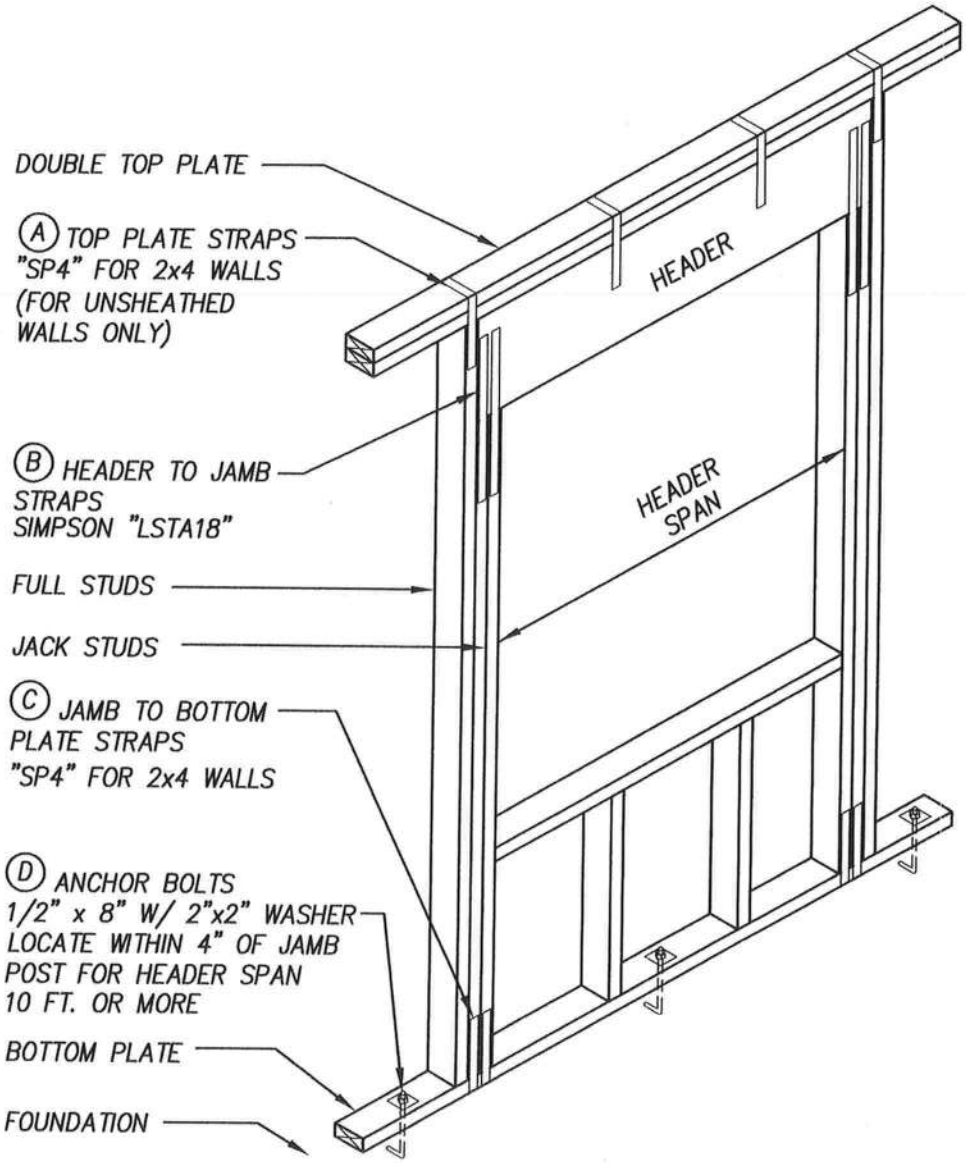

HEADER SPAN (FT)	HEADER	QTY JACK STUDS	QTY FULL STUDS	STRAP (A) SPACING	STRAP (B) QTY	STRAP (C) QTY	BOLT (D) QTY
4'-0"	(2) 2x8	1	1	32" O.C.	1	1	*
6'-0"	(2) 2x10	2	1	↓	1	1	*
8'-0"	(2) 2x12	2	2	↓	2	2	*
10'-0"	(2) 11 1/4" LVL	3	2	↓	3	0	**

* PROVIDE BOLTS AT SPACING SPECIFIED FOR TYPICAL WALL CONSTRUCTION.
** PROVIDE SIMPSON "HTT16" + 5/8" A.B. TO FOUNDATION.

1. DIMENSIONAL LUMBER HEADERS – NO. 2 SOUTHERN PINE (SP).
2. LVL HEADERS – 1 3/4" THICK "GP–LAM" LAMINATED VENEER LUMBER (Fb = 2950 PSI) BY GEORGIA PACIFIC OR EQUIVALENT.
3. ALL CONNECTORS ARE BY SIMPSON STRONG–TIE OR EQUIVALENT.
4. PROVIDE 1/2" OSB SPACER BETWEEN PLYS FOR DIMENSIONAL LUMBER.
5. FASTEN HEADER PLYS TOGETHER WITH 16d NAILS @ 12" O.C. STAGGERED.
6. FASTEN JAMB STUDS TOGETHER WITH 10d NAILS @ 12" O.C.

C

Typical Header Schedule

1/2" = 1'–0"

WOOD–W300

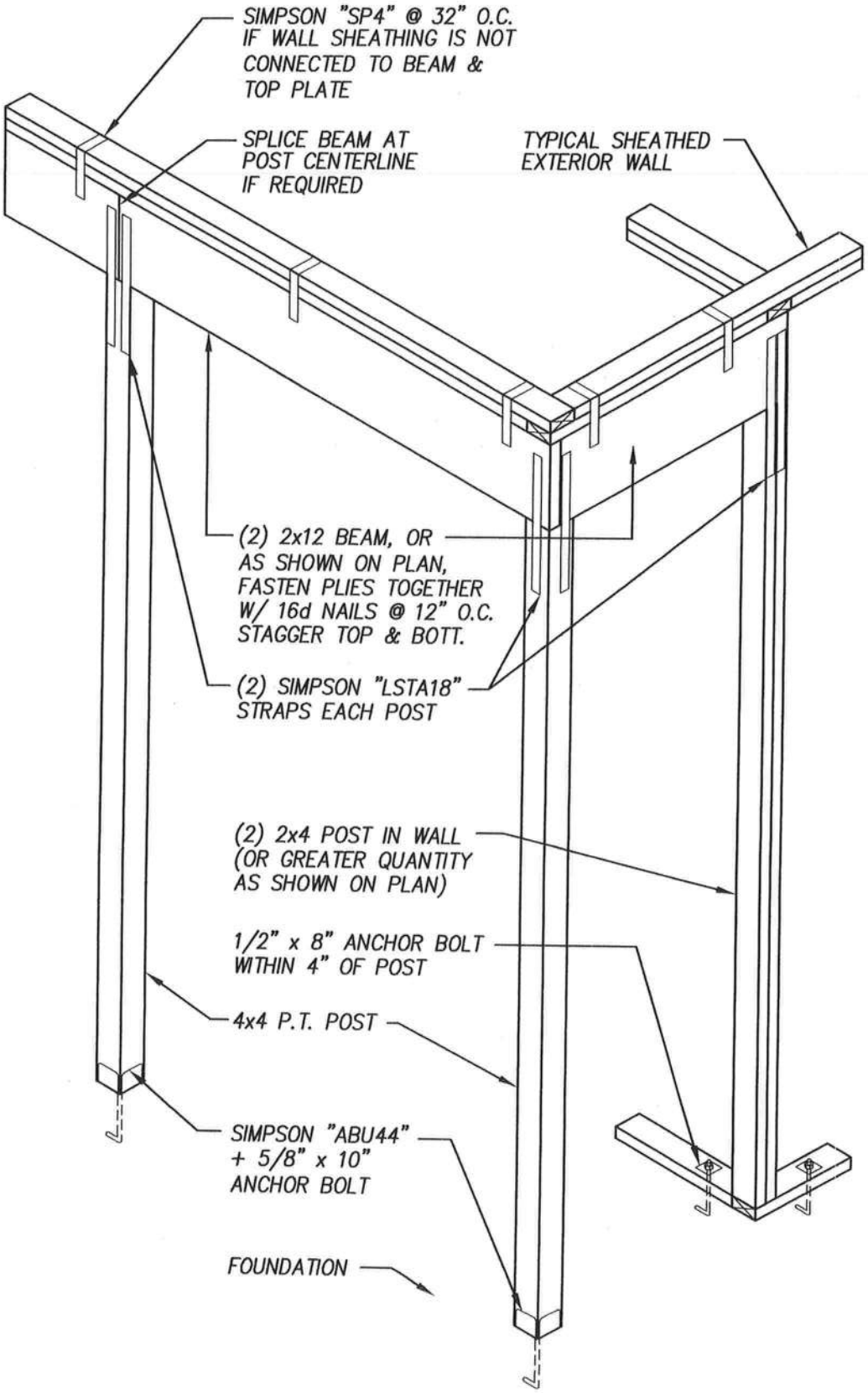

D

Typical Post & Beam

1/2" = 1'–0"

WOOD–W500

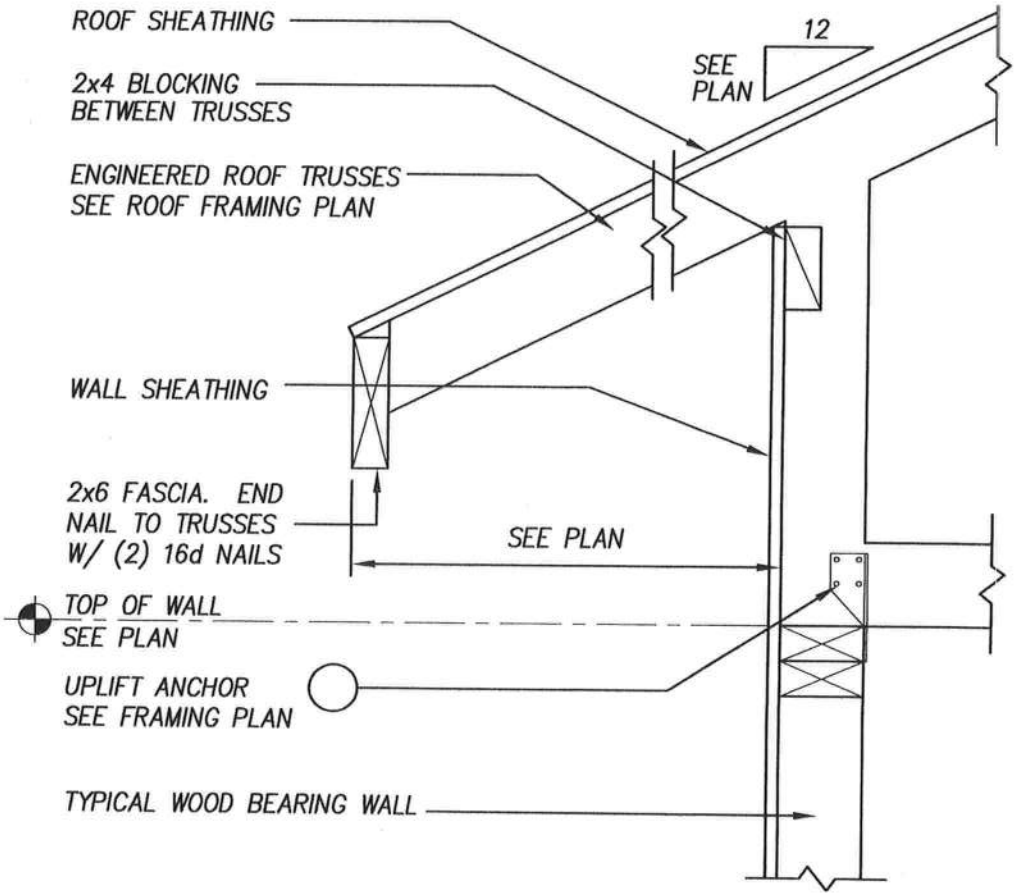

E

Typ. Truss Bearing (Raised Heel)

1 1/2" = 1'-0"

WOOD-R006

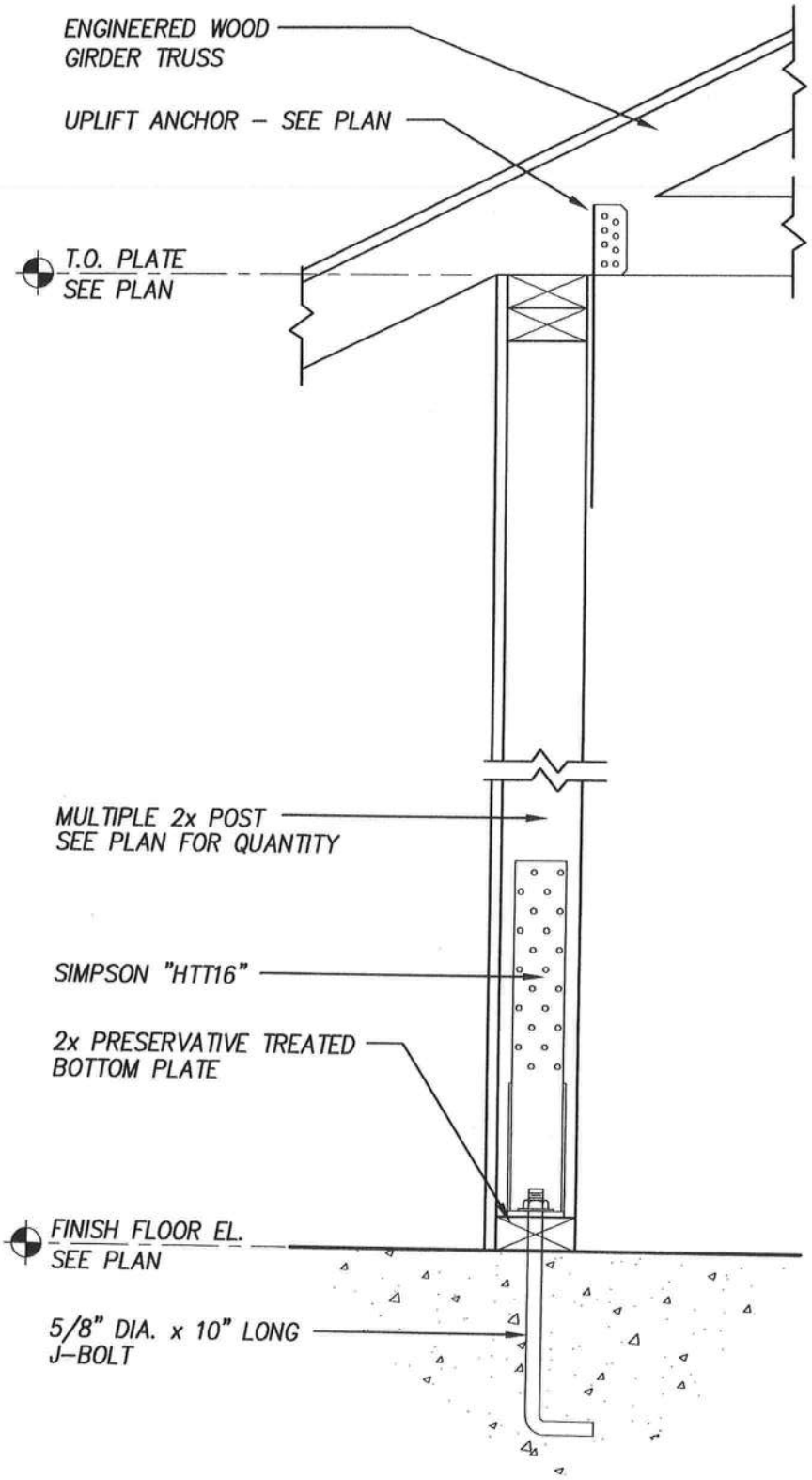

F

Typical Girder Truss Anchor

1 1/2" = 1'-0"

WOOD-W021L

VERTICAL WALL MEMBERS (STUDS & POSTS)

Refer to Truss Engineering or Truss Uplift Calculations for calculations of vertical roof loads to be supported by walls.
Refer to attached spreadsheets for individual stud or post design calculations.

A. TYPICAL EXTERIOR BEARING WALL STUDS

Stud Height H = 10.00 ft
Stud Spacing s = 16 in

Load Case 1 - DL + LL

	Uniform Axial Load, (plf)	Axial Load (lb/stud)
Dead Load	407	543
Live Load	407	543
Total	**814**	**1,085**

Load Case 2 - 0.6DL + WL

	Uniform Axial Load, (plf)	Axial Load (lb/stud)
0.6 Dead	244	326
Wind Uplift	83	111

	Pressure (psf)	Uniform load (plf)
Lateral Wind	22.6	30.1

USE: 2x4 STUDS @ 16" O.C., CONSTRUCTION GRADE SPRUCE-PINE-FIR (SPF)
W/ DOUBLE 2x4 TOP PLATE, 2x4 P.T. BOTTOM PLATE & STRUCTURAL SHEATHING FULL HEIGHT ONE SIDE OF STUD
W/ 1/2" x 8" ANCHOR BOLTS TO FOUNDATION @ 48" O.C. & WITHIN 4" OF CORNERS AND END OF WALL

B. TYPICAL INTERIOR BEARING WALL STUDS (NOT APPLICABLE)

Stud Height H = NA ft
Stud Spacing s = NA in

Load Case 1 - DL + LL

	Uniform Axial Load, (plf)	Axial Load (lb/stud)
Dead Load	NA	NA
Live Load	NA	NA
Total	**NA**	**NA**

Load Case 2 - 0.6DL + WL

	Uniform Axial Load, (plf)	Axial Load (lb/stud)
0.6 Dead	NA	NA
Wind Uplift	NA	NA

	Pressure (psf)	Uniform load (plf)
Lateral Wind	NA	NA

NA

C. POST FOR TYPICAL GIRDER TRUSS

Post Height H = 10.00 ft

	Axial Load (lb/post)
Dead Load	1,612
Live Load	1,612
Total	**3,224**

Uplift (lb/post)
521

USE: (2) 2x4 STUD POST, CONSTRUCTION GRADE SPRUCE-PINE-FIR (SPF)
W/ 1/2" x 8" ANCHOR BOLT TO FOUNDATION WITHIN 4" OF POST

D. TYPICAL PORCH POST

Post Height H = 10.00 ft
Post Spacing s = 8.33 ft

	Uniform Load, (plf)	End Posts Axial Load (lb/post)	Middle Posts Axial Load (lb/post)
Dead Load	208	866	1,733
Live Load	208	866	1,733
Total	416	**1,733**	**3,465**
Uplift	26	**108**	**217**

USE: 4x4 PRESERVATIVE TREATED POST, NO. 2 SOUTHERN PINE (SP)
W/ SIMPSON "ABU44" W/ NAILS TO POST + 5/8" x 10" ANCHOR BOLT TO FOUNDATION (U=2200 lb)
or USE: (2) 2x4 STUD POST INSIDE SHEATHED WALL, CONSTRUCTION GRADE SPRUCE-PINE-FIR (SPF)
W/ 1/2" x 8" ANCHOR BOLT TO FOUNDATION WITHIN 4" OF POST

WAYLAND STRUCTURAL ENGINEERING
Gregory S. Wayland, PE — FL PE #54396 — FL COA #8236
8200 SW 16th Place Gainesville, FL 32607 — Ph/Fax 352-331-0727

Project Name: **DERKSEN-OHIDY RESIDENCE**
WSE Project Number:
Project Location:

For: RICARDO CAVALLINO + ASSOCIATES
22 SE 5th Avenue
Gainesville, FL 32601

HORIZONTAL WALL MEMBERS (HEADERS, BEAMS, GIRDERS)

A. TYPICAL WALL HEADERS

Dead Load	407	plf
Live Load	407	plf
Total	**814**	plf
Wind Uplift	92	plf

		Header Span, (ft)				
		3.33	6.33	8.00		
Uplift, (lb)	U =	153	291	368		
Shear, (lb)	V =	1,355	2,576	3,256		
Moment (in-lb)	M =	13,540	48,924	78,144		
Deflection (in)	delta total =	0.17	0.32	0.40		
	delta live =	0.11	0.21	0.27		
Area (in^2)	A =	12.0	22.9	28.9		
Section Mod. (in^3)	S =	11.1	40.1	64.1		
Mom. of Inertia (in^4)	I total =	8.5	58.1	117.2		
	I live =	6.3	43.6	87.9		
Header		**(2) 2x8**	**(2) 2x10**	**(2) 2x12**		
Straps	Plate to Hdr*	**SP4 @ 32"**	**SP4 @ 32"**	**SP4 @ 32"**		
	Hdr to Post	**(1) LSTA18**	**(1) LSTA18**	**(2) LSTA18**		
Jamb Posts	Jack	**1**	**2**	**2**		
	Full	**1**	**1**	**2**		

**Required at unsheathed interior bearing walls only*

B. TYPICAL PORCH BEAM

Dead Load	150	plf
Live Load	150	plf
Total	**300**	plf
Wind Uplift	150	plf

Span, (ft)	L =	8.33
Uplift, (lb)	U =	625
Shear, (lb)	V =	1,250
Moment (in-lb)	M =	31,225
Deflection (in)	delta total =	0.42
	delta live =	0.28
Area (in^2)	A =	11.1
Section Mod. (in^3)	S =	25.6
Mom. of Inertia (in^4)	I total =	48.8
	I live =	36.6

USE: (2) 2x12 BEAM, NO. 2 SOUTHERN PINE (SP) W/ (2) SIMPSON "LSTA18" TO POSTS (U=2330 lb)

FOOTINGS AND SLABS

Allowable Bearing Pressure: 1,000 psf

A. TYPICAL EXTERIOR CONTINUOUS FOOTINGS

Footing width	b =	2.00	ft
Footing depth	d =	1	ft
Slab thickness	ts =	0.33	ft
Effective slab width	bs =	2.00	ft

	Volume (cf/lf)	Weight (plf)
Footing	2.00	300
Slab	0.66	99
Total	2.66	399

Uniform Downward Loads

Roof load	814	plf
Wall load	80	plf
Footing weight	300	plf
Total	1,194	plf
Req'd Width	**1.19**	ft
Check	**OK**	

Uniform Upward Loads

Roof uplift	83	plf
Req'd volume	0.55	cf/lf
Check	**OK**	

USE: 1'-4" WIDE x 1'-8" DEEP STRIP FOOTING W/ (2) #5 CONTINUOUS BOTTOM

B. TYPICAL INTERIOR CONTINUOUS FOOTINGS

Footing width	b =	NA	ft
Footing depth	d =	NA	ft
Slab thickness	ts =	NA	ft
Effective slab width	bs =	NA	ft

	Volume (cf/lf)	Weight (plf)
Footing	NA	NA
Slab	NA	NA
Total	NA	NA

Uniform Downward Loads

Roof load	NA	plf
Wall load	NA	plf
Footing weight	NA	plf
Total	NA	plf
Req'd Width	**NA**	ft
Check	**NA**	

Uniform Upward Loads

Roof uplift	NA	plf
Req'd volume	NA	cf/lf
Check	**NA**	

NA

C. TYPICAL GIRDER TRUSS FOOTING

Footing length	L =	2.00	ft
Footing width	B =	2.00	ft
Footing depth	d =	1.00	ft
Footing area	A =	4.00	sf
Slab thickness	ts =	0.33	ft
Effective slab width	bs =	2.00	ft

	Volume (cf)	Weight (lb)
Footing	4.00	600
Slab	1.98	297
Total	5.98	**897**

Uniform Downward Loads

Roof load	3,224	lb
Footing weight	600	lb
Total	3,824	lb
Req'd Area	**3.82**	sf
Check	**OK**	

Uniform Upward Loads

Roof uplift	521	lb
Check	**OK**	

USE: TYPICAL STRIP FOOTING UNLESS OTHERWISE SHOWN ON PLAN

D. TYPICAL PORCH MIDDLE POST FOOTING

Footing length	L =	8.33	ft
Footing width	B =	1.33	ft
Footing depth	d =	1.67	ft
Footing area	A =	11.08	sf
Slab thickness	ts =	0.33	ft
Effective slab width	bs =	2.00	ft

	Volume (cf)	Weight (lb)
Footing	18.50	2,775
Slab	4.07	610
Total	22.57	**3,386**

Uniform Downward Loads

Roof load	3,465	lb
Footing weight	2,775	lb
Total	6,241	lb
Req'd Area	**6.24**	sf
Check	**OK**	

Uniform Upward Loads

Roof uplift	217	lb
Check	**OK**	

USE: 1'-4" WIDE x 1'-6" DEEP FOOTING W/ (2) #5 CONTINUOUS BOTTOM

C. LATERAL ANALYSIS

1. Building Data

Building Length	L =	77.00	ft
Building Width	B =	53.83	ft
Eave Height	he =	12.00	ft
Peak ht above eave	hp =	9.25	ft
Roof Slope		6	/12

Exposure Category	B
Adjustment Coefficient	1.00

2. Edge Zone

a = 0.10*B	5.38	ft
a = 0.40*h	4.80	ft
a =	4.80	ft
a = 0.04*B	2.15	ft
a = 3.00	3.00	ft
a =	**4.80**	**ft**

3. End Zone

z = 2*a = 9.60 **ft**

4. LONGITUDINAL DIRECTION

MWFRS Wind Pressures:

Wall Interior Zone	12.7	psf
Wall End Zone	19.2	psf
Roof Interior Zone	-5.9	psf
Roof End Zone	-10.0	psf

Wall Shear Force:

Interior	2.64	kips
End	2.21	kips
Total	4.85	kips

Roof Shear Force:

Interior	-1.44	kips
End	-0.46	kips
Total	-1.90	kips
Use	0.00	kips

Total Shear Force:

V = 4.85 kips

Roof Diaphragm Check:

Diaphragm shear	v =	31	plf
Allowable shear	v =	240	plf
	check	OK	

Shear Wall Check:

Shear wall length	d =	35.00	ft
Shear wall height	h =	10.00	ft
Shear in wall	v =	69	plf
Allowable shear	v =	260	plf
	check	OK	

Overturning moment	M =	24253	ft-lb
Uplift at Corner	T =	315	lb

5. TRANSVERSE DIRECTION

MWFRS Wind Pressures:

Wall Interior Zone	17.7	psf
Wall End Zone	26.6	psf
Roof Interior Zone	-3.9	psf
Roof End Zone	-7.0	psf

Wall Shear Force:

Interior	6.14	kips
End	3.06	kips
Total	9.20	kips

Roof Shear Force:

Interior	-1.58	kips
End	-0.32	kips
Total	-1.91	kips
Use	0.00	kips

Total Shear Force:

V = 9.20 kips

Roof Diaphragm Check:

Diaphragm shear	v =	85	plf
Allowable shear	v =	240	plf
	check	OK	

Shear Wall Check:

Shear wall length	d =	27.00	ft
Shear wall height	h =	8.00	ft
Shear in wall	v =	170	plf
Allowable shear	v =	260	plf
	check	OK	

Overturning moment	M =	36811	ft-lb
Uplift at Corner	T =	478	lb

ROOF SHEATHING:
USE: 7/16" THICK ORIENTED STRAND BOARD (OSB), SHEATHING GRADE
W/ 8d COMMON NAILS @ 6" O.C. AT PANEL EDGES, 12" O.C. AT PANEL INTERIOR, 6" O.C. WITHIN 5 FT. OF GABLE ENDS

WALL SHEATHING:
USE: 7/16" THICK ORIENTED STRAND BOARD (OSB), SHEATHING GRADE
W/ 8d COMMON NAILS @ 6" O.C. AT PANEL EDGES, 12" O.C. AT PANEL INTERIOR,
W/ SOLID 2x4 BLOCKING AT ALL PANEL EDGES
W/ 1/2" x 8" ANCHOR BOLTS TO FOUNDATION @ 48" O.C. & WITHIN 4" OF CORNERS AND END OF WALL

GARAGE DOOR HEADER

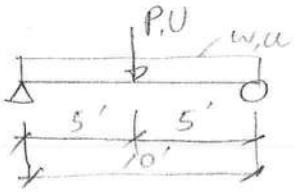

$W_d = 5.5(20) = 110$ $\quad u = 50$ plf

$W_\ell = 5.5(20) = 110$

$w = 220$ plf

$P = 6790$, $U = 796$

$R = 4495$ lb. $\quad U = 648$ lb.

$M = [1/8(220)10^2 + 6790(10/4)]12 = 236700$ in. lb.

$w_{eq} = 1578$ plf

$\Delta = 120/240 = 0.50$ in

	LUMBER	LVL
$A = 4995/(90 \times 1.25) =$	40.0 in^2	12.6
$S = 236700/(975 \times 1.25) =$	199.2 in^3	64.2
$I = \dfrac{5(1578/12)120^4}{384(1.6\times10^6)0.50} =$	443 in^4	354

∴ USE
2 PLY 1 3/4" x 11 1/4 LVL
w/ (3) 2X4 JACK STUDS, (2) FULL STUDS
w/ (3) MSTA18 TO POST

BEAM @ SLIDING DOOR

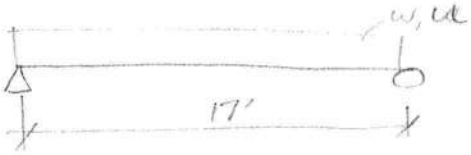

$W = 1628/2 = 814$ plf

$u = 183/2 = 92$ plf

$V = 814(17/2) = 6919$ lb $\quad U = 92(17/2) = 782$ lb

$M = 1/8(814)17^2 \times 12 = 352869$ in-lb

$\Delta_t = L/240 = 204/240 = 0.85$ in

$\Delta_\ell = 204/360 = 0.56$

$A = 6919/(285 \times 1.25) = 19.4$ in^2

$S = 352869/(2950 \times 1.25) = 95.7$ in^3

$I_t = \dfrac{5(814/12)204^4}{384(2.0\times10^6)0.85} = 900$ in^4

$I_\ell = \dfrac{5(407/12)204^4}{384(2.0\times10^6)0.56} = 682$ in^4

∴ USE
3 PLY 1 3/4 X 14" LVL
W/(3) MSTA18" TO POST
W/(3) 2X6 POST +
SIMPSON" HTT16" TO FOUNDATION

WAYLAND STRUCTURAL ENGINEERING	FL PE #54396	Date: 12/10/2007
Gregory S. Wayland, PE	FL COA #8236	By: GSW
8200 SW 16th Place Gainesville, FL 32607	Ph/Fax 352-331-0727	Page: 16

Project Name:	DERKSEN-OHIDY RESIDENCE	For:
Project Number:	07132	
Project Location:	Columbia County, FL	

WOOD COLUMN DESIGN Referenced Codes: Florida Building Code, 2001 and National Design Specification 1997

MEMBER DESCRIPTION: TYPICAL EXTERIOR BEARING WALL STUDS (LOAD CASE 1 - DL + LL)

A. Member Properties

1. Wood Species	SPF		
2. Wood Grade	No. 2		
3. Trial Member Size	2x4		nominal
4. Allowable Stresses	Fb =	1,000	psi
	Fb* =	1,438	psi
	Fv =	70	psi
	Fv' =	151	psi
	Fc =	1,400	psi
	Fc* =	2012.5	psi
	E =	1,300,000	psi
	E' =	1,300,000	psi
	G =	0.55	
5. Allowable Deflection	L/	180	

B. Member Dimensions

Width	dx =	3.50	in.
Thickness	dy =	1.50	in.
Length	Lux =	10.00	ft
	Luy =	1.00	ft
Effective Length Factor	Kex =	1.00	
	Key =	1.00	
Effective Length	Lex =	120	in
	Ley =	12	in
Slenderness Ratios	Lex/dx =	34	
	Ley/dy =	8	
Area	A =	5.25	in^2
Section Modulus	Sx =	3.06	in^3
	Sy =	1.31	in^3
Moment of Inertia	Ix =	5.36	in^4
	Iy =	0.98	in^4
Member laterally supported (y-axis) throughout length by sheathing		X	YES
			NO

C. Loading

Axial load	Pd =	543	lb
	Pl =	543	lb
	P =	1,086	lb
Uniform horizontal load	wx =	0.0	plf
	wy =	0.0	plf
Shear	Vx =	0	lb
	Vy =	0	lb
Moment	Mx =	0	in-lb
	My =	0	in-lb

D. Use Factors

Load Duration Factor	CD =	1.25	
Wet Service Factor	CM =	1.00	
Temperature Factor	CT =	1.00	1.00
Beam Stability Factor	CL =	1.00	
Repetitive Member Factor	Cr =	1.15	
Flat Use Factor	Cfu =	1.00	
Shear Stress Factor	CH =	1.50	

E. Column Design

Column Stability Factor

c =	0.80	sawn lumber
KcE =	0.30	visually graded lumber
Le/d =	34	<= 50, OK
Fce =	332	psi
Fce/Fc* =	0.165	
Cp =	**0.16**	

Beam Stability Factor

Rb =	13.66	
KbE =	0.439	visually graded lumber
Fbe =	3,057	
Fbe/Fb* =	2.13	
CL =	0.62	
CL =	**1.00**	

Shear Check

Fv' =	151	psi	
fvx =	0	psi	OK
fvy =	0	psi	OK

Deflection Check

allowable deltax =	0.67	in	
calculated deltax =	0.00	in	OK
allowable deltay =	0.07	in	
calculated deltay =	0.00	in	OK

Dead + Live Load

A req'd =	3.40	in^2	OK
fc =	207	psi	
Fc' =	320	psi	
Interaction Equation =		0.65	NDS 3.9-3

Dead + Wind Load

fc =	103	psi	
fb =	0	psi	
Fc' =	320	psi	
Fb' =	1,438	psi	
Interaction Equation =		0.10	NDS 3.9-3

INTERACTION EQUATION =	0.647	USE	No. 2	SPF	2x4

WAYLAND STRUCTURAL ENGINEERING	FL PE #54396	Date:	12/10/2007
Gregory S. Wayland, PE	FL COA #8236	By:	GSW
8200 SW 16th Place Gainesville, FL 32607	Ph/Fax 352-331-0727	Page:	17
Project Name: **DERKSEN-OHIDY RESIDENCE**		For:	
Project Number: **07132**			
Project Location: Columbia County, FL			

WOOD COLUMN DESIGN Referenced Codes: Florida Building Code, 2001 and National Design Specification 1997

MEMBER DESCRIPTION: TYPICAL EXTERIOR BEARING WALL STUDS (LOAD CASE 2 - 0.6DL + WL)

A. Member Properties

1. Wood Species	SPF		
2. Wood Grade	No. 2		
3. Trial Member Size	2x4		nominal
4. Allowable Stresses	Fb =	1,000	psi
	Fb* =	1,840	psi
	Fv =	70	psi
	Fv' =	193	psi
	Fc =	1,400	psi
	Fc* =	2576	psi
	E =	1,300,000	psi
	E' =	1,300,000	psi
	G =	0.55	
5. Allowable Deflection	L/	180	

B. Member Dimensions

Width	dx =	3.50	in.
Thickness	dy =	1.50	in.
Length	Lux =	10.00	ft
	Luy =	1.00	ft
Effective Length Factor	Kex =	1.00	
	Key =	1.00	
Effective Length	Lex =	120	in
	Ley =	12	in
Slenderness Ratios	Lex/dx =	34	
	Ley/dy =	8	
Area	A =	5.25	in^2
Section Modulus	Sx =	3.06	in^3
	Sy =	1.31	in^3
Moment of Inertia	Ix =	5.36	in^4
	Iy =	0.98	in^4
Member laterally supported (y-axis) throughout length by sheathing		X	YES
			NO

C. Loading

Axial load	Pd =	326	lb
	Pl =	0	lb
	P =	326	lb
Uniform horizontal load	wx =	30.1	plf
	wy =	0.0	plf
Shear	Vx =	151	lb
	Vy =	0	lb
Moment	Mx =	4,515	in-lb
	My =	0	in-lb

D. Use Factors

Load Duration Factor	CD =	1.60	
Wet Service Factor	CM =	1.00	
Temperature Factor	CT =	1.00	1.00
Beam Stability Factor	CL =	1.00	
Repetitive Member Factor	Cr =	1.15	
Flat Use Factor	Cfu =	1.00	
Shear Stress Factor	CH =	1.50	

E. Column Design

Column Stability Factor

c =	0.80	sawn lumber
KcE =	0.30	visually graded lumber
Le/d =	34	<= 50, OK
Fce =	332	psi
Fce/Fc* =	0.129	
Cp =	**0.13**	

Beam Stability Factor

Rb =	13.66	
KbE =	0.439	visually graded lumber
Fbe =	3,057	
Fbe/Fb* =	1.66	
CL =	0.55	
CL =	**1.00**	

Shear Check

Fv' =	193	psi	
fvx =	43	psi	OK
fvy =	0	psi	OK

Deflection Check

allowable deltax =	0.67	in	
calculated deltax =	0.97	in	NG
allowable deltay =	0.07	in	
calculated deltay =	0.00	in	OK

Dead + Live Load

A req'd =	1.01	in^2	OK
fc =	62	psi	
Fc' =	323	psi	
Interaction Equation =		0.19	NDS 3.9-3

Dead + Wind Load

fc =	62	psi	
fb =	1,474	psi	
Fc' =	323	psi	
Fb' =	1,840	psi	
Interaction Equation =		1.03	NDS 3.9-3

INTERACTION EQUATION = 1.029 | USE No. 2 SPF 2x4

WAYLAND STRUCTURAL ENGINEERING	FL PE #54396	Date: 12/10/2007
Gregory S. Wayland, PE	FL COA #8236	By: GSW
8200 SW 16th Place Gainesville, FL 32607	Ph/Fax 352-331-0727	Page: 18

Project Name:	DERKSEN-OHIDY RESIDENCE	For:
Project Number:	07132	
Project Location:	Columbia County, FL	

WOOD COLUMN DESIGN Referenced Codes: Florida Building Code, 2001 and National Design Specification 1997

MEMBER DESCRIPTION: TYPICAL GIRDER TRUSS POST

A. Member Properties

1. Wood Species		SPF	
2. Wood Grade		No. 2	
3. Trial Member Size		(2) 2x4	nominal
4. Allowable Stresses	Fb =	1,000	psi
	Fb* =	1,250	psi
	Fv =	70	psi
	Fv' =	131	psi
	Fc =	1,400	psi
	Fc* =	1750	psi
	E =	1,300,000	psi
	E' =	1,300,000	psi
	G =	0.55	
5. Allowable Deflection	L/	180	

B. Member Dimensions

Width	dx =	3.50	in.
Thickness	dy =	3.00	in.
Length	Lux =	10.00	ft
	Luy =	1.00	ft
Effective Length Factor	Kex =	1.00	
	Key =	1.00	
Effective Length	Lex =	120	in
	Ley =	12	in
Slenderness Ratios	Lex/dx =	34	
	Ley/dy =	4	
Area	A =	10.50	in^2
Section Modulus	Sx =	6.13	in^3
	Sy =	5.25	in^3
Moment of Inertia	Ix =	10.72	in^4
	Iy =	7.88	in^4
Member laterally supported (y-axis) throughout length by sheathing		X	YES
			NO

C. Loading

Axial load	Pd =	1,612	lb
	Pl =	1,612	lb
	P =	3,224	lb
Uniform horizontal load	wx =	0.0	plf
	wy =	0.0	plf
Shear	Vx =	0	lb
	Vy =	0	lb
Moment	Mx =	0	in-lb
	My =	0	in-lb

D. Use Factors

Load Duration Factor	CD =	1.25	
Wet Service Factor	CM =	1.00	
Temperature Factor	CT =	1.00	1.00
Beam Stability Factor	CL =	1.00	
Repetitive Member Factor	Cr =	1.00	
Flat Use Factor	Cfu =	1.00	
Shear Stress Factor	CH =	1.50	

E. Column Design

Column Stability Factor

c =	0.80	sawn lumber
KcE =	0.30	visually graded lumber
Le/d =	34	<= 50, OK
Fce =	332	psi
Fce/Fc* =	0.190	
Cp =	**0.18**	

Beam Stability Factor

Rb =	6.83	
KbE =	0.439	visually graded lumber
Fbe =	12,229	
Fbe/Fb* =	9.78	
CL =	0.90	
CL =	**1.00**	

Shear Check

Fv' =	131	psi	
fvx =	0	psi	OK
fvy =	0	psi	OK

Deflection Check

allowable deltax =	0.67	in	
calculated deltax =	0.00	in	OK
allowable deltay =	0.07	in	
calculated deltay =	0.00	in	OK

Dead + Live Load

A req'd =	10.15	in^2	OK
fc =	307	psi	
Fc' =	318	psi	
Interaction Equation =		0.97	NDS 3.9-3

Dead + Wind Load

fc =	154	psi	
fb =	0	psi	
Fc' =	318	psi	
Fb' =	1,250	psi	
Interaction Equation =		0.23	NDS 3.9-3

INTERACTION EQUATION =	0.967	USE	No. 2	SPF	(2) 2x4

WAYLAND STRUCTURAL ENGINEERING	FL PE #54396	Date: 12/10/2007
Gregory S. Wayland, PE	FL COA #8236	By: GSW
8200 SW 16th Place Gainesville, FL 32607	Ph/Fax 352-331-0727	Page: 19
Project Name: **DERKSEN-OHIDY RESIDENCE**		For:
Project Number: **07132**		
Project Location: Columbia County, FL		

WOOD COLUMN DESIGN Referenced Codes: Florida Building Code, 2001 and National Design Specification 1997

MEMBER DESCRIPTION: TYPICAL GIRDER TRUSS POST A26

A. Member Properties

1. Wood Species		SPF	
2. Wood Grade		No. 2	
3. Trial Member Size		(3) 2x4	nominal
4. Allowable Stresses	Fb =	1,000	psi
	Fb* =	1,250	psi
	Fv =	70	psi
	Fv' =	131	psi
	Fc =	1,400	psi
	Fc* =	1750	psi
	E =	1,300,000	psi
	E' =	1,300,000	psi
	G =	0.55	
5. Allowable Deflection	L/	180	

B. Member Dimensions

Width	dx =	3.50	in.
Thickness	dy =	4.50	in.
Length	Lux =	10.00	ft
	Luy =	1.00	ft
Effective Length Factor	Kex =	1.00	
	Key =	1.00	
Effective Length	Lex =	120	in
	Ley =	12	in
Slenderness Ratios	Lex/dx =	34	
	Ley/dy =	3	
Area	A =	15.75	in^2
Section Modulus	Sx =	9.19	in^3
	Sy =	11.81	in^3
Moment of Inertia	Ix =	16.08	in^4
	Iy =	26.58	in^4
Member laterally supported (y-axis) throughout length by sheathing		X	YES
			NO

C. Loading

Axial load	Pd =	2,450	lb
	Pl =	2,450	lb
	P =	4,900	lb
Uniform horizontal load	wx =	0.0	plf
	wy =	0.0	plf
Shear	Vx =	0	lb
	Vy =	0	lb
Moment	Mx =	0	in-lb
	My =	0	in-lb

D. Use Factors

Load Duration Factor	CD =	1.25	
Wet Service Factor	CM =	1.00	
Temperature Factor	CT =	1.00	1.00
Beam Stability Factor	CL =	1.00	
Repetitive Member Factor	Cr =	1.00	
Flat Use Factor	Cfu =	1.00	
Shear Stress Factor	CH =	1.50	

E. Column Design

Column Stability Factor

c =	0.80	sawn lumber
KcE =	0.30	visually graded lumber
Le/d =	34	<= 50, OK
Fce =	332	psi
Fce/Fc* =	0.190	
Cp =	**0.18**	

Beam Stability Factor

Rb =	4.55	
KbE =	0.439	visually graded lumber
Fbe =	27,516	
Fbe/Fb* =	22.01	
CL =	0.96	
CL =	**1.00**	

Shear Check

Fv' =	131	psi	
fvx =	0	psi	OK
fvy =	0	psi	OK

Deflection Check

allowable deltax =	0.67	in	
calculated deltax =	0.00	in	OK
allowable deltay =	0.07	in	
calculated deltay =	0.00	in	OK

Dead + Live Load

A req'd =	15.42	in^2	OK
fc =	311	psi	
Fc' =	318	psi	
Interaction Equation =		0.98	NDS 3.9-3

Dead + Wind Load

fc =	156	psi	
fb =	0	psi	
Fc' =	318	psi	
Fb' =	1,250	psi	
Interaction Equation =		0.24	NDS 3.9-3

INTERACTION EQUATION =	0.979	USE	No. 2	SPF	(3) 2x4

WAYLAND STRUCTURAL ENGINEERING	FL PE #54396	Date: 12/10/2007
Gregory S. Wayland, PE	FL COA #8236	By: GSW
8200 SW 16th Place Gainesville, FL 32607	Ph/Fax 352-331-0727	Page: 20
Project Name: **DERKSEN-OHIDY RESIDENCE**		For:
Project Number: **07132**		
Project Location: Columbia County, FL		

WOOD COLUMN DESIGN Referenced Codes: Florida Building Code, 2001 and National Design Specification 1997

MEMBER DESCRIPTION: GIRDER TRUSS POST A4

A. Member Properties

1. Wood Species		SPF	
2. Wood Grade		No. 2	
3. Trial Member Size		(5) 2x4	nominal
4. Allowable Stresses	Fb =	1,000	psi
	Fb* =	1,250	psi
	Fv =	70	psi
	Fv' =	131	psi
	Fc =	1,400	psi
	Fc* =	1750	psi
	E =	1,300,000	psi
	E' =	1,300,000	psi
	G =	0.55	
5. Allowable Deflection	L/	180	

B. Member Dimensions

Width	dx =	3.50	in.
Thickness	dy =	7.50	in.
Length	Lux =	10.00	ft
	Luy =	1.00	ft
Effective Length Factor	Kex =	1.00	
	Key =	1.00	
Effective Length	Lex =	120	in
	Ley =	12	in
Slenderness Ratios	Lex/dx =	34	
	Ley/dy =	2	
Area	A =	26.25	in^2
Section Modulus	Sx =	15.31	in^3
	Sy =	32.81	in^3
Moment of Inertia	Ix =	26.80	in^4
	Iy =	123.05	in^4
Member laterally supported (y-axis) throughout length by sheathing		X	YES
			NO

C. Loading

Axial load	Pd =	4,450	lb
	Pl =	4,450	lb
	P =	8,900	lb
Uniform horizontal load	wx =	0.0	plf
	wy =	0.0	plf
Shear	Vx =	0	lb
	Vy =	0	lb
Moment	Mx =	0	in-lb
	My =	0	in-lb

D. Use Factors

Load Duration Factor	CD =	1.25	
Wet Service Factor	CM =	1.00	
Temperature Factor	CT =	1.00	1.00
Beam Stability Factor	CL =	1.00	
Repetitive Member Factor	Cr =	1.00	
Flat Use Factor	Cfu =	1.00	
Shear Stress Factor	CH =	1.50	

E. Column Design

Column Stability Factor

c =	0.80	sawn lumber
KcE =	0.30	visually graded lumber
Le/d =	34	<= 50, OK
Fce =	332	psi
Fce/Fc* =	0.190	
Cp =	**0.18**	

Beam Stability Factor

Rb =	2.73	
KbE =	0.439	visually graded lumber
Fbe =	76,433	
Fbe/Fb* =	61.15	
CL =	0.98	
CL =	**1.00**	

Shear Check

Fv' =	131	psi	
fvx =	0	psi	OK
fvy =	0	psi	OK

Deflection Check

allowable deltax =	0.67	in	
calculated deltax =	0.00	in	OK
allowable deltay =	0.07	in	
calculated deltay =	0.00	in	OK

Dead + Live Load

A req'd =	28.02	in^2	NG
fc =	339	psi	
Fc' =	318	psi	
Interaction Equation =		1.07	NDS 3.9-3

Dead + Wind Load

fc =	170	psi	
fb =	0	psi	
Fc' =	318	psi	
Fb' =	1,250	psi	
Interaction Equation =		0.28	NDS 3.9-3

INTERACTION EQUATION =	1.067	USE	No. 2	SPF	(5) 2x4

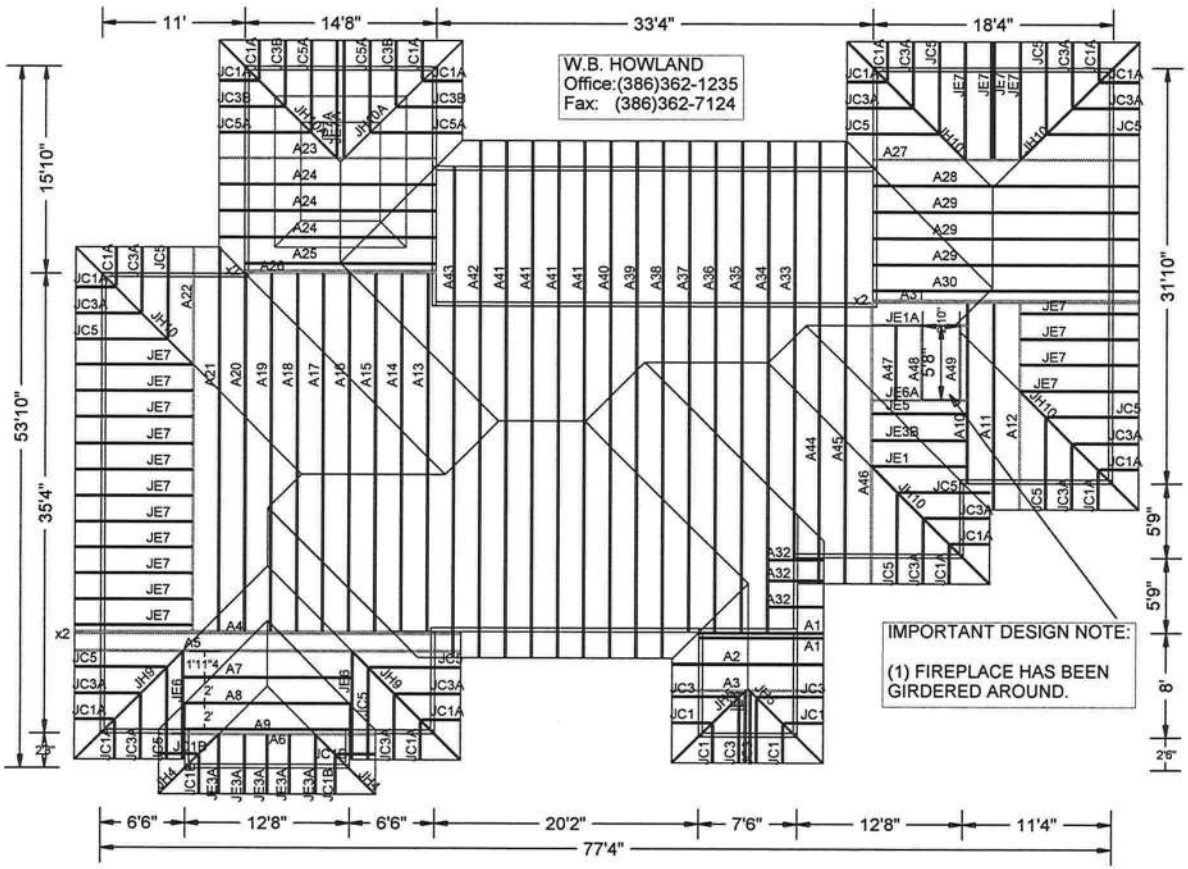

W.B. HOWLAND
Office:(386)362-1235
Fax: (386)362-7124

DATE:11/30/07
ROOF PITCH:6/12
CLG. PITCH:6/12
MBR TRAY AND
2' OFF INSIDE WALLS
OVERHANG:2'
LOADING:40#s PSF
WIND LOAD:110 MPH
EXT. WALLS:2 X 4 X 10'

IMPORTANT DESIGN NOTE:

(1) FIREPLACE HAS BEEN GIRDERED AROUND.

ROOF & FLOOR TRUSS QUOTES DO NOT INCLUDE BEAMS, LVLS, AND/OR GLULAMS.

VALLEY AREAS TO BE CONVENTIONALLY FRAMED UNLESS OTHERWISE STATED.

Job Name: DERKSEN RESIDENCE
Customer: ERIN JOHNSON CONSTRUCTION
Designer: Lynn Bell

JOB NO:
5074

PAGE NO:
1 OF 1

ITW Building Components Group, Inc.

1950 Marley Drive Haines City, FL 33844
Florida Engineering Certificate of Authorization Number: 0 278
Florida Certificate of Product Approval # FL1999
 Document ID:1TCW215-Z0230115044

Truss Fabricator: W.B. Howland
Job Identification: 5074-/DERKSEN RESIDENCE /ERIN JOHNSON CONSTRUCTION -- , **
Truss Count: 72
Model Code: IBC
Truss Criteria: IBC CODE
Engineering Software: Alpine Software,Version 7.38.
Structural Engineer of Record: The identity of the structural EOR did not exist as of
Address: the seal date per section 61G15-31.003(5a) of the FAC
Minimum Design Loads: Roof - 40.0 PSF @ 1.25 Duration
Floor - N/A
Wind - 110 MPH ASCE 7-02 -Closed

Seal Date: 11/30/2007

-Truss Design Engineer-
James F. Collins Jr.
Florida License Number: 52212
1950 Marley Drive
Haines City, FL 33844

Notes:

1. Determination as to the suitability of these truss components for the structure is the responsibility of the building designer/engineer of record, as defined in ANSI/TPI 1
2. The drawing date shown on this index sheet must match the date shown on the individual truss component drawing.
3. As shown on attached drawings; the drawing number is preceded by: HCUSR215

Details: CNBRGBLK-BRCLBSUB-

#	Ref Description	Drawing#	Date
1	17471--A1	07334050	11/30/07
2	17472--A2	07334051	11/30/07
3	17473--A3	07334067	11/30/07
4	17474--A4	07334121	11/30/07
5	17475--A5	07334117	11/30/07
6	17476--A6	07334118	11/30/07
7	17477--A7	07334068	11/30/07
8	17478--A8	07334069	11/30/07
9	17479--A9	07334052	11/30/07
10	17480--A10	07334119	11/30/07
11	17481--A11	07334070	11/30/07
12	17482--A12	07334115	11/30/07
13	17483--A13	07334071	11/30/07
14	17484--A14	07334072	11/30/07
15	17485--A15	07334073	11/30/07
16	17486--A16	07334074	11/30/07
17	17487--A17	07334075	11/30/07
18	17488--A18	07334076	11/30/07
19	17489--A19	07334077	11/30/07
20	17490--A20	07334078	11/30/07
21	17491--A21	07334079	11/30/07
22	17492--A22	07334111	11/30/07
23	17493--A23	07334112	11/30/07
24	17494--A24	07334053	11/30/07
25	17495--A25	07334054	11/30/07
26	17496--A26	07334113	11/30/07
27	17497--A27	07334114	11/30/07
28	17498--A28	07334055	11/30/07
29	17499--A29	07334056	11/30/07
30	17500--A30	07334057	11/30/07
31	17501--A31	07334120	11/30/07
32	17502--A32	07334080	11/30/07
33	17503--A33	07334081	11/30/07
34	17504--A34	07334082	11/30/07
35	17505--A35	07334083	11/30/07
36	17506--A36	07334084	11/30/07
37	17507--A37	07334085	11/30/07
38	17508--A38	07334086	11/30/07
39	17509--A39	07334087	11/30/07
40	17510--A40	07334088	11/30/07
41	17511--A41	07334089	11/30/07
42	17512--A42	07334090	11/30/07
43	17513--A43	07334091	11/30/07
44	17514--A44	07334092	11/30/07
45	17515--A45	07334093	11/30/07
46	17516--A46	07334116	11/30/07
47	17517--A47	07334058	11/30/07
48	17518--A48	07334059	11/30/07
49	17519--A49	07334094	11/30/07
50	17520--JC1	07334095	11/30/07
51	17521--JC3	07334060	11/30/07
52	17522--JC5	07334061	11/30/07
53	17523--JC1A	07334096	11/30/07
54	17524--JC3A	07334062	11/30/07
55	17525--JC5A	07334097	11/30/07
56	17526--JC1B	07334098	11/30/07
57	17527--JC3B	07334063	11/30/07
58	17528--JE1	07334099	11/30/07
59	17529--JE3	07334064	11/30/07
60	17530--JE5	07334100	11/30/07
61	17531--JE6	07334101	11/30/07
62	17532--JE7	07334065	11/30/07
63	17533--JH5	07334102	11/30/07
64	17534--JH4	07334103	11/30/07
65	17535--JE1A	07334104	11/30/07
66	17536--JE3A	07334066	11/30/07
67	17537--JE6A	07334105	11/30/07
68	17538--JE7A	07334106	11/30/07
69	17539--JE3B	07334107	11/30/07
70	17540--JH9	07334108	11/30/07
71	17541--JH10	07334109	11/30/07
72	17542--JH10A	07334110	11/30/07

ITW Building Components Group, Inc.

1950 Marley Drive Haines City, FL 33844
Florida Engineering Certificate of Authorization Number: 567
 Document ID:1TCW215-Z0230115044

Truss Fabricator: W.B. Howland
Job Identification: 5074-/DERKSEN RESIDENCE /ERIN JOHNSON CONSTRUCTION -- , **
Truss Count: 1
Model Code: IBC
Truss Criteria: IBC CODE
Engineering Software: Alpine Software,Version 7.38.
Structural Engineer of Record:
Address:
Minimum Design Loads: Roof - 40.0 PSF @ 1.25 Duration
Floor - N/A
Wind - 110 MPH ASCE 7-02 -Closed

Seal Date: 11/30/2007

-Truss Design Engineer-
James F. Collins Jr.
Florida License Number: 52212
1950 Marley Drive
Haines City, FL 33844

Notes:

1. Determination as to the suitability of these truss components for the structure is the responsibility of the building designer/engineer of record, as defined in ANSI/TPI 1
2. The drawing date shown on this index sheet must match the date shown on the individual truss component drawing.
3. As shown on attached drawings; the drawing number is preceded by: HCUSR215

Revised Trusses

#	Ref	Description	Drawing#	Date
1	17526--JC1B		07334098	11/30/07

Top chord 2x4 SP #2 N
Bot chord 2x4 SP #2 N
Webs 2x4 SP #2 N

End verticals not exposed to wind pressure.

Deflection meets L/240 live and L/180 total load.

110 mph wind, 15.00 ft mean hgt, ASCE 7-02, CLOSED bldg, not located within 4.50 ft from roof edge, CAT II, EXP B, wind TC DL=5.0 psf, wind BC DL=5.0 psf.

Wind reactions based on MWFRS pressures.

The overall height of this truss excluding overhang is 3-10-8.

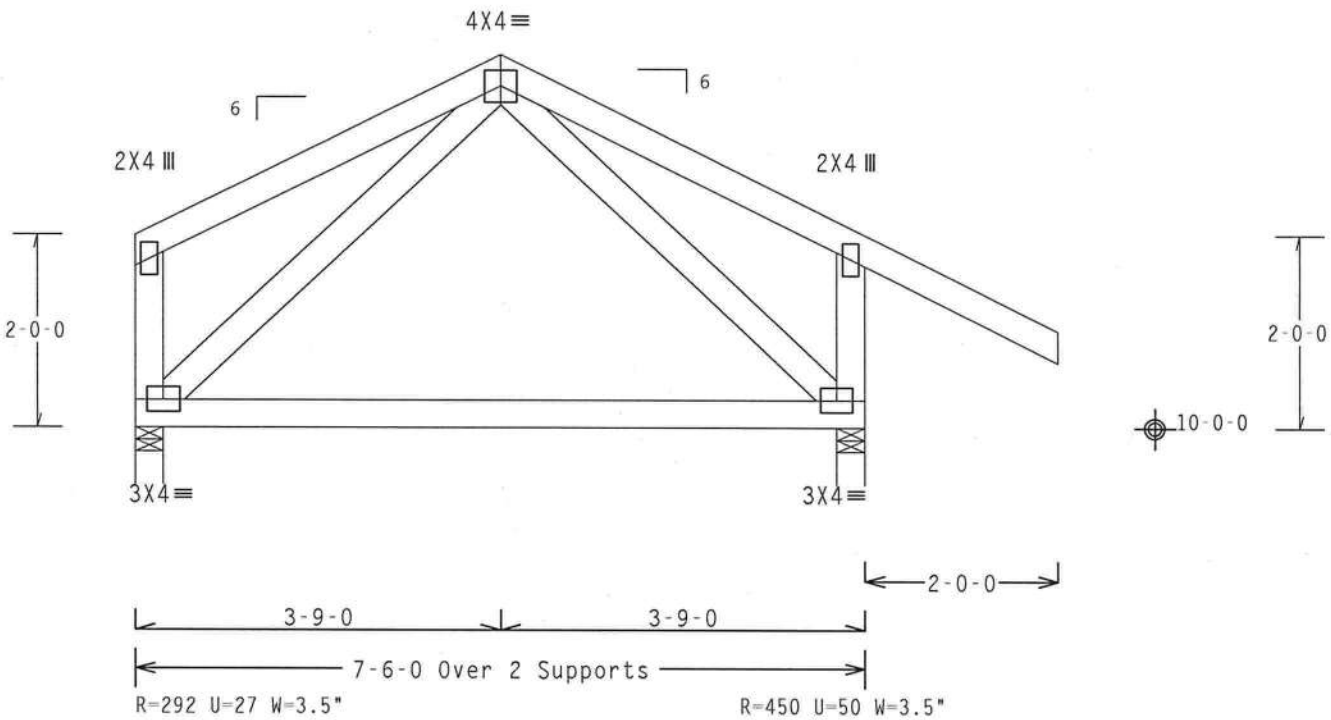

Design Crit: IBC CODE

PLT TYP. Wave Cq/RT=1.00(1.25)/10(0) 7.38.0810 QTY:1 FL/-/5/-/-/R/- Scale =.5"/Ft.

ALPINE

ITW Building Components Group, Inc.
Haines City, FL 33844
FL Certificate of Authorization # 0 278

WARNING TRUSSES REQUIRE EXTREME CARE IN FABRICATION, HANDLING, SHIPPING, INSTALLING AND BRACING. REFER TO BCSI (BUILDING COMPONENT SAFETY INFORMATION), PUBLISHED BY TPI (TRUSS PLATE INSTITUTE, 218 NORTH LEE STREET, SUITE 312, ALEXANDRIA, VA, 22314) AND WTCA (WOOD TRUSS COUNCIL OF AMERICA, 6300 ENTERPRISE LANE, MADISON, WI 53719) FOR SAFETY PRACTICES PRIOR TO PERFORMING THESE FUNCTIONS. UNLESS OTHERWISE INDICATED TOP CHORD SHALL HAVE PROPERLY ATTACHED STRUCTURAL PANELS AND BOTTOM CHORD SHALL HAVE A PROPERLY ATTACHED RIGID CEILING.

IMPORTANTFURNISH A COPY OF THIS DESIGN TO THE INSTALLATION CONTRACTOR. ITW BCG, INC. SHALL NOT BE RESPONSIBLE FOR ANY DEVIATION FROM THIS DESIGN; ANY FAILURE TO BUILD THE TRUSS IN COMFORMANCE WITH TPI; OR FABRICATING, HANDLING, SHIPPING, INSTALLING & BRACING OF TRUSSES.
DESIGN CONFORMS WITH APPLICABLE PROVISIONS OF NDS (NATIONAL DESIGN SPEC. BY AF&PA) AND TPI. ITW BCG CONNECTOR PLATES ARE MADE OF 20/18/16GA (W,H/SS/K) ASTM A653 GRADE 40/60 (W, K/H,SS) GALV. STEEL. APPLY PLATES TO EACH FACE OF TRUSS AND, UNLESS OTHERWISE LOCATED ON THIS DESIGN, POSITION PER DRAWINGS 160A-Z. ANY INSPECTION OF PLATES FOLLOWED BY (1) SHALL BE PER ANNEX A3 OF TPI1-2002 SEC.3. A SEAL ON THIS DRAWING INDICATES ACCEPTANCE OF PROFESSIONAL ENGINEERING RESPONSIBILITY SOLELY FOR THE TRUSS COMPONENT DESIGN SHOWN. THE SUITABILITY AND USE OF THIS COMPONENT FOR ANY BUILDING IS THE RESPONSIBILITY OF THE BUILDING DESIGNER PER ANSI/TPI 1 SEC. 2.

JAMES F. COLLINS JR. LICENSE No. 52212 STATE OF FLORIDA PROFESSIONAL ENGINEER
Nov 30 07

TC LL	20.0 PSF	REF	R215-- 17471
TC DL	10.0 PSF	DATE	11/30/07
BC DL	10.0 PSF	DRW	HCUSR215 07334050
BC LL	0.0 PSF	HC-ENG	RA/WHK *
TOT.LD.	40.0 PSF	SEQN-	90129
DUR.FAC.	1.25	FROM	LRB
SPACING	24.0"	JREF-	1TCW215_Z02

Top chord 2x4 SP #2 N
Bot chord 2x4 SP #2 N
Webs 2x4 SP #2 N

End verticals not exposed to wind pressure.

Deflection meets L/240 live and L/180 total load.

110 mph wind, 15.00 ft mean hgt, ASCE 7-02, CLOSED bldg, not located within 4.50 ft from roof edge, CAT II, EXP B, wind TC DL=5.0 psf, wind BC DL=5.0 psf.

Wind reactions based on MWFRS pressures.

The overall height of this truss excluding overhang is 3-10-8.

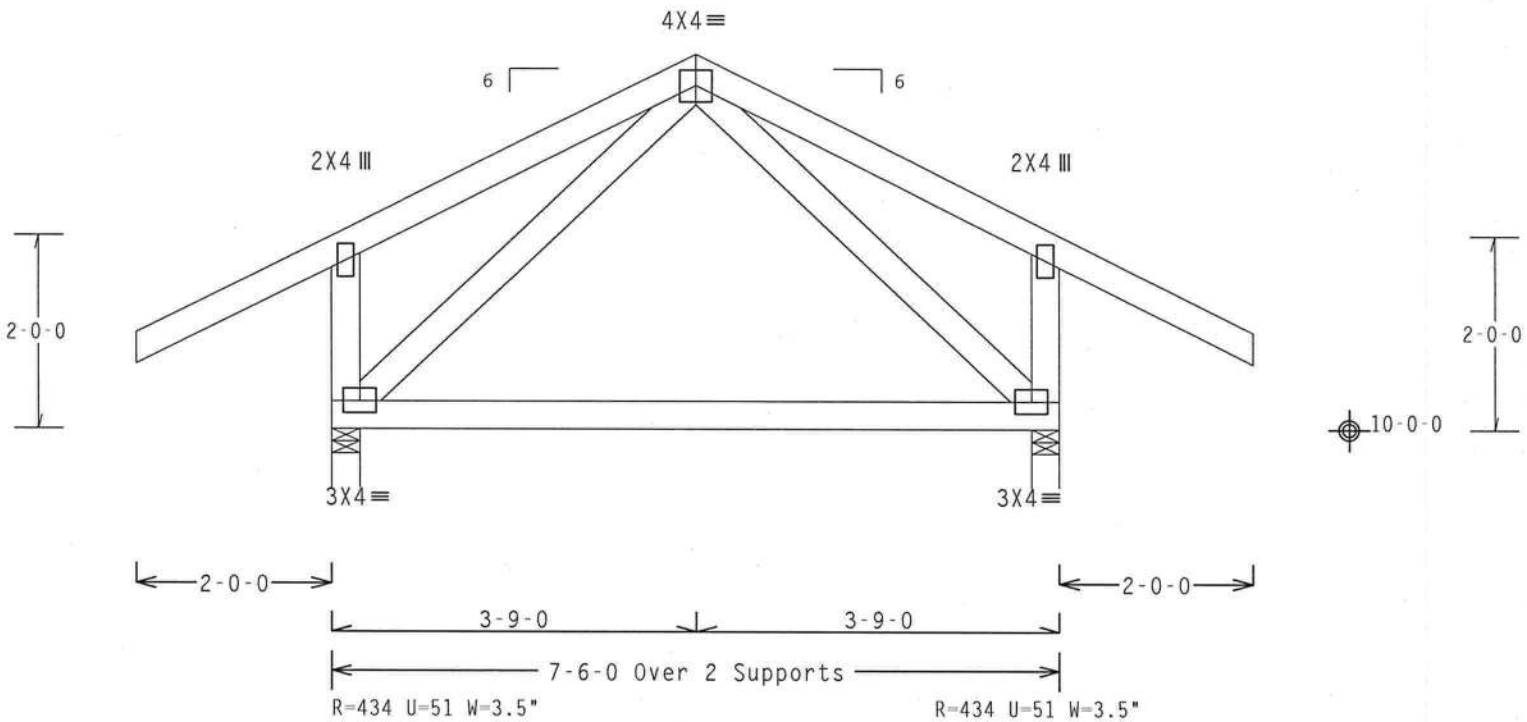

Design Crit: IBC CODE

PLT TYP. Wave Cq/RT=1.00(1.25)/10(0) 7.38.0810 00 QTY:1 FL/-/5/-/-/R/- Scale =.5"/Ft.

ALPINE

ITW Building Components Group, Inc.
Haines City, FL 33844
FL Certificate of Authorization # 0 278

WARNING TRUSSES REQUIRE EXTREME CARE IN FABRICATION, HANDLING, SHIPPING, INSTALLING AND BRACING. REFER TO BCSI (BUILDING COMPONENT SAFETY INFORMATION), PUBLISHED BY TPI (TRUSS PLATE INSTITUTE, 218 NORTH LEE STREET, SUITE 312, ALEXANDRIA, VA, 22314) AND WTCA (WOOD TRUSS COUNCIL OF AMERICA, 6300 ENTERPRISE LANE, MADISON, WI 53719) FOR SAFETY PRACTICES PRIOR TO PERFORMING THESE FUNCTIONS. UNLESS OTHERWISE INDICATED TOP CHORD SHALL HAVE PROPERLY ATTACHED STRUCTURAL PANELS AND BOTTOM CHORD SHALL HAVE A PROPERLY ATTACHED RIGID CEILING.

IMPORTANTFURNISH A COPY OF THIS DESIGN TO THE INSTALLATION CONTRACTOR. ITW BCG, INC. SHALL NOT BE RESPONSIBLE FOR ANY DEVIATION FROM THIS DESIGN; ANY FAILURE TO BUILD THE TRUSS IN COMFORMANCE WITH TPI; OR FABRICATING, HANDLING, SHIPPING, INSTALLING & BRACING OF TRUSSES.
DESIGN CONFORMS WITH APPLICABLE PROVISIONS OF NDS (NATIONAL DESIGN SPEC. BY AF&PA) AND TPI. ITW BCG CONNECTOR PLATES ARE MADE OF 20/18/16GA (W,H/SS/K) ASTM A653 GRADE 40/60 (W. K/H,SS) GALV. STEEL. APPLY PLATES TO EACH FACE OF TRUSS AND, UNLESS OTHERWISE LOCATED ON THIS DESIGN, POSITION PER DRAWINGS 160A-2. ANY INSPECTION OF PLATES FOLLOWED BY (1) SHALL BE PER ANNEX A3 OF TPI1-2002 SEC.3. A SEAL ON THIS DRAWING INDICATES ACCEPTANCE OF PROFESSIONAL ENGINEERING RESPONSIBILITY SOLELY FOR THE TRUSS COMPONENT DESIGN SHOWN. THE SUITABILITY AND USE OF THIS COMPONENT FOR ANY BUILDING IS THE RESPONSIBILITY OF THE BUILDING DESIGNER PER ANSI/TPI 1 SEC. 2.

JAMES F. COLLINS JR. LICENSE No. 52212 STATE OF FLORIDA PROFESSIONAL ENGINEER
Nov 30, 2007

TC LL	20.0 PSF	REF R215-- 17472
TC DL	10.0 PSF	DATE 11/30/07
BC DL	10.0 PSF	DRW HCUSR215 07334051
BC LL	0.0 PSF	HC-ENG RA/WHK *
TOT.LD.	40.0 PSF	SEQN- 90127
DUR.FAC.	1.25	FROM LRB
SPACING	24.0"	JREF- 1TCW215_Z02

Top chord 2x4 SP #2 N
Bot chord 2x6 SP #2 N
Webs 2x4 SP #2 N

110 mph wind, 15.00 ft mean hgt, ASCE 7-02, CLOSED bldg, not located within 4.50 ft from roof edge, CAT II, EXP B, wind TC DL=5.0 psf, wind BC DL=5.0 psf.

Wind reactions based on MWFRS pressures.

Deflection meets L/240 live and L/180 total load.

SPECIAL LOADS
------(LUMBER DUR.FAC.=1.25 / PLATE DUR.FAC.=1.25)
TC - From 62 PLF at -2.00 to 62 PLF at 3.50
TC - From 62 PLF at 4.00 to 62 PLF at 9.50
BC - From 20 PLF at 0.00 to 20 PLF at 7.50
TC - 163 LB Conc. Load at 3.50, 4.00
BC - 189 LB Conc. Load at 3.50, 4.00

End verticals not exposed to wind pressure.

The overall height of this truss excluding overhang is 3-9-0.

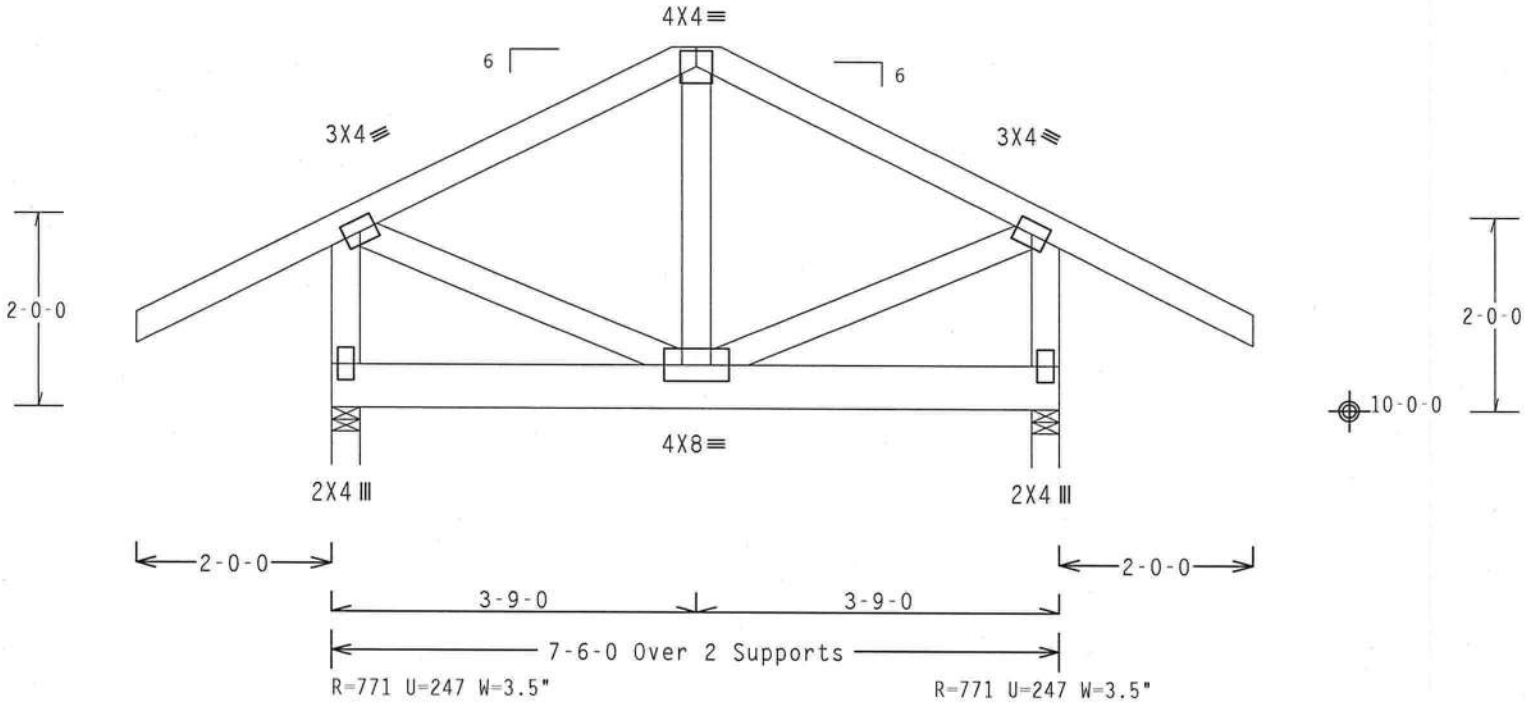

Design Crit: IBC CODE

PLT TYP. Wave Cq/RT=1.00(1.25)/10(0) 7.38.0810.0 QTY:1 FL/-/5/-/-/R/- Scale =.5"/Ft.

ALPINE
ITW Building Components Group, Inc.
Haines City, FL 33844
FL Certificate of Authorization # 0 278

WARNING TRUSSES REQUIRE EXTREME CARE IN FABRICATION, HANDLING, SHIPPING, INSTALLING AND BRACING. REFER TO BCSI (BUILDING COMPONENT SAFETY INFORMATION), PUBLISHED BY TPI (TRUSS PLATE INSTITUTE, 218 NORTH LEE STREET, SUITE 312, ALEXANDRIA, VA, 22314) AND WTCA (WOOD TRUSS COUNCIL OF AMERICA, 6300 ENTERPRISE LANE, MADISON, WI 53719) FOR SAFETY PRACTICES PRIOR TO PERFORMING THESE FUNCTIONS. UNLESS OTHERWISE INDICATED TOP CHORD SHALL HAVE PROPERLY ATTACHED STRUCTURAL PANELS AND BOTTOM CHORD SHALL HAVE A PROPERLY ATTACHED RIGID CEILING.

IMPORTANTFURNISH A COPY OF THIS DESIGN TO THE INSTALLATION CONTRACTOR. ITW BCG, INC. SHALL NOT BE RESPONSIBLE FOR ANY DEVIATION FROM THIS DESIGN; ANY FAILURE TO BUILD THE TRUSS IN COMFORMANCE WITH TPI; OR FABRICATING, HANDLING, SHIPPING, INSTALLING & BRACING OF TRUSSES.
DESIGN CONFORMS WITH APPLICABLE PROVISIONS OF NDS (NATIONAL DESIGN SPEC. BY AF&PA) AND TPI. ITW BCG CONNECTOR PLATES ARE MADE OF 20/18/16GA (W,H/SS/K) ASTM A653 GRADE 40/60 (W, K/H,SS) GALV. STEEL. APPLY PLATES TO EACH FACE OF TRUSS AND, UNLESS OTHERWISE LOCATED ON THIS DESIGN, POSITION PER DRAWINGS 160A-Z. ANY INSPECTION OF PLATES FOLLOWED BY (1) SHALL BE PER ANNEX A3 OF TPI1-2002 SEC.3. A SEAL ON THIS DRAWING INDICATES ACCEPTANCE OF PROFESSIONAL ENGINEERING RESPONSIBILITY SOLELY FOR THE TRUSS COMPONENT DESIGN SHOWN. THE SUITABILITY AND USE OF THIS COMPONENT FOR ANY BUILDING IS THE RESPONSIBILITY OF THE BUILDING DESIGNER PER ANSI/TPI 1 SEC. 2.

JAMES F. COLLINS, JR. LICENSE No. 32212 STATE OF FLORIDA PROFESSIONAL ENGINEER
Nov 30 07

TC LL	20.0 PSF	REF	R215-- 17473
TC DL	10.0 PSF	DATE	11/30/07
BC DL	10.0 PSF	DRW	HCUSR215 07334067
BC LL	0.0 PSF	HC-ENG	RA/WHK
TOT.LD.	40.0 PSF	SEQN-	90385
DUR.FAC.	1.25	FROM	LRB
SPACING	24.0"	JREF-	1TCW215_Z02

Top chord 2x4 SP #2 N :T2 2x6 SP #2 N:
Bot chord 2x6 SP SS
Webs 2x4 SP #2 N
:Lt Wedge 2x4 SP #2 N::Rt Wedge 2x6 SP #2 N:

SPECIAL LOADS
------(LUMBER DUR.FAC.=1.25 / PLATE DUR.FAC.=1.25)
TC - From 62 PLF at -2.00 to 62 PLF at 7.58
TC - From 62 PLF at 7.58 to 62 PLF at 18.08
TC - From 62 PLF at 18.08 to 62 PLF at 27.67
BC - From 20 PLF at 0.00 to 20 PLF at 25.67
BC - 3057 LB Conc. Load at 7.06
BC - 1121 LB Conc. Load at 9.06
BC - 1126 LB Conc. Load at 11.06, 13.06
BC - 1132 LB Conc. Load at 15.06, 17.06, 19.06, 21.06, 23.06
25.06

Wind reactions based on MWFRS pressures.

Deflection meets L/240 live and L/180 total load.

Truss not symmetrical and cannot be installed end for end. Mark for proper installation.

2 COMPLETE TRUSSES REQUIRED

Nailing Schedule: (10d_Box_or_Gun_(0.128"x3"_min.)_nails)
Top Chord: 1 Row @12.00" o.c.
Bot Chord: 2 Rows @ 6.00" o.c. (Each Row)
Webs : 1 Row @ 4" o.c.
Use equal spacing between rows and stagger nails in each row to avoid splitting.

Bearing blocks: Nail type: 10d_Box_or_Gun_(0.128"x3"_min.)_nails

BRG	X-LOC	#BLOCKS	LENGTH/BLK	#NAILS/BLK	WALL PLATE
1	0.000'	1	12"	7	Rigid Surface
2	25.375'	1	18"	24	Rigid Surface

Bearing block to be same size and species as bottom chord.
Refer to drawing CNBRGBLK0207 for additional information.

110 mph wind, 15.00 ft mean hgt, ASCE 7-02, CLOSED bldg, not located within 4.50 ft from roof edge, CAT II, EXP B, wind TC DL=5.0 psf, wind BC DL=5.0 psf.

The overall height of this truss excluding overhang is 4-1-11.

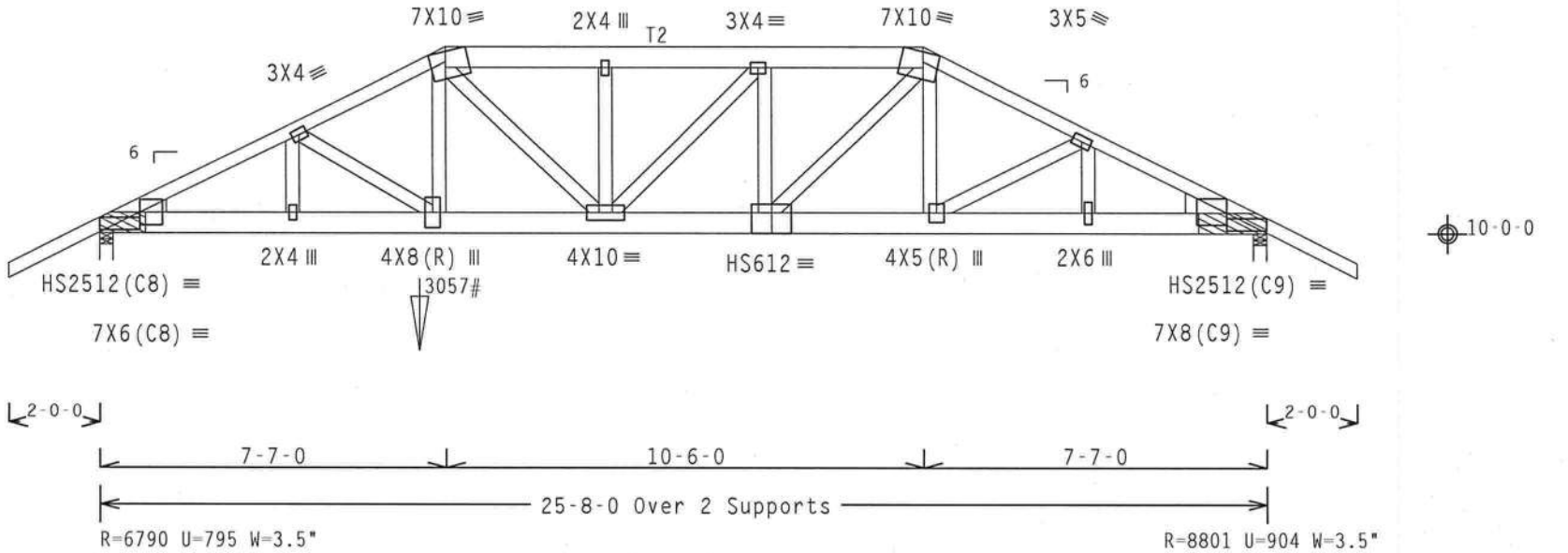

Design Crit: IBC CODE

PLT TYP. 20 Gauge HS,Wave Cq/RT=1.00(1.25)/10(0) 7.38.0810.02 QTY:1 FL/-/5/-/-/R/- Scale =.25"/Ft.

ALPINE
ITW Building Components Group, Inc.
Haines City, FL 33844
FL Certificate of Authorization # 0 278

WARNING TRUSSES REQUIRE EXTREME CARE IN FABRICATION, HANDLING, SHIPPING, INSTALLING AND BRACING. REFER TO BCSI (BUILDING COMPONENT SAFETY INFORMATION), PUBLISHED BY TPI (TRUSS PLATE INSTITUTE, 218 NORTH LEE STREET, SUITE 312, ALEXANDRIA, VA, 22314) AND WTCA (WOOD TRUSS COUNCIL OF AMERICA, 6300 ENTERPRISE LANE, MADISON, WI 53719) FOR SAFETY PRACTICES PRIOR TO PERFORMING THESE FUNCTIONS. UNLESS OTHERWISE INDICATED TOP CHORD SHALL HAVE PROPERLY ATTACHED STRUCTURAL PANELS AND BOTTOM CHORD SHALL HAVE A PROPERLY ATTACHED RIGID CEILING.

IMPORTANTFURNISH A COPY OF THIS DESIGN TO THE INSTALLATION CONTRACTOR. ITW BCG, INC. SHALL NOT BE RESPONSIBLE FOR ANY DEVIATION FROM THIS DESIGN; ANY FAILURE TO BUILD THE TRUSS IN COMFORMANCE WITH TPI; OR FABRICATING, HANDLING, SHIPPING, INSTALLING & BRACING OF TRUSSES.
DESIGN CONFORMS WITH APPLICABLE PROVISIONS OF NDS (NATIONAL DESIGN SPEC, BY AF&PA) AND TPI. ITW BCG CONNECTOR PLATES ARE MADE OF 20/18/16GA (W,H/SS/K) ASTM A653 GRADE 40/60 (W, K/H,SS) GALV. STEEL. APPLY PLATES TO EACH FACE OF TRUSS AND. UNLESS OTHERWISE LOCATED ON THIS DESIGN, POSITION PER DRAWINGS 160A-Z. ANY INSPECTION OF PLATES FOLLOWED BY (1) SHALL BE PER ANNEX A3 OF TPI1-2002 SEC.3. A SEAL ON THIS DRAWING INDICATES ACCEPTANCE OF PROFESSIONAL ENGINEERING RESPONSIBILITY SOLELY FOR THE TRUSS COMPONENT DESIGN SHOWN. THE SUITABILITY AND USE OF THIS COMPONENT FOR ANY BUILDING IS THE RESPONSIBILITY OF THE BUILDING DESIGNER PER ANSI/TPI 1 SEC. 2.

JAMES F. COLLINS, JR. LICENSE No. 62212 STATE OF FLORIDA PROFESSIONAL ENGINEER
Nov

TC LL	20.0 PSF	REF R215-- 17474
TC DL	10.0 PSF	DATE 11/30/07
BC DL	10.0 PSF	DRW HCUSR215 07334121
BC LL	0.0 PSF	HC-ENG RA/WHK
TOT.LD.	40.0 PSF	SEQN- 90496
DUR.FAC.	1.25	FROM LRB
SPACING	24.0"	JREF- 1TCW215_Z02

Top chord 2x4 SP #2 N :T2 2x6 SP #2 N:
Bot chord 2x6 SP #2 N
Webs 2x4 SP #2 N

110 mph wind, 15.00 ft mean hgt, ASCE 7-02, CLOSED bldg, not located within 4.50 ft from roof edge, CAT II, EXP B, wind TC DL=5.0 psf, wind BC DL=5.0 psf.

Wind reactions based on MWFRS pressures.

The overall height of this truss excluding overhang is 3-5-11.

SPECIAL LOADS
------(LUMBER DUR.FAC.=1.25 / PLATE DUR.FAC.=1.25)

TC - From	62 PLF	at -2.00	to	62 PLF	at 6.25
TC - From	62 PLF	at 6.25	to	62 PLF	at 19.42
TC - From	62 PLF	at 19.42	to	62 PLF	at 27.67
BC - From	20 PLF	at 0.00	to	20 PLF	at 25.67

TC - 160 LB Conc. Load at 6.31, 19.35
BC - 686 LB Conc. Load at 6.25, 19.42

Deflection meets L/240 live and L/180 total load.

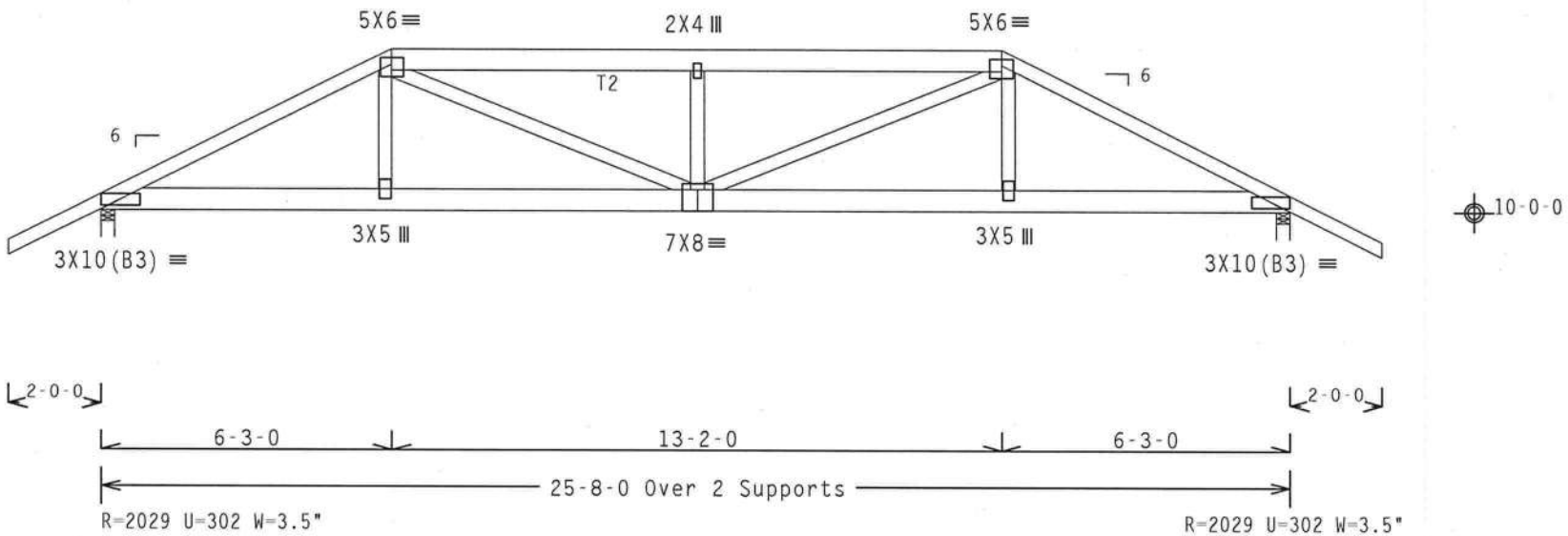

Design Crit: IBC CODE

PLT TYP. Wave Cq/RT=1.00(1.25)/10(0) 7.38.0810.0 QTY:1 FL/-/5/-/-/R/- Scale =.25"/Ft.

ALPINE
ITW Building Components Group, Inc.
Haines City, FL 33844
FL Certificate of Authorization # 0 278

WARNING TRUSSES REQUIRE EXTREME CARE IN FABRICATION, HANDLING, SHIPPING, INSTALLING AND BRACING. REFER TO BCSI (BUILDING COMPONENT SAFETY INFORMATION), PUBLISHED BY TPI (TRUSS PLATE INSTITUTE, 218 NORTH LEE STREET, SUITE 312, ALEXANDRIA, VA, 22314) AND WTCA (WOOD TRUSS COUNCIL OF AMERICA, 6300 ENTERPRISE LANE, MADISON, WI 53719) FOR SAFETY PRACTICES PRIOR TO PERFORMING THESE FUNCTIONS. UNLESS OTHERWISE INDICATED TOP CHORD SHALL HAVE PROPERLY ATTACHED STRUCTURAL PANELS AND BOTTOM CHORD SHALL HAVE A PROPERLY ATTACHED RIGID CEILING.

IMPORTANTFURNISH A COPY OF THIS DESIGN TO THE INSTALLATION CONTRACTOR. ITW BCG, INC. SHALL NOT BE RESPONSIBLE FOR ANY DEVIATION FROM THIS DESIGN; ANY FAILURE TO BUILD THE TRUSS IN COMFORMANCE WITH TPI; OR FABRICATING, HANDLING, SHIPPING, INSTALLING & BRACING OF TRUSSES.
DESIGN CONFORMS WITH APPLICABLE PROVISIONS OF NDS (NATIONAL DESIGN SPEC. BY AF&PA) AND TPI. ITW BCG CONNECTOR PLATES ARE MADE OF 20/18/16GA (W,H/SS/K) ASTM A653 GRADE 40/60 (W, K/H,SS) GALV. STEEL. APPLY PLATES TO EACH FACE OF TRUSS AND, UNLESS OTHERWISE LOCATED ON THIS DESIGN, POSITION PER DRAWINGS 160A-Z. ANY INSPECTION OF PLATES FOLLOWED BY (1) SHALL BE PER ANNEX A3 OF TPI1-2002 SEC.3. A SEAL ON THIS DRAWING INDICATES ACCEPTANCE OF PROFESSIONAL ENGINEERING RESPONSIBILITY SOLELY FOR THE TRUSS COMPONENT DESIGN SHOWN. THE SUITABILITY AND USE OF THIS COMPONENT FOR ANY BUILDING IS THE RESPONSIBILITY OF THE BUILDING DESIGNER PER ANSI/TPI 1 SEC. 2.

JAMES F. COLLINS, JR. LICENSE No. 52212 STATE OF FLORIDA PROFESSIONAL ENGINEER
Nov 30 07

TC LL	20.0 PSF	REF R215-- 17475
TC DL	10.0 PSF	DATE 11/30/07
BC DL	10.0 PSF	DRW HCUSR215 07334117
BC LL	0.0 PSF	HC-ENG RA/WHK
TOT.LD.	40.0 PSF	SEQN- 90295
DUR.FAC.	1.25	FROM LRB
SPACING	24.0"	JREF- 1TCW215_Z02

Top chord 2x4 SP #2 N :T2 2x6 SP #2 N:
Bot chord 2x6 SP #2 N
Webs 2x4 SP #2 N

110 mph wind, 15.00 ft mean hgt, ASCE 7-02, CLOSED bldg, not located within 4.50 ft from roof edge, CAT II, EXP B, wind TC DL=5.0 psf, wind BC DL=5.0 psf.

Wind reactions based on MWFRS pressures.

Deflection meets L/240 live and L/180 total load.

SPECIAL LOADS
------(LUMBER DUR.FAC.=1.25 / PLATE DUR.FAC.=1.25)

TC - From	62 PLF at	-2.00 to	62 PLF at	2.54	
TC - From	62 PLF at	2.54 to	62 PLF at	10.13	
TC - From	62 PLF at	10.13 to	62 PLF at	14.67	
BC - From	20 PLF at	0.00 to	20 PLF at	12.67	
TC -	-64 LB Conc. Load at	2.54, 10.13			
TC -	18 LB Conc. Load at	2.60, 4.60, 6.33, 8.06, 10.06			
BC -	110 LB Conc. Load at	2.54, 10.13			
BC -	37 LB Conc. Load at	4.60, 6.33, 8.06			

The overall height of this truss excluding overhang is 2-9-4.

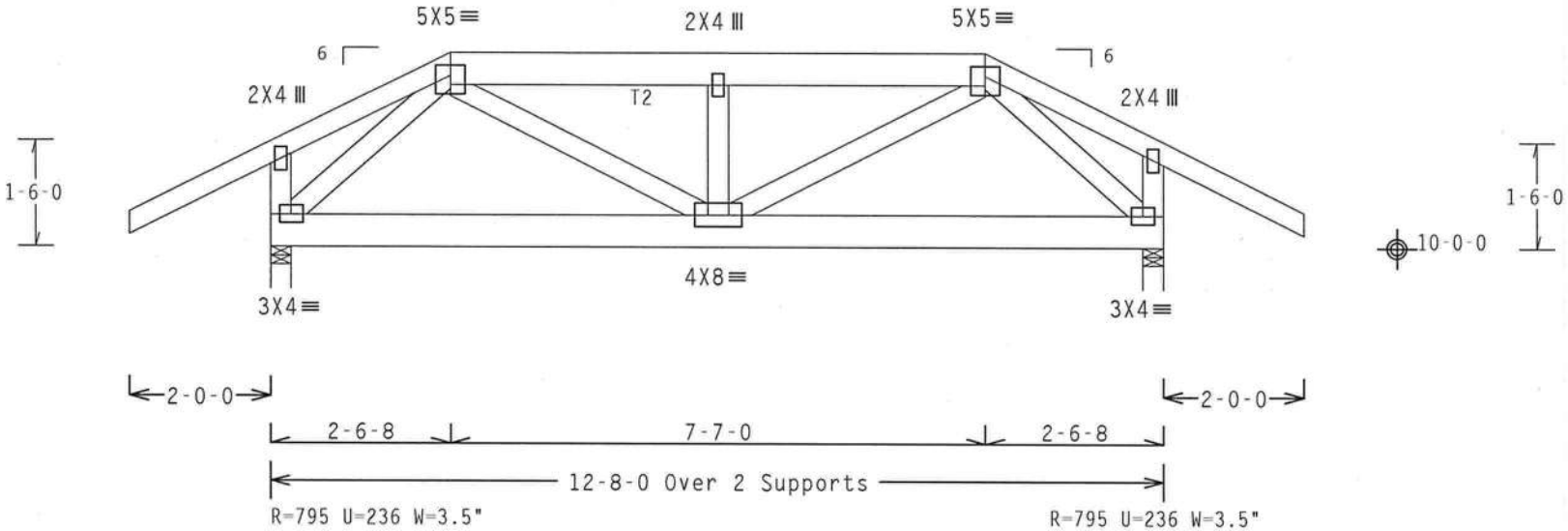

Design Crit: IBC CODE

PLT TYP. Wave Cq/RT=1.00(1.25)/10(0) 7.38.0810.02 QTY:1 FL/-/5/-/-/R/- Scale =.375"/Ft.

ALPINE
ITW Building Components Group, Inc.
Haines City, FL 33844
FL Certificate of Authorization # 0 278

WARNING TRUSSES REQUIRE EXTREME CARE IN FABRICATION, HANDLING, SHIPPING, INSTALLING AND BRACING. REFER TO BCSI (BUILDING COMPONENT SAFETY INFORMATION), PUBLISHED BY TPI (TRUSS PLATE INSTITUTE, 218 NORTH LEE STREET, SUITE 312, ALEXANDRIA, VA, 22314) AND WTCA (WOOD TRUSS COUNCIL OF AMERICA, 6300 ENTERPRISE LANE, MADISON, WI 53719) FOR SAFETY PRACTICES PRIOR TO PERFORMING THESE FUNCTIONS. UNLESS OTHERWISE INDICATED TOP CHORD SHALL HAVE PROPERLY ATTACHED STRUCTURAL PANELS AND BOTTOM CHORD SHALL HAVE A PROPERLY ATTACHED RIGID CEILING.

IMPORTANTFURNISH A COPY OF THIS DESIGN TO THE INSTALLATION CONTRACTOR. ITW BCG, INC. SHALL NOT BE RESPONSIBLE FOR ANY DEVIATION FROM THIS DESIGN; ANY FAILURE TO BUILD THE TRUSS IN COMFORMANCE WITH TPI; OR FABRICATING, HANDLING, SHIPPING, INSTALLING & BRACING OF TRUSSES. DESIGN CONFORMS WITH APPLICABLE PROVISIONS OF NDS (NATIONAL DESIGN SPEC. BY AF&PA) AND TPI. ITW BCG CONNECTOR PLATES ARE MADE OF 20/18/16GA (W,H/SS/K) ASTM A653 GRADE 40/60 (W, K/H,SS) GALV. STEEL. APPLY PLATES TO EACH FACE OF TRUSS AND, UNLESS OTHERWISE LOCATED ON THIS DESIGN, POSITION PER DRAWINGS 160A-Z. ANY INSPECTION OF PLATES FOLLOWED BY (1) SHALL BE PER ANNEX A3 OF TPI1-2002 SEC.3. A SEAL ON THIS DRAWING INDICATES ACCEPTANCE OF PROFESSIONAL ENGINEERING RESPONSIBILITY SOLELY FOR THE TRUSS COMPONENT DESIGN SHOWN. THE SUITABILITY AND USE OF THIS COMPONENT FOR ANY BUILDING IS THE RESPONSIBILITY OF THE BUILDING DESIGNER PER ANSI/TPI 1 SEC. 2.

JAMES F. COLLINS, JR. LICENSE No. 52212 STATE OF FLORIDA PROFESSIONAL ENGINEER
Nov

TC LL	20.0 PSF	REF R215-- 17476
TC DL	10.0 PSF	DATE 11/30/07
BC DL	10.0 PSF	DRW HCUSR215 07334118
BC LL	0.0 PSF	HC-ENG RA/WHK
TOT.LD.	40.0 PSF	SEQN- 90290
DUR.FAC.	1.25	FROM LRB
SPACING	24.0"	JREF- 1TCW215_Z02

Top chord 2x4 SP #2 N
Bot chord 2x4 SP #2 N
Webs 2x4 SP #2 N

Deflection meets L/240 live and L/180 total load.

The overall height of this truss excluding overhang is 4-8-0.

110 mph wind, 15.00 ft mean hgt, ASCE 7-02, CLOSED bldg, not located within 4.50 ft from roof edge, CAT II, EXP B, wind TC DL=5.0 psf, wind BC DL=5.0 psf.

Wind reactions based on MWFRS pressures.

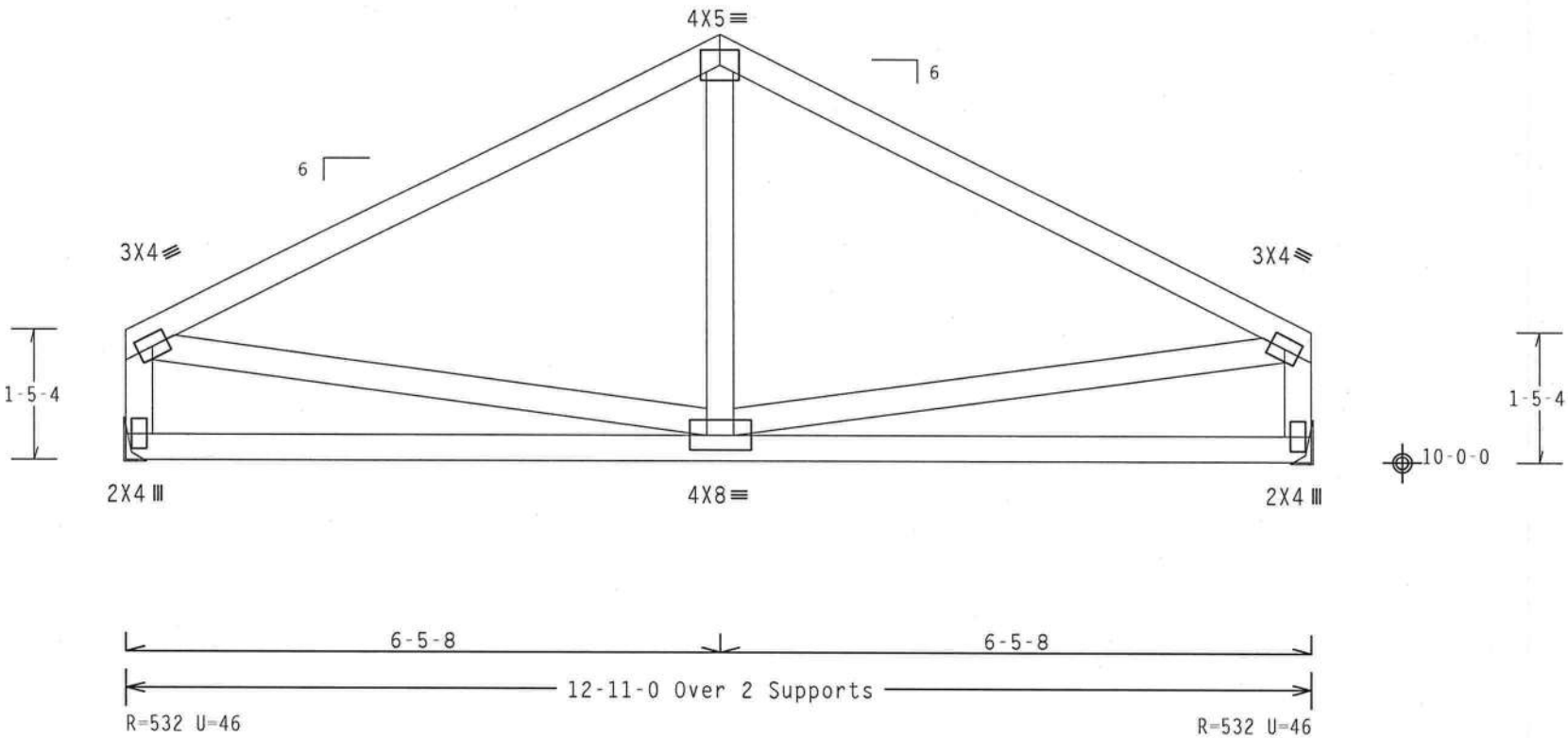

Design Crit: IBC CODE

PLT TYP. Wave Cq/RT=1.00(1.25)/10(0) 7.38.0810.03 QTY:1 FL/-/5/-/-/R/- Scale =.5"/Ft.

ALPINE
ITW Building Components Group, Inc.
Haines City, FL 33844
FL Certificate of Authorization # 0 278

WARNING TRUSSES REQUIRE EXTREME CARE IN FABRICATION, HANDLING, SHIPPING, INSTALLING AND BRACING. REFER TO BCSI (BUILDING COMPONENT SAFETY INFORMATION), PUBLISHED BY TPI (TRUSS PLATE INSTITUTE, 218 NORTH LEE STREET, SUITE 312, ALEXANDRIA, VA, 22314) AND WTCA (WOOD TRUSS COUNCIL OF AMERICA, 6300 ENTERPRISE LANE, MADISON, WI 53719) FOR SAFETY PRACTICES PRIOR TO PERFORMING THESE FUNCTIONS. UNLESS OTHERWISE INDICATED TOP CHORD SHALL HAVE PROPERLY ATTACHED STRUCTURAL PANELS AND BOTTOM CHORD SHALL HAVE A PROPERLY ATTACHED RIGID CEILING.

IMPORTANT FURNISH A COPY OF THIS DESIGN TO THE INSTALLATION CONTRACTOR. ITW BCG, INC. SHALL NOT BE RESPONSIBLE FOR ANY DEVIATION FROM THIS DESIGN; ANY FAILURE TO BUILD THE TRUSS IN CONFORMANCE WITH TPI; OR FABRICATING, HANDLING, SHIPPING, INSTALLING & BRACING OF TRUSSES. DESIGN CONFORMS WITH APPLICABLE PROVISIONS OF NDS (NATIONAL DESIGN SPEC, BY AF&PA) AND TPI. ITW BCG CONNECTOR PLATES ARE MADE OF 20/18/16GA (W,H/SS/K) ASTM A653 GRADE 40/60 (W, K/H,SS) GALV. STEEL. APPLY PLATES TO EACH FACE OF TRUSS AND, UNLESS OTHERWISE LOCATED ON THIS DESIGN, POSITION PER DRAWINGS 160A-Z. ANY INSPECTION OF PLATES FOLLOWED BY (1) SHALL BE PER ANNEX A3 OF TPI1-2002 SEC.3. A SEAL ON THIS DRAWING INDICATES ACCEPTANCE OF PROFESSIONAL ENGINEERING RESPONSIBILITY SOLELY FOR THE TRUSS COMPONENT DESIGN SHOWN. THE SUITABILITY AND USE OF THIS COMPONENT FOR ANY BUILDING IS THE RESPONSIBILITY OF THE BUILDING DESIGNER PER ANSI/TPI 1 SEC. 2.

JAMES F. COLLINS JR. LICENSE No. 52210 STATE OF FLORIDA PROFESSIONAL ENGINEER
Nov 30, 2007

TC LL	20.0 PSF	REF	R215-- 17477
TC DL	10.0 PSF	DATE	11/30/07
BC DL	10.0 PSF	DRW	HCUSR215 07334068
BC LL	0.0 PSF	HC-ENG	RA/WHK
TOT.LD.	40.0 PSF	SEQN-	90541
DUR.FAC.	1.25	FROM	LRB
SPACING	24.0"	JREF-	1TCW215_Z02

Top chord 2x4 SP #2 N
Bot chord 2x4 SP #2 N
Webs 2x4 SP #2 N

Deflection meets L/240 live and L/180 total load.

The overall height of this truss excluding overhang is 3-11-8.

110 mph wind, 15.00 ft mean hgt, ASCE 7-02, CLOSED bldg, not located within 4.50 ft from roof edge, CAT II, EXP B, wind TC DL=5.0 psf, wind BC DL=5.0 psf.

Wind reactions based on MWFRS pressures.

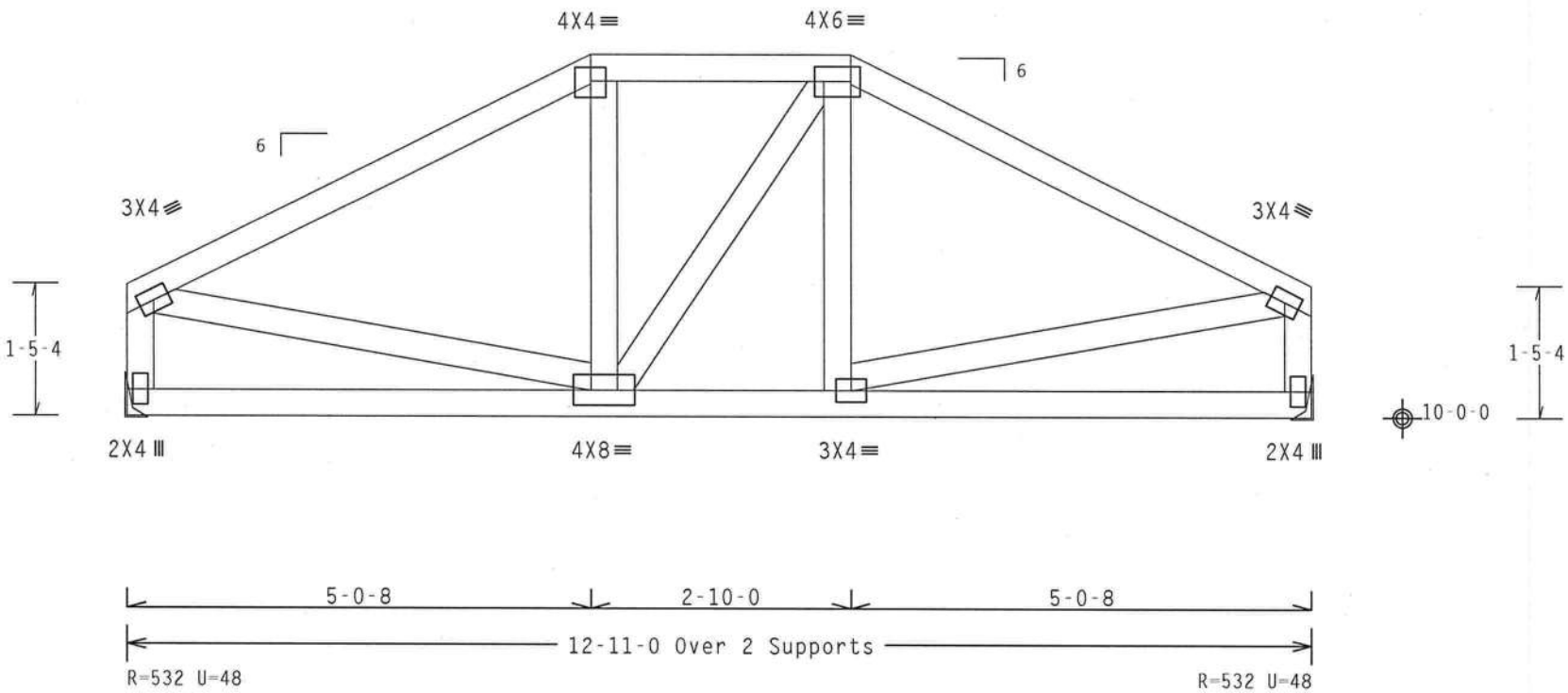

Design Crit: IBC CODE

PLT TYP. Wave Cq/RT=1.00(1.25)/10(0) 7.38.0810.02 QTY:1 FL/-/5/-/-/R/- Scale =.5"/Ft.

ALPINE

ITW Building Components Group, Inc.
Haines City, FL 33844
FL Certificate of Authorization # 0 278

WARNING TRUSSES REQUIRE EXTREME CARE IN FABRICATION, HANDLING, SHIPPING, INSTALLING AND BRACING. REFER TO BCSI (BUILDING COMPONENT SAFETY INFORMATION), PUBLISHED BY TPI (TRUSS PLATE INSTITUTE, 218 NORTH LEE STREET, SUITE 312, ALEXANDRIA, VA, 22314) AND WTCA (WOOD TRUSS COUNCIL OF AMERICA, 6300 ENTERPRISE LANE, MADISON, WI 53719) FOR SAFETY PRACTICES PRIOR TO PERFORMING THESE FUNCTIONS. UNLESS OTHERWISE INDICATED TOP CHORD SHALL HAVE PROPERLY ATTACHED STRUCTURAL PANELS AND BOTTOM CHORD SHALL HAVE A PROPERLY ATTACHED RIGID CEILING.

IMPORTANTFURNISH A COPY OF THIS DESIGN TO THE INSTALLATION CONTRACTOR. ITW BCG, INC. SHALL NOT BE RESPONSIBLE FOR ANY DEVIATION FROM THIS DESIGN; ANY FAILURE TO BUILD THE TRUSS IN COMFORMANCE WITH TPI; OR FABRICATING, HANDLING, SHIPPING, INSTALLING & BRACING OF TRUSSES.
DESIGN CONFORMS WITH APPLICABLE PROVISIONS OF NDS (NATIONAL DESIGN SPEC. BY AF&PA) AND TPI. ITW BCG CONNECTOR PLATES ARE MADE OF 20/18/16GA (W,H/SS/K) ASTM A653 GRADE 40/60 (W, K/H,SS) GALV. STEEL. APPLY PLATES TO EACH FACE OF TRUSS AND, UNLESS OTHERWISE LOCATED ON THIS DESIGN, POSITION PER DRAWINGS 160A-Z. ANY INSPECTION OF PLATES FOLLOWED BY (1) SHALL BE PER ANNEX A3 OF TPI1-2002 SEC.3. A SEAL ON THIS DRAWING INDICATES ACCEPTANCE OF PROFESSIONAL ENGINEERING RESPONSIBILITY SOLELY FOR THE TRUSS COMPONENT DESIGN SHOWN. THE SUITABILITY AND USE OF THIS COMPONENT FOR ANY BUILDING IS THE RESPONSIBILITY OF THE BUILDING DESIGNER PER ANSI/TPI 1 SEC. 2.

JAMES F. COLLINS JR. LICENSE No 52212 STATE OF FLORIDA PROFESSIONAL ENGINEER
Nov 30, 2007

TC LL	20.0 PSF	REF R215-- 17478
TC DL	10.0 PSF	DATE 11/30/07
BC DL	10.0 PSF	DRW HCUSR215 07334069
BC LL	0.0 PSF	HC-ENG RA/WHK
TOT.LD.	40.0 PSF	SEQN- 90548
DUR.FAC.	1.25	FROM LRB
SPACING	24.0"	JREF- 1TCW215_Z02

Top chord 2x4 SP #2 N
Bot chord 2x4 SP #2 N
Webs 2x4 SP #2 N

Deflection meets L/240 live and L/180 total load.

The overall height of this truss excluding overhang is 2-11-8.

110 mph wind, 15.00 ft mean hgt, ASCE 7-02, CLOSED bldg, not located within 4.50 ft from roof edge, CAT II, EXP B, wind TC DL=5.0 psf, wind BC DL=5.0 psf.

Wind reactions based on MWFRS pressures.

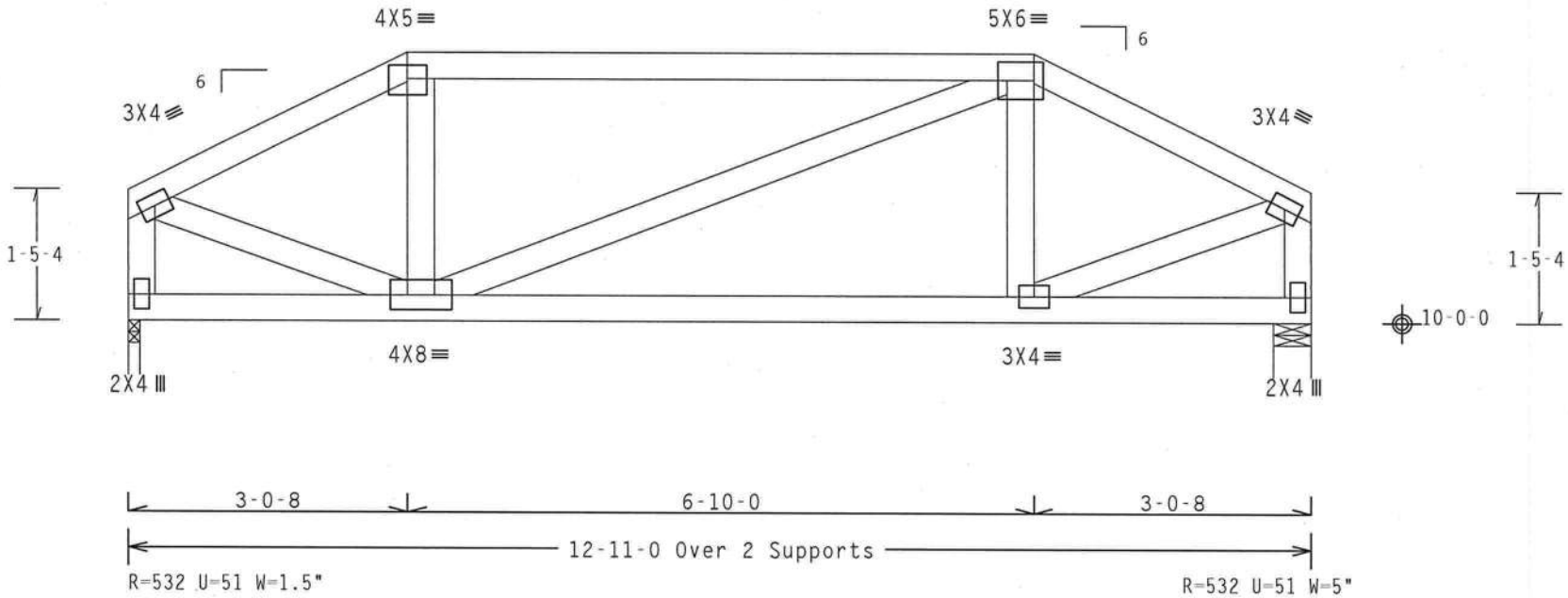

Design Crit: IBC CODE

PLT TYP. Wave Cq/RT=1.00(1.25)/10(0) 7.38.0810.02 QTY:1 FL/-/5/-/-/R/- Scale =.5"/Ft.

ALPINE

ITW Building Components Group, Inc.
Haines City, FL 33844
FL Certificate of Authorization # 0 278

WARNING TRUSSES REQUIRE EXTREME CARE IN FABRICATION, HANDLING, SHIPPING, INSTALLING AND BRACING. REFER TO BCSI (BUILDING COMPONENT SAFETY INFORMATION), PUBLISHED BY TPI (TRUSS PLATE INSTITUTE, 218 NORTH LEE STREET, SUITE 312, ALEXANDRIA, VA, 22314) AND WTCA (WOOD TRUSS COUNCIL OF AMERICA, 6300 ENTERPRISE LANE, MADISON, WI 53719) FOR SAFETY PRACTICES PRIOR TO PERFORMING THESE FUNCTIONS. UNLESS OTHERWISE INDICATED TOP CHORD SHALL HAVE PROPERLY ATTACHED STRUCTURAL PANELS AND BOTTOM CHORD SHALL HAVE A PROPERLY ATTACHED RIGID CEILING.

IMPORTANTFURNISH A COPY OF THIS DESIGN TO THE INSTALLATION CONTRACTOR. ITW BCG, INC. SHALL NOT BE RESPONSIBLE FOR ANY DEVIATION FROM THIS DESIGN; ANY FAILURE TO BUILD THE TRUSS IN COMFORMANCE WITH TPI; OR FABRICATING, HANDLING, SHIPPING, INSTALLING & BRACING OF TRUSSES.
DESIGN CONFORMS WITH APPLICABLE PROVISIONS OF NDS (NATIONAL DESIGN SPEC. BY AF&PA) AND TPI. ITW BCG CONNECTOR PLATES ARE MADE OF 20/18/16GA (W,H/SS/K) ASTM A653 GRADE 40/60 (W, K/H,SS) GALV. STEEL. APPLY PLATES TO EACH FACE OF TRUSS AND, UNLESS OTHERWISE LOCATED ON THIS DESIGN, POSITION PER DRAWINGS 160A-Z. ANY INSPECTION OF PLATES FOLLOWED BY (I) SHALL BE PER ANNEX A3 OF TPI1-2002 SEC.3. A SEAL ON THIS DRAWING INDICATES ACCEPTANCE OF PROFESSIONAL ENGINEERING RESPONSIBILITY SOLELY FOR THE TRUSS COMPONENT DESIGN SHOWN. THE SUITABILITY AND USE OF THIS COMPONENT FOR ANY BUILDING IS THE RESPONSIBILITY OF THE BUILDING DESIGNER PER ANSI/TPI 1 SEC. 2.

JAMES F. COLLINS JR. LICENSED No 52212 STATE OF FLORIDA PROFESSIONAL ENGINEER
Nov

TC LL	20.0 PSF	REF	R215-- 17479
TC DL	10.0 PSF	DATE	11/30/07
BC DL	10.0 PSF	DRW	HCUSR215 07334052
BC LL	0.0 PSF	HC-ENG	RA/WHK *
TOT.LD.	40.0 PSF	SEQN-	90159
DUR.FAC.	1.25	FROM	LRB
SPACING	24.0"	JREF-	1TCW215_Z02

Top chord 2x4 SP #2 N :T2 2x6 SP #2 N:
Bot chord 2x6 SP #2 N
Webs 2x4 SP #2 N

SPECIAL LOADS
------(LUMBER DUR.FAC.=1.25 / PLATE DUR.FAC.=1.25)
TC - From 62 PLF at 0.00 to 62 PLF at 11.00
TC - From 62 PLF at 11.00 to 62 PLF at 13.17
TC - From 62 PLF at 13.17 to 62 PLF at 13.83
BC - From 20 PLF at 0.00 to 20 PLF at 13.83
BC - 288 LB Conc. Load at 1.31
BC - 282 LB Conc. Load at 3.31
BC - 281 LB Conc. Load at 5.31
BC - 689 LB Conc. Load at 6.35
BC - 501 LB Conc. Load at 12.15

Wind reactions based on MWFRS pressures.

(**) 1 plate(s) require special positioning. Refer to scaled plate plot details for special positioning requirements.

110 mph wind, 15.00 ft mean hgt, ASCE 7-02, CLOSED bldg, not located within 4.50 ft from roof edge, CAT II, EXP B, wind TC DL=5.0 psf, wind BC DL=5.0 psf.

Right end vertical not exposed to wind pressure.

Deflection meets L/240 live and L/180 total load.

The overall height of this truss excluding overhang is 5-10-3.

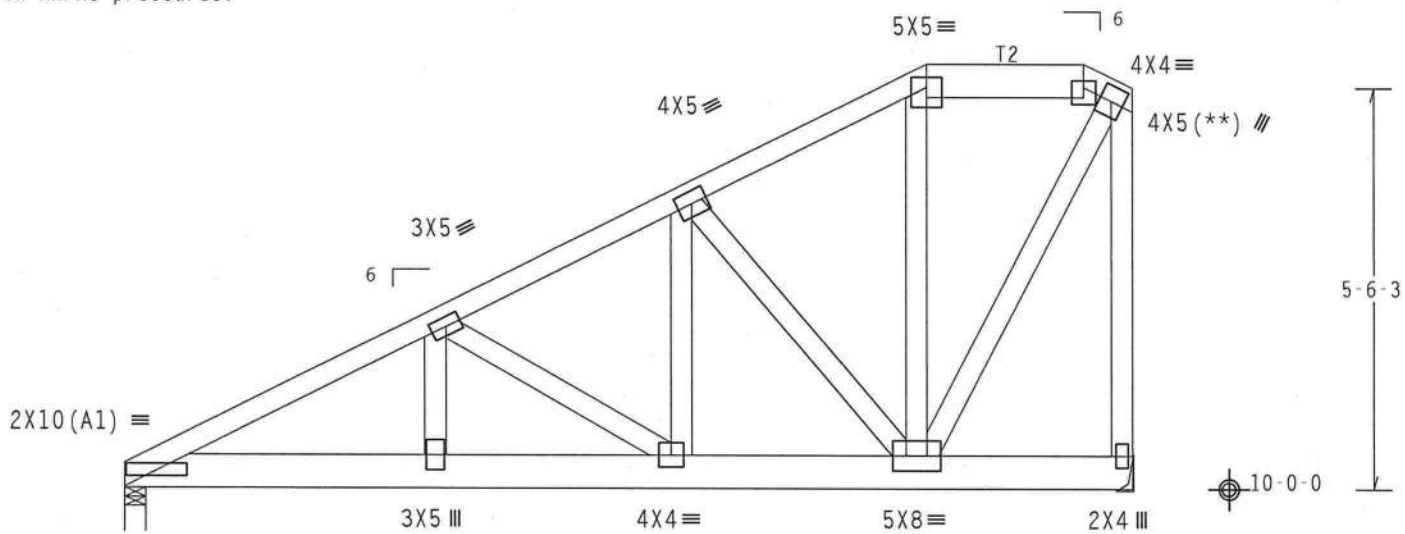

R=1669 U=179 W=3.5"

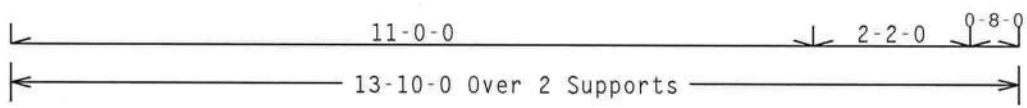

R=1511 U=162

Design Crit: IBC CODE

PLT TYP. Wave Cq/RT=1.00(1.25)/10(0) 7.38.0810 QTY:1 FL/-/5/-/-/R/- Scale =.375"/Ft.

ALPINE
ITW Building Components Group, Inc.
Haines City, FL 33844
FL Certificate of Authorization # 0 278

WARNING TRUSSES REQUIRE EXTREME CARE IN FABRICATION, HANDLING, SHIPPING, INSTALLING AND BRACING. REFER TO BCSI (BUILDING COMPONENT SAFETY INFORMATION), PUBLISHED BY TPI (TRUSS PLATE INSTITUTE, 218 NORTH LEE STREET, SUITE 312, ALEXANDRIA, VA, 22314) AND WTCA (WOOD TRUSS COUNCIL OF AMERICA, 6300 ENTERPRISE LANE, MADISON, WI 53719) FOR SAFETY PRACTICES PRIOR TO PERFORMING THESE FUNCTIONS. UNLESS OTHERWISE INDICATED TOP CHORD SHALL HAVE PROPERLY ATTACHED STRUCTURAL PANELS AND BOTTOM CHORD SHALL HAVE A PROPERLY ATTACHED RIGID CEILING.

IMPORTANTFURNISH A COPY OF THIS DESIGN TO THE INSTALLATION CONTRACTOR. ITW BCG, INC. SHALL NOT BE RESPONSIBLE FOR ANY DEVIATION FROM THIS DESIGN; ANY FAILURE TO BUILD THE TRUSS IN COMFORMANCE WITH TPI; OR FABRICATING, HANDLING, SHIPPING, INSTALLING & BRACING OF TRUSSES.
DESIGN CONFORMS WITH APPLICABLE PROVISIONS OF NDS (NATIONAL DESIGN SPEC. BY AF&PA) AND TPI. ITW BCG CONNECTOR PLATES ARE MADE OF 20/18/16GA (W,H/SS/K) ASTM A653 GRADE 40/60 (W, K/H,SS) GALV. STEEL. APPLY PLATES TO EACH FACE OF TRUSS AND, UNLESS OTHERWISE LOCATED ON THIS DESIGN, POSITION PER DRAWINGS 160A-Z. ANY INSPECTION OF PLATES FOLLOWED BY (I) SHALL BE PER ANNEX A3 OF TPI1-2002 SEC.3. A SEAL ON THIS DRAWING INDICATES ACCEPTANCE OF PROFESSIONAL ENGINEERING RESPONSIBILITY SOLELY FOR THE TRUSS COMPONENT DESIGN SHOWN. THE SUITABILITY AND USE OF THIS COMPONENT FOR ANY BUILDING IS THE RESPONSIBILITY OF THE BUILDING DESIGNER PER ANSI/TPI 1 SEC. 2.

JAMES F. COLLINS, JR. LICENSED No.52212 STATE OF FLORIDA PROFESSIONAL ENGINEER
Nov 30,2007

TC LL	20.0 PSF	REF	R215-- 17480
TC DL	10.0 PSF	DATE	11/30/07
BC DL	10.0 PSF	DRW	HCUSR215 07334119
BC LL	0.0 PSF	HC-ENG	RA/WHK
TOT.LD.	40.0 PSF	SEQN-	90475
DUR.FAC.	1.25	FROM	LRB
SPACING	24.0"	JREF-	1TCW215_Z02

Top chord 2x4 SP #2 N
Bot chord 2x4 SP #2 N
Webs 2x4 SP #2 N

Deflection meets L/240 live and L/180 total load.

The overall height of this truss excluding overhang is 4-10-3.

110 mph wind, 15.00 ft mean hgt, ASCE 7-02, CLOSED bldg, not located within 4.50 ft from roof edge, CAT II, EXP B, wind TC DL=5.0 psf, wind BC DL=5.0 psf.

Wind reactions based on MWFRS pressures.

Right end vertical not exposed to wind pressure.

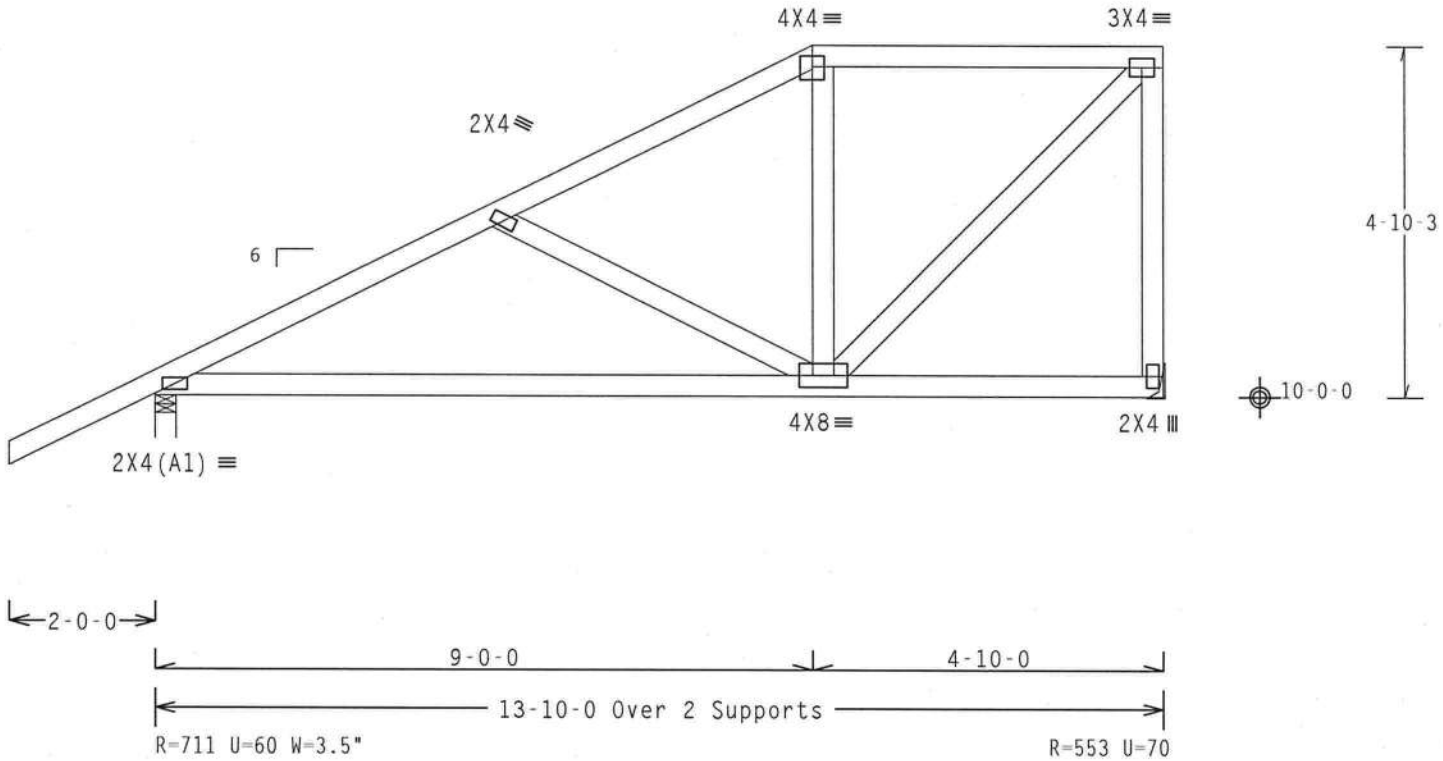

Design Crit: IBC CODE

PLT TYP. Wave Cq/RT=1.00(1.25)/10(0) 7.38.0810 QTY:1 FL/-/5/-/-/R/- Scale =.375"/Ft.

ALPINE

ITW Building Components Group, Inc.
Haines City, FL 33844
FL Certificate of Authorization # 0 278

WARNING TRUSSES REQUIRE EXTREME CARE IN FABRICATION, HANDLING, SHIPPING, INSTALLING AND BRACING. REFER TO BCSI (BUILDING COMPONENT SAFETY INFORMATION), PUBLISHED BY TPI (TRUSS PLATE INSTITUTE, 218 NORTH LEE STREET, SUITE 312, ALEXANDRIA, VA, 22314) AND WTCA (WOOD TRUSS COUNCIL OF AMERICA, 6300 ENTERPRISE LANE, MADISON, WI 53719) FOR SAFETY PRACTICES PRIOR TO PERFORMING THESE FUNCTIONS. UNLESS OTHERWISE INDICATED TOP CHORD SHALL HAVE PROPERLY ATTACHED STRUCTURAL PANELS AND BOTTOM CHORD SHALL HAVE A PROPERLY ATTACHED RIGID CEILING.

IMPORTANTFURNISH A COPY OF THIS DESIGN TO THE INSTALLATION CONTRACTOR. ITW BCG, INC. SHALL NOT BE RESPONSIBLE FOR ANY DEVIATION FROM THIS DESIGN; ANY FAILURE TO BUILD THE TRUSS IN COMFORMANCE WITH TPI; OR FABRICATING, HANDLING, SHIPPING, INSTALLING & BRACING OF TRUSSES.
DESIGN CONFORMS WITH APPLICABLE PROVISIONS OF NDS (NATIONAL DESIGN SPEC. BY AF&PA) AND TPI. ITW BCG CONNECTOR PLATES ARE MADE OF 20/18/16GA (W,H/SS/K) ASTM A653 GRADE 40/60 (W, K/H,SS) GALV. STEEL. APPLY PLATES TO EACH FACE OF TRUSS AND, UNLESS OTHERWISE LOCATED ON THIS DESIGN, POSITION PER DRAWINGS 160A-Z. ANY INSPECTION OF PLATES FOLLOWED BY (1) SHALL BE PER ANNEX A3 OF TPI1-2002 SEC.3. A SEAL ON THIS DRAWING INDICATES ACCEPTANCE OF PROFESSIONAL ENGINEERING RESPONSIBILITY SOLELY FOR THE TRUSS COMPONENT DESIGN SHOWN. THE SUITABILITY AND USE OF THIS COMPONENT FOR ANY BUILDING IS THE RESPONSIBILITY OF THE BUILDING DESIGNER PER ANSI/TPI 1 SEC. 2.

JAMES F. COLLINS, JR. LICENSED No. 52212 STATE OF FLORIDA PROFESSIONAL ENGINEER
Nov 30 '07

TC LL	20.0 PSF	REF R215-- 17481
TC DL	10.0 PSF	DATE 11/30/07
BC DL	10.0 PSF	DRW HCUSR215 07334070
BC LL	0.0 PSF	HC-ENG RA/WHK
TOT.LD.	40.0 PSF	SEQN- 90508
DUR.FAC.	1.25	FROM LRB
SPACING	24.0"	JREF- 1TCW215_Z02

Top chord 2x4 SP #2 Dense :T2 2x6 SP SS:
Bot chord 2x6 SP #2 N
Webs 2x4 SP #2 N

110 mph wind, 15.00 ft mean hgt, ASCE 7-02, CLOSED bldg, not located within 4.50 ft from roof edge, CAT II, EXP B, wind TC DL=5.0 psf, wind BC DL=5.0 psf.

Wind reactions based on MWFRS pressures.

Deflection meets L/240 live and L/180 total load.

SPECIAL LOADS
------(LUMBER DUR.FAC.=1.25 / PLATE DUR.FAC.=1.25)
TC - From 62 PLF at -2.00 to 62 PLF at 7.00
TC - From 62 PLF at 7.00 to 62 PLF at 13.83
BC - From 20 PLF at 0.00 to 20 PLF at 13.83
TC - 183 LB Conc. Load at 7.06, 9.06, 11.06, 13.06
BC - 711 LB Conc. Load at 7.00
BC - 78 LB Conc. Load at 9.06, 11.06, 13.06

Right end vertical not exposed to wind pressure.

The overall height of this truss excluding overhang is 3-10-3.

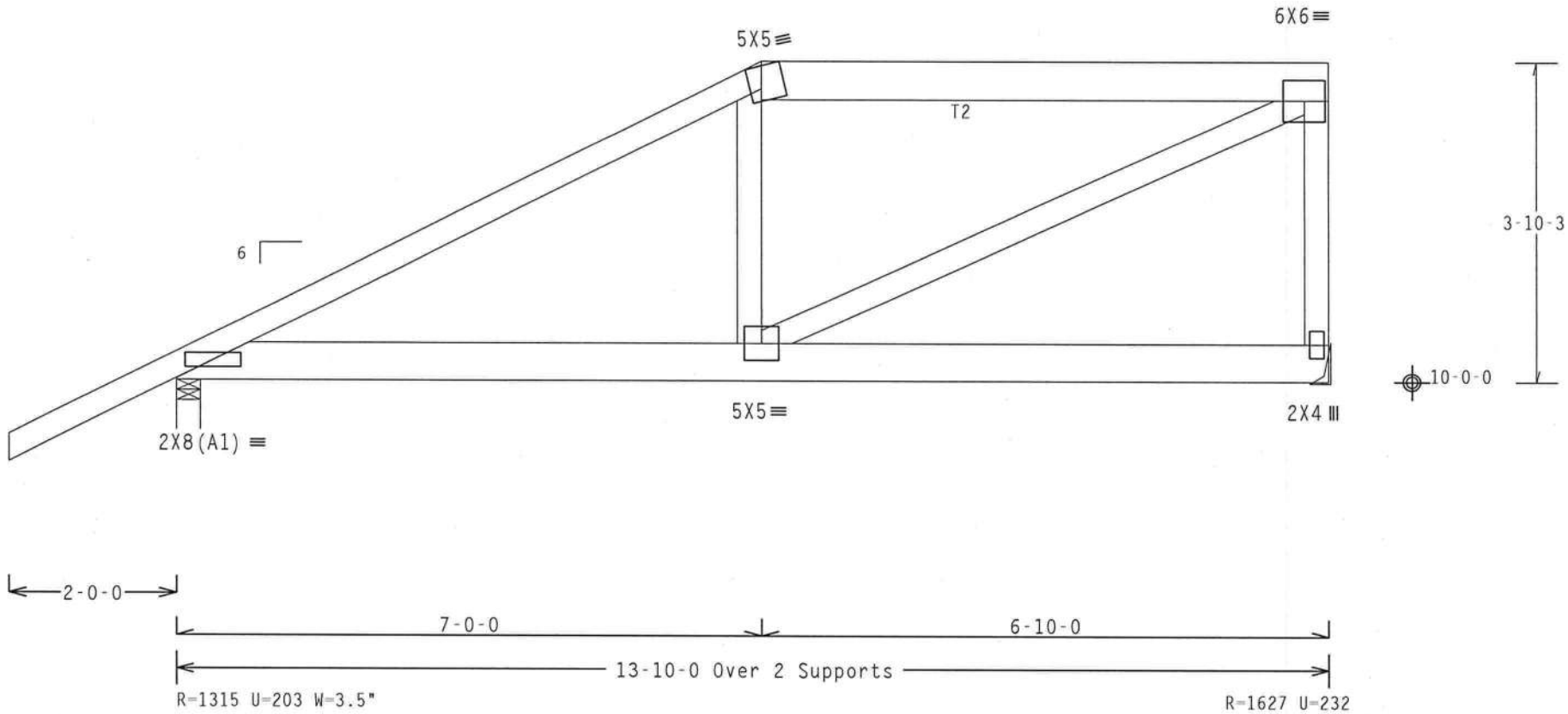

Design Crit: IBC CODE

PLT TYP. Wave Cq/RT=1.00(1.25)/10(0) 7.38.0810.00 QTY:1 FL/-/5/-/-/R/- Scale =.5"/Ft.

ALPINE
ITW Building Components Group, Inc.
Haines City, FL 33844
FL Certificate of Authorization # 0 278

WARNING TRUSSES REQUIRE EXTREME CARE IN FABRICATION, HANDLING, SHIPPING, INSTALLING AND BRACING. REFER TO BCSI (BUILDING COMPONENT SAFETY INFORMATION), PUBLISHED BY TPI (TRUSS PLATE INSTITUTE, 218 NORTH LEE STREET, SUITE 312, ALEXANDRIA, VA, 22314) AND WTCA (WOOD TRUSS COUNCIL OF AMERICA, 6300 ENTERPRISE LANE, MADISON, WI 53719) FOR SAFETY PRACTICES PRIOR TO PERFORMING THESE FUNCTIONS. UNLESS OTHERWISE INDICATED TOP CHORD SHALL HAVE PROPERLY ATTACHED STRUCTURAL PANELS AND BOTTOM CHORD SHALL HAVE A PROPERLY ATTACHED RIGID CEILING.

IMPORTANTFURNISH A COPY OF THIS DESIGN TO THE INSTALLATION CONTRACTOR. ITW BCG, INC. SHALL NOT BE RESPONSIBLE FOR ANY DEVIATION FROM THIS DESIGN; ANY FAILURE TO BUILD THE TRUSS IN COMFORMANCE WITH TPI; OR FABRICATING, HANDLING, SHIPPING, INSTALLING & BRACING OF TRUSSES.
DESIGN CONFORMS WITH APPLICABLE PROVISIONS OF NDS (NATIONAL DESIGN SPEC. BY AF&PA) AND TPI. ITW BCG CONNECTOR PLATES ARE MADE OF 20/18/16GA (W.H/SS/K) ASTM A653 GRADE 40/60 (W. K/H.SS) GALV. STEEL. APPLY PLATES TO EACH FACE OF TRUSS AND, UNLESS OTHERWISE LOCATED ON THIS DESIGN, POSITION PER DRAWINGS 160A-Z. ANY INSPECTION OF PLATES FOLLOWED BY (1) SHALL BE PER ANNEX A3 OF TPI1-2002 SEC.3. A SEAL ON THIS DRAWING INDICATES ACCEPTANCE OF PROFESSIONAL ENGINEERING RESPONSIBILITY SOLELY FOR THE TRUSS COMPONENT DESIGN SHOWN. THE SUITABILITY AND USE OF THIS COMPONENT FOR ANY BUILDING IS THE RESPONSIBILITY OF THE BUILDING DESIGNER PER ANSI/TPI 1 SEC. 2.

JAMES F. COLLINS, JR. LICENSE No. 52212 STATE OF FLORIDA PROFESSIONAL ENGINEER
Nov 30, 2007

TC LL	20.0 PSF	REF	R215-- 17482
TC DL	10.0 PSF	DATE	11/30/07
BC DL	10.0 PSF	DRW	HCUSR215 07334115
BC LL	0.0 PSF	HC-ENG	RA/WHK
TOT.LD.	40.0 PSF	SEQN-	90397
DUR.FAC.	1.25	FROM	LRB
SPACING	24.0"	JREF-	1TCW215_Z02

Top chord 2x4 SP #2 N
Bot chord 2x4 SP #2 N
Webs 2x4 SP #2 N

End verticals not exposed to wind pressure.

(A) Continuous lateral bracing equally spaced on member.

The overall height of this truss excluding overhang is 8-0-9.

110 mph wind, 15.02 ft mean hgt, ASCE 7-02, CLOSED bldg, not located within 4.50 ft from roof edge, CAT II, EXP B, wind TC DL=5.0 psf, wind BC DL=5.0 psf.

Wind reactions based on MWFRS pressures.

Deflection meets L/240 live and L/180 total load.

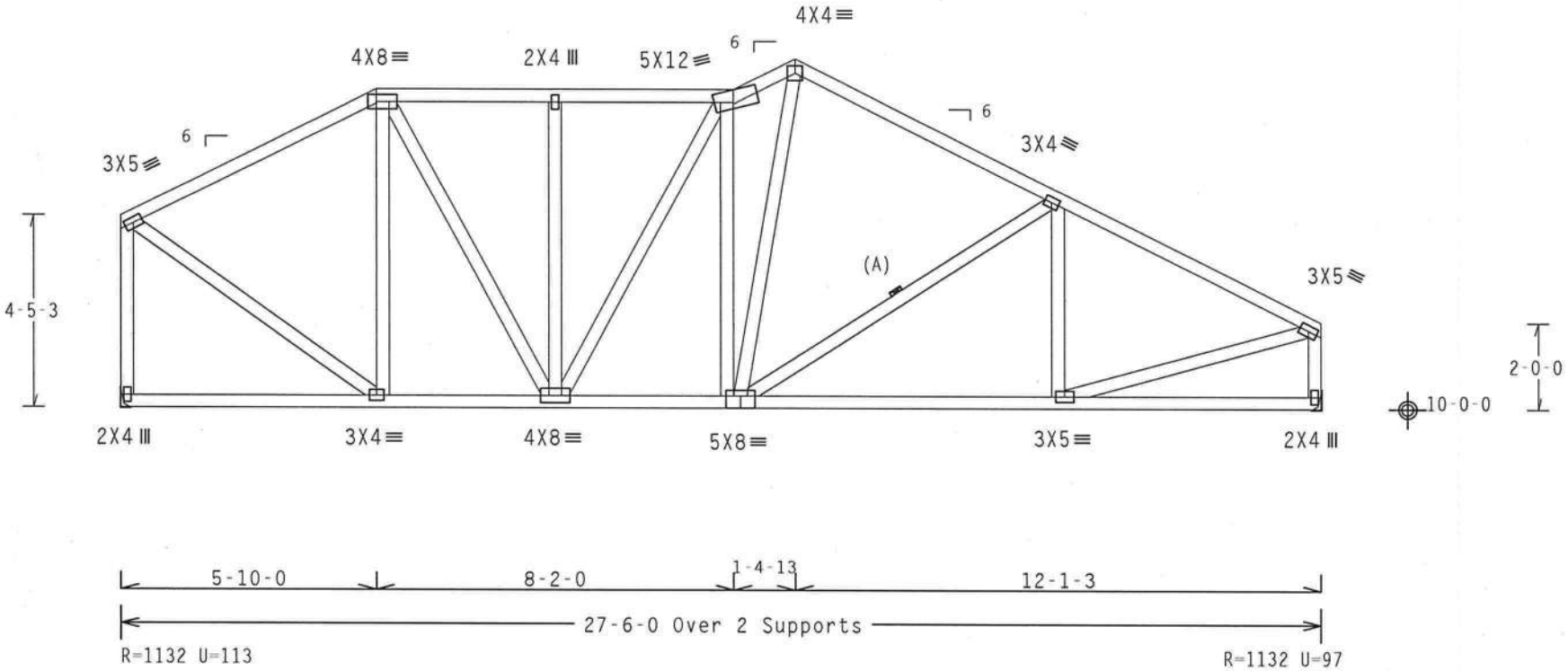

Design Crit: IBC CODE

PLT TYP. Wave Cq/RT=1.00(1.25)/10(0) 7.38.0810.00 QTY:1 FL/-/5/-/-/R/- Scale =.25"/Ft.

ALPINE

ITW Building Components Group, Inc.
Haines City, FL 33844
FL Certificate of Authorization # 0 278

WARNING TRUSSES REQUIRE EXTREME CARE IN FABRICATION, HANDLING, SHIPPING, INSTALLING AND BRACING. REFER TO BCSI (BUILDING COMPONENT SAFETY INFORMATION), PUBLISHED BY TPI (TRUSS PLATE INSTITUTE, 218 NORTH LEE STREET, SUITE 312, ALEXANDRIA, VA, 22314) AND WTCA (WOOD TRUSS COUNCIL OF AMERICA, 6300 ENTERPRISE LANE, MADISON, WI 53719) FOR SAFETY PRACTICES PRIOR TO PERFORMING THESE FUNCTIONS. UNLESS OTHERWISE INDICATED TOP CHORD SHALL HAVE PROPERLY ATTACHED STRUCTURAL PANELS AND BOTTOM CHORD SHALL HAVE A PROPERLY ATTACHED RIGID CEILING.

IMPORTANTFURNISH A COPY OF THIS DESIGN TO THE INSTALLATION CONTRACTOR. ITW BCG, INC. SHALL NOT BE RESPONSIBLE FOR ANY DEVIATION FROM THIS DESIGN; ANY FAILURE TO BUILD THE TRUSS IN COMFORMANCE WITH TPI; OR FABRICATING, HANDLING, SHIPPING, INSTALLING & BRACING OF TRUSSES.
DESIGN CONFORMS WITH APPLICABLE PROVISIONS OF NDS (NATIONAL DESIGN SPEC, BY AF&PA) AND TPI. ITW BCG CONNECTOR PLATES ARE MADE OF 20/18/16GA (W,H/SS/K) ASTM A653 GRADE 40/60 (W, K/H,SS) GALV. STEEL. APPLY PLATES TO EACH FACE OF TRUSS AND, UNLESS OTHERWISE LOCATED ON THIS DESIGN, POSITION PER DRAWINGS 160A-Z. ANY INSPECTION OF PLATES FOLLOWED BY (1) SHALL BE PER ANNEX A3 OF TPI1-2002 SEC.3. A SEAL ON THIS DRAWING INDICATES ACCEPTANCE OF PROFESSIONAL ENGINEERING RESPONSIBILITY SOLELY FOR THE TRUSS COMPONENT DESIGN SHOWN. THE SUITABILITY AND USE OF THIS COMPONENT FOR ANY BUILDING IS THE RESPONSIBILITY OF THE BUILDING DESIGNER PER ANSI/TPI 1 SEC. 2.

JAMES F. COLLINS JR. LICENSE No 62212 STATE OF FLORIDA PROFESSIONAL ENGINEER
Nov 30

TC LL	20.0 PSF	REF R215-- 17483
TC DL	10.0 PSF	DATE 11/30/07
BC DL	10.0 PSF	DRW HCUSR215 07334071
BC LL	0.0 PSF	HC-ENG RA/WHK
TOT.LD.	40.0 PSF	SEQN- 90372
DUR.FAC.	1.25	FROM LRB
SPACING	24.0"	JREF- 1TCW215_Z02

Top chord 2x4 SP #2 N
Bot chord 2x4 SP #2 N
Webs 2x4 SP #2 N

End verticals not exposed to wind pressure.

Deflection meets L/240 live and L/180 total load.

110 mph wind, 15.02 ft mean hgt, ASCE 7-02, CLOSED bldg, not located within 4.50 ft from roof edge, CAT II, EXP B, wind TC DL=5.0 psf, wind BC DL=5.0 psf.

Wind reactions based on MWFRS pressures.

The overall height of this truss excluding overhang is 8-0-9.

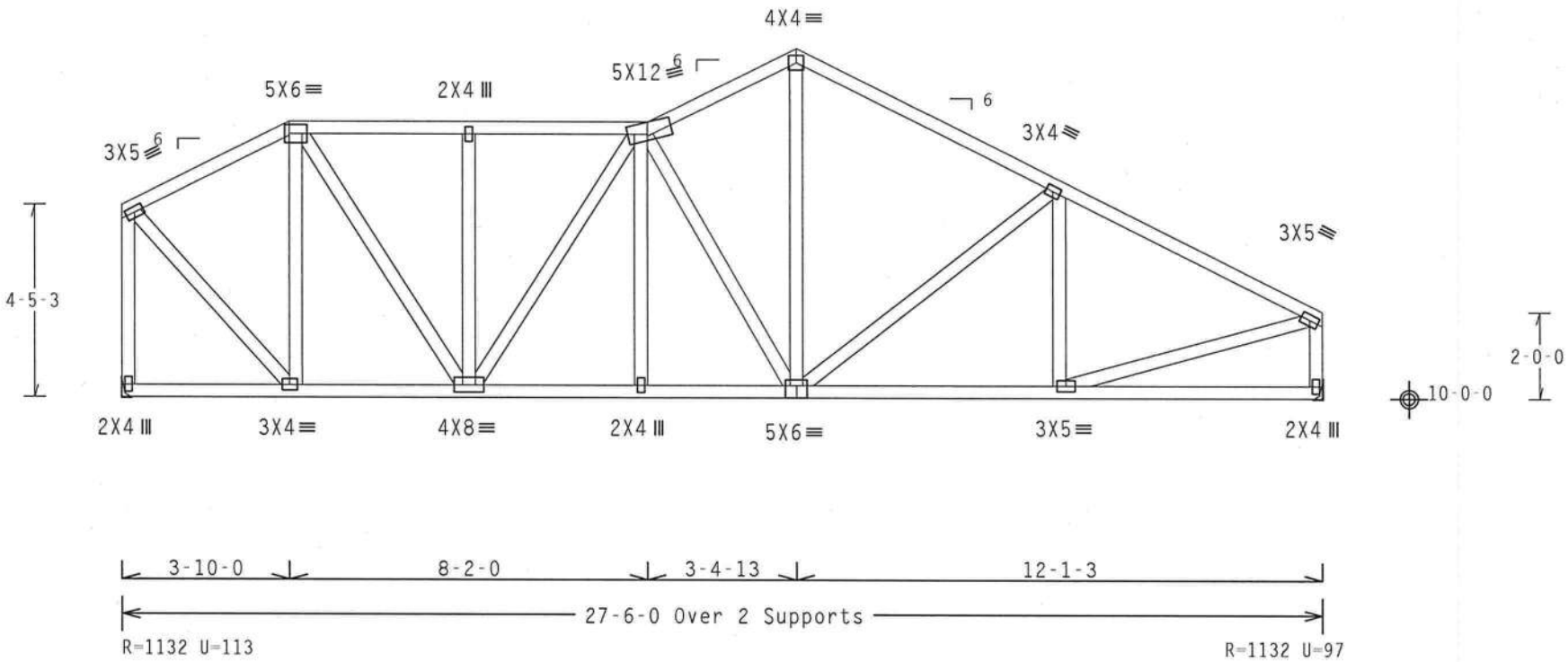

Design Crit: IBC CODE

PLT TYP. Wave Cq/RT=1.00(1.25)/10(0) 7.38.0810 QTY:1 FL/-/5/-/-/R/- Scale =.25"/Ft.

ALPINE

ITW Building Components Group, Inc.
Haines City, FL 33844
FL Certificate of Authorization # 0 278

WARNING TRUSSES REQUIRE EXTREME CARE IN FABRICATION, HANDLING, SHIPPING, INSTALLING AND BRACING. REFER TO BCSI (BUILDING COMPONENT SAFETY INFORMATION), PUBLISHED BY TPI (TRUSS PLATE INSTITUTE, 218 NORTH LEE STREET, SUITE 312, ALEXANDRIA, VA, 22314) AND WTCA (WOOD TRUSS COUNCIL OF AMERICA, 6300 ENTERPRISE LANE, MADISON, WI 53719) FOR SAFETY PRACTICES PRIOR TO PERFORMING THESE FUNCTIONS. UNLESS OTHERWISE INDICATED TOP CHORD SHALL HAVE PROPERLY ATTACHED STRUCTURAL PANELS AND BOTTOM CHORD SHALL HAVE A PROPERLY ATTACHED RIGID CEILING.

IMPORTANTFURNISH A COPY OF THIS DESIGN TO THE INSTALLATION CONTRACTOR. ITW BCG, INC. SHALL NOT BE RESPONSIBLE FOR ANY DEVIATION FROM THIS DESIGN; ANY FAILURE TO BUILD THE TRUSS IN COMFORMANCE WITH TPI; OR FABRICATING, HANDLING, SHIPPING, INSTALLING & BRACING OF TRUSSES.
DESIGN CONFORMS WITH APPLICABLE PROVISIONS OF NDS (NATIONAL DESIGN SPEC. BY AF&PA) AND TPI. ITW BCG CONNECTOR PLATES ARE MADE OF 20/18/16GA (W,H/SS/K) ASTM A653 GRADE 40/60 (W, K/H,SS) GALV. STEEL. APPLY PLATES TO EACH FACE OF TRUSS AND, UNLESS OTHERWISE LOCATED ON THIS DESIGN, POSITION PER DRAWINGS 160A-Z. ANY INSPECTION OF PLATES FOLLOWED BY (1) SHALL BE PER ANNEX A3 OF TPI1-2002 SEC.3. A SEAL ON THIS DRAWING INDICATES ACCEPTANCE OF PROFESSIONAL ENGINEERING RESPONSIBILITY SOLELY FOR THE TRUSS COMPONENT DESIGN SHOWN. THE SUITABILITY AND USE OF THIS COMPONENT FOR ANY BUILDING IS THE RESPONSIBILITY OF THE BUILDING DESIGNER PER ANSI/TPI 1 SEC. 2.

JAMES F. COLLINS JR. LICENSE No. 52212 STATE OF FLORIDA PROFESSIONAL ENGINEER
Nov 30 '07

TC LL	20.0 PSF	REF R215-- 17484
TC DL	10.0 PSF	DATE 11/30/07
BC DL	10.0 PSF	DRW HCUSR215 07334072
BC LL	0.0 PSF	HC-ENG RA/WHK
TOT.LD.	40.0 PSF	SEQN- 90365
DUR.FAC.	1.25	FROM LRB
SPACING	24.0"	JREF- 1TCW215_Z02

Top chord 2x4 SP #2 N
Bot chord 2x4 SP #2 N
Webs 2x4 SP #2 N

End verticals not exposed to wind pressure.

Deflection meets L/240 live and L/180 total load.

110 mph wind, 15.02 ft mean hgt, ASCE 7-02, CLOSED bldg, not located within 4.50 ft from roof edge, CAT II, EXP B, wind TC DL=5.0 psf, wind BC DL=5.0 psf.

Wind reactions based on MWFRS pressures.

The overall height of this truss excluding overhang is 8-0-9.

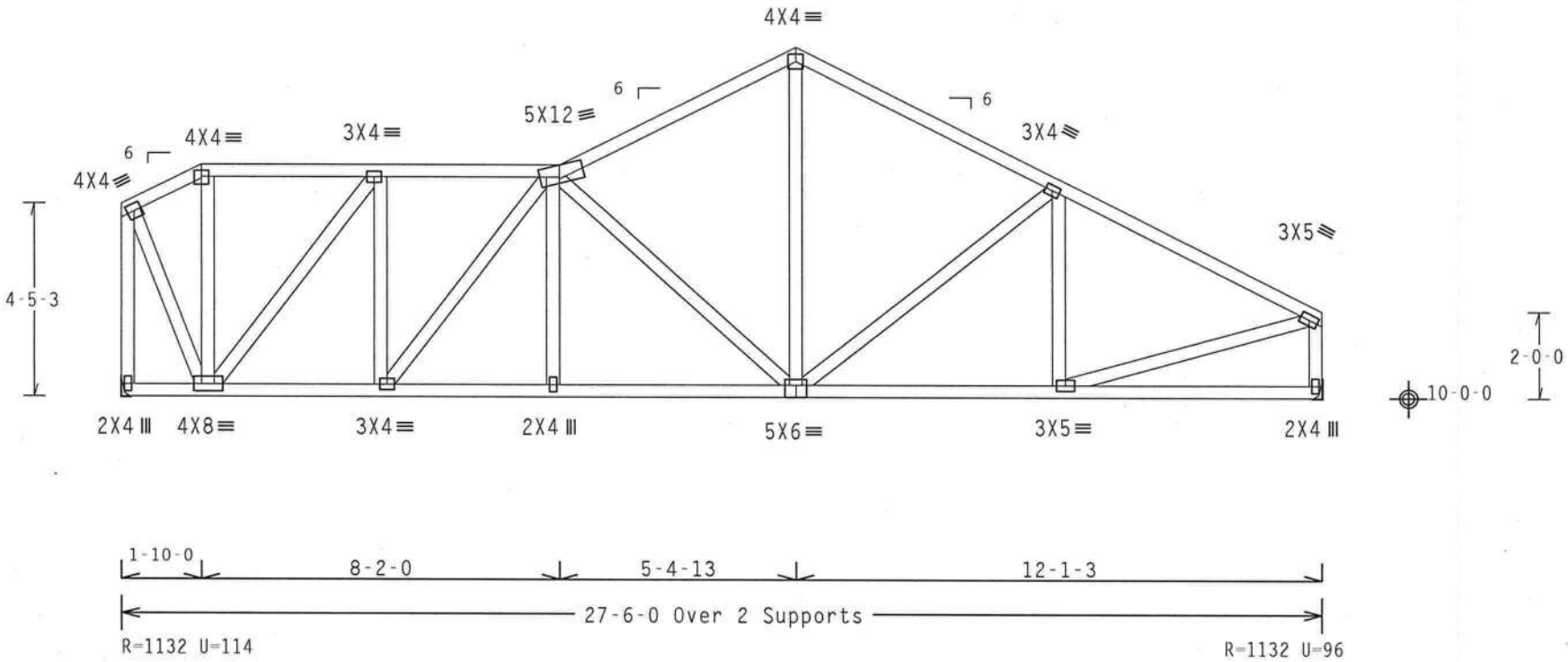

Design Crit: IBC CODE

PLT TYP. Wave Cq/RT=1.00(1.25)/10(0) 7.38.0810.0 QTY:1 FL/-/5/-/-/R/- Scale =.25"/Ft.

ALPINE

ITW Building Components Group, Inc.
Haines City, FL 33844
FL Certificate of Authorization # 0 278

WARNING TRUSSES REQUIRE EXTREME CARE IN FABRICATION, HANDLING, SHIPPING, INSTALLING AND BRACING. REFER TO BCSI (BUILDING COMPONENT SAFETY INFORMATION), PUBLISHED BY TPI (TRUSS PLATE INSTITUTE, 218 NORTH LEE STREET, SUITE 312, ALEXANDRIA, VA, 22314) AND WTCA (WOOD TRUSS COUNCIL OF AMERICA, 6300 ENTERPRISE LANE, MADISON, WI 53719) FOR SAFETY PRACTICES PRIOR TO PERFORMING THESE FUNCTIONS. UNLESS OTHERWISE INDICATED TOP CHORD SHALL HAVE PROPERLY ATTACHED STRUCTURAL PANELS AND BOTTOM CHORD SHALL HAVE A PROPERLY ATTACHED RIGID CEILING.

IMPORTANTFURNISH A COPY OF THIS DESIGN TO THE INSTALLATION CONTRACTOR. ITW BCG, INC. SHALL NOT BE RESPONSIBLE FOR ANY DEVIATION FROM THIS DESIGN; ANY FAILURE TO BUILD THE TRUSS IN COMFORMANCE WITH TPI; OR FABRICATING, HANDLING, SHIPPING, INSTALLING & BRACING OF TRUSSES.
DESIGN CONFORMS WITH APPLICABLE PROVISIONS OF NDS (NATIONAL DESIGN SPEC, BY AF&PA) AND TPI. ITW BCG CONNECTOR PLATES ARE MADE OF 20/18/16GA (W,H/SS/K) ASTM A653 GRADE 40/60 (W, K/H,SS) GALV. STEEL. APPLY PLATES TO EACH FACE OF TRUSS AND, UNLESS OTHERWISE LOCATED ON THIS DESIGN, POSITION PER DRAWINGS 160A-Z. ANY INSPECTION OF PLATES FOLLOWED BY (1) SHALL BE PER ANNEX A3 OF TPI1-2002 SEC.3. A SEAL ON THIS DRAWING INDICATES ACCEPTANCE OF PROFESSIONAL ENGINEERING RESPONSIBILITY SOLELY FOR THE TRUSS COMPONENT DESIGN SHOWN. THE SUITABILITY AND USE OF THIS COMPONENT FOR ANY BUILDING IS THE RESPONSIBILITY OF THE BUILDING DESIGNER PER ANSI/TPI 1 SEC. 2.

JAMES F. COLLINS, JR. LICENSE No. 52212 STATE OF FLORIDA PROFESSIONAL ENGINEER
Nov 30 2007

TC LL	20.0 PSF	REF R215-- 17485
TC DL	10.0 PSF	DATE 11/30/07
BC DL	10.0 PSF	DRW HCUSR215 07334073
BC LL	0.0 PSF	HC-ENG RA/WHK
TOT.LD.	40.0 PSF	SEQN- 90358
DUR.FAC.	1.25	FROM LRB
SPACING	24.0"	JREF- 1TCW215_Z02

(5074-/DERKSEN RESIDENCE /ERIN JOHNSON CONSTRUCTION -- , ** - A16)

Top chord 2x4 SP #2 N
Bot chord 2x4 SP #2 N
Webs 2x4 SP #2 N

End verticals not exposed to wind pressure.

(A) Continuous lateral bracing equally spaced on member.

Provide for complete drainage of roof.

110 mph wind, 15.83 ft mean hgt, ASCE 7-02, CLOSED bldg, not located within 4.50 ft from roof edge, CAT II, EXP B, wind TC DL=5.0 psf, wind BC DL=5.0 psf.

Wind reactions based on MWFRS pressures.

Deflection meets L/240 live and L/180 total load.

The overall height of this truss excluding overhang is 8-0-9.

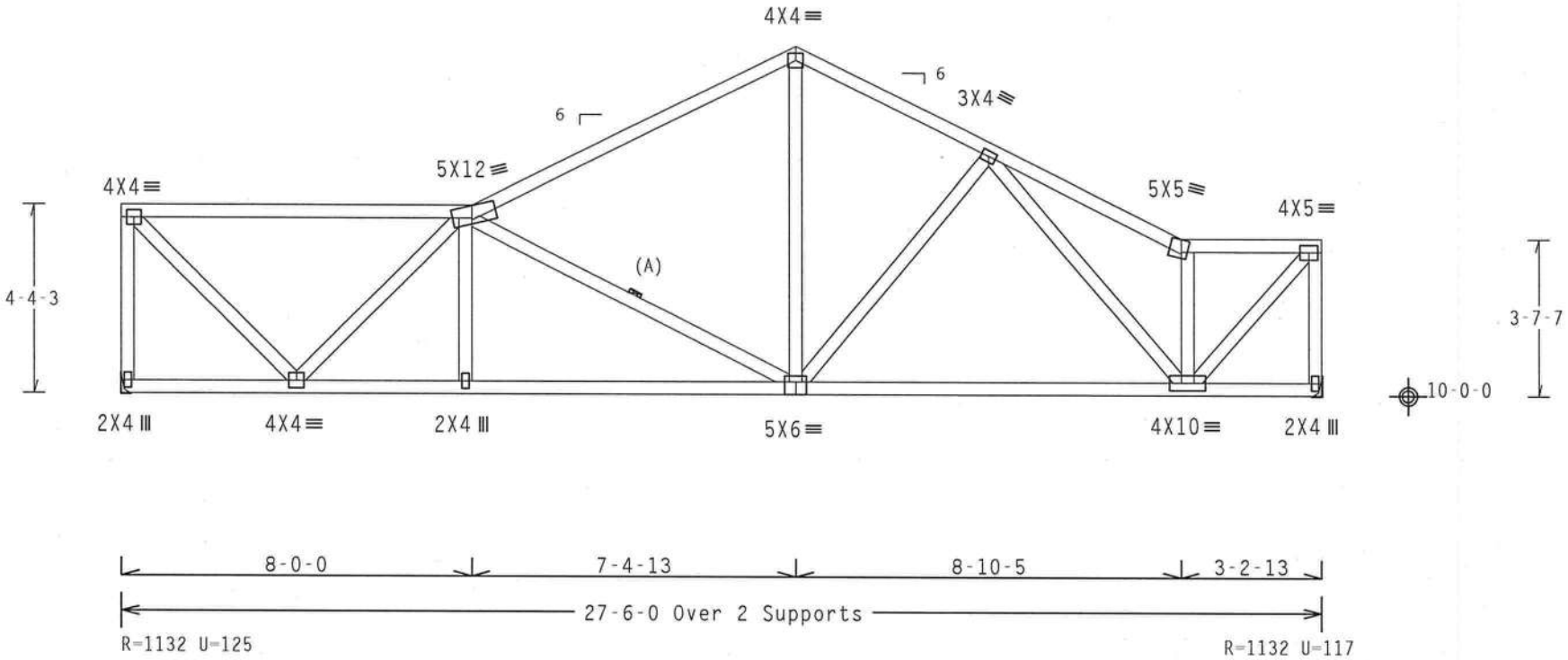

Design Crit: IBC CODE

PLT TYP. Wave Cq/RT=1.00(1.25)/10(0) 7.38.0810 QTY:1 FL/-/5/-/-/R/- Scale =.25"/Ft.

ALPINE

ITW Building Components Group, Inc.
Haines City, FL 33844
FL Certificate of Authorization # 0 278

WARNING TRUSSES REQUIRE EXTREME CARE IN FABRICATION, HANDLING, SHIPPING, INSTALLING AND BRACING. REFER TO BCSI (BUILDING COMPONENT SAFETY INFORMATION), PUBLISHED BY TPI (TRUSS PLATE INSTITUTE, 218 NORTH LEE STREET, SUITE 312, ALEXANDRIA, VA, 22314) AND WTCA (WOOD TRUSS COUNCIL OF AMERICA, 6300 ENTERPRISE LANE, MADISON, WI 53719) FOR SAFETY PRACTICES PRIOR TO PERFORMING THESE FUNCTIONS. UNLESS OTHERWISE INDICATED TOP CHORD SHALL HAVE PROPERLY ATTACHED STRUCTURAL PANELS AND BOTTOM CHORD SHALL HAVE A PROPERLY ATTACHED RIGID CEILING.

IMPORTANTFURNISH A COPY OF THIS DESIGN TO THE INSTALLATION CONTRACTOR. ITW BCG, INC. SHALL NOT BE RESPONSIBLE FOR ANY DEVIATION FROM THIS DESIGN; ANY FAILURE TO BUILD THE TRUSS IN COMFORMANCE WITH TPI; OR FABRICATING, HANDLING, SHIPPING, INSTALLING & BRACING OF TRUSSES.
DESIGN CONFORMS WITH APPLICABLE PROVISIONS OF NDS (NATIONAL DESIGN SPEC. BY AF&PA) AND TPI. ITW BCG CONNECTOR PLATES ARE MADE OF 20/18/16GA (W,H/SS/K) ASTM A653 GRADE 40/60 (W, K/H,SS) GALV. STEEL. APPLY PLATES TO EACH FACE OF TRUSS AND, UNLESS OTHERWISE LOCATED ON THIS DESIGN, POSITION PER DRAWINGS 160A-Z. ANY INSPECTION OF PLATES FOLLOWED BY (1) SHALL BE PER ANNEX A3 OF TPI1-2002 SEC.3. A SEAL ON THIS DRAWING INDICATES ACCEPTANCE OF PROFESSIONAL ENGINEERING RESPONSIBILITY SOLELY FOR THE TRUSS COMPONENT DESIGN SHOWN. THE SUITABILITY AND USE OF THIS COMPONENT FOR ANY BUILDING IS THE RESPONSIBILITY OF THE BUILDING DESIGNER PER ANSI/TPI 1 SEC. 2.

JAMES F. COLLINS, JR. LICENSED No. 52212 STATE OF FLORIDA PROFESSIONAL ENGINEER
Nov 30 07

TC LL	20.0 PSF	REF R215-- 17486
TC DL	10.0 PSF	DATE 11/30/07
BC DL	10.0 PSF	DRW HCUSR215 07334074
BC LL	0.0 PSF	HC-ENG RA/WHK
TOT.LD.	40.0 PSF	SEQN- 90351
DUR.FAC.	1.25	FROM LRB
SPACING	24.0"	JREF- 1TCW215_Z02

Top chord 2x4 SP #2 N :T4 2x4 SP #2 Dense:
:T5 2x6 SP #2 N:
Bot chord 2x4 SP #2 N
Webs 2x4 SP #2 N

End verticals not exposed to wind pressure.

Deflection meets L/240 live and L/180 total load.

110 mph wind, 15.70 ft mean hgt, ASCE 7-02, CLOSED bldg, not located within 4.50 ft from roof edge, CAT II, EXP B, wind TC DL=5.0 psf, wind BC DL=5.0 psf.

Wind reactions based on MWFRS pressures.

(A) Continuous lateral bracing equally spaced on member.

The overall height of this truss excluding overhang is 8-0-9.

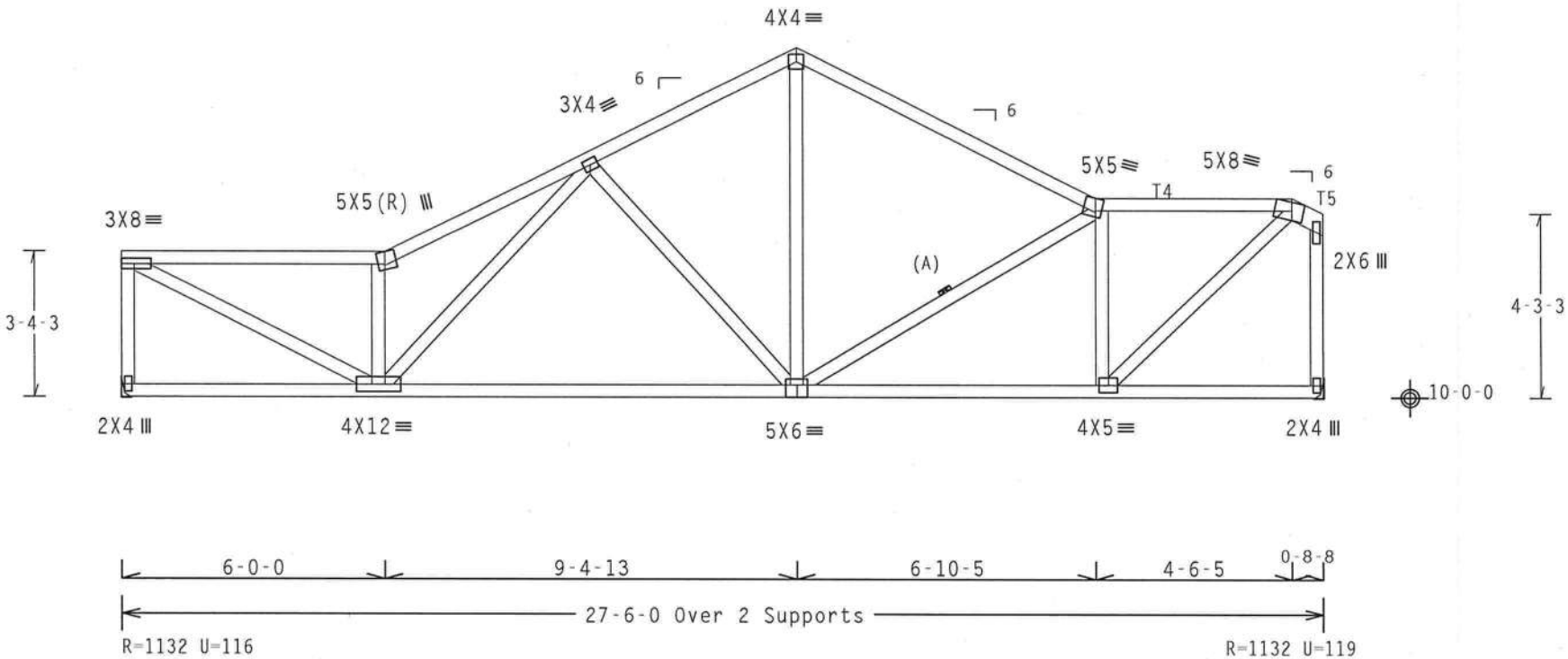

Design Crit: IBC CODE

PLT TYP. Wave Cq/RT=1.00(1.25)/10(0) 7.38.0810.0 QTY:1 FL/-/5/-/-/R/- Scale =.25"/Ft.

ALPINE

ITW Building Components Group, Inc.
Haines City, FL 33844
FL Certificate of Authorization # 0 278

WARNING TRUSSES REQUIRE EXTREME CARE IN FABRICATION, HANDLING, SHIPPING, INSTALLING AND BRACING. REFER TO BCSI (BUILDING COMPONENT SAFETY INFORMATION), PUBLISHED BY TPI (TRUSS PLATE INSTITUTE, 218 NORTH LEE STREET, SUITE 312, ALEXANDRIA, VA, 22314) AND WTCA (WOOD TRUSS COUNCIL OF AMERICA, 6300 ENTERPRISE LANE, MADISON, WI 53719) FOR SAFETY PRACTICES PRIOR TO PERFORMING THESE FUNCTIONS. UNLESS OTHERWISE INDICATED TOP CHORD SHALL HAVE PROPERLY ATTACHED STRUCTURAL PANELS AND BOTTOM CHORD SHALL HAVE A PROPERLY ATTACHED RIGID CEILING.

IMPORTANTFURNISH A COPY OF THIS DESIGN TO THE INSTALLATION CONTRACTOR. ITW BCG, INC. SHALL NOT BE RESPONSIBLE FOR ANY DEVIATION FROM THIS DESIGN; ANY FAILURE TO BUILD THE TRUSS IN COMFORMANCE WITH TPI; OR FABRICATING, HANDLING, SHIPPING, INSTALLING & BRACING OF TRUSSES.
DESIGN CONFORMS WITH APPLICABLE PROVISIONS OF NDS (NATIONAL DESIGN SPEC. BY AF&PA) AND TPI. ITW BCG CONNECTOR PLATES ARE MADE OF 20/18/16GA (W,H/SS/K) ASTM A653 GRADE 40/60 (W, K/H,SS) GALV. STEEL. APPLY PLATES TO EACH FACE OF TRUSS AND, UNLESS OTHERWISE LOCATED ON THIS DESIGN, POSITION PER DRAWINGS 160A-Z. ANY INSPECTION OF PLATES FOLLOWED BY (I) SHALL BE PER ANNEX A3 OF TPI1-2002 SEC.3. A SEAL ON THIS DRAWING INDICATES ACCEPTANCE OF PROFESSIONAL ENGINEERING RESPONSIBILITY SOLELY FOR THE TRUSS COMPONENT DESIGN SHOWN. THE SUITABILITY AND USE OF THIS COMPONENT FOR ANY BUILDING IS THE RESPONSIBILITY OF THE BUILDING DESIGNER PER ANSI/TPI 1 SEC. 2.

JAMES F. COLLINS, JR. LICENSE No. 52272 STATE OF FLORIDA PROFESSIONAL ENGINEER
Nov 30 07

TC LL	20.0 PSF	REF	R215-- 17487
TC DL	10.0 PSF	DATE	11/30/07
BC DL	10.0 PSF	DRW	HCUSR215 07334075
BC LL	0.0 PSF	HC-ENG	RA/WHK
TOT.LD.	40.0 PSF	SEQN-	90344
DUR.FAC.	1.25	FROM	LRB
SPACING	24.0"	JREF-	1TCW215_Z02

Top chord 2x4 SP #2 N
Bot chord 2x4 SP #2 N
Webs 2x4 SP #2 N

End verticals not exposed to wind pressure.

Deflection meets L/240 live and L/180 total load.

110 mph wind, 15.10 ft mean hgt, ASCE 7-02, CLOSED bldg, not located within 4.50 ft from roof edge, CAT II, EXP B, wind TC DL=5.0 psf, wind BC DL=5.0 psf.

Wind reactions based on MWFRS pressures.

The overall height of this truss excluding overhang is 7-10-3.

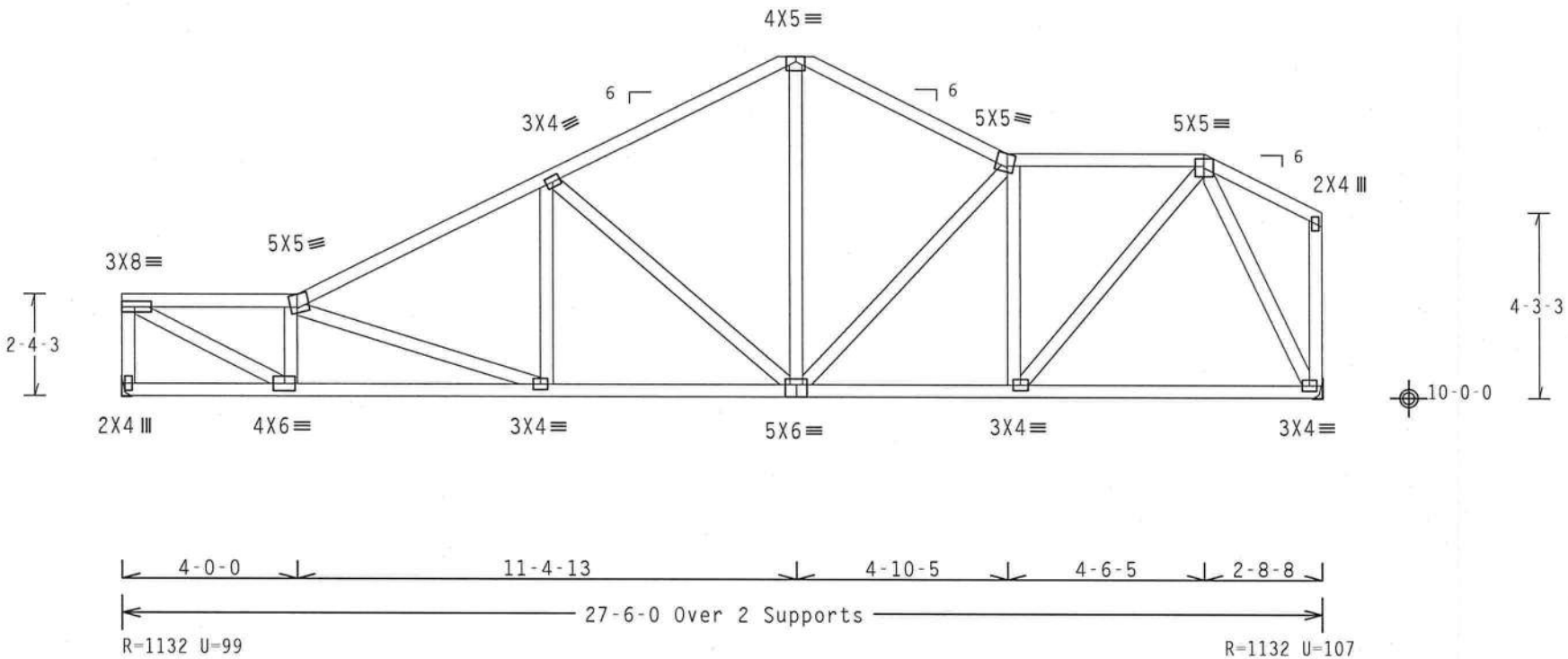

Design Crit: IBC CODE

PLT TYP. Wave Cq/RT=1.00(1.25)/10(0) 7.38.0810 QTY:1 FL/-/5/-/-/R/- Scale =.25"/Ft.

ALPINE

ITW Building Components Group, Inc.
Haines City, FL 33844
FL Certificate of Authorization # 0 278

WARNING TRUSSES REQUIRE EXTREME CARE IN FABRICATION, HANDLING, SHIPPING, INSTALLING AND BRACING. REFER TO BCSI (BUILDING COMPONENT SAFETY INFORMATION), PUBLISHED BY TPI (TRUSS PLATE INSTITUTE, 218 NORTH LEE STREET, SUITE 312, ALEXANDRIA, VA, 22314) AND WTCA (WOOD TRUSS COUNCIL OF AMERICA, 6300 ENTERPRISE LANE, MADISON, WI 53719) FOR SAFETY PRACTICES PRIOR TO PERFORMING THESE FUNCTIONS. UNLESS OTHERWISE INDICATED TOP CHORD SHALL HAVE PROPERLY ATTACHED STRUCTURAL PANELS AND BOTTOM CHORD SHALL HAVE A PROPERLY ATTACHED RIGID CEILING.

IMPORTANTFURNISH A COPY OF THIS DESIGN TO THE INSTALLATION CONTRACTOR. ITW BCG, INC. SHALL NOT BE RESPONSIBLE FOR ANY DEVIATION FROM THIS DESIGN; ANY FAILURE TO BUILD THE TRUSS IN COMFORMANCE WITH TPI; OR FABRICATING, HANDLING, SHIPPING, INSTALLING & BRACING OF TRUSSES.
DESIGN CONFORMS WITH APPLICABLE PROVISIONS OF NDS (NATIONAL DESIGN SPEC. BY AF&PA) AND TPI. ITW BCG CONNECTOR PLATES ARE MADE OF 20/18/16GA (W,H/SS/K) ASTM A653 GRADE 40/60 (W, K/H,SS) GALV. STEEL. APPLY PLATES TO EACH FACE OF TRUSS AND, UNLESS OTHERWISE LOCATED ON THIS DESIGN, POSITION PER DRAWINGS 160A-Z. ANY INSPECTION OF PLATES FOLLOWED BY (1) SHALL BE PER ANNEX A3 OF TPI1-2002 SEC.3. A SEAL ON THIS DRAWING INDICATES ACCEPTANCE OF PROFESSIONAL ENGINEERING RESPONSIBILITY SOLELY FOR THE TRUSS COMPONENT DESIGN SHOWN. THE SUITABILITY AND USE OF THIS COMPONENT FOR ANY BUILDING IS THE RESPONSIBILITY OF THE BUILDING DESIGNER PER ANSI/TPI 1 SEC. 2.

JAMES F. COLLINS, JR. LICENSED No. 52212 STATE OF FLORIDA PROFESSIONAL ENGINEER
Nov 30 '07

TC LL	20.0 PSF	REF R215-- 17488
TC DL	10.0 PSF	DATE 11/30/07
BC DL	10.0 PSF	DRW HCUSR215 07334076
BC LL	0.0 PSF	HC-ENG RA/WHK
TOT.LD.	40.0 PSF	SEQN- 90337
DUR.FAC.	1.25	FROM LRB
SPACING	24.0"	JREF- 1TCW215_Z02

Top chord 2x4 SP #2 N
Bot chord 2x4 SP #2 N
Webs 2x4 SP #2 N

Deflection meets L/240 live and L/180 total load.

The overall height of this truss excluding overhang is 6-10-3.

(**) 1 plate(s) require special positioning. Refer to scaled plate plot details for special positioning requirements.

110 mph wind, 15.00 ft mean hgt, ASCE 7-02, CLOSED bldg, not located within 4.50 ft from roof edge, CAT II, EXP B, wind TC DL=5.0 psf, wind BC DL=5.0 psf.

Wind reactions based on MWFRS pressures.

Right end vertical not exposed to wind pressure.

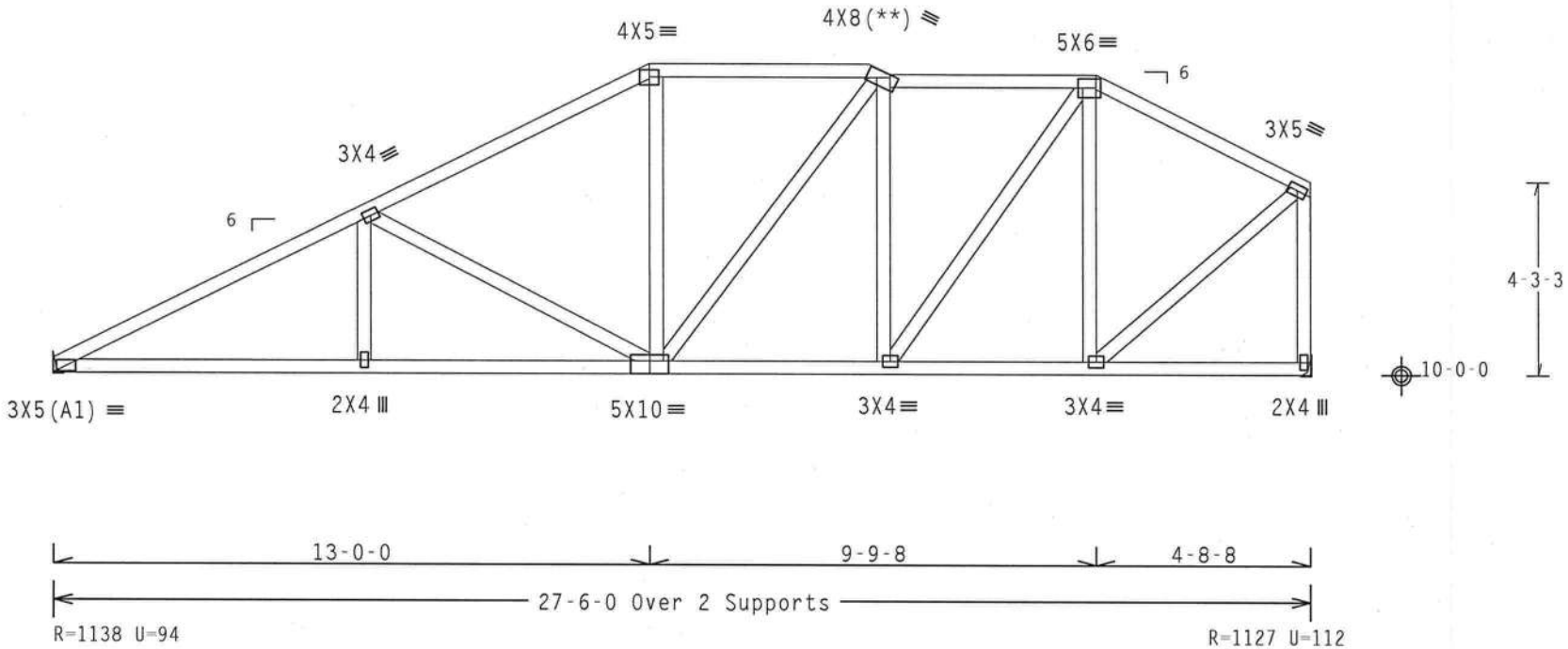

Design Crit: IBC CODE

PLT TYP. Wave Cq/RT=1.00(1.25)/10(0) 7.38.0810.02 QTY:1 FL/-/5/-/-/R/- Scale =.25"/Ft.

ALPINE

ITW Building Components Group, Inc.
Haines City, FL 33844
FL Certificate of Authorization # 0 278

WARNING TRUSSES REQUIRE EXTREME CARE IN FABRICATION, HANDLING, SHIPPING, INSTALLING AND BRACING. REFER TO BCSI (BUILDING COMPONENT SAFETY INFORMATION), PUBLISHED BY TPI (TRUSS PLATE INSTITUTE, 218 NORTH LEE STREET, SUITE 312, ALEXANDRIA, VA, 22314) AND WTCA (WOOD TRUSS COUNCIL OF AMERICA, 6300 ENTERPRISE LANE, MADISON, WI 53719) FOR SAFETY PRACTICES PRIOR TO PERFORMING THESE FUNCTIONS. UNLESS OTHERWISE INDICATED TOP CHORD SHALL HAVE PROPERLY ATTACHED STRUCTURAL PANELS AND BOTTOM CHORD SHALL HAVE A PROPERLY ATTACHED RIGID CEILING.

IMPORTANTFURNISH A COPY OF THIS DESIGN TO THE INSTALLATION CONTRACTOR. ITW BCG, INC. SHALL NOT BE RESPONSIBLE FOR ANY DEVIATION FROM THIS DESIGN; ANY FAILURE TO BUILD THE TRUSS IN COMFORMANCE WITH TPI; OR FABRICATING, HANDLING, SHIPPING, INSTALLING & BRACING OF TRUSSES. DESIGN CONFORMS WITH APPLICABLE PROVISIONS OF NDS (NATIONAL DESIGN SPEC, BY AF&PA) AND TPI. ITW BCG CONNECTOR PLATES ARE MADE OF 20/18/16GA (W,H/SS/K) ASTM A653 GRADE 40/60 (W, K/H,SS) GALV. STEEL. APPLY PLATES TO EACH FACE OF TRUSS AND, UNLESS OTHERWISE LOCATED ON THIS DESIGN, POSITION PER DRAWINGS 160A-Z. ANY INSPECTION OF PLATES FOLLOWED BY (1) SHALL BE PER ANNEX A3 OF TPI1-2002 SEC.3. A SEAL ON THIS DRAWING INDICATES ACCEPTANCE OF PROFESSIONAL ENGINEERING RESPONSIBILITY SOLELY FOR THE TRUSS COMPONENT DESIGN SHOWN. THE SUITABILITY AND USE OF THIS COMPONENT FOR ANY BUILDING IS THE RESPONSIBILITY OF THE BUILDING DESIGNER PER ANSI/TPI 1 SEC. 2.

JAMES F. COLLINS, JR. LICENSE No. 52212 STATE OF FLORIDA PROFESSIONAL ENGINEER
Nov 30, 2007

TC LL	20.0 PSF	REF	R215-- 17489
TC DL	10.0 PSF	DATE	11/30/07
BC DL	10.0 PSF	DRW	HCUSR215 07334077
BC LL	0.0 PSF	HC-ENG	RA/WHK
TOT.LD.	40.0 PSF	SEQN-	90322
DUR.FAC.	1.25	FROM	LRB
SPACING	24.0"	JREF-	1TCW215_Z02

Top chord 2x4 SP #2 N
Bot chord 2x4 SP #2 N
Webs 2x4 SP #2 N

(A) Continuous lateral bracing equally spaced on member.

Deflection meets L/240 live and L/180 total load.

The overall height of this truss excluding overhang is 5-10-3.

110 mph wind, 15.00 ft mean hgt, ASCE 7-02, CLOSED bldg, not located within 4.50 ft from roof edge, CAT II, EXP B, wind TC DL=5.0 psf, wind BC DL=5.0 psf.

Wind reactions based on MWFRS pressures.

Right end vertical not exposed to wind pressure.

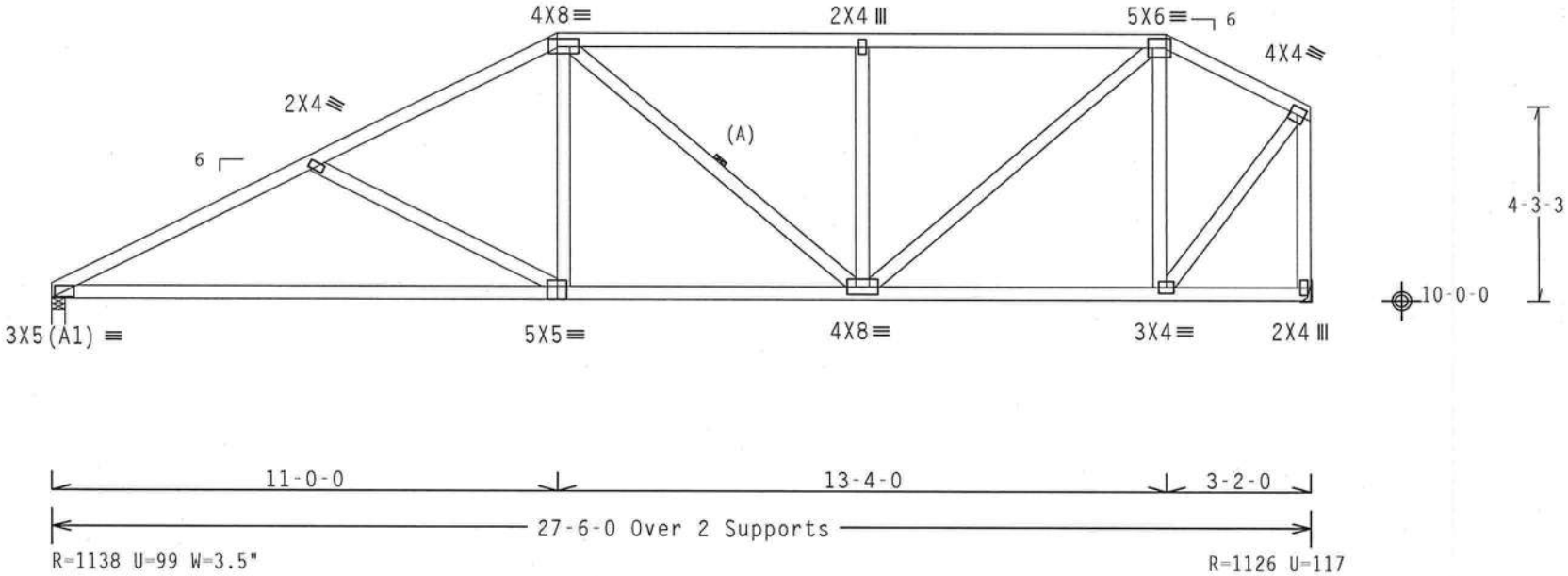

Design Crit: IBC CODE

PLT TYP. Wave Cq/RT=1.00(1.25)/10(0) 7.38.0810.02 QTY:1 FL/-/5/-/-/R/- Scale =.25"/Ft.

ALPINE

ITW Building Components Group, Inc.
Haines City, FL 33844
FL Certificate of Authorization # 0 278

WARNING TRUSSES REQUIRE EXTREME CARE IN FABRICATION, HANDLING, SHIPPING, INSTALLING AND BRACING. REFER TO BCSI (BUILDING COMPONENT SAFETY INFORMATION), PUBLISHED BY TPI (TRUSS PLATE INSTITUTE, 218 NORTH LEE STREET, SUITE 312, ALEXANDRIA, VA, 22314) AND WTCA (WOOD TRUSS COUNCIL OF AMERICA, 6300 ENTERPRISE LANE, MADISON, WI 53719) FOR SAFETY PRACTICES PRIOR TO PERFORMING THESE FUNCTIONS. UNLESS OTHERWISE INDICATED TOP CHORD SHALL HAVE PROPERLY ATTACHED STRUCTURAL PANELS AND BOTTOM CHORD SHALL HAVE A PROPERLY ATTACHED RIGID CEILING.

IMPORTANTFURNISH A COPY OF THIS DESIGN TO THE INSTALLATION CONTRACTOR. ITW BCG, INC. SHALL NOT BE RESPONSIBLE FOR ANY DEVIATION FROM THIS DESIGN; ANY FAILURE TO BUILD THE TRUSS IN CONFORMANCE WITH TPI; OR FABRICATING, HANDLING, SHIPPING, INSTALLING & BRACING OF TRUSSES.
DESIGN CONFORMS WITH APPLICABLE PROVISIONS OF NDS (NATIONAL DESIGN SPEC, BY AF&PA) AND TPI. ITW BCG CONNECTOR PLATES ARE MADE OF 20/18/16GA (W,H/SS/K) ASTM A653 GRADE 40/60 (W, K/H,SS) GALV. STEEL. APPLY PLATES TO EACH FACE OF TRUSS AND, UNLESS OTHERWISE LOCATED ON THIS DESIGN, POSITION PER DRAWINGS 160A-Z. ANY INSPECTION OF PLATES FOLLOWED BY (1) SHALL BE PER ANNEX A3 OF TPI1-2002 SEC.3. A SEAL ON THIS DRAWING INDICATES ACCEPTANCE OF PROFESSIONAL ENGINEERING RESPONSIBILITY SOLELY FOR THE TRUSS COMPONENT DESIGN SHOWN. THE SUITABILITY AND USE OF THIS COMPONENT FOR ANY BUILDING IS THE RESPONSIBILITY OF THE BUILDING DESIGNER PER ANSI/TPI 1 SEC. 2.

JAMES F. COLLINS JR. LICENSE No 52212 STATE OF FLORIDA PROFESSIONAL ENGINEER
Nov

TC LL	20.0 PSF	REF	R215-- 17490
TC DL	10.0 PSF	DATE	11/30/07
BC DL	10.0 PSF	DRW	HCUSR215 07334078
BC LL	0.0 PSF	HC-ENG	RA/WHK
TOT.LD.	40.0 PSF	SEQN-	90313
DUR.FAC.	1.25	FROM	LRB
SPACING	24.0"	JREF-	1TCW215_Z02

Top chord 2x4 SP #2 N
Bot chord 2x4 SP #2 N
Webs 2x4 SP #2 N

(A) Continuous lateral bracing equally spaced on member.

Deflection meets L/240 live and L/180 total load.

The overall height of this truss excluding overhang is 4-10-3.

110 mph wind, 15.00 ft mean hgt, ASCE 7-02, CLOSED bldg, not located within 4.50 ft from roof edge, CAT II, EXP B, wind TC DL=5.0 psf, wind BC DL=5.0 psf.

Wind reactions based on MWFRS pressures.

Right end vertical not exposed to wind pressure.

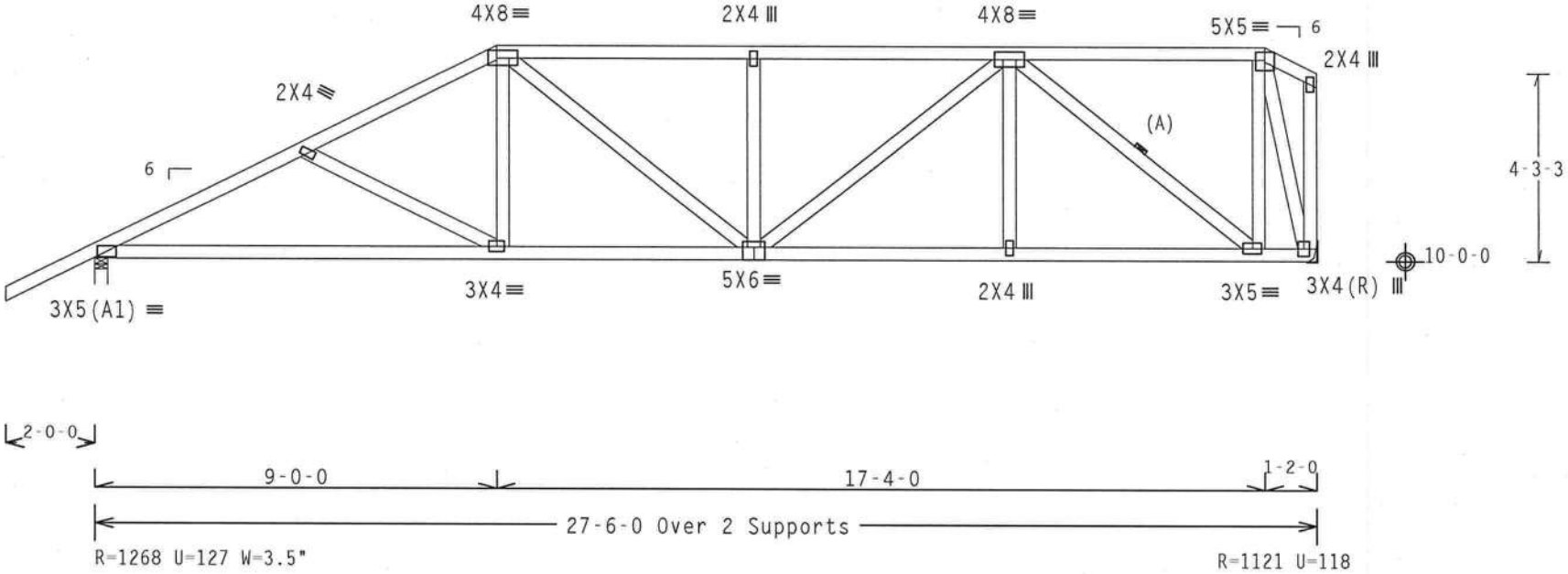

Design Crit: IBC CODE

PLT TYP. Wave Cq/RT=1.00(1.25)/10(0) 7.38.0810 QTY:1 FL/-/5/-/-/R/- Scale =.25"/Ft.

ALPINE

ITW Building Components Group, Inc.
Haines City, FL 33844
FL Certificate of Authorization # 0 278

WARNING TRUSSES REQUIRE EXTREME CARE IN FABRICATION, HANDLING, SHIPPING, INSTALLING AND BRACING. REFER TO BCSI (BUILDING COMPONENT SAFETY INFORMATION), PUBLISHED BY TPI (TRUSS PLATE INSTITUTE, 218 NORTH LEE STREET, SUITE 312, ALEXANDRIA, VA, 22314) AND WTCA (WOOD TRUSS COUNCIL OF AMERICA, 6300 ENTERPRISE LANE, MADISON, WI 53719) FOR SAFETY PRACTICES PRIOR TO PERFORMING THESE FUNCTIONS. UNLESS OTHERWISE INDICATED TOP CHORD SHALL HAVE PROPERLY ATTACHED STRUCTURAL PANELS AND BOTTOM CHORD SHALL HAVE A PROPERLY ATTACHED RIGID CEILING.

IMPORTANTFURNISH A COPY OF THIS DESIGN TO THE INSTALLATION CONTRACTOR. ITW BCG, INC. SHALL NOT BE RESPONSIBLE FOR ANY DEVIATION FROM THIS DESIGN; ANY FAILURE TO BUILD THE TRUSS IN COMFORMANCE WITH TPI; OR FABRICATING, HANDLING, SHIPPING, INSTALLING & BRACING OF TRUSSES.
DESIGN CONFORMS WITH APPLICABLE PROVISIONS OF NDS (NATIONAL DESIGN SPEC. BY AF&PA) AND TPI. ITW BCG CONNECTOR PLATES ARE MADE OF 20/18/16GA (W.H/SS/K) ASTM A653 GRADE 40/60 (W, K/H,SS) GALV. STEEL. APPLY PLATES TO EACH FACE OF TRUSS AND, UNLESS OTHERWISE LOCATED ON THIS DESIGN, POSITION PER DRAWINGS 160A-Z. ANY INSPECTION OF PLATES FOLLOWED BY (1) SHALL BE PER ANNEX A3 OF TPI1-2002 SEC.3. A SEAL ON THIS DRAWING INDICATES ACCEPTANCE OF PROFESSIONAL ENGINEERING RESPONSIBILITY SOLELY FOR THE TRUSS COMPONENT DESIGN SHOWN. THE SUITABILITY AND USE OF THIS COMPONENT FOR ANY BUILDING IS THE RESPONSIBILITY OF THE BUILDING DESIGNER PER ANSI/TPI 1 SEC. 2.

JAMES F. COLLINS, JR. LICENSE No. 52212 STATE OF FLORIDA PROFESSIONAL ENGINEER
Nov 30 07

TC LL	20.0 PSF	REF	R215-- 17491
TC DL	10.0 PSF	DATE	11/30/07
BC DL	10.0 PSF	DRW	HCUSR215 07334079
BC LL	0.0 PSF	HC-ENG	RA/WHK
TOT.LD.	40.0 PSF	SEQN-	90307
DUR.FAC.	1.25	FROM	LRB
SPACING	24.0"	JREF-	1TCW215_Z02

Top chord 2x6 SP SS :T1 2x4 SP #2 Dense:
Bot chord 2x6 SP SS
Webs 2x4 SP #2 N
:Lt Wedge 2x4 SP #2 N:

110 mph wind, 15.00 ft mean hgt, ASCE 7-02, CLOSED bldg, not located within 4.50 ft from roof edge, CAT II, EXP B, wind TC DL=5.0 psf, wind BC DL=5.0 psf.

Wind reactions based on MWFRS pressures.

Deflection meets L/240 live and L/180 total load.

The overall height of this truss excluding overhang is 3-10-3.

SPECIAL LOADS
------(LUMBER DUR.FAC.=1.25 / PLATE DUR.FAC.=1.25)
TC - From 62 PLF at -2.00 to 62 PLF at 7.00
TC - From 62 PLF at 7.00 to 62 PLF at 27.50
BC - From 20 PLF at 0.00 to 20 PLF at 27.50
TC - 183 LB Conc. Load at 7.06, 9.06, 11.06, 13.06, 15.06 17.06, 19.06, 21.06, 23.06, 25.06, 27.06
BC - 711 LB Conc. Load at 7.00
BC - 78 LB Conc. Load at 9.06, 11.06, 13.06, 15.06, 17.06 19.06, 21.06, 23.06, 25.06, 27.06

Right end vertical not exposed to wind pressure.

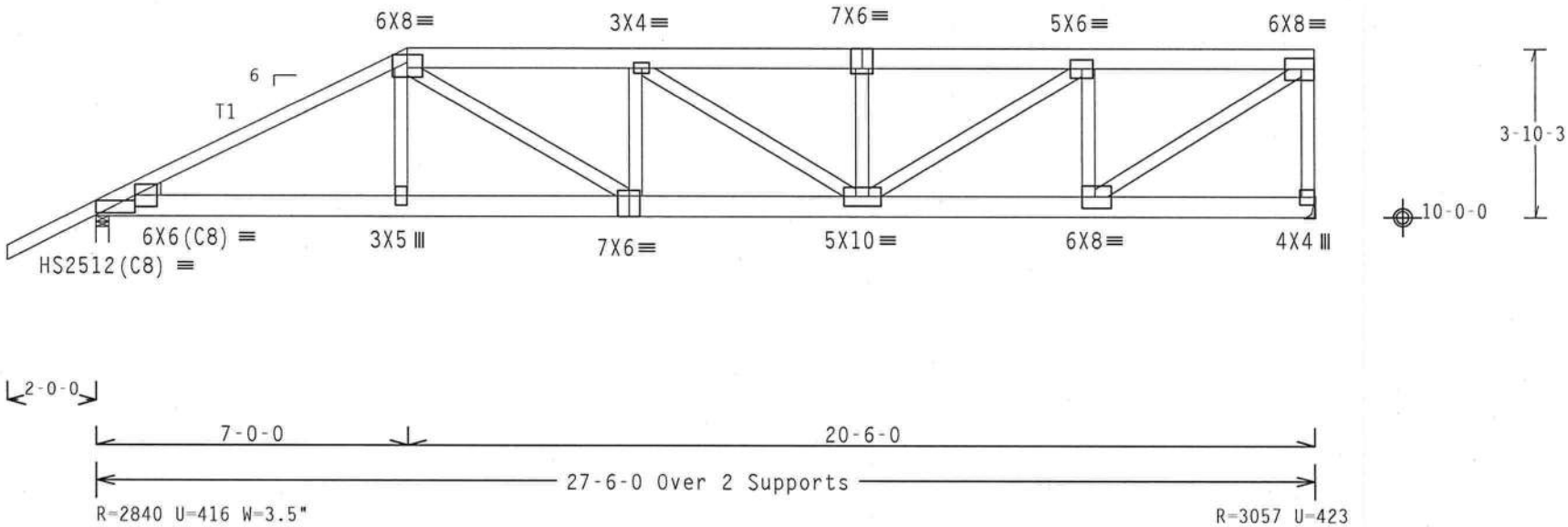

Design Crit: IBC CODE

PLT TYP. 20 Gauge HS,Wave Cq/RT=1.00(1.25)/10(0) 7.38.0810.00 QTY:1 FL/-/5/-/-/R/- Scale =.25"/Ft.

ALPINE
ITW Building Components Group, Inc.
Haines City, FL 33844
FL Certificate of Authorization # 0 278

WARNING TRUSSES REQUIRE EXTREME CARE IN FABRICATION, HANDLING, SHIPPING, INSTALLING AND BRACING. REFER TO BCSI (BUILDING COMPONENT SAFETY INFORMATION), PUBLISHED BY TPI (TRUSS PLATE INSTITUTE, 218 NORTH LEE STREET, SUITE 312, ALEXANDRIA, VA. 22314) AND WTCA (WOOD TRUSS COUNCIL OF AMERICA, 6300 ENTERPRISE LANE, MADISON, WI 53719) FOR SAFETY PRACTICES PRIOR TO PERFORMING THESE FUNCTIONS. UNLESS OTHERWISE INDICATED TOP CHORD SHALL HAVE PROPERLY ATTACHED STRUCTURAL PANELS AND BOTTOM CHORD SHALL HAVE A PROPERLY ATTACHED RIGID CEILING.

IMPORTANTFURNISH A COPY OF THIS DESIGN TO THE INSTALLATION CONTRACTOR. ITW BCG, INC. SHALL NOT BE RESPONSIBLE FOR ANY DEVIATION FROM THIS DESIGN; ANY FAILURE TO BUILD THE TRUSS IN COMFORMANCE WITH TPI; OR FABRICATING, HANDLING, SHIPPING, INSTALLING & BRACING OF TRUSSES.
DESIGN CONFORMS WITH APPLICABLE PROVISIONS OF NDS (NATIONAL DESIGN SPEC, BY AF&PA) AND TPI. ITW BCG CONNECTOR PLATES ARE MADE OF 20/18/16GA (W,H/SS/K) ASTM A653 GRADE 40/60 (W, K/H,SS) GALV. STEEL. APPLY PLATES TO EACH FACE OF TRUSS AND, UNLESS OTHERWISE LOCATED ON THIS DESIGN, POSITION PER DRAWINGS 160A-2. ANY INSPECTION OF PLATES FOLLOWED BY (1) SHALL BE PER ANNEX A3 OF TPI1-2002 SEC.3. A SEAL ON THIS DRAWING INDICATES ACCEPTANCE OF PROFESSIONAL ENGINEERING RESPONSIBILITY SOLELY FOR THE TRUSS COMPONENT DESIGN SHOWN. THE SUITABILITY AND USE OF THIS COMPONENT FOR ANY BUILDING IS THE RESPONSIBILITY OF THE BUILDING DESIGNER PER ANSI/TPI 1 SEC. 2.

JAMES F. COLLINS JR. LICENSED No. 52212 STATE OF FLORIDA PROFESSIONAL ENGINEER
Nov 30,2007

TC LL	20.0 PSF	REF	R215-- 17492
TC DL	10.0 PSF	DATE	11/30/07
BC DL	10.0 PSF	DRW	HCUSR215 07334111
BC LL	0.0 PSF	HC-ENG	RA/WHK
TOT.LD.	40.0 PSF	SEQN-	90301
DUR.FAC.	1.25	FROM	LRB
SPACING	24.0"	JREF-	1TCW215_Z02

Top chord 2x4 SP #2 N
Bot chord 2x4 SP SS :B1, B5 2x4 SP #2 N:
Webs 2x4 SP #2 N

110 mph wind, 15.00 ft mean hgt, ASCE 7-02, CLOSED bldg, not located within 4.50 ft from roof edge, CAT II, EXP B, wind TC DL=5.0 psf, wind BC DL=5.0 psf.

Wind reactions based on MWFRS pressures.

Deflection meets L/240 live and L/180 total load.

The overall height of this truss excluding overhang is 3-10-3.

SPECIAL LOADS
------(LUMBER DUR.FAC.=1.25 / PLATE DUR.FAC.=1.25)

TC - From	62 PLF	at	-2.00	to	62 PLF	at 7.00
TC - From	62 PLF	at	7.67	to	62 PLF	at 14.67
BC - From	20 PLF	at	0.00	to	20 PLF	at 2.29
BC - From	22 PLF	at	2.29	to	22 PLF	at 4.29
BC - From	20 PLF	at	4.29	to	20 PLF	at 10.38
BC - From	22 PLF	at	10.38	to	22 PLF	at 12.38
BC - From	20 PLF	at	12.38	to	20 PLF	at 14.67
TC -	187 LB Conc. Load at		7.06,		7.60	
BC -	717 LB Conc. Load at		7.00,		7.67	

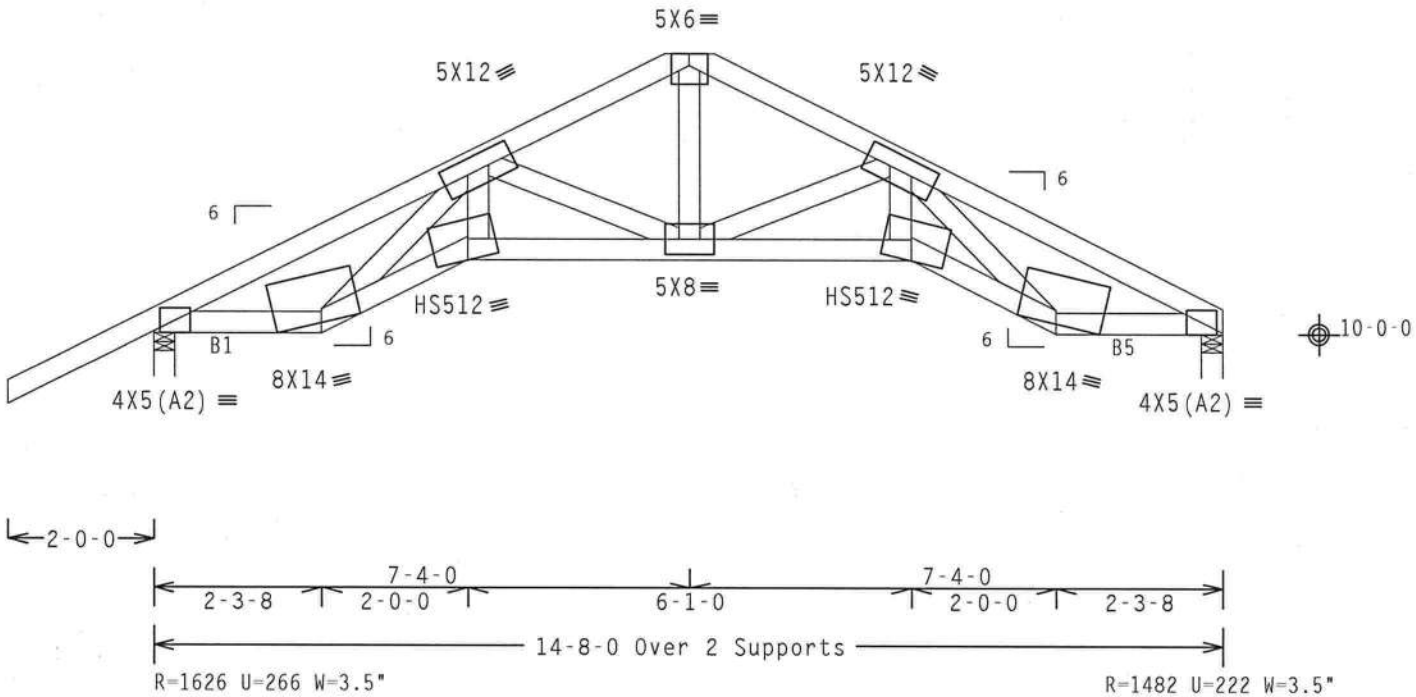

Design Crit: IBC CODE

PLT TYP. 20 Gauge HS,Wave Cq/RT=1.00(1.25)/10(0) 7.38.0810.0 QTY:1 FL/-/5/-/-/R/- Scale =.375"/Ft.

ALPINE

ITW Building Components Group, Inc.
Haines City, FL 33844
FL Certificate of Authorization # 0 278

WARNING TRUSSES REQUIRE EXTREME CARE IN FABRICATION, HANDLING, SHIPPING, INSTALLING AND BRACING. REFER TO BCSI (BUILDING COMPONENT SAFETY INFORMATION), PUBLISHED BY TPI (TRUSS PLATE INSTITUTE, 218 NORTH LEE STREET, SUITE 312, ALEXANDRIA, VA, 22314) AND WTCA (WOOD TRUSS COUNCIL OF AMERICA, 6300 ENTERPRISE LANE, MADISON, WI 53719) FOR SAFETY PRACTICES PRIOR TO PERFORMING THESE FUNCTIONS. UNLESS OTHERWISE INDICATED TOP CHORD SHALL HAVE PROPERLY ATTACHED STRUCTURAL PANELS AND BOTTOM CHORD SHALL HAVE A PROPERLY ATTACHED RIGID CEILING.

IMPORTANTFURNISH A COPY OF THIS DESIGN TO THE INSTALLATION CONTRACTOR. ITW BCG, INC. SHALL NOT BE RESPONSIBLE FOR ANY DEVIATION FROM THIS DESIGN; ANY FAILURE TO BUILD THE TRUSS IN CONFORMANCE WITH TPI; OR FABRICATING, HANDLING, SHIPPING, INSTALLING & BRACING OF TRUSSES.
DESIGN CONFORMS WITH APPLICABLE PROVISIONS OF NDS (NATIONAL DESIGN SPEC, BY AF&PA) AND TPI. ITW BCG CONNECTOR PLATES ARE MADE OF 20/18/16GA (W,H/SS/K) ASTM A653 GRADE 40/60 (W, K/H,SS) GALV. STEEL. APPLY PLATES TO EACH FACE OF TRUSS AND, UNLESS OTHERWISE LOCATED ON THIS DESIGN, POSITION PER DRAWINGS 160A-Z. ANY INSPECTION OF PLATES FOLLOWED BY (1) SHALL BE PER ANNEX A3 OF TPI1-2002 SEC.3. A SEAL ON THIS DRAWING INDICATES ACCEPTANCE OF PROFESSIONAL ENGINEERING RESPONSIBILITY SOLELY FOR THE TRUSS COMPONENT DESIGN SHOWN. THE SUITABILITY AND USE OF THIS COMPONENT FOR ANY BUILDING IS THE RESPONSIBILITY OF THE BUILDING DESIGNER PER ANSI/TPI 1 SEC. 2.

JAMES F. COLLINS JR. LICENSE No. 52212 STATE OF FLORIDA PROFESSIONAL ENGINEER
Nov 30 07

TC LL	20.0 PSF	REF R215-- 17493
TC DL	10.0 PSF	DATE 11/30/07
BC DL	10.0 PSF	DRW HCUSR215 07334112
BC LL	0.0 PSF	HC-ENG RA/WHK
TOT.LD.	40.0 PSF	SEQN- 90271
DUR.FAC.	1.25	FROM LRB
SPACING	24.0"	JREF- 1TCW215_Z02

op chord 2x4 SP #2 N
ot chord 2x4 SP #2 N
Webs 2x4 SP #2 N

eflection meets L/240 live and L/180 total load.

he overall height of this truss excluding overhang is 4-0-3.

110 mph wind, 15.00 ft mean hgt, ASCE 7-02, CLOSED bldg, not located within 4.50 ft from roof edge, CAT II, EXP B, wind TC DL=5.0 psf, wind BC DL=5.0 psf.

Wind reactions based on MWFRS pressures.

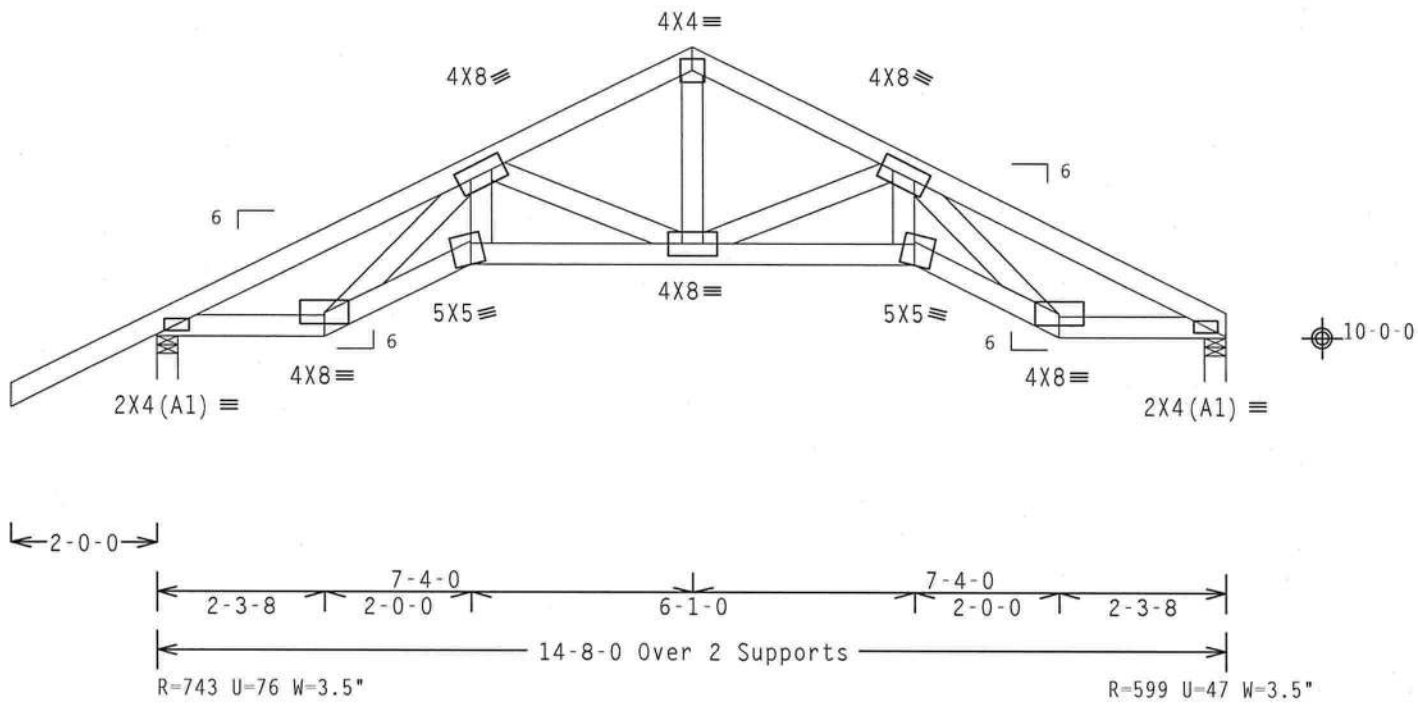

Design Crit: IBC CODE

'LT TYP. Wave Cq/RT=1.00(1.25)/10(0) 7.38.0810.02 QTY:1 FL/-/5/-/-/R/- Scale =.375"/Ft.

ALPINE

TW Building Components Group, Inc.
Haines City, FL 33844
L Certificate of Authorization # 0 278

WARNING TRUSSES REQUIRE EXTREME CARE IN FABRICATION, HANDLING, SHIPPING, INSTALLING AND BRACING. REFER TO BCSI (BUILDING COMPONENT SAFETY INFORMATION), PUBLISHED BY TPI (TRUSS PLATE INSTITUTE, 218 NORTH LEE STREET, SUITE 312, ALEXANDRIA, VA, 22314) AND WTCA (WOOD TRUSS COUNCIL OF AMERICA, 6300 ENTERPRISE LANE, MADISON, WI 53719) FOR SAFETY PRACTICES PRIOR TO PERFORMING THESE FUNCTIONS. UNLESS OTHERWISE INDICATED TOP CHORD SHALL HAVE PROPERLY ATTACHED STRUCTURAL PANELS AND BOTTOM CHORD SHALL HAVE A PROPERLY ATTACHED RIGID CEILING.

IMPORTANTFURNISH A COPY OF THIS DESIGN TO THE INSTALLATION CONTRACTOR. ITW BCG, INC. SHALL NOT BE RESPONSIBLE FOR ANY DEVIATION FROM THIS DESIGN; ANY FAILURE TO BUILD THE TRUSS IN COMFORMANCE WITH TPI; OR FABRICATING, HANDLING, SHIPPING, INSTALLING & BRACING OF TRUSSES.
DESIGN CONFORMS WITH APPLICABLE PROVISIONS OF NDS (NATIONAL DESIGN SPEC, BY AF&PA) AND TPI. ITW BCG CONNECTOR PLATES ARE MADE OF 20/18/16GA (W,H/SS/K) ASTM A653 GRADE 40/60 (W, K/H,SS) GALV. STEEL. APPLY PLATES TO EACH FACE OF TRUSS AND, UNLESS OTHERWISE LOCATED ON THIS DESIGN, POSITION PER DRAWINGS 160A-Z. ANY INSPECTION OF PLATES FOLLOWED BY (1) SHALL BE PER ANNEX A3 OF TPI1-2002 SEC.3. A SEAL ON THIS DRAWING INDICATES ACCEPTANCE OF PROFESSIONAL ENGINEERING RESPONSIBILITY SOLELY FOR THE TRUSS COMPONENT DESIGN SHOWN. THE SUITABILITY AND USE OF THIS COMPONENT FOR ANY BUILDING IS THE RESPONSIBILITY OF THE BUILDING DESIGNER PER ANSI/TPI 1 SEC. 2.

JAMES F. COLLINS, JR. LICENSE No 52212 STATE OF FLORIDA PROFESSIONAL ENGINEER
Nov 30, 2007

TC LL	20.0 PSF	REF	R215-- 17494
TC DL	10.0 PSF	DATE	11/30/07
BC DL	10.0 PSF	DRW	HCUSR215 07334053
BC LL	0.0 PSF	HC-ENG	RA/WHK *
TOT.LD.	40.0 PSF	SEQN-	90165
DUR.FAC.	1.25	FROM	LRB
SPACING	24.0"	JREF-	1TCW215_Z02

Top chord 2x4 SP #2 N
Bot chord 2x4 SP #2 N
Webs 2x4 SP #2 N

Deflection meets L/240 live and L/180 total load.

The overall height of this truss excluding overhang is 4-0-3.

110 mph wind, 15.00 ft mean hgt, ASCE 7-02, CLOSED bldg, not located within 4.50 ft from roof edge, CAT II, EXP B, wind TC DL=5.0 psf, wind BC DL=5.0 psf.

Wind reactions based on MWFRS pressures.

Right end vertical not exposed to wind pressure.

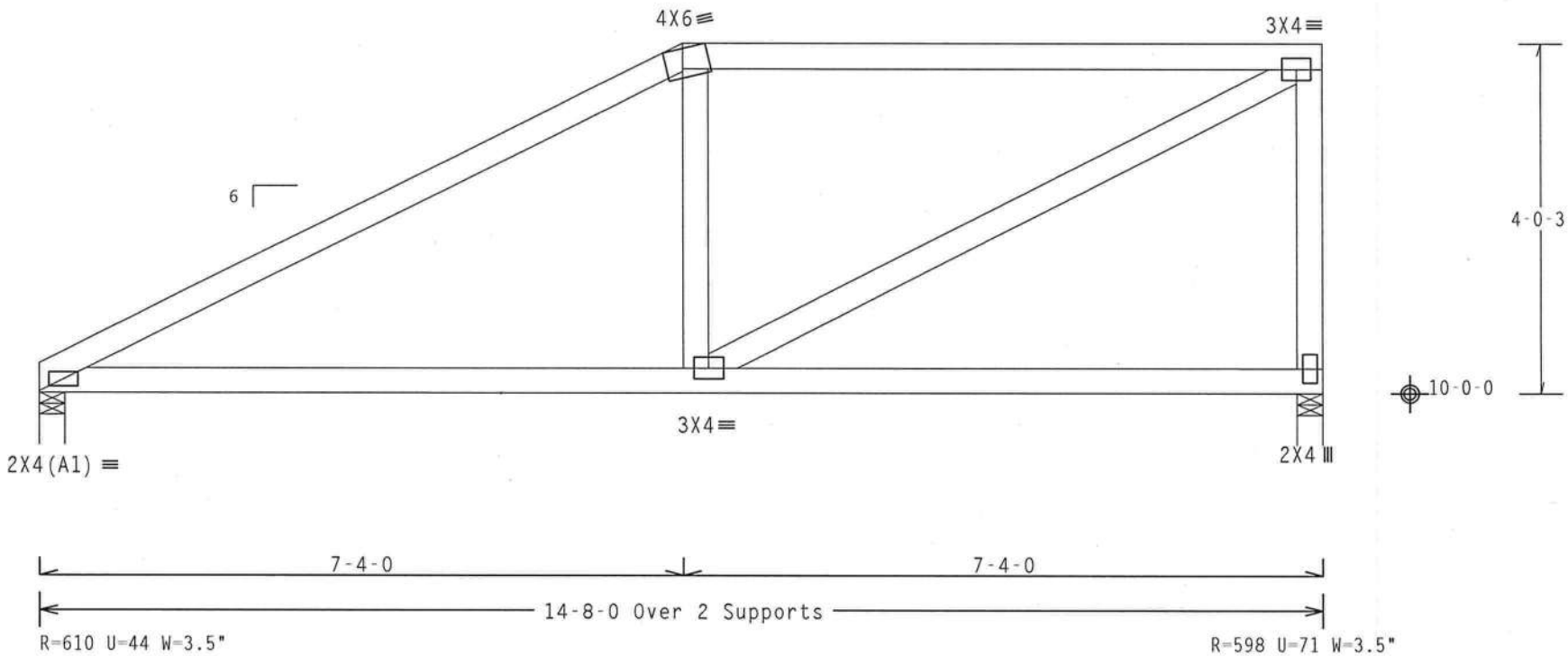

Design Crit: IBC CODE

PLT TYP. Wave Cq/RT=1.00(1.25)/10(0) 7.38.0810 00 QTY:1 FL/-/5/-/-/R/- Scale =.5"/Ft.

ALPINE
ITW Building Components Group, Inc.
Haines City, FL 33844
FL Certificate of Authorization # 0 278

WARNING TRUSSES REQUIRE EXTREME CARE IN FABRICATION, HANDLING, SHIPPING, INSTALLING AND BRACING. REFER TO BCSI (BUILDING COMPONENT SAFETY INFORMATION), PUBLISHED BY TPI (TRUSS PLATE INSTITUTE, 218 NORTH LEE STREET, SUITE 312, ALEXANDRIA, VA, 22314) AND WTCA (WOOD TRUSS COUNCIL OF AMERICA, 6300 ENTERPRISE LANE, MADISON, WI 53719) FOR SAFETY PRACTICES PRIOR TO PERFORMING THESE FUNCTIONS. UNLESS OTHERWISE INDICATED TOP CHORD SHALL HAVE PROPERLY ATTACHED STRUCTURAL PANELS AND BOTTOM CHORD SHALL HAVE A PROPERLY ATTACHED RIGID CEILING.

IMPORTANTFURNISH A COPY OF THIS DESIGN TO THE INSTALLATION CONTRACTOR. ITW BCG, INC. SHALL NOT BE RESPONSIBLE FOR ANY DEVIATION FROM THIS DESIGN; ANY FAILURE TO BUILD THE TRUSS IN COMFORMANCE WITH TPI; OR FABRICATING, HANDLING, SHIPPING, INSTALLING & BRACING OF TRUSSES. DESIGN CONFORMS WITH APPLICABLE PROVISIONS OF NDS (NATIONAL DESIGN SPEC, BY AF&PA) AND TPI. ITW BCG CONNECTOR PLATES ARE MADE OF 20/18/16GA (W,H/SS/K) ASTM A653 GRADE 40/60 (W, K/H,SS) GALV. STEEL. APPLY PLATES TO EACH FACE OF TRUSS AND, UNLESS OTHERWISE LOCATED ON THIS DESIGN, POSITION PER DRAWINGS 160A-Z. ANY INSPECTION OF PLATES FOLLOWED BY (I) SHALL BE PER ANNEX A3 OF TPI1-2002 SEC.3. A SEAL ON THIS DRAWING INDICATES ACCEPTANCE OF PROFESSIONAL ENGINEERING RESPONSIBILITY SOLELY FOR THE TRUSS COMPONENT DESIGN SHOWN. THE SUITABILITY AND USE OF THIS COMPONENT FOR ANY BUILDING IS THE RESPONSIBILITY OF THE BUILDING DESIGNER PER ANSI/TPI 1 SEC. 2.

JAMES F. COLLINS JR. LICENSE No. 52272 STATE OF FLORIDA PROFESSIONAL ENGINEER
Nov 30-07

TC LL	20.0 PSF	REF	R215-- 17495
TC DL	10.0 PSF	DATE	11/30/07
BC DL	10.0 PSF	DRW	HCUSR215 07334054
BC LL	0.0 PSF	HC-ENG	RA/WHK *
TOT.LD.	40.0 PSF	SEQN-	90327
DUR.FAC.	1.25	FROM	LRB
SPACING	24.0"	JREF-	1TCW215_Z02

Top chord 2x4 SP #2 N :T2 2x6 SP #2 N:
Bot chord 2x6 SP SS
Webs 2x4 SP #2 N

SPECIAL LOADS
------(LUMBER DUR.FAC.=1.25 / PLATE DUR.FAC.=1.25)
TC - From 62 PLF at 0.00 to 62 PLF at 7.92
TC - From 62 PLF at 7.92 to 62 PLF at 14.67
BC - From 20 PLF at 0.00 to 20 PLF at 14.67
BC - 1138 LB Conc. Load at 2.06
BC - 1132 LB Conc. Load at 4.06, 6.06, 8.06, 10.06, 12.06
14.06

Wind reactions based on MWFRS pressures.

Deflection meets L/240 live and L/180 total load.

2 COMPLETE TRUSSES REQUIRED

Nailing Schedule: (10d_Box_or_Gun_(0.128"x3",_min.)_nails)
Top Chord: 1 Row @12.00" o.c.
Bot Chord: 2 Rows @ 5.50" o.c. (Each Row)
Webs : 1 Row @ 4" o.c.
Use equal spacing between rows and stagger nails in each row to avoid splitting.

110 mph wind, 15.00 ft mean hgt, ASCE 7-02, CLOSED bldg, not located within 4.50 ft from roof edge, CAT II, EXP B, wind TC DL=5.0 psf, wind BC DL=5.0 psf.

Right end vertical not exposed to wind pressure.

The overall height of this truss excluding overhang is 4-3-11.

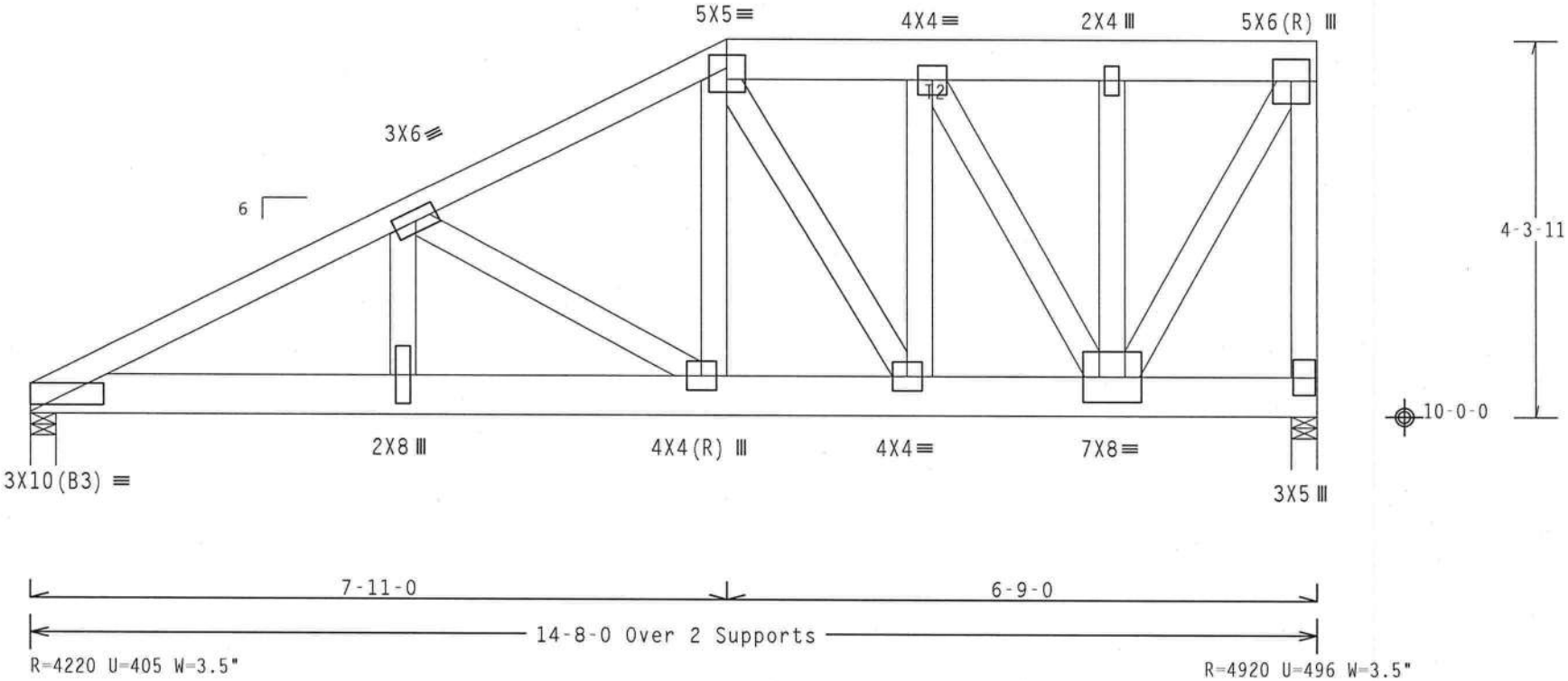

Design Crit: IBC CODE

PLT TYP. Wave Cq/RT=1.00(1.25)/10(0) 7.38.0810 QTY:1 FL/-/5/-/-/R/- Scale =.5"/Ft.

ALPINE
ITW Building Components Group, Inc.
Haines City, FL 33844
FL Certificate of Authorization # 0 278

WARNING TRUSSES REQUIRE EXTREME CARE IN FABRICATION, HANDLING, SHIPPING, INSTALLING AND BRACING. REFER TO BCSI (BUILDING COMPONENT SAFETY INFORMATION), PUBLISHED BY TPI (TRUSS PLATE INSTITUTE, 218 NORTH LEE STREET, SUITE 312, ALEXANDRIA, VA. 22314) AND WTCA (WOOD TRUSS COUNCIL OF AMERICA, 6300 ENTERPRISE LANE, MADISON, WI 53719) FOR SAFETY PRACTICES PRIOR TO PERFORMING THESE FUNCTIONS. UNLESS OTHERWISE INDICATED TOP CHORD SHALL HAVE PROPERLY ATTACHED STRUCTURAL PANELS AND BOTTOM CHORD SHALL HAVE A PROPERLY ATTACHED RIGID CEILING.

IMPORTANTFURNISH A COPY OF THIS DESIGN TO THE INSTALLATION CONTRACTOR. ITW BCG, INC. SHALL NOT BE RESPONSIBLE FOR ANY DEVIATION FROM THIS DESIGN; ANY FAILURE TO BUILD THE TRUSS IN COMFORMANCE WITH TPI; OR FABRICATING, HANDLING, SHIPPING, INSTALLING & BRACING OF TRUSSES.
DESIGN CONFORMS WITH APPLICABLE PROVISIONS OF NDS (NATIONAL DESIGN SPEC. BY AF&PA) AND TPI. ITW BCG CONNECTOR PLATES ARE MADE OF 20/18/16GA (W,H/SS/K) ASTM A653 GRADE 40/60 (W, K/H,SS) GALV. STEEL. APPLY PLATES TO EACH FACE OF TRUSS AND, UNLESS OTHERWISE LOCATED ON THIS DESIGN, POSITION PER DRAWINGS 160A-Z. ANY INSPECTION OF PLATES FOLLOWED BY (1) SHALL BE PER ANNEX A3 OF TPI1-2002 SEC.3. A SEAL ON THIS DRAWING INDICATES ACCEPTANCE OF PROFESSIONAL ENGINEERING RESPONSIBILITY SOLELY FOR THE TRUSS COMPONENT DESIGN SHOWN. THE SUITABILITY AND USE OF THIS COMPONENT FOR ANY BUILDING IS THE RESPONSIBILITY OF THE BUILDING DESIGNER PER ANSI/TPI 1 SEC. 2.

JAMES F. COLLINS, JR. LICENSE No. 52212 STATE OF FLORIDA PROFESSIONAL ENGINEER
Nov 30 07

TC LL	20.0 PSF	REF R215-- 17496
TC DL	10.0 PSF	DATE 11/30/07
BC DL	10.0 PSF	DRW HCUSR215 07334113
BC LL	0.0 PSF	HC-ENG RA/WHK
TOT.LD.	40.0 PSF	SEQN- 90533
DUR.FAC.	1.25	FROM LRB
SPACING	24.0"	JREF- 1TCW215_Z02

Top chord 2x4 SP #2 N :T2 2x6 SP #2 N:
Bot chord 2x6 SP SS
Webs 2x4 SP #2 N

110 mph wind, 15.00 ft mean hgt, ASCE 7-02, CLOSED bldg, not located within 4.50 ft from roof edge, CAT II, EXP B, wind TC DL=5.0 psf, wind BC DL=5.0 psf.

Wind reactions based on MWFRS pressures.

Deflection meets L/240 live and L/180 total load.

SPECIAL LOADS
------(LUMBER DUR.FAC.=1.25 / PLATE DUR.FAC.=1.25)

TC - From	62 PLF at	-0.00 to	62 PLF at	7.00	
TC - From	62 PLF at	7.00 to	62 PLF at	11.33	
TC - From	62 PLF at	11.33 to	62 PLF at	20.33	
BC - From	20 PLF at	0.00 to	20 PLF at	18.33	
TC -	183 LB Conc. Load at	7.06,	9.06,	9.27, 11.27	
BC -	711 LB Conc. Load at	7.00,	11.33		
BC -	78 LB Conc. Load at	9.06,	9.27		

The overall height of this truss excluding overhang is 3-10-3.

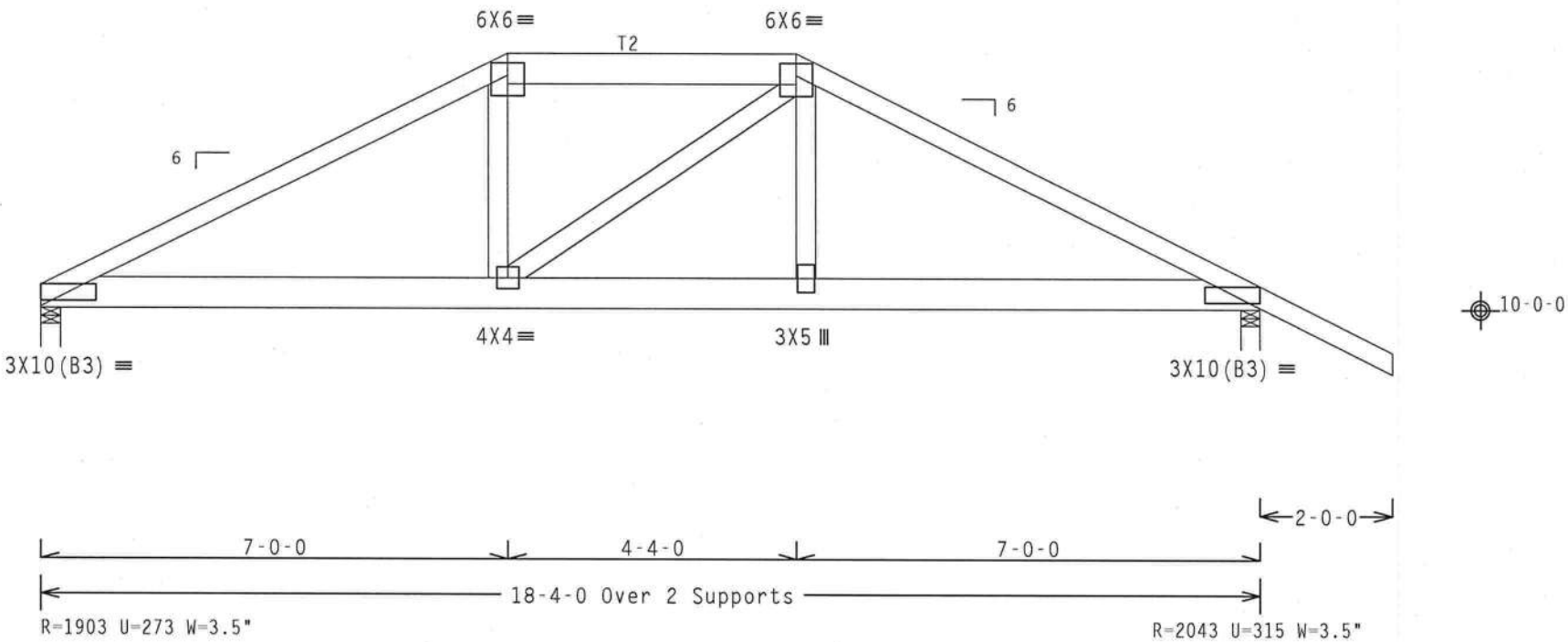

Design Crit: IBC CODE

PLT TYP. Wave Cq/RT=1.00(1.25)/10(0) 7.38.0810.0 QTY:1 FL/-/5/-/-/R/- Scale =.375"/Ft.

ALPINE
ITW Building Components Group, Inc.
Haines City, FL 33844
FL Certificate of Authorization # 0 278

WARNING TRUSSES REQUIRE EXTREME CARE IN FABRICATION, HANDLING, SHIPPING, INSTALLING AND BRACING. REFER TO BCSI (BUILDING COMPONENT SAFETY INFORMATION), PUBLISHED BY TPI (TRUSS PLATE INSTITUTE, 218 NORTH LEE STREET, SUITE 312, ALEXANDRIA, VA, 22314) AND WTCA (WOOD TRUSS COUNCIL OF AMERICA, 6300 ENTERPRISE LANE, MADISON, WI 53719) FOR SAFETY PRACTICES PRIOR TO PERFORMING THESE FUNCTIONS. UNLESS OTHERWISE INDICATED TOP CHORD SHALL HAVE PROPERLY ATTACHED STRUCTURAL PANELS AND BOTTOM CHORD SHALL HAVE A PROPERLY ATTACHED RIGID CEILING.

IMPORTANTFURNISH A COPY OF THIS DESIGN TO THE INSTALLATION CONTRACTOR. ITW BCG, INC. SHALL NOT BE RESPONSIBLE FOR ANY DEVIATION FROM THIS DESIGN; ANY FAILURE TO BUILD THE TRUSS IN COMFORMANCE WITH TPI; OR FABRICATING, HANDLING, SHIPPING, INSTALLING & BRACING OF TRUSSES.
DESIGN CONFORMS WITH APPLICABLE PROVISIONS OF NDS (NATIONAL DESIGN SPEC, BY AF&PA) AND TPI. ITW BCG CONNECTOR PLATES ARE MADE OF 20/18/16GA (W,H/SS/K) ASTM A653 GRADE 40/60 (W, K/H,SS) GALV. STEEL. APPLY PLATES TO EACH FACE OF TRUSS AND, UNLESS OTHERWISE LOCATED ON THIS DESIGN, POSITION PER DRAWINGS 160A-Z. ANY INSPECTION OF PLATES FOLLOWED BY (1) SHALL BE PER ANNEX A3 OF TPI1-2002 SEC.3. A SEAL ON THIS DRAWING INDICATES ACCEPTANCE OF PROFESSIONAL ENGINEERING RESPONSIBILITY SOLELY FOR THE TRUSS COMPONENT DESIGN SHOWN. THE SUITABILITY AND USE OF THIS COMPONENT FOR ANY BUILDING IS THE RESPONSIBILITY OF THE BUILDING DESIGNER PER ANSI/TPI 1 SEC. 2.

JAMES F. COLLINS, JR. LICENSE No. 52217 STATE OF FLORIDA PROFESSIONAL ENGINEER
Nov 30 07

TC LL	20.0 PSF	REF R215-- 17497
TC DL	10.0 PSF	DATE 11/30/07
BC DL	10.0 PSF	DRW HCUSR215 07334114
BC LL	0.0 PSF	HC-ENG RA/WHK
TOT.LD.	40.0 PSF	SEQN- 90501
DUR.FAC.	1.25	FROM LRB
SPACING	24.0"	JREF- 1TCW215_Z02

5074-/DERKSEN RESIDENCE /ERIN JOHNSON CONSTRUCTION -- , ** - A28)

op chord 2x4 SP #2 N
ot chord 2x4 SP #2 N
Webs 2x4 SP #2 N

eflection meets L/240 live and L/180 total load.

he overall height of this truss excluding overhang is 4-10-3.

110 mph wind, 15.00 ft mean hgt, ASCE 7-02, CLOSED bldg, not located within 4.50 ft from roof edge, CAT II, EXP B, wind TC DL=5.0 psf, wind BC DL=5.0 psf.

Wind reactions based on MWFRS pressures.

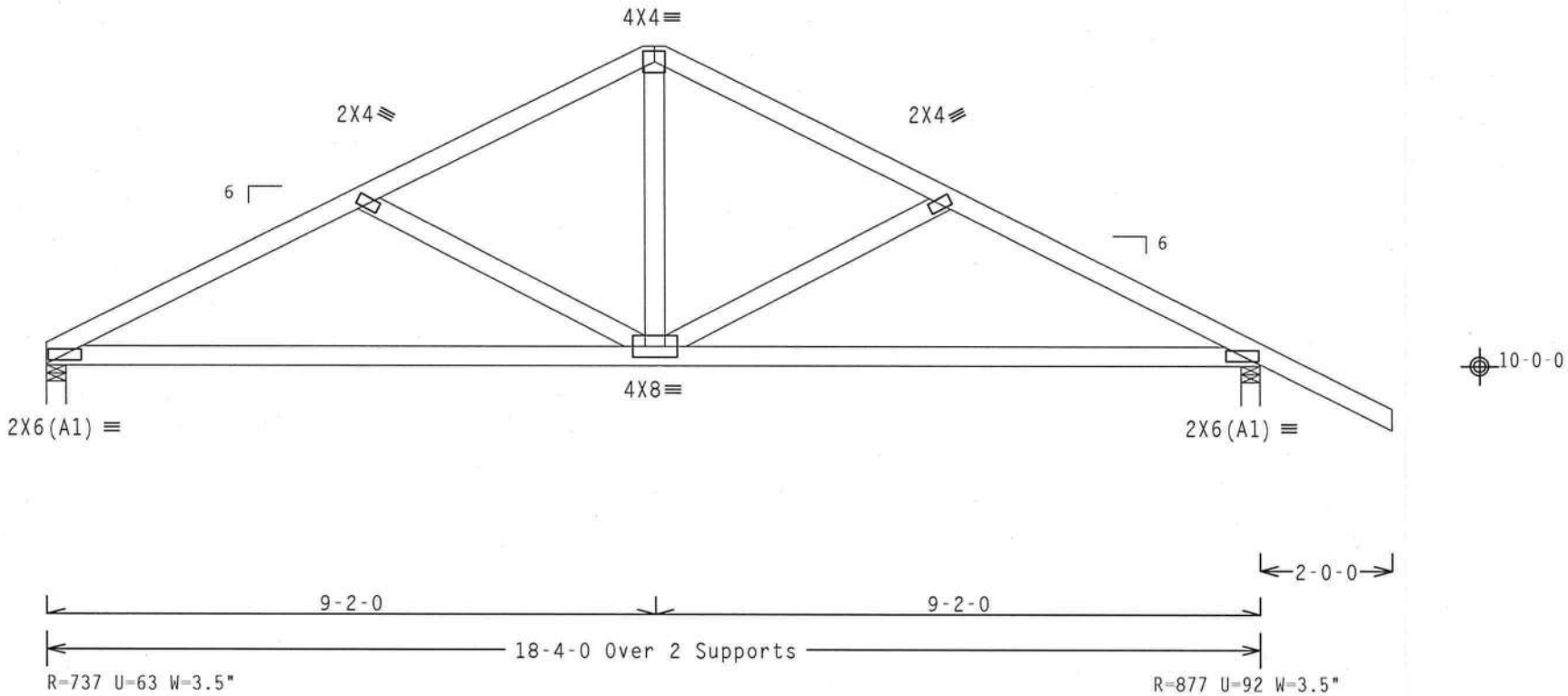

Design Crit: IBC CODE

PLT TYP. Wave Cq/RT=1.00(1.25)/10(0) 7.38.0810 0 QTY:1 FL/-/5/-/-/R/- Scale =.375"/Ft.

ALPINE

TW Building Components Group, Inc.
Haines City, FL 33844
L Certificate of Authorization # 0 278

WARNING TRUSSES REQUIRE EXTREME CARE IN FABRICATION, HANDLING, SHIPPING, INSTALLING AND BRACING. REFER TO BCSI (BUILDING COMPONENT SAFETY INFORMATION), PUBLISHED BY TPI (TRUSS PLATE INSTITUTE, 218 NORTH LEE STREET, SUITE 312, ALEXANDRIA, VA, 22314) AND WTCA (WOOD TRUSS COUNCIL OF AMERICA, 6300 ENTERPRISE LANE, MADISON, WI 53719) FOR SAFETY PRACTICES PRIOR TO PERFORMING THESE FUNCTIONS. UNLESS OTHERWISE INDICATED TOP CHORD SHALL HAVE PROPERLY ATTACHED STRUCTURAL PANELS AND BOTTOM CHORD SHALL HAVE A PROPERLY ATTACHED RIGID CEILING.

IMPORTANT FURNISH A COPY OF THIS DESIGN TO THE INSTALLATION CONTRACTOR. ITW BCG, INC. SHALL NOT BE RESPONSIBLE FOR ANY DEVIATION FROM THIS DESIGN; ANY FAILURE TO BUILD THE TRUSS IN CONFORMANCE WITH TPI; OR FABRICATING, HANDLING, SHIPPING, INSTALLING & BRACING OF TRUSSES.
DESIGN CONFORMS WITH APPLICABLE PROVISIONS OF NDS (NATIONAL DESIGN SPEC, BY AF&PA) AND TPI. ITW BCG CONNECTOR PLATES ARE MADE OF 20/18/16GA (W,H/SS/K) ASTM A653 GRADE 40/60 (W, K/H,SS) GALV. STEEL. APPLY PLATES TO EACH FACE OF TRUSS AND, UNLESS OTHERWISE LOCATED ON THIS DESIGN, POSITION PER DRAWINGS 160A-Z. ANY INSPECTION OF PLATES FOLLOWED BY (1) SHALL BE PER ANNEX A3 OF TPI1-2002 SEC.3. A SEAL ON THIS DRAWING INDICATES ACCEPTANCE OF PROFESSIONAL ENGINEERING RESPONSIBILITY SOLELY FOR THE TRUSS COMPONENT DESIGN SHOWN. THE SUITABILITY AND USE OF THIS COMPONENT FOR ANY BUILDING IS THE RESPONSIBILITY OF THE BUILDING DESIGNER PER ANSI/TPI 1 SEC. 2.

JAMES F. COLLINS JR. LICENSE No 52212 STATE OF FLORIDA PROFESSIONAL ENGINEER
Nov 30, 2007

TC LL	20.0 PSF	REF R215-- 17498
TC DL	10.0 PSF	DATE 11/30/07
BC DL	10.0 PSF	DRW HCUSR215 07334055
BC LL	0.0 PSF	HC-ENG RA/WHK *
TOT.LD.	40.0 PSF	SEQN- 90180
DUR.FAC.	1.25	FROM LRB
SPACING	24.0"	JREF- 1TCW215_Z02

Top chord 2x4 SP #2 N
Bot chord 2x4 SP #2 N
Webs 2x4 SP #2 N

Deflection meets L/240 live and L/180 total load.

The overall height of this truss excluding overhang is 4-11-3.

110 mph wind, 15.00 ft mean hgt, ASCE 7-02, CLOSED bldg, not located within 4.50 ft from roof edge, CAT II, EXP B, wind TC DL=5.0 psf, wind BC DL=5.0 psf.

Wind reactions based on MWFRS pressures.

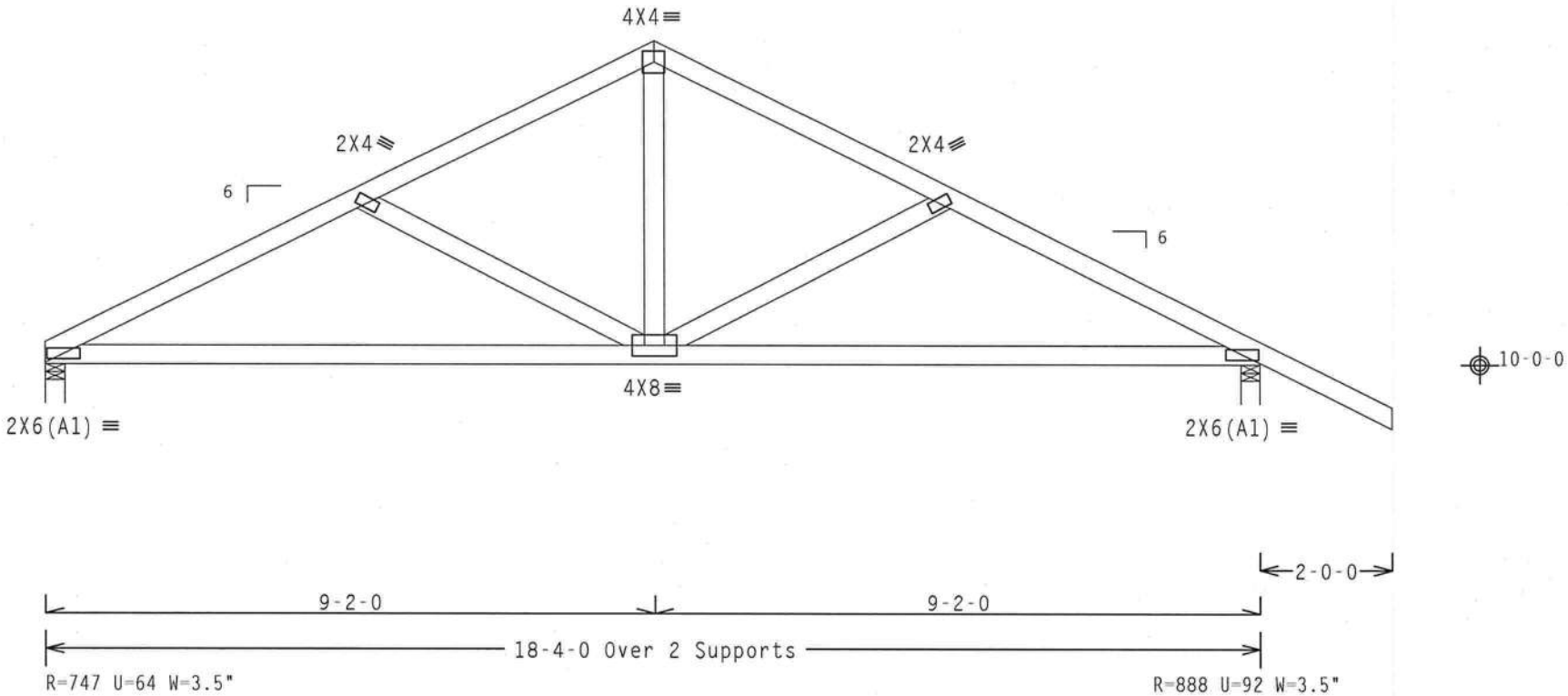

Design Crit: IBC CODE

PLT TYP. Wave Cq/RT=1.00(1.25)/10(0) 7.38.0810 QTY:1 FL/-/5/-/-/R/- Scale =.375"/Ft.

ALPINE

ITW Building Components Group, Inc.
Haines City, FL 33844
FL Certificate of Authorization # 0 278

WARNING TRUSSES REQUIRE EXTREME CARE IN FABRICATION, HANDLING, SHIPPING, INSTALLING AND BRACING. REFER TO BCSI (BUILDING COMPONENT SAFETY INFORMATION), PUBLISHED BY TPI (TRUSS PLATE INSTITUTE, 218 NORTH LEE STREET, SUITE 312, ALEXANDRIA, VA. 22314) AND WTCA (WOOD TRUSS COUNCIL OF AMERICA, 6300 ENTERPRISE LANE, MADISON, WI 53719) FOR SAFETY PRACTICES PRIOR TO PERFORMING THESE FUNCTIONS. UNLESS OTHERWISE INDICATED TOP CHORD SHALL HAVE PROPERLY ATTACHED STRUCTURAL PANELS AND BOTTOM CHORD SHALL HAVE A PROPERLY ATTACHED RIGID CEILING.

IMPORTANTFURNISH A COPY OF THIS DESIGN TO THE INSTALLATION CONTRACTOR. ITW BCG, INC. SHALL NOT BE RESPONSIBLE FOR ANY DEVIATION FROM THIS DESIGN; ANY FAILURE TO BUILD THE TRUSS IN CONFORMANCE WITH TPI; OR FABRICATING, HANDLING, SHIPPING, INSTALLING & BRACING OF TRUSSES.
DESIGN CONFORMS WITH APPLICABLE PROVISIONS OF NDS (NATIONAL DESIGN SPEC, BY AF&PA) AND TPI. ITW BCG CONNECTOR PLATES ARE MADE OF 20/18/16GA (W,H/SS/K) ASTM A653 GRADE 40/60 (W, K/H,SS) GALV. STEEL. APPLY PLATES TO EACH FACE OF TRUSS AND, UNLESS OTHERWISE LOCATED ON THIS DESIGN, POSITION PER DRAWINGS 160A-Z. ANY INSPECTION OF PLATES FOLLOWED BY (1) SHALL BE PER ANNEX A3 OF TPI1-2002 SEC.3. A SEAL ON THIS DRAWING INDICATES ACCEPTANCE OF PROFESSIONAL ENGINEERING RESPONSIBILITY SOLELY FOR THE TRUSS COMPONENT DESIGN SHOWN. THE SUITABILITY AND USE OF THIS COMPONENT FOR ANY BUILDING IS THE RESPONSIBILITY OF THE BUILDING DESIGNER PER ANSI/TPI 1 SEC. 2.

JAMES F. COLLINS, JR. LICENSED No. 52212 STATE OF FLORIDA PROFESSIONAL ENGINEER
Nov 30 07

TC LL	20.0 PSF	REF R215-- 17499
TC DL	10.0 PSF	DATE 11/30/07
BC DL	10.0 PSF	DRW HCUSR215 07334056
BC LL	0.0 PSF	HC-ENG RA/WHK *
TOT.LD.	40.0 PSF	SEQN- 90182
DUR.FAC.	1.25	FROM LRB
SPACING	24.0"	JREF- 1TCW215_Z02

Top chord 2x4 SP #2 N
Bot chord 2x4 SP #2 N
Webs 2x4 SP #2 N

Left end vertical not exposed to wind pressure.

Deflection meets L/240 live and L/180 total load.

110 mph wind, 15.00 ft mean hgt, ASCE 7-02, CLOSED bldg, not located within 4.50 ft from roof edge, CAT II, EXP B, wind TC DL=5.0 psf, wind BC DL=5.0 psf.

Wind reactions based on MWFRS pressures.

The overall height of this truss excluding overhang is 5-0-3.

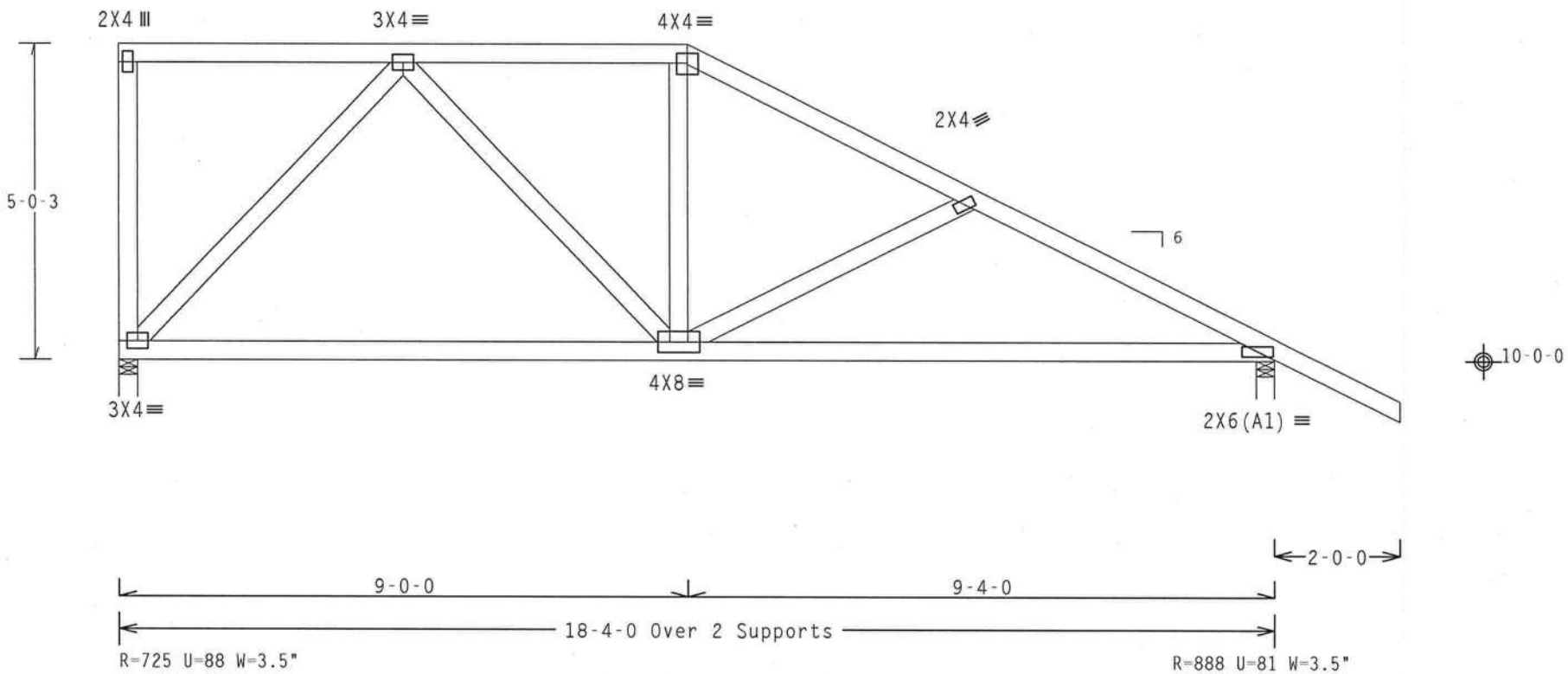

Design Crit: IBC CODE

PLT TYP. Wave Cq/RT=1.00(1.25)/10(0) 7.38.0810.03 QTY:1 FL/-/5/-/-/R/- Scale =.375"/Ft.

ALPINE

ITW Building Components Group, Inc.
Haines City, FL 33844
FL Certificate of Authorization # 0 278

WARNING TRUSSES REQUIRE EXTREME CARE IN FABRICATION, HANDLING, SHIPPING, INSTALLING AND BRACING. REFER TO BCSI (BUILDING COMPONENT SAFETY INFORMATION), PUBLISHED BY TPI (TRUSS PLATE INSTITUTE, 218 NORTH LEE STREET, SUITE 312, ALEXANDRIA, VA, 22314) AND WTCA (WOOD TRUSS COUNCIL OF AMERICA, 6300 ENTERPRISE LANE, MADISON, WI 53719) FOR SAFETY PRACTICES PRIOR TO PERFORMING THESE FUNCTIONS. UNLESS OTHERWISE INDICATED TOP CHORD SHALL HAVE PROPERLY ATTACHED STRUCTURAL PANELS AND BOTTOM CHORD SHALL HAVE A PROPERLY ATTACHED RIGID CEILING.

IMPORTANTFURNISH A COPY OF THIS DESIGN TO THE INSTALLATION CONTRACTOR. ITW BCG, INC. SHALL NOT BE RESPONSIBLE FOR ANY DEVIATION FROM THIS DESIGN; ANY FAILURE TO BUILD THE TRUSS IN COMFORMANCE WITH TPI; OR FABRICATING, HANDLING, SHIPPING, INSTALLING & BRACING OF TRUSSES.
DESIGN CONFORMS WITH APPLICABLE PROVISIONS OF NDS (NATIONAL DESIGN SPEC. BY AF&PA) AND TPI. ITW BCG CONNECTOR PLATES ARE MADE OF 20/18/16GA (W,H/SS/K) ASTM A653 GRADE 40/60 (W, K/H,SS) GALV. STEEL. APPLY PLATES TO EACH FACE OF TRUSS AND, UNLESS OTHERWISE LOCATED ON THIS DESIGN, POSITION PER DRAWINGS 160A-Z. ANY INSPECTION OF PLATES FOLLOWED BY (I) SHALL BE PER ANNEX A3 OF TPI1-2002 SEC.3. A SEAL ON THIS DRAWING INDICATES ACCEPTANCE OF PROFESSIONAL ENGINEERING RESPONSIBILITY SOLELY FOR THE TRUSS COMPONENT DESIGN SHOWN. THE SUITABILITY AND USE OF THIS COMPONENT FOR ANY BUILDING IS THE RESPONSIBILITY OF THE BUILDING DESIGNER PER ANSI/TPI 1 SEC. 2.

JAMES F. COLLINS, JR. LICENSED No. 52212 STATE OF FLORIDA PROFESSIONAL ENGINEER
Nov

TC LL	20.0 PSF	REF	R215-- 17500
TC DL	10.0 PSF	DATE	11/30/07
BC DL	10.0 PSF	DRW	HCUSR215 07334057
BC LL	0.0 PSF	HC-ENG	RA/WHK *
TOT.LD.	40.0 PSF	SEQN-	90513
DUR.FAC.	1.25	FROM	LRB
SPACING	24.0"	JREF-	1TCW215_Z02

Top chord 2x6 SP #2 N :T2 2x4 SP #2 N:
Bot chord 2x6 SP SS
Webs 2x4 SP #2 N

SPECIAL LOADS
------(LUMBER DUR.FAC.=1.25 / PLATE DUR.FAC.=1.25)
TC - From 60 PLF at 0.00 to 60 PLF at 8.25
TC - From 62 PLF at 8.25 to 62 PLF at 20.33
BC - From 20 PLF at 0.00 to 20 PLF at 18.33
BC - 1511 LB Conc. Load at 7.27
BC - 553 LB Conc. Load at 9.27
BC - 1627 LB Conc. Load at 11.27

Wind reactions based on MWFRS pressures.

Left end vertical not exposed to wind pressure.

2 COMPLETE TRUSSES REQUIRED

Nailing Schedule: (10d_Box_or_Gun_(0.128"x3",_min.)_nails)
Top Chord: 1 Row @12.00" o.c.
Bot Chord: 1 Row @ 7.25" o.c.
Webs : 1 Row @ 4" o.c.
Use equal spacing between rows and stagger nails in each row to avoid splitting.

110 mph wind, 15.00 ft mean hgt, ASCE 7-02, CLOSED bldg, not located within 4.50 ft from roof edge, CAT II, EXP B, wind TC DL=5.0 psf, wind BC DL=5.0 psf.

Deflection meets L/240 live and L/180 total load.

The overall height of this truss excluding overhang is 5-4-11.

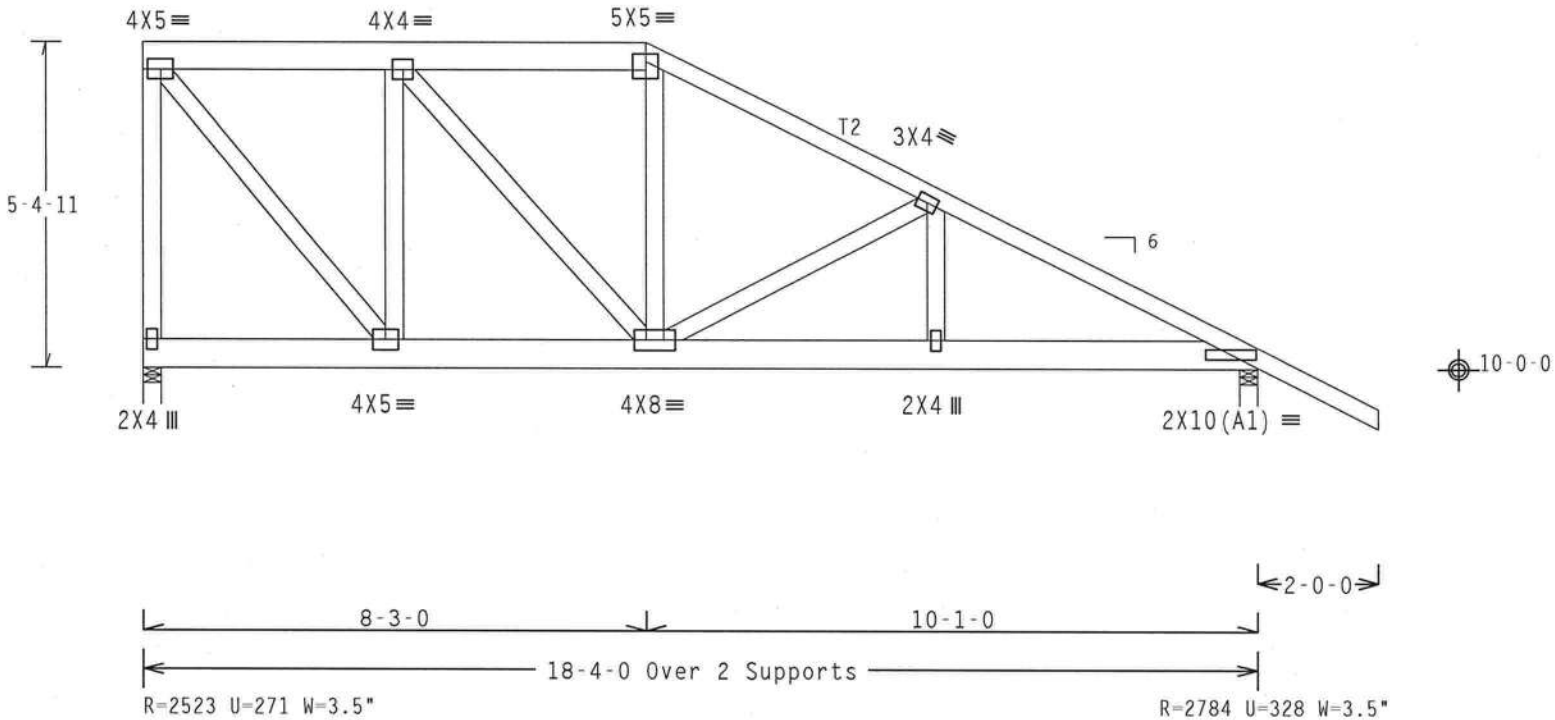

Design Crit: IBC CODE

PLT TYP. Wave Cq/RT=1.00(1.25)/10(0) 7.38.0810 QTY:1 FL/-/5/-/-/R/- Scale =.3125"/Ft.

ALPINE
ITW Building Components Group, Inc.
Haines City, FL 33844
FL Certificate of Authorization # 0 278

WARNING TRUSSES REQUIRE EXTREME CARE IN FABRICATION, HANDLING, SHIPPING, INSTALLING AND BRACING. REFER TO BCSI (BUILDING COMPONENT SAFETY INFORMATION), PUBLISHED BY TPI (TRUSS PLATE INSTITUTE, 218 NORTH LEE STREET, SUITE 312, ALEXANDRIA, VA, 22314) AND WTCA (WOOD TRUSS COUNCIL OF AMERICA, 6300 ENTERPRISE LANE, MADISON, WI 53719) FOR SAFETY PRACTICES PRIOR TO PERFORMING THESE FUNCTIONS. UNLESS OTHERWISE INDICATED TOP CHORD SHALL HAVE PROPERLY ATTACHED STRUCTURAL PANELS AND BOTTOM CHORD SHALL HAVE A PROPERLY ATTACHED RIGID CEILING.

IMPORTANTFURNISH A COPY OF THIS DESIGN TO THE INSTALLATION CONTRACTOR. ITW BCG, INC. SHALL NOT BE RESPONSIBLE FOR ANY DEVIATION FROM THIS DESIGN; ANY FAILURE TO BUILD THE TRUSS IN CONFORMANCE WITH TPI; OR FABRICATING, HANDLING, SHIPPING, INSTALLING & BRACING OF TRUSSES. DESIGN CONFORMS WITH APPLICABLE PROVISIONS OF NDS (NATIONAL DESIGN SPEC. BY AF&PA) AND TPI. ITW BCG CONNECTOR PLATES ARE MADE OF 20/18/16GA (W,H/SS/K) ASTM A653 GRADE 40/60 (W, K/H,SS) GALV. STEEL. APPLY PLATES TO EACH FACE OF TRUSS AND, UNLESS OTHERWISE LOCATED ON THIS DESIGN, POSITION PER DRAWINGS 160A-Z. ANY INSPECTION OF PLATES FOLLOWED BY (I) SHALL BE PER ANNEX A3 OF TPI1-2002 SEC.3. A SEAL ON THIS DRAWING INDICATES ACCEPTANCE OF PROFESSIONAL ENGINEERING RESPONSIBILITY SOLELY FOR THE TRUSS COMPONENT DESIGN SHOWN. THE SUITABILITY AND USE OF THIS COMPONENT FOR ANY BUILDING IS THE RESPONSIBILITY OF THE BUILDING DESIGNER PER ANSI/TPI 1 SEC. 2.

JAMES F. COLLINS, JR. LICENSE No. 52212 STATE OF FLORIDA PROFESSIONAL ENGINEER
Nov 30 07

TC LL	20.0 PSF	REF	R215-- 17501
TC DL	10.0 PSF	DATE	11/30/07
BC DL	10.0 PSF	DRW	HCUSR215 07334120
BC LL	0.0 PSF	HC-ENG	RA/WHK
TOT.LD.	40.0 PSF	SEQN-	90526
DUR.FAC.	1.25	FROM	LRB
SPACING	24.0"	JREF-	1TCW215_Z02

Top chord 2x4 SP #2 N
Bot chord 2x4 SP #2 N
Webs 2x4 SP #2 N

End verticals not exposed to wind pressure.

Deflection meets L/240 live and L/180 total load.

The overall height of this truss excluding overhang is 3-1-4.

110 mph wind, 15.00 ft mean hgt, ASCE 7-02, CLOSED bldg, Located anywhere in roof, CAT II, EXP B, wind TC DL=5.0 psf, wind BC DL=5.0 psf.

Wind reactions based on MWFRS pressures.

Fasten rated sheathing to one face of this frame.

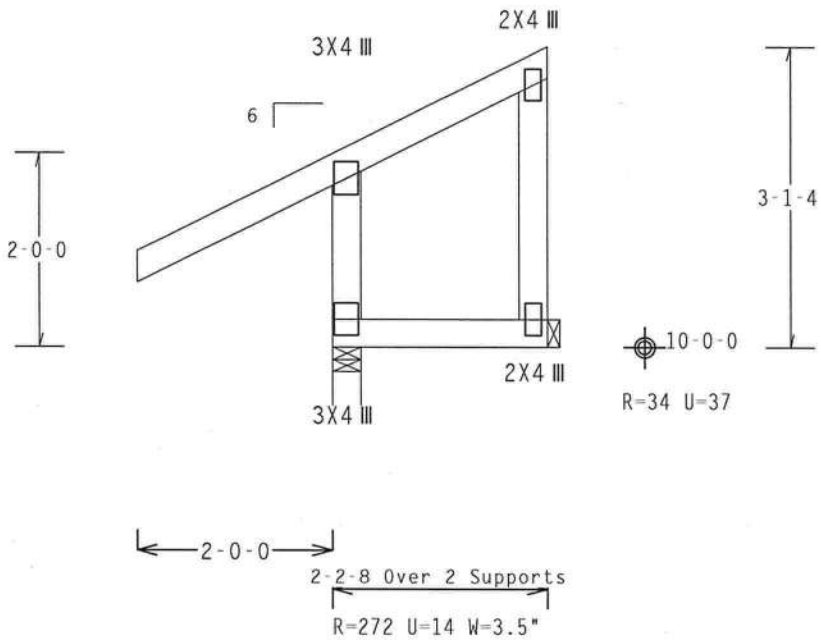

Design Crit: IBC CODE

PLT TYP. Wave Cq/RT=1.00(1.25)/10(0) 7.38.0810 QTY:1 FL/-/5/-/-/R/- Scale =.5"/Ft.

ALPINE

ITW Building Components Group, Inc.
Haines City, FL 33844
FL Certificate of Authorization # 0 278

WARNING TRUSSES REQUIRE EXTREME CARE IN FABRICATION, HANDLING, SHIPPING, INSTALLING AND BRACING. REFER TO BCSI (BUILDING COMPONENT SAFETY INFORMATION), PUBLISHED BY TPI (TRUSS PLATE INSTITUTE, 218 NORTH LEE STREET, SUITE 312, ALEXANDRIA, VA. 22314) AND WTCA (WOOD TRUSS COUNCIL OF AMERICA, 6300 ENTERPRISE LANE, MADISON, WI 53719) FOR SAFETY PRACTICES PRIOR TO PERFORMING THESE FUNCTIONS. UNLESS OTHERWISE INDICATED TOP CHORD SHALL HAVE PROPERLY ATTACHED STRUCTURAL PANELS AND BOTTOM CHORD SHALL HAVE A PROPERLY ATTACHED RIGID CEILING.

IMPORTANTFURNISH A COPY OF THIS DESIGN TO THE INSTALLATION CONTRACTOR. ITW BCG, INC. SHALL NOT BE RESPONSIBLE FOR ANY DEVIATION FROM THIS DESIGN; ANY FAILURE TO BUILD THE TRUSS IN CONFORMANCE WITH TPI; OR FABRICATING, HANDLING, SHIPPING, INSTALLING & BRACING OF TRUSSES. DESIGN CONFORMS WITH APPLICABLE PROVISIONS OF NDS (NATIONAL DESIGN SPEC. BY AF&PA) AND TPI. ITW BCG CONNECTOR PLATES ARE MADE OF 20/18/16GA (W,H/SS/K) ASTM A653 GRADE 40/60 (W, K/H,SS) GALV. STEEL. APPLY PLATES TO EACH FACE OF TRUSS AND, UNLESS OTHERWISE LOCATED ON THIS DESIGN, POSITION PER DRAWINGS 160A-Z. ANY INSPECTION OF PLATES FOLLOWED BY (1) SHALL BE PER ANNEX A3 OF TPI1-2002 SEC.3. A SEAL ON THIS DRAWING INDICATES ACCEPTANCE OF PROFESSIONAL ENGINEERING RESPONSIBILITY SOLELY FOR THE TRUSS COMPONENT DESIGN SHOWN. THE SUITABILITY AND USE OF THIS COMPONENT FOR ANY BUILDING IS THE RESPONSIBILITY OF THE BUILDING DESIGNER PER ANSI/TPI 1 SEC. 2.

JAMES F. COLLINS, JR. LICENSE No. 52212 STATE OF FLORIDA PROFESSIONAL ENGINEER
Nov 30 07

TC LL	20.0 PSF	REF R215-- 17502
TC DL	10.0 PSF	DATE 11/30/07
BC DL	10.0 PSF	DRW HCUSR215 07334080
BC LL	0.0 PSF	HC-ENG RA/WHK
TOT.LD.	40.0 PSF	SEQN- 90485
DUR.FAC.	1.25	FROM LRB
SPACING	24.0"	JREF- 1TCW215_Z02

Top chord 2x4 SP #2 N
Bot chord 2x4 SP #2 N
Webs 2x4 SP #2 N

Deflection meets L/240 live and L/180 total load.

The overall height of this truss excluding overhang is 6-9-7.

110 mph wind, 15.00 ft mean hgt, ASCE 7-02, CLOSED bldg, not located within 4.50 ft from roof edge, CAT II, EXP B, wind TC DL=5.0 psf, wind BC DL=5.0 psf.

Wind reactions based on MWFRS pressures.

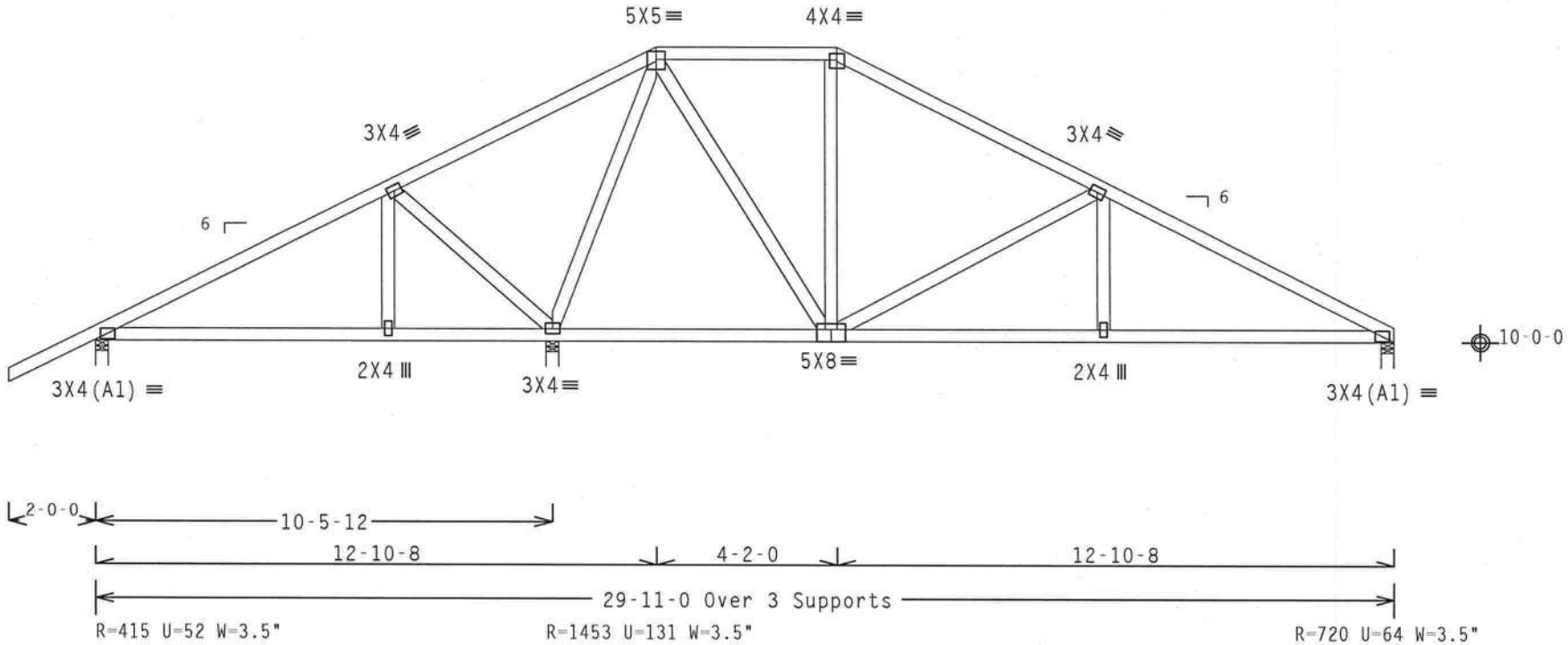

Design Crit: IBC CODE

PLT TYP. Wave Cq/RT=1.00(1.25)/10(0) 7.38.0810.0 QTY:1 FL/-/5/-/-/R/- Scale =.25"/Ft.

ALPINE

ITW Building Components Group, Inc.
Haines City, FL 33844
FL Certificate of Authorization # 0 278

WARNING TRUSSES REQUIRE EXTREME CARE IN FABRICATION, HANDLING, SHIPPING, INSTALLING AND BRACING. REFER TO BCSI (BUILDING COMPONENT SAFETY INFORMATION), PUBLISHED BY TPI (TRUSS PLATE INSTITUTE, 218 NORTH LEE STREET, SUITE 312, ALEXANDRIA, VA, 22314) AND WTCA (WOOD TRUSS COUNCIL OF AMERICA, 6300 ENTERPRISE LANE, MADISON, WI 53719) FOR SAFETY PRACTICES PRIOR TO PERFORMING THESE FUNCTIONS. UNLESS OTHERWISE INDICATED TOP CHORD SHALL HAVE PROPERLY ATTACHED STRUCTURAL PANELS AND BOTTOM CHORD SHALL HAVE A PROPERLY ATTACHED RIGID CEILING.

IMPORTANTFURNISH A COPY OF THIS DESIGN TO THE INSTALLATION CONTRACTOR. ITW BCG, INC. SHALL NOT BE RESPONSIBLE FOR ANY DEVIATION FROM THIS DESIGN; ANY FAILURE TO BUILD THE TRUSS IN COMFORMANCE WITH TPI; OR FABRICATING, HANDLING, SHIPPING, INSTALLING & BRACING OF TRUSSES. DESIGN CONFORMS WITH APPLICABLE PROVISIONS OF NDS (NATIONAL DESIGN SPEC, BY AF&PA) AND TPI. ITW BCG CONNECTOR PLATES ARE MADE OF 20/18/16GA (W,H/SS/K) ASTM A653 GRADE 40/60 (W, K/H,SS) GALV. STEEL. APPLY PLATES TO EACH FACE OF TRUSS AND, UNLESS OTHERWISE LOCATED ON THIS DESIGN, POSITION PER DRAWINGS 160A-Z. ANY INSPECTION OF PLATES FOLLOWED BY (1) SHALL BE PER ANNEX A3 OF TPI1-2002 SEC.3. A SEAL ON THIS DRAWING INDICATES ACCEPTANCE OF PROFESSIONAL ENGINEERING RESPONSIBILITY SOLELY FOR THE TRUSS COMPONENT DESIGN SHOWN. THE SUITABILITY AND USE OF THIS COMPONENT FOR ANY BUILDING IS THE RESPONSIBILITY OF THE BUILDING DESIGNER PER ANSI/TPI 1 SEC. 2.

JAMES F. COLLINS, JR. LICENSED No. 52212 STATE OF FLORIDA PROFESSIONAL ENGINEER
Nov 30 07

TC LL	20.0 PSF	REF	R215-- 17503
TC DL	10.0 PSF	DATE	11/30/07
BC DL	10.0 PSF	DRW	HCUSR215 07334081
BC LL	0.0 PSF	HC-ENG	RA/WHK
TOT.LD.	40.0 PSF	SEQN-	90220
DUR.FAC.	1.25	FROM	LRB
SPACING	24.0"	JREF-	1TCW215_Z02

Top chord 2x4 SP #2 N :T3 2x6 SP #2 N:
Bot chord 2x4 SP #2 N :B3 2x6 SP #2 N:
Webs 2x4 SP #2 N

Deflection meets L/240 live and L/180 total load.

The overall height of this truss excluding overhang is 7-9-7.

110 mph wind, 15.00 ft mean hgt, ASCE 7-02, CLOSED bldg, not located within 4.50 ft from roof edge, CAT II, EXP B, wind TC DL=5.0 psf, wind BC DL=5.0 psf.

Wind reactions based on MWFRS pressures.

Right end vertical not exposed to wind pressure.

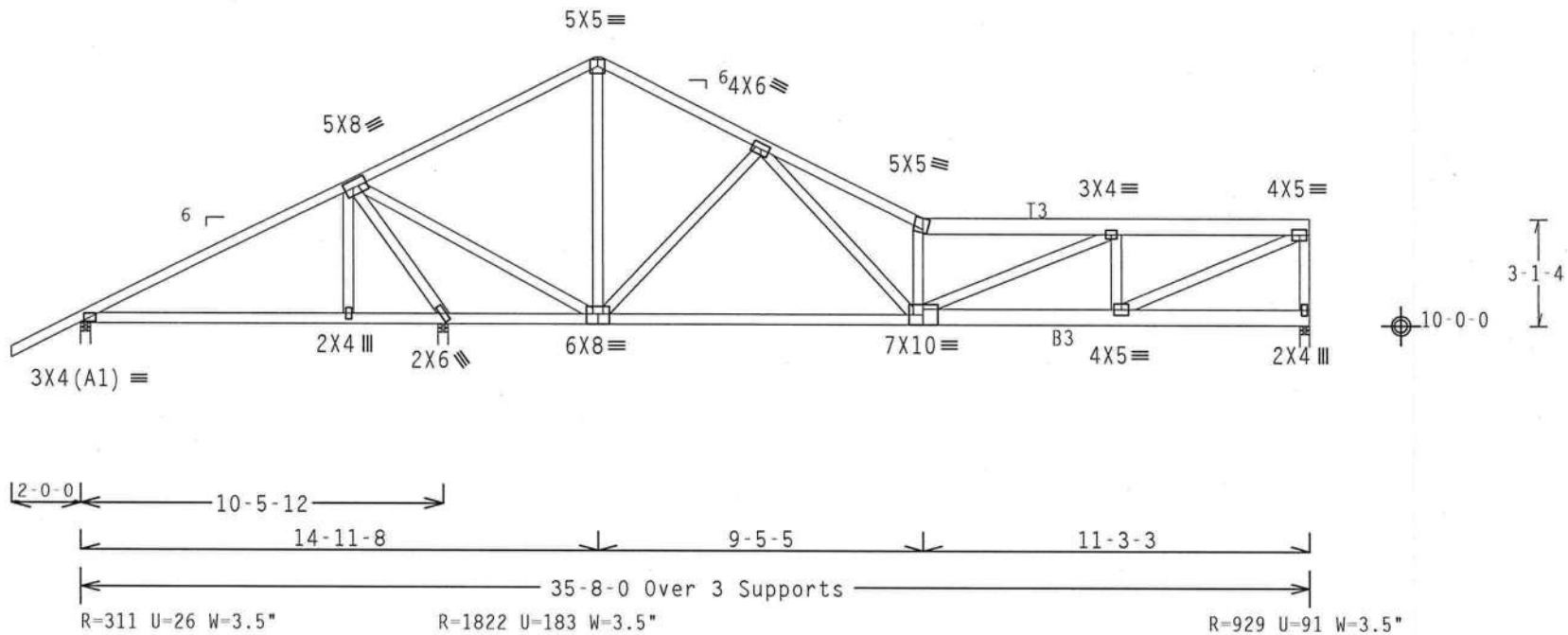

Design Crit: IBC CODE

PLT TYP. Wave Cq/RT=1.00(1.25)/10(0) 7.38.0810 QTY:1 FL/-/5/-/-/R/- Scale =.1875"/Ft.

ALPINE

ITW Building Components Group, Inc.
Haines City, FL 33844
FL Certificate of Authorization # 0 278

WARNING TRUSSES REQUIRE EXTREME CARE IN FABRICATION, HANDLING, SHIPPING, INSTALLING AND BRACING. REFER TO BCSI (BUILDING COMPONENT SAFETY INFORMATION), PUBLISHED BY TPI (TRUSS PLATE INSTITUTE, 218 NORTH LEE STREET, SUITE 312, ALEXANDRIA, VA, 22314) AND WTCA (WOOD TRUSS COUNCIL OF AMERICA, 6300 ENTERPRISE LANE, MADISON, WI 53719) FOR SAFETY PRACTICES PRIOR TO PERFORMING THESE FUNCTIONS. UNLESS OTHERWISE INDICATED TOP CHORD SHALL HAVE PROPERLY ATTACHED STRUCTURAL PANELS AND BOTTOM CHORD SHALL HAVE A PROPERLY ATTACHED RIGID CEILING.

IMPORTANTFURNISH A COPY OF THIS DESIGN TO THE INSTALLATION CONTRACTOR. ITW BCG, INC. SHALL NOT BE RESPONSIBLE FOR ANY DEVIATION FROM THIS DESIGN; ANY FAILURE TO BUILD THE TRUSS IN COMFORMANCE WITH TPI; OR FABRICATING, HANDLING, SHIPPING, INSTALLING & BRACING OF TRUSSES.
DESIGN CONFORMS WITH APPLICABLE PROVISIONS OF NDS (NATIONAL DESIGN SPEC. BY AF&PA) AND TPI. ITW BCG CONNECTOR PLATES ARE MADE OF 20/18/16GA (W,H/SS/K) ASTM A653 GRADE 40/60 (W, K/H,SS) GALV. STEEL. APPLY PLATES TO EACH FACE OF TRUSS AND, UNLESS OTHERWISE LOCATED ON THIS DESIGN, POSITION PER DRAWINGS 160A-Z. ANY INSPECTION OF PLATES FOLLOWED BY (I) SHALL BE PER ANNEX A3 OF TPI1-2002 SEC.3. A SEAL ON THIS DRAWING INDICATES ACCEPTANCE OF PROFESSIONAL ENGINEERING RESPONSIBILITY SOLELY FOR THE TRUSS COMPONENT DESIGN SHOWN. THE SUITABILITY AND USE OF THIS COMPONENT FOR ANY BUILDING IS THE RESPONSIBILITY OF THE BUILDING DESIGNER PER ANSI/TPI 1 SEC. 2.

JAMES F. COLLINS, JR. LICENSE No. 52212 STATE OF FLORIDA PROFESSIONAL ENGINEER
Nov 30 07

TC LL	20.0 PSF	REF	R215-- 17504
TC DL	10.0 PSF	DATE	11/30/07
BC DL	10.0 PSF	DRW	HCUSR215 07334082
BC LL	0.0 PSF	HC-ENG	RA/WHK
TOT.LD.	40.0 PSF	SEQN-	90490
DUR.FAC.	1.25	FROM	LRB
SPACING	24.0"	JREF-	1TCW215_Z02

Top chord 2x4 SP #2 N
Bot chord 2x4 SP #2 N
Webs 2x4 SP #2 N

(A) Continuous lateral bracing equally spaced on member.

Deflection meets L/240 live and L/180 total load.

The overall height of this truss excluding overhang is 7-9-15.

110 mph wind, 15.00 ft mean hgt, ASCE 7-02, CLOSED bldg, not located within 4.50 ft from roof edge, CAT II, EXP B, wind TC DL=5.0 psf, wind BC DL=5.0 psf.

Wind reactions based on MWFRS pressures.

Right end vertical not exposed to wind pressure.

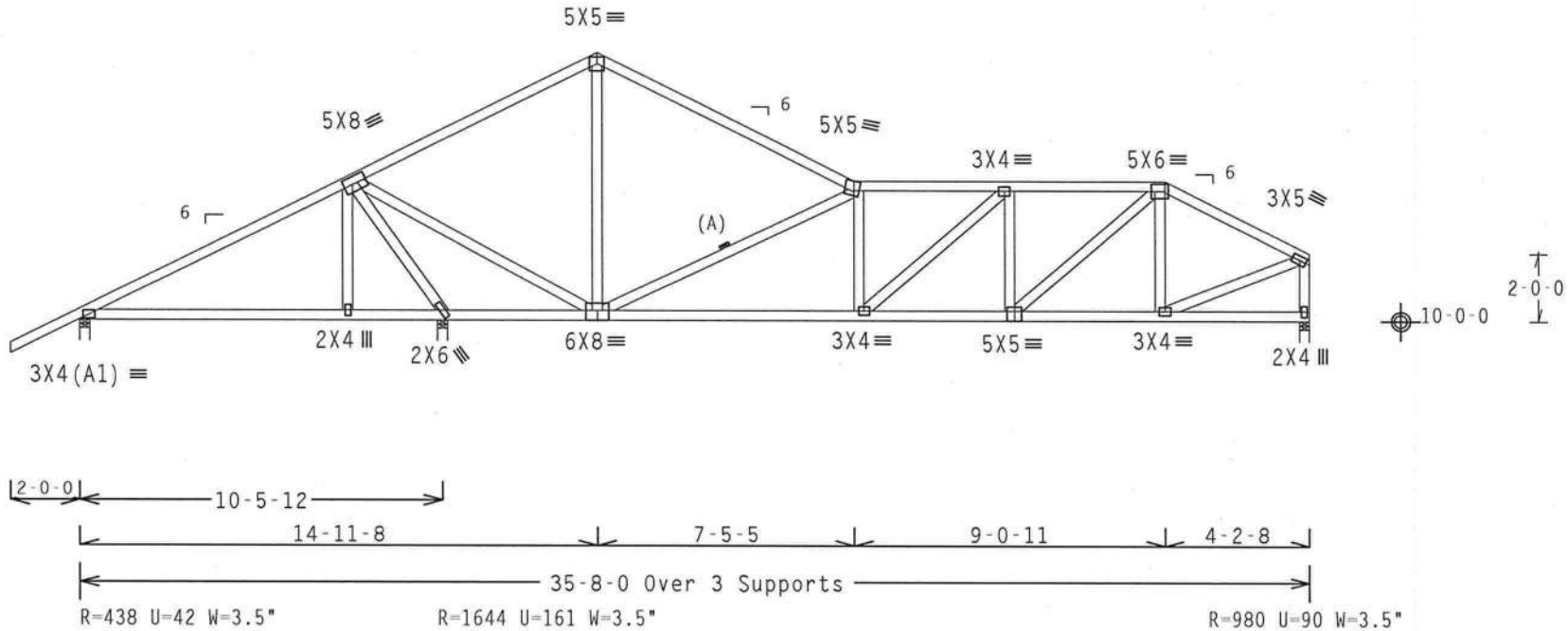

Design Crit: IBC CODE

PLT TYP. Wave Cq/RT=1.00(1.25)/10(0) 7.38.0810 QTY:1 FL/-/5/-/-/R/- Scale =.1875"/Ft.

ALPINE

ITW Building Components Group, Inc.
Haines City, FL 33844
FL Certificate of Authorization # 0 278

WARNING TRUSSES REQUIRE EXTREME CARE IN FABRICATION, HANDLING, SHIPPING, INSTALLING AND BRACING. REFER TO BCSI (BUILDING COMPONENT SAFETY INFORMATION), PUBLISHED BY TPI (TRUSS PLATE INSTITUTE, 218 NORTH LEE STREET, SUITE 312, ALEXANDRIA, VA, 22314) AND WTCA (WOOD TRUSS COUNCIL OF AMERICA, 6300 ENTERPRISE LANE, MADISON, WI 53719) FOR SAFETY PRACTICES PRIOR TO PERFORMING THESE FUNCTIONS. UNLESS OTHERWISE INDICATED TOP CHORD SHALL HAVE PROPERLY ATTACHED STRUCTURAL PANELS AND BOTTOM CHORD SHALL HAVE A PROPERLY ATTACHED RIGID CEILING.

IMPORTANTFURNISH A COPY OF THIS DESIGN TO THE INSTALLATION CONTRACTOR. ITW BCG, INC. SHALL NOT BE RESPONSIBLE FOR ANY DEVIATION FROM THIS DESIGN; ANY FAILURE TO BUILD THE TRUSS IN CONFORMANCE WITH TPI; OR FABRICATING, HANDLING, SHIPPING, INSTALLING & BRACING OF TRUSSES. DESIGN CONFORMS WITH APPLICABLE PROVISIONS OF NDS (NATIONAL DESIGN SPEC, BY AF&PA) AND TPI. ITW BCG CONNECTOR PLATES ARE MADE OF 20/18/16GA (W,H/SS/K) ASTM A653 GRADE 40/60 (W, K/H,SS) GALV. STEEL. APPLY PLATES TO EACH FACE OF TRUSS AND, UNLESS OTHERWISE LOCATED ON THIS DESIGN, POSITION PER DRAWINGS 160A-Z. ANY INSPECTION OF PLATES FOLLOWED BY (1) SHALL BE PER ANNEX A3 OF TPI1-2002 SEC.3. A SEAL ON THIS DRAWING INDICATES ACCEPTANCE OF PROFESSIONAL ENGINEERING RESPONSIBILITY SOLELY FOR THE TRUSS COMPONENT DESIGN SHOWN. THE SUITABILITY AND USE OF THIS COMPONENT FOR ANY BUILDING IS THE RESPONSIBILITY OF THE BUILDING DESIGNER PER ANSI/TPI 1 SEC. 2.

JAMES F. COLLINS, JR. LICENSE No. 52212 STATE OF FLORIDA PROFESSIONAL ENGINEER
Nov 30 07

TC LL	20.0 PSF	REF	R215-- 17505
TC DL	10.0 PSF	DATE	11/30/07
BC DL	10.0 PSF	DRW	HCUSR215 07334083
BC LL	0.0 PSF	HC-ENG	RA/WHK
TOT.LD.	40.0 PSF	SEQN-	90216
DUR.FAC.	1.25	FROM	LRB
SPACING	24.0"	JREF-	1TCW215_Z02

Top chord 2x4 SP #2 N
Bot chord 2x4 SP #2 N
Webs 2x4 SP #2 N

Deflection meets L/240 live and L/180 total load.

The overall height of this truss excluding overhang is 7-9-15.

110 mph wind, 15.00 ft mean hgt, ASCE 7-02, CLOSED bldg, not located within 4.50 ft from roof edge, CAT II, EXP B, wind TC DL=5.0 psf, wind BC DL=5.0 psf.

Wind reactions based on MWFRS pressures.

Right end vertical not exposed to wind pressure.

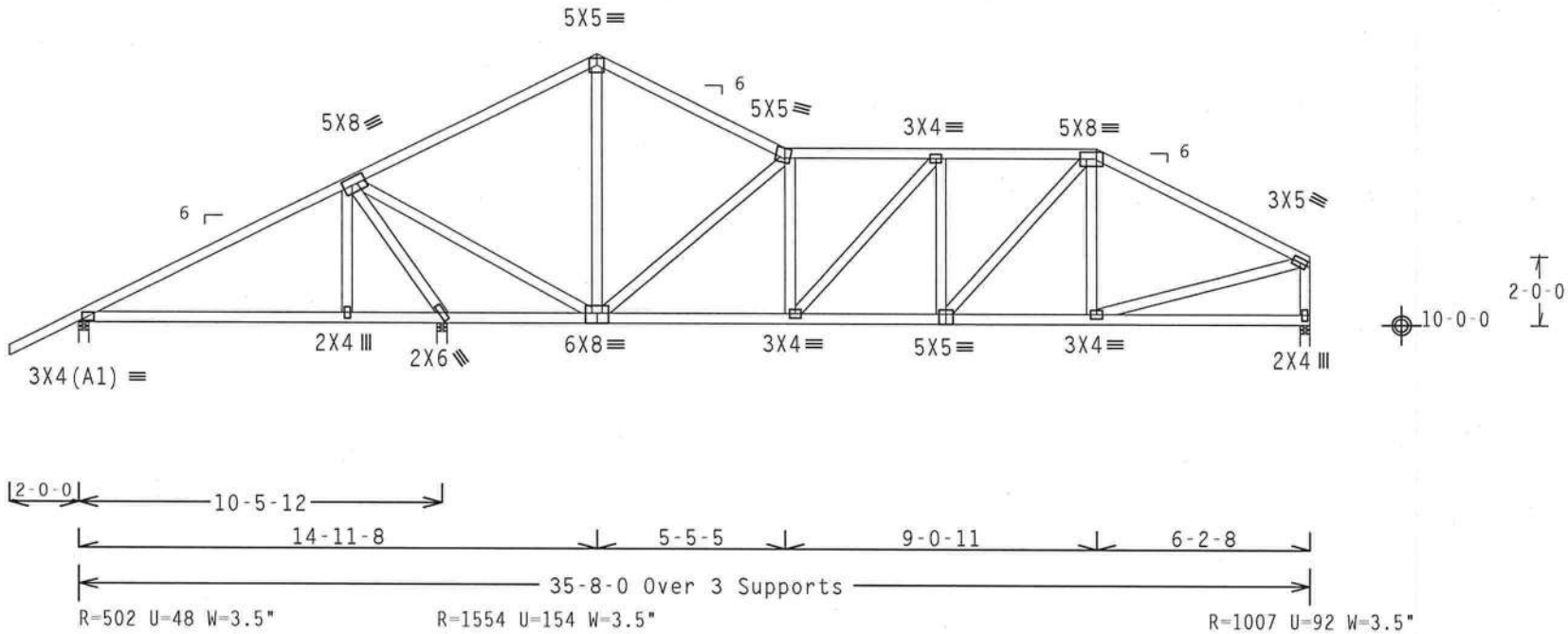

Design Crit: IBC CODE

PLT TYP. Wave | Cq/RT=1.00(1.25)/10(0) 7.38.0810 | QTY:1 | FL/-/5/-/-/R/- | Scale =.1875"/Ft.

ALPINE

ITW Building Components Group, Inc.
Haines City, FL 33844
FL Certificate of Authorization # 0 278

WARNING TRUSSES REQUIRE EXTREME CARE IN FABRICATION, HANDLING, SHIPPING, INSTALLING AND BRACING. REFER TO BCSI (BUILDING COMPONENT SAFETY INFORMATION), PUBLISHED BY TPI (TRUSS PLATE INSTITUTE, 218 NORTH LEE STREET, SUITE 312, ALEXANDRIA, VA, 22314) AND WTCA (WOOD TRUSS COUNCIL OF AMERICA, 6300 ENTERPRISE LANE, MADISON, WI 53719) FOR SAFETY PRACTICES PRIOR TO PERFORMING THESE FUNCTIONS. UNLESS OTHERWISE INDICATED TOP CHORD SHALL HAVE PROPERLY ATTACHED STRUCTURAL PANELS AND BOTTOM CHORD SHALL HAVE A PROPERLY ATTACHED RIGID CEILING.

IMPORTANTFURNISH A COPY OF THIS DESIGN TO THE INSTALLATION CONTRACTOR. ITW BCG, INC. SHALL NOT BE RESPONSIBLE FOR ANY DEVIATION FROM THIS DESIGN; ANY FAILURE TO BUILD THE TRUSS IN COMFORMANCE WITH TPI; OR FABRICATING, HANDLING, SHIPPING, INSTALLING & BRACING OF TRUSSES.
DESIGN CONFORMS WITH APPLICABLE PROVISIONS OF NDS (NATIONAL DESIGN SPEC, BY AF&PA) AND TPI. ITW BCG CONNECTOR PLATES ARE MADE OF 20/18/16GA (W,H/SS/K) ASTM A653 GRADE 40/60 (W, K/H,SS) GALV. STEEL. APPLY PLATES TO EACH FACE OF TRUSS AND, UNLESS OTHERWISE LOCATED ON THIS DESIGN, POSITION PER DRAWINGS 160A-Z. ANY INSPECTION OF PLATES FOLLOWED BY (1) SHALL BE PER ANNEX A3 OF TPI1-2002 SEC.3. A SEAL ON THIS DRAWING INDICATES ACCEPTANCE OF PROFESSIONAL ENGINEERING RESPONSIBILITY SOLELY FOR THE TRUSS COMPONENT DESIGN SHOWN. THE SUITABILITY AND USE OF THIS COMPONENT FOR ANY BUILDING IS THE RESPONSIBILITY OF THE BUILDING DESIGNER PER ANSI/TPI 1 SEC. 2.

JAMES F. COLLINS, JR. LICENSED No. 52212 STATE OF FLORIDA PROFESSIONAL ENGINEER
Nov 30 07

TC LL	20.0 PSF	REF R215-- 17506
TC DL	10.0 PSF	DATE 11/30/07
BC DL	10.0 PSF	DRW HCUSR215 07334084
BC LL	0.0 PSF	HC-ENG RA/WHK
TOT.LD.	40.0 PSF	SEQN- 90214
DUR.FAC.	1.25	FROM LRB
SPACING	24.0"	JREF- 1TCW215_Z02

Top chord 2x4 SP #2 N
Bot chord 2x4 SP #2 N
Webs 2x4 SP #2 N

Deflection meets L/240 live and L/180 total load.

The overall height of this truss excluding overhang is 7-9-15.

110 mph wind, 15.00 ft mean hgt, ASCE 7-02, CLOSED bldg, not located within 4.50 ft from roof edge, CAT II, EXP B, wind TC DL=5.0 psf, wind BC DL=5.0 psf.

Wind reactions based on MWFRS pressures.

Right end vertical not exposed to wind pressure.

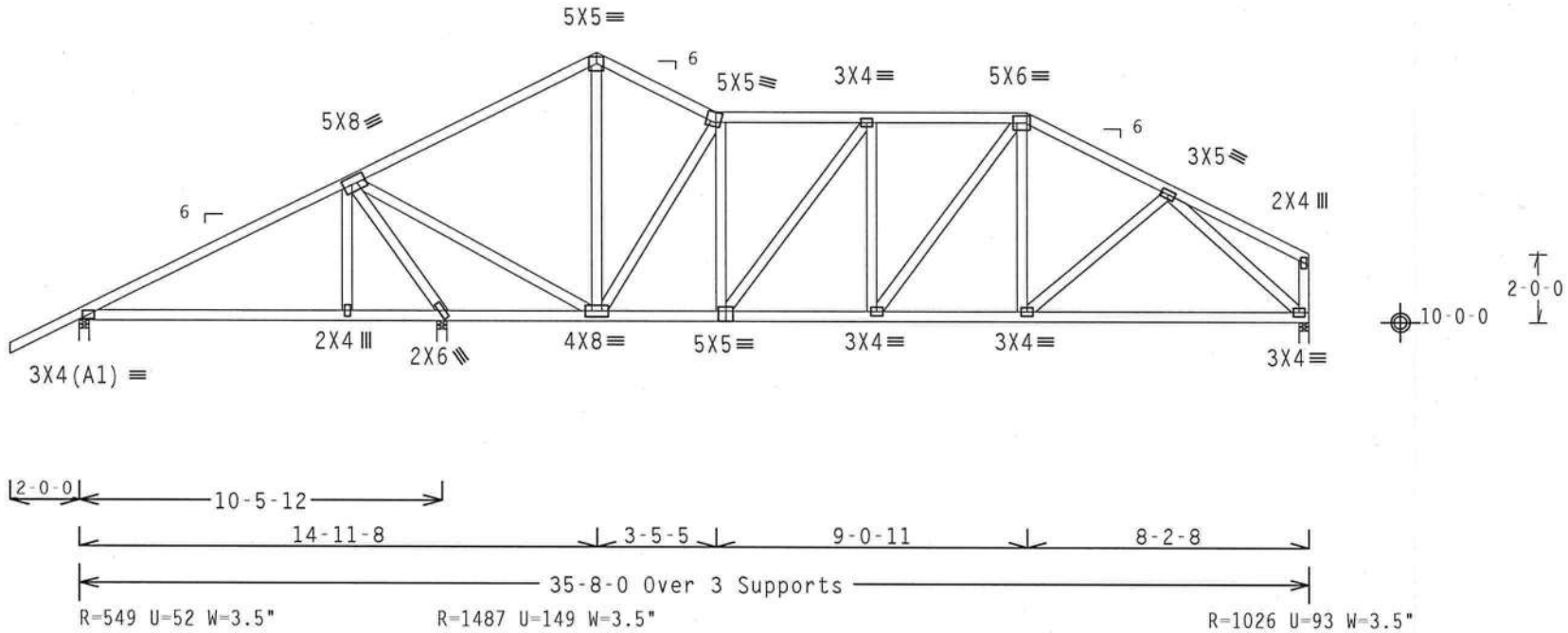

Design Crit: IBC CODE

PLT TYP. Wave | Cq/RT=1.00(1.25)/10(0) 7.38.0810 | QTY:1 | FL/-/5/-/-/R/- | Scale =.1875"/Ft.

ALPINE

ITW Building Components Group, Inc.
Haines City, FL 33844
FL Certificate of Authorization # 0 278

WARNING TRUSSES REQUIRE EXTREME CARE IN FABRICATION, HANDLING, SHIPPING, INSTALLING AND BRACING. REFER TO BCSI (BUILDING COMPONENT SAFETY INFORMATION), PUBLISHED BY TPI (TRUSS PLATE INSTITUTE, 218 NORTH LEE STREET, SUITE 312, ALEXANDRIA, VA. 22314) AND WTCA (WOOD TRUSS COUNCIL OF AMERICA, 6300 ENTERPRISE LANE, MADISON, WI 53719) FOR SAFETY PRACTICES PRIOR TO PERFORMING THESE FUNCTIONS. UNLESS OTHERWISE INDICATED TOP CHORD SHALL HAVE PROPERLY ATTACHED STRUCTURAL PANELS AND BOTTOM CHORD SHALL HAVE A PROPERLY ATTACHED RIGID CEILING.

IMPORTANT FURNISH A COPY OF THIS DESIGN TO THE INSTALLATION CONTRACTOR. ITW BCG, INC. SHALL NOT BE RESPONSIBLE FOR ANY DEVIATION FROM THIS DESIGN; ANY FAILURE TO BUILD THE TRUSS IN CONFORMANCE WITH TPI; OR FABRICATING, HANDLING, SHIPPING, INSTALLING & BRACING OF TRUSSES.
DESIGN CONFORMS WITH APPLICABLE PROVISIONS OF NDS (NATIONAL DESIGN SPEC. BY AF&PA) AND TPI. ITW BCG CONNECTOR PLATES ARE MADE OF 20/18/16GA (W,H/SS/K) ASTM A653 GRADE 40/60 (W, K/H,SS) GALV. STEEL. APPLY PLATES TO EACH FACE OF TRUSS AND, UNLESS OTHERWISE LOCATED ON THIS DESIGN, POSITION PER DRAWINGS 160A-Z. ANY INSPECTION OF PLATES FOLLOWED BY (1) SHALL BE PER ANNEX A3 OF TPI1-2002 SEC.3. A SEAL ON THIS DRAWING INDICATES ACCEPTANCE OF PROFESSIONAL ENGINEERING RESPONSIBILITY SOLELY FOR THE TRUSS COMPONENT DESIGN SHOWN. THE SUITABILITY AND USE OF THIS COMPONENT FOR ANY BUILDING IS THE RESPONSIBILITY OF THE BUILDING DESIGNER PER ANSI/TPI 1 SEC. 2.

JAMES F. COLLINS, JR. LICENSE No. 52212 STATE OF FLORIDA PROFESSIONAL ENGINEER
Nov 30 '07

TC LL	20.0 PSF	REF	R215-- 17507
TC DL	10.0 PSF	DATE	11/30/07
BC DL	10.0 PSF	DRW	HCUSR215 07334085
BC LL	0.0 PSF	HC-ENG	RA/WHK
TOT.LD.	40.0 PSF	SEQN-	90212
DUR.FAC.	1.25	FROM	LRB
SPACING	24.0"	JREF-	1TCW215_Z02

Top chord 2x4 SP #2 N
Bot chord 2x4 SP #2 N
Webs 2x4 SP #2 N

Deflection meets L/240 live and L/180 total load.

The overall height of this truss excluding overhang is 7-9-15.

110 mph wind, 15.00 ft mean hgt, ASCE 7-02, CLOSED bldg, not located within 4.50 ft from roof edge, CAT II, EXP B, wind TC DL=5.0 psf, wind BC DL=5.0 psf.

Wind reactions based on MWFRS pressures.

Right end vertical not exposed to wind pressure.

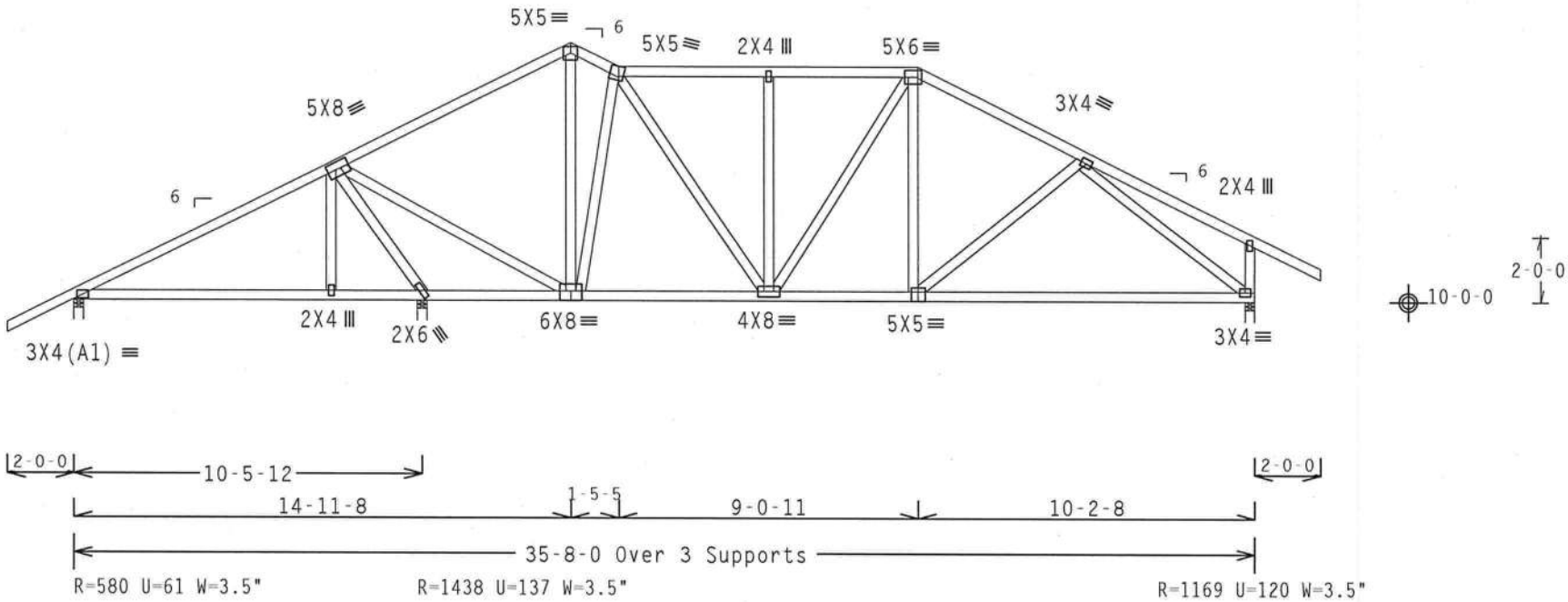

Design Crit: IBC CODE

PLT TYP. Wave Cq/RT=1.00(1.25)/10(0) 7.38.0810.03 QTY:1 FL/-/5/-/-/R/- Scale =.1875"/Ft.

ALPINE

ITW Building Components Group, Inc.
Haines City, FL 33844
FL Certificate of Authorization # 0 278

WARNING TRUSSES REQUIRE EXTREME CARE IN FABRICATION, HANDLING, SHIPPING, INSTALLING AND BRACING. REFER TO BCSI (BUILDING COMPONENT SAFETY INFORMATION), PUBLISHED BY TPI (TRUSS PLATE INSTITUTE, 218 NORTH LEE STREET, SUITE 312, ALEXANDRIA, VA, 22314) AND WTCA (WOOD TRUSS COUNCIL OF AMERICA, 6300 ENTERPRISE LANE, MADISON, WI 53719) FOR SAFETY PRACTICES PRIOR TO PERFORMING THESE FUNCTIONS. UNLESS OTHERWISE INDICATED TOP CHORD SHALL HAVE PROPERLY ATTACHED STRUCTURAL PANELS AND BOTTOM CHORD SHALL HAVE A PROPERLY ATTACHED RIGID CEILING.

IMPORTANTFURNISH A COPY OF THIS DESIGN TO THE INSTALLATION CONTRACTOR. ITW BCG, INC. SHALL NOT BE RESPONSIBLE FOR ANY DEVIATION FROM THIS DESIGN; ANY FAILURE TO BUILD THE TRUSS IN COMFORMANCE WITH TPI; OR FABRICATING, HANDLING, SHIPPING, INSTALLING & BRACING OF TRUSSES.
DESIGN CONFORMS WITH APPLICABLE PROVISIONS OF NDS (NATIONAL DESIGN SPEC. BY AF&PA) AND TPI. ITW BCG CONNECTOR PLATES ARE MADE OF 20/18/16GA (W,H/SS/K) ASTM A653 GRADE 40/60 (W, K/H,SS) GALV. STEEL. APPLY PLATES TO EACH FACE OF TRUSS AND, UNLESS OTHERWISE LOCATED ON THIS DESIGN, POSITION PER DRAWINGS 160A-Z. ANY INSPECTION OF PLATES FOLLOWED BY (1) SHALL BE PER ANNEX A3 OF TPI1-2002 SEC.3. A SEAL ON THIS DRAWING INDICATES ACCEPTANCE OF PROFESSIONAL ENGINEERING RESPONSIBILITY SOLELY FOR THE TRUSS COMPONENT DESIGN SHOWN. THE SUITABILITY AND USE OF THIS COMPONENT FOR ANY BUILDING IS THE RESPONSIBILITY OF THE BUILDING DESIGNER PER ANSI/TPI 1 SEC. 2.

JAMES F. COLLINS LICENSED No. 52212 STATE OF FLORIDA PROFESSIONAL ENGINEER

Nov

TC LL	20.0 PSF	REF R215-- 17508
TC DL	10.0 PSF	DATE 11/30/07
BC DL	10.0 PSF	DRW HCUSR215 07334086
BC LL	0.0 PSF	HC-ENG RA/WHK
TOT.LD.	40.0 PSF	SEQN- 90228
DUR.FAC.	1.25	FROM LRB
SPACING	24.0"	JREF- 1TCW215_Z02

Top chord 2x4 SP #2 N
Bot chord 2x4 SP #2 N
Webs 2x4 SP #2 N

(A) Continuous lateral bracing equally spaced on member.

Deflection meets L/240 live and L/180 total load.

The overall height of this truss excluding overhang is 8-1-4.

110 mph wind, 15.00 ft mean hgt, ASCE 7-02, CLOSED bldg, not located within 4.50 ft from roof edge, CAT II, EXP B, wind TC DL=5.0 psf, wind BC DL=5.0 psf.

Wind reactions based on MWFRS pressures.

Right end vertical not exposed to wind pressure.

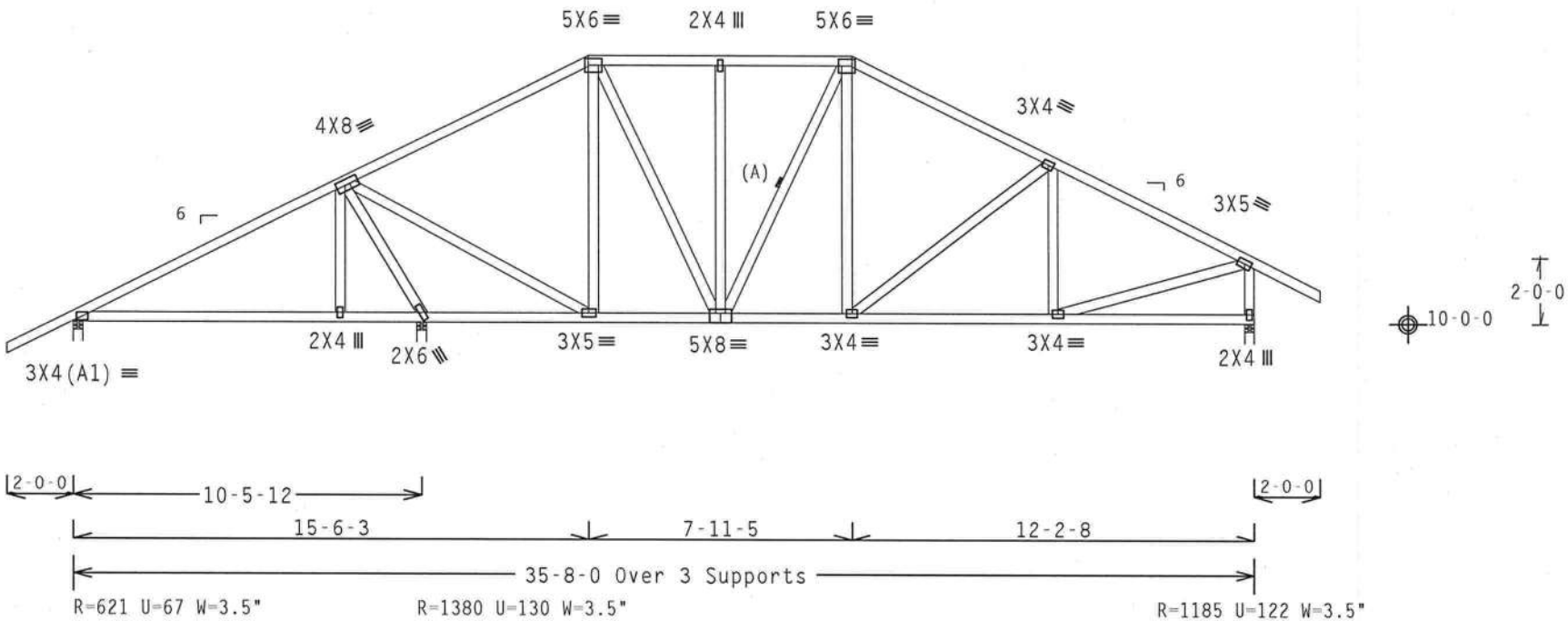

Design Crit: IBC CODE

PLT TYP. Wave Cq/RT=1.00(1.25)/10(0) 7.38.0810 QTY:1 FL/-/5/-/-/R/- Scale =.1875"/Ft.

ALPINE

ITW Building Components Group, Inc.
Haines City, FL 33844
FL Certificate of Authorization # 0 278

WARNING TRUSSES REQUIRE EXTREME CARE IN FABRICATION, HANDLING, SHIPPING, INSTALLING AND BRACING. REFER TO BCSI (BUILDING COMPONENT SAFETY INFORMATION), PUBLISHED BY TPI (TRUSS PLATE INSTITUTE, 218 NORTH LEE STREET, SUITE 312, ALEXANDRIA, VA, 22314) AND WTCA (WOOD TRUSS COUNCIL OF AMERICA, 6300 ENTERPRISE LANE, MADISON, WI 53719) FOR SAFETY PRACTICES PRIOR TO PERFORMING THESE FUNCTIONS. UNLESS OTHERWISE INDICATED TOP CHORD SHALL HAVE PROPERLY ATTACHED STRUCTURAL PANELS AND BOTTOM CHORD SHALL HAVE A PROPERLY ATTACHED RIGID CEILING.

IMPORTANTFURNISH A COPY OF THIS DESIGN TO THE INSTALLATION CONTRACTOR. ITW BCG, INC. SHALL NOT BE RESPONSIBLE FOR ANY DEVIATION FROM THIS DESIGN; ANY FAILURE TO BUILD THE TRUSS IN COMFORMANCE WITH TPI; OR FABRICATING, HANDLING, SHIPPING, INSTALLING & BRACING OF TRUSSES.
DESIGN CONFORMS WITH APPLICABLE PROVISIONS OF NDS (NATIONAL DESIGN SPEC. BY AF&PA) AND TPI. ITW BCG CONNECTOR PLATES ARE MADE OF 20/18/16GA (W,H/SS/K) ASTM A653 GRADE 40/60 (W, K/H,SS) GALV. STEEL. APPLY PLATES TO EACH FACE OF TRUSS AND, UNLESS OTHERWISE LOCATED ON THIS DESIGN, POSITION PER DRAWINGS 160A-Z. ANY INSPECTION OF PLATES FOLLOWED BY (1) SHALL BE PER ANNEX A3 OF TPI1-2002 SEC.3. A SEAL ON THIS DRAWING INDICATES ACCEPTANCE OF PROFESSIONAL ENGINEERING RESPONSIBILITY SOLELY FOR THE TRUSS COMPONENT DESIGN SHOWN. THE SUITABILITY AND USE OF THIS COMPONENT FOR ANY BUILDING IS THE RESPONSIBILITY OF THE BUILDING DESIGNER PER ANSI/TPI 1 SEC. 2.

JAMES F. COLLINS, JR. LICENSED No. 52212 STATE OF FLORIDA PROFESSIONAL ENGINEER
Nov 30, 2007

TC LL	20.0 PSF	REF R215-- 17509
TC DL	10.0 PSF	DATE 11/30/07
BC DL	10.0 PSF	DRW HCUSR215 07334087
BC LL	0.0 PSF	HC-ENG RA/WHK
TOT.LD.	40.0 PSF	SEQN- 90226
DUR.FAC.	1.25	FROM LRB
SPACING	24.0"	JREF- 1TCW215_Z02

Top chord 2x4 SP #2 N
Bot chord 2x4 SP #2 N
Webs 2x4 SP #2 N

(A) Continuous lateral bracing equally spaced on member.

Deflection meets L/240 live and L/180 total load.

The overall height of this truss excluding overhang is 9-1-4.

110 mph wind, 15.00 ft mean hgt, ASCE 7-02, CLOSED bldg, not located within 4.50 ft from roof edge, CAT II, EXP B, wind TC DL=5.0 psf, wind BC DL=5.0 psf.

Wind reactions based on MWFRS pressures.

Right end vertical not exposed to wind pressure.

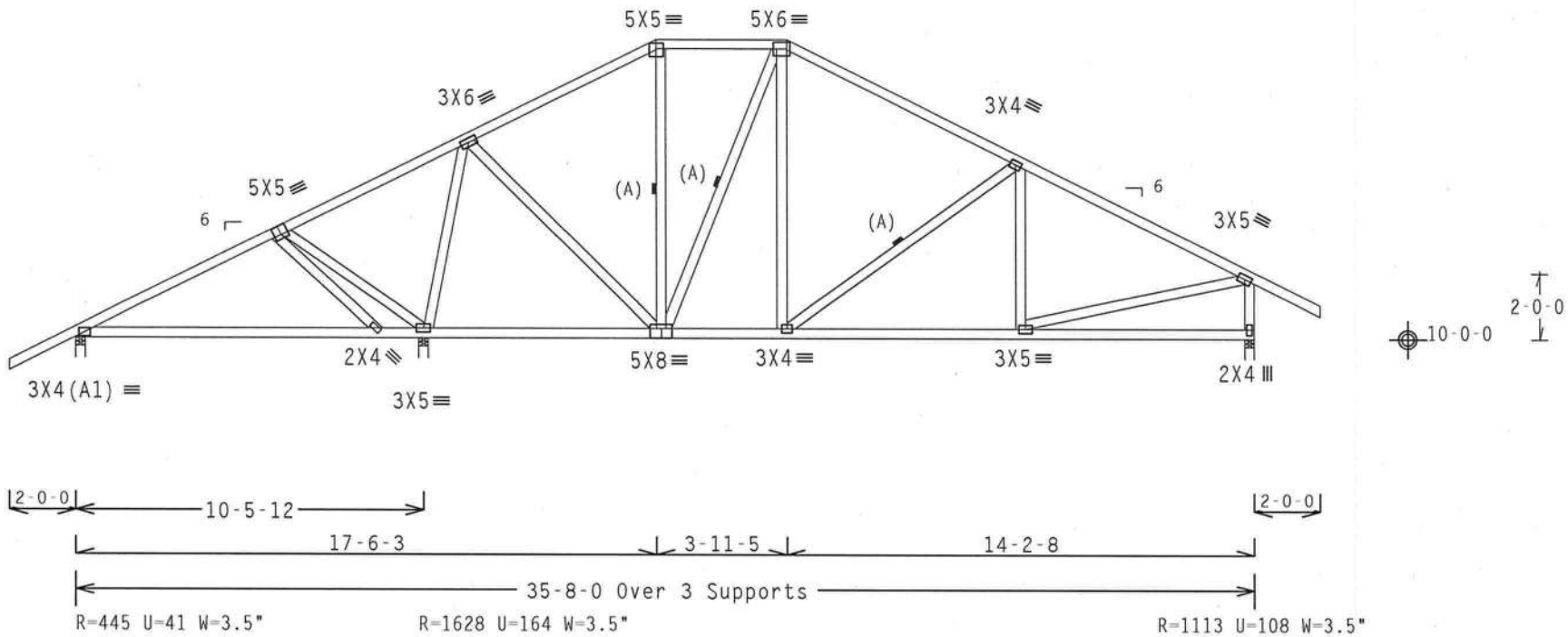

Design Crit: IBC CODE

PLT TYP. Wave Cq/RT=1.00(1.25)/10(0) 7.38.0810.02 QTY:1 FL/-/5/-/-/R/- Scale =.1875"/Ft.

ALPINE

ITW Building Components Group, Inc.
Haines City, FL 33844
FL Certificate of Authorization # 0 278

WARNING TRUSSES REQUIRE EXTREME CARE IN FABRICATION, HANDLING, SHIPPING, INSTALLING AND BRACING. REFER TO BCSI (BUILDING COMPONENT SAFETY INFORMATION), PUBLISHED BY TPI (TRUSS PLATE INSTITUTE, 218 NORTH LEE STREET, SUITE 312, ALEXANDRIA, VA, 22314) AND WTCA (WOOD TRUSS COUNCIL OF AMERICA, 6300 ENTERPRISE LANE, MADISON, WI 53719) FOR SAFETY PRACTICES PRIOR TO PERFORMING THESE FUNCTIONS. UNLESS OTHERWISE INDICATED TOP CHORD SHALL HAVE PROPERLY ATTACHED STRUCTURAL PANELS AND BOTTOM CHORD SHALL HAVE A PROPERLY ATTACHED RIGID CEILING.

IMPORTANTFURNISH A COPY OF THIS DESIGN TO THE INSTALLATION CONTRACTOR. ITW BCG, INC. SHALL NOT BE RESPONSIBLE FOR ANY DEVIATION FROM THIS DESIGN; ANY FAILURE TO BUILD THE TRUSS IN CONFORMANCE WITH TPI; OR FABRICATING, HANDLING, SHIPPING, INSTALLING & BRACING OF TRUSSES.
DESIGN CONFORMS WITH APPLICABLE PROVISIONS OF NDS (NATIONAL DESIGN SPEC. BY AF&PA) AND TPI. ITW BCG CONNECTOR PLATES ARE MADE OF 20/18/16GA (W,H/SS/K) ASTM A653 GRADE 40/60 (W, K/H,SS) GALV. STEEL. APPLY PLATES TO EACH FACE OF TRUSS AND, UNLESS OTHERWISE LOCATED ON THIS DESIGN, POSITION PER DRAWINGS 160A-Z. ANY INSPECTION OF PLATES FOLLOWED BY (1) SHALL BE PER ANNEX A3 OF TPI1-2002 SEC.3. A SEAL ON THIS DRAWING INDICATES ACCEPTANCE OF PROFESSIONAL ENGINEERING RESPONSIBILITY SOLELY FOR THE TRUSS COMPONENT DESIGN SHOWN. THE SUITABILITY AND USE OF THIS COMPONENT FOR ANY BUILDING IS THE RESPONSIBILITY OF THE BUILDING DESIGNER PER ANSI/TPI 1 SEC. 2.

JAMES F. COLLINS JR. LICENSE No. 52212 STATE OF FLORIDA PROFESSIONAL ENGINEER
Nov 30

TC LL	20.0 PSF	REF	R215-- 17510
TC DL	10.0 PSF	DATE	11/30/07
BC DL	10.0 PSF	DRW	HCUSR215 07334088
BC LL	0.0 PSF	HC-ENG	RA/WHK
TOT.LD.	40.0 PSF	SEQN-	90224
DUR.FAC.	1.25	FROM	LRB
SPACING	24.0"	JREF-	1TCW215_Z02

Top chord 2x4 SP #2 N
Bot chord 2x4 SP #2 N
Webs 2x4 SP #2 N

(A) Continuous lateral bracing equally spaced on member.

Deflection meets L/240 live and L/180 total load.

The overall height of this truss excluding overhang is 10-1-1.

110 mph wind, 15.00 ft mean hgt, ASCE 7-02, CLOSED bldg, not located within 4.50 ft from roof edge, CAT II, EXP B, wind TC DL=5.0 psf, wind BC DL=5.0 psf.

Wind reactions based on MWFRS pressures.

Right end vertical not exposed to wind pressure.

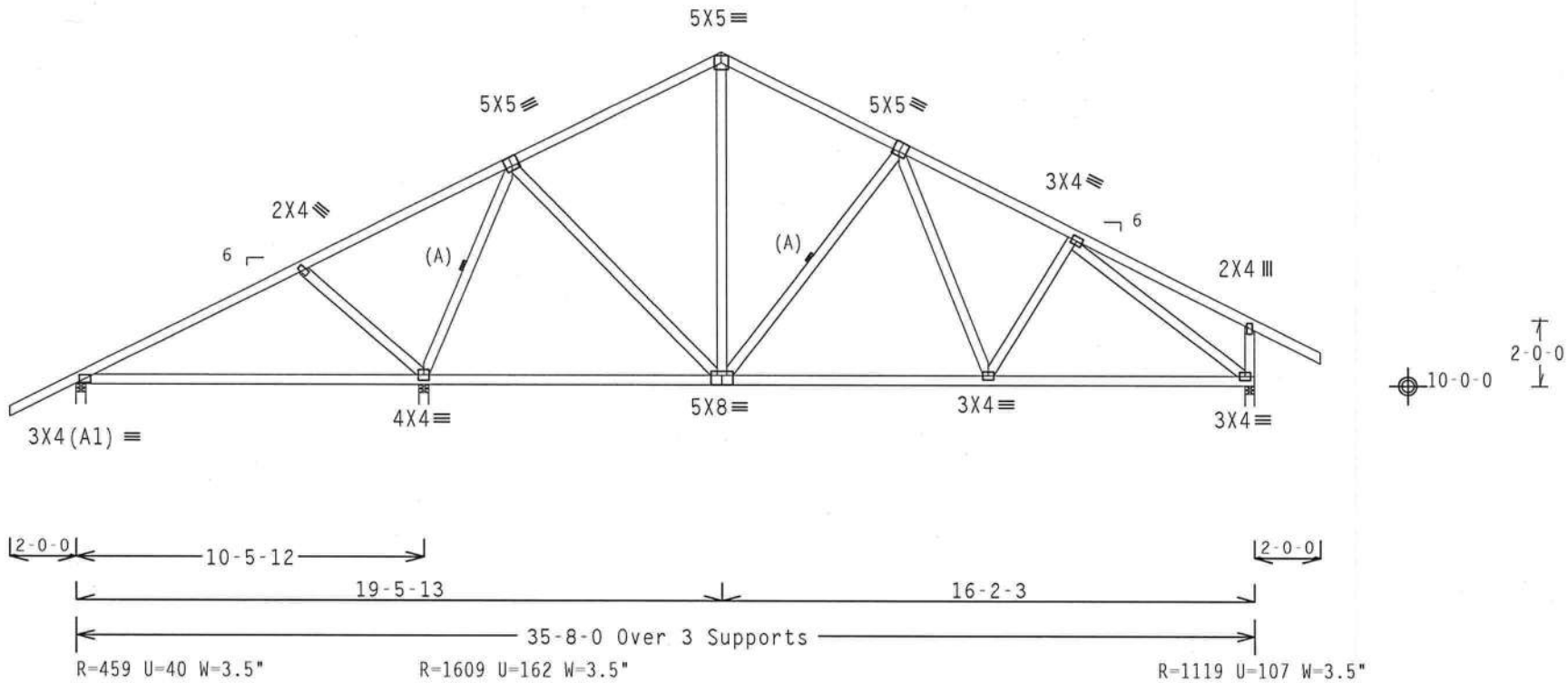

Design Crit: IBC CODE

PLT TYP. Wave Cq/RT=1.00(1.25)/10(0) 7.38.0810 QTY:1 FL/-/5/-/-/R/- Scale =.1875"/Ft.

ALPINE

ITW Building Components Group, Inc.
Haines City, FL 33844
FL Certificate of Authorization # 0 278

WARNING TRUSSES REQUIRE EXTREME CARE IN FABRICATION, HANDLING, SHIPPING, INSTALLING AND BRACING. REFER TO BCSI (BUILDING COMPONENT SAFETY INFORMATION), PUBLISHED BY TPI (TRUSS PLATE INSTITUTE, 218 NORTH LEE STREET, SUITE 312, ALEXANDRIA, VA. 22314) AND WTCA (WOOD TRUSS COUNCIL OF AMERICA, 6300 ENTERPRISE LANE, MADISON, WI 53719) FOR SAFETY PRACTICES PRIOR TO PERFORMING THESE FUNCTIONS. UNLESS OTHERWISE INDICATED TOP CHORD SHALL HAVE PROPERLY ATTACHED STRUCTURAL PANELS AND BOTTOM CHORD SHALL HAVE A PROPERLY ATTACHED RIGID CEILING.

IMPORTANT FURNISH A COPY OF THIS DESIGN TO THE INSTALLATION CONTRACTOR. ITW BCG, INC. SHALL NOT BE RESPONSIBLE FOR ANY DEVIATION FROM THIS DESIGN; ANY FAILURE TO BUILD THE TRUSS IN CONFORMANCE WITH TPI; OR FABRICATING, HANDLING, SHIPPING, INSTALLING & BRACING OF TRUSSES. DESIGN CONFORMS WITH APPLICABLE PROVISIONS OF NDS (NATIONAL DESIGN SPEC, BY AF&PA) AND TPI. ITW BCG CONNECTOR PLATES ARE MADE OF 20/18/16GA (W,H/SS/K) ASTM A653 GRADE 40/60 (W, K/H,SS) GALV. STEEL. APPLY PLATES TO EACH FACE OF TRUSS AND, UNLESS OTHERWISE LOCATED ON THIS DESIGN, POSITION PER DRAWINGS 160A-Z. ANY INSPECTION OF PLATES FOLLOWED BY (1) SHALL BE PER ANNEX A3 OF TPI1-2002 SEC.3. A SEAL ON THIS DRAWING INDICATES ACCEPTANCE OF PROFESSIONAL ENGINEERING RESPONSIBILITY SOLELY FOR THE TRUSS COMPONENT DESIGN SHOWN. THE SUITABILITY AND USE OF THIS COMPONENT FOR ANY BUILDING IS THE RESPONSIBILITY OF THE BUILDING DESIGNER PER ANSI/TPI 1 SEC. 2.

JAMES F. COLLINS, JR. LICENSED No. 52212 STATE OF FLORIDA PROFESSIONAL ENGINEER
Nov 30 07

TC LL	20.0 PSF	REF R215-- 17511
TC DL	10.0 PSF	DATE 11/30/07
BC DL	10.0 PSF	DRW HCUSR215 07334089
BC LL	0.0 PSF	HC-ENG RA/WHK
TOT.LD.	40.0 PSF	SEQN- 90208
DUR.FAC.	1.25	FROM LRB
SPACING	24.0"	JREF- 1TCW215_Z02

Top chord 2x4 SP #2 N
Bot chord 2x4 SP #2 N
Webs 2x4 SP #2 N

(A) Continuous lateral bracing equally spaced on member.

Deflection meets L/240 live and L/180 total load.

The overall height of this truss excluding overhang is 9-4-3.

110 mph wind, 15.00 ft mean hgt, ASCE 7-02, CLOSED bldg, not located within 4.50 ft from roof edge, CAT II, EXP B, wind TC DL=5.0 psf, wind BC DL=5.0 psf.

Wind reactions based on MWFRS pressures.

Right end vertical not exposed to wind pressure.

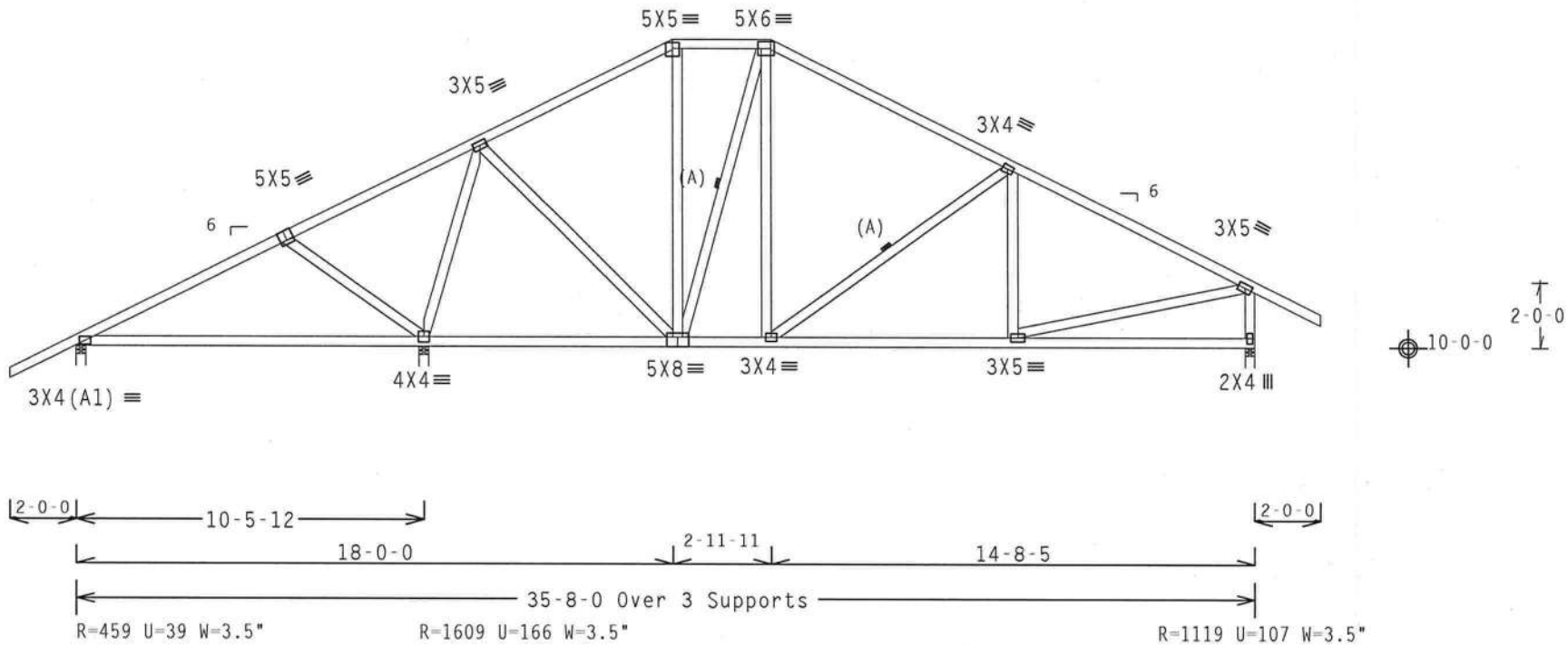

Design Crit: IBC CODE

PLT TYP. Wave | Cq/RT=1.00(1.25)/10(0) 7.38.0810 F2 | QTY:1 | FL/-/5/-/-/R/- | Scale =.1875"/Ft.

ALPINE

ITW Building Components Group, Inc.
Haines City, FL 33844
FL Certificate of Authorization # 0 278

WARNING TRUSSES REQUIRE EXTREME CARE IN FABRICATION, HANDLING, SHIPPING, INSTALLING AND BRACING. REFER TO BCSI (BUILDING COMPONENT SAFETY INFORMATION), PUBLISHED BY TPI (TRUSS PLATE INSTITUTE, 218 NORTH LEE STREET, SUITE 312, ALEXANDRIA, VA, 22314) AND WTCA (WOOD TRUSS COUNCIL OF AMERICA, 6300 ENTERPRISE LANE, MADISON, WI 53719) FOR SAFETY PRACTICES PRIOR TO PERFORMING THESE FUNCTIONS. UNLESS OTHERWISE INDICATED TOP CHORD SHALL HAVE PROPERLY ATTACHED STRUCTURAL PANELS AND BOTTOM CHORD SHALL HAVE A PROPERLY ATTACHED RIGID CEILING.

IMPORTANTFURNISH A COPY OF THIS DESIGN TO THE INSTALLATION CONTRACTOR. ITW BCG, INC. SHALL NOT BE RESPONSIBLE FOR ANY DEVIATION FROM THIS DESIGN; ANY FAILURE TO BUILD THE TRUSS IN COMFORMANCE WITH TPI; OR FABRICATING, HANDLING, SHIPPING, INSTALLING & BRACING OF TRUSSES. DESIGN CONFORMS WITH APPLICABLE PROVISIONS OF NDS (NATIONAL DESIGN SPEC. BY AF&PA) AND TPI. ITW BCG CONNECTOR PLATES ARE MADE OF 20/18/16GA (W,H/SS/K) ASTM A653 GRADE 40/60 (W, K/H,SS) GALV. STEEL. APPLY PLATES TO EACH FACE OF TRUSS AND, UNLESS OTHERWISE LOCATED ON THIS DESIGN, POSITION PER DRAWINGS 160A-Z. ANY INSPECTION OF PLATES FOLLOWED BY (1) SHALL BE PER ANNEX A3 OF TPI1-2002 SEC.3. A SEAL ON THIS DRAWING INDICATES ACCEPTANCE OF PROFESSIONAL ENGINEERING RESPONSIBILITY SOLELY FOR THE TRUSS COMPONENT DESIGN SHOWN. THE SUITABILITY AND USE OF THIS COMPONENT FOR ANY BUILDING IS THE RESPONSIBILITY OF THE BUILDING DESIGNER PER ANSI/TPI 1 SEC. 2.

JAMES F. COLLINS JR. LICENSED No. 52212 STATE OF FLORIDA PROFESSIONAL ENGINEER
Nov 30 07

TC LL	20.0 PSF	REF R215-- 17512
TC DL	10.0 PSF	DATE 11/30/07
BC DL	10.0 PSF	DRW HCUSR215 07334090
BC LL	0.0 PSF	HC-ENG RA/WHK
TOT.LD.	40.0 PSF	SEQN- 90230
DUR.FAC.	1.25	FROM LRB
SPACING	24.0"	JREF- 1TCW215_Z02

Top chord 2x4 SP #2 N
Bot chord 2x4 SP #2 N
Webs 2x4 SP #2 N

(A) Continuous lateral bracing equally spaced on member.

Deflection meets L/240 live and L/180 total load.

The overall height of this truss excluding overhang is 8-4-3.

110 mph wind, 15.00 ft mean hgt, ASCE 7-02, CLOSED bldg, not located within 4.50 ft from roof edge, CAT II, EXP B, wind TC DL=5.0 psf, wind BC DL=5.0 psf.

Wind reactions based on MWFRS pressures.

Right end vertical not exposed to wind pressure.

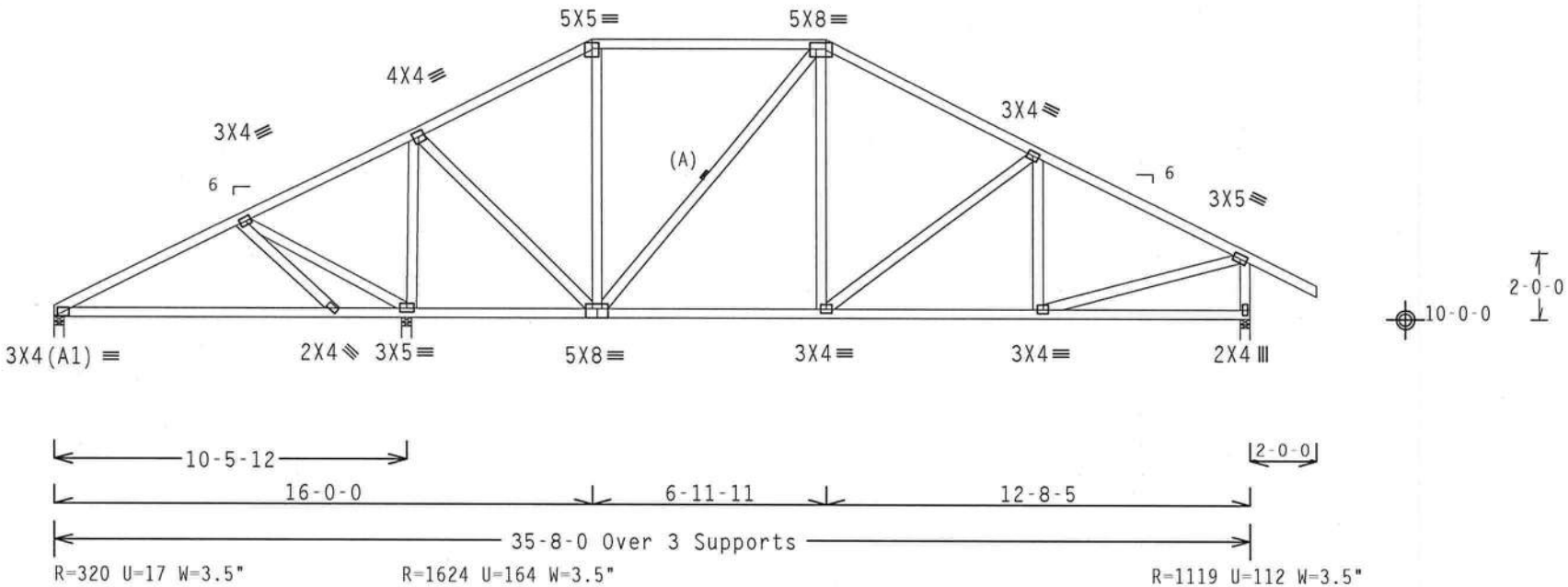

Design Crit: IBC CODE

PLT TYP. Wave Cq/RT=1.00(1.25)/10(0) 7.38.0810 00 QTY:1 FL/-/5/-/-/R/- Scale =.1875"/Ft.

ALPINE

ITW Building Components Group, Inc.
Haines City, FL 33844
FL Certificate of Authorization # 0 278

WARNING TRUSSES REQUIRE EXTREME CARE IN FABRICATION, HANDLING, SHIPPING, INSTALLING AND BRACING. REFER TO BCSI (BUILDING COMPONENT SAFETY INFORMATION), PUBLISHED BY TPI (TRUSS PLATE INSTITUTE, 218 NORTH LEE STREET, SUITE 312, ALEXANDRIA, VA, 22314) AND WTCA (WOOD TRUSS COUNCIL OF AMERICA, 6300 ENTERPRISE LANE, MADISON, WI 53719) FOR SAFETY PRACTICES PRIOR TO PERFORMING THESE FUNCTIONS. UNLESS OTHERWISE INDICATED TOP CHORD SHALL HAVE PROPERLY ATTACHED STRUCTURAL PANELS AND BOTTOM CHORD SHALL HAVE A PROPERLY ATTACHED RIGID CEILING.

IMPORTANTFURNISH A COPY OF THIS DESIGN TO THE INSTALLATION CONTRACTOR. ITW BCG, INC. SHALL NOT BE RESPONSIBLE FOR ANY DEVIATION FROM THIS DESIGN; ANY FAILURE TO BUILD THE TRUSS IN CONFORMANCE WITH TPI; OR FABRICATING, HANDLING, SHIPPING, INSTALLING & BRACING OF TRUSSES. DESIGN CONFORMS WITH APPLICABLE PROVISIONS OF NDS (NATIONAL DESIGN SPEC. BY AF&PA) AND TPI. ITW BCG CONNECTOR PLATES ARE MADE OF 20/18/16GA (W,H/SS/K) ASTM A653 GRADE 40/60 (W, K/H,SS) GALV. STEEL. APPLY PLATES TO EACH FACE OF TRUSS AND, UNLESS OTHERWISE LOCATED ON THIS DESIGN, POSITION PER DRAWINGS 160A-Z. ANY INSPECTION OF PLATES FOLLOWED BY (1) SHALL BE PER ANNEX A3 OF TPI1-2002 SEC.3. A SEAL ON THIS DRAWING INDICATES ACCEPTANCE OF PROFESSIONAL ENGINEERING RESPONSIBILITY SOLELY FOR THE TRUSS COMPONENT DESIGN SHOWN. THE SUITABILITY AND USE OF THIS COMPONENT FOR ANY BUILDING IS THE RESPONSIBILITY OF THE BUILDING DESIGNER PER ANSI/TPI 1 SEC. 2.

JAMES F. COLLINS JR. LICENSED No. 52212 STATE OF FLORIDA PROFESSIONAL ENGINEER
Nov 30 07

TC LL	20.0 PSF	REF R215-- 17513
TC DL	10.0 PSF	DATE 11/30/07
BC DL	10.0 PSF	DRW HCUSR215 07334091
BC LL	0.0 PSF	HC-ENG RA/WHK
TOT.LD.	40.0 PSF	SEQN- 90222
DUR.FAC.	1.25	FROM LRB
SPACING	24.0"	JREF- 1TCW215_Z02

Top chord 2x4 SP #2 N
Bot chord 2x4 SP #2 N
Webs 2x4 SP #2 N

Deflection meets L/240 live and L/180 total load.

The overall height of this truss excluding overhang is 6-4-11.

110 mph wind, 15.00 ft mean hgt, ASCE 7-02, CLOSED bldg, not located within 4.50 ft from roof edge, CAT II, EXP B, wind TC DL=5.0 psf, wind BC DL=5.0 psf.

Wind reactions based on MWFRS pressures.

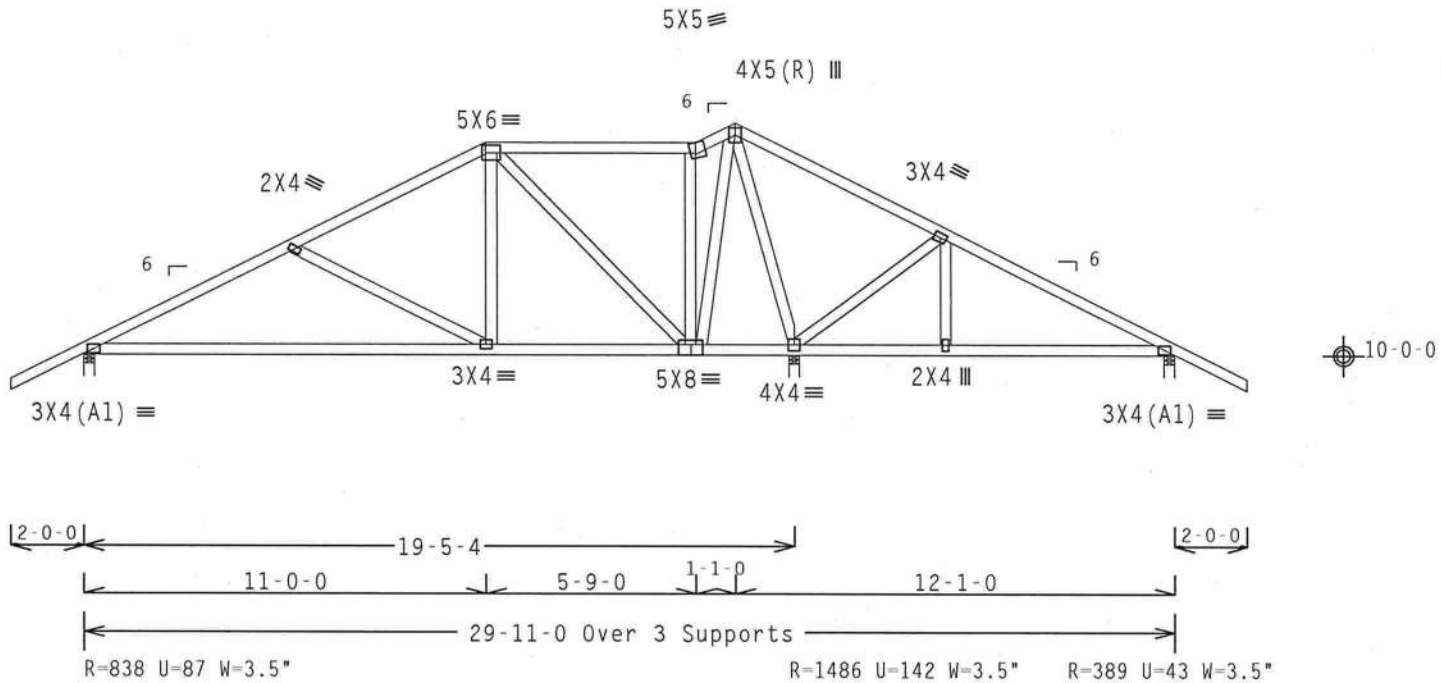

Design Crit: IBC CODE

PLT TYP. Wave Cq/RT=1.00(1.25)/10(0) 7.38.0810 QTY:1 FL/-/5/-/-/R/- Scale =.1875"/Ft.

ALPINE

ITW Building Components Group, Inc.
Haines City, FL 33844
FL Certificate of Authorization # 0 278

WARNING TRUSSES REQUIRE EXTREME CARE IN FABRICATION, HANDLING, SHIPPING, INSTALLING AND BRACING. REFER TO BCSI (BUILDING COMPONENT SAFETY INFORMATION), PUBLISHED BY TPI (TRUSS PLATE INSTITUTE, 218 NORTH LEE STREET, SUITE 312, ALEXANDRIA, VA. 22314) AND WTCA (WOOD TRUSS COUNCIL OF AMERICA, 6300 ENTERPRISE LANE, MADISON, WI 53719) FOR SAFETY PRACTICES PRIOR TO PERFORMING THESE FUNCTIONS. UNLESS OTHERWISE INDICATED TOP CHORD SHALL HAVE PROPERLY ATTACHED STRUCTURAL PANELS AND BOTTOM CHORD SHALL HAVE A PROPERLY ATTACHED RIGID CEILING.

IMPORTANTFURNISH A COPY OF THIS DESIGN TO THE INSTALLATION CONTRACTOR. ITW BCG, INC. SHALL NOT BE RESPONSIBLE FOR ANY DEVIATION FROM THIS DESIGN; ANY FAILURE TO BUILD THE TRUSS IN COMFORMANCE WITH TPI; OR FABRICATING, HANDLING, SHIPPING, INSTALLING & BRACING OF TRUSSES. DESIGN CONFORMS WITH APPLICABLE PROVISIONS OF NDS (NATIONAL DESIGN SPEC. BY AF&PA) AND TPI. ITW BCG CONNECTOR PLATES ARE MADE OF 20/18/16GA (W,H/SS/K) ASTM A653 GRADE 40/60 (W, K/H,SS) GALV. STEEL. APPLY PLATES TO EACH FACE OF TRUSS AND, UNLESS OTHERWISE LOCATED ON THIS DESIGN, POSITION PER DRAWINGS 160A-Z. ANY INSPECTION OF PLATES FOLLOWED BY (I) SHALL BE PER ANNEX A3 OF TPI1-2002 SEC.3. A SEAL ON THIS DRAWING INDICATES ACCEPTANCE OF PROFESSIONAL ENGINEERING RESPONSIBILITY SOLELY FOR THE TRUSS COMPONENT DESIGN SHOWN. THE SUITABILITY AND USE OF THIS COMPONENT FOR ANY BUILDING IS THE RESPONSIBILITY OF THE BUILDING DESIGNER PER ANSI/TPI 1 SEC. 2.

JAMES F. COLLINS, JR. LICENSE No. 52212 STATE OF FLORIDA PROFESSIONAL ENGINEER

Nov 30 07

TC LL	20.0 PSF	REF R215-- 17514
TC DL	10.0 PSF	DATE 11/30/07
BC DL	10.0 PSF	DRW HCUSR215 07334092
BC LL	0.0 PSF	HC-ENG RA/WHK
TOT.LD.	40.0 PSF	SEQN- 90239
DUR.FAC.	1.25	FROM LRB
SPACING	24.0"	JREF- 1TCW215_Z02

Top chord 2x4 SP #2 N
Bot chord 2x4 SP #2 N
Webs 2x4 SP #2 N

Deflection meets L/240 live and L/180 total load.

The overall height of this truss excluding overhang is 6-4-11.

110 mph wind, 15.00 ft mean hgt, ASCE 7-02, CLOSED bldg, not located within 4.50 ft from roof edge, CAT II, EXP B, wind TC DL=5.0 psf, wind BC DL=5.0 psf.

Wind reactions based on MWFRS pressures.

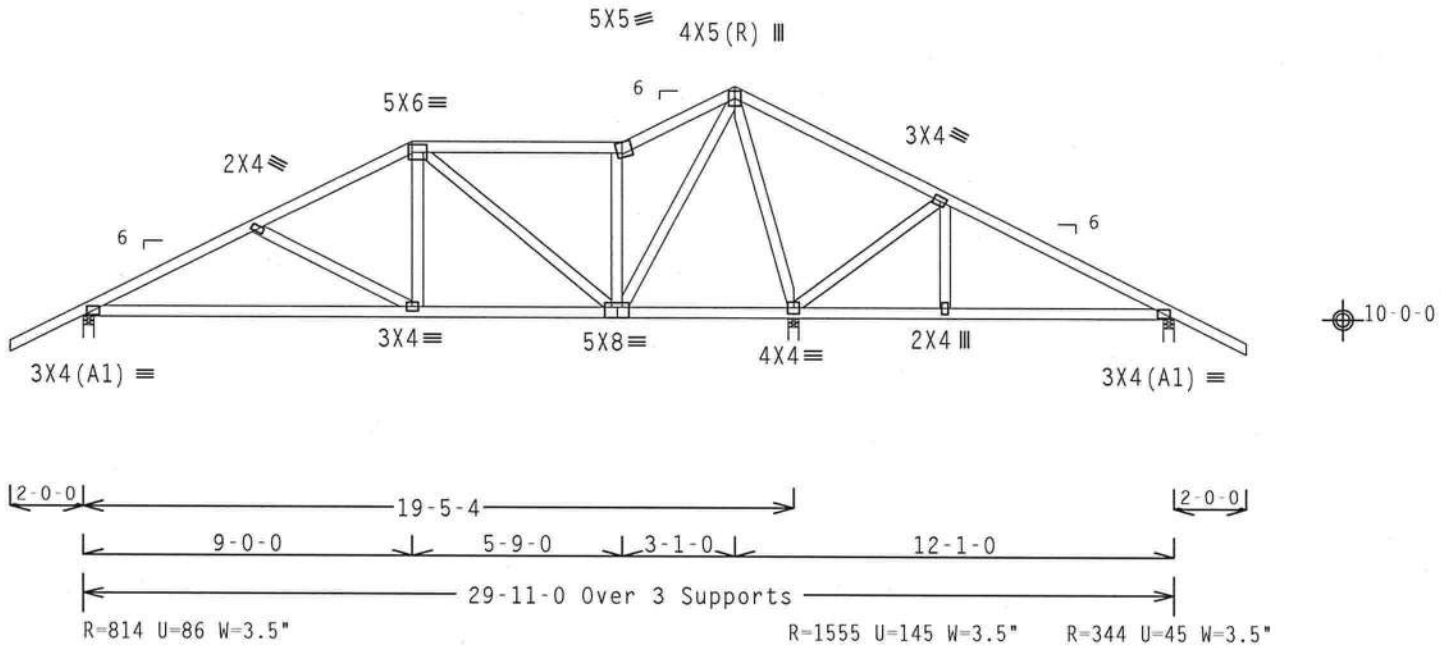

Design Crit: IBC CODE

PLT TYP. Wave Cq/RT=1.00(1.25)/10(0) 7.38.0810.03 QTY:1 FL/-/5/-/-/R/- Scale =.1875"/Ft.

ALPINE

ITW Building Components Group, Inc.
Haines City, FL 33844
FL Certificate of Authorization # 0 278

WARNING TRUSSES REQUIRE EXTREME CARE IN FABRICATION, HANDLING, SHIPPING, INSTALLING AND BRACING. REFER TO BCSI (BUILDING COMPONENT SAFETY INFORMATION), PUBLISHED BY TPI (TRUSS PLATE INSTITUTE, 218 NORTH LEE STREET, SUITE 312, ALEXANDRIA, VA, 22314) AND WTCA (WOOD TRUSS COUNCIL OF AMERICA, 6300 ENTERPRISE LANE, MADISON, WI 53719) FOR SAFETY PRACTICES PRIOR TO PERFORMING THESE FUNCTIONS. UNLESS OTHERWISE INDICATED TOP CHORD SHALL HAVE PROPERLY ATTACHED STRUCTURAL PANELS AND BOTTOM CHORD SHALL HAVE A PROPERLY ATTACHED RIGID CEILING.

IMPORTANTFURNISH A COPY OF THIS DESIGN TO THE INSTALLATION CONTRACTOR. ITW BCG, INC. SHALL NOT BE RESPONSIBLE FOR ANY DEVIATION FROM THIS DESIGN; ANY FAILURE TO BUILD THE TRUSS IN COMFORMANCE WITH TPI; OR FABRICATING, HANDLING, SHIPPING, INSTALLING & BRACING OF TRUSSES. DESIGN CONFORMS WITH APPLICABLE PROVISIONS OF NDS (NATIONAL DESIGN SPEC. BY AF&PA) AND TPI. ITW BCG CONNECTOR PLATES ARE MADE OF 20/18/16GA (W,H/SS/K) ASTM A653 GRADE 40/60 (W, K/H,SS) GALV. STEEL. APPLY PLATES TO EACH FACE OF TRUSS AND, UNLESS OTHERWISE LOCATED ON THIS DESIGN, POSITION PER DRAWINGS 160A-Z. ANY INSPECTION OF PLATES FOLLOWED BY (1) SHALL BE PER ANNEX A3 OF TPI1-2002 SEC.3. A SEAL ON THIS DRAWING INDICATES ACCEPTANCE OF PROFESSIONAL ENGINEERING RESPONSIBILITY SOLELY FOR THE TRUSS COMPONENT DESIGN SHOWN. THE SUITABILITY AND USE OF THIS COMPONENT FOR ANY BUILDING IS THE RESPONSIBILITY OF THE BUILDING DESIGNER PER ANSI/TPI 1 SEC. 2.

JAMES F. COLLINS JR. LICENSE No. 52212 STATE OF FLORIDA PROFESSIONAL ENGINEER

Nov 30, 2007

TC LL	20.0 PSF	REF	R215-- 17515
TC DL	10.0 PSF	DATE	11/30/07
BC DL	10.0 PSF	DRW	HCUSR215 07334093
BC LL	0.0 PSF	HC-ENG	RA/WHK
TOT.LD.	40.0 PSF	SEQN-	90233
DUR.FAC.	1.25	FROM	LRB
SPACING	24.0"	JREF-	1TCW215_Z02

Top chord 2x4 SP #2 N :T1 2x4 SP #2 Dense:
:T2 2x6 SP SS:
Bot chord 2x6 SP SS
Webs 2x4 SP #2 N :W4 2x4 SP SS:
:Lt Wedge 2x4 SP #2 N:

Bearing blocks: Nail type: 10d_Box_or_Gun_(0.128"x3",_min.)_nails

BRG	X-LOC	#BLOCKS	LENGTH/BLK	#NAILS/BLK	WALL PLATE
1	0.000'	1	12"	4	Rigid Surface
2	19.292'	1	12"	11	Rigid Surface

Bearing block to be same size and species as bottom chord.
Refer to drawing CNBRGBLK0207 for additional information.

(**) 2 plate(s) require special positioning. Refer to scaled plate plot details for special positioning requirements.

110 mph wind, 15.00 ft mean hgt, ASCE 7-02, CLOSED bldg, not located within 4.50 ft from roof edge, CAT II, EXP B, wind TC DL=5.0 psf, wind BC DL=5.0 psf.

Wind reactions based on MWFRS pressures.

(A) Continuous lateral bracing equally spaced on member.

Deflection meets L/240 live and L/180 total load.

SPECIAL LOADS
------(LUMBER DUR.FAC.=1.25 / PLATE DUR.FAC.=1.25)

TC - From	62 PLF at	-2.00 to	62 PLF at	7.00
TC - From	62 PLF at	7.00 to	62 PLF at	12.75
TC - From	62 PLF at	12.75 to	62 PLF at	17.83
TC - From	62 PLF at	17.83 to	62 PLF at	19.58
BC - From	20 PLF at	0.00 to	20 PLF at	19.58

TC - 288 LB Conc. Load at 7.06
TC - 581 LB Conc. Load at 9.06
TC - 577 LB Conc. Load at 11.06
TC - 368 LB Conc. Load at 12.10
TC - 823 LB Conc. Load at 17.90
BC - 921 LB Conc. Load at 7.00
BC - 581 LB Conc. Load at 9.06
BC - 577 LB Conc. Load at 11.06
BC - 204 LB Conc. Load at 12.10
BC - 823 LB Conc. Load at 17.90

Right end vertical not exposed to wind pressure.

The overall height of this truss excluding overhang is 6-4-11.

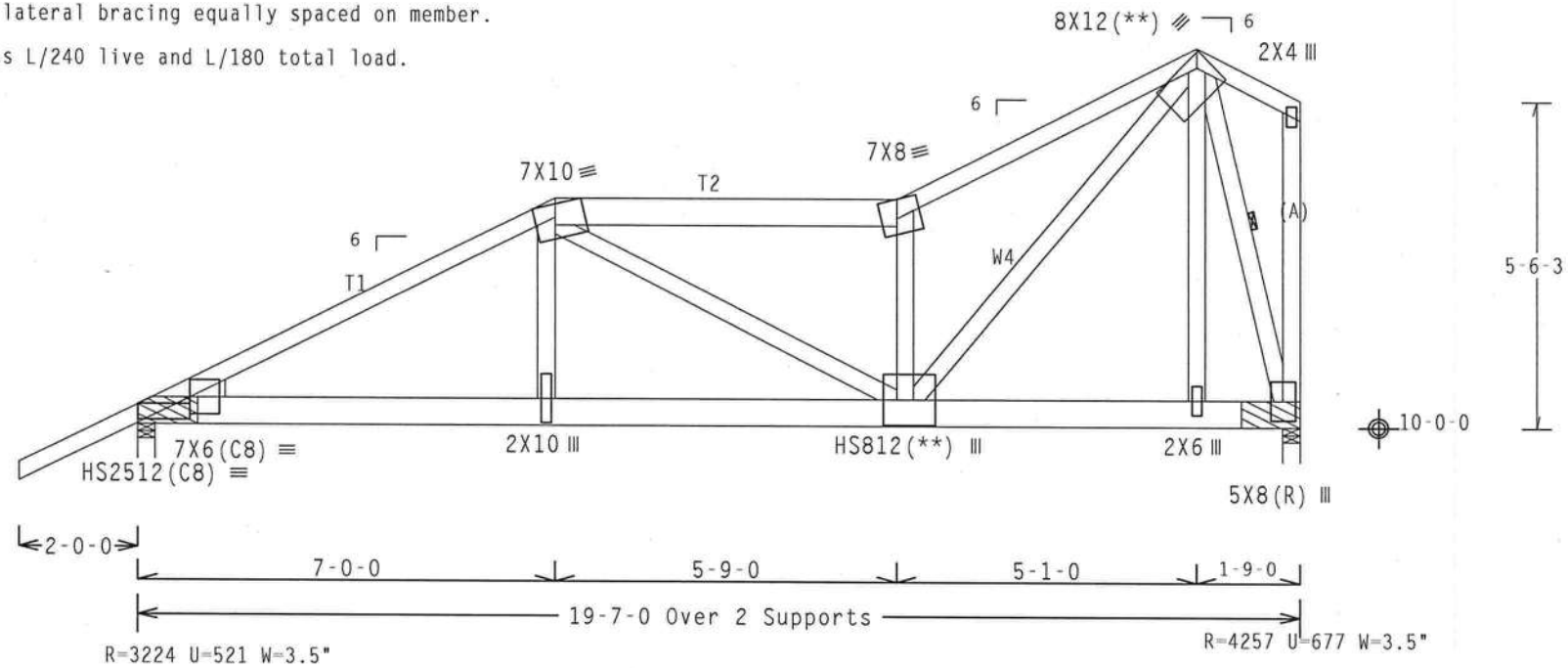

Design Crit: IBC CODE

PLT TYP. 20 Gauge HS,Wave Cq/RT=1.00(1.25)/10(0) 7.38.0810 QTY:1 FL/-/5/-/-/R/- Scale =.3125"/Ft.

ALPINE
ITW Building Components Group, Inc.
Haines City, FL 33844
FL Certificate of Authorization # 0 278

WARNING TRUSSES REQUIRE EXTREME CARE IN FABRICATION, HANDLING, SHIPPING, INSTALLING AND BRACING. REFER TO BCSI (BUILDING COMPONENT SAFETY INFORMATION), PUBLISHED BY TPI (TRUSS PLATE INSTITUTE, 218 NORTH LEE STREET, SUITE 312, ALEXANDRIA, VA, 22314) AND WTCA (WOOD TRUSS COUNCIL OF AMERICA, 6300 ENTERPRISE LANE, MADISON, WI 53719) FOR SAFETY PRACTICES PRIOR TO PERFORMING THESE FUNCTIONS. UNLESS OTHERWISE INDICATED TOP CHORD SHALL HAVE PROPERLY ATTACHED STRUCTURAL PANELS AND BOTTOM CHORD SHALL HAVE A PROPERLY ATTACHED RIGID CEILING.

IMPORTANTFURNISH A COPY OF THIS DESIGN TO THE INSTALLATION CONTRACTOR. ITW BCG, INC. SHALL NOT BE RESPONSIBLE FOR ANY DEVIATION FROM THIS DESIGN; ANY FAILURE TO BUILD THE TRUSS IN COMFORMANCE WITH TPI; OR FABRICATING, HANDLING, SHIPPING, INSTALLING & BRACING OF TRUSSES.
DESIGN CONFORMS WITH APPLICABLE PROVISIONS OF NDS (NATIONAL DESIGN SPEC. BY AF&PA) AND TPI. ITW BCG CONNECTOR PLATES ARE MADE OF 20/18/16GA (W,H/SS/K) ASTM A653 GRADE 40/60 (W, K/H,SS) GALV. STEEL. APPLY PLATES TO EACH FACE OF TRUSS AND, UNLESS OTHERWISE LOCATED ON THIS DESIGN, POSITION PER DRAWINGS 160A-Z. ANY INSPECTION OF PLATES FOLLOWED BY (1) SHALL BE PER ANNEX A3 OF TPI1-2002 SEC.3. A SEAL ON THIS DRAWING INDICATES ACCEPTANCE OF PROFESSIONAL ENGINEERING RESPONSIBILITY SOLELY FOR THE TRUSS COMPONENT DESIGN SHOWN. THE SUITABILITY AND USE OF THIS COMPONENT FOR ANY BUILDING IS THE RESPONSIBILITY OF THE BUILDING DESIGNER PER ANSI/TPI 1 SEC. 2.

JAMES F. COLLINS, JR. LICENSE No. 52212 STATE OF FLORIDA PROFESSIONAL ENGINEER
Nov 30 07

TC LL	20.0 PSF	REF	R215-- 17516
TC DL	10.0 PSF	DATE	11/30/07
BC DL	10.0 PSF	DRW	HCUSR215 07334116
BC LL	0.0 PSF	HC-ENG	RA/WHK
TOT.LD.	40.0 PSF	SEQN-	90467
DUR.FAC.	1.25	FROM	LRB
SPACING	24.0"	JREF-	1TCW215_Z02

Top chord 2x4 SP #2 N
Bot chord 2x4 SP #2 N
Webs 2x4 SP #2 N

End verticals not exposed to wind pressure.

Deflection meets L/240 live and L/180 total load.

110 mph wind, 15.00 ft mean hgt, ASCE 7-02, CLOSED bldg, not located within 4.50 ft from roof edge, CAT II, EXP B, wind TC DL=5.0 psf, wind BC DL=5.0 psf.

Wind reactions based on MWFRS pressures.

The overall height of this truss excluding overhang is 6-4-11.

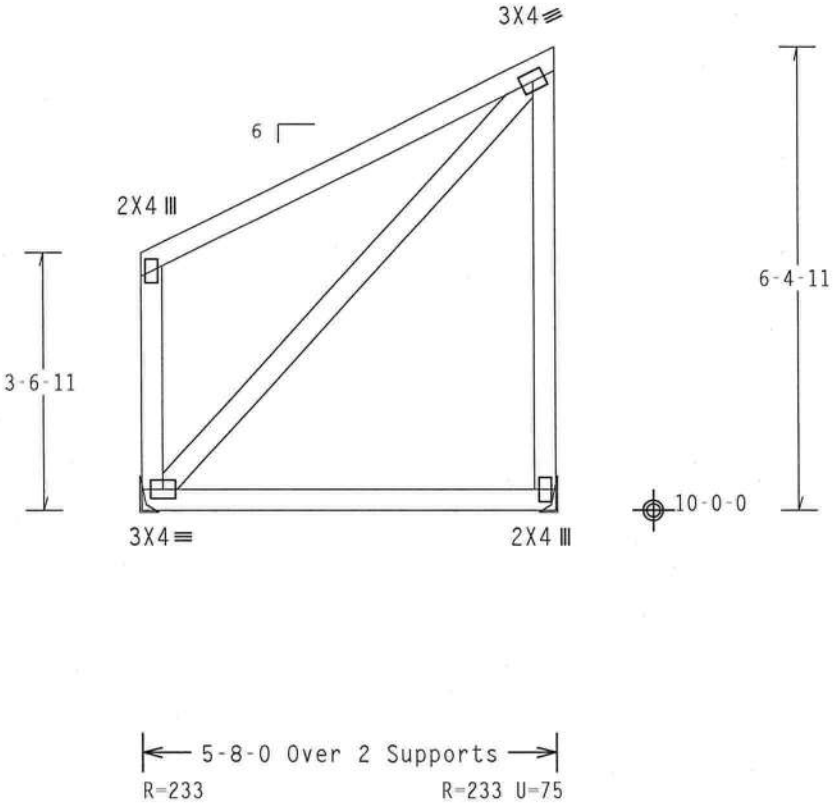

Design Crit: IBC CODE

PLT TYP. Wave | Cq/RT=1.00(1.25)/10(0) 7.38.0810 | QTY:1 | FL/-/5/-/-/R/- | Scale =.375"/Ft.

ALPINE
ITW Building Components Group, Inc.
Haines City, FL 33844
FL Certificate of Authorization # 0 278

WARNING TRUSSES REQUIRE EXTREME CARE IN FABRICATION, HANDLING, SHIPPING, INSTALLING AND BRACING. REFER TO BCSI (BUILDING COMPONENT SAFETY INFORMATION), PUBLISHED BY TPI (TRUSS PLATE INSTITUTE, 218 NORTH LEE STREET, SUITE 312, ALEXANDRIA, VA. 22314) AND WTCA (WOOD TRUSS COUNCIL OF AMERICA, 6300 ENTERPRISE LANE, MADISON, WI 53719) FOR SAFETY PRACTICES PRIOR TO PERFORMING THESE FUNCTIONS. UNLESS OTHERWISE INDICATED TOP CHORD SHALL HAVE PROPERLY ATTACHED STRUCTURAL PANELS AND BOTTOM CHORD SHALL HAVE A PROPERLY ATTACHED RIGID CEILING.

IMPORTANT FURNISH A COPY OF THIS DESIGN TO THE INSTALLATION CONTRACTOR. ITW BCG, INC. SHALL NOT BE RESPONSIBLE FOR ANY DEVIATION FROM THIS DESIGN; ANY FAILURE TO BUILD THE TRUSS IN COMFORMANCE WITH TPI; OR FABRICATING, HANDLING, SHIPPING, INSTALLING & BRACING OF TRUSSES.
DESIGN CONFORMS WITH APPLICABLE PROVISIONS OF NDS (NATIONAL DESIGN SPEC, BY AF&PA) AND TPI. ITW BCG CONNECTOR PLATES ARE MADE OF 20/18/16GA (W,H/SS/K) ASTM A653 GRADE 40/60 (W, K/H,SS) GALV. STEEL. APPLY PLATES TO EACH FACE OF TRUSS AND, UNLESS OTHERWISE LOCATED ON THIS DESIGN, POSITION PER DRAWINGS 160A-Z. ANY INSPECTION OF PLATES FOLLOWED BY (1) SHALL BE PER ANNEX A3 OF TPI1-2002 SEC.3. A SEAL ON THIS DRAWING INDICATES ACCEPTANCE OF PROFESSIONAL ENGINEERING RESPONSIBILITY SOLELY FOR THE TRUSS COMPONENT DESIGN SHOWN. THE SUITABILITY AND USE OF THIS COMPONENT FOR ANY BUILDING IS THE RESPONSIBILITY OF THE BUILDING DESIGNER PER ANSI/TPI 1 SEC. 2.

JAMES F. COLLINS JR. LICENSE No. 52212 STATE OF FLORIDA PROFESSIONAL ENGINEER
Nov 30, 2007

TC LL	20.0 PSF	REF R215-- 17517
TC DL	10.0 PSF	DATE 11/30/07
BC DL	10.0 PSF	DRW HCUSR215 07334058
BC LL	0.0 PSF	HC-ENG RA/WHK *
TOT.LD.	40.0 PSF	SEQN- 90428
DUR.FAC.	1.25	FROM LRB
SPACING	24.0"	JREF- 1TCW215_Z02

op chord 2x4 SP #2 N
ot chord 2x4 SP #2 N
Webs 2x4 SP #2 N

nd verticals not exposed to wind pressure.

eflection meets L/240 live and L/180 total load.

110 mph wind, 15.00 ft mean hgt, ASCE 7-02, CLOSED bldg, not located within 4.50 ft from roof edge, CAT II, EXP B, wind TC DL=5.0 psf, wind BC DL=5.0 psf.

Wind reactions based on MWFRS pressures.

The overall height of this truss excluding overhang is 6-4-11.

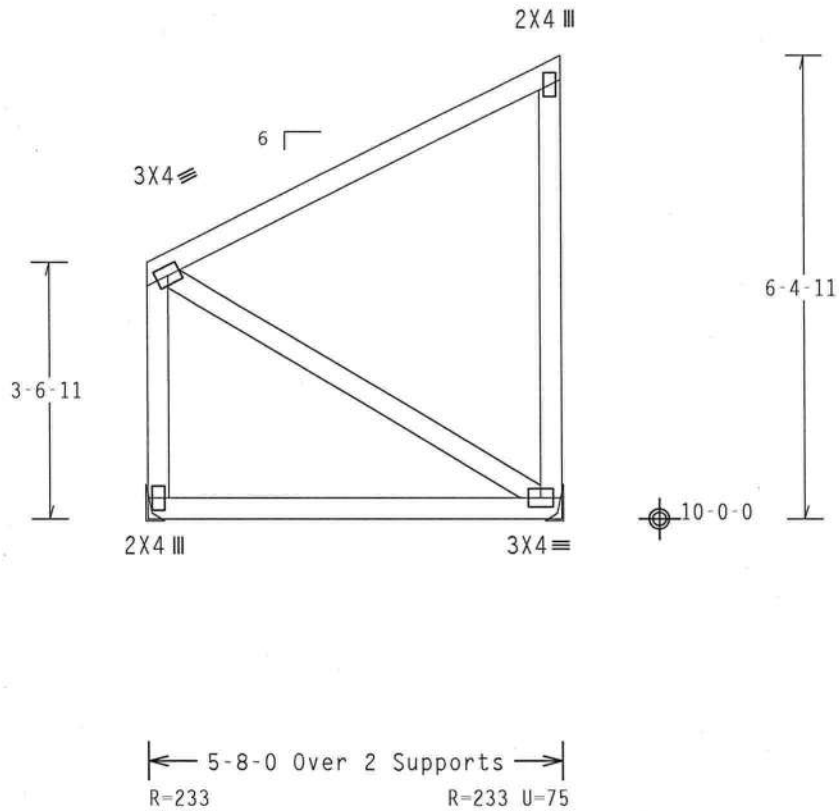

Design Crit: IBC CODE

'LT TYP. Wave Cq/RT=1.00(1.25)/10(0) 7.38.0810 QTY:1 FL/-/5/-/-/R/- Scale =.375"/Ft.

ALPINE

TW Building Components Group, Inc.
Haines City, FL 33844
L Certificate of Authorization # 0 278

WARNING TRUSSES REQUIRE EXTREME CARE IN FABRICATION, HANDLING, SHIPPING, INSTALLING AND BRACING. REFER TO BCSI (BUILDING COMPONENT SAFETY INFORMATION), PUBLISHED BY TPI (TRUSS PLATE INSTITUTE, 218 NORTH LEE STREET, SUITE 312, ALEXANDRIA, VA, 22314) AND WTCA (WOOD TRUSS COUNCIL OF AMERICA, 6300 ENTERPRISE LANE, MADISON, WI 53719) FOR SAFETY PRACTICES PRIOR TO PERFORMING THESE FUNCTIONS. UNLESS OTHERWISE INDICATED TOP CHORD SHALL HAVE PROPERLY ATTACHED STRUCTURAL PANELS AND BOTTOM CHORD SHALL HAVE A PROPERLY ATTACHED RIGID CEILING.

IMPORTANT FURNISH A COPY OF THIS DESIGN TO THE INSTALLATION CONTRACTOR. ITW BCG, INC. SHALL NOT BE RESPONSIBLE FOR ANY DEVIATION FROM THIS DESIGN; ANY FAILURE TO BUILD THE TRUSS IN COMFORMANCE WITH TPI; OR FABRICATING, HANDLING, SHIPPING, INSTALLING & BRACING OF TRUSSES. DESIGN CONFORMS WITH APPLICABLE PROVISIONS OF NDS (NATIONAL DESIGN SPEC, BY AF&PA) AND TPI. ITW BCG CONNECTOR PLATES ARE MADE OF 20/18/16GA (W,H/SS/K) ASTM A653 GRADE 40/60 (W, K/H,SS) GALV. STEEL. APPLY PLATES TO EACH FACE OF TRUSS AND, UNLESS OTHERWISE LOCATED ON THIS DESIGN, POSITION PER DRAWINGS 160A-Z. ANY INSPECTION OF PLATES FOLLOWED BY (1) SHALL BE PER ANNEX A3 OF TPI1-2002 SEC.3. A SEAL ON THIS DRAWING INDICATES ACCEPTANCE OF PROFESSIONAL ENGINEERING RESPONSIBILITY SOLELY FOR THE TRUSS COMPONENT DESIGN SHOWN. THE SUITABILITY AND USE OF THIS COMPONENT FOR ANY BUILDING IS THE RESPONSIBILITY OF THE BUILDING DESIGNER PER ANSI/TPI 1 SEC. 2.

JAMES F. COLLINS JR. LICENSE No. 52272 STATE OF FLORIDA PROFESSIONAL ENGINEER
Nov 30 '07

TC LL	20.0 PSF	REF	R215-- 17518
TC DL	10.0 PSF	DATE	11/30/07
BC DL	10.0 PSF	DRW	HCUSR215 07334059
BC LL	0.0 PSF	HC-ENG	RA/WHK *
TOT.LD.	40.0 PSF	SEQN-	90421
DUR.FAC.	1.25	FROM	LRB
SPACING	24.0"	JREF-	1TCW215_Z02

Top chord 2x4 SP #2 N
Bot chord 2x4 SP #2 N
Webs 2x4 SP #2 N

End verticals not exposed to wind pressure.

Deflection meets L/240 live and L/180 total load.

110 mph wind, 15.00 ft mean hgt, ASCE 7-02, CLOSED bldg, not located within 4.50 ft from roof edge, CAT II, EXP B, wind TC DL=5.0 psf, wind BC DL=5.0 psf.

Wind reactions based on MWFRS pressures.

The overall height of this truss excluding overhang is 6-1-7.

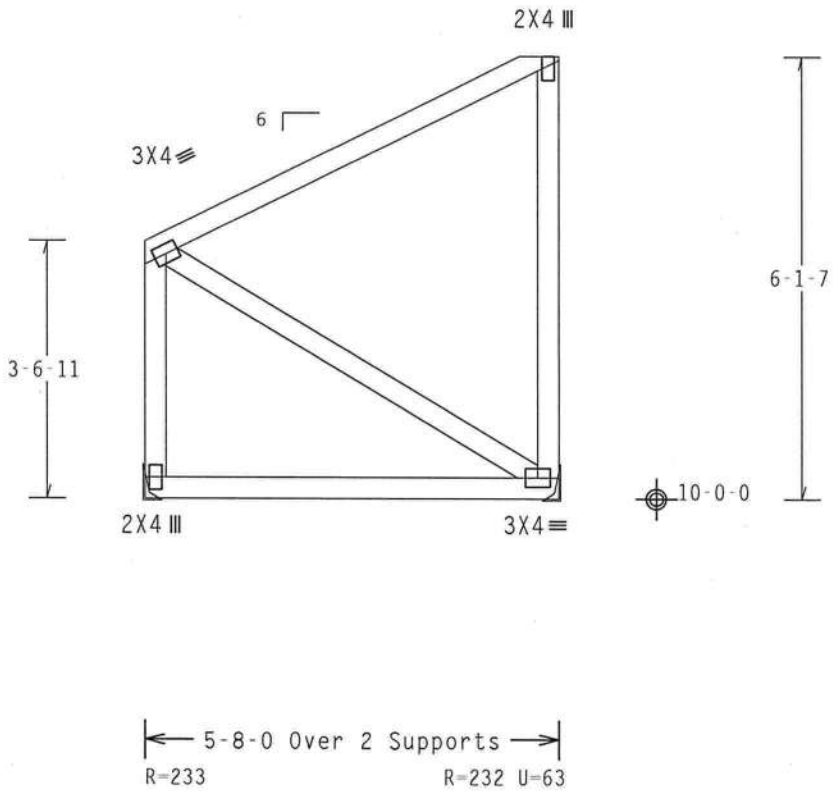

Design Crit: IBC CODE

PLT TYP. Wave Cq/RT=1.00(1.25)/10(0) 7.38.081[illegible] QTY:1 FL/-/5/-/-/R/- Scale =.375"/Ft.

ALPINE

ITW Building Components Group, Inc.
Haines City, FL 33844
FL Certificate of Authorization # 0 278

WARNING TRUSSES REQUIRE EXTREME CARE IN FABRICATION, HANDLING, SHIPPING, INSTALLING AND BRACING. REFER TO BCSI (BUILDING COMPONENT SAFETY INFORMATION), PUBLISHED BY TPI (TRUSS PLATE INSTITUTE, 218 NORTH LEE STREET, SUITE 312, ALEXANDRIA, VA, 22314) AND WTCA (WOOD TRUSS COUNCIL OF AMERICA, 6300 ENTERPRISE LANE, MADISON, WI 53719) FOR SAFETY PRACTICES PRIOR TO PERFORMING THESE FUNCTIONS. UNLESS OTHERWISE INDICATED TOP CHORD SHALL HAVE PROPERLY ATTACHED STRUCTURAL PANELS AND BOTTOM CHORD SHALL HAVE A PROPERLY ATTACHED RIGID CEILING.

IMPORTANTFURNISH A COPY OF THIS DESIGN TO THE INSTALLATION CONTRACTOR. ITW BCG, INC. SHALL NOT BE RESPONSIBLE FOR ANY DEVIATION FROM THIS DESIGN; ANY FAILURE TO BUILD THE TRUSS IN COMFORMANCE WITH TPI; OR FABRICATING, HANDLING, SHIPPING, INSTALLING & BRACING OF TRUSSES.
DESIGN CONFORMS WITH APPLICABLE PROVISIONS OF NDS (NATIONAL DESIGN SPEC. BY AF&PA) AND TPI. ITW BCG CONNECTOR PLATES ARE MADE OF 20/18/16GA (W,H/SS/K) ASTM A653 GRADE 40/60 (W, K/H,SS) GALV. STEEL. APPLY PLATES TO EACH FACE OF TRUSS AND, UNLESS OTHERWISE LOCATED ON THIS DESIGN, POSITION PER DRAWINGS 160A-Z. ANY INSPECTION OF PLATES FOLLOWED BY (1) SHALL BE PER ANNEX A3 OF TPI1-2002 SEC.3. A SEAL ON THIS DRAWING INDICATES ACCEPTANCE OF PROFESSIONAL ENGINEERING RESPONSIBILITY SOLELY FOR THE TRUSS COMPONENT DESIGN SHOWN. THE SUITABILITY AND USE OF THIS COMPONENT FOR ANY BUILDING IS THE RESPONSIBILITY OF THE BUILDING DESIGNER PER ANSI/TPI 1 SEC. 2.

JAMES F. COLLINS LICENSED No. 52212 STATE OF FLORIDA PROFESSIONAL ENGINEER
Nov 30 '07

TC LL	20.0 PSF	REF	R215-- 17519
TC DL	10.0 PSF	DATE	11/30/07
BC DL	10.0 PSF	DRW	HCUSR215 07334094
BC LL	0.0 PSF	HC-ENG	RA/WHK
TOT.LD.	40.0 PSF	SEQN-	90413
DUR.FAC.	1.25	FROM	LRB
SPACING	24.0"	JREF-	1TCW215_Z02

op chord 2x4 SP #2 N
ot chord 2x4 SP #2 N
Webs 2x4 SP #2 N

eflection meets L/240 live and L/180 total load.

he overall height of this truss excluding overhang is 2-6-0.

eft end vertical exposed to wind pressure. Deflection meets L/240 riteria for brittle and flexible wall coverings.

110 mph wind, 15.00 ft mean hgt, ASCE 7-02, CLOSED bldg, Located anywhere in roof, CAT II, EXP B, wind TC DL=5.0 psf, wind BC DL=5.0 psf.

Wind reactions based on MWFRS pressures.

Fasten rated sheathing to one face of this frame.

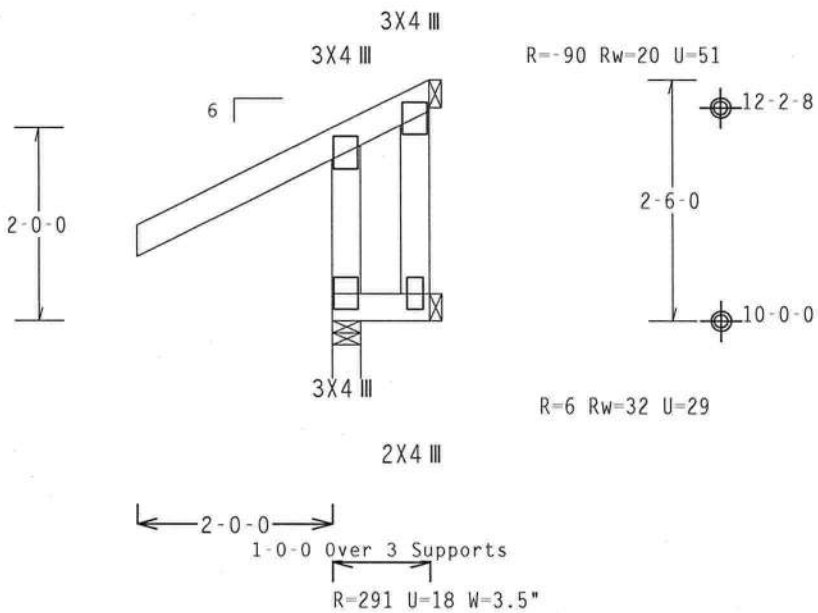

Design Crit: IBC CODE

'LT TYP. Wave | Cq/RT=1.00(1.25)/10(0) 7.38.0810 | QTY:1 | FL/-/5/-/-/R/- | Scale =.5"/Ft.

ALPINE

TW Building Components Group, Inc.
Haines City, FL 33844
L Certificate of Authorization # 0 278

WARNING TRUSSES REQUIRE EXTREME CARE IN FABRICATION, HANDLING, SHIPPING, INSTALLING AND BRACING. REFER TO BCSI (BUILDING COMPONENT SAFETY INFORMATION), PUBLISHED BY TPI (TRUSS PLATE INSTITUTE, 218 NORTH LEE STREET, SUITE 312, ALEXANDRIA, VA. 22314) AND WTCA (WOOD TRUSS COUNCIL OF AMERICA, 6300 ENTERPRISE LANE, MADISON, WI 53719) FOR SAFETY PRACTICES PRIOR TO PERFORMING THESE FUNCTIONS. UNLESS OTHERWISE INDICATED TOP CHORD SHALL HAVE PROPERLY ATTACHED STRUCTURAL PANELS AND BOTTOM CHORD SHALL HAVE A PROPERLY ATTACHED RIGID CEILING.

IMPORTANTFURNISH A COPY OF THIS DESIGN TO THE INSTALLATION CONTRACTOR. ITW BCG, INC. SHALL NOT BE RESPONSIBLE FOR ANY DEVIATION FROM THIS DESIGN; ANY FAILURE TO BUILD THE TRUSS IN COMFORMANCE WITH TPI; OR FABRICATING, HANDLING, SHIPPING, INSTALLING & BRACING OF TRUSSES.
DESIGN CONFORMS WITH APPLICABLE PROVISIONS OF NDS (NATIONAL DESIGN SPEC. BY AF&PA) AND TPI. ITW BCG CONNECTOR PLATES ARE MADE OF 20/18/16GA (W,H/SS/K) ASTM A653 GRADE 40/60 (W, K/H,SS) GALV. STEEL. APPLY PLATES TO EACH FACE OF TRUSS AND, UNLESS OTHERWISE LOCATED ON THIS DESIGN, POSITION PER DRAWINGS 160A-Z. ANY INSPECTION OF PLATES FOLLOWED BY (1) SHALL BE PER ANNEX A3 OF TPI1-2002 SEC.3. A SEAL ON THIS DRAWING INDICATES ACCEPTANCE OF PROFESSIONAL ENGINEERING RESPONSIBILITY SOLELY FOR THE TRUSS COMPONENT DESIGN SHOWN. THE SUITABILITY AND USE OF THIS COMPONENT FOR ANY BUILDING IS THE RESPONSIBILITY OF THE BUILDING DESIGNER PER ANSI/TPI 1 SEC. 2.

JAMES F. COLLINS, JR. LICENSE No 52212 STATE OF FLORIDA PROFESSIONAL ENGINEER
Nov 30 07

TC LL	20.0 PSF	REF	R215-- 17520
TC DL	10.0 PSF	DATE	11/30/07
BC DL	10.0 PSF	DRW	HCUSR215 07334095
BC LL	0.0 PSF	HC-ENG	RA/WHK
TOT.LD.	40.0 PSF	SEQN-	90390
DUR.FAC.	1.25	FROM	LRB
SPACING	24.0"	JREF-	1TCW215_Z02

Top chord 2x4 SP #2 N
Bot chord 2x4 SP #2 N
Webs 2x4 SP #2 N

Left end vertical not exposed to wind pressure.

Deflection meets L/240 live and L/180 total load.

110 mph wind, 15.00 ft mean hgt, ASCE 7-02, CLOSED bldg, Located anywhere in roof, CAT II, EXP B, wind TC DL=5.0 psf, wind BC DL=5.0 psf.

Wind reactions based on MWFRS pressures.

The overall height of this truss excluding overhang is 3-6-0.

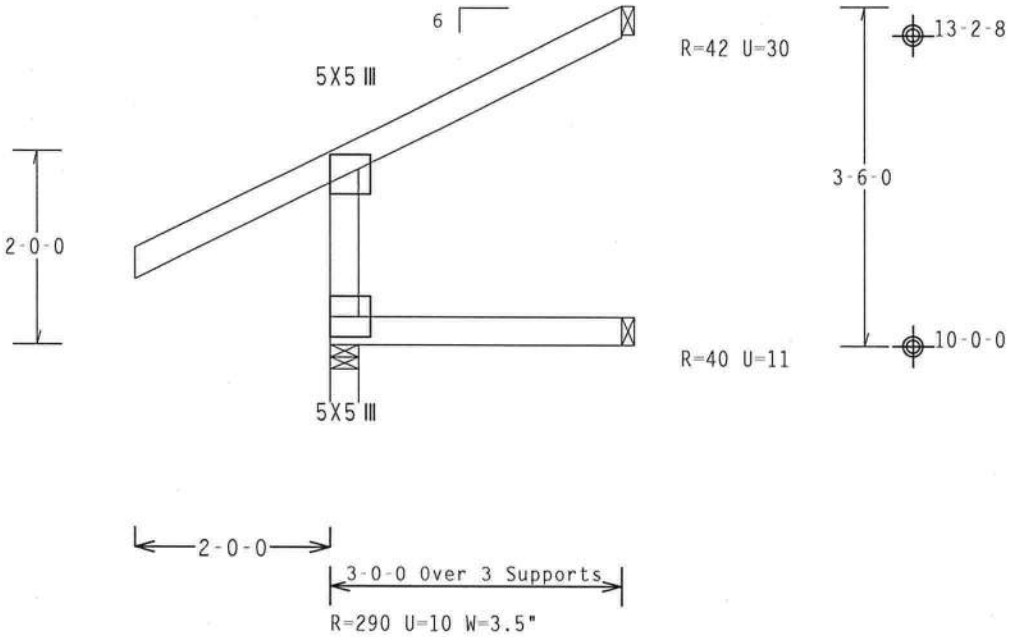

Design Crit: IBC CODE

PLT TYP. Wave Cq/RT=1.00(1.25)/10(0) 7.38.0810.03 QTY:1 FL/-/5/-/-/R/- Scale =.5"/Ft.

ALPINE

ITW Building Components Group, Inc.
Haines City, FL 33844
FL Certificate of Authorization # 0 278

WARNING TRUSSES REQUIRE EXTREME CARE IN FABRICATION, HANDLING, SHIPPING, INSTALLING AND BRACING. REFER TO BCSI (BUILDING COMPONENT SAFETY INFORMATION), PUBLISHED BY TPI (TRUSS PLATE INSTITUTE, 218 NORTH LEE STREET, SUITE 312, ALEXANDRIA, VA, 22314) AND WTCA (WOOD TRUSS COUNCIL OF AMERICA, 6300 ENTERPRISE LANE, MADISON, WI 53719) FOR SAFETY PRACTICES PRIOR TO PERFORMING THESE FUNCTIONS. UNLESS OTHERWISE INDICATED TOP CHORD SHALL HAVE PROPERLY ATTACHED STRUCTURAL PANELS AND BOTTOM CHORD SHALL HAVE A PROPERLY ATTACHED RIGID CEILING.

IMPORTANTFURNISH A COPY OF THIS DESIGN TO THE INSTALLATION CONTRACTOR. ITW BCG, INC. SHALL NOT BE RESPONSIBLE FOR ANY DEVIATION FROM THIS DESIGN; ANY FAILURE TO BUILD THE TRUSS IN COMFORMANCE WITH TPI; OR FABRICATING, HANDLING, SHIPPING, INSTALLING & BRACING OF TRUSSES.
DESIGN CONFORMS WITH APPLICABLE PROVISIONS OF NDS (NATIONAL DESIGN SPEC. BY AF&PA) AND TPI. ITW BCG CONNECTOR PLATES ARE MADE OF 20/18/16GA (W,H/SS/K) ASTM A653 GRADE 40/60 (W, K/H,SS) GALV. STEEL. APPLY PLATES TO EACH FACE OF TRUSS AND, UNLESS OTHERWISE LOCATED ON THIS DESIGN, POSITION PER DRAWINGS 160A-Z. ANY INSPECTION OF PLATES FOLLOWED BY (1) SHALL BE PER ANNEX A3 OF TPI1-2002 SEC.3. A SEAL ON THIS DRAWING INDICATES ACCEPTANCE OF PROFESSIONAL ENGINEERING RESPONSIBILITY SOLELY FOR THE TRUSS COMPONENT DESIGN SHOWN. THE SUITABILITY AND USE OF THIS COMPONENT FOR ANY BUILDING IS THE RESPONSIBILITY OF THE BUILDING DESIGNER PER ANSI/TPI 1 SEC. 2.

JAMES F. COLLINS JR. LICENSE No. 52212 STATE OF FLORIDA PROFESSIONAL ENGINEER
Nov 30, 2007

TC LL	20.0 PSF	REF	R215-- 17521
TC DL	10.0 PSF	DATE	11/30/07
BC DL	10.0 PSF	DRW	HCUSR215 07334060
BC LL	0.0 PSF	HC-ENG	RA/WHK *
TOT.LD.	40.0 PSF	SEQN-	90132
DUR.FAC.	1.25	FROM	LRB
SPACING	24.0"	JREF-	1TCW215_Z02

Top chord 2x4 SP #2 N
Bot chord 2x4 SP #2 N

Deflection meets L/240 live and L/180 total load.

The overall height of this truss excluding overhang is 2-10-3.

110 mph wind, 15.00 ft mean hgt, ASCE 7-02, CLOSED bldg, not located within 4.50 ft from roof edge, CAT II, EXP B, wind TC DL=5.0 psf, wind BC DL=5.0 psf.

Wind reactions based on MWFRS pressures.

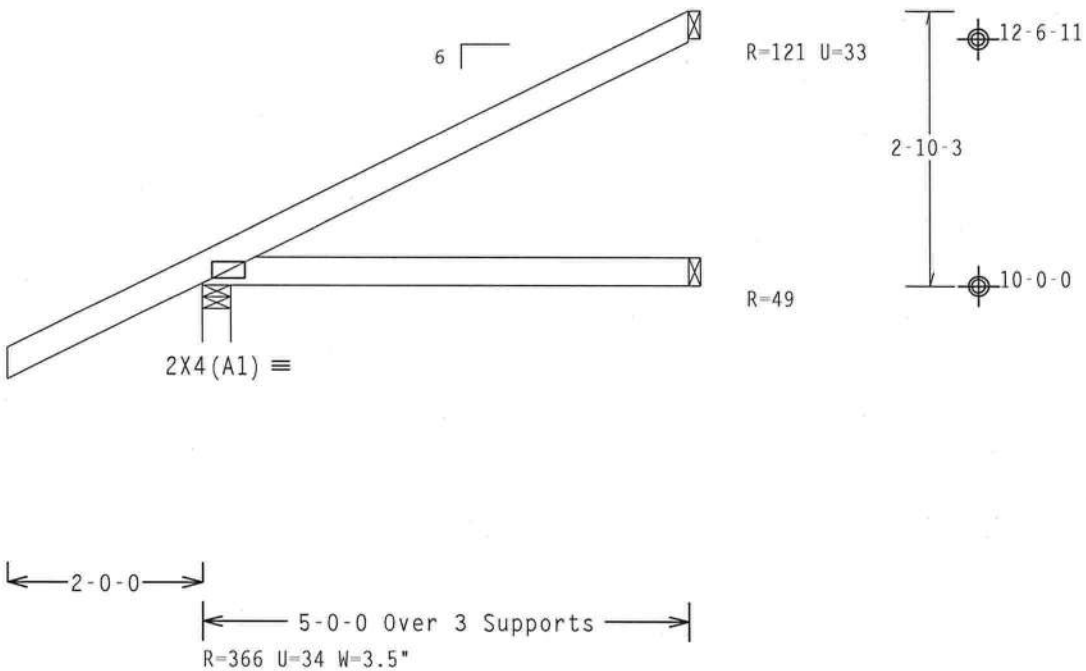

Design Crit: IBC CODE

PLT TYP. Wave Cq/RT=1.00(1.25)/10(0) 7.38.0810 QTY:1 FL/-/5/-/-/R/- Scale =.5"/Ft.

ALPINE

ITW Building Components Group, Inc.
Haines City, FL 33844
FL Certificate of Authorization # 0 278

WARNING TRUSSES REQUIRE EXTREME CARE IN FABRICATION, HANDLING, SHIPPING, INSTALLING AND BRACING. REFER TO BCSI (BUILDING COMPONENT SAFETY INFORMATION), PUBLISHED BY TPI (TRUSS PLATE INSTITUTE, 218 NORTH LEE STREET, SUITE 312, ALEXANDRIA, VA, 22314) AND WTCA (WOOD TRUSS COUNCIL OF AMERICA, 6300 ENTERPRISE LANE, MADISON, WI 53719) FOR SAFETY PRACTICES PRIOR TO PERFORMING THESE FUNCTIONS. UNLESS OTHERWISE INDICATED TOP CHORD SHALL HAVE PROPERLY ATTACHED STRUCTURAL PANELS AND BOTTOM CHORD SHALL HAVE A PROPERLY ATTACHED RIGID CEILING.

IMPORTANTFURNISH A COPY OF THIS DESIGN TO THE INSTALLATION CONTRACTOR. ITW BCG, INC. SHALL NOT BE RESPONSIBLE FOR ANY DEVIATION FROM THIS DESIGN; ANY FAILURE TO BUILD THE TRUSS IN COMFORMANCE WITH TPI; OR FABRICATING, HANDLING, SHIPPING, INSTALLING & BRACING OF TRUSSES.
DESIGN CONFORMS WITH APPLICABLE PROVISIONS OF NDS (NATIONAL DESIGN SPEC, BY AF&PA) AND TPI. ITW BCG CONNECTOR PLATES ARE MADE OF 20/18/16GA (W,H/SS/K) ASTM A653 GRADE 40/60 (W, K/H,SS) GALV. STEEL. APPLY PLATES TO EACH FACE OF TRUSS AND, UNLESS OTHERWISE LOCATED ON THIS DESIGN, POSITION PER DRAWINGS 160A-Z. ANY INSPECTION OF PLATES FOLLOWED BY (1) SHALL BE PER ANNEX A3 OF TPI1-2002 SEC.3. A SEAL ON THIS DRAWING INDICATES ACCEPTANCE OF PROFESSIONAL ENGINEERING RESPONSIBILITY SOLELY FOR THE TRUSS COMPONENT DESIGN SHOWN. THE SUITABILITY AND USE OF THIS COMPONENT FOR ANY BUILDING IS THE RESPONSIBILITY OF THE BUILDING DESIGNER PER ANSI/TPI 1 SEC. 2.

JAMES F. COLLINS LICENSE No. 52212 STATE OF FLORIDA PROFESSIONAL ENGINEER
Nov 30 '07

TC LL	20.0 PSF	REF R215-- 17522
TC DL	10.0 PSF	DATE 11/30/07
BC DL	10.0 PSF	DRW HCUSR215 07334061
BC LL	0.0 PSF	HC-ENG RA/WHK *
TOT.LD.	40.0 PSF	SEQN- 90147
DUR.FAC.	1.25	FROM LRB
SPACING	24.0"	JREF- 1TCW215_Z02

Top chord 2x4 SP #2 N
Bot chord 2x4 SP #2 N

Deflection meets L/240 live and L/180 total load.

The overall height of this truss excluding overhang is 0-10-3.

110 mph wind, 15.00 ft mean hgt, ASCE 7-02, CLOSED bldg, Located anywhere in roof, CAT II, EXP B, wind TC DL=5.0 psf, wind BC DL=5.0 psf.

Wind reactions based on MWFRS pressures.

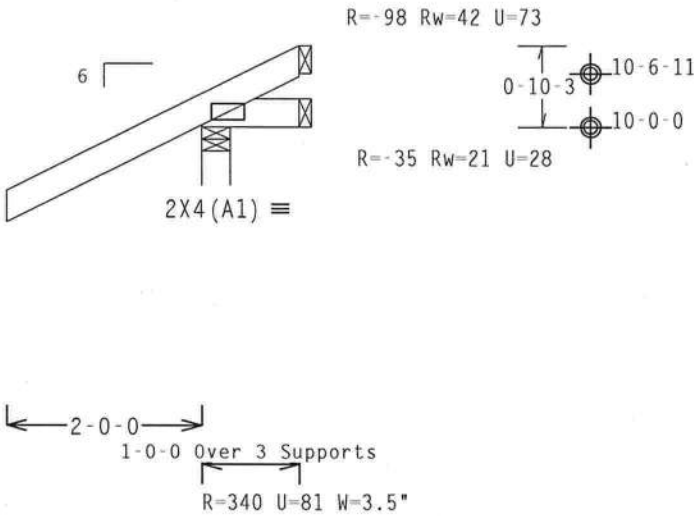

Design Crit: IBC CODE

PLT TYP. Wave | Cq/RT=1.00(1.25)/10(0) 7.38.0810 | QTY:1 | FL/-/5/-/-/R/- | Scale =.5"/Ft.

ALPINE
ITW Building Components Group, Inc.
Haines City, FL 33844
FL Certificate of Authorization # 0 278

WARNING TRUSSES REQUIRE EXTREME CARE IN FABRICATION, HANDLING, SHIPPING, INSTALLING AND BRACING. REFER TO BCSI (BUILDING COMPONENT SAFETY INFORMATION), PUBLISHED BY TPI (TRUSS PLATE INSTITUTE, 218 NORTH LEE STREET, SUITE 312, ALEXANDRIA, VA, 22314) AND WTCA (WOOD TRUSS COUNCIL OF AMERICA, 6300 ENTERPRISE LANE, MADISON, WI 53719) FOR SAFETY PRACTICES PRIOR TO PERFORMING THESE FUNCTIONS. UNLESS OTHERWISE INDICATED TOP CHORD SHALL HAVE PROPERLY ATTACHED STRUCTURAL PANELS AND BOTTOM CHORD SHALL HAVE A PROPERLY ATTACHED RIGID CEILING.

IMPORTANTFURNISH A COPY OF THIS DESIGN TO THE INSTALLATION CONTRACTOR. ITW BCG, INC. SHALL NOT BE RESPONSIBLE FOR ANY DEVIATION FROM THIS DESIGN; ANY FAILURE TO BUILD THE TRUSS IN COMFORMANCE WITH TPI; OR FABRICATING, HANDLING, SHIPPING, INSTALLING & BRACING OF TRUSSES.
DESIGN CONFORMS WITH APPLICABLE PROVISIONS OF NDS (NATIONAL DESIGN SPEC. BY AF&PA) AND TPI. ITW BCG CONNECTOR PLATES ARE MADE OF 20/18/16GA (W,H/SS/K) ASTM A653 GRADE 40/60 (W, K/H,SS) GALV. STEEL. APPLY PLATES TO EACH FACE OF TRUSS AND, UNLESS OTHERWISE LOCATED ON THIS DESIGN, POSITION PER DRAWINGS 160A-Z. ANY INSPECTION OF PLATES FOLLOWED BY (1) SHALL BE PER ANNEX A3 OF TPI1-2002 SEC.3. A SEAL ON THIS DRAWING INDICATES ACCEPTANCE OF PROFESSIONAL ENGINEERING RESPONSIBILITY SOLELY FOR THE TRUSS COMPONENT DESIGN SHOWN. THE SUITABILITY AND USE OF THIS COMPONENT FOR ANY BUILDING IS THE RESPONSIBILITY OF THE BUILDING DESIGNER PER ANSI/TPI 1 SEC. 2.

JAMES F. COLLINS, JR. LICENSE No. 52212 STATE OF FLORIDA PROFESSIONAL ENGINEER
Nov 30 07

TC LL	20.0 PSF	REF	R215-- 17523
TC DL	10.0 PSF	DATE	11/30/07
BC DL	10.0 PSF	DRW	HCUSR215 07334096
BC LL	0.0 PSF	HC-ENG	RA/WHK
TOT.LD.	40.0 PSF	SEQN-	90152
DUR.FAC.	1.25	FROM	LRB
SPACING	24.0"	JREF-	1TCW215_Z02

Top chord 2x4 SP #2 N
Bot chord 2x4 SP #2 N

Deflection meets L/240 live and L/180 total load.

The overall height of this truss excluding overhang is 1-10-3.

110 mph wind, 15.00 ft mean hgt, ASCE 7-02, CLOSED bldg, Located anywhere in roof, CAT II, EXP B, wind TC DL=5.0 psf, wind BC DL=5.0 psf.

Wind reactions based on MWFRS pressures.

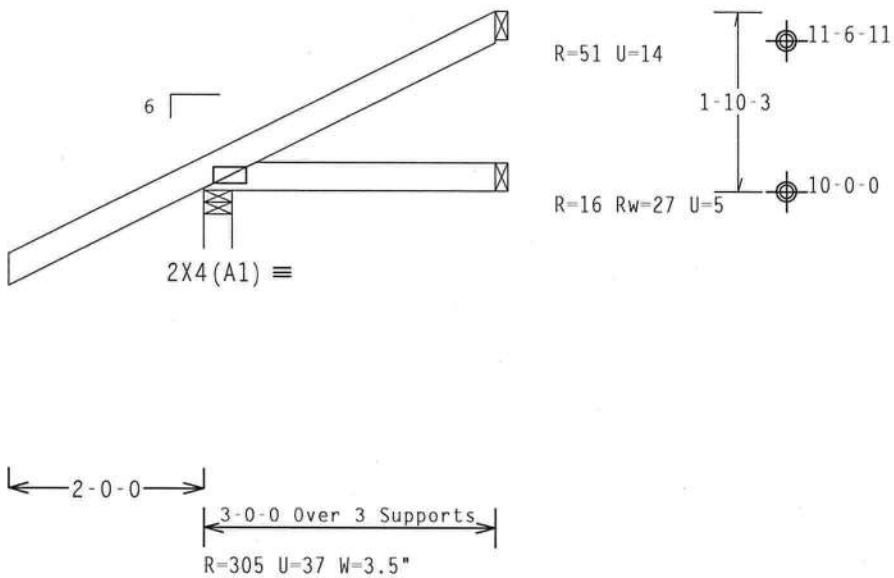

Design Crit: IBC CODE

PLT TYP. Wave Cq/RT=1.00(1.25)/10(0) 7.38.0810.03 QTY:1 FL/-/5/-/-/R/- Scale =.5"/Ft.

ALPINE

ITW Building Components Group, Inc.
Haines City, FL 33844
FL Certificate of Authorization # 0 278

WARNING TRUSSES REQUIRE EXTREME CARE IN FABRICATION, HANDLING, SHIPPING, INSTALLING AND BRACING. REFER TO BCSI (BUILDING COMPONENT SAFETY INFORMATION), PUBLISHED BY TPI (TRUSS PLATE INSTITUTE, 218 NORTH LEE STREET, SUITE 312, ALEXANDRIA, VA. 22314) AND WTCA (WOOD TRUSS COUNCIL OF AMERICA, 6300 ENTERPRISE LANE, MADISON, WI 53719) FOR SAFETY PRACTICES PRIOR TO PERFORMING THESE FUNCTIONS. UNLESS OTHERWISE INDICATED TOP CHORD SHALL HAVE PROPERLY ATTACHED STRUCTURAL PANELS AND BOTTOM CHORD SHALL HAVE A PROPERLY ATTACHED RIGID CEILING.

IMPORTANTFURNISH A COPY OF THIS DESIGN TO THE INSTALLATION CONTRACTOR. ITW BCG, INC. SHALL NOT BE RESPONSIBLE FOR ANY DEVIATION FROM THIS DESIGN; ANY FAILURE TO BUILD THE TRUSS IN COMFORMANCE WITH TPI; OR FABRICATING, HANDLING, SHIPPING, INSTALLING & BRACING OF TRUSSES.
DESIGN CONFORMS WITH APPLICABLE PROVISIONS OF NDS (NATIONAL DESIGN SPEC, BY AF&PA) AND TPI. ITW BCG CONNECTOR PLATES ARE MADE OF 20/18/16GA (W,H/SS/K) ASTM A653 GRADE 40/60 (W, K/H,SS) GALV. STEEL. APPLY PLATES TO EACH FACE OF TRUSS AND, UNLESS OTHERWISE LOCATED ON THIS DESIGN, POSITION PER DRAWINGS 160A-Z. ANY INSPECTION OF PLATES FOLLOWED BY (I) SHALL BE PER ANNEX A3 OF TPI1-2002 SEC.3. A SEAL ON THIS DRAWING INDICATES ACCEPTANCE OF PROFESSIONAL ENGINEERING RESPONSIBILITY SOLELY FOR THE TRUSS COMPONENT DESIGN SHOWN. THE SUITABILITY AND USE OF THIS COMPONENT FOR ANY BUILDING IS THE RESPONSIBILITY OF THE BUILDING DESIGNER PER ANSI/TPI 1 SEC. 2.

JAMES F. COLLINS, JR. LICENSE No. 52212 STATE OF FLORIDA PROFESSIONAL ENGINEER
Nov

TC LL	20.0 PSF	REF	R215-- 17524
TC DL	10.0 PSF	DATE	11/30/07
BC DL	10.0 PSF	DRW	HCUSR215 07334062
BC LL	0.0 PSF	HC-ENG	RA/WHK *
TOT.LD.	40.0 PSF	SEQN-	90150
DUR.FAC.	1.25	FROM	LRB
SPACING	24.0"	JREF-	1TCW215_Z02

Top chord 2x4 SP #2 N
Bot chord 2x4 SP #2 N

Deflection meets L/240 live and L/180 total load.

The overall height of this truss excluding overhang is 2-10-3.

110 mph wind, 15.00 ft mean hgt, ASCE 7-02, CLOSED bldg, not located within 4.50 ft from roof edge, CAT II, EXP B, wind TC DL=5.0 psf, wind BC DL=5.0 psf.

Wind reactions based on MWFRS pressures.

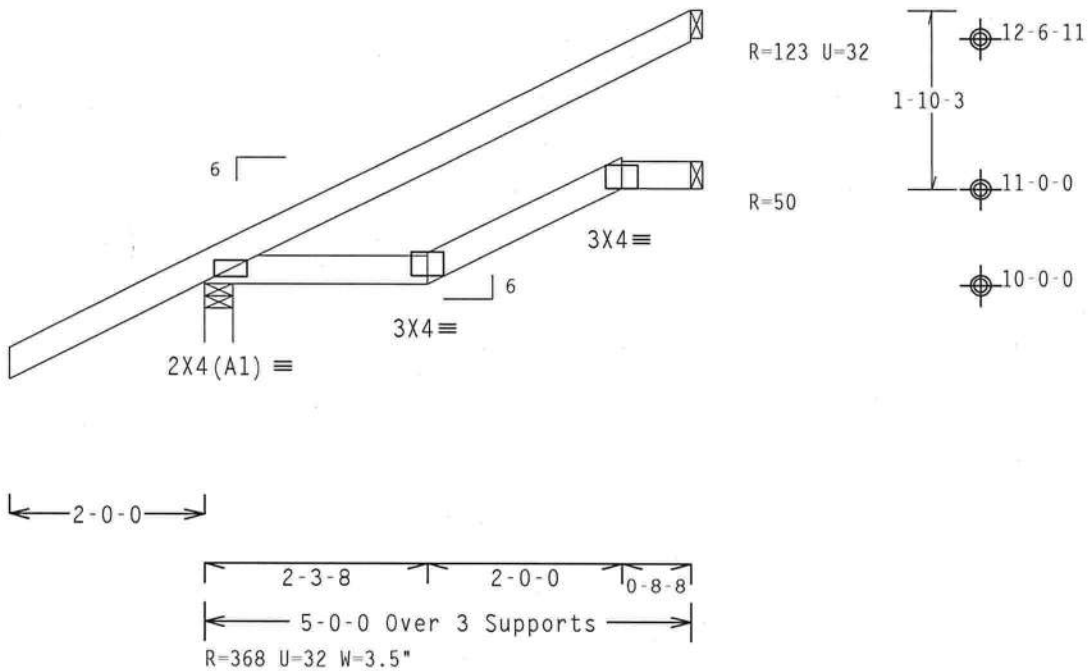

Design Crit: IBC CODE

PLT TYP. Wave Cq/RT=1.00(1.25)/10(0) 7.38.0810.0 QTY:1 FL/-/5/-/-/R/- Scale =.5"/Ft.

ALPINE

ITW Building Components Group, Inc.
Haines City, FL 33844
FL Certificate of Authorization # 0 278

WARNING TRUSSES REQUIRE EXTREME CARE IN FABRICATION, HANDLING, SHIPPING, INSTALLING AND BRACING. REFER TO BCSI (BUILDING COMPONENT SAFETY INFORMATION), PUBLISHED BY TPI (TRUSS PLATE INSTITUTE, 218 NORTH LEE STREET, SUITE 312, ALEXANDRIA, VA, 22314) AND WTCA (WOOD TRUSS COUNCIL OF AMERICA, 6300 ENTERPRISE LANE, MADISON, WI 53719) FOR SAFETY PRACTICES PRIOR TO PERFORMING THESE FUNCTIONS. UNLESS OTHERWISE INDICATED TOP CHORD SHALL HAVE PROPERLY ATTACHED STRUCTURAL PANELS AND BOTTOM CHORD SHALL HAVE A PROPERLY ATTACHED RIGID CEILING.

IMPORTANT FURNISH A COPY OF THIS DESIGN TO THE INSTALLATION CONTRACTOR. ITW BCG, INC. SHALL NOT BE RESPONSIBLE FOR ANY DEVIATION FROM THIS DESIGN; ANY FAILURE TO BUILD THE TRUSS IN COMFORMANCE WITH TPI; OR FABRICATING, HANDLING, SHIPPING, INSTALLING & BRACING OF TRUSSES. DESIGN CONFORMS WITH APPLICABLE PROVISIONS OF NDS (NATIONAL DESIGN SPEC, BY AF&PA) AND TPI. ITW BCG CONNECTOR PLATES ARE MADE OF 20/18/16GA (W,H/SS/K) ASTM A653 GRADE 40/60 (W, K/H,SS) GALV. STEEL. APPLY PLATES TO EACH FACE OF TRUSS AND, UNLESS OTHERWISE LOCATED ON THIS DESIGN, POSITION PER DRAWINGS 160A-Z. ANY INSPECTION OF PLATES FOLLOWED BY (1) SHALL BE PER ANNEX A3 OF TPI1-2002 SEC.3. A SEAL ON THIS DRAWING INDICATES ACCEPTANCE OF PROFESSIONAL ENGINEERING RESPONSIBILITY SOLELY FOR THE TRUSS COMPONENT DESIGN SHOWN. THE SUITABILITY AND USE OF THIS COMPONENT FOR ANY BUILDING IS THE RESPONSIBILITY OF THE BUILDING DESIGNER PER ANSI/TPI 1 SEC. 2.

JAMES F. COLLINS, JR. LICENSE No. 52212 STATE OF FLORIDA PROFESSIONAL ENGINEER
Nov 30 2007

TC LL	20.0 PSF	REF R215-- 17525
TC DL	10.0 PSF	DATE 11/30/07
BC DL	10.0 PSF	DRW HCUSR215 07334097
BC LL	0.0 PSF	HC-ENG RA/WHK
TOT.LD.	40.0 PSF	SEQN- 90161
DUR.FAC.	1.25	FROM LRB
SPACING	24.0"	JREF- 1TCW215_Z02

op chord 2x4 SP #2 N
ot chord 2x4 SP #2 N
Webs 2x4 SP #2 N

eflection meets L/240 live and L/180 total load.

ne overall height of this truss excluding overhang is 2-0-0.

110 mph wind, 15.00 ft mean hgt, ASCE 7-02, CLOSED bldg, Located anywhere in roof, CAT II, EXP B, wind TC DL=5.0 psf, wind BC DL=5.0 psf.

Wind reactions based on MWFRS pressures.

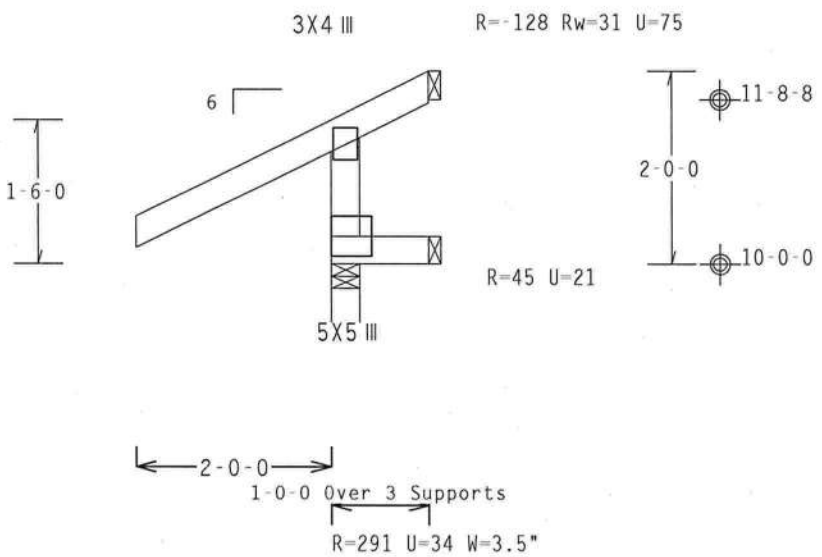

Design Crit: IBC CODE

LT TYP. Wave Cq/RT=1.00(1.25)/10(0) 7.38.0810 QTY:1 FL/-/5/-/-/R/- Scale =.5"/Ft.

ALPINE
W Building Components Group, Inc.
Haines City, FL 33844
Certificate of Authorization # 0 278

WARNING TRUSSES REQUIRE EXTREME CARE IN FABRICATION, HANDLING, SHIPPING, INSTALLING AND BRACING. REFER TO BCSI (BUILDING COMPONENT SAFETY INFORMATION), PUBLISHED BY TPI (TRUSS PLATE INSTITUTE, 218 NORTH LEE STREET, SUITE 312, ALEXANDRIA, VA, 22314) AND WTCA (WOOD TRUSS COUNCIL OF AMERICA, 6300 ENTERPRISE LANE, MADISON, WI 53719) FOR SAFETY PRACTICES PRIOR TO PERFORMING THESE FUNCTIONS. UNLESS OTHERWISE INDICATED TOP CHORD SHALL HAVE PROPERLY ATTACHED STRUCTURAL PANELS AND BOTTOM CHORD SHALL HAVE A PROPERLY ATTACHED RIGID CEILING.

IMPORTANTFURNISH A COPY OF THIS DESIGN TO THE INSTALLATION CONTRACTOR. ITW BCG, INC. SHALL NOT BE RESPONSIBLE FOR ANY DEVIATION FROM THIS DESIGN; ANY FAILURE TO BUILD THE TRUSS IN COMFORMANCE WITH TPI; OR FABRICATING, HANDLING, SHIPPING, INSTALLING & BRACING OF TRUSSES.
DESIGN CONFORMS WITH APPLICABLE PROVISIONS OF NDS (NATIONAL DESIGN SPEC, BY AF&PA) AND TPI. ITW BCG CONNECTOR PLATES ARE MADE OF 20/18/16GA (W.H/SS/K) ASTM A653 GRADE 40/60 (W. K/H.SS) GALV. STEEL. APPLY PLATES TO EACH FACE OF TRUSS AND, UNLESS OTHERWISE LOCATED ON THIS DESIGN, POSITION PER DRAWINGS 160A-Z. ANY INSPECTION OF PLATES FOLLOWED BY (1) SHALL BE PER ANNEX A3 OF TPI1-2002 SEC.3. A SEAL ON THIS DRAWING INDICATES ACCEPTANCE OF PROFESSIONAL ENGINEERING RESPONSIBILITY SOLELY FOR THE TRUSS COMPONENT DESIGN SHOWN. THE SUITABILITY AND USE OF THIS COMPONENT FOR ANY BUILDING IS THE RESPONSIBILITY OF THE BUILDING DESIGNER PER ANSI/TPI 1 SEC. 2.

JAMES F. COLLINS, JR. LICENSE No. 52212 STATE OF FLORIDA PROFESSIONAL ENGINEER
Nov 30 07

TC LL	20.0 PSF	REF	R215-- 17526
TC DL	10.0 PSF	DATE	11/30/07
BC DL	10.0 PSF	DRW	HCUSR215 07334098
BC LL	0.0 PSF	HC-ENG	RA/WHK
TOT.LD.	40.0 PSF	SEQN-	90140 REV
DUR.FAC.	1.25	FROM	LRB
SPACING	24.0"	JREF-	1TCW215_Z02

Top chord 2x4 SP #2 N
Bot chord 2x4 SP #2 N
Webs 2x4 SP #2 N

Deflection meets L/240 live and L/180 total load.

Shim all supports to solid bearing.

110 mph wind, 15.00 ft mean hgt, ASCE 7-02, CLOSED bldg, Located anywhere in roof, CAT II, EXP B, wind TC DL=5.0 psf, wind BC DL=5.0 psf.

Wind reactions based on MWFRS pressures.

The overall height of this truss excluding overhang is 1-10-3.

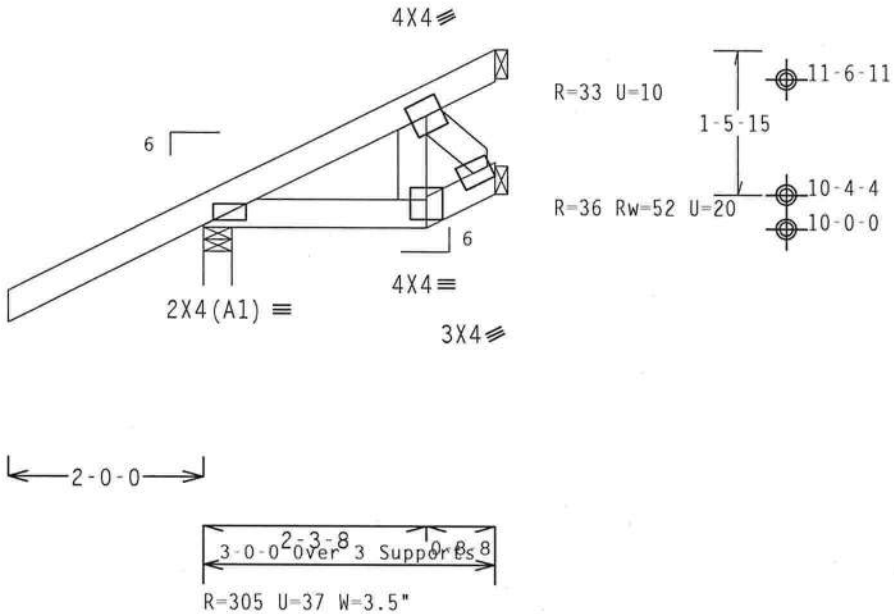

Design Crit: IBC CODE

PLT TYP. Wave | Cq/RT=1.00(1.25)/10(0) 7.38.0810 R2 | QTY:1 | FL/-/5/-/-/R/- | Scale =.5"/Ft.

ALPINE

ITW Building Components Group, Inc.
Haines City, FL 33844
L Certificate of Authorization # 0 278

WARNING TRUSSES REQUIRE EXTREME CARE IN FABRICATION, HANDLING, SHIPPING, INSTALLING AND BRACING. REFER TO BCSI (BUILDING COMPONENT SAFETY INFORMATION), PUBLISHED BY TPI (TRUSS PLATE INSTITUTE, 218 NORTH LEE STREET, SUITE 312, ALEXANDRIA, VA. 22314) AND WTCA (WOOD TRUSS COUNCIL OF AMERICA, 6300 ENTERPRISE LANE, MADISON, WI 53719) FOR SAFETY PRACTICES PRIOR TO PERFORMING THESE FUNCTIONS. UNLESS OTHERWISE INDICATED TOP CHORD SHALL HAVE PROPERLY ATTACHED STRUCTURAL PANELS AND BOTTOM CHORD SHALL HAVE A PROPERLY ATTACHED RIGID CEILING.

IMPORTANTFURNISH A COPY OF THIS DESIGN TO THE INSTALLATION CONTRACTOR. ITW BCG, INC. SHALL NOT BE RESPONSIBLE FOR ANY DEVIATION FROM THIS DESIGN; ANY FAILURE TO BUILD THE TRUSS IN COMFORMANCE WITH TPI; OR FABRICATING, HANDLING, SHIPPING, INSTALLING & BRACING OF TRUSSES.
DESIGN CONFORMS WITH APPLICABLE PROVISIONS OF NDS (NATIONAL DESIGN SPEC. BY AF&PA) AND TPI. ITW BCG CONNECTOR PLATES ARE MADE OF 20/18/16GA (W,H/SS/K) ASTM A653 GRADE 40/60 (W, K/H,SS) GALV. STEEL. APPLY PLATES TO EACH FACE OF TRUSS AND, UNLESS OTHERWISE LOCATED ON THIS DESIGN, POSITION PER DRAWINGS 160A-Z. ANY INSPECTION OF PLATES FOLLOWED BY (1) SHALL BE PER ANNEX A3 OF TPI1-2002 SEC.3. A SEAL ON THIS DRAWING INDICATES ACCEPTANCE OF PROFESSIONAL ENGINEERING RESPONSIBILITY SOLELY FOR THE TRUSS COMPONENT DESIGN SHOWN. THE SUITABILITY AND USE OF THIS COMPONENT FOR ANY BUILDING IS THE RESPONSIBILITY OF THE BUILDING DESIGNER PER ANSI/TPI 1 SEC. 2.

JAMES F. COLLINS III
LICENSE
No. 52212
STATE OF FLORIDA
PROFESSIONAL ENGINEER
Nov 30 07

TC LL	20.0 PSF	REF	R215-- 17527
TC DL	10.0 PSF	DATE	11/30/07
BC DL	10.0 PSF	DRW	HCUSR215 07334063
BC LL	0.0 PSF	HC-ENG	RA/WHK *
TOT.LD.	40.0 PSF	SEQN-	90163
DUR.FAC.	1.25	FROM	LRB
SPACING	24.0"	JREF-	1TCW215_Z02

(5074-/DERKSEN RESIDENCE /ERIN JOHNSON CONSTRUCTION -- , ** - JE1)

Top chord 2x4 SP #2 N
Bot chord 2x4 SP #2 N
Webs 2x4 SP #2 N

Deflection meets L/240 live and L/180 total load.

The overall height of this truss excluding overhang is 3-10-3.

110 mph wind, 15.00 ft mean hgt, ASCE 7-02, CLOSED bldg, not located within 4.50 ft from roof edge, CAT II, EXP B, wind TC DL=5.0 psf, wind BC DL=5.0 psf.

Wind reactions based on MWFRS pressures.

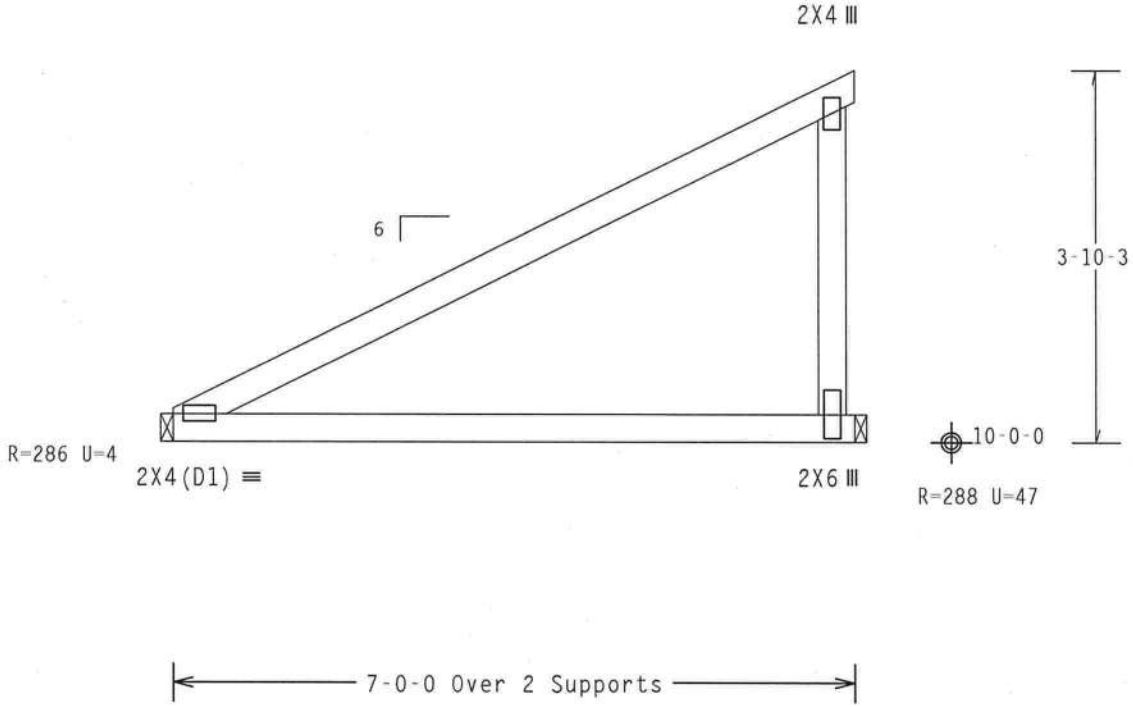

Design Crit: IBC CODE

PLT TYP. Wave Cq/RT=1.00(1.25)/10(0) 7.38.0810.02 QTY:1 FL/-/5/-/-/R/- Scale =.5"/Ft.

ALPINE

ITW Building Components Group, Inc.
Haines City, FL 33844
FL Certificate of Authorization # 0 278

WARNING TRUSSES REQUIRE EXTREME CARE IN FABRICATION, HANDLING, SHIPPING, INSTALLING AND BRACING. REFER TO BCSI (BUILDING COMPONENT SAFETY INFORMATION), PUBLISHED BY TPI (TRUSS PLATE INSTITUTE, 218 NORTH LEE STREET, SUITE 312, ALEXANDRIA, VA, 22314) AND WTCA (WOOD TRUSS COUNCIL OF AMERICA, 6300 ENTERPRISE LANE, MADISON, WI 53719) FOR SAFETY PRACTICES PRIOR TO PERFORMING THESE FUNCTIONS. UNLESS OTHERWISE INDICATED TOP CHORD SHALL HAVE PROPERLY ATTACHED STRUCTURAL PANELS AND BOTTOM CHORD SHALL HAVE A PROPERLY ATTACHED RIGID CEILING.

IMPORTANTFURNISH A COPY OF THIS DESIGN TO THE INSTALLATION CONTRACTOR. ITW BCG, INC. SHALL NOT BE RESPONSIBLE FOR ANY DEVIATION FROM THIS DESIGN; ANY FAILURE TO BUILD THE TRUSS IN COMFORMANCE WITH TPI; OR FABRICATING, HANDLING, SHIPPING, INSTALLING & BRACING OF TRUSSES.
DESIGN CONFORMS WITH APPLICABLE PROVISIONS OF NDS (NATIONAL DESIGN SPEC. BY AF&PA) AND TPI. ITW BCG CONNECTOR PLATES ARE MADE OF 20/18/16GA (W,H/SS/K) ASTM A653 GRADE 40/60 (W, K/H,SS) GALV. STEEL. APPLY PLATES TO EACH FACE OF TRUSS AND, UNLESS OTHERWISE LOCATED ON THIS DESIGN, POSITION PER DRAWINGS 160A-Z. ANY INSPECTION OF PLATES FOLLOWED BY (1) SHALL BE PER ANNEX A3 OF TPI1-2002 SEC.3. A SEAL ON THIS DRAWING INDICATES ACCEPTANCE OF PROFESSIONAL ENGINEERING RESPONSIBILITY SOLELY FOR THE TRUSS COMPONENT DESIGN SHOWN. THE SUITABILITY AND USE OF THIS COMPONENT FOR ANY BUILDING IS THE RESPONSIBILITY OF THE BUILDING DESIGNER PER ANSI/TPI 1 SEC. 2.

JAMES F. COLLINS, JR. LICENSE No. 52212 STATE OF FLORIDA PROFESSIONAL ENGINEER
Nov 30,2007

TC LL	20.0 PSF	REF	R215-- 17528
TC DL	10.0 PSF	DATE	11/30/07
BC DL	10.0 PSF	DRW	HCUSR215 07334099
BC LL	0.0 PSF	HC-ENG	RA/WHK
TOT.LD.	40.0 PSF	SEQN-	90405
DUR.FAC.	1.25	FROM	LRB
SPACING	24.0"	JREF-	1TCW215_Z02

(5074-/DERKSEN RESIDENCE /ERIN JOHNSON CONSTRUCTION -- , ** - JE3)

Top chord 2x4 SP #2 N
Bot chord 2x4 SP #2 N
Webs 2x4 SP #2 N

Left end vertical not exposed to wind pressure.

Deflection meets L/240 live and L/180 total load.

110 mph wind, 15.00 ft mean hgt, ASCE 7-02, CLOSED bldg, Located anywhere in roof, CAT II, EXP B, wind TC DL=5.0 psf, wind BC DL=5.0 psf.

Wind reactions based on MWFRS pressures.

The overall height of this truss excluding overhang is 3-9-0.

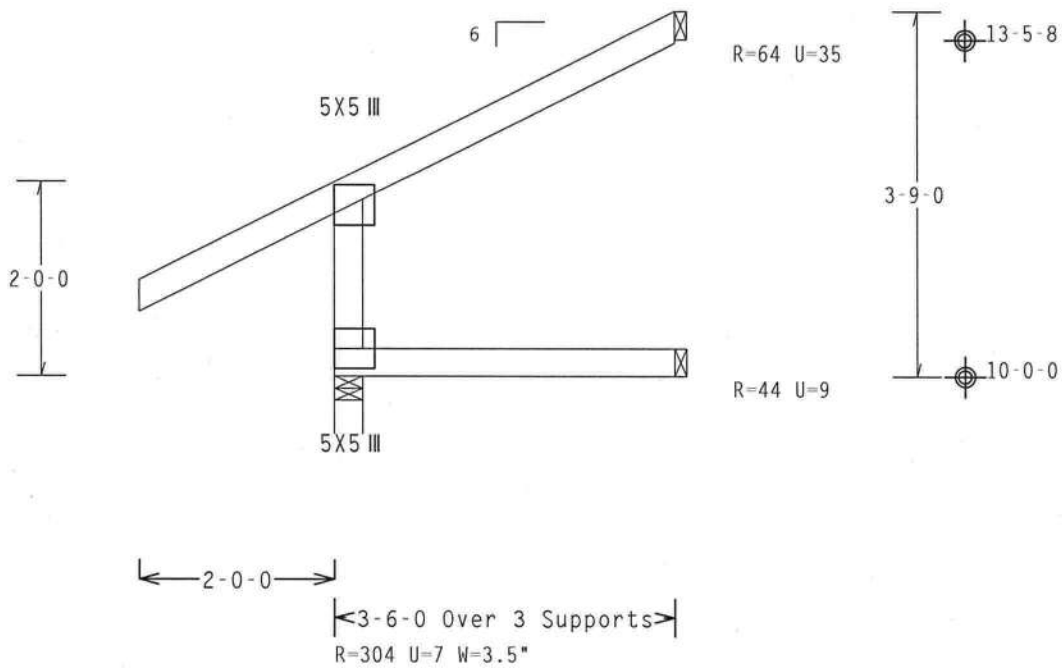

Design Crit: IBC CODE

PLT TYP. Wave Cq/RT=1.00(1.25)/10(0) 7.38.0810.08 QTY:1 FL/-/5/-/-/R/- Scale =.5"/Ft.

ALPINE

ITW Building Components Group, Inc.
Haines City, FL 33844
FL Certificate of Authorization # 0 278

WARNING TRUSSES REQUIRE EXTREME CARE IN FABRICATION, HANDLING, SHIPPING, INSTALLING AND BRACING. REFER TO BCSI (BUILDING COMPONENT SAFETY INFORMATION), PUBLISHED BY TPI (TRUSS PLATE INSTITUTE, 218 NORTH LEE STREET, SUITE 312, ALEXANDRIA, VA. 22314) AND WTCA (WOOD TRUSS COUNCIL OF AMERICA, 6300 ENTERPRISE LANE, MADISON, WI 53719) FOR SAFETY PRACTICES PRIOR TO PERFORMING THESE FUNCTIONS. UNLESS OTHERWISE INDICATED TOP CHORD SHALL HAVE PROPERLY ATTACHED STRUCTURAL PANELS AND BOTTOM CHORD SHALL HAVE A PROPERLY ATTACHED RIGID CEILING.

IMPORTANT FURNISH A COPY OF THIS DESIGN TO THE INSTALLATION CONTRACTOR. ITW BCG, INC. SHALL NOT BE RESPONSIBLE FOR ANY DEVIATION FROM THIS DESIGN; ANY FAILURE TO BUILD THE TRUSS IN COMFORMANCE WITH TPI; OR FABRICATING, HANDLING, SHIPPING, INSTALLING & BRACING OF TRUSSES.
DESIGN CONFORMS WITH APPLICABLE PROVISIONS OF NDS (NATIONAL DESIGN SPEC, BY AF&PA) AND TPI. ITW BCG CONNECTOR PLATES ARE MADE OF 20/18/16GA (W,H/SS/K) ASTM A653 GRADE 40/60 (W, K/H,SS) GALV. STEEL. APPLY PLATES TO EACH FACE OF TRUSS AND, UNLESS OTHERWISE LOCATED ON THIS DESIGN, POSITION PER DRAWINGS 160A-Z. ANY INSPECTION OF PLATES FOLLOWED BY (1) SHALL BE PER ANNEX A3 OF TPI1-2002 SEC.3. A SEAL ON THIS DRAWING INDICATES ACCEPTANCE OF PROFESSIONAL ENGINEERING RESPONSIBILITY SOLELY FOR THE TRUSS COMPONENT DESIGN SHOWN. THE SUITABILITY AND USE OF THIS COMPONENT FOR ANY BUILDING IS THE RESPONSIBILITY OF THE BUILDING DESIGNER PER ANSI/TPI 1 SEC. 2.

JAMES F. COLLINS, JR. LICENSE No. 52212 STATE OF FLORIDA PROFESSIONAL ENGINEER
Nov 30, 2007

TC LL	20.0 PSF	REF	R215-- 17529
TC DL	10.0 PSF	DATE	11/30/07
BC DL	10.0 PSF	DRW	HCUSR215 07334064
BC LL	0.0 PSF	HC-ENG	RA/WHK *
TOT.LD.	40.0 PSF	SEQN-	90136
DUR.FAC.	1.25	FROM	LRB
SPACING	24.0"	JREF-	1TCW215_Z02

Top chord 2x4 SP #2 N
Bot chord 2x4 SP #2 N
Webs 2x4 SP #2 N

Left end vertical not exposed to wind pressure.

Deflection meets L/240 live and L/180 total load.

The overall height of this truss excluding overhang is 3-10-3.

110 mph wind, 15.00 ft mean hgt, ASCE 7-02, CLOSED bldg, not located within 4.50 ft from roof edge, CAT II, EXP B, wind TC DL=5.0 psf, wind BC DL=5.0 psf.

Wind reactions based on MWFRS pressures.

Provide for complete drainage of roof.

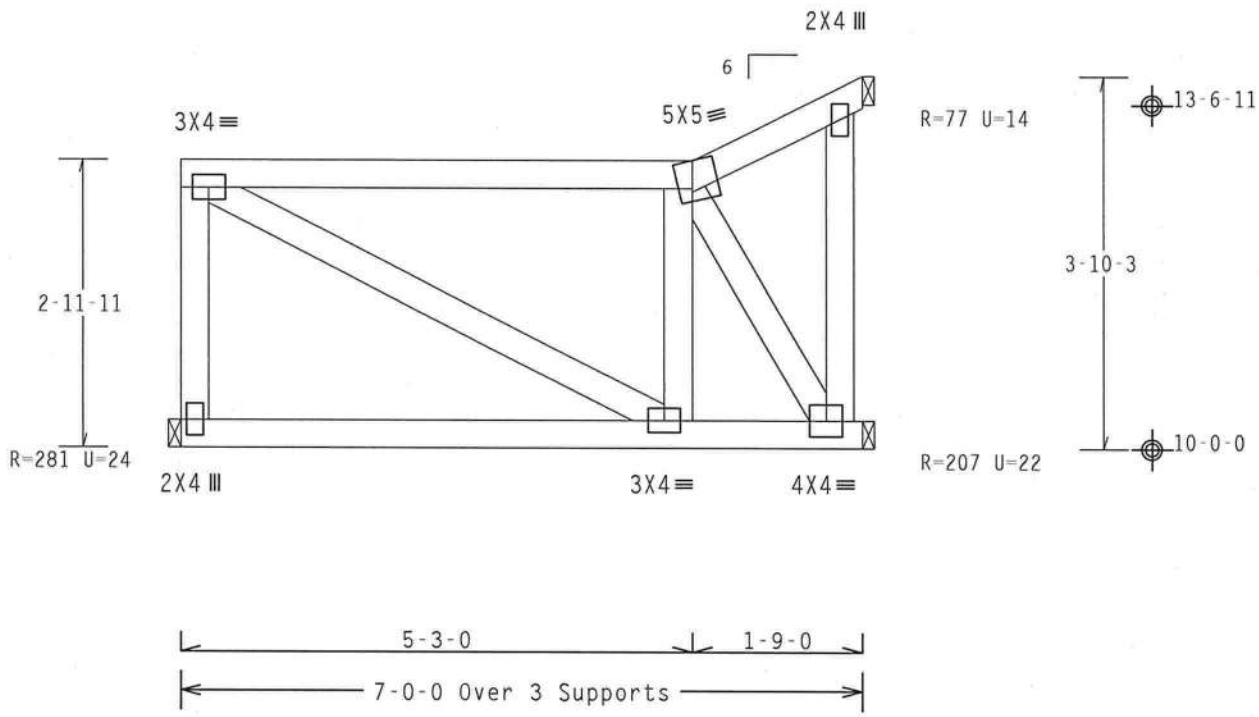

Design Crit: IBC CODE

PLT TYP. Wave Cq/RT=1.00(1.25)/10(0) 7.38.0810 QTY:1 FL/-/5/-/-/R/- Scale =.5"/Ft.

ALPINE
ITW Building Components Group, Inc.
Haines City, FL 33844
FL Certificate of Authorization # 0 278

WARNING TRUSSES REQUIRE EXTREME CARE IN FABRICATION, HANDLING, SHIPPING, INSTALLING AND BRACING. REFER TO BCSI (BUILDING COMPONENT SAFETY INFORMATION), PUBLISHED BY TPI (TRUSS PLATE INSTITUTE, 218 NORTH LEE STREET, SUITE 312, ALEXANDRIA, VA. 22314) AND WTCA (WOOD TRUSS COUNCIL OF AMERICA, 6300 ENTERPRISE LANE, MADISON, WI 53719) FOR SAFETY PRACTICES PRIOR TO PERFORMING THESE FUNCTIONS. UNLESS OTHERWISE INDICATED TOP CHORD SHALL HAVE PROPERLY ATTACHED STRUCTURAL PANELS AND BOTTOM CHORD SHALL HAVE A PROPERLY ATTACHED RIGID CEILING.

IMPORTANTFURNISH A COPY OF THIS DESIGN TO THE INSTALLATION CONTRACTOR. ITW BCG, INC. SHALL NOT BE RESPONSIBLE FOR ANY DEVIATION FROM THIS DESIGN; ANY FAILURE TO BUILD THE TRUSS IN COMFORMANCE WITH TPI; OR FABRICATING, HANDLING, SHIPPING, INSTALLING & BRACING OF TRUSSES.
DESIGN CONFORMS WITH APPLICABLE PROVISIONS OF NDS (NATIONAL DESIGN SPEC. BY AF&PA) AND TPI. ITW BCG CONNECTOR PLATES ARE MADE OF 20/18/16GA (W,H/SS/K) ASTM A653 GRADE 40/60 (W, K/H,SS) GALV. STEEL. APPLY PLATES TO EACH FACE OF TRUSS AND, UNLESS OTHERWISE LOCATED ON THIS DESIGN, POSITION PER DRAWINGS 160A-Z. ANY INSPECTION OF PLATES FOLLOWED BY (1) SHALL BE PER ANNEX A3 OF TPI1-2002 SEC.3. A SEAL ON THIS DRAWING INDICATES ACCEPTANCE OF PROFESSIONAL ENGINEERING RESPONSIBILITY SOLELY FOR THE TRUSS COMPONENT DESIGN SHOWN. THE SUITABILITY AND USE OF THIS COMPONENT FOR ANY BUILDING IS THE RESPONSIBILITY OF THE BUILDING DESIGNER PER ANSI/TPI 1 SEC. 2.

JAMES F. COLLINS, JR. LICENSE No. 52212 STATE OF FLORIDA PROFESSIONAL ENGINEER
Nov 30 '07

TC LL	20.0 PSF	REF	R215-- 17530
TC DL	10.0 PSF	DATE	11/30/07
BC DL	10.0 PSF	DRW	HCUSR215 07334100
BC LL	0.0 PSF	HC-ENG	RA/WHK
TOT.LD.	40.0 PSF	SEQN-	90455
DUR.FAC.	1.25	FROM	LRB
SPACING	24.0"	JREF-	1TCW215_Z02

Top chord 2x4 SP #2 N
Bot chord 2x6 SP SS
Webs 2x4 SP #2 N

SPECIAL LOADS
------(LUMBER DUR.FAC.=1.25 / PLATE DUR.FAC.=1.25)
TC - From 62 PLF at -2.00 to 62 PLF at 6.25
BC - From 20 PLF at 0.00 to 20 PLF at 6.25
BC - 532 LB Conc. Load at 0.31, 2.31, 4.31

Wind reactions based on MWFRS pressures.

* Toe nailing allowed based on average reaction

110 mph wind, 15.00 ft mean hgt, ASCE 7-02, CLOSED bldg, not located within 4.50 ft from roof edge, CAT II, EXP B, wind TC DL=5.0 psf, wind BC DL=5.0 psf.

Right end vertical not exposed to wind pressure.

Deflection meets L/240 live and L/180 total load.

The overall height of this truss excluding overhang is 3-5-11.

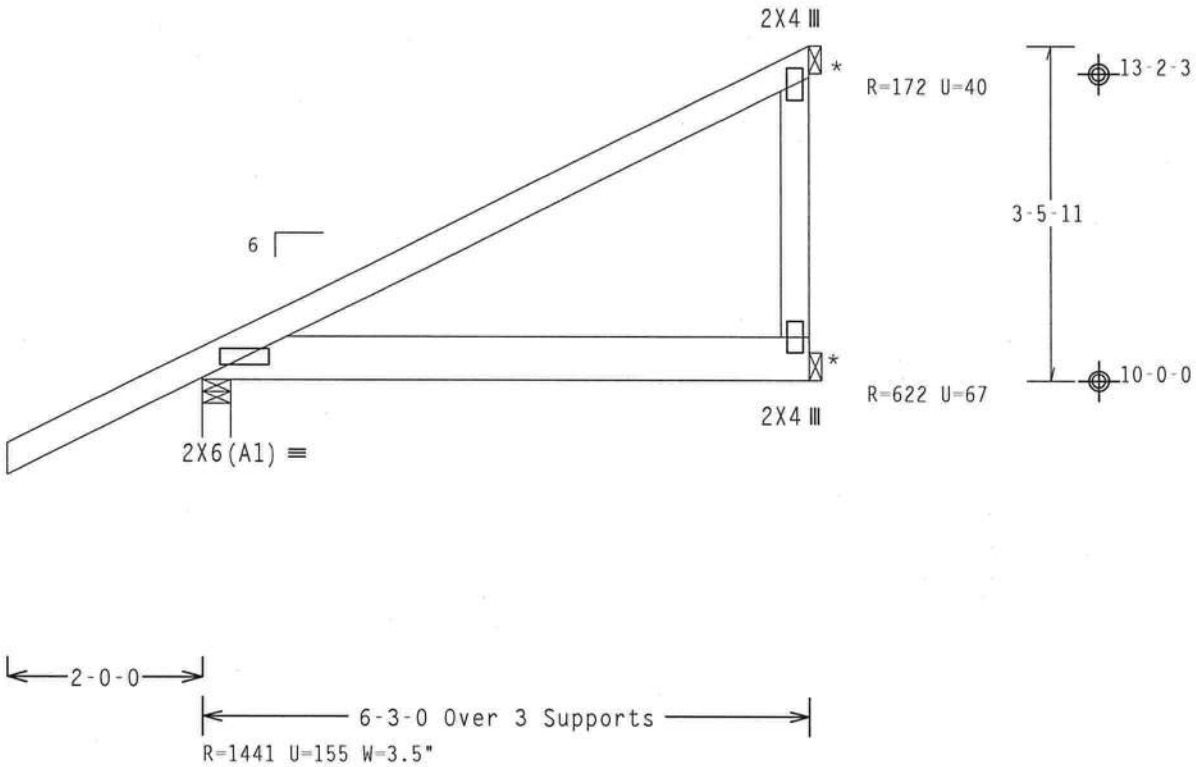

Design Crit: IBC CODE

PLT TYP. Wave Cq/RT=1.00(1.25)/10(0) 7.38.0810.00 QTY:1 FL/-/5/-/-/R/- Scale =.5"/Ft.

ALPINE

ITW Building Components Group, Inc.
Haines City, FL 33844
FL Certificate of Authorization # 0 278

WARNING TRUSSES REQUIRE EXTREME CARE IN FABRICATION, HANDLING, SHIPPING, INSTALLING AND BRACING. REFER TO BCSI (BUILDING COMPONENT SAFETY INFORMATION). PUBLISHED BY TPI (TRUSS PLATE INSTITUTE, 218 NORTH LEE STREET, SUITE 312, ALEXANDRIA, VA, 22314) AND WTCA (WOOD TRUSS COUNCIL OF AMERICA, 6300 ENTERPRISE LANE, MADISON, WI 53719) FOR SAFETY PRACTICES PRIOR TO PERFORMING THESE FUNCTIONS. UNLESS OTHERWISE INDICATED TOP CHORD SHALL HAVE PROPERLY ATTACHED STRUCTURAL PANELS AND BOTTOM CHORD SHALL HAVE A PROPERLY ATTACHED RIGID CEILING.

IMPORTANTFURNISH A COPY OF THIS DESIGN TO THE INSTALLATION CONTRACTOR. ITW BCG, INC. SHALL NOT BE RESPONSIBLE FOR ANY DEVIATION FROM THIS DESIGN; ANY FAILURE TO BUILD THE TRUSS IN COMFORMANCE WITH TPI; OR FABRICATING, HANDLING, SHIPPING, INSTALLING & BRACING OF TRUSSES.
DESIGN CONFORMS WITH APPLICABLE PROVISIONS OF NDS (NATIONAL DESIGN SPEC. BY AF&PA) AND TPI. ITW BCG CONNECTOR PLATES ARE MADE OF 20/18/16GA (W,H/SS/K) ASTM A653 GRADE 40/60 (W, K/H,SS) GALV. STEEL. APPLY PLATES TO EACH FACE OF TRUSS AND, UNLESS OTHERWISE LOCATED ON THIS DESIGN, POSITION PER DRAWINGS 160A-Z. ANY INSPECTION OF PLATES FOLLOWED BY (1) SHALL BE PER ANNEX A3 OF TPI1-2002 SEC.3. A SEAL ON THIS DRAWING INDICATES ACCEPTANCE OF PROFESSIONAL ENGINEERING RESPONSIBILITY SOLELY FOR THE TRUSS COMPONENT DESIGN SHOWN. THE SUITABILITY AND USE OF THIS COMPONENT FOR ANY BUILDING IS THE RESPONSIBILITY OF THE BUILDING DESIGNER PER ANSI/TPI 1 SEC. 2.

JAMES F. COLLINS, JR. LICENSE No. 52272 STATE OF FLORIDA PROFESSIONAL ENGINEER
Nov 30,2007

TC LL	20.0 PSF	REF	R215-- 17531
TC DL	10.0 PSF	DATE	11/30/07
BC DL	10.0 PSF	DRW	HCUSR215 07334101
BC LL	0.0 PSF	HC-ENG	RA/WHK
TOT.LD.	40.0 PSF	SEQN-	90556
DUR.FAC.	1.25	FROM	LRB
SPACING	24.0"	JREF-	1TCW215_Z02

op chord 2x4 SP #2 N
ot chord 2x4 SP #2 N

eflection meets L/240 live and L/180 total load.

he overall height of this truss excluding overhang is 3-10-3.

110 mph wind, 15.00 ft mean hgt, ASCE 7-02, CLOSED bldg, not located within 4.50 ft from roof edge, CAT II, EXP B, wind TC DL=5.0 psf, wind BC DL=5.0 psf.

Wind reactions based on MWFRS pressures.

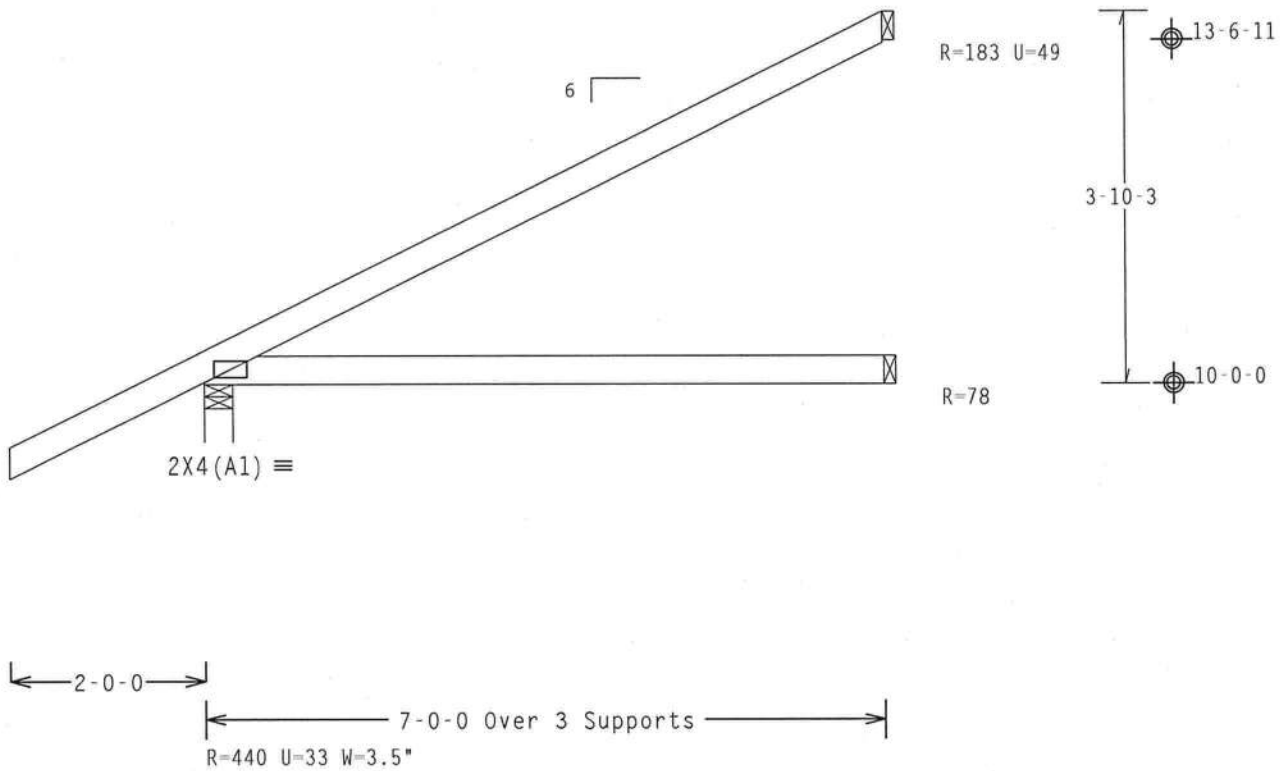

Design Crit: IBC CODE

PLT TYP. Wave Cq/RT=1.00(1.25)/10(0) 7.38.0810 QTY:1 FL/-/5/-/-/R/- Scale =.5"/Ft.

ALPINE
ITW Building Components Group, Inc.
Haines City, FL 33844
FL Certificate of Authorization # 0 278

WARNING TRUSSES REQUIRE EXTREME CARE IN FABRICATION, HANDLING, SHIPPING, INSTALLING AND BRACING. REFER TO BCSI (BUILDING COMPONENT SAFETY INFORMATION), PUBLISHED BY TPI (TRUSS PLATE INSTITUTE, 218 NORTH LEE STREET, SUITE 312, ALEXANDRIA, VA, 22314) AND WTCA (WOOD TRUSS COUNCIL OF AMERICA, 6300 ENTERPRISE LANE, MADISON, WI 53719) FOR SAFETY PRACTICES PRIOR TO PERFORMING THESE FUNCTIONS. UNLESS OTHERWISE INDICATED TOP CHORD SHALL HAVE PROPERLY ATTACHED STRUCTURAL PANELS AND BOTTOM CHORD SHALL HAVE A PROPERLY ATTACHED RIGID CEILING.

IMPORTANTFURNISH A COPY OF THIS DESIGN TO THE INSTALLATION CONTRACTOR. ITW BCG, INC. SHALL NOT BE RESPONSIBLE FOR ANY DEVIATION FROM THIS DESIGN; ANY FAILURE TO BUILD THE TRUSS IN COMFORMANCE WITH TPI; OR FABRICATING, HANDLING, SHIPPING, INSTALLING & BRACING OF TRUSSES.
DESIGN CONFORMS WITH APPLICABLE PROVISIONS OF NDS (NATIONAL DESIGN SPEC. BY AF&PA) AND TPI. ITW BCG CONNECTOR PLATES ARE MADE OF 20/18/16GA (W,H/SS/K) ASTM A653 GRADE 40/60 (W, K/H,SS) GALV. STEEL. APPLY PLATES TO EACH FACE OF TRUSS AND. UNLESS OTHERWISE LOCATED ON THIS DESIGN, POSITION PER DRAWINGS 160A-Z. ANY INSPECTION OF PLATES FOLLOWED BY (1) SHALL BE PER ANNEX A3 OF TPI1-2002 SEC.3. A SEAL ON THIS DRAWING INDICATES ACCEPTANCE OF PROFESSIONAL ENGINEERING RESPONSIBILITY SOLELY FOR THE TRUSS COMPONENT DESIGN SHOWN. THE SUITABILITY AND USE OF THIS COMPONENT FOR ANY BUILDING IS THE RESPONSIBILITY OF THE BUILDING DESIGNER PER ANSI/TPI 1 SEC. 2.

JAMES F. COLLINS, JR. LICENSED No. 52272 STATE OF FLORIDA PROFESSIONAL ENGINEER
Nov 30-07

TC LL	20.0 PSF	REF	R215-- 17532
TC DL	10.0 PSF	DATE	11/30/07
BC DL	10.0 PSF	DRW	HCUSR215 07334065
BC LL	0.0 PSF	HC-ENG	RA/WHK *
TOT.LD.	40.0 PSF	SEQN-	90187
DUR.FAC.	1.25	FROM	LRB
SPACING	24.0"	JREF-	1TCW215_Z02

(5074-/DERKSEN RESIDENCE /ERIN JOHNSON CONSTRUCTION -- , ** - JH5)

Top chord 2x4 SP #2 N
Bot chord 2x4 SP #2 N
Webs 2x4 SP #2 N

110 mph wind, 15.00 ft mean hgt, ASCE 7-02, CLOSED bldg, not located within 4.50 ft from roof edge, CAT II, EXP B, wind TC DL=5.0 psf, wind BC DL=5.0 psf.

Wind reactions based on MWFRS pressures.

Top chord overhangs have been checked only for loads as indicates. Overhangs not checked for man loads or long-term deflection.

SPECIAL LOADS
------(LUMBER DUR.FAC.=1.25 / PLATE DUR.FAC.=1.25)
TC - From 61 PLF at -2.83 to 61 PLF at 4.95
BC - From 20 PLF at 0.00 to 20 PLF at 4.95
TC - -257 LB Conc. Load at 1.48
TC - 83 LB Conc. Load at 4.31
BC - 90 LB Conc. Load at 1.48
BC - 81 LB Conc. Load at 4.31

Deflection meets L/240 live and L/180 total load.

The overall height of this truss excluding overhang is 3-8-12.

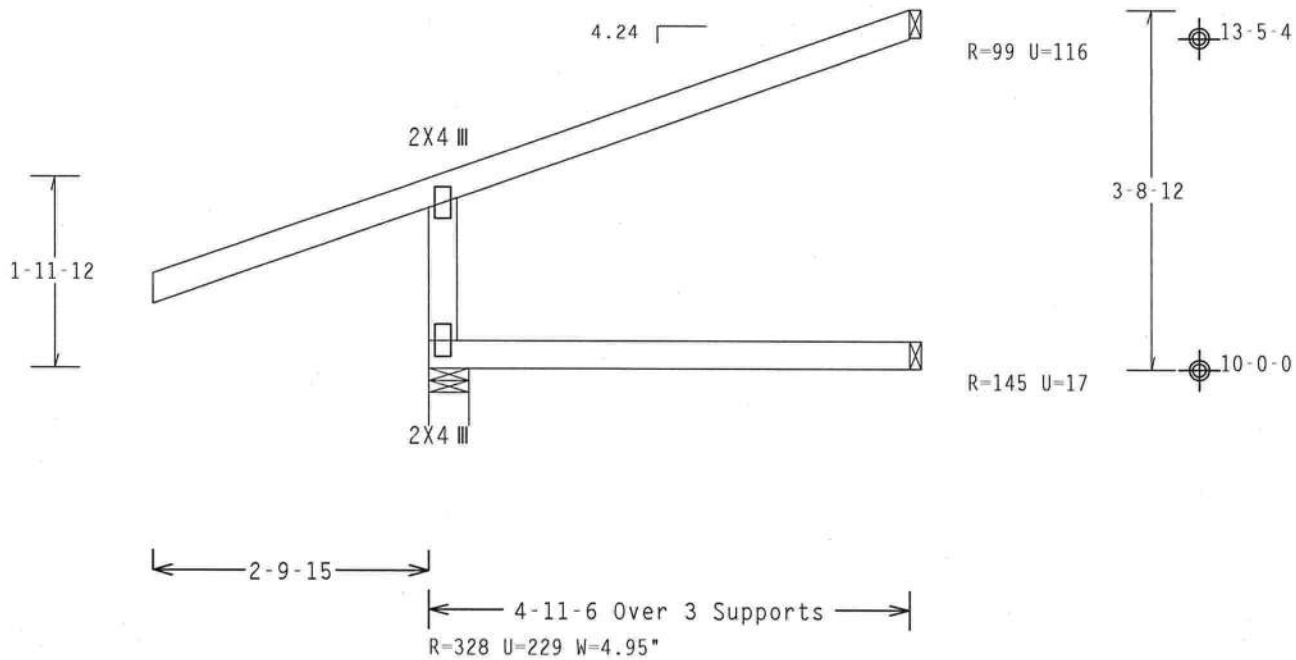

Design Crit: IBC CODE

PLT TYP. Wave Cq/RT=1.00(1.25)/10(0) 7.38.0810 03 QTY:1 FL/-/5/-/-/R/- Scale =.5"/Ft.

ALPINE
ITW Building Components Group, Inc.
Haines City, FL 33844
FL Certificate of Authorization # 0 278

WARNING TRUSSES REQUIRE EXTREME CARE IN FABRICATION, HANDLING, SHIPPING, INSTALLING AND BRACING. REFER TO BCSI (BUILDING COMPONENT SAFETY INFORMATION), PUBLISHED BY TPI (TRUSS PLATE INSTITUTE, 218 NORTH LEE STREET, SUITE 312, ALEXANDRIA, VA, 22314) AND WTCA (WOOD TRUSS COUNCIL OF AMERICA, 6300 ENTERPRISE LANE, MADISON, WI 53719) FOR SAFETY PRACTICES PRIOR TO PERFORMING THESE FUNCTIONS. UNLESS OTHERWISE INDICATED TOP CHORD SHALL HAVE PROPERLY ATTACHED STRUCTURAL PANELS AND BOTTOM CHORD SHALL HAVE A PROPERLY ATTACHED RIGID CEILING.

IMPORTANTFURNISH A COPY OF THIS DESIGN TO THE INSTALLATION CONTRACTOR. ITW BCG, INC. SHALL NOT BE RESPONSIBLE FOR ANY DEVIATION FROM THIS DESIGN; ANY FAILURE TO BUILD THE TRUSS IN COMFORMANCE WITH TPI; OR FABRICATING, HANDLING, SHIPPING, INSTALLING & BRACING OF TRUSSES.
DESIGN CONFORMS WITH APPLICABLE PROVISIONS OF NDS (NATIONAL DESIGN SPEC. BY AF&PA) AND TPI. ITW BCG CONNECTOR PLATES ARE MADE OF 20/18/16GA (W,H/SS/K) ASTM A653 GRADE 40/60 (W, K/H,SS) GALV. STEEL. APPLY PLATES TO EACH FACE OF TRUSS AND, UNLESS OTHERWISE LOCATED ON THIS DESIGN, POSITION PER DRAWINGS 160A-Z. ANY INSPECTION OF PLATES FOLLOWED BY (I) SHALL BE PER ANNEX A3 OF TPI1-2002 SEC.3. A SEAL ON THIS DRAWING INDICATES ACCEPTANCE OF PROFESSIONAL ENGINEERING RESPONSIBILITY SOLELY FOR THE TRUSS COMPONENT DESIGN SHOWN. THE SUITABILITY AND USE OF THIS COMPONENT FOR ANY BUILDING IS THE RESPONSIBILITY OF THE BUILDING DESIGNER PER ANSI/TPI 1 SEC. 2.

JAMES F. COLLINS, JR. LICENSED No. 52212 STATE OF FLORIDA PROFESSIONAL ENGINEER
Nov

TC LL	20.0 PSF	REF	R215-- 17533
TC DL	10.0 PSF	DATE	11/30/07
BC DL	10.0 PSF	DRW	HCUSR215 07334102
BC LL	0.0 PSF	HC-ENG	RA/WHK
TOT.LD.	40.0 PSF	SEQN-	90248
DUR.FAC.	1.25	FROM	LRB
SPACING	24.0"	JREF-	1TCW215_Z02

op chord 2x4 SP #2 N
ot chord 2x4 SP #2 N
Webs 2x4 SP #2 N

10 mph wind, 15.00 ft mean hgt, ASCE 7-02, CLOSED bldg, Located nywhere in roof, CAT II, EXP B, wind TC DL=5.0 psf, wind BC DL=5.0 sf.

ind reactions based on MWFRS pressures.

op chord overhangs have been checked only for loads as indicates. verhangs not checked for man loads or long-term deflection.

SPECIAL LOADS
------(LUMBER DUR.FAC.=1.25 / PLATE DUR.FAC.=1.25)
TC - From 61 PLF at -2.83 to 61 PLF at 3.59
BC - From 20 PLF at 0.00 to 20 PLF at 3.59
TC - -257 LB Conc. Load at 1.48
BC - 90 LB Conc. Load at 1.48

Deflection meets L/240 live and L/180 total load.

The overall height of this truss excluding overhang is 2-9-0.

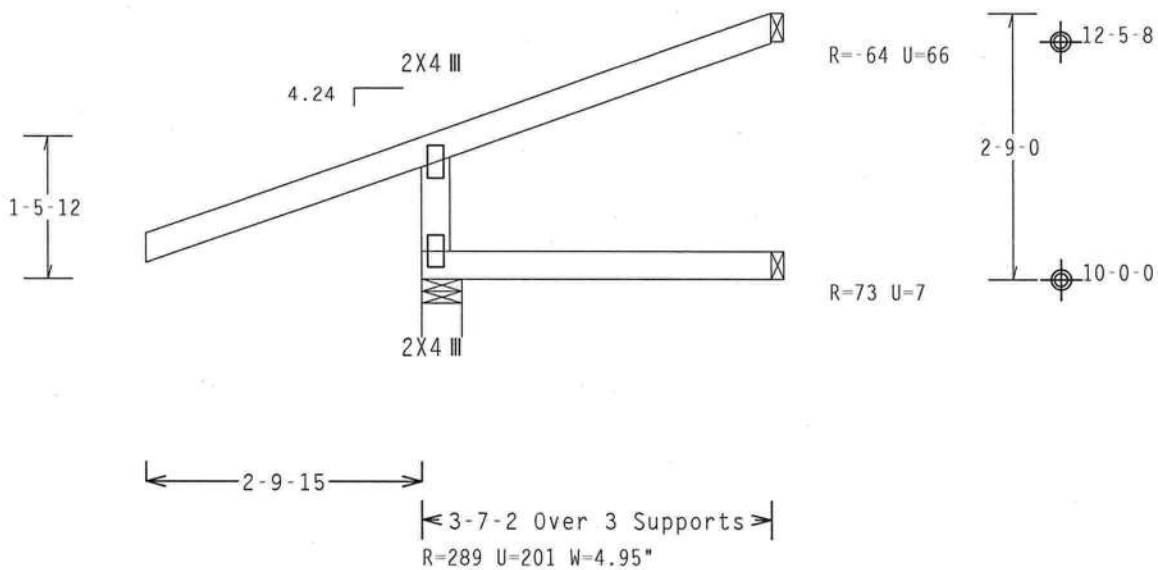

Design Crit: IBC CODE
LT TYP. Wave Cq/RT=1.00(1.25)/10(0) 7.38.0810 QTY:1 FL/-/5/-/-/R/- Scale =.5"/Ft.

ALPINE
TW Building Components Group, Inc.
Haines City, FL 33844
Certificate of Authorization # 0 278

WARNING TRUSSES REQUIRE EXTREME CARE IN FABRICATION, HANDLING, SHIPPING, INSTALLING AND BRACING. REFER TO BCSI (BUILDING COMPONENT SAFETY INFORMATION), PUBLISHED BY TPI (TRUSS PLATE INSTITUTE, 218 NORTH LEE STREET, SUITE 312, ALEXANDRIA, VA, 22314) AND WTCA (WOOD TRUSS COUNCIL OF AMERICA, 6300 ENTERPRISE LANE, MADISON, WI 53719) FOR SAFETY PRACTICES PRIOR TO PERFORMING THESE FUNCTIONS. UNLESS OTHERWISE INDICATED TOP CHORD SHALL HAVE PROPERLY ATTACHED STRUCTURAL PANELS AND BOTTOM CHORD SHALL HAVE A PROPERLY ATTACHED RIGID CEILING.

IMPORTANTFURNISH A COPY OF THIS DESIGN TO THE INSTALLATION CONTRACTOR. ITW BCG, INC. SHALL NOT BE RESPONSIBLE FOR ANY DEVIATION FROM THIS DESIGN; ANY FAILURE TO BUILD THE TRUSS IN COMFORMANCE WITH TPI; OR FABRICATING, HANDLING, SHIPPING, INSTALLING & BRACING OF TRUSSES.
DESIGN CONFORMS WITH APPLICABLE PROVISIONS OF NDS (NATIONAL DESIGN SPEC. BY AF&PA) AND TPI. ITW BCG CONNECTOR PLATES ARE MADE OF 20/18/16GA (W,H/SS/K) ASTM A653 GRADE 40/60 (W, K/H,SS) GALV. STEEL. APPLY PLATES TO EACH FACE OF TRUSS AND, UNLESS OTHERWISE LOCATED ON THIS DESIGN, POSITION PER DRAWINGS 160A-Z. ANY INSPECTION OF PLATES FOLLOWED BY (1) SHALL BE PER ANNEX A3 OF TPI1-2002 SEC.3. A SEAL ON THIS DRAWING INDICATES ACCEPTANCE OF PROFESSIONAL ENGINEERING RESPONSIBILITY SOLELY FOR THE TRUSS COMPONENT DESIGN SHOWN. THE SUITABILITY AND USE OF THIS COMPONENT FOR ANY BUILDING IS THE RESPONSIBILITY OF THE BUILDING DESIGNER PER ANSI/TPI 1 SEC. 2.

JAMES F. COLLINS JR. LICENSE No. 52211 STATE OF FLORIDA PROFESSIONAL ENGINEER
Nov 30 07

TC LL	20.0 PSF	REF R215-- 17534
TC DL	10.0 PSF	DATE 11/30/07
BC DL	10.0 PSF	DRW HCUSR215 07334103
BC LL	0.0 PSF	HC-ENG RA/WHK
TOT.LD.	40.0 PSF	SEQN- 90252
DUR.FAC.	1.25	FROM LRB
SPACING	24.0"	JREF- 1TCW215_Z02

Top chord 2x4 SP #2 N :T2 2x6 SP #2 N:
Bot chord 2x6 SP #2 N
Webs 2x4 SP #2 N

SPECIAL LOADS
------(LUMBER DUR.FAC.=1.25 / PLATE DUR.FAC.=1.25)
TC - From 62 PLF at 0.00 to 62 PLF at 0.63
TC - From 62 PLF at 0.63 to 62 PLF at 7.00
BC - From 20 PLF at 0.00 to 20 PLF at 7.00
BC - 233 LB Conc. Load at 2.40
PLB- 233 LB Conc. Load at (5.23,10.04)

Wind reactions based on MWFRS pressures.

110 mph wind, 16.17 ft mean hgt, ASCE 7-02, CLOSED bldg, not located within 4.50 ft from roof edge, CAT II, EXP B, wind TC DL=5.0 psf, wind BC DL=5.0 psf.

End verticals not exposed to wind pressure.

Deflection meets L/240 live and L/180 total load.

The overall height of this truss excluding overhang is 6-3-15.

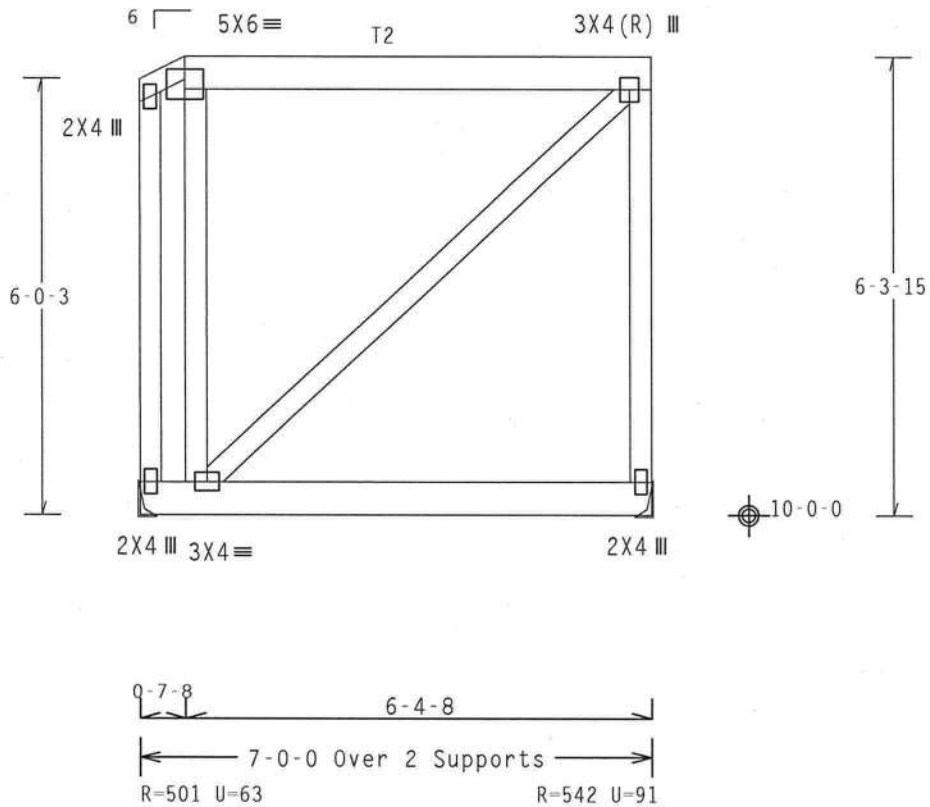

Design Crit: IBC CODE

PLT TYP. Wave Cq/RT=1.00(1.25)/10(0) 7.38.0810 QTY:1 FL/-/5/-/-/R/- Scale =.375"/Ft.

ALPINE
ITW Building Components Group, Inc.
Haines City, FL 33844
FL Certificate of Authorization # 0 278

WARNING TRUSSES REQUIRE EXTREME CARE IN FABRICATION, HANDLING, SHIPPING, INSTALLING AND BRACING. REFER TO BCSI (BUILDING COMPONENT SAFETY INFORMATION), PUBLISHED BY TPI (TRUSS PLATE INSTITUTE, 218 NORTH LEE STREET, SUITE 312, ALEXANDRIA, VA, 22314) AND WTCA (WOOD TRUSS COUNCIL OF AMERICA, 6300 ENTERPRISE LANE, MADISON, WI 53719) FOR SAFETY PRACTICES PRIOR TO PERFORMING THESE FUNCTIONS. UNLESS OTHERWISE INDICATED TOP CHORD SHALL HAVE PROPERLY ATTACHED STRUCTURAL PANELS AND BOTTOM CHORD SHALL HAVE A PROPERLY ATTACHED RIGID CEILING.

IMPORTANT FURNISH A COPY OF THIS DESIGN TO THE INSTALLATION CONTRACTOR. ITW BCG, INC. SHALL NOT BE RESPONSIBLE FOR ANY DEVIATION FROM THIS DESIGN; ANY FAILURE TO BUILD THE TRUSS IN COMFORMANCE WITH TPI; OR FABRICATING, HANDLING, SHIPPING, INSTALLING & BRACING OF TRUSSES.
DESIGN CONFORMS WITH APPLICABLE PROVISIONS OF NDS (NATIONAL DESIGN SPEC. BY AF&PA) AND TPI. ITW BCG CONNECTOR PLATES ARE MADE OF 20/18/16GA (W,H/SS/K) ASTM A653 GRADE 40/60 (W, K/H,SS) GALV. STEEL. APPLY PLATES TO EACH FACE OF TRUSS AND, UNLESS OTHERWISE LOCATED ON THIS DESIGN, POSITION PER DRAWINGS 160A-Z. ANY INSPECTION OF PLATES FOLLOWED BY (1) SHALL BE PER ANNEX A3 OF TPI1-2002 SEC.3. A SEAL ON THIS DRAWING INDICATES ACCEPTANCE OF PROFESSIONAL ENGINEERING RESPONSIBILITY SOLELY FOR THE TRUSS COMPONENT DESIGN SHOWN. THE SUITABILITY AND USE OF THIS COMPONENT FOR ANY BUILDING IS THE RESPONSIBILITY OF THE BUILDING DESIGNER PER ANSI/TPI 1 SEC. 2.

JAMES F. COLLINS, JR. LICENSE NO. 52212 STATE OF FLORIDA PROFESSIONAL ENGINEER
Nov 30 '07

TC LL	20.0 PSF	REF	R215-- 17535
TC DL	10.0 PSF	DATE	11/30/07
BC DL	10.0 PSF	DRW	HCUSR215 07334104
BC LL	0.0 PSF	HC-ENG	RA/WHK
TOT.LD.	40.0 PSF	SEQN-	90437
DUR.FAC.	1.25	FROM	LRB
SPACING	24.0"	JREF-	1TCW215_Z02

Top chord 2x4 SP #2 N
Bot chord 2x4 SP #2 N
Webs 2x4 SP #2 N

Deflection meets L/240 live and L/180 total load.

The overall height of this truss excluding overhang is 2-9-4.

110 mph wind, 15.00 ft mean hgt, ASCE 7-02, CLOSED bldg, Located anywhere in roof, CAT II, EXP B, wind TC DL=5.0 psf, wind BC DL=5.0 psf.

Wind reactions based on MWFRS pressures.

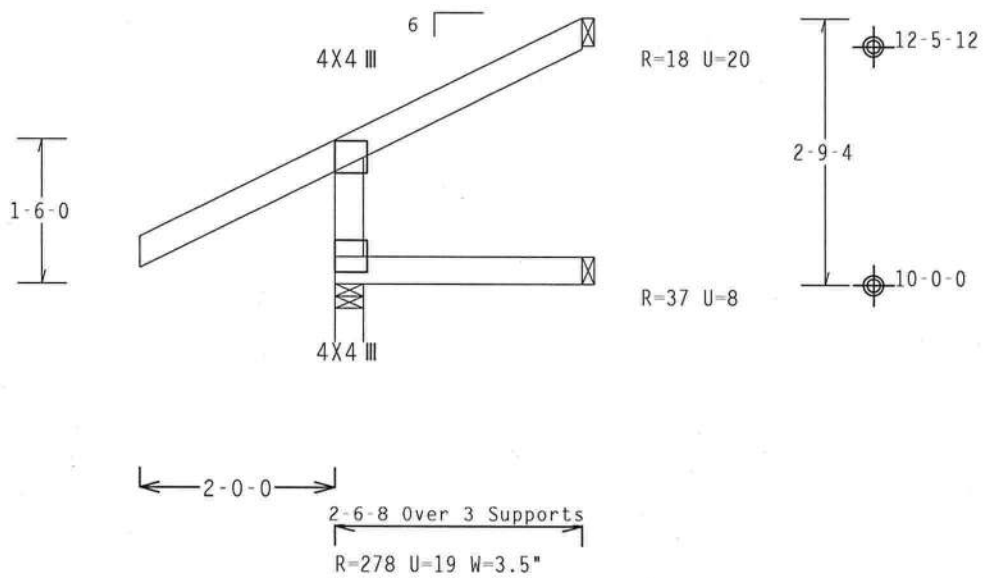

Design Crit: IBC CODE

PLT TYP. Wave Cq/RT=1.00(1.25)/10(0) 7.38.0810 M2 QTY:1 FL/-/5/-/-/R/- Scale =.5"/Ft.

ALPINE

ITW Building Components Group, Inc.
Haines City, FL 33844
FL Certificate of Authorization # 0 278

WARNING TRUSSES REQUIRE EXTREME CARE IN FABRICATION, HANDLING, SHIPPING, INSTALLING AND BRACING. REFER TO BCSI (BUILDING COMPONENT SAFETY INFORMATION), PUBLISHED BY TPI (TRUSS PLATE INSTITUTE, 218 NORTH LEE STREET, SUITE 312, ALEXANDRIA, VA, 22314) AND WTCA (WOOD TRUSS COUNCIL OF AMERICA, 6300 ENTERPRISE LANE, MADISON, WI 53719) FOR SAFETY PRACTICES PRIOR TO PERFORMING THESE FUNCTIONS. UNLESS OTHERWISE INDICATED TOP CHORD SHALL HAVE PROPERLY ATTACHED STRUCTURAL PANELS AND BOTTOM CHORD SHALL HAVE A PROPERLY ATTACHED RIGID CEILING.

IMPORTANTFURNISH A COPY OF THIS DESIGN TO THE INSTALLATION CONTRACTOR. ITW BCG, INC. SHALL NOT BE RESPONSIBLE FOR ANY DEVIATION FROM THIS DESIGN; ANY FAILURE TO BUILD THE TRUSS IN COMFORMANCE WITH TPI; OR FABRICATING, HANDLING, SHIPPING, INSTALLING & BRACING OF TRUSSES.
DESIGN CONFORMS WITH APPLICABLE PROVISIONS OF NDS (NATIONAL DESIGN SPEC, BY AF&PA) AND TPI. ITW BCG CONNECTOR PLATES ARE MADE OF 20/18/16GA (W,H/SS/K) ASTM A653 GRADE 40/60 (W, K/H,SS) GALV. STEEL. APPLY PLATES TO EACH FACE OF TRUSS AND, UNLESS OTHERWISE LOCATED ON THIS DESIGN, POSITION PER DRAWINGS 160A-Z. ANY INSPECTION OF PLATES FOLLOWED BY (1) SHALL BE PER ANNEX A3 OF TPI1-2002 SEC.3. A SEAL ON THIS DRAWING INDICATES ACCEPTANCE OF PROFESSIONAL ENGINEERING RESPONSIBILITY SOLELY FOR THE TRUSS COMPONENT DESIGN SHOWN. THE SUITABILITY AND USE OF THIS COMPONENT FOR ANY BUILDING IS THE RESPONSIBILITY OF THE BUILDING DESIGNER PER ANSI/TPI 1 SEC. 2.

JAMES F. COLLINS JR. LICENSE No. 52212 STATE OF FLORIDA PROFESSIONAL ENGINEER
Nov 30 07

TC LL	20.0 PSF	REF R215-- 17536
TC DL	10.0 PSF	DATE 11/30/07
BC DL	10.0 PSF	DRW HCUSR215 07334066
BC LL	0.0 PSF	HC-ENG RA/WHK *
TOT.LD.	40.0 PSF	SEQN- 90142
DUR.FAC.	1.25	FROM LRB
SPACING	24.0"	JREF- 1TCW215_Z02

(5074-/DERKSEN RESIDENCE /ERIN JOHNSON CONSTRUCTION -- , ** - JE6A)

THIS DWG PREPARED FROM COMPUTER INPUT (LOADS & DIMENSIONS) SUBMITTED BY TRUSS MFR.

Top chord 2x6 SP #2 N :T2 2x4 SP #2 N:
Bot chord 2x6 SP #2 N
Webs 2x4 SP #2 N

(**) 2 plate(s) require special positioning. Refer to scaled plate plot details for special positioning requirements.

110 mph wind, 15.00 ft mean hgt, ASCE 7-02, CLOSED bldg, not located within 4.50 ft from roof edge, CAT II, EXP B, wind TC DL=5.0 psf, wind BC DL=5.0 psf.

Wind reactions based on MWFRS pressures.

SPECIAL LOADS
------(LUMBER DUR.FAC.=1.25 / PLATE DUR.FAC.=1.25)
TC - From 60 PLF at -0.00 to 60 PLF at 6.29
TC - From 62 PLF at 6.29 to 62 PLF at 7.00
BC - From 20 PLF at 0.00 to 20 PLF at 7.00
PLB- 233 LB Conc. Load at (0.27,10.04), (3.23,10.04), (5.23,10.04)

End verticals not exposed to wind pressure.

Deflection meets L/240 live and L/180 total load.

The overall height of this truss excluding overhang is 3-10-3.

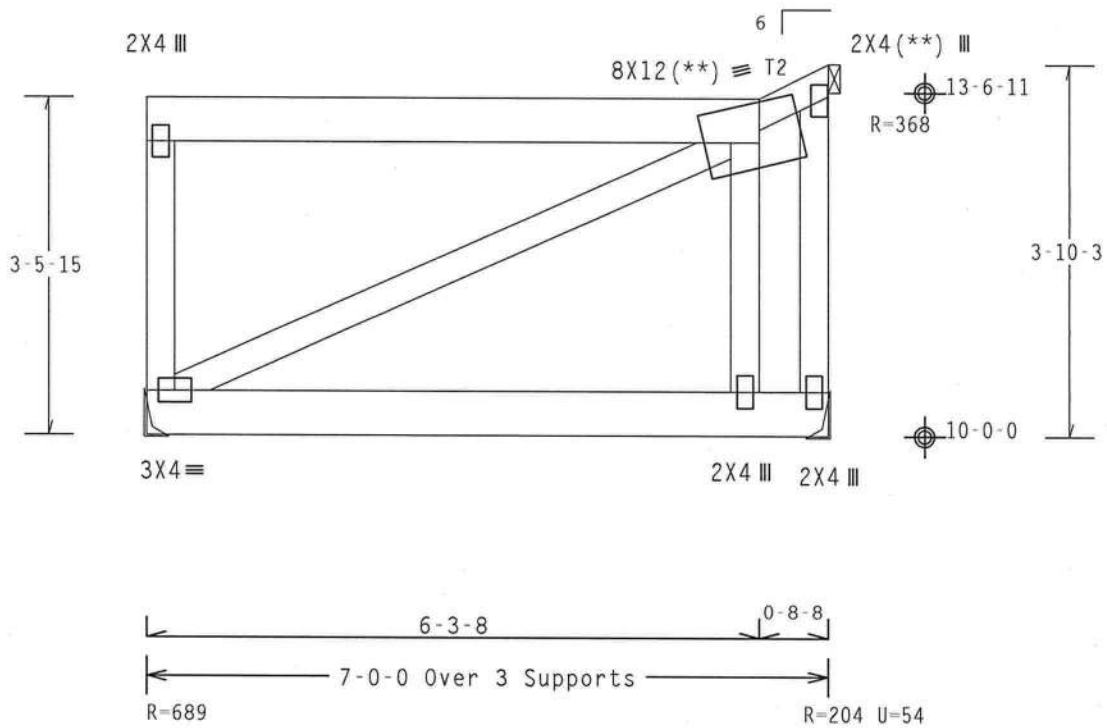

Design Crit: IBC CODE

PLT TYP. Wave Cq/RT=1.00(1.25)/10(0) 7.38.0810.02 QTY:1 FL/-/5/-/-/R/- Scale =.5"/Ft.

ALPINE

ITW Building Components Group, Inc.
Haines City, FL 33844
L Certificate of Authorization # 0 278

WARNING TRUSSES REQUIRE EXTREME CARE IN FABRICATION, HANDLING, SHIPPING, INSTALLING AND BRACING. REFER TO BCSI (BUILDING COMPONENT SAFETY INFORMATION), PUBLISHED BY TPI (TRUSS PLATE INSTITUTE, 218 NORTH LEE STREET, SUITE 312, ALEXANDRIA, VA, 22314) AND WTCA (WOOD TRUSS COUNCIL OF AMERICA, 6300 ENTERPRISE LANE, MADISON, WI 53719) FOR SAFETY PRACTICES PRIOR TO PERFORMING THESE FUNCTIONS. UNLESS OTHERWISE INDICATED TOP CHORD SHALL HAVE PROPERLY ATTACHED STRUCTURAL PANELS AND BOTTOM CHORD SHALL HAVE A PROPERLY ATTACHED RIGID CEILING.

IMPORTANTFURNISH A COPY OF THIS DESIGN TO THE INSTALLATION CONTRACTOR. ITW BCG, INC. SHALL NOT BE RESPONSIBLE FOR ANY DEVIATION FROM THIS DESIGN; ANY FAILURE TO BUILD THE TRUSS IN COMFORMANCE WITH TPI; OR FABRICATING, HANDLING, SHIPPING, INSTALLING & BRACING OF TRUSSES.
DESIGN CONFORMS WITH APPLICABLE PROVISIONS OF NDS (NATIONAL DESIGN SPEC, BY AF&PA) AND TPI. ITW BCG CONNECTOR PLATES ARE MADE OF 20/18/16GA (W,H/SS/K) ASTM A653 GRADE 40/60 (W, K/H,SS) GALV. STEEL. APPLY PLATES TO EACH FACE OF TRUSS AND, UNLESS OTHERWISE LOCATED ON THIS DESIGN, POSITION PER DRAWINGS 160A-Z. ANY INSPECTION OF PLATES FOLLOWED BY (I) SHALL BE PER ANNEX A3 OF TPI1-2002 SEC.3. A SEAL ON THIS DRAWING INDICATES ACCEPTANCE OF PROFESSIONAL ENGINEERING RESPONSIBILITY SOLELY FOR THE TRUSS COMPONENT DESIGN SHOWN. THE SUITABILITY AND USE OF THIS COMPONENT FOR ANY BUILDING IS THE RESPONSIBILITY OF THE BUILDING DESIGNER PER ANSI/TPI 1 SEC. 2.

JAMES F. COLLINS JR. LICENSE No. 52112 STATE OF FLORIDA PROFESSIONAL ENGINEER
Nov 30

TC LL	20.0 PSF	REF	R215-- 17537
TC DL	10.0 PSF	DATE	11/30/07
BC DL	10.0 PSF	DRW	HCUSR215 07334105
BC LL	0.0 PSF	HC-ENG	RA/WHK
TOT.LD.	40.0 PSF	SEQN-	90446
DUR.FAC.	1.25	FROM	LRB
SPACING	24.0"	JREF-	1TCW215_Z02

Top chord 2x4 SP #2 N
Bot chord 2x4 SP #2 N

Deflection meets L/240 live and L/180 total load.

The overall height of this truss excluding overhang is 3-10-3.

110 mph wind, 15.00 ft mean hgt, ASCE 7-02, CLOSED bldg, not located within 4.50 ft from roof edge, CAT II, EXP B, wind TC DL=5.0 psf, wind BC DL=5.0 psf.

Wind reactions based on MWFRS pressures.

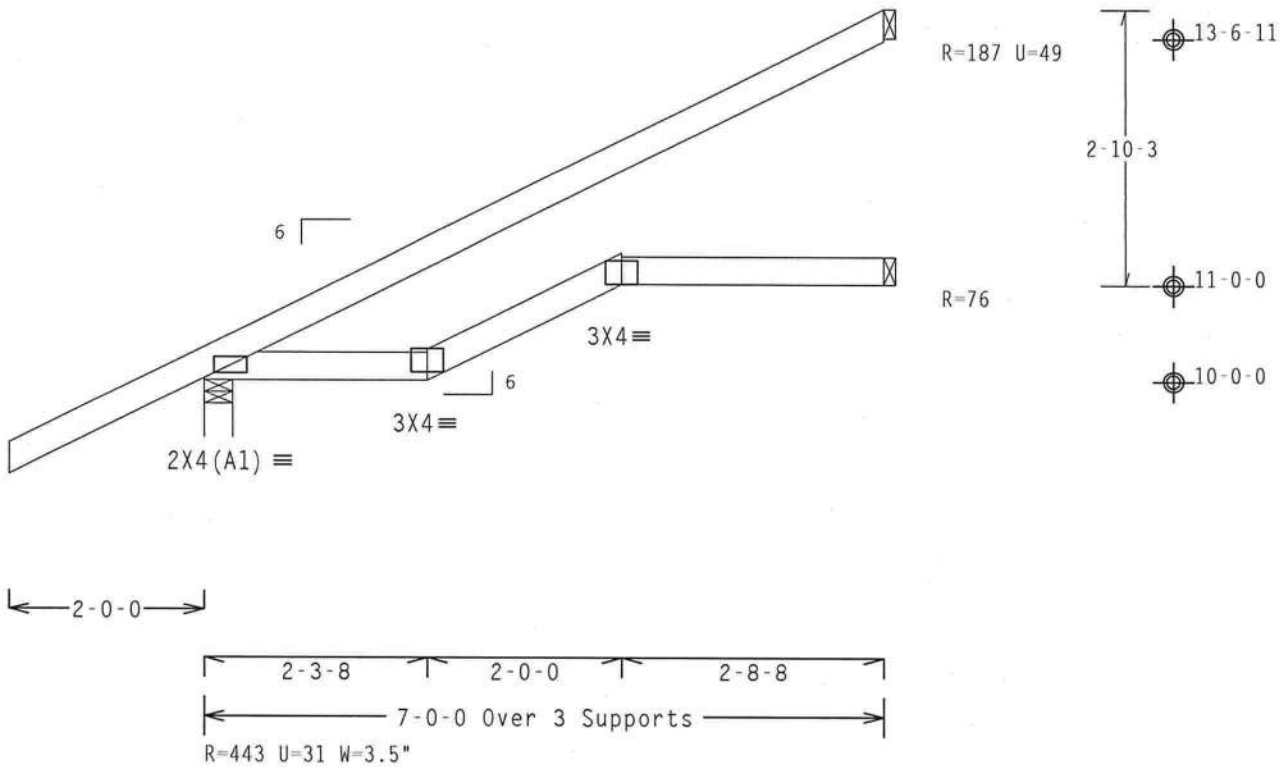

Design Crit: IBC CODE

PLT TYP. Wave Cq/RT=1.00(1.25)/10(0) 7.38.0810 R2 QTY:1 FL/-/5/-/-/R/- Scale =.5"/Ft.

ALPINE

ITW Building Components Group, Inc.
Haines City, FL 33844
FL Certificate of Authorization # 0 278

WARNING TRUSSES REQUIRE EXTREME CARE IN FABRICATION, HANDLING, SHIPPING, INSTALLING AND BRACING. REFER TO BCSI (BUILDING COMPONENT SAFETY INFORMATION), PUBLISHED BY TPI (TRUSS PLATE INSTITUTE, 218 NORTH LEE STREET, SUITE 312, ALEXANDRIA, VA, 22314) AND WTCA (WOOD TRUSS COUNCIL OF AMERICA, 6300 ENTERPRISE LANE, MADISON, WI 53719) FOR SAFETY PRACTICES PRIOR TO PERFORMING THESE FUNCTIONS. UNLESS OTHERWISE INDICATED TOP CHORD SHALL HAVE PROPERLY ATTACHED STRUCTURAL PANELS AND BOTTOM CHORD SHALL HAVE A PROPERLY ATTACHED RIGID CEILING.

IMPORTANTFURNISH A COPY OF THIS DESIGN TO THE INSTALLATION CONTRACTOR. ITW BCG, INC. SHALL NOT BE RESPONSIBLE FOR ANY DEVIATION FROM THIS DESIGN; ANY FAILURE TO BUILD THE TRUSS IN COMFORMANCE WITH TPI; OR FABRICATING, HANDLING, SHIPPING, INSTALLING & BRACING OF TRUSSES.
DESIGN CONFORMS WITH APPLICABLE PROVISIONS OF NDS (NATIONAL DESIGN SPEC, BY AF&PA) AND TPI. ITW BCG CONNECTOR PLATES ARE MADE OF 20/18/16GA (W,H/SS/K) ASTM A653 GRADE 40/60 (W, K/H,SS) GALV. STEEL. APPLY PLATES TO EACH FACE OF TRUSS AND, UNLESS OTHERWISE LOCATED ON THIS DESIGN, POSITION PER DRAWINGS 160A-Z. ANY INSPECTION OF PLATES FOLLOWED BY (1) SHALL BE PER ANNEX A3 OF TPI1-2002 SEC.3. A SEAL ON THIS DRAWING INDICATES ACCEPTANCE OF PROFESSIONAL ENGINEERING RESPONSIBILITY SOLELY FOR THE TRUSS COMPONENT DESIGN SHOWN. THE SUITABILITY AND USE OF THIS COMPONENT FOR ANY BUILDING IS THE RESPONSIBILITY OF THE BUILDING DESIGNER PER ANSI/TPI 1 SEC. 2.

JAMES F. COLLINS, JR. LICENSE No. 52212 STATE OF FLORIDA PROFESSIONAL ENGINEER
Nov 30 07

TC LL	20.0 PSF	REF	R215-- 17538
TC DL	10.0 PSF	DATE	11/30/07
BC DL	10.0 PSF	DRW	HCUSR215 07334106
BC LL	0.0 PSF	HC-ENG	RA/WHK
TOT.LD.	40.0 PSF	SEQN-	90177
DUR.FAC.	1.25	FROM	LRB
SPACING	24.0"	JREF-	1TCW215_Z02

(5074-/DERKSEN RESIDENCE /ERIN JOHNSON CONSTRUCTION -- , ** - JE3B)

THIS DWG PREPARED FROM COMPUTER INPUT (LOADS & DIMENSIONS) SUBMITTED BY TRUSS MFR.

Top chord 2x4 SP #2 N
Bot chord 2x4 SP #2 N
Webs 2x4 SP #2 N

Deflection meets L/240 live and L/180 total load.

Provide for complete drainage of roof.

110 mph wind, 15.00 ft mean hgt, ASCE 7-02, CLOSED bldg, not located within 4.50 ft from roof edge, CAT II, EXP B, wind TC DL=5.0 psf, wind BC DL=5.0 psf.

Wind reactions based on MWFRS pressures.

The overall height of this truss excluding overhang is 3-10-3.

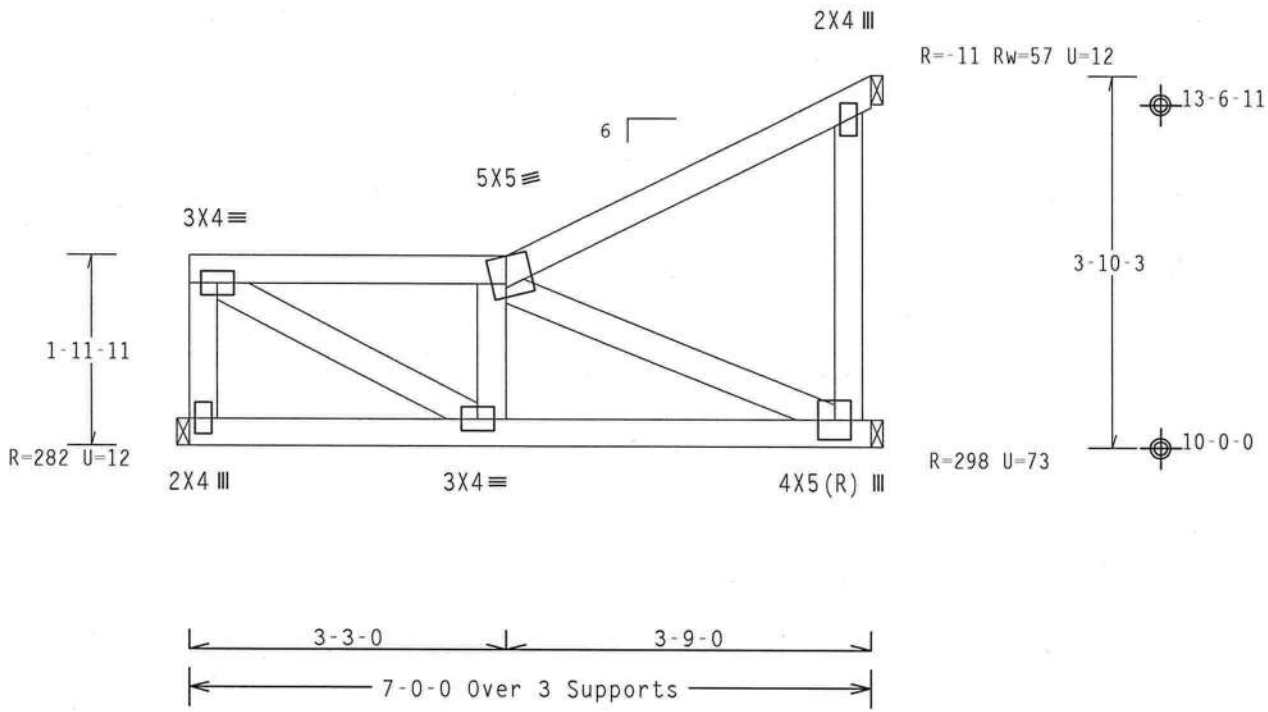

Design Crit: IBC CODE

PLT TYP. Wave Cq/RT=1.00(1.25)/10(0) 7.38.0810 QTY:1 FL/-/5/-/-/R/- Scale =.5"/Ft.

ALPINE
ITW Building Components Group, Inc.
Haines City, FL 33844
L Certificate of Authorization # 0 278

WARNING TRUSSES REQUIRE EXTREME CARE IN FABRICATION, HANDLING, SHIPPING, INSTALLING AND BRACING. REFER TO BCSI (BUILDING COMPONENT SAFETY INFORMATION), PUBLISHED BY TPI (TRUSS PLATE INSTITUTE, 218 NORTH LEE STREET, SUITE 312, ALEXANDRIA, VA, 22314) AND WTCA (WOOD TRUSS COUNCIL OF AMERICA, 6300 ENTERPRISE LANE, MADISON, WI 53719) FOR SAFETY PRACTICES PRIOR TO PERFORMING THESE FUNCTIONS. UNLESS OTHERWISE INDICATED TOP CHORD SHALL HAVE PROPERLY ATTACHED STRUCTURAL PANELS AND BOTTOM CHORD SHALL HAVE A PROPERLY ATTACHED RIGID CEILING.

IMPORTANTFURNISH A COPY OF THIS DESIGN TO THE INSTALLATION CONTRACTOR. ITW BCG, INC. SHALL NOT BE RESPONSIBLE FOR ANY DEVIATION FROM THIS DESIGN; ANY FAILURE TO BUILD THE TRUSS IN COMFORMANCE WITH TPI; OR FABRICATING, HANDLING, SHIPPING, INSTALLING & BRACING OF TRUSSES.
DESIGN CONFORMS WITH APPLICABLE PROVISIONS OF NDS (NATIONAL DESIGN SPEC. BY AF&PA) AND TPI. ITW BCG CONNECTOR PLATES ARE MADE OF 20/18/16GA (W,H/SS/K) ASTM A653 GRADE 40/60 (W, K/H,SS) GALV. STEEL. APPLY PLATES TO EACH FACE OF TRUSS AND, UNLESS OTHERWISE LOCATED ON THIS DESIGN, POSITION PER DRAWINGS 160A-Z. ANY INSPECTION OF PLATES FOLLOWED BY (I) SHALL BE PER ANNEX A3 OF TPI1-2002 SEC.3. A SEAL ON THIS DRAWING INDICATES ACCEPTANCE OF PROFESSIONAL ENGINEERING RESPONSIBILITY SOLELY FOR THE TRUSS COMPONENT DESIGN SHOWN. THE SUITABILITY AND USE OF THIS COMPONENT FOR ANY BUILDING IS THE RESPONSIBILITY OF THE BUILDING DESIGNER PER ANSI/TPI 1 SEC. 2.

JAMES F. COLLINS JR. LICENSE No. 52212 STATE OF FLORIDA PROFESSIONAL ENGINEER
Nov 30 07

TC LL	20.0 PSF	REF R215-- 17539
TC DL	10.0 PSF	DATE 11/30/07
BC DL	10.0 PSF	DRW HCUSR215 07334107
BC LL	0.0 PSF	HC-ENG RA/WHK
TOT.LD.	40.0 PSF	SEQN- 90461
DUR.FAC.	1.25	FROM LRB
SPACING	24.0"	JREF- 1TCW215_Z02

(5074-/DERKSEN RESIDENCE /ERIN JOHNSON CONSTRUCTION -- , ** - JH9)

Top chord 2x4 SP #2 N
Bot chord 2x4 SP #2 N
Webs 2x4 SP #2 N

110 mph wind, 15.00 ft mean hgt, ASCE 7-02, CLOSED bldg, not located within 4.50 ft from roof edge, CAT II, EXP B, wind TC DL=5.0 psf, wind BC DL=5.0 psf.

Wind reactions based on MWFRS pressures.

Deflection meets L/240 live and L/180 total load.

SPECIAL LOADS
------(LUMBER DUR.FAC.=1.25 / PLATE DUR.FAC.=1.25)
TC - From 61 PLF at -2.83 to 61 PLF at 8.84
BC - From 20 PLF at 0.00 to 20 PLF at 8.84
TC - -196 LB Conc. Load at 1.48
TC - 103 LB Conc. Load at 4.31
TC - 243 LB Conc. Load at 7.13
BC - -70 LB Conc. Load at 1.48
BC - 31 LB Conc. Load at 4.31
BC - 98 LB Conc. Load at 7.13

The overall height of this truss excluding overhang is 3-5-6.

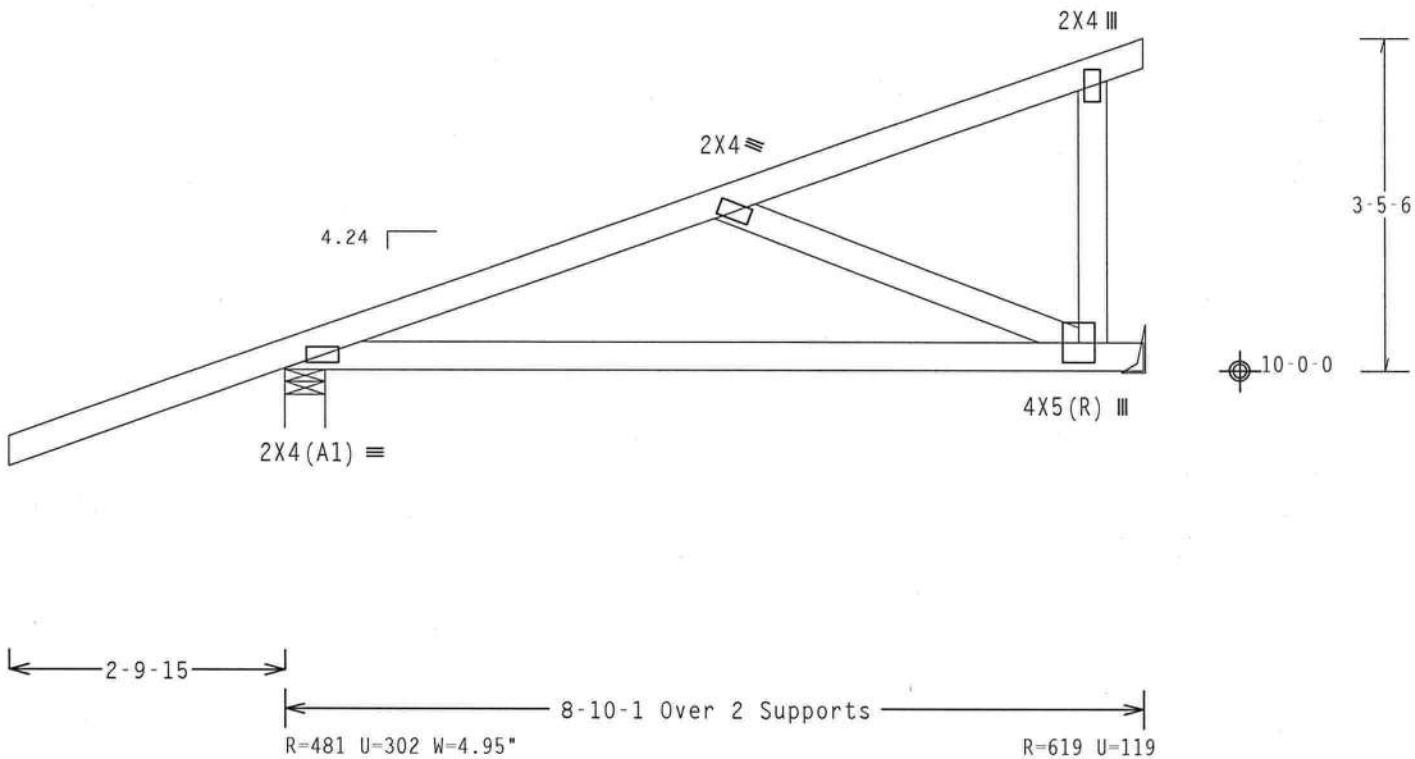

Design Crit: IBC CODE

PLT TYP. Wave Cq/RT=1.00(1.25)/10(0) 7.38.0810.02 QTY:1 FL/-/5/-/-/R/- Scale =.5"/Ft.

ALPINE
ITW Building Components Group, Inc.
Haines City, FL 33844
FL Certificate of Authorization # 0 278

WARNING TRUSSES REQUIRE EXTREME CARE IN FABRICATION, HANDLING, SHIPPING, INSTALLING AND BRACING. REFER TO BCSI (BUILDING COMPONENT SAFETY INFORMATION), PUBLISHED BY TPI (TRUSS PLATE INSTITUTE, 218 NORTH LEE STREET, SUITE 312, ALEXANDRIA, VA. 22314) AND WTCA (WOOD TRUSS COUNCIL OF AMERICA, 6300 ENTERPRISE LANE, MADISON, WI 53719) FOR SAFETY PRACTICES PRIOR TO PERFORMING THESE FUNCTIONS. UNLESS OTHERWISE INDICATED TOP CHORD SHALL HAVE PROPERLY ATTACHED STRUCTURAL PANELS AND BOTTOM CHORD SHALL HAVE A PROPERLY ATTACHED RIGID CEILING.

IMPORTANTFURNISH A COPY OF THIS DESIGN TO THE INSTALLATION CONTRACTOR. ITW BCG, INC. SHALL NOT BE RESPONSIBLE FOR ANY DEVIATION FROM THIS DESIGN; ANY FAILURE TO BUILD THE TRUSS IN CONFORMANCE WITH TPI; OR FABRICATING, HANDLING, SHIPPING, INSTALLING & BRACING OF TRUSSES.
DESIGN CONFORMS WITH APPLICABLE PROVISIONS OF NDS (NATIONAL DESIGN SPEC, BY AF&PA) AND TPI. ITW BCG CONNECTOR PLATES ARE MADE OF 20/18/16GA (W,H/SS/K) ASTM A653 GRADE 40/60 (W, K/H,SS) GALV. STEEL. APPLY PLATES TO EACH FACE OF TRUSS AND, UNLESS OTHERWISE LOCATED ON THIS DESIGN, POSITION PER DRAWINGS 160A-Z. ANY INSPECTION OF PLATES FOLLOWED BY (1) SHALL BE PER ANNEX A3 OF TPI1-2002 SEC.3. A SEAL ON THIS DRAWING INDICATES ACCEPTANCE OF PROFESSIONAL ENGINEERING RESPONSIBILITY SOLELY FOR THE TRUSS COMPONENT DESIGN SHOWN. THE SUITABILITY AND USE OF THIS COMPONENT FOR ANY BUILDING IS THE RESPONSIBILITY OF THE BUILDING DESIGNER PER ANSI/TPI 1 SEC. 2.

JAMES F. COLLINS, JR. LICENSED No. 52272 STATE OF FLORIDA PROFESSIONAL ENGINEER
Nov

TC LL	20.0 PSF	REF R215-- 17540
TC DL	10.0 PSF	DATE 11/30/07
BC DL	10.0 PSF	DRW HCUSR215 07334108
BC LL	0.0 PSF	HC-ENG RA/WHK
TOT.LD.	40.0 PSF	SEQN- 90256
DUR.FAC.	1.25	FROM LRB
SPACING	24.0"	JREF- 1TCW215_Z02

(5074-/DERKSEN RESIDENCE /ERIN JOHNSON CONSTRUCTION -- , ** - JH10)

THIS DWG PREPARED FROM COMPUTER INPUT (LOADS & DIMENSIONS) SUBMITTED BY TRUSS MFR.

Top chord 2x4 SP #2 N
Bot chord 2x4 SP #2 N
Webs 2x4 SP #2 N

110 mph wind, 15.00 ft mean hgt, ASCE 7-02, CLOSED bldg, not located within 4.50 ft from roof edge, CAT II, EXP B, wind TC DL=5.0 psf, wind BC DL=5.0 psf.

Wind reactions based on MWFRS pressures.

Deflection meets L/240 live and L/180 total load.

SPECIAL LOADS
------(LUMBER DUR.FAC.=1.25 / PLATE DUR.FAC.=1.25)

TC -	From	61 PLF	at -2.83	to	61 PLF	at	9.90
BC -	From	20 PLF	at 0.00	to	20 PLF	at	9.90
TC -		-196 LB	Conc. Load	at	1.48		
TC -		103 LB	Conc. Load	at	4.31		
TC -		243 LB	Conc. Load	at	7.13		
BC -		-70 LB	Conc. Load	at	1.48		
BC -		31 LB	Conc. Load	at	4.31		
BC -		98 LB	Conc. Load	at	7.13		

The overall height of this truss excluding overhang is 3-9-14.

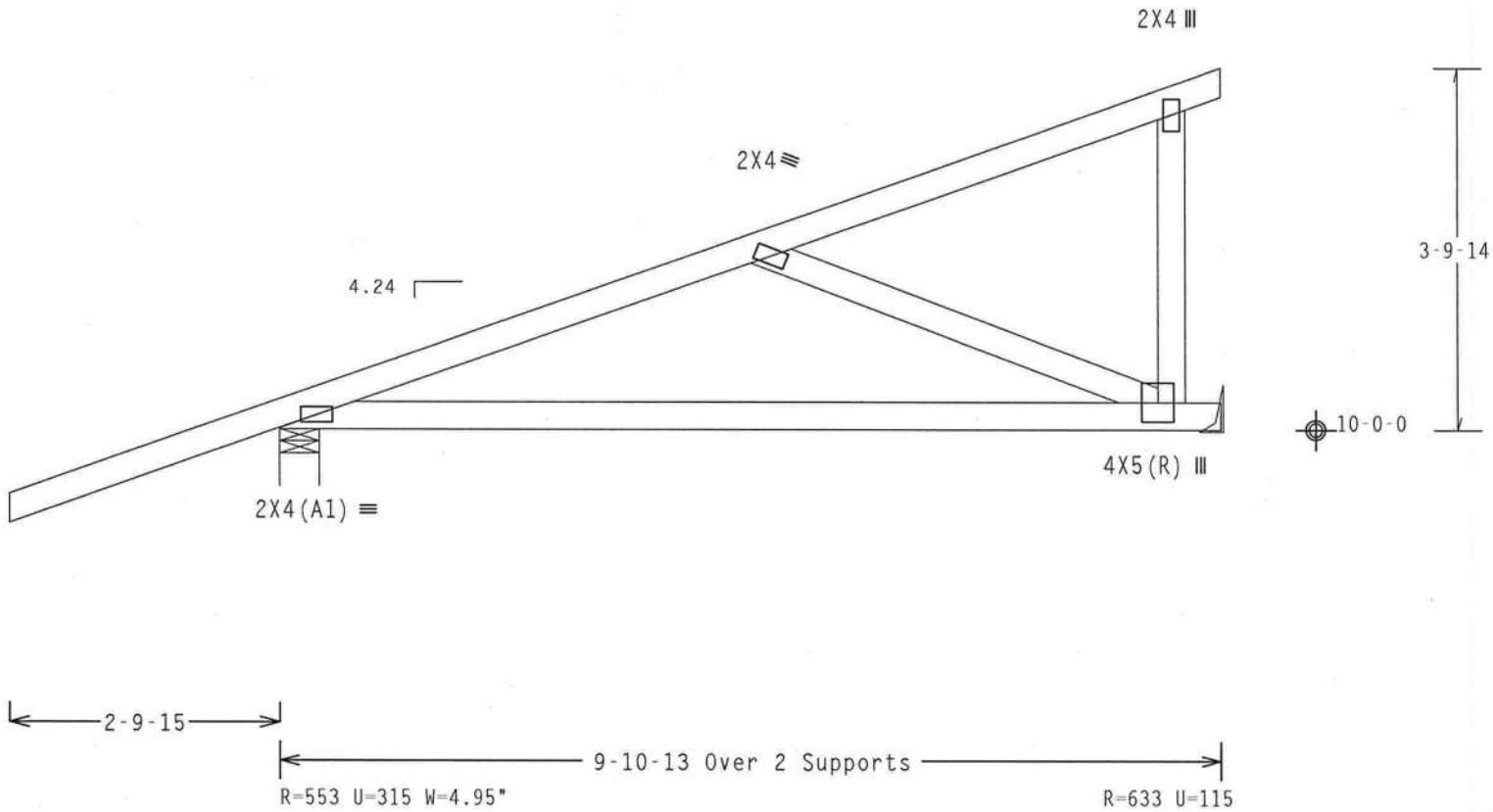

Design Crit: IBC CODE

PLT TYP. Wave Cq/RT=1.00(1.25)/10(0) 7.38.0810 QTY:1 FL/-/5/-/-/R/- Scale =.5"/Ft.

ALPINE
ITW Building Components Group, Inc.
Haines City, FL 33844
FL Certificate of Authorization # 0 278

WARNING TRUSSES REQUIRE EXTREME CARE IN FABRICATION, HANDLING, SHIPPING, INSTALLING AND BRACING. REFER TO BCSI (BUILDING COMPONENT SAFETY INFORMATION), PUBLISHED BY TPI (TRUSS PLATE INSTITUTE, 218 NORTH LEE STREET, SUITE 312, ALEXANDRIA, VA, 22314) AND WTCA (WOOD TRUSS COUNCIL OF AMERICA, 6300 ENTERPRISE LANE, MADISON, WI 53719) FOR SAFETY PRACTICES PRIOR TO PERFORMING THESE FUNCTIONS. UNLESS OTHERWISE INDICATED TOP CHORD SHALL HAVE PROPERLY ATTACHED STRUCTURAL PANELS AND BOTTOM CHORD SHALL HAVE A PROPERLY ATTACHED RIGID CEILING.

IMPORTANTFURNISH A COPY OF THIS DESIGN TO THE INSTALLATION CONTRACTOR. ITW BCG, INC. SHALL NOT BE RESPONSIBLE FOR ANY DEVIATION FROM THIS DESIGN; ANY FAILURE TO BUILD THE TRUSS IN COMFORMANCE WITH TPI; OR FABRICATING, HANDLING, SHIPPING, INSTALLING & BRACING OF TRUSSES. DESIGN CONFORMS WITH APPLICABLE PROVISIONS OF NDS (NATIONAL DESIGN SPEC. BY AF&PA) AND TPI. ITW BCG CONNECTOR PLATES ARE MADE OF 20/18/16GA (W,H/SS/K) ASTM A653 GRADE 40/60 (W, K/H,SS) GALV. STEEL. APPLY PLATES TO EACH FACE OF TRUSS AND, UNLESS OTHERWISE LOCATED ON THIS DESIGN, POSITION PER DRAWINGS 160A-Z. ANY INSPECTION OF PLATES FOLLOWED BY (1) SHALL BE PER ANNEX A3 OF TPI1-2002 SEC.3. A SEAL ON THIS DRAWING INDICATES ACCEPTANCE OF PROFESSIONAL ENGINEERING RESPONSIBILITY SOLELY FOR THE TRUSS COMPONENT DESIGN SHOWN. THE SUITABILITY AND USE OF THIS COMPONENT FOR ANY BUILDING IS THE RESPONSIBILITY OF THE BUILDING DESIGNER PER ANSI/TPI 1 SEC. 2.

JAMES F. COLLINS JR. LICENSE No. 37212 STATE OF FLORIDA PROFESSIONAL ENGINEER
Nov 30 07

TC LL	20.0 PSF	REF	R215-- 17541
TC DL	10.0 PSF	DATE	11/30/07
BC DL	10.0 PSF	DRW	HCUSR215 07334109
BC LL	0.0 PSF	HC-ENG	RA/WHK
TOT.LD.	40.0 PSF	SEQN-	90260
DUR.FAC.	1.25	FROM	LRB
SPACING	24.0"	JREF-	1TCW215_Z02

(5074-/DERKSEN RESIDENCE /ERIN JOHNSON CONSTRUCTION -- , ** - JH10A)

Top chord 2x4 SP #2 N
Bot chord 2x4 SP #2 N
Webs 2x4 SP #2 N

110 mph wind, 15.00 ft mean hgt, ASCE 7-02, CLOSED bldg, not located within 4.50 ft from roof edge, CAT II, EXP B, wind TC DL=5.0 psf, wind BC DL=5.0 psf.

Wind reactions based on MWFRS pressures.

Deflection meets L/240 live and L/180 total load.

The overall height of this truss excluding overhang is 3-9-14.

SPECIAL LOADS
------(LUMBER DUR.FAC.=1.25 / PLATE DUR.FAC.=1.25)

TC -	From	61 PLF	at -2.83	to	61 PLF	at	9.90
BC -	From	20 PLF	at 0.00	to	20 PLF	at	3.24
BC -	From	21 PLF	at 3.24	to	21 PLF	at	6.01
BC -	From	20 PLF	at 6.01	to	20 PLF	at	9.90
TC -		-196 LB	Conc. Load at	1.48			
TC -		66 LB	Conc. Load at	4.31			
TC -		247 LB	Conc. Load at	7.13			
BC -		-70 LB	Conc. Load at	1.48			
BC -		71 LB	Conc. Load at	4.31			
BC -		100 LB	Conc. Load at	7.13			

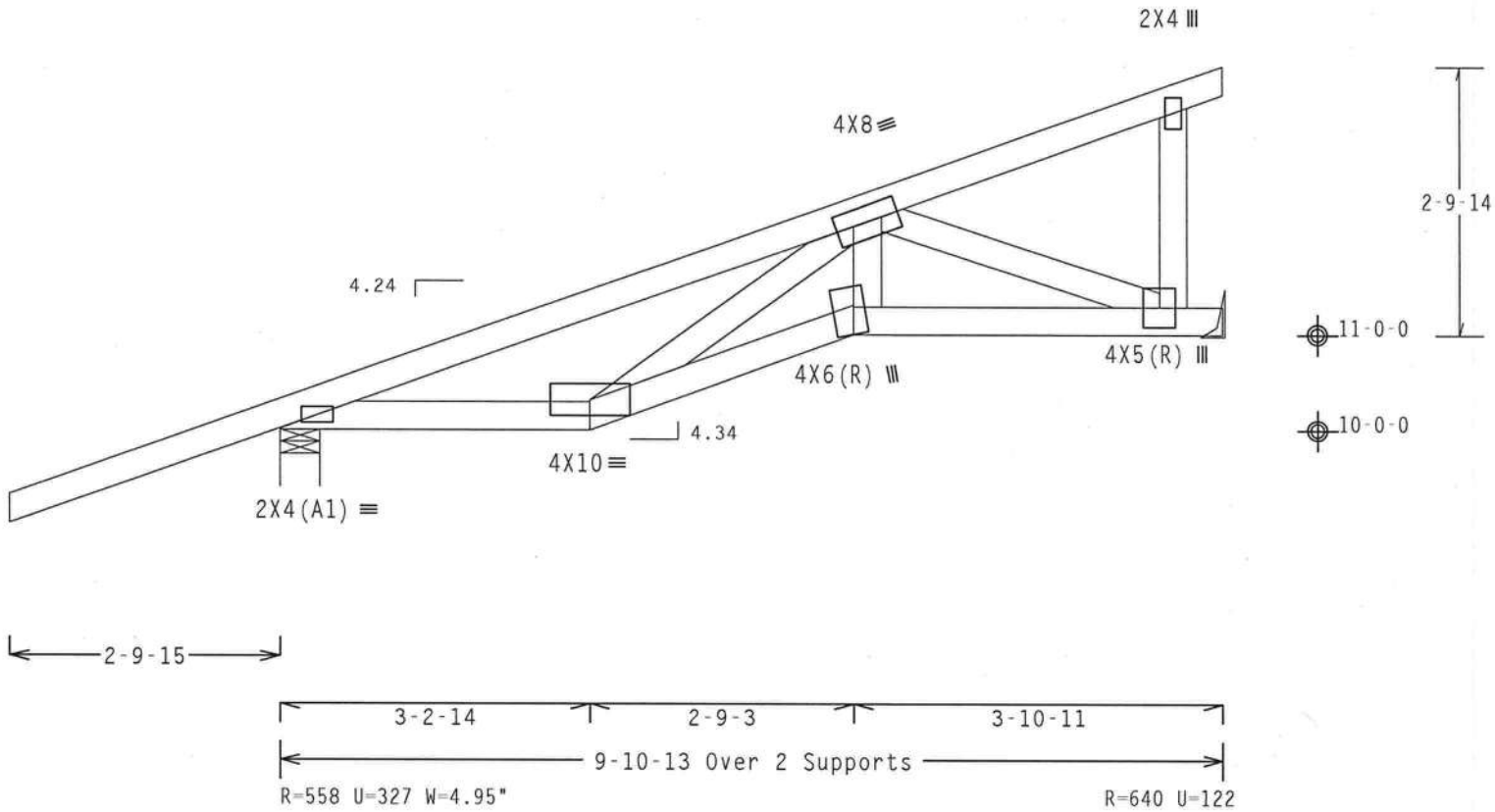

Design Crit: IBC CODE

PLT TYP. Wave Cq/RT=1.00(1.25)/10(0) 7.38.0810 QTY:1 FL/-/5/-/-/R/- Scale =.5"/Ft.

ALPINE
ITW Building Components Group, Inc.
Haines City, FL 33844
FL Certificate of Authorization # 0 278

WARNING TRUSSES REQUIRE EXTREME CARE IN FABRICATION, HANDLING, SHIPPING, INSTALLING AND BRACING. REFER TO BCSI (BUILDING COMPONENT SAFETY INFORMATION), PUBLISHED BY TPI (TRUSS PLATE INSTITUTE, 218 NORTH LEE STREET, SUITE 312, ALEXANDRIA, VA, 22314) AND WTCA (WOOD TRUSS COUNCIL OF AMERICA, 6300 ENTERPRISE LANE, MADISON, WI 53719) FOR SAFETY PRACTICES PRIOR TO PERFORMING THESE FUNCTIONS. UNLESS OTHERWISE INDICATED TOP CHORD SHALL HAVE PROPERLY ATTACHED STRUCTURAL PANELS AND BOTTOM CHORD SHALL HAVE A PROPERLY ATTACHED RIGID CEILING.

IMPORTANTFURNISH A COPY OF THIS DESIGN TO THE INSTALLATION CONTRACTOR. ITW BCG, INC. SHALL NOT BE RESPONSIBLE FOR ANY DEVIATION FROM THIS DESIGN; ANY FAILURE TO BUILD THE TRUSS IN CONFORMANCE WITH TPI; OR FABRICATING, HANDLING, SHIPPING, INSTALLING & BRACING OF TRUSSES.
DESIGN CONFORMS WITH APPLICABLE PROVISIONS OF NDS (NATIONAL DESIGN SPEC, BY AF&PA) AND TPI. ITW BCG CONNECTOR PLATES ARE MADE OF 20/18/16GA (W,H/SS/K) ASTM A653 GRADE 40/60 (W, K/H,SS) GALV. STEEL. APPLY PLATES TO EACH FACE OF TRUSS AND, UNLESS OTHERWISE LOCATED ON THIS DESIGN, POSITION PER DRAWINGS 160A-Z. ANY INSPECTION OF PLATES FOLLOWED BY (1) SHALL BE PER ANNEX A3 OF TPI1-2002 SEC.3. A SEAL ON THIS DRAWING INDICATES ACCEPTANCE OF PROFESSIONAL ENGINEERING RESPONSIBILITY SOLELY FOR THE TRUSS COMPONENT DESIGN SHOWN. THE SUITABILITY AND USE OF THIS COMPONENT FOR ANY BUILDING IS THE RESPONSIBILITY OF THE BUILDING DESIGNER PER ANSI/TPI 1 SEC. 2.

JAMES F. COLLINS JR. LICENSE No.52212 STATE OF FLORIDA PROFESSIONAL ENGINEER
Nov 30 '07

TC LL	20.0 PSF	REF R215-- 17542
TC DL	10.0 PSF	DATE 11/30/07
BC DL	10.0 PSF	DRW HCUSR215 07334110
BC LL	0.0 PSF	HC-ENG RA/WHK
TOT.LD.	40.0 PSF	SEQN- 90265
DUR.FAC.	1.25	FROM LRB
SPACING	24.0"	JREF- 1TCW215_Z02

BEARING BLOCK NAIL SPACING DETAIL

MINIMUM SPACING FOR SINGLE BEARING BLOCK IS SHOWN. DOUBLE NAIL SPACINGS AND STAGGER NAILING FOR TWO BLOCKS. GREATER SPACING MAY BE REQUIRED TO AVOID SPLITTING.

A – EDGE DISTANCE AND SPACING BETWEEN STAGGERED ROWS OF NAILS (6 NAIL DIAMETERS)
B – SPACING OF NAILS IN A ROW (12 NAIL DIAMETERS)
C – END DISTANCE (15 NAIL DIAMETERS)

IF NAIL HOLES ARE PREBORED, SOME SPACING MAY BE REDUCED BY THE AMOUNTS GIVEN BELOW:
- • SPACING MAY BE REDUCED BY 50%
- •• SPACING MAY BE REDUCED BY 33%

BEARING BLOCK TO BE SAME SIZE AND SPECIES AS BOTTOM CHORD. BLOCKS MAY BE ANY GRADE WITHIN THE SPECIES, PROVIDED THE COMPRESSION PERPENDICULAR TO GRAIN VALUE (Fc-perp) IS AT LEAST THAT OF THE CHORD.

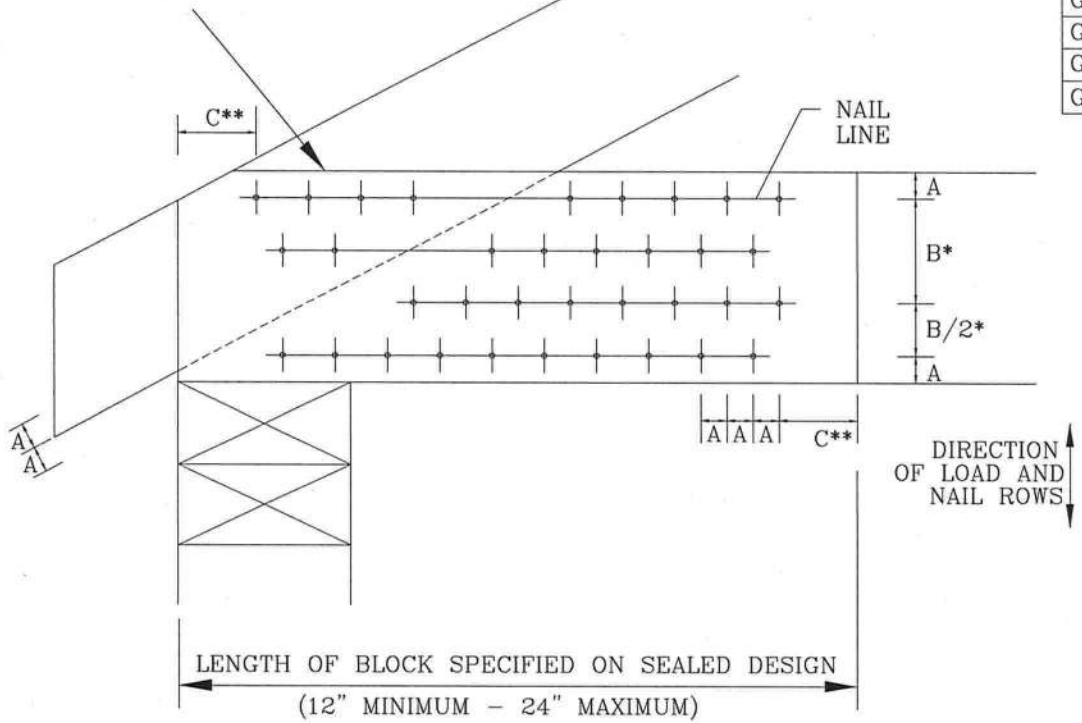

MAXIMUM NUMBER OF NAIL LINES PARALLEL TO GRAIN

NAIL TYPE	CHORD SIZE 2X4	2X6	2X8	2X10	2X12
8d BOX (0.113"X 2.5",MIN)	3	6	9	12	15
10d BOX (0.128"X 3.",MIN)	3	5	7	10	12
12d BOX (0.128"X 3.25",MIN)	3	5	7	10	12
16d BOX (0.135"X 3.5",MIN)	3	5	7	10	12
20d BOX (0.148"X 4.",MIN)	2	4	5	6	8
8d COMMON (0.131"X 2.5",MIN)	3	5	7	10	12
10d COMMON (0.148"X 3.",MIN)	2	4	6	8	10
12d COMMON (0.148"X 3.25",MIN)	2	4	6	8	10
16d COMMON (0.162"X 3.5",MIN)	2	4	6	8	10
GUN (0.120"X 2.5",MIN)	3	6	8	11	14
GUN (0.131"X 2.5",MIN)	3	5	7	10	12
GUN (0.120"X 3.",MIN)	3	6	8	11	14
GUN (0.131"X 3.",MIN)	3	5	7	10	12

MINIMUM NAIL SPACING DISTANCES

NAIL TYPE	DISTANCES A	B*	C**
8d BOX (0.113"X 2.5",MIN)	3/4"	1 3/8"	1 3/4"
10d BOX (0.128"X 3.",MIN)	7/8"	1 5/8"	2"
12d BOX (0.128"X 3.25",MIN)	7/8"	1 5/8"	2"
16d BOX (0.135"X 3.5",MIN)	7/8"	1 5/8"	2 1/8"
20d BOX (0.148"X 4.",MIN)	1"	1 7/8"	2 1/4"
8d COMMON (0.131"X 2.5",MIN)	7/8"	1 5/8"	2"
10d COMMON (0.148"X 3.",MIN)	1"	1 7/8"	2 1/4"
12d COMMON (0.148"X 3.25",MIN)	1"	1 7/8"	2 1/4"
16d COMMON (0.162"X 3.5",MIN)	1'	2"	2 1/2"
GUN (0.120"X 2.5",MIN)	3/4"	1 1/2"	1 7/8"
GUN (0.131"X 2.5",MIN)	7/8"	1 5/8"	2"
GUN (0.120"X 3.",MIN)	3/4"	1 1/2"	1 7/8"
GUN (0.131"X 3.",MIN)	7/8"	1 5/8"	2"

THIS DRAWING REPLACES DRAWING B139 AND CNBRGBLK0699

ALPINE
ITW BUILDING COMPONENTS GROUP, INC.
POMPANO BEACH, FLORIDA

WARNING TRUSSES REQUIRE EXTREME CARE IN FABRICATING, HANDLING, SHIPPING, INSTALLING AND BRACING. REFER TO BCSI (BUILDING COMPONENT SAFETY INFORMATION), PUBLISHED BY TPI (TRUSS PLATE INSTITUTE, 218 NORTH LEE STR., SUITE 312 ALEXANDRIA, VA. 22314) AND WTCA (WOOD TRUSS COUNCIL OF AMERICA, 6300 ENTERPRISE LN, MADISON, WI 53719) FOR SAFETY PRACTICES PRIOR TO PERFORMING THESE FUNCTIONS. UNLESS OTHERWISE INDICATED, TOP CHORD SHALL HAVE PROPERLY ATTACHED STRUCTURAL PANELS AND BOTTOM CHORD SHALL HAVE A PROPERLY ATTACHED RIGID CEILING.

IMPORTANT FURNISH COPY OF THIS DESIGN TO INSTALLATION CONTRACTOR. ITW BCG, INC., SHALL NOT BE RESPONSIBLE FOR ANY DEVIATION FROM THIS DESIGN; ANY FAILURE TO BUILD THE TRUSS IN CONFORMANCE WITH TPI; OR FABRICATING, HANDLING, SHIPPING, INSTALLING & BRACING OF TRUSSES DESIGN CONFORMS WITH APPLICABLE PROVISIONS OF NDS (NATIONAL DESIGN SPEC, BY AF&PA) AND TPI. ITW, BCG CONNECTOR PLATES ARE MADE OF 20/18/16GA (W,H/SS/K) ASTM A653 GRADE 40/60 (W,K/HES) GALV. STEEL. APPLY PLATES TO EACH FACE OF TRUSS AND, UNLESS OTHERWISE LOCATED ON THIS DESIGN, POSITION PER DRAWINGS 160A-Z. ANY INSPECTION OF PLATES FOLLOWED BY (I) SHALL BE PER ANNEX A3 OF TPI 1-2002 SEC. 3. A SEAL ON THIS DRAWING INDICATES ACCEPTANCE OF PROFESSIONAL ENGINEERING RESPONSIBILITY SOLELY FOR THE TRUSS COMPONENT DESIGN SHOWN. THE SUITABILITY AND USE OF THIS COMPONENT FOR ANY BUILDING IS THE RESPONSIBILITY OF THE BUILDING DESIGNER, PER ANSI/TPI 1 SEC. 2.

JAMES F. COLLINS, JR. LICENSE No. 52212 STATE OF FLORIDA PROFESSIONAL ENGINEER

REF	BEARING BLOCK
DATE	2/23/07
DRWG	CNBRGBLK0207
-ENG	SJP/KAR

CLB WEB BRACE SUBSTITUTION

THIS DETAIL IS TO BE USED WHEN CONTINUOUS LATERAL BRACING (CLB) IS SPECIFIED ON AN ALPINE TRUSS DESIGN BUT AN ALTERNATIVE WEB BRACING METHOD IS DESIRED.

NOTES:

THIS DETAIL IS ONLY APPLICABLE FOR CHANGING THE SPECIFIED CLB SHOWN ON SINGLE PLY SEALED DESIGNS TO T-BRACING OR SCAB BRACING.

ALTERNATIVE BRACING SPECIFIED IN CHART BELOW MAY BE CONSERVATIVE. FOR MINIMUM ALTERNATIVE BRACING, RE-RUN DESIGN WITH APPROPRIATE BRACING.

WEB MEMBER SIZE	SPECIFIED CLB BRACING	ALTERNATIVE BRACING T OR L-BRACE	ALTERNATIVE BRACING SCAB BRACE
2X3 OR 2X4	1 ROW	2X4	1-2X4
2X3 OR 2X4	2 ROWS	2X6	2-2X4
2X6	1 ROW	2X4	1-2X6
2X6	2 ROWS	2X6	2-2X4(*)
2X8	1 ROW	2X6	1-2X8
2X8	2 ROWS	2X6	2-2X6(*)

T-BRACE, L-BRACE AND SCAB BRACE TO BE SAME SPECIES AND GRADE OR BETTER THAN WEB MEMBER UNLESS SPECIFIED OTHERWISE ON ENGINEER'S SEALED DESIGN.

(*) CENTER SCAB ON WIDE FACE OF WEB. APPLY (1) SCAB TO EACH FACE OF WEB.

T-BRACING OR L-BRACING:

APPLY TO EITHER SIDE OF WEB NARROW FACE.
ATTACH WITH 10d BOX OR GUN (0.128"x 3.",MIN) NAILS.
AT 6" O.C. BRACE IS A MINIMUM 80% OF WEB MEMBER LENGTH

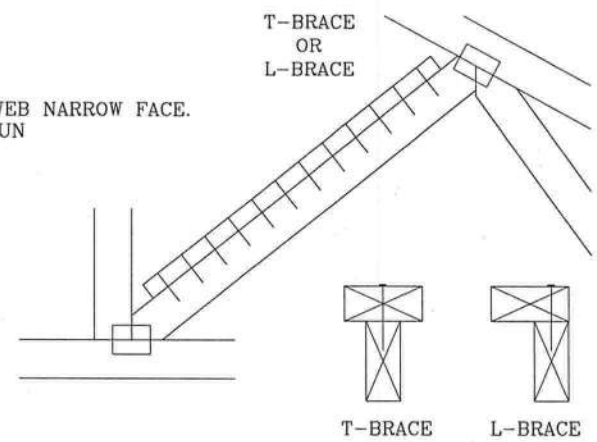

SCAB BRACING:

APPLY SCAB(S) TO WIDE FACE OF WEB.
NO MORE THAN (1) SCAB PER FACE.
ATTACH WITH 10d BOX OR GUN (0.128"x 3.",MIN) NAILS.
AT 6" O.C. BRACE IS A MINIMUM 80% OF WEB MEMBER LENGTH

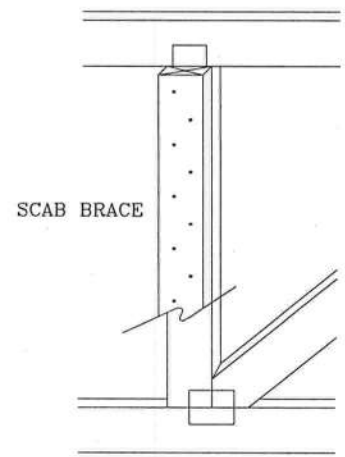

THIS DRAWING REPLACES DRAWING 579,640

ALPINE
ITW BUILDING COMPONENTS GROUP, INC.
POMPANO BEACH, FLORIDA

JAMES F. COLLINS, JR. LICENSE No. 52212 STATE OF FLORIDA PROFESSIONAL ENGINEER
NOV 30 '07

TC LL	PSF	REF	CLB SUBST.
TC DL	PSF	DATE	2/23/07
BC DL	PSF	DRWG	BRCLBSUB0207
BC LL	PSF	-ENG	MLH/KAR
TOT. LD.	PSF		
DUR. FAC.			
SPACING			

DERKSON/OHIDY RESIDENCE
WINDOW SCHEDULE

CAPITOL VINYL 3540 SERIES

2830 SINGLE HUNG
2050 SINGLE HUNG
2850 SINGLE HUNG
3050 SINGLE HUNG
2840 SINGLE HUNG
2650 SINGLE HUNG
2020 AWNING
2814 AWNING
3014 TRANSOM
2814 TRANSOM
4814 TRANSOM
5040 HORIZONTAL SLIDER

Sun-Tek Skylights
The Skylight Experts

Sun-Tek Manufacuring, Inc.
10303General Drive
Orlando, Florida 32824
407-859-2117
customerservice@sun-tek.com
www.sun-tek.com

INSTALLATI(
INSTRUCTIO
Classic Series M

VGC•FGC•FHP•T

Follow instructions below for the model skylight you're installing.

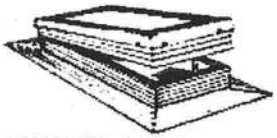

MODEL VGC
Minimum 3:12 pitch required.

MODEL FHP
Minimum 3:12 pitch required.

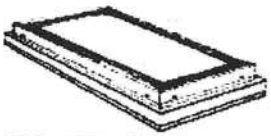

MODEL CMG
Minimum 3:12 pitch requ

MODEL FGC
Minimum 3:12 pitch required.

MODEL TG
Specially designed for tile and build-up roofing.

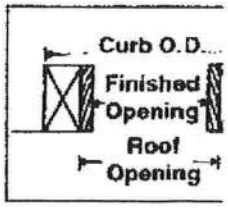

SIZE INFORMATION

Size Code	Roof Opening	Finished Opening	Model CMG Curb Outside Dimension	Fits on Center Spacing
1430	11½ x 27½	10½ x 26½	14½ x 30½	16"
1446	11½ x 43½	10½ x 42½	14½ x 46½	16"
2222	19½ x 19½	18½ x 18½	22½ x 22½	24"
2230	19½ x 27½	18½ x 26½	22½ x 30½	24"
2246	19½ x 43½	18½ x 42½	22½ x 46½	24"
2269	19½ x 66½	18½ x 65½	22½ x 69½	24"
2525	22½ x 22½	21½ x 21½	25½ x 25½	24"
2533	22½ x 30½	21½ x 29½	25½ x 33½	24"
2549	22½ x 46½	21½ x 45½	25½ x 49½	24"
2572	22½ x 69½	21½ x 68½	25½ x 72½	24"
3030	27½ x 27½	26½ x 26½	30½ x 30½	16" or 32"
3046	27½ x 43½	26½ x 42½	30½ x 46½	16" or 32"
3069	27½ x 66½	26½ x 65½	30½ x 69½	16" or 32"
3333	30½ x 30½	29½ x 29½	33½ x 33½	16" or 32"
3349	30½ x 46½	29½ x 45½	33½ x 49½	16" or 32"
4646	43½ x 43½	42½ x 42½	46½ x 46½	16" or 24" or 48"
4669	43½ x 66½	42½ x 65½	46½ x 69½	16" or 24" or 48"
4949	46½ x 46½	45½ x 45½	49½ x 49½	16" or 24" or 48"

You will need:
hammer
keyhole saw
skill saw
nails
drill
2 x 4's
sealant/mastic
tape measure chalkline or
straight edge
trowel or caulk gun
utility knife

For Optional Light Tunnel :
8 or 10 penny nails
plywood or drywall

RECOMMENDED SEALANTS:
Sun-Tek's *STS 1000 Butyl, *Silicone 999-A 3C Butyl Caulk #622-11, GE 1200 series, SCS 1000 with primer 3154, SCS 2000, & SCS 2400 series, Owens Corning Deck Dri Roofing Sealant, PTI 303, 606, 707 Architectural Sealant.

SILICONE: 100% G.E. Silicone or Dow Com or equivalent.

Butyl Synthetic Rubber Sealants:
Black Butyl 4360, Butyl Based Sealant Tape MBT-35, Butyl Sealant Tape 440 Preshim.

CLEANING YOUR SKYLIGHT:
Use mild soap and water or glass cleaners only. Fresh

STS 1000 Caulk -Use only between de underside of skylight flange on Classic

Use mild soap and water or glass cleaners only. Fresh paint splashes, glazing compound, etc. may be removed by rubbing lightly with a soft cloth or cotton ball soaked in mineral spirits.

ACCESSORIES:

Classic Skylight Shades - a variety of sizes are available and are easily installed. Contact your building materials dealer or Sun-Tek Manufacturing for details.

underside of skylight flange on Classic

Step Flash Kit - Pre-formed, precut fla eliminates need for flashing on self-bui with selected sizes Model CMG.

MODEL VGC ACCESSORIES

Skylight Operator
With Rain Sensor and Rerriote Control System -Complete kit. Opens/closes skylight and automatically senses moisture.

Motorized Skylight Operator
(Can be upgraded to remote) Opens/closes skylight with the flickof a wall-mounted switch All wiring, wall switch and instructions included.

Remote Control System
(Receiver & Transmitter) Allows you to operate skylight from up to 50 feet away.

Transmitter Only
Receiver with Rain Sensor

3 ft. Extension Pole
Can be used with telescopic pole.

Telescopic Pole
Extends from 6' to 10' to allow manual opening/closing of skylight in high ceilings (includes adapter for 1 skylight; ordera Hex Drive Adapter for each additional skylight).

Hex Drive Adapter
To operate skylight opener with Telescopic Pole must be replaced with this adapter.

Hex Ball Drive
Replaces lost or damaged ball portion of pole ti

Universal Joint and Insert
May be needed in sharply angled tunnels to use

Universal Joint with Pole Ring
To be used in applications with extreme poch.

Hook Adapter
To be used in conjunction with universal joint p and classic shade.

Eyelet Adapter
To be used with the Hook Adapter and Telescop

All installation information is supplied in good faith, but without recommendation to its use. No guarantee of the results of any use of this be implied, since conditions of use are beyond our control. Please consult local building codes for compliance before install

FAILURE TO FOLLOW RECOMMENDED INSTALLATION PROCEDURES MAY VO WARRANTY Check local building codes for glass requirements. • Please read instructions completely before beginning. • Deck and roofing felt should already installed.

Sample installation on composition shingle roof: (Instructions 1 through 4 apply to all models.)

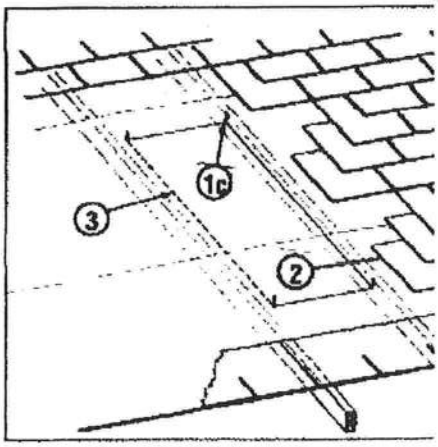

1. To properly position skylight between trusses/ rafters, locate the roof opening from the under side of the decking. (if this area is not accessible, locate the ceiling joists from inside the house, mark opening in ceiling (a-c), and cut ceiling opening. Then follow steps below for roof opening.)

   a. measure distance between trusses/rafters and mark center point.

   b. to center skylight, measure one-half of ap propriate roof opening to each side of cen ter point and mark

ter point and mark.

c. using the side marks as a guide, mark corners by drilling holes or driving nails through roof.

2. Remove shingles 6" - 8" out from roof opening.

3. Cut roof opening (snap a chalkline from corner to corner, or draw line with a straightedge.)

4. Frame roof opening:

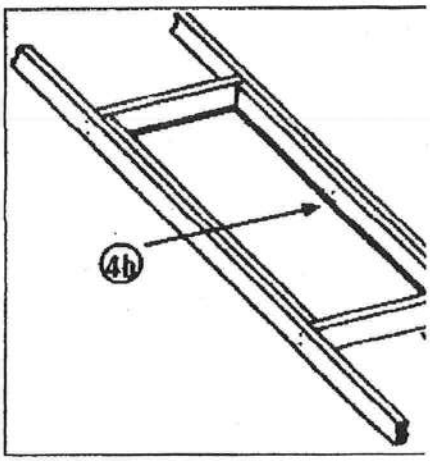

a. cut two 2 x 4's to fit the actual distance between trusses/rafters and nail into place. **NOTE: Sizes 2525, 2549, 3333, 3349, 4949 Skip step "b" proceed to "c".**

b. cut two 2 x 4's to the exact length of the roof opening and nail to the trusses/rafters.

c. if applicable, cut ceiling opening and build tunnel framing. (See "Light Tunnel Installation Instructions.")

For VGC, FGC, FHP, & TG. MODELS
follow instructions 5 through 9.

For CMG Model
follow instructions 5 CMG through 9 CMG

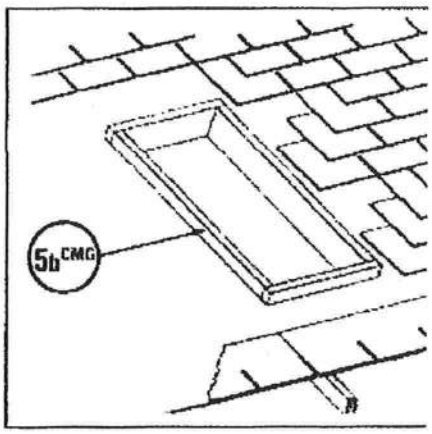

5. CMG Build curb:

a. Construct curb with 2 x 4's, 2 x 6's, etc. (depending on height desired or building code requirements). Curb should be minimum 3½" high. Be sure inside measurement of curb is the same as roof opening measurement.

b. Secure curb to roof

6. CMG Shingle roof up to bottom of curb.

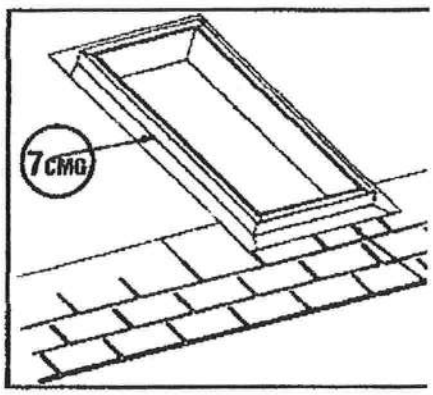

7. CMG Flash curb (sizes 2525, 2549, 3333, 3349, 4949 can be used with Sun-Tek's preformed, pre-cut Step Flash Kit with one-piece head and sill). Use galvanized sheet metal, aluminum, or copper. Metal should extend a minimum of 4" over shingles (on bottom side), then up sides of curb. Flashing should be flush with curb top.

8. CMGShingle up sides and across the top.

9. CMG Apply 1 " wide strip of sealant / mastic around entire curb top, starting ½" out from edge of roof opening. (if sealant is applied too close to roof

opening. (If sealant is applied too close to roof opening, it may llooze" into the tunnel when the skylight is placed.)

10. CMG Set skylight over opening. (Bottom edge of skylight is labeled ? this side must be placed on the bottom edge of roof opening to insure proper functioning of condensation wick.) Nail or screw in place through pre-drilled holes in side with 1¼" galvanized ringshank nails or weather- resistant screw

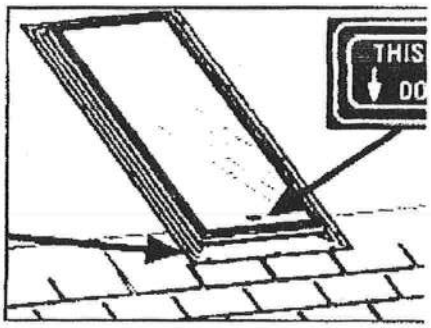

For VGC, FGC, FHP & TG MODELS:

5. Shingle up roof to bottom of roof opening.

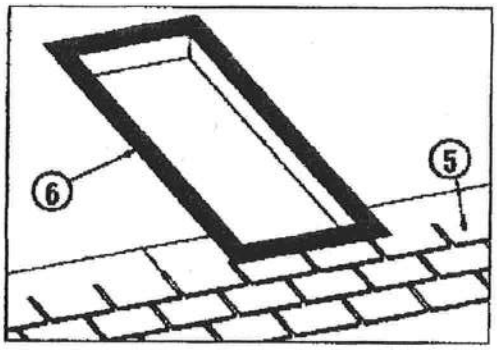

6. Apply a 3½" wide strip of sealant/mastic around entire opening. (Sealant applied too close to roof opening may "ooze" into tunnel when skylight is set into place.)

7. Set skylight over opening. The label 'This edge down' should be at the bottom of the opening. This insures proper functioning of the condensation wick. Fasten the skylight to the roof using the rink shanked galvanized roof nails provided or #8 x 1" pan head screws. The screws should be stainless steel, galvanized or zinc plated for resistance to corrosion. Use the pre-drilled holes for the fasteners.

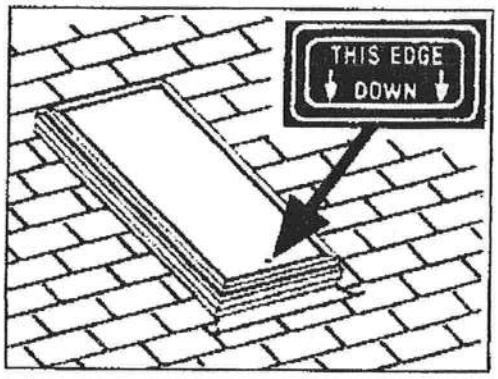

IMPORTANT: Bottom flange of skylight MUST go on top of shingles.

8. Now shingle up sides and across top. Place shingles, as far in as possible, but be careful not to nail through skylight flange.

DO NOT place any sealant on the top side of the skylight f lange! Sealant in this area will block the water diversion channels on the flange.

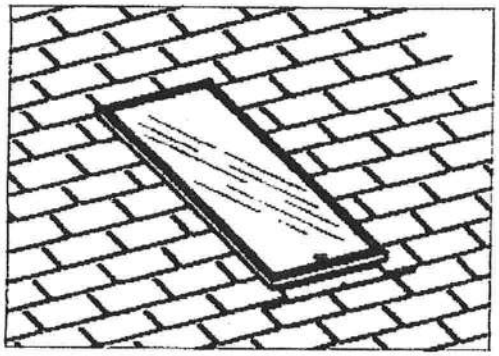

9. Bottom flange will still be exposed: we recommend leaving it this way. If you decide to put a "false shingle" over it, be careful not to nail through skylight flange.

LIGHT TUNNEL INSTALLATION INSTRUCTIONS

For homes with an attic, it is necessary to build a tunnel between skylights and ceiling. The tunnel walls

straight, or flared for extra light and architectural appeal. It's very easy to increase the tunnel size along length of the ceiling joists. As long as no roof-supporting members are cut, no special framing is needed is possible to flare the tunnel in all directions, if support members are cut, special framing will be require structural support. In this case you must consult a qualified building professional to insure proper and sa results.

1. After roof and ceiling openings have been framed, measure distance (at each corner of roof opening) between rafter/truss and ceiling joist.
2. Using these four measurements, cut 2 x 4 lumber for verticle support members (two per corner).
3. In each corner, nail vertical support members into place at right angles to each other.
4. Measure, cut, and nail tunnel walls into place. Suggestions for lining tunnel:
   - use drywall, tape corners, and paint white using regular or texture paint. (Texture paint alone will hide and fill untaped joints
   - but in time, cracks may appear in corners.)
   - use prefinished paneling with molding in corners.
   - line the tunnel with cedar, pine, or a wood to coordinate with your decor.
   - for special effects, try painting the tunnel a striking accent color, or use mirrors or wallpaper on tunnel walls.
5. Caulk the slight gap between the tunnel walls and skylight base.
6. Finish off tunnel at ceiling with molding, or blend edges into ceiling with texture paint.
7. Be sure to wrap the exterior of the tunnel with insulation for energy savings.

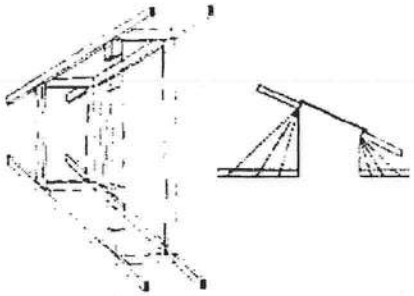

installation information is supplied in good faith, without recommendation as to its use. No guarantee of the results of any use of this information is to be implied, since the conditions use are beyond our control.

CLASSIC SKYLIGHT LIMITED WARRANTY Sun-Tek Manufacturing, Inc. ("Sun-Tek") 10303 General Drive, Orlando, Flc (407) 859-2117, warrants this Skylight on the following terms and conditions: **A. Warranty Coverage:** This warranty applies to both the o purchaser and first consumer-owner of a Skylight made by Sun-Tek. **B. Warranty Duration:** This warranty shall remain in effect for a per twenty (20) years after the date the Skylight is purchased or the date the Skylight is delivered to the first consumer-owner, whichever is la the first ten (10) years of this warranty period, Sun-Tek Manufacturing covers 100 percent of all material cost for the entire unit. After 10 y following the initiation of this warranty. Sun-Tek Manufacturing will cover a prorated portion and issue a credit as follows:

Years	Coverage
11 to 13	75 percent
14 to 16	50 percent
17 to 20	25 percent

This 20-year limited warranty applies to Classic series glass skylights only for skylights manufactured after January 1, 1998. For products manufactured before January I . 1998, the warranty period is 10 years. **C. Warranty Application:** This warranty applies only to the mater fabrication of the Skylight and does not apply to any defect or damage caused by improper use, improper installation, improper care or ac Glass breakage is not covered. **D. Performance by Sun-Tek:** During the warranty period, Sun-Tek will provide free of charge an equivale skylight (orcomponent thereof) for one found to be defective in material or workmanship. Shipping costs of such replacements are not the responsibility of Sun-Tek. Sun-Tek will not be responsible for any costs of removal or re-installation. **E. Validation Procedure:** To obtain performance under this warranty, the purchaser must **(1) On installed skylights. contact Sun-Tek for instructions before removing s Removal of skylight from roof before inspection will void warranty.** (2) Notify Sun Tek in writing of any claim within thirty (30) days a defect is discovered, and (3) Sun-Tek or its authorized agents must examine the skylight and determine to its satisfaction whether the def covered by this warranty. **F. Implied Warranties:** IMPLIED WARRANTIES, INCLUDING BUT NOT LIMITED TO IMPLIED WARRANTIES MERCHANTABILITY AND FITNESS FOR A PARTICULAR PURPOSE, SHALL NOT EXTEND BEYOND THE DURATION OF THE EXPI WARRANTIES PROVIDED HEREIN. Some states do not allow limitations on how long an implied warranty lasts, so the above limitation apply to you. **G. Incidental or Consequential Damages.** SUN-TEK SHALL NOT BE LIABLE FOR ANY INCIDENTAL OR CONSEQUEN DAMAGES WHATSOEVER, INCLUDING BUT NOT LIMITED TO LOSS OF TIME OR REVENUE, GASOLINE, TELEPHONE, OR OTHE

DAMAGES WHATSOEVER, INCLUDING BUT NOT LIMITED TO LOSS OF TIME OR REVENUE, GASOLINE, TELEPHONE, OR OTHE EXPENSES. Some states do not allow the exclusion or limitation) of incidental or consequential damages, so the above limitation or exclu not apply to you. **H. Exclusive Warranty:** THIS WARRANTY is EXCLUSIVE AND IN LIEU OF ALL OTHER WARRANTIES. This warrant specific legal rights. You may have other rights which vary from state to state.

MODELS: 73, 75 (25 GA. STEEL SKIN)
MODELS: 84A, 94 (24 GA. STEEL SKIN)

REV	DATE	DESCRIPTION
2	7-23-97	REDRAWN; TESTED W/20 GA. U-BARS; -30/-32 TEST LOAD
03	2/7/2000	ADDED JAMB ATTACHMENT INFORMATION
04	3/15/2000	ADDED LOW HEADROOM TRACK OPTION
05	11/13/2000	QTY.(1) WAS (2) FOR TRACK BOLTS
06	9/2003	ADDED CENTER STILE QUANTITY CHART

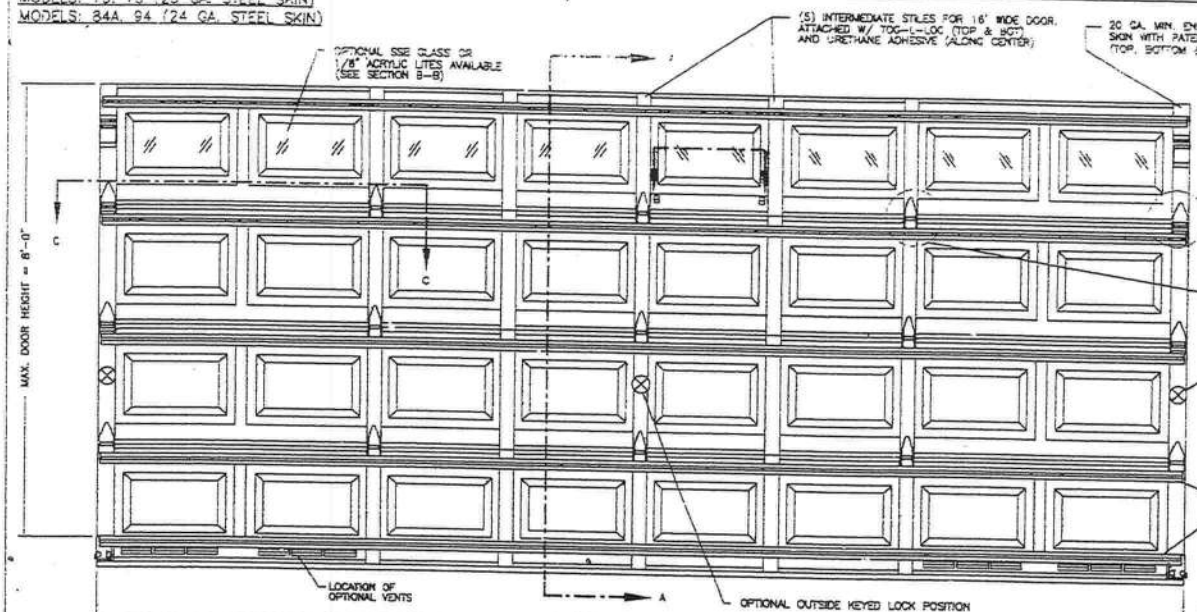

INSIDE ELEVATIONS

NOTE 1:
DOORS UP TO 7'-0" HIGH CONSIST OF (4) SECTIONS (SHOWN).
DOORS OVER 7'-0" HIGH CONSIST OF (5) SECTIONS (NOT SHOWN).

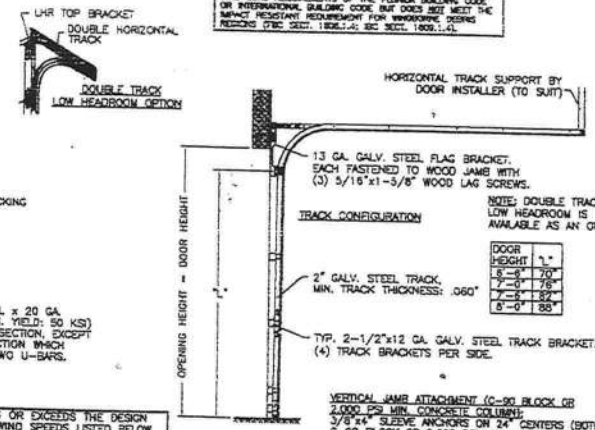

TRACK CONFIGURATION

NOTE: DOUBLE TRACK LOW HEADROOM IS AVAILABLE AS AN OPTION

DOOR HEIGHT	"L"
5'-6"	70"
7'-0"	76"
7'-6"	82"
8'-0"	88"

THE OPTIONAL GLAZING SHOWN ON THIS DRAWING MEETS THE WIND LOAD REQUIREMENTS OF THE FLORIDA BUILDING CODE OR INTERNATIONAL BUILDING CODE, BUT DOES NOT MEET THE IMPACT RESISTANT REQUIREMENT FOR WINDBORNE DEBRIS REGIONS (FBC SECT. 1606.1.4; IBC SECT. 1609.1.4).

THIS DOOR MEETS OR EXCEEDS THE DESIGN LOADS FOR THE WIND SPEEDS LISTED BELOW ACCORDING TO THE 2001 FLORIDA BLDG. CODE OR 2000 IBC (ASCE7-98) FOR THE FOLLOWING CONDITIONS: 1) ENCLOSED BUILDING, 2) DOOR HAS 2' OF WIDTH IN BUILDING'S END ZONE, 3) IMPORTANCE FACTOR OF 1.0, 4) ANY ROOF SLOPE, AND 5) 50% SAFETY FACTOR.

WIND SPEED (MPH)	≤ 100	100	110	110
EXPOSURE LEVEL	B	C	B	C
MEAN ROOF HEIGHT	30'	17'	30'	N/A

VERTICAL JAMB ATTACHMENT (C-90 BLOCK OR 2,000 PSI MIN. CONCRETE COLUMN): 3/8"x4" SLEEVE ANCHORS ON 24" CENTERS (BOTH C-90 BLOCK OR 2,000 PSI MIN. CONCRETE) OR 1/4"x4" TAPCON SCREWS ON 21" CENTERS (2,000 PSI MIN. CONCRETE). WASHERS INCLUDED WITH SLEEVE ANCHORS. 1" O.D. MIN. WASHERS REQUIRED WITH TAPCONS. ANCHORS MAY BE COUNTERSUNK (BUT NOT REQUIRED) TO PROVIDE A FLUSH MOUNTING SURFACE. HORIZONTAL JAMBS DO NOT TRANSFER LOAD.

VERTICAL JAMB ATTACHMENT (WOOD FRAME BUILDINGS): 1/2"x3" LAG SCREWS ON 22-1/2" CENTERS. 1" O.D. MIN. WASHER REQUIRED. LAG SCREWS MAY BE COUNTERSUNK (BUT NOT REQUIRED) TO PROVIDE A FLUSH MOUNTING SURFACE. HORIZONTAL JAMBS DO NOT TRANSFER LOAD.

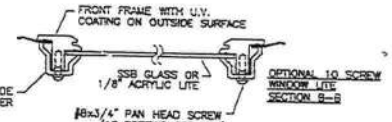

OPTIONAL 10 SCREW WINDOW LITE SECTION B-B

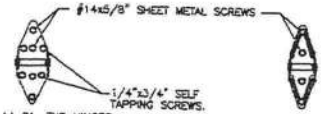

14 GA. END HINGES
VIEW "B"

18 GA. INTERMEDIATE HINGE
VIEW "C"

# OF CENTER STILES	DOOR WIDTH
1	9'2" TO 9'10"
2	10'0" TO 11'10"
3	12'0" TO 13'10"
4	14'0" TO 15'10"
5	16'0"

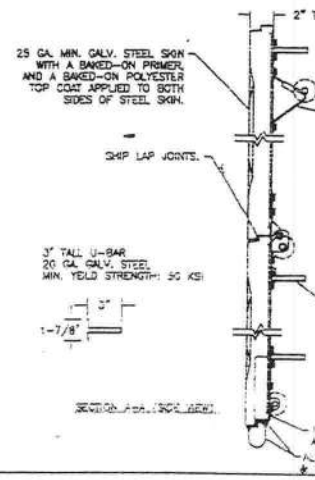

SECTION A-A (LOCK VIEW)

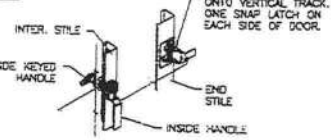

OUTSIDE KEYED LOCK SNAP LATCH LOCK OPTION

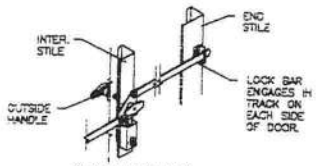

OUTSIDE KEYED LOCK LOCK BAR LOCKING

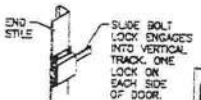

INSIDE SLIDE BOLT LOCK OPTION

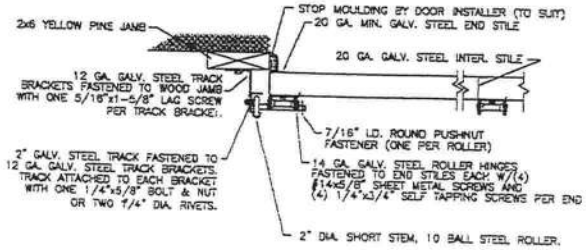

JAMB CONFIGURATION
SECTION C-C

PREPARATION OF JAMBS BY OTHERS.

NOTE 2: THE DESIGN OF THE SUPPORTING STRUCTURAL ELEMENTS SHALL BE THE RESPONSIBILITY OF THE PROFESSIONAL OF RECORD FOR THE BUILDING OR STRUCTURE AND IN ACCORDANCE WITH CURRENT BUILDING CODES FOR THE LOADS LISTED ON THIS DRAWING.

ORIGINAL DRAWINGS ARE SIGNED IN BLUE INK WITH A RAISED SEAL (EMBOSS).

DESIGN ENGINEER: MARK WESTERFIELD, P.E. FLORIDA P.E. #48495, NC P.E. #23832, TEXAS P.E. #91513

DESIGN LOADS: +20.0 PSF & -21.0 PSF
TEST LOADS: +30.0 PSF & -32.0 PSF

Clopay Building Products Company

CLOPAY BUILDING PRODUCTS COMPANY
8585 DUKE BLVD.
MASON, OH 45040
(513) 770-4800

SCALE:	NONE
DATE:	2/7/97
DRAWN BY:	MWW
CHECKED BY:	
PLOT:	
MAX. DOOR SIZE:	16'2"W x 8'H
DESCRIPTION	MODELS 73/75/84A/94: 16'W: +20 -21 DES. LOADS
B	
DRAWING NUMBER:	101308
REV:	06

Product Approval Method: Method 1 Option D

Application Status: Approved

Page: Go

App/Seq #	Product Model # or Name	Model Description
542.1		Residential WindCode Doors
542.2	W3: 1000, 1001	Steel Pan (min. 25 ga.) Double Car (9'2" to 16'0" wide) WindCode® W3 Garage Door; Design Pressures: +20/-21
542.3	W3: 110R, 120R	Steel Pan (min. 25 ga.) Double Car (9'2" to 16'0" wide) WindCode® W3 Garage Door; Design Pressures: +20/-21
542.4	W3: 128R	Steel Pan (min. 25 ga.) Double Car (9'2" to 16'0" wide) WindCode® W3 Garage Door; Design Pressures: +20/-21
542.5	W3: 183, 187	Steel Pan (min. 25 ga.) Double Car (9'2" to 16'0" wide) WindCode® W3 Garage Door; Design Pressures: +20/-21
542.6	W3: 2050, 2051	Double-skin Insulated (exterior skin min 27 ga.; interior skin min 29 ga.) Single Car (up to 9'0" wide) WindCode® W3 Garage Door; Design Pressures: +20/-20
542.7	W3: 2050, 2051	Double-skin Insulated (exterior skin min 27 ga.; interior skin min 29 ga.) Double Car (9'2" to 16'0" wide) WindCode® W3 Garage Door; Design Pressures: +20/-21
542.9	W3: 4050, 4051, 4053	Double-skin Insulated (exterior skin min 27 ga.; interior skin min 29 ga.) Single Car (up to 9'0" wide) WindCode® W3 Garage Door; Design Pressures: +20/-20
542.8	W3: 4050, 4051, 4053	Double-skin Insulated (exterior skin min 27 ga.; interior skin min 29 ga.) Double Car (9'2" to 16'0" wide) WindCode® W3 Garage Door; Design Pressures: +20/-21
542.10	W3: 42, 48	Steel Pan (min. 25 ga.) Double Car (9'2" to 16'0" wide) WindCode® W3 Garage Door; Design Pressures: +20/-21
542.11	W3: 4RST, 6RST, 4RSF, 6RSF	Steel Pan (min. 25 ga.) Double Car (9'2" to 16'0" wide) WindCode® W3 Garage Door; Design Pressures: +20/-21
542.12	W3: 52	Steel Pan (min. 25 ga.) Double Car (9'2" to 16'0" wide) WindCode® W3 Garage Door; Design Pressures: +20/-21
542.14	W3: 62, 64, 65	Double-skin Insulated (exterior skin min 27 ga.; interior skin min 29 ga.) Double Car (9'2" to 16'0" wide) WindCode® W3 Garage Door; Design Pressures: +20/-21
542.13	W3: 62, 64, 65	Double-skin Insulated (exterior skin min 27 ga.; interior skin min 29 ga.) Single Car (up to 9'0" wide) WindCode® W3 Garage Door; Design Pressures: +20/-20
542.15	W3: 73, 94, 1500	Steel Pan (min. 25 ga.) Double Car (9'2" to 16'0" wide) WindCode® W3 Garage Door; Design Pressures: +20/-21
542.16	W3: 75, 84A	Steel Pan (min. 25 ga.) Double Car (9'2" to 16'0" wide) WindCode® W3 Garage Door; Design Pressures: +20/-21

Architectural Testing

ANSI/AAMA/NWWDA 101/I.S.2-97
TEST REPORT

Rendered to:

MI WINDOWS AND DOORS, INC

SERIES/MODEL: 420/430/440
PRODUCT TYPE: Aluminum Sliding Glass Door

	Summary of Results		
Title	**Test Specimen #1**	**Test Specimen #2**	**Test Specimen #3**
Rating	SGD-R25 182 x 96	SGD-R35 182 x 80	SGD-R40 144 x 96
Operating Force	17 lbf max.	17 lbf max.	N/A
Air Infiltration	0.23 cfm/ft^2	0.27 cfm/ft^2	N/A
Water Resistance Test Pressure	3.75/6.0/9.0 psf	6.0 psf	N/A
Uniform Load Deflection Test Pressure	±35.0 psf	±35.0 psf	+40.0 psf/-40.1 psf
Uniform Load Structural Test Pressure	±37.5 psf	±52.5 psf	+60.0 psf/-60.2 psf
Forced Entry Resistance	Grade 10	Grade 10	N/A

Reference should be made to ATI Report No. 52112.01-122-47 for complete test specimen description and data.

130 Derry Court
York, PA 17402-9405
phone: 717-764-7700
fax: 717-764-4129
www.archtest.com

Architectural Testing

ANSI/AAMA/NWWDA 101/I.S.2-97 TEST REPORT

Rendered to:

MI WINDOWS AND DOORS, INC
P.O. Box 370
Gratz, Pennsylvania 17030-0370

Report No.:	52112.01-122-47
Revision 1:	09/13/04
Test Dates:	06/30/04
Through:	08/12/04
Report Date:	08/30/04
Expiration Date:	07/02/08

Project Summary: Architectural Testing, Inc. (ATI) was contracted by MI Windows and Doors, Inc. to witness testing on three Series/Model 420/430/440, aluminum sliding glass doors at MI Windows and Doors, Inc. test facility in Elizabethville, Pennsylvania. The samples tested successfully met the performance requirements for the following ratings: Test Specimen #1: SGD-R25 182 x 96; Test Specimen #2: SGD-R35 182 x 80; Test Specimen #3: SGD-R40 144 x 96. Test specimen description and results are reported herein.

Test Specification: The test specimens were evaluated in accordance with ANSI/AAMA/NWWDA 101/I.S.2-97, *Voluntary Specifications for Aluminum, Vinyl (PVC) and Wood Windows and Glass Doors.*

Test Specimen Description:

Series/Model: 420/430/440

Product Type: Aluminum Sliding Glass Door

Test Specimen #1: SGD-R25 182 x 96 (XXO)

Overall Size: 15' 1-3/4" wide by 8' 0" high

Active Door Panel Size (2): 5' 0-1/2" wide by 7' 11" high

Fixed Door Panel Size: 5' 1" wide by 7' 11" high

Screen Size: 5' 0-3/8" wide by 7' 11" high

Overall Area: 121.2 ft^2

Reinforcement: The active and fixed interlocking stile utilized a steel U-shaped reinforcement (Drawing #9917525). The fixed intermediate jamb utilized a steel reinforcement (Drawing #9917520).

130 Derry Court
York, PA 17402-9405
phone: 717-764-7700
fax: 717-764-4129
www.archtest.com

Test Specimen Description: (Continued)

Test Specimen #2: SGD-R35 182 x 80 (OXX)

Overall Size: 15' 1-3/4" wide by 6' 8" high

Active Door Panel Size (2): 5' 0-1/2" wide by 6' 7" high

Fixed Door Panel Size: 4' 8-7/8" wide by 6' 2-5/8" high

Screen Size: 5' 0-3/8" wide by 6' 7" high

Overall Area: 101 ft^2

Reinforcement: No reinforcement was utilized.

Test Specimen #3: SGD-R40 144 x 96 (XOX)

Overall Size: 12' 0" wide by 8' 0" high

Active Door Panel Size: 3' 8-1/4" wide by 7' 10-1/2" high

Fixed Door Panel Size (2): 3' 8-3/4" wide by 7' 6-1/2" high

Screen Size: 3' 11-1/2" wide by 7' 11-3/8" high

Overall Area: 96 ft^2

Reinforcement: The active and fixed interlocking stile utilized a steel U-shaped reinforcement (Drawing #9917525). The fixed intermediate jamb utilized a steel reinforcement (Drawing #9917520). The interlock utilized an aluminum reinforcement (Drawing #SECT4237).

The following descriptions apply to all specimens.

Finish: All aluminum was white.

Glazing Details: All glazing consisted of a single sheet of 3/16" thick clear tempered glass that was channel glazed with a wrap around rubber gasket.

Test Specimen Description: (Continued)

Weatherstripping:

Description	Quantity	Location
0.187" backed by 0.270" high polypile with center fin	2 Rows	Stiles

Frame Construction: The frame was constructed of extruded aluminum. Corners were coped, butted, sealed, and fastened with two #8 by 5/8" screws.

Door Panel Construction: The door panels were constructed of extruded aluminum members. Corners were coped, butted, and fastened with one 1/4" by 3/4" screw at the bottom and two #8 by 3/4" screws at the top.

Screen Construction: The screen was constructed of extruded aluminum members. Corners were coped, butted, and fastened with one 1/4" by 3/4" and one #8 by 1" screw at the bottom and one #8 by 1" screw at the top.

Hardware:

Description	Quantity	Location
Locking handle	1	44" from active panel bottom
Roller assembly	2	3" from bottom rail ends
Screen locking handle	1	46" from screen bottom rail

Drainage:

Description	Quantity	Location
Sloped sill	1	Sill

Installation: The units were installed into a #2 Spruce-Pine-Fir wood test buck. The units were fastened to the test buck with two rows of #8 by 1-1/4" screws, 8" from each end and 23" on center. The exterior perimeter was sealed with silicone.

Test Results:

The results are tabulated as follows:

Paragraph	Title of Test - Test Method	Results	Allowed
Test Specimen #1: SGD-R25 182 x 96 (XXO)			
2.2.1.6.1	Operating Force	17 lbf	20 lbf max.
	Breakaway force	24 lbf	30 lbf max.
2.1.2	Air Infiltration per ASTM E 283		
	1.57 psf (25 mph)	0.23 cfm/ft^2	0.3 cfm/ft^2 max.

Note #1: *The tested specimen meets the performance levels specified in ANSI/AAMA/NWWDA 101/I.S.2-97 for air infiltration.*

2.1.3	Water Resistance per ASTM E 547		
	(with and without screen)		
	2.86 psf	No leakage	No leakage
2.1.4.1	Uniform Load Deflection per ASTM E 330		
	(Deflections reported were taken on the meeting rail)		
	(Loads were held for 52 seconds)		
	15.0 psf (positive)	0.56"	See Note #2
	15.0 psf (negative)	0.57"	See Note #2

Note #2: *The Uniform Load Deflection test is not a requirement of ANSI/AAMA/NWWDA 101/I.S.2-97 for this product designation. The deflection data is recorded in this report for special code compliance and information only.*

2.1.4.2	Uniform Load Structural per ASTM E 330		
	(Permanent sets reported were taken on the meeting stile)		
	(Loads were held for 10 seconds)		
	22.5 psf (positive)	0.02"	0.30" max.
	22.5 psf (negative)	0.03"	0.30" max.
2.2.1.6.2	Deglazing Test per ASTM E 987		
	In operating direction - 70 lbs		
	Locking stile	0.12"/24%	0.50"/100%
	Interlock stile	0.12"/24%	0.50"/100%

Test Results: (Continued)

Paragraph	Title of Test - Test Method	Results	Allowed
Test Specimen #1: SGD-R25 182 x 96 (XXO) (Continued)			
2.2.1.6.2	Deglazing Test per ASTM E 987 In remaining direction - 50 lbs		
	Top rail	0.06"/12%	0.50"/100%
	Bottom rail	0.06"/12%	0.50"/100%
2.1.8	Forced Entry Resistance per ASTM F 842		
	Type: A	Grade: 10	
	Lock Manipulation Test	No entry	No entry
	Test A1 through A6	No entry	No entry
	Lock Manipulation Test	No entry	No entry
Optional Performance			
4.3	Water Resistance per ASTM E 547 (with and without screen) 3.75 psf	No leakage	No leakage
4.3	Water Resistance per ASTM E 547 (with and without screen) (with sill riser) 6.0 psf	No leakage	No leakage
4.3	Water Resistance per ASTM E 547 (with and without screen) (with 2-5/8" Dade County sill extension) 9.0 psf	No leakage	No leakage
4.4.1	Uniform Load Deflection per ASTM E 330 (Deflections reported were taken on the meeting stile) (Loads were held for 10 seconds)		
	35.0 psf (positive)	2.98"	See Note #2
	35.0 psf (negative)	2.52"	See Note #2

Test Results: (Continued)

Paragraph	Title of Test - Test Method	Results	Allowed
Test Specimen #1: SGD-R25 182 x 96 (XXO) (Continued)			
4.4.2	Uniform Load Structural per ASTM E 330 (Permanent sets reported were taken on the meeting stile) (Loads were held for 10 seconds)		
	37.5 psf (positive)	0.20"	0.36" max.
	37.5 psf (negative)	0.19"	0.36" max.
Test Specimen #2: SGD-R35 182 x 80 (OXX)			
2.2.1.6.1	Operating Force	17 lbf	20 lbf max.
	Breakaway force	21 lbf	30 lbf max.
2.1.2	Air Infiltration per ASTM E 283		
	1.57 psf (25 mph)	0.27 cfm/ft^2	0.3 cfm/ft^2 max.

Note #1: *The tested specimen meets the performance levels specified in ANSI/AAMA/NWWDA 101/I.S.2-97 for air infiltration.*

2.1.3	Water Resistance per ASTM E 547 (with and without screen)		
	2.86 psf	No leakage	No leakage
2.2.1.6.2	Deglazing Test per ASTM E 987		
	In operating direction - 70 lbs		
	Locking stile	0.12"/24%	0.50"/100%
	Interlock stile	0.12"/24%	0.50"/100%
	In remaining direction - 50 lbs		
	Top rail	0.06"/12%	0.50"/100%
	Bottom rail	0.06"/12%	0.50"/100%
2.1.8	Forced Entry Resistance per ASTM F 842		
	Type: A	Grade: 10	
	Lock Manipulation Test	No entry	No entry
	Test A1 through A6	No entry	No entry
	Lock Manipulation Test	No entry	No entry

Test Results: (Continued)

Paragraph	Title of Test - Test Method	Results	Allowed
Test Specimen #2: SGD-R35 182 x 80 (OXX) (Continued)			
Optional Performance			
4.3	Water Resistance per ASTM E 547 (with and without screen) (with sill riser) 6.0 psf	No leakage	No leakage
4.4.1	Uniform Load Deflection per ASTM E 330 (Deflections reported were taken on the meeting stile) (Loads were held for 52 seconds)		
	35.0 psf (positive)	1.28"	See Note #2
	35.0 psf (negative)	1.33"	See Note #2
4.4.2	Uniform Load Structural per ASTM E 330 (Permanent sets reported were taken on the meeting stile) (Loads were held for 10 seconds)		
	52.5 psf (positive)	0.13"	0.30" max.
	52.5 psf (negative)	0.15"	0.30" max.
Test Specimen #3: SGD-R40 144 x 96 (XOX)			
Optional Performance			
4.4.1	Uniform Load Deflection per ASTM E 330 (Deflections reported were taken on the meeting stile) (Loads were held for 52 seconds)		
	40.0 psf (positive)	1.42"	See Note #2
	40.1 psf (negative)	1.28"	See Note #2
4.4.2	Uniform Load Structural per ASTM E 330 (Permanent sets reported were taken on the meeting stile) (Loads were held for 10 seconds)		
	60.0 psf (positive)	0.27"	0.37" max.
	60.2 psf (negative)	0.30"	0.37" max.

Detailed drawings, representative samples of the test specimen, and a copy of this report will be retained by ATI for a period of four years from the original test date. The above results were secured by using the designated test methods and they indicate compliance with the performance requirements of the above referenced specification. This report does not constitute certification of this product, which may only be granted by the certification program administrator. This report may not be reproduced, except in full, without approval of Architectural Testing, Inc.

For ARCHITECTURAL TESTING, INC:

Mark A. Hess vlm

Digitally Signed for: Mark A. Hess by Vicki L. McElwain

Mark Hess
Technician

Digitally Signed by: Steven M. Urich

Steven M. Urich, P.E.
Senior Project Engineer

MH:vlm

INSTALLATION INSTRUCTIONS FOR NEW CONSTRUCTION VINYL FIN WINDOWS

READ THESE INSTRUCTIONS COMPLETELY BEFORE BEGINNING. Please inspect your MI Windows and Doors, Inc. product thoroughly before beginning installation. Inspect the opening and the product, and do not install if there is any observable damage or other irregularity. The product specification sheet and warranty include important information regarding your product and may include product-specific installation requirements (for example, types of fasteners to be used with impact resistant windows and limitations on the height at which the product may be installed); if you did not obtain copies please contact MI Windows and Doors, Inc. Local building codes may impose additional requirements, and those codes supercede these instructions.

FAILURE TO FOLLOW THESE INSTRUCTIONS, AND BUILDING CODE REQUIREMENTS, MAY AFFECT THE REMEDIES AVAILABLE UNDER YOUR WARRANTY.

1. IF THE BUILDING HAS A WEATHER RESISTANT BARRIER (WRB) I.E. HOUSE WRAP, PREPARE THE OPENING ACCORDING TO WRB MANUFACTURER'S INSTRUCTIONS. AT EACH TOP CORNER MAKE A 45° CUT IN THE WRB. FOLD UP THE WRB SO THAT THE TOP NAIL FIN OF THE UNIT CAN BE INSTALLED UNDERNEATH IT. (See Figure 1 below) FLASHING OF THE WINDOW OPENING IS RECOMMENDED AND MAY BE REQUIRED BY SOME BUILDING CODES.
2. MAKE SURE THE ROUGH OPENING IS PLUMB, SQUARE AND THE SILL PLATE IS LEVEL. ROUGH OPENINGS SHOULD BE 1/2" LARGER THAN WINDOW FRAME IN WIDTH & HEIGHT. (See Figure 2 below)
3. CLOSE & LOCK THE SASH THROUGHOUT INSTALLATION. KEEP THE SIDE JAMBS PLUMB & SQUARE WITH HEAD AND SILL. BE CAREFUL NOT TO "CROWN UP" OR "BOW DOWN" THE SILL OR HEAD. CONSTANTLY CHECK WIDTH AT THE MEETING RAILS OF SINGLE AND DOUBLE HUNGS (CENTER POINT ON CASEMENTS) TO AVOID A "BOWED OUT" INSTALLATION. WHEN USING FLASHING APPLY THE BOTTOM PIECE BEFORE INSTALLING THE WINDOW. (See Figure 1 below) FLASHING MUST BE RATED TO MEET ASTM D-779. 24 HOUR WATER RESISTANCE TEST.
4. APPLY A CONTINUOUS 3/8" BEAD OF PREMIUM GRADE, COMPATIBLE EXTERIOR SEALANT TO THE INTERIOR (BACKSIDE) OF THE NAIL FIN NEAR THE OUTSIDE EDGE IN LINE WITH THE PRE-PUNCHED HOLES ON **ALL SIDES PRIOR** TO SETTING THE WINDOW INTO THE ROUGH OPENING. (See Figure 3 below)
5. PLACE 1/4" FLAT SHIMS ON THE ROUGH OPENING SILL PLATE UNDER THE BOTTOM CORNERS OF THE WINDOW (See Figure 4 below). THESE SHIMS SHOULD BE REMOVED WHEN INSTALLATION IS COMPLETE. DO NOT PLACE SHIMS OR BLOCKS UNDER THE SILL EXCEPT AT THE FRAME CORNERS. SET THE WINDOW ONTO THE SHIMS CENTERING THE WINDOW IN THE OPENING ALLOWING EQUAL SPACE ON EITHER SIDE. FOR WINDOWS WITH INTERMEDIATE JAMBS AND ALL SLIDER WINDOWS, CONTINUOUS SHIM OR HORIZONTAL SHIMS ARE RECOMMENDED UNDER EACH INTERMEDIATE JAMB AND MEETING RAIL TO ENSURE SILL IS LEVEL). THESE SILL SHIMS SHOULD REMAIN AFTER INSTALLATION IS COMPLETE. APPLY ADDITIONAL SHIMS AS NECESSARY TO MAINTAIN A LEVEL SILL THROUGHOUT INSTALLATION.
6. PLACE A TEMPORARY FASTENER IN THE SLOT PROVIDED IN THE NAIL FIN ON EACH TOP CORNER, CHECK LEVEL AND SQUARE OF THE WINDOW BY MEASURING THE DIAGONALS. OPEN BOTTOM SASH, CHECK THE "REVEAL" (SPACE) BETWEEN THE BOTTOM OF THE SASH AND THE WINDOW SILL. CLOSE AND RELOCK THE SASH, ADJUST IF NECESSARY. PLACE ADDITIONAL FASTENERS IN THE BOTTOM CORNERS CHECKING WINDOW AGAIN FOR LEVEL, PLUMB AND SQUARE.
7. SECURE THE WINDOW WITH FASTENERS THAT PENETRATE THE FRAMING BY A MINIMUM OF 1", CARE SHOULD BE TAKEN TO INSTALL FASTENERS STRAIGHT, NOT ANGLED. KEEP THE SASH LOCKED UNTIL ALL SIDES ARE SECURE. PRIOR TO FASTENING THE SILL AND HEAD BE SURE THEY ARE STRAIGHT AND LEVEL. FASTENERS SHOULD BE APPLIED SECURELY INTO EVERY OTHER SLOT ON ALL SIDES, DO NOT DISTORT THE NAIL FIN WITH THE FASTENERS.
8. APPLY SEALANT OVER EXPOSED FASTENER HEADS, ANY UNUSED SLOTS AND THE OUTSIDE EDGE OF THE NAIL FIN WHERE IT COMES IN CONTACT WITH THE WRB/SHEATING. **OR IF FLASHING (WINDOW TAPE) IS BEING USED** - NOTE: SILL FLASHING SHOULD HAVE BEEN APPLIED PRIOR TO INSTALLING THE WINDOW. APPLY THE SIDE FLASHING ON TOP OF THE NAIL FIN, OVERLAPPING THE SILL FLASHING AND EXTENDING UP PAST THE TOP NAIL FIN APPROXIMATELY 2". THEN APPLY THE TOP FLASHING ALSO OVER THE NAIL FIN, OVERLAPPING THE SIDE PIECES AND EXTENDING PAST THE SIDE FLASHING BY APPROXIMATELY 1". LASTLY FOLD DOWN THE WRB FLAP OVER THE FLASHING, TAPE THE DIAGONAL CUTS ABOVE EACH CORNER. (SEE FIGURE #5 BELOW)
9. PLACE SHIMS AT THE MEETING RAIL/CHECK RAIL ON THE SIDE JAMBS TO PREVENT BOWING, THESE SHIMS SHOULD REMAIN AFTER INSTALLATION. CAUTION SHOULD BE TAKEN AS TO NOT OVER SHIM, CAUSING DEFLECTION OF THE FRAME AND HINDER SASH OPERATION. CHECK THE FRAME WIDTH AT TOP, MIDDLE AND BOTTOM, IF NOT THE SAME, SHIM ACCORDINGLY. UNLOCK AND OPERATE THE SASH(S). VISUALLY INSPECT ALL SIGHT LINES. ADJUST OR SHIM AS REQUIRED TO ASSURE CONSISTENT SASH REVEAL AND EASE OF OPERATION.
10. INSULATE BETWEEN THE WINDOW FRAME & ROUGH OPENING WITH FIBERGLASS INSULATION OR EQUAL. THE SPACE MAY BE EFFECTIVELY FILLED WITH MEASURED USE OF LOW EXPANSION FOAM BUT ONLY AFTER DETERMINING THAT FOAM WILL NOT EXERT PRESSURE AGAINST THE FRAME, WHICH CAN IMPAIR OPERATION. DISTORTION OF THE FRAME WILL AFFECT THE USER'S RIGHTS UNDER THE WARRANTY.
11. ALLOW A 1/4" GAP BETWEEN THE EXTERIOR CLADDING, SIDING, BRICK, STUCCO OR STONE AND THE WINDOW FRAME ON ALL SIDES (EXCEPT VINYL J CHANNEL). THE GAP (EXPANSION JOINT) SHOULD BE FILLED WITH CORRECT SIZE BACKER ROD, THEN SEALED WITH A HIGH GRADE EXTERIOR SEALANT AND WILL NEED TO BE MAINTAINED.

CAUTION:

- USE OF SOLVENTS OR ACIDS WILL DAMAGE COMPONENTS OF THIS PRODUCT AND WILL LIMIT RIGHTS UNDER THE WARRANTY
- VINYL WINDOWS HAVE PRE-PUNCHED SLOTS FOR INSTALLATION - FASTENING IN ANY OTHER PORTION MAY PERMANENTLY DAMAGE UNIT WHICH WILL LIMIT RIGHTS UNDER THE WARRANTY.
- IT IS THE SOLE RESPONSIBILITY OF THE OWNER, ARCHITECT, AND/OR BUILDER TO SELECT CORRECT PRODUCTS TO BE IN COMPLIANCE WITH APPLICABLE LAWS, SITE REQUIREMENTS AND BUILDING CODES AND TO ENSURE THAT INSTALLATION IS IN COMPLIANCE WITH APPLICABLE LAWS, SITE REQUIREMENTS AND BUILDING CODES.
- DO NOT STORE IN THE SUN OR LAY FLAT BEFORE OR DURING INSTALLATION.
- ANY PENETRATIONS (e.g. ALARM SENSORS) MADE THROUGH ANY PORTION OF ANY M.I., BETTERBILT OR CAPITOL PRODUCT MAY AFFECT RIGHTS UNDER THE MANUFACTURER'S WARRANTY.
- SOME LAWS AND BUILDING CODES REQUIRE SAFETY GLASS. THE ORDERING PARTY IS RESPONSIBLE TO SPECIFY SAFETY GLASS AND ENSURE COMPLIANCE WITH LOCAL LAWS AND BUILDING CODES.

THESE INSTRUCTIONS ARE MINIMUM REQUIREMENTS ONLY, CHECK STATE AND LOCAL CODE RESTRICTIONS FOR ADDITIONAL COMPLIANCE ON INSTALLATION AND/OR FASTENING. IF UNIT HAS EXTERIOR TRIM (BRICKMOULD/J CHANNEL, ETC.) THE UNIT MUST BE SEALED BEHIND THE NAIL FIN, THE TRIM IS PROVIDED FOR AESTHETIC PURPOSES ONLY, AND NOT DESIGNED TO BE WATER TIGHT. INSTALLATION INTO MASONRY OR REPLACEMENT OPENINGS MUST BE SEALED TO THE OPENINGS USING AN APPROVED, PROPER METHOD. REFER TO AAMA 2400 AND/OR ASTM 2112 STANDARDS.

These installation instructions are provided for information only; no representation and warranty is made that these instructions set forth all of the information necessary for proper installation of the product. Given the variety of field conditions, primary responsibility for product installation rests with the installer. Do not proceed unless you have addressed the factors necessary to achieve weather-tight installation of a properly functioning product. MI Windows and Doors, Inc. assumes no liability for any personal injury or property damage incurred in installation. These instructions, together with the product specifications and warranty set forth the entire liability of MI Windows and Doors, Inc. with regard to the product.

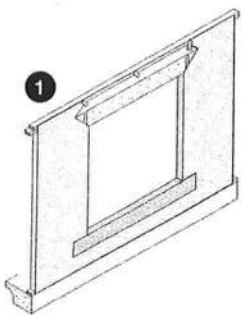

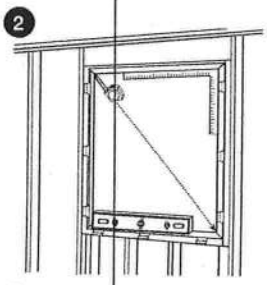

Check for level, plumb and square.

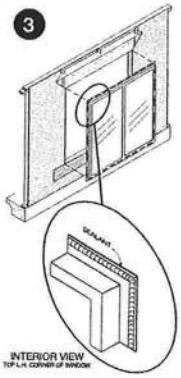

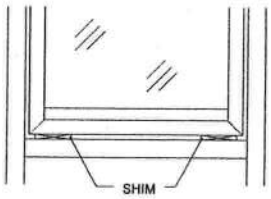

"DRAWINGS HAVE BEEN REPRINTED WITH PERMISSION FROM THE INSTALLATION MASTERS™ INSTITUTE. THE INSTALLATION MASTERS™ ACCEPTS NO RESPONSIBILITY FOR THE USE OR APPLICATION OF THIS INFORMATION."

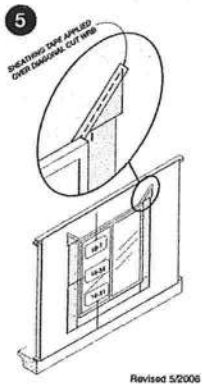

Revised 5/2006

VENT-FREE

Go Anywhere Fireboxes For Vent-Free Logs UVFC/UVFR-500/600

Innovative Features

- Use fireboxes with ANSI Z21.11.2 vent-free log sets
- Easy gas line access with knockouts on both sides
- Realistic brick interior liner

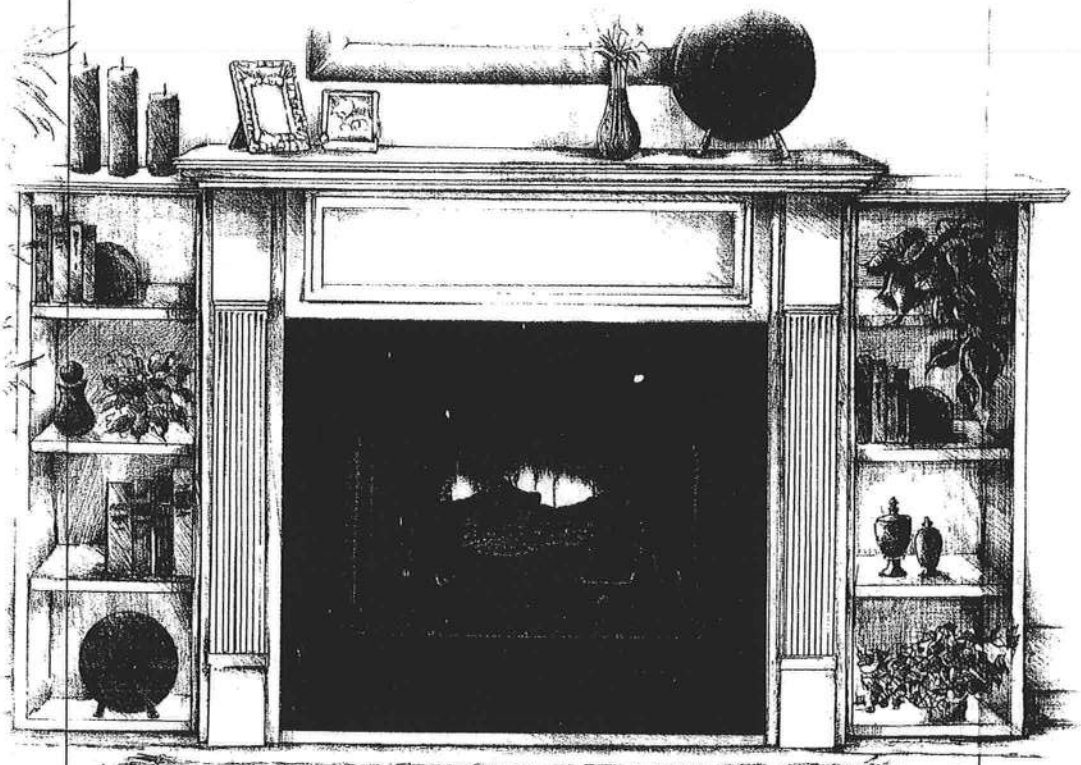

UVFC-600 shown with Superior VFGL-24-3 Vent-Free gas log set

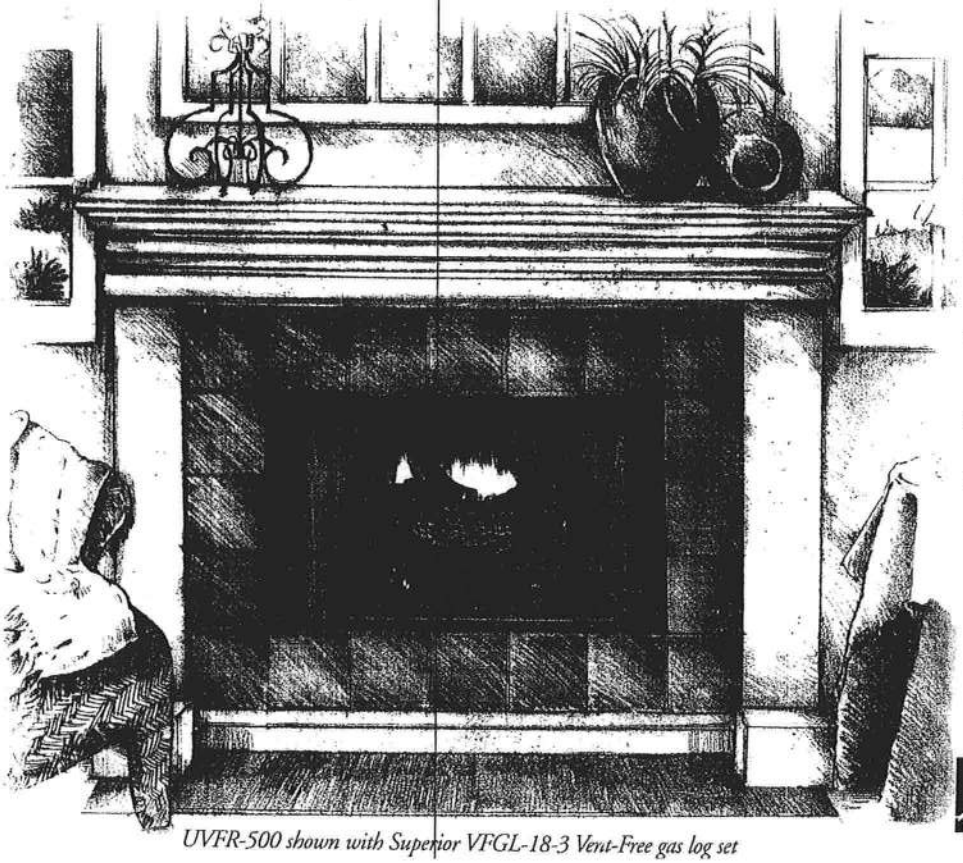

UVFR-500 shown with Superior VFGL-18-3 Vent-Free gas log set

Distinctive Advantages

- No vent means installation almost anywhere
- Radiant or heat-circulating models
- Hood included protects mantel
- Fully assembled, ready to install

SUPERIOR.

UVF Fireboxes

Don't be fooled by appearances. Superior Vent-Free Universal Fireboxes look like beautiful, cozy fireplaces, but they are actually energy-efficient firebox enclosures for Vent-Free Gas Log heaters. Designed for use with Lennox Hearth Products or other listed Vent-Free Gas Log Sets, Fireboxes work in conjunction with the Log Sets to deliver 99% fuel burning efficiency. Together, they heat a room for just pennies a day.

Designed for installation ease, Universal Vent-Free Fireboxes require no venting and utilize a standard gas flex connecter. Without chimneys or venting to contend with, Universal Vent-Free Fireboxes can be installed practically anywhere – under bookcases, windows, even on the 25th floor. Minimum clearance to combustible materials allows framing right up to the fireplace sides and top.

Choose from radiant or heat-circulating models with 36″ or 41″ screen openings. Radiant models allow facing materials to be installed flush with the front opening. Heat-circulating designs feature louvers and space for installing an optional forced air blower for increased warm air circulation. Hoods are included to protect mantels and other combustible surrounds. Large brick liners create a genuine masonry look. All models are Warnock Hersey listed as ventless firebox enclosures for decorative unvented room heaters.

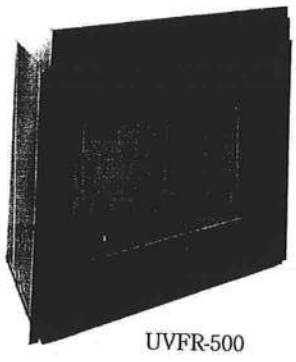

UVFR-500

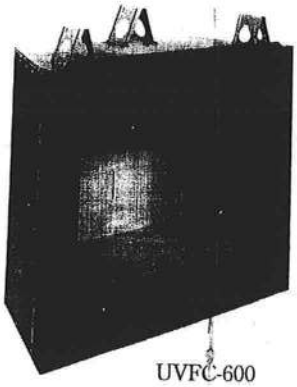

UVFC-600

UVFC-500

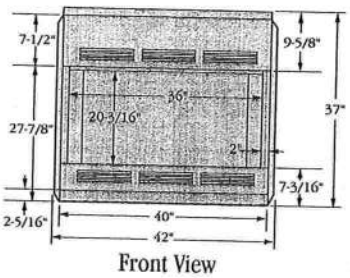

Front View

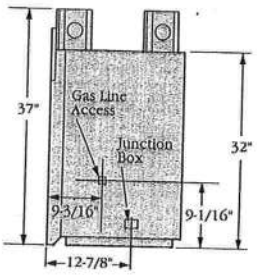

Right Side View

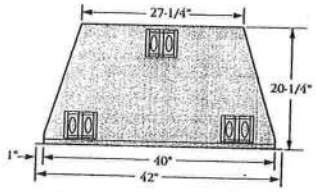

Top View

UVFR-600

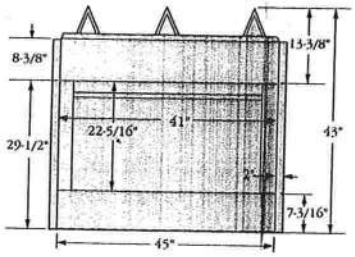

Front View

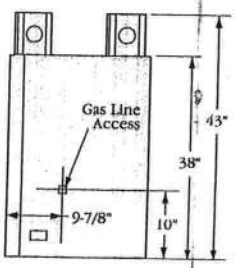

Right Side View

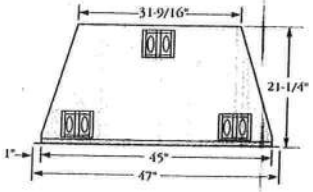

Top View

Realistic brick interior liner.

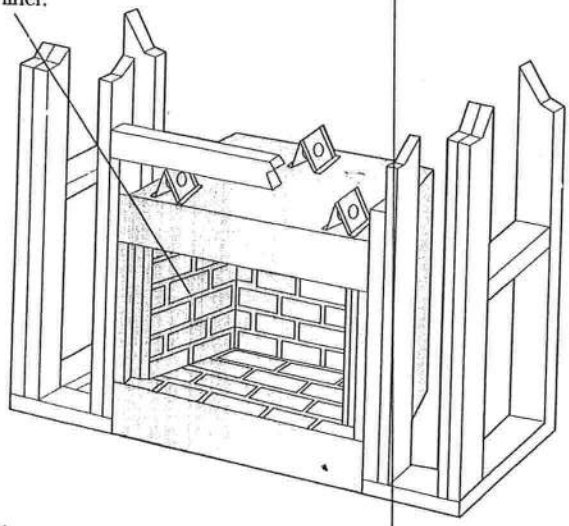

Distributed by:

Framing Dimensions

Model	Width	Height	Depth
UVFC/UVFR-500	41-1/4"	37-1/2"	19-5/8"
UVFR/UVFC-600	46-1/4"	43-1/2"	20-5/8"

NOTE: Diagrams and illustrations are not to scale and should not be used for framing purposes – consult installation instructions. Product designs, materials, dimensions, specifications, colors and prices subject to change or discontinuance without notice. Built to ANSI Z21.11.2 standards.

Consult your distributor for local fireplace code information.

Warnock Hersey C US

SUPERIOR.

www.LennoxHearthProducts.com

TAMCO Thompson Architectural Metals
(813) 248-3456
(800) 248-3456
Fax (813) 247-4616
www.Gometalroofing.com

OFF RIDGE ROOF VENT INSTALLATION

PREPARATION

Minimum 4/12 pitch required.

Cut out the off ridge opening in the roof sheathing as shown in Figure A. Size the opening in accordance with the correct cutting data models and locate the opening 6" minimum off the peak of the roof as shown in Figure B. For single vent applications, install vent as close to the center of the roof length as possible. Install multiple vents in evenly spaced areas of the entire roof length.

Do not cut into trusses or rafters when cutting hole in the roof.

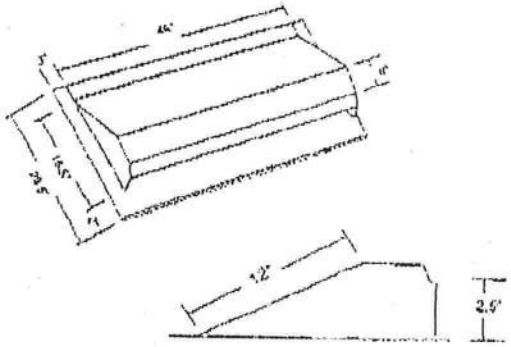

STANDARD OFF RIDGE VENT

SIZE	LENGTH "L"	Area Net Free SQ IN	HEIGHT "H"	Cut Out Size
4'	46.25	104	5.5"	46" x 12"
6'	70.25	156	5.5"	70" x 12"
8'	94.25	207	5.5"	94" x 12"
10'	118.25	260	5.5"	118" x 12"

TILE OFF RIDGE VENT

SIZE	LENGTH "L"	Area Net Free SQ IN	HEIGHT "H"	Cut Out Size
4'	46.25	144	8.5"	46" x 12"
6'	70.25	196	8.5"	70" x 12"
8'	94.25	248	8.5"	94" x 12"
10'	118.25	312	8.5"	118" x 12"

FITTING

Remove interfering shingle nails around the perimeter of the opening. Slide top and side flanges of the vent up and under shingles. Allow the bottom vent flanges to lay on top of shingles.

MOUNTING

Care should be taken in keeping the vent properly aligned. Nail in place using 1-1/4" coating roofing nails spaced approximately 6" - 12" on center and 1-1/2" from each end. Roofing cement should be applied to all shingle edges and nail heads to prevent water leakage. In severe weather coastal construction zones, caulking around entire perimeter, under vent flanges and near outer edges is recommended.

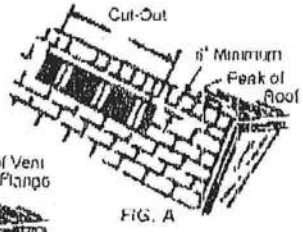

FIG. A

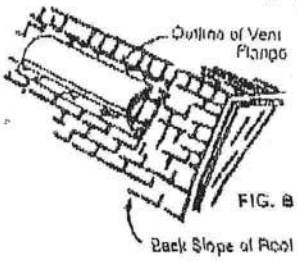

FIG. B

TAMCO: This product meets Florida Building Code Table 1507.5.3/1508.4.3

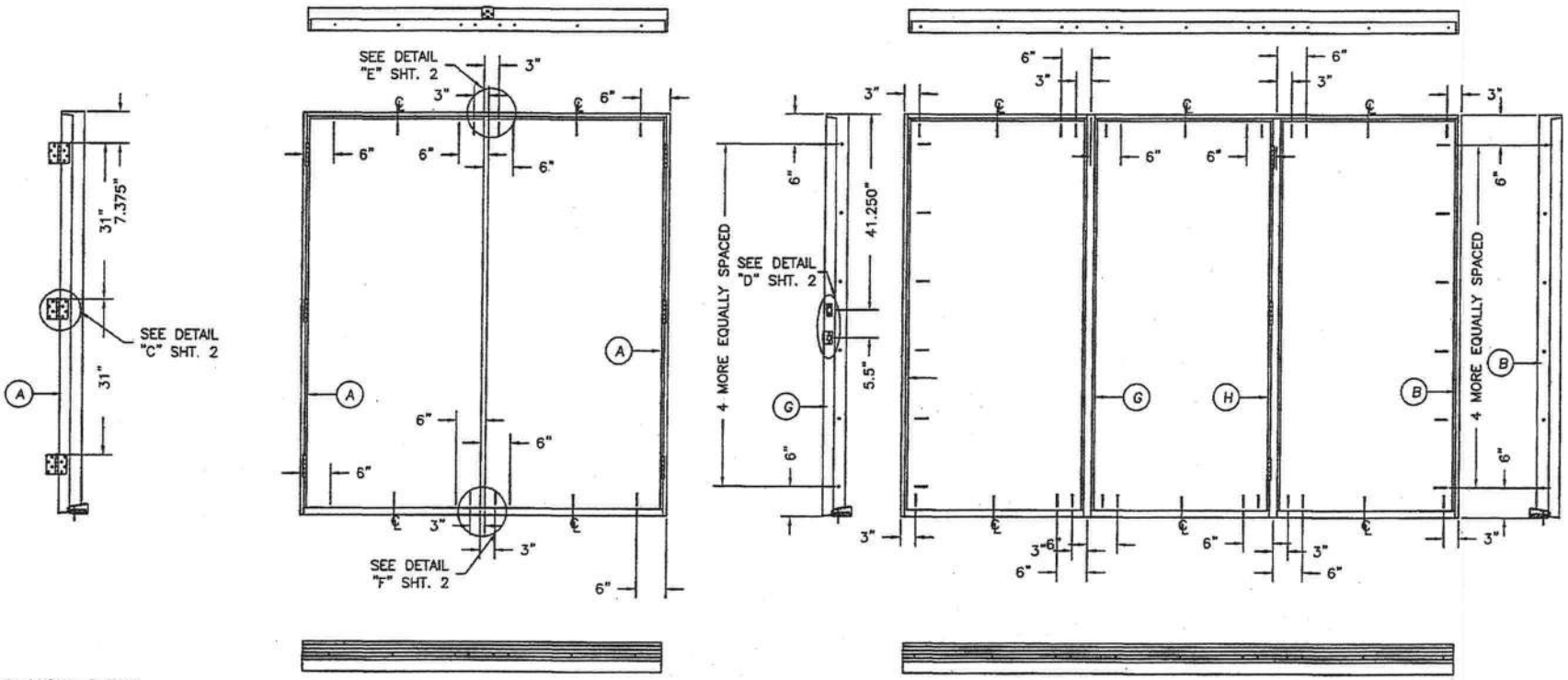

ATTACHMENT DETAIL

1. ANCHOR ANALYSIS FOR LOADING CONDITIONS PREPARED, SIGNED AND SEALED BY HAROLD E. RUPP, PE (FLORIDA #15935) WITH THE LOWEST (LEAST) FASTENER RATING FROM THE DIFFERENT FASTENERS BEING CONSIDERED FOR USE. JAMB, HEAD, AND THRESHOLD FASTENERS ANALYZED FOR THIS UNIT INCLUDE #10 WOOD SCREWS OR 3/16" TAPCONS. A PHYSICAL SHIM MUST BE PLACED IN SHIM SPACE AT EACH ANCHOR LOCATION.
2. THE WOOD SCREW SINGLE SHEAR DESIGN VALUES COME FROM ANSI/AF&PA NDA FOR SOUTHERN PINE LUMBER AND ACHEIVEMENT OF 1-1/2" MINIMUM EMBEDMENT. THE TAPCON MUST ACHIEVE MINIMUM EMBEDMENT OF 1-1/4".
3. WOOD BUCKS BY OTHERS MUST BE ANCHORED PROPERLY TO TRANSFER LOADS TO STRUCTURE.
4. MINIMUM DESIGN VALUE STRENGTH OF ANCHORS 171 LBS.

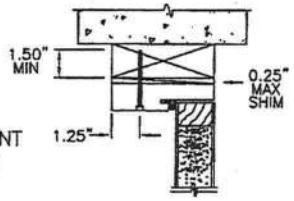

TYPICAL ANCHOR INSTALLATION

HARDWARE SCHEDULE

1.	KWIKSET OR SCHLEGE ANSI/BHMA GRADE 3 OR BETTER CYLINDRICAL AND DEADLOCK HARDWARE TO BE INSTALLED AT 5-1/2" CENTERLINE.
2.	4" X 4" FULL MORTISE BUTT HINGES.

Addendum to NAMI
Certification No.: NT.006063R
Reviewed By:
Date Reviewed: 7/18/05

MASONITE INTERNATIONAL CORP.
7300 REAMES RD.
CHARLOTTE, NC 28216

PRODUCT: "EXTERIOR DOOR PRODUCT" 6'-8" FIBERGLASS GLAZED DOUBLE DOOR UNIT

PART OR ASSEMBLY: ANCHORING LOCATIONS & DETAILS

NO.	DATE	BY

REVISIONS

DATE: 5/25/05
SCALE: N.T.S.
DWG. BY: SWS
CHK. BY:
DRAWING NO.: DWG-MA-FL0126-05
SHEET 3 OF 3

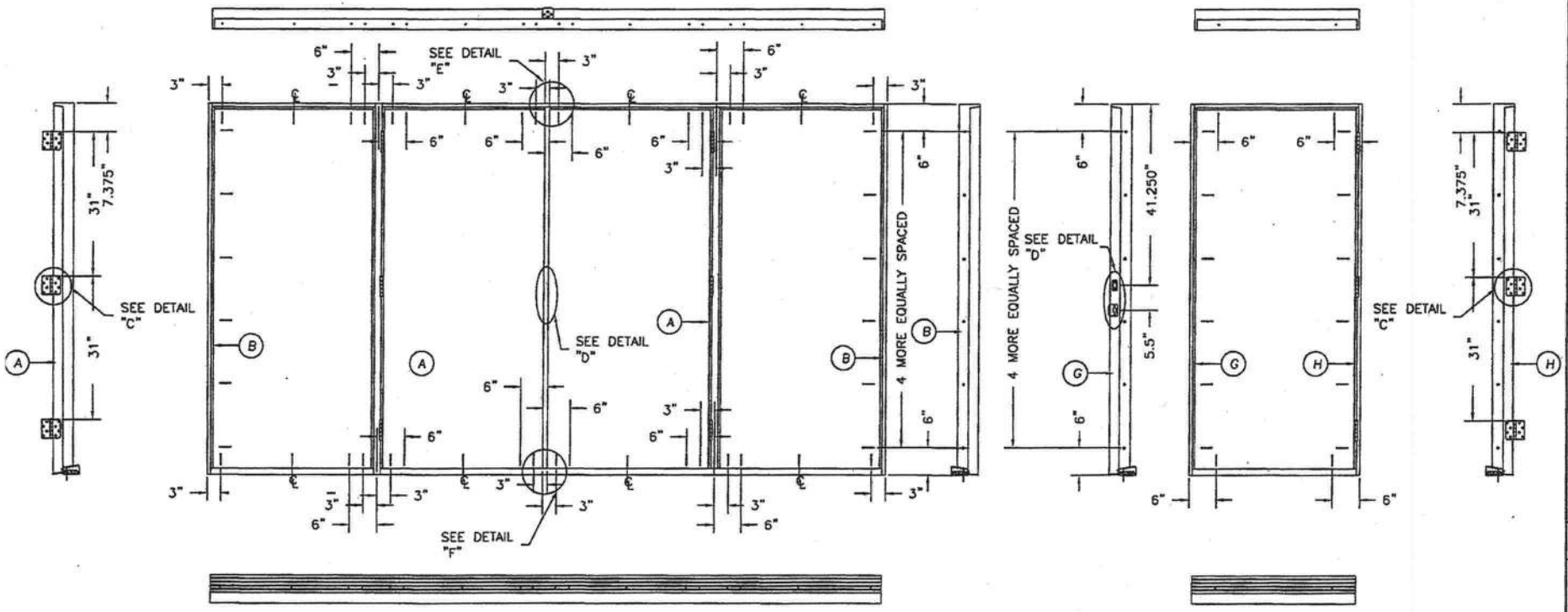

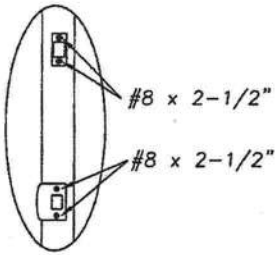

DETAIL "D"

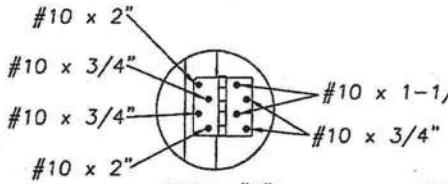

DETAIL "C"

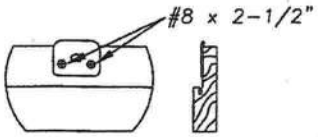

DETAIL "E" ASTRAGAL

ATTACH ASTRAGAL RETAINER BOLT STRIKE PLATE TO FRAME AS SHOWN.

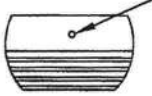

ASTRAGAL RETAINER BOLT HOLE MUST BE DRILLED THROUGH THE THRESHOLD & INTO THE STRUCTURE DEEP ENOUGH FOR A 1.375" THROW

DETAIL "F" ASTRAGAL

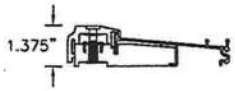

INSWING THRESHOLD

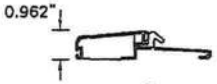

OUTSWING THRESHOLD

HIGH DAM O/S THRESHOLD

Addendum to NAMI
Certification No.: NJ 006063R
Reviewed By:
Date Reviewed: 7/18/05

MASONITE INTERNATIONAL CORP.
7300 REAMES RD.
CHARLOTTE, NC 28216

PRODUCT: "EXTERIOR DOOR PRODUCT" 6'-8" FIBERGLASS GLAZED DOUBLE DOOR UNIT

PART OR ASSEMBLY: ANCHORING LOCATIONS & DETAILS

NO.	DATE	BY

REVISIONS

DATE: 5/25/05
SCALE: N.T.S.
DWG. BY: SWS
CHK. BY:
DRAWING NO.: DWG-MA-FL0126-05
SHEET 2 OF 3

5. PLASTICS TESTING OF LITE FRAME MATERIAL:

TEST DESCRIPTION	DESIGNATION	RESULT
SELF IGNITION TEMP	ASTM D1929	680 °F > 650 °F
RATE OF BURNING	ASTM D635	1.10 IN/MIN
SMOKE DENSITY	ASTM D2843	69.6%
TENSILE STRENGTH*	ASTM D638	−7.48% DIFF

* COMPARATIVE TENSILE STRENGTH AFTER WEATHERING 4500 HOURS XENON ARC METHOD 1

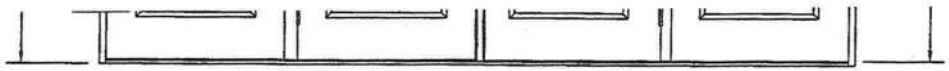

DOUBLE INSWING UNIT W/SIDELITES

Addendum to NAMI

Certification No.: NI0060638
Reviewed By:
Date Reviewed: 7/18/05

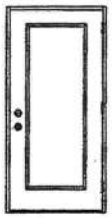

SINGLE DOOR UNIT

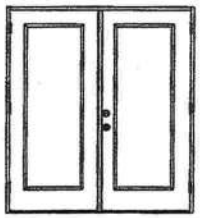

DOUBLE DOOR UNIT

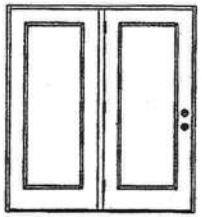

SINGLE DOOR UNIT WITH SIDELITE

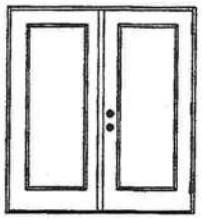

SINGLE DOOR UNIT WITH SIDELITE

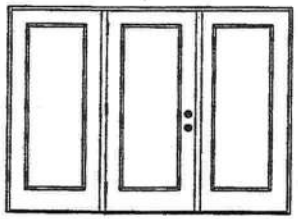

SINGLE DOOR UNIT W/SIDELITES

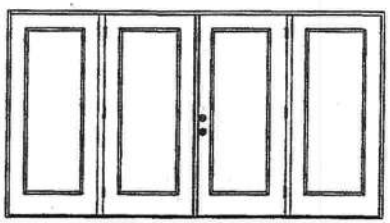

DOUBLE DOOR UNIT W/SIDELITES

TABLE OF CONTENTS

		DESIGN PRESSURE RATING		WHERE WATER INFILTRATION PERFORMANCE IS REQUIRED TO BE 15% OF DESIGN PRESSURE		
CONFIG	MAX WIDTH	INSWING	OUTSWING	INSWING	OUTSWING	OUTSWING*
X	37.5"	+52.0 / −52.0	+55.0 / −55.0	+19.0 / −19.0	+40.0 / −40.0	+55.0 / −55.0
XX	74"	+52.0 / −52.0	+55.0 / −55.0	+19.0 / −19.0	+40.0 / −40.0	+55.0 / −55.0
OX or XO	75"	+52.0 / −52.0	+55.0 / −55.0	+19.0 / −19.0	+40.0 / −40.0	+55.0 / −55.0
OXO	112.5"	+52.0 / −52.0	+55.0 / −55.0	+19.0 / −19.0	+40.0 / −40.0	+55.0 / −55.0
OXXO	149"	+52.0 / −52.0	+55.0 / −55.0	+19.0 / −19.0	+40.0 / −40.0	+55.0 / −55.0

* High Dam Threshold Design

PRODUCT: "EXTERIOR DOOR DOUBLE 6'8" FIBERGLASS"

PART OR ASSEMBL TYPICAL ELE & GENERAL

NO.	DATE	BY

REVISIONS

DATE: 5/25/05
SCALE: N.T.S.
DWG. BY: SWS
CHK. BY:
DRAWING NO.: DWG-MA-FL0126-05
SHEET 1 OF 3

FLORIDA PRODUCT APPROVAL # 5577.1

XX
Glazed Inswing Unit

COP-WL-MA0142-02

FIBERGLASS DOORS

APPROVED ARRANGEMENT:

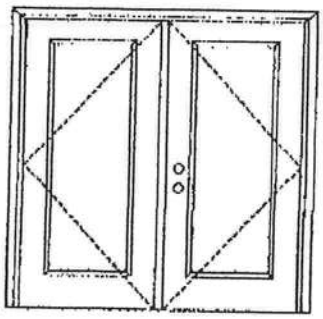

Note:
Units of other sizes are covered by this report as long as the panels used do not exceed 3'0" x 6'8".

Double Door
Maximum unit size – 6'0" x 6'8"

Design Pressure

+52.0/-52.0

Limited water unless special threshold design is used.

Large Missile Impact Resistance

Hurricane protective system (shutters) is REQUIRED.

Actual design pressure and impact resistant requirements for a specific building design and geographic location is determined by ASCE 7-national, state or local building codes specify the edition required.

MINIMUM ASSEMBLY DETAIL:

Compliance requires that minimum assembly details have been followed – see MAD-WL-MA0002-02 and MAD-WL-MA0041-02.

MINIMUM INSTALLATION DETAIL:

Compliance requires that minimum installation details have been followed – see MID-WL-MA0002-02.

APPROVED DOOR STYLES:

1/4 GLASS:

100 Series

133, 135 Series

138 Series

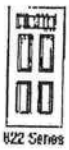

822 Series

1/2 GLASS:

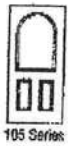

105 Series

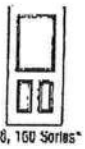

106, 160 Series*

129 Series*

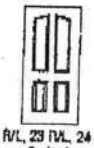

12 R/L, 23 R/L, 24 R/L Series*

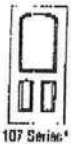

107 Series*

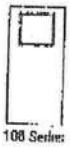

108 Series

304 Series

*This glass kit may also be used in the following door style: Eyebrow 5-panel with scroll.

Oakcraft Woodbridge Technical FIBERGLASS ENTRY DOORS

ARTEK™ Non-textured Fiberglass Entry Doors

April 29, 2002
Our continuing program of product improvement makes specifications, detail and product detail subject to change without notice.

PREMDOR Collection Premium Quality Doors

Exclusively from Masonite
Masonite International Corporation

TENSILE STRENGTH*	ASTM D638	−7.3% DIFF

5. PLASTICS TESTING OF LITE FRAME MATERIAL:

TEST DESCRIPTION	DESIGNATION	RESULT
SELF IGNITION TEMP	ASTM D1929	680 °F > 650 °F
RATE OF BURNING	ASTM D635	1.10 IN/MIN
SMOKE DENSITY	ASTM D2843	69.6%
TENSILE STRENGTH*	ASTM D638	−7.48% DIFF

* COMPARATIVE TENSILE STRENGTH AFTER WEATHERING 4500 HOURS XENON ARC METHOD 1

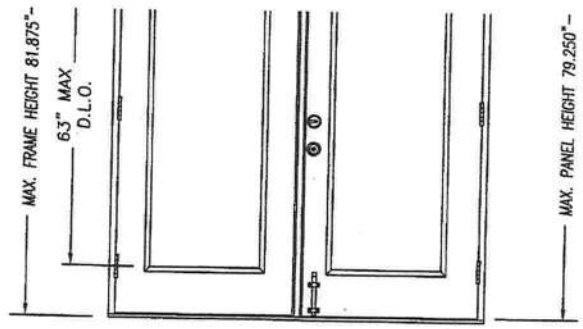

DOUBLE DOOR UNIT

Addendum to NAMI

Certification No.: NI 0061220
Reviewed By:
Date Reviewed: 9/23/05

TABLE OF CONTENTS

CONFIG	MAX WIDTH	DESIGN PRESSURE RATING		WHERE WATER INFILTRATION PERFORMANCE IS REQUIRED TO BE 15% OF DESIGN PRESSURE	
		INSWING	OUTSWING	INSWING	OUTSWING
XX	74"	+50.5 / −50.5	+50.5 / −50.5	+19.0 / −19.0	+50.5 / −50.5

PRODUCT: "EXTERIOR DOO 6'8" CL DOUBLE DO

PART OR ASSEMB TYPICAL EL & GENERA

NO.	DATE	BY	REVISIONS

DATE: 9/20/05
SCALE: N.T.S.
DWG. BY: SWS
CHK. BY:
DRAWING NO.: DWG-MA-FL0143-05
SHEET 1 OF 3

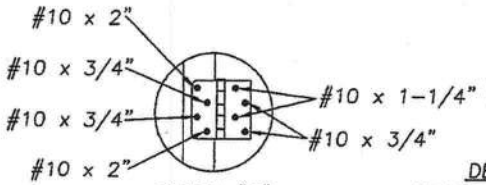

DETAIL "C"

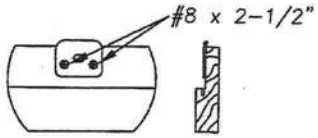

DETAIL "E" ASTRAGAL

ATTACH ASTRAGAL RETAINER BOLT STRIKE PLATE TO FRAME AS SHOWN.

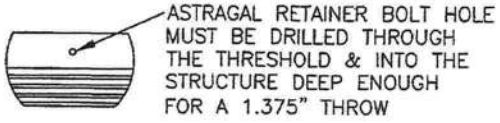

DETAIL "F" ASTRAGAL

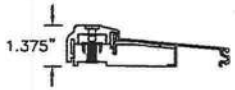

INSWING THRESHOLD

OUTSWING THRESHOLD

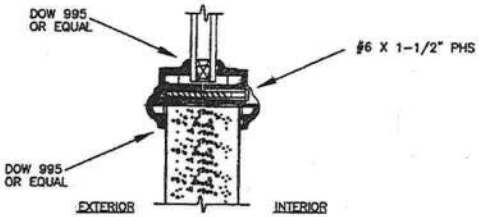

TYPICAL GLAZING DETAIL

Addendum to NAMI

Certification No.: NI 006220

Reviewed By:

Date Reviewed: 9/23/05

MASONITE INTERNATIONAL CORP.
7300 REAMES RD.
CHARLOTTE, NC 28216

PRODUCT: "EXTERIOR DOOR PRODUCT" 6'-8" GLAZED DOUBLE DOOR UNIT

PART OR ASSEMBLY: ANCHORING LOCATIONS & DETAILS

NO.	DATE	REVISIONS	BY

DATE: 9/20/05

SCALE: N.T.S.

DWG. BY: SWS

CHK. BY:

DRAWING NO.: DWG-MA-FL0143-05

SHEET 2 OF 3

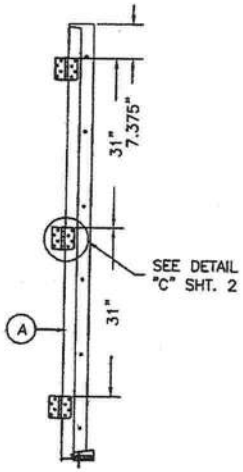

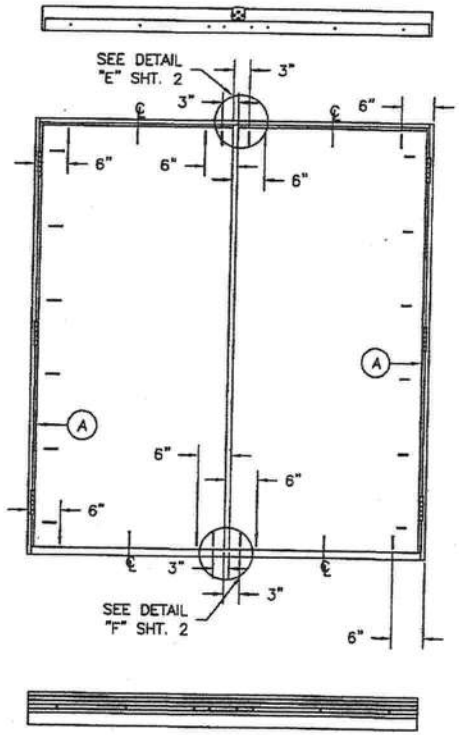

ATTACHMENT DETAIL

1. ANCHOR ANALYSIS FOR LOADING CONDITIONS PREPARED, SIGNED AND SEALED BY HAROLD E. RUPP, PE (FLORIDA #15935) WITH THE LOWEST (LEAST) FASTENER RATING FROM THE DIFFERENT FASTENERS BEING CONSIDERED FOR USE. JAMB, HEAD, AND THRESHOLD FASTENERS ANALYZED FOR THIS UNIT INCLUDE #10 WOOD SCREWS OR 3/16" TAPCONS. A PHYSICAL SHIM MUST BE PLACED IN SHIM SPACE AT EACH ANCHOR LOCATION.
2. THE WOOD SCREW SINGLE SHEAR DESIGN VALUES COME FROM ANSI/AF&PA NDA FOR SOUTHERN PINE LUMBER AND ACHEIVEMENT OF 1-1/2" MINIMUM EMBEDMENT. THE TAPCON MUST ACHIEVE MINIMUM EMBEDMENT OF 1-1/4".
3. WOOD BUCKS BY OTHERS MUST BE ANCHORED PROPERLY TO TRANSFER LOADS TO STRUCTURE.
4. MINIMUM DESIGN VALUE STRENGTH OF ANCHORS 171 LBS.

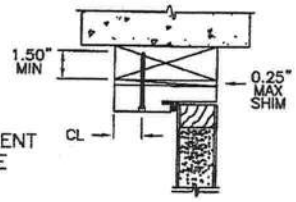

TYPICAL
ANCHOR INSTALLATION

HARDWARE SCHEDULE

1.	KWIKSET OR SCHLEGE ANSI/BHMA GRADE 3 OR BETTER CYLINDRICAL AND DEADLOCK HARDWARE TO BE INSTALLED AT 5-1/2" CENTERLINE WITH 8" GRADE 1 (ANSI/BHMA A156.16) SURFACE BOLTS INSTALLED ON LATCH SIDE OF ACTIVE DOOR PANEL - (1) AT TOP AND (1) AT BOTTOM.
2.	4" X 4" FULL MORTISE BUTT HINGES

Addendum to NAMI
Certification No.: NI 006220
Reviewed By:
Date Reviewed: 9/23/05

MASONITE INTERNATIONAL CORP.
7300 REAMES RD.
CHARLOTTE, NC 28216

PRODUCT: "EXTERIOR DOOR PRODUCT" 6'-8" GLAZED DOUBLE DOOR UNIT

PART OR ASSEMBLY: ANCHORING LOCATIONS & DETAILS

NO.	DATE	REVISIONS	BY

DATE: 9/20/05
SCALE: N.T.S.
DWG. BY: SWS
CHK. BY:
DRAWING NO.: DWG-MA-FL0143-05
SHEET 3 OF 3

JOHN

Derksen - Ohidy Residence
HVAC Load Calculations

for

E Johnson Construction
5600 N.E 60th AVE
Highsprings FL 32643

Elite Software

RHVAC RESIDENTIAL HVAC LOADS

Prepared By:

Chuck Fischer
North Central Florida Air Conditioning I
P. O. Box 700
High Springs Fl 32655-0700
(386) 454-4767
Thursday, December 06, 2007

Project Report

General Project Information

Project Title:	Derksen - Ohidy Residence
Designed By:	Chuck Fischer
Project Date:	Thursday, December 06, 2007
Client Name:	E Johnson Construction
Client Address:	5600 N.E 60th AVE
Client City:	Highsprings FL 32643
Client Phone:	352-317-1254
Client Fax:	386-454-1796
Company Name:	North Central Florida Air Conditioning I
Company Representative:	Chuck Fischer
Company Address:	P. O. Box 700
Company City:	High Springs Fl 32655-0700
Company Phone:	(386) 454-4767
Company Fax:	(386) 454-4854
Company Comment:	heat load for addition

Design Data

Reference City:		Gainesville, Florida
Daily Temperature Range:		Medium
Latitude:	29	Degrees
Elevation:	152	ft.
Altitude Factor:	0.995	
Elevation Sensible Adj. Factor:	1.000	
Elevation Total Adj. Factor:	1.000	
Elevation Heating Adj. Factor:	1.000	
Elevation Heating Adj. Factor:	1.000	

	Outdoor Dry Bulb	Outdoor Wet Bulb	Indoor Rel.Hum	Indoor Dry Bulb	Grains Difference
Winter:	31	0	50	72	38
Summer:	93	77	50	75	50

Check Figures

Total Building Supply CFM:	1,239	CFM Per Square ft.:	0.640
Square ft. of Room Area:	1,937	Square ft. Per Ton:	660
Volume (ft³) of Cond. Space:	19,369	Air Turnover Rate (per hour):	3.8

Building Loads

Total Heating Required With Outside Air:	48,611	Btuh	48.611	MBH
Total Sensible Gain:	27,116	Btuh	83	%
Total Latent Gain:	5,521	Btuh	17	%
Total Cooling Required With Outside Air:	32,637	Btuh	2.72	Tons (Based On Sensible + Latent)
			2.93	Tons (Based On 77% Sensible Capacity)

Notes

Calculations are based on 8th edition of ACCA Manual J.
All computed results are estimates as building use and weather may vary.
Be sure to select a unit that meets both sensible and latent loads.

Load Preview Report

Scope	Area	Sens Gain	Lat Gain	Net Gain	Sens Loss	Win CFM	Sum CFM	Sys CFM	Duct Size
Building: 2.72 Net Tons, 2.93 Recommended Tons, 660 ft.²/Ton, 48.61 MBH Heating									
Building	1,937	27,116	5,521	32,637	48,611	635	1,239	1,239	
System 1: 2.72 Net Tons, 2.93 Recommended Tons, 660 ft.²/Ton, 48.61 MBH Heating									
System 1	1,937	27,116	5,521	32,637	48,611	635	1,239	1,239	15x15
Zone 1	1,937	27,116	5,521	32,637	48,611	635	1,239	1,239	
1-Master Bath	145	2,598	703	3,301	6,834	89	119	119	1-6
2-Master W.i.c	68	666	196	862	1,775	23	30	30	1-3
3-Master Bedroom	235	4,507	1,157	5,664	8,137	106	206	206	2-6
4-Kitchen	257	3,988	622	4,610	4,273	56	182	182	1-8
5-Laundry Room	54	948	121	1,069	1,434	19	43	43	1-4
6-Dining Room	314	3,704	511	4,215	6,976	91	169	169	1-8
7-Living Room	405	2,285	380	2,665	4,357	57	104	104	1-6
8-Bedroom 1	168	3,126	747	3,873	5,958	78	143	143	1-7
9-Bedroom 2	174	2,570	630	3,200	4,372	57	117	117	1-6
10-Bedroom 2 W.i.c	34	725	232	957	2,102	27	33	33	1-3
11-Bath 2	63	1,648	222	1,870	2,286	30	75	75	1-5
12-Hall	20	348	0	348	107	1	16	16	1-2

Total Building Summary Loads

Component Description	Area Quan	Sen Loss	Lat Gain	Sen Gain	Total Gain
2A-b-o: Glazing-Double pane low-e (e = 0.60), operable window, metal frame with break, ground reflectance = 0.23, outdoor insect screen with 50% coverage, light color blinds at 45° with 25% coverage, external shade screen coefficient of 0.45 and 50% coverage	299.9	7,747	0	5,414	5,414
2A-b-o: Glazing-Double pane low-e (e = 0.60), operable window, metal frame with break, ground reflectance = 0.32, outdoor insect screen with 50% coverage, light color blinds at 45° with 25% coverage, external shade screen coefficient of 0.45 and 50% coverage	20	517	0	330	330
2B-w-o: Glazing-Double pane low-e (e = 0.60), fixed sash, wood frame, ground reflectance = 0.32	7.8	173	0	175	175
2B-b-o: Glazing-Double pane low-e (e = 0.60), fixed sash, metal frame with break, ground reflectance = 0.32	6.7	165	0	158	158
11P: Door-Polyurethane Core	40.8	486	0	344	344
12C-3sw: Wall-Frame, R-13 insulation in 2 x 4 stud cavity, R-3 board insulation, siding finish, wood studs	1831.8	5,632	0	2,801	2,801
16C-30: Roof/Ceiling-Under attic or knee wall, Vented Attic, No Radiant Barrier, White or Light Color Shingles, Any Wood Shake, Light Metal, Tar and Gravel or Membrane, R-30 insulation	300	396	0	408	408
22A-ph: Floor-Slab on grade, No edge insulation, no insulation below floor, any floor cover, passive, heavy moist soil	222	12,362	0	0	0
Subtotals for structure:		27,478	0	9,630	9,630
People:	5		1,150	1,500	2,650
Equipment:			0	1,200	1,200
Lighting:	2265			7,724	7,724
Ductwork:		8,102	0	4,519	4,519
Infiltration: Winter CFM: 291, Summer CFM: 129		13,031	4,371	2,543	6,914
Ventilation: Winter CFM: 0, Summer CFM: 0		0	0	0	0
Total Building Load Totals:		48,611	5,521	27,116	32,637

Check Figures

Total Building Supply CFM:	1,239	CFM Per Square ft.:	0.640
Square ft. of Room Area:	1,937	Square ft. Per Ton:	660
Volume (ft³) of Cond. Space:	19,369	Air Turnover Rate (per hour):	3.8

Building Loads

Total Heating Required With Outside Air:	48,611	Btuh	48.611	MBH
Total Sensible Gain:	27,116	Btuh	83	%
Total Latent Gain:	5,521	Btuh	17	%
Total Cooling Required With Outside Air:	32,637	Btuh	2.72	Tons (Based On Sensible + Latent)
			2.93	Tons (Based On 77% Sensible Capacity)

Notes

Calculations are based on 8th edition of ACCA Manual J.
All computed results are estimates as building use and weather may vary.
Be sure to select a unit that meets both sensible and latent loads.

System 1 Main Floor Summary Loads

Component Description	Area Quan	Sen Loss	Lat Gain	Sen Gain	Total Gain
2A-b-o: Glazing-Double pane low-e (e = 0.60), operable window, metal frame with break, ground reflectance = 0.23, outdoor insect screen with 50% coverage, light color blinds at 45° with 25% coverage, external shade screen coefficient of 0.45 and 50% coverage	299.9	7,747	0	5,414	5,414
2A-b-o: Glazing-Double pane low-e (e = 0.60), operable window, metal frame with break, ground reflectance = 0.32, outdoor insect screen with 50% coverage, light color blinds at 45° with 25% coverage, external shade screen coefficient of 0.45 and 50% coverage	20	517	0	330	330
2B-w-o: Glazing-Double pane low-e (e = 0.60), fixed sash, wood frame, ground reflectance = 0.32	7.8	173	0	175	175
2B-b-o: Glazing-Double pane low-e (e = 0.60), fixed sash, metal frame with break, ground reflectance = 0.32	6.7	165	0	158	158
11P: Door-Polyurethane Core	40.8	486	0	344	344
12C-3sw: Wall-Frame, R-13 insulation in 2 x 4 stud cavity, R-3 board insulation, siding finish, wood studs	1831.8	5,632	0	2,801	2,801
16C-30: Roof/Ceiling-Under attic or knee wall, Vented Attic, No Radiant Barrier, White or Light Color Shingles, Any Wood Shake, Light Metal, Tar and Gravel or Membrane, R-30 insulation	300	396	0	408	408
22A-ph: Floor-Slab on grade, No edge insulation, no insulation below floor, any floor cover, passive, heavy moist soil	222	12,362	0	0	0
Subtotals for structure:		27,478	0	9,630	9,630
People:	5		1,150	1,500	2,650
Equipment:			0	1,200	1,200
Lighting:	2265			7,724	7,724
Ductwork:		8,102	0	4,519	4,519
Infiltration: Winter CFM: 291, Summer CFM: 129		13,031	4,371	2,543	6,914
Ventilation: Winter CFM: 0, Summer CFM: 0		0	0	0	0
System 1 Main Floor Load Totals:		48,611	5,521	27,116	32,637

Check Figures

Supply CFM:	1,239	CFM Per Square ft.:	0.640
Square ft. of Room Area:	1,937	Square ft. Per Ton:	660
Volume (ft³) of Cond. Space:	19,369	Air Turnover Rate (per hour):	3.8

System Loads

Total Heating Required With Outside Air:	48,611	Btuh	48.611	MBH
Total Sensible Gain:	27,116	Btuh	83	%
Total Latent Gain:	5,521	Btuh	17	%
Total Cooling Required With Outside Air:	32,637	Btuh	2.72	Tons (Based On Sensible + Latent)
			2.93	Tons (Based On 77% Sensible Capacity)

Notes

Calculations are based on 8th edition of ACCA Manual J.
All computed results are estimates as building use and weather may vary.
Be sure to select a unit that meets both sensible and latent loads.

System 1, Zone 1 Summary Loads (Average Load Procedure for Rooms)

Component Description	Area Quan	Sen Loss	Lat Gain	Sen Gain	Total Gain
2A-b-o: Glazing-Double pane low-e (e = 0.60), operable window, metal frame with break, ground reflectance = 0.23, outdoor insect screen with 50% coverage, light color blinds at 45° with 25% coverage, external shade screen coefficient of 0.45 and 50% coverage	299.9	7,747	0	5,414	5,414
2A-b-o: Glazing-Double pane low-e (e = 0.60), operable window, metal frame with break, ground reflectance = 0.32, outdoor insect screen with 50% coverage, light color blinds at 45° with 25% coverage, external shade screen coefficient of 0.45 and 50% coverage	20	517	0	330	330
2B-w-o: Glazing-Double pane low-e (e = 0.60), fixed sash, wood frame, ground reflectance = 0.32	7.8	173	0	175	175
2B-b-o: Glazing-Double pane low-e (e = 0.60), fixed sash, metal frame with break, ground reflectance = 0.32	6.7	165	0	158	158
11P: Door-Polyurethane Core	40.8	486	0	344	344
12C-3sw: Wall-Frame, R-13 insulation in 2 x 4 stud cavity, R-3 board insulation, siding finish, wood studs	1831.8	5,632	0	2,801	2,801
16C-30: Roof/Ceiling-Under attic or knee wall, Vented Attic, No Radiant Barrier, White or Light Color Shingles, Any Wood Shake, Light Metal, Tar and Gravel or Membrane, R-30 insulation	300	396	0	408	408
22A-ph: Floor-Slab on grade, No edge insulation, no insulation below floor, any floor cover, passive, heavy moist soil	222	12,362	0	0	0
Subtotals for structure:		27,478	0	9,630	9,630
People:	5		1,150	1,500	2,650
Equipment:			0	1,200	1,200
Lighting:	2265			7,724	7,724
Ductwork:		8,102	0	4,519	4,519
Infiltration: Winter CFM: 291, Summer CFM: 129		13,031	4,371	2,543	6,914
System 1, Zone 1 Load Totals:		48,611	5,521	27,116	32,637

Check Figures

Supply CFM:	1,239	CFM Per Square ft.:	0.640
Square ft. of Room Area:	1,937	Square ft. Per Ton:	660
Volume (ft³) of Cond. Space:	19,369	Air Turnover Rate (per hour):	3.8

Zone Loads

Total Heating Required:	48,611	Btuh	48.611 MBH
Total Sensible Gain:	27,116	Btuh	83 %
Total Latent Gain:	5,521	Btuh	17 %
Total Cooling Required:	32,637	Btuh	2.72 Tons (Based On Sensible + Latent)
			2.93 Tons (Based On 77% Sensible Capacity)

Notes

Calculations are based on 8th edition of ACCA Manual J.
All computed results are estimates as building use and weather may vary.
Be sure to select a unit that meets both sensible and latent loads.

System 1 Room Load Summary

No	Room Name	Area SF	Htg Sens Btuh	Htg Nom CFM	Run Duct Size	Run Duct Vel	Clg Sens Btuh	Clg Lat Btuh	Clg Nom CFM	Air Sys CFM
---Zone 1---										
1	Master Bath	145	6,834	89	1-6	605	2,598	703	119	119
2	Master W.i.c	68	1,775	23	1-3	620	666	196	30	30
3	Master Bedroom	235	8,137	106	2-6	525	4,507	1,157	206	206
4	Kitchen	257	4,273	56	1-8	522	3,988	622	182	182
5	Laundry Room	54	1,434	19	1-4	497	948	121	43	43
6	Dining Room	314	6,976	91	1-8	485	3,704	511	169	169
7	Living Room	405	4,357	57	1-6	532	2,285	380	104	104
8	Bedroom 1	168	5,958	78	1-7	535	3,126	747	143	143
9	Bedroom 2	174	4,372	57	1-6	598	2,570	630	117	117
10	Bedroom 2 W.i.c	34	2,102	27	1-3	675	725	232	33	33
11	Bath 2	63	2,286	30	1-5	553	1,648	222	75	75
12	Hall	20	107	1	1-2	729	348	0	16	16
	System 1 total	1,937	48,611	635			27,116	5,521	1,239	1,239

System 1 Main Trunk Size:	15x15	in.
Velocity:	888	ft./min
Loss per 100 ft.:	0.096	in.wg

Cooling System Summary

	Cooling Tons	Sensible/Latent Split	Sensible Btuh	Latent Btuh	Total Btuh
Net Required:	2.72	83% / 17%	27,116	5,521	32,637
Recommended:	2.93	77% / 23%	27,116	8,099	35,215
Actual:	3.00	74% / 26%	26,600	9,400	36,000

Equipment Data

	Heating System	Cooling System
Type:	air source heat pump	Air Source Heat Pump
Model:	ASH130361+ARUF364216+HKR-10	ASH130361+ARUF364216=HKR-10
Brand:	Amana	Amana
Efficiency:	7.7 HSPF	13 seer
Sound:	0	
Capacity:	34.000	36.000
Sensible Capacity:	n/a	26,600 Btuh
Latent Capacity:	n/a	9,400 Btuh

Form B38-05/06

PRODUCT APPROVAL SPECIFICATION SHEET

As required by Florida Statute 553.842 and Florida Administrative Code 9B-72, please provide the information and approval numbers on the building components listed below if they will be utilized on the construction project for which you are applying for a building permit. We recommend you contact your local product supplier should you not know the product approval number for any of the applicable listed products.

Category/Subcategory		Manufacturer	Product Description	Approval Number(s)
1.	**Exterior Doors**			
A.	Swinging	Masonite	exterior Glazed Door	FL 4668-R1
B.	Sliding			
C.	Sectional	Clopay	Garage Automatic	542.15
D.	Roll-up			
E.	Automatic			
F.	Other			
2.	**Windows**			
A.	Single Hung	MI / CAPITOL	SINGLE HUNG VINYL	FL 5438.9
B.	Horizontal Slider			
C.	Casement			
D.	Double Hung			
E.	Fixed			
F.	Awning			
G.	Pass Through			
H.	Projected			
I.	Mullion			
J.	Wind Breaker			
K.	Dual Action			
L.	Other			
3.	**Panel Walls**			
A.	Siding	Hardiboard	Siding	FL 889-R2
B.	Soffits	Variform	Vinyl Soffit	2224
C.	EIFS			
D.	Storefronts			
E.	Curtain Walls			
F.	Wall Louver			
G.	Glass Block			
H.	Membrane			
I.	Greenhouse			
J.	Other	Ludflow	House Wrap	2841
4.	**Roofing Products**			
A.	Asphalt Shingles	Certainteed	Asphalt Shingles	FL 5444
B.	Underlayments	Tamko	#30 Felt Under	FL 1481-R1
C.	Roofing Fasteners			
D.	Non-Structural Metal Roofing			
E.	Wood Shingles and Shakes			
F.	Roofing Tiles			
G.	Roofing Insulation			
H.	Waterproofing			
I.	Built Up Roofing Roof Systems			
J.	Modified Bitumen			
K.	Single Ply Roof Systems			

Category/Subcategory		Manufacturer	Product Description	Approval Number(s)
L.	Roofing Slate			
M.	Cements-Adhesives Coatings			
N.	Liquid Applied Roof Systems			
O.	Roof Tile Adhesive			
P.	Spray Applied Polyurethane Roof			
Q.	Other			
5.	**Shutters**			
A.	Accordion			
B.	Bahama			
C.	Storm Panels			
D.	Colonial			
E.	Roll-up			
F.	Equipment			
G.	Other			
6.	**Skylights**			
A.	Skylight	SUN-TEK	Self flashing fixed	FL - 2442.5
B.	Other			
7.	**Structural Components**			
A.	Wood Connectors/ Anchors	SIMPSON.	Wood connectors	538, 1901, 474, 1725
B.	Truss Plates			
C.	Engineered Lumber			
D.	Railing			
E.	Coolers-Freezers			
F.	Concrete Admixtures			
G.	Material			
H.	Insulation Forms			
I.	Plastics			
J.	Deck Roof			
K.	Wall			
L.	Sheds			
M.	Other			
8.	**New Exterior Envelope Product**			

The products manufacturer, description, and approval numbers can be obtained from the Florida Department of Community Affairs Building Code information system on the web @ www.floridabuilding.org. I understand that at the time of inspection of these products, the following information must be available to the inspector on the jobsite: 1) copy of the product approval; 2) the performance characteristics which the product was tested and certified to comply with; and 3) copy of the applicable manufacturers installation requirements. Further, I understand these products may have to be removed if approval cannot be demonstrated during inspection.

Applicant Signature _____ Date _____

CONSTRUCTION AGREEMENT

THIS AGREEMENT is entered into by and between **ROBERT A. JOHNSON CONSTRUCTION LC**, hereinafter referred to as "**Contractor**", whose address for purpose of notice under this contract is: 5600 N.E. 60th Avenue, High Springs, Florida 32643, and whose phone number is: (386) 454-9613, and **SANDRA KAY DERKSEN** and **FRANK NELSON OHIDY (JTWRS)**, hereinafter referred to as "**Owner**", whose address for purpose of notice under this contract is: P.O. Box 359 Fort White, Florida 32038. Whose phone number is: (386) 497-1283.

RECITALS

A. Owner is fee simple title holder and is lawfully entitled to construct a single Family residence on the following described property:

Legal Description: 4260 SW CR 138 Fort White, FL 32038

BEG INTERS E LINE OF W 745 FT OF N ½ OF SW ¼ OF SW ¼ & S R/W OF CR-138, RUN E ALONG S R/W 702.89 FT, S 620.69 FT, W 702.89 FT, N620 FT TO POB, ORB 778-418, 795-491, JTWRS 885-576

Parcel Identification No. 22-7S-16-04291-010

B. The Owner represents to the Contractor that the Owner has adequate funds to pay for the construction as hereinafter provided.

NOW, THEREFORE, in consideration of the mutual covenants and agreements contained herein, the parties hereto do hereby covenant and agree as follows:

1. **GENERAL SCOPE OF WORK**. The Contractor shall furnish all of the labor and materials and perform all of the work within and on the lot described above as set forth in The Plans and Specifications provide by the Contractor and submitted to the Columbia County Building Department for the purpose of securing the building permit. The Plans and specifications as Initialed by the parties and The Specifications as set forth in Exhibit "A" shall be considered a part of this agreement.

2. **CONTRACTOR**. The Contractor represents to the Owner that he is fully experienced and properly qualified as an expert to perform the work provided for him and that he is properly, equipped, organized and financed to perform such work. The Contractor shall finance his

own operation hereunder, shall operate as an independent contractor and not as an agent of the Owner, and shall hold the Owner free and harmless from all liabilities, costs and charges by reason of any act, omission or representation of the Contractor or his subcontractors, agents or employees.

3. **OWNER**. The Owner represents to the Contractor that Owner is capable of providing the full purchase price, as herein set forth.

4. **CONTRACT PRICE**. The amount to be paid by the Owner to the Contractor, in consideration of the construction of the improvements herein described, shall be **TWO HUNDRED NINETY TWO THOUSAND AND FIVE HUNDRED EIGHTY DOLLARS 00/100 ($292,580.00).** In this contract price the Contractor has made allowances in the Specifications as set forth in Exhibit "A".

5. **TERMS OF PAYMENT**. The aforementioned contract price shall be paid in accordance with the Construction Draw Schedule Exhibit "C" provided by the Contractor.

6. **TIME FOR COMPLETION**. Contractors shall commence performance under this agreement within thirty (30) days of building permit approval and he agrees to use every reasonable effort to complete construction within two hundred forty (240) days from the date of beginning construction.

7. **PERMITS AND INSURANCE**. The Contractor shall obtain the building permit. Owner shall purchase a Builders Hazard Insurance policy, including Builders Risk Insurance with a maximum $ 1,000.00 deductible and list Robert A. Johnson Construction LC as an additional insured. Policy to provide coverage during the term of construction.

8. **CHANGE ORDERS**. All modifications shall be documented by a Change Order signed by the Owner and the Contractor. Change Order shall take the form of that Change Order as attached to this contract and marked Exhibit "B". Each Change Order processing fee is $ 175.00.

9. **ELECTRIC SERVICE**. The Owner shall pay the metered cost of providing electric service to the site for use by the Contractor during construction.

10. **CONDITION OF SITE**. The parties have performed no test to determine soil type or location of subsurface rocks or obstructions. The Owner shall be responsible for additional costs of construction attribute to soil type, location of subsurface rocks, etc.

CONSTRUCTION AGREEMENT

11. **ENFORCEMENT**. If any of the terms of this agreement are not abided by, and court costs result to enforce the terms of this agreement, the prevailing party shall be entitled to court costs, a reasonable attorney's fee, and any other reasonable costs required to bring suit.

12. Whenever used, the singular shall include the plural, the plural shall include the singular, and the use of any gender shall include all genders.

IN WITNESS WHEREOF, the parties have executed this Agreement this__ day of _____2007.

Signed, sealed, and delivered
In our presence as witnesses:

_____

_____
As to Owner

_____

_____
As to Contractor

Owner:

_____
SANDRA KAY DERKSEN

_____
FRANK NELSON OHIDY

Contractor: Robert A. Johnson
Construction LC

_____
ROBERT A. JOHNSON, MGRM

COLUMBIA COUNTY BUILDING DEPARTMENT
RESIDENTIAL MINIMUM PLAN REQUIREMENTS AND CHECKLIST
FOR THE FLORIDA RESIDENTIAL BUILDING CODE 2004 with 2005 & 2006
Supplements and One (1) and Two (2) Family Dwellings

ALL REQUIREMENTS ARE SUBJECT TO CHANGE

ALL BUILDING PLANS MUST INDICATE COMPLIANCE with the Current FLORIDA BUILDING CODES and the Current FLORIDA RESIDENTIAL CODE. ALL PLANS OR DRAWING SHALL PROVIDED CALCULATIONS AND DETAILS THAT HAVE THE SEAL AND SIGNATURE OF A CERTIFIED ARCHITECT OR ENGINEER REGISTERED IN THE STATE OF FLORIDA, OR ALTERNATE METHODOLOGIES, APPROVED BY THE STATE OF FLORIDA BUILDING COMMISSION FOR ONE-AND-TWO FAMILY DWELLINGS.

FOR DESIGN PURPOSES THE FOLLOWING BASIC WIND SPEEDS ARE PER FIGURE R301.2(4) of the Residential Code (Florida Wind speed map) **SHALL BE USED.**

WIND SPEED LINE SHALL BE DEFINED AS FOLLOWS: THE CENTERLINE OF INTERSTATE 75.

1. ALL BUILDINGS CONSTRUCTED EAST OF SAID LINE SHALL BE -------- 100 MPH
2. ALL BUILDINGS CONSTRUCTED WEST OF SAID LINE SHALL BE --------110 MPH
3. NO AREA IN COLUMBIA COUNTY IS IN A WIND BORNE DEBRIS REGION

GENERAL REQUIREMENTS;

- ø Two (2) complete sets of plans containing the following:
- ø All drawings must be clear, concise and drawn to scale, details that are not used shall be marked void
- ø Condition space (Sq. Ft.) and total (Sq. Ft.) under roof shall be shown on the plans.
- ø Designers name and signature shall be on all documents and a licensed architect or engineer, signature and official embossed seal shall be affixed to the plans and documents per FBC 106.1.

Site Plan information including:

- ø Dimensions of lot or parcel of land
- ø Dimensions of all building set backs
- o Location of all other structures (include square footage of structures) on parcel, existing or proposed well and septic tank and all utility easements.
- ø Provide a full legal description of property.

Wind-load Engineering Summary, calculations and any details required:

- ø Plans or specifications must meet state compliance with FRC Chapter 3
- ø The following information must be shown as per section FRC
- ø Basic wind speed (3-second gust), miles per hour
- ø Wind importance factor and nature of occupancy
- ø Wind exposure – if more than one wind exposure is used, the wind exposure and applicable wind direction shall be indicated
- ø The applicable internal pressure coefficient, Components and Cladding The design wind pressure in terms of psf (kN/m²), to be used for the design of exterior component and cladding materials not specifally designed by the registered design professional.

Elevations Drawing including:

- ø All side views of the structure
- ø Roof pitch
- ø Overhang dimensions and detail with attic ventilation
- ø Location, size and height above roof of chimneys
- ø Location and size of skylights with Florida Product Approval
- ø Number of stories
- ø e) Building height from the established grade to the roofs highest peak

Floor Plan including:

- Dimensioned area plan showing rooms, attached garage, breeze ways, covered porches, deck, balconies and raised floor surfaces located more than 30 inches above the floor or grade
- All exterior and interior shear walls indicated
- Shear wall opening shown (Windows, Doors and Garage doors
- Emergency escape and rescue opening in each bedroom (net clear opening shown)
- Safety glazing of glass where needed
- Fireplaces types (gas appliance) (vented or non-vented) or wood burning with Hearth (see chapter 10 of FRC)
- Stairs with dimensions (width, tread and riser and total run) details of guardrails, Handrails (see FRC 311)
- Plans must show and identify accessibility of bathroom (see FRC 322)

All materials placed within opening or onto/into exterior shear walls, soffits or roofs shall have Florida product approval number and mfg. installation information submitted with the plans (see Florida product approval form)

Foundation Plans Per FRC 403:

- a) Location of all load-bearing walls footings indicated as standard, monolithic, dimensions, size and type of reinforcing.
- b) All posts and/or column footing including size and reinforcing
- c) Any special support required by soil analysis such as piling.
- d) Assumed load-bearing valve of soil_____ (psf)
- e) Location of horizontal and vertical steel, for foundation or walls (include # size and type)

CONCRETE SLAB ON GRADE Per FRC R506

- Show Vapor retarder (6mil. Polyethylene with joints lapped 6 inches and sealed)
- Show control joints, synthetic fiber reinforcement or welded fire fabric reinforcement and Supports

PROTECTION AGAINST TERMITES Per FRC 320:

- Indicate on the foundation plan if soil treatment is used for subterranean termite prevention or submit other approved termite protection methods. Protection shall be provided by registered termiticides

Masonry Walls and Stem walls (load bearing & shear Walls) FRC Section R606

- Show all materials making up walls, wall height, and Block size, mortar type
- Show all Lintel sizes, type, spans and tie-beam sizes and spacing of reinforcement

Metal frame shear wall and roof systems shall be designed, signed and sealed by Florida Prof. Engineer or Architect

Floor Framing System: First and/or second story

- Floor truss package shall including layout and details, signed and sealed by Florida Registered Professional Engineer
- Show conventional floor joist type, size, span, spacing and attachment to load bearing walls, stem walls and/or priers
- Girder type, size and spacing to load bearing walls, stem wall and/or priers
- Attachment of joist to girder
- Wind load requirements where applicable
- Show required under-floor crawl space
- Show required amount of ventilation opening for under-floor spaces
- Show required covering of ventilation opening.
- Show the required access opening to access to under-floor spaces
- Show the sub-floor structural panel sheathing type, thickness and fastener schedule on the edges & intermediate of the areas structural panel sheathing
- Show Draft stopping, Fire caulking and Fire blocking
- Show fireproofing requirements for garages attached to living spaces, per FRC section R309
- Provide live and dead load rating of floor framing systems (psf).

WOOD WALL FRAMING CONSTRUCTION FRC CHAPTER 6

- Stud type, grade, size, wall height and oc spacing for all load bearing or shear walls.
- Fastener schedule for structural members per table R602.3 (1) are to be shown.
- Show wood structural panel's sheathing attachment to studs, joist, trusses, rafters and structural members, showing fastener schedule attachment on the edges & intermediate of the areas structural panel sheathing
- Show all required connectors with a max uplift rating and required number of connectors and oc spacing for continuous connection of structural walls to foundation and roof trusses or rafter systems.
- Show sizes, type, span lengths and required number of support jack studs, king studs for shear wall opening and girder or header per FRC Table R502.5 (1)
- Indicate where pressure treated wood will be placed.
- Show all wall structural panel sheathing, grade, thickness and show fastener schedule for structural panel sheathing edges & intermediate areas
- A detail showing gable truss bracing, wall balloon framing details or/ and wall hinge bracing detail

ROOF SYSTEMS:

- Truss design drawing shall meet section FRC R802.10 Wood trusses. Include a layout and truss details and be signed and sealed by Fl. Pro. Eng.
- Show types of connector's assemblies' and resistance uplift rating for all trusses and rafters
- Show gable ends with rake beams showing reinforcement or gable truss and wall bracing details
- Provide dead load rating of trusses

Conventional Roof Framing Layout Per FRC 802:

- Rafter and ridge beams sizes, span, species and spacing
- Connectors to wall assemblies' include assemblies' resistance to uplift rating.
- Valley framing and support details
- Provide dead load rating of rafter system.

ROOF SHEATHING FRC Table R602.3(2) FRC 803

- Include all materials which will make up the roof decking, identification of structural panel sheathing, grade, thickness and show fastener schedule for structural panel sheathing on the edges & intermediate areas

ROOF ASSEMBLIES FRC Chapter 9

- Include all materials which will make up the roof assembles covering; with Florida Product Approval numbers for each component of the roof assembles covering.

FCB Chapter 13 Florida Energy Efficiency Code for Building Construction

- Residential construction shall comply with this code by using the following compliance methods in the FBC Subchapter 13-6, Residential buildings compliance methods. Two of the required forms are to be submitted, showing dimensions condition area equal to the total condition living space area
- Show the insulation R value for the following areas of the structure: Attic space, Exterior wall cavity and Crawl space (if applicable)

HVAC information shown

- Manual J sizing equipment or equivalent computation
- Exhaust fans locations in bathrooms

Plumbing Fixture layout shown

- All fixtures waste water lines shall be shown on the foundation plan

Electrical layout shown including:

- Switches, outlets/receptacles, lighting and all required GFCI outlets identified
- Ceiling fans
- Smoke detectors
- Service panel, sub-panel, location(s) and total ampere ratings

911: 4260 SW CR138

26672

Notice of Treatment 42087

Applicator: Florida Pest Control & Chemical Co. (www.flapest .com)
Address: 116 NW 16 AVE
City GVILLE Phone 376-2661

Site Location: Subdivision
Lot # Block# Permit #
Address 4206 SW CR 138 H. SPGS

Product used	Active Ingredient	% Concentration
☑ Premise	Imidacloprid	0.1%
☐ Termidor	Fipronil	0.12%
☐ Bora-Care	Disodium Octaborate Tetrahydrate	23.0%

Type treatment: ☑ Soil ☐ Wood

Area Treated	Square feet	Linear feet	Gallons Applied
MB-GRG-PRCHS	3048	284.10	275

As per Florida Building Code 104.2.6 – If soil chemical barrier method for termite prevention is used, final exterior treatment shall be completed prior to final building approval.

If this notice is for the final exterior treatment, initial this line _____.

6/24/08	12:14	BILL E.
Date	Time	Print Technician's Name

Remarks:

Applicator - White Permit File - Canary Permit Holder - Pink

10/05 ©