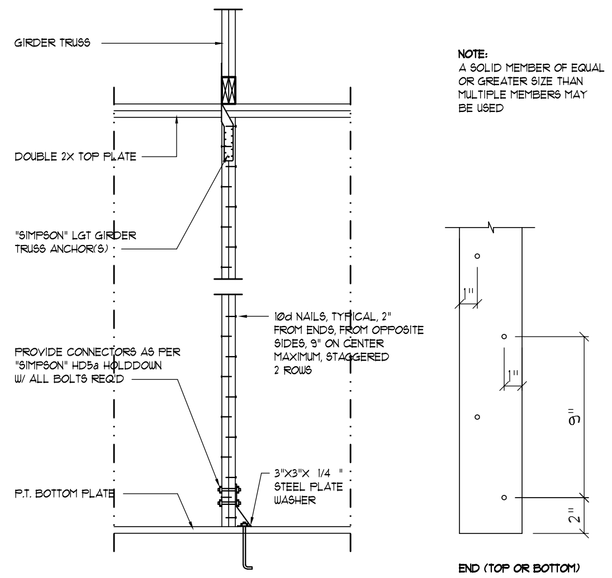

Girder Truss Column DET.

A

SCALE: 1/2" = 1'-0"

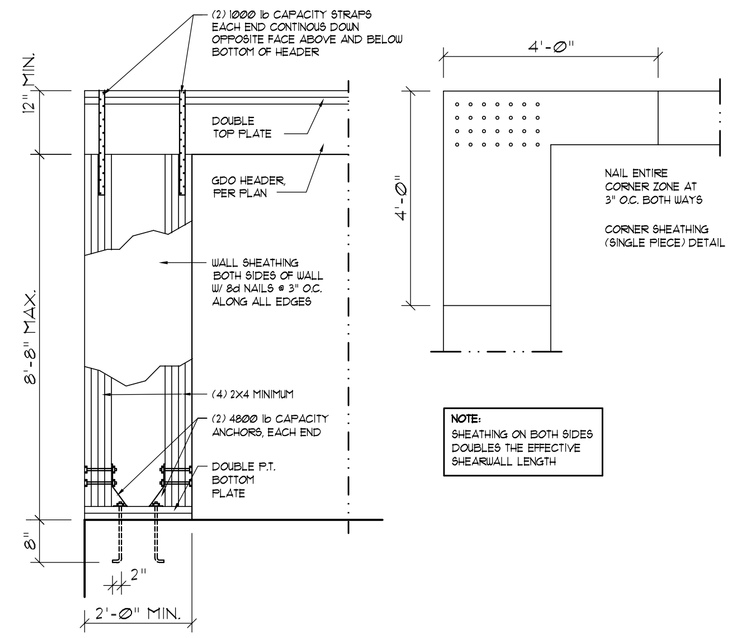

Garage End Wall DETAILS

B

SCALE: 1/2" = 1'-0"

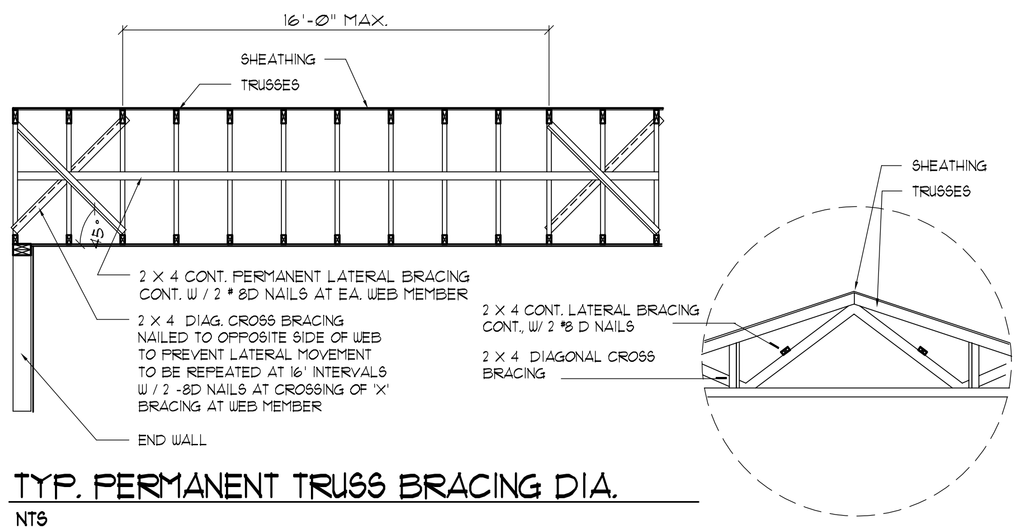

TYP. PERMANENT TRUSS BRACING DIA.

NTS

NOTE: ALL WOOD TO BE NUMBER 2 GRADE SOUTHERN YELLOW PINE

Truss Bracing DETAILS

C

SCALE: AS NOTED

ROOF SHEATHING FASTENINGS			
NAILING ZONE	SHEATHING TYPE	FASTENER	SPACING
1	7/16 " OSB. OR 15/32 CDX	8d COMMON OR 8d HOT DIPPED GALVANIZED BOX NAILS	6 in. o.c. EDGE 12 in. o.c. FIELD
2			6 in. o.c. EDGE 6 in. o.c. FIELD
3			4 in. o.c. @ GABLE TRUSS OR GABLE ENDWALL 6 in. o.c. EDGE 6 in. o.c. FIELD

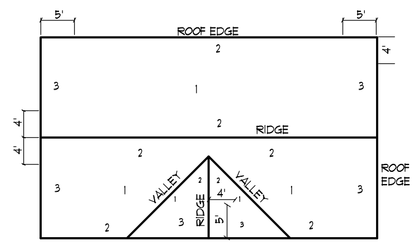

ROOF SHEATHING NAILING ZONES
(GABLE ROOF)

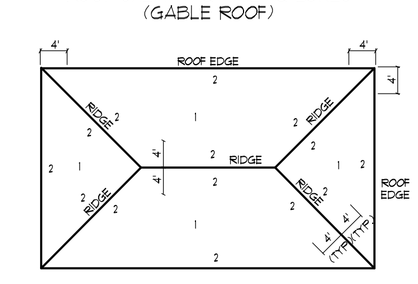

ROOF SHEATHING NAILING ZONES
(HIP ROOF)

Roof Nail Pattern DET.

E

SCALE: NONE

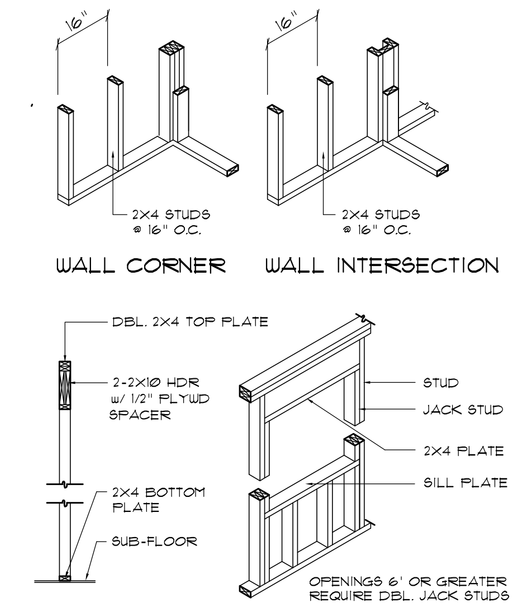

Wall Framing/ Header DET'S

F

SCALE: NONE

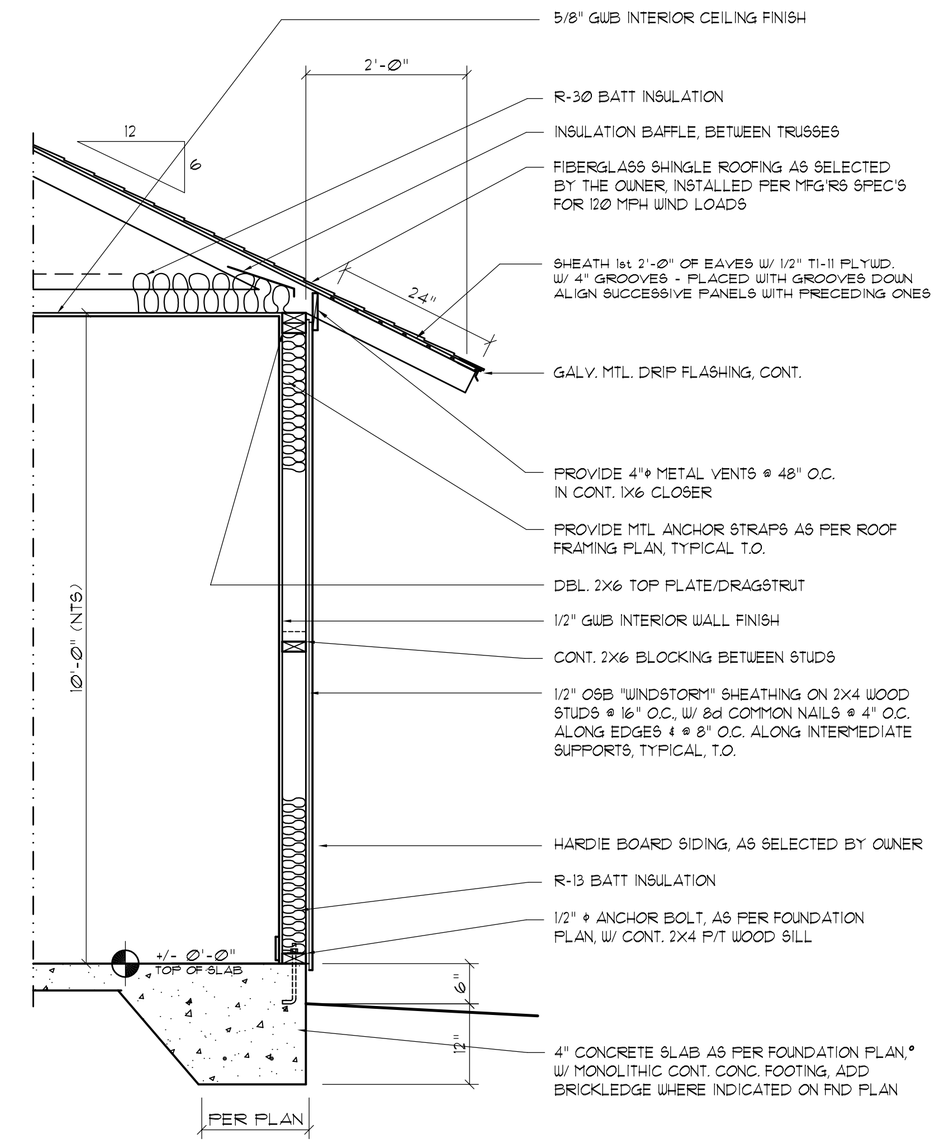

Typical Wall SECTION

H

SCALE: 3/4" = 1'-0"

EXTERIOR WALL SHEATHING:
APPLY VERTICALLY, "WindSTORM" 7/16" OSB 48" X 97", 109", 121" OR 14
SHEATHING. FASTEN TO THE TOP PLATE AND THE SILL PLATE WITH EITHE
6d COMMON NAILS @ 3" O.C. OR 8d COMMON NAILS @ 4" O.C. FASTEN TO
EACH STUD WITH EITHER 6d COMMON NAILS @ 6" O.C. OR 8d COMMON
NAILS @ 8" O.C.

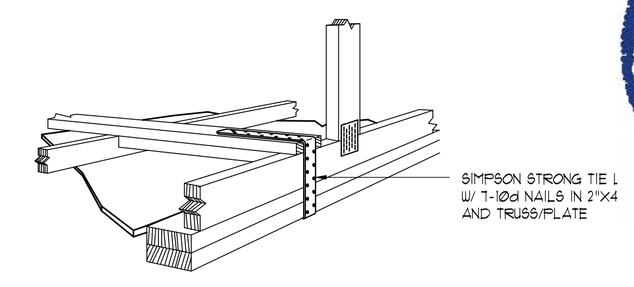

GABLE END GYPSUM DIAPHRAGM HOLDOWN CONNECTOR

G.1

SCALE: NONE

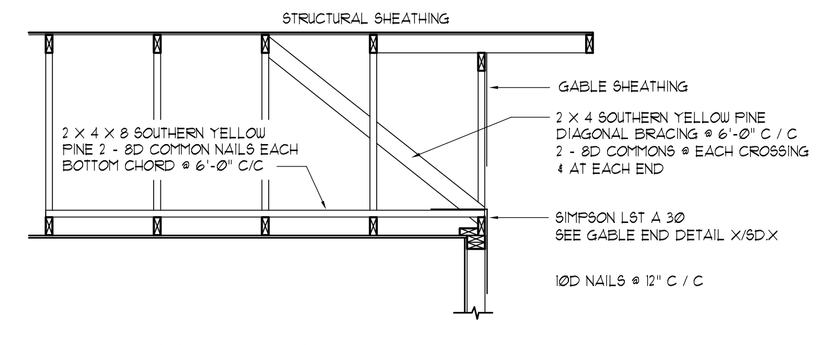

END WALL BRACING FOR CEILING DIAPHRAGM

G.2

NTS (ALTERNATIVE TO BALLOON FRAMING)

NOTE: ALL WOOD TO BE NUMBER 2 GRADE SOUTHERN YELLOW PINE

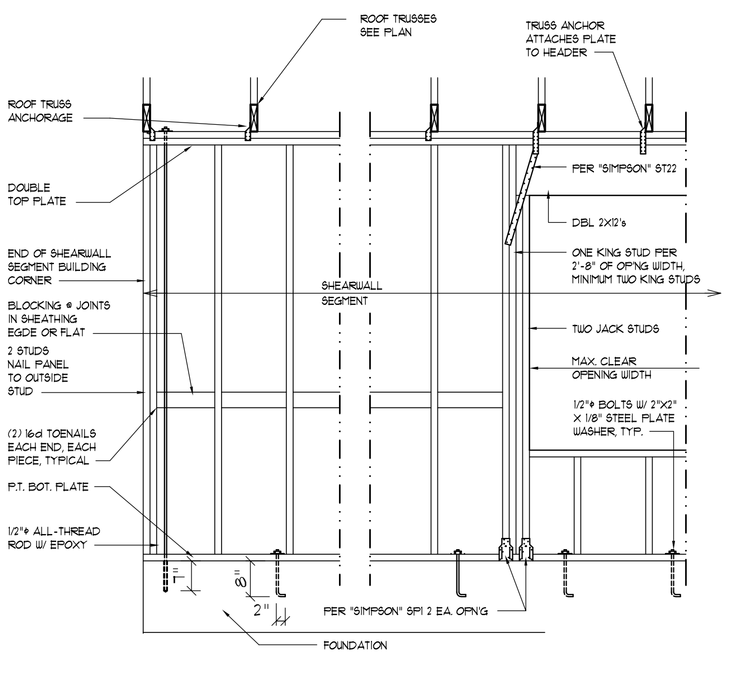

SHEARWALL NOTES:

1. ALL SHEARWALLS SHALL BE TYPE 2 SHEARWALLS AS DEFINED BY: STD 10-97 SSBBCI 305.4.3.
2. THE WALL SHALL BE ENTIRELY SHEATHED WITH 7/16 " OSB, INCLUDING AREAS ABOVE AND BELOW OPENINGS
3. ALL SHEATHING SHALL BE ATTACHED TO FRAMING ALONG ALL FOUR EDGES WITH JOINTS FOR ADJACENT PANELS OCCURING OVER COMMON FRAMING MEMBERS OR ALONG BLOCKING.
4. NAIL SPACING SHALL BE 4" O.C. EDGES AND 8" O.C. IN THE FIELD.
5. TYPE 2 SHEARWALLS ARE DESIGNED FOR THE OPENING IT CONTAINS. MAXIMUM HEIGHT OF OPENING SHALL BE 5/6 TIMES THE WALL HEIGHT. THE MINIMUM DISTANCE BETWEEN OPENINGS SHALL BE THE WALL HEIGHT/3.5 FOR 8'-0" WALLS (2'-3").

OPENING WIDTH	SILL PLATES	16d TOE NAILS EACH END
UP TO 6'-0"	(1) 2x4 OR (1) 2x6	1
6' TO 9'-0"	(3) 2x4 OR (1) 2x6	2
9' TO 12'-0"	(5) 2x4 OR (2) 2x6	3

Shear Wall DETAILS

D

SCALE: NONE

HEADER SPANS FOR EXTERIOR BEARING WALLS								
HEADERS SUPPORTING:	HEADER SIZE	BUILDING WIDTH (FT)						
		20'		28'		36'		
		SPAN	# JACKS	SPAN	# JACKS	SPAN	# JACKS	
ROOF, CEILING	2-2x4	3'-6"	1	3'-2"	1	2'-10"	1	
	2-2x6	5'-5"	1	4'-8"	1	4'-2"	1	
	2-2x8	6'-10"	1	5'-11"	2	5'-4"	1	
	2-2x10	8'-5"	2	7'-3"	2	6'-6"	2	
	2-2x12	9'-9"	2	8'-5"	2	7'-6"	2	
	3-2x8	8'-4"	1	7'-5"	1	6'-8"	1	
	3-2x10	10'-6"	1	9'-1"	2	8'-2"	1	
	3-2x12	12'-2"	2	10'-7"	2	9'-5"	2	
	4-2x8	9'-2"	1	8'-4"	1	9'-2"	1	
	4-2x10	11'-8"	1	10'-6"	1	9'-5"	1	
	4-2x12	14'-1"	1	12'-2"	2	10'-11"	1	

These drawings, as instruments of service, are the sole property of the architect, and may not be used, copied or reproduced in whole or in part for use on or incorporated within any other job without specific and individual authorization by the architect.

REVISION:

Copyright 2023 ©
N.P. Geisler, Architect

DRAWN: npg

NEW OFFICE for:
KYLE McLEOD
LAKE CITY, FLORIDA
WALL SECTION & FRAMING DETAILS

Celebrating 51 Years of Service
1972 - 2023
N.P. Geisler, Architect
AR0007005

CUSTOM ARCHITECTURAL DESIGN

NICHOLAS PAUL GEISLER
ARCHITECT

Columbia County Building Department
Plans Reviewed for Code Compliance
State of Florida

1758 NW Brown Rd.
Lake City, FL 32055
386-365-4355

DATE: 02 SEP 2023

COMM: 2K2336

SHEET: A.7

7 OF 7

AR0007005

Digitally signed by: N. P. GEISLER
DN: CN = N. P. GEISLER C = US O = AR0007005 OU = ARCHITECT
Date: 2023.09.04 17:45:34 -05'00'