SYSTEM INFORMATION	
MODULE	HANWHA Q.PEAK DUO BLK ML-G10+ 410
INVERTER	ENPHASE IQ7PLUS-72-2-US
RACKING	S-5 CORRUBRACKET W/UNIRAC HORIZON 2-RAIL RACKING SYSTEM
SYSTEM SIZE (DC)	9.84 KW
LOCATION	30.1938294,-82.7018288

CLIMATIC & GEOGRAPHIC DESIGN CRITERIA TABLE R301.2(1)	
SPEED (MPH)	120
TOPOGRAPHIC EFFECTS	B
SPECIAL WIND REGION	NO
WIND BORNE DEBRIS ZONE	2
SEISMIC DESIGN CATEGORY	C
CLIMATE ZONE	2A
WIND EXPOSURE CATETORY	B

PLAN KEY	
PV-1	COVER PAGE
PV-1.1	ATTACHMENT DETAIL
PV-1.1(2)	ATTACHMENT DETAIL
PV-1.2	INVERTER SPECS
PV-1.3	COMBINER SPECS
PV-1.4	PANEL SPECS
PV-2	PANEL LAYOUT
PV-3	ELETRICAL
PV-3.1	ELECTRICAL CONT.
PV-3.2	EQUIPMENT LABELS

GENERAL NOTES:

THIS PV SYSTEM HAS BEEN DESIGNED TO MEET THE MINIMUM DESIGN STANDARDS FOR BUILDING AND OTHER STRUCTURES OF THE ASCE 7-22, 8TH EDITION 2023 FLORIDA RESIDENTIAL CODE, 8TH EDITION 2023 FLORIDA BUILDING CODE, 8TH EDITION 2023 FLORIDA FIRE PREVENTION CODE, NEC 2020 AND ALL LOCAL CODES & ORDINANCES.

ROOF SHALL HAVE NO MORE THAN TWO LAYERS OF COVERING IN ADDITION TO THE SOLAR EQUIPMENT.

INSTALLATION OF SOLAR EQUIPMENT SHALL BE FLUSH MOUNTED, PARALLEL TO AND NO MORE THAN 6-INCHES ABOVE THE SURFACE OF THE ROOF.

ANY PLUMBING VENTS ARE NOT TO BE CUT OR COVERED FOR SOLAR EQUIPMENT INSTALLATION. ANY RELOCATION OR MODIFICATION OF THE VENT REQUIRES A PLUMBING PERMIT AND INSPECTION.

ALL DESIGN, CALCULATIONS ARE PERFORMED BY MICHAEL S. REZK, P.E. PROFESSIONAL ENGINEER, WITH LICENCE No. 95844.

INVERTER PLACEMENT:

SYSTEM UTILIZES "ENPHASE" MICRO-INVERTERS WITH RAPID SHUTDOWN CONTROL LOCATED ON THE BACK SIDE OF EACH MODULE.

STRUCTURAL STATEMENT:

THE EXISTING STRUCTURE IS ADEQUATE TO SUPPORT THE NEW LOADS IMPOSED BY THE PHOTOVOLTAIC MODULE SYSTEM INCLUDING UPLIFT & SHEAR.EXISTING RAFTER SIZES & DIMENSIONS CONFORM TO 8TH EDITION 2023 FLORIDA RESIDENTIAL CODE

MOUNTING BRACKETS AND HARDWARE MEET OR EXCEED FLORIDA CODE REQUIREMENTS FOR THE DESIGN CRITERIA OF THE TOWN.

FSEC CERTIFICATION STATEMENT:

PER FL. STATUE 377.705 , I, MINA A. MAKAR PE# 86753, CERTIFICATE OF AUTHORIZATION #33404, AN ENGINEER LICENSED PURSUANT TO CHAPTER 471,CERTIFY THAT THE PV ELECTRICAL SYSTEM AND ELECTRICAL COMPONENTS ARE DESIGNED AND APPROVED USING THE STANDARDS CONTAINED IN THE MOST RECENT VERSION OF THE FLORIDA BUILDING CODE. FBC 2023

FBC, RESIDENTIAL 2023

TABLE R301.2.1.3

WIND SPEED CONVERSIONS[a]

V_{ult}	110	115	120	130	140	150	160	170	180	190	200
V_{asd}	85	89	93	101	108	116	124	132	139	147	155

For SI: 1 mile per hour = 0.447 m/s.

a. Linear interpolation is permitted.

HANWHA Q.PEAK DUO BLK ML-G10+ 410
410 WATT MODULE
74'' X 41.1'' X 1.26''
(SEE DATASHEET)

Columbia County Building Department
Plans Reviewed for Code Compliance
State of Florida

MODULES	24
INVERTERS	24
L-FOOT ATTACHMENT W/ S-5 CORRUBRACKET	50
171" RAILS	11
ENPHASE COMBINER BOX	1
EATON 60A FUSIBLE AC DISCONNECT	1
40A FUSES	2
40A BACKFEED BREAKER	1

momentum SOLAR

PRO CUSTOM SOLAR LLC D.B.A. MOMENTUM SOLAR
325 HIGH STREET, METUCHEN, NJ 08840
(732) 902-6224
MOMENTUMSOLAR.COM

PROFESSIONAL ENGINEERING

MINA A. MAKAR
LICENSE
No PE86753
STATE OF FLORIDA
PROFESSIONAL ENGINEER

Digitally signed by
Reason: Digitally signed by Mina A Makar. Reason : This item has been electronically signed and sealed by [Mina A. Makar, PE 86753, COA # 33404] on the Date and Time Stamp shown using a digital signature. Printed copies of this document are not considered signed and sealed and the signature must be verified on any electronic copies
Date: 2024.06.05 02:06:50 -05:00

Digitally signed by Mina A Makar. Reason : This item has been electronically signed and sealed by [Mina A. Makar, PE 86753, COA # 33404] on the Date and Time Stamp shown using a digital signature. Printed copies of this document are not considered signed and sealed and the signature must be verified on any electronic copies

SOLAR CONTRACTOR

CAMERON CHRISTENSEN
CERTIFIED SOLAR CONTRACTOR LICENSE NUMBER: CVC57036
MOMENTUM SOLAR
5728 MAJOR BLVD. SUITE 307, ORLANDO FL. 32819

CUSTOMER INFORMATION

CRYSTAL HAIR - MS151756
274 NORTHWEST OPEN COURT
LAKE CITY, FL 32055
(386) 288-8884

PV SYSTEM INFORMATION

SYSTEM SIZE (DC): 9.84 KW
24 MODULES: HANWHA Q.PEAK DUO BLK ML-G10+ 410
24 INVERTERS: ENPHASE IQ7PLUS-72-2-US

PROJECT INFORMATION

INITIAL	DATE: 6/5/2024	DESIGNER: AKL
REV:	DATE:	DESIGNER:
REV:	DATE:	DESIGNER:

COVER PAGE

PV-1

PART # TABLE		
P/N	DESCRIPTION	LENGTH
084RLM1	NXT HORIZON RAIL 84" MILL	84"
084RLD1	NXT HORIZON RAIL 84" DARK	84"
168RLM1	NXT HORIZON RAIL 168" MILL	168"
168RLD1	NXT HORIZON RAIL 168" DARK	168"
208RLM1	NXT HORIZON RAIL 208" MILL	208"
208RLD1	NXT HORIZON RAIL 208" DARK	208"
246RLM1	NXT HORIZON RAIL 246" MILL	246"
246RLD1	NXT HORIZON RAIL 246" DARK	246"

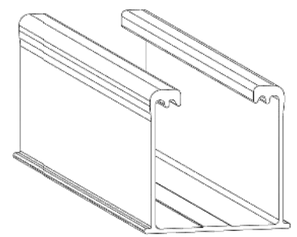

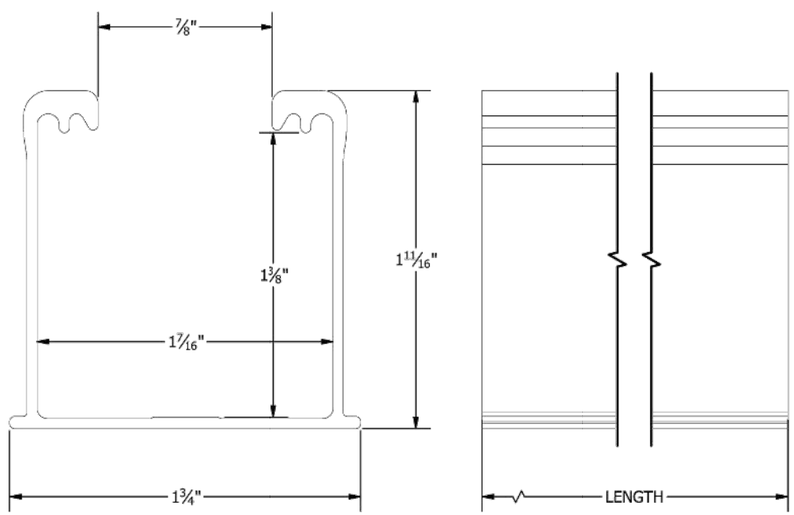

UNIRAC
1411 BROADWAY BLVD. NE
ALBUQUERQUE, NM 87102 USA
PHONE: 505.242.6411
WWW.UNIRAC.COM

PRODUCT LINE:	NXT HORIZON
DRAWING TYPE:	PART DETAIL
DESCRIPTION:	RAIL
REVISION DATE:	9/13/2021

DRAWING NOT TO SCALE
ALL DIMENSIONS ARE NOMINAL

PRODUCT PROTECTED BY ONE OR MORE US PATENTS
LEGAL NOTICE

NH-P01
SHEET

PART # TABLE		
P/N	DESCRIPTION	LENGTH
RLSPLCM1	NXT HORIZON RAIL SPLICE	10"

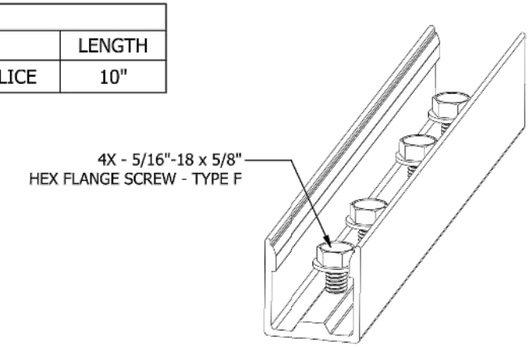

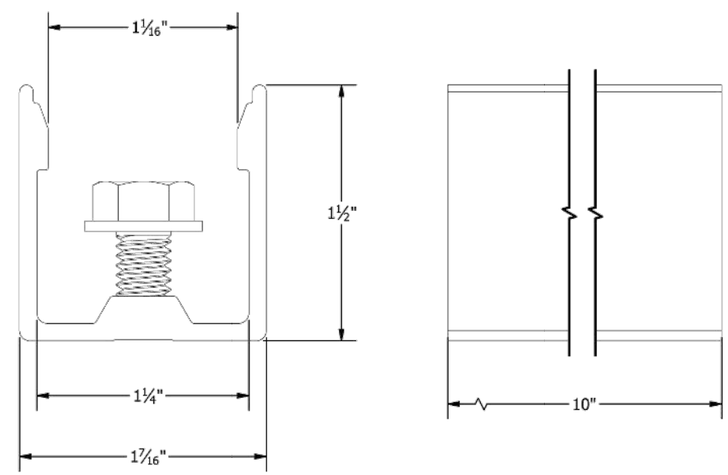

UNIRAC
1411 BROADWAY BLVD. NE
ALBUQUERQUE, NM 87102 USA
PHONE: 505.242.6411
WWW.UNIRAC.COM

PRODUCT LINE:	NXT HORIZON
DRAWING TYPE:	PART DETAIL
DESCRIPTION:	RAIL SPLICE
REVISION DATE:	9/22/2021

DRAWING NOT TO SCALE
ALL DIMENSIONS ARE NOMINAL

PRODUCT PROTECTED BY ONE OR MORE US PATENTS
LEGAL NOTICE

NH-P02
SHEET

momentum SOLAR

PRO CUSTOM SOLAR LLC D.B.A. MOMENTUM SOLAR
325 HIGH STREET, METUCHEN, NJ 08840
(732) 902-6224
MOMENTUMSOLAR.COM

PROFESSIONAL ENGINEERING

MINA A. MAKAR
LICENSE
No PE86753
STATE OF FLORIDA
PROFESSIONAL ENGINEER

Digitally signed by
Reason: Digitally signed by Mina A Makar. Reason: This item has been electronically signed and sealed by [Mina A. Makar, PE 86753, COA # 33404] on the Date and Time Stamp shown using a digital signature. Printed copies of this document are not considered signed and sealed and the signature must be verified on any electronic copies
Date: 2024.06.05 02:06:50 -05:00

SOLAR CONTRACTOR

CAMERON CHRISTENSEN
CERTIFIED SOLAR CONTRACTOR LICENSE NUMBER: CVC57036
MOMENTUM SOLAR
5728 MAJOR BLVD. SUITE 307, ORLANDO FL. 32819

CUSTOMER INFORMATION

CRYSTAL HAIR - MS151756
274 NORTHWEST OPEN COURT
LAKE CITY, FL 32055
(386) 288-8884

PV SYSTEM INFORMATION

SYSTEM SIZE (DC): 9.84 KW
24 MODULES: HANWHA Q.PEAK DUO BLK ML-G10+ 410
24 INVERTERS: ENPHASE IQ7PLUS-72-2-US

PROJECT INFORMATION

INITIAL	DATE: 6/5/2024	DESIGNER: AKL
REV:	DATE:	DESIGNER:
REV:	DATE:	DESIGNER:

ATTACHMENT DETAIL

PV-1.1

S-5!®

The Right Way!

CorruBracket™

CorruBracket™ can be used to mount almost anything to corrugated metal roofing and is compatible with 7/8" and 3/4" corrugated roofing. No messy sealants to apply! No chance for leaks! The CorruBracket comes with factory-applied butyl sealant already in the base, and the S-5!® patented reservoir conceals the sealant, preventing UV degredation.

Installation is simple! CorruBracket is mounted directly into the supporting structure of the roof, i.e. roof decking, wood or steel purlins, or trusses. No surface preparation is necessary; simply wipe away excess oils and debris, peel the release paper, align, and apply. Secure through the pre-punched holes using the appropriate screws for the supporting structure.

CorruBracket is so strong, it will even support heavy-duty applications like snow retention. For corrugated profiles, the CorruBracket is the perfect match for our ColorGard® snow retention system. CorruBracket is economical and facilitates quick and easy installation.

The right way to attach almost anything to metal roofs!

1

2

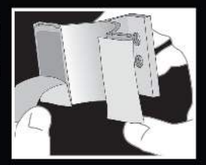

3

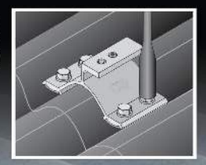

CorruBracket™

S-5!® CorruBracket™ is the right way to attach almost anything to 7/8" and 3/4" corrugated roofing, including PV via DirectAttached™ or rail methods.

888-825-3432 | www.S-5.com

S-5!®

The Right Way!

CorruBracket™ is extremely versatile. It can be used for almost any attachment need on 7/8" and 3/4" corrugated metal roofing. No messy sealants to apply. The factory-applied butyl sealant waterproofs and makes installation a snap!

Each **CorruBracket™** comes with factory-applied butyl sealant in the base. CorruBracket is compatible with most common metal roofing materials. For design assistance, ask your distributor, or use our web-based calculator at **www.S-5.com** for job-specific system engineering and design of your next snow retention project. Also, please visit our website for more information including CAD details, metallurgical compatibilities and specifications.

The CorruBracket has been tested for load-to-failure results on wood decking, and metal and wood purlins. The independent lab test data found at www.S-5.com can be used for load-critical designs and applications. S-5!® holding strength is unmatched in the industry.

Example Profile

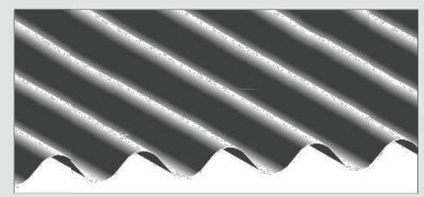

CorruBracket™

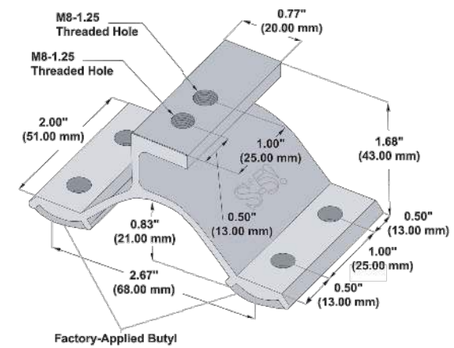

Please note: All measurements are rounded to the second decimal place. Contact your distributor for information about hardware requirements.

Example Applications

S-5-PV Kit (DirectAttached™ or Rail)

ColorGard®

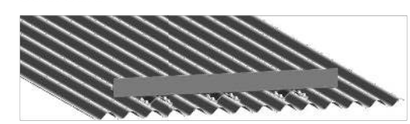

S-5!® Warning! Please use this product responsibly!

Products are protected by multiple U.S. and foreign patents. For published data regarding holding strength, bolt torque, patents and trademarks visit the S-5! website at www.S-5.com.

Copyright 2013, Metal Roof Innovations, Ltd. S-5! products are patent protected. S-5! aggressively protects its patents, trademarks, and copyrights. Version 120517.

Distributed by

ATTACHMENT DETAIL FOR CORRUGATED METAL ROOF

momentum SOLAR

PRO CUSTOM SOLAR LLC D.B.A. MOMENTUM SOLAR
325 HIGH STREET, METUCHEN, NJ 08840
(732) 902-6224
MOMENTUMSOLAR.COM

PROFESSIONAL ENGINEERING

MINA A. MAKAR
LICENSE
No PE86753
STATE OF FLORIDA
PROFESSIONAL ENGINEER

Digitally signed by
Reason: Digitally signed by Mina A Makar. Reason: This item has been electronically signed and sealed by [Mina A. Makar, PE 86753, COA # 33404] on the Date and Time Stamp shown using a digital signature. Printed copies of this document are not considered signed and sealed and the signature must be verified on any electronic copies
Date: 2024.06.05 02:06:50 -05:00

Digitally signed by Mina A Makar.
Reason: This item has been electronically signed and sealed by [Mina A. Makar, PE 86753, COA # 33404] on the Date and Time Stamp shown using a digital signature. Printed copies of this document are not considered signed and sealed and the signature must be verified on any electronic copies

SOLAR CONTRACTOR

CAMERON CHRISTENSEN
CERTIFIED SOLAR CONTRACTOR LICENSE NUMBER: CVC57036
MOMENTUM SOLAR
5728 MAJOR BLVD. SUITE 307, ORLANDO FL. 32819

CUSTOMER INFORMATION

CRYSTAL HAIR - MS151756
274 NORTHWEST OPEN COURT
LAKE CITY, FL 32055
(386) 288-8884

PV SYSTEM INFORMATION

SYSTEM SIZE (DC): 9.84 KW
24 MODULES: HANWHA Q.PEAK DUO BLK ML-G10+ 410
24 INVERTERS: ENPHASE IQ7PLUS-72-2-US

PROJECT INFORMATION

INITIAL	DATE: 6/5/2024	DESIGNER: AKL
REV:	DATE:	DESIGNER:
REV:	DATE:	DESIGNER:

ATTACHMENT DETAIL

PV-1.1 (2)

Data Sheet
Enphase Microinverters
Region: AMERICAS

Enphase IQ 7 and IQ 7+ Microinverters

The high-powered smart grid-ready **Enphase IQ 7 Micro™** and **Enphase IQ 7+ Micro™** dramatically simplify the installation process while achieving the highest system efficiency.

Part of the Enphase IQ System, the IQ 7 and IQ 7+ Microinverters integrate with the Enphase IQ Envoy™, Enphase IQ Battery™, and the Enphase Enlighten™ monitoring and analysis software.

IQ Series Microinverters extend the reliability standards set forth by previous generations and undergo over a million hours of power-on testing, enabling Enphase to provide an industry-leading warranty of up to 25 years.

Easy to Install

- Lightweight and simple
- Faster installation with improved, lighter two-wire cabling
- Built-in rapid shutdown compliant (NEC 2014 & 2017)

Productive and Reliable

- Optimized for high powered 60-cell/120 half-cell and 72-cell/144 half-cell* modules
- More than a million hours of testing
- Class II double-insulated enclosure
- UL listed

Smart Grid Ready

- Complies with advanced grid support, voltage and frequency ride-through requirements
- Remotely updates to respond to changing grid requirements
- Configurable for varying grid profiles
- Meets CA Rule 21 (UL 1741-SA)

* The IQ 7+ Micro is required to support 72-cell/144 half-cell modules.

To learn more about Enphase offerings, visit **enphase.com**

ENPHASE.

Enphase IQ 7 and IQ 7+ Microinverters

INPUT DATA (DC)	IQ7-60-2-US		IQ7PLUS-72-2-US	
Commonly used module pairings[1]	235 W - 350 W +		235 W - 440 W +	
Module compatibility	60-cell/120 half-cell PV modules only		60-cell/120 half-cell and 72-cell/144 half-cell PV modules	
Maximum input DC voltage	48 V		60 V	
Peak power tracking voltage	27 V - 37 V		27 V - 45 V	
Operating range	16 V - 48 V		16 V - 60 V	
Min/Max start voltage	22 V / 48 V		22 V / 60 V	
Max DC short circuit current (module Isc)	15 A		15 A	
Overvoltage class DC port	II		II	
DC port backfeed current	0 A		0 A	
PV array configuration	1 x 1 ungrounded array; No additional DC side protection required; AC side protection requires max 20A per branch circuit			
OUTPUT DATA (AC)	**IQ 7 Microinverter**		**IQ 7+ Microinverter**	
Peak output power	250 VA		295 VA	
Maximum continuous output power	240 VA		290 VA	
Nominal (L-L) voltage/range[2]	240 V / 211-264 V	208 V / 183-229 V	240 V / 211-264 V	208 V / 183-229 V
Maximum continuous output current	1.0 A (240 V)	1.15 A (208 V)	1.21 A (240 V)	1.39 A (208 V)
Nominal frequency	60 Hz		60 Hz	
Extended frequency range	47 - 68 Hz		47 - 68 Hz	
AC short circuit fault current over 3 cycles	5.8 Arms		5.8 Arms	
Maximum units per 20 A (L-L) branch circuit[3]	16 (240 VAC)	13 (208 VAC)	13 (240 VAC)	11 (208 VAC)
Overvoltage class AC port	III		III	
AC port backfeed current	18 mA		18 mA	
Power factor setting	1.0		1.0	
Power factor (adjustable)	0.85 leading ... 0.85 lagging		0.85 leading ... 0.85 lagging	
EFFICIENCY	**@240 V**	**@208 V**	**@240 V**	**@208 V**
Peak efficiency	97.6 %	97.6 %	97.5 %	97.3 %
CEC weighted efficiency	97.0 %	97.0 %	97.0 %	97.0 %
MECHANICAL DATA				
Ambient temperature range	-40°C to +65°C			
Relative humidity range	4% to 100% (condensing)			
Connector type	MC4 (or Amphenol H4 UTX with additional Q-DCC-5 adapter)			
Dimensions (HxWxD)	212 mm x 175 mm x 30.2 mm (without bracket)			
Weight	1.08 kg (2.38 lbs)			
Cooling	Natural convection - No fans			
Approved for wet locations	Yes			
Pollution degree	PD3			
Enclosure	Class II double-insulated, corrosion resistant polymeric enclosure			
Environmental category / UV exposure rating	NEMA Type 6 / outdoor			
FEATURES				
Communication	Power Line Communication (PLC)			
Monitoring	Enlighten Manager and MyEnlighten monitoring options. Both options require installation of an Enphase IQ Envoy.			
Disconnecting means	The AC and DC connectors have been evaluated and approved by UL for use as the load-break disconnect required by NEC 690.			
Compliance	CA Rule 21 (UL 1741-SA) UL 62109-1, UL1741/IEEE1547, FCC Part 15 Class B, ICES-0003 Class B, CAN/CSA-C22.2 NO. 107.1-01 This product is UL Listed as PV Rapid Shut Down Equipment and conforms with NEC 2014, NEC 2017, and NEC 2020 section 690.12 and C22.1-2015 Rule 64-218 Rapid Shutdown of PV Systems, for AC and DC conductors, when installed according manufacturer's instructions.			

1. No enforced DC/AC ratio. See the compatibility calculator at https://enphase.com/en-us/support/module-compatibility.
2. Nominal voltage range can be extended beyond nominal if required by the utility.
3. Limits may vary. Refer to local requirements to define the number of microinverters per branch in your area.

To learn more about Enphase offerings, visit **enphase.com**

ENPHASE.

© 2020 Enphase Energy. All rights reserved. Enphase, the Enphase logo, Enphase IQ 7, Enphase IQ 7+, Enphase IQ Battery, Enphase Enlighten, Enphase IQ Envoy, and other trademarks or service names are the trademarks of Enphase Energy, Inc. Data subject to change. 2020-08-12

momentum SOLAR

PRO CUSTOM SOLAR LLC D.B.A. MOMENTUM SOLAR
325 HIGH STREET, METUCHEN, NJ 08840
(732) 902-6224
MOMENTUMSOLAR.COM

PROFESSIONAL ENGINEERING

MINA A. MAKAR
LICENSE
No PE86753
STATE OF FLORIDA
PROFESSIONAL ENGINEER

Digitally signed by
Reason: Digitally signed by Mina A Makar. Reason: This item has been electronically signed and sealed by [Mina A. Makar, PE 86753, COA # 33404] on the Date and Time Stamp shown using a digital signature. Printed copies of this document are not considered signed and sealed and the signature must be verified on any electronic copies
Digitally signed by Mina A Makar.
Reason: This item has been electronically signed and sealed by [Mina A. Makar, PE 86753, COA # 33404] on the Date and Time Stamp shown using a digital signature. Printed copies of this document are not considered signed and sealed and the signature must be verified on any electronic copies
Date: 2024.06.05 02:06:50 -05:00

SOLAR CONTRACTOR

CAMERON CHRISTENSEN
CERTIFIED SOLAR CONTRACTOR LICENSE NUMBER: CVC57036
MOMENTUM SOLAR
5728 MAJOR BLVD. SUITE 307, ORLANDO FL. 32819

CUSTOMER INFORMATION

CRYSTAL HAIR - MS151756
274 NORTHWEST OPEN COURT
LAKE CITY, FL 32055
(386) 288-8884

PV SYSTEM INFORMATION

SYSTEM SIZE (DC): 9.84 KW
24 MODULES: HANWHA Q.PEAK DUO BLK ML-G10+ 410
24 INVERTERS: ENPHASE IQ7PLUS-72-2-US

PROJECT INFORMATION

INITIAL	DATE: 6/5/2024	DESIGNER: AKL
REV:	DATE:	DESIGNER:
REV:	DATE:	DESIGNER:

INVERTER DETAIL

PV-1.2

Data Sheet
Enphase Networking

IQ Combiner 4/4C

The **IQ Combiner 4/4C** with IQ Gateway and integrated LTE-M1 cell modem (included only with IQ Combiner 4C) consolidates interconnection equipment into a single enclosure. It streamlines IQ Microinverters and storage installations by providing a consistent, pre-wired solution for residential applications. It offers up to four 2-pole input circuits and Eaton BR series busbar assembly.

X-IQ-AM1-240-4C
X2-IQ-AM1-240-4C (IEEE 1547:2018)

X-IQ-AM1-240-4
X2-IQ-AM1-240-4 (IEEE 1547:2018)

Smart

- Includes IQ Gateway for communication and control
- Includes Mobile Connect cellular modem (CELLMODEM-M1-06-SP-05), included only with IQ Combiner 4C
- Includes solar shield to match Enphase IQ Battery aesthetics and deflect heat
- Supports Wi-Fi, Ethernet, or cellular connectivity
- Optional AC receptacle available for PLC bridge
- Provides production metering and consumption monitoring

Simple

- Mounts on single stud with centered brackets
- Supports bottom, back and side conduit entry
- Allows up to four 2-pole branch circuits for 240VAC plug-in breakers (not included)
- 80A total PV or storage branch circuits

Reliable

- Durable NRTL-certified NEMA type 3R enclosure
- Five-year limited warranty
- Two years labor reimbursement program coverage included for both the IQ Combiner SKU's
- UL listed
- X2-IQ-AM1-240-4 and X2-IQ-AM1-240-4C comply with IEEE 1547:2018 (UL 1741-SB, 3rd Ed.)

LISTED

To learn more about Enphase offerings, visit **enphase.com**
IQ-C-4-4C-DS-0103-EN-US-12-29-2022

ENPHASE.

IQ Combiner 4/4C

MODEL NUMBER	
IQ Combiner 4 X-IQ-AM1-240-4 X2-IQ-AM1-240-4 (IEEE 1547:2018)	IQ Combiner 4 with IQ Gateway printed circuit board for integrated revenue grade PV production metering (ANSI C12.20 ± 0.5%) and consumption monitoring (± 2.5%). Includes a silver solar shield to match the IQ Battery and IQ System Controller 2 and to deflect heat.
IQ Combiner 4C X-IQ-AM1-240-4C X2-IQ-AM1-240-4C (IEEE 1547:2018)	IQ Combiner 4C with IQ Gateway printed circuit board for integrated revenue grade PV production metering (ANSI C12.20 ± 0.5%) and consumption monitoring (± 2.5%). Includes Mobile Connect cellular modem (CELLMODEM-M1-06-SP-05), a plug-and-play industrial-grade cell modem for systems up to 60 microinverters. (Available in the US, Canada, Mexico, Puerto Rico, and the US Virgin Islands, where there is adequate cellular service in the installation area.) Includes a silver solar shield to match the IQ Battery and IQ System Controller and to deflect heat.
ACCESSORIES AND REPLACEMENT PARTS	(not included, order separately)
Supported microinverters	IQ6, IQ7, and IQ8. (Do not mix IQ6/7 Microinverters with IQ8)
Communications Kit COMMS-CELLMODEM-M1-06 CELLMODEM-M1-36-SP-05 CELLMODEM-M1-36-AT-05	 - Includes COMMS-KIT-01 and CELLMODEM-M1-06-SP-05 with 5-year Sprint data plan - 4G based LTE-M1 cellular modem with 5-year Sprint data plan - 4G based LTE-M1 cellular modem with 5-year AT&T data plan
Circuit Breakers BRK-10A-2-240V BRK-15A-2-240V BRK-20A-2P-240V BRK-15A-2P-240V-B BRK-20A-2P-240V-B	Supports Eaton BR210, BR215, BR220, BR230, BR240, BR250, and BR260 circuit breakers. Circuit breaker, 2 pole, 10A, Eaton BR210 Circuit breaker, 2 pole, 15A, Eaton BR215 Circuit breaker, 2 pole, 20A, Eaton BR220 Circuit breaker, 2 pole, 15A, Eaton BR215B with hold down kit support Circuit breaker, 2 pole, 20A, Eaton BR220B with hold down kit support
XA-SOLARSHIELD-ES	Replacement solar shield for IQ Combiner 4/4C
XA-PLUG-120-3	Accessory receptacle for Power Line Carrier in IQ Combiner 4/4C (required for EPLC-01)
X-IQ-NA-HD-125A	Hold-down kit for Eaton circuit breaker with screws
Consumption monitoring CT (CT-200-SPLIT/CT-200-CLAMP)	A pair of 200A split core current transformers
ELECTRICAL SPECIFICATIONS	
Rating	Continuous duty
System voltage	120/240VAC, 60Hz
Eaton BR series busbar rating	125A
Max. continuous current rating	65A
Max. continuous current rating (input from PV/storage)	64A
Max. fuse/circuit rating (output)	90A
Branch circuits (solar and/or storage)	Up to four 2-pole Eaton BR series Distributed Generation (DG) breakers only (not included)
Max. total branch circuit breaker rating (input)	80A of distributed generation/95A with IQ Gateway breaker included
IQ Gateway breaker	10A or 15A rating GE/Siemens/Eaton included
Production metering CT	200A solid core pre-installed and wired to IQ Gateway
MECHANICAL DATA	
Dimensions (WxHxD)	37.5 cm x 49.5 cm x 16.8 cm (14.75 in x 19.5 in x 6.63 in). Height is 53.5 cm (21.06 in) with mounting brackets.
Weight	7.5 kg (16.5 lbs)
Ambient temperature range	-40°C to +46°C (-40°F to 115°F)
Cooling	Natural convection, plus heat shield
Enclosure environmental rating	Outdoor, NRTL-certified, NEMA type 3R, polycarbonate construction
Wire sizes	• 20A to 50A breaker inputs: 14 to 4 AWG copper conductors • 60A breaker branch input: 4 to 1/0 AWG copper conductors • Main lug combined output: 10 to 2/0 AWG copper conductors • Neutral and ground: 14 to 1/0 copper conductors • Always follow local code requirements for conductor sizing.
Altitude	Up to 3,000 meters (9,842 feet)
INTERNET CONNECTION OPTIONS	
Integrated Wi-Fi	IEEE 802.11b/g/n
Cellular	CELLMODEM-M1-06-SP-05, CELLMODEM-M1-06-AT-05 (4G based LTE-M1 cellular modem). Note that an Mobile Connect cellular modem is required for all Enphase Energy System installations.
Ethernet	Optional, IEEE 802.3, Cat5E (or Cat6) UTP Ethernet cable (not included)
COMPLIANCE	
Compliance, IQ Combiner	CA Rule 21 (UL 1741-SA) IEEE 1547:2018 -UL 1741-SB, 3rd Ed. (X2-IQ-AM1-240-4 and X2-IQ-AM1-240-4C) CAN/CSA C22.2 No. 107.1, Title 47 CFR, Part 15, Class B, ICES 003 Production metering: ANSI C12.20 accuracy class 0.5 (PV production) Consumption metering: accuracy class 2.5
Compliance, IQ Gateway	UL 60601-1/CAN/CSA 22.2 No. 61010-1

© 2022 Enphase Energy. All rights reserved. Enphase, the Enphase logo, IQ Combiner 4/4C, and other names are trademarks of Enphase Energy, Inc. Data subject to change.

IQ-C-4-4C-DS-0103-EN-US-12-29-2022

momentum SOLAR

PRO CUSTOM SOLAR LLC D.B.A. MOMENTUM SOLAR
325 HIGH STREET, METUCHEN, NJ 08840
(732) 902-6224
MOMENTUMSOLAR.COM

PROFESSIONAL ENGINEERING

MINA A. MAKAR
LICENSE
No PE86753
STATE OF FLORIDA
PROFESSIONAL ENGINEER

Digitally signed by
Reason: Digitally signed by Mina A Makar. Reason: This item has been electronically signed and sealed by [Mina A. Makar, PE 86753, COA # 33404] on the Date and Time Stamp shown using a digital signature. Printed copies of this document are not considered signed and sealed and the signature must be verified on any electronic copies
Date: 2024.06.05 02:06:50 -05:00

SOLAR CONTRACTOR

CAMERON CHRISTENSEN
CERTIFIED SOLAR CONTRACTOR LICENSE NUMBER: CVC57036
MOMENTUM SOLAR
5728 MAJOR BLVD. SUITE 307, ORLANDO FL. 32819

CUSTOMER INFORMATION

CRYSTAL HAIR - MS151756
274 NORTHWEST OPEN COURT
LAKE CITY, FL 32055
(386) 288-8884

PV SYSTEM INFORMATION

SYSTEM SIZE (DC): 9.84 KW
24 MODULES: HANWHA Q.PEAK DUO BLK ML-G10+ 410
24 INVERTERS: ENPHASE IQ7PLUS-72-2-US

PROJECT INFORMATION

INITIAL	DATE: 6/5/2024	DESIGNER: AKL
REV:	DATE:	DESIGNER:
REV:	DATE:	DESIGNER:

COMBINER DETAIL

PV-1.3

Q.PEAK DUO BLK ML-G10+ SERIES

qcells

385 - 410 Wp | 132 Cells
20.9 % Maximum Module Efficiency

MODEL Q.PEAK DUO BLK ML-G10+

Breaking the 20% efficiency barrier
Q.ANTUM DUO Z Technology with zero gap cell layout boosts module efficiency up to 20.9%.

A reliable investment
Inclusive 25-year product warranty and 25-year linear performance warranty[1].

Enduring high performance
Long-term yield security with Anti LeTID Technology, Anti PID Technology[2] and Hot-Spot Protect.

Extreme weather rating
High-tech aluminium alloy frame, certified for high snow (5400 Pa) and wind loads (4000 Pa).

Innovative all-weather technology
Optimal yields, whatever the weather with excellent low-light and temperature behaviour.

The most thorough testing programme in the industry
Qcells is the first solar module manufacturer to pass the most comprehensive quality programme in the industry: The new "Quality Controlled PV" of the independent certification institute TÜV Rheinland.

[1] See data sheet on rear for further information.
[2] APT test conditions according to IEC/TS 62804-1:2015, method A (−1500 V, 96 h)

The ideal solution for:
Rooftop arrays on residential buildings

Q.PEAK DUO BLK ML-G10+ SERIES

Mechanical Specification

Format	74.0 in × 41.1 in × 1.26 in (including frame) (1879 mm × 1045 mm × 32 mm)
Weight	48.5 lbs (22.0 kg)
Front Cover	0.13 in (3.2 mm) thermally pre-stressed glass with anti-reflection technology
Back Cover	Composite film
Frame	Black anodised aluminium
Cell	6 × 22 monocrystalline Q.ANTUM solar half cells
Junction box	2.09-3.98 in × 1.26-2.36 in × 0.59-0.71 in (53-101 mm × 32-60 mm × 15-18 mm), IP67, with bypass diodes
Cable	4 mm² Solar cable; (+) ≥ 49.2 in (1250 mm), (−) ≥ 49.2 in (1250 mm)
Connector	Stäubli MC4; IP68

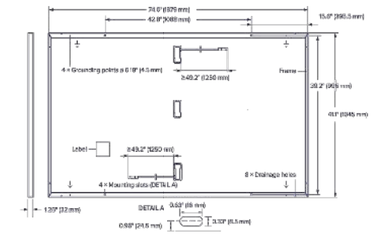

Electrical Characteristics

POWER CLASS			385	390	395	400	405	410
MINIMUM PERFORMANCE AT STANDARD TEST CONDITIONS, STC[1] (POWER TOLERANCE +5 W/−0 W)								
Minimum: Power at MPP[1]	P_{MPP}	[W]	385	390	395	400	405	410
Short Circuit Current[1]	I_{SC}	[A]	11.04	11.07	11.10	11.14	11.17	11.20
Open Circuit Voltage[1]	V_{OC}	[V]	45.19	45.23	45.27	45.30	45.34	45.37
Current at MPP	I_{MPP}	[A]	10.59	10.65	10.71	10.77	10.83	10.89
Voltage at MPP	V_{MPP}	[V]	36.36	36.62	36.88	37.13	37.39	37.64
Efficiency[1]	η	[%]	≥19.6	≥19.9	≥20.1	≥20.4	≥20.6	≥20.9
MINIMUM PERFORMANCE AT NORMAL OPERATING CONDITIONS, NMOT[2]								
Minimum: Power at MPP	P_{MPP}	[W]	288.8	292.6	296.3	300.1	303.8	307.6
Short Circuit Current	I_{SC}	[A]	8.90	8.92	8.95	8.97	9.00	9.03
Open Circuit Voltage	V_{OC}	[V]	42.62	42.65	42.69	42.72	42.76	42.79
Current at MPP	I_{MPP}	[A]	8.35	8.41	8.46	8.51	8.57	8.62
Voltage at MPP	V_{MPP}	[V]	34.59	34.81	35.03	35.25	35.46	35.68

[1] Measurement tolerances P_{MPP} ±3%; I_{SC}; V_{OC} ±5% at STC: 1000 W/m², 25±2 °C, AM 1.5 according to IEC 60904-3 • [2] 800 W/m², NMOT, spectrum AM 1.5

Qcells PERFORMANCE WARRANTY

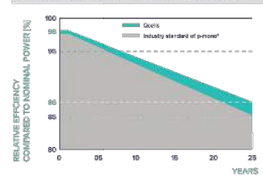

At least 98% of nominal power during first year. Thereafter max. 0.5% degradation per year. At least 93.5% of nominal power up to 10 years. At least 86% of nominal power up to 25 years.

All data within measurement tolerances. Full warranties in accordance with the warranty terms of the Qcells sales organisation of your respective country.

*Standard terms of guarantee for the 5 PV companies with the highest production capacity in 2021 (February 2021)

PERFORMANCE AT LOW IRRADIANCE

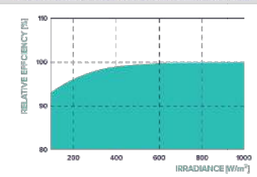

Typical module performance under low irradiance conditions in comparison to STC conditions (25 °C, 1000 W/m²).

TEMPERATURE COEFFICIENTS

Temperature Coefficient of I_{SC}	α	[%/K]	+0.04	Temperature Coefficient of V_{OC}	β	[%/K]	−0.27
Temperature Coefficient of P_{MPP}	γ	[%/K]	−0.34	Nominal Module Operating Temperature	NMOT	[°F]	109±5.4 (43±3 °C)

Properties for System Design

Maximum System Voltage	V_{SYS}	[V]	1000 (IEC)/1000 (UL)	PV module classification	Class II
Maximum Series Fuse Rating		[A DC]	20	Fire Rating based on ANSI/UL 61730	TYPE 2
Max. Design Load, Push/Pull[3]		[lbs/ft²]	75 (3600 Pa)/55 (2660 Pa)	Permitted Module Temperature on Continuous Duty	−40 °F up to +185 °F (−40 °C up to +85 °C)
Max. Test Load, Push/Pull[3]		[lbs/ft²]	113 (5400 Pa)/84 (4000 Pa)		

[3] See Installation Manual

Qualifications and Certificates

UL 61730, CE-compliant,
Quality Controlled PV - TÜV Rheinland,
IEC 61215:2016, IEC 61730:2016,
U.S. Patent No. 9,893,215 (solar cells).

Specifications subject to technical changes © Qcells Q.PEAK_DUO_BLK_ML-G10+_series_385-410_2023-01_Rev04_NA

Qcells pursues minimizing paper output in consideration of the global environment.

Note: Installation instructions must be followed. Contact our technical service for further information on approved installation of this product.
Hanwha Q CELLS America Inc. 400 Spectrum Center Drive, Suite 1400, Irvine, CA 92618, USA | TEL +1 949 748 59 96 | EMAIL inquiry@qcells.com | WEB www.qcells.com

qcells

momentum SOLAR

PRO CUSTOM SOLAR LLC D.B.A. MOMENTUM SOLAR
325 HIGH STREET, METUCHEN, NJ 08840
(732) 902-6224
MOMENTUMSOLAR.COM

PROFESSIONAL ENGINEERING

MINA A. MAKAR
LICENSE
No PE86753
STATE OF FLORIDA
PROFESSIONAL ENGINEER

Digitally signed by
Reason: Digitally signed by Mina A Makar. Reason: This item has been electronically signed and sealed by [Mina A. Makar, PE 86753, COA # 33404] on the Date and Time Stamp shown using a digital signature. Printed copies of this document are not considered signed and sealed and the signature must be verified on any electronic copies
Date: 2024.06.05 02:06:50 -05:00

SOLAR CONTRACTOR

CAMERON CHRISTENSEN
CERTIFIED SOLAR CONTRACTOR LICENSE NUMBER: CVC57036
MOMENTUM SOLAR
5728 MAJOR BLVD. SUITE 307, ORLANDO FL. 32819

CUSTOMER INFORMATION

CRYSTAL HAIR - MS151756
274 NORTHWEST OPEN COURT
LAKE CITY, FL 32055
(386) 288-8884

PV SYSTEM INFORMATION

SYSTEM SIZE (DC): 9.84 KW
24 MODULES: HANWHA Q.PEAK DUO BLK ML-G10+ 410
24 INVERTERS: ENPHASE IQ7PLUS-72-2-US

PROJECT INFORMATION

INITIAL	DATE: 6/5/2024	DESIGNER: AKL
REV:	DATE:	DESIGNER:
REV:	DATE:	DESIGNER:

PANEL DETAIL

PV-1.4

SCALE: 3/32" = 1'-0"

ROOF	PANEL COUNT	TILT	AZIMUTH	SHADING	LANDSCAPE MAX SPAN (ROOF AREA 1/2/3)	PORTRAIT MAX SPAN (ROOF AREA 1/2/3)	LANDSCAPE MAX CANTILEVER	PORTRAIT MAX CANTILEVER
R1	24	18°	267°	75%	48 /48 /48	48 /48 /48	16 /10 /10	16 /10 /10

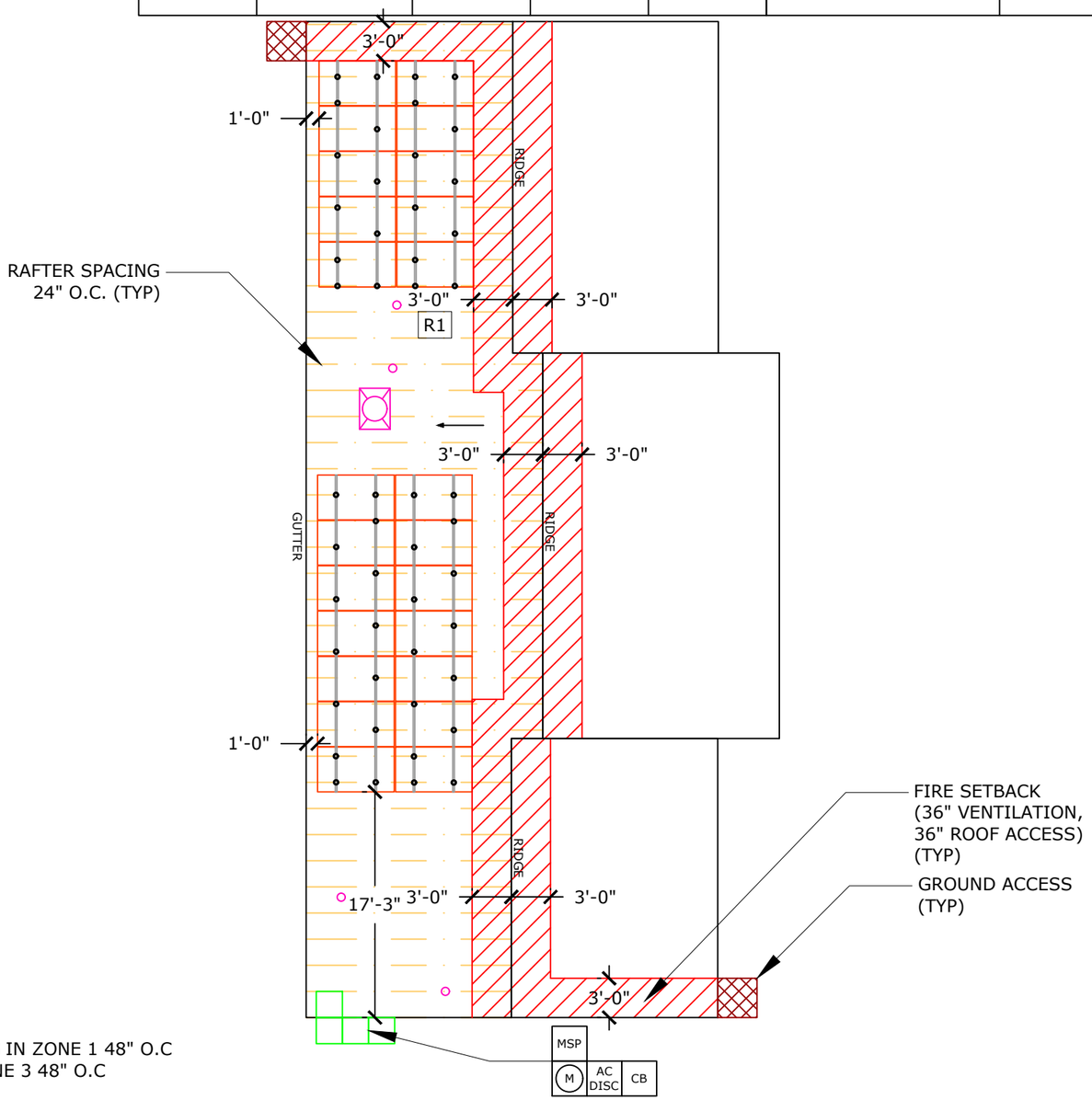

NORTHWEST OPEN COURT
FRONT OF RESIDENCE

TOTAL SQUARE FOOTAGE OF ROOF: 2677 SQFT

SQUARE FOOTAGE OF SOLAR ARRAY:506.9 SQFT

PERCENTAGE OF SOLAR ROOF COVERAGE: 18.94%

18" RIDGE SETBACK SHALL BE REQUIRED

CLAMPING MAX SPACING IN ZONE 1 48" O.C
AND IN ZONE 2 AND ZONE 3 48" O.C

NOTE:

1. ROOF COVERING MATERIAL IS COMPOSED OF CORRUGATED METAL.
2. EXACT ATTACHMENT LOCATION AND QUANTITY OF ATTACHMENTS ARE BASED ON EXISTING RAFTER LOCATIONS OBTAINED FROM FIELD MEASUREMENTS. THE LOCATION AND QUANTITY OF ATTACHMENTS MAY VARY BASED ON RAFTER LAYOUT START POINT, SPACING VARIATIONS AND ROOFING TYPE. VERIFY IN THE FIELD ALL RAFTER LOCATIONS AND ADJUST LAYOUT AS REQUIRED. A TILE ROOF WILL PRODUCE A STAGGERED ATTACHMENT LAYOUT BECAUSE OF EXISTING STAGGERED TILE JOINT LOCATIONS.

SYMBOL LEGEND

MSP	MAIN SERVICE PANEL		CHIMNEY
SP	SUB-PANEL		SKYLIGHT
M	UTILITY METER		VENT
AC DISC	AC DISCONNECT		PIPE VENT
UDC	UTILITY DISCONNECT		FAN
LC	LOAD CENTER		SATELLITE DISH
N3R	NEMA 3R BOX W/ ENVOY-S		FIRE SETBACKS
CB	COMBINER BOX		MIN 3'x3' GROUND ACCESS POINT
	MODULE		PITCH DIRECTION
		WIND PRESSURE ZONE LINES. REFER TO PV-2.2 FOR ADDITIONAL INFO	

momentum SOLAR

PRO CUSTOM SOLAR LLC D.B.A. MOMENTUM SOLAR
325 HIGH STREET, METUCHEN, NJ 08840
(732) 902-6224
MOMENTUMSOLAR.COM

PROFESSIONAL ENGINEERING

MINA A. MAKAR
LICENSE
No PE86753
STATE OF FLORIDA
PROFESSIONAL ENGINEER

Digitally signed by
Reason: Digitally signed by Mina A Makar. Reason: This item has been electronically signed and sealed by [Mina A. Makar, PE 86753, COA # 33404] on the Date and Time Stamp shown using a digital signature. Printed copies of this document are not considered signed and sealed and the signature must be verified on any electronic copies
Date: 2024.06.05 02:06:50 -05:00

Digitally signed by Mina A Makar.
Reason: This item has been electronically signed and sealed by [Mina A. Makar, PE 86753, COA # 33404] on the Date and Time Stamp shown using a digital signature. Printed copies of this document are not considered signed and sealed and the signature must be verified on any electronic copies

SOLAR CONTRACTOR

CAMERON CHRISTENSEN
CERTIFIED SOLAR CONTRACTOR LICENSE NUMBER: CVC57036
MOMENTUM SOLAR
5728 MAJOR BLVD. SUITE 307, ORLANDO FL. 32819

CUSTOMER INFORMATION

CRYSTAL HAIR - MS151756
274 NORTHWEST OPEN COURT
LAKE CITY, FL 32055
(386) 288-8884

PV SYSTEM INFORMATION

SYSTEM SIZE (DC): 9.84 KW
24 MODULES: HANWHA Q.PEAK DUO BLK ML-G10+ 410
24 INVERTERS: ENPHASE IQ7PLUS-72-2-US

PROJECT INFORMATION

INITIAL	DATE: 6/5/2024	DESIGNER: AKL
REV:	DATE:	DESIGNER:
REV:	DATE:	DESIGNER:

ROOF LAYOUT

PV-2

PV MODULE RATINGS	
MODULE MAKE	HANWHA
MODEL	HANWHA Q.PEAK DUO BLK ML-G10+ 410
MAX POWER	410W
OPEN CIRCUIT VOLTAGE	45.37V
MPP VOLTAGE	37.64V
SHORT CIRCUIT CURRENT	11.2A
MPP CURRENT	10.89A
NUMBER OF MODULES	24
UL1703 COMPLIANT	YES

INVERTER RATINGS	
INVERTER MAKE	ENPHASE
MODEL	IQ7PLUS-72-2-US
MAX OUTPUT POWER	290W
OPEN DC VOLTAGE	60V
NOMINAL AC VOLTAGE	240V
MAX AC CURRENT	1.21A
CEC INVERTER EFFICIENCY	97%
NUMBER OF INVERTERS	24
UL1703 COMPLIANT	YES

VOLTAGE DROP CALCULATIONS

FORMULA USED PER NEC HANDBOOK 215.2(A)(4) WHERE APPLICABLE

WIRE RUN	V_{mp}	I_{mp}	R	L (FT)	V_o	% V_o	WIRE SIZE
BRANCH TO J-BOX	240.00	14.52	1.98	79.00	4.542	1.89%	12 AWG
J-BOX TO LOAD CENTER	240.00	29.04	1.24	50.00	3.601	1.50%	10 AWG
LOAD CENTER TO AC DISCONNECT	240.00	36.3	0.778	3.00	0.169	0.07%	08 AWG
AC DISCONNECT TO INTERCONNECTION	240.00	36.3	0.778	10.00	0.565	0.24%	08 AWG

SUB PANEL BREAKER SIZE	# OF MODULES	PV BREAKER PER BRANCH
	UP TO 16	20A

THIS SOLAR PHOTOVOLTAIC SYSTEM COMPLIES WITH THE 2023 FLORIDA BUILDING CODE AND THE 2020 NATIONAL ELECTRICAL CODE

NEC 705.12(B)(2)(3)(b) 120% RULE

(1.25 x INVERTER OUTPUT) + MAIN OCPD ≤ BUS RATING x 1.20

(1.25 x 29.04) + 200 ≤ 200 x 1.20

FSEC CERTIFICATION STATEMENT:

PER FL. STATUE 377.705 , I, MINA A. MAKAR PE# 86753, CERTIFICATE OF AUTHORIZATION #33404, AN ENGINEER LICENSED PURSUANT TO CHAPTER 471,CERTIFY THAT THE PV ELECTRICAL SYSTEM AND ELECTRICAL COMPONENTS ARE DESIGNED AND APPROVED USING THE STANDARDS CONTAINED IN THE MOST RECENT VERSION OF THE FLORIDA BUILDING CODE. FBC 2023

24 HANWHA Q.PEAK DUO BLK ML-G10+ 410 410W MODULES PAIRED WITH

24 ENPHASE IQ7PLUS-72-2-US MICRO-INVERTERS

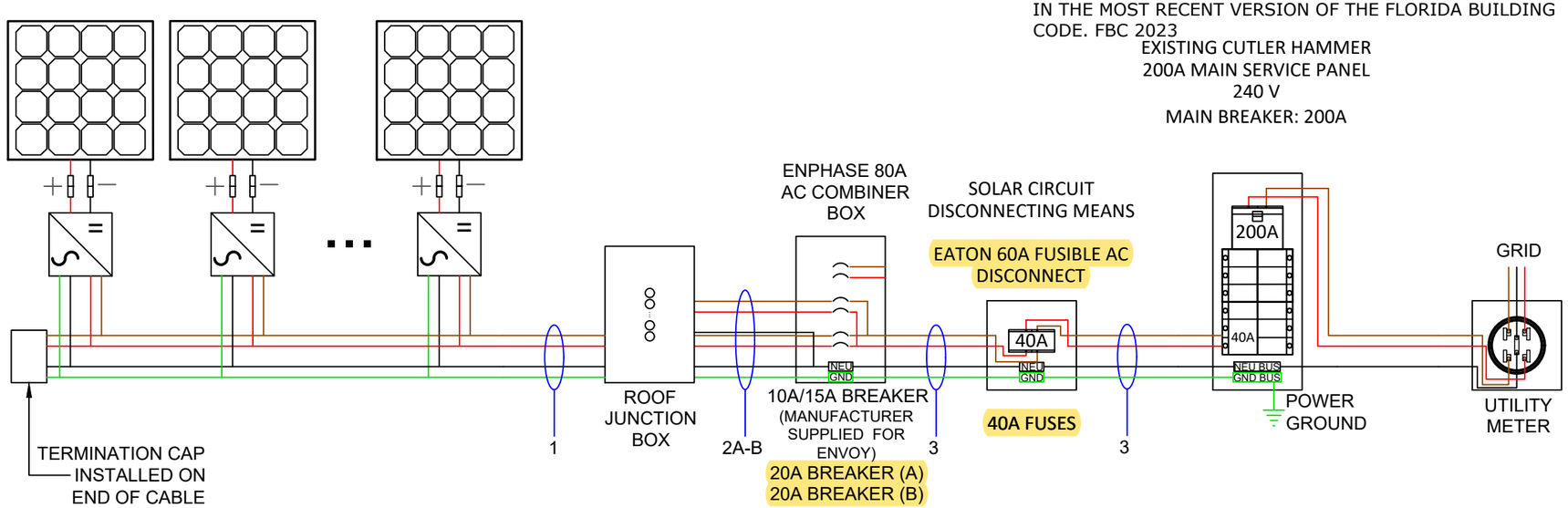

EXISTING CUTLER HAMMER
200A MAIN SERVICE PANEL
240 V
MAIN BREAKER: 200A

Wire Tag	Conduit	Wire Qty	Wire Gauge	Wire Type	Temp. Rating	Wire Ampacity (A)	Temp. Derate	Conduit Fill Derate	Derated Ampacity (A)	Inverter Qty	NOC (A)	NEC Correction	Design Current (A)	Ground Size	Ground Wire Type
1	OPEN AIR	2	12 AWG	Trunk Cable	90°C	30	0.96	1	28.80	12	1.21	1.25	18.15	12 AWG	Trunk Cable
2A	3/4" PVC	4	10 AWG	THWN-2	75°C	35	0.96	0.8	26.88	12	1.21	1.25	18.15	08 AWG	THWN-2
2B			10 AWG	THWN-2	75°C	35	0.96		26.88	12	1.21	1.25	18.15		
3	3/4" PVC	3 + G	08 AWG	THWN-2	75°C	50	0.96	1	48.00	24	1.21	1.25	36.30	08 AWG	THWN-2

NOTE: LETTER "G" IN WIRE QTY TAB STANDS FOR GROUNDING CONDUCTOR.

momentum SOLAR

PRO CUSTOM SOLAR LLC D.B.A. MOMENTUM SOLAR
325 HIGH STREET, METUCHEN, NJ 08840
(732) 902-6224
MOMENTUMSOLAR.COM

PROFESSIONAL ENGINEERING

MINA A. MAKAR LICENSE No PE86753 STATE OF FLORIDA PROFESSIONAL ENGINEER

Digitally signed by
Reason: Digitally signed by Mina A Makar. Reason: This item has been electronically signed and sealed by [Mina A. Makar, PE 86753, COA # 33404] on the Date and Time Stamp shown using a digital signature. Printed copies of this document are not considered signed and sealed and the signature must be verified on any electronic copies
Date: 2024.06.05 02:06:50 -05:00

Digitally signed by Mina A Makar. Reason : This item has been electronically signed and sealed by [Mina A. Makar, PE 86753, COA # 33404] on the Date and Time Stamp shown using a digital signature. Printed copies of this document are not considered signed and sealed and the signature must be verified on any electronic copies

SOLAR CONTRACTOR

CAMERON CHRISTENSEN
CERTIFIED SOLAR CONTRACTOR LICENSE NUMBER: CVC57036
MOMENTUM SOLAR
5728 MAJOR BLVD. SUITE 307, ORLANDO FL. 32819

CUSTOMER INFORMATION

CRYSTAL HAIR - MS151756
274 NORTHWEST OPEN COURT
LAKE CITY, FL 32055
(386) 288-8884

PV SYSTEM INFORMATION

SYSTEM SIZE (DC): 9.84 KW
24 MODULES: HANWHA Q.PEAK DUO BLK ML-G10+ 410
24 INVERTERS: ENPHASE IQ7PLUS-72-2-US

PROJECT INFORMATION

INITIAL	DATE: 6/5/2024	DESIGNER: AKL
REV:	DATE:	DESIGNER:
REV:	DATE:	DESIGNER:

THREE LINE DIAGRAM

PV-3

ELECTRICAL NOTES:

1. ALL CALCULATIONS FOR VOC, VMAX, IMP AND ISC HAVE BEEN CALCULATED USING THE MANUFACTURED STRING CALCULATOR BASED ON ASHRAE 2% HIGH AND EXTREME MINIMUM TEMPERATURE COEFFICIENTS.
2. THE ENTIRE ARRAY IS BONDED ACCORDING TO (NEC 690.43(A) THROUGH (D) WITH 250.134 OR 250.136.
3. THIS SYSTEM COMPLIES WITH NEC 2020
4. BRANCH CIRCUIT CALCULATION FOR WIRE TAG 1 DISPLAYS THE LARGEST BRANCH CIRCUIT IN SYSTEM. OTHER BRANCH CIRCUITS SHALL HAVE LOWER DESIGN CURRENT THAN THE ONE SHOWN. IN ADDITION, VOLTAGE DROP CALCULATIONS FROM PANELS TO THE COMBINER BOX SHALL BE SHOWN IN A SIMILAR FASHION
5. ALL CONDUCTORS ARE SIZED BASED ON NEC 2020 ARTICLE 310
6. ALL EQUIPMENT INSTALLED IS RATED AT 75°C
7. INVERTER NOC (NOMINAL OPEN CURRENT) OBTAINED FROM EQUIPMENT DATASHEET
8. CONTRACTOR SHALL BE RESPONSIBLE FOR COMPLYING WITH ALL LOCAL AND NATIONAL CODE REQUIREMENTS.
9. EACH MODULE MUST BE GROUNDED ACCORDING TO USER INSTRUCTIONS
10. ALL EQUIPMENT SHALL BE LISTED PER NEC 690.4(B)
11. PER NEC 690.13, 690.15, PROVIDE A WARNING SIGN AT ALL LOCATIONS WHERE TERMINALS OF THE DISCONNECTING MEANS MAY BE ENERGIZED IN THE OPEN POSITION> SIGN SHALL READ *WARNING - ELECTRIC SHOCK HAZARD - DO NOT TOUCH TERMINALS - OR EQUIVALENT.
12. PER NEC 705.10, PROVIDE A PERMANENT PLAQUE OR DIRECTORY SHOWING ALL ELECTRIC POWER SOURCES ON THE PREMISES AT SERVICE ENTRANCE.
13. INTERCONNECTION METHOD SHALL COMPLY WITH NEC 705.12
14. AND OPTION FOR A SINGLE CIRCUIT BRANCH TO BE SPLIT INTO TWO SUB-CIRCUIT BRANCHES IS ACCEPTABLE.
15. ALL CONDUCTORS MUST BE COPPER.
16. NEUTRAL AND EQUIPMENT GROUNDING CONDUCTOR BONDED AS PER NEC 250.24(C).
17. EQUIPMENT GROUNDING CONDUCTOR IS CONNECTED TO A GROUNDING ELECTRODE SYSTEM PER 250.54(D).
18. FUSES FOR PV DISCONNECT HAVE AIC RATINGS OF 200KA AC AND 20KA DC.
19. SUPPLY SIDE CONNECTION SHALL BE MADE USING ILSCO INSULATION PIERCING CONNECTORS (IPC). MAKE, MODEL, AND RATING OF INTERCONNECTION CAN BE SEEN ON TABLE 1 BELOW.
20. METHOD OF INTERCONNECTION CAN BE SEEN IN FIGURE 1.
21. UTILITY HAS 24-HR UNRESTRICTED ACCESS TO ALL PHOTOVOLTAIC SYSTEM COMPONENTS LOCATED AT THE SERVICE ENTRANCE.
22. WORKING CLEARANCES AROUND THE EXISTING AND NEW ELECTRICAL EQUIPMENT WILL BE MAINTAINED IN ACCORDANCE WITH NEC ARTICLE 110.26.
23. CONDUCTORS EXPOSED TO SUNLIGHT SHALL BE LISTED AS SUNLIGHT RESISTANT PER NEC ARTICLE 300.6 (C)(1) AND ARTICLE 310.8 (D).
24. CONDUCTORS EXPOSED TO WET LOCATIONS SHALL BE SUITABLE FOR USE IN WET LOCATIONS PER NEC ARTICLE 310.10 (C).
25. TOTAL AREA OF ALL CONDUCTORS, SPLICES, AND TAPS INSTALLED AT ANY CROSS SECTION OF THE WIRING DOES NOT EXCEED 75% OF THE CROSS SECTIONAL AREA OF THE SPACE. NEC 312.8(A)(2).
26. SYSTEM IS CONSIDERED AN AC MODULE SYSTEM. NO DC CONDUCTORS ARE PRESENT IN CONDUIT, COMBINER, JUNCTION BOX, DISCONNECT. AND COMPLIES WITH 690.6 - NO DC DISCONNECT AND ASSOCIATED DC LABELING ARE REQUIRED.
27. SYSTEM COMPLIES WITH 690.12 RAPID SHUTDOWN AND ASSOCIATED LABELING AS PER 690.56(C). AC VOLTAGE AND SYSTEM OPERATING CURRENT SHALL BE PROVIDED 690.51.
28. CONDUCTORS IN CONDUIT ARE AC CONDUCTORS BRANCH CIRCUITS AND NOT PV SOURCE CIRCUITS. 690.6.
29. ALL GROUNDING SHALL COMPLY WITH 690.47(A) IN THAT THE AC MODULES WILL COMPLY WITH 250.64.
30. NO TERMINALS SHALL BE ENERGIZED IN THE OPEN POSITION IN THIS AC MODULE SYSTEM 690.13(B), 690.6.
31. WHERE APPLICABLE: INTERCONNECTION SHALL COMPLY WITH 705.11(A) THROUGH (E) OR 705.12(B) THROUGH (E)
32. ALL WARNING SIGN(S) OR LABEL(S) SHALL COMPLY WITH 2020 NEC ARTICLE 110.21(B). LABEL WARNINGS SHALL ADEQUATELY WARN OF THE HAZARD. LABELS SHALL BE PERMANENTLY AFFIXED TO THE EQUIPMENT, AND LABELS REQUIRED SHALL BE SUITABLE FOR THE ENVIRONMENT.
33. PV POWER CIRCUIT LABELS SHALL APPEAR ON EVERY SECTION OF THE WIRING SYSTEM THAT IS SEPARATED BY ENCLOSURES, WALLS, PARTITIONS, CEILINGS, OR FLOORS.

TABLE 1:

MAKE	MODEL	VOLTAGE RATING	CONDUCTOR RANGE MAIN	CONDUCTOR RANGE TAP
ILSCO	IPC 4006	600 V	4/0-4 AWG	6-14 AWG
ILSCO	IPC 4020	600 V	4/0-2 AWG	2/0-6 AWG

INSTRUCTIONS FOR LINE TAPS

FIGURE 1:

1. ADJUST THE CONNECTOR NUT TO SUITABLE LOCATION
2. PUT THE BRANCH WIRE INTO THE CAP SHEATH FULLY
3. INSERT THE MAIN WIRE, IF THERE ARE TWO LAYS OF INSULATED LAY IN THE MAIN CABLE, SHOULD STRIP A CERTAIN LENGTH OF THE FIRST INSULATED LAY FROM INSERTED END
4. TURN THE NUT BY HAND, AND FIX THE CONNECTOR IN SUITABLE LOCATION.
5. SCREW THE NUT WITH THE SLEEVE SPANNER.
6. SCREW THE NUT CONTINUALLY UNTIL THE TOP PART IS CRACKED AND DROPPED DOWN

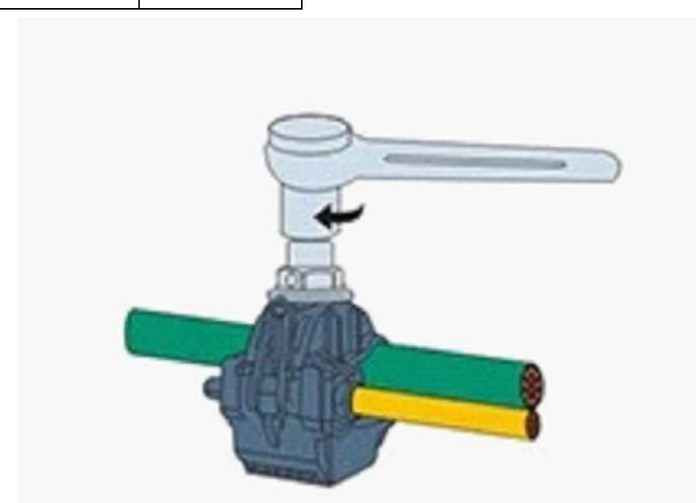

momentum SOLAR

PRO CUSTOM SOLAR LLC D.B.A. MOMENTUM SOLAR
325 HIGH STREET, METUCHEN, NJ 08840
(732) 902-6224
MOMENTUMSOLAR.COM

PROFESSIONAL ENGINEERING

MINA A. MAKAR
LICENSE
No PE86753
STATE OF FLORIDA
PROFESSIONAL ENGINEER

Digitally signed by
Reason: Digitally signed by Mina A Makar. Reason : This item has been electronically signed and sealed by [Mina A. Makar, PE 86753, COA # 33404] on the Date and Time Stamp shown using a digital signature. Printed copies of this document are not considered signed and sealed and the signature must be verified on any electronic copies
Date: 2024.06.05 02:06:50 -05:00

Digitally signed by Mina A Makar. Reason : This item has been electronically signed and sealed by [Mina A. Makar, PE 86753, COA # 33404] on the Date and Time Stamp shown using a digital signature. Printed copies of this document are not considered signed and sealed and the signature must be verified on any electronic copies

SOLAR CONTRACTOR

CAMERON CHRISTENSEN
CERTIFIED SOLAR CONTRACTOR LICENSE NUMBER: CVC57036
MOMENTUM SOLAR
5728 MAJOR BLVD. SUITE 307, ORLANDO FL. 32819

CUSTOMER INFORMATION

CRYSTAL HAIR - MS151756
274 NORTHWEST OPEN COURT
LAKE CITY, FL 32055
(386) 288-8884

PV SYSTEM INFORMATION

SYSTEM SIZE (DC): 9.84 KW
24 MODULES: HANWHA Q.PEAK DUO BLK ML-G10+ 410
24 INVERTERS: ENPHASE IQ7PLUS-72-2-US

PROJECT INFORMATION

INITIAL	DATE: 6/5/2024	DESIGNER: AKL
REV:	DATE:	DESIGNER:
REV:	DATE:	DESIGNER:

ELECTRICAL CONT.

PV-3.1

ALL WARNING SIGN(S) OR LABEL(S) SHALL COMPLY WITH NEC ARTICLE 110.21(B). LABEL WARNINGS SHALL ADEQUATELY WARN OF THE HAZARD. LABELS SHALL BE PERMANENTLY AFFIXED TO THE EQUIPMENT, AND LABELS REQUIRED SHALL BE SUITABLE FOR THE ENVIRONMENT.

TAG	LABEL	QUANTITY	LOCATION	NOTE
○	⚠ CAUTION AC SOLAR VOLTAGE	12	AC CONDUITS	1 AT EVERY SEPARATION BY ENCLOSURES / WALLS / PARTITIONS / CEILINGS / FLOORS OR NO MORE THAN 10'
○	WARNING: PHOTOVOLTAIC POWER SOURCE PHOTOVOLTAIC SYSTEM EQUIPPED WITH RAPID SHUTDOWN	1	COMBINER BOX	1 AT ANY COMBINER BOX
○	⚠ WARNING ELECTRICAL SHOCK HAZARD TERMINALS ON BOTH LINE AND LOAD SIDES MAY BE ENERGIZED IN THE OPEN POSITION	1	JUNCTION BOX	1 AT ANY JUNCTION BOX
○	PHOTOVOLTAIC SYSTEM ⚠ AC DISCONNECT ⚠ RATED AC OUTPUT CURRENT 29.04 A NOMINAL OPERATING AC VOLTAGE 240 V ⚠ WARNING ELECTRICAL SHOCK HAZARD TERMINALS ON BOTH LINE AND LOAD SIDES MAY BE ENERGIZED IN THE OPEN POSITION ⚠ CAUTION POWER TO THIS SERVICE IS ALSO SUPPLIED FROM ON-SITE SOLAR GENERATION AC SYSTEM DISCONNECT RAPID SHUTDOWN SWITCH FOR SOLAR PV SYSTEM PHOTOVOLTAIC SYSTEM INSTALLED BY MOMENTUM SOLAR 3096 B HAMILTON BLVD S. PLAINFIELD, NJ 07080 PHONE NUMBER:732-902-6224	1	AC DISCONNECT (RSD SWITCH)	1 OF EACH AT FUSED AC DISCONNECT COMPLETE VOLTAGE AND CURRENT VALUES ON DISCONNECT LABEL
○	⚠ WARNING DUAL POWER SUPPLY SECOND SOURCE IS PHOTOVOLTAIC SYSTEM REVENUE METER	1	UTILITY METER	1 AT UTILITY METER
○	EMERGENCY RESPONDER THIS SOLAR PV SYSTEM EQUIPPED WITH RAPID SHUTDOWN TURN RAPID SHUTDOWN SWITCH TO THE "OFF" POSITION TO SHUT DOWN ENTIRE PV SYSTEM SECTIONS OF THE PV SYSTEM THAT ARE SHUT DOWN WHEN THE RAPID SHUTDOWN SWITCH IS OPERATED SECTIONS OF THE PV SYSTEM THAT ARE NOT SHUT DOWN WHEN THE RAPID SHUTDOWN SWITCH IS OPERATED SOLAR ELECTRIC PV PANELS ⚠ WARNING DUAL POWER SUPPLY SECOND SOURCE IS PHOTOVOLTAIC SYSTEM	1	INTERCONNECTION POINT	1 OF EACH AT BUILDING INTERCONNECTION POINT
	⚠ WARNING POWER SOURCE OUTPUT CONNECTION. DO NOT RELOCATE THIS OVERCURRENT DEVICE	1	BACKFEED PANEL	
○	NOMINAL OPERATING AC VOLTAGE : 240V NOMINAL OPERATING AC FREQUENCY : 60HZ MAXIMUM AC POWER : VA MAXIMUM AC CURRENT : A MAXIMUM OVERCURRENT DEVICE RATING FOR AC MODULE PROTECTION : 20A	1	AC CURRENT PV MODULES	

EXAMPLES

○

○

○

○

○

○

momentum SOLAR

PRO CUSTOM SOLAR LLC D.B.A. MOMENTUM SOLAR
325 HIGH STREET, METUCHEN, NJ 08840
(732) 902-6224
MOMENTUMSOLAR.COM

PROFESSIONAL ENGINEERING

MINA A. MAKAR LICENSE No PE86753 STATE OF FLORIDA PROFESSIONAL ENGINEER

Digitally signed by
Reason: Digitally signed by Mina A Makar. Reason: This item has been electronically signed and sealed by [Mina A. Makar, PE 86753, COA # 33404] on the Date and Time Stamp shown using a digital signature. Printed copies of this document are not considered signed and sealed and the signature must be verified on any electronic copies
Date: 2024.06.05 02:06:50 -05:00

SOLAR CONTRACTOR

CAMERON CHRISTENSEN
CERTIFIED SOLAR CONTRACTOR LICENSE NUMBER: CVC57036
MOMENTUM SOLAR
5728 MAJOR BLVD. SUITE 307, ORLANDO FL. 32819

CUSTOMER INFORMATION

CRYSTAL HAIR - MS151756
274 NORTHWEST OPEN COURT
LAKE CITY, FL 32055
(386) 288-8884

PV SYSTEM INFORMATION

SYSTEM SIZE (DC): 9.84 KW
24 MODULES: HANWHA Q.PEAK DUO BLK ML-G10+ 410
24 INVERTERS: ENPHASE IQ7PLUS-72-2-US

PROJECT INFORMATION

INITIAL	DATE: 6/5/2024	DESIGNER: AKL
REV:	DATE:	DESIGNER:
REV:	DATE:	DESIGNER:

EQUIPMENT LABELS

PV-3.2