DATE 06/20/2006

Columbia County Building Permit

This Permit Expires One Year From the Date of Issue

PERMIT
000024642

APPLICANT STEPHEN D. MORGAN PHONE 386.466.1876

ADDRESS 173 SW LANCELOT GLEN LAKE CITY FL 32024

OWNER DONNY WILLIAMS PHONE 386.755.0764

ADDRESS 172 SW LANCELOT GLEN LAKE CITY FL 32024

CONTRACTOR FREDRICK PERRY PHONE 386.752.2832

LOCATION OF PROPERTY 90-W TO C-341-S,TL TO STONEHENGE LN,TR TO GUINEVERE WAY,TR T LANCELOT GLEN,TR AND IT'S THE 3RD LOT ON R.

TYPE DEVELOPMENT SFD/UTILITY ESTIMATED COST OF CONSTRUCTION 95250.00

HEATED FLOOR AREA 1905.00 TOTAL AREA 2687.00 HEIGHT 21.00 STORIES 1

FOUNDATION CONC WALLS FRAMED ROOF PITCH 6'12 FLOOR CONC

LAND USE & ZONING RSF-2 MAX. HEIGHT 36

Minimum Set Back Requirments: STREET-FRONT 25.00 REAR 15.00 SIDE 10.00

NO. EX.D.U. 0 FLOOD ZONE XPP DEVELOPMENT PERMIT NO.

PARCEL ID 23-4S-16-03099-222 SUBDIVISION STONEHENGE

LOT 22 BLOCK PHASE 2 UNIT TOTAL ACRES 0.50

000001118		CBC1252411		
Culvert Permit No.	Culvert Waiver	Contractor's License Number	Applicant/Owner/Contractor	
18"X32'MITERED	06-0468-N	BLK	JTH	
Driveway Connection	Septic Tank Number	LU & Zoning checked by	Approved for Issuance	New Resident

COMMENTS: SEE ATTACHED LETTER FOR 1ST. FLOOR HEIGHT - 1 FT ABOVE EXISTING GRADE.
NOC ON FILE.

Check # or Cash 5154

FOR BUILDING & ZONING DEPARTMENT ONLY

(footer/Slab)

Temporary Power _____ date/app. by
Foundation _____ date/app. by
Monolithic _____ date/app. by
Under slab rough-in plumbing _____ date/app. by
Slab _____ date/app. by
Sheathing/Nailing _____ date/app. by
Framing _____ date/app. by
Rough-in plumbing above slab and below wood floor _____ date/app. by
Electrical rough-in _____ date/app. by
Heat & Air Duct _____ date/app. by
Peri. beam (Lintel) _____ date/app. by
Permanent power _____ date/app. by
C.O. Final _____ date/app. by
Culvert _____ date/app. by
M/H tie downs, blocking, electricity and plumbing _____ date/app. by
Pool _____ date/app. by
Reconnection _____ date/app. by
Pump pole _____ date/app. by
Utility Pole _____ date/app. by
M/H Pole _____ date/app. by
Travel Trailer _____ date/app. by
Re-roof _____ date/app. by

BUILDING PERMIT FEE $ 480.00 CERTIFICATION FEE $ 13.44 SURCHARGE FEE $ 13.44

MISC. FEES $ 0.00 ZONING CERT. FEE $ 50.00 FIRE FEE $ 0.00 WASTE FEE $

FLOOD DEVELOPMENT FEE $ FLOOD ZONE FEE $ 25.00 CULVERT FEE $ 25.00 **TOTAL FEE** 606.88

INSPECTORS OFFICE CDP CLERKS OFFICE CH

NOTICE: IN ADDITION TO THE REQUIREMENTS OF THIS PERMIT, THERE MAY BE ADDITIONAL RESTRICTIONS APPLICABLE TO THIS PROPERTY THAT MAY BE FOUND IN THE PUBLIC RECORDS OF THIS COUNTY. AND THERE MAY BE ADDITIONAL PERMITS REQUIRED FROM OTHER GOVERNMENTAL ENTITIES SUCH AS WATER MANAGEMENT DISTRICTS, STATE AGENCIES, OR FEDERAL AGENCIES.

"WARNING TO OWNER: YOUR FAILURE TO RECORD A NOTICE OF COMMENCEMENT MAY RESULT IN YOUR PAYING TWICE FOR IMPROVEMENTS TO YOUR PROPERTY. IF YOU INTEND TO OBTAIN FINANCING, CONSULT WITH YOUR LENDER OR AN ATTORNEY BEFORE RECORDING YOUR NOTICE OF COMMENCEMENT."

This Permit Must Be Prominently Posted on Premises During Construction

PLEASE NOTIFY THE COLUMBIA COUNTY BUILDING DEPARTMENT AT LEAST 24 HOURS IN ADVANCE OF EACH INSPECTION, IN ORDER THAT IT MAY BE MADE WITHOUT DELAY OR INCONVIENCE, PHONE 758-1008. THIS PERMIT IS NOT VALID UNLESS THE WORK AUTHORIZED BY IT IS COMMENCED WITHIN 6 MONTHS AFTER ISSUANCE.

The Issuance of this Permit Does Not Waive Compliance by Permittee with Deed Restrictions.

Columbia County Building Permit Application

Revised 9-23-04

For Office Use Only Application # 0606-13 Date Received 6/2/06 By G Permit # 1118/24642

Application Approved by - Zoning Official BLK Date 6.06.06 Plans Examiner OKJTH Date 6-13-06

Flood Zone Approved Development Permit N/A Zoning RSF-2 Land Use Plan Map Category Res. Low Den.

Comments See Attached Engineer Letter for 1ST Floor Height - 1 ft above Existing Grade

Applicants Name Stephen D. Morgan Phone 386-466-1876

Address 173 SW Lancelot Glen Lake City Fl 32024

Owners Name Donny Williams Phone 386-755-0764

911 Address ~~541~~ 173 SW ~~Arthur~~ Lancelot Glen Lake City Fl 32024

Contractors Name Fred Perry's Quality Construction Phone 386-752-2832

Address 615 SW Sabre Ave, Lake City Fl 32025

Fee Simple Owner Name & Address None

Bonding Co. Name & Address None

Architect/Engineer Name & Address Mark Disosway P.E PO Box 868 Lake City Fl 32056

Mortgage Lenders Name & Address

Circle the correct power company - FL Power & Light - Clay Elec. - Suwannee Valley Elec. - Progressive Energy

Property ID Number 23-4S-16-03099-222 Estimated Cost of Construction $105,000

Subdivision Name Stonehenge Lot 22 Block ____ Unit ____ Phase II

Driving Directions Highway 90 west, TL on Sisters Welcome rd, TR on Stonehenge Lane, TR on Guinevere way, TR on Lancelot Glen, Third lot on Right

Type of Construction Brick veiner / wood frame Number of Existing Dwellings on Property 0

Total Acreage .50 Lot Size ____ Do you need a - Culvert Permit or Culvert Waiver or Have an Existing Drive

Actual Distance of Structure from Property Lines - Front 60 Side 16 Side 75 Rear 79

Total Building Height 21' Number of Stories 1 Heated Floor Area ~~1852~~ 1925 Roof Pitch 6/12

Porches 215 GARAGE 567 TOTAL ~~2592~~ 2687

Application is hereby made to obtain a permit to do work and installations as indicated. I certify that no work or installation has commenced prior to the issuance of a permit and that all work be performed to meet the standards of all laws regulating construction in this jurisdiction.

OWNERS AFFIDAVIT: I hereby certify that all the foregoing information is accurate and all work will be done in compliance with all applicable laws and regulating construction and zoning.

WARNING TO OWNER: YOUR FAILURE TO RECORD A NOTICE OF COMMENCMENT MAY RESULT IN YOU PAYING TWICE FOR IMPROVEMENTS TO YOUR PROPERTY. IF YOU INTEND TO OBTAIN FINANCING, CONSULT WITH YOUR LENDER OR ATTORNEY BEFORE RECORDING YOUR NOTICE OF COMMENCEMENT.

Owner Builder or Agent (including Contractor) Contractor Signature

Contractors License Number CBC 1252411

Competency Card Number

STATE OF FLORIDA
COUNTY OF COLUMBIA

NOTARY STAMP/SEAL

LORETTA S. RUSS MY COMMISSION EXPIRES March 6, 2010 #DD 525675 Bonded thru Notary Public Underwriters NOTARY PUBLIC, STATE OF FLORIDA

Sworn to (or affirmed) and subscribed before me this 2nd day of June 2006.

Personally known ✓ or Produced Identification ____

Notary Signature

JW advised Stephen 6.19.06 - CH# 5154

FLOOR ELEVATIONS

PROPERTY DESCRIPTION: **Stonehenge Subdivision, Phase 2**

OWNER: Donald E. Williams

PROJECT REQUIREMENTS: Finish floor elevations for Stonehenge Subdivision, Phase 2.

On all lots, except those listed below, the minimum finish floor elevation of all proposed habitable buildings shall be a minimum of 12 inches above the highest adjacent existing ground elevation at the proposed building.

Lots 1, 2, 3, 4, & 5: The minimum finish floor elevation of all proposed habitable buildings shall be the higher of 12 inches above the highest adjacent existing ground elevation at the proposed building or 12 inches above the highest adjacent roadway.

Lots 17, 18, 19, 20, & 21: The minimum finish floor elevation of all proposed habitable buildings shall be the higher of 12 inches above the highest adjacent existing ground elevation at the proposed building or 18 inches above the east end of pavement adjacent to the retention pond.

All lots and driveways shall be graded to direct all runoff around and away from all points on exterior of the proposed building without changing direction, final destination, or quantity of runoff leaving the site. Lots shall not be filled, except for building pads, next to retention ponds.

The above elevations were obtained by using highly variable factors determined by a study of the watershed and by accepted water management district rainfall data and practices. Many judgements and assumptions are required to establish these factors. The resultant data is sensitive to changes, particularly of antecedent conditions, fill, urbanization, channelization, and land use.

The elevations are based on the 100-year flood, which is the flood having a 1% chance of being exceeded in any year.

Arthur N. Bedenbaugh 10-6-05

Arthur N. Bedenbaugh
Fla. P.E. # 9162
637 SW Hillcrest St.
Lake City, Florida 32025
(386) 752-5846

Application for Onsite Sewage Disposal System Construction Permit. Part II Site Plan

Permit Application Number: 06-0468

ALL CHANGES MUST BE APPROVED BY THE COUNTY HEALTH UNIT

PERRY/CR 05-3366

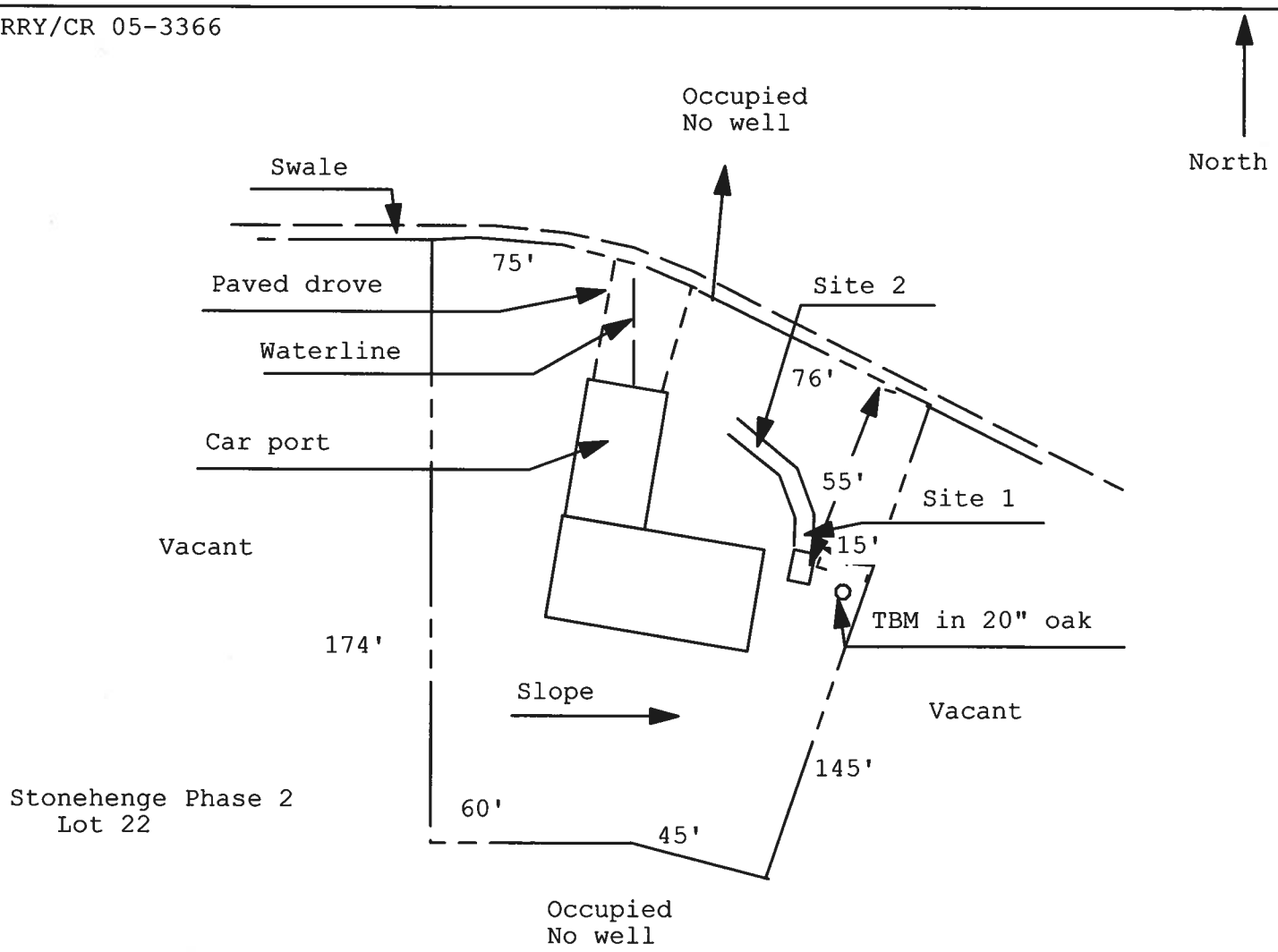

1 inch = 50 feet

Site Plan Submitted By Paul Lloyd **Date** 2/17/06

Plan Approved ✓ **Not Approved** ____ **Date** 5/12/06

By [illegible] Columbia **CPHU**

Notes:

Columbia County Building Department
Culvert Permit

Culvert Permit No.
000001118

DATE 06/20/2006 PARCEL ID # 23-4S-16-03099-222

APPLICANT STEPHEN D. MORGAN PHONE 386.466.1876

ADDRESS 173 SW LANCELOT GLEN LAKE CITY FL 32024

OWNER DONNY WILLIAMS PHONE 386.755.0764

ADDRESS 172 LANCELOT GLEN LAKE CITY FL 32024

CONTRACTOR FREDRICK PERRY PHONE 386.752.2832

LOCATION OF PROPERTY 90-W TO C-341-S,TL TO STONEHENGE LN,TR TO GUINEVERE WAY,TR TO LANCELOT GLEN,TR AND IT'S THE 3RD LOT ON R.

SUBDIVISION/LOT/BLOCK/PHASE/UNIT STONEHENGE 22 2

SIGNATURE

INSTALLATION REQUIREMENTS

[X] Culvert size will be 18 inches in diameter with a total lenght of 32 feet, leaving 24 feet of driving surface. Both ends will be mitered 4 foot with a 4 : 1 slope and poured with a 4 inch thick reinforced concrete slab.

INSTALLATION NOTE: Turnouts will be required as follows:
a) a majority of the current and existing driveway turnouts are paved, or;
b) the driveway to be served will be paved or formed with concrete.
Turnouts shall be concrete or paved a minimum of 12 feet wide or the width of the concrete or paved driveway, whichever is greater. The width shall conform to the current and existing paved or concreted turnouts.

[ ] Culvert installation shall conform to the approved site plan standards.

[ ] Department of Transportation Permit installation approved standards.

[ ] Other

ALL PROPER SAFETY REQUIREMENTS SHOULD BE FOLLOWED DURING THE INSTALATION OF THE CULVERT.

135 NE Hernando Ave., Suite B-21
Lake City, FL 32055
Phone: 386-758-1008 Fax: 386-758-2160

Amount Paid 25.00

COLUMBIA COUNTY GATEWAY TO FLORIDA

NOTICE OF COMMENCEMENT FORM
COLUMBIA COUNTY, FLORIDA

******THIS DOCUMENT MUST BE RECORDED AT THE COUNTY CLERKS OFFICE BEFORE YOUR FIRST INSPECTION.******

THE UNDERSIGNED hereby gives notice that improvement will be made to certain real property, and in accordance with Chapter 713, Florida Statutes, the following information is provided in this Notice of Commencement.

Tax Parcel ID Number 23-45-16-03099-222 **PERMIT NUMBER** _____

1. **Description of property: (legal description of the property and street address or 911 address)**
   172 SW Lancelot Glen

   Inst:2006013296 Date:06/02/2006 Time:11:20
   DC,P.DeWitt Cason,Columbia County B:1085 P:1477

2. **General description of improvement:** New House
3. **Owner Name & Address** Donny Williams Construction LLC
   Interest in Property Owner
4. **Name & Address of Fee Simple Owner (if other than owner):** Same as above
5. **Contractor Name** Fred Perry Quality Const. **Phone Number** 752-2832
   Address 615 SW Sabre Ave Lake City Fl 32024
6. **Surety Holders Name** None **Phone Number** _____
   Address _____
   Amount of Bond _____
7. **Lender Name** None **Phone Number** _____
   Address _____
8. **Persons within the State of Florida designated by the Owner upon whom notices or other documents may be served as provided by section 718.13 (1)(a) 7; Florida Statutes:**
   Name Donny Williams Construction LLC **Phone Number** 755-0764
   Address 541 SW Airpark Glen Lake City Fl 32024
9. **In addition to himself/herself the owner designates** _____ **of** _____ **to receive a copy of the Lienor's Notice as provided in Section 713.13 (1) – (a) 7. Phone Number of the designee** _____
10. **Expiration date of the Notice of Commencement (the expiration date is 1 (one) year from the date of recording, (Unless a different date is specified)** _____

NOTICE AS PER CHAPTER 713, Florida Statutes:
The owner must sign the notice of commencement and no one else may be permitted to sign in his/her stead.

Donald E Williams
Signature of Owner

Sworn to (or affirmed) and subscribed before day of March 2, **20** 06

NOTARY STAMP/SEAL

WORTH D. MORRIS
MY COMMISSION EXPIRES June 16, 2007
#DD 188249
Bonded thru Notary Public Underwriters
NOTARY PUBLIC, STATE OF FLORIDA

Worth D. Morris
Signature of Notary

Doc Stamp-Deed : 931.00
MK DC,P.DeWitt Cason,Columbia County B:959 P:106

WARRANTY DEED

THIS INDENTURE, made this 30th day of July, 2002, between LEONARD REYNOLDS and MARY ELIZABETH REYNOLDS, his wife, whose post office address is Post Office Box 2067, Chiefland, Florida 32644, Grantors, and DONALD E. WILLIAMS and SANDRA P. WILLIAMS, his wife, as to a ½ undivided interest, social security numbers 267-84-0079 and 267-84-0430, and UMESH M. MHATRE and SHILPA U. MHATRE, his wife, as to the other ½ undivided interest, as equal joint tenants in common, social security numbers 264-57-4342 and 265-65-3610, whose post office address is Route 18, Box 576, Lake City, Florida 32025, Grantees,

W I T N E S S E T H:

That said Grantors, for and in consideration of the sum of TEN AND NO/100 ($10.00) DOLLARS, and other good and valuable considerations to said Grantors in hand paid by said Grantees, the receipt whereof is hereby acknowledged, have granted, bargained and sold to the said Grantees, and Grantees' heirs, successors and assigns forever, the following described land, situate, lying and being in COLUMBIA County, Florida, to-wit:

TOWNSHIP 4 SOUTH, RANGE 16 EAST

Section 23: The S½ of S½ of NW¼, less and except rights of way for railroad and for road. Containing 38.00 acres, more or less. Lying in Columbia County, Florida.

SUBJECT TO: Taxes for 2002 and subsequent years; restrictions and easements of record; and easements shown by the plat of said property.

Tax Parcel No. R-03099-000

And said Grantors do hereby fully warrant the title to said land and will defend the same against the lawful claims of all persons whomsoever.

IN WITNESS WHEREOF, Grantors have hereunto set their hands and seals the day and year first above written.

Signed, sealed and delivered in the presence of:

Eddie M. Anderson
Print Name: Eddie M. Anderson

Donna H. Anderson
Print Name: DONNA H. Anderson

Witnesses as to Grantors

LEONARD REYNOLDS

Mary Elizabeth Reynolds
MARY ELIZABETH REYNOLDS

This Instrument Prepared By
EDDIE M. ANDERSON, P.A.
P. O. Box 1179
Lake City, Florida 32056-1179

STATE OF FLORIDA
COUNTY OF COLUMBIA

The foregoing instrument was acknowledged before me this 30th day of July, 2002, by LEONARD REYNOLDS and MARY ELIZABETH REYNOLDS. They produced DL as identification.

Donna H. Anderson
My Commission CC845938
Expires June 13, 2003
(Notarial Seal)

Donna H. Anderson
Print Name:
Notary Public
My Commission Expires:

Inst:200201306O Date:07/31/2002 Time:09:12:12
Doc Stamp-Deed : 67.50
MCK DC,P.DeWitt Cason,Columbia County B:959 P:105

WARRANTY DEED

THIS INDENTURE, made this 30th day of July, 2002, between CATHERINE B. DALE, also known as KATHERINE DALE, who does not reside on the property, whose post office address is 17745 Thelma Avenue, Jupiter, Florida 33458, Grantor, and DONALD E. WILLIAMS and SANDRA P. WILLIAMS, his wife, as to a ½ undivided interest, social security numbers 267-84-0079 and 267-84-0430, and UMESH M. MHATRE and SHILPA U. MHATRE, his wife, as to the other ½ undivided interest, as equal joint tenants in common, social security numbers 264-57-4342 and 265-65-3610, whose post office address is Route 18, Box 576, Lake City, Florida 32025, Grantees,

W I T N E S S E T H:

That said Grantor, for and in consideration of the sum of TEN AND NO/100 ($10.00) DOLLARS, and other good and valuable considerations to said Grantor in hand paid by said Grantees, the receipt whereof is hereby acknowledged, has granted, bargained and sold to the said Grantees, and Grantees' heirs, successors and assigns forever, the following described land, situate, lying and being in COLUMBIA County, Florida, to-wit:

TOWNSHIP 4 SOUTH, RANGE 16 EAST

Section 23: The West 1.00 acre of the E½ of S½ of N½ of SE¼ of NW¼; and

The E½ of S½ of N½ of SE¼ of NW¼, less and except the West 1.00 acre thereof.

SUBJECT TO: Taxes for 2002 and subsequent years; restrictions and easements of record; and easements shown by the plat of said property.

Tax Parcel No. R-03098-002; R-03098-003

And said Grantor does hereby fully warrant the title to said land and will defend the same against the lawful claims of all persons whomsoever.

IN WITNESS WHEREOF, Grantor has hereunto set her hand and seal the day and year first above written.

Signed, sealed and delivered in the presence of:

Eddie M. Anderson
Print Name: Eddie M. Anderson

Donna H. Anderson
Print Name: Donna H. Anderson
Witnesses as to Grantor

Catherine B. Dale
CATHERINE B. DALE

This Instrument Prepared By
EDDIE M. ANDERSON, P.A.
P. O. Box 1179
Lake City, Florida 32056-1179

STATE OF FLORIDA
COUNTY OF COLUMBIA

The foregoing instrument was acknowledged before me this 30th day of July, 2002, by CATHERINE B. DALE. She is personally known to me or has produced DL as identification.

Donna H. Anderson
Print Name:
Notary Public
My Commission Expires:

(Notarial Seal) Donna H. Anderson My Commission CC845934 Expires June 13, 2003

Inst:200201502 Date:07/31/2002 Time:09:12:12
Doc Stamp-Deed : 437.50
MCK DC,P.DeWitt Cason,Columbia County B:959 P:107

443.50

SPECIAL WARRANTY DEED

THIS SPECIAL WARRANTY DEED, made this 30th day of July, 2002, between CATHERINE B. DALE, as personal representative of the estate of Ida Brooks, deceased, who does not reside on the property, whose post office address is 17745 Thelma Avenue, Jupiter, Florida 33458, Grantor, and DONALD E. WILLIAMS and SANDRA P. WILLIAMS, his wife, as to a ½ undivided interest, social security numbers 267-84-0079 and 267-84-0430, and UMESH M. MHATRE and SHILPA U. MHATRE, his wife, as to the other ½ undivided interest, as equal joint tenants in common, social security numbers 264-57-4342 and 265-65-3610, whose post office address is Route 18, Box 576, Lake City, Florida 32025, Grantees,

W I T N E S S E T H:

That said Grantor, for and in consideration of the sum of TEN AND NO/100 ($10.00) DOLLARS and other valuable considerations, receipt whereof is hereby acknowledged, hereby grants, bargains, sells, aliens, remises, releases, conveys and confirms unto the Grantees those certain lands situate in Columbia County, Florida, described as follows:

TOWNSHIP 4 SOUTH, RANGE 16 EAST

Section 23: The N½ of N½ of S½ of NW¼; and the W½ of S½ of N½ of SE¼ of NW¼.

SUBJECT TO: Taxes for 2002 and subsequent years; restrictions and easements of record; and easements shown by the plat of said property.

Tax Parcel No. R-03098-000

TOGETHER with all the tenements, hereditaments and appurtenances thereto belonging or in anywise appertaining.

TO HAVE AND TO HOLD, the same in fee simple forever.

AND the Grantor hereby covenants with said Grantees that the Grantor is lawfully seized of said land in fee simple; that the Grantor has good right and lawful authority to sell and convey said land; that the Grantor hereby warrants the title to said land and will defend the same against the lawful claims of all persons claiming by, through or under the said Grantor.

IN WITNESS WHEREOF, the Grantor has hereunto set her hand and seal the day and year first above written.

Signed, sealed and delivered in the presence of:

Eddie M. Anderson
Print Name: Eddie M. Anderson

Donna H. Anderson
Print Name: Donna H. Anderson
Witnesses as to Grantor

Catherine B. Dale (SEAL)
CATHERINE B. DALE, as personal representative of the estate of Ida Brooks, deceased

This Instrument Prepared By
EDDIE M. ANDERSON, P.A.
P. O. Box 1179
Lake City, Florida 32056-1179

STATE OF FLORIDA
COUNTY OF COLUMBIA

The foregoing instrument was acknowledged before me the 30th day of July, 2002 by CATHERINE B. DALE, as personal representative of the estate of Ida Brooks, deceased. She is personally known to me or produced FL DL as identification.

(Notary Seal)

Donna H. Anderson
My Commission CC645932
Expires June 13, 2003

Donna H. Anderson
Print Name:
Notary Public
My Commission Expires:

FORM 600A-2001

FLORIDA ENERGY EFFICIENCY CODE FOR BUILDING CONSTRUCTION

Florida Department of Community Affairs

Residential Whole Building Performance Method A

Project Name:	stonehenge model	Builder:	
Address:		Permitting Office:	COLUMBIA
City, State:	Lake City, FL 32025-	Permit Number:	24642
Owner:		Jurisdiction Number:	221000
Climate Zone:	North		

1. New construction or existing		New	
2. Single family or multi-family		Single family	
3. Number of units, if multi-family		1	
4. Number of Bedrooms		3	
5. Is this a worst case?		No	
6. Conditioned floor area (ft²)		1905 ft²	
7. Glass area & type	Single Pane	Double Pane	
a. Clear glass, default U-factor	0.0 ft²	0.0 ft²	
b. Default tint	0.0 ft²	246.3 ft²	
c. Labeled U or SHGC	0.0 ft²	0.0 ft²	
8. Floor types			
a. Slab-On-Grade Edge Insulation		R=0.0, 186.5(p) ft	
b. N/A			
c. N/A			
9. Wall types			
a. Face Brick, Wood, Exterior		R=11.0, 1552.3 ft²	
b. N/A			
c. N/A			
d. N/A			
e. N/A			
10. Ceiling types			
a. Under Attic		R=30.0, 1905.4 ft²	
b. N/A			
c. N/A			
11. Ducts			
a. Sup: Unc. Ret: Unc. AH: Interior		Sup. R=6.0, 151.0 ft	
b. N/A			

12. Cooling systems		
a. Central Unit	Cap: 45.7 kBtu/hr	
	SEER: 10.00	
b. N/A		
c. N/A		
13. Heating systems		
a. Electric Heat Pump	Cap: 45.7 kBtu/hr	
	HSPF: 7.20	
b. N/A		
c. N/A		
14. Hot water systems		
a. N/A		
b. N/A		
c. Conservation credits (HR-Heat recovery, Solar DHP-Dedicated heat pump)		
15. HVAC credits (CF-Ceiling fan, CV-Cross ventilation, HF-Whole house fan, PT-Programmable Thermostat, MZ-C-Multizone cooling, MZ-H-Multizone heating)		

Glass/Floor Area: 0.13

Total as-built points: 26294
Total base points: 28873

PASS

I hereby certify that the plans and specifications covered by this calculation are in compliance with the Florida Energy Code.

PREPARED BY: Donny Williams

DATE: 5/31/06

I hereby certify that this building, as designed, is in compliance with the Florida Energy Code.

OWNER/AGENT: Fredil L Pz

DATE: 5/31/06

Review of the plans and specifications covered by this calculation indicates compliance with the Florida Energy Code. Before construction is completed this building will be inspected for compliance with Section 553.908 Florida Statutes.

GREAT SEAL OF THE STATE OF FLORIDA · IN GOD WE TRUST

BUILDING OFFICIAL: _____

DATE: _____

FORM 600A-2001

SUMMER CALCULATIONS

Residential Whole Building Performance Method A - Details

ADDRESS: , Lake City, FL, 32025- PERMIT #:

BASE

GLASS TYPES .18 X Conditioned Floor Area	X BSPM	= Points
.18 1905.0	20.04	6871.7

WALL TYPES	Area	X BSPM	= Points
Adjacent	0.0	0.00	0.0
Exterior	1552.3	1.70	2638.9
Base Total:	1552.3		2638.9

DOOR TYPES	Area	X BSPM	= Points
Adjacent	0.0	0.00	0.0
Exterior	66.5	6.10	405.6
Base Total:	66.5		405.6

CEILING TYPES	Area	X BSPM	= Points
Under Attic	1905.4	1.73	3296.3
Base Total:	1905.4		3296.3

FLOOR TYPES	Area	X BSPM	= Points
Slab	186.5(p)	-37.0	-6900.5
Raised	0.0	0.00	0.0
Base Total:			-6900.5

INFILTRATION	Area	X BSPM	= Points
	1905.0	10.21	19450.1

AS-BUILT

Type/SC	Overhang Ornt	Len	Hgt	Area	X SPM	X SOF	= Points
Double, Tint	N	2.0	6.0	105.0	14.84	0.90	1404.6
Double, Tint	W	2.0	6.0	30.0	30.93	0.85	790.7
Double, Tint	S	2.0	6.0	105.0	28.73	0.78	2350.6
Double, Tint	E	2.0	3.5	6.3	33.89	0.68	145.4
As-Built Total:				246.3			4691.3

Type	R-Value	Area	X SPM	= Points
Face Brick, Wood, Exterior	11.0	1552.3	0.40	620.9
As-Built Total:		1552.3		620.9

Type	Area	X SPM	= Points
Exterior Wood	24.5	6.10	149.4
Exterior Wood	42.0	6.10	256.2
As-Built Total:	66.5		405.6

Type	R-Value	Area	X SPM X SCM	= Points
Under Attic	30.0	1905.4	1.73 X 1.00	3296.3
As-Built Total:		1905.4		3296.3

Type	R-Value	Area	X SPM	= Points
Slab-On-Grade Edge Insulation	0.0	186.5(p	-41.20	-7683.8
As-Built Total:		186.5		-7683.8

Area	X SPM	= Points
1905.0	10.21	19450.1

SUMMER CALCULATIONS

Residential Whole Building Performance Method A - Details

ADDRESS: , Lake City, FL, 32025-	PERMIT #:

BASE				AS-BUILT							
Summer Base Points:			**25762.2**	**Summer As-Built Points:**							**20780.4**
Total Summer Points	X System Multiplier	=	Cooling Points	Total Component	X Cap Ratio	X Duct Multiplier (DM x DSM x AHU)	X System Multiplier	X Credit Multiplier	=	Cooling Points	
25762.2	**0.4266**		**10990.1**	20780.4 **20780.4**	1.000 **1.00**	(1.090 x 1.147 x 0.91) **1.138**	0.341 **0.341**	1.000 **1.000**		8069.0 **8069.0**	

FORM 600A-2001

WINTER CALCULATIONS

Residential Whole Building Performance Method A - Details

ADDRESS: , Lake City, FL, 32025-	PERMIT #:

BASE				AS-BUILT							
Winter Base Points:			**15372.0**	**Winter As-Built Points:**							**18144.0**
Total Winter Points	X	System Multiplier	= Heating Points	Total Component	X	Cap Ratio	X Duct Multiplier (DM x DSM x AHU)	X System Multiplier	X	Credit Multiplier	= Heating Points
15372.0		**0.6274**	**9644.4**	18144.0 **18144.0**		1.000 **1.00**	(1.069 x 1.169 x 0.93) **1.162**	0.474 **0.474**		1.000 **1.000**	9986.9 **9986.9**

FORM 600A-2001

WATER HEATING & CODE COMPLIANCE STATUS

Residential Whole Building Performance Method A - Details

ADDRESS: , Lake City, FL, 32025-	PERMIT #:

BASE					AS-BUILT							
WATER HEATING												
Number of Bedrooms	X	Multiplier	=	Total	Tank Volume	EF	Number of Bedrooms	X	Tank Ratio	X	Multiplier	X	Credit Multiplier	=	Total
3		2746.00		8238.0			3		1.00		2746.00		1.00		8238.0
					As-Built Total:										**8238.0**

CODE COMPLIANCE STATUS

BASE				AS-BUILT			
Cooling Points +	Heating Points +	Hot Water Points =	Total Points	Cooling Points +	Heating Points +	Hot Water Points =	Total Points
10990	**9644**	**8238**	**28873**	**8069**	**9987**	**8238**	**26294**

PASS

FORM 600A-2001

Code Compliance Checklist

Residential Whole Building Performance Method A - Details

ADDRESS: , Lake City, FL, 32025-	PERMIT #:

6A-21 INFILTRATION REDUCTION COMPLIANCE CHECKLIST

COMPONENTS	SECTION	REQUIREMENTS FOR EACH PRACTICE	CHECK
Exterior Windows & Doors	606.1.ABC.1.1	Maximum:.3 cfm/sq.ft. window area; .5 cfm/sq.ft. door area.	
Exterior & Adjacent Walls	606.1.ABC.1.2.1	Caulk, gasket, weatherstrip or seal between: windows/doors & frames, surrounding wall; foundation & wall sole or sill plate; joints between exterior wall panels at corners; utility penetrations; between wall panels & top/bottom plates; between walls and floor. EXCEPTION: Frame walls where a continuous infiltration barrier is installed that extends from, and is sealed to, the foundation to the top plate.	
Floors	606.1.ABC.1.2.2	Penetrations/openings >1/8" sealed unless backed by truss or joint members. EXCEPTION: Frame floors where a continuous infiltration barrier is installed that is sealed to the perimeter, penetrations and seams.	
Ceilings	606.1.ABC.1.2.3	Between walls & ceilings; penetrations of ceiling plane of top floor; around shafts, chases, soffits, chimneys, cabinets sealed to continuous air barrier; gaps in gyp board & top plate; attic access. EXCEPTION: Frame ceilings where a continuous infiltration barrier is installed that is sealed at the perimeter, at penetrations and seams.	
Recessed Lighting Fixtures	606.1.ABC.1.2.4	Type IC rated with no penetrations, sealed; or Type IC or non-IC rated, installed inside a sealed box with 1/2" clearance & 3" from insulation; or Type IC rated with < 2.0 cfm from conditioned space, tested.	
Multi-story Houses	606.1.ABC.1.2.5	Air barrier on perimeter of floor cavity between floors.	
Additional Infiltration reqts	606.1.ABC.1.3	Exhaust fans vented to outdoors, dampers; combustion space heaters comply with NFPA, have combustion air.	

6A-22 OTHER PRESCRIPTIVE MEASURES (must be met or exceeded by all residences.)

COMPONENTS	SECTION	REQUIREMENTS	CHECK
Water Heaters	612.1	Comply with efficiency requirements in Table 6-12. Switch or clearly marked circuit breaker (electric) or cutoff (gas) must be provided. External or built-in heat trap required.	
Swimming Pools & Spas	612.1	Spas & heated pools must have covers (except solar heated). Non-commercial pools must have a pump timer. Gas spa & pool heaters must have a minimum thermal efficiency of 78%.	
Shower heads	612.1	Water flow must be restricted to no more than 2.5 gallons per minute at 80 PSIG.	
Air Distribution Systems	610.1	All ducts, fittings, mechanical equipment and plenum chambers shall be mechanically attached, sealed, insulated, and installed in accordance with the criteria of Section 610. Ducts in unconditioned attics: R-6 min. insulation.	
HVAC Controls	607.1	Separate readily accessible manual or automatic thermostat for each system.	
Insulation	604.1, 602.1	Ceilings-Min. R-19. Common walls-Frame R-11 or CBS R-3 both sides. Common ceiling & floors R-11.	

Summary Energy Code Results

Residential Whole Building Performance Method A

Project Title:
stonehenge model

Lake City, FL 32025-

Class 3 Rating
Registration No. 0
Climate: North

12/1/2003

Building Loads			
Base		As-Built	
Summer:	**25762 points**	Summer:	**20780 points**
Winter:	**15372 points**	Winter:	**18144 points**
Hot Water:	**7249 points**	Hot Water:	**7249 points**
Total:	**48384 points**	Total:	**46174 points**

Energy Use			
Base		As-Built	
Cooling:	**10990 points**	Cooling:	**8069 points**
Heating:	**9644 points**	Heating:	**9987 points**
Hot Water:	**8238 points**	Hot Water:	**8238 points**
Total:	**28873 points**	Total:	**26294 points**

PASS
e-Ratio: 0.91

EnergyGauge®(Version: FLRCSB v3.30)

** LAMAR BOOZER **
900 EAST PUTNAM STREET
LAKE CITY, FL 32055

PROJECT: CUSTOM
CLIENT: FREDRICK PERRY
DATE: 2 22 06

RESIDENTIAL/LIGHT COMMERCIAL HVAC LOADS

DESIGNER: LAMAR BOOZER

CLIENT INFORMATION:

NAME: FREDRICK PERRY
ADDRESS:
CITY, STATE: LAKE CITY, FLORIDA

TOTAL BUILDING LOADS:

BLDG. LOAD DESCRIPTIONS	AREA QUAN	SEN. LOSS	LAT. + GAIN	SEN. = GAIN	TOTAL GAIN
3-C WINDOW DBL PANE CLR GLS METL FR	140	4,568	0	7,721	7,721
9-I FRENCH DOOR DBL CLR GLS METL FR	40	1,357	0	1,536	1,536
12-D WALL R-11 +1/2"ASPHLT BRD(R-1.3)	1,252	4,507	0	2,462	2,462
11-C DOOR METAL POLYSTYRENE CORE	60	1,269	0	693	693
16-G CEILING R-30 INSULATION	1,840	2,466	0	2,466	2,466
22-A SLAB ON GRADE NO EDGE INSUL	44	1,604	0	0	0
22-B SLAB ON GRADE 1" EDGE INS(R-5)	142	2,620	0	0	0
SUBTOTALS FOR STRUCTURE:	3,518	18,391	0	14,878	14,878
PEOPLE	9	0	0	2,700	2,700
APPLIANCES	0	0	1,800	1,500	3,300
DUCTWORK	0	919	0	1,908	1,908
INFILTRATION W.CFM: 0.0 S.CFM: 0.0	0	0	0	0	0
VENTILATION W.CFM: 0.0 S.CFM: 0.0	0	0	0	0	0
SENSIBLE GAIN TOTAL				20,986	
TEMP. SWING MULTIPLIER				X 1.00	
BUILDING LOAD TOTALS		19,310	1,800	20,986	22,786

SUPPLY CFM AT 20 DEG DT: 954
SQUARE FT. OF ROOM AREA: 1,840

CFM PER SQUARE FOOT: 0.574
SQUARE FOOT PER TON: 874.748

TOTAL HEATING REQUIRED WITH OUTSIDE AIR: 19.310 MBH
TOTAL COOLING REQUIRED WITH OUTSIDE AIR: 2.899 TONS

CALCULATIONS ARE BASED ON 7TH EDITION OF ACCA MANUAL J.
ALL COMPUTED RESULTS ARE ESTIMATES AS BUILDING USE AND WEATHER MAY VARY.
BE SURE TO SELECT A UNIT THAT MEETS BOTH SENSIBLE AND LATENT LOADS.

Project Name:

by Florida Statute 553.842 and Florida Administrative Code 9B-72, please provide the information and the approval number(s) on the building components listed below if they will be utilized on the construction project for ou are applying for a building permit on or after April 1, 2004. We recommend you contact your local product er should you not know the product approval number for any of the applicable listed products. More information t statewide product approval can be obtained at www.floridabuilding.org

Category/Subcategory	Manufacturer	Product Description	Approval Number(s)
. EXTERIOR DOORS			
1. Swinging	Masonite	Wood-edge Steel Side-Hinge Door	4904.1
2. Sliding			
3. Sectional			
4. Roll up			
5. Automatic Garage			FL-4970
6. Other Door + Sidelites	Masonite	Wood-edge Steel Side Hinged Door	4901.3
. WINDOWS			
1. Single hung	ALUT	3950 Vinyl Fin Frame Single Hung	1782.2
2. Horizontal Slider			
3. Casement			
4. Double Hung			
5. Fixed	ALUT	Series 3180 Vinyl Fin Frame Picture	1788.1
6. Awning			
7. Pass-through			
8. Projected			
9. Mullion			
10. Wind Breaker			
11 Dual Action			
12. Other			
. PANEL WALL			
1. Siding		HARDI	FL 889-122
2. Soffits			
3. EIFS			
4. Storefronts			
5. Curtain walls			
6. Wall louver			
7. Glass block			
8. Membrane			
9. Greenhouse			
10. Other			
. ROOFING PRODUCTS			
1. Asphalt Shingles		ELK	Shingles Hip Starter 728.4 728.5 728.6
2. Underlayments			30# FL 1814.3
3. Roofing Fasteners			15# FL 1814.1
4. Non-structural Metal Rf			
5. Built-Up Roofing			
6. Modified Bitumen			
7. Single Ply Roofing Sys			
8. Roofing Tiles			
9. Roofing Insulation			
10. Waterproofing			
11. Wood shingles /shakes			
12. Roofing Slate			

Notice of Treatment 12130

Applicator: Florida Pest Control & Chemical Co. (www.flapest .com)
Address: Bayaue
City Lake City Phone 7521703

Site Location: Subdivision Stonehenge II
Lot # 22 Block# Permit # 24642
Address 172 sw Lancelot

Product used	Active Ingredient	% Concentration
☐ Premise	Imidacloprid	0.1%
☐ Termidor	Fipronil	0.12%
☑ Bora-Care	Disodium Octaborate Tetrahydrate	23.0%

Type treatment: ☐ Soil ☑ Wood

Area Treated	Square feet	Linear feet	Gallons Applied
Dwelling	2687	696	6

As per Florida Building Code 104.2.6 – If soil chemical barrier method for termite prevention is used, final exterior treatment shall be completed prior to final building approval.

If this notice is for the final exterior treatment, initial this line _____.

8/25/06 — Date
0800 — Time
F254 Gunny — Print Technician's Name

Remarks: Plumbing Traps Filled w/Concrete (unable to Treat)

Applicator - White Permit File - Canary Permit Holder - Pink

10/05 ©

Category/Subcategory (cont.)	Manufacturer	Product Description	Approval Numbe
13. Liquid Applied Roof Sys			
14. Cements-Adhesives – Coatings			
15. Roof Tile Adhesive			
16. Spray Applied Polyurethane Roof			
17. Other			
E. SHUTTERS			
1. Accordion			
2. Bahama			
3. Storm Panels			
4. Colonial			
5. Roll-up			
6. Equipment			
7. Others			
F. SKYLIGHTS			
1. Skylight			
2. Other			
G. STRUCTURAL COMPONENTS			
1. Wood connector/anchor			
2. Truss plates			
3. Engineered lumber			
4. Railing			
5. Coolers-freezers			
6. Concrete Admixtures	Andersen materials		
7. Material			305701RS
8. Insulation Forms			
9. Plastics			
10. Deck-Roof	Norboard		
11. Wall			PSR-04
12. Sheds			
13. Other			
H. NEW EXTERIOR ENVELOPE PRODUCTS			
1.			
2.			

The products listed below did not demonstrate product approval at plan review. I understand that at the time of inspection of these products, the following information must be available to the inspector on the jobsite: 1) copy of the product approval, 2) the performance characteristics which the product was tested and certified to comply with, 3) copy of the applicable manufacturers installation requirements.

I understand these products may have to be removed if approval cannot be demonstrated during inspecti

Contractor or Contractor's Authorized Agent Signature

Print Name

Date

From: The Columbia County Building & Zoning Department
Plan Review
135 NE Hernando Av.
P.O. Box 1529
Lake City Florida 32056-1529

Reference to a building permit application Number: 0606-13

Contractor: Fredrick Perry Owner Donnie Williams Lot 22 of Stonehenge Subdivision

On the date of June 14, 2006 application 0606-13 and plans for construction of a single family dwelling were reviewed and the following information or alteration to the plans will be required to continue processing this application. If you should have any question please contact the above address, or contact phone number (386) 758-1163 or fax any information to (386) 754-7088.

Please include application number 0606-13 when making reference to this application.

This is a plan review for compliance with the Florida Residential Code 2004 only and doesn't make any consideration toward the land use and zoning requirements.

To help ensure compliance with the Florida Residential Code 2004 the comments below need to be addressed on the plans.

1. Line 6, conditioned area square footage on form 600A-2004 of the Florida Energy Efficiency Code for Building Construction doesn't concur with the conditioned floor area on the submitted plans. The total conditioned areas on the plans are 1817 (square feet). Line 6 currently reads that the

conditioned floor area equals1905 (square feet). *Please resubmit the corrected form to reflect on line 6 the actual total conditioned area to this department.*

2. The electrical plan shows the location of the electrical service, Please indicate on the electrical plan that an overcurrent protection device will be installed on the exterior of structures to serve as a disconnecting means. Conductors used from the exterior disconnecting means to a panel or sub panel shall have four-wire conductors, of which one conductor shall be used as an equipment ground.

Joe Haltiwanger

Plan Examiner
Columbia County Building Department

NICHOLAS
PAUL
GEISLER
ARCHITECT
N.C.A.R.B. Certified

1758 NW Brown Road
Lake City, FL 32055
386/755-9021

29 AUGUST 2006

JOHNNY KEARSE, BUILDING OFFICIAL
COLUMBIA COUNTY, BUILDING DEPT.
COLUMBIA COUNTY COURTHOUSE ANNEX
LAKE CITY, FLORIDA 32055

RE: Nr. 22, STONEHENGE 2
PERMIT Nr.: 24642

DEAR SIR:

PLEASE BE ADVISED THAT FOLLOWING A REVIEW OF THE ENGINEERED TRUSS SHOP DRAWINGS FOR THE ABOVE REFERENCED PROJECT THAT THE INSTALLED TRUSS ANCHORS, "SIMPSON" H2.5, ARE ADIQUATE FOR THE ENGINEERED LOADS INDICATED IN THE AFOREMENTIONED TRUSS SHOP DRAWINGS, WITH ONE EXCEPTION.

GIRDER TRUSS "D6G", SHALL BE REQUIRED TO HAVE 2 "SIMPSON" H2.5 ANCHORS AT EACH END, MOUNTED DIAGONALLY OPPOSITE FROM ONE ANOTHER ACROSS THE TRUSS.

THE TRUSSES THUS INSTALLED WILL MEET THE UPLIFT REQUIREMENTS OF THE ENGINEERED TRUSS SHOP DRAWINGS.

SHOULD YOU HAVE ANY FURTHER QUESTIONS WITH THIS, PLEASE CALL FOR ASSISTANCE.

YOURS TRULY,
NICHOLAS PAUL GEISLER, ARCHITECT AR0007005

CERTIFICATE OF

OCCUPANCY

COLUMBIA COUNTY, FLORIDA

Department of Building and Zoning Inspection

This Certificate of Occupancy is issued to the below named permit holder for the building and premises at the below named location, and certifies that the work has been completed in accordance with the Columbia County Building Code.

Parcel Number 23-4S-16-03099-222

Building permit No. 000024642

Use Classification SFD/UTILITY

Fire: 55.80

Permit Holder FREDRICK PERRY

Waste: 167.50

Owner of Building DONNY WILLIAMS

Total: 223.30

Location: 172 SW LANCELOT GLEN(STONEHENGE, LOT 22)

Date: 11/28/2006

Harry Dicks

Building Inspector

POST IN A CONSPICUOUS PLACE
(Business Places Only)

Alpine Engineered Products, Inc.

1950 Marley Drive Haines City, FL 33844
Florida Engineering Certificate of Authorization Number: 567
Florida Certificate of Product Approval # FL1999
 Document ID:1SV0487-Z0327105310

Truss Fabricator: Anderson Truss Company
Job Identification: 6-083--Doug Morgan Construction #22 Stonehenge II -- , **
Truss Count: 50
Model Code: Florida Building Code 2004
Truss Criteria: ANSI/TPI-2002(STD)/FBC
Engineering Software: Alpine Software,Version 7.24.
Structural Engineer of Record:
Address:
Minimum Design Loads: Roof - 40.0 PSF @ 1.25 Duration
Floor - N/A
Wind - 110 MPH ASCE 7-02 -Closed

Seal Date: 02/27/2006

-Truss Design Engineer-
Arthur R. Fisher
Florida License Number: 59687
1950 Marley Drive
Haines City, FL 33844

Notes:

1. Determination as to the suitability of these truss components for the structure is the responsibility of the building designer/engineer of record, as defined in ANSI/TPI 1
2. The drawing date shown on this index sheet must match the date shown on the individual truss component drawing.
3. As shown on attached drawings; the drawing number is preceded by: HCUSR487

Details: BRCLBSUB-CNBRGBLK-

#	Ref Description	Drawing#	Date
1	31975--A1	06058033	02/27/06
2	31976--A2	06058029	02/27/06
3	31977--A3	06058027	02/27/06
4	31978--A4	06058026	02/27/06
5	31979--A5	06058025	02/27/06
6	31980--A6	06058021	02/27/06
7	31981--A7	06058022	02/27/06
8	31982--A8	06058024	02/27/06
9	31983--A9	06058013	02/27/06
10	31984--A10	06058042	02/27/06
11	31985--B1	06058020	02/27/06
12	31986--B2	06058030	02/27/06
13	31987--B3	06058031	02/27/06
14	31988--B4	06058032	02/27/06
15	31989--B5	06058038	02/27/06
16	31990--B6	06058039	02/27/06
17	31991--B7	06058040	02/27/06
18	31992--B8	06058041	02/27/06
19	31993--C1	06058004	02/27/06
20	31994--C2	06058005	02/27/06
21	31995--C3	06058006	02/27/06
22	31996--C4	06058007	02/27/06
23	31997--C5	06058014	02/27/06
24	31998--C6	06058008	02/27/06
25	31999--C7	06058009	02/27/06
26	32000--C8	06058010	02/27/06
27	32001--C9	06058043	02/27/06
28	32002--D1	06058001	02/27/06
29	32003--D2	06058012	02/27/06
30	32004--D3	06058023	02/27/06
31	32005--D4	06058034	02/27/06
32	32006--D5	06058045	02/27/06
33	32007--D6G	06058047	02/27/06
34	32008--HJ7	06058048	02/27/06
35	32009--EJ7	06058003	02/27/06
36	32010--HJ5	06058018	02/27/06
37	32011--EJ5	06058019	02/27/06
38	32012--HJ4	06058036	02/27/06
39	32013--EJ4	06058037	02/27/06
40	32014--HJB	06058044	02/27/06
41	32015--J3B	06058046	02/27/06
42	32016--J5	06058049	02/27/06
43	32017--J3	06058050	02/27/06
44	32018--J1	06058002	02/27/06
45	32019--K1	06058011	02/27/06
46	32020--K2	06058015	02/27/06
47	32021--K3	06058016	02/27/06
48	32022--K4G	06058017	02/27/06
49	32023--R1	06058035	02/27/06
50	32024--R2G	06058028	02/27/06

Roof Plane Sheathing Area = 3510 sq. ft
Gable Sheathing Area = 0 sq. ft
Total Sheathing Area = 3510 sq. ft
Fascia Material = 0 linear ft
Valley Flashing Material = 92 linear ft
Ridge Cap Material = 48 linear ft
Hip Ridge Material = 215 linear ft

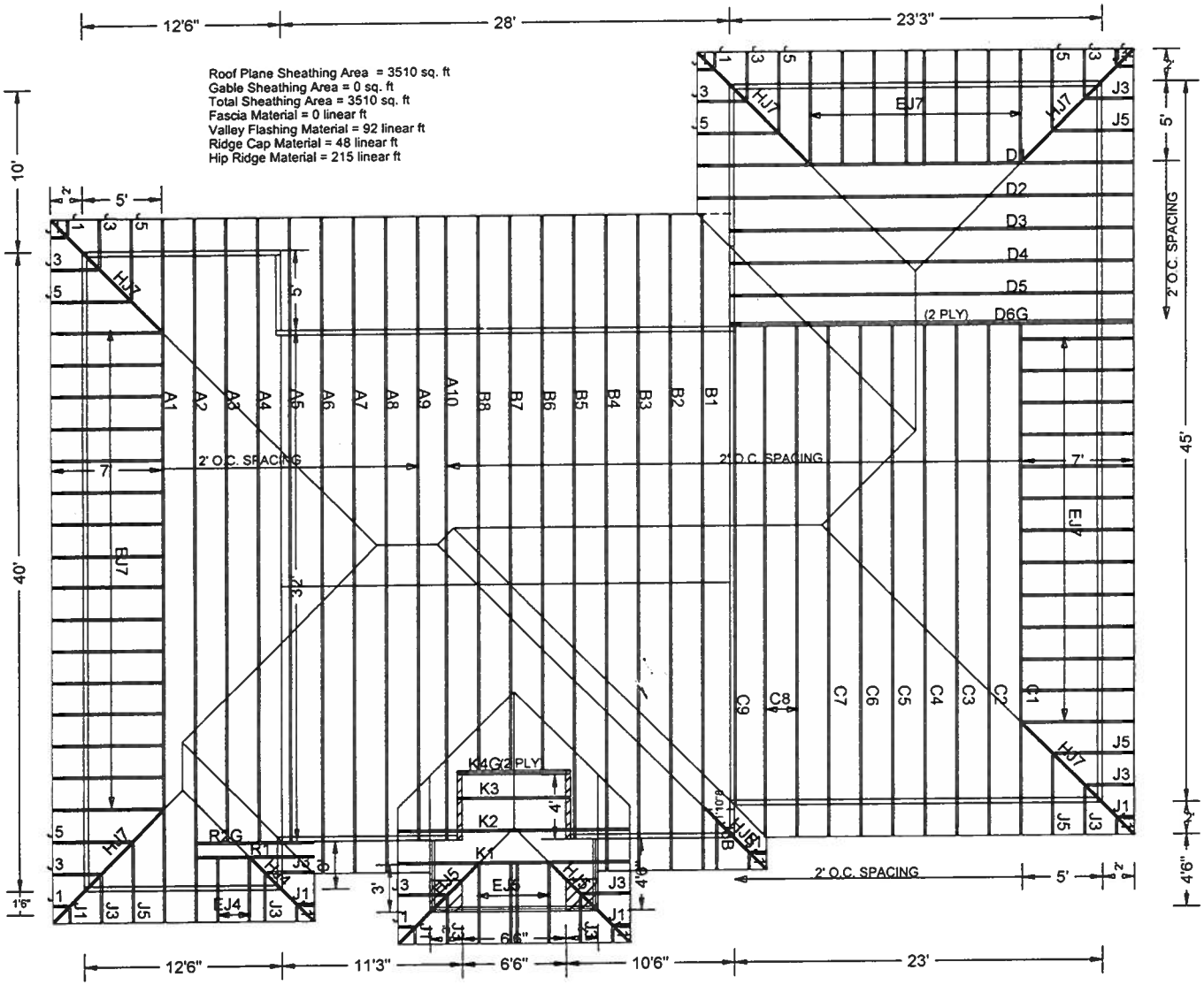

2/24/06 #6-083 DOUG MORGAN CONSTRUCTION - LOT #22 STONEHENGE II

Scale: 3/32" = 1'

623-5541

(6-083--Doug Morgan Construction #22 Stonehenge II -- , ** - A1)

Top chord 2x4 SP #2 :T2, T3 2x6 SP #1:
Bot chord 2x6 SP #1 :B2 2x6 SP SS:
Webs 2x4 SP #3 :W4, W12 2x4 SP #2:

SPECIAL LOADS
------(LUMBER DUR.FAC.=1.25 / PLATE DUR.FAC.=1.25)
TC - From 62 PLF at 0.00 to 62 PLF at 44.00
BC - From 20 PLF at 0.00 to 20 PLF at 44.00
TC - 281 LB Conc. Load at 7.00, 37.00
TC - 115 LB Conc. Load at 9.00, 11.00, 13.00, 15.00, 17.00
19.00, 21.00, 23.00, 25.00, 27.00, 29.00, 31.00, 33.00, 35.00
BC - 134 LB Conc. Load at 7.00, 37.00
BC - 33 LB Conc. Load at 9.00, 11.00, 13.00, 15.00, 17.00
19.00, 21.00, 23.00, 25.00, 27.00, 29.00, 31.00, 33.00, 35.00

110 mph wind, 15.00 ft mean hgt, ASCE 7-02, CLOSED bldg, not located within 6.50 ft from roof edge, CAT II, EXP B, wind TC DL=5.0 psf, wind BC DL=5.0 psf.

Calculated horizontal deflection is 0.10" due to live load and 0.15" due to dead load.

In lieu of structural panels or rigid ceiling use purlins to brace TC @ 24" OC, BC @ 24" OC.

Deflection meets L/360 live and L/240 total load. Creep increase factor for dead load is 1.50.

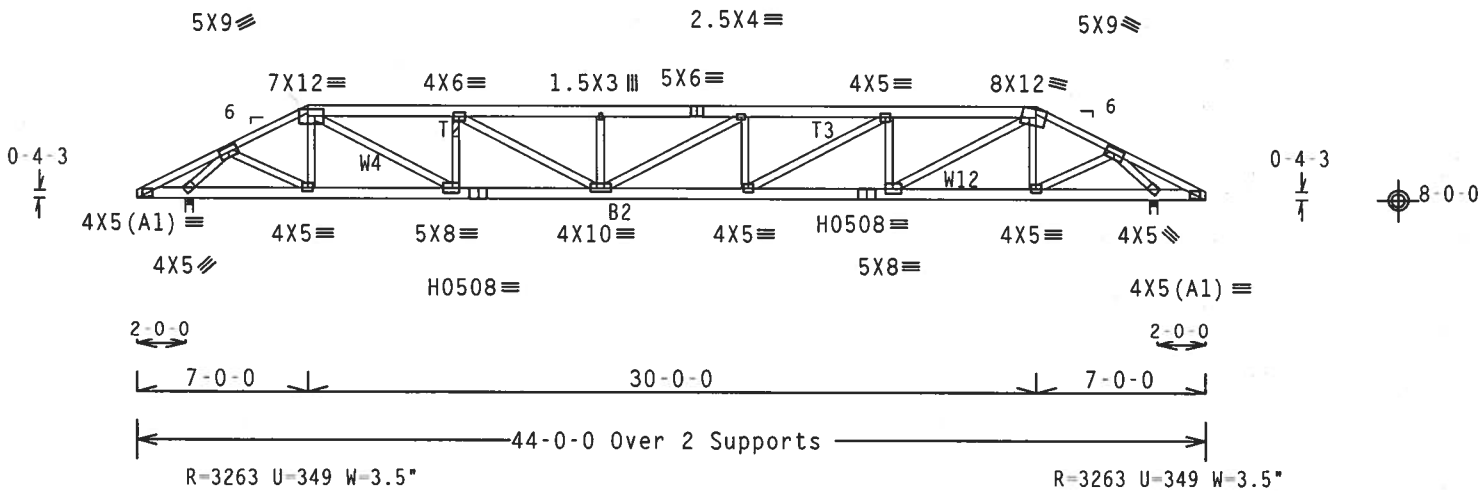

Design Crit: TPI-2002(STD)/FBC

PLT TYP. 20 Gauge HS,Wave Cq/RT=1.00(1.25)/10(0) 7.24. QTY:1 FL/-/4/-/-/R/- Scale =.125"/Ft.

ALPINE
Alpine Engineered Products, Inc.
1950 Marley Drive
Haines City, FL 33844
FL Certificate of Authorization # 567

WARNING TRUSSES REQUIRE EXTREME CARE IN FABRICATION, HANDLING, SHIPPING, INSTALLING AND BRACING. REFER TO BCSI 1-03 (BUILDING COMPONENT SAFETY INFORMATION), PUBLISHED BY TPI (TRUSS PLATE INSTITUTE, 583 D'ONOFRIO DR., SUITE 200, MADISON, WI 53719) AND WTCA (WOOD TRUSS COUNCIL OF AMERICA, 6300 ENTERPRISE LN, MADISON, WI 53719) FOR SAFETY PRACTICES PRIOR TO PERFORMING THESE FUNCTIONS. UNLESS OTHERWISE INDICATED, TOP CHORD SHALL HAVE PROPERLY ATTACHED STRUCTURAL PANELS AND BOTTOM CHORD SHALL HAVE A PROPERLY ATTACHED RIGID CEILING.

IMPORTANTFURNISH A COPY OF THIS DESIGN TO THE INSTALLATION CONTRACTOR. ALPINE ENGINEERED PRODUCTS, INC. SHALL NOT BE RESPONSIBLE FOR ANY DEVIATION FROM THIS DESIGN; ANY FAILURE TO BUILD THE TRUSS IN CONFORMANCE WITH TPI; OR FABRICATING, HANDLING, SHIPPING, INSTALLING & BRACING OF TRUSSES. DESIGN CONFORMS WITH APPLICABLE PROVISIONS OF NDS (NATIONAL DESIGN SPEC. BY AF&PA) AND TPI. ALPINE CONNECTOR PLATES ARE MADE OF 20/18/16GA (W,H/S/K) ASTM A653 GRADE 40/60 (W, K/H,S) GALV. STEEL. APPLY PLATES TO EACH FACE OF TRUSS AND, UNLESS OTHERWISE LOCATED ON THIS DESIGN, POSITION PER DRAWINGS 160A-Z. ANY INSPECTION OF PLATES FOLLOWED BY (1) SHALL BE PER ANNEX A3 OF TPI1-2002 SEC.3. A SEAL ON THIS DRAWING INDICATES ACCEPTANCE OF PROFESSIONAL ENGINEERING RESPONSIBILITY SOLELY FOR THE TRUSS COMPONENT DESIGN SHOWN. THE SUITABILITY AND USE OF THIS COMPONENT FOR ANY BUILDING IS THE RESPONSIBILITY OF THE BUILDING DESIGNER PER ANSI/TPI 1 SEC. 2.

ARTHUR R. FISHER
LICENSE
No. 59687
STATE OF FLORIDA
PROFESSIONAL ENGINEER
Feb 27 '06

TC LL	20.0 PSF	REF R487-- 31975
TC DL	10.0 PSF	DATE 02/27/06
BC DL	10.0 PSF	DRW HCUSR487 06058033
BC LL	0.0 PSF	HC-ENG JB/AF
TOT.LD.	40.0 PSF	SEQN- 147655 REV
DUR.FAC.	1.25	
SPACING	SEE ABOVE	JREF- 1SV0487_Z03

(6-083--Doug Morgan Construction #22 Stonehenge II -- , ** - A2)

Top chord 2x4 SP #2 Dense
Bot chord 2x4 SP #2 Dense :B3 2x6 SP #1 Dense:
Webs 2x4 SP #3

110 mph wind, 15.00 ft mean hgt, ASCE 7-02, CLOSED bldg, not located within 4.50 ft from roof edge, CAT II, EXP B, wind TC DL=5.0 psf, wind BC DL=5.0 psf.

In lieu of structural panels or rigid ceiling use purlins to brace TC @ 24" OC, BC @ 24" OC.

SPECIAL LOADS
------(LUMBER DUR.FAC.=1.25 / PLATE DUR.FAC.=1.25)
TC - From 62 PLF at 0.00 to 62 PLF at 44.00
BC - From 20 PLF at 0.00 to 20 PLF at 44.00
BC - 1563 LB Conc. Load at 39.06
BC - 14 LB Conc. Load at 39.94

(A) Continuous lateral bracing equally spaced on member.

Deflection meets L/360 live and L/240 total load. Creep increase factor for dead load is 1.50.

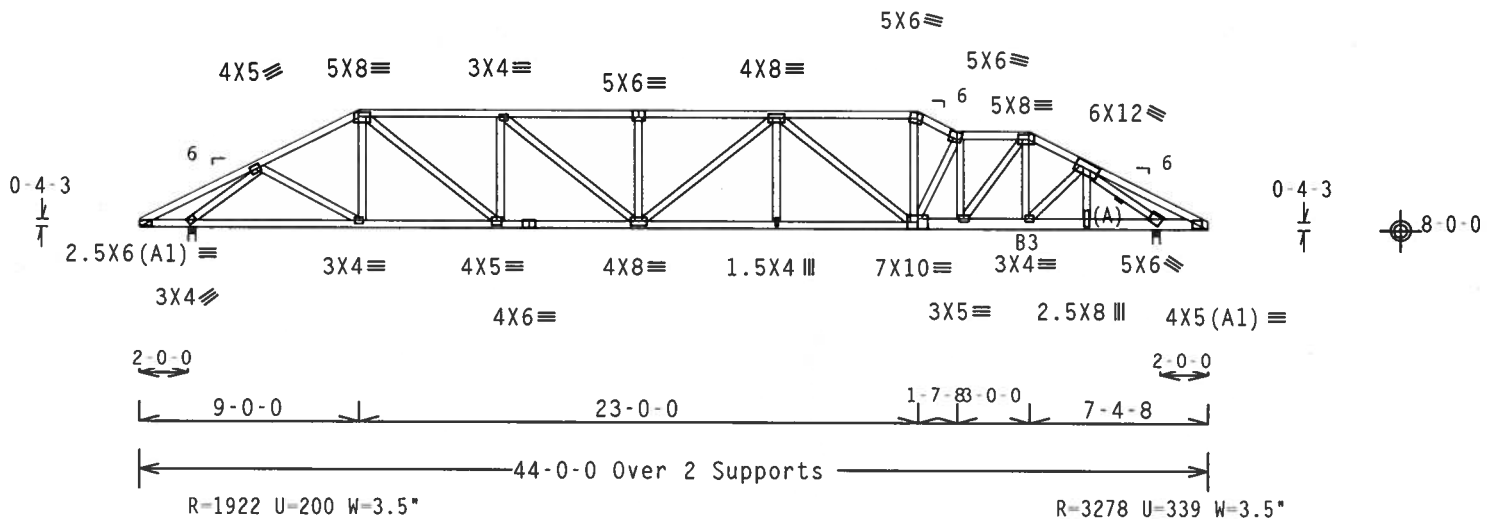

Design Crit: TPI-2002(STD)/FBC
PLT TYP. Wave Cq/RT=1.00(1.25)/10(0) 7.24.12 QTY:1 FL/-/4/-/-/R/- Scale =.125"/Ft.

ALPINE
Alpine Engineered Products, Inc.
1950 Marley Drive
Haines City, FL 33844
FL Certificate of Authorization # 567

WARNING TRUSSES REQUIRE EXTREME CARE IN FABRICATION, HANDLING, SHIPPING, INSTALLING AND BRACING. REFER TO BCSI 1-03 (BUILDING COMPONENT SAFETY INFORMATION), PUBLISHED BY TPI (TRUSS PLATE INSTITUTE, 583 D'ONOFRIO DR., SUITE 200, MADISON, WI 53719) AND WTCA (WOOD TRUSS COUNCIL OF AMERICA, 6300 ENTERPRISE LN, MADISON, WI 53719) FOR SAFETY PRACTICES PRIOR TO PERFORMING THESE FUNCTIONS. UNLESS OTHERWISE INDICATED, TOP CHORD SHALL HAVE PROPERLY ATTACHED STRUCTURAL PANELS AND BOTTOM CHORD SHALL HAVE A PROPERLY ATTACHED RIGID CEILING.

IMPORTANTFURNISH A COPY OF THIS DESIGN TO THE INSTALLATION CONTRACTOR. ALPINE ENGINEERED PRODUCTS, INC. SHALL NOT BE RESPONSIBLE FOR ANY DEVIATION FROM THIS DESIGN; ANY FAILURE TO BUILD THE TRUSS IN CONFORMANCE WITH TPI: OR FABRICATING, HANDLING, SHIPPING, INSTALLING & BRACING OF TRUSSES. DESIGN CONFORMS WITH APPLICABLE PROVISIONS OF NDS (NATIONAL DESIGN SPEC. BY AF&PA) AND TPI. ALPINE CONNECTOR PLATES ARE MADE OF 20/18/16GA (W,H/S/K) ASTM A653 GRADE 40/60 (W, K/H,S) GALV. STEEL. APPLY PLATES TO EACH FACE OF TRUSS AND, UNLESS OTHERWISE LOCATED ON THIS DESIGN, POSITION PER DRAWINGS 160A-Z. ANY INSPECTION OF PLATES FOLLOWED BY (1) SHALL BE PER ANNEX A3 OF TPI1-2002 SEC.3. A SEAL ON THIS DRAWING INDICATES ACCEPTANCE OF PROFESSIONAL ENGINEERING RESPONSIBILITY SOLELY FOR THE TRUSS COMPONENT DESIGN SHOWN. THE SUITABILITY AND USE OF THIS COMPONENT FOR ANY BUILDING IS THE RESPONSIBILITY OF THE BUILDING DESIGNER PER ANSI/TPI 1 SEC. 2.

ARTHUR R. FISHER LICENSE No. 59687 STATE OF FLORIDA PROFESSIONAL ENGINEER
Feb 27 '06

TC LL	20.0 PSF	REF	R487-- 31976
TC DL	10.0 PSF	DATE	02/27/06
BC DL	10.0 PSF	DRW	HCUSR487 06058029
BC LL	0.0 PSF	HC-ENG	JB/AF
TOT.LD.	40.0 PSF	SEQN-	86789
DUR.FAC.	1.25		
SPACING	24.0"	JREF-	1SV0487_Z03

Top chord 2x4 SP #2 Dense
Bot chord 2x4 SP #2 Dense
Webs 2x4 SP #3

H = recommended connection based on manufacturer tested capacities and calculations. Conditions may exist that require different connections than indicated. Refer to manufacturer publication for additional information.

Deflection meets L/360 live and L/240 total load. Creep increase factor for dead load is 1.50.

110 mph wind, 15.00 ft mean hgt, ASCE 7-02, CLOSED bldg, not located within 4.50 ft from roof edge, CAT II, EXP B, wind TC DL=5.0 psf, wind BC DL=5.0 psf.

(A) 1x4 #3 or better "T" brace. 80% length of web member. Attach with 8d Box or Gun (0.113"x2.5",min.)nails @ 6" OC.

In lieu of structural panels or rigid ceiling use purlins to brace TC @ 24" OC, BC @ 24" OC.

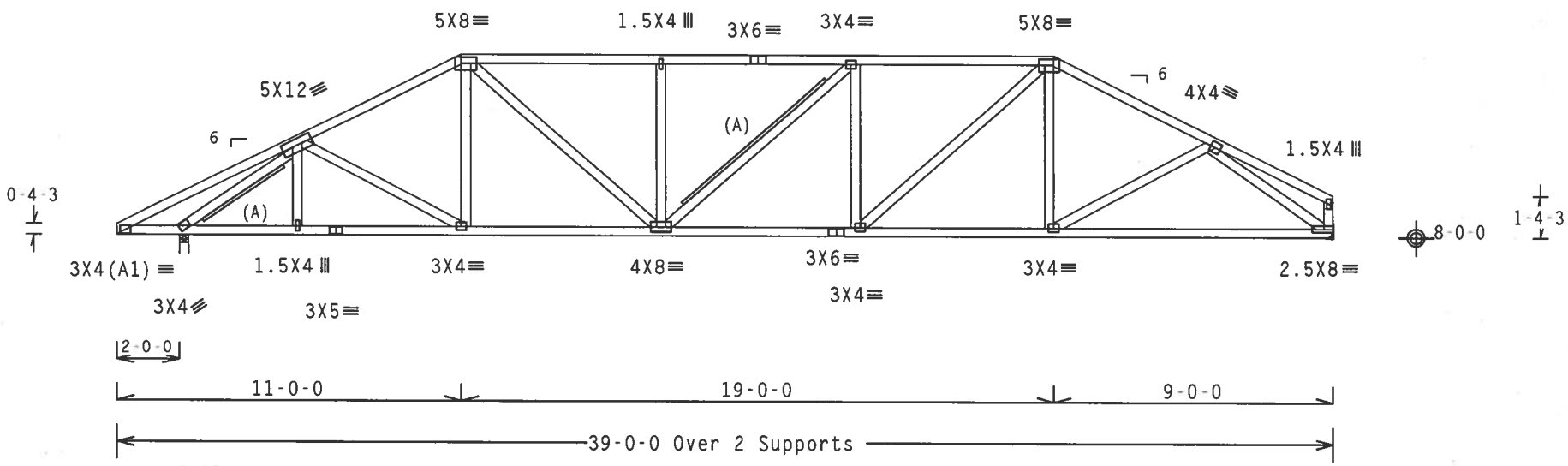

R=1700 U=180 W=3.5"

R=1513 U=180 H=Simpson HUS26
w/ (4) 10d Common, 0.148"x3.0" nails in Truss
w/ (14) 10d Common, 0.148"x3.0" nails in Girder
Girder is (1)2X6 min. So.Pine

Design Crit: TPI-2002(STD)/FBC

PLT TYP. Wave

Cq/RT=1.00(1.25)/10(0) 7.24.1 QTY:1 FL/-/4/-/-/R/- Scale =.1875"/Ft.

ALPINE
Alpine Engineered Products, Inc.
1950 Marley Drive
Haines City, FL 33844
FL Certificate of Authorization # 567

WARNING TRUSSES REQUIRE EXTREME CARE IN FABRICATION, HANDLING, SHIPPING, INSTALLING AND BRACING. REFER TO BCSI 1-03 (BUILDING COMPONENT SAFETY INFORMATION), PUBLISHED BY TPI (TRUSS PLATE INSTITUTE, 583 D'ONOFRIO DR., SUITE 200, MADISON, WI 53719) AND WTCA (WOOD TRUSS COUNCIL OF AMERICA, 6300 ENTERPRISE LN, MADISON, WI 53719) FOR SAFETY PRACTICES PRIOR TO PERFORMING THESE FUNCTIONS. UNLESS OTHERWISE INDICATED, TOP CHORD SHALL HAVE PROPERLY ATTACHED STRUCTURAL PANELS AND BOTTOM CHORD SHALL HAVE A PROPERLY ATTACHED RIGID CEILING.

IMPORTANT FURNISH A COPY OF THIS DESIGN TO THE INSTALLATION CONTRACTOR. ALPINE ENGINEERED PRODUCTS, INC. SHALL NOT BE RESPONSIBLE FOR ANY DEVIATION FROM THIS DESIGN; ANY FAILURE TO BUILD THE TRUSS IN CONFORMANCE WITH TPI; OR FABRICATING, HANDLING, SHIPPING, INSTALLING & BRACING OF TRUSSES. DESIGN CONFORMS WITH APPLICABLE PROVISIONS OF NDS (NATIONAL DESIGN SPEC. BY AF&PA) AND TPI. ALPINE CONNECTOR PLATES ARE MADE OF 20/18/16GA (W,H/S/K) ASTM A653 GRADE 40/60 (W, K/H,S) GALV. STEEL. APPLY PLATES TO EACH FACE OF TRUSS AND, UNLESS OTHERWISE LOCATED ON THIS DESIGN, POSITION PER DRAWINGS 160A-Z. ANY INSPECTION OF PLATES FOLLOWED BY (1) SHALL BE PER ANNEX A3 OF TPI1-2002 SEC.3. A SEAL ON THIS DRAWING INDICATES ACCEPTANCE OF PROFESSIONAL ENGINEERING RESPONSIBILITY SOLELY FOR THE TRUSS COMPONENT DESIGN SHOWN. THE SUITABILITY AND USE OF THIS COMPONENT FOR ANY BUILDING IS THE RESPONSIBILITY OF THE BUILDING DESIGNER PER ANSI/TPI 1 SEC. 2.

ARTHUR R. FISHER LICENSE No.59687 STATE OF FLORIDA PROFESSIONAL ENGINEER

Feb 27 '06

TC LL	20.0 PSF	REF	R487-- 31977
TC DL	10.0 PSF	DATE	02/27/06
BC DL	10.0 PSF	DRW	HCUSR487 06058027
BC LL	0.0 PSF	HC-ENG	JB/AF
TOT.LD.	40.0 PSF	SEQN-	1832
DUR.FAC.	1.25		
SPACING	24.0"	JREF-	1SV0487_Z03

Top chord 2x4 SP #2 Dense
Bot chord 2x4 SP #2 Dense
Webs 2x4 SP #3

H = recommended connection based on manufacturer tested capacities and calculations. Conditions may exist that require different connections than indicated. Refer to manufacturer publication for additional information.

Deflection meets L/360 live and L/240 total load. Creep increase factor for dead load is 1.50.

110 mph wind, 15.00 ft mean hgt, ASCE 7-02, CLOSED bldg, not located within 4.50 ft from roof edge, CAT II, EXP B, wind TC DL=5.0 psf, wind BC DL=5.0 psf.

(A) 2x6 #3 or better "T" brace. 80% length of web member. Attach with 16d Box or Gun (0.135"x3.5",min.)nails @ 6" OC.

In lieu of structural panels or rigid ceiling use purlins to brace TC @ 24" OC, BC @ 24" OC.

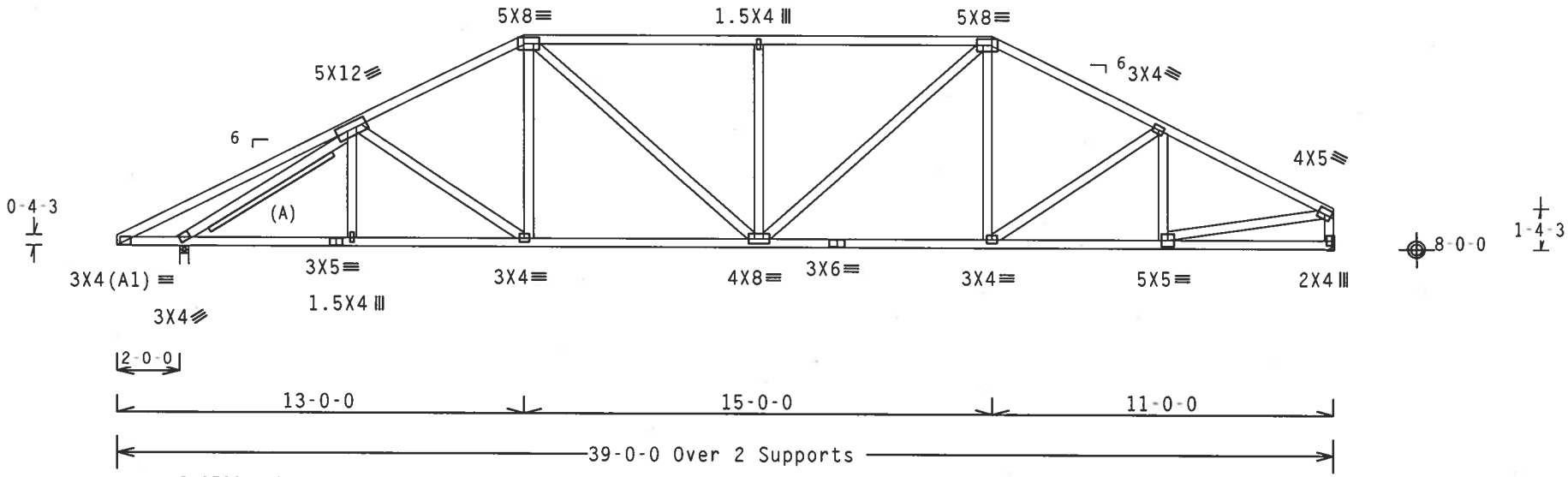

Design Crit: TPI-2002(STD)/FBC

PLT TYP. Wave

Cq/RT=1.00(1.25)/10(0) 7.24.12 QTY:1 FL/-/4/-/-/R/- Scale =.1875"/Ft.

ALPINE
Alpine Engineered Products, Inc.
1950 Marley Drive
Haines City, FL 33844
FL Certificate of Authorization # 567

WARNING TRUSSES REQUIRE EXTREME CARE IN FABRICATION, HANDLING, SHIPPING, INSTALLING AND BRACING. REFER TO BCSI 1-03 (BUILDING COMPONENT SAFETY INFORMATION), PUBLISHED BY TPI (TRUSS PLATE INSTITUTE, 583 D'ONOFRIO DR., SUITE 200, MADISON, WI 53719) AND WTCA (WOOD TRUSS COUNCIL OF AMERICA, 6300 ENTERPRISE LN. MADISON, WI 53719) FOR SAFETY PRACTICES PRIOR TO PERFORMING THESE FUNCTIONS. UNLESS OTHERWISE INDICATED, TOP CHORD SHALL HAVE PROPERLY ATTACHED STRUCTURAL PANELS AND BOTTOM CHORD SHALL HAVE A PROPERLY ATTACHED RIGID CEILING.

IMPORTANTFURNISH A COPY OF THIS DESIGN TO THE INSTALLATION CONTRACTOR. ALPINE ENGINEERED PRODUCTS, INC. SHALL NOT BE RESPONSIBLE FOR ANY DEVIATION FROM THIS DESIGN; ANY FAILURE TO BUILD THE TRUSS IN CONFORMANCE WITH TPI: OR FABRICATING, HANDLING, SHIPPING, INSTALLING & BRACING OF TRUSSES. DESIGN CONFORMS WITH APPLICABLE PROVISIONS OF NDS (NATIONAL DESIGN SPEC. BY AF&PA) AND TPI. ALPINE CONNECTOR PLATES ARE MADE OF 20/18/16GA (W,H/S/K) ASTM A653 GRADE 40/60 (W, K/H,S) GALV. STEEL. APPLY PLATES TO EACH FACE OF TRUSS AND, UNLESS OTHERWISE LOCATED ON THIS DESIGN, POSITION PER DRAWINGS 160A-2. ANY INSPECTION OF PLATES FOLLOWED BY (1) SHALL BE PER ANNEX A3 OF TPI1-2002 SEC.3. A SEAL ON THIS DRAWING INDICATES ACCEPTANCE OF PROFESSIONAL ENGINEERING RESPONSIBILITY SOLELY FOR THE TRUSS COMPONENT DESIGN SHOWN. THE SUITABILITY AND USE OF THIS COMPONENT FOR ANY BUILDING IS THE RESPONSIBILITY OF THE BUILDING DESIGNER PER ANSI/TPI 1 SEC. 2.

ARTHUR R. FISHER LICENSE No. 59687 STATE OF FLORIDA PROFESSIONAL ENGINEER
Feb 27 '06

TC LL	20.0 PSF	REF R487-- 31978
TC DL	10.0 PSF	DATE 02/27/06
BC DL	10.0 PSF	DRW HCUSR487 06058026
BC LL	0.0 PSF	HC-ENG JB/AF
TOT.LD.	40.0 PSF	SEQN- 1844
DUR.FAC.	1.25	
SPACING	24.0"	JREF- 1SV0487_Z03

Top chord 2x4 SP #2 Dense
Bot chord 2x4 SP #2 Dense
Webs 2x4 SP #3

Calculated horizontal deflection is 0.10" due to live load and 0.16" due to dead load.

In lieu of structural panels or rigid ceiling use purlins to brace TC @ 24" OC, BC @ 24" OC.

110 mph wind, 15.00 ft mean hgt, ASCE 7-02, CLOSED bldg, not located within 4.50 ft from roof edge, CAT II, EXP B, wind TC DL=5.0 psf, wind BC DL=5.0 psf.

(A) 2x6 #3 or better "T" brace. 80% length of web member. Attach with 16d Box or Gun (0.135"x3.5",min.)nails @ 6" OC.

Deflection meets L/360 live and L/240 total load. Creep increase factor for dead load is 1.50.

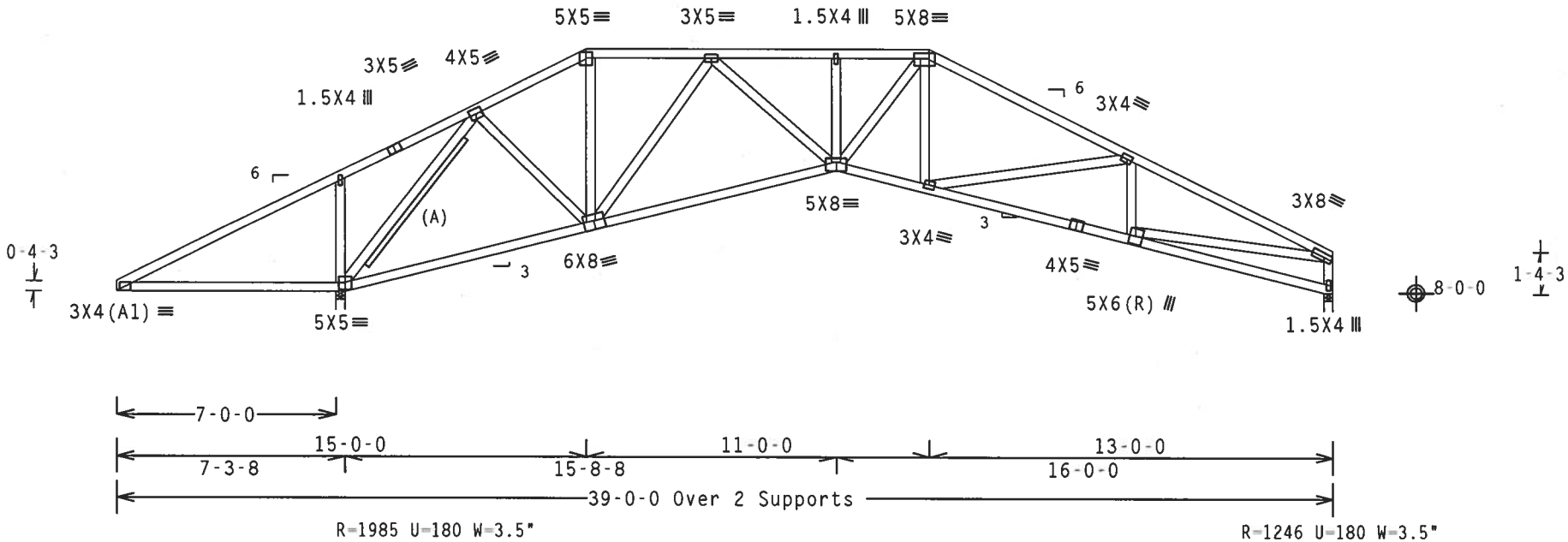

Design Crit: TPI-2002(STD)/FBC

PLT TYP. Wave Cq/RT=1.00(1.25)/10(0) 7.24.1 QTY:1 FL/-/4/-/-/R/- Scale =.1875"/Ft.

ALPINE
Alpine Engineered Products, Inc.
1950 Marley Drive
Haines City, FL 33844
FL Certificate of Authorization # 567

WARNING TRUSSES REQUIRE EXTREME CARE IN FABRICATION, HANDLING, SHIPPING, INSTALLING AND BRACING. REFER TO BCSI 1-03 (BUILDING COMPONENT SAFETY INFORMATION), PUBLISHED BY TPI (TRUSS PLATE INSTITUTE, 583 D'ONOFRIO DR., SUITE 200, MADISON, WI 53719) AND WTCA (WOOD TRUSS COUNCIL OF AMERICA, 6300 ENTERPRISE LN, MADISON, WI 53719) FOR SAFETY PRACTICES PRIOR TO PERFORMING THESE FUNCTIONS. UNLESS OTHERWISE INDICATED, TOP CHORD SHALL HAVE PROPERLY ATTACHED STRUCTURAL PANELS AND BOTTOM CHORD SHALL HAVE A PROPERLY ATTACHED RIGID CEILING.

IMPORTANTFURNISH A COPY OF THIS DESIGN TO THE INSTALLATION CONTRACTOR. ALPINE ENGINEERED PRODUCTS, INC. SHALL NOT BE RESPONSIBLE FOR ANY DEVIATION FROM THIS DESIGN; ANY FAILURE TO BUILD THE TRUSS IN CONFORMANCE WITH TPI; OR FABRICATING, HANDLING, SHIPPING, INSTALLING & BRACING OF TRUSSES. DESIGN CONFORMS WITH APPLICABLE PROVISIONS OF NDS (NATIONAL DESIGN SPEC. BY AF&PA) AND TPI. ALPINE CONNECTOR PLATES ARE MADE OF 20/18/16GA (W,H/S/K) ASTM A653 GRADE 40/60 (W, K/H,S) GALV. STEEL. APPLY PLATES TO EACH FACE OF TRUSS AND, UNLESS OTHERWISE LOCATED ON THIS DESIGN, POSITION PER DRAWINGS 160A-Z. ANY INSPECTION OF PLATES FOLLOWED BY (I) SHALL BE PER ANNEX A3 OF TPI1-2002 SEC.3. A SEAL ON THIS DRAWING INDICATES ACCEPTANCE OF PROFESSIONAL ENGINEERING RESPONSIBILITY SOLELY FOR THE TRUSS COMPONENT DESIGN SHOWN. THE SUITABILITY AND USE OF THIS COMPONENT FOR ANY BUILDING IS THE RESPONSIBILITY OF THE BUILDING DESIGNER PER ANSI/TPI 1 SEC. 2.

ARTHUR R. FISHER LICENSE No.59687 STATE OF FLORIDA PROFESSIONAL ENGINEER

Feb 27, '06

TC LL	20.0 PSF	REF	R487-- 31979
TC DL	10.0 PSF	DATE	02/27/06
BC DL	10.0 PSF	DRW	HCUSR487 06058025
BC LL	0.0 PSF	HC-ENG	JB/AF
TOT.LD.	40.0 PSF	SEQN-	86801
DUR.FAC.	1.25		
SPACING	24.0"	JREF-	1SV0487_Z03

Top chord 2x4 SP #2 Dense
Bot chord 2x4 SP #2 Dense
Webs 2x4 SP #3

(B) 1x4 #3 or better "T" brace. 80% length of web member. Attach with 8d Box or Gun (0.113"x2.5",min.)nails @ 6" OC.

In lieu of structural panels or rigid ceiling use purlins to brace TC @ 24" OC, BC @ 24" OC.

110 mph wind, 15.00 ft mean hgt, ASCE 7-02, CLOSED bldg, not located within 6.50 ft from roof edge, CAT II, EXP B, wind TC DL=5.0 psf, wind BC DL=5.0 psf.

(A) 2x6 #3 or better "T" brace. 80% length of web member. Attach with 16d Box or Gun (0.135"x3.5",min.)nails @ 6" OC.

Deflection meets L/360 live and L/240 total load. Creep increase factor for dead load is 1.50.

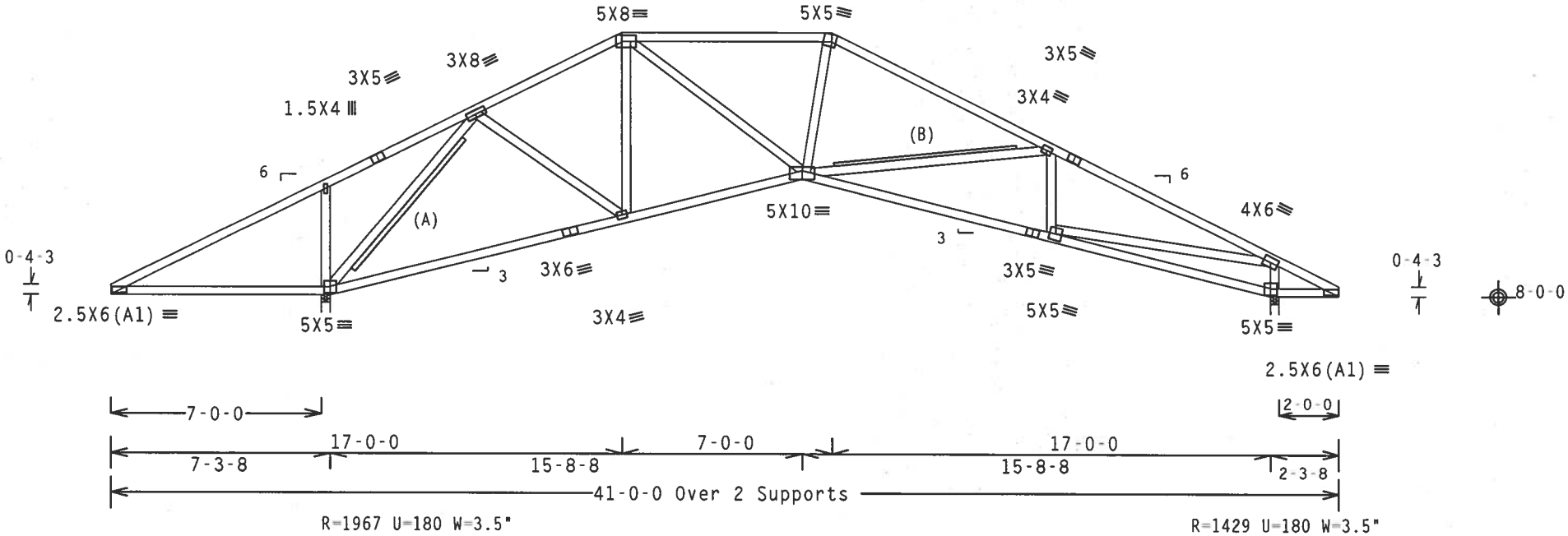

Design Crit: TPI-2002(STD)/FBC

PLT TYP. Wave Cg/RT=1.00(1.25)/10(0) 7.24.12 QTY:1 FL/-/4/-/-/R/- Scale =.1875"/Ft.

ALPINE
Alpine Engineered Products, Inc.
1950 Marley Drive
Haines City, FL 33844
FL Certificate of Authorization # 567

WARNING TRUSSES REQUIRE EXTREME CARE IN FABRICATION, HANDLING, SHIPPING, INSTALLING AND BRACING. REFER TO BCSI 1-03 (BUILDING COMPONENT SAFETY INFORMATION), PUBLISHED BY TPI (TRUSS PLATE INSTITUTE, 583 D'ONOFRIO DR., SUITE 200, MADISON, WI 53719) AND WTCA (WOOD TRUSS COUNCIL OF AMERICA, 6300 ENTERPRISE LN, MADISON, WI 53719) FOR SAFETY PRACTICES PRIOR TO PERFORMING THESE FUNCTIONS. UNLESS OTHERWISE INDICATED, TOP CHORD SHALL HAVE PROPERLY ATTACHED STRUCTURAL PANELS AND BOTTOM CHORD SHALL HAVE A PROPERLY ATTACHED RIGID CEILING.

IMPORTANT FURNISH A COPY OF THIS DESIGN TO THE INSTALLATION CONTRACTOR. ALPINE ENGINEERED PRODUCTS, INC. SHALL NOT BE RESPONSIBLE FOR ANY DEVIATION FROM THIS DESIGN; ANY FAILURE TO BUILD THE TRUSS IN CONFORMANCE WITH TPI; OR FABRICATING, HANDLING, SHIPPING, INSTALLING & BRACING OF TRUSSES. DESIGN CONFORMS WITH APPLICABLE PROVISIONS OF NDS (NATIONAL DESIGN SPEC. BY AF&PA) AND TPI. ALPINE CONNECTOR PLATES ARE MADE OF 20/18/16GA (W,H/S/K) ASTM A653 GRADE 40/60 (W. K/H.S) GALV. STEEL. APPLY PLATES TO EACH FACE OF TRUSS AND, UNLESS OTHERWISE LOCATED ON THIS DESIGN, POSITION PER DRAWINGS 160A-Z. ANY INSPECTION OF PLATES FOLLOWED BY (1) SHALL BE PER ANNEX A3 OF TPI1-2002 SEC.3. A SEAL ON THIS DRAWING INDICATES ACCEPTANCE OF PROFESSIONAL ENGINEERING RESPONSIBILITY SOLELY FOR THE TRUSS COMPONENT DESIGN SHOWN. THE SUITABILITY AND USE OF THIS COMPONENT FOR ANY BUILDING IS THE RESPONSIBILITY OF THE BUILDING DESIGNER PER ANSI/TPI 1 SEC. 2.

ARTHUR R. FISHER LICENSE No. 59687 STATE OF FLORIDA PROFESSIONAL ENGINEER

Feb 27 '06

TC LL	20.0 PSF	REF R487-- 31980
TC DL	10.0 PSF	DATE 02/27/06
BC DL	10.0 PSF	DRW HCUSR487 06058021
BC LL	0.0 PSF	HC-ENG JB/AF
TOT.LD.	40.0 PSF	SEQN- 86807
DUR.FAC.	1.25	
SPACING	24.0"	JREF- 1SV0487_Z03

Top chord 2x4 SP #2 Dense
Bot chord 2x4 SP #2 Dense
Webs 2x4 SP #3

(A) 2x6 #3 or better "T" brace. 80% length of web member. Attach with 16d Box or Gun (0.135"x3.5",min.)nails @ 6" OC.

Deflection meets L/360 live and L/240 total load. Creep increase factor for dead load is 1.50.

110 mph wind, 15.00 ft mean hgt, ASCE 7-02, CLOSED bldg, not located within 6.50 ft from roof edge, CAT II, EXP B, wind TC DL=5.0 psf, wind BC DL=5.0 psf.

In lieu of structural panels or rigid ceiling use purlins to brace TC 24" OC, BC @ 24" OC.

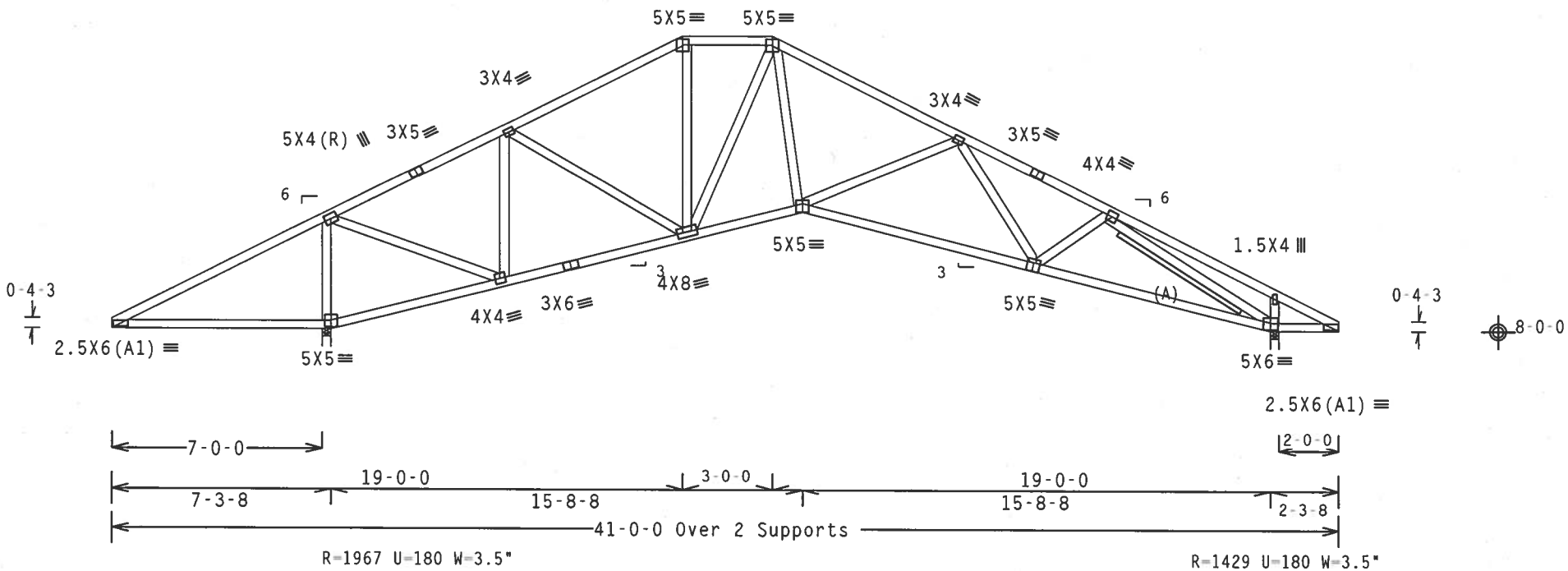

Design Crit: TPI-2002(STD)/FBC

PLT TYP. Wave

Cq/RT=1.00(1.25)/10(0) 7.24.1 QTY:1 FL/-/4/-/-/R/- Scale =.1875"/Ft.

ALPINE
Alpine Engineered Products, Inc.
1950 Marley Drive
Haines City, FL 33844
FL Certificate of Authorization # 567

WARNING TRUSSES REQUIRE EXTREME CARE IN FABRICATION, HANDLING, SHIPPING, INSTALLING AND BRACING. REFER TO BCSI 1-03 (BUILDING COMPONENT SAFETY INFORMATION), PUBLISHED BY TPI (TRUSS PLATE INSTITUTE, 583 D'ONOFRIO DR., SUITE 200, MADISON, WI 53719) AND WTCA (WOOD TRUSS COUNCIL OF AMERICA, 6300 ENTERPRISE LN, MADISON, WI 53719) FOR SAFETY PRACTICES PRIOR TO PERFORMING THESE FUNCTIONS. UNLESS OTHERWISE INDICATED, TOP CHORD SHALL HAVE PROPERLY ATTACHED STRUCTURAL PANELS AND BOTTOM CHORD SHALL HAVE A PROPERLY ATTACHED RIGID CEILING.

IMPORTANTFURNISH A COPY OF THIS DESIGN TO THE INSTALLATION CONTRACTOR. ALPINE ENGINEERED PRODUCTS, INC. SHALL NOT BE RESPONSIBLE FOR ANY DEVIATION FROM THIS DESIGN; ANY FAILURE TO BUILD THE TRUSS IN CONFORMANCE WITH TPI; OR FABRICATING, HANDLING, SHIPPING, INSTALLING & BRACING OF TRUSSES. DESIGN CONFORMS WITH APPLICABLE PROVISIONS OF NDS (NATIONAL DESIGN SPEC. BY AF&PA) AND TPI. ALPINE CONNECTOR PLATES ARE MADE OF 20/18/16GA (W,H/S/K) ASTM A653 GRADE 40/60 (W, K/H,S) GALV. STEEL. APPLY PLATES TO EACH FACE OF TRUSS AND, UNLESS OTHERWISE LOCATED ON THIS DESIGN, POSITION PER DRAWINGS 160A-Z. ANY INSPECTION OF PLATES FOLLOWED BY (1) SHALL BE PER ANNEX A3 OF TPI1-2002 SEC.3. A SEAL ON THIS DRAWING INDICATES ACCEPTANCE OF PROFESSIONAL ENGINEERING RESPONSIBILITY SOLELY FOR THE TRUSS COMPONENT DESIGN SHOWN. THE SUITABILITY AND USE OF THIS COMPONENT FOR ANY BUILDING IS THE RESPONSIBILITY OF THE BUILDING DESIGNER PER ANSI/TPI 1 SEC. 2.

ARTHUR R. FISHER LICENSE No 59687 STATE OF FLORIDA PROFESSIONAL ENGINEER
Feb 27 '06

TC LL	20.0 PSF	REF	R487-- 31981
TC DL	10.0 PSF	DATE	02/27/06
BC DL	10.0 PSF	DRW	HCUSR487 06058022
BC LL	0.0 PSF	HC-ENG	JB/AF
TOT.LD.	40.0 PSF	SEQN-	86818
DUR.FAC.	1.25		
SPACING	24.0"	JREF-	1SV0487_Z03

(6-083--Doug Morgan Construction #22 Stonehenge II -- , ** - A8)

Top chord 2x4 SP #2 Dense
Bot chord 2x4 SP #2 Dense
Webs 2x4 SP #3

(A) Continuous lateral bracing equally spaced on member.

Deflection meets L/360 live and L/240 total load. Creep increase factor for dead load is 1.50.

110 mph wind, 15.00 ft mean hgt, ASCE 7-02, CLOSED bldg, not located within 6.50 ft from roof edge, CAT II, EXP B, wind TC DL=5.0 psf, wind BC DL=5.0 psf.

In lieu of structural panels or rigid ceiling use purlins to brace TC 24" OC, BC @ 24" OC.

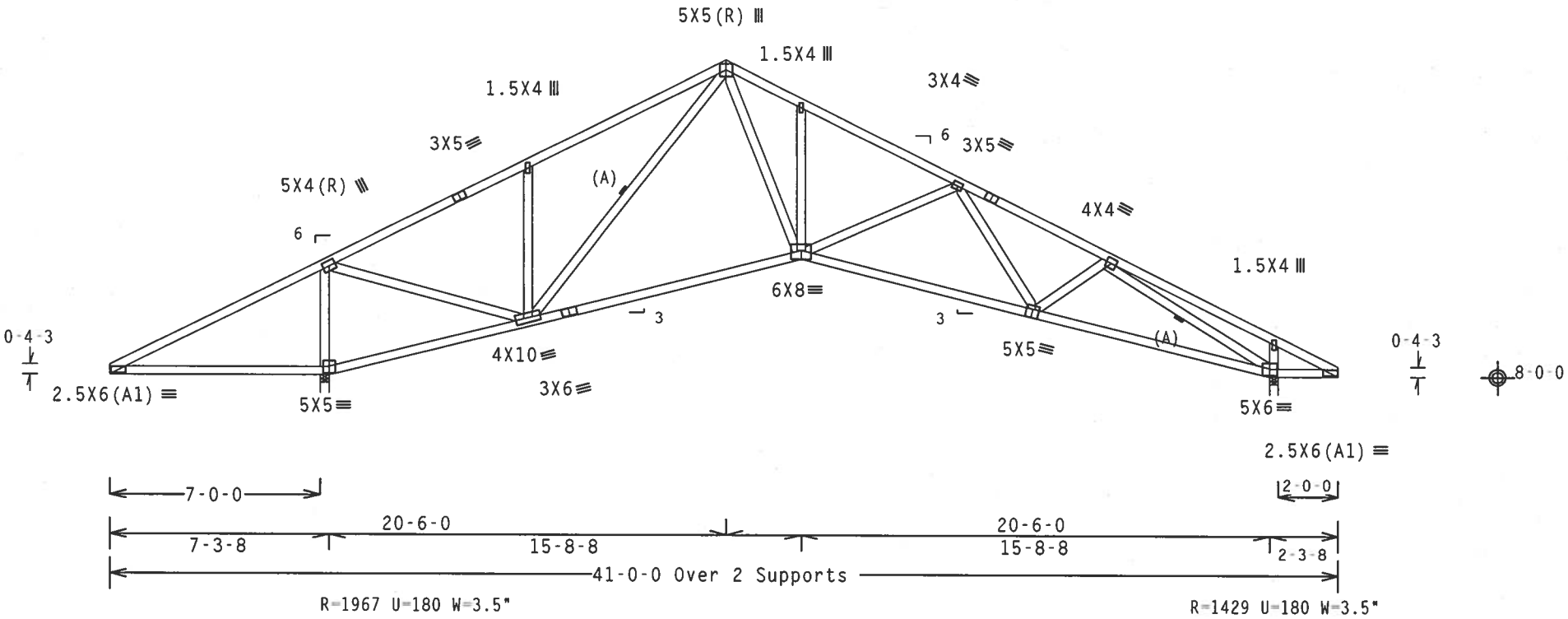

Design Crit: TPI-2002(STD)/FBC

PLT TYP. Wave

Cq/RT=1.00(1.25)/10(0) 7.24.1 TY:1 FL/-/4/-/-/R/- Scale =.1875"/Ft.

ALPINE

Alpine Engineered Products, Inc.
1950 Marley Drive
Haines City, FL 33844
FL Certificate of Authorization # 567

WARNING TRUSSES REQUIRE EXTREME CARE IN FABRICATION, HANDLING, SHIPPING, INSTALLING AND BRACING. REFER TO BCSI 1-03 (BUILDING COMPONENT SAFETY INFORMATION), PUBLISHED BY TPI (TRUSS PLATE INSTITUTE, 583 D'ONOFRIO DR., SUITE 200, MADISON, WI 53719) AND WTCA (WOOD TRUSS COUNCIL OF AMERICA, 6300 ENTERPRISE LN. MADISON, WI 53719) FOR SAFETY PRACTICES PRIOR TO PERFORMING THESE FUNCTIONS. UNLESS OTHERWISE INDICATED, TOP CHORD SHALL HAVE PROPERLY ATTACHED STRUCTURAL PANELS AND BOTTOM CHORD SHALL HAVE A PROPERLY ATTACHED RIGID CEILING.

IMPORTANT FURNISH A COPY OF THIS DESIGN TO THE INSTALLATION CONTRACTOR. ALPINE ENGINEERED PRODUCTS, INC. SHALL NOT BE RESPONSIBLE FOR ANY DEVIATION FROM THIS DESIGN; ANY FAILURE TO BUILD THE TRUSS IN CONFORMANCE WITH TPI; OR FABRICATING, HANDLING, SHIPPING, INSTALLING & BRACING OF TRUSSES. DESIGN CONFORMS WITH APPLICABLE PROVISIONS OF NDS (NATIONAL DESIGN SPEC. BY AF&PA) AND TPI. ALPINE CONNECTOR PLATES ARE MADE OF 20/18/16GA (W,H/S/K) ASTM A653 GRADE 40/60 (W, K/H,S) GALV. STEEL. APPLY PLATES TO EACH FACE OF TRUSS AND, UNLESS OTHERWISE LOCATED ON THIS DESIGN, POSITION PER DRAWINGS 160A-Z. ANY INSPECTION OF PLATES FOLLOWED BY (1) SHALL BE PER ANNEX A3 OF TPI1-2002 SEC.3. A SEAL ON THIS DRAWING INDICATES ACCEPTANCE OF PROFESSIONAL ENGINEERING RESPONSIBILITY SOLELY FOR THE TRUSS COMPONENT DESIGN SHOWN. THE SUITABILITY AND USE OF THIS COMPONENT FOR ANY BUILDING IS THE RESPONSIBILITY OF THE BUILDING DESIGNER PER ANSI/TPI 1 SEC. 2.

ARTHUR R. FISHER LICENSE No.59687 STATE OF FLORIDA PROFESSIONAL ENGINEER

Feb 27 '06

TC LL	20.0 PSF	REF	R487-- 31982
TC DL	10.0 PSF	DATE	02/27/06
BC DL	10.0 PSF	DRW	HCUSR487 06058024
BC LL	0.0 PSF	HC-ENG	JB/AF
TOT.LD.	40.0 PSF	SEQN-	86832
DUR.FAC.	1.25		
SPACING	24.0"	JREF-	1SV0487_Z03

Top chord 2x4 SP #2 Dense
Bot chord 2x4 SP #2 Dense
Webs 2x4 SP #3

(A) Continuous lateral bracing equally spaced on member.

Deflection meets L/360 live and L/240 total load. Creep increase factor for dead load is 1.50.

110 mph wind, 15.00 ft mean hgt, ASCE 7-02, CLOSED bldg, not located within 4.50 ft from roof edge, CAT II, EXP B, wind TC DL=5.0 psf, wind BC DL=5.0 psf.

In lieu of structural panels or rigid ceiling use purlins to brace TC 24" OC, BC @ 24" OC.

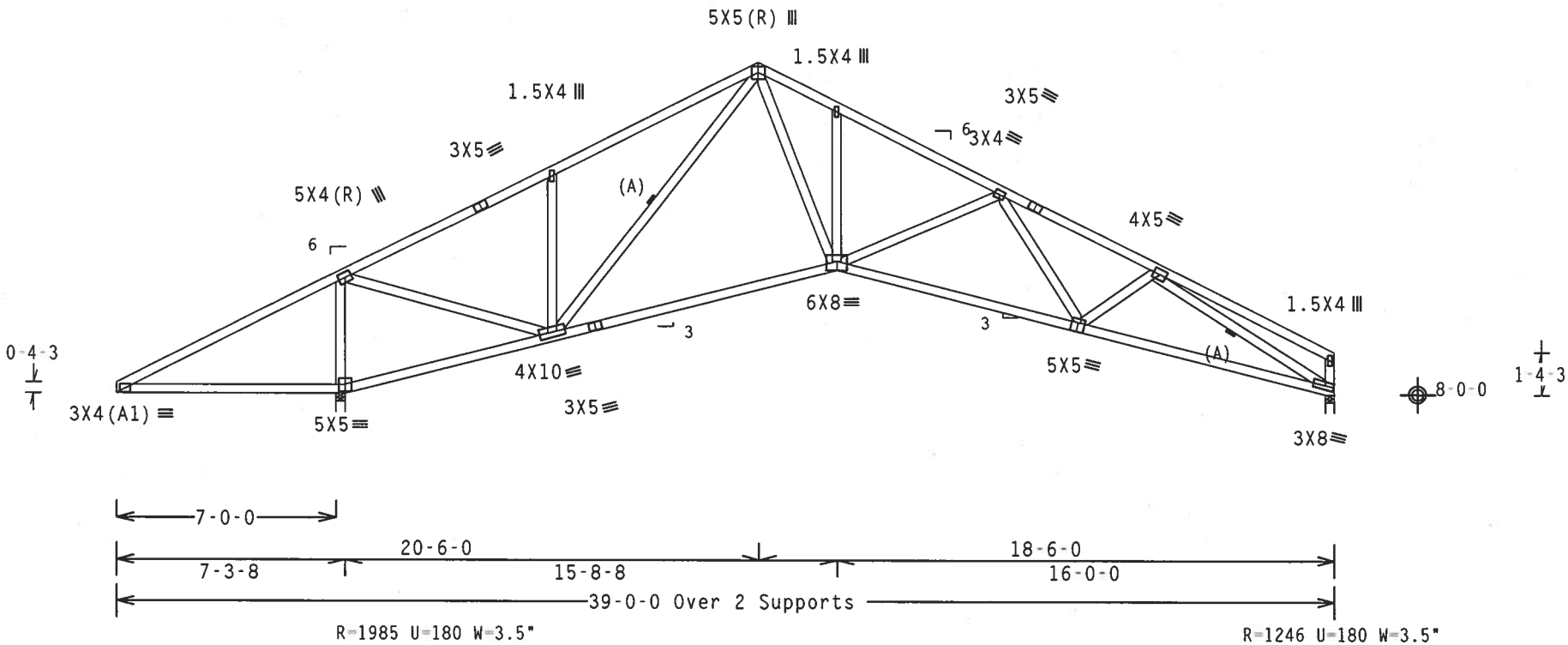

Design Crit: TPI-2002(STD)/FBC

PLT TYP. Wave Cq/RT=1.00(1.25)/10(0) 7.24.1 TY:1 FL/-/4/-/-/R/- Scale =.1875"/Ft.

ALPINE
Alpine Engineered Products, Inc.
1950 Marley Drive
Haines City, FL 33844
FL Certificate of Authorization # 567

WARNING TRUSSES REQUIRE EXTREME CARE IN FABRICATION, HANDLING, SHIPPING, INSTALLING AND BRACING. REFER TO BCSI 1-03 (BUILDING COMPONENT SAFETY INFORMATION), PUBLISHED BY TPI (TRUSS PLATE INSTITUTE, 583 D'ONOFRIO DR., SUITE 200, MADISON, WI 53719) AND WTCA (WOOD TRUSS COUNCIL OF AMERICA, 6300 ENTERPRISE LN, MADISON, WI 53719) FOR SAFETY PRACTICES PRIOR TO PERFORMING THESE FUNCTIONS. UNLESS OTHERWISE INDICATED, TOP CHORD SHALL HAVE PROPERLY ATTACHED STRUCTURAL PANELS AND BOTTOM CHORD SHALL HAVE A PROPERLY ATTACHED RIGID CEILING.

IMPORTANT FURNISH A COPY OF THIS DESIGN TO THE INSTALLATION CONTRACTOR. ALPINE ENGINEERED PRODUCTS, INC. SHALL NOT BE RESPONSIBLE FOR ANY DEVIATION FROM THIS DESIGN; ANY FAILURE TO BUILD THE TRUSS IN CONFORMANCE WITH TPI; OR FABRICATING, HANDLING, SHIPPING, INSTALLING & BRACING OF TRUSSES. DESIGN CONFORMS WITH APPLICABLE PROVISIONS OF NDS (NATIONAL DESIGN SPEC. BY AF&PA) AND TPI. ALPINE CONNECTOR PLATES ARE MADE OF 20/18/16GA (W,H/S/K) ASTM A653 GRADE 40/60 (W, K/H,S) GALV. STEEL. APPLY PLATES TO EACH FACE OF TRUSS AND, UNLESS OTHERWISE LOCATED ON THIS DESIGN, POSITION PER DRAWINGS 160A-2. ANY INSPECTION OF PLATES FOLLOWED BY (1) SHALL BE PER ANNEX A3 OF TPI1-2002 SEC.3. A SEAL ON THIS DRAWING INDICATES ACCEPTANCE OF PROFESSIONAL ENGINEERING RESPONSIBILITY SOLELY FOR THE TRUSS COMPONENT DESIGN SHOWN. THE SUITABILITY AND USE OF THIS COMPONENT FOR ANY BUILDING IS THE RESPONSIBILITY OF THE BUILDING DESIGNER PER ANSI/TPI 1 SEC. 2.

ARTHUR R. FISHER LICENSE No. 59687 STATE OF FLORIDA PROFESSIONAL ENGINEER
Feb 27 '06

TC LL	20.0 PSF	REF	R487-- 31983
TC DL	10.0 PSF	DATE	02/27/06
BC DL	10.0 PSF	DRW	HCUSR487 06058013
BC LL	0.0 PSF	HC-ENG	JB/AF
TOT.LD.	40.0 PSF	SEQN-	86837
DUR.FAC.	1.25		
SPACING	24.0"	JREF-	1SV0487_Z03

(6-083--Doug Morgan Construction #22 Stonehenge II -- , ** - A10)

Top chord 2x4 SP #2 Dense
Bot chord 2x4 SP #2 Dense
Webs 2x4 SP #3

Calculated horizontal deflection is 0.10" due to live load and 0.16" due to dead load.

Deflection meets L/360 live and L/240 total load. Creep increase factor for dead load is 1.50.

110 mph wind, 15.00 ft mean hgt, ASCE 7-02, CLOSED bldg, not located within 4.50 ft from roof edge, CAT II, EXP B, wind TC DL=5.0 psf, wind BC DL=5.0 psf.

(A) Continuous lateral bracing equally spaced on member.

In lieu of structural panels or rigid ceiling use purlins to brace TC 24" OC, BC @ 24" OC.

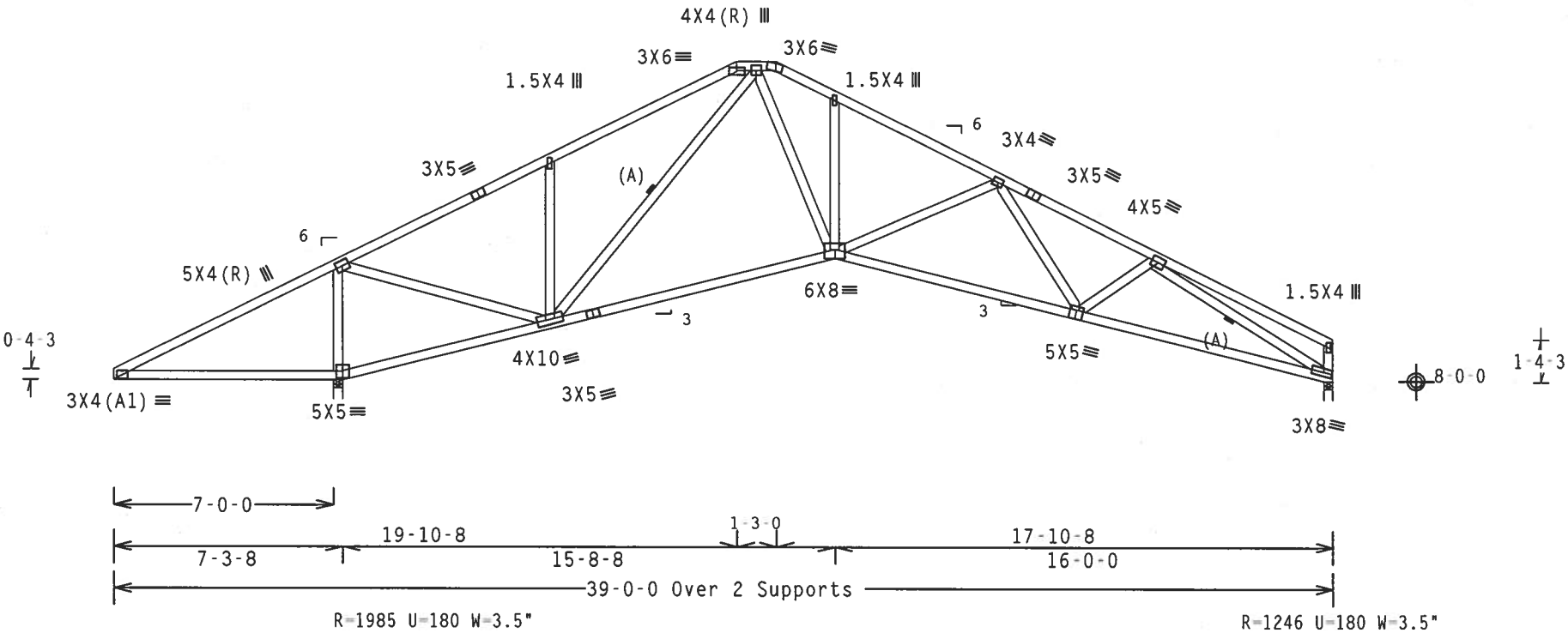

Design Crit: TPI-2002(STD)/FBC

PLT TYP. Wave Cq/RT=1.00(1.25)/10(0) 7.24.1 QTY:1 FL/-/4/-/-/R/- Scale =.1875"/Ft.

ALPINE
Alpine Engineered Products, Inc.
1950 Marley Drive
Haines City, FL 33844
FL Certificate of Authorization # 567

WARNING TRUSSES REQUIRE EXTREME CARE IN FABRICATION, HANDLING, SHIPPING, INSTALLING AND BRACING. REFER TO BCSI 1-03 (BUILDING COMPONENT SAFETY INFORMATION), PUBLISHED BY TPI (TRUSS PLATE INSTITUTE, 583 D'ONOFRIO DR., SUITE 200, MADISON, WI 53719) AND WTCA (WOOD TRUSS COUNCIL OF AMERICA, 6300 ENTERPRISE LN, MADISON, WI 53719) FOR SAFETY PRACTICES PRIOR TO PERFORMING THESE FUNCTIONS. UNLESS OTHERWISE INDICATED, TOP CHORD SHALL HAVE PROPERLY ATTACHED STRUCTURAL PANELS AND BOTTOM CHORD SHALL HAVE A PROPERLY ATTACHED RIGID CEILING.

IMPORTANT FURNISH A COPY OF THIS DESIGN TO THE INSTALLATION CONTRACTOR. ALPINE ENGINEERED PRODUCTS, INC. SHALL NOT BE RESPONSIBLE FOR ANY DEVIATION FROM THIS DESIGN; ANY FAILURE TO BUILD THE TRUSS IN CONFORMANCE WITH TPI; OR FABRICATING, HANDLING, SHIPPING, INSTALLING & BRACING OF TRUSSES. DESIGN CONFORMS WITH APPLICABLE PROVISIONS OF NDS (NATIONAL DESIGN SPEC. BY AF&PA) AND TPI. ALPINE CONNECTOR PLATES ARE MADE OF 20/18/16GA (W,H/S/K) ASTM A653 GRADE 40/60 (W, K/H,S) GALV. STEEL. APPLY PLATES TO EACH FACE OF TRUSS AND, UNLESS OTHERWISE LOCATED ON THIS DESIGN, POSITION PER DRAWINGS 160A-Z. ANY INSPECTION OF PLATES FOLLOWED BY (1) SHALL BE PER ANNEX A3 OF TPI1-2002 SEC.3. A SEAL ON THIS DRAWING INDICATES ACCEPTANCE OF PROFESSIONAL ENGINEERING RESPONSIBILITY SOLELY FOR THE TRUSS COMPONENT DESIGN SHOWN. THE SUITABILITY AND USE OF THIS COMPONENT FOR ANY BUILDING IS THE RESPONSIBILITY OF THE BUILDING DESIGNER PER ANSI/TPI 1 SEC. 2.

ARTHUR R. FISHER LICENSE No. 59687 STATE OF FLORIDA PROFESSIONAL ENGINEER
Feb 27 '06

TC LL	20.0 PSF	REF R487-- 31984
TC DL	10.0 PSF	DATE 02/27/06
BC DL	10.0 PSF	DRW HCUSR487 06058042
BC LL	0.0 PSF	HC-ENG JB/AF
TOT.LD.	40.0 PSF	SEQN- 86846
DUR.FAC.	1.25	
SPACING	24.0"	JREF- 1SV0487_Z03

(6-083--Doug Morgan Construction #22 Stonehenge II -- , ** - B1)

Top chord 2x4 SP #2 Dense
Bot chord 2x4 SP #2 Dense
Webs 2x4 SP #3

110 mph wind, 15.00 ft mean hgt, ASCE 7-02, CLOSED bldg, not located within 6.50 ft from roof edge, CAT II, EXP B, wind TC DL=5.0 psf, wind BC DL=5.0 psf.

Calculated horizontal deflection is 0.13" due to live load and 0.20" due to dead load.

In lieu of structural panels or rigid ceiling use purlins to brace TC @ 24" OC, BC @ 24" OC.

SPECIAL LOADS
------(LUMBER DUR.FAC.=1.25 / PLATE DUR.FAC.=1.25)

TC -	From	62 PLF	at 0.00	to	62 PLF	at	41.00
BC -	From	20 PLF	at 0.00	to	20 PLF	at	7.29
BC -	From	21 PLF	at 7.29	to	21 PLF	at	23.00
BC -	From	21 PLF	at 23.00	to	21 PLF	at	38.71
BC -	From	20 PLF	at 38.71	to	20 PLF	at	41.00
TC -		12 LB Conc. Load at 37.13					
BC -		-99 LB Conc. Load at 37.13					

(A) Continuous lateral bracing equally spaced on member.

Deflection meets L/360 live and L/240 total load. Creep increase factor for dead load is 1.50.

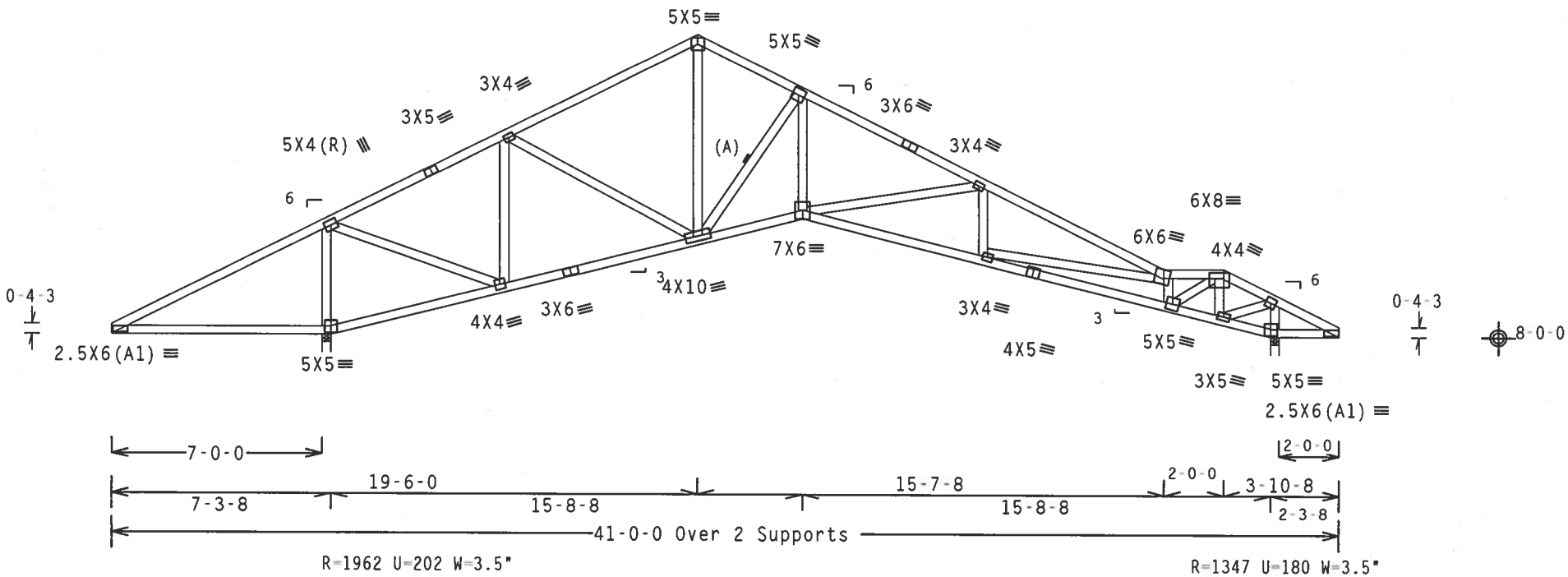

Design Crit: TPI-2002(STD)/FBC

PLT TYP. Wave Cq/RT=1.00(1.25)/10(0) 7.24.1 QTY:1 FL/-/4/-/-/R/- Scale =.1875"/Ft.

ALPINE
Alpine Engineered Products, Inc.
1950 Marley Drive
Haines City, FL 33844
FL Certificate of Authorization # 567

WARNING TRUSSES REQUIRE EXTREME CARE IN FABRICATION, HANDLING, SHIPPING, INSTALLING AND BRACING. REFER TO BCSI 1-03 (BUILDING COMPONENT SAFETY INFORMATION), PUBLISHED BY TPI (TRUSS PLATE INSTITUTE, 583 D'ONOFRIO DR., SUITE 200, MADISON, WI 53719) AND WTCA (WOOD TRUSS COUNCIL OF AMERICA, 6300 ENTERPRISE LN, MADISON, WI 53719) FOR SAFETY PRACTICES PRIOR TO PERFORMING THESE FUNCTIONS. UNLESS OTHERWISE INDICATED, TOP CHORD SHALL HAVE PROPERLY ATTACHED STRUCTURAL PANELS AND BOTTOM CHORD SHALL HAVE A PROPERLY ATTACHED RIGID CEILING.

IMPORTANTFURNISH A COPY OF THIS DESIGN TO THE INSTALLATION CONTRACTOR. ALPINE ENGINEERED PRODUCTS, INC. SHALL NOT BE RESPONSIBLE FOR ANY DEVIATION FROM THIS DESIGN; ANY FAILURE TO BUILD THE TRUSS IN CONFORMANCE WITH TPI; OR FABRICATING, HANDLING, SHIPPING, INSTALLING & BRACING OF TRUSSES. DESIGN CONFORMS WITH APPLICABLE PROVISIONS OF NDS (NATIONAL DESIGN SPEC. BY AF&PA) AND TPI. ALPINE CONNECTOR PLATES ARE MADE OF 20/18/16GA (W,H/S/K) ASTM A653 GRADE 40/60 (W, K/H,S) GALV. STEEL. APPLY PLATES TO EACH FACE OF TRUSS AND, UNLESS OTHERWISE LOCATED ON THIS DESIGN, POSITION PER DRAWINGS 160A-Z. ANY INSPECTION OF PLATES FOLLOWED BY (1) SHALL BE PER ANNEX A3 OF TPI1-2002 SEC.3. A SEAL ON THIS DRAWING INDICATES ACCEPTANCE OF PROFESSIONAL ENGINEERING RESPONSIBILITY SOLELY FOR THE TRUSS COMPONENT DESIGN SHOWN. THE SUITABILITY AND USE OF THIS COMPONENT FOR ANY BUILDING IS THE RESPONSIBILITY OF THE BUILDING DESIGNER PER ANSI/TPI 1 SEC. 2.

ARTHUR R. FISHER LICENSE No.59687 STATE OF FLORIDA PROFESSIONAL ENGINEER
Feb 27 '06

TC LL	20.0 PSF	REF	R487-- 31985
TC DL	10.0 PSF	DATE	02/27/06
BC DL	10.0 PSF	DRW	HCUSR487 06058020
BC LL	0.0 PSF	HC-ENG	JB/AF
TOT.LD.	40.0 PSF	SEQN-	86934
DUR.FAC.	1.25		
SPACING	24.0"	JREF-	1SV0487_Z03

Top chord 2x4 SP #2 Dense
Bot chord 2x4 SP #2 Dense
Webs 2x4 SP #3

SPECIAL LOADS
------(LUMBER DUR.FAC.=1.25 / PLATE DUR.FAC.=1.25)
TC - From 62 PLF at 0.00 to 62 PLF at 41.00
BC - From 20 PLF at 0.00 to 20 PLF at 7.29
BC - From 21 PLF at 7.29 to 21 PLF at 23.00
BC - From 21 PLF at 23.00 to 21 PLF at 38.71
BC - From 20 PLF at 38.71 to 20 PLF at 41.00
TC - 45 LB Conc. Load at 40.94

110 mph wind, 15.00 ft mean hgt, ASCE 7-02, CLOSED bldg, not located within 6.50 ft from roof edge, CAT II, EXP B, wind TC DL=5.0 psf, wind BC DL=5.0 psf.

Calculated horizontal deflection is 0.12" due to live load and 0.19" due to dead load.

(A) Continuous lateral bracing equally spaced on member.

In lieu of structural panels or rigid ceiling use purlins to brace TC @ 24" OC, BC @ 24" OC.

Deflection meets L/360 live and L/240 total load. Creep increase factor for dead load is 1.50.

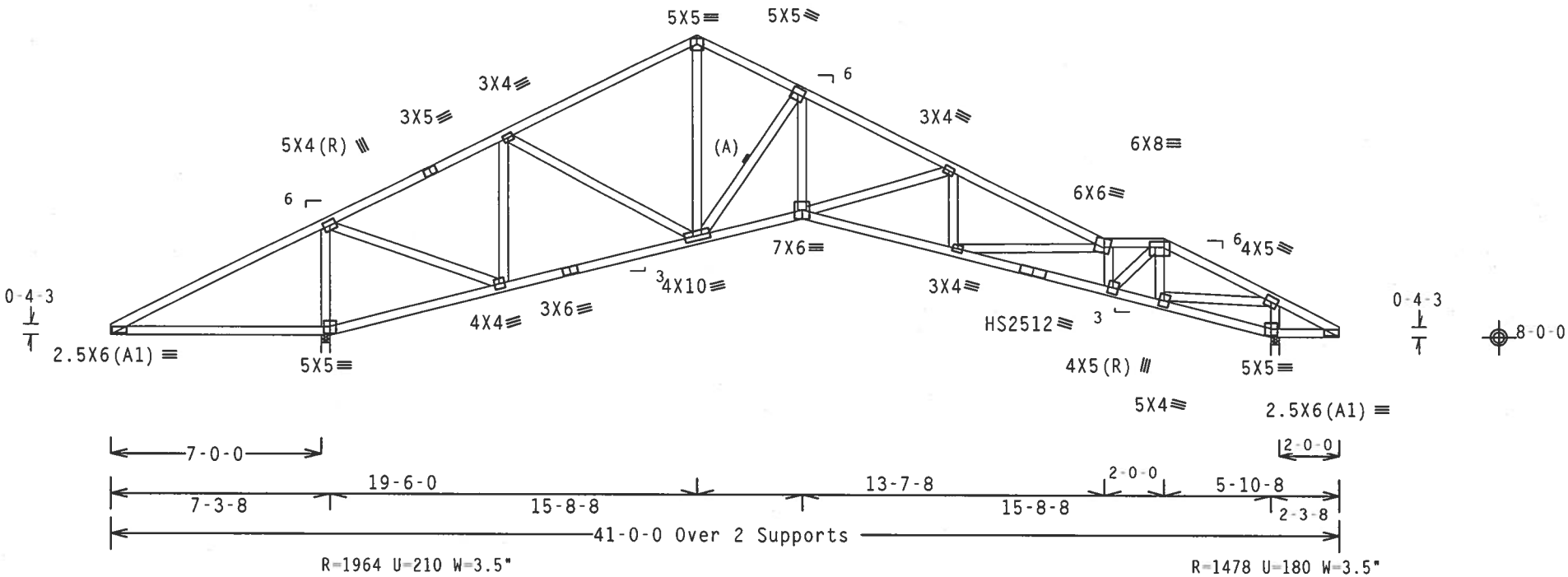

Design Crit: TPI-2002(STD)/FBC

PLT TYP. 20 Gauge HS,Wave Cq/RT=1.00(1.25)/10(0) 7.24.1 QTY:1 FL/-/4/-/-/R/- Scale =.1875"/Ft.

ALPINE
Alpine Engineered Products, Inc.
1950 Marley Drive
Haines City, FL 33844
FL Certificate of Authorization # 567

WARNING TRUSSES REQUIRE EXTREME CARE IN FABRICATION, HANDLING, SHIPPING, INSTALLING AND BRACING. REFER TO BCSI 1-03 (BUILDING COMPONENT SAFETY INFORMATION), PUBLISHED BY TPI (TRUSS PLATE INSTITUTE, 583 D'ONOFRIO DR., SUITE 200, MADISON, WI 53719) AND WTCA (WOOD TRUSS COUNCIL OF AMERICA, 6300 ENTERPRISE LN, MADISON, WI 53719) FOR SAFETY PRACTICES PRIOR TO PERFORMING THESE FUNCTIONS. UNLESS OTHERWISE INDICATED, TOP CHORD SHALL HAVE PROPERLY ATTACHED STRUCTURAL PANELS AND BOTTOM CHORD SHALL HAVE A PROPERLY ATTACHED RIGID CEILING.

IMPORTANT FURNISH A COPY OF THIS DESIGN TO THE INSTALLATION CONTRACTOR. ALPINE ENGINEERED PRODUCTS, INC. SHALL NOT BE RESPONSIBLE FOR ANY DEVIATION FROM THIS DESIGN; ANY FAILURE TO BUILD THE TRUSS IN CONFORMANCE WITH TPI; OR FABRICATING, HANDLING, SHIPPING, INSTALLING & BRACING OF TRUSSES. DESIGN CONFORMS WITH APPLICABLE PROVISIONS OF NDS (NATIONAL DESIGN SPEC. BY AF&PA) AND TPI. ALPINE CONNECTOR PLATES ARE MADE OF 20/18/16GA (W,H/S/K) ASTM A653 GRADE 40/60 (W, K/H,S) GALV. STEEL. APPLY PLATES TO EACH FACE OF TRUSS AND, UNLESS OTHERWISE LOCATED ON THIS DESIGN, POSITION PER DRAWINGS 160A-Z. ANY INSPECTION OF PLATES FOLLOWED BY (1) SHALL BE PER ANNEX A3 OF TPI1-2002 SEC.3. A SEAL ON THIS DRAWING INDICATES ACCEPTANCE OF PROFESSIONAL ENGINEERING RESPONSIBILITY SOLELY FOR THE TRUSS COMPONENT DESIGN SHOWN. THE SUITABILITY AND USE OF THIS COMPONENT FOR ANY BUILDING IS THE RESPONSIBILITY OF THE BUILDING DESIGNER PER ANSI/TPI 1 SEC. 2.

ARTHUR R. FISHER
LICENSE
No. 59687
STATE OF FLORIDA
PROFESSIONAL ENGINEER
Feb 27 '06

TC LL	20.0 PSF	REF	R487-- 31986
TC DL	10.0 PSF	DATE	02/27/06
BC DL	10.0 PSF	DRW	HCUSR487 06058030
BC LL	0.0 PSF	HC-ENG	JB/AF
TOT.LD.	40.0 PSF	SEQN-	86926
DUR.FAC.	1.25		
SPACING	SEE ABOVE	JREF-	1SV0487_Z03

Top chord 2x4 SP #2 Dense
Bot chord 2x4 SP #2 Dense
Webs 2x4 SP #3

Calculated horizontal deflection is 0.11" due to live load and 0.18" due to dead load.

Deflection meets L/360 live and L/240 total load. Creep increase factor for dead load is 1.50.

110 mph wind, 15.00 ft mean hgt, ASCE 7-02, CLOSED bldg, not located within 6.50 ft from roof edge, CAT II, EXP B, wind TC DL=5.0 psf, wind BC DL=5.0 psf.

(A) Continuous lateral bracing equally spaced on member.

In lieu of structural panels or rigid ceiling use purlins to brace TC @ 24" OC, BC @ 24" OC.

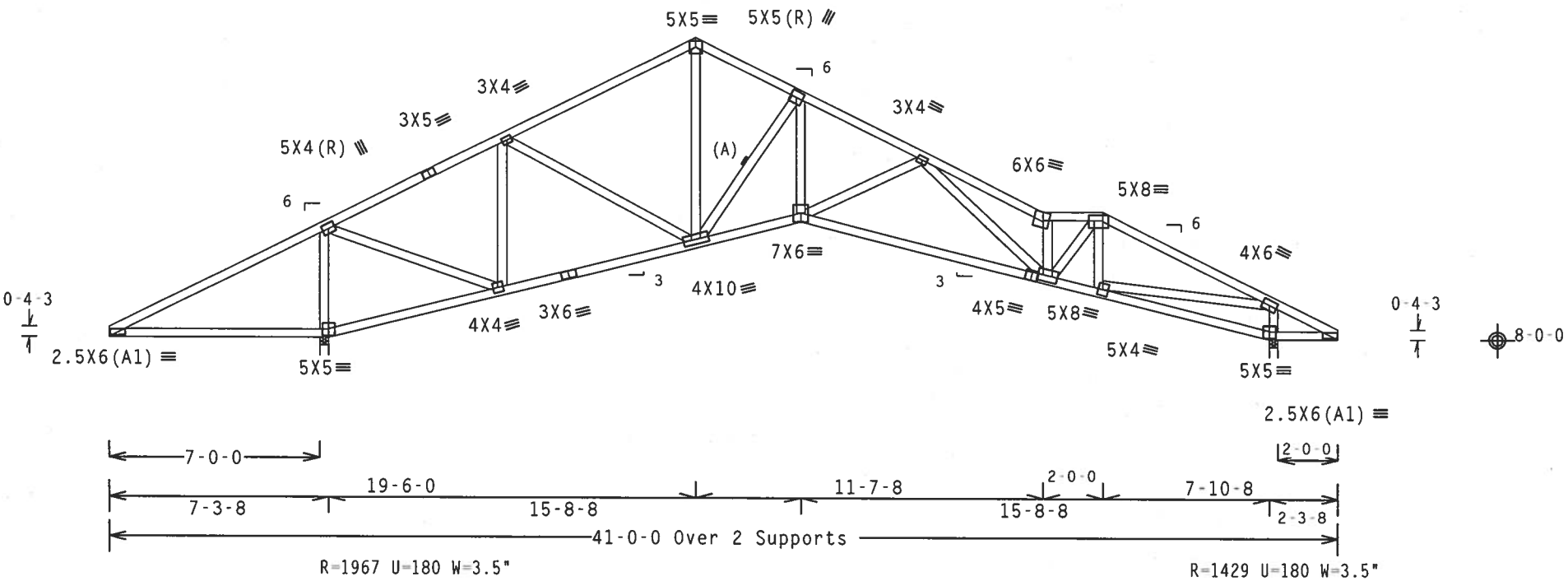

Design Crit: TPI-2002(STD)/FBC
PLT TYP. Wave Cq/RT=1.00(1.25)/10(0) 7.24.12 QTY:1 FL/-/4/-/-/R/- Scale =.1875"/Ft.

ALPINE
Alpine Engineered Products, Inc.
1950 Marley Drive
Haines City, FL 33844
FL Certificate of Authorization # 567

WARNING TRUSSES REQUIRE EXTREME CARE IN FABRICATION, HANDLING, SHIPPING, INSTALLING AND BRACING. REFER TO BCSI 1-03 (BUILDING COMPONENT SAFETY INFORMATION), PUBLISHED BY TPI (TRUSS PLATE INSTITUTE, 583 D'ONOFRIO DR., SUITE 200, MADISON, WI 53719) AND WTCA (WOOD TRUSS COUNCIL OF AMERICA, 6300 ENTERPRISE LN. MADISON, WI 53719) FOR SAFETY PRACTICES PRIOR TO PERFORMING THESE FUNCTIONS. UNLESS OTHERWISE INDICATED, TOP CHORD SHALL HAVE PROPERLY ATTACHED STRUCTURAL PANELS AND BOTTOM CHORD SHALL HAVE A PROPERLY ATTACHED RIGID CEILING.

IMPORTANT FURNISH A COPY OF THIS DESIGN TO THE INSTALLATION CONTRACTOR. ALPINE ENGINEERED PRODUCTS, INC. SHALL NOT BE RESPONSIBLE FOR ANY DEVIATION FROM THIS DESIGN; ANY FAILURE TO BUILD THE TRUSS IN CONFORMANCE WITH TPI; OR FABRICATING, HANDLING, SHIPPING, INSTALLING & BRACING OF TRUSSES. DESIGN CONFORMS WITH APPLICABLE PROVISIONS OF NDS (NATIONAL DESIGN SPEC. BY AF&PA) AND TPI. ALPINE CONNECTOR PLATES ARE MADE OF 20/18/16GA (W,H/S/K) ASTM A653 GRADE 40/60 (W, K/H,S) GALV. STEEL. APPLY PLATES TO EACH FACE OF TRUSS AND, UNLESS OTHERWISE LOCATED ON THIS DESIGN, POSITION PER DRAWINGS 160A-Z. ANY INSPECTION OF PLATES FOLLOWED BY (1) SHALL BE PER ANNEX A3 OF TPI1-2002 SEC.3. A SEAL ON THIS DRAWING INDICATES ACCEPTANCE OF PROFESSIONAL ENGINEERING RESPONSIBILITY SOLELY FOR THE TRUSS COMPONENT DESIGN SHOWN. THE SUITABILITY AND USE OF THIS COMPONENT FOR ANY BUILDING IS THE RESPONSIBILITY OF THE BUILDING DESIGNER PER ANSI/TPI 1 SEC. 2.

ARTHUR R. FISHER LICENSE No. 59687 STATE OF FLORIDA PROFESSIONAL ENGINEER
Feb 27 '06

TC LL	20.0 PSF	REF	R487-- 31987
TC DL	10.0 PSF	DATE	02/27/06
BC DL	10.0 PSF	DRW	HCUSR487 06058031
BC LL	0.0 PSF	HC-ENG	JB/AF
TOT.LD.	40.0 PSF	SEQN-	86911
DUR.FAC.	1.25		
SPACING	24.0"	JREF-	1SV0487_Z03

Top chord 2x4 SP #2 Dense
Bot chord 2x4 SP #2 Dense
Webs 2x4 SP #3

Calculated horizontal deflection is 0.11" due to live load and 0.18" due to dead load.

Deflection meets L/360 live and L/240 total load. Creep increase factor for dead load is 1.50.

110 mph wind, 15.00 ft mean hgt, ASCE 7-02, CLOSED bldg, not located within 6.50 ft from roof edge, CAT II, EXP B, wind TC DL=5.0 psf, wind BC DL=5.0 psf.

(A) Continuous lateral bracing equally spaced on member.

In lieu of structural panels or rigid ceiling use purlins to brace TC @ 24" OC, BC @ 24" OC.

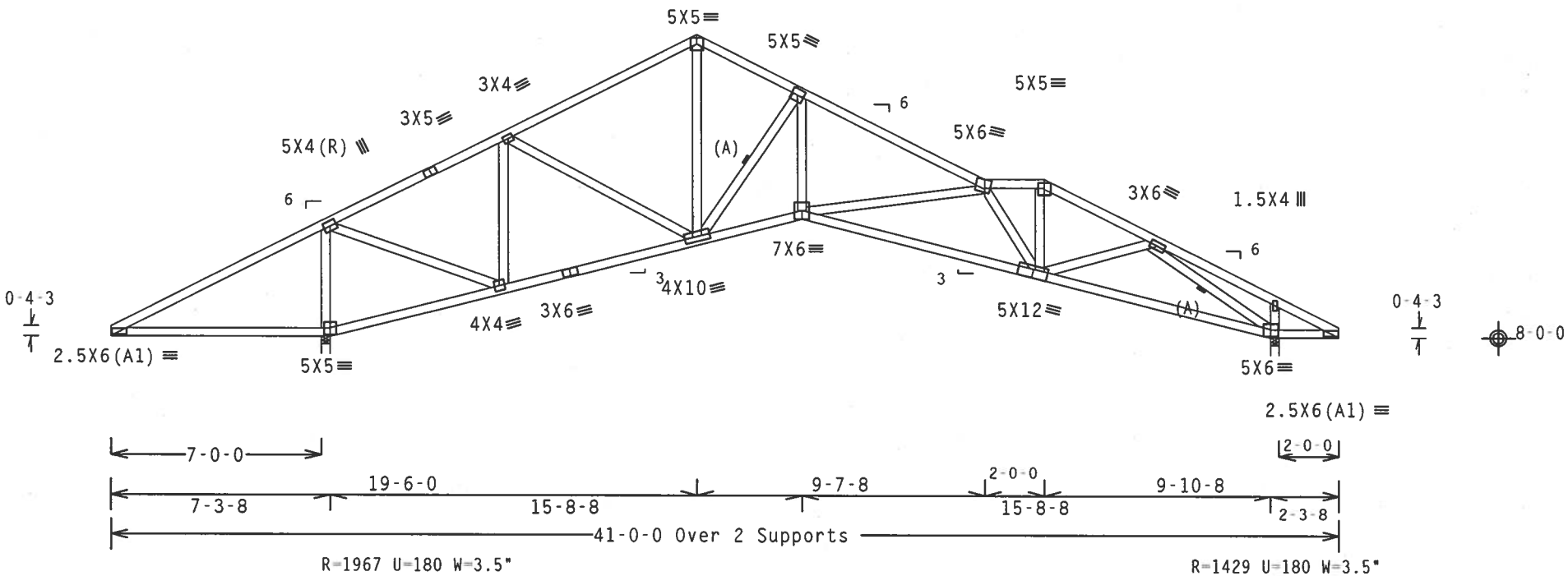

Design Crit: TPI-2002(STD)/FBC

PLT TYP. Wave Cq/RT=1.00(1.25)/10(0) 7.24.1 QTY:1 FL/-/4/-/-/R/- Scale =.1875"/Ft.

ALPINE
Alpine Engineered Products, Inc.
1950 Marley Drive
Haines City, FL 33844
FL Certificate of Authorization # 567

WARNING TRUSSES REQUIRE EXTREME CARE IN FABRICATION, HANDLING, SHIPPING, INSTALLING AND BRACING. REFER TO BCSI 1-03 (BUILDING COMPONENT SAFETY INFORMATION), PUBLISHED BY TPI (TRUSS PLATE INSTITUTE, 583 D'ONOFRIO DR., SUITE 200, MADISON, WI 53719) AND WTCA (WOOD TRUSS COUNCIL OF AMERICA, 6300 ENTERPRISE LN. MADISON, WI 53719) FOR SAFETY PRACTICES PRIOR TO PERFORMING THESE FUNCTIONS. UNLESS OTHERWISE INDICATED, TOP CHORD SHALL HAVE PROPERLY ATTACHED STRUCTURAL PANELS AND BOTTOM CHORD SHALL HAVE A PROPERLY ATTACHED RIGID CEILING.

IMPORTANTFURNISH A COPY OF THIS DESIGN TO THE INSTALLATION CONTRACTOR. ALPINE ENGINEERED PRODUCTS, INC. SHALL NOT BE RESPONSIBLE FOR ANY DEVIATION FROM THIS DESIGN; ANY FAILURE TO BUILD THE TRUSS IN CONFORMANCE WITH TPI: OR FABRICATING, HANDLING, SHIPPING, INSTALLING & BRACING OF TRUSSES. DESIGN CONFORMS WITH APPLICABLE PROVISIONS OF NDS (NATIONAL DESIGN SPEC. BY AF&PA) AND TPI. ALPINE CONNECTOR PLATES ARE MADE OF 20/18/16GA (W,H/S/K) ASTM A653 GRADE 40/60 (W, K/H,S) GALV. STEEL. APPLY PLATES TO EACH FACE OF TRUSS AND, UNLESS OTHERWISE LOCATED ON THIS DESIGN, POSITION PER DRAWINGS 160A-Z. ANY INSPECTION OF PLATES FOLLOWED BY (1) SHALL BE PER ANNEX A3 OF TPI1-2002 SEC.3. A SEAL ON THIS DRAWING INDICATES ACCEPTANCE OF PROFESSIONAL ENGINEERING RESPONSIBILITY SOLELY FOR THE TRUSS COMPONENT DESIGN SHOWN. THE SUITABILITY AND USE OF THIS COMPONENT FOR ANY BUILDING IS THE RESPONSIBILITY OF THE BUILDING DESIGNER PER ANSI/TPI 1 SEC. 2.

ARTHUR B. FISHER LICENSE No.59687 STATE OF FLORIDA PROFESSIONAL ENGINEER
Feb 27, '06

TC LL	20.0 PSF	REF	R487-- 31988
TC DL	10.0 PSF	DATE	02/27/06
BC DL	10.0 PSF	DRW	HCUSR487 06058032
BC LL	0.0 PSF	HC-ENG	JB/AF
TOT.LD.	40.0 PSF	SEQN-	86901
DUR.FAC.	1.25		
SPACING	24.0"	JREF-	1SV0487_Z03

(6-083--Doug Morgan Construction #22 Stonehenge II - , ** - 65)

Top chord 2x4 SP #2 Dense
Bot chord 2x4 SP #2 Dense
Webs 2x4 SP #3

Calculated horizontal deflection is 0.10" due to live load and 0.16" due to dead load.

Deflection meets L/360 live and L/240 total load. Creep increase factor for dead load is 1.50.

110 mph wind, 15.00 ft mean hgt, ASCE 7-02, CLOSED bldg, not located within 4.50 ft from roof edge, CAT II, EXP B, wind TC DL=5.0 psf, wind BC DL=5.0 psf.

In lieu of structural panels or rigid ceiling use purlins to brace TC @ 24" OC, BC @ 24" OC.

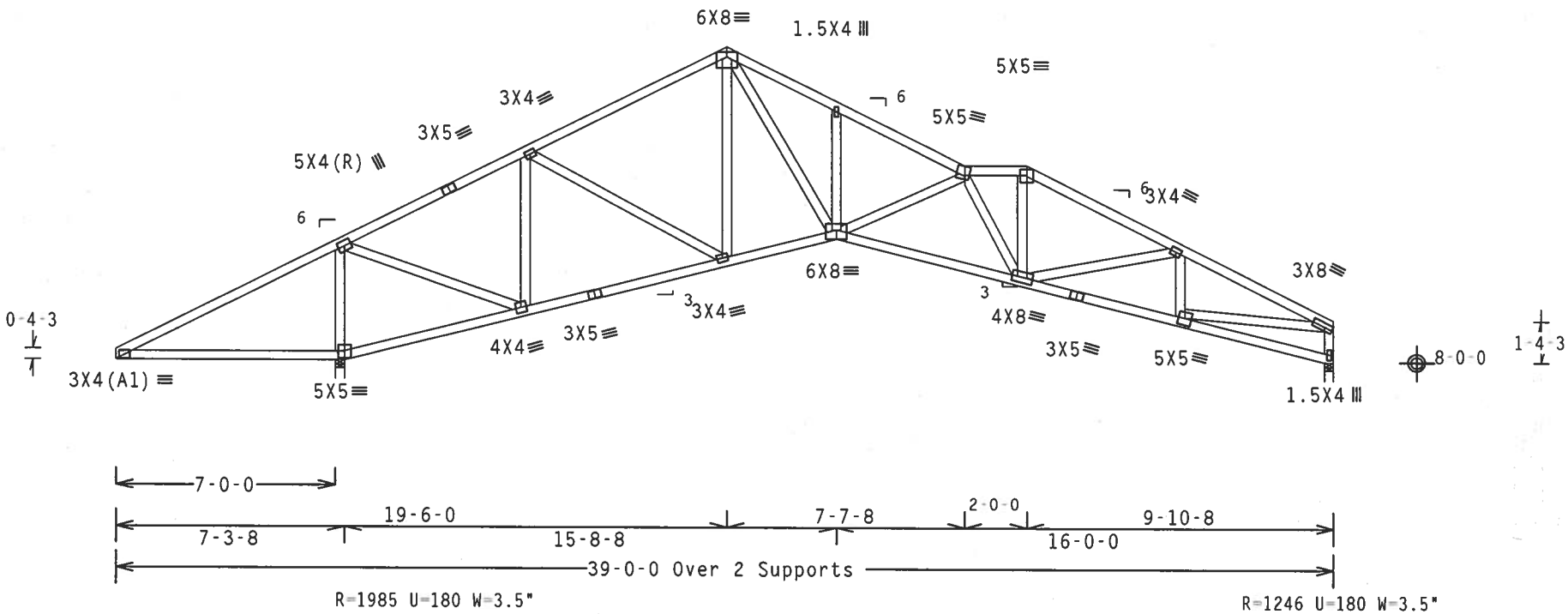

Design Crit: TPI-2002(STD)/FBC

PLT TYP. Wave

Cq/RT=1.00(1.25)/10(0) 7.24.1 QTY:1 FL/-/4/-/-/R/- Scale =.1875"/Ft.

ALPINE

Alpine Engineered Products, Inc.
1950 Marley Drive
Haines City, FL 33844
FL Certificate of Authorization # 567

WARNING TRUSSES REQUIRE EXTREME CARE IN FABRICATION, HANDLING, SHIPPING, INSTALLING AND BRACING. REFER TO BCSI 1-03 (BUILDING COMPONENT SAFETY INFORMATION), PUBLISHED BY TPI (TRUSS PLATE INSTITUTE, 583 D'ONOFRIO DR., SUITE 200, MADISON, WI 53719) AND WTCA (WOOD TRUSS COUNCIL OF AMERICA, 6300 ENTERPRISE LN. MADISON, WI 53719) FOR SAFETY PRACTICES PRIOR TO PERFORMING THESE FUNCTIONS. UNLESS OTHERWISE INDICATED, TOP CHORD SHALL HAVE PROPERLY ATTACHED STRUCTURAL PANELS AND BOTTOM CHORD SHALL HAVE A PROPERLY ATTACHED RIGID CEILING.

IMPORTANTFURNISH A COPY OF THIS DESIGN TO THE INSTALLATION CONTRACTOR. ALPINE ENGINEERED PRODUCTS, INC. SHALL NOT BE RESPONSIBLE FOR ANY DEVIATION FROM THIS DESIGN; ANY FAILURE TO BUILD THE TRUSS IN CONFORMANCE WITH TPI; OR FABRICATING, HANDLING, SHIPPING, INSTALLING & BRACING OF TRUSSES. DESIGN CONFORMS WITH APPLICABLE PROVISIONS OF NDS (NATIONAL DESIGN SPEC. BY AF&PA) AND TPI. ALPINE CONNECTOR PLATES ARE MADE OF 20/18/16GA (W,H/S/K) ASTM A653 GRADE 40/60 (W, K/H,S) GALV. STEEL. APPLY PLATES TO EACH FACE OF TRUSS AND, UNLESS OTHERWISE LOCATED ON THIS DESIGN, POSITION PER DRAWINGS 160A-Z. ANY INSPECTION OF PLATES FOLLOWED BY (1) SHALL BE PER ANNEX A3 OF TPI1-2002 SEC.3. A SEAL ON THIS DRAWING INDICATES ACCEPTANCE OF PROFESSIONAL ENGINEERING RESPONSIBILITY SOLELY FOR THE TRUSS COMPONENT DESIGN SHOWN. THE SUITABILITY AND USE OF THIS COMPONENT FOR ANY BUILDING IS THE RESPONSIBILITY OF THE BUILDING DESIGNER PER ANSI/TPI 1 SEC. 2.

ARTHUR R. FISHER LICENSE No. 59687 STATE OF FLORIDA PROFESSIONAL ENGINEER

Feb 27 '06

TC LL	20.0 PSF	REF	R487-- 31989
TC DL	10.0 PSF	DATE	02/27/06
BC DL	10.0 PSF	DRW	HCUSR487 06058038
BC LL	0.0 PSF	HC-ENG	JB/AF
TOT.LD.	40.0 PSF	SEQN-	86893
DUR.FAC.	1.25		
SPACING	24.0"	JREF-	1SV0487_Z03

(6 083--Doug Morgan Construction #22 Stonehenge II -- , ** - B6)

Top chord 2x4 SP #2 Dense
Bot chord 2x4 SP #2 Dense
Webs 2x4 SP #3

H = recommended connection based on manufacturer tested capacities and calculations. Conditions may exist that require different connections than indicated. Refer to manufacturer publication for additional information.

110 mph wind, 15.00 ft mean hgt, ASCE 7-02, CLOSED bldg, not located within 4.50 ft from roof edge, CAT II, EXP B, wind TC DL=5.0 psf, wind BC DL=5.0 psf.

In lieu of structural panels or rigid ceiling use purlins to brace TC @ 24" OC, BC @ 24" OC.

Deflection meets L/360 live and L/240 total load. Creep increase factor for dead load is 1.50.

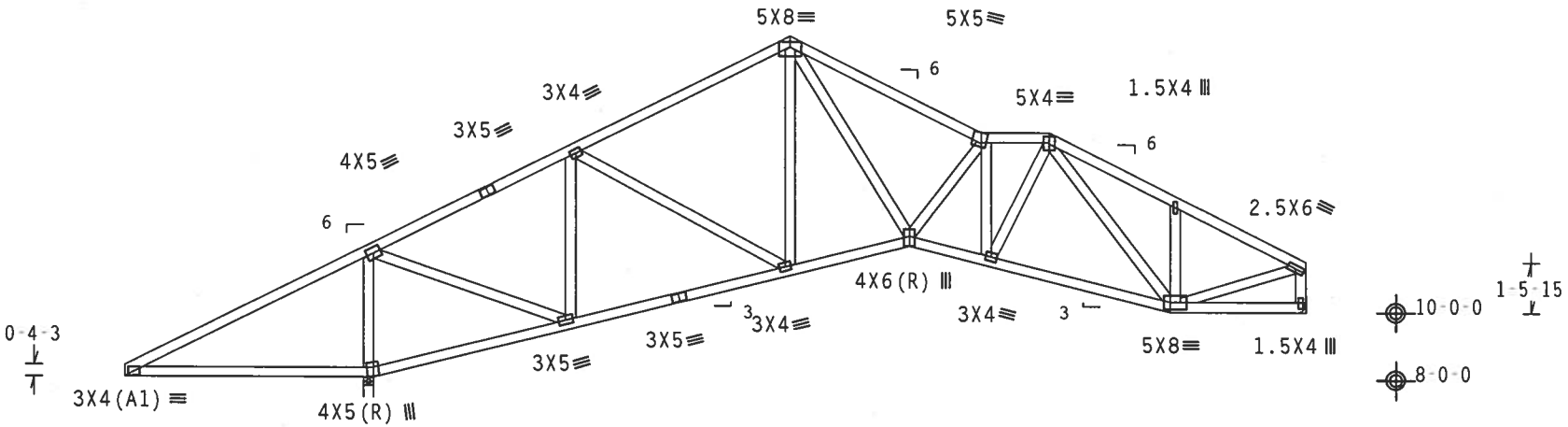

R=1818 U=180 W=3.5"

R=1055 U=180 H=Simpson LUS26
w/ (4) 10d Common, 0.148"x3.0" nails in Truss
w/ (4) 10d Common, 0.148"x3.0" nails in Girder
Girder is (1)2X6 min. So.Pine

Design Crit: TPI-2002(STD)/FBC
Cq/RT=1.00(1.25)/10(0) 7.24.12

PLT TYP. Wave

QTY:1 FL/-/4/-/-/R/- Scale =.1875"/Ft.

ALPINE
Alpine Engineered Products, Inc.
1950 Marley Drive
Haines City, FL 33844
FL Certificate of Authorization # 567

WARNING TRUSSES REQUIRE EXTREME CARE IN FABRICATION, HANDLING, SHIPPING, INSTALLING AND BRACING. REFER TO BCSI 1-03 (BUILDING COMPONENT SAFETY INFORMATION), PUBLISHED BY TPI (TRUSS PLATE INSTITUTE, 583 D'ONOFRIO DR., SUITE 200, MADISON, WI 53719) AND WTCA (WOOD TRUSS COUNCIL OF AMERICA, 6300 ENTERPRISE LN. MADISON, WI 53719) FOR SAFETY PRACTICES PRIOR TO PERFORMING THESE FUNCTIONS. UNLESS OTHERWISE INDICATED, TOP CHORD SHALL HAVE PROPERLY ATTACHED STRUCTURAL PANELS AND BOTTOM CHORD SHALL HAVE A PROPERLY ATTACHED RIGID CEILING.

IMPORTANT FURNISH A COPY OF THIS DESIGN TO THE INSTALLATION CONTRACTOR. ALPINE ENGINEERED PRODUCTS, INC. SHALL NOT BE RESPONSIBLE FOR ANY DEVIATION FROM THIS DESIGN; ANY FAILURE TO BUILD THE TRUSS IN CONFORMANCE WITH TPI; OR FABRICATING, HANDLING, SHIPPING, INSTALLING & BRACING OF TRUSSES. DESIGN CONFORMS WITH APPLICABLE PROVISIONS OF NDS (NATIONAL DESIGN SPEC. BY AF&PA) AND TPI. ALPINE CONNECTOR PLATES ARE MADE OF 20/18/16GA (W.H/S/K) ASTM A653 GRADE 40/60 (W. K/H.S) GALV. STEEL. APPLY PLATES TO EACH FACE OF TRUSS AND, UNLESS OTHERWISE LOCATED ON THIS DESIGN, POSITION PER DRAWINGS 160A-Z. ANY INSPECTION OF PLATES FOLLOWED BY (I) SHALL BE PER ANNEX A3 OF TPI1-2002 SEC.3. A SEAL ON THIS DRAWING INDICATES ACCEPTANCE OF PROFESSIONAL ENGINEERING RESPONSIBILITY SOLELY FOR THE TRUSS COMPONENT DESIGN SHOWN. THE SUITABILITY AND USE OF THIS COMPONENT FOR ANY BUILDING IS THE RESPONSIBILITY OF THE BUILDING DESIGNER PER ANSI/TPI 1 SEC. 2.

ARTHUR R. FISHER
LICENSE
No. 59687
STATE OF FLORIDA
PROFESSIONAL ENGINEER
Feb 27 '06

TC LL	20.0 PSF	REF R487-- 31990
TC DL	10.0 PSF	DATE 02/27/06
BC DL	10.0 PSF	DRW HCUSR487 06058039
BC LL	0.0 PSF	HC-ENG JB/AF
TOT.LD.	40.0 PSF	SEQN- 86882
DUR.FAC.	1.25	
SPACING	24.0"	JREF- 1SV0487_Z03

(6-083--Doug Morgan Construction #22 Stonehenge II - , ** - B7)

Top chord 2x4 SP #2 Dense
Bot chord 2x4 SP #2 Dense
Webs 2x4 SP #3

H = recommended connection based on manufacturer tested capacities and calculations. Conditions may exist that require different connections than indicated. Refer to manufacturer publication for additional information.

110 mph wind, 15.00 ft mean hgt, ASCE 7-02, CLOSED bldg, not located within 4.50 ft from roof edge, CAT II, EXP B, wind TC DL=5.0 psf, wind BC DL=5.0 psf.

In lieu of structural panels or rigid ceiling use purlins to brace TC @ 24" OC, BC @ 24" OC.

Deflection meets L/360 live and L/240 total load. Creep increase factor for dead load is 1.50.

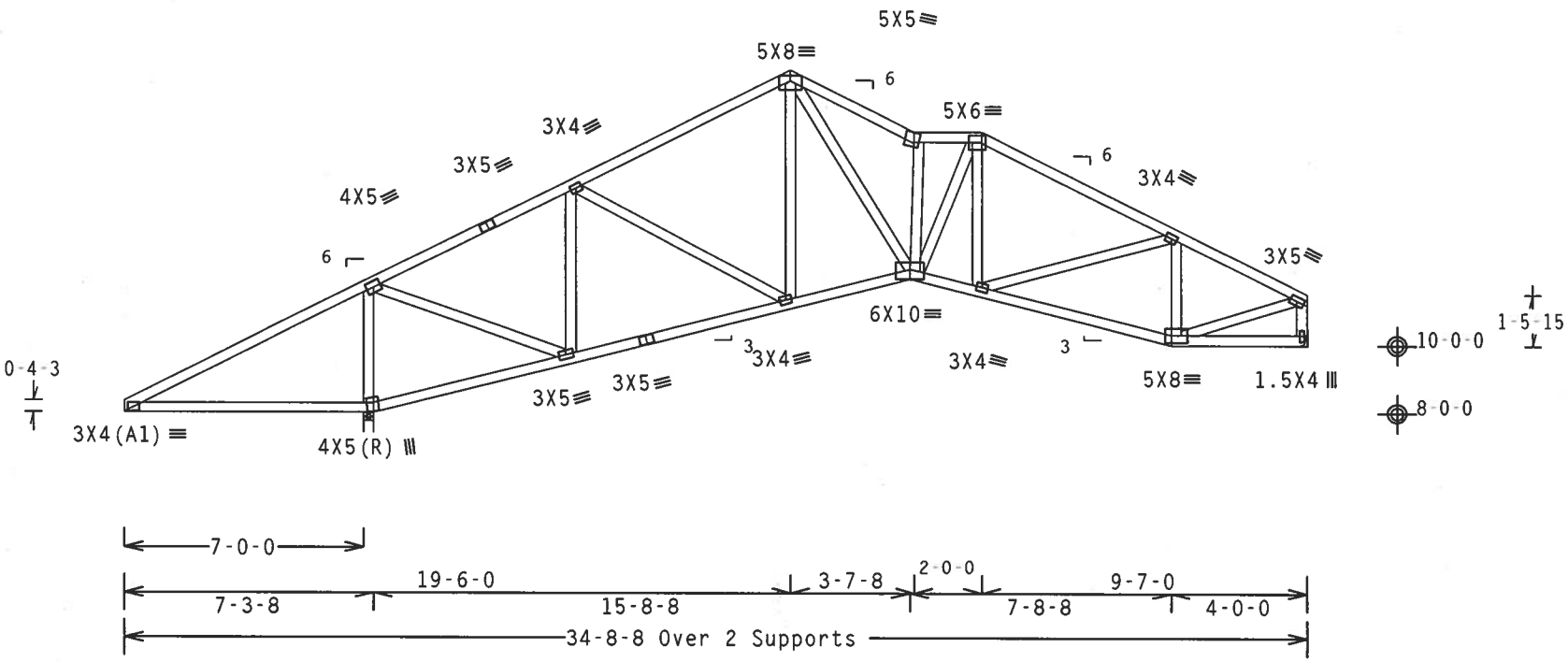

R=1818 U=180 W=3.5"

R=1055 U=180 H=Simpson LUS26
w/ (4) 10d Common, 0.148"x3.0" nails in Truss
w/ (4) 10d Common, 0.148"x3.0" nails in Girder
Girder is (1)2X6 min. So.Pine

Design Crit: TPI-2002(STD)/FBC
Cq/RT=1.00(1.25)/10(0) 7.24.1

PLT TYP. Wave QTY:1 FL/-/4/-/-/R/- Scale =.1875"/Ft.

ALPINE
Alpine Engineered Products, Inc.
1950 Marley Drive
Haines City, FL 33844
FL Certificate of Authorization # 567

WARNING TRUSSES REQUIRE EXTREME CARE IN FABRICATION, HANDLING, SHIPPING, INSTALLING AND BRACING. REFER TO BCSI 1-03 (BUILDING COMPONENT SAFETY INFORMATION), PUBLISHED BY TPI (TRUSS PLATE INSTITUTE, 583 D'ONOFRIO DR., SUITE 200, MADISON, WI 53719) AND WTCA (WOOD TRUSS COUNCIL OF AMERICA, 6300 ENTERPRISE LN, MADISON, WI 53719) FOR SAFETY PRACTICES PRIOR TO PERFORMING THESE FUNCTIONS. UNLESS OTHERWISE INDICATED, TOP CHORD SHALL HAVE PROPERLY ATTACHED STRUCTURAL PANELS AND BOTTOM CHORD SHALL HAVE A PROPERLY ATTACHED RIGID CEILING.

IMPORTANTFURNISH A COPY OF THIS DESIGN TO THE INSTALLATION CONTRACTOR. ALPINE ENGINEERED PRODUCTS, INC. SHALL NOT BE RESPONSIBLE FOR ANY DEVIATION FROM THIS DESIGN; ANY FAILURE TO BUILD THE TRUSS IN CONFORMANCE WITH TPI; OR FABRICATING, HANDLING, SHIPPING, INSTALLING & BRACING OF TRUSSES. DESIGN CONFORMS WITH APPLICABLE PROVISIONS OF NDS (NATIONAL DESIGN SPEC. BY AF&PA) AND TPI. ALPINE CONNECTOR PLATES ARE MADE OF 20/18/16GA (W.H/S/K) ASTM A653 GRADE 40/60 (W, K/H.S) GALV. STEEL. APPLY PLATES TO EACH FACE OF TRUSS AND. UNLESS OTHERWISE LOCATED ON THIS DESIGN, POSITION PER DRAWINGS 160A-Z. ANY INSPECTION OF PLATES FOLLOWED BY (I) SHALL BE PER ANNEX A3 OF TPI1-2002 SEC.3. A SEAL ON THIS DRAWING INDICATES ACCEPTANCE OF PROFESSIONAL ENGINEERING RESPONSIBILITY SOLELY FOR THE TRUSS COMPONENT DESIGN SHOWN. THE SUITABILITY AND USE OF THIS COMPONENT FOR ANY BUILDING IS THE RESPONSIBILITY OF THE BUILDING DESIGNER PER ANSI/TPI 1 SEC. 2.

ARTHUR R. FISHER
LICENSE
No. 59687
STATE OF FLORIDA
PROFESSIONAL ENGINEER
Feb 27 '06

TC LL	20.0 PSF	REF	R487-- 31991
TC DL	10.0 PSF	DATE	02/27/06
BC DL	10.0 PSF	DRW	HCUSR487 06058040
BC LL	0.0 PSF	HC-ENG	JB/AF
TOT.LD.	40.0 PSF	SEQN-	86872
DUR.FAC.	1.25		
SPACING	24.0"	JREF-	1SV0487_Z03

Top chord 2x4 SP #2 Dense
Bot chord 2x4 SP #2 Dense
Webs 2x4 SP #3

H = recommended connection based on manufacturer tested capacities and calculations. Conditions may exist that require different connections than indicated. Refer to manufacturer publication for additional information.

110 mph wind, 15.00 ft mean hgt, ASCE 7-02, CLOSED bldg, not located within 4.50 ft from roof edge, CAT II, EXP B, wind TC DL=5.0 psf, wind BC DL=5.0 psf.

In lieu of structural panels or rigid ceiling use purlins to brace TC @ 24" OC, BC @ 24" OC.

Deflection meets L/360 live and L/240 total load. Creep increase factor for dead load is 1.50.

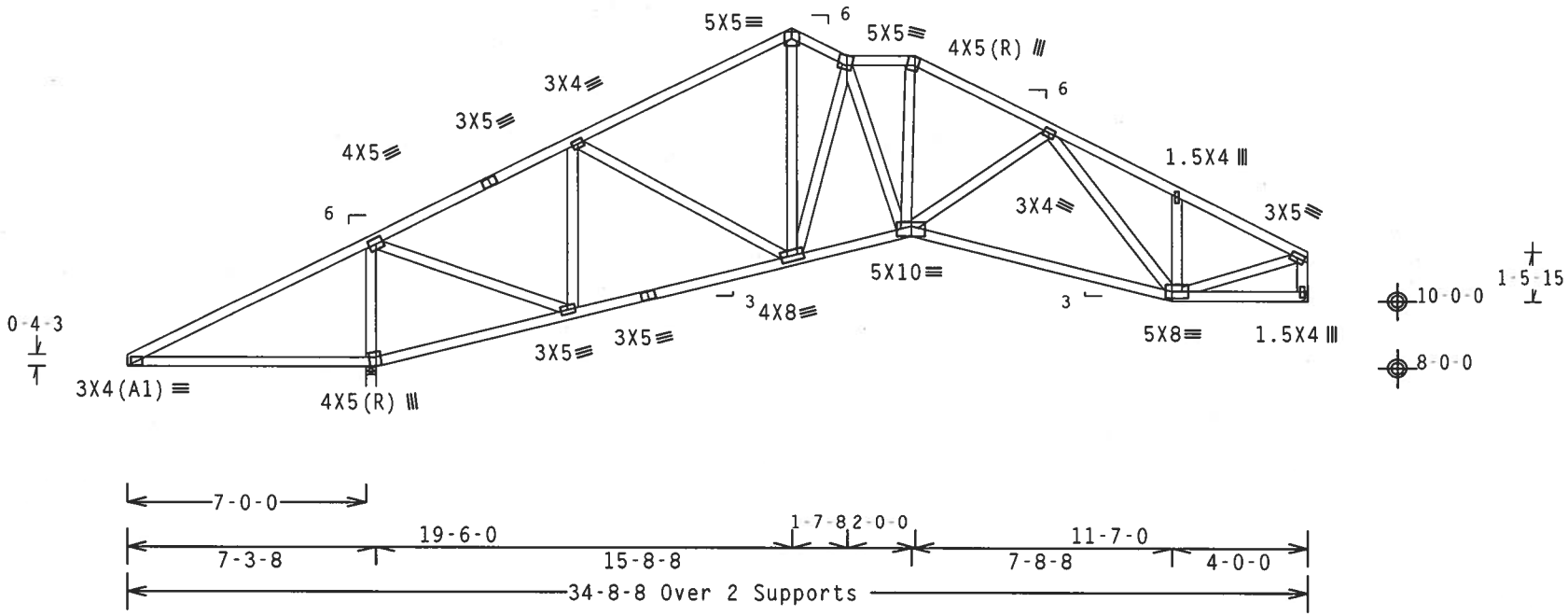

R=1818 U=180 W=3.5"

R=1055 U=180 H=Simpson LUS26
w/ (4) 10d Common, 0.148"x3.0" nails in Truss
w/ (4) 10d Common, 0.148"x3.0" nails in Girder
Girder is (1)2X6 min. So.Pine

Design Crit: TPI-2002(STD)/FBC

PLT TYP. Wave Cq/RT=1.00(1.25)/10(0) 7.24.1 QTY:1 FL/-/4/-/-/R/- Scale =.1875"/Ft.

ALPINE
Alpine Engineered Products, Inc.
1950 Marley Drive
Haines City, FL 33844
FL Certificate of Authorization # 567

WARNING TRUSSES REQUIRE EXTREME CARE IN FABRICATION, HANDLING, SHIPPING, INSTALLING AND BRACING. REFER TO BCSI 1-03 (BUILDING COMPONENT SAFETY INFORMATION), PUBLISHED BY TPI (TRUSS PLATE INSTITUTE, 583 D'ONOFRIO DR., SUITE 200, MADISON, WI 53719) AND WTCA (WOOD TRUSS COUNCIL OF AMERICA, 6300 ENTERPRISE LN, MADISON, WI 53719) FOR SAFETY PRACTICES PRIOR TO PERFORMING THESE FUNCTIONS. UNLESS OTHERWISE INDICATED, TOP CHORD SHALL HAVE PROPERLY ATTACHED STRUCTURAL PANELS AND BOTTOM CHORD SHALL HAVE A PROPERLY ATTACHED RIGID CEILING.

IMPORTANT FURNISH A COPY OF THIS DESIGN TO THE INSTALLATION CONTRACTOR. ALPINE ENGINEERED PRODUCTS, INC. SHALL NOT BE RESPONSIBLE FOR ANY DEVIATION FROM THIS DESIGN; ANY FAILURE TO BUILD THE TRUSS IN CONFORMANCE WITH TPI; OR FABRICATING, HANDLING, SHIPPING, INSTALLING & BRACING OF TRUSSES. DESIGN CONFORMS WITH APPLICABLE PROVISIONS OF NDS (NATIONAL DESIGN SPEC. BY AF&PA) AND TPI. ALPINE CONNECTOR PLATES ARE MADE OF 20/18/16GA (W,H/S/K) ASTM A653 GRADE 40/60 (W, K/H,S) GALV. STEEL. APPLY PLATES TO EACH FACE OF TRUSS AND, UNLESS OTHERWISE LOCATED ON THIS DESIGN, POSITION PER DRAWINGS 160A-2. ANY INSPECTION OF PLATES FOLLOWED BY (1) SHALL BE PER ANNEX A3 OF TPI1-2002 SEC.3. A SEAL ON THIS DRAWING INDICATES ACCEPTANCE OF PROFESSIONAL ENGINEERING RESPONSIBILITY SOLELY FOR THE TRUSS COMPONENT DESIGN SHOWN. THE SUITABILITY AND USE OF THIS COMPONENT FOR ANY BUILDING IS THE RESPONSIBILITY OF THE BUILDING DESIGNER PER ANSI/TPI 1 SEC. 2.

ARTHUR R. FISHER LICENSE No. 59687 STATE OF FLORIDA PROFESSIONAL ENGINEER

Feb 27 '06

TC LL	20.0 PSF	REF	R487-- 31992
TC DL	10.0 PSF	DATE	02/27/06
BC DL	10.0 PSF	DRW	HCUSR487 06058041
BC LL	0.0 PSF	HC-ENG	JB/AF
TOT.LD.	40.0 PSF	SEQN-	86860
DUR.FAC.	1.25		
SPACING	24.0"	JREF-	1SV0487_Z03

(6-083--Doug Morgan Construction #22 Stonehenge II - . ** - C1)

Top chord 2x4 SP #1 N :T1 2x4 SP #2:
Bot chord 2x4 SP #2
Webs 2x4 SP #3 :W12 2x4 SP #2:

SPECIAL LOADS
------(LUMBER DUR.FAC.=1.25 / PLATE DUR.FAC.=1.25)
TC - From 62 PLF at 0.00 to 62 PLF at 32.00
BC - From 20 PLF at 0.00 to 20 PLF at 32.00
TC - 281 LB Conc. Load at 7.00
TC - 115 LB Conc. Load at 9.00, 11.00, 13.00, 15.00, 17.00
19.00, 21.00, 23.00, 25.00, 27.00, 29.00, 31.00
BC - 134 LB Conc. Load at 7.00
BC - 33 LB Conc. Load at 9.00, 11.00, 13.00, 15.00, 17.00
19.00, 21.00, 23.00, 25.00, 27.00, 29.00, 31.00

110 mph wind, 15.00 ft mean hgt, ASCE 7-02, CLOSED bldg, not located within 4.50 ft from roof edge, CAT II, EXP B, wind TC DL=5.0 psf, wind BC DL=5.0 psf.

Right end vertical not exposed to wind pressure.

H = recommended connection based on manufacturer tested capacities and calculations. Conditions may exist that require different connections than indicated. Refer to manufacturer publication for additional information.

In lieu of structural panels or rigid ceiling use purlins to brace TC @ 24" OC, BC @ 24" OC.

Deflection meets L/360 live and L/240 total load. Creep increase factor for dead load is 1.50.

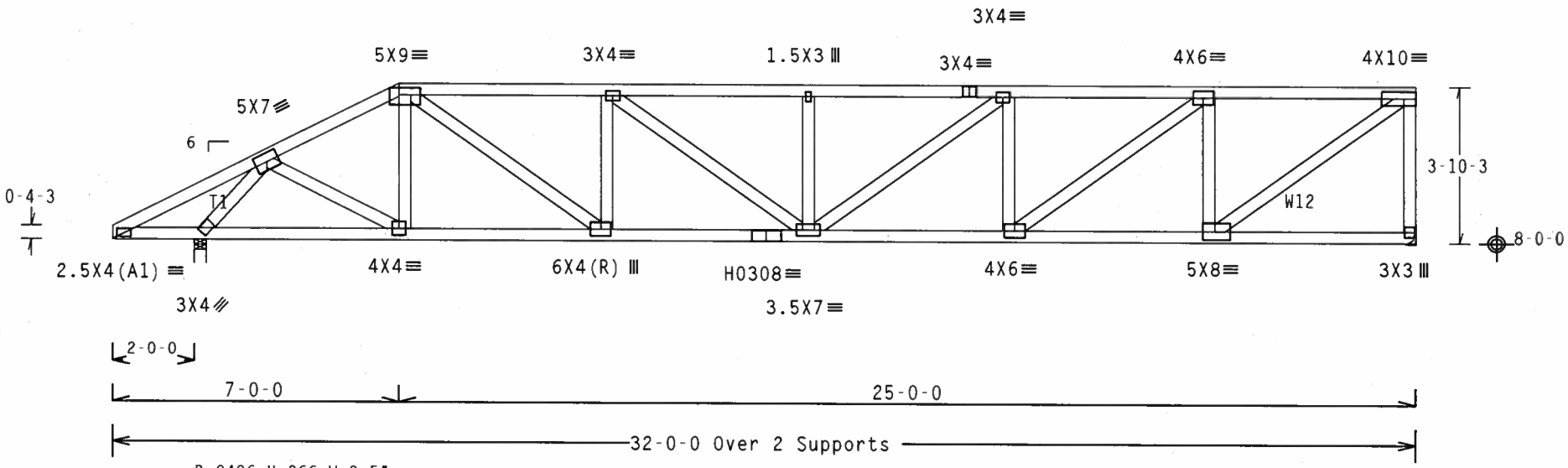

R=2486 U=266 W=3.5"

R=2341 U=250 H=Simpson HUS26
w/ (6) 10d Common, 0.148"x3.0" nails in Truss
w/ (14) 10d Common, 0.148"x3.0" nails in Girder
Girder is (1)2X6 min. So.Pine

Design Crit: TPI-2002(STD)/FBC

PLT TYP. 20 Gauge HS,Wave Cq/RT=1.00(1.25)/10(0) 7.24.12 QTY:1 FL/-/4/-/-/R/- Scale =.25"/Ft.

ALPINE
Alpine Engineered Products, Inc.
1950 Marley Drive
Haines City, FL 33844
FL Certificate of Authorization # 567

WARNING TRUSSES REQUIRE EXTREME CARE IN FABRICATION, HANDLING, SHIPPING, INSTALLING AND BRACING. REFER TO BCSI 1-03 (BUILDING COMPONENT SAFETY INFORMATION), PUBLISHED BY TPI (TRUSS PLATE INSTITUTE, 583 D'ONOFRIO DR., SUITE 200, MADISON, WI 53719) AND WTCA (WOOD TRUSS COUNCIL OF AMERICA, 6300 ENTERPRISE LN. MADISON, WI 53719) FOR SAFETY PRACTICES PRIOR TO PERFORMING THESE FUNCTIONS. UNLESS OTHERWISE INDICATED, TOP CHORD SHALL HAVE PROPERLY ATTACHED STRUCTURAL PANELS AND BOTTOM CHORD SHALL HAVE A PROPERLY ATTACHED RIGID CEILING.

IMPORTANTFURNISH A COPY OF THIS DESIGN TO THE INSTALLATION CONTRACTOR. ALPINE ENGINEERED PRODUCTS, INC. SHALL NOT BE RESPONSIBLE FOR ANY DEVIATION FROM THIS DESIGN; ANY FAILURE TO BUILD THE TRUSS IN CONFORMANCE WITH TPI; OR FABRICATING, HANDLING, SHIPPING, INSTALLING & BRACING OF TRUSSES. DESIGN CONFORMS WITH APPLICABLE PROVISIONS OF NDS (NATIONAL DESIGN SPEC. BY AF&PA) AND TPI. ALPINE CONNECTOR PLATES ARE MADE OF 20/18/16GA (W,H/S/K) ASTM A653 GRADE 40/60 (W, K/H,S) GALV. STEEL. APPLY PLATES TO EACH FACE OF TRUSS AND, UNLESS OTHERWISE LOCATED ON THIS DESIGN, POSITION PER DRAWINGS 160A-Z. ANY INSPECTION OF PLATES FOLLOWED BY (1) SHALL BE PER ANNEX A3 OF TPI1-2002 SEC.3. A SEAL ON THIS DRAWING INDICATES ACCEPTANCE OF PROFESSIONAL ENGINEERING RESPONSIBILITY SOLELY FOR THE TRUSS COMPONENT DESIGN SHOWN. THE SUITABILITY AND USE OF THIS COMPONENT FOR ANY BUILDING IS THE RESPONSIBILITY OF THE BUILDING DESIGNER PER ANSI/TPI 1 SEC. 2.

ARTHUR R. FISHER LICENSE No. 59687 STATE OF FLORIDA PROFESSIONAL ENGINEER
Feb 27 '06

TC LL	20.0 PSF	REF	R487-- 31993
TC DL	10.0 PSF	DATE	02/27/06
BC DL	10.0 PSF	DRW	HCUSR487 06058004
BC LL	0.0 PSF	HC-ENG	JB/AF
TOT.LD.	40.0 PSF	SEQN-	147659 REV
DUR.FAC.	1.25		
SPACING	SEE ABOVE	JREF-	1SV0487_Z03

(6-083--Doug Morgan Construction #22 Stonehenge II -- , * - C2)

Top chord 2x4 SP #2 Dense
Bot chord 2x4 SP #2 Dense
Webs 2x4 SP #3

H = recommended connection based on manufacturer tested capacities and calculations. Conditions may exist that require different connections than indicated. Refer to manufacturer publication for additional information.

Deflection meets L/360 live and L/240 total load. Creep increase factor for dead load is 1.50.

110 mph wind, 15.00 ft mean hgt, ASCE 7-02, CLOSED bldg, not located within 4.50 ft from roof edge, CAT II, EXP B, wind TC DL=5.0 psf, wind BC DL=5.0 psf.

Right end vertical not exposed to wind pressure.

In lieu of structural panels or rigid ceiling use purlins to brace TC @ 24" OC, BC @ 24" OC.

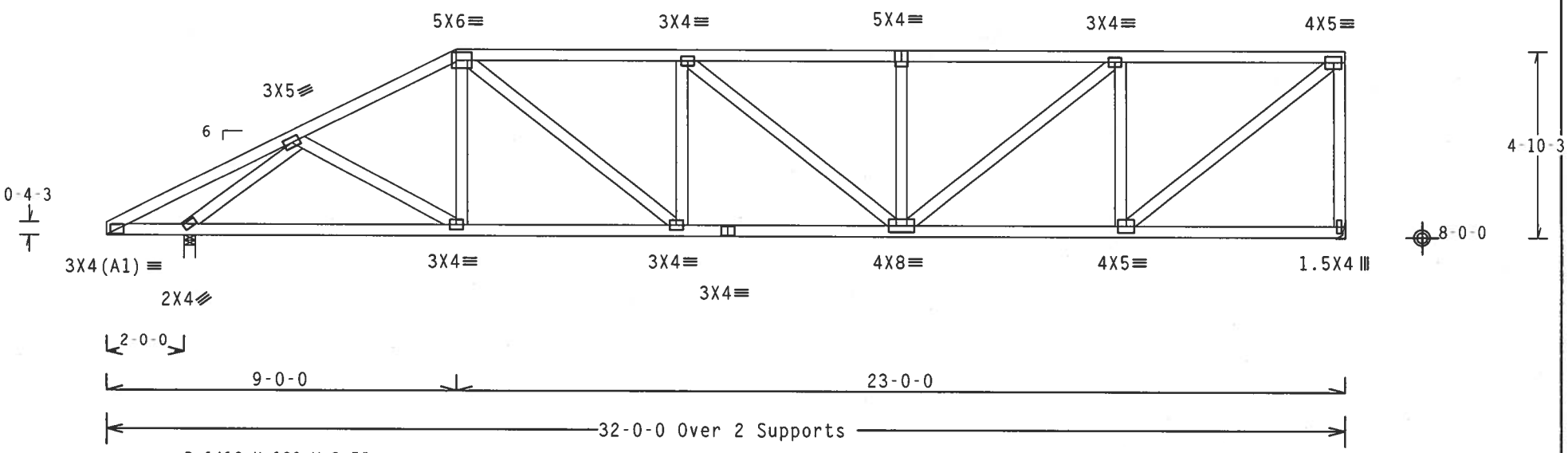

R=1412 U=180 W=3.5"

R=1223 U=180 H=Simpson HUS26
w/ (4) 10d Common, 0.148"x3.0" nails in Truss
w/ (14) 10d Common, 0.148"x3.0" nails in Girder
Girder is (1)2X6 min. So.Pine

Design Crit: TPI-2002(STD)/FBC

PLT TYP. Wave Cq/RT=1.00(1.25)/10(0) 7.24.12 QTY:1 FL/-/4/-/-/R/- Scale =.25"/Ft.

ALPINE
Alpine Engineered Products, Inc.
1950 Marley Drive
Haines City, FL 33844
FL Certificate of Authorization # 567

WARNING TRUSSES REQUIRE EXTREME CARE IN FABRICATION, HANDLING, SHIPPING, INSTALLING AND BRACING. REFER TO BCSI 1-03 (BUILDING COMPONENT SAFETY INFORMATION), PUBLISHED BY TPI (TRUSS PLATE INSTITUTE, 583 D'ONOFRIO DR., SUITE 200, MADISON, WI 53719) AND WTCA (WOOD TRUSS COUNCIL OF AMERICA, 6300 ENTERPRISE LN, MADISON, WI 53719) FOR SAFETY PRACTICES PRIOR TO PERFORMING THESE FUNCTIONS. UNLESS OTHERWISE INDICATED, TOP CHORD SHALL HAVE PROPERLY ATTACHED STRUCTURAL PANELS AND BOTTOM CHORD SHALL HAVE A PROPERLY ATTACHED RIGID CEILING.

IMPORTANTFURNISH A COPY OF THIS DESIGN TO THE INSTALLATION CONTRACTOR. ALPINE ENGINEERED PRODUCTS, INC. SHALL NOT BE RESPONSIBLE FOR ANY DEVIATION FROM THIS DESIGN; ANY FAILURE TO BUILD THE TRUSS IN CONFORMANCE WITH TPI; OR FABRICATING, HANDLING, SHIPPING, INSTALLING & BRACING OF TRUSSES. DESIGN CONFORMS WITH APPLICABLE PROVISIONS OF NDS (NATIONAL DESIGN SPEC. BY AF&PA) AND TPI. ALPINE CONNECTOR PLATES ARE MADE OF 20/18/16GA (W,H/S/K) ASTM A653 GRADE 40/60 (W, K/H,S) GALV. STEEL. APPLY PLATES TO EACH FACE OF TRUSS AND, UNLESS OTHERWISE LOCATED ON THIS DESIGN, POSITION PER DRAWINGS 160A-Z. ANY INSPECTION OF PLATES FOLLOWED BY (1) SHALL BE PER ANNEX A3 OF TPI1-2002 SEC.3. A SEAL ON THIS DRAWING INDICATES ACCEPTANCE OF PROFESSIONAL ENGINEERING RESPONSIBILITY SOLELY FOR THE TRUSS COMPONENT DESIGN SHOWN. THE SUITABILITY AND USE OF THIS COMPONENT FOR ANY BUILDING IS THE RESPONSIBILITY OF THE BUILDING DESIGNER PER ANSI/TPI 1 SEC. 2.

ARTHUR R. FISHER
LICENSE
No.59687
STATE OF FLORIDA
PROFESSIONAL ENGINEER

Feb 27 '06

TC LL	20.0 PSF	REF	R487-- 31994
TC DL	10.0 PSF	DATE	02/27/06
BC DL	10.0 PSF	DRW	HCUSR487 06058005
BC LL	0.0 PSF	HC-ENG	JB/AF
TOT.LD.	40.0 PSF	SEQN-	1697
DUR.FAC.	1.25		
SPACING	24.0"	JREF-	1SV0487_Z03

Top chord 2x4 SP #2 Dense
Bot chord 2x4 SP #2 Dense
Webs 2x4 SP #3

H = recommended connection based on manufacturer tested capacities and calculations. Conditions may exist that require different connections than indicated. Refer to manufacturer publication for additional information.

Deflection meets L/360 live and L/240 total load. Creep increase factor for dead load is 1.50.

110 mph wind, 15.00 ft mean hgt, ASCE 7-02, CLOSED bldg, not located within 4.50 ft from roof edge, CAT II, EXP B, wind TC DL=5.0 psf, wind BC DL=5.0 psf.

Right end vertical not exposed to wind pressure.

In lieu of structural panels or rigid ceiling use purlins to brace TC @ 24" OC, BC @ 24" OC.

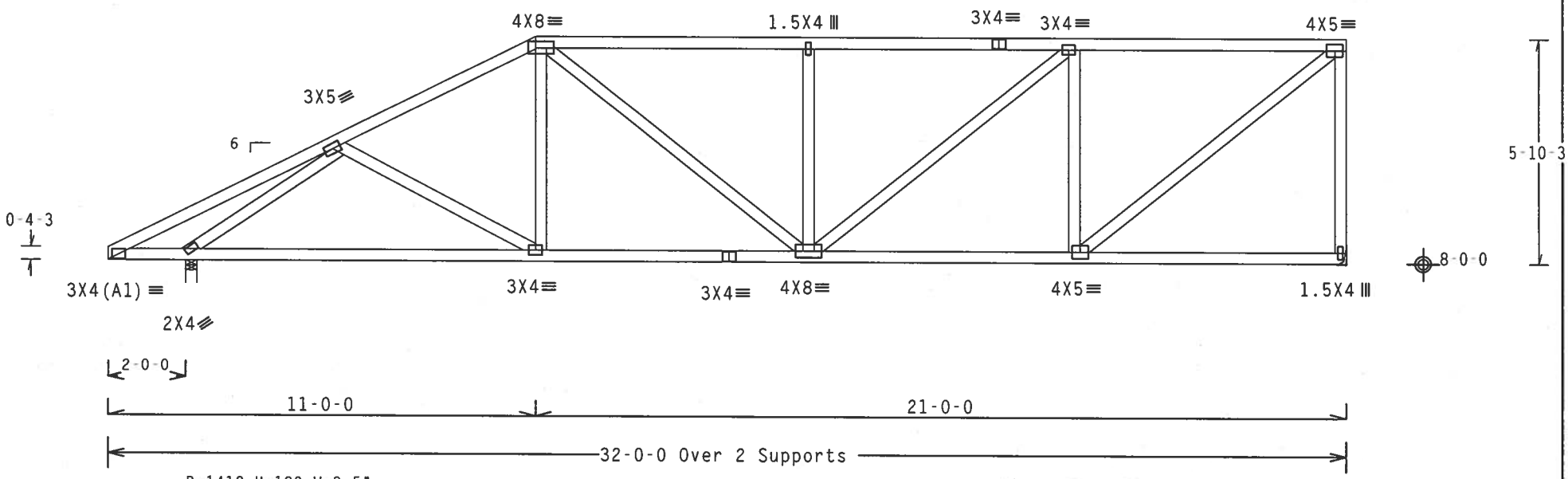

R=1412 U=180 W=3.5"

R=1223 U=180 H=Simpson HUS26
w/ (4) 10d Common, 0.148"x3.0" nails in Truss
w/ (14) 10d Common, 0.148"x3.0" nails in Girder
Girder is (1)2X6 min. So.Pine

Design Crit: TPI-2002(STD)/FBC
Cq/RT=1.00(1.25)/10(0) 7.24.12 QTY:1 FL/-/4/-/-/R/-

PLT TYP. Wave

Scale =.25"/Ft.

ALPINE
Alpine Engineered Products, Inc.
1950 Marley Drive
Haines City, FL 33844
FL Certificate of Authorization # 567

WARNING TRUSSES REQUIRE EXTREME CARE IN FABRICATION, HANDLING, SHIPPING, INSTALLING AND BRACING. REFER TO BCSI 1-03 (BUILDING COMPONENT SAFETY INFORMATION), PUBLISHED BY TPI (TRUSS PLATE INSTITUTE, 583 D'ONOFRIO DR., SUITE 200, MADISON, WI 53719) AND WTCA (WOOD TRUSS COUNCIL OF AMERICA, 6300 ENTERPRISE LN, MADISON, WI 53719) FOR SAFETY PRACTICES PRIOR TO PERFORMING THESE FUNCTIONS. UNLESS OTHERWISE INDICATED, TOP CHORD SHALL HAVE PROPERLY ATTACHED STRUCTURAL PANELS AND BOTTOM CHORD SHALL HAVE A PROPERLY ATTACHED RIGID CEILING.

IMPORTANT FURNISH A COPY OF THIS DESIGN TO THE INSTALLATION CONTRACTOR. ALPINE ENGINEERED PRODUCTS, INC. SHALL NOT BE RESPONSIBLE FOR ANY DEVIATION FROM THIS DESIGN; ANY FAILURE TO BUILD THE TRUSS IN CONFORMANCE WITH TPI; OR FABRICATING, HANDLING, SHIPPING, INSTALLING & BRACING OF TRUSSES. DESIGN CONFORMS WITH APPLICABLE PROVISIONS OF NDS (NATIONAL DESIGN SPEC. BY AF&PA) AND TPI. ALPINE CONNECTOR PLATES ARE MADE OF 20/18/16GA (W,H/S/K) ASTM A653 GRADE 40/60 (W. K/H.S) GALV. STEEL. APPLY PLATES TO EACH FACE OF TRUSS AND, UNLESS OTHERWISE LOCATED ON THIS DESIGN, POSITION PER DRAWINGS 160A-Z. ANY INSPECTION OF PLATES FOLLOWED BY (1) SHALL BE PER ANNEX A3 OF TPI1-2002 SEC.3. A SEAL ON THIS DRAWING INDICATES ACCEPTANCE OF PROFESSIONAL ENGINEERING RESPONSIBILITY SOLELY FOR THE TRUSS COMPONENT DESIGN SHOWN. THE SUITABILITY AND USE OF THIS COMPONENT FOR ANY BUILDING IS THE RESPONSIBILITY OF THE BUILDING DESIGNER PER ANSI/TPI 1 SEC. 2.

ARTHUR R. FISHER
LICENSE
No.59687
STATE OF FLORIDA
PROFESSIONAL ENGINEER

Fe[illegible] 06

TC LL	20.0 PSF	REF	R487-- 31995
TC DL	10.0 PSF	DATE	02/27/06
BC DL	10.0 PSF	DRW	HCUSR487 06058006
BC LL	0.0 PSF	HC-ENG	JB/AF
TOT.LD.	40.0 PSF	SEQN-	1704
DUR.FAC.	1.25		
SPACING	24.0"	JREF-	1SV0487_Z03

Top chord 2x4 SP #2 Dense
Bot chord 2x4 SP #2 Dense
Webs 2x4 SP #3

H = recommended connection based on manufacturer tested capacities and calculations. Conditions may exist that require different connections than indicated. Refer to manufacturer publication for additional information.

In lieu of structural panels or rigid ceiling use purlins to brace TC @ 24" OC, BC @ 24" OC.

110 mph wind, 15.00 ft mean hgt, ASCE 7-02, CLOSED bldg, not located within 4.50 ft from roof edge, CAT II, EXP B, wind TC DL=5.0 psf, wind BC DL=5.0 psf.

Right end vertical not exposed to wind pressure.

(A) 1x4 #3 or better "T" brace. 80% length of web member. Attach with 8d Box or Gun (0.113"x2.5",min.)nails @ 6" OC.

Deflection meets L/360 live and L/240 total load. Creep increase factor for dead load is 1.50.

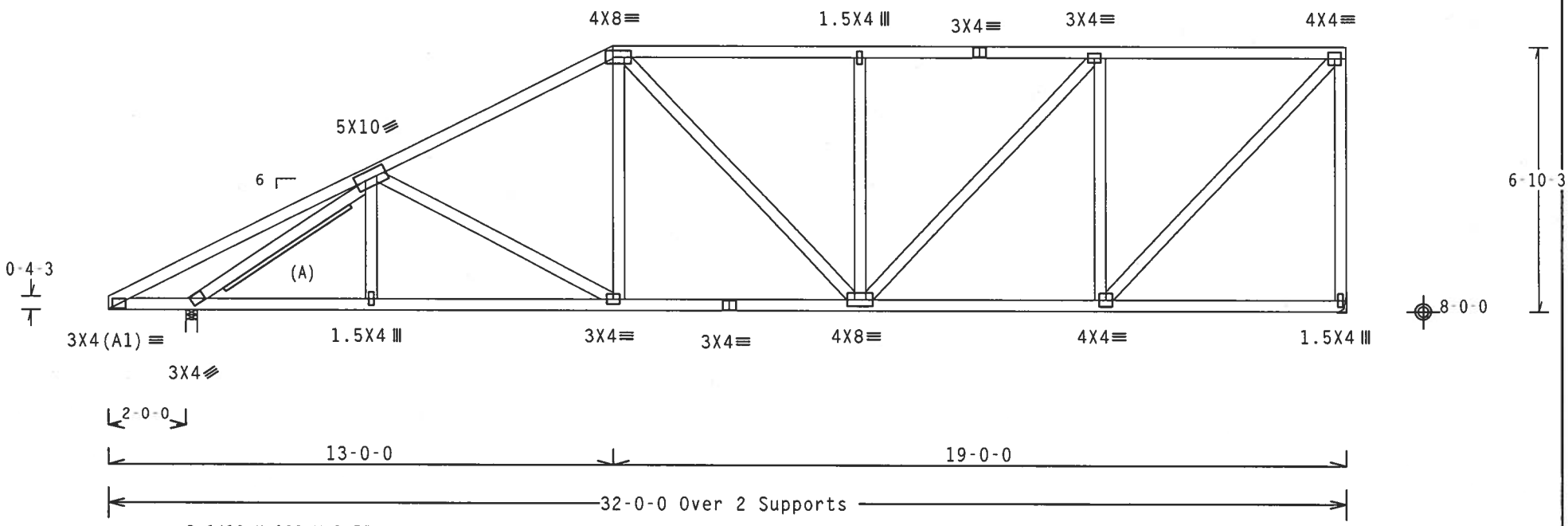

R=1419 U=180 W=3.5"

R=1216 U=180 H=Simpson HUS26
w/ (4) 10d Common, 0.148"x3.0" nails in Truss
w/ (14) 10d Common, 0.148"x3.0" nails in Girder
Girder is (1)2X6 min. So.Pine

Design Crit: TPI-2002(STD)/FBC

PLT TYP. Wave Cq/RT=1.00(1.25)/10(0) 7.24.1 QTY:1 FL/-/4/-/-/R/- Scale =.25"/Ft.

ALPINE
Alpine Engineered Products, Inc.
1950 Marley Drive
Haines City, FL 33844
FL Certificate of Authorization # 567

WARNING TRUSSES REQUIRE EXTREME CARE IN FABRICATION, HANDLING, SHIPPING, INSTALLING AND BRACING. REFER TO BCSI 1-03 (BUILDING COMPONENT SAFETY INFORMATION), PUBLISHED BY TPI (TRUSS PLATE INSTITUTE, 583 D'ONOFRIO DR., SUITE 200, MADISON, WI 53719) AND WTCA (WOOD TRUSS COUNCIL OF AMERICA, 6300 ENTERPRISE LN, MADISON, WI 53719) FOR SAFETY PRACTICES PRIOR TO PERFORMING THESE FUNCTIONS. UNLESS OTHERWISE INDICATED, TOP CHORD SHALL HAVE PROPERLY ATTACHED STRUCTURAL PANELS AND BOTTOM CHORD SHALL HAVE A PROPERLY ATTACHED RIGID CEILING.

IMPORTANT FURNISH A COPY OF THIS DESIGN TO THE INSTALLATION CONTRACTOR. ALPINE ENGINEERED PRODUCTS, INC. SHALL NOT BE RESPONSIBLE FOR ANY DEVIATION FROM THIS DESIGN; ANY FAILURE TO BUILD THE TRUSS IN CONFORMANCE WITH TPI: OR FABRICATING, HANDLING, SHIPPING, INSTALLING & BRACING OF TRUSSES. DESIGN CONFORMS WITH APPLICABLE PROVISIONS OF NDS (NATIONAL DESIGN SPEC, BY AF&PA) AND TPI. ALPINE CONNECTOR PLATES ARE MADE OF 20/18/16GA (W,H/S/K) ASTM A653 GRADE 40/60 (W, K/H,S) GALV. STEEL. APPLY PLATES TO EACH FACE OF TRUSS AND, UNLESS OTHERWISE LOCATED ON THIS DESIGN, POSITION PER DRAWINGS 160A-Z. ANY INSPECTION OF PLATES FOLLOWED BY (1) SHALL BE PER ANNEX A3 OF TPI1-2002 SEC.3. A SEAL ON THIS DRAWING INDICATES ACCEPTANCE OF PROFESSIONAL ENGINEERING RESPONSIBILITY SOLELY FOR THE TRUSS COMPONENT DESIGN SHOWN. THE SUITABILITY AND USE OF THIS COMPONENT FOR ANY BUILDING IS THE RESPONSIBILITY OF THE BUILDING DESIGNER PER ANSI/TPI 1 SEC. 2.

ARTHUR R. FISHER LICENSE No 59687 STATE OF FLORIDA PROFESSIONAL ENGINEER
Feb 27, 06

TC LL	20.0 PSF	REF R487-- 31996
TC DL	10.0 PSF	DATE 02/27/06
BC DL	10.0 PSF	DRW HCUSR487 06058007
BC LL	0.0 PSF	HC-ENG JB/AF
TOT.LD.	40.0 PSF	SEQN- 1711
DUR.FAC.	1.25	
SPACING	24.0"	JREF- 1SV0487_Z03

Top chord 2x4 SP #2 Dense
Bot chord 2x4 SP #2 Dense
Webs 2x4 SP #3

H = recommended connection based on manufacturer tested capacities and calculations. Conditions may exist that require different connections than indicated. Refer to manufacturer publication for additional information.

(A) 2x6 #3 or better "T" brace. 80% length of web member. Attach with 16d Box or Gun (0.135"x3.5",min.)nails @ 6" OC.

Deflection meets L/360 live and L/240 total load. Creep increase factor for dead load is 1.50.

110 mph wind, 15.00 ft mean hgt, ASCE 7-02, CLOSED bldg, not located within 4.50 ft from roof edge, CAT II, EXP B, wind TC DL=5.0 psf, wind BC DL=5.0 psf.

Right end vertical not exposed to wind pressure.

(B) 1x4 #3 or better "T" brace. 80% length of web member. Attach with 8d Box or Gun (0.113"x2.5",min.)nails @ 6" OC.

In lieu of structural panels or rigid ceiling use purlins to brace TC @ 24" OC, BC @ 24" OC.

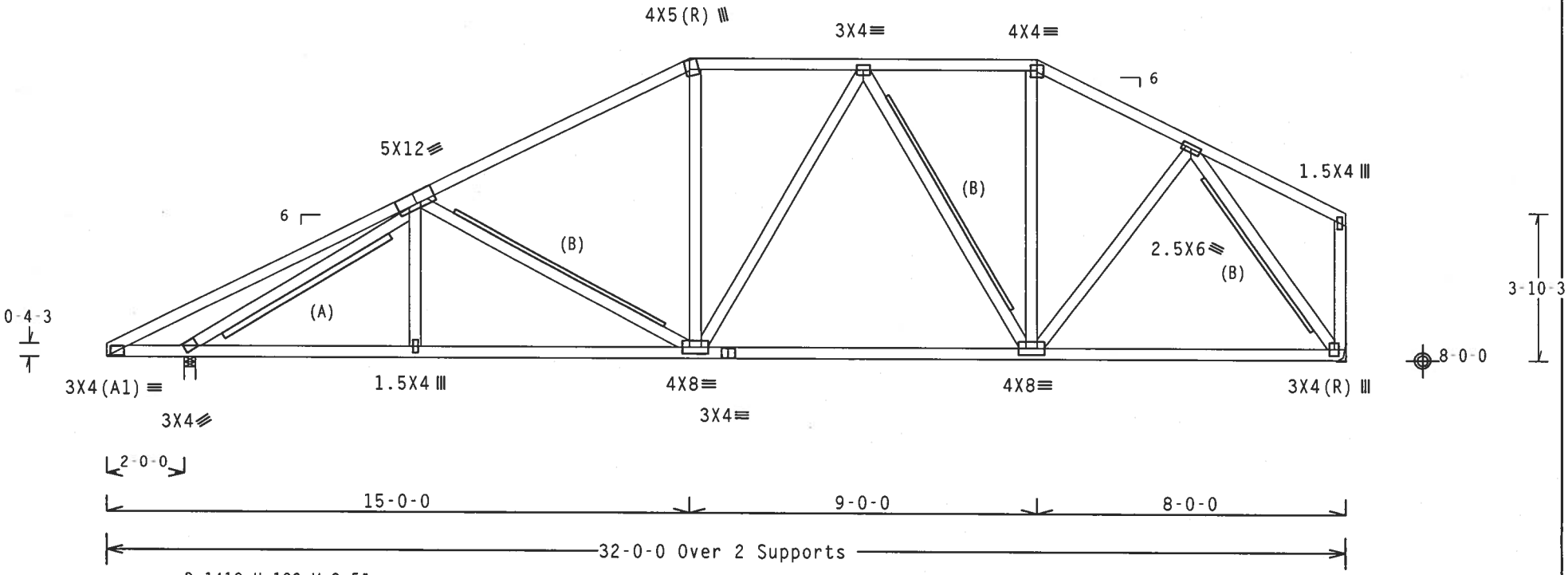

R=1412 U=180 W=3.5"

R=1223 U=180 H=Simpson HUS26
w/ (4) 10d Common, 0.148"x3.0" nails in Truss
w/ (14) 10d Common, 0.148"x3.0" nails in Girder
Girder is (1)2X6 min. So.Pine

Design Crit: TPI-2002(STD)/FBC

PLT TYP. Wave Cq/RT=1.00(1.25)/10(0) 7.24.1 QTY:1 FL/-/4/-/-/R/- Scale =.25"/Ft.

ALPINE
Alpine Engineered Products, Inc.
1950 Marley Drive
Haines City, FL 33844
FL Certificate of Authorization # 567

WARNING TRUSSES REQUIRE EXTREME CARE IN FABRICATION, HANDLING, SHIPPING, INSTALLING AND BRACING. REFER TO BCSI 1-03 (BUILDING COMPONENT SAFETY INFORMATION), PUBLISHED BY TPI (TRUSS PLATE INSTITUTE, 583 D'ONOFRIO DR., SUITE 200, MADISON, WI 53719) AND WTCA (WOOD TRUSS COUNCIL OF AMERICA, 6300 ENTERPRISE LN, MADISON, WI 53719) FOR SAFETY PRACTICES PRIOR TO PERFORMING THESE FUNCTIONS. UNLESS OTHERWISE INDICATED, TOP CHORD SHALL HAVE PROPERLY ATTACHED STRUCTURAL PANELS AND BOTTOM CHORD SHALL HAVE A PROPERLY ATTACHED RIGID CEILING.

IMPORTANT FURNISH A COPY OF THIS DESIGN TO THE INSTALLATION CONTRACTOR. ALPINE ENGINEERED PRODUCTS, INC. SHALL NOT BE RESPONSIBLE FOR ANY DEVIATION FROM THIS DESIGN; ANY FAILURE TO BUILD THE TRUSS IN CONFORMANCE WITH TPI; OR FABRICATING, HANDLING, SHIPPING, INSTALLING & BRACING OF TRUSSES. DESIGN CONFORMS WITH APPLICABLE PROVISIONS OF NDS (NATIONAL DESIGN SPEC. BY AF&PA) AND TPI. ALPINE CONNECTOR PLATES ARE MADE OF 20/18/16GA (W,H/S/K) ASTM A653 GRADE 40/60 (W, K/H,S) GALV. STEEL. APPLY PLATES TO EACH FACE OF TRUSS AND, UNLESS OTHERWISE LOCATED ON THIS DESIGN, POSITION PER DRAWINGS 160A-Z. ANY INSPECTION OF PLATES FOLLOWED BY (1) SHALL BE PER ANNEX A3 OF TPI1-2002 SEC.3. A SEAL ON THIS DRAWING INDICATES ACCEPTANCE OF PROFESSIONAL ENGINEERING RESPONSIBILITY SOLELY FOR THE TRUSS COMPONENT DESIGN SHOWN. THE SUITABILITY AND USE OF THIS COMPONENT FOR ANY BUILDING IS THE RESPONSIBILITY OF THE BUILDING DESIGNER PER ANSI/TPI 1 SEC. 2.

ARTHUR R. FISHER LICENSE No. 59687 STATE OF FLORIDA PROFESSIONAL ENGINEER

Feb 27 '06

TC LL	20.0 PSF	REF	R487-- 31997
TC DL	10.0 PSF	DATE	02/27/06
BC DL	10.0 PSF	DRW	HCUSR487 06058014
BC LL	0.0 PSF	HC-ENG	JB/AF
TOT.LD.	40.0 PSF	SEQN-	1722
DUR.FAC.	1.25		
SPACING	24.0"	JREF-	1SV0487_Z03

Top chord 2x4 SP #2 Dense
Bot chord 2x4 SP #2 Dense
Webs 2x4 SP #3

H = recommended connection based on manufacturer tested capacities and calculations. Conditions may exist that require different connections than indicated. Refer to manufacturer publication for additional information.

In lieu of structural panels or rigid ceiling use purlins to brace TC @ 24" OC, BC @ 24" OC.

110 mph wind, 15.00 ft mean hgt, ASCE 7-02, CLOSED bldg, not located within 4.50 ft from roof edge, CAT II, EXP B, wind TC DL=5.0 psf, wind BC DL=5.0 psf.

Right end vertical not exposed to wind pressure.

(A) 1x4 #3 or better "T" brace. 80% length of web member. Attach with 8d Box or Gun (0.113"x2.5",min.)nails @ 6" OC.

Deflection meets L/360 live and L/240 total load. Creep increase factor for dead load is 1.50.

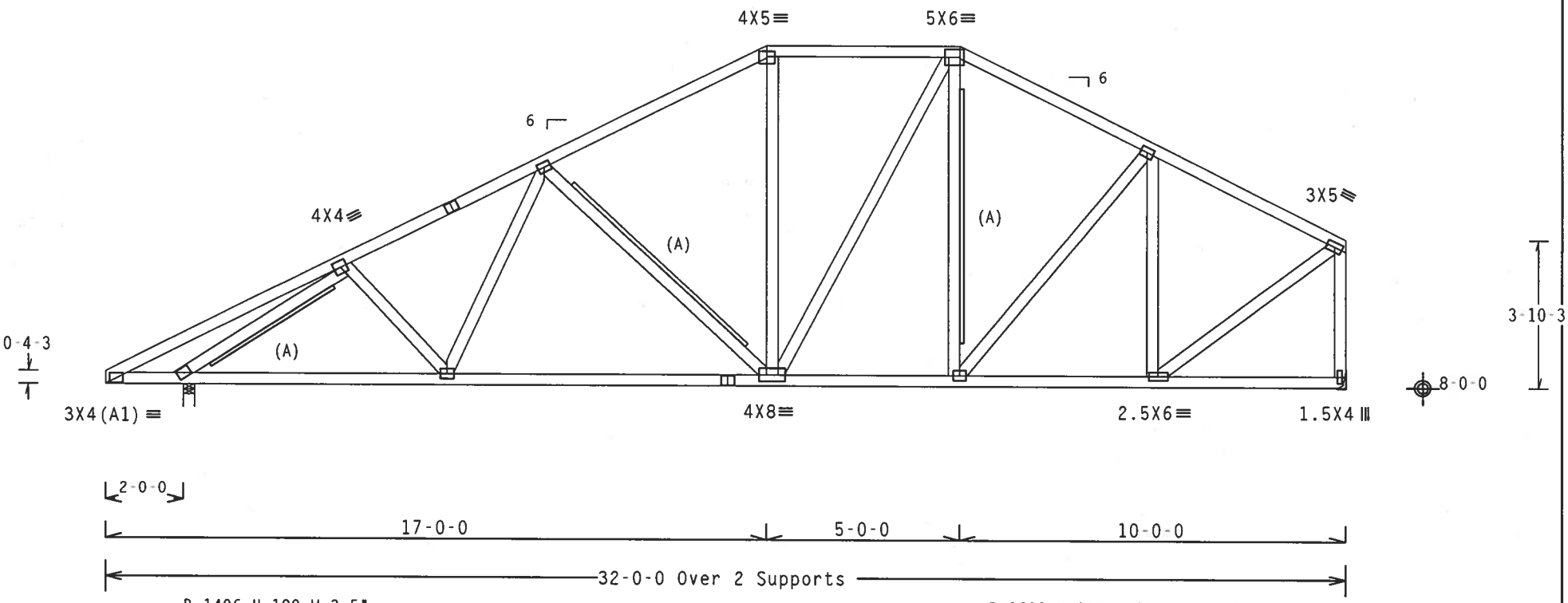

Note: All Plates Are 3X4 Except As Shown.

Design Crit: TPI-2002(STD)/FBC

PLT TYP. Wave

Cq/RT=1.00(1.25)/10(0) 7.24.1 QTY:1 FL/-/4/-/-/R/- Scale =.25"/Ft.

ALPINE

Alpine Engineered Products, Inc.
1950 Marley Drive
Haines City, FL 33844
FL Certificate of Authorization # 567

WARNING TRUSSES REQUIRE EXTREME CARE IN FABRICATION, HANDLING, SHIPPING, INSTALLING AND BRACING. REFER TO BCSI 1-03 (BUILDING COMPONENT SAFETY INFORMATION), PUBLISHED BY TPI (TRUSS PLATE INSTITUTE, 583 D'ONOFRIO DR., SUITE 200, MADISON, WI 53719) AND WTCA (WOOD TRUSS COUNCIL OF AMERICA, 6300 ENTERPRISE LN, MADISON, WI 53719) FOR SAFETY PRACTICES PRIOR TO PERFORMING THESE FUNCTIONS. UNLESS OTHERWISE INDICATED, TOP CHORD SHALL HAVE PROPERLY ATTACHED STRUCTURAL PANELS AND BOTTOM CHORD SHALL HAVE A PROPERLY ATTACHED RIGID CEILING.

IMPORTANTFURNISH A COPY OF THIS DESIGN TO THE INSTALLATION CONTRACTOR. ALPINE ENGINEERED PRODUCTS, INC. SHALL NOT BE RESPONSIBLE FOR ANY DEVIATION FROM THIS DESIGN; ANY FAILURE TO BUILD THE TRUSS IN CONFORMANCE WITH TPI; OR FABRICATING, HANDLING, SHIPPING, INSTALLING & BRACING OF TRUSSES. DESIGN CONFORMS WITH APPLICABLE PROVISIONS OF NDS (NATIONAL DESIGN SPEC. BY AF&PA) AND TPI. ALPINE CONNECTOR PLATES ARE MADE OF 20/18/16GA (W,H/S/K) ASTM A653 GRADE 40/60 (W, K/H,S) GALV. STEEL. APPLY PLATES TO EACH FACE OF TRUSS AND, UNLESS OTHERWISE LOCATED ON THIS DESIGN, POSITION PER DRAWINGS 160A-Z. ANY INSPECTION OF PLATES FOLLOWED BY (1) SHALL BE PER ANNEX A3 OF TPI1-2002 SEC.3. A SEAL ON THIS DRAWING INDICATES ACCEPTANCE OF PROFESSIONAL ENGINEERING RESPONSIBILITY SOLELY FOR THE TRUSS COMPONENT DESIGN SHOWN. THE SUITABILITY AND USE OF THIS COMPONENT FOR ANY BUILDING IS THE RESPONSIBILITY OF THE BUILDING DESIGNER PER ANSI/TPI 1 SEC. 2.

ARTHUR R. FISHER LICENSE No. 59687 STATE OF FLORIDA PROFESSIONAL ENGINEER

Feb 27 '06

TC LL	20.0 PSF	REF	R487-- 31998
TC DL	10.0 PSF	DATE	02/27/06
BC DL	10.0 PSF	DRW	HCUSR487 06058008
BC LL	0.0 PSF	HC-ENG	JB/AF
TOT.LD.	40.0 PSF	SEQN-	1734
DUR.FAC.	1.25		
SPACING	24.0"	JREF-	1SV0487_Z03

Top chord 2x4 SP #2 Dense
Bot chord 2x4 SP #2 Dense
Webs 2x4 SP #3

H = recommended connection based on manufacturer tested capacities and calculations. Conditions may exist that require different connections than indicated. Refer to manufacturer publication for additional information.

In lieu of structural panels or rigid ceiling use purlins to brace TC @ 24" OC, BC @ 24" OC.

110 mph wind, 15.00 ft mean hgt, ASCE 7-02, CLOSED bldg, not located within 4.50 ft from roof edge, CAT II, EXP B, wind TC DL=5.0 psf, wind BC DL=5.0 psf.

Right end vertical not exposed to wind pressure.

(A) 1x4 #3 or better "T" brace. 80% length of web member. Attach with 8d Box or Gun (0.113"x2.5",min.)nails @ 6" OC.

Deflection meets L/360 live and L/240 total load. Creep increase factor for dead load is 1.50.

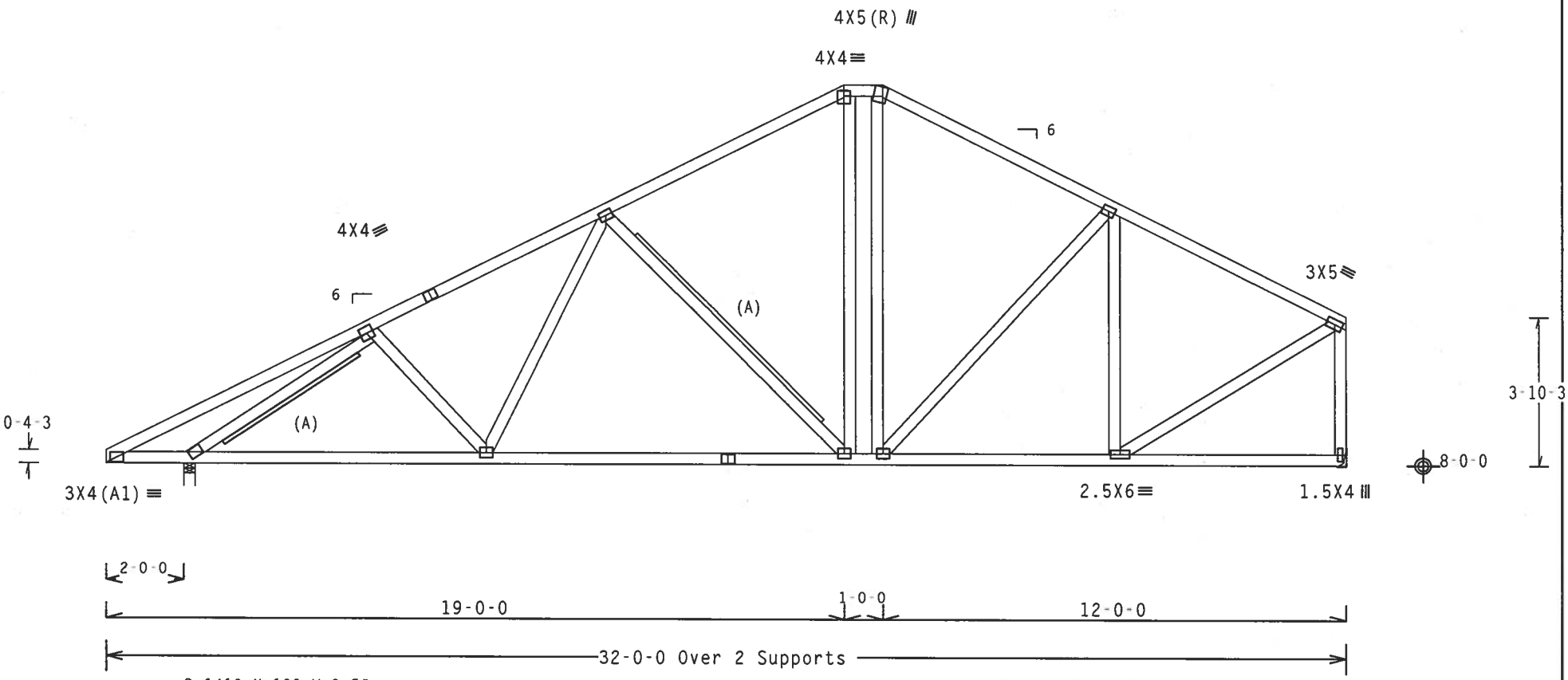

Note: All Plates Are 3X4 Except As Shown.

Design Crit: TPI-2002(STD)/FBC

PLT TYP. Wave Cq/RT=1.00(1.25)/10(0) 7.24.1 QTY:1 FL/-/4/-/-/R/- Scale =.25"/Ft.

ALPINE
Alpine Engineered Products, Inc.
1950 Marley Drive
Haines City, FL 33844
FL Certificate of Authorization # 567

WARNING TRUSSES REQUIRE EXTREME CARE IN FABRICATION, HANDLING, SHIPPING, INSTALLING AND BRACING. REFER TO BCSI 1-03 (BUILDING COMPONENT SAFETY INFORMATION), PUBLISHED BY TPI (TRUSS PLATE INSTITUTE, 583 D'ONOFRIO DR., SUITE 200, MADISON, WI 53719) AND WTCA (WOOD TRUSS COUNCIL OF AMERICA, 6300 ENTERPRISE LN, MADISON, WI 53719) FOR SAFETY PRACTICES PRIOR TO PERFORMING THESE FUNCTIONS. UNLESS OTHERWISE INDICATED, TOP CHORD SHALL HAVE PROPERLY ATTACHED STRUCTURAL PANELS AND BOTTOM CHORD SHALL HAVE A PROPERLY ATTACHED RIGID CEILING.

IMPORTANTFURNISH A COPY OF THIS DESIGN TO THE INSTALLATION CONTRACTOR. ALPINE ENGINEERED PRODUCTS, INC. SHALL NOT BE RESPONSIBLE FOR ANY DEVIATION FROM THIS DESIGN; ANY FAILURE TO BUILD THE TRUSS IN CONFORMANCE WITH TPI; OR FABRICATING, HANDLING, SHIPPING, INSTALLING & BRACING OF TRUSSES. DESIGN CONFORMS WITH APPLICABLE PROVISIONS OF NDS (NATIONAL DESIGN SPEC. BY AF&PA) AND TPI. ALPINE CONNECTOR PLATES ARE MADE OF 20/18/16GA (W,H/S/K) ASTM A653 GRADE 40/60 (W, K/H,S) GALV. STEEL. APPLY PLATES TO EACH FACE OF TRUSS AND, UNLESS OTHERWISE LOCATED ON THIS DESIGN, POSITION PER DRAWINGS 160A-Z. ANY INSPECTION OF PLATES FOLLOWED BY (1) SHALL BE PER ANNEX A3 OF TPI1-2002 SEC.3. A SEAL ON THIS DRAWING INDICATES ACCEPTANCE OF PROFESSIONAL ENGINEERING RESPONSIBILITY SOLELY FOR THE TRUSS COMPONENT DESIGN SHOWN. THE SUITABILITY AND USE OF THIS COMPONENT FOR ANY BUILDING IS THE RESPONSIBILITY OF THE BUILDING DESIGNER PER ANSI/TPI 1 SEC. 2.

ARTHUR R. FISHER LICENSE No.59687 STATE OF FLORIDA PROFESSIONAL ENGINEER
Feb 27 '06

TC LL	20.0 PSF	REF	R487-- 31999
TC DL	10.0 PSF	DATE	02/27/06
BC DL	10.0 PSF	DRW	HCUSR487 06058009
BC LL	0.0 PSF	HC-ENG	JB/AF
TOT.LD.	40.0 PSF	SEQN-	1745
DUR.FAC.	1.25		
SPACING	24.0"	JREF-	1SV0487_Z03

(0-083--Doug Morgan Construction #22 Stonehenge II , * - C8)

Top chord 2x4 SP #2 Dense
Bot chord 2x4 SP #2 Dense
Webs 2x4 SP #3

H = recommended connection based on manufacturer tested capacities and calculations. Conditions may exist that require different connections than indicated. Refer to manufacturer publication for additional information.

In lieu of structural panels or rigid ceiling use purlins to brace TC @ 24" OC, BC @ 24" OC.

110 mph wind, 15.00 ft mean hgt, ASCE 7-02, CLOSED bldg, not located within 4.50 ft from roof edge, CAT II, EXP B, wind TC DL=5.0 psf, wind BC DL=5.0 psf.

Right end vertical not exposed to wind pressure.

(A) Continuous lateral bracing equally spaced on member.

Deflection meets L/360 live and L/240 total load. Creep increase factor for dead load is 1.50.

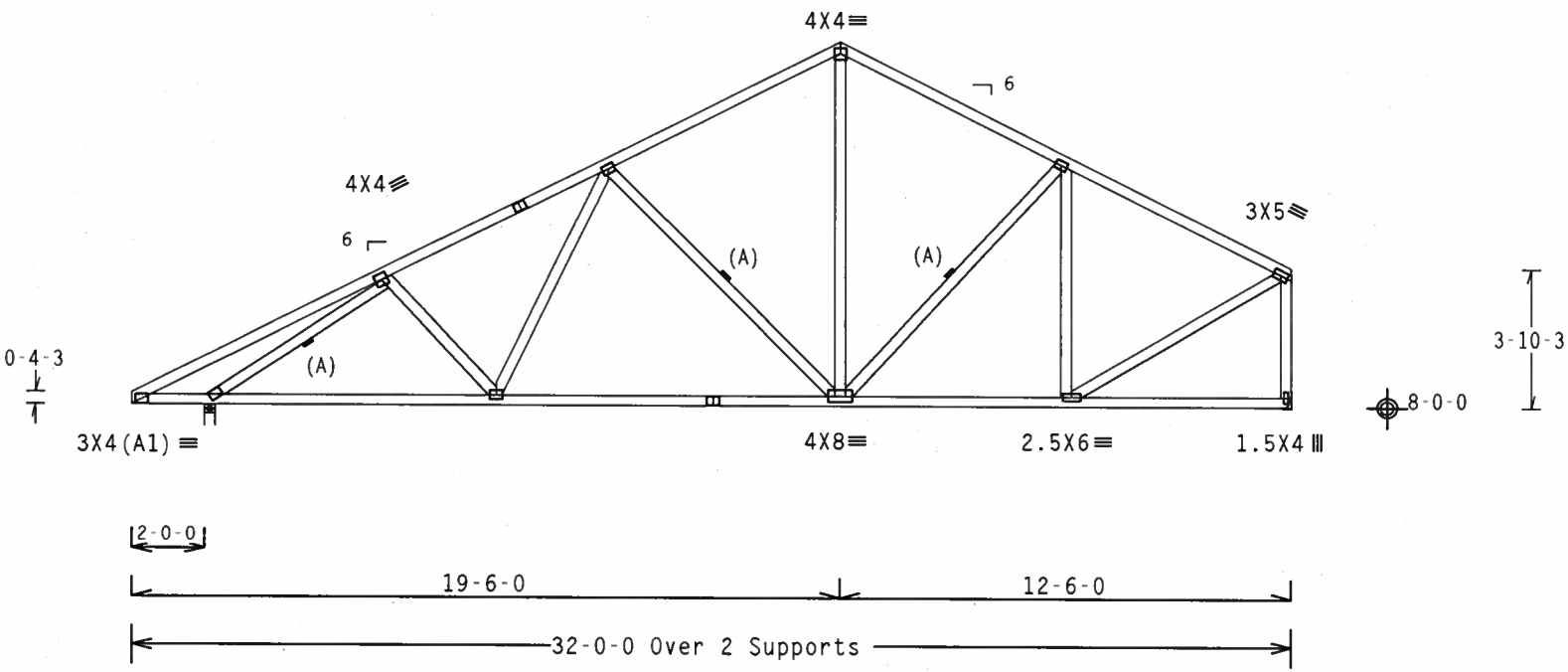

R=1419 U=180 W=3.5"

R=1216 U=180 H=Simpson HUS26
w/ (4) 10d Common, 0.148"x3.0" nails in Truss
w/ (14) 10d Common, 0.148"x3.0" nails in Girder
Girder is (1)2X6 min. So.Pine

Note: All Plates Are 3X4 Except As Shown.

Design Crit: TPI-2002(STD)/FBC

PLT TYP. Wave

Cq/RT=1.00(1.25)/10(0) 7.24.12 QTY:2 FL/-/4/-/-/R/- Scale =.1875"/Ft.

ALPINE
Alpine Engineered Products, Inc.
1950 Marley Drive
Haines City, FL 33844
FL Certificate of Authorization # 567

WARNING TRUSSES REQUIRE EXTREME CARE IN FABRICATION, HANDLING, SHIPPING, INSTALLING AND BRACING. REFER TO BCSI 1-03 (BUILDING COMPONENT SAFETY INFORMATION), PUBLISHED BY TPI (TRUSS PLATE INSTITUTE, 583 D'ONOFRIO DR., SUITE 200, MADISON, WI 53719) AND WTCA (WOOD TRUSS COUNCIL OF AMERICA, 6300 ENTERPRISE LN, MADISON, WI 53719) FOR SAFETY PRACTICES PRIOR TO PERFORMING THESE FUNCTIONS. UNLESS OTHERWISE INDICATED, TOP CHORD SHALL HAVE PROPERLY ATTACHED STRUCTURAL PANELS AND BOTTOM CHORD SHALL HAVE A PROPERLY ATTACHED RIGID CEILING.

IMPORTANTFURNISH A COPY OF THIS DESIGN TO THE INSTALLATION CONTRACTOR. ALPINE ENGINEERED PRODUCTS, INC. SHALL NOT BE RESPONSIBLE FOR ANY DEVIATION FROM THIS DESIGN; ANY FAILURE TO BUILD THE TRUSS IN CONFORMANCE WITH TPI; OR FABRICATING, HANDLING, SHIPPING, INSTALLING & BRACING OF TRUSSES. DESIGN CONFORMS WITH APPLICABLE PROVISIONS OF NDS (NATIONAL DESIGN SPEC. BY AF&PA) AND TPI. ALPINE CONNECTOR PLATES ARE MADE OF 20/18/16GA (W.H/S/K) ASTM A653 GRADE 40/60 (W, K/H,S) GALV. STEEL. APPLY PLATES TO EACH FACE OF TRUSS AND, UNLESS OTHERWISE LOCATED ON THIS DESIGN, POSITION PER DRAWINGS 160A-Z. ANY INSPECTION OF PLATES FOLLOWED BY (1) SHALL BE PER ANNEX A3 OF TPI1-2002 SEC.3. A SEAL ON THIS DRAWING INDICATES ACCEPTANCE OF PROFESSIONAL ENGINEERING RESPONSIBILITY SOLELY FOR THE TRUSS COMPONENT DESIGN SHOWN. THE SUITABILITY AND USE OF THIS COMPONENT FOR ANY BUILDING IS THE RESPONSIBILITY OF THE BUILDING DESIGNER PER ANSI/TPI 1 SEC. 2.

ARTHUR R. FISHER
LICENSE
No. 59687
STATE OF FLORIDA
PROFESSIONAL ENGINEER
Feb 27 '06

TC LL	20.0 PSF	REF R487-- 32000
TC DL	10.0 PSF	DATE 02/27/06
BC DL	10.0 PSF	DRW HCUSR487 06058010
BC LL	0.0 PSF	HC-ENG JB/AF
TOT.LD.	40.0 PSF	SEQN- 1756
DUR.FAC.	1.25	
SPACING	24.0"	JREF- 1SV0487_Z03

Top chord 2x4 SP #2 Dense
Bot chord 2x4 SP #2 Dense
Webs 2x4 SP #3

H = recommended connection based on manufacturer tested capacities and calculations. Conditions may exist that require different connections than indicated. Refer to manufacturer publication for additional information.

In lieu of structural panels or rigid ceiling use purlins to brace TC @ 24" OC, BC @ 24" OC.

110 mph wind, 15.00 ft mean hgt, ASCE 7-02, CLOSED bldg, not located within 4.50 ft from roof edge, CAT II, EXP B, wind TC DL=5.0 psf, wind BC DL=5.0 psf.

Right end vertical not exposed to wind pressure.

(A) Continuous lateral bracing equally spaced on member.

Deflection meets L/360 live and L/240 total load. Creep increase factor for dead load is 1.50.

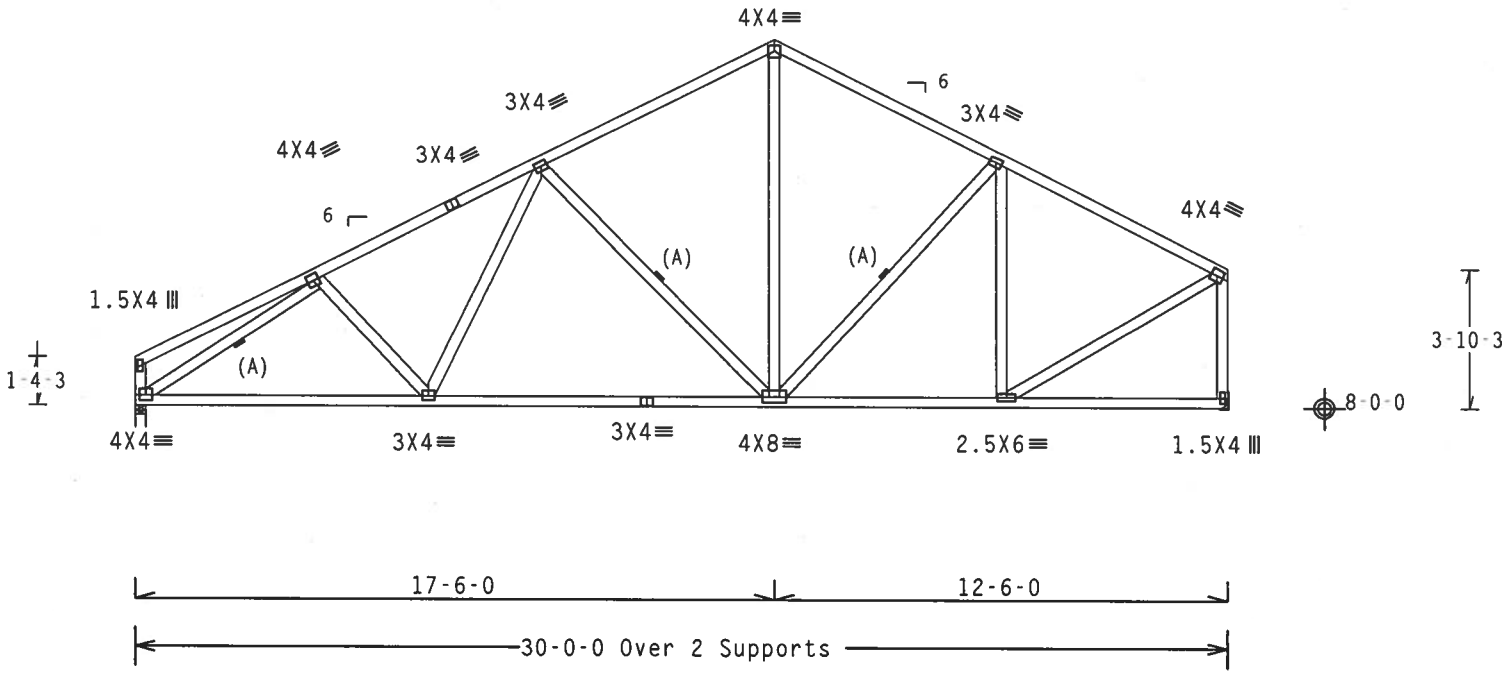

R=1235 U=180 W=3.5"

R=1235 U=180 H=Simpson HUS26
w/ (4) 10d Common, 0.148"x3.0" nails in Truss
w/ (14) 10d Common, 0.148"x3.0" nails in Girder
Girder is (1)2X6 min. So.Pine

Design Crit: TPI-2002(STD)/FBC
Cq/RT=1.00(1.25)/10(0) 7.24.1 QTY:1 FL/-/4/-/-/R/-

PLT TYP. Wave

Scale =.1875"/Ft.

ALPINE
Alpine Engineered Products, Inc.
1950 Marley Drive
Haines City, FL 33844
FL Certificate of Authorization # 567

WARNING TRUSSES REQUIRE EXTREME CARE IN FABRICATION, HANDLING, SHIPPING, INSTALLING AND BRACING. REFER TO BCSI 1-03 (BUILDING COMPONENT SAFETY INFORMATION), PUBLISHED BY TPI (TRUSS PLATE INSTITUTE, 583 D'ONOFRIO DR., SUITE 200, MADISON, WI 53719) AND WTCA (WOOD TRUSS COUNCIL OF AMERICA, 6300 ENTERPRISE LN, MADISON, WI 53719) FOR SAFETY PRACTICES PRIOR TO PERFORMING THESE FUNCTIONS. UNLESS OTHERWISE INDICATED, TOP CHORD SHALL HAVE PROPERLY ATTACHED STRUCTURAL PANELS AND BOTTOM CHORD SHALL HAVE A PROPERLY ATTACHED RIGID CEILING.

IMPORTANTFURNISH A COPY OF THIS DESIGN TO THE INSTALLATION CONTRACTOR. ALPINE ENGINEERED PRODUCTS, INC. SHALL NOT BE RESPONSIBLE FOR ANY DEVIATION FROM THIS DESIGN; ANY FAILURE TO BUILD THE TRUSS IN CONFORMANCE WITH TPI; OR FABRICATING, HANDLING, SHIPPING, INSTALLING & BRACING OF TRUSSES. DESIGN CONFORMS WITH APPLICABLE PROVISIONS OF NDS (NATIONAL DESIGN SPEC. BY AF&PA) AND TPI. ALPINE CONNECTOR PLATES ARE MADE OF 20/18/16GA (W,H/S/K) ASTM A653 GRADE 40/60 (W, K/H,S) GALV. STEEL. APPLY PLATES TO EACH FACE OF TRUSS AND. UNLESS OTHERWISE LOCATED ON THIS DESIGN, POSITION PER DRAWINGS 160A-Z. ANY INSPECTION OF PLATES FOLLOWED BY (1) SHALL BE PER ANNEX A3 OF TPI1-2002 SEC.3. A SEAL ON THIS DRAWING INDICATES ACCEPTANCE OF PROFESSIONAL ENGINEERING RESPONSIBILITY SOLELY FOR THE TRUSS COMPONENT DESIGN SHOWN. THE SUITABILITY AND USE OF THIS COMPONENT FOR ANY BUILDING IS THE RESPONSIBILITY OF THE BUILDING DESIGNER PER ANSI/TPI 1 SEC. 2.

ARTHUR B. FISHER
LICENSE
No.59687
STATE OF FLORIDA
PROFESSIONAL ENGINEER
Feb 2 '06

TC LL	20.0 PSF	REF R487-- 32001
TC DL	10.0 PSF	DATE 02/27/06
BC DL	10.0 PSF	DRW HCUSR487 06058043
BC LL	0.0 PSF	HC-ENG JB/AF
TOT.LD.	40.0 PSF	SEQN- 1761
DUR.FAC.	1.25	
SPACING	24.0"	JREF- 1SV0487_Z03

Top chord 2x4 SP #2 Dense
Bot chord 2x4 SP #2 Dense
Webs 2x4 SP #3

In lieu of structural panels or rigid ceiling use purlins to brace TC @ 24" OC, BC @ 24" OC.

Deflection meets L/360 live and L/240 total load. Creep increase factor for dead load is 1.50.

110 mph wind, 15.00 ft mean hgt, ASCE 7-02, CLOSED bldg, Located anywhere in roof, CAT II, EXP B, wind TC DL=5.0 psf, wind BC DL=5.0 psf.

#1 hip supports 7-0-0 jacks W/2 panel TC and no end vert.

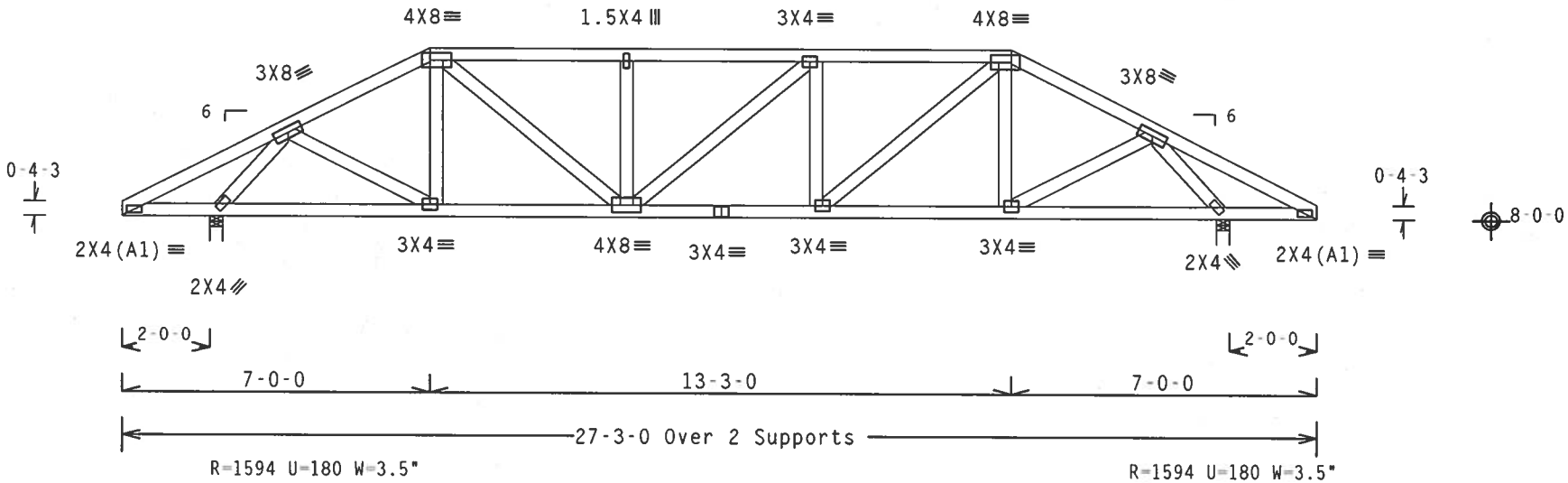

Design Crit: TPI-2002(STD)/FBC

PLT TYP. Wave Cq/RT=1.00(1.25)/10(0) 7.24.1 QTY:1 FL/-/4/-/-/R/- Scale =.25"/Ft.

ALPINE
Alpine Engineered Products, Inc.
1950 Marley Drive
Haines City, FL 33844
FL Certificate of Authorization # 567

WARNING TRUSSES REQUIRE EXTREME CARE IN FABRICATION, HANDLING, SHIPPING, INSTALLING AND BRACING. REFER TO BCSI 1-03 (BUILDING COMPONENT SAFETY INFORMATION), PUBLISHED BY TPI (TRUSS PLATE INSTITUTE, 583 D'ONOFRIO DR., SUITE 200, MADISON, WI 53719) AND WTCA (WOOD TRUSS COUNCIL OF AMERICA, 6300 ENTERPRISE LN, MADISON, WI 53719) FOR SAFETY PRACTICES PRIOR TO PERFORMING THESE FUNCTIONS. UNLESS OTHERWISE INDICATED, TOP CHORD SHALL HAVE PROPERLY ATTACHED STRUCTURAL PANELS AND BOTTOM CHORD SHALL HAVE A PROPERLY ATTACHED RIGID CEILING.

IMPORTANTFURNISH A COPY OF THIS DESIGN TO THE INSTALLATION CONTRACTOR. ALPINE ENGINEERED PRODUCTS, INC. SHALL NOT BE RESPONSIBLE FOR ANY DEVIATION FROM THIS DESIGN; ANY FAILURE TO BUILD THE TRUSS IN CONFORMANCE WITH TPI; OR FABRICATING, HANDLING, SHIPPING, INSTALLING & BRACING OF TRUSSES. DESIGN CONFORMS WITH APPLICABLE PROVISIONS OF NDS (NATIONAL DESIGN SPEC. BY AF&PA) AND TPI. ALPINE CONNECTOR PLATES ARE MADE OF 20/18/16GA (W,H/S/K) ASTM A653 GRADE 40/60 (W, K/H,S) GALV. STEEL. APPLY PLATES TO EACH FACE OF TRUSS AND, UNLESS OTHERWISE LOCATED ON THIS DESIGN, POSITION PER DRAWINGS 160A-Z. ANY INSPECTION OF PLATES FOLLOWED BY (1) SHALL BE PER ANNEX A3 OF TPI1-2002 SEC.3. A SEAL ON THIS DRAWING INDICATES ACCEPTANCE OF PROFESSIONAL ENGINEERING RESPONSIBILITY SOLELY FOR THE TRUSS COMPONENT DESIGN SHOWN. THE SUITABILITY AND USE OF THIS COMPONENT FOR ANY BUILDING IS THE RESPONSIBILITY OF THE BUILDING DESIGNER PER ANSI/TPI 1 SEC. 2.

ARTHUR R. FISHER LICENSE No.59687 STATE OF FLORIDA PROFESSIONAL ENGINEER

Feb 27 '06

TC LL	20.0 PSF	REF	R487-- 32002
TC DL	10.0 PSF	DATE	02/27/06
BC DL	10.0 PSF	DRW	HCUSR487 06058001
BC LL	0.0 PSF	HC-ENG	JB/AF
TOT.LD.	40.0 PSF	SEQN-	1816
DUR.FAC.	1.25		
SPACING	SEE ABOVE	JREF-	1SV0487_Z03

Top chord 2x4 SP #2 Dense
Bot chord 2x4 SP #2 Dense
Webs 2x4 SP #3

In lieu of structural panels or rigid ceiling use purlins to brace TC @ 24" OC, BC @ 24" OC.

110 mph wind, 15.00 ft mean hgt, ASCE 7-02, CLOSED bldg, not located within 4.50 ft from roof edge, CAT II, EXP B, wind TC DL=5.0 psf, wind BC DL=5.0 psf.

Deflection meets L/360 live and L/240 total load. Creep increase factor for dead load is 1.50.

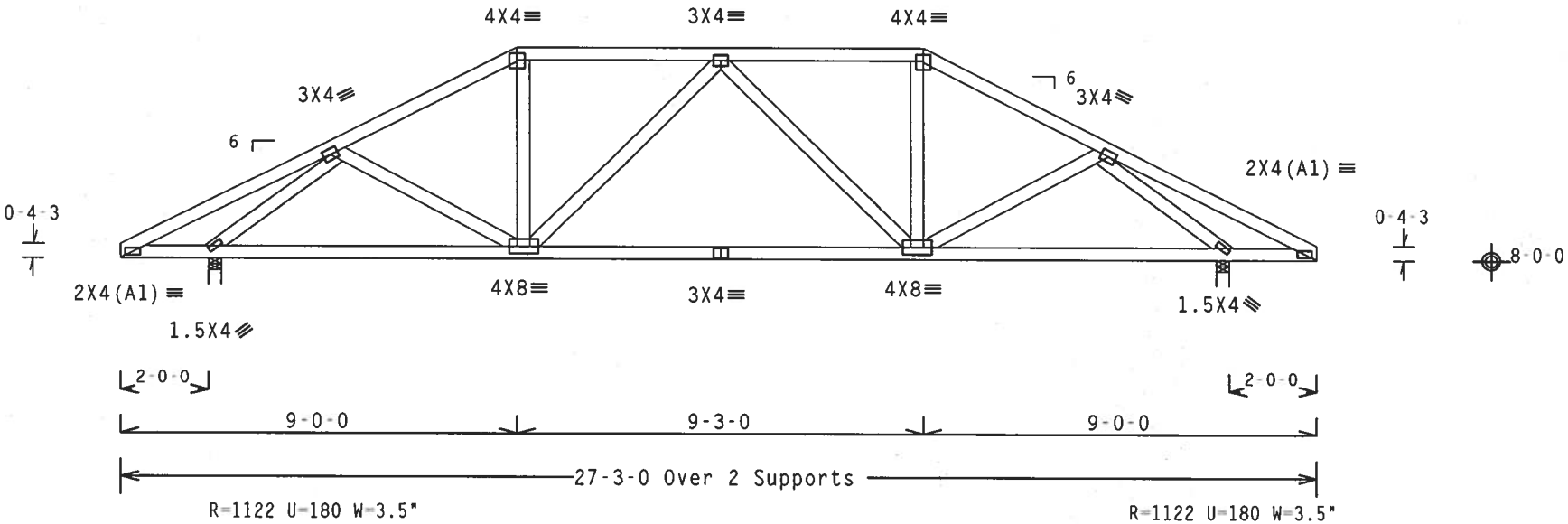

Design Crit: TPI-2002(STD)/FBC

PLT TYP. Wave Cq/RT=1.00(1.25)/10(0) 7.24.12 TY:1 FL/-/4/-/-/R/- Scale =.25"/Ft.

ALPINE
Alpine Engineered Products, Inc.
1950 Marley Drive
Haines City, FL 33844
FL Certificate of Authorization # 567

WARNING TRUSSES REQUIRE EXTREME CARE IN FABRICATION, HANDLING, SHIPPING, INSTALLING AND BRACING. REFER TO BCSI 1-03 (BUILDING COMPONENT SAFETY INFORMATION), PUBLISHED BY TPI (TRUSS PLATE INSTITUTE, 583 D'ONOFRIO DR., SUITE 200, MADISON, WI 53719) AND WTCA (WOOD TRUSS COUNCIL OF AMERICA, 6300 ENTERPRISE LN, MADISON, WI 53719) FOR SAFETY PRACTICES PRIOR TO PERFORMING THESE FUNCTIONS. UNLESS OTHERWISE INDICATED, TOP CHORD SHALL HAVE PROPERLY ATTACHED STRUCTURAL PANELS AND BOTTOM CHORD SHALL HAVE A PROPERLY ATTACHED RIGID CEILING.

IMPORTANTFURNISH A COPY OF THIS DESIGN TO THE INSTALLATION CONTRACTOR. ALPINE ENGINEERED PRODUCTS, INC. SHALL NOT BE RESPONSIBLE FOR ANY DEVIATION FROM THIS DESIGN; ANY FAILURE TO BUILD THE TRUSS IN CONFORMANCE WITH TPI: OR FABRICATING, HANDLING, SHIPPING, INSTALLING & BRACING OF TRUSSES. DESIGN CONFORMS WITH APPLICABLE PROVISIONS OF NDS (NATIONAL DESIGN SPEC, BY AF&PA) AND TPI. ALPINE CONNECTOR PLATES ARE MADE OF 20/18/16GA (W,H/S/K) ASTM A653 GRADE 40/60 (W, K/H,S) GALV. STEEL. APPLY PLATES TO EACH FACE OF TRUSS AND, UNLESS OTHERWISE LOCATED ON THIS DESIGN, POSITION PER DRAWINGS 160A-Z. ANY INSPECTION OF PLATES FOLLOWED BY (i) SHALL BE PER ANNEX A3 OF TPI1-2002 SEC.3. A SEAL ON THIS DRAWING INDICATES ACCEPTANCE OF PROFESSIONAL ENGINEERING RESPONSIBILITY SOLELY FOR THE TRUSS COMPONENT DESIGN SHOWN. THE SUITABILITY AND USE OF THIS COMPONENT FOR ANY BUILDING IS THE RESPONSIBILITY OF THE BUILDING DESIGNER PER ANSI/TPI 1 SEC. 2.

ARTHUR R. FISHER LICENSE No. 59687 STATE OF FLORIDA PROFESSIONAL ENGINEER
Feb 27 '06

TC LL	20.0 PSF	REF	R487-- 32003
TC DL	10.0 PSF	DATE	02/27/06
BC DL	10.0 PSF	DRW	HCUSR487 06058012
BC LL	0.0 PSF	HC-ENG	JB/AF
TOT.LD.	40.0 PSF	SEQN-	1809
DUR.FAC.	1.25		
SPACING	24.0"	JREF-	1SV0487_Z03

Top chord 2x4 SP #2 Dense
Bot chord 2x4 SP #2 Dense
Webs 2x4 SP #3

In lieu of structural panels or rigid ceiling use purlins to brace TC @ 24" OC, BC @ 24" OC.

110 mph wind, 15.00 ft mean hgt, ASCE 7-02, CLOSED bldg, not located within 4.50 ft from roof edge, CAT II, EXP B, wind TC DL=5.0 psf, wind BC DL=5.0 psf.

Deflection meets L/360 live and L/240 total load. Creep increase factor for dead load is 1.50.

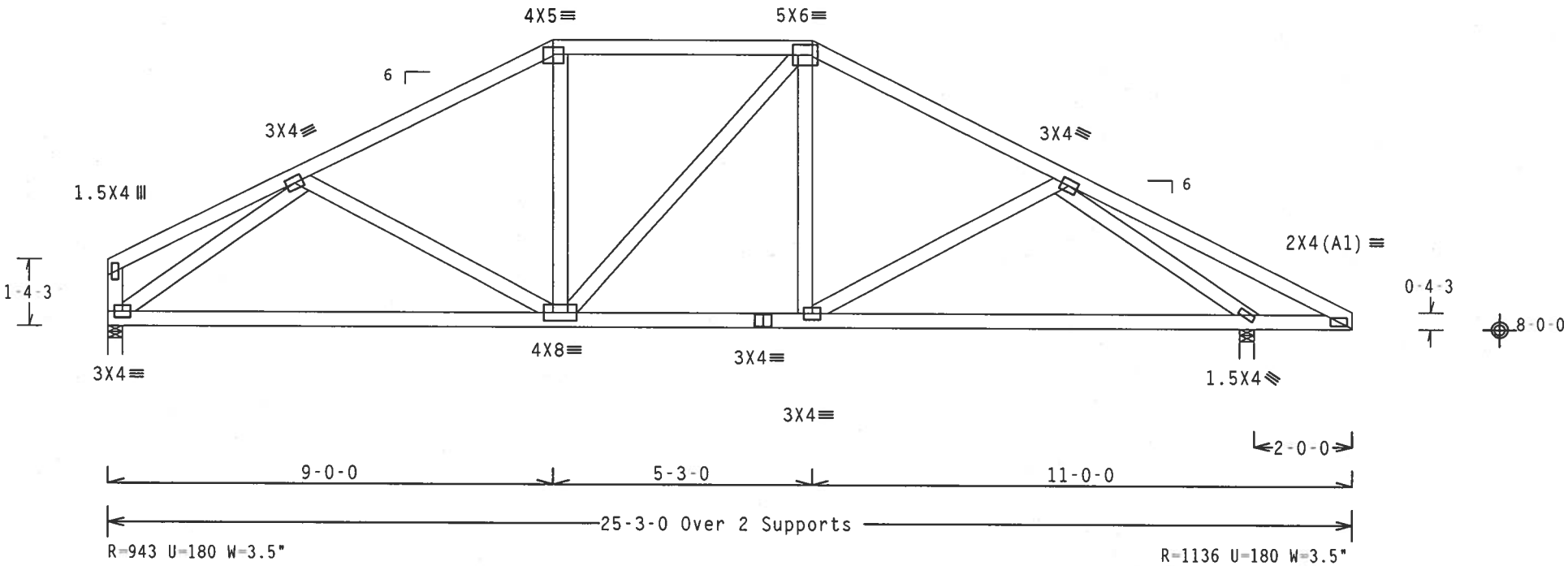

Design Crit: TPI-2002(STD)/FBC
PLT TYP. Wave
Cq/RT=1.00(1.25)/10(0) 7.24.12 QTY:1 FL/-/4/-/-/R/- Scale =.3125"/Ft.

ALPINE
Alpine Engineered Products, Inc.
1950 Marley Drive
Haines City, FL 33844
FL Certificate of Authorization # 567

WARNING TRUSSES REQUIRE EXTREME CARE IN FABRICATION, HANDLING, SHIPPING, INSTALLING AND BRACING. REFER TO BCSI 1-03 (BUILDING COMPONENT SAFETY INFORMATION), PUBLISHED BY TPI (TRUSS PLATE INSTITUTE, 583 D'ONOFRIO DR., SUITE 200, MADISON, WI 53719) AND WTCA (WOOD TRUSS COUNCIL OF AMERICA, 6300 ENTERPRISE LN, MADISON, WI 53719) FOR SAFETY PRACTICES PRIOR TO PERFORMING THESE FUNCTIONS. UNLESS OTHERWISE INDICATED, TOP CHORD SHALL HAVE PROPERLY ATTACHED STRUCTURAL PANELS AND BOTTOM CHORD SHALL HAVE A PROPERLY ATTACHED RIGID CEILING.

IMPORTANTFURNISH A COPY OF THIS DESIGN TO THE INSTALLATION CONTRACTOR. ALPINE ENGINEERED PRODUCTS, INC. SHALL NOT BE RESPONSIBLE FOR ANY DEVIATION FROM THIS DESIGN; ANY FAILURE TO BUILD THE TRUSS IN CONFORMANCE WITH TPI; OR FABRICATING, HANDLING, SHIPPING, INSTALLING & BRACING OF TRUSSES. DESIGN CONFORMS WITH APPLICABLE PROVISIONS OF NDS (NATIONAL DESIGN SPEC. BY AF&PA) AND TPI. ALPINE CONNECTOR PLATES ARE MADE OF 20/18/16GA (W,H/S/K) ASTM A653 GRADE 40/60 (W, K/H,S) GALV. STEEL. APPLY PLATES TO EACH FACE OF TRUSS AND, UNLESS OTHERWISE LOCATED ON THIS DESIGN, POSITION PER DRAWINGS 160A-Z. ANY INSPECTION OF PLATES FOLLOWED BY (I) SHALL BE PER ANNEX A3 OF TPI1-2002 SEC.3. A SEAL ON THIS DRAWING INDICATES ACCEPTANCE OF PROFESSIONAL ENGINEERING RESPONSIBILITY SOLELY FOR THE TRUSS COMPONENT DESIGN SHOWN. THE SUITABILITY AND USE OF THIS COMPONENT FOR ANY BUILDING IS THE RESPONSIBILITY OF THE BUILDING DESIGNER PER ANSI/TPI 1 SEC. 2.

ARTHUR R. FISHER LICENSE No. 59687 STATE OF FLORIDA PROFESSIONAL ENGINEER
Feb 27 '06

TC LL	20.0 PSF	REF	R487-- 32004
TC DL	10.0 PSF	DATE	02/27/06
BC DL	10.0 PSF	DRW	HCUSR487 06058023
BC LL	0.0 PSF	HC-ENG	JB/AF
TOT.LD.	40.0 PSF	SEQN-	1802
DUR.FAC.	1.25		
SPACING	24.0"	JREF-	1SV0487_Z03

Top chord 2x4 SP #2 Dense
Bot chord 2x4 SP #2 Dense
Webs 2x4 SP #3

(A) 1x4 #3 or better "T" brace. 80% length of web member. Attach with 8d Box or Gun (0.113"x2.5",min.)nails @ 6" OC.

Deflection meets L/360 live and L/240 total load. Creep increase factor for dead load is 1.50.

110 mph wind, 15.00 ft mean hgt, ASCE 7-02, CLOSED bldg, not located within 4.50 ft from roof edge, CAT II, EXP B, wind TC DL=5.0 psf, wind BC DL=5.0 psf.

In lieu of structural panels or rigid ceiling use purlins to brace TC @ 24" OC, BC @ 24" OC.

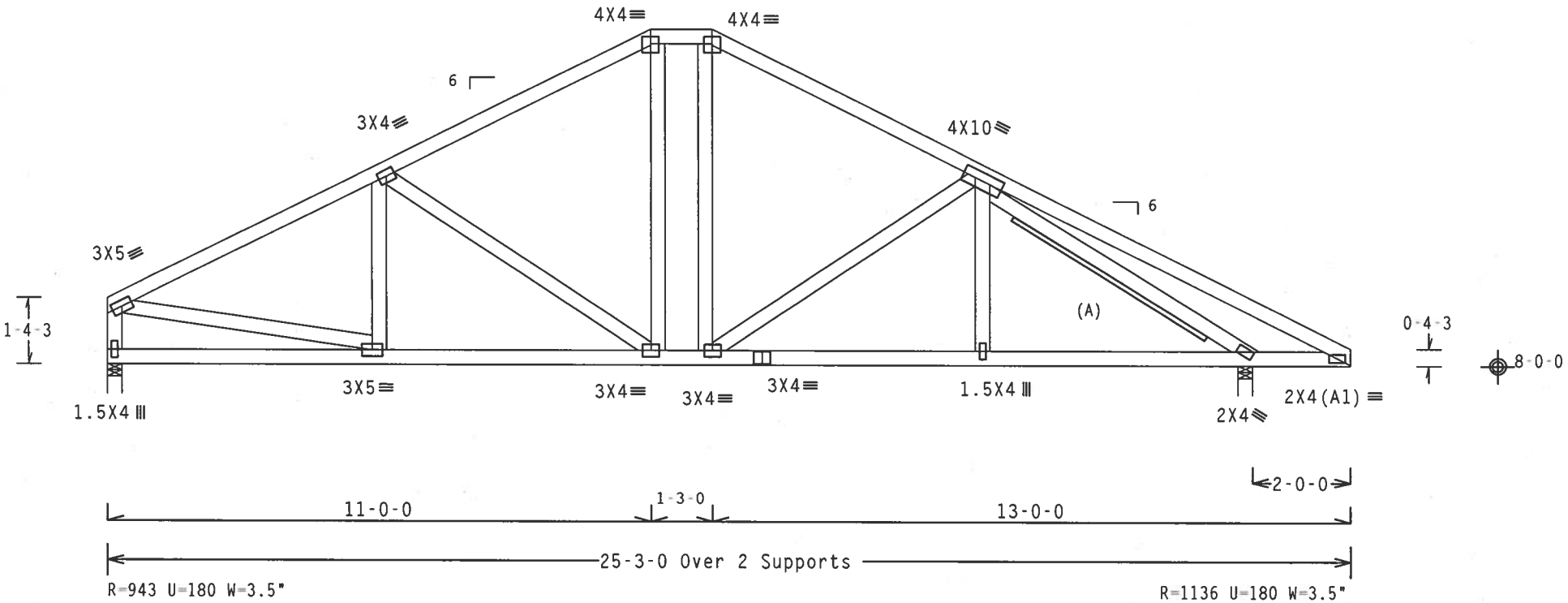

Design Crit: TPI-2002(STD)/FBC
PLT TYP. Wave
Cq/RT=1.00(1.25)/10(0) 7.24.1 QTY:1 FL/-/4/-/-/R/- Scale =.3125"/Ft.

ALPINE
Alpine Engineered Products, Inc.
1950 Marley Drive
Haines City, FL 33844
FL Certificate of Authorization # 567

WARNING TRUSSES REQUIRE EXTREME CARE IN FABRICATION, HANDLING, SHIPPING, INSTALLING AND BRACING. REFER TO BCSI 1-03 (BUILDING COMPONENT SAFETY INFORMATION), PUBLISHED BY TPI (TRUSS PLATE INSTITUTE, 583 D'ONOFRIO DR., SUITE 200, MADISON, WI 53719) AND WTCA (WOOD TRUSS COUNCIL OF AMERICA, 6300 ENTERPRISE LN, MADISON, WI 53719) FOR SAFETY PRACTICES PRIOR TO PERFORMING THESE FUNCTIONS. UNLESS OTHERWISE INDICATED, TOP CHORD SHALL HAVE PROPERLY ATTACHED STRUCTURAL PANELS AND BOTTOM CHORD SHALL HAVE A PROPERLY ATTACHED RIGID CEILING.

IMPORTANT FURNISH A COPY OF THIS DESIGN TO THE INSTALLATION CONTRACTOR. ALPINE ENGINEERED PRODUCTS, INC. SHALL NOT BE RESPONSIBLE FOR ANY DEVIATION FROM THIS DESIGN; ANY FAILURE TO BUILD THE TRUSS IN CONFORMANCE WITH TPI; OR FABRICATING, HANDLING, SHIPPING, INSTALLING & BRACING OF TRUSSES. DESIGN CONFORMS WITH APPLICABLE PROVISIONS OF NDS (NATIONAL DESIGN SPEC. BY AF&PA) AND TPI. ALPINE CONNECTOR PLATES ARE MADE OF 20/18/16GA (W,H/S/K) ASTM A653 GRADE 40/60 (W, K/H,S) GALV. STEEL. APPLY PLATES TO EACH FACE OF TRUSS AND, UNLESS OTHERWISE LOCATED ON THIS DESIGN, POSITION PER DRAWINGS 160A-Z. ANY INSPECTION OF PLATES FOLLOWED BY (1) SHALL BE PER ANNEX A3 OF TPI1-2002 SEC.3. A SEAL ON THIS DRAWING INDICATES ACCEPTANCE OF PROFESSIONAL ENGINEERING RESPONSIBILITY SOLELY FOR THE TRUSS COMPONENT DESIGN SHOWN. THE SUITABILITY AND USE OF THIS COMPONENT FOR ANY BUILDING IS THE RESPONSIBILITY OF THE BUILDING DESIGNER PER ANSI/TPI 1 SEC. 2.

ARTHUR R. FISHER LICENSE No. 59687 STATE OF FLORIDA PROFESSIONAL ENGINEER
Feb 27 '06

TC LL	20.0 PSF	REF	R487-- 32005
TC DL	10.0 PSF	DATE	02/27/06
BC DL	10.0 PSF	DRW	HCUSR487 06058034
BC LL	0.0 PSF	HC-ENG	JB/AF
TOT.LD.	40.0 PSF	SEQN-	1792
DUR.FAC.	1.25		
SPACING	24.0"	JREF-	1SV0487_Z03

Top chord 2x4 SP #2 Dense
Bot chord 2x4 SP #2 Dense
Webs 2x4 SP #3

(A) Continuous lateral bracing equally spaced on member.

Deflection meets L/360 live and L/240 total load. Creep increase factor for dead load is 1.50.

110 mph wind, 15.00 ft mean hgt, ASCE 7-02, CLOSED bldg, not located within 4.50 ft from roof edge, CAT II, EXP B, wind TC DL=5.0 psf, wind BC DL=5.0 psf.

In lieu of structural panels or rigid ceiling use purlins to brace TC @ 24" OC, BC @ 24" OC.

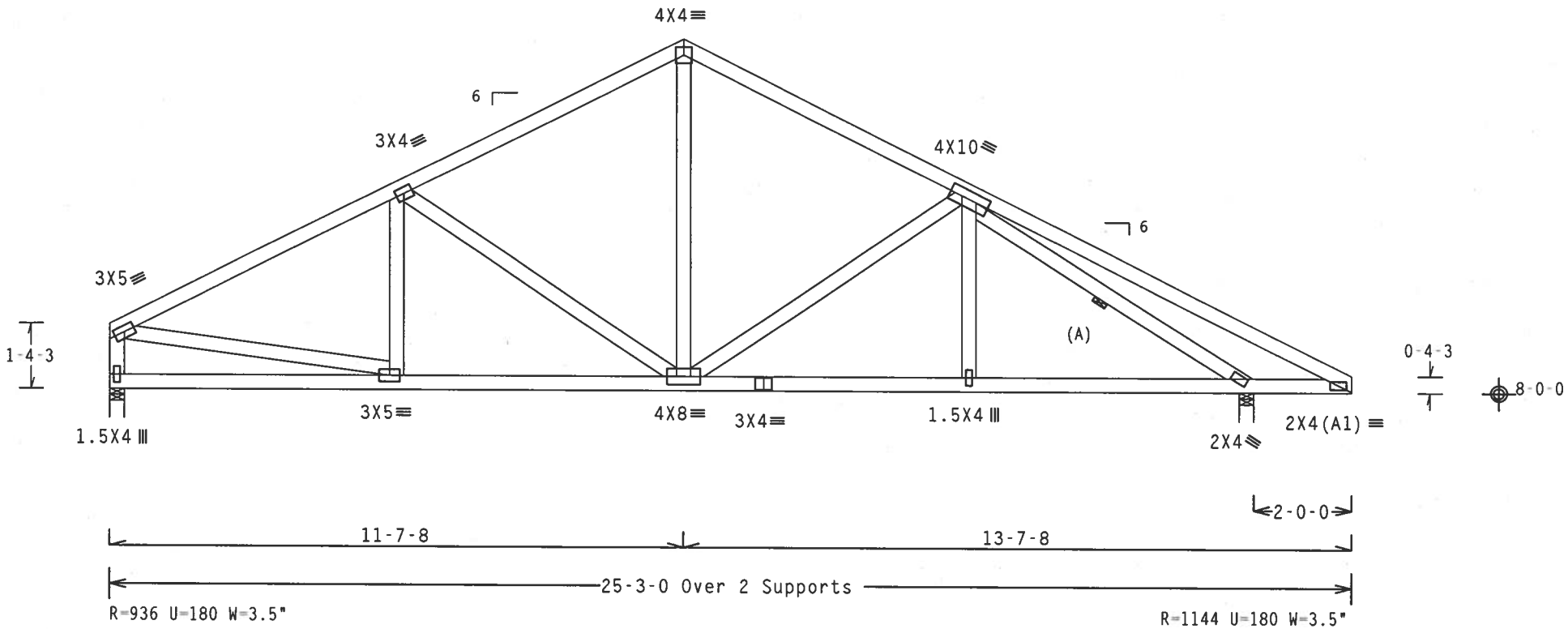

Design Crit: TPI-2002(STD)/FBC

PLT TYP. Wave

Cg/RT=1.00(1.25)/10(0) 7.24.12 QTY:1 FL/-/4/-/-/R/- Scale =.3125"/Ft.

ALPINE

Alpine Engineered Products, Inc.
1950 Marley Drive
Haines City, FL 33844
FL Certificate of Authorization # 567

WARNING TRUSSES REQUIRE EXTREME CARE IN FABRICATION, HANDLING, SHIPPING, INSTALLING AND BRACING. REFER TO BCSI 1-03 (BUILDING COMPONENT SAFETY INFORMATION), PUBLISHED BY TPI (TRUSS PLATE INSTITUTE, 583 D'ONOFRIO DR., SUITE 200, MADISON, WI 53719) AND WTCA (WOOD TRUSS COUNCIL OF AMERICA, 6300 ENTERPRISE LN, MADISON, WI 53719) FOR SAFETY PRACTICES PRIOR TO PERFORMING THESE FUNCTIONS. UNLESS OTHERWISE INDICATED, TOP CHORD SHALL HAVE PROPERLY ATTACHED STRUCTURAL PANELS AND BOTTOM CHORD SHALL HAVE A PROPERLY ATTACHED RIGID CEILING.

IMPORTANT FURNISH A COPY OF THIS DESIGN TO THE INSTALLATION CONTRACTOR. ALPINE ENGINEERED PRODUCTS, INC. SHALL NOT BE RESPONSIBLE FOR ANY DEVIATION FROM THIS DESIGN; ANY FAILURE TO BUILD THE TRUSS IN CONFORMANCE WITH TPI; OR FABRICATING, HANDLING, SHIPPING, INSTALLING & BRACING OF TRUSSES. DESIGN CONFORMS WITH APPLICABLE PROVISIONS OF NDS (NATIONAL DESIGN SPEC. BY AF&PA) AND TPI. ALPINE CONNECTOR PLATES ARE MADE OF 20/18/16GA (W,H/S/K) ASTM A653 GRADE 40/60 (W, K/H,S) GALV. STEEL. APPLY PLATES TO EACH FACE OF TRUSS AND, UNLESS OTHERWISE LOCATED ON THIS DESIGN, POSITION PER DRAWINGS 160A-Z. ANY INSPECTION OF PLATES FOLLOWED BY (1) SHALL BE PER ANNEX A3 OF TPI1-2002 SEC.3. A SEAL ON THIS DRAWING INDICATES ACCEPTANCE OF PROFESSIONAL ENGINEERING RESPONSIBILITY SOLELY FOR THE TRUSS COMPONENT DESIGN SHOWN. THE SUITABILITY AND USE OF THIS COMPONENT FOR ANY BUILDING IS THE RESPONSIBILITY OF THE BUILDING DESIGNER PER ANSI/TPI 1 SEC. 2.

ARTHUR R. FISHER LICENSE No. 59687 STATE OF FLORIDA PROFESSIONAL ENGINEER

Feb 27 '06

TC LL	20.0 PSF	REF R487-- 32006
TC DL	10.0 PSF	DATE 02/27/06
BC DL	10.0 PSF	DRW HCUSR487 06058045
BC LL	0.0 PSF	HC-ENG JB/AF
TOT.LD.	40.0 PSF	SEQN- 1784
DUR.FAC.	1.25	
SPACING	24.0"	JREF- 1SV0487_Z03

(6-083--Doug Morgan Construction #22 Stonehenge II --, ** - D6G)

Top chord 2x4 SP #2
Bot chord 2x6 SP #1
Webs 2x4 SP #3 :W8 2x4 SP #2:

SPECIAL LOADS
------(LUMBER DUR.FAC.=1.25 / PLATE DUR.FAC.=1.25)
TC - From 62 PLF at 0.00 to 62 PLF at 25.25
BC - From 20 PLF at 0.00 to 20 PLF at 25.25
BC - 1216 LB Conc. Load at 2.19, 4.19, 6.19, 12.19
BC - 1230 LB Conc. Load at 8.19
BC - 1223 LB Conc. Load at 10.19, 14.19, 16.19
BC - 2341 LB Conc. Load at 18.19

110 mph wind, 15.00 ft mean hgt, ASCE 7-02, CLOSED bldg, not located within 4.50 ft from roof edge, CAT II, EXP B, wind TC DL=5.0 psf, wind BC DL=5.0 psf.

In lieu of structural panels or rigid ceiling use purlins to brace TC @ 24" OC, BC @ 24" OC.

2 COMPLETE TRUSSES REQUIRED

Nailing Schedule: (12d_Common_(0.148"x3.25",_min.)_nails)
Top Chord: 1 Row @12.00" o.c.
Bot Chord: 1 Row @ 4.00" o.c.
Webs : 1 Row @ 4" o.c.
Use equal spacing between rows and stagger nails in each row to avoid splitting.

Bearing blocks: Nail type: 12d_Common_(0.148"x3.25",_min.)_nails

BRG	X-LOC	#BLOCKS	LENGTH/BLK	#NAILS/BLK	WALL PLATE
1	0.000'	1	14"	11	Match Truss
2	22.958'	1	12"	4	Match Truss

Bearing block to be same size and species as bottom chord.
Refer to drawing CNBRGBLK1103 for additional information.

(A) #3 or better scab brace. Same size & 80% length of web member. Attach with 10d Box or Gun (0.128"x3",min.)nails @ 6" OC.

Deflection meets L/360 live and L/240 total load. Creep increase factor for dead load is 1.50.

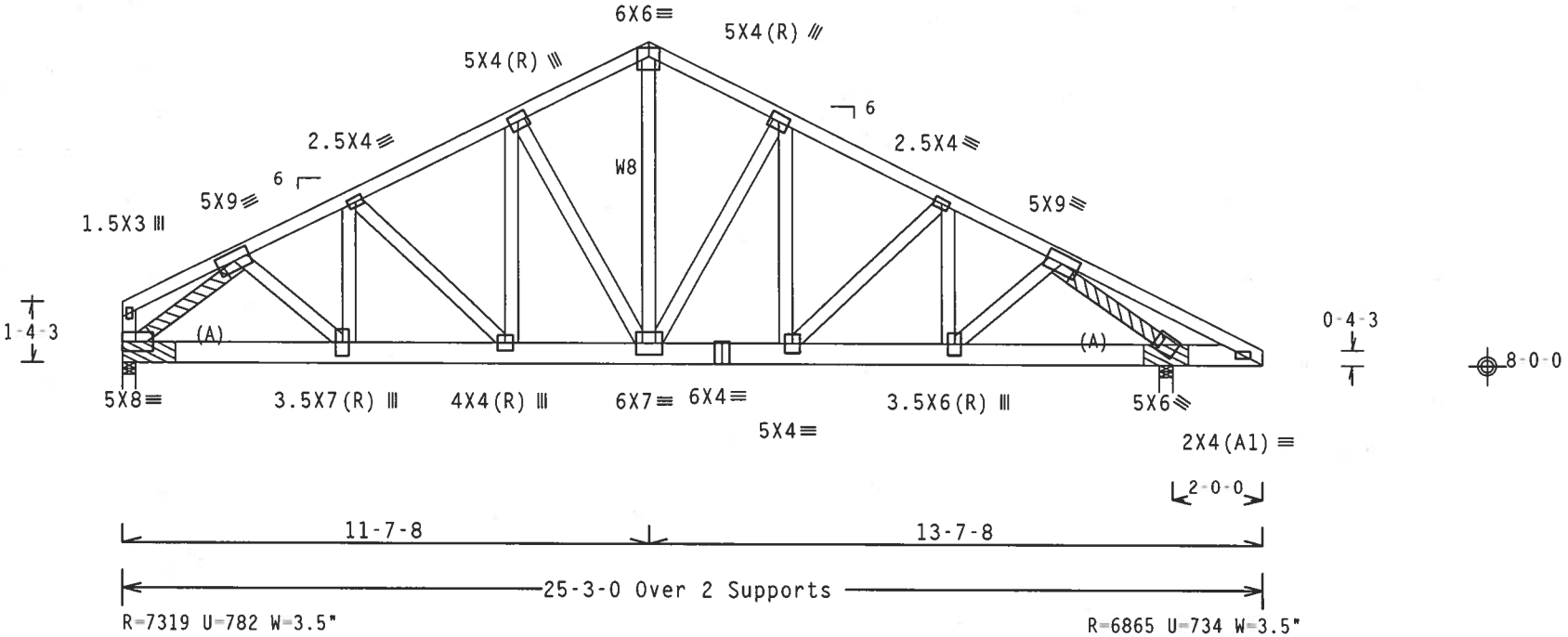

Design Crit: TPI-2002(STD)/FBC
PLT TYP. Wave Cq/RT=1.00(1.25)/10(0) 7.24.12 QTY:1 FL/-/4/-/-/R/- Scale =.25"/Ft.

ALPINE
Alpine Engineered Products, Inc.
1950 Marley Drive
Haines City, FL 33844
FL Certificate of Authorization # 567

WARNING TRUSSES REQUIRE EXTREME CARE IN FABRICATION, HANDLING, SHIPPING, INSTALLING AND BRACING. REFER TO BCSI 1-03 (BUILDING COMPONENT SAFETY INFORMATION), PUBLISHED BY TPI (TRUSS PLATE INSTITUTE, 583 D'ONOFRIO DR., SUITE 200, MADISON, WI 53719) AND WTCA (WOOD TRUSS COUNCIL OF AMERICA, 6300 ENTERPRISE LN, MADISON, WI 53719) FOR SAFETY PRACTICES PRIOR TO PERFORMING THESE FUNCTIONS. UNLESS OTHERWISE INDICATED, TOP CHORD SHALL HAVE PROPERLY ATTACHED STRUCTURAL PANELS AND BOTTOM CHORD SHALL HAVE A PROPERLY ATTACHED RIGID CEILING.

IMPORTANTFURNISH A COPY OF THIS DESIGN TO THE INSTALLATION CONTRACTOR. ALPINE ENGINEERED PRODUCTS, INC. SHALL NOT BE RESPONSIBLE FOR ANY DEVIATION FROM THIS DESIGN; ANY FAILURE TO BUILD THE TRUSS IN CONFORMANCE WITH TPI; OR FABRICATING, HANDLING, SHIPPING, INSTALLING & BRACING OF TRUSSES. DESIGN CONFORMS WITH APPLICABLE PROVISIONS OF NDS (NATIONAL DESIGN SPEC. BY AF&PA) AND TPI. ALPINE CONNECTOR PLATES ARE MADE OF 20/18/16GA (W,H/S/K) ASTM A653 GRADE 40/60 (W, K/H,S) GALV. STEEL. APPLY PLATES TO EACH FACE OF TRUSS AND, UNLESS OTHERWISE LOCATED ON THIS DESIGN, POSITION PER DRAWINGS 160A-Z. ANY INSPECTION OF PLATES FOLLOWED BY (4) SHALL BE PER ANNEX A3 OF TPI1-2002 SEC.3. A SEAL ON THIS DRAWING INDICATES ACCEPTANCE OF PROFESSIONAL ENGINEERING RESPONSIBILITY SOLELY FOR THE TRUSS COMPONENT DESIGN SHOWN. THE SUITABILITY AND USE OF THIS COMPONENT FOR ANY BUILDING IS THE RESPONSIBILITY OF THE BUILDING DESIGNER PER ANSI/TPI 1 SEC. 2.

ARTHUR R. FISHER LICENSE No. 59687 STATE OF FLORIDA PROFESSIONAL ENGINEER
Feb 27 '06

TC LL	20.0 PSF	REF R487-- 32007
TC DL	10.0 PSF	DATE 02/27/06
BC DL	10.0 PSF	DRW HCUSR487 06058047
BC LL	0.0 PSF	HC-ENG JB/AF
TOT.LD.	40.0 PSF	SEQN- 147662 REV
DUR.FAC.	1.25	
SPACING	SEE ABOVE	JREF- 1SV0487_Z03

Top chord 2x4 SP #2 Dense
Bot chord 2x4 SP #2 Dense
Webs 2x4 SP #3

In lieu of structural panels or rigid ceiling use purlins to brace TC @ 24" OC, BC @ 24" OC.

Sub-fascia beam assumptions: 5-0-0 sub-fascia beam on the 2-0-0 cantilever side. 5-0-0 sub-fascia beam on the 2-0-0 cantilever side.

Deflection meets L/360 live and L/240 total load. Creep increase factor for dead load is 1.50.

110 mph wind, 15.00 ft mean hgt, ASCE 7-02, CLOSED bldg, Located anywhere in roof, CAT II, EXP B, wind TC DL=5.0 psf, wind BC DL=5.0 psf.

The following members need concentrated loads at the heel: 5-0-0 span/setback member on the 2-0-0 cant side requires 45 lbs and the 5-0-0 span/setback member on the 2-0-0 cant side requires 45 lbs.

Hipjack supports 7-0-0 setback jacks with 2-0-0 cantilever one face; 2-0-0 cantilever opposite face.

Provide (2) 16d common nails(0.162"x3.5"), toe nailed at Top chord.
Provide (2) 16d common nails(0.162"x3.5"), toe nailed at Bot chord.

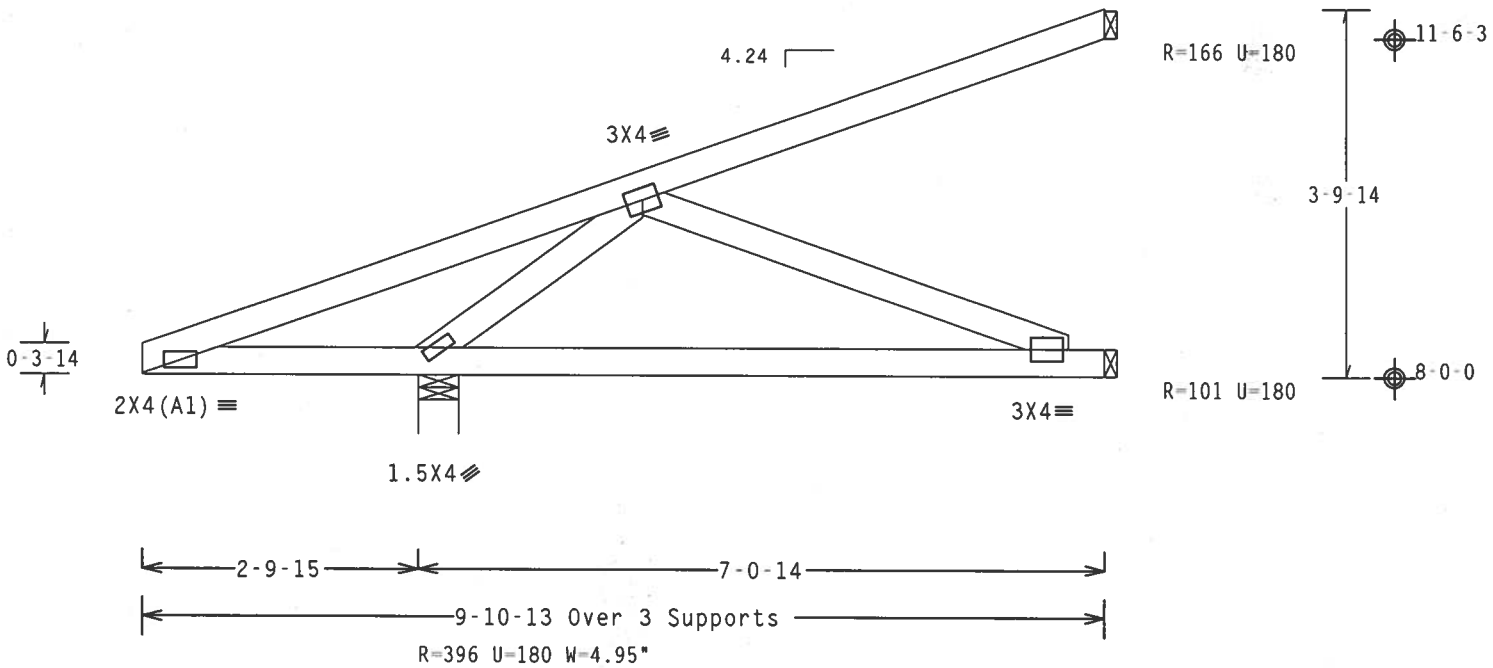

Design Crit: TPI-2002(STD)/FBC

PLT TYP. Wave Cq/RT=1.00(1.25)/10(0) 7.24.1 TY:5 FL/-/4/-/-/R/- Scale =.5"/Ft.

ALPINE
Alpine Engineered Products, Inc.
1950 Marley Drive
Haines City, FL 33844
FL Certificate of Authorization # 567

WARNING TRUSSES REQUIRE EXTREME CARE IN FABRICATION, HANDLING, SHIPPING, INSTALLING AND BRACING. REFER TO BCSI 1-03 (BUILDING COMPONENT SAFETY INFORMATION), PUBLISHED BY TPI (TRUSS PLATE INSTITUTE, 583 D'ONOFRIO DR., SUITE 200, MADISON, WI 53719) AND WTCA (WOOD TRUSS COUNCIL OF AMERICA, 6300 ENTERPRISE LN, MADISON, WI 53719) FOR SAFETY PRACTICES PRIOR TO PERFORMING THESE FUNCTIONS. UNLESS OTHERWISE INDICATED, TOP CHORD SHALL HAVE PROPERLY ATTACHED STRUCTURAL PANELS AND BOTTOM CHORD SHALL HAVE A PROPERLY ATTACHED RIGID CEILING.

IMPORTANTFURNISH A COPY OF THIS DESIGN TO THE INSTALLATION CONTRACTOR. ALPINE ENGINEERED PRODUCTS, INC. SHALL NOT BE RESPONSIBLE FOR ANY DEVIATION FROM THIS DESIGN; ANY FAILURE TO BUILD THE TRUSS IN CONFORMANCE WITH TPI; OR FABRICATING, HANDLING, SHIPPING, INSTALLING & BRACING OF TRUSSES. DESIGN CONFORMS WITH APPLICABLE PROVISIONS OF NDS (NATIONAL DESIGN SPEC, BY AF&PA) AND TPI. ALPINE CONNECTOR PLATES ARE MADE OF 20/18/16GA (W,H/S/K) ASTM A653 GRADE 40/60 (W, K/H,S) GALV. STEEL. APPLY PLATES TO EACH FACE OF TRUSS AND, UNLESS OTHERWISE LOCATED ON THIS DESIGN, POSITION PER DRAWINGS 160A-Z. ANY INSPECTION OF PLATES FOLLOWED BY (1) SHALL BE PER ANNEX A3 OF TPI1-2002 SEC.3. A SEAL ON THIS DRAWING INDICATES ACCEPTANCE OF PROFESSIONAL ENGINEERING RESPONSIBILITY SOLELY FOR THE TRUSS COMPONENT DESIGN SHOWN. THE SUITABILITY AND USE OF THIS COMPONENT FOR ANY BUILDING IS THE RESPONSIBILITY OF THE BUILDING DESIGNER PER ANSI/TPI 1 SEC. 2.

ARTHUR R. FISHER LICENSE No. 59687 STATE OF FLORIDA PROFESSIONAL ENGINEER
Feb 27 '06

TC LL	20.0 PSF	REF	R487-- 32008
TC DL	10.0 PSF	DATE	02/27/06
BC DL	10.0 PSF	DRW	HCUSR487 06058048
BC LL	0.0 PSF	HC-ENG	JB/AF
TOT.LD.	40.0 PSF	SEQN-	1626
DUR.FAC.	1.25		
SPACING	SEE ABOVE	JREF-	1SV0487_Z03

Top chord 2x4 SP #2 Dense
Bot chord 2x4 SP #2 Dense
Webs 2x4 SP #3

In lieu of structural panels or rigid ceiling use purlins to brace TC @ 24" OC, BC @ 24" OC.

Provide (2) 16d common nails(0.162"x3.5"), toe nailed at Top chord.
Provide (2) 16d common nails(0.162"x3.5"), toe nailed at Bot chord.

110 mph wind, 15.00 ft mean hgt, ASCE 7-02, CLOSED bldg, not located within 4.50 ft from roof edge, CAT II, EXP B, wind TC DL=5.0 psf, wind BC DL=5.0 psf.

Deflection meets L/360 live and L/240 total load. Creep increase factor for dead load is 1.50.

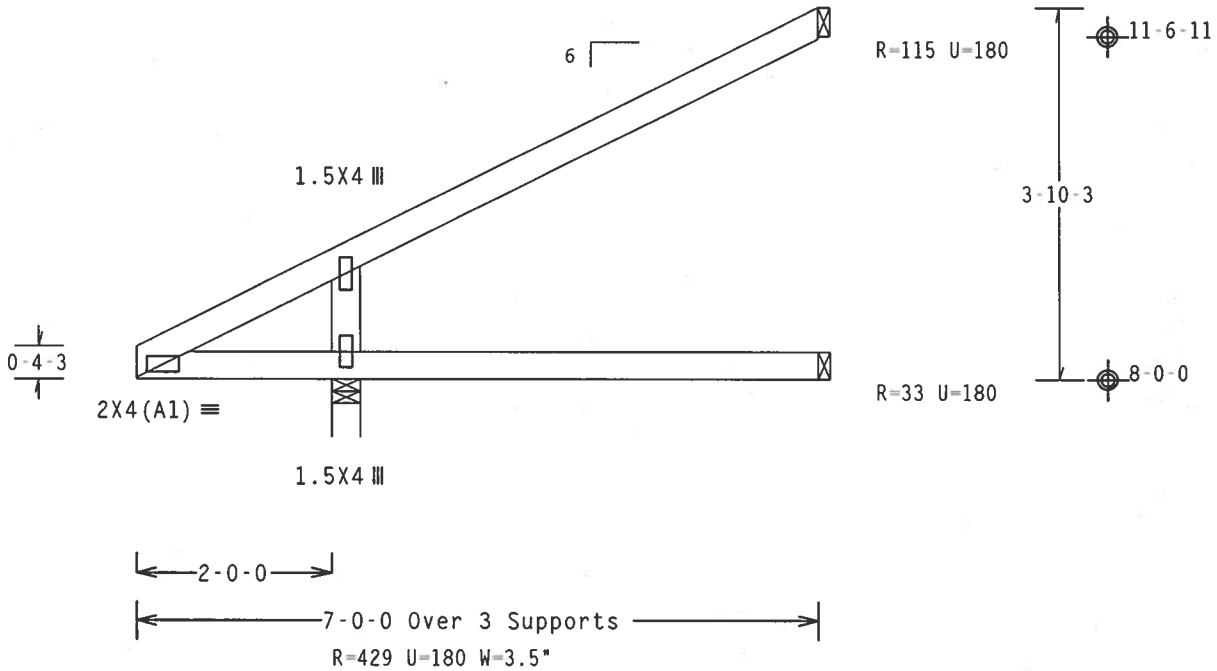

Design Crit: TPI-2002(STD)/FBC

PLT TYP. Wave Cg/RT=1.00(1.25)/10(0) 7.24.1[illegible] QTY:37 FL/-/4/-/-/R/- Scale =.5"/Ft.

ALPINE
Alpine Engineered Products, Inc.
1950 Marley Drive
Haines City, FL 33844
FL Certificate of Authorization # 567

WARNING TRUSSES REQUIRE EXTREME CARE IN FABRICATION, HANDLING, SHIPPING, INSTALLING AND BRACING. REFER TO BCSI 1-03 (BUILDING COMPONENT SAFETY INFORMATION), PUBLISHED BY TPI (TRUSS PLATE INSTITUTE, 583 D'ONOFRIO DR., SUITE 200, MADISON, WI 53719) AND WTCA (WOOD TRUSS COUNCIL OF AMERICA, 6300 ENTERPRISE LN, MADISON, WI 53719) FOR SAFETY PRACTICES PRIOR TO PERFORMING THESE FUNCTIONS. UNLESS OTHERWISE INDICATED, TOP CHORD SHALL HAVE PROPERLY ATTACHED STRUCTURAL PANELS AND BOTTOM CHORD SHALL HAVE A PROPERLY ATTACHED RIGID CEILING.

IMPORTANTFURNISH A COPY OF THIS DESIGN TO THE INSTALLATION CONTRACTOR. ALPINE ENGINEERED PRODUCTS, INC. SHALL NOT BE RESPONSIBLE FOR ANY DEVIATION FROM THIS DESIGN; ANY FAILURE TO BUILD THE TRUSS IN CONFORMANCE WITH TPI; OR FABRICATING, HANDLING, SHIPPING, INSTALLING & BRACING OF TRUSSES. DESIGN CONFORMS WITH APPLICABLE PROVISIONS OF NDS (NATIONAL DESIGN SPEC. BY AF&PA) AND TPI. ALPINE CONNECTOR PLATES ARE MADE OF 20/18/16GA (W,H/S/K) ASTM A653 GRADE 40/60 (W, K/H,S) GALV. STEEL. APPLY PLATES TO EACH FACE OF TRUSS AND, UNLESS OTHERWISE LOCATED ON THIS DESIGN, POSITION PER DRAWINGS 160A-Z. ANY INSPECTION OF PLATES FOLLOWED BY (1) SHALL BE PER ANNEX A3 OF TPI1-2002 SEC.3. A SEAL ON THIS DRAWING INDICATES ACCEPTANCE OF PROFESSIONAL ENGINEERING RESPONSIBILITY SOLELY FOR THE TRUSS COMPONENT DESIGN SHOWN. THE SUITABILITY AND USE OF THIS COMPONENT FOR ANY BUILDING IS THE RESPONSIBILITY OF THE BUILDING DESIGNER PER ANSI/TPI 1 SEC. 2.

ARTHUR R. FISHER LICENSE No.59637 STATE OF FLORIDA PROFESSIONAL ENGINEER
Fe[illegible] '06

TC LL	20.0 PSF	REF	R487-- 32009
TC DL	10.0 PSF	DATE	02/27/06
BC DL	10.0 PSF	DRW	HCUSR487 06058003
BC LL	0.0 PSF	HC-ENG	JB/AF
TOT.LD.	40.0 PSF	SEQN-	1601
DUR.FAC.	1.25		
SPACING	24.0"	JREF-	1SV0487_Z03

Top chord 2x4 SP #2 Dense
Bot chord 2x4 SP #2 Dense
Webs 2x4 SP #3

In lieu of structural panels or rigid ceiling use purlins to brace TC @ 24" OC, BC @ 24" OC.

Sub-fascia beam assumptions: 5-0-0 sub-fascia beam on the 2-0-0 cantilever side. 5-0-0 sub-fascia beam on the 2-0-0 cantilever side.

Deflection meets L/360 live and L/240 total load. Creep increase factor for dead load is 1.50.

110 mph wind, 15.00 ft mean hgt, ASCE 7-02, CLOSED bldg, Located anywhere in roof, CAT II, EXP B, wind TC DL=5.0 psf, wind BC DL=5.0 psf.

The following members need concentrated loads at the heel: 5-0-0 span/setback member on the 2-0-0 cant side requires 45 lbs and the 5-0-0 span/setback member on the 2-0-0 cant side requires 45 lbs.

Hipjack supports 5-0-0 setback jacks with 2-0-0 cantilever one face; 2-0-0 cantilever opposite face.

Provide (2) 16d common nails(0.162"x3.5"), toe nailed at Top chord.
Provide (2) 16d common nails(0.162"x3.5"), toe nailed at Bot chord.

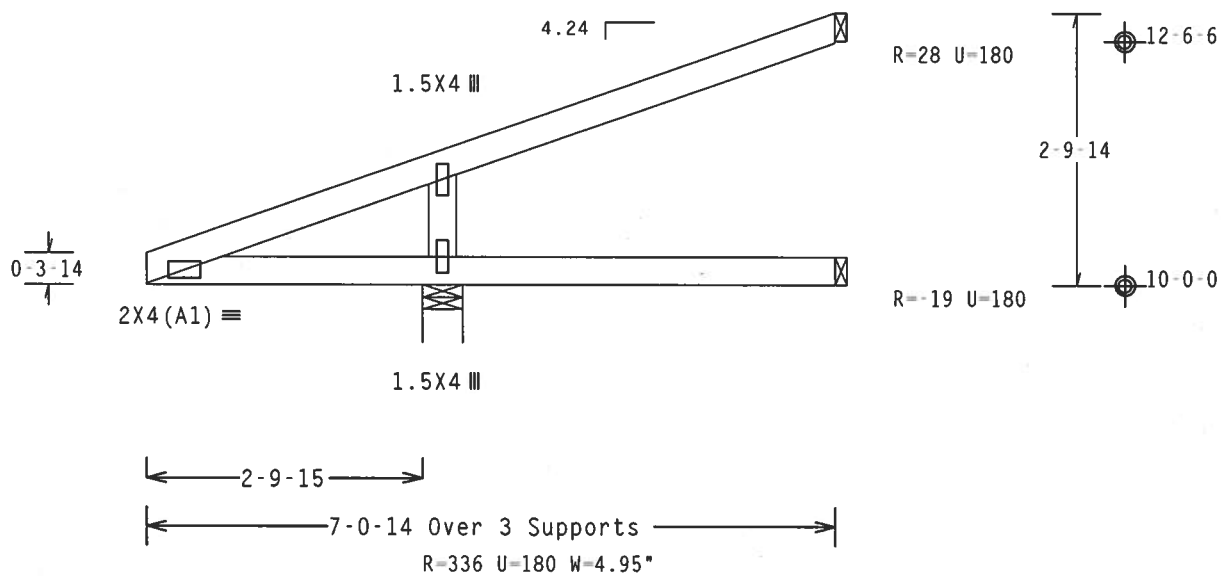

Design Crit: TPI-2002(STD)/FBC
PLT TYP. Wave
Cq/RT=1.00(1.25)/10(0) 7.24.12 QTY:2 FL/-/4/-/-/R/- Scale =.5"/Ft.

ALPINE
Alpine Engineered Products, Inc.
1950 Marley Drive
Haines City, FL 33844
FL Certificate of Authorization # 567

WARNING TRUSSES REQUIRE EXTREME CARE IN FABRICATION, HANDLING, SHIPPING, INSTALLING AND BRACING. REFER TO BCSI 1-03 (BUILDING COMPONENT SAFETY INFORMATION), PUBLISHED BY TPI (TRUSS PLATE INSTITUTE, 583 D'ONOFRIO DR., SUITE 200, MADISON, WI 53719) AND WTCA (WOOD TRUSS COUNCIL OF AMERICA, 6300 ENTERPRISE LN. MADISON, WI 53719) FOR SAFETY PRACTICES PRIOR TO PERFORMING THESE FUNCTIONS. UNLESS OTHERWISE INDICATED, TOP CHORD SHALL HAVE PROPERLY ATTACHED STRUCTURAL PANELS AND BOTTOM CHORD SHALL HAVE A PROPERLY ATTACHED RIGID CEILING.

IMPORTANT FURNISH A COPY OF THIS DESIGN TO THE INSTALLATION CONTRACTOR. ALPINE ENGINEERED PRODUCTS, INC. SHALL NOT BE RESPONSIBLE FOR ANY DEVIATION FROM THIS DESIGN; ANY FAILURE TO BUILD THE TRUSS IN CONFORMANCE WITH TPI; OR FABRICATING, HANDLING, SHIPPING, INSTALLING & BRACING OF TRUSSES. DESIGN CONFORMS WITH APPLICABLE PROVISIONS OF NDS (NATIONAL DESIGN SPEC. BY AF&PA) AND TPI. ALPINE CONNECTOR PLATES ARE MADE OF 20/18/16GA (W,H/S/K) ASTM A653 GRADE 40/60 (W, K/H,S) GALV. STEEL. APPLY PLATES TO EACH FACE OF TRUSS AND, UNLESS OTHERWISE LOCATED ON THIS DESIGN, POSITION PER DRAWINGS 160A-Z. ANY INSPECTION OF PLATES FOLLOWED BY (1) SHALL BE PER ANNEX A3 OF TPI1-2002 SEC.3. A SEAL ON THIS DRAWING INDICATES ACCEPTANCE OF PROFESSIONAL ENGINEERING RESPONSIBILITY SOLELY FOR THE TRUSS COMPONENT DESIGN SHOWN. THE SUITABILITY AND USE OF THIS COMPONENT FOR ANY BUILDING IS THE RESPONSIBILITY OF THE BUILDING DESIGNER PER ANSI/TPI 1 SEC. 2.

ARTHUR B. FISHER LICENSE No.59687 STATE OF FLORIDA PROFESSIONAL ENGINEER
Feb 27 '06

TC LL	20.0 PSF	REF	R487-- 32010
TC DL	10.0 PSF	DATE	02/27/06
BC DL	10.0 PSF	DRW	HCUSR487 06058018
BC LL	0.0 PSF	HC-ENG	JB/AF
TOT.LD.	40.0 PSF	SEQN-	1659
DUR.FAC.	1.25		
SPACING	SEE ABOVE	JREF-	1SV0487_Z03

Top chord 2x4 SP #2 Dense
Bot chord 2x4 SP #2 Dense
Webs 2x4 SP #3

In lieu of structural panels or rigid ceiling use purlins to brace TC @ 24" OC, BC @ 24" OC.

Provide (2) 16d common nails(0.162"x3.5"), toe nailed at Top chord.
Provide (2) 16d common nails(0.162"x3.5"), toe nailed at Bot chord.

110 mph wind, 15.00 ft mean hgt, ASCE 7-02, CLOSED bldg, not located within 4.50 ft from roof edge, CAT II, EXP B, wind TC DL=5.0 psf, wind BC DL=5.0 psf.

Deflection meets L/360 live and L/240 total load. Creep increase factor for dead load is 1.50.

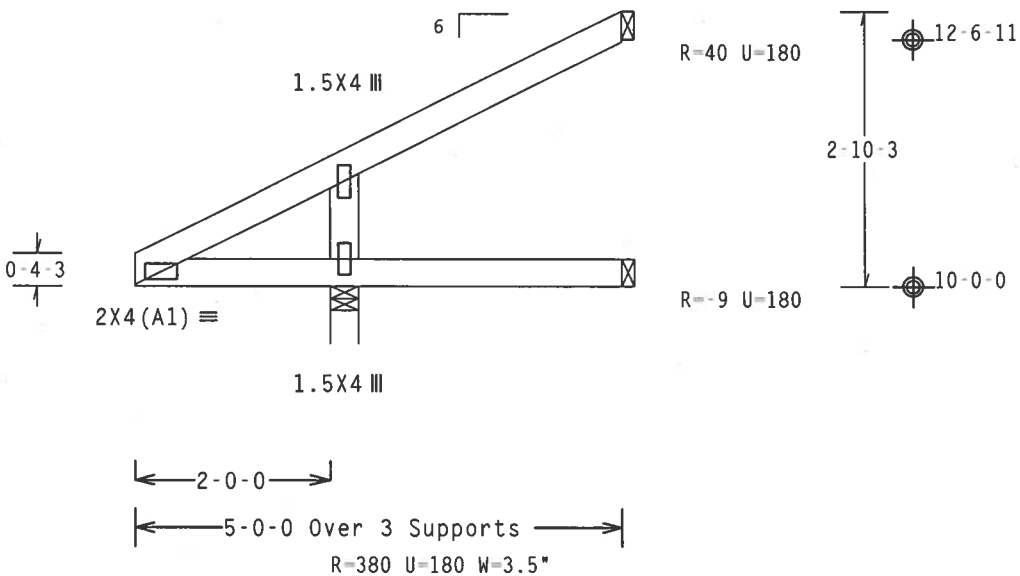

Design Crit: TPI-2002(STD)/FBC
PLT TYP. Wave Cq/RT=1.00(1.25)/10(0) 7.24.1 QTY:4 FL/-/4/-/-/R/- Scale =.5"/Ft.

ALPINE
Alpine Engineered Products, Inc.
1950 Marley Drive
Haines City, FL 33844
FL Certificate of Authorization # 567

WARNING TRUSSES REQUIRE EXTREME CARE IN FABRICATION, HANDLING, SHIPPING, INSTALLING AND BRACING. REFER TO BCSI 1-03 (BUILDING COMPONENT SAFETY INFORMATION), PUBLISHED BY TPI (TRUSS PLATE INSTITUTE, 583 D'ONOFRIO DR., SUITE 200, MADISON, WI 53719) AND WTCA (WOOD TRUSS COUNCIL OF AMERICA, 6300 ENTERPRISE LN. MADISON, WI 53719) FOR SAFETY PRACTICES PRIOR TO PERFORMING THESE FUNCTIONS. UNLESS OTHERWISE INDICATED, TOP CHORD SHALL HAVE PROPERLY ATTACHED STRUCTURAL PANELS AND BOTTOM CHORD SHALL HAVE A PROPERLY ATTACHED RIGID CEILING.

IMPORTANTFURNISH A COPY OF THIS DESIGN TO THE INSTALLATION CONTRACTOR. ALPINE ENGINEERED PRODUCTS, INC. SHALL NOT BE RESPONSIBLE FOR ANY DEVIATION FROM THIS DESIGN; ANY FAILURE TO BUILD THE TRUSS IN CONFORMANCE WITH TPI; OR FABRICATING, HANDLING, SHIPPING, INSTALLING & BRACING OF TRUSSES. DESIGN CONFORMS WITH APPLICABLE PROVISIONS OF NDS (NATIONAL DESIGN SPEC. BY AF&PA) AND TPI. ALPINE CONNECTOR PLATES ARE MADE OF 20/18/16GA (W,H/S/K) ASTM A653 GRADE 40/60 (W, K/H,S) GALV. STEEL. APPLY PLATES TO EACH FACE OF TRUSS AND, UNLESS OTHERWISE LOCATED ON THIS DESIGN, POSITION PER DRAWINGS 160A-Z. ANY INSPECTION OF PLATES FOLLOWED BY (1) SHALL BE PER ANNEX A3 OF TPI1-2002 SEC.3. A SEAL ON THIS DRAWING INDICATES ACCEPTANCE OF PROFESSIONAL ENGINEERING RESPONSIBILITY SOLELY FOR THE TRUSS COMPONENT DESIGN SHOWN. THE SUITABILITY AND USE OF THIS COMPONENT FOR ANY BUILDING IS THE RESPONSIBILITY OF THE BUILDING DESIGNER PER ANSI/TPI 1 SEC. 2.

ARTHUR R. FISHER LICENSE No. 59687 STATE OF FLORIDA PROFESSIONAL ENGINEER
Feb 27 '06

TC LL	20.0 PSF	REF R487-- 32011
TC DL	10.0 PSF	DATE 02/27/06
BC DL	10.0 PSF	DRW HCUSR487 06058019
BC LL	0.0 PSF	HC-ENG JB/AF
TOT.LD.	40.0 PSF	SEQN- 1647
DUR.FAC.	1.25	
SPACING	24.0"	JREF- 1SV0487_Z03

Top chord 2x4 SP #2 Dense
Bot chord 2x4 SP #2 Dense
Webs 2x4 SP #3

In lieu of structural panels or rigid ceiling use purlins to brace TC @ 24" OC, BC @ 24" OC.

Sub-fascia beam assumptions: 4-0-0 sub-fascia beam on the 2-0-0 cantilever side. 4-0-0 sub-fascia beam on the 2-0-0 cantilever side.

Deflection meets L/360 live and L/240 total load. Creep increase factor for dead load is 1.50.

110 mph wind, 15.00 ft mean hgt, ASCE 7-02, CLOSED bldg, Located anywhere in roof, CAT II, EXP B, wind TC DL=5.0 psf, wind BC DL=5.0 psf.

The following members need concentrated loads at the heel: 4-0-0 span/setback member on the 2-0-0 cant side requires 26 lbs and the 4-0-0 span/setback member on the 2-0-0 cant side requires 26 lbs.

Hipjack supports 4-0-0 setback jacks with 2-0-0 cantilever one face; 2-0-0 cantilever opposite face.

Provide (2) 16d common nails(0.162"x3.5"), toe nailed at Top chord.
Provide (2) 16d common nails(0.162"x3.5"), toe nailed at Bot chord.

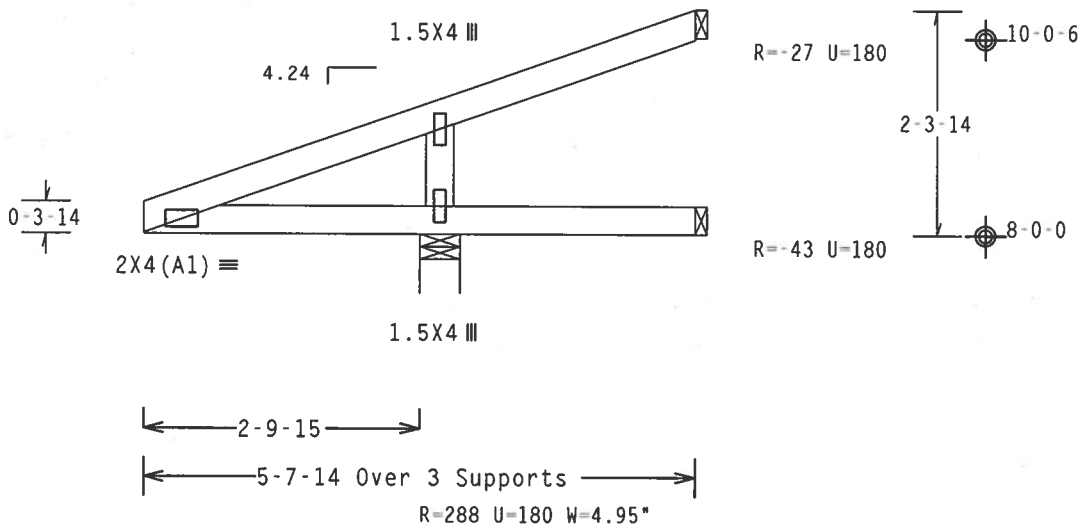

PLT TYP. Wave

Design Crit: TPI-2002(STD)/FBC
Cq/RT=1.00(1.25)/10(0) 7.24.12 QTY:1 FL/-/4/-/-/R/- Scale =.5"/Ft.

ALPINE
Alpine Engineered Products, Inc.
1950 Marley Drive
Haines City, FL 33844
FL Certificate of Authorization # 567

WARNING TRUSSES REQUIRE EXTREME CARE IN FABRICATION, HANDLING, SHIPPING, INSTALLING AND BRACING. REFER TO BCSI 1-03 (BUILDING COMPONENT SAFETY INFORMATION), PUBLISHED BY TPI (TRUSS PLATE INSTITUTE, 583 D'ONOFRIO DR., SUITE 200, MADISON, WI 53719) AND WTCA (WOOD TRUSS COUNCIL OF AMERICA, 6300 ENTERPRISE LN, MADISON, WI 53719) FOR SAFETY PRACTICES PRIOR TO PERFORMING THESE FUNCTIONS. UNLESS OTHERWISE INDICATED, TOP CHORD SHALL HAVE PROPERLY ATTACHED STRUCTURAL PANELS AND BOTTOM CHORD SHALL HAVE A PROPERLY ATTACHED RIGID CEILING.

IMPORTANTFURNISH A COPY OF THIS DESIGN TO THE INSTALLATION CONTRACTOR. ALPINE ENGINEERED PRODUCTS, INC. SHALL NOT BE RESPONSIBLE FOR ANY DEVIATION FROM THIS DESIGN; ANY FAILURE TO BUILD THE TRUSS IN CONFORMANCE WITH TPI; OR FABRICATING, HANDLING, SHIPPING, INSTALLING & BRACING OF TRUSSES. DESIGN CONFORMS WITH APPLICABLE PROVISIONS OF NDS (NATIONAL DESIGN SPEC. BY AF&PA) AND TPI. ALPINE CONNECTOR PLATES ARE MADE OF 20/18/16GA (W,H/S/K) ASTM A653 GRADE 40/60 (W, K/H,S) GALV. STEEL. APPLY PLATES TO EACH FACE OF TRUSS AND, UNLESS OTHERWISE LOCATED ON THIS DESIGN. POSITION PER DRAWINGS 160A-Z. ANY INSPECTION OF PLATES FOLLOWED BY (1) SHALL BE PER ANNEX A3 OF TPI1-2002 SEC.3. A SEAL ON THIS DRAWING INDICATES ACCEPTANCE OF PROFESSIONAL ENGINEERING RESPONSIBILITY SOLELY FOR THE TRUSS COMPONENT DESIGN SHOWN. THE SUITABILITY AND USE OF THIS COMPONENT FOR ANY BUILDING IS THE RESPONSIBILITY OF THE BUILDING DESIGNER PER ANSI/TPI 1 SEC. 2.

ARTHUR B. FISHER LICENSE No.59687 STATE OF FLORIDA PROFESSIONAL ENGINEER
Feb 27 '06

TC LL	20.0 PSF	REF	R487-- 32012
TC DL	10.0 PSF	DATE	02/27/06
BC DL	10.0 PSF	DRW	HCUSR487 06058036
BC LL	0.0 PSF	HC-ENG	JB/AF
TOT.LD.	40.0 PSF	SEQN-	1856
DUR.FAC.	1.25		
SPACING	SEE ABOVE	JREF-	1SV0487_Z03

Top chord 2x4 SP #2 Dense
Bot chord 2x4 SP #2 Dense
Webs 2x4 SP #3

SPECIAL LOADS
------(LUMBER DUR.FAC.=1.25 / PLATE DUR.FAC.=1.25)
TC - From 62 PLF at 0.00 to 62 PLF at 4.00
BC - From 20 PLF at 0.00 to 20 PLF at 4.00
TC - 26 LB Conc. Load at 0.00

Provide (2) 16d common nails(0.162"x3.5"), toe nailed at Top chord.
Provide (2) 16d common nails(0.162"x3.5"), toe nailed at Bot chord.

110 mph wind, 15.00 ft mean hgt, ASCE 7-02, CLOSED bldg, Located anywhere in roof, CAT II, EXP B, wind TC DL=5.0 psf, wind BC DL=5.0 psf.

In lieu of structural panels or rigid ceiling use purlins to brace TC @ 24" OC, BC @ 24" OC.

Deflection meets L/360 live and L/240 total load. Creep increase factor for dead load is 1.50.

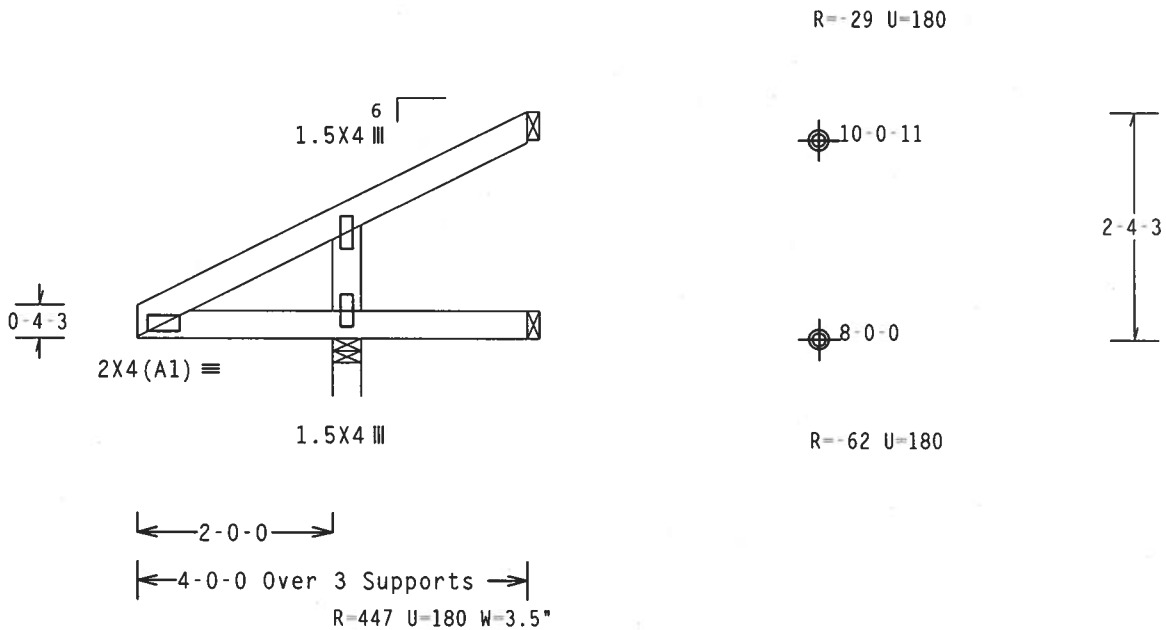

Design Crit: TPI-2002(STD)/FBC
PLT TYP. Wave Cq/RT=1.00(1.25)/10(0) 7.24.12 QTY:2 FL/-/4/-/-/R/- Scale =.5"/Ft.

ALPINE
Alpine Engineered Products, Inc.
1950 Marley Drive
Haines City, FL 33844
FL Certificate of Authorization # 567

WARNING TRUSSES REQUIRE EXTREME CARE IN FABRICATION, HANDLING, SHIPPING, INSTALLING AND BRACING. REFER TO BCSI 1-03 (BUILDING COMPONENT SAFETY INFORMATION), PUBLISHED BY TPI (TRUSS PLATE INSTITUTE, 583 D'ONOFRIO DR., SUITE 200, MADISON, WI 53719) AND WTCA (WOOD TRUSS COUNCIL OF AMERICA, 6300 ENTERPRISE LN, MADISON, WI 53719) FOR SAFETY PRACTICES PRIOR TO PERFORMING THESE FUNCTIONS. UNLESS OTHERWISE INDICATED, TOP CHORD SHALL HAVE PROPERLY ATTACHED STRUCTURAL PANELS AND BOTTOM CHORD SHALL HAVE A PROPERLY ATTACHED RIGID CEILING.

IMPORTANT FURNISH A COPY OF THIS DESIGN TO THE INSTALLATION CONTRACTOR. ALPINE ENGINEERED PRODUCTS, INC. SHALL NOT BE RESPONSIBLE FOR ANY DEVIATION FROM THIS DESIGN; ANY FAILURE TO BUILD THE TRUSS IN CONFORMANCE WITH TPI; OR FABRICATING, HANDLING, SHIPPING, INSTALLING & BRACING OF TRUSSES. DESIGN CONFORMS WITH APPLICABLE PROVISIONS OF NDS (NATIONAL DESIGN SPEC. BY AF&PA) AND TPI. ALPINE CONNECTOR PLATES ARE MADE OF 20/18/16GA (W,H/S/K) ASTM A653 GRADE 40/60 (W, K/H,S) GALV. STEEL. APPLY PLATES TO EACH FACE OF TRUSS AND, UNLESS OTHERWISE LOCATED ON THIS DESIGN, POSITION PER DRAWINGS 160A-Z. ANY INSPECTION OF PLATES FOLLOWED BY (1) SHALL BE PER ANNEX A3 OF TPI1-2002 SEC.3. A SEAL ON THIS DRAWING INDICATES ACCEPTANCE OF PROFESSIONAL ENGINEERING RESPONSIBILITY SOLELY FOR THE TRUSS COMPONENT DESIGN SHOWN. THE SUITABILITY AND USE OF THIS COMPONENT FOR ANY BUILDING IS THE RESPONSIBILITY OF THE BUILDING DESIGNER PER ANSI/TPI 1 SEC. 2.

ARTHUR R. FISHER LICENSE No.59687 STATE OF FLORIDA PROFESSIONAL ENGINEER
Feb 27 '06

TC LL	20.0 PSF	REF	R487-- 32013
TC DL	10.0 PSF	DATE	02/27/06
BC DL	10.0 PSF	DRW	HCUSR487 06058037
BC LL	0.0 PSF	HC-ENG	JB/AF
TOT.LD.	40.0 PSF	SEQN-	1867
DUR.FAC.	1.25		
SPACING	SEE ABOVE	JREF-	1SV0487_Z03

Top chord 2x4 SP #2 Dense
Bot chord 2x4 SP #2 Dense
Webs 2x4 SP #3

In lieu of structural panels or rigid ceiling use purlins to brace TC @ 24" OC, BC @ 24" OC.

Sub-fascia beam assumptions: 3-10-8 sub-fascia beam on the 2-0-0 cantilever side. 3-10-8 sub-fascia beam on the 2-0-0 cantilever side.

Deflection meets L/360 live and L/240 total load. Creep increase factor for dead load is 1.50.

Provide (2) 16d common nails(0.162"x3.5"), toe nailed at Top chord.
Provide (2) 16d common nails(0.162"x3.5"), toe nailed at Bot chord.

110 mph wind, 15.00 ft mean hgt, ASCE 7-02, CLOSED bldg, Located anywhere in roof, CAT II, EXP B, wind TC DL=5.0 psf, wind BC DL=5.0 psf.

The following members need concentrated loads at the heel: 3-10-8 span/setback member on the 2-0-0 cant side requires 24 lbs and the 3-10-8 span/setback member on the 2-0-0 cant side requires 24 lbs.

Hipjack supports 3-10-8 setback jacks with 2-0-0 cantilever one face; 2-0-0 cantilever opposite face.

Shim all supports to solid bearing.

R=-47 U=180

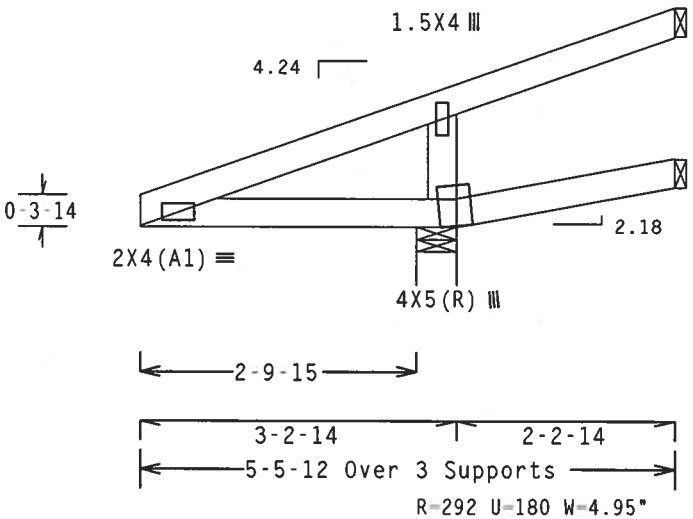

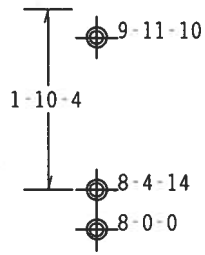

R=-40 U=180

Design Crit: TPI-2002(STD)/FBC

PLT TYP. Wave Cq/RT=1.00(1.25)/10(0) 7.24.1 QTY:1 FL/-/4/-/-/R/- Scale =.5"/Ft.

ALPINE
Alpine Engineered Products, Inc.
1950 Marley Drive
Haines City, FL 33844
FL Certificate of Authorization # 567

WARNING TRUSSES REQUIRE EXTREME CARE IN FABRICATION, HANDLING, SHIPPING, INSTALLING AND BRACING. REFER TO BCSI 1-03 (BUILDING COMPONENT SAFETY INFORMATION), PUBLISHED BY TPI (TRUSS PLATE INSTITUTE, 583 D'ONOFRIO DR., SUITE 200, MADISON, WI 53719) AND WTCA (WOOD TRUSS COUNCIL OF AMERICA, 6300 ENTERPRISE LN, MADISON, WI 53719) FOR SAFETY PRACTICES PRIOR TO PERFORMING THESE FUNCTIONS. UNLESS OTHERWISE INDICATED, TOP CHORD SHALL HAVE PROPERLY ATTACHED STRUCTURAL PANELS AND BOTTOM CHORD SHALL HAVE A PROPERLY ATTACHED RIGID CEILING.

IMPORTANTFURNISH A COPY OF THIS DESIGN TO THE INSTALLATION CONTRACTOR. ALPINE ENGINEERED PRODUCTS, INC. SHALL NOT BE RESPONSIBLE FOR ANY DEVIATION FROM THIS DESIGN; ANY FAILURE TO BUILD THE TRUSS IN CONFORMANCE WITH TPI; OR FABRICATING, HANDLING, SHIPPING, INSTALLING & BRACING OF TRUSSES. DESIGN CONFORMS WITH APPLICABLE PROVISIONS OF NDS (NATIONAL DESIGN SPEC. BY AF&PA) AND TPI. ALPINE CONNECTOR PLATES ARE MADE OF 20/18/16GA (W.H/S/K) ASTM A653 GRADE 40/60 (W. K/H.S) GALV. STEEL. APPLY PLATES TO EACH FACE OF TRUSS AND, UNLESS OTHERWISE LOCATED ON THIS DESIGN, POSITION PER DRAWINGS 160A-Z. ANY INSPECTION OF PLATES FOLLOWED BY (1) SHALL BE PER ANNEX A3 OF TPI1-2002 SEC.3. A SEAL ON THIS DRAWING INDICATES ACCEPTANCE OF PROFESSIONAL ENGINEERING RESPONSIBILITY SOLELY FOR THE TRUSS COMPONENT DESIGN SHOWN. THE SUITABILITY AND USE OF THIS COMPONENT FOR ANY BUILDING IS THE RESPONSIBILITY OF THE BUILDING DESIGNER PER ANSI/TPI 1 SEC. 2.

ARTHUR R. FISHER
LICENSE
No. 59687
STATE OF FLORIDA
PROFESSIONAL ENGINEER
Feb 27 '06

TC LL	20.0 PSF	REF R487-- 32014
TC DL	10.0 PSF	DATE 02/27/06
BC DL	10.0 PSF	DRW HCUSR487 06058044
BC LL	0.0 PSF	HC-ENG JB/AF
TOT.LD.	40.0 PSF	SEQN- 1642
DUR.FAC.	1.25	
SPACING	SEE ABOVE	JREF- 1SV0487_Z03

Top chord 2x4 SP #2 Dense
Bot chord 2x4 SP #2 Dense
Webs 2x4 SP #3

In lieu of structural panels or rigid ceiling use purlins to brace TC @ 24" OC, BC @ 24" OC.

Shim all supports to solid bearing.

110 mph wind, 15.00 ft mean hgt, ASCE 7-02, CLOSED bldg, Located anywhere in roof, CAT II, EXP B, wind TC DL=5.0 psf, wind BC DL=5.0 psf.

Deflection meets L/360 live and L/240 total load. Creep increase factor for dead load is 1.50.

Provide (2) 16d common nails(0.162"x3.5"), toe nailed at Top chord.
Provide (2) 16d common nails(0.162"x3.5"), toe nailed at Bot chord.

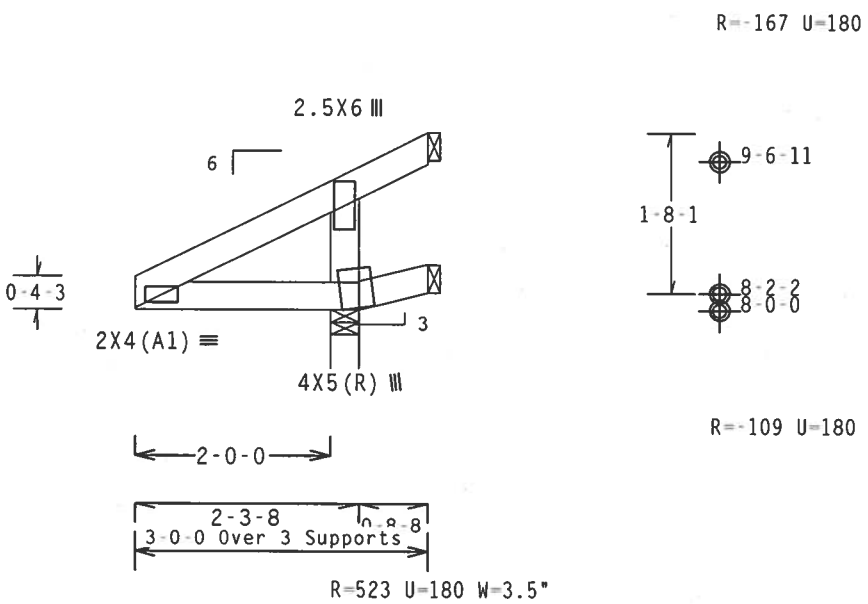

Design Crit: TPI-2002(STD)/FBC
PLT TYP. Wave Cq/RT=1.00(1.25)/10(0) 7.24.[illegible] QTY:1 FL/-/4/-/-/R/- Scale =.5"/Ft.

ALPINE
Alpine Engineered Products, Inc.
1950 Marley Drive
Haines City, FL 33844
FL Certificate of Authorization # 567

WARNING TRUSSES REQUIRE EXTREME CARE IN FABRICATION, HANDLING, SHIPPING, INSTALLING AND BRACING. REFER TO BCSI 1-03 (BUILDING COMPONENT SAFETY INFORMATION), PUBLISHED BY TPI (TRUSS PLATE INSTITUTE, 583 D'ONOFRIO DR., SUITE 200, MADISON, WI 53719) AND WTCA (WOOD TRUSS COUNCIL OF AMERICA, 6300 ENTERPRISE LN. MADISON, WI 53719) FOR SAFETY PRACTICES PRIOR TO PERFORMING THESE FUNCTIONS. UNLESS OTHERWISE INDICATED, TOP CHORD SHALL HAVE PROPERLY ATTACHED STRUCTURAL PANELS AND BOTTOM CHORD SHALL HAVE A PROPERLY ATTACHED RIGID CEILING.

IMPORTANT FURNISH A COPY OF THIS DESIGN TO THE INSTALLATION CONTRACTOR. ALPINE ENGINEERED PRODUCTS, INC. SHALL NOT BE RESPONSIBLE FOR ANY DEVIATION FROM THIS DESIGN; ANY FAILURE TO BUILD THE TRUSS IN CONFORMANCE WITH TPI; OR FABRICATING, HANDLING, SHIPPING, INSTALLING & BRACING OF TRUSSES. DESIGN CONFORMS WITH APPLICABLE PROVISIONS OF NDS (NATIONAL DESIGN SPEC. BY AF&PA) AND TPI. ALPINE CONNECTOR PLATES ARE MADE OF 20/18/16GA (W,H/S/K) ASTM A653 GRADE 40/60 (W, K/H,S) GALV. STEEL. APPLY PLATES TO EACH FACE OF TRUSS AND, UNLESS OTHERWISE LOCATED ON THIS DESIGN, POSITION PER DRAWINGS 160A-Z. ANY INSPECTION OF PLATES FOLLOWED BY (1) SHALL BE PER ANNEX A3 OF TPI1-2002 SEC.3. A SEAL ON THIS DRAWING INDICATES ACCEPTANCE OF PROFESSIONAL ENGINEERING RESPONSIBILITY SOLELY FOR THE TRUSS COMPONENT DESIGN SHOWN. THE SUITABILITY AND USE OF THIS COMPONENT FOR ANY BUILDING IS THE RESPONSIBILITY OF THE BUILDING DESIGNER PER ANSI/TPI 1 SEC. 2.

ARTHUR R. FISHER LICENSE No 59687 STATE OF FLORIDA PROFESSIONAL ENGINEER
Feb 27 '06

TC LL	20.0 PSF	REF	R487-- 32015
TC DL	10.0 PSF	DATE	02/27/06
BC DL	10.0 PSF	DRW	HCUSR487 06058046
BC LL	0.0 PSF	HC-ENG	JB/AF
TOT.LD.	40.0 PSF	SEQN-	1631
DUR.FAC.	1.25		
SPACING	24.0"	JREF-	1SV0487_Z03

(6-083--Doug Morgan Construction #22 Stonehenge II -- , ** - J5)

Top chord 2x4 SP #2 Dense
Bot chord 2x4 SP #2 Dense
Webs 2x4 SP #3

SPECIAL LOADS
------(LUMBER DUR.FAC.=1.25 / PLATE DUR.FAC.=1.25)
TC - From 62 PLF at 0.00 to 62 PLF at 5.00
BC - From 20 PLF at 0.00 to 20 PLF at 5.00
TC - 45 LB Conc. Load at 0.00

Provide (2) 16d common nails(0.162"x3.5"), toe nailed at Top chord.
Provide (2) 16d common nails(0.162"x3.5"), toe nailed at Bot chord.

110 mph wind, 15.00 ft mean hgt, ASCE 7-02, CLOSED bldg, not located within 4.50 ft from roof edge, CAT II, EXP B, wind TC DL=5.0 psf, wind BC DL=5.0 psf.

In lieu of structural panels or rigid ceiling use purlins to brace TC @ 24" OC, BC @ 24" OC.

Deflection meets L/360 live and L/240 total load. Creep increase factor for dead load is 1.50.

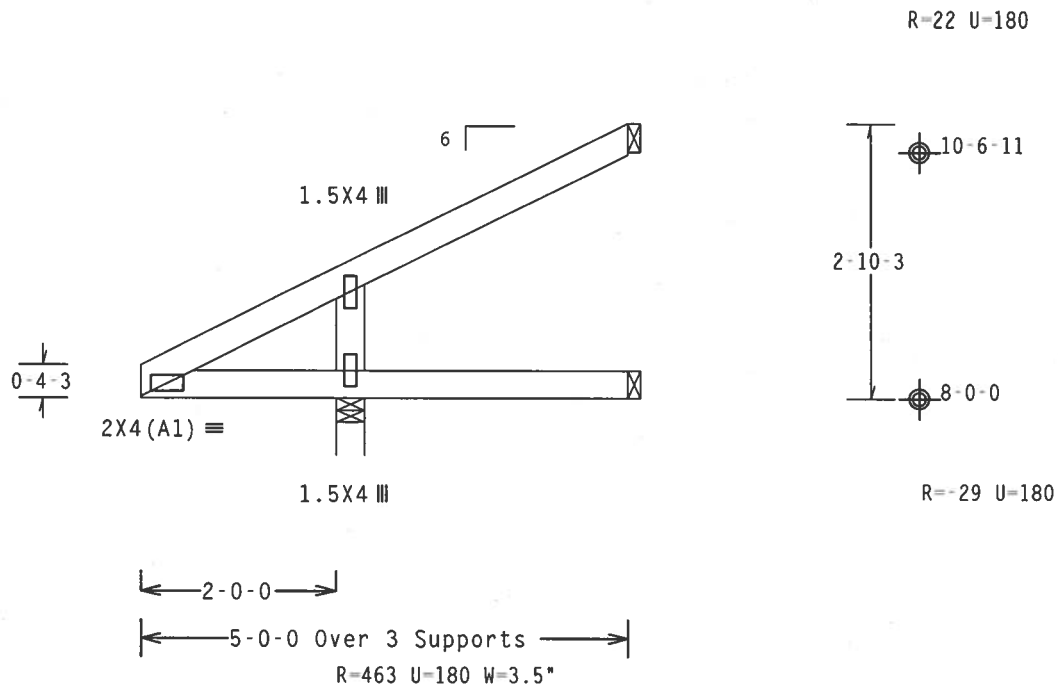

Design Crit: TPI-2002(STD)/FBC

PLT TYP. Wave Cq/RT=1.00(1.25)/10(0) 7.24.12 QTY:10 FL/-/4/-/-/R/- Scale =.5"/Ft.

ALPINE
Alpine Engineered Products, Inc.
1950 Marley Drive
Haines City, FL 33844
FL Certificate of Authorization # 567

WARNING TRUSSES REQUIRE EXTREME CARE IN FABRICATION, HANDLING, SHIPPING, INSTALLING AND BRACING. REFER TO BCSI 1-03 (BUILDING COMPONENT SAFETY INFORMATION), PUBLISHED BY TPI (TRUSS PLATE INSTITUTE, 583 D'ONOFRIO DR., SUITE 200, MADISON, WI 53719) AND WTCA (WOOD TRUSS COUNCIL OF AMERICA, 6300 ENTERPRISE LN, MADISON, WI 53719) FOR SAFETY PRACTICES PRIOR TO PERFORMING THESE FUNCTIONS. UNLESS OTHERWISE INDICATED, TOP CHORD SHALL HAVE PROPERLY ATTACHED STRUCTURAL PANELS AND BOTTOM CHORD SHALL HAVE A PROPERLY ATTACHED RIGID CEILING.

IMPORTANTFURNISH A COPY OF THIS DESIGN TO THE INSTALLATION CONTRACTOR. ALPINE ENGINEERED PRODUCTS, INC. SHALL NOT BE RESPONSIBLE FOR ANY DEVIATION FROM THIS DESIGN; ANY FAILURE TO BUILD THE TRUSS IN CONFORMANCE WITH TPI; OR FABRICATING, HANDLING, SHIPPING, INSTALLING & BRACING OF TRUSSES. DESIGN CONFORMS WITH APPLICABLE PROVISIONS OF NDS (NATIONAL DESIGN SPEC. BY AF&PA) AND TPI. ALPINE CONNECTOR PLATES ARE MADE OF 20/18/16GA (W,H/S/K) ASTM A653 GRADE 40/60 (W, K/H,S) GALV. STEEL. APPLY PLATES TO EACH FACE OF TRUSS AND, UNLESS OTHERWISE LOCATED ON THIS DESIGN, POSITION PER DRAWINGS 160A-Z. ANY INSPECTION OF PLATES FOLLOWED BY (I) SHALL BE PER ANNEX A3 OF TPI1-2002 SEC.3. A SEAL ON THIS DRAWING INDICATES ACCEPTANCE OF PROFESSIONAL ENGINEERING RESPONSIBILITY SOLELY FOR THE TRUSS COMPONENT DESIGN SHOWN. THE SUITABILITY AND USE OF THIS COMPONENT FOR ANY BUILDING IS THE RESPONSIBILITY OF THE BUILDING DESIGNER PER ANSI/TPI 1 SEC. 2.

ARTHUR R. FISHER LICENSE No. 58687 STATE OF FLORIDA PROFESSIONAL ENGINEER
Feb 27, 06

TC LL	20.0 PSF	REF	R487-- 32016
TC DL	10.0 PSF	DATE	02/27/06
BC DL	10.0 PSF	DRW	HCUSR487 06058049
BC LL	0.0 PSF	HC-ENG	JB/AF
TOT.LD.	40.0 PSF	SEQN-	1681
DUR.FAC.	1.25		
SPACING	SEE ABOVE	JREF-	1SV0487_Z03

Top chord 2x4 SP #2 Dense
Bot chord 2x4 SP #2 Dense
Webs 2x4 SP #3

In lieu of structural panels or rigid ceiling use purlins to brace TC @ 24" OC, BC @ 24" OC.

Provide (2) 16d common nails(0.162"x3.5"), toe nailed at Top chord.
Provide (2) 16d common nails(0.162"x3.5"), toe nailed at Bot chord.

110 mph wind, 15.00 ft mean hgt, ASCE 7-02, CLOSED bldg, Located anywhere in roof, CAT II, EXP B, wind TC DL=5.0 psf, wind BC DL=5.0 psf.

Deflection meets L/360 live and L/240 total load. Creep increase factor for dead load is 1.50.

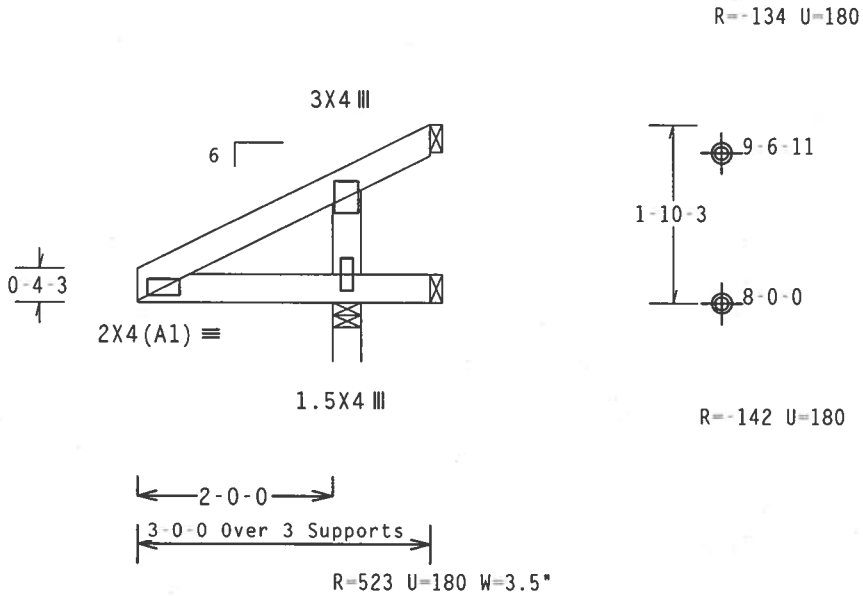

Design Crit: TPI-2002(STD)/FBC

PLT TYP. Wave

Cq/RT=1.00(1.25)/10(0) 7.24.12 QTY:16 FL/-/4/-/-/R/- Scale =.5"/Ft.

ALPINE
Alpine Engineered Products, Inc.
1950 Marley Drive
Haines City, FL 33844
FL Certificate of Authorization # 567

WARNING TRUSSES REQUIRE EXTREME CARE IN FABRICATION, HANDLING, SHIPPING, INSTALLING AND BRACING. REFER TO BCSI 1-03 (BUILDING COMPONENT SAFETY INFORMATION), PUBLISHED BY TPI (TRUSS PLATE INSTITUTE, 583 D'ONOFRIO DR., SUITE 200, MADISON, WI 53719) AND WTCA (WOOD TRUSS COUNCIL OF AMERICA, 6300 ENTERPRISE LN. MADISON, WI 53719) FOR SAFETY PRACTICES PRIOR TO PERFORMING THESE FUNCTIONS. UNLESS OTHERWISE INDICATED, TOP CHORD SHALL HAVE PROPERLY ATTACHED STRUCTURAL PANELS AND BOTTOM CHORD SHALL HAVE A PROPERLY ATTACHED RIGID CEILING.

IMPORTANTFURNISH A COPY OF THIS DESIGN TO THE INSTALLATION CONTRACTOR. ALPINE ENGINEERED PRODUCTS, INC. SHALL NOT BE RESPONSIBLE FOR ANY DEVIATION FROM THIS DESIGN; ANY FAILURE TO BUILD THE TRUSS IN CONFORMANCE WITH TPI; OR FABRICATING, HANDLING, SHIPPING, INSTALLING & BRACING OF TRUSSES. DESIGN CONFORMS WITH APPLICABLE PROVISIONS OF NDS (NATIONAL DESIGN SPEC. BY AF&PA) AND TPI. ALPINE CONNECTOR PLATES ARE MADE OF 20/18/16GA (W.H/S/K) ASTM A653 GRADE 40/60 (W. K/H.S) GALV. STEEL. APPLY PLATES TO EACH FACE OF TRUSS AND, UNLESS OTHERWISE LOCATED ON THIS DESIGN, POSITION PER DRAWINGS 160A-Z. ANY INSPECTION OF PLATES FOLLOWED BY (1) SHALL BE PER ANNEX A3 OF TPI1-2002 SEC.3. A SEAL ON THIS DRAWING INDICATES ACCEPTANCE OF PROFESSIONAL ENGINEERING RESPONSIBILITY SOLELY FOR THE TRUSS COMPONENT DESIGN SHOWN. THE SUITABILITY AND USE OF THIS COMPONENT FOR ANY BUILDING IS THE RESPONSIBILITY OF THE BUILDING DESIGNER PER ANSI/TPI 1 SEC. 2.

ARTHUR R. FISHER LICENSE No. 39687 STATE OF FLORIDA PROFESSIONAL ENGINEER

Feb 27 '06

TC LL	20.0 PSF	REF R487-- 32017
TC DL	10.0 PSF	DATE 02/27/06
BC DL	10.0 PSF	DRW HCUSR487 06058050
BC LL	0.0 PSF	HC-ENG JB/AF
TOT.LD.	40.0 PSF	SEQN- 1609
DUR.FAC.	1.25	
SPACING	24.0"	JREF- 1SV0487_Z03

(6-083--Doug Morgan Construction #22 Stonehenge II -- , ** - J1)

Top chord 2x4 SP #2 Dense
Bot chord 2x4 SP #2 Dense

110 mph wind, 15.00 ft mean hgt, ASCE 7-02, CLOSED bldg, Located anywhere in roof, CAT II, EXP B, wind TC DL=5.0 psf, wind BC DL=5.0 psf.

Deflection meets L/360 live and L/240 total load. Creep increase factor for dead load is 1.50.

** PROVIDE CONNECTION FOR 180# UP OR DOWN AT FASCIA BEAM. FASCIA BEAMS AND THEIR CONNECTIONS TO BE DESIGNED AND FURNISHED BY OTHERS.

SPECIAL LOADS
------(LUMBER DUR.FAC.=1.25 / PLATE DUR.FAC.=1.25)
TC - From 62 PLF at 0.00 to 62 PLF at 1.00
BC - From 4 PLF at 0.00 to 4 PLF at 1.00

In lieu of structural panels or rigid ceiling use purlins to brace TC 24" OC, BC @ 24" OC.

Provide (2) 16d common nails(0.162"x3.5"), toe nailed at Top chord.
Provide (2) 16d common nails(0.162"x3.5"), toe nailed at Bot chord.

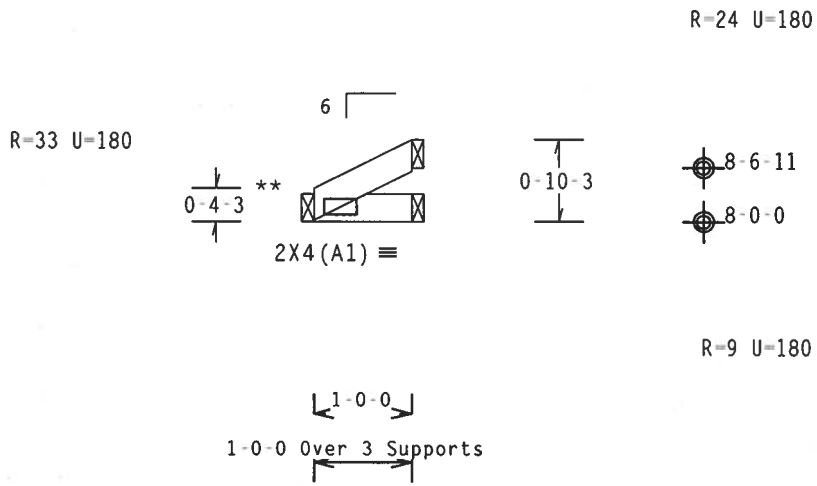

Design Crit: TPI-2002(STD)/FBC

PLT TYP. Wave Cq/RT=1.00(1.25)/10(0) 7.24.[illegible]06 QTY:18 FL/-/4/-/-/R/- Scale =.5"/Ft.

ALPINE
Alpine Engineered Products, Inc.
1950 Marley Drive
Haines City, FL 33844
FL Certificate of Authorization # 567

WARNING TRUSSES REQUIRE EXTREME CARE IN FABRICATION, HANDLING, SHIPPING, INSTALLING AND BRACING. REFER TO BCSI 1-03 (BUILDING COMPONENT SAFETY INFORMATION), PUBLISHED BY TPI (TRUSS PLATE INSTITUTE, 583 D'ONOFRIO DR., SUITE 200, MADISON, WI 53719) AND WTCA (WOOD TRUSS COUNCIL OF AMERICA, 6300 ENTERPRISE LN, MADISON, WI 53719) FOR SAFETY PRACTICES PRIOR TO PERFORMING THESE FUNCTIONS. UNLESS OTHERWISE INDICATED, TOP CHORD SHALL HAVE PROPERLY ATTACHED STRUCTURAL PANELS AND BOTTOM CHORD SHALL HAVE A PROPERLY ATTACHED RIGID CEILING.

IMPORTANTFURNISH A COPY OF THIS DESIGN TO THE INSTALLATION CONTRACTOR. ALPINE ENGINEERED PRODUCTS, INC. SHALL NOT BE RESPONSIBLE FOR ANY DEVIATION FROM THIS DESIGN; ANY FAILURE TO BUILD THE TRUSS IN CONFORMANCE WITH TPI; OR FABRICATING, HANDLING, SHIPPING, INSTALLING & BRACING OF TRUSSES. DESIGN CONFORMS WITH APPLICABLE PROVISIONS OF NDS (NATIONAL DESIGN SPEC. BY AF&PA) AND TPI. ALPINE CONNECTOR PLATES ARE MADE OF 20/18/16GA (W.H/S/K) ASTM A653 GRADE 40/60 (W. K/H.S) GALV. STEEL. APPLY PLATES TO EACH FACE OF TRUSS AND, UNLESS OTHERWISE LOCATED ON THIS DESIGN, POSITION PER DRAWINGS 160A-Z. ANY INSPECTION OF PLATES FOLLOWED BY (1) SHALL BE PER ANNEX A3 OF TPI1-2002 SEC.3. A SEAL ON THIS DRAWING INDICATES ACCEPTANCE OF PROFESSIONAL ENGINEERING RESPONSIBILITY SOLELY FOR THE TRUSS COMPONENT DESIGN SHOWN. THE SUITABILITY AND USE OF THIS COMPONENT FOR ANY BUILDING IS THE RESPONSIBILITY OF THE BUILDING DESIGNER PER ANSI/TPI 1 SEC. 2.

ARTHUR R. FISHER LICENSE No. 59687 STATE OF FLORIDA PROFESSIONAL ENGINEER
Feb 2[illegible] 06

TC LL	20.0 PSF	REF R487-- 32018
TC DL	10.0 PSF	DATE 02/27/06
BC DL	10.0 PSF	DRW HCUSR487 06058002
BC LL	0.0 PSF	HC-ENG JB/AF *
TOT.LD.	40.0 PSF	SEQN- 1618
DUR.FAC.	1.25	
SPACING	24.0"	JREF- 1SV0487_Z03

(6-083--Doug Morgan Construction #22 Stonehenge II -- , ** - K1)

Top chord 2x4 SP #2 Dense
Bot chord 2x4 SP #2 Dense
Webs 2x4 SP #3

SPECIAL LOADS
------(LUMBER DUR.FAC.=1.25 / PLATE DUR.FAC.=1.25)
TC - From 62 PLF at 0.00 to 62 PLF at 5.00
TC - From 70 PLF at 5.00 to 70 PLF at 9.50
TC - From 62 PLF at 9.50 to 62 PLF at 14.50
BC - From 20 PLF at 0.00 to 20 PLF at 5.00
BC - From 5 PLF at 5.00 to 5 PLF at 9.50
BC - From 20 PLF at 9.50 to 20 PLF at 14.50
TC - 45 LB Conc. Load at 0.00, 14.50
BC - 47 LB Conc. Load at 5.00, 9.50

110 mph wind, 15.00 ft mean hgt, ASCE 7-02, CLOSED bldg, not located within 4.50 ft from roof edge, CAT II, EXP B, wind TC DL=5.0 psf, wind BC DL=5.0 psf.

In lieu of structural panels or rigid ceiling use purlins to brace TC @ 24" OC, BC @ 24" OC.

Deflection meets L/360 live and L/240 total load. Creep increase factor for dead load is 1.50.

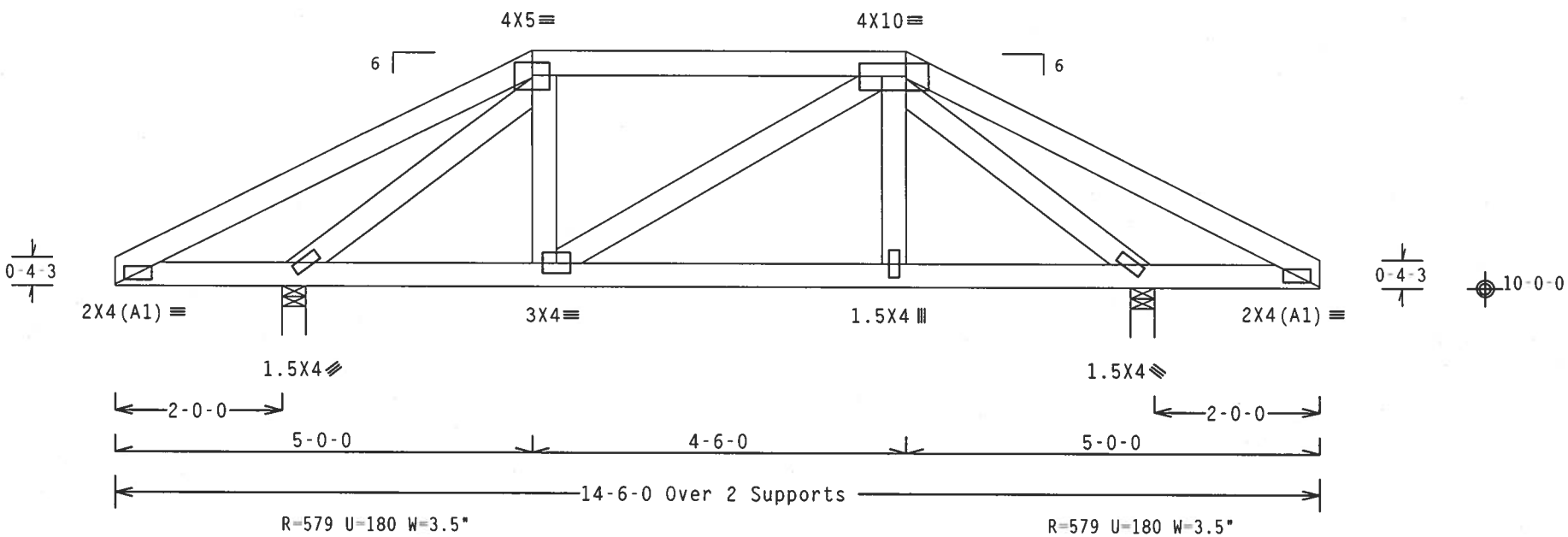

Design Crit: TPI-2002(STD)/FBC
PLT TYP. Wave Cq/RT=1.00(1.25)/10(0) 7.24.12 QTY:1 FL/-/4/-/-/R/- Scale =.5"/Ft.

ALPINE
Alpine Engineered Products, Inc.
1950 Marley Drive
Haines City, FL 33844
FL Certificate of Authorization # 567

WARNING TRUSSES REQUIRE EXTREME CARE IN FABRICATION, HANDLING, SHIPPING, INSTALLING AND BRACING. REFER TO BCSI 1-03 (BUILDING COMPONENT SAFETY INFORMATION), PUBLISHED BY TPI (TRUSS PLATE INSTITUTE, 583 D'ONOFRIO DR., SUITE 200, MADISON, WI 53719) AND WTCA (WOOD TRUSS COUNCIL OF AMERICA, 6300 ENTERPRISE LN, MADISON, WI 53719) FOR SAFETY PRACTICES PRIOR TO PERFORMING THESE FUNCTIONS. UNLESS OTHERWISE INDICATED, TOP CHORD SHALL HAVE PROPERLY ATTACHED STRUCTURAL PANELS AND BOTTOM CHORD SHALL HAVE A PROPERLY ATTACHED RIGID CEILING.

IMPORTANTFURNISH A COPY OF THIS DESIGN TO THE INSTALLATION CONTRACTOR. ALPINE ENGINEERED PRODUCTS, INC. SHALL NOT BE RESPONSIBLE FOR ANY DEVIATION FROM THIS DESIGN; ANY FAILURE TO BUILD THE TRUSS IN CONFORMANCE WITH TPI; OR FABRICATING, HANDLING, SHIPPING, INSTALLING & BRACING OF TRUSSES. DESIGN CONFORMS WITH APPLICABLE PROVISIONS OF NDS (NATIONAL DESIGN SPEC. BY AF&PA) AND TPI. ALPINE CONNECTOR PLATES ARE MADE OF 20/18/16GA (W,H/S/K) ASTM A653 GRADE 40/60 (W, K/H,S) GALV. STEEL. APPLY PLATES TO EACH FACE OF TRUSS AND, UNLESS OTHERWISE LOCATED ON THIS DESIGN, POSITION PER DRAWINGS 160A-Z. ANY INSPECTION OF PLATES FOLLOWED BY (1) SHALL BE PER ANNEX A3 OF TPI1-2002 SEC.3. A SEAL ON THIS DRAWING INDICATES ACCEPTANCE OF PROFESSIONAL ENGINEERING RESPONSIBILITY SOLELY FOR THE TRUSS COMPONENT DESIGN SHOWN. THE SUITABILITY AND USE OF THIS COMPONENT FOR ANY BUILDING IS THE RESPONSIBILITY OF THE BUILDING DESIGNER PER ANSI/TPI 1 SEC. 2.

ARTHUR B. FISHER LICENSE No. 59687 STATE OF FLORIDA PROFESSIONAL ENGINEER
Feb 27 '06

TC LL	20.0 PSF	REF	R487-- 32019
TC DL	10.0 PSF	DATE	02/27/06
BC DL	10.0 PSF	DRW	HCUSR487 06058011
BC LL	0.0 PSF	HC-ENG	JB/AF
TOT.LD.	40.0 PSF	SEQN-	1665
DUR.FAC.	1.25		
SPACING	SEE ABOVE	JREF-	1SV0487_Z03

(6-083--Doug Morgan Construction #22 Stonehenge II -- , ** - K2)

Top chord 2x4 SP #2 Dense
Bot chord 2x4 SP #2 Dense
Webs 2x4 SP #3

In lieu of structural panels or rigid ceiling use purlins to brace TC @ 24" OC, BC @ 24" OC.

110 mph wind, 15.00 ft mean hgt, ASCE 7-02, CLOSED bldg, not located within 4.50 ft from roof edge, CAT II, EXP B, wind TC DL=5.0 psf, wind BC DL=5.0 psf.

Deflection meets L/360 live and L/240 total load. Creep increase factor for dead load is 1.50.

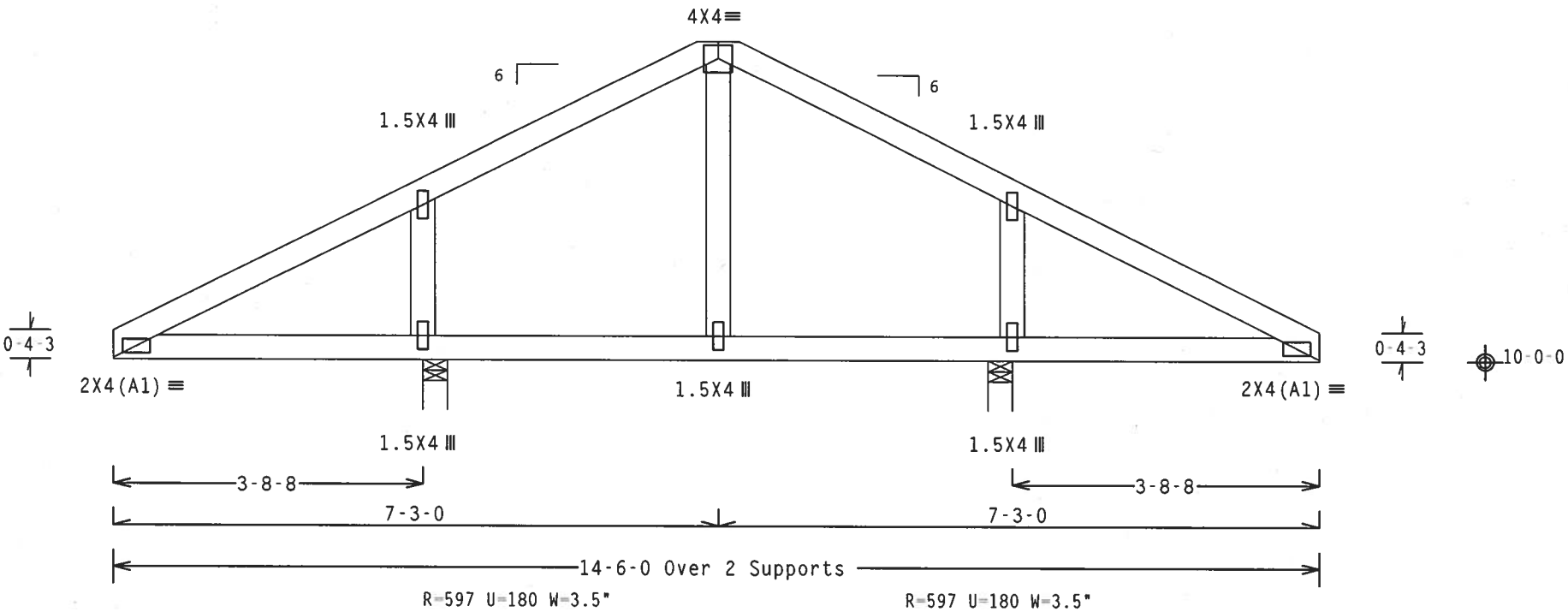

Design Crit: TPI-2002(STD)/FBC

PLT TYP. Wave

Cq/RT=1.00(1.25)/10(0) 7.24.1 QTY:1 FL/-/4/-/-/R/- Scale =.5"/Ft.

ALPINE

Alpine Engineered Products, Inc.
1950 Marley Drive
Haines City, FL 33844
FL Certificate of Authorization # 567

WARNING TRUSSES REQUIRE EXTREME CARE IN FABRICATION, HANDLING, SHIPPING, INSTALLING AND BRACING. REFER TO BCSI 1-03 (BUILDING COMPONENT SAFETY INFORMATION), PUBLISHED BY TPI (TRUSS PLATE INSTITUTE, 583 D'ONOFRIO DR., SUITE 200, MADISON, WI 53719) AND WTCA (WOOD TRUSS COUNCIL OF AMERICA, 6300 ENTERPRISE LN, MADISON, WI 53719) FOR SAFETY PRACTICES PRIOR TO PERFORMING THESE FUNCTIONS. UNLESS OTHERWISE INDICATED, TOP CHORD SHALL HAVE PROPERLY ATTACHED STRUCTURAL PANELS AND BOTTOM CHORD SHALL HAVE A PROPERLY ATTACHED RIGID CEILING.

IMPORTANTFURNISH A COPY OF THIS DESIGN TO THE INSTALLATION CONTRACTOR. ALPINE ENGINEERED PRODUCTS, INC. SHALL NOT BE RESPONSIBLE FOR ANY DEVIATION FROM THIS DESIGN; ANY FAILURE TO BUILD THE TRUSS IN CONFORMANCE WITH TPI; OR FABRICATING, HANDLING, SHIPPING, INSTALLING & BRACING OF TRUSSES. DESIGN CONFORMS WITH APPLICABLE PROVISIONS OF NDS (NATIONAL DESIGN SPEC. BY AF&PA) AND TPI. ALPINE CONNECTOR PLATES ARE MADE OF 20/18/16GA (W,H/S/K) ASTM A653 GRADE 40/60 (W, K/H,S) GALV. STEEL. APPLY PLATES TO EACH FACE OF TRUSS AND, UNLESS OTHERWISE LOCATED ON THIS DESIGN, POSITION PER DRAWINGS 160A-Z. ANY INSPECTION OF PLATES FOLLOWED BY (1) SHALL BE PER ANNEX A3 OF TPI1-2002 SEC.3. A SEAL ON THIS DRAWING INDICATES ACCEPTANCE OF PROFESSIONAL ENGINEERING RESPONSIBILITY SOLELY FOR THE TRUSS COMPONENT DESIGN SHOWN. THE SUITABILITY AND USE OF THIS COMPONENT FOR ANY BUILDING IS THE RESPONSIBILITY OF THE BUILDING DESIGNER PER ANSI/TPI 1 SEC. 2.

ARTHUR B. FISHER
LICENSE
No. 59687
STATE OF FLORIDA
PROFESSIONAL ENGINEER

Feb 27 '06

TC LL	20.0 PSF	REF R487-- 32020
TC DL	10.0 PSF	DATE 02/27/06
BC DL	10.0 PSF	DRW HCUSR487 06058015
BC LL	0.0 PSF	HC-ENG JB/AF
TOT.LD.	40.0 PSF	SEQN- 1670
DUR.FAC.	1.25	
SPACING	24.0"	JREF- 1SV0487_Z03

Top chord 2x4 SP #2 Dense
Bot chord 2x4 SP #2 Dense
Webs 2x4 SP #3

End verticals not exposed to wind pressure.

Deflection meets L/360 live and L/240 total load. Creep increase factor for dead load is 1.50.

110 mph wind, 15.00 ft mean hgt, ASCE 7-02, CLOSED bldg, not located within 4.50 ft from roof edge, CAT II, EXP B, wind TC DL=5.0 psf, wind BC DL=5.0 psf.

In lieu of structural panels or rigid ceiling use purlins to brace TC @ 24" OC, BC @ 24" OC.

Fasten rated sheathing to one face of this frame.

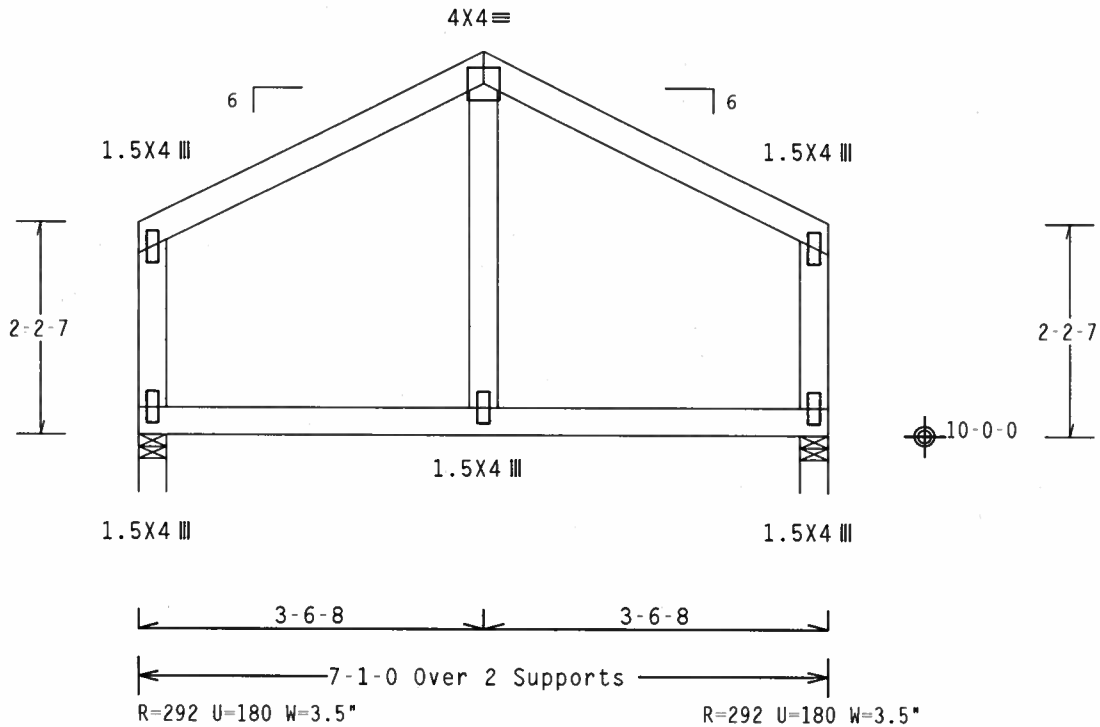

Design Crit: TPI-2002(STD)/FBC
PLT TYP. Wave
Cq/RT=1.00(1.25)/10(0) 7.24.1 QTY:1 FL/-/4/-/-/R/- Scale =.5"/Ft.

ALPINE
Alpine Engineered Products, Inc.
1950 Marley Drive
Haines City, FL 33844
FL Certificate of Authorization # 567

WARNING TRUSSES REQUIRE EXTREME CARE IN FABRICATION, HANDLING, SHIPPING, INSTALLING AND BRACING. REFER TO BCSI 1-03 (BUILDING COMPONENT SAFETY INFORMATION), PUBLISHED BY TPI (TRUSS PLATE INSTITUTE, 583 D'ONOFRIO DR., SUITE 200, MADISON, WI 53719) AND WTCA (WOOD TRUSS COUNCIL OF AMERICA, 6300 ENTERPRISE LN, MADISON, WI 53719) FOR SAFETY PRACTICES PRIOR TO PERFORMING THESE FUNCTIONS. UNLESS OTHERWISE INDICATED, TOP CHORD SHALL HAVE PROPERLY ATTACHED STRUCTURAL PANELS AND BOTTOM CHORD SHALL HAVE A PROPERLY ATTACHED RIGID CEILING.

IMPORTANTFURNISH A COPY OF THIS DESIGN TO THE INSTALLATION CONTRACTOR. ALPINE ENGINEERED PRODUCTS, INC. SHALL NOT BE RESPONSIBLE FOR ANY DEVIATION FROM THIS DESIGN; ANY FAILURE TO BUILD THE TRUSS IN CONFORMANCE WITH TPI; OR FABRICATING, HANDLING, SHIPPING, INSTALLING & BRACING OF TRUSSES. DESIGN CONFORMS WITH APPLICABLE PROVISIONS OF NDS (NATIONAL DESIGN SPEC. BY AF&PA) AND TPI. ALPINE CONNECTOR PLATES ARE MADE OF 20/18/16GA (W,H/S/K) ASTM A653 GRADE 40/60 (W, K/H,S) GALV. STEEL. APPLY PLATES TO EACH FACE OF TRUSS AND, UNLESS OTHERWISE LOCATED ON THIS DESIGN, POSITION PER DRAWINGS 160A-Z. ANY INSPECTION OF PLATES FOLLOWED BY (1) SHALL BE PER ANNEX A3 OF TPI1-2002 SEC.3. A SEAL ON THIS DRAWING INDICATES ACCEPTANCE OF PROFESSIONAL ENGINEERING RESPONSIBILITY SOLELY FOR THE TRUSS COMPONENT DESIGN SHOWN. THE SUITABILITY AND USE OF THIS COMPONENT FOR ANY BUILDING IS THE RESPONSIBILITY OF THE BUILDING DESIGNER PER ANSI/TPI 1 SEC. 2.

ARTHUR R. FISHER LICENSE No.59687 STATE OF FLORIDA PROFESSIONAL ENGINEER
Feb 27 '06

TC LL	20.0 PSF	REF R487-- 32021
TC DL	10.0 PSF	DATE 02/27/06
BC DL	10.0 PSF	DRW HCUSR487 06058016
BC LL	0.0 PSF	HC-ENG JB/AF
TOT.LD.	40.0 PSF	SEQN- 1675
DUR.FAC.	1.25	
SPACING	24.0"	JREF- 1SV0487_Z03

(6-083--Doug Morgan Construction #22 Stonehenge II -- , ** - K4G)

Top chord 2x4 SP #2 Dense
Bot chord 2x6 SP #1 Dense
Webs 2x4 SP #3

SPECIAL LOADS
------(LUMBER DUR.FAC.=1.25 / PLATE DUR.FAC.=1.25)
TC - From 62 PLF at 0.00 to 62 PLF at 7.08
BC - From 20 PLF at 0.00 to 20 PLF at 7.08
BC - 1055 LB Conc. Load at 1.35, 3.35, 5.35

End verticals not exposed to wind pressure.

In lieu of structural panels or rigid ceiling use purlins to brace TC @ 24" OC, BC @ 24" OC.

2 COMPLETE TRUSSES REQUIRED

Nailing Schedule: (12d_Common_(0.148"x3.25",_min.)_nails)
Top Chord: 1 Row @12.00" o.c.
Bot Chord: 1 Row @ 4.25" o.c.
Webs : 1 Row @ 4" o.c.
Use equal spacing between rows and stagger nails in each row to avoid splitting.

110 mph wind, 15.00 ft mean hgt, ASCE 7-02, CLOSED bldg, not located within 6.50 ft from roof edge, CAT II, EXP B, wind TC DL=5.0 psf, wind BC DL=5.0 psf.

Deflection meets L/360 live and L/240 total load. Creep increase factor for dead load is 1.50.

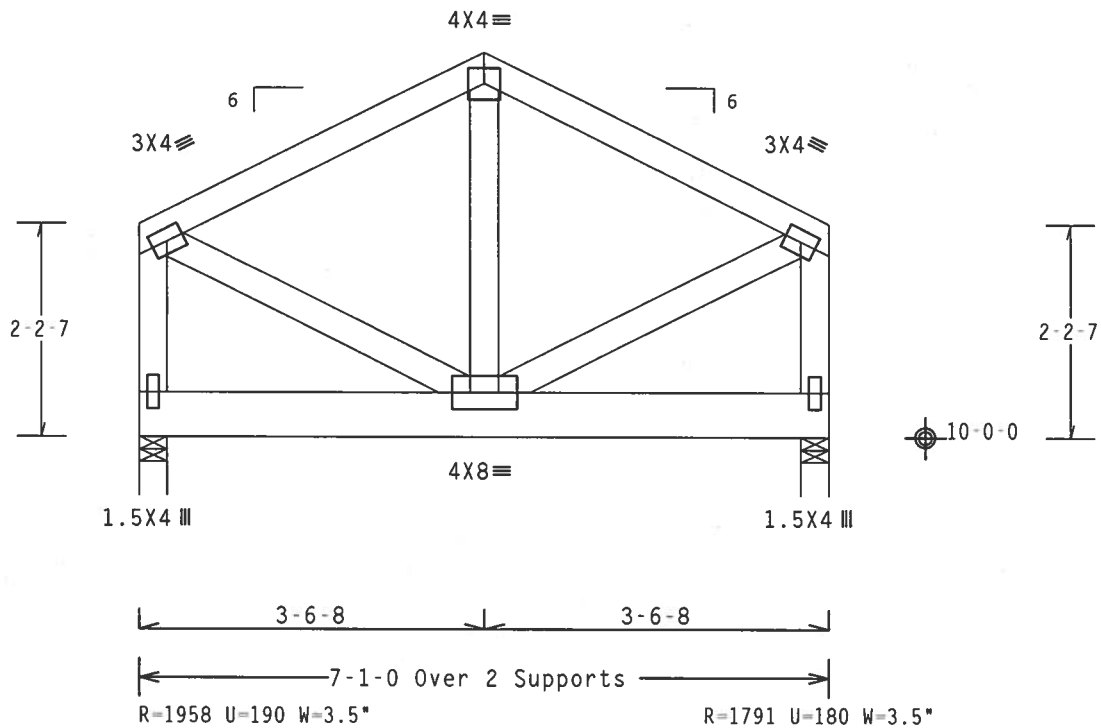

Design Crit: TPI-2002(STD)/FBC
PLT TYP. Wave Cq/RT=1.00(1.25)/10(0) 7.24.1 QTY:1 FL/-/4/-/-/R/- Scale =.5"/Ft.

ALPINE
Alpine Engineered Products, Inc.
1950 Marley Drive
Haines City, FL 33844
FL Certificate of Authorization # 567

WARNING TRUSSES REQUIRE EXTREME CARE IN FABRICATION, HANDLING, SHIPPING, INSTALLING AND BRACING. REFER TO BCSI 1-03 (BUILDING COMPONENT SAFETY INFORMATION), PUBLISHED BY TPI (TRUSS PLATE INSTITUTE, 583 D'ONOFRIO DR., SUITE 200, MADISON, WI 53719) AND WTCA (WOOD TRUSS COUNCIL OF AMERICA, 6300 ENTERPRISE LN, MADISON, WI 53719) FOR SAFETY PRACTICES PRIOR TO PERFORMING THESE FUNCTIONS. UNLESS OTHERWISE INDICATED, TOP CHORD SHALL HAVE PROPERLY ATTACHED STRUCTURAL PANELS AND BOTTOM CHORD SHALL HAVE A PROPERLY ATTACHED RIGID CEILING.

IMPORTANTFURNISH A COPY OF THIS DESIGN TO THE INSTALLATION CONTRACTOR. ALPINE ENGINEERED PRODUCTS, INC. SHALL NOT BE RESPONSIBLE FOR ANY DEVIATION FROM THIS DESIGN; ANY FAILURE TO BUILD THE TRUSS IN CONFORMANCE WITH TPI; OR FABRICATING, HANDLING, SHIPPING, INSTALLING & BRACING OF TRUSSES. DESIGN CONFORMS WITH APPLICABLE PROVISIONS OF NDS (NATIONAL DESIGN SPEC. BY AF&PA) AND TPI. ALPINE CONNECTOR PLATES ARE MADE OF 20/18/16GA (W,H/S/K) ASTM A653 GRADE 40/60 (W, K/H,S) GALV. STEEL. APPLY PLATES TO EACH FACE OF TRUSS AND. UNLESS OTHERWISE LOCATED ON THIS DESIGN, POSITION PER DRAWINGS 160A-Z. ANY INSPECTION OF PLATES FOLLOWED BY (1) SHALL BE PER ANNEX A3 OF TPI1-2002 SEC.3. A SEAL ON THIS DRAWING INDICATES ACCEPTANCE OF PROFESSIONAL ENGINEERING RESPONSIBILITY SOLELY FOR THE TRUSS COMPONENT DESIGN SHOWN. THE SUITABILITY AND USE OF THIS COMPONENT FOR ANY BUILDING IS THE RESPONSIBILITY OF THE BUILDING DESIGNER PER ANSI/TPI 1 SEC. 2.

ARTHUR R. FISHER LICENSE No.59687 STATE OF FLORIDA PROFESSIONAL ENGINEER
Feb 27 '06

TC LL	20.0 PSF	REF R487-- 32022
TC DL	10.0 PSF	DATE 02/27/06
BC DL	10.0 PSF	DRW HCUSR487 06058017
BC LL	0.0 PSF	HC-ENG JB/AF
TOT.LD.	40.0 PSF	SEQN- 86939
DUR.FAC.	1.25	
SPACING	24.0"	JREF- 1SV0487_Z03

Top chord 2x4 SP #2 Dense
Bot chord 2x4 SP #2 Dense
Webs 2x4 SP #3

H = recommended connection based on manufacturer tested capacities and calculations. Conditions may exist that require different connections than indicated. Refer to manufacturer publication for additional information.

#1 hip supports 4-0-0 jacks W/2 panel TC and no end vert.

Deflection meets L/360 live and L/240 total load. Creep increase factor for dead load is 1.50.

110 mph wind, 15.00 ft mean hgt, ASCE 7-02, CLOSED bldg, Located anywhere in roof, CAT II, EXP B, wind TC DL=5.0 psf, wind BC DL=5.0 psf.

Right end vertical not exposed to wind pressure.

In lieu of structural panels or rigid ceiling use purlins to brace TC @ 24" OC, BC @ 24" OC.

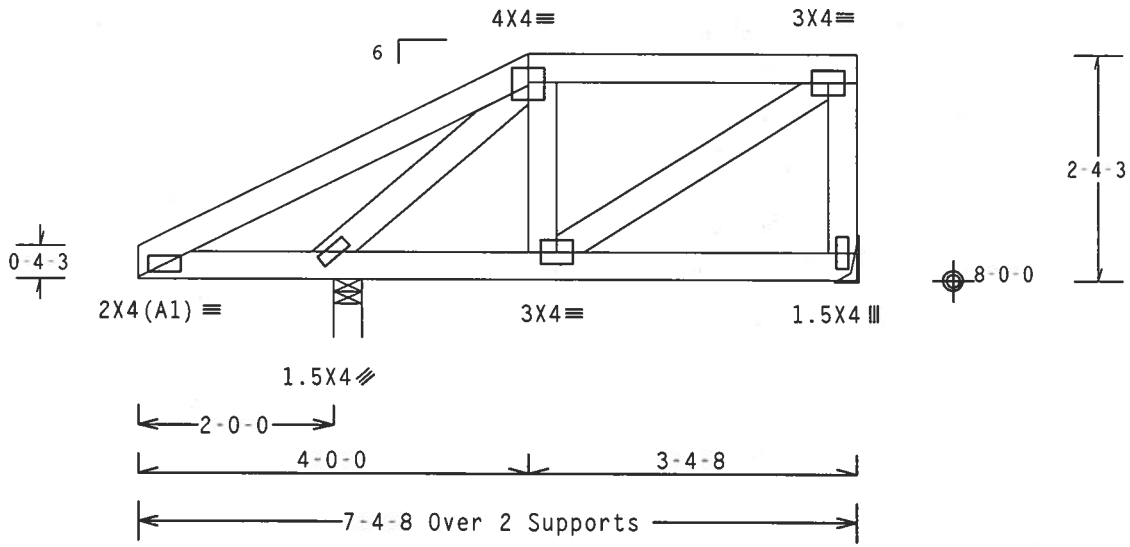

R=386 U=180 W=3.5"

R=14 U=180 H=Simpson LU24
w/ (2) 10d, 0.148"x1.5" nails in Truss
w/ (4) 10d Common, 0.148"x3.0" nails in Girder
Girder is (1)2X6

Design Crit: TPI-2002(STD)/FBC
Cq/RT=1.00(1.25)/10(0) 7.24.1 QTY:1 FL/-/4/-/-/R/-

PLT TYP. Wave

Scale =.5"/Ft.

ALPINE
Alpine Engineered Products, Inc.
1950 Marley Drive
Haines City, FL 33844
FL Certificate of Authorization # 567

WARNING TRUSSES REQUIRE EXTREME CARE IN FABRICATION, HANDLING, SHIPPING, INSTALLING AND BRACING. REFER TO BCSI 1-03 (BUILDING COMPONENT SAFETY INFORMATION), PUBLISHED BY TPI (TRUSS PLATE INSTITUTE, 583 D'ONOFRIO DR., SUITE 200, MADISON, WI 53719) AND WTCA (WOOD TRUSS COUNCIL OF AMERICA, 6300 ENTERPRISE LN. MADISON, WI 53719) FOR SAFETY PRACTICES PRIOR TO PERFORMING THESE FUNCTIONS. UNLESS OTHERWISE INDICATED, TOP CHORD SHALL HAVE PROPERLY ATTACHED STRUCTURAL PANELS AND BOTTOM CHORD SHALL HAVE A PROPERLY ATTACHED RIGID CEILING.

IMPORTANTFURNISH A COPY OF THIS DESIGN TO THE INSTALLATION CONTRACTOR. ALPINE ENGINEERED PRODUCTS, INC. SHALL NOT BE RESPONSIBLE FOR ANY DEVIATION FROM THIS DESIGN; ANY FAILURE TO BUILD THE TRUSS IN CONFORMANCE WITH TPI; OR FABRICATING, HANDLING, SHIPPING, INSTALLING & BRACING OF TRUSSES. DESIGN CONFORMS WITH APPLICABLE PROVISIONS OF NDS (NATIONAL DESIGN SPEC. BY AF&PA) AND TPI. ALPINE CONNECTOR PLATES ARE MADE OF 20/18/16GA (W,H/S/K) ASTM A653 GRADE 40/60 (W, K/H,S) GALV. STEEL. APPLY PLATES TO EACH FACE OF TRUSS AND, UNLESS OTHERWISE LOCATED ON THIS DESIGN, POSITION PER DRAWINGS 160A-Z. ANY INSPECTION OF PLATES FOLLOWED BY (1) SHALL BE PER ANNEX A3 OF TPI1-2002 SEC.3. A SEAL ON THIS DRAWING INDICATES ACCEPTANCE OF PROFESSIONAL ENGINEERING RESPONSIBILITY SOLELY FOR THE TRUSS COMPONENT DESIGN SHOWN. THE SUITABILITY AND USE OF THIS COMPONENT FOR ANY BUILDING IS THE RESPONSIBILITY OF THE BUILDING DESIGNER PER ANSI/TPI 1 SEC. 2.

ARTHUR B. FISHER
LICENSE
No. 59687
STATE OF FLORIDA
PROFESSIONAL ENGINEER

Feb 27 '06

TC LL	20.0 PSF	REF	R487-- 32023
TC DL	10.0 PSF	DATE	02/27/06
BC DL	10.0 PSF	DRW	HCUSR487 06058035
BC LL	0.0 PSF	HC-ENG	JB/AF
TOT.LD.	40.0 PSF	SEQN-	1862
DUR.FAC.	1.25		
SPACING	SEE ABOVE	JREF-	1SV0487_Z03

(6-083--Doug Morgan Construction #22 Stonehenge II - . ** - R2G)

Top chord 2x4 SP #2 Dense
Bot chord 2x6 SP #1 Dense
Webs 2x4 SP #3

110 mph wind, 15.00 ft mean hgt, ASCE 7-02, CLOSED bldg, not located within 4.50 ft from roof edge, CAT II, EXP B, wind TC DL=5.0 psf, wind BC DL=5.0 psf.

H = recommended connection based on manufacturer tested capacities and calculations. Conditions may exist that require different connections than indicated. Refer to manufacturer publication for additional information.

SPECIAL LOADS
------(LUMBER DUR.FAC.=1.25 / PLATE DUR.FAC.=1.25)
TC - From 62 PLF at 0.00 to 62 PLF at 7.38
BC - From 20 PLF at 0.00 to 20 PLF at 7.38
BC - 1513 LB Conc. Load at 3.44, 5.44

Right end vertical not exposed to wind pressure.

In lieu of structural panels or rigid ceiling use purlins to brace TC @ 24" OC, BC @ 24" OC.

Deflection meets L/360 live and L/240 total load. Creep increase factor for dead load is 1.50.

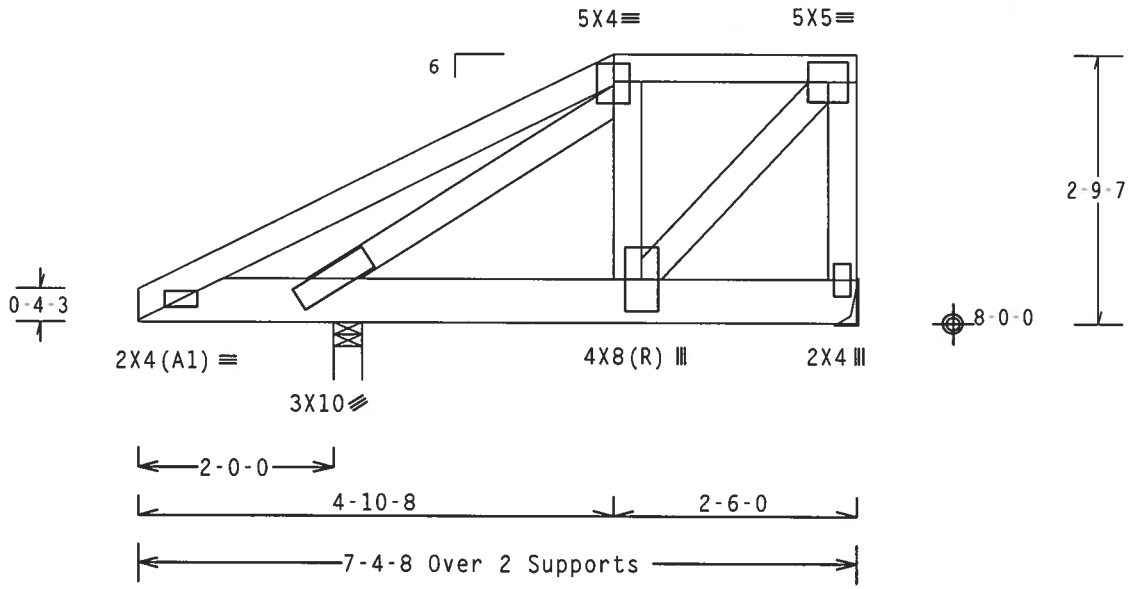

R=2070 U=201 W=3.5"

R=1563 U=180 H=Simpson HUS26
w/ (4) 10d Common, 0.148"x3.0" nails in Truss
w/ (14) 10d Common, 0.148"x3.0" nails in Girder
Girder is (1)2X6 [illegible]

Design Crit: TPI-2002(STD)/FBC
Cq/RT=1.00(1.25)/10(0) 7.24.1[illegible] QTY:1 FL/-/4/-/-/R/-

PLT TYP. Wave

Scale =.5"/Ft.

ALPINE
Alpine Engineered Products, Inc.
1950 Marley Drive
Haines City, FL 33844
FL Certificate of Authorization # 567

WARNING TRUSSES REQUIRE EXTREME CARE IN FABRICATION, HANDLING, SHIPPING, INSTALLING AND BRACING. REFER TO BCSI 1-03 (BUILDING COMPONENT SAFETY INFORMATION), PUBLISHED BY TPI (TRUSS PLATE INSTITUTE, 583 D'ONOFRIO DR., SUITE 200, MADISON, WI 53719) AND WTCA (WOOD TRUSS COUNCIL OF AMERICA, 6300 ENTERPRISE LN, MADISON, WI 53719) FOR SAFETY PRACTICES PRIOR TO PERFORMING THESE FUNCTIONS. UNLESS OTHERWISE INDICATED, TOP CHORD SHALL HAVE PROPERLY ATTACHED STRUCTURAL PANELS AND BOTTOM CHORD SHALL HAVE A PROPERLY ATTACHED RIGID CEILING.

IMPORTANTFURNISH A COPY OF THIS DESIGN TO THE INSTALLATION CONTRACTOR. ALPINE ENGINEERED PRODUCTS, INC. SHALL NOT BE RESPONSIBLE FOR ANY DEVIATION FROM THIS DESIGN; ANY FAILURE TO BUILD THE TRUSS IN CONFORMANCE WITH TPI; OR FABRICATING, HANDLING, SHIPPING, INSTALLING & BRACING OF TRUSSES. DESIGN CONFORMS WITH APPLICABLE PROVISIONS OF NDS (NATIONAL DESIGN SPEC. BY AF&PA) AND TPI. ALPINE CONNECTOR PLATES ARE MADE OF 20/18/16GA (W,H/S/K) ASTM A653 GRADE 40/60 (W, K/H,S) GALV. STEEL. APPLY PLATES TO EACH FACE OF TRUSS AND, UNLESS OTHERWISE LOCATED ON THIS DESIGN, POSITION PER DRAWINGS 160A-Z. ANY INSPECTION OF PLATES FOLLOWED BY (1) SHALL BE PER ANNEX A3 OF TPI1-2002 SEC.3. A SEAL ON THIS DRAWING INDICATES ACCEPTANCE OF PROFESSIONAL ENGINEERING RESPONSIBILITY SOLELY FOR THE TRUSS COMPONENT DESIGN SHOWN. THE SUITABILITY AND USE OF THIS COMPONENT FOR ANY BUILDING IS THE RESPONSIBILITY OF THE BUILDING DESIGNER PER ANSI/TPI 1 SEC. 2.

ARTHUR B. FISHER
LICENSE
No. 59687
STATE OF FLORIDA
PROFESSIONAL ENGINEER

Feb 27, '06

TC LL	20.0 PSF	REF R487-- 32024
TC DL	10.0 PSF	DATE 02/27/06
BC DL	10.0 PSF	DRW HCUSR487 06058028
BC LL	0.0 PSF	HC-ENG JB/AF
TOT.LD.	40.0 PSF	SEQN- 1850
DUR.FAC.	1.25	
SPACING	24.0"	JREF- 1SV0487_Z03

CLB WEB BRACE SUBSTITUTION

THIS DETAIL IS TO BE USED WHEN CONTINUOUS LATERAL BRACING (CLB) IS SPECIFIED ON AN ALPINE TRUSS DESIGN BUT AN ALTERNATIVE WEB BRACING METHOD IS DESIRED.

NOTES:

THIS DETAIL IS ONLY APPLICABLE FOR CHANGING THE SPECIFIED CLB SHOWN ON SINGLE PLY SEALED DESIGNS TO T-BRACING OR SCAB BRACING.

ALTERNATIVE BRACING SPECIFIED IN CHART BELOW MAY BE CONSERVATIVE. FOR MINIMUM ALTERNATIVE BRACING, RE-RUN DESIGN WITH APPROPRIATE BRACING.

WEB MEMBER SIZE	SPECIFIED CLB BRACING	ALTERNATIVE BRACING T OR L-BRACE	ALTERNATIVE BRACING SCAB BRACE
2X3 OR 2X4	1 ROW	2X4	1-2X4
2X3 OR 2X4	2 ROWS	2X6	2-2X4
2X6	1 ROW	2X4	1-2X6
2X6	2 ROWS	2X6	2-2X4(*)
2X8	1 ROW	2X6	1-2X8
2X8	2 ROWS	2X6	2-2X6(*)

T-BRACE, L-BRACE AND SCAB BRACE TO BE SAME SPECIES AND GRADE OR BETTER THAN WEB MEMBER UNLESS SPECIFIED OTHERWISE ON ENGINEER'S SEALED DESIGN.

(*) CENTER SCAB ON WIDE FACE OF WEB. APPLY (1) SCAB TO EACH FACE OF WEB.

T-BRACING OR L-BRACING:

APPLY TO EITHER SIDE OF WEB NARROW FACE

ATTACH WITH 16d NAILS AT 6" O.C.

BRACE IS A MINIMUM 80% OF WEB MEMBER LENGTH

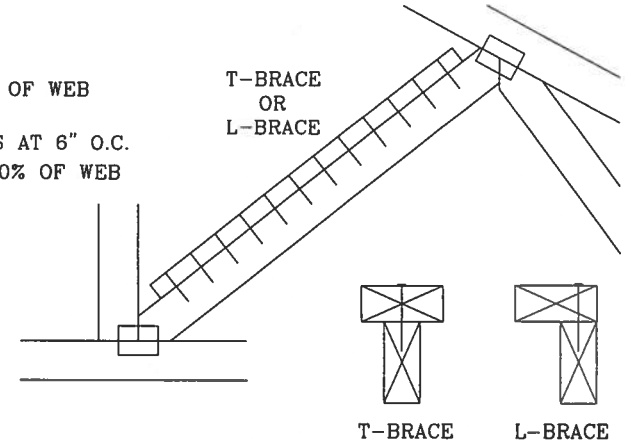

SCAB BRACING:

APPLY SCAB(S) TO WIDE FACE OF WEB.

NO MORE THAN (1) SCAB PER FACE.

ATTACH WITH 10d OR .128"x3" GUN NAILS AT 6" O.C. BRACE IS A MINIMUM 80% OF WEB MEMBER LENGTH

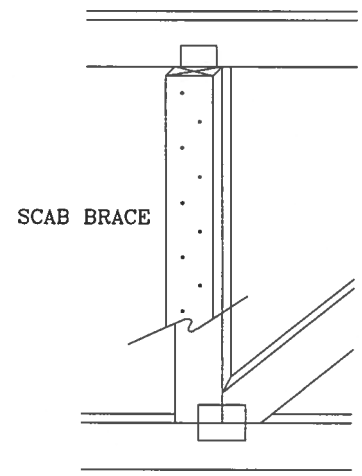

THIS DRAWING REPLACES DRAWING 579,640

ALPINE

ALPINE ENGINEERED PRODUCTS, INC.
POMPANO BEACH, FLORIDA

WARNING TRUSSES REQUIRE EXTREME CARE IN FABRICATING, HANDLING, SHIPPING, INSTALLING AND BRACING. REFER TO BCSI 1-03 (BUILDING COMPONENT SAFETY INFORMATION), PUBLISHED BY TPI (TRUSS PLATE INSTITUTE, 583 D'ONOFRIO DR., SUITE 200, MADISON, WI. 53719) AND WTCA (WOOD TRUSS COUNCIL OF AMERICA, 6300 ENTERPRISE LN, MADISON, WI 53719) FOR SAFETY PRACTICES PRIOR TO PERFORMING THESE FUNCTIONS. UNLESS OTHERWISE INDICATED, TOP CHORD SHALL HAVE PROPERLY ATTACHED STRUCTURAL PANELS AND BOTTOM CHORD SHALL HAVE A PROPERLY ATTACHED RIGID CEILING.

IMPORTANT FURNISH COPY OF THIS DESIGN TO INSTALLATION CONTRACTOR. ALPINE ENGINEERED PRODUCTS, INC., SHALL NOT BE RESPONSIBLE FOR ANY DEVIATION FROM THIS DESIGN; ANY FAILURE TO BUILD THE TRUSS IN CONFORMANCE WITH TPI; OR FABRICATING, HANDLING, SHIPPING, INSTALLING & BRACING OF TRUSSES. DESIGN CONFORMS WITH APPLICABLE PROVISIONS OF NDS (NATIONAL DESIGN SPEC, BY AF&PA) AND TPI. ALPINE CONNECTOR PLATES ARE MADE OF 20/18/16GA (W,H/S/K) ASTM A653 GRADE 40/60 (W,K/H,S) GALV. STEEL. APPLY PLATES TO EACH FACE OF TRUSS AND, UNLESS OTHERWISE LOCATED ON THIS DESIGN, POSITION PER DRAWINGS 160A-Z. ANY INSPECTION OF PLATES FOLLOWED BY (I) SHALL BE PER ANNEX A3 OF TPI 1-2002 SEC. 3. A SEAL ON THIS DRAWING INDICATES ACCEPTANCE OF PROFESSIONAL ENGINEERING RESPONSIBILITY SOLELY FOR THE TRUSS COMPONENT DESIGN SHOWN. THE SUITABILITY AND USE OF THIS COMPONENT FOR ANY BUILDING IS THE RESPONSIBILITY OF THE BUILDING DESIGNER, PER ANSI/TPI 1 SEC. 2.

ARTHUR R. FISHER
LICENSE
No. 59687
STATE OF FLORIDA
PROFESSIONAL ENGINEER

Feb 27

TC LL	PSF	REF	CLB SUBST.
TC DL	PSF	DATE	11/26/03
BC DL	PSF	DRWG	BRCLBSUB1103
BC LL	PSF	-ENG	MLH/KAR
TOT. LD.	PSF		
DUR. FAC.			
SPACING			

BEARING BLOCK NAIL SPACING DETAIL

MINIMUM SPACING FOR SINGLE BEARING BLOCK IS SHOWN. DOUBLE NAIL SPACINGS AND STAGGER NAILING FOR TWO BLOCKS. GREATER SPACING MAY BE REQUIRED TO AVOID SPLITTING.

A – EDGE DISTANCE AND SPACING BETWEEN STAGGERED ROWS OF NAILS (6 NAIL DIAMETERS)
B – SPACING OF NAILS IN A ROW (12 NAIL DIAMETERS)
C – END DISTANCE (15 NAIL DIAMETERS)

IF NAIL HOLES ARE PREBORED, SOME SPACING MAY BE REDUCED BY THE AMOUNTS GIVEN BELOW:
- • SPACING MAY BE REDUCED BY 50%
- •• SPACING MAY BE REDUCED BY 33%

BEARING BLOCK TO BE SAME SIZE AND SPECIES AS BOTTOM CHORD. BLOCKS MAY BE ANY GRADE WITHIN THE SPECIES, PROVIDED THE COMPRESSION PERPENDICULAR TO GRAIN VALUE (Fc-perp) IS AT LEAST THAT OF THE CHORD.

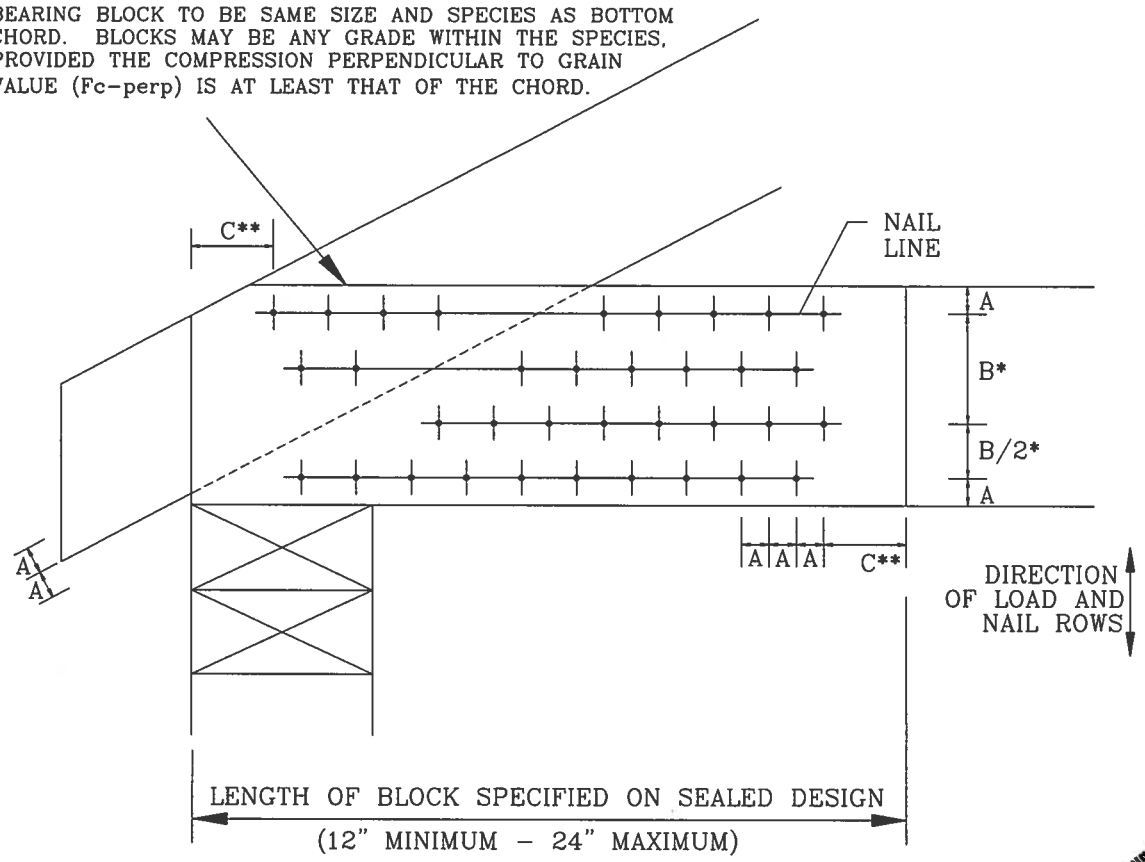

MAXIMUM NUMBER OF NAIL LINES PARALLEL TO GRAIN

NAIL TYPE	CHORD SIZE 2X4	2X6	2X8	2X10	2X12
8d BOX (0.113"X2.5")	3	6	9	12	15
10d BOX (0.128"X3")	3	5	7	10	12
12d BOX (0.128"X3.25")	3	5	7	10	12
16d BOX (0.135"X3.5")	3	5	7	10	12
20d BOX (0.148"X4")	2	4	5	6	8
8d COMMON (0.131"X2.5")	3	5	7	10	12
10d COMMON (0.148"X3")	2	4	6	8	10
12d COMMON (0.148"X3.25")	2	4	6	8	10
16d COMMON (0.162"X3.5")	2	4	6	8	10
0.120"X2.5" GUN	3	6	8	11	14
0.131"X2.5" GUN	3	5	7	10	12
0.120"X3.0" GUN	3	6	8	11	14
0.131"x3.0" GUN	3	5	7	10	12

MINIMUM NAIL SPACING DISTANCES

NAIL TYPE	DISTANCES A	B*	C**
8d BOX (0.113"X2.5")	3/4"	1 3/8"	1 3/4"
10d BOX (0.128"X3")	7/8"	1 5/8"	2"
12d BOX (0.128"X3.25")	7/8"	1 5/8"	2"
16d BOX (0.135"X3.5")	7/8"	1 5/8"	2 1/8"
20d BOX (0.148"X4")	1"	1 7/8"	2 1/4"
8d COMMON (0.131"X2.5")	7/8"	1 5/8"	2"
10d COMMON (0.148"X3")	1"	1 7/8"	2 1/4"
12d COMMON (0.148"X3.25")	1"	1 7/8"	2 1/4"
16d COMMON (0.162"X3.5")	1'	2"	2 1/2"
0.120"X2.5" GUN	3/4"	1 1/2"	1 7/8"
0.131"X2.5" GUN	7/8"	1 5/8"	2"
0.120"X3.0" GUN	3/4"	1 1/2"	1 7/8"
0.131"x3.0" GUN	7/8"	1 5/8"	2"

THIS DRAWING REPLACES DRAWING B139 AND CNBRGBLK0699

ALPINE
ALPINE ENGINEERED PRODUCTS, INC.
POMPANO BEACH, FLORIDA

WARNING TRUSSES REQUIRE EXTREME CARE IN FABRICATING, HANDLING, SHIPPING, INSTALLING AND BRACING. REFER TO BCSI 1-03 (BUILDING COMPONENT SAFETY INFORMATION), PUBLISHED BY TPI (TRUSS PLATE INSTITUTE, 583 D'ONOFRIO DR., SUITE 200, MADISON, WI. 53719) AND WTCA (WOOD TRUSS COUNCIL OF AMERICA, 6300 ENTERPRISE LN, MADISON, WI 53719) FOR SAFETY PRACTICES PRIOR TO PERFORMING THESE FUNCTIONS. UNLESS OTHERWISE INDICATED, TOP CHORD SHALL HAVE PROPERLY ATTACHED STRUCTURAL PANELS AND BOTTOM CHORD SHALL HAVE A PROPERLY ATTACHED RIGID CEILING.

IMPORTANT FURNISH COPY OF THIS DESIGN TO INSTALLATION CONTRACTOR. ALPINE ENGINEERED PRODUCTS, INC., SHALL NOT BE RESPONSIBLE FOR ANY DEVIATION FROM THIS DESIGN; ANY FAILURE TO BUILD THE TRUSS IN CONFORMANCE WITH TPI; OR FABRICATING, HANDLING, SHIPPING, INSTALLING & BRACING OF TRUSSES. DESIGN CONFORMS WITH APPLICABLE PROVISIONS OF NDS (NATIONAL DESIGN SPEC, BY AF&PA) AND TPI. ALPINE CONNECTOR PLATES ARE MADE OF 20/18/16GA (W,H/S/K) ASTM A653 GRADE 40/60 (W,K/H,S) GALV. STEEL. APPLY PLATES TO EACH FACE OF TRUSS AND, UNLESS OTHERWISE LOCATED ON THIS DESIGN, POSITION PER DRAWINGS 160A-Z. ANY INSPECTION OF PLATES FOLLOWED BY (I) SHALL BE PER ANNEX A3 OF TPI 1-2002 SEC. 3. A SEAL ON THIS DRAWING INDICATES ACCEPTANCE OF PROFESSIONAL ENGINEERING RESPONSIBILITY SOLELY FOR THE TRUSS COMPONENT DESIGN SHOWN. THE SUITABILITY AND USE OF THIS COMPONENT FOR ANY BUILDING IS THE RESPONSIBILITY OF THE BUILDING DESIGNER, PER ANSI/TPI 1 SEC. 2.

ARTHUR R. FISHER
LICENSE
No. 59687
STATE OF
FLORIDA
PROFESSIONAL ENGINEER

Feb

REF	BEARING BLOCK
DATE	11/26/03
DRWG	CNBRGBLK1103
-ENG	SJP/KAR