DocuSign Envelope ID: 4B13B538-0A28-4847-888C-23B9FE1BA69C

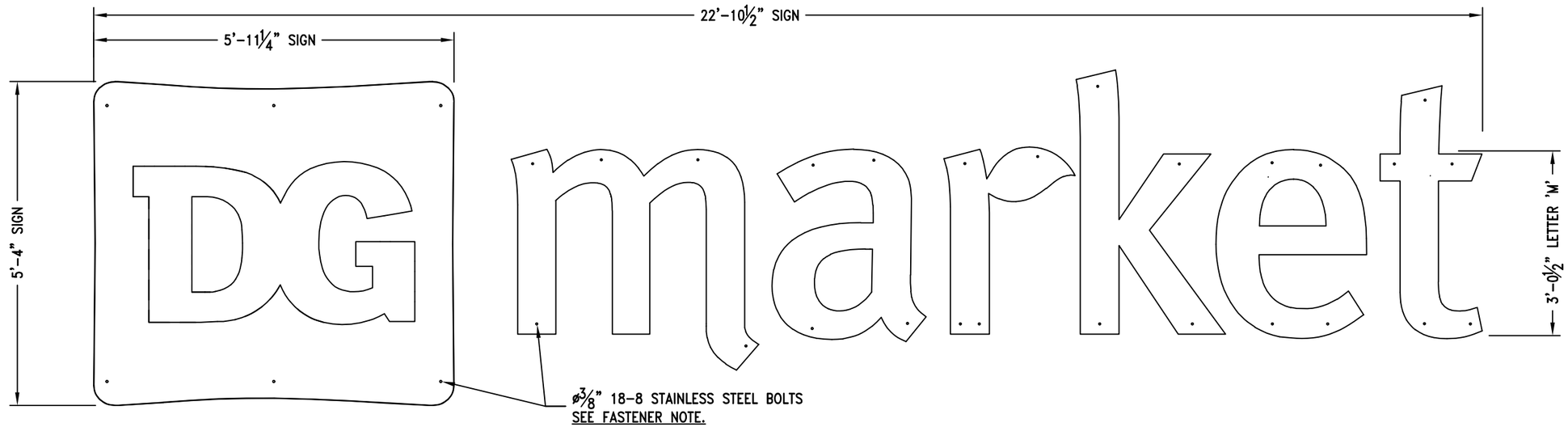

ELEVATION VIEW

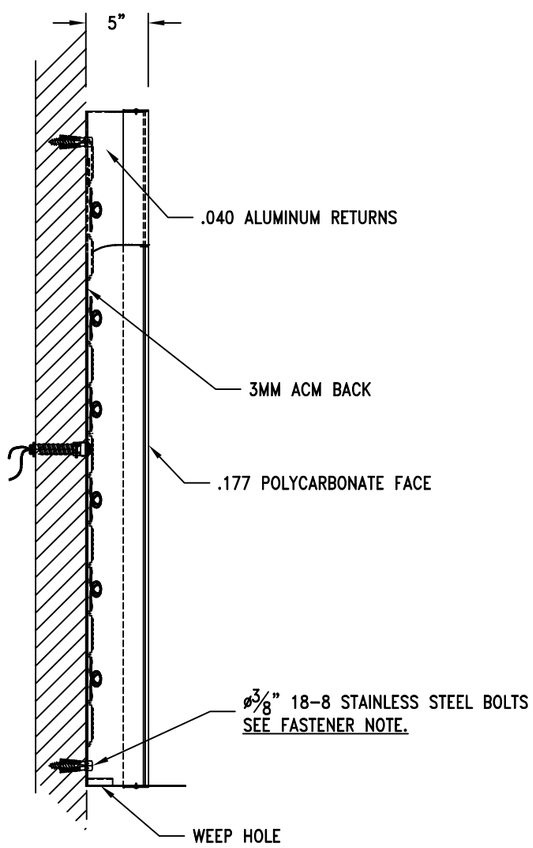

DETAIL VIEW-'MARKET' LETTERS

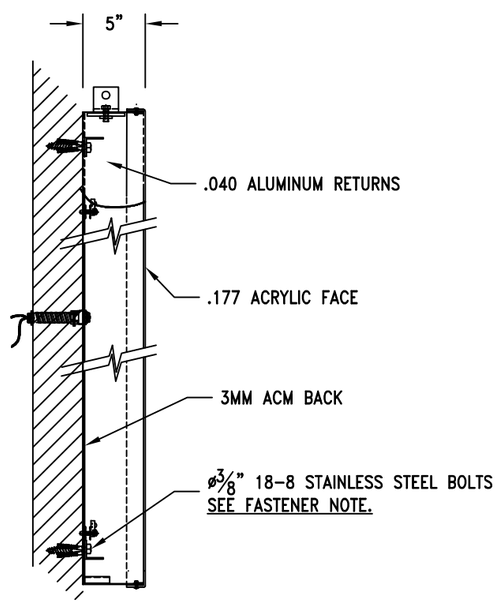

DETAIL VIEW-SIGN

DESIGN WIND LOAD:
Based on the 2023 Florida Building Code, 8th Edition (ASCE 7-22) using Risk Category II, Exposure C and 150 mph wind speed

FASTENER NOTE:
Use 18-8 stainless steel bolts, w/spacers thru EIFS, as listed:
- Toggle bolts in hollow concrete block or plywood sheathing.
- TEK screws in metal studs.
- Lag bolts in wood studs.
- All thread bolts with blocking between studs without sheathing.
- Hilti HIT-IC inserts embedded 3⅛" with HY-270 adhesive in brick.
- Hilti HLC Sleeve anchors embedded 1½" in concrete or grout filled CMU.

SEAN M. McFARLAND
LICENSE
No. 61049
STATE OF FLORIDA
PROFESSIONAL ENGINEER

DocuSigned by:
Sean M. McFarland
1BDD4704DCE34C8...

This item has been digitally signed and sealed by Sean M. McFarland, P.E. on the date adjacent to the seal. Printed copies of this document are not considered signed and sealed and the signature must be verified on any electronic copies. FAC 61G15-23.004

Sean M. McFarland
2024.06.27
16:52:44 -04'00'
2024.002.20857

SITE: Dollar General Market
Store No. 25861
8255 S.W. US Highway 27
Fort White, Florida 32038

REV	DATE	DESCRIPTION	APPROVED
A	24 Jun 24	RELEASED FOR PERMITTING	J. HOGAN

Robert-James & Associates, Inc.
12255 West 187th Street, Mokena Illinois 60448-9737
phone: 708-479-8385 fax: 708-479-8395 email: rja37@comcast.net

TITLE LED SIGN AND CHANNEL LETTERS FOR INSTALLATION ON BUILDING WALL

DRAWN BY	DATE	SCALE	DRAWING NUMBER	SHEET	REV.
W. CARTER	24 Jun 24	NONE	2406204	1 OF 1	A
CHECKED BY J. HOGAN	DATE 24 Jun 24				