DATE 10/19/2005

Columbia County Building Permit

This Permit Expires One Year From the Date of Issue

PERMIT
000023735

APPLICANT MATT CASON PHONE 752.5152

ADDRESS 1531 SW COMMERCIAL GLEN LAKE CITY FL 32025

OWNER WILLARD & MARLENE GRAHAM PHONE

ADDRESS 3949 SE HIGH FALLS ROAD LAKE CITY FL 32025

CONTRACTOR W. STANLEY CRAWFORD PHONE 752.5152

LOCATION OF PROPERTY 441-S T0 TO C-252,TL TO C-245,TR TO HIGH FALLS RD, TL GO 1 MILE, PLACE ON R.

TYPE DEVELOPMENT SFD/UTILITY ESTIMATED COST OF CONSTRUCTION 116850.00

HEATED FLOOR AREA 2337.00 TOTAL AREA 3187.00 HEIGHT 27.90 STORIES 1

FOUNDATION CONC WALLS FRAMED ROOF PITCH 12'12 FLOOR CONC

LAND USE & ZONING A-3 MAX. HEIGHT 35

Minimum Set Back Requirments: STREET-FRONT 30.00 REAR 25.00 SIDE 25.00

NO. EX.D.U. 0 FLOOD ZONE X DEVELOPMENT PERMIT NO.

PARCEL ID 12-5S-17-09215-004 SUBDIVISION

LOT BLOCK PHASE UNIT TOTAL ACRES 5.00

000000850		RG0042896		
Culvert Permit No.	Culvert Waiver	Contractor's License Number	Applicant/Owner/Contractor	
WAIVER	05-1015-N	BLK	JTH	N
Driveway Connection	Septic Tank Number	LU & Zoning checked by	Approved for Issuance	New Resident

COMMENTS: TERMITE PREVENTATIVE REPORT REC'D.10/19/2005. PROPOSED 2006 I.D # FROM P/A OFFICE(KYLIE)NOC ON FILE. 1 FOOT ABOVE ROAD.

Check # or Cash 7353

FOR BUILDING & ZONING DEPARTMENT ONLY

Temporary Power date/app. by Foundation date/app. by Monolithic (footer/Slab) date/app. by

Under slab rough-in plumbing date/app. by Slab date/app. by Sheathing/Nailing date/app. by

Framing date/app. by Rough-in plumbing above slab and below wood floor date/app. by

Electrical rough-in date/app. by Heat & Air Duct date/app. by Peri. beam (Lintel) date/app. by

Permanent power date/app. by C.O. Final date/app. by Culvert date/app. by

M/H tie downs, blocking, electricity and plumbing date/app. by Pool date/app. by

Reconnection date/app. by Pump pole date/app. by Utility Pole date/app. by

M/H Pole date/app. by Travel Trailer date/app. by Re-roof date/app. by

BUILDING PERMIT FEE $ 585.00 CERTIFICATION FEE $ 15.94 SURCHARGE FEE $ 15.94

MISC. FEES $ .00 ZONING CERT. FEE $ 50.00 FIRE FEE $ .00 WASTE FEE $

FLOOD DEVELOPMENT FEE $ FLOOD ZONE FEE $ 25.00 CULVERT FEE $ **TOTAL FEE** 691.88

INSPECTORS OFFICE CLERKS OFFICE CH

NOTICE: IN ADDITION TO THE REQUIREMENTS OF THIS PERMIT, THERE MAY BE ADDITIONAL RESTRICTIONS APPLICABLE TO THIS PROPERTY THAT MAY BE FOUND IN THE PUBLIC RECORDS OF THIS COUNTY. AND THERE MAY BE ADDITIONAL PERMITS REQUIRED FROM OTHER GOVERNMENTAL ENTITIES SUCH AS WATER MANAGEMENT DISTRICTS, STATE AGENCIES, OR FEDERAL AGENCIES.

"WARNING TO OWNER: YOUR FAILURE TO RECORD A NOTICE OF COMMENCEMENT MAY RESULT IN YOUR PAYING TWICE FOR IMPROVEMENTS TO YOUR PROPERTY. IF YOU INTEND TO OBTAIN FINANCING, CONSULT WITH YOUR LENDER OR AN ATTORNEY BEFORE RECORDING YOUR NOTICE OF COMMENCEMENT."

This Permit Must Be Prominently Posted on Premises During Construction

PLEASE NOTIFY THE COLUMBIA COUNTY BUILDING DEPARTMENT AT LEAST 24 HOURS IN ADVANCE OF EACH INSPECTION, IN ORDER THAT IT MAY BE MADE WITHOUT DELAY OR INCONVIENCE, PHONE 758-1008. THIS PERMIT IS NOT VALID UNLESS THE WORK AUTHORIZED BY IT IS COMMENCED WITHIN 6 MONTHS AFTER ISSUANCE.

The Issuance of this Permit Does Not Waive Compliance by Permittee with Deed Restrictions.

Cal-Tech Testing, Inc.
• Engineering
• Geotechnical
• Environmental

P.O. Box 1625 • Lake City, FL 32056-1625
6919 Distribution Avenue S., Unit #5 • Jacksonville, FL 32257

Tel. (386) 755-3633 • Fax (386) 752-5456
Tel. (904) 262-4046 • Fax (904) 262-4047

JOB NO.: 05-433
DATE TESTED: 08/30/05
DATE REPORTED: 08/30/05

REPORT OF IN-PLACE DENSITY TEST

PROJECT: Graham Residence
CLIENT: Willard Graham, 3949 SE Highfalls Dr., Lake City, FL 32025
GENERAL CONTRACTOR: Willard Graham
EARTHWORK CONTRACTOR: Willard Graham
INSPECTOR: J. Beggs

ASTM METHOD: (D-2922) Nuclear
SOIL USE: BUILDING FILL

SPECIFICATION REQUIREMENTS: 95%

TEST NO.	TEST LOCATION	TEST DEPTH	WET DENSITY (lb/ft³)	MOISTURE PERCENT	DRY DENSITY (lb/ft³)	PROCTOR TEST NO.	PROCTOR VALUE	% MAXIMUM DENSITY
1	NW Corner of Pad	12"	108.0	2.4	105.5	1	105.0	100.4%
2	Center of Pad	12"	109.9	2.9	106.8	1	105.0	101.7%
3	SE Corner of Pad	12"	113.0	3.3	109.4	1	105.0	104.2%

REMARKS: The Above Tests Meet Specification Requirements.

PROCTORS

PROCTOR NO.	SOIL DESCRIPTION	MAXIMUM DRY UNIT WEIGHT (lb/ft³)	OPT. MOIST.	TYPE
1	Archer Sand	105.0	11.0	MODIFIED (ASTM D-1557)

Respectfully Submitted,
CAL-TECH TESTING, INC.

Linda Creamer

Linda M. Creamer
President - CEO
SC

Reviewed By:

Date: 8/30/05
Florida Registration No: 52612

The test results presented in this report are specific only to the samples tested at the time of testing. The tests were performed in accordance with generally accepted methods and standards. Since material conditions can vary between test locations and change with time, sound judgement should be exercised with regard to the use and interpretation of the data.

"Excellence in Engineering & Geoscience"

23735

CERTIFICATE OF

OCCUPANCY

COLUMBIA COUNTY, FLORIDA

Department of Building and Zoning Inspection

This Certificate of Occupancy is issued to the below named permit holder for the building and premises at the below named location, and certifies that the work has been completed in accordance with the Columbia County Building Code.

Parcel Number 12-5S-17-09215-004

Building permit No. 000023735

Use Classification SFD/UTILITY

Fire: 11.84

Permit Holder W. STANLEY CRAWFORD

Waste: 24.50

Owner of Building WILLARD & MARLENE GRAHAM

Total: 36.34

Location: 3949 SE HIGH FALLS ROAD

Date: 08/01/2006

Harry Dicks

Building Inspector

POST IN A CONSPICUOUS PLACE
(Business Places Only)

ATTN: WEEGIE

Columbia County Building Department
Culvert Waiver

Culvert Waiver No.
000000850

DATE: 10/19/2005 BUILDING PERMIT NO. 23735

APPLICANT MATT CASON PHONE 752.5152

ADDRESS 1531 SW COMMERCIAL GLEN LAKE CITY FL 32025

OWNER WILLARD & MARLENE GRAHAM PHONE

ADDRESS 3949 SE HIGH FALLS ROAD LAKE CITY FL 32025

CONTRACTOR W. STANLEY CRAWFORD PHONE 752.5152

LOCATION OF PROPERTY 441-S TO C-252,TL TO C-245,TR TO HIGH FALLS ROAD,GO 1 MILE

PLACE ON R.

SUBDIVISION/LOT/BLOCK/PHASE/UNIT

PARCEL ID # 12-5S-17-09215-004

I HEREBY CERTIFY THAT I UNDERSTAND AND WILL FULLY COMPLY WITH THE DECISION OF THE COLUMBIA COUNTY PUBLIC WORKS DEPARTMENT IN CONNECTION WITH THE HEREIN PROPOSED APPLICATION.

SIGNATURE: Matt D. Cason

A SEPARATE CHECK IS REQUIRED
MAKE CHECKS PAYABLE TO BCC

Amount Paid 50.00

PUBLIC WORKS DEPARTMENT USE ONLY

I HEREBY CERTIFY THAT I HAVE EXAMINED THIS APPLICATION AND DETERMINED THAT THE CULVERT WAIVER IS:

✓ APPROVED _____ NOT APPROVED - NEEDS A CULVERT PERMIT

COMMENTS: DITCH NOT DEEP ENOUGHT TO INSTALL CULVERT
RECOMMEND FILLING DITCH IN BETWEEN DRIVEWAYS

SIGNED: Perry Pettis DATE: 10/27/05

ANY QUESTIONS PLEASE CONTACT THE PUBLIC WORKS DEPARTMENT AT 386-752-5955.

135 NE Hernando Ave., Suite B-21
Lake City, FL 32055
Phone: 386-758-1008 Fax: 386-758-2160

COLUMBIA COUNTY
OCT 20 2005
PUBLIC WORKS DEPT.

COLUMBIA COUNTY · GATEWAY TO FLORIDA

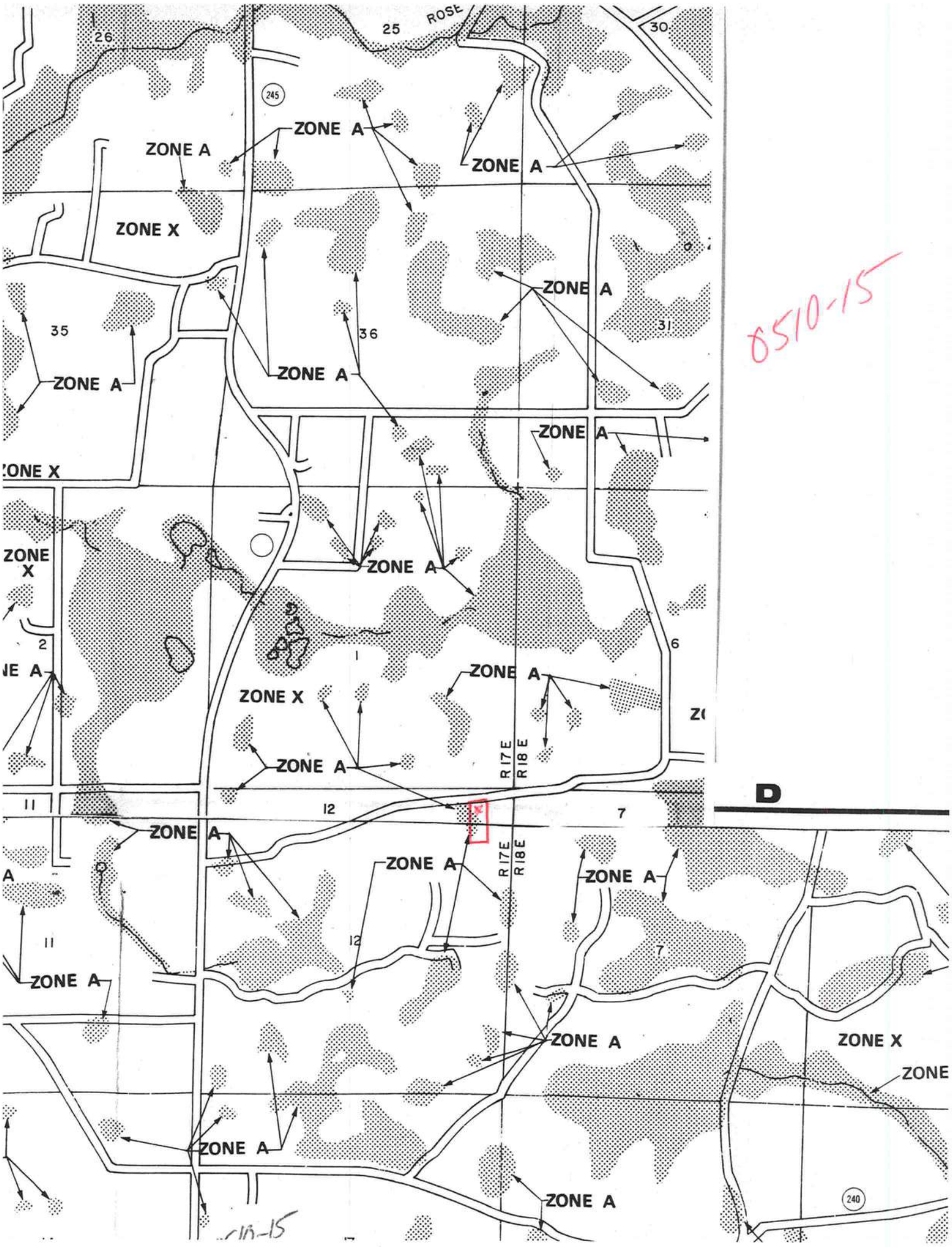
ROSE
26
25
30
245
ZONE A
ZONE A
ZONE A
ZONE X
ZONE A
35
36
31
ZONE A
ZONE A
ZONE A
ZONE X
ZONE X
ZONE A
2
1
6
ZONE A
ZONE X
ZONE A
ZONE A
R 17 E
R 18 E
D
11
12
7
ZONE A
ZONE A
ZONE A
R 17 E
R 18 E
11
12
7
ZONE A
ZONE A
ZONE X
ZONE
ZONE A
ZONE A
240

0510-15

FORM 600A-2004 EnergyGauge® 4.0

FLORIDA ENERGY EFFICIENCY CODE FOR BUILDING CONSTRUCTION

Florida Department of Community Affairs

Residential Whole Building Performance Method A

Project Name: GRHAM (Graham)
Address:
City, State:
Owner:
Climate Zone: North

Builder: STANLEY CRAWFORD
Permitting Office: Columbia
Permit Number: 23735
Jurisdiction Number: 221000

1. New construction or existing	New	
2. Single family or multi-family	Single family	
3. Number of units, if multi-family	1	
4. Number of Bedrooms	3	
5. Is this a worst case?	Yes	
6. Conditioned floor area (ft²)	2337.4 ft²	
7. Glass type[1] and area: (Label reqd. by 13-104.4.5 if not default)		
a. U-factor: (or Single or Double DEFAULT) 7a.	Description Area (Dble Default) 347.0 ft²	
b. SHGC: (or Clear or Tint DEFAULT) 7b.	(Clear) 347.0 ft²	
8. Floor types		
a. Slab-On-Grade Edge Insulation	R=4.0, 154.0(p) ft	
b. Raised Wood, Adjacent	R=19.0, 198.0ft²	
c. N/A		
9. Wall types		
a. Frame, Wood, Exterior	R=19.0, 1655.0 ft²	
b. Frame, Wood, Adjacent	R=13.0, 370.0 ft²	
c. N/A		
d. N/A		
e. N/A		
10. Ceiling types		
a. Under Attic	R=30.0, 1395.8 ft²	
b. N/A		
c. N/A		
11. Ducts		
a. Sup: Unc. Ret: Unc. AH: Garage	Sup. R=6.0, 226.0 ft	
b. N/A		

12. Cooling systems		
a. Central Unit	Cap: 42.0 kBtu/hr SEER: 13.00	
b. N/A		
c. N/A		
13. Heating systems		
a. Electric Heat Pump	Cap: 42.0 kBtu/hr HSPF: 7.00	
b. N/A		
c. N/A		
14. Hot water systems		
a. Electric Resistance	Cap: 50.0 gallons EF: 0.92	
b. N/A		
c. Conservation credits (HR-Heat recovery, Solar DHP-Dedicated heat pump)		
15. HVAC credits (CF-Ceiling fan, CV-Cross ventilation, HF-Whole house fan, PT-Programmable Thermostat, MZ-C-Multizone cooling, MZ-H-Multizone heating)		

Glass/Floor Area: 0.15

Total as-built points: 28693
Total base points: 31746

PASS

I hereby certify that the plans and specifications covered by this calculation are in compliance with the Florida Energy Code.

PREPARED BY: Suncoast Insulators

DATE: 9-12-05

I hereby certify that this building, as designed, is in compliance with the Florida Energy Code.

OWNER/AGENT: _____

DATE: _____

Review of the plans and specifications covered by this calculation indicates compliance with the Florida Energy Code. Before construction is completed this building will be inspected for compliance with Section 553.908 Florida Statutes.

BUILDING OFFICIAL: _____

DATE: _____

1 Predominant glass type. For actual glass type and areas, see Summer & Winter Glass output on pages 2&4.

FORM 600A-2004

EnergyGauge® 4.0

SUMMER CALCULATIONS

Residential Whole Building Performance Method A - Details

ADDRESS: , , , PERMIT #:

BASE

GLASS TYPES .18 X Conditioned Floor Area	X BSPM	= Points
.18 2337.4	20.94	8431.5

WALL TYPES	Area X	BSPM =	Points
Adjacent	370.0	0.70	259.0
Exterior	1655.0	1.70	2813.5
Base Total:	2025.0		3072.5

DOOR TYPES	Area X	BSPM =	Points
Adjacent	18.0	2.40	43.2
Exterior	38.0	6.10	231.8
Base Total:	56.0		275.0

CEILING TYPES	Area X	BSPM =	Points
Under Attic	1395.8	1.73	2414.7
Base Total:	1395.8		2414.7

FLOOR TYPES	Area X	BSPM =	Points
Slab	154.0(p)	-37.0	-5698.0
Raised	198.0	-3.99	-790.0
Base Total:			-6488.0

INFILTRATION	Area X	BSPM =	Points
	2337.4	10.21	23864.9

AS-BUILT

Type/SC	Overhang Ornt	Len	Hgt	Area X	SPM X	SOF =	Points
Double, Clear	W	2.0	6.0	135.0	38.52	0.85	4417.5
Double, Clear	N	2.0	6.0	36.0	19.20	0.90	622.1
Double, Clear	E	2.0	6.0	176.0	42.06	0.85	6278.1
As-Built Total:				347.0			11317.7

Type	R-Value	Area X	SPM =	Points
Frame, Wood, Exterior	19.0	1655.0	0.90	1489.5
Frame, Wood, Adjacent	13.0	370.0	0.60	222.0
As-Built Total:		2025.0		1711.5

Type	Area X	SPM =	Points
Exterior Insulated	38.0	4.10	155.8
Adjacent Insulated	18.0	1.60	28.8
As-Built Total:	56.0		184.6

Type	R-Value	Area X	SPM X	SCM =	Points
Under Attic	30.0	1395.8	1.73 X	1.00	2414.7
As-Built Total:		1395.8			2414.7

Type	R-Value	Area X	SPM =	Points
Slab-On-Grade Edge Insulation	4.0	154.0(p	-36.70	-5651.8
Raised Wood, Adjacent	19.0	198.0	0.40	79.2
As-Built Total:		352.0		-5572.6

Area X	SPM =	Points
2337.4	10.21	23864.9

FORM 600A-2004

EnergyGauge® 4.0

SUMMER CALCULATIONS

Residential Whole Building Performance Method A - Details

ADDRESS: , , , PERMIT #

BASE				AS-BUILT							
Summer Base Points: 31570.5				Summer As-Built Points:							33920.8
Total Summer Points	X	System Multiplier	=	Cooling Points	Total Component (System - Points)	X	Cap Ratio	X	Duct Multiplier (DM x DSM x AHU)	X	System Multiplier	X	Credit Multiplier	=	Cooling Points
					(sys 1: Central Unit 42000 btuh ,SEER/EFF(13.0) Ducts:Unc(S),Unc(R),Gar(AH),R6.0(INS)										
					33921		1.00		(1.09 x 1.147 x 1.00)		0.263		1.000		11133.9
31570.5		0.4266		13468.0	33920.8		1.00		1.250		0.263		1.000		11133.9

FORM 600A-2004

EnergyGauge® 4.0

WINTER CALCULATIONS

Residential Whole Building Performance Method A - Details

ADDRESS: , , , PERMIT #:

BASE

GLASS TYPES .18 X Conditioned Floor Area	X BWPM	= Points
.18 2337.4	12.74	5360.1

WALL TYPES	Area X BWPM	= Points
Adjacent	370.0 3.60	1332.0
Exterior	1655.0 3.70	6123.5
Base Total:	2025.0	7455.5

DOOR TYPES	Area X BWPM	= Points
Adjacent	18.0 11.50	207.0
Exterior	38.0 12.30	467.4
Base Total:	56.0	674.4

CEILING TYPES	Area X BWPM	= Points
Under Attic	1395.8 2.05	2861.4
Base Total:	1395.8	2861.4

FLOOR TYPES	Area X BWPM	= Points
Slab	154.0(p) 8.9	1370.5
Raised	198.0 0.96	190.1
Base Total:		1560.7

INFILTRATION	Area X BWPM	= Points
	2337.4 -0.59	-1379.1

AS-BUILT

Type/SC	Overhang Ornt	Len	Hgt	Area X	WPM X	WOF	= Points
Double, Clear	W	2.0	6.0	135.0	20.73	1.04	2917.9
Double, Clear	N	2.0	6.0	36.0	24.58	1.00	888.9
Double, Clear	E	2.0	6.0	176.0	18.79	1.06	3507.8
As-Built Total:				347.0			7314.6

Type	R-Value	Area X	WPM	= Points
Frame, Wood, Exterior	19.0	1655.0	2.20	3641.0
Frame, Wood, Adjacent	13.0	370.0	3.30	1221.0
As-Built Total:		2025.0		4862.0

Type	Area X	WPM	= Points
Exterior Insulated	38.0	8.40	319.2
Adjacent Insulated	18.0	8.00	144.0
As-Built Total:	56.0		463.2

Type	R-Value	Area X	WPM X	WCM =	Points
Under Attic	30.0	1395.8	2.05 X	1.00	2861.4
As-Built Total:		1395.8			2861.4

Type	R-Value	Area X	WPM	= Points
Slab-On-Grade Edge Insulation	4.0	154.0(p	8.45	1301.3
Raised Wood, Adjacent	19.0	198.0	2.20	435.6
As-Built Total:		352.0		1736.9

Area X	WPM	= Points
2337.4	-0.59	-1379.1

FORM 600A-2004

EnergyGauge® 4.0

WINTER CALCULATIONS

Residential Whole Building Performance Method A - Details

ADDRESS: , , , PERMIT #:

BASE				AS-BUILT							
Winter Base Points:			16533.0	Winter As-Built Points:							15859.1
Total Winter Points	X	System Multiplier	= Heating Points	Total Component (System - Points)	X	Cap Ratio	X Duct Multiplier (D4l x DSM x AHU)	X System Multiplier	X	Credit Multiplier	= Heating Points
				(sys 1: Electric Heat Pump 42000 btuh ,EFF(7.0) Ducts:Unc(S),Unc(R),Gar(AH),R6.0							
				15859.1		1.000	(1.069 x 1.169 x 1.00)	0.487		1.000	9654.4
16533.0		0.6274	10372.8	15859.1		1.00	1.250	0.487		1.000	9654.4

FORM 600A-2004

EnergyGauge® 4.0

WATER HEATING & CODE COMPLIANCE STATUS

Residential Whole Building Performance Method A - Details

ADDRESS: , , , PERMIT #:

BASE					AS-BUILT							
WATER HEATING												
Number of Bedrooms	X	Multiplier	=	Total	Tank Volume	EF	Number of Bedrooms	X	Tank Ratio	X Multiplier	X Credit Multiplier	= Total
3		2635.00		7905.0	50.0	0.92	3		1.00	2635.00	1.00	7905.0
					As-Built Total:							7905.0

CODE COMPLIANCE STATUS							
BASE				AS-BUILT			
Cooling Points +	Heating Points +	Hot Water Points =	Total Points	Cooling Points +	Heating Points +	Hot Water Points =	Total Points
13468	10373	7905	31746	11134	9654	7905	28693

PASS

FORM 600A-2004

EnergyGauge® 4.0

Code Compliance Checklist

Residential Whole Building Performance Method A - Details

ADDRESS: , , , PERMIT #:

6A-21 INFILTRATION REDUCTION COMPLIANCE CHECKLIST

COMPONENTS	SECTION	REQUIREMENTS FOR EACH PRACTICE	CHECK
Exterior Windows & Doors	606.1.ABC.1.1	Maximum: .3 cfm/sq.ft. window area; .5 cfm/sq.ft. door area.	
Exterior & Adjacent Walls	606.1.ABC.1.2.1	Caulk, gasket, weatherstrip or seal between: windows/doors & frames, surrounding wall; foundation & wall sole or sill plate; joints between exterior wall panels at corners; utility penetrations; between wall panels & top/bottom plates; between walls and floor. EXCEPTION: Frame walls where a continuous infiltration barrier is installed that extends from, and is sealed to, the foundation to the top plate.	
Floors	606.1.ABC.1.2.2	Penetrations/openings >1/8" sealed unless backed by truss or joint members. EXCEPTION: Frame floors where a continuous infiltration barrier is installed that is sealed to the perimeter, penetrations and seams.	
Ceilings	606.1.ABC.1.2.3	Between walls & ceilings; penetrations of ceiling plane of top floor; around shafts, chases, soffits, chimneys, cabinets sealed to continuous air barrier; gaps in gyp board & top plate; attic access. EXCEPTION: Frame ceilings where a continuous infiltration barrier is installed that is sealed at the perimeter, at penetrations and seams.	
Recessed Lighting Fixtures	606.1.ABC.1.2.4	Type IC rated with no penetrations, sealed; or Type IC or non-IC rated, installed inside a sealed box with 1/2" clearance & 3" from insulation; or Type IC rated with < 2.0 cfm from conditioned space, tested.	
Multi-story Houses	606.1.ABC.1.2.5	Air barrier on perimeter of floor cavity between floors.	
Additional Infiltration reqts	606.1.ABC.1.3	Exhaust fans vented to outdoors, dampers; combustion space heaters comply with NFPA, have combustion air.	

6A-22 OTHER PRESCRIPTIVE MEASURES (must be met or exceeded by all residences.)

COMPONENTS	SECTION	REQUIREMENTS	CHECK
Water Heaters	612.1	Comply with efficiency requirements in Table 612.1.ABC.3.2. Switch or clearly marked circuit breaker (electric) or cutoff (gas) must be provided. External or built-in heat trap required.	
Swimming Pools & Spas	612.1	Spas & heated pools must have covers (except solar heated). Non-commercial pools must have a pump timer. Gas spa & pool heaters must have a minimum thermal efficiency of 78%.	
Shower heads	612.1	Water flow must be restricted to no more than 2.5 gallons per minute at 80 PSIG.	
Air Distribution Systems	610.1	All ducts, fittings, mechanical equipment and plenum chambers shall be mechanically attached, sealed, insulated, and installed in accordance with the criteria of Section 610. Ducts in unconditioned attics: R-6 min. insulation.	
HVAC Controls	607.1	Separate readily accessible manual or automatic thermostat for each system.	
Insulation	604.1, 602.1	Ceilings-Min. R-19. Common walls-Frame R-11 or CBS R-3 both sides. Common ceiling & floors R-11.	

ENERGY PERFORMANCE LEVEL (EPL) DISPLAY CARD

ESTIMATED ENERGY PERFORMANCE SCORE* = 84.5

The higher the score, the more efficient the home.

1. New construction or existing	New	
2. Single family or multi-family	Single family	
3. Number of units, if multi-family	1	
4. Number of Bedrooms	3	
5. Is this a worst case?	Yes	
6. Conditioned floor area (ft²)	2337.4 ft²	
7. Glass type[1] and area: (Label reqd. by 13-104.4.5 if not default)		
a. U-factor: (or Single or Double DEFAULT) 7a.	Description Area (Dble Default) 347.0 ft²	
b. SHGC: (or Clear or Tint DEFAULT) 7b.	(Clear) 347.0 ft²	
8. Floor types		
a. Slab-On-Grade Edge Insulation	R=4.0, 154.0(p) ft	
b. Raised Wood, Adjacent	R=19.0, 198.0ft²	
c. N/A		
9. Wall types		
a. Frame, Wood, Exterior	R=19.0, 1655.0 ft²	
b. Frame, Wood, Adjacent	R=13.0, 370.0 ft²	
c. N/A		
d. N/A		
e. N/A		
10. Ceiling types		
a. Under Attic	R=30.0, 1395.8 ft²	
b. N/A		
c. N/A		
11. Ducts		
a. Sup: Unc. Ret: Unc. AH: Garage	Sup. R=6.0, 226.0 ft	
b. N/A		
12. Cooling systems		
a. Central Unit	Cap: 42.0 kBtu/hr SEER: 13.00	
b. N/A		
c. N/A		
13. Heating systems		
a. Electric Heat Pump	Cap: 42.0 kBtu/hr HSPF: 7.00	
b. N/A		
c. N/A		
14. Hot water systems		
a. Electric Resistance	Cap: 50.0 gallons EF: 0.92	
b. N/A		
c. Conservation credits (HR-Heat recovery, Solar DHP-Dedicated heat pump)		
15. HVAC credits (CF-Ceiling fan, CV-Cross ventilation, HF-Whole house fan, PT-Programmable Thermostat, MZ-C-Multizone cooling, MZ-H-Multizone heating)		

I certify that this home has complied with the Florida Energy Efficiency Code For Building Construction through the above energy saving features which will be installed (or exceeded) in this home before final inspection. Otherwise, a new EPL Display Card will be completed based on installed Code compliant features.

Builder Signature: _____ Date: _____

Address of New Home: _____ City/FL Zip: _____

**NOTE: The home's estimated energy performance score is only available through the FLA/RES computer program. This is not a Building Energy Rating. If your score is 80 or greater (or 86 for a US EPA/DOE EnergyStar™ designation), your home may qualify for energy efficiency mortgage (EEM) incentives if you obtain a Florida Energy Gauge Rating. Contact the Energy Gauge Hotline at 321/638-1492 or see the Energy Gauge web site at www.fsec.ucf.edu for information and a list of certified Raters. For information about Florida's Energy Efficiency Code For Building Construction, contact the Department of Community Affairs at 850/487-1824.*

1 Predominant glass type. For actual glass type and areas, see Summer & Winter Glass output on pages 2&4.

EnergyGauge® (Version: FLRCSB v4.0)

Inst:2005023548 Date:09/23/2005 Time:09:27
MK DC,P.DeWitt Cason,Columbia County B:1059 P:1260

2.50

NOTICE OF COMMENCEMENT

The undersigned hereby gives notice that improvements will be made to certain real property, and in accordance with Section 713 Florida Statutes, the following information is provided in this NOTICE OF COMMENCEMENT.

DESCRIPTION OF PROPERTY:

A PART OF THE NE 1/4 OF SECTION12 TOWNSHIP 5 SOUTH RANGE 17 EAST, COLUMBIA COUNTY, FLORIDA, MORE PARTICULARLY DESCRIBED AS FOLLOWS: BEGIN AT A CONCRETE MONUMENT MARKING THE NE CORNER OF SAID SECTION 12; THENCE RUN SOUTH 00°00'56" EAST ALONG THE EAST LINE OF SAID SECTION 12 133.76 FEET TO THE SOUTHERLY RIGHT OF WAY OF SE HIGH FALLS ROAD; THENCE ALONG SAID SOUTHERLY RIGHT OF WAY LINE SOUTH 83°45'52" WEST 439.20 FEET TO THE POINT OF BEGINNING; THENCE CONTINUE SOUTH 83°45'52" WEST ALONG SAID SOUTHERLY RIGHT OF WAY LINE 330.00 FEET; THENCE SOUTH 00°06'14" EAST, 642.38 FEET; THENCE NORTH 89°53'46" EAST, 328.11 FEET; THENCE NORTH 00°06'14" WEST, 677.62 FEET TO THE POINT OF BEGINNING, CONTAINING 5.0 ACRES MORE OR LESS.

GENERAL DESCRIPTION OF IMPROVEMENTS: Repairs to residence

OWNER AND ADDRESS: Williard T. Graham and
Marlene M. Graham, his wife
4149 SE Highfalls Drive
Lake City, Florida 32025

OWNER'S INTEREST IN PROPERTY: Fee Simple

FEE SIMPLE TITLE HOLDER: OWNER

CONTRACTOR AND ADDRESS:
Stanley Crawford Construction, Inc.
1531 SW Commercial Glen
Lake City, Florida 32025-0454

STATE OF FLORIDA, COUNTY OF COLUMBIA
I HEREBY CERTIFY, that the above and foregoing is a true copy of the original filed in this office.
P. DeWITT CASON, CLERK OF COURTS
By Marsal Kerr
Deputy Clerk
Date Sept 23, 2005

CLERK CIRCUIT COURT COLUMBIA COUNTY, FLORIDA

SURETY: NONE AMOUNT OF BOND: N/A

LENDER: Monticello Bank
327S. Main Street
Fitzgerald, GA 31750

Name and address of person within the State of Florida designated by owner upon whom notices or other documents may be served as provided by Section 713.13(1)(a)(7), Florida Statutes.

OWNER

In addition to himself, Owner designate the following person to receive a copy of the Lienor's Notice as provided in Section 713.13(1)(b) Florida Statutes: THE LENDER

Owner, WILLARD T. GRAHAM

Owner, MARLENE M. GRAHAM

STATE OF FLORIDA
COUNTY OF COLUMBIA

The foregoing instrument was acknowledged before me this 22nd day of September, 2005, by Willard T. Graham and Marlene M. Graham. They produced Fla DL as identification.

(Notarial Seal)

Donna H. Anderson
Notary Public

Donna H Anderson
My Commission DD199996
Expires June 13, 2007

This Instrument Prepared By:
EDDIE M. ANDERSON, P.A.
P. O. Box 1179
Lake City, Florida 32056-1179

Return to: (enclose self-addressed stamped envelope)

Name:

Address:

This Instrument Prepared by:

Name: Leon McCall

Address: 4180 SE High Falls Dr.
Lake City, Florida 32025

Property Appraiser's Parcel Identification (Folio Number(s): 12-5S-17-09215-000 (cutout)

Grantee(s) S.S. #(s)

TO: STANLEY CRAWFIRD CONSTRUCTION
755-2165
From: Eddie Anderson

Inst:2005023546 Date:09/23/2005 Time:09:27
Doc Stamp-Deed : 0.70
DC,P.DeWitt Cason,Columbia County B:1058 P:1251

SPACE ABOVE THIS LINE FOR PROCESSING DATA — SPACE ABOVE THIS LINE FOR RECORDING DATA

This Warranty Deed, *Made the* 21th *day of* May, 2005, *by* Leon McCall, who does not reside on the property, *hereinafter called the Grantor, to* Willard T. Graham & Marlene M. Graham, his wife *whose post office address is* 4149 SE High Falls DR., Lake City, Fl. 32025, *hereinafter called the Grantee.*

(Wherever used herein the terms "Grantor" and "Grantee" include all the parties to this instrument and the heirs, legal representatives, and assigns of individuals, and the successors and assigns of corporations, wherever the context so admits or requires.)

Witnesseth, *That the Grantor, for and in consideration of the sum of* $ ~~10.00~~ Love & Affection *and other valuable considerations, receipt whereof is hereby acknowledged, hereby grants, bargains, sells, aliens, remises, releases, conveys and confirms unto the Grantee all that certain land, situate in* Columbia *County, State of* ~~Florida~~, *viz:*

A PART OF TH NE ¼ OF SECTION 12 TOWNSHIP 5 SOUTH RANGE 17 EAST, COLUMBIA COUNTY, FLORIDA, MORE, Particularly described as follows; BEGIN AT A CONCRETE MONUMENT MARKING THE NE CORNER OF SAID SECTION 12; THENCE RUN SOUTH 00'00'56" EAST ALONG THE EAST LINE OF SAID SECTION 12 133.76 FEET TO THE SOUTHERLY RIGHT OF WAY OF SE HIGH FALLS ROAD; THENCE ALONG SAID SOUTHERLY RIGHT OF WAY LINE SOUTH83'45'52" WEST 439.20 FEET TO THE POINT OF BEGINNING; THENCE CONTINUE SOUTH 83'45'52" WEST ALONG SAID SOUTHERLY RIGHT OF WAY LINE 330.00 FEET: THENCE SOUTH 00'06'14" EAST, 642.38 FEET: THENCE NORTH 89'53'46" EAST 328.11 FEET: THENCE NORTH 00'06'14" WEST, 677.62 FEET TO THE POINT OF BEGINNING, CONTAINING 5.0 ACRES MORE OR LESS.

Together, *with all the tenements, hereditaments and appurtenances thereto belonging or in anywise appertaining.* **To Have and to Hold,** *the same in fee simple forever.*

And *the Grantor hereby covenants with said grantee that the grantor is lawfully seized of said land in fee simple; that the grantor has good right and lawful authority to sell and convey said land, and hereby warrants the title to said land and will defend the same against the lawful claims of all persons whomsoever; and that said land is free of all encumbrances, except taxes accruing subsequent to December 31.*

In Witness Whereof, *the said Grantor has signed and sealed these presents the day and year first above written.*

Signed, sealed and delivered in the presence of:

Elizabeth Eberhardt
Witness Signature (as to first Grantor)
Elizabeth Eberhardt
Printed Name

Kevin Ro
Witness Signature (as to first Grantor)
Kevin Parnell
Printed Name

Witness Signature (as to Co-Grantor, if any)

Printed Name

Witness Signature (as to Co-Grantor, if any)

Printed Name

Leon McCall
Grantor Signature L.S.
Leon McCall
Printed Name
4180 SE High Falls DR. Lake City Fl. 32025
Post Office Address

Co-Grantor Signature (if any) L.S.

Printed Name

Post Office Address

STATE OF FLORIDA)
COUNTY OF COLUMBIA)

I hereby Certify that on this day, before me, an officer duly authorized to administer oaths and take acknowledgments ...

Printing Co., Inc., 1994

known to me to be the person he described in and who executed the foregoing instrument, who acknowledged before me that he executed the same, and an oath was not taken. (Check one:) ☐ Said person(s) is/are personally known to me. ☒ Said person(s) provided the following type of identification: Florida Drivers License

NOTARY RUBBER STAMP SEAL

NOTARY PUBLIC-STATE OF FLORIDA
Elizabeth Eberhardt
Commission # DD425389
Expires: MAY 21, 2007
Bonded Thru Atlantic Bonding Co., Inc.

Witness my hand and official seal in the County and State last aforesaid this 21st day of May, A.D. 2005.

Elizabeth Eberhardt
Notary Signature

Elizabeth Eberhardt
Printed Name

07
23
99

MAP OF BOUNDARY SURVEY

A PART OF THE NE 1/4 OF SECTION12 TOWNSHIP 5 SOUTH RANGE 17 EAST, COLUMBIA COUNTY, FLORIDA, MORE PARTICULARLY DESCRIBED AS FOLLOWS: BEGIN AT A CONCRETE MONUMENT MARKING THE NE CORNER OF SAID SECTION 12; THENCE RUN SOUTH 00°00'56" EAST ALONG THE EAST LINE OF SAID SECTION 12 133.76 FEET TO THE SOUTHERLY RIGHT OF WAY OF SE HIGH FALLS ROAD; THENCE ALONG SAID SOUTHERLY RIGHT OF WAY LINE SOUTH 83°45'52" WEST 439.20 FEET TO THE POINT OF BEGINNING; THENCE CONTINUE SOUTH 83°45'52" WEST ALONG SAID SOUTHERLY RIGHT OF WAY LINE 330.00 FEET; THENCE SOUTH 00°06'14" EAST, 642.38 FEET; THENCE NORTH 89°53'46" EAST, 328.11 FEET; THENCE NORTH 00°06'14" WEST, 677.62 FEET TO THE POINT OF BEGINNING, CONTAINING 5.0 ACRES MORE OR LESS.

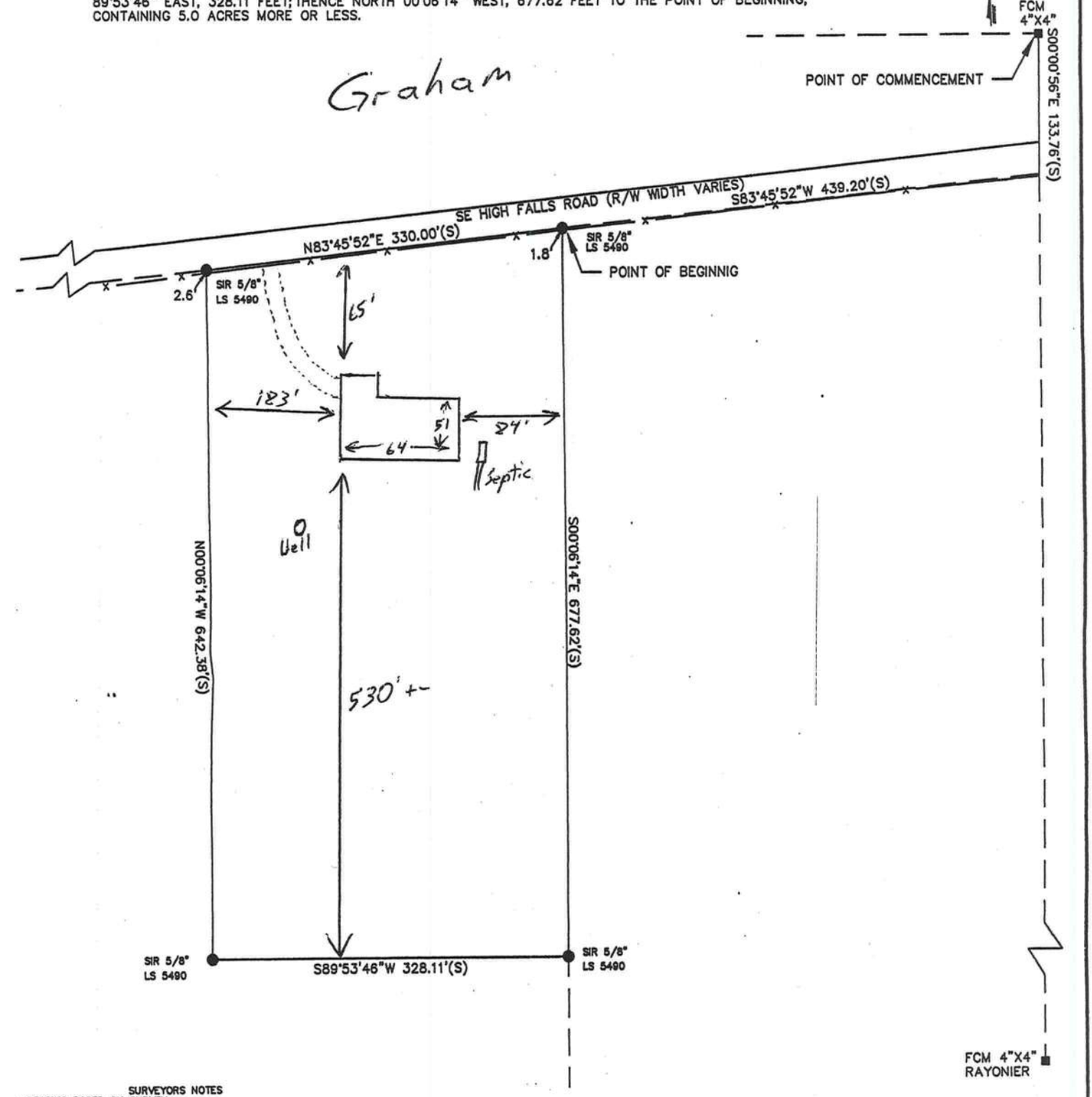

SURVEYORS NOTES

1. BEARING BASED ON SURVEY.
2. THIS SURVEY BASED ON LEGAL DESCRIPTION FURNISHED. THE PUBLIC RECORDS, WERE NOT SEARCHED BY THIS SURVEYOR FOR EASEMENTS, TITLE, COVENANTS, RESTRICTIONS, CLOSURES, TAKINGS OR ORDINANCES, ETC., THERE COULD BE OTHER MATTER OF RECORD THAT EFFECT THIS PARCEL.

CERTIFIED TO:
WILLARD GRAM

I HEREBY CERTIFY THIS SURVEY WAS DONE UNDER MY DIRECT SUPERVISION AND IT MEETS THE MINIMUM TECHNICAL STANDARDS FOR LAND SURVEYING PURSUANT TO CHAPTER 61G17-6, FLORIDA ADMINISTRATION CODE, CHAPTER 472, FLORIDA STATUES.

WILLIAM N. KITCHEN PSM 5490

William N. Kitchen 5-21-2005

NOT VALID WITHOUT THE SIGNATURE AND THE ORIGINAL RAISED SEAL OF A FLORIDA LICENSED SURVEYOR AND MAPPER.

LEGEND

MEMBER OF
The
North Central
Florida Water
Well

Clyatt Well Drilling, Inc.
(Established in 1971)
POST OFFICE BOX 180
WORTHINGTON SPRINGS, FLORIDA 32697

Telephone Number (386)496-2488
FAX Number (386)496-4640

K. Melaine
"Red" Clyatt

June 18, 2002

Columbia County Building Department
Post Office Box 1529
Lake City, Florida 32056

To Whom It May Concern:

As required by building code regulations for Columbia County in order that a building permit can be issued, the following well information is provided with regard to the above-referenced well:

Size of Pump Motor:	1-1/2 Horse Power
Size of Pressure Tank:	220 Gallon Equivalent
Cycle Stop Valve Used:	No

Should you require any additional information, please do not hesitate to contact us.

Respectfully,

CLYATT WELL DRILLING, INC.

K. Melaine "Red" Clyatt
President

Application for Onsite Sewage Disposal System Construction Permit. Part II Site Plan

Permit Application Number: 05-1015-N

ALL CHANGES MUST BE APPROVED BY THE COUNTY HEALTH UNIT

GRAHAM/CR 05-3117

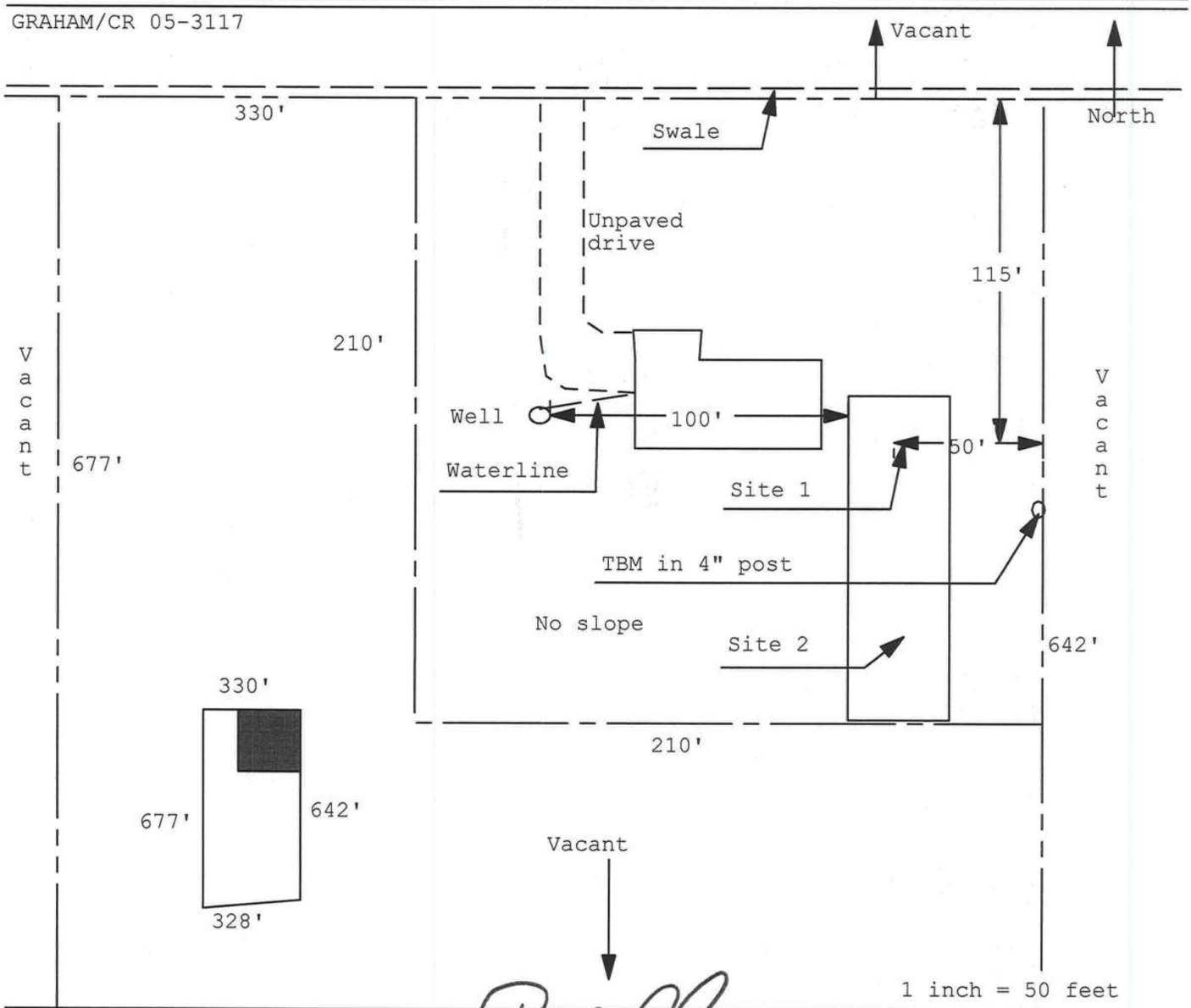

Site Plan Submitted By Paul Lloyd **Date** 9/28/05

Plan Approved ✓ **Not Approved** ____ **Date** 10-3-05

By Mr S Zn Columbia **CPHU**

Notes:

Columbia County Building Permit Application

Revised 9-23-04

For Office Use Only Application # 0510-15 Date Received 10/4/05 By G Permit # 8501 23735

Application Approved by - Zoning Official BLK Date 18.10.05 Plans Examiner CK JTH Date 10-12-05

Flood Zone X Development Permit N/A Zoning A-3 Land Use Plan Map Category A-3

Comments

- (CH# 7352 /w/ (7353) - ~~BH~~ 10-12

Applicants Name Matt Carson Phone 752-5152

Address 1531 SW Commercial Glen LC FL 32025

Owners Name Willard & Marlene Graham Phone 752-5152

911 Address 3949 SE High Falls Rd LC, FL 32025

Contractors Name Stanley Crawford Const. Phone 752-5152

Address 1531 SW Commercial Glen LC FL 32025

Fee Simple Owner Name & Address

Bonding Co. Name & Address

Architect/Engineer Name & Address Mark Disosway PO Box 868 LC FL 32056

Mortgage Lenders Name & Address First Atlantic Mortgage 885 SW Sisters Welcome Rd. L.C., FL 32025

Circle the correct power company - FL Power & Light - Clay Elec. - Suwannee Valley Elec. - Progressive Energy

Property ID Number part of 12551709215 ~~000~~ Estimated Cost of Construction 165,000.00

Subdivision Name PROPOSED II - 004 2006 Lot ____ Block ____ Unit ____ Phase ____

Driving Directions Hwy 441 South, TL on CR 252, TR on CR 245, TL on High Falls Rd, Go 1 mile, home on right

Type of Construction Residential, Single Fa Number of Existing Dwellings on Property Ø

Total Acreage 5 Lot Size ____ Do you need a - Culvert Permit or Culvert Waiver or Have an Existing Drive

Actual Distance of Structure from Property Lines - Front 65' Side 84' Side 183' Rear 530'+-

Total Building Height 27'9" Number of Stories 2 Heated Floor Area 2337.4 Roof Pitch 12/12

Porches 239.4 GARAGE 610.6 TOTAL 3187.4

Application is hereby made to obtain a permit to do work and installations as indicated. I certify that no work or installation has commenced prior to the issuance of a permit and that all work be performed to meet the standards of all laws regulating construction in this jurisdiction.

OWNERS AFFIDAVIT: I hereby certify that all the foregoing information is accurate and all work will be done in compliance with all applicable laws and regulating construction and zoning.

WARNING TO OWNER: YOUR FAILURE TO RECORD A NOTICE OF COMMENCMENT MAY RESULT IN YOU PAYING TWICE FOR IMPROVEMENTS TO YOUR PROPERTY. IF YOU INTEND TO OBTAIN FINANCING, CONSULT WITH YOUR LENDER OR ATTORNEY BEFORE RECORDING YOUR NOTICE OF COMMENCEMENT.

Stanley Crawford
Owner Builder or Agent (Including Contractor)

Stanley Crawford
Contractor Signature

Contractors License Number RG-0042896

Competency Card Number 5627

NOTARY STAMP/SEAL

STATE OF FLORIDA
COUNTY OF COLUMBIA

JANET L. CHEEK
MY COMMISSION # DD 22
EXPIRES: June 25, 2007
Bonded Thru Notary Public Underwriters

Sworn to (or affirmed) and subscribed before me this 4th day of October 2005.

Personally known ✓ or Produced Identification ____

Janet L. Cheek
Notary Signature

ATTN: WEEGIE

Columbia County Building Department
Culvert Waiver

Culvert Waiver No.
000000850

DATE: 10/19/2005 BUILDING PERMIT NO. 23735

APPLICANT MATT CASON PHONE 752.5152

ADDRESS 1531 SW COMMERCIAL GLEN LAKE CITY FL 32025

OWNER WILLARD & MARLENE GRAHAM PHONE

ADDRESS 3949 SE HIGH FALLS ROAD LAKE CITY FL 32025

CONTRACTOR W. STANLEY CRAWFORD PHONE 752.5152

LOCATION OF PROPERTY 441-S TO C-252,TL TO C-245,TR TO HIGH FALLS ROAD,GO 1 MILE PLACE ON R.

SUBDIVISION/LOT/BLOCK/PHASE/UNIT

PARCEL ID # 12-5S-17-09215-004

I HEREBY CERTIFY THAT I UNDERSTAND AND WILL FULLY COMPLY WITH THE DECISION OF THE COLUMBIA COUNTY PUBLIC WORKS DEPARTMENT IN CONNECTION WITH THE HEREIN PROPOSED APPLICATION.

SIGNATURE: Matt D. Cason

A SEPARATE CHECK IS REQUIRED
MAKE CHECKS PAYABLE TO BCC

Amount Paid 50.00

PUBLIC WORKS DEPARTMENT USE ONLY

I HEREBY CERTIFY THAT I HAVE EXAMINED THIS APPLICATION AND DETERMINED THAT THE CULVERT WAIVER IS:

✓ APPROVED _____ NOT APPROVED - NEEDS A CULVERT PERMIT

COMMENTS: DITCH NOT DEEP ENOUGHT TO INSTALL CULVERT
RECOMMEND FILLING DITCH IN BETWEEN DRIVEWAYS

SIGNED: Perry Pettis DATE: 10/27/05

ANY QUESTIONS PLEASE CONTACT THE PUBLIC WORKS DEPARTMENT AT 386-752-5955.

135 NE Hernando Ave., Suite B-21
Lake City, FL 32055
Phone: 386-758-1008 Fax: 386-758-2160

COLUMBIA COUNTY GATEWAY TO FLORIDA

Alpine Engineered Products, Inc.

1950 Marley Drive Haines City, FL 33844
Florida Engineering Certificate of Authorization Number: 567
Florida Certificate of Product Approval # FL1999
 Document ID:1SQJ487-Z0219092811

Truss Fabricator: Anderson Truss Company
Job Identification: 5-220-STANLEY CRAWFORD/GRAHAM - ROOF
Truss Count: 51
Model Code: Florida Building Code 2001
Truss Criteria: ANSI/TPI-1995(STD)/FBC
Engineering Software: Alpine Software,Version 7.04.
Structural Engineer of Record:
Address:
Minimum Design Loads: Roof - 40.0 PSF @ 1.25 Duration
Floor - N/A
Wind - 110 MPH ASCE 7-98 -Closed

Seal Date: 09/19/2005

-Truss Design Engineer-
Denise Rutledge
Florida License Number: 58752
1950 Marley Drive
Haines City, FL 33844

Notes:

1. Determination as to the suitability of these truss components for the structure is the responsibility of the building designer/engineer of record, as defined in ANSI/TPI 1-1995 Section 2.2
2. The drawing date shown on this index sheet must match the date shown on the individual truss component drawing.
3. As shown on attached drawings; the drawing number is preceded by: HCUSR487

Details: BRCLBSUB-A11015EC-GBLLETIN-PIGBACKA-A11030EC

#	Ref Description	Drawing#	Date
1	52885--H7A	05262050	09/19/05
2	52886--A	05262012	09/19/05
3	52887--AS	05262013	09/19/05
4	52888--AGE	05262014	09/19/05
5	52889--AG1	05262015	09/19/05
6	52890--AG	05262016	09/19/05
7	52891--AH	05262017	09/19/05
8	52892--H11B	05262018	09/19/05
9	52893--H13B	05262019	09/19/05
10	52894--HT7B	05262020	09/19/05
11	52895--HT9B	05262021	09/19/05
12	52896--CGE	05262051	09/19/05
13	52897--D	05262001	09/19/05
14	52898--DGE	05262022	09/19/05
15	52899--DG	05262023	09/19/05
16	52900--E	05262002	09/19/05
17	52901--EGE	05262024	09/19/05
18	52902--FG	05262025	09/19/05
19	52903--F	05262026	09/19/05
20	52904--FS	05262003	09/19/05
21	52905--G	05262004	09/19/05
22	52906--GGE	05262027	09/19/05
23	52907--EJ7D	05262028	09/19/05
24	52908--EJ7	05262029	09/19/05
25	52909--EJ7G	05262030	09/19/05
26	52910--HJ7	05262031	09/19/05
27	52911--CJ5	05262032	09/19/05
28	52912--CJ3	05262033	09/19/05
29	52913--CJ1	05262034	09/19/05
30	52914--CJ3T	05262005	09/19/05
31	52915--CJ5T	05262006	09/19/05
32	52916--EJ7T	05262007	09/19/05
33	52917--EJ7T1	05262008	09/19/05
34	52918--HJ7T	05262035	09/19/05
35	52919--MVH	05262036	09/19/05
36	52920--MV	05262037	09/19/05
37	52921--H11BP	05262038	09/19/05
38	52922--BP	05262039	09/19/05
39	52923--BHP	05262040	09/19/05
40	52924--AP	05262041	09/19/05
41	52925--AGP	05262042	09/19/05
42	52926--AH1P	05262043	09/19/05
43	52927--AHP	05262044	09/19/05
44	52928--RV	05262045	09/19/05
45	52929--RVH	05262046	09/19/05
46	52930--RVH1	05262047	09/19/05
47	52931--TGE	05262048	09/19/05
48	52932--T	05262009	09/19/05
49	52933--T1	05262010	09/19/05
50	52934--T2	05262011	09/19/05
51	52935--T2GE	05262049	09/19/05

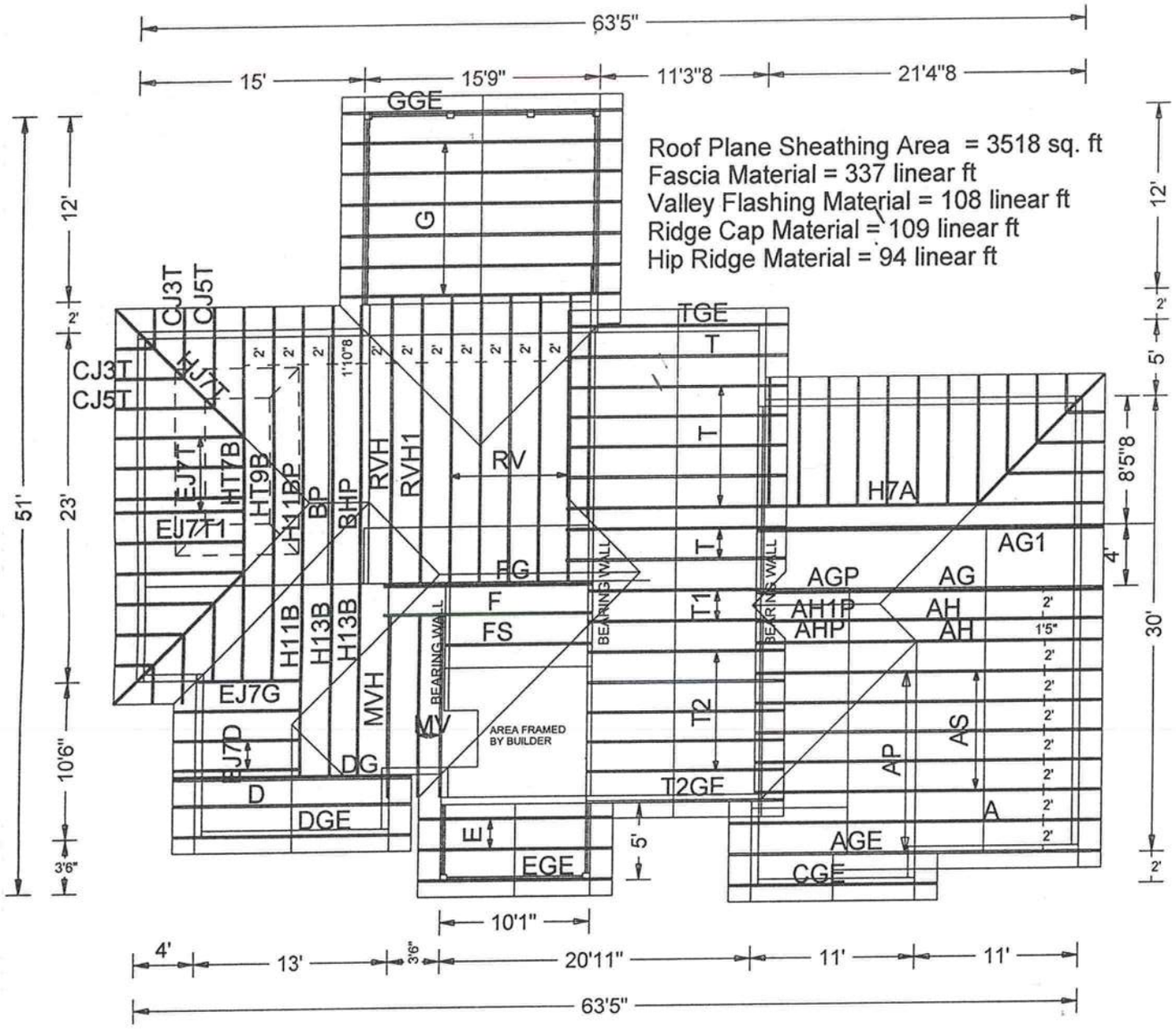

Roof Plane Sheathing Area = 3518 sq. ft
Fascia Material = 337 linear ft
Valley Flashing Material = 108 linear ft
Ridge Cap Material = 109 linear ft
Hip Ridge Material = 94 linear ft

STANLEY CRAWFORD/WILLARD GRAHAM
ROOF

JOB LOCATION:

JOB DESCRIPTION: STANLEY CRAWFORD/GRAHAM - ROO

DESIGNED BY:

JOB NO: 5-220

PAGE NO: 1 OF 1

(5-220-STANLEY CRAWFORD/GRAHAM - ROOF - H7A)

Top chord 2x4 SP #2 Dense
Bot chord 2x4 SP #2 Dense :B2 2x6 SP #2:
Webs 2x4 SP #3

(A) 1x4 SP #3 or better "T" brace. 80% length of web member. Attach with 8d Box or Gun (0.113"x2.5",min.)nails @ 6" OC.

#1 hip supports 7-0-0 jacks with no webs.

110 mph wind, 15.00 ft mean hgt, ASCE 7-98, CLOSED bldg, Located anywhere in roof, CAT II, EXP B, wind TC DL=5.0 psf, wind BC DL=5.0 psf.

(B) 2x4 SP #3 or better "T" brace. 80% length of web member. Attach with 16d Box or Gun (0.135"x3.5",min.)nails @ 6" OC.

Deflection meets L/360 live and L/240 total load.

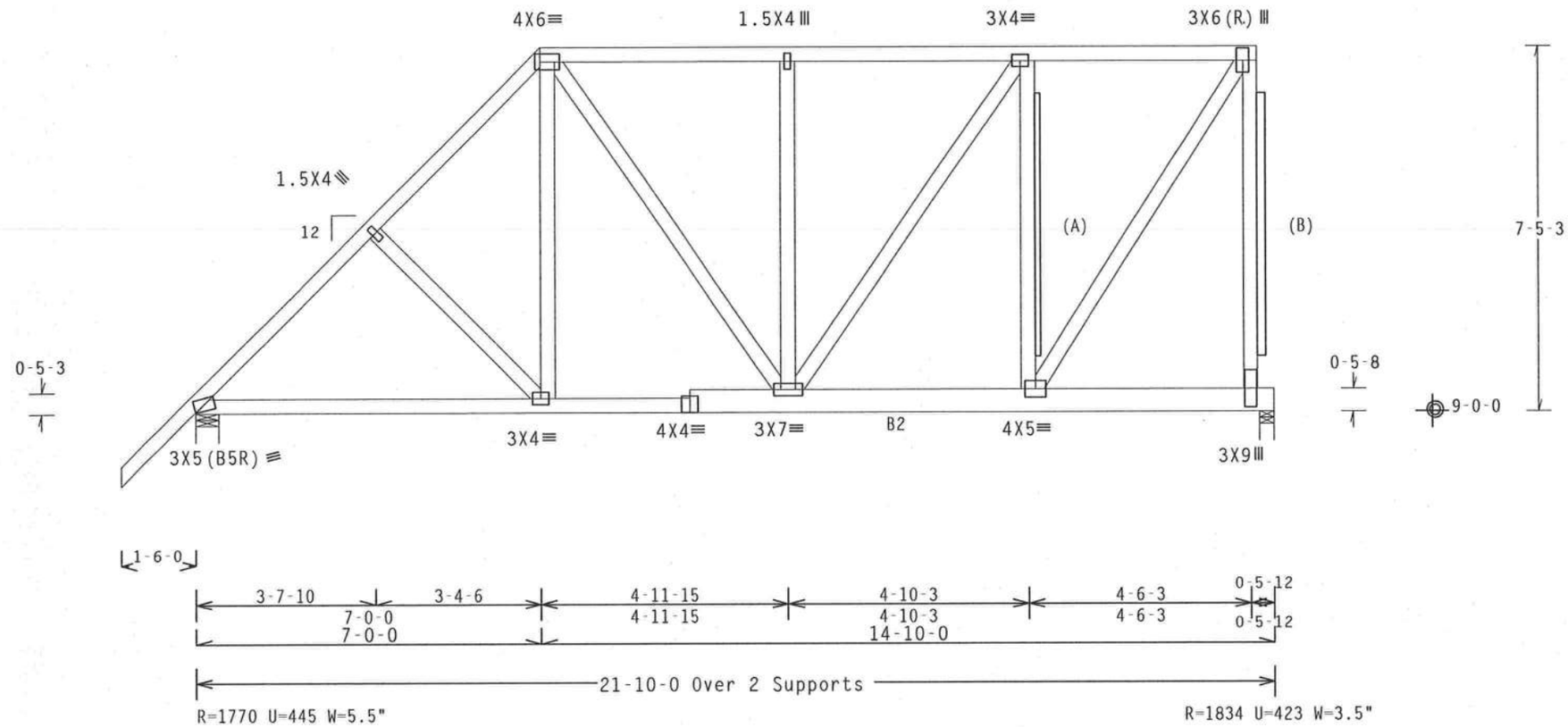

PLT TYP. Wave TPI | Design Crit: TPI-1995(STD)/FBC | 7.04.0805 | QTY:1 | FL/-/3/-/-/R/- | Scale =.3125"/Ft.

ALPINE
Alpine Engineered Products, Inc.
1950 Marley Drive
Haines City, FL 33844
FL Certificate of Authorization # 567

WARNING TRUSSES REQUIRE EXTREME CARE IN FABRICATION, HANDLING, SHIPPING, INSTALLING AND BRACING. REFER TO BCSI 1-03 (BUILDING COMPONENT SAFETY INFORMATION), PUBLISHED BY TPI (TRUSS PLATE INSTITUTE, 583 D'ONOFRIO DR., SUITE 200, MADISON, WI 53719) AND WTCA (WOOD TRUSS COUNCIL OF AMERICA, 6300 ENTERPRISE LN, MADISON, WI 53719) FOR SAFETY PRACTICES PRIOR TO PERFORMING THESE FUNCTIONS. UNLESS OTHERWISE INDICATED, TOP CHORD SHALL HAVE PROPERLY ATTACHED STRUCTURAL PANELS AND BOTTOM CHORD SHALL HAVE A PROPERLY ATTACHED RIGID CEILING.

IMPORTANT FURNISH A COPY OF THIS DESIGN TO THE INSTALLATION CONTRACTOR. ALPINE ENGINEERED PRODUCTS, INC. SHALL NOT BE RESPONSIBLE FOR ANY DEVIATION FROM THIS DESIGN; ANY FAILURE TO BUILD THE TRUSS IN CONFORMANCE WITH TPI; OR FABRICATING, HANDLING, SHIPPING, INSTALLING & BRACING OF TRUSSES. DESIGN CONFORMS WITH APPLICABLE PROVISIONS OF NDS (NATIONAL DESIGN SPEC, BY AF&PA) AND TPI. ALPINE CONNECTOR PLATES ARE MADE OF 20/18/16GA (W,H/S/K) ASTM A653 GRADE 40/60 (W, K/H,S) GALV. STEEL. APPLY PLATES TO EACH FACE OF TRUSS AND, UNLESS OTHERWISE LOCATED ON THIS DESIGN, POSITION PER DRAWINGS 160A-Z. ANY INSPECTION OF PLATES FOLLOWED BY (1) SHALL BE PER ANNEX A3 OF TPI1-2002 SEC.3. A SEAL ON THIS DRAWING INDICATES ACCEPTANCE OF PROFESSIONAL ENGINEERING RESPONSIBILITY SOLELY FOR THE TRUSS COMPONENT DESIGN SHOWN. THE SUITABILITY AND USE OF THIS COMPONENT FOR ANY BUILDING IS THE RESPONSIBILITY OF THE BUILDING DESIGNER PER ANSI/TPI 1 SEC. 2.

DENISE RUTLEDGE LICENSE No. 58752 STATE OF FLORIDA PROFESSIONAL ENGINEER
Sep 19 05

TC LL	20.0 PSF	REF R487-- 52885
TC DL	10.0 PSF	DATE 09/19/05
BC DL	10.0 PSF	DRW HCUSR487 05262050
BC LL	0.0 PSF	HC-ENG JB/ADR
TOT.LD.	40.0 PSF	SEQN- 155951
DUR.FAC.	1.25	
SPACING	24.0"	JREF- 1SQJ487_Z02

(5-220-STANLEY CRAWFORD/GRAHAM - ROOF - A)

Top chord 2x4 SP #2 Dense :T2, T4 2x8 SP SS:
Bot chord 2x6 SP #1 Dense :B2 2x8 SP SS:
:B3 2x4 SP #2 Dense:
Webs 2x4 SP #3

Calculated horizontal deflection is 0.22" due to live load and 0.18" due to dead load.

BC attic room floor loading: LL = 40.00 psf; DL = 10.00 psf; from 5-5-8 to 16-6-8.

110 mph wind, 13.47 ft mean hgt, ASCE 7-98, CLOSED bldg, Located anywhere in roof, CAT II, EXP B, wind TC DL=5.0 psf, wind BC DL=5.0 psf.

Roof overhang supports 2.00 psf soffit load.

Collar-tie braced with continuous lateral bracing at 24" OC. or rigid ceiling.

Deflection meets L/360 live and L/240 total load.

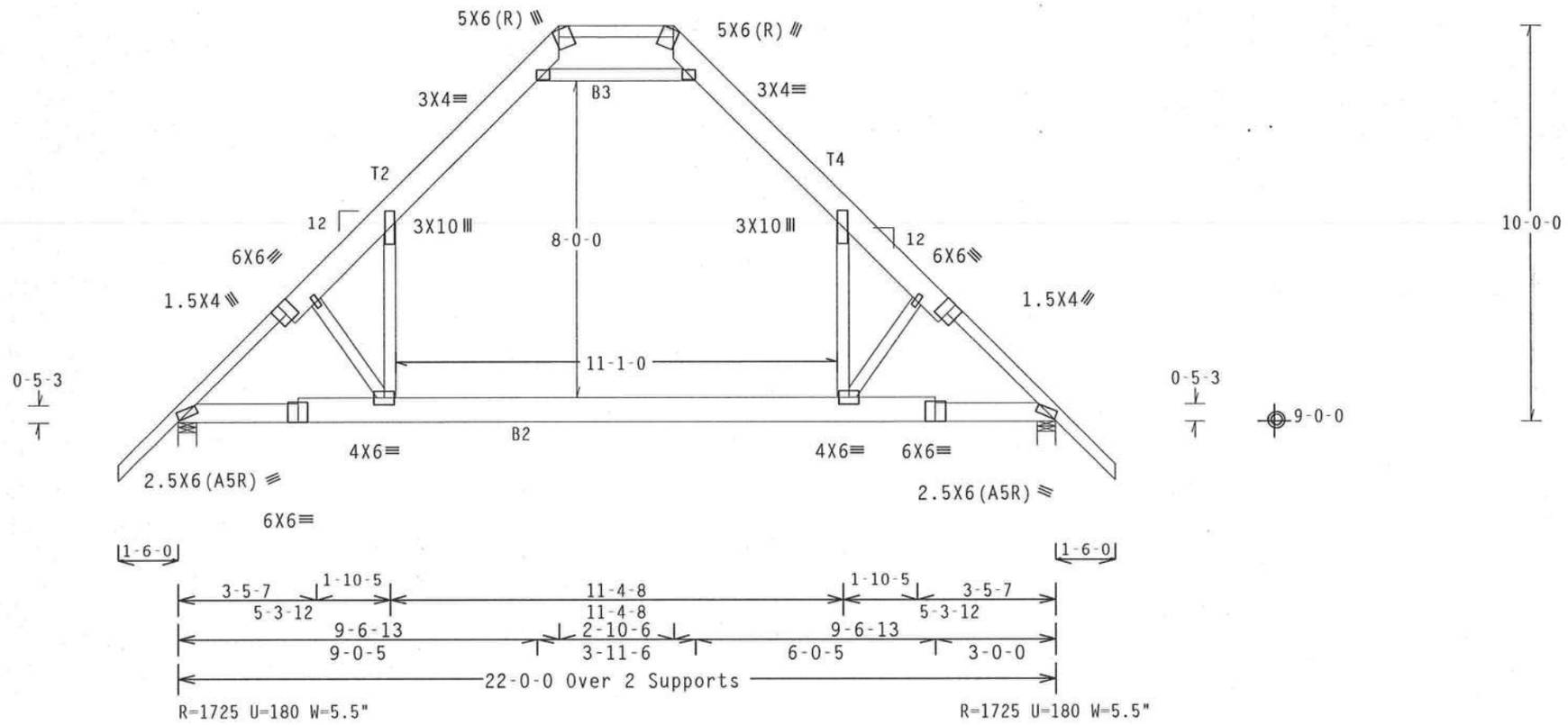

PLT TYP. Wave TPI | Design Crit: TPI-1995(STD)/FBC | 7.04.080 | QTY:1 | FL/-/3/-/-/R/- | Scale =.25"/Ft.

ALPINE

Alpine Engineered Products, Inc.
1950 Marley Drive
Haines City, FL 33844
FL Certificate of Authorization # 567

WARNING TRUSSES REQUIRE EXTREME CARE IN FABRICATION, HANDLING, SHIPPING, INSTALLING AND BRACING. REFER TO BCSI 1-03 (BUILDING COMPONENT SAFETY INFORMATION), PUBLISHED BY TPI (TRUSS PLATE INSTITUTE, 583 D'ONOFRIO DR., SUITE 200, MADISON, WI 53719) AND WICA (WOOD TRUSS COUNCIL OF AMERICA, 6300 ENTERPRISE LN, MADISON, WI 53719) FOR SAFETY PRACTICES PRIOR TO PERFORMING THESE FUNCTIONS. UNLESS OTHERWISE INDICATED, TOP CHORD SHALL HAVE PROPERLY ATTACHED STRUCTURAL PANELS AND BOTTOM CHORD SHALL HAVE A PROPERLY ATTACHED RIGID CEILING.

IMPORTANT FURNISH A COPY OF THIS DESIGN TO THE INSTALLATION CONTRACTOR. ALPINE ENGINEERED PRODUCTS, INC. SHALL NOT BE RESPONSIBLE FOR ANY DEVIATION FROM THIS DESIGN; ANY FAILURE TO BUILD THE TRUSS IN CONFORMANCE WITH TPI; OR FABRICATING, HANDLING, SHIPPING, INSTALLING & BRACING OF TRUSSES. DESIGN CONFORMS WITH APPLICABLE PROVISIONS OF NDS (NATIONAL DESIGN SPEC, BY AF&PA) AND TPI. ALPINE CONNECTOR PLATES ARE MADE OF 20/18/16GA (W,H/S/K) ASTM A653 GRADE 40/60 (W, K/H,S) GALV. STEEL. APPLY PLATES TO EACH FACE OF TRUSS AND, UNLESS OTHERWISE LOCATED ON THIS DESIGN, POSITION PER DRAWINGS 160A-Z. ANY INSPECTION OF PLATES FOLLOWED BY (I) SHALL BE PER ANNEX A3 OF TPI1-2002 SEC.3. A SEAL ON THIS DRAWING INDICATES ACCEPTANCE OF PROFESSIONAL ENGINEERING RESPONSIBILITY SOLELY FOR THE TRUSS COMPONENT DESIGN SHOWN. THE SUITABILITY AND USE OF THIS COMPONENT FOR ANY BUILDING IS THE RESPONSIBILITY OF THE BUILDING DESIGNER PER ANSI/TPI 1 SEC. 2.

DENISE RUTLEDGE
LICENSE
No. 58752
STATE OF FLORIDA
PROFESSIONAL ENGINEER
Sep 19 '05

TC LL	20.0 PSF	REF R487-- 52886
TC DL	10.0 PSF	DATE 09/19/05
BC DL	10.0 PSF	DRW HCUSR487 05262012
BC LL	0.0 PSF	HC-ENG JB/ADR
TOT.LD.	40.0 PSF	SEQN- 156018
DUR.FAC.	1.25	
SPACING	24.0"	JREF- 1SQJ487_Z02

(5-220-STANLEY CRAWFORD/GRAHAM - ROOF - AS)

Top chord 2x4 SP #2 Dense :T2, T4 2x8 SP SS:
Bot chord 2x6 SP #1 Dense :B2 2x8 SP SS:
:B3 2x4 SP #2 Dense:
Webs 2x4 SP #3

Calculated horizontal deflection is 0.22" due to live load and 0.18" due to dead load.

BC attic room floor loading: LL = 40.00 psf; DL = 10.00 psf; from 5-5-8 to 16-6-8.

110 mph wind, 13.47 ft mean hgt, ASCE 7-98, CLOSED bldg, Located anywhere in roof, CAT II, EXP B, wind TC DL=5.0 psf, wind BC DL=5.0 psf.

Roof overhang supports 2.00 psf soffit load.

Collar-tie braced with continuous lateral bracing at 24" OC. or rigid ceiling.

Deflection meets L/360 live and L/240 total load.

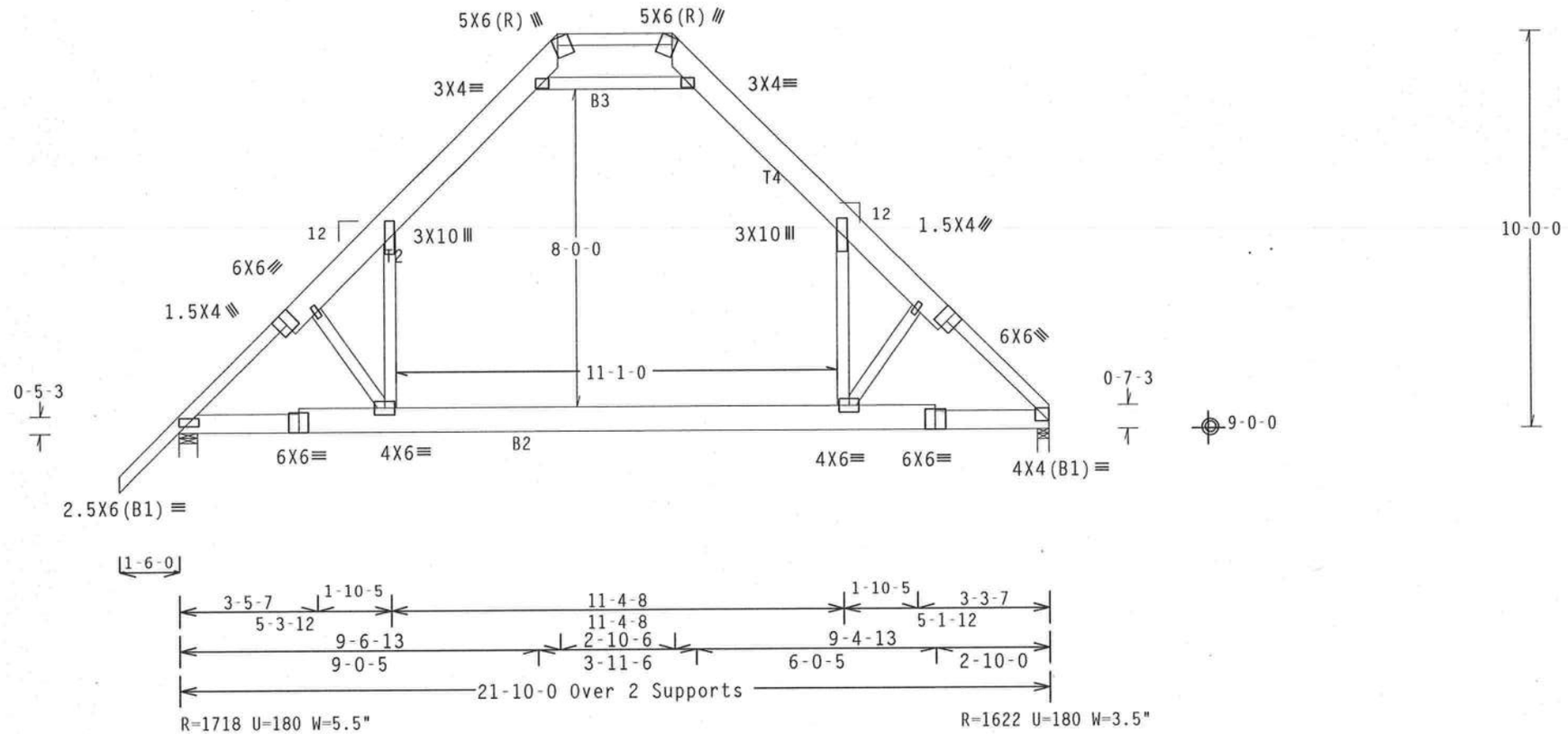

PLT TYP. Wave TPI | Design Crit: TPI-1995(STD)/FBC | 7.04.0805 | QTY:5 | FL/-/3/-/-/R/- | Scale =.25"/Ft.

ALPINE
Alpine Engineered Products, Inc.
1950 Marley Drive
Haines City, FL 33844
FL Certificate of Authorization # 567

WARNING TRUSSES REQUIRE EXTREME CARE IN FABRICATION, HANDLING, SHIPPING, INSTALLING AND BRACING. REFER TO BCSI 1-03 (BUILDING COMPONENT SAFETY INFORMATION), PUBLISHED BY TPI (TRUSS PLATE INSTITUTE, 583 D'ONOFRIO DR., SUITE 200, MADISON, WI 53719) AND WTCA (WOOD TRUSS COUNCIL OF AMERICA, 6300 ENTERPRISE LN, MADISON, WI 53719) FOR SAFETY PRACTICES PRIOR TO PERFORMING THESE FUNCTIONS. UNLESS OTHERWISE INDICATED, TOP CHORD SHALL HAVE PROPERLY ATTACHED STRUCTURAL PANELS AND BOTTOM CHORD SHALL HAVE A PROPERLY ATTACHED RIGID CEILING.

IMPORTANTFURNISH A COPY OF THIS DESIGN TO THE INSTALLATION CONTRACTOR. ALPINE ENGINEERED PRODUCTS, INC. SHALL NOT BE RESPONSIBLE FOR ANY DEVIATION FROM THIS DESIGN; ANY FAILURE TO BUILD THE TRUSS IN CONFORMANCE WITH TPI; OR FABRICATING, HANDLING, SHIPPING, INSTALLING & BRACING OF TRUSSES. DESIGN CONFORMS WITH APPLICABLE PROVISIONS OF NDS (NATIONAL DESIGN SPEC, BY AF&PA) AND TPI. ALPINE CONNECTOR PLATES ARE MADE OF 20/18/16GA (W.H/S/K) ASTM A653 GRADE 40/60 (W. K/H.S) GALV. STEEL. APPLY PLATES TO EACH FACE OF TRUSS AND, UNLESS OTHERWISE LOCATED ON THIS DESIGN, POSITION PER DRAWINGS 160A-Z. ANY INSPECTION OF PLATES FOLLOWED BY (1) SHALL BE PER ANNEX A3 OF TPI1-2002 SEC.3. A SEAL ON THIS DRAWING INDICATES ACCEPTANCE OF PROFESSIONAL ENGINEERING RESPONSIBILITY SOLELY FOR THE TRUSS COMPONENT DESIGN SHOWN. THE SUITABILITY AND USE OF THIS COMPONENT FOR ANY BUILDING IS THE RESPONSIBILITY OF THE BUILDING DESIGNER PER ANSI/TPI 1 SEC. 2.

DENISE RUTLEDGE
LICENSE
No. 58752
STATE OF FLORIDA
PROFESSIONAL ENGINEER
Sep 19 05

TC LL	20.0 PSF	REF	R487-- 52887
TC DL	10.0 PSF	DATE	09/19/05
BC DL	10.0 PSF	DRW	HCUSR487 05262013
BC LL	0.0 PSF	HC-ENG	JB/ADR
TOT.LD.	40.0 PSF	SEQN-	156032
DUR.FAC.	1.25		
SPACING	24.0"	JREF-	1SQJ487_Z02

(5-220-STANLEY CRAWFORD/GRAHAM - ROOF - AGE)

Top chord 2x4 SP #2 Dense :T3, T5 2x8 SP SS:
Bot chord 2x6 SP #1 Dense :B2 2x8 SP SS:
:B3 2x4 SP #2 Dense:
Webs 2x4 SP #3

SPECIAL LOADS
------(LUMBER DUR.FAC.=1.25 / PLATE DUR.FAC.=1.25)

TC - From	81 PLF	at	-1.50 to	81 PLF	at	5.46
TC - From	101 PLF	at	5.46 to	101 PLF	at	9.44
TC - From	81 PLF	at	9.44 to	81 PLF	at	12.56
TC - From	101 PLF	at	12.56 to	101 PLF	at	16.50
TC - From	80 PLF	at	16.50 to	80 PLF	at	16.54
TC - From	60 PLF	at	16.54 to	60 PLF	at	23.50
PLT- From	20 PLF	at	9.69 to	20 PLF	at	12.31
BC - From	4 PLF	at	-1.50 to	4 PLF	at	0.00
BC - From	20 PLF	at	0.00 to	20 PLF	at	5.46
BC - From	120 PLF	at	5.46 to	120 PLF	at	16.54
BC - From	20 PLF	at	16.54 to	20 PLF	at	22.00
BC - From	4 PLF	at	22.00 to	4 PLF	at	23.50

BC - 80 LB Conc. Load at 5.46, 16.54

Calculated horizontal deflection is 0.12" due to live load and 0.14" due to dead load.

Collar-tie braced with continuous lateral bracing at 24" OC. or rigid ceiling.

+ MEMBER TO BE LATERALLY BRACED FOR HORIZONTAL WIND LOADS. BRACING SYSTEM TO BE DESIGNED AND FURNISHED BY OTHERS.

110 mph wind, 13.26 ft mean hgt, ASCE 7-98, CLOSED bldg, Located anywhere in roof, CAT II, EXP B, wind TC DL=5.0 psf, wind BC DL=5.0 psf.

Roof overhang supports 2.00 psf soffit load.

Deflection meets L/360 live and L/240 total load.

THE BUILDING DESIGNER IS RESPONSIBLE FOR THE DESIGN OF ROOF AND CEILING DIAPHRAGMS, GABLE END SHEAR WALLS, SUPPORTING SHEAR WALLS. SHEAR WALLS MUST PROVIDE CONTINUOUS LATERAL RESTRAINT TO GABLE END. ALL CONNECTIONS TO BE DESIGNED BY THE BUILDING DESIGNER.

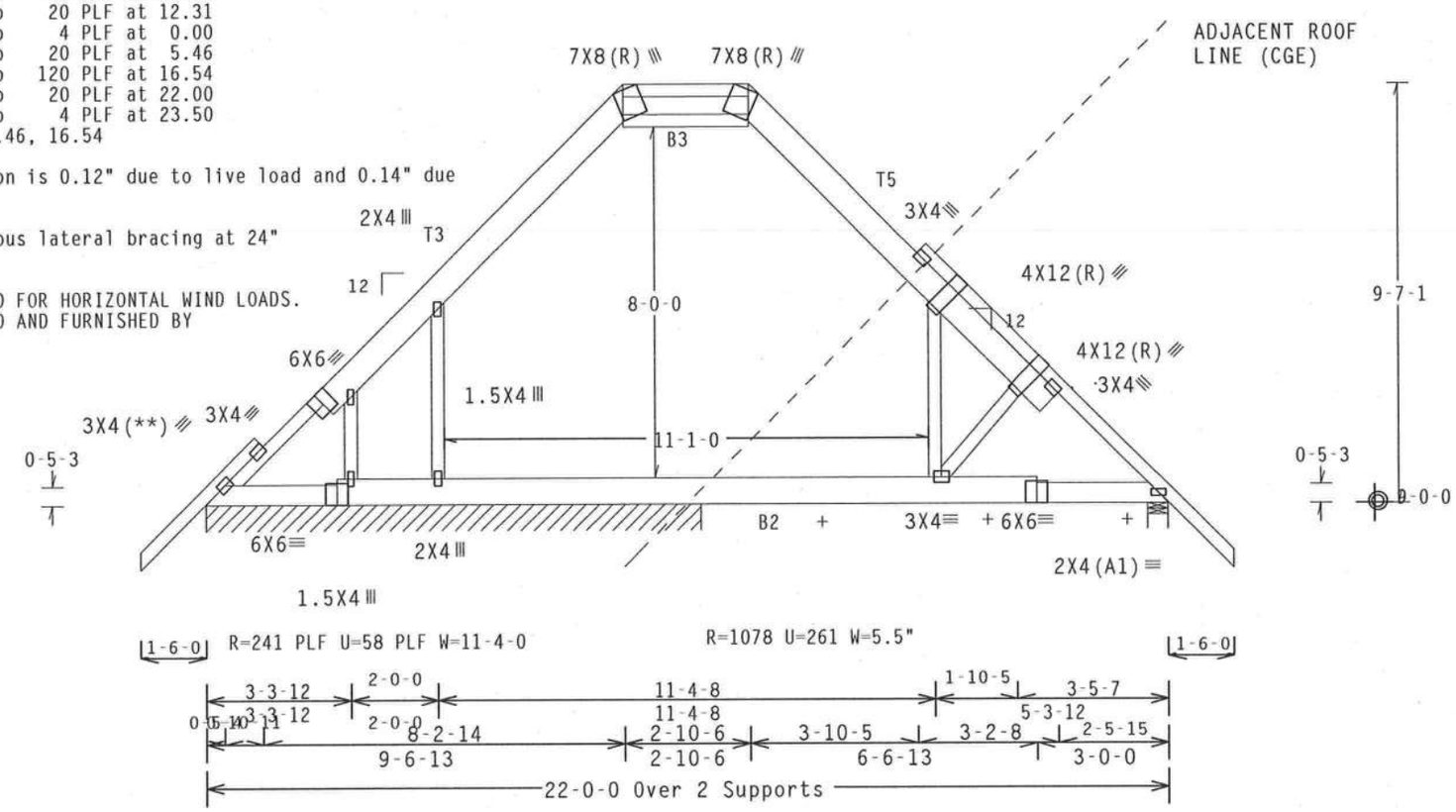

PLT TYP. Wave TPI | Design Crit: TPI-1995(STD)/FBC | 7.04.0805 | QTY:1 | FL/-/3/-/-/R/- | Scale =.25"/Ft.

ALPINE
Alpine Engineered Products, Inc.
1950 Marley Drive
Haines City, FL 33844
FL Certificate of Authorization # 567

WARNING TRUSSES REQUIRE EXTREME CARE IN FABRICATION, HANDLING, SHIPPING, INSTALLING AND BRACING. REFER TO BCSI 1-03 (BUILDING COMPONENT SAFETY INFORMATION), PUBLISHED BY TPI (TRUSS PLATE INSTITUTE, 583 D'ONOFRIO DR., SUITE 200, MADISON, WI 53719) AND WTCA (WOOD TRUSS COUNCIL OF AMERICA, 6300 ENTERPRISE LN, MADISON, WI 53719) FOR SAFETY PRACTICES PRIOR TO PERFORMING THESE FUNCTIONS. UNLESS OTHERWISE INDICATED, TOP CHORD SHALL HAVE PROPERLY ATTACHED STRUCTURAL PANELS AND BOTTOM CHORD SHALL HAVE A PROPERLY ATTACHED RIGID CEILING.

IMPORTANT FURNISH A COPY OF THIS DESIGN TO THE INSTALLATION CONTRACTOR. ALPINE ENGINEERED PRODUCTS, INC. SHALL NOT BE RESPONSIBLE FOR ANY DEVIATION FROM THIS DESIGN; ANY FAILURE TO BUILD THE TRUSS IN CONFORMANCE WITH TPI; OR FABRICATING, HANDLING, SHIPPING, INSTALLING & BRACING OF TRUSSES. DESIGN CONFORMS WITH APPLICABLE PROVISIONS OF NDS (NATIONAL DESIGN SPEC, BY AF&PA) AND TPI. ALPINE CONNECTOR PLATES ARE MADE OF 20/18/16GA (W,H/S/K) ASTM A653 GRADE 40/60 (W, K/H,S) GALV. STEEL. APPLY PLATES TO EACH FACE OF TRUSS AND, UNLESS OTHERWISE LOCATED ON THIS DESIGN, POSITION PER DRAWINGS 160A-Z. ANY INSPECTION OF PLATES FOLLOWED BY (1) SHALL BE PER ANNEX A3 OF TPI1-2002 SEC.3. A SEAL ON THIS DRAWING INDICATES ACCEPTANCE OF PROFESSIONAL ENGINEERING RESPONSIBILITY SOLELY FOR THE TRUSS COMPONENT DESIGN SHOWN. THE SUITABILITY AND USE OF THIS COMPONENT FOR ANY BUILDING IS THE RESPONSIBILITY OF THE BUILDING DESIGNER PER ANSI/TPI 1 SEC. 2.

DENISE RUTLEDGE LICENSE No. 58752 STATE OF FLORIDA PROFESSIONAL ENGINEER
Sep 19 05

TC LL	20.0 PSF	REF R487-- 52888
TC DL	10.0 PSF	DATE 09/19/05
BC DL	10.0 PSF	DRW HCUSR487 05262014
BC LL	0.0 PSF	HC-ENG JB/ADR
TOT.LD.	40.0 PSF	SEQN- 156062
DUR.FAC.	1.25	
SPACING	24.0"	JREF- 1SQJ487_Z02

(5-220-STANLEY CRAWFORD/GRAHAM - ROOF - AG1)

Top chord 2x4 SP #2 Dense :T2 2x8 SP SS:
:T3 2x6 SP #1 Dense:
Bot chord 2x8 SP SS :B2 2x6 SP #1 Dense:
Webs 2x4 SP #3

110 mph wind, 12.91 ft mean hgt, ASCE 7-98, CLOSED bldg, not located within 4.50 ft from roof edge, CAT II, EXP B, wind TC DL=5.0 psf, wind BC DL=5.0 psf.

Roof overhang supports 2.00 psf soffit load.

Calculated horizontal deflection is 0.12" due to live load and 0.14" due to dead load.

Trusses to be spaced at 48.0" OC maximum.

Collar-tie braced with continuous lateral bracing at 24" OC.

Deflection meets L/360 live and L/240 total load.

In lieu of structural panels or rigid ceiling use purlins to brace TC @ 24" OC, BC @ 48" OC.

2 COMPLETE TRUSSES REQUIRED

Nailing Schedule: (12d_Box_or_Gun_(0.128"x3.25",_min.)_nails)
Top Chord: 1 Row @12.00" o.c.
Bot Chord: 1 Row @ 8.50" o.c.
Webs : 1 Row @ 4" o.c.
Use equal spacing between rows and stagger nails in each row to avoid splitting.

Right end vertical not exposed to wind pressure.

(A) SP #3 or better scab brace. Same size & 80% length of web member. Attach with 10d Box or Gun (0.128"x3",min.)nails @ 6" OC.

BC attic room floor loading: LL = 40.00 psf; DL = 10.00 psf; from 5-5-8 to 16-6-8.

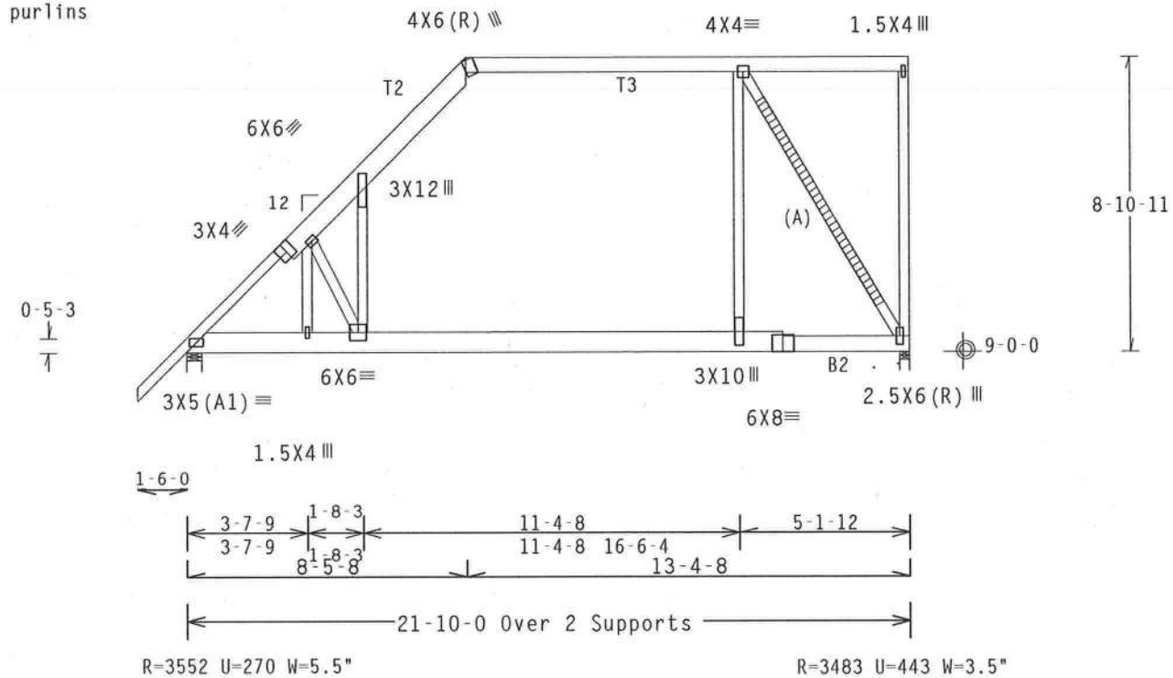

PLT TYP. Wave TPI | Design Crit: TPI-1995(STD)/FBC | 7.04.0805 | QTY:1 | FL/-/3/-/-/R/- | Scale =.1875"/Ft.

ALPINE
Alpine Engineered Products, Inc.
1950 Marley Drive
Haines City, FL 33844
FL Certificate of Authorization # 567

WARNING TRUSSES REQUIRE EXTREME CARE IN FABRICATION, HANDLING, SHIPPING, INSTALLING AND BRACING. REFER TO BCSI 1-03 (BUILDING COMPONENT SAFETY INFORMATION), PUBLISHED BY TPI (TRUSS PLATE INSTITUTE, 583 D'ONOFRIO DR., SUITE 200, MADISON, WI 53719) AND WTCA (WOOD TRUSS COUNCIL OF AMERICA, 6300 ENTERPRISE LN, MADISON, WI 53719) FOR SAFETY PRACTICES PRIOR TO PERFORMING THESE FUNCTIONS. UNLESS OTHERWISE INDICATED, TOP CHORD SHALL HAVE PROPERLY ATTACHED STRUCTURAL PANELS AND BOTTOM CHORD SHALL HAVE A PROPERLY ATTACHED RIGID CEILING.

IMPORTANT FURNISH A COPY OF THIS DESIGN TO THE INSTALLATION CONTRACTOR. ALPINE ENGINEERED PRODUCTS, INC. SHALL NOT BE RESPONSIBLE FOR ANY DEVIATION FROM THIS DESIGN; ANY FAILURE TO BUILD THE TRUSS IN CONFORMANCE WITH TPI; OR FABRICATING, HANDLING, SHIPPING, INSTALLING & BRACING OF TRUSSES. DESIGN CONFORMS WITH APPLICABLE PROVISIONS OF NDS (NATIONAL DESIGN SPEC. BY AF&PA) AND TPI. ALPINE CONNECTOR PLATES ARE MADE OF 20/18/16GA (W,H/S/K) ASTM A653 GRADE 40/60 (W, K/H,S) GALV. STEEL. APPLY PLATES TO EACH FACE OF TRUSS AND, UNLESS OTHERWISE LOCATED ON THIS DESIGN, POSITION PER DRAWINGS 160A-Z. ANY INSPECTION OF PLATES FOLLOWED BY (1) SHALL BE PER ANNEX A3 OF TPI1-2002 SEC.3. A SEAL ON THIS DRAWING INDICATES ACCEPTANCE OF PROFESSIONAL ENGINEERING RESPONSIBILITY SOLELY FOR THE TRUSS COMPONENT DESIGN SHOWN. THE SUITABILITY AND USE OF THIS COMPONENT FOR ANY BUILDING IS THE RESPONSIBILITY OF THE BUILDING DESIGNER PER ANSI/TPI 1 SEC. 2.

Sep 19 '05

TC LL	20.0 PSF	REF	R487-- 52889
TC DL	10.0 PSF	DATE	09/19/05
BC DL	10.0 PSF	DRW	HCUSR487 05262015
BC LL	0.0 PSF	HC-ENG	JB/ADR
TOT.LD.	40.0 PSF	SEQN-	156092
DUR.FAC.	1.25		
SPACING	48.0"	JREF-	1SQJ487_Z02

(5-220-STANLEY CRAWFORD/GRAHAM - ROOF - AG)

Top chord 2x4 SP #2 Dense :T2 2x8 SP SS:
Bot chord 2x8 SP SS :B2 2x6 SP #1 Dense:
Webs 2x4 SP #3

110 mph wind, 13.47 ft mean hgt, ASCE 7-98, CLOSED bldg, not located within 4.50 ft from roof edge, CAT II, EXP B, wind TC DL=5.0 psf, wind BC DL=5.0 psf.

Calculated horizontal deflection is 0.12" due to live load and 0.14" due to dead load.

Trusses to be spaced at 48.0" OC maximum.

BC attic room floor loading: LL = 40.00 psf; DL = 10.00 psf; from 5-5-8 to 16-6-8.

(**) Plate relocated as shown.

In lieu of structural panels or rigid ceiling use purlins to brace TC @ 24" OC, BC @ 48" OC.

2 COMPLETE TRUSSES REQUIRED

Nailing Schedule: (12d_Box_or_Gun_(0.128"x3.25",_min.)_nails)
Top Chord: 1 Row @12.00" o.c.
Bot Chord: 1 Row @ 8.50" o.c.
Webs : 1 Row @ 4" o.c.
Use equal spacing between rows and stagger nails in each row to avoid splitting.

Roof overhang supports 2.00 psf soffit load.

(A) SP #3 or better scab brace. Same size & 80% length of web member. Attach with 10d Box or Gun (0.128"x3",min.)nails @ 6" OC.

Collar-tie braced with continuous lateral bracing at 24" OC.

Deflection meets L/360 live and L/240 total load.

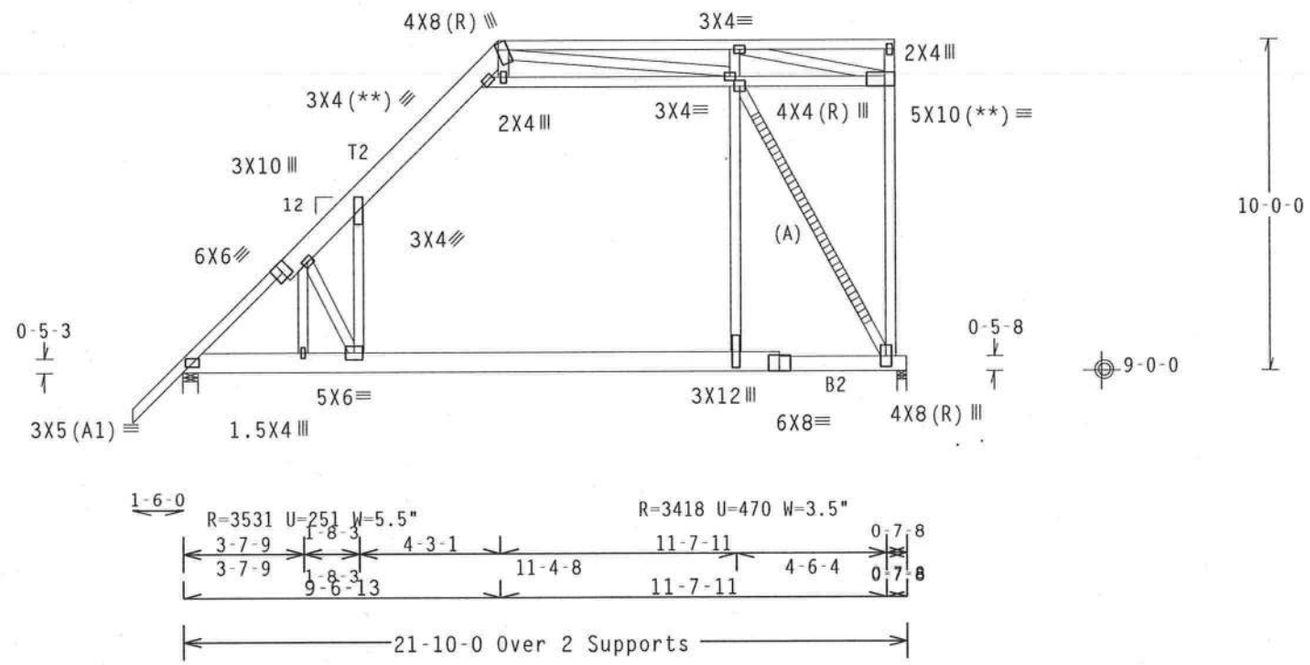

PLT TYP. Wave TPI | Design Crit: TPI-1995(STD)/FBC | 7.04.080 | QTY:1 | FL/-/3/-/-/R/- | Scale =.1875"/Ft.

ALPINE
Alpine Engineered Products, Inc.
1950 Marley Drive
Haines City, FL 33844
FL Certificate of Authorization # 567

WARNING TRUSSES REQUIRE EXTREME CARE IN FABRICATION, HANDLING, SHIPPING, INSTALLING AND BRACING. REFER TO BCSI 1-03 (BUILDING COMPONENT SAFETY INFORMATION), PUBLISHED BY TPI (TRUSS PLATE INSTITUTE, 583 D'ONOFRIO DR., SUITE 200, MADISON, WI 53719) AND WTCA (WOOD TRUSS COUNCIL OF AMERICA, 6300 ENTERPRISE LN, MADISON, WI 53719) FOR SAFETY PRACTICES PRIOR TO PERFORMING THESE FUNCTIONS. UNLESS OTHERWISE INDICATED, TOP CHORD SHALL HAVE PROPERLY ATTACHED STRUCTURAL PANELS AND BOTTOM CHORD SHALL HAVE A PROPERLY ATTACHED RIGID CEILING.

IMPORTANT FURNISH A COPY OF THIS DESIGN TO THE INSTALLATION CONTRACTOR. ALPINE ENGINEERED PRODUCTS, INC. SHALL NOT BE RESPONSIBLE FOR ANY DEVIATION FROM THIS DESIGN; ANY FAILURE TO BUILD THE TRUSS IN CONFORMANCE WITH TPI: OR FABRICATING, HANDLING, SHIPPING, INSTALLING & BRACING OF TRUSSES. DESIGN CONFORMS WITH APPLICABLE PROVISIONS OF NDS (NATIONAL DESIGN SPEC, BY AF&PA) AND TPI. ALPINE CONNECTOR PLATES ARE MADE OF 20/18/16GA (W,H/S/K) ASTM A653 GRADE 40/60 (W, K/H,S) GALV. STEEL. APPLY PLATES TO EACH FACE OF TRUSS AND, UNLESS OTHERWISE LOCATED ON THIS DESIGN, POSITION PER DRAWINGS 160A-Z. ANY INSPECTION OF PLATES FOLLOWED BY (1) SHALL BE PER ANNEX A3 OF TPI1-2002 SEC.3. A SEAL ON THIS DRAWING INDICATES ACCEPTANCE OF PROFESSIONAL ENGINEERING RESPONSIBILITY SOLELY FOR THE TRUSS COMPONENT DESIGN SHOWN. THE SUITABILITY AND USE OF THIS COMPONENT FOR ANY BUILDING IS THE RESPONSIBILITY OF THE BUILDING DESIGNER PER ANSI/TPI 1 SEC. 2.

DENISE RUTLEDGE
LICENSE
No 58752
STATE OF FLORIDA
PROFESSIONAL ENGINEER
Sep 19 '05

TC LL	20.0 PSF	REF R487-- 52890
TC DL	10.0 PSF	DATE 09/19/05
BC DL	10.0 PSF	DRW HCUSR487 05262016
BC LL	0.0 PSF	HC-ENG JB/ADR
TOT.LD.	40.0 PSF	SEQN- 156188
DUR.FAC.	1.25	
SPACING	48.0"	JREF- 1SQJ487_Z02

(5-220-STANLEY CRAWFORD/GRAHAM - ROOF - AH)

Top chord 2x4 SP #2 Dense :T2 2x8 SP SS:
Bot chord 2x8 SP SS :B2 2x6 SP #1 Dense:
Webs 2x4 SP #3

Roof overhang supports 2.00 psf soffit load.

Calculated horizontal deflection is 0.12" due to live load and 0.14" due to dead load.

Collar-tie braced with continuous lateral bracing at 24" OC. or rigid ceiling.

Deflection meets L/360 live and L/240 total load.

110 mph wind, 13.47 ft mean hgt, ASCE 7-98, CLOSED bldg, not located within 4.50 ft from roof edge, CAT II, EXP B, wind TC DL=5.0 psf, wind BC DL=5.0 psf.

(A) Continuous lateral bracing equally spaced on member.

BC attic room floor loading: LL = 40.00 psf; DL = 10.00 psf; from 5-5-8 to 16-6-8.

(**) Plate relocated as shown.

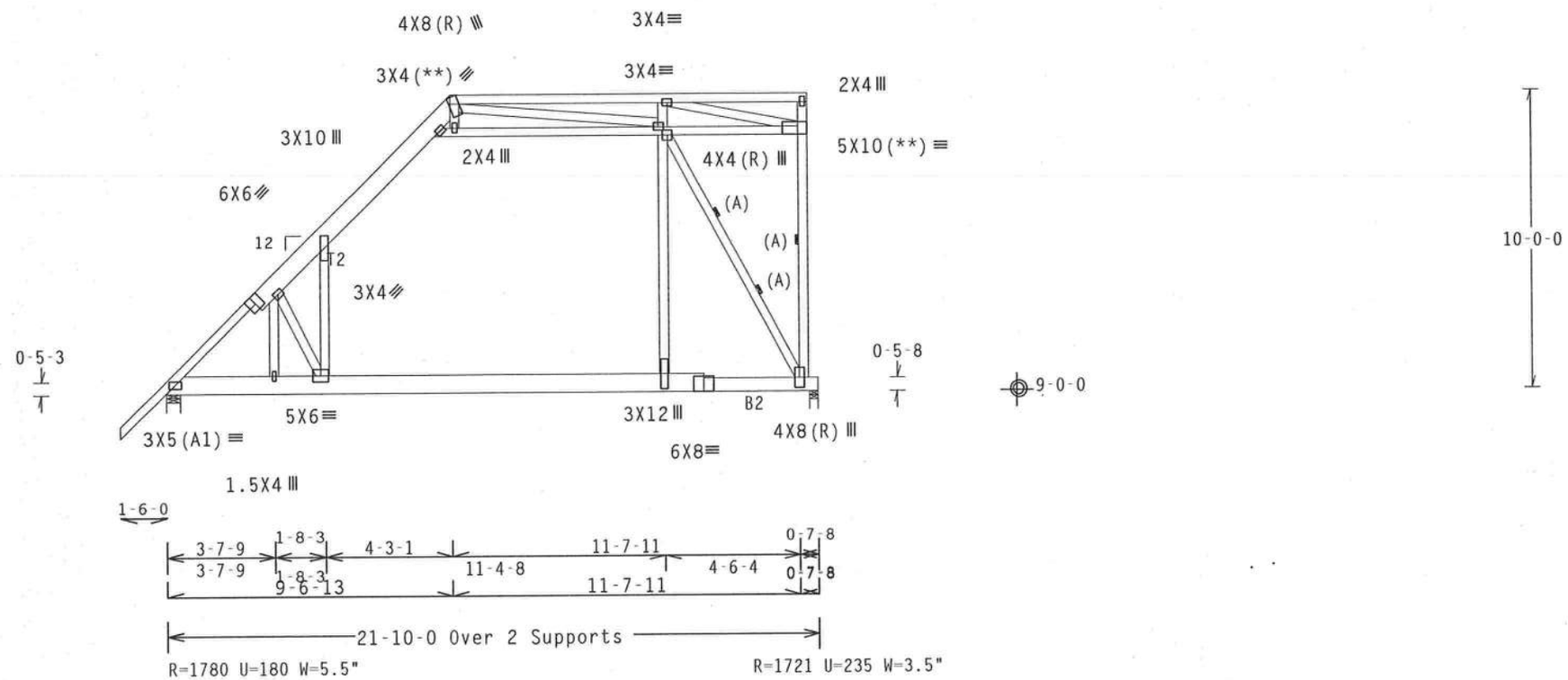

PLT TYP. Wave TPI | Design Crit: TPI-1995(STD)/FBC | 7.04.080 | QTY:2 | FL/-/3/-/-/R/- | Scale =.1875"/Ft.

ALPINE
Alpine Engineered Products, Inc.
1950 Marley Drive
Haines City, FL 33844
FL Certificate of Authorization # 567

WARNING TRUSSES REQUIRE EXTREME CARE IN FABRICATION, HANDLING, SHIPPING, INSTALLING AND BRACING. REFER TO BCSI 1-03 (BUILDING COMPONENT SAFETY INFORMATION), PUBLISHED BY TPI (TRUSS PLATE INSTITUTE, 583 D'ONOFRIO DR., SUITE 200, MADISON, WI 53719) AND WTCA (WOOD TRUSS COUNCIL OF AMERICA, 6300 ENTERPRISE LN, MADISON, WI 53719) FOR SAFETY PRACTICES PRIOR TO PERFORMING THESE FUNCTIONS. UNLESS OTHERWISE INDICATED, TOP CHORD SHALL HAVE PROPERLY ATTACHED STRUCTURAL PANELS AND BOTTOM CHORD SHALL HAVE A PROPERLY ATTACHED RIGID CEILING.

IMPORTANTFURNISH A COPY OF THIS DESIGN TO THE INSTALLATION CONTRACTOR. ALPINE ENGINEERED PRODUCTS, INC. SHALL NOT BE RESPONSIBLE FOR ANY DEVIATION FROM THIS DESIGN; ANY FAILURE TO BUILD THE TRUSS IN CONFORMANCE WITH TPI; OR FABRICATING, HANDLING, SHIPPING, INSTALLING & BRACING OF TRUSSES. DESIGN CONFORMS WITH APPLICABLE PROVISIONS OF NDS (NATIONAL DESIGN SPEC, BY AF&PA) AND TPI. ALPINE CONNECTOR PLATES ARE MADE OF 20/18/16GA (W,H/S/K) ASTM A653 GRADE 40/60 (N, K/H,S) GALV. STEEL. APPLY PLATES TO EACH FACE OF TRUSS AND, UNLESS OTHERWISE LOCATED ON THIS DESIGN, POSITION PER DRAWINGS 160A-Z. ANY INSPECTION OF PLATES FOLLOWED BY (1) SHALL BE PER ANNEX A3 OF TPI1-2002 SEC.3. A SEAL ON THIS DRAWING INDICATES ACCEPTANCE OF PROFESSIONAL ENGINEERING RESPONSIBILITY SOLELY FOR THE TRUSS COMPONENT DESIGN SHOWN. THE SUITABILITY AND USE OF THIS COMPONENT FOR ANY BUILDING IS THE RESPONSIBILITY OF THE BUILDING DESIGNER PER ANSI/TPI 1 SEC. 2.

DENISE RUTLEDGE LICENSE No. 58792 STATE OF FLORIDA PROFESSIONAL ENGINEER
Sep 19 '05

TC LL	20.0 PSF	REF	R487-- 52891
TC DL	10.0 PSF	DATE	09/19/05
BC DL	10.0 PSF	DRW	HCUSR487 05262017
BC LL	0.0 PSF	HC-ENG	JB/ADR
TOT.LD.	40.0 PSF	SEQN-	156195
DUR.FAC.	1.25		
SPACING	24.0"	JREF-	1SQJ487_Z02

(5-220-STANLEY CRAWFORD/GRAHAM - ROOF - H11B)

Top chord 2x4 SP #2 Dense :T5 2x6 SP #1 Dense:
Bot chord 2x4 SP #2 Dense :B2 2x6 SP #1 Dense:
Webs 2x4 SP #3 :W11 2x4 SP #2 Dense:
:W14 2x6 SP #2:

SPECIAL LOADS
------(LUMBER DUR.FAC.=1.25 / PLATE DUR.FAC.=1.25)
TC - From 60 PLF at -1.50 to 60 PLF at 29.50
BC - From 4 PLF at -1.50 to 4 PLF at 0.00
BC - From 20 PLF at 0.00 to 20 PLF at 29.50
PLT- 254 LB Conc. Load at (27.06,14.81)
PLT- 254 LB Conc. Load at (29.06,12.81)
PLB- 1685 LB Conc. Load at (23.06,9.04)
PLB- 178 LB Conc. Load at (25.06,16.02)
PLB- 76 LB Conc. Load at (25.06,9.04)
PLB- 254 LB Conc. Load at (27.06,9.04)
PLB- 254 LB Conc. Load at (29.06,9.04)

110 mph wind, 15.00 ft mean hgt, ASCE 7-98, CLOSED bldg, not located within 4.50 ft from roof edge, CAT II, EXP B, wind TC DL=5.0 psf, wind BC DL=5.0 psf.

Right end vertical not exposed to wind pressure.

H = recommended connection based on manufacturer tested capacities and calculations. Conditions may exist that require different connections than indicated. Refer to manufacturer publication for additional information.

(A) Continuous lateral bracing equally spaced on member.

Deflection meets L/360 live and L/240 total load.

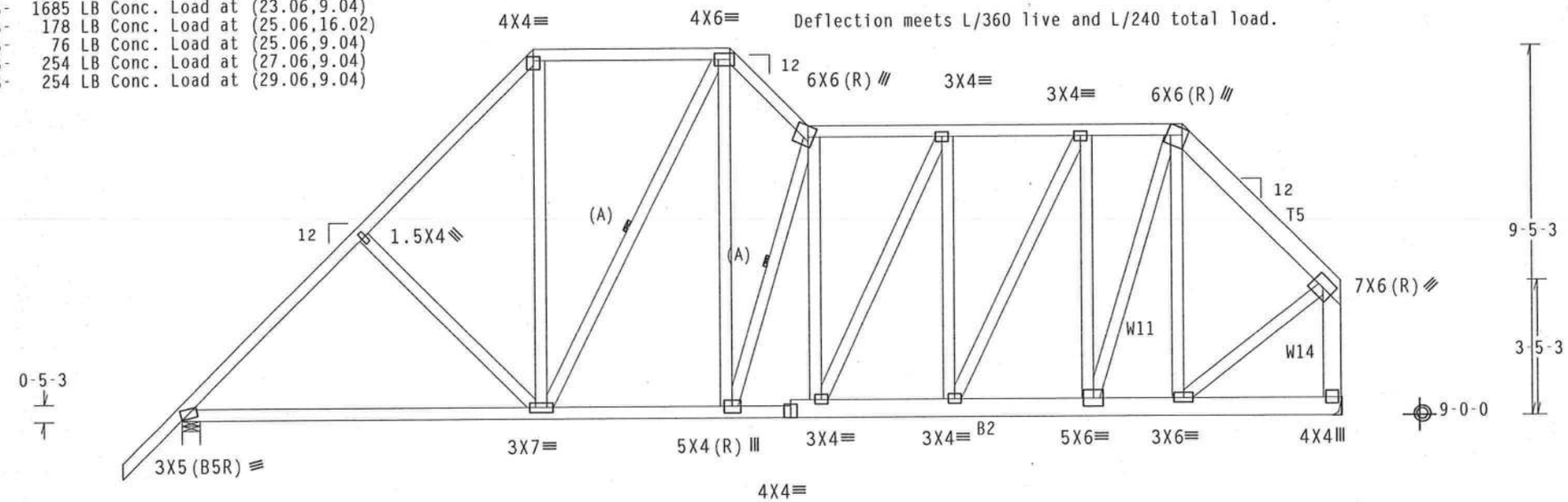

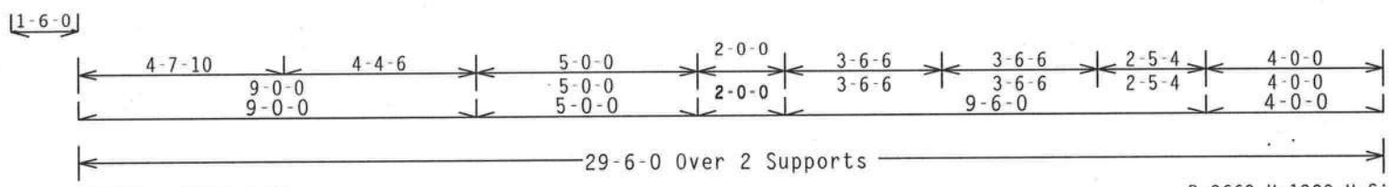

R=1750 U=407 W=5.5"

R=3662 U=1328 H=Simpson HGUS26
w/ (8) 16d, 0.162"x2.5" nails in Truss
w/ (20) 16d, 0.162"x2.5" nails in Girder
Girder is (2)2X6 min. So.Pine

PLT TYP. Wave TPI | Design Crit: TPI-1995(STD)/FBC | 7.04.0805 | QTY:1 | FL/-/3/-/-/R/- | Scale =.25"/Ft.

ALPINE
Alpine Engineered Products, Inc
1950 Marley Drive
Haines City, FL 33844
FL Certificate of Authorization # 567

WARNING TRUSSES REQUIRE EXTREME CARE IN FABRICATION, HANDLING, SHIPPING, INSTALLING AND BRACING. REFER TO BCSI 1-03 (BUILDING COMPONENT SAFETY INFORMATION), PUBLISHED BY TPI (TRUSS PLATE INSTITUTE, 583 D'ONOFRIO DR., SUITE 200, MADISON, WI 53719) AND WTCA (WOOD TRUSS COUNCIL OF AMERICA, 6300 ENTERPRISE LN, MADISON, WI 53719) FOR SAFETY PRACTICES PRIOR TO PERFORMING THESE FUNCTIONS. UNLESS OTHERWISE INDICATED, TOP CHORD SHALL HAVE PROPERLY ATTACHED STRUCTURAL PANELS AND BOTTOM CHORD SHALL HAVE A PROPERLY ATTACHED RIGID CEILING.

IMPORTANT FURNISH A COPY OF THIS DESIGN TO THE INSTALLATION CONTRACTOR. ALPINE ENGINEERED PRODUCTS, INC. SHALL NOT BE RESPONSIBLE FOR ANY DEVIATION FROM THIS DESIGN; ANY FAILURE TO BUILD THE TRUSS IN CONFORMANCE WITH TPI; OR FABRICATING, HANDLING, SHIPPING, INSTALLING & BRACING OF TRUSSES. DESIGN CONFORMS WITH APPLICABLE PROVISIONS OF NDS (NATIONAL DESIGN SPEC. BY AF&PA) AND TPI. ALPINE CONNECTOR PLATES ARE MADE OF 20/18/16GA (W,H/S/K) ASTM A653 GRADE 40/60 (W, K/H,S) GALV. STEEL. APPLY PLATES TO EACH FACE OF TRUSS AND, UNLESS OTHERWISE LOCATED ON THIS DESIGN, POSITION PER DRAWINGS 160A-Z. ANY INSPECTION OF PLATES FOLLOWED BY (I) SHALL BE PER ANNEX A3 OF TPI1-2002 SEC.3. A SEAL ON THIS DRAWING INDICATES ACCEPTANCE OF PROFESSIONAL ENGINEERING RESPONSIBILITY SOLELY FOR THE TRUSS COMPONENT DESIGN SHOWN. THE SUITABILITY AND USE OF THIS COMPONENT FOR ANY BUILDING IS THE RESPONSIBILITY OF THE BUILDING DESIGNER PER ANSI/TPI 1 SEC. 2.

DENISE RUTLEDGE
LICENSE
No. 58792
STATE OF
FLORIDA
PROFESSIONAL ENGINEER
Sep 19 '05

TC LL	20.0 PSF	REF R487-- 52892
TC DL	10.0 PSF	DATE 09/19/05
BC DL	10.0 PSF	DRW HCUSR487 05262018
BC LL	0.0 PSF	HC-ENG JB/ADR
TOT.LD.	40.0 PSF	SEQN- 155836
DUR.FAC.	1.25	
SPACING	24.0"	JREF- 1SQJ487_Z02

(5-220-STANLEY CRAWFORD/GRAHAM - ROOF - H13B)

Top chord 2x4 SP #2 Dense
Bot chord 2x4 SP #2 Dense
Webs 2x4 SP #3

H = recommended connection based on manufacturer tested capacities and calculations. Conditions may exist that require different connections than indicated. Refer to manufacturer publication for additional information.

Deflection meets L/360 live and L/240 total load.

110 mph wind, 13.18 ft mean hgt, ASCE 7-98, CLOSED bldg, not located within 4.50 ft from roof edge, CAT II, EXP B, wind TC DL=5.0 psf, wind BC DL=5.0 psf.

Right end vertical not exposed to wind pressure.

(A) Continuous lateral bracing equally spaced on member.

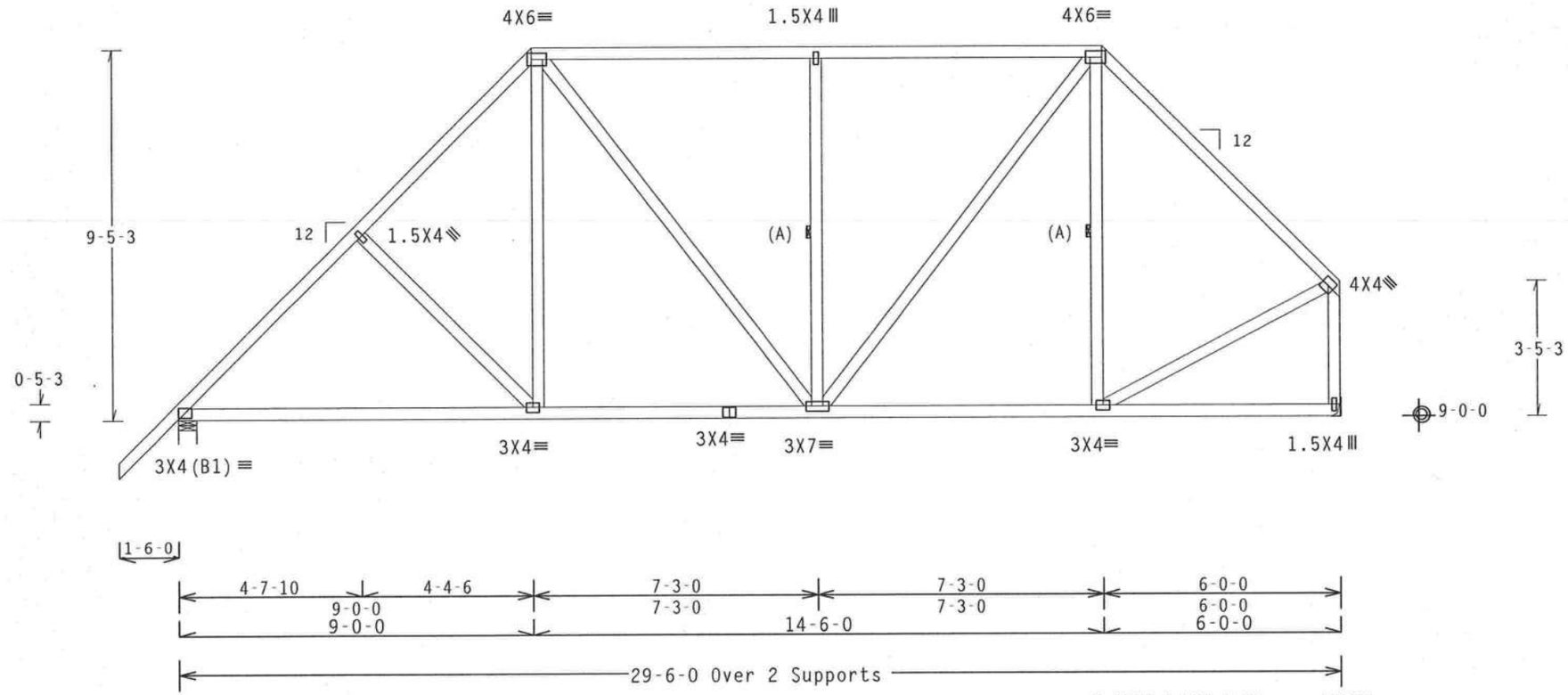

R=1290 U=201 W=5.5"

R=1166 U=189 H=Simpson HUS26
w/ (6) 10d Common, 0.148"x3.0" nails in Truss
w/ (14) 10d Common, 0.148"x3.0" nails in Girder
Girder is (1)2X6 min. So.Pine

PLT TYP. Wave TPI | Design Crit: TPI-1995(STD)/FBC | 7.04.0805 | QTY:2 | FL/-/3/-/-/R/- | Scale =.25"/Ft.

ALPINE

Alpine Engineered Products, Inc
1950 Marley Drive
Haines City, FL 33844
FL Certificate of Authorization # 567

WARNING TRUSSES REQUIRE EXTREME CARE IN FABRICATION, HANDLING, SHIPPING, INSTALLING AND BRACING. REFER TO BCSI 1-03 (BUILDING COMPONENT SAFETY INFORMATION), PUBLISHED BY TPI (TRUSS PLATE INSTITUTE, 583 D'ONOFRIO DR., SUITE 200, MADISON, WI 53719) AND WTCA (WOOD TRUSS COUNCIL OF AMERICA, 6300 ENTERPRISE LN, MADISON, WI 53719) FOR SAFETY PRACTICES PRIOR TO PERFORMING THESE FUNCTIONS. UNLESS OTHERWISE INDICATED, TOP CHORD SHALL HAVE PROPERLY ATTACHED STRUCTURAL PANELS AND BOTTOM CHORD SHALL HAVE A PROPERLY ATTACHED RIGID CEILING.

IMPORTANT FURNISH A COPY OF THIS DESIGN TO THE INSTALLATION CONTRACTOR. ALPINE ENGINEERED PRODUCTS, INC. SHALL NOT BE RESPONSIBLE FOR ANY DEVIATION FROM THIS DESIGN; ANY FAILURE TO BUILD THE TRUSS IN CONFORMANCE WITH TPI; OR FABRICATING, HANDLING, SHIPPING, INSTALLING & BRACING OF TRUSSES. DESIGN CONFORMS WITH APPLICABLE PROVISIONS OF NDS (NATIONAL DESIGN SPEC, BY AF&PA) AND TPI. ALPINE CONNECTOR PLATES ARE MADE OF 20/18/16GA (W,H/S/K) ASTM A653 GRADE 40/60 (W, K/H,S) GALV. STEEL. APPLY PLATES TO EACH FACE OF TRUSS AND, UNLESS OTHERWISE LOCATED ON THIS DESIGN, POSITION PER DRAWINGS 160A-Z. ANY INSPECTION OF PLATES FOLLOWED BY (1) SHALL BE PER ANNEX A3 OF TPI1-2002 SEC.3. A SEAL ON THIS DRAWING INDICATES ACCEPTANCE OF PROFESSIONAL ENGINEERING RESPONSIBILITY SOLELY FOR THE TRUSS COMPONENT DESIGN SHOWN. THE SUITABILITY AND USE OF THIS COMPONENT FOR ANY BUILDING IS THE RESPONSIBILITY OF THE BUILDING DESIGNER PER ANSI/TPI 1 SEC. 2.

DENISE RUTLEDGE
LICENSE
No. 58752
STATE OF FLORIDA
PROFESSIONAL ENGINEER

Sep 19 '05

TC LL	20.0 PSF	REF R487-- 52893
TC DL	10.0 PSF	DATE 09/19/05
BC DL	10.0 PSF	DRW HCUSR487 05262019
BC LL	0.0 PSF	HC-ENG JB/ADR
TOT.LD.	40.0 PSF	SEQN- 155858
DUR.FAC.	1.25	
SPACING	24.0"	JREF- 1SQJ487_Z02

(5-220-STANLEY CRAWFORD/GRAHAM - ROOF - HT7B)

Top chord 2x4 SP #2 Dense
Bot chord 2x4 SP #2 Dense
Webs 2x4 SP #3

H = recommended connection based on manufacturer tested capacities and calculations. Conditions may exist that require different connections than indicated. Refer to manufacturer publication for additional information.

Deflection meets L/360 live and L/240 total load.

110 mph wind, 15.00 ft mean hgt, ASCE 7-98, CLOSED bldg, Located anywhere in roof, CAT II, EXP B, wind TC DL=5.0 psf, wind BC DL=5.0 psf.

(A) 2x6 SP #3 or better "T" brace. 80% length of web member. Attach with 16d Box or Gun (0.135"x3.5",min.)nails @ 6" OC.

#1 hip supports 7-0-0 jacks with no webs.

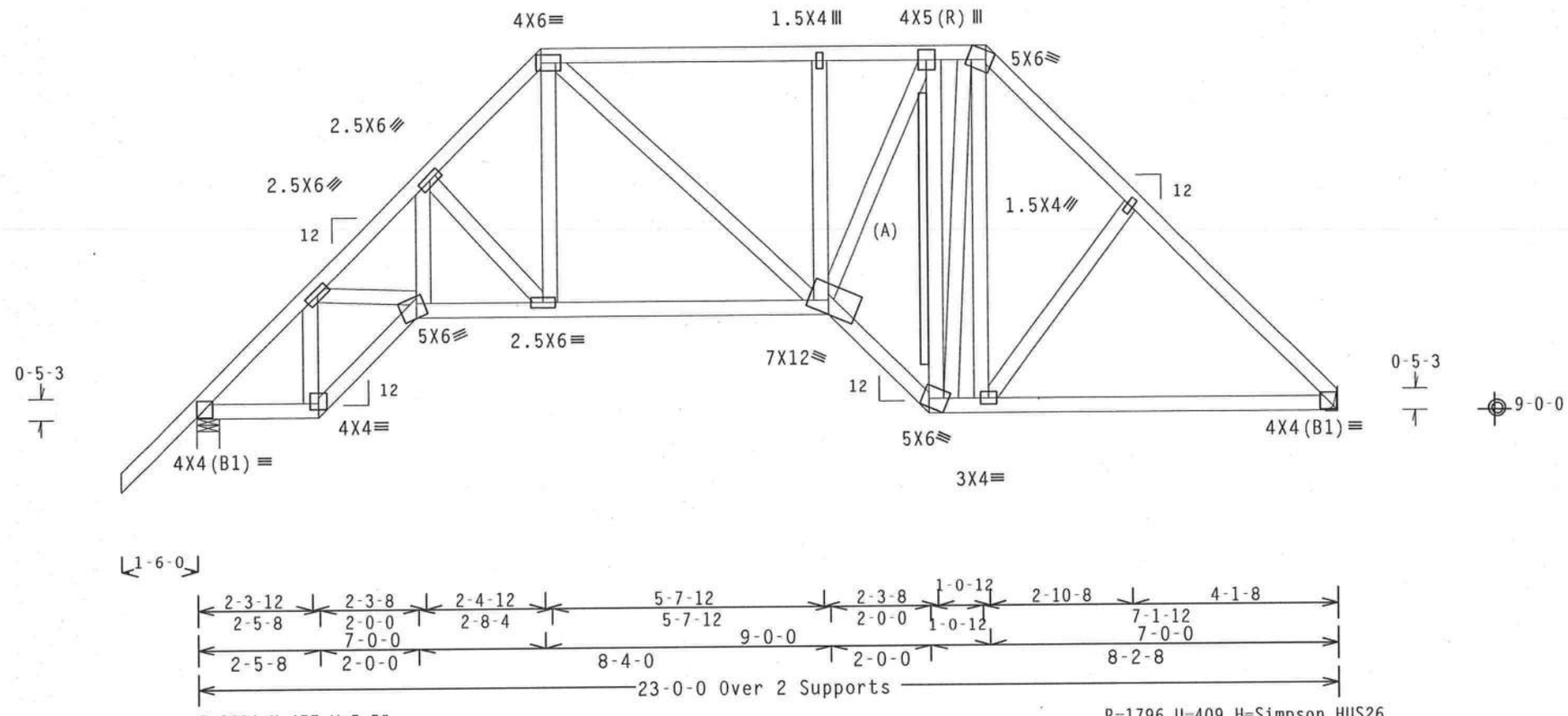

R=1904 U=457 W=5.5"

R=1796 U=409 H=Simpson HUS26
w/ (6) 10d Common, 0.148"x3.0" nails in Truss
w/ (14) 10d Common, 0.148"x3.0" nails in Girder
Girder is (1)2X6 min. So.Pine

PLT TYP. Wave TPI | Design Crit: TPI-1995(STD)/FBC | 7.04.0805 | QTY:1 | FL/-/3/:/-/R/- | Scale =.3125"/Ft.

ALPINE
Alpine Engineered Products, Inc.
1950 Marley Drive
Haines City, FL 33844
FL Certificate of Authorization # 567

WARNING TRUSSES REQUIRE EXTREME CARE IN FABRICATION, HANDLING, SHIPPING, INSTALLING AND BRACING. REFER TO BCSI 1-03 (BUILDING COMPONENT SAFETY INFORMATION), PUBLISHED BY TPI (TRUSS PLATE INSTITUTE, 583 D'ONOFRIO DR., SUITE 200, MADISON, WI 53719) AND WTCA (WOOD TRUSS COUNCIL OF AMERICA, 6300 ENTERPRISE LN, MADISON, WI 53719) FOR SAFETY PRACTICES PRIOR TO PERFORMING THESE FUNCTIONS. UNLESS OTHERWISE INDICATED, TOP CHORD SHALL HAVE PROPERLY ATTACHED STRUCTURAL PANELS AND BOTTOM CHORD SHALL HAVE A PROPERLY ATTACHED RIGID CEILING.

IMPORTANT FURNISH A COPY OF THIS DESIGN TO THE INSTALLATION CONTRACTOR. ALPINE ENGINEERED PRODUCTS, INC. SHALL NOT BE RESPONSIBLE FOR ANY DEVIATION FROM THIS DESIGN; ANY FAILURE TO BUILD THE TRUSS IN CONFORMANCE WITH TPI; OR FABRICATING, HANDLING, SHIPPING, INSTALLING & BRACING OF TRUSSES. DESIGN CONFORMS WITH APPLICABLE PROVISIONS OF NDS (NATIONAL DESIGN SPEC, BY AF&PA) AND TPI. ALPINE CONNECTOR PLATES ARE MADE OF 20/18/16GA (W,H/S/K) ASTM A653 GRADE 40/60 (W, K/H,S) GALV. STEEL. APPLY PLATES TO EACH FACE OF TRUSS AND, UNLESS OTHERWISE LOCATED ON THIS DESIGN, POSITION PER DRAWINGS 160A-Z. ANY INSPECTION OF PLATES FOLLOWED BY (1) SHALL BE PER ANNEX A3 OF TPI1-2002 SEC.3. A SEAL ON THIS DRAWING INDICATES ACCEPTANCE OF PROFESSIONAL ENGINEERING RESPONSIBILITY SOLELY FOR THE TRUSS COMPONENT DESIGN SHOWN. THE SUITABILITY AND USE OF THIS COMPONENT FOR ANY BUILDING IS THE RESPONSIBILITY OF THE BUILDING DESIGNER PER ANSI/TPI 1 SEC. 2.

DENISE RUTLEDGE LICENSE No. 58752 STATE OF FLORIDA PROFESSIONAL ENGINEER
Sep 19 05

TC LL	20.0 PSF	REF	R487-- 52894
TC DL	10.0 PSF	DATE	09/19/05
BC DL	10.0 PSF	DRW	HCUSR487 05262020
BC LL	0.0 PSF	HC-ENG	JB/ADR
TOT.LD.	40.0 PSF	SEQN-	123825
DUR.FAC.	1.25		
SPACING	24.0"	JREF-	1SQJ487_Z02

(5-220-STANLEY CRAWFORD/GRAHAM - ROOF - HT9B)

Top chord 2x4 SP #2 Dense
Bot chord 2x4 SP #2 Dense
Webs 2x4 SP #3

H = recommended connection based on manufacturer tested capacities and calculations. Conditions may exist that require different connections than indicated. Refer to manufacturer publication for additional information.

110 mph wind, 13.18 ft mean hgt, ASCE 7-98, CLOSED bldg, not located within 4.50 ft from roof edge, CAT II, EXP B, wind TC DL=5.0 psf, wind BC DL=5.0 psf.

(A) 1x4 SP #3 or better "T" brace. 80% length of web member. Attach with 8d Box or Gun (0.113"x2.5",min.)nails @ 6" OC.

Deflection meets L/360 live and L/240 total load.

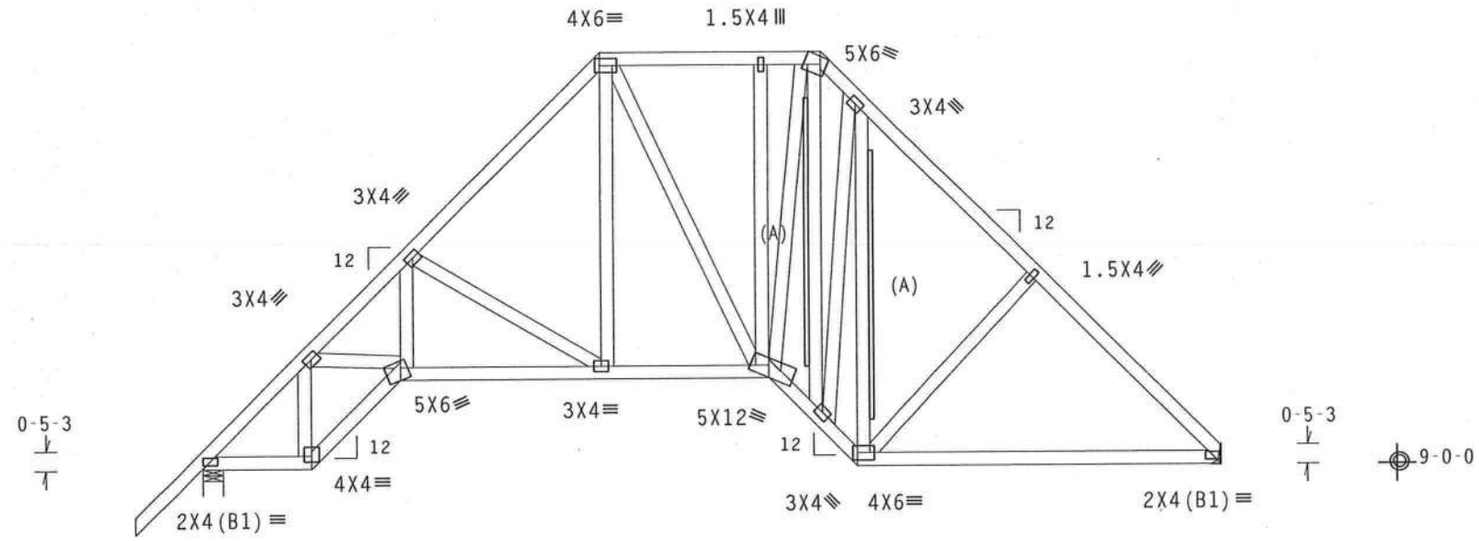

R=1021 U=180 W=5.5"

R=915 U=180 H=Simpson LUS26
w/ (4) 10d Common, 0.148"x3.0" nails in Truss
w/ (4) 10d Common, 0.148"x3.0" nails in Girder
Girder is (1)2X6 min. So.Pine

PLT TYP. Wave TPI | Design Crit: TPI-1995(STD)/FBC | 7.04.0805 | QTY:1 | FL/-/3/-/-/R/- | Scale =.25"/Ft.

ALPINE
Alpine Engineered Products, Inc.
1950 Marley Drive
Haines City, FL 33844
FL Certificate of Authorization # 567

WARNING TRUSSES REQUIRE EXTREME CARE IN FABRICATION, HANDLING, SHIPPING, INSTALLING AND BRACING. REFER TO BCSI 1-03 (BUILDING COMPONENT SAFETY INFORMATION), PUBLISHED BY TPI (TRUSS PLATE INSTITUTE, 583 D'ONOFRIO DR., SUITE 200, MADISON, WI 53719) AND WTCA (WOOD TRUSS COUNCIL OF AMERICA, 6300 ENTERPRISE LN. MADISON, WI 53719) FOR SAFETY PRACTICES PRIOR TO PERFORMING THESE FUNCTIONS. UNLESS OTHERWISE INDICATED, TOP CHORD SHALL HAVE PROPERLY ATTACHED STRUCTURAL PANELS AND BOTTOM CHORD SHALL HAVE A PROPERLY ATTACHED RIGID CEILING.

IMPORTANT FURNISH A COPY OF THIS DESIGN TO THE INSTALLATION CONTRACTOR. ALPINE ENGINEERED PRODUCTS, INC. SHALL NOT BE RESPONSIBLE FOR ANY DEVIATION FROM THIS DESIGN; ANY FAILURE TO BUILD THE TRUSS IN CONFORMANCE WITH TPI; OR FABRICATING, HANDLING, SHIPPING, INSTALLING & BRACING OF TRUSSES. DESIGN CONFORMS WITH APPLICABLE PROVISIONS OF NDS (NATIONAL DESIGN SPEC. BY AF&PA) AND TPI. ALPINE CONNECTOR PLATES ARE MADE OF 20/18/16GA (M,H/S/K) ASTM A653 GRADE 40/60 (W, K/H,S) GALV. STEEL. APPLY PLATES TO EACH FACE OF TRUSS AND, UNLESS OTHERWISE LOCATED ON THIS DESIGN, POSITION PER DRAWINGS 160A-Z. ANY INSPECTION OF PLATES FOLLOWED BY (1) SHALL BE PER ANNEX A3 OF TPI1-2002 SEC.3. A SEAL ON THIS DRAWING INDICATES ACCEPTANCE OF PROFESSIONAL ENGINEERING RESPONSIBILITY SOLELY FOR THE TRUSS COMPONENT DESIGN SHOWN. THE SUITABILITY AND USE OF THIS COMPONENT FOR ANY BUILDING IS THE RESPONSIBILITY OF THE BUILDING DESIGNER PER ANSI/TPI 1 SEC. 2.

DENISE RUTLEDGE LICENSE No. 58752 STATE OF FLORIDA PROFESSIONAL ENGINEER
Sep 19 '05

TC LL	20.0 PSF	REF	R487-- 52895
TC DL	10.0 PSF	DATE	09/19/05
BC DL	10.0 PSF	DRW	HCUSR487 05262021
BC LL	0.0 PSF	HC-ENG	JB/ADR
TOT.LD.	40.0 PSF	SEQN-	123844
DUR.FAC.	1.25		
SPACING	24.0"	JREF-	1SQJ487_Z02

(5-220-STANLEY CRAWFORD/GRAHAM - ROOF - CGE)

Top chord 2x4 SP #2 Dense
Bot chord 2x4 SP #2 Dense
Webs 2x4 SP #3

SPECIAL LOADS
------(LUMBER DUR.FAC.=1.25 / PLATE DUR.FAC.=1.25)

TC - From	81 PLF	at -1.50 to	81 PLF	at 12.50
BC - From	4 PLF	at -1.50 to	4 PLF	at 0.00
BC - From	20 PLF	at 0.00 to	20 PLF	at 11.00
BC - From	4 PLF	at 11.00 to	4 PLF	at 12.50

110 mph wind, 11.23 ft mean hgt, ASCE 7-98, CLOSED bldg, Located anywhere in roof, CAT II, EXP B, wind TC DL=5.0 psf, wind BC DL=5.0 psf.

See DWGS A11015EC1103 & GBLLETIN0405 for more requirements.

Deflection meets L/360 live and L/240 total load.

(**) Plate relocated as shown.

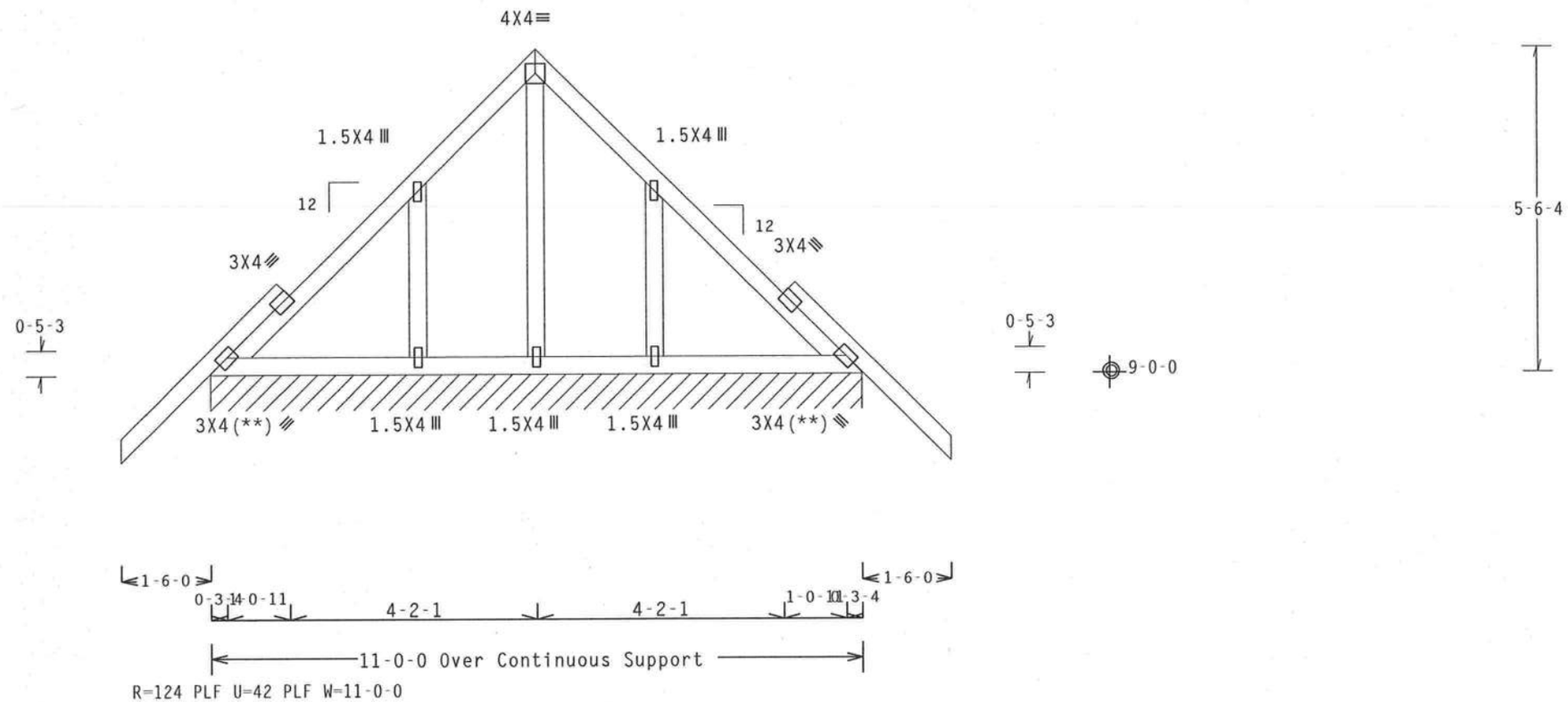

PLT TYP. Wave TPI | Design Crit: TPI-1995(STD)/FBC | 7.04.0805 | QTY:1 | FL/-/3/-/-/R/- | Scale =.375"/Ft.

ALPINE
Alpine Engineered Products, Inc.
1950 Marley Drive
Haines City, FL 33844
FL Certificate of Authorization # 567

WARNING TRUSSES REQUIRE EXTREME CARE IN FABRICATION, HANDLING, SHIPPING, INSTALLING AND BRACING. REFER TO BCSI 1-03 (BUILDING COMPONENT SAFETY INFORMATION), PUBLISHED BY TPI (TRUSS PLATE INSTITUTE, 583 D'ONOFRIO DR., SUITE 200, MADISON, WI 53719) AND WTCA (WOOD TRUSS COUNCIL OF AMERICA, 6300 ENTERPRISE LN, MADISON, WI 53719) FOR SAFETY PRACTICES PRIOR TO PERFORMING THESE FUNCTIONS. UNLESS OTHERWISE INDICATED, TOP CHORD SHALL HAVE PROPERLY ATTACHED STRUCTURAL PANELS AND BOTTOM CHORD SHALL HAVE A PROPERLY ATTACHED RIGID CEILING.

IMPORTANTFURNISH A COPY OF THIS DESIGN TO THE INSTALLATION CONTRACTOR. ALPINE ENGINEERED PRODUCTS, INC. SHALL NOT BE RESPONSIBLE FOR ANY DEVIATION FROM THIS DESIGN; ANY FAILURE TO BUILD THE TRUSS IN CONFORMANCE WITH TPI; OR FABRICATING, HANDLING, SHIPPING, INSTALLING & BRACING OF TRUSSES. DESIGN CONFORMS WITH APPLICABLE PROVISIONS OF NDS (NATIONAL DESIGN SPEC, BY AF&PA) AND TPI. ALPINE CONNECTOR PLATES ARE MADE OF 20/18/16GA (W,H/S/K) ASTM A653 GRADE 40/60 (W, K/H,S) GALV. STEEL. APPLY PLATES TO EACH FACE OF TRUSS AND, UNLESS OTHERWISE LOCATED ON THIS DESIGN, POSITION PER DRAWINGS 160A-Z. ANY INSPECTION OF PLATES FOLLOWED BY (1) SHALL BE PER ANNEX A3 OF TPI1-2002 SEC.3. A SEAL ON THIS DRAWING INDICATES ACCEPTANCE OF PROFESSIONAL ENGINEERING RESPONSIBILITY SOLELY FOR THE TRUSS COMPONENT DESIGN SHOWN. THE SUITABILITY AND USE OF THIS COMPONENT FOR ANY BUILDING IS THE RESPONSIBILITY OF THE BUILDING DESIGNER PER ANSI/TPI 1 SEC. 2.

DENISE RUTLEDGE LICENSE No. 58762 STATE OF FLORIDA PROFESSIONAL ENGINEER
Sep 19 '05

TC LL	20.0 PSF	REF	R487-- 52896
TC DL	10.0 PSF	DATE	09/19/05
BC DL	10.0 PSF	DRW	HCUSR487 05262051
BC LL	0.0 PSF	HC-ENG	JB/ADR
TOT.LD.	40.0 PSF	SEQN-	123782
DUR.FAC.	1.25		
SPACING	24.0"	JREF-	1SQJ487_Z02

(5-220-STANLEY CRAWFORD/GRAHAM - ROOF - D)

Top chord 2x4 SP #2 Dense
Bot chord 2x4 SP #2 Dense
Webs 2x4 SP #3

Deflection meets L/360 live and L/240 total load.

110 mph wind, 11.93 ft mean hgt, ASCE 7-98, CLOSED bldg, Located anywhere in roof, CAT II, EXP B, wind TC DL=5.0 psf, wind BC DL=5.0 psf.

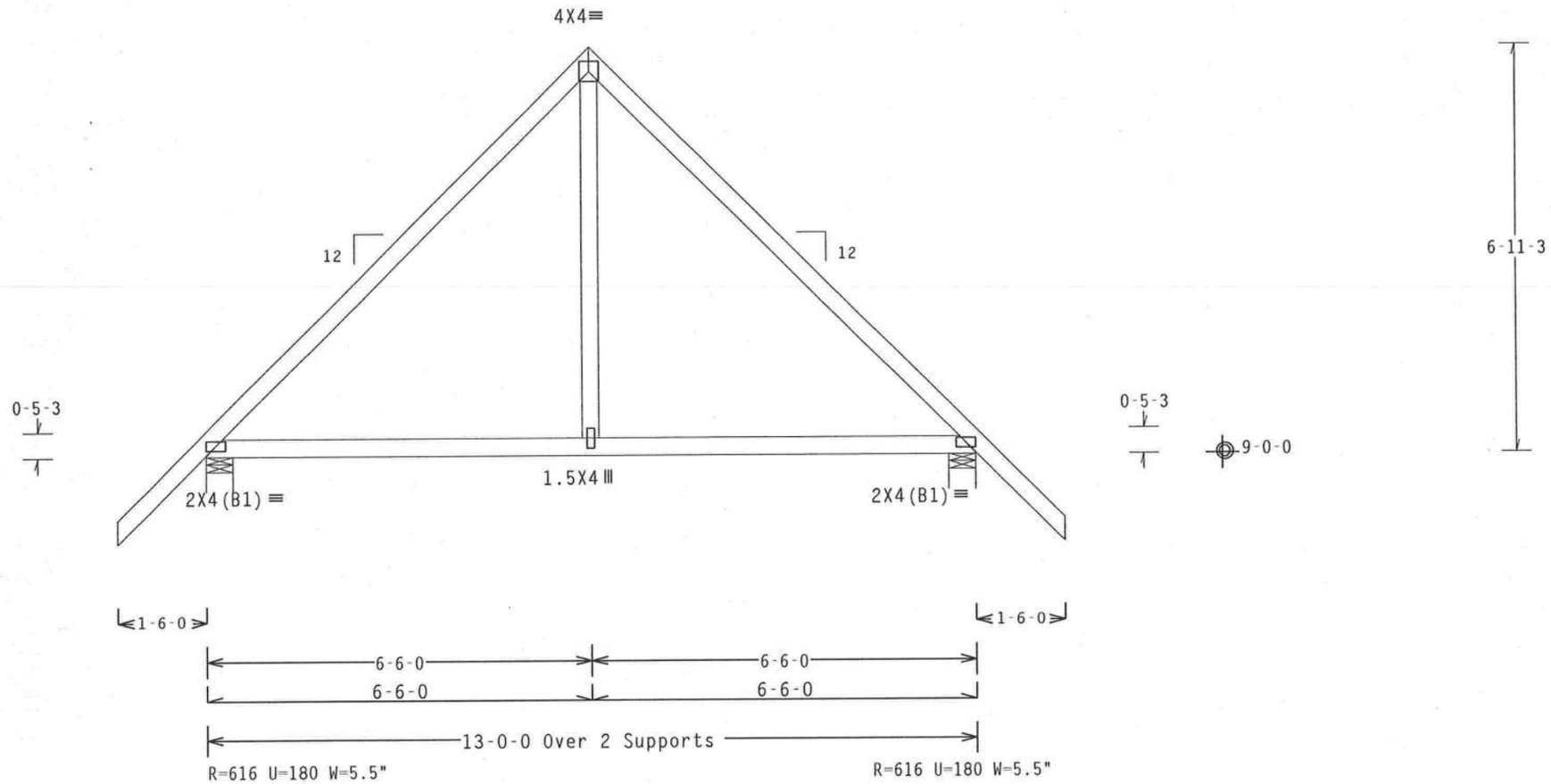

PLT TYP. Wave TPI | Design Crit: TPI-1995(STD)/FBC | 7.04.0805 | QTY:1 | FL/-/3/-/-/R/- | Scale =.375"/Ft.

ALPINE
Alpine Engineered Products, Inc.
1950 Marley Drive
Haines City, FL 33844
FL Certificate of Authorization # 567

WARNING TRUSSES REQUIRE EXTREME CARE IN FABRICATION, HANDLING, SHIPPING, INSTALLING AND BRACING. REFER TO BCSI 1-03 (BUILDING COMPONENT SAFETY INFORMATION), PUBLISHED BY TPI (TRUSS PLATE INSTITUTE, 583 D'ONOFRIO DR., SUITE 200, MADISON, WI 53719) AND WTCA (WOOD TRUSS COUNCIL OF AMERICA, 6300 ENTERPRISE LN, MADISON, WI 53719) FOR SAFETY PRACTICES PRIOR TO PERFORMING THESE FUNCTIONS. UNLESS OTHERWISE INDICATED, TOP CHORD SHALL HAVE PROPERLY ATTACHED STRUCTURAL PANELS AND BOTTOM CHORD SHALL HAVE A PROPERLY ATTACHED RIGID CEILING.

IMPORTANTFURNISH A COPY OF THIS DESIGN TO THE INSTALLATION CONTRACTOR. ALPINE ENGINEERED PRODUCTS, INC. SHALL NOT BE RESPONSIBLE FOR ANY DEVIATION FROM THIS DESIGN; ANY FAILURE TO BUILD THE TRUSS IN CONFORMANCE WITH TPI: OR FABRICATING, HANDLING, SHIPPING, INSTALLING & BRACING OF TRUSSES. DESIGN CONFORMS WITH APPLICABLE PROVISIONS OF NDS (NATIONAL DESIGN SPEC. BY AF&PA) AND TPI. ALPINE CONNECTOR PLATES ARE MADE OF 20/18/16GA (W,H/S/K) ASTM A653 GRADE 40/60 (W, K/H,S) GALV. STEEL. APPLY PLATES TO EACH FACE OF TRUSS AND, UNLESS OTHERWISE LOCATED ON THIS DESIGN, POSITION PER DRAWINGS 160A-Z. ANY INSPECTION OF PLATES FOLLOWED BY (I) SHALL BE PER ANNEX A3 OF TPI1-2002 SEC.3. A SEAL ON THIS DRAWING INDICATES ACCEPTANCE OF PROFESSIONAL ENGINEERING RESPONSIBILITY SOLELY FOR THE TRUSS COMPONENT DESIGN SHOWN. THE SUITABILITY AND USE OF THIS COMPONENT FOR ANY BUILDING IS THE RESPONSIBILITY OF THE BUILDING DESIGNER PER ANSI/TPI 1 SEC. 2.

DENISE RUTLEDGE LICENSE NO. 58752 STATE OF FLORIDA PROFESSIONAL ENGINEER
Sep 19, 2005

TC LL	20.0 PSF	REF	R487-- 52897
TC DL	10.0 PSF	DATE	09/19/05
BC DL	10.0 PSF	DRW	HCUSR487 05262001
BC LL	0.0 PSF	HC-ENG	JB/ADR *
TOT.LD.	40.0 PSF	SEQN-	123673
DUR.FAC.	1.25		
SPACING	24.0"	JREF-	1SQJ487_Z02

(5-220-STANLEY CRAWFORD/GRAHAM - ROOF - DGE)

Top chord 2x4 SP #2 Dense
Bot chord 2x4 SP #2 Dense
Webs 2x4 SP #3

SPECIAL LOADS
------(LUMBER DUR.FAC.=1.25 / PLATE DUR.FAC.=1.25)

TC - From	81 PLF	at -1.50 to	81 PLF	at 14.50	
BC - From	4 PLF	at -1.50 to	4 PLF	at 0.00	
BC - From	20 PLF	at 0.00 to	20 PLF	at 13.00	
BC - From	4 PLF	at 13.00 to	4 PLF	at 14.50	

110 mph wind, 11.73 ft mean hgt, ASCE 7-98, CLOSED bldg, Located anywhere in roof, CAT II, EXP B, wind TC DL=5.0 psf, wind BC DL=5.0 psf.

See DWGS A11015EC1103 & GBLLETIN0405 for more requirements.

Deflection meets L/360 live and L/240 total load.

(**) Plate relocated as shown.

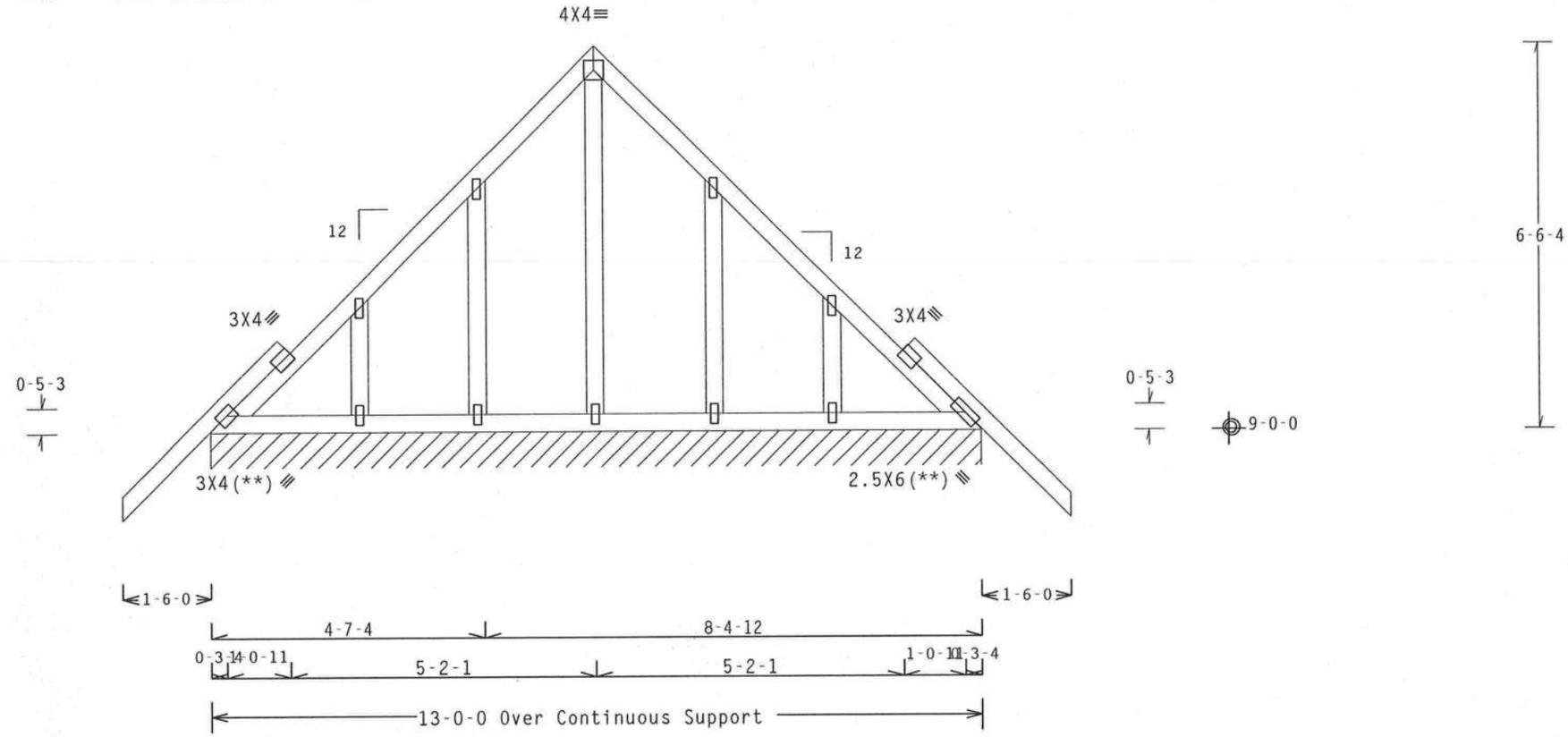

R=121 PLF U=41 PLF W=13-0-0

Note: All Plates Are 1.5X4 Except As Shown.

PLT TYP. Wave TPI | Design Crit: TPI-1995(STD)/FBC | 7.04.0805 | QTY:1 | FL/-/3/-/-/R/- | Scale =.375"/Ft.

ALPINE
Alpine Engineered Products, Inc.
1950 Marley Drive
Haines City, FL 33844
FL Certificate of Authorization # 567

WARNING TRUSSES REQUIRE EXTREME CARE IN FABRICATION, HANDLING, SHIPPING, INSTALLING AND BRACING. REFER TO BCSI 1-03 (BUILDING COMPONENT SAFETY INFORMATION), PUBLISHED BY TPI (TRUSS PLATE INSTITUTE, 583 D'ONOFRIO DR., SUITE 200, MADISON, WI 53719) AND WTCA (WOOD TRUSS COUNCIL OF AMERICA, 6300 ENTERPRISE LN, MADISON, WI 53719) FOR SAFETY PRACTICES PRIOR TO PERFORMING THESE FUNCTIONS. UNLESS OTHERWISE INDICATED, TOP CHORD SHALL HAVE PROPERLY ATTACHED STRUCTURAL PANELS AND BOTTOM CHORD SHALL HAVE A PROPERLY ATTACHED RIGID CEILING.

IMPORTANT FURNISH A COPY OF THIS DESIGN TO THE INSTALLATION CONTRACTOR. ALPINE ENGINEERED PRODUCTS, INC. SHALL NOT BE RESPONSIBLE FOR ANY DEVIATION FROM THIS DESIGN; ANY FAILURE TO BUILD THE TRUSS IN CONFORMANCE WITH TPI; OR FABRICATING, HANDLING, SHIPPING, INSTALLING & BRACING OF TRUSSES. DESIGN CONFORMS WITH APPLICABLE PROVISIONS OF NDS (NATIONAL DESIGN SPEC, BY AF&PA) AND TPI. ALPINE CONNECTOR PLATES ARE MADE OF 20/18/16GA (W,H/S/K) ASTM A653 GRADE 40/60 (W, K/H,S) GALV. STEEL. APPLY PLATES TO EACH FACE OF TRUSS AND, UNLESS OTHERWISE LOCATED ON THIS DESIGN, POSITION PER DRAWINGS 160A-Z. ANY INSPECTION OF PLATES FOLLOWED BY (1) SHALL BE PER ANNEX A3 OF TPI1-2002 SEC.3. A SEAL ON THIS DRAWING INDICATES ACCEPTANCE OF PROFESSIONAL ENGINEERING RESPONSIBILITY SOLELY FOR THE TRUSS COMPONENT DESIGN SHOWN. THE SUITABILITY AND USE OF THIS COMPONENT FOR ANY BUILDING IS THE RESPONSIBILITY OF THE BUILDING DESIGNER PER ANSI/TPI 1 SEC. 2.

DENISE RUTLEDGE LICENSE No. 58752 STATE OF FLORIDA PROFESSIONAL ENGINEER
Sep 19 '05

TC LL	20.0 PSF	REF R487-- 52898
TC DL	10.0 PSF	DATE 09/19/05
BC DL	10.0 PSF	DRW HCUSR487 05262022
BC LL	0.0 PSF	HC-ENG JB/ADR
TOT.LD.	40.0 PSF	SEQN- 123680
DUR.FAC.	1.25	
SPACING	24.0"	JREF- 1SQJ487_Z02

(5-220-STANLEY CRAWFORD/GRAHAM - ROOF - DG)

Top chord 2x4 SP #2 Dense
Bot chord 2x6 SP #1 Dense
Webs 2x4 SP #3

SPECIAL LOADS
------(LUMBER DUR.FAC.=1.25 / PLATE DUR.FAC.=1.25)
TC - From 60 PLF at -1.50 to 60 PLF at 14.50
BC - From 4 PLF at -1.50 to 4 PLF at 0.00
BC - From 20 PLF at 0.00 to 20 PLF at 13.00
BC - From 4 PLF at 13.00 to 4 PLF at 14.50
BC - 3662 LB Conc. Load at 7.06
BC - 1166 LB Conc. Load at 9.06, 10.94

Deflection meets L/360 live and L/240 total load.

2 COMPLETE TRUSSES REQUIRED

Nailing Schedule: (12d_Box_or_Gun_(0.128"x3.25",_min.)_nails)
Top Chord: 1 Row @12.00" o.c.
Bot Chord: 1 Row @ 3.25" o.c.
Webs : 1 Row @ 4" o.c.
Use equal spacing between rows and stagger nails in each row to avoid splitting.

110 mph wind, 15.00 ft mean hgt, ASCE 7-98, CLOSED bldg, not located within 4.50 ft from roof edge, CAT II, EXP B, wind TC DL=5.0 psf, wind BC DL=5.0 psf.

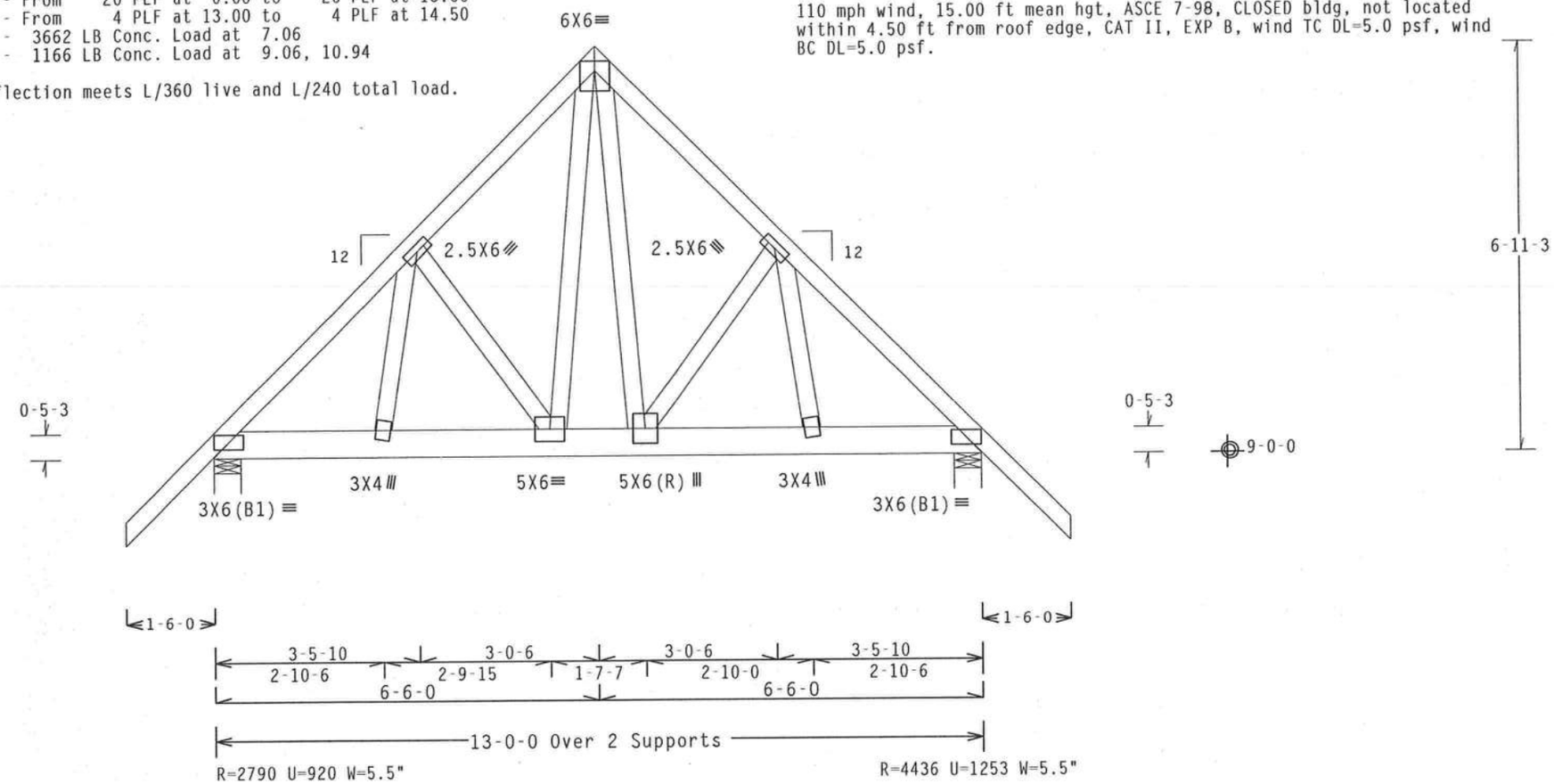

PLT TYP. Wave TPI | Design Crit: TPI-1995(STD)/FBC | 7.04.0805 | QTY:1 | FL/-/3/-/-/R/- | Scale =.375"/Ft.

ALPINE
Alpine Engineered Products, Inc.
1950 Marley Drive
Haines City, FL 33844
FL Certificate of Authorization # 567

WARNING TRUSSES REQUIRE EXTREME CARE IN FABRICATION, HANDLING, SHIPPING, INSTALLING AND BRACING. REFER TO BCSI 1-03 (BUILDING COMPONENT SAFETY INFORMATION), PUBLISHED BY TPI (TRUSS PLATE INSTITUTE, 583 D'ONOFRIO DR., SUITE 200, MADISON, WI 53719) AND WTCA (WOOD TRUSS COUNCIL OF AMERICA, 6300 ENTERPRISE LN. MADISON, WI 53719) FOR SAFETY PRACTICES PRIOR TO PERFORMING THESE FUNCTIONS. UNLESS OTHERWISE INDICATED, TOP CHORD SHALL HAVE PROPERLY ATTACHED STRUCTURAL PANELS AND BOTTOM CHORD SHALL HAVE A PROPERLY ATTACHED RIGID CEILING.

IMPORTANTFURNISH A COPY OF THIS DESIGN TO THE INSTALLATION CONTRACTOR. ALPINE ENGINEERED PRODUCTS, INC. SHALL NOT BE RESPONSIBLE FOR ANY DEVIATION FROM THIS DESIGN; ANY FAILURE TO BUILD THE TRUSS IN CONFORMANCE WITH TPI; OR FABRICATING, HANDLING, SHIPPING, INSTALLING & BRACING OF TRUSSES. DESIGN CONFORMS WITH APPLICABLE PROVISIONS OF NDS (NATIONAL DESIGN SPEC, BY AF&PA) AND TPI. ALPINE CONNECTOR PLATES ARE MADE OF 20/18/16GA (W,H/S/K) ASTM A653 GRADE 40/60 (W, K/H,S) GALV. STEEL. APPLY PLATES TO EACH FACE OF TRUSS AND, UNLESS OTHERWISE LOCATED ON THIS DESIGN, POSITION PER DRAWINGS 160A-Z. ANY INSPECTION OF PLATES FOLLOWED BY (1) SHALL BE PER ANNEX A3 OF TPI1-2002 SEC.3. A SEAL ON THIS DRAWING INDICATES ACCEPTANCE OF PROFESSIONAL ENGINEERING RESPONSIBILITY SOLELY FOR THE TRUSS COMPONENT DESIGN SHOWN. THE SUITABILITY AND USE OF THIS COMPONENT FOR ANY BUILDING IS THE RESPONSIBILITY OF THE BUILDING DESIGNER PER ANSI/TPI 1 SEC. 2.

DENISE RUTLEDGE
LICENSE
No. 58752
STATE OF FLORIDA
PROFESSIONAL ENGINEER
Sep 19 '05

TC LL	20.0 PSF	REF	R487-- 52899
TC DL	10.0 PSF	DATE	09/19/05
BC DL	10.0 PSF	DRW	HCUSR487 05262023
BC LL	0.0 PSF	HC-ENG	JB/ADR
TOT.LD.	40.0 PSF	SEQN-	155904
DUR.FAC.	1.25		
SPACING	24.0"	JREF-	1SQJ487_Z02

(5-220-STANLEY CRAWFORD/GRAHAM - ROOF - E)

Top chord 2x4 SP #2 Dense
Bot chord 2x4 SP #2 Dense
Webs 2x4 SP #3

Deflection meets L/360 live and L/240 total load.

110 mph wind, 14.20 ft mean hgt, ASCE 7-98, CLOSED bldg, Located anywhere in roof, CAT II, EXP B, wind TC DL=5.0 psf, wind BC DL=5.0 psf.

THE ARCHITECT OR ENGINEER OF RECORD SHALL EVALUATE AND APPROVE LOAD MAGNITUDES AND LOCATIONS FROM AREAS FIELD FRAMED BY OTHERS.
TRUSS ENGINEER IS NOT RESPONSIBLE FOR LOAD MAGNITUDES AND LOCATIONS FROM CONVENTIONAL FRAMING.

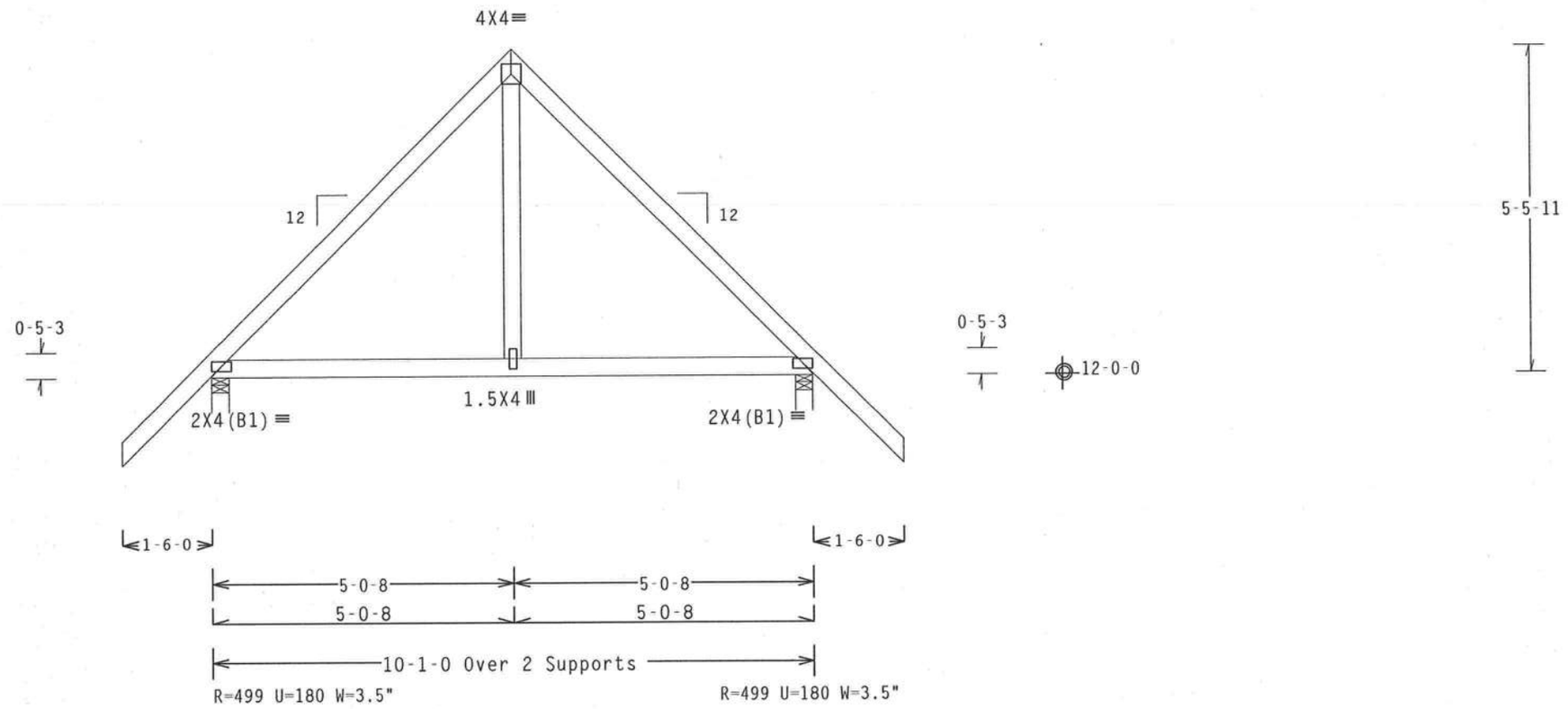

PLT TYP. Wave TPI | Design Crit: TPI-1995(STD)/FBC | 7.04.0805 | QTY:2 | FL/-/3/-/-/R/- | Scale =.375"/Ft.

ALPINE
Alpine Engineered Products, Inc.
1950 Marley Drive
Haines City, FL 33844
FL Certificate of Authorization # 567

WARNING TRUSSES REQUIRE EXTREME CARE IN FABRICATION, HANDLING, SHIPPING, INSTALLING AND BRACING. REFER TO BCSI 1-03 (BUILDING COMPONENT SAFETY INFORMATION), PUBLISHED BY TPI (TRUSS PLATE INSTITUTE, 583 D'ONOFRIO DR., SUITE 200, MADISON, WI 53719) AND WTCA (WOOD TRUSS COUNCIL OF AMERICA, 6300 ENTERPRISE LN. MADISON, WI 53719) FOR SAFETY PRACTICES PRIOR TO PERFORMING THESE FUNCTIONS. UNLESS OTHERWISE INDICATED, TOP CHORD SHALL HAVE PROPERLY ATTACHED STRUCTURAL PANELS AND BOTTOM CHORD SHALL HAVE A PROPERLY ATTACHED RIGID CEILING.

IMPORTANT FURNISH A COPY OF THIS DESIGN TO THE INSTALLATION CONTRACTOR. ALPINE ENGINEERED PRODUCTS, INC. SHALL NOT BE RESPONSIBLE FOR ANY DEVIATION FROM THIS DESIGN; ANY FAILURE TO BUILD THE TRUSS IN CONFORMANCE WITH TPI: OR FABRICATING, HANDLING, SHIPPING, INSTALLING & BRACING OF TRUSSES. DESIGN CONFORMS WITH APPLICABLE PROVISIONS OF NDS (NATIONAL DESIGN SPEC. BY AF&PA) AND TPI. ALPINE CONNECTOR PLATES ARE MADE OF 20/18/16GA (W,H/S/K) ASTM A653 GRADE 40/60 (W, K/H,S) GALV. STEEL. APPLY PLATES TO EACH FACE OF TRUSS AND, UNLESS OTHERWISE LOCATED ON THIS DESIGN, POSITION PER DRAWINGS 160A-Z. ANY INSPECTION OF PLATES FOLLOWED BY (1) SHALL BE PER ANNEX A3 OF TPI1-2002 SEC.3. A SEAL ON THIS DRAWING INDICATES ACCEPTANCE OF PROFESSIONAL ENGINEERING RESPONSIBILITY SOLELY FOR THE TRUSS COMPONENT DESIGN SHOWN. THE SUITABILITY AND USE OF THIS COMPONENT FOR ANY BUILDING IS THE RESPONSIBILITY OF THE BUILDING DESIGNER PER ANSI/TPI 1 SEC. 2.

DENISE RUTLEDGE LICENSE No. 58762 STATE OF FLORIDA PROFESSIONAL ENGINEER
Sep 19 '05

TC LL	20.0 PSF	REF	R487-- 52900
TC DL	10.0 PSF	DATE	09/19/05
BC DL	10.0 PSF	DRW	HCUSR487 05262002
BC LL	0.0 PSF	HC-ENG	JB/ADR *
TOT.LD.	40.0 PSF	SEQN-	123686
DUR.FAC.	1.25		
SPACING	24.0"	JREF-	1SQJ487_Z02

(5-220-STANLEY CRAWFORD/GRAHAM - ROOF - EGE)

Top chord 2x4 SP #2 Dense
Bot chord 2x4 SP #2 Dense
Webs 2x4 SP #3

SPECIAL LOADS
------(LUMBER DUR.FAC.=1.25 / PLATE DUR.FAC.=1.25)

TC - From	81 PLF	at -1.50 to	81 PLF	at	11.58
BC - From	4 PLF	at -1.50 to	4 PLF	at	0.00
BC - From	20 PLF	at 0.00 to	20 PLF	at	10.08
BC - From	4 PLF	at 10.08 to	4 PLF	at	11.58

110 mph wind, 14.00 ft mean hgt, ASCE 7-98, CLOSED bldg, Located anywhere in roof, CAT II, EXP B, wind TC DL=5.0 psf, wind BC DL=5.0 psf.

See DWGS A11015EC1103 & GBLLETIN0405 for more requirements.

Deflection meets L/360 live and L/240 total load.

(**) Plate relocated as shown.

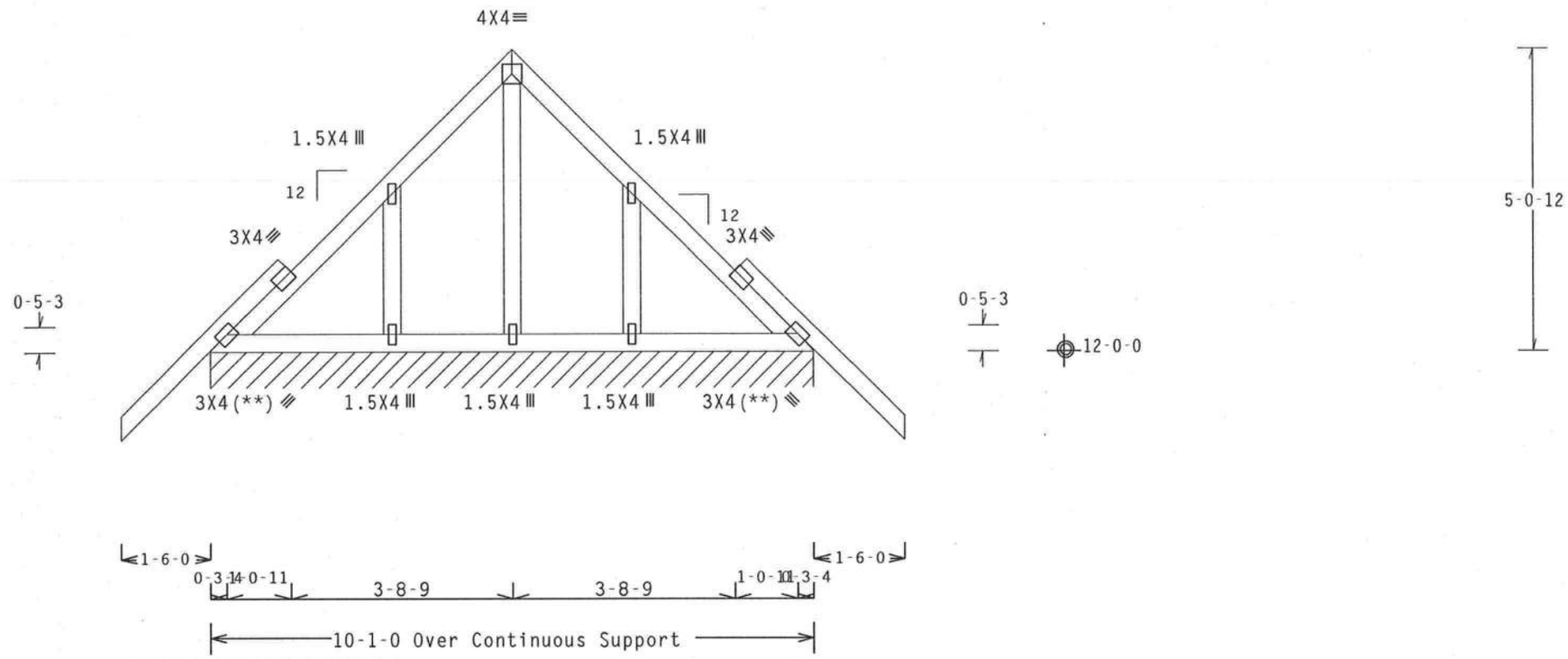

R=126 PLF U=43 PLF W=10-1-0

PLT TYP. Wave TPI | Design Crit: TPI-1995(STD)/FBC | 7.04.0805 | QTY:1 | FL/-/3/-/-/R/- | Scale =.375"/Ft.

ALPINE
Alpine Engineered Products, Inc
1950 Marley Drive
Haines City, FL 33844
FL Certificate of Authorization # 567

WARNING TRUSSES REQUIRE EXTREME CARE IN FABRICATION, HANDLING, SHIPPING, INSTALLING AND BRACING. REFER TO BCSI 1-03 (BUILDING COMPONENT SAFETY INFORMATION), PUBLISHED BY TPI (TRUSS PLATE INSTITUTE, 583 D'ONOFRIO DR., SUITE 200, MADISON, WI 53719) AND WTCA (WOOD TRUSS COUNCIL OF AMERICA, 6300 ENTERPRISE LN, MADISON, WI 53719) FOR SAFETY PRACTICES PRIOR TO PERFORMING THESE FUNCTIONS. UNLESS OTHERWISE INDICATED, TOP CHORD SHALL HAVE PROPERLY ATTACHED STRUCTURAL PANELS AND BOTTOM CHORD SHALL HAVE A PROPERLY ATTACHED RIGID CEILING.

IMPORTANT FURNISH A COPY OF THIS DESIGN TO THE INSTALLATION CONTRACTOR. ALPINE ENGINEERED PRODUCTS, INC. SHALL NOT BE RESPONSIBLE FOR ANY DEVIATION FROM THIS DESIGN; ANY FAILURE TO BUILD THE TRUSS IN CONFORMANCE WITH TPI; OR FABRICATING, HANDLING, SHIPPING, INSTALLING & BRACING OF TRUSSES. DESIGN CONFORMS WITH APPLICABLE PROVISIONS OF NDS (NATIONAL DESIGN SPEC, BY AF&PA) AND TPI. ALPINE CONNECTOR PLATES ARE MADE OF 20/18/16GA (W,H/S/K) ASTM A653 GRADE 40/60 (W, K/H,S) GALV. STEEL. APPLY PLATES TO EACH FACE OF TRUSS AND, UNLESS OTHERWISE LOCATED ON THIS DESIGN, POSITION PER DRAWINGS 160A-Z. ANY INSPECTION OF PLATES FOLLOWED BY (I) SHALL BE PER ANNEX A3 OF TPI1-2002 SEC.3. A SEAL ON THIS DRAWING INDICATES ACCEPTANCE OF PROFESSIONAL ENGINEERING RESPONSIBILITY SOLELY FOR THE TRUSS COMPONENT DESIGN SHOWN. THE SUITABILITY AND USE OF THIS COMPONENT FOR ANY BUILDING IS THE RESPONSIBILITY OF THE BUILDING DESIGNER PER ANSI/TPI 1 SEC. 2.

DENISE RUTLEDGE LICENSE NO. 58752 STATE OF FLORIDA PROFESSIONAL ENGINEER
Sep 19 05

TC LL	20.0 PSF	REF	R487-- 52901
TC DL	10.0 PSF	DATE	09/19/05
BC DL	10.0 PSF	DRW	HCUSR487 05262024
BC LL	0.0 PSF	HC-ENG	JB/ADR
TOT.LD.	40.0 PSF	SEQN-	123693
DUR.FAC.	1.25		
SPACING	24.0"	JREF-	1SQJ487_Z02

(5-220-STANLEY CRAWFORD/GRAHAM - ROOF - FG)

Top chord 2x4 SP #2 Dense
Bot chord 2x6 SP #1 Dense
Webs 2x4 SP #3

SPECIAL LOADS
------(LUMBER DUR.FAC.=1.25 / PLATE DUR.FAC.=1.25)
TC - From 60 PLF at 0.00 to 60 PLF at 14.04
BC - From 20 PLF at 0.00 to 20 PLF at 14.04
BC - 752 LB Conc. Load at 0.40, 2.40, 4.40, 6.40, 8.40
10.40, 12.40

End verticals not exposed to wind pressure.

Deflection meets L/360 live and L/240 total load.

2 COMPLETE TRUSSES REQUIRED

Nailing Schedule: (12d_Box_or_Gun_(0.128"x3.25",_min.)_nails)
Top Chord: 1 Row @12.00" o.c.
Bot Chord: 1 Row @ 3.75" o.c.
Webs : 1 Row @ 4" o.c.
Use equal spacing between rows and stagger nails
in each row to avoid splitting.

110 mph wind, 23.43 ft mean hgt, ASCE 7-98, CLOSED bldg, not located within 4.50 ft from roof edge, CAT II, EXP B, wind TC DL=5.0 psf, wind BC DL=5.0 psf.

NOTE: IN THE CALCULATION OF DEFLECTION AT CANTILEVER END, CREEP WAS NOT CONSIDERED.

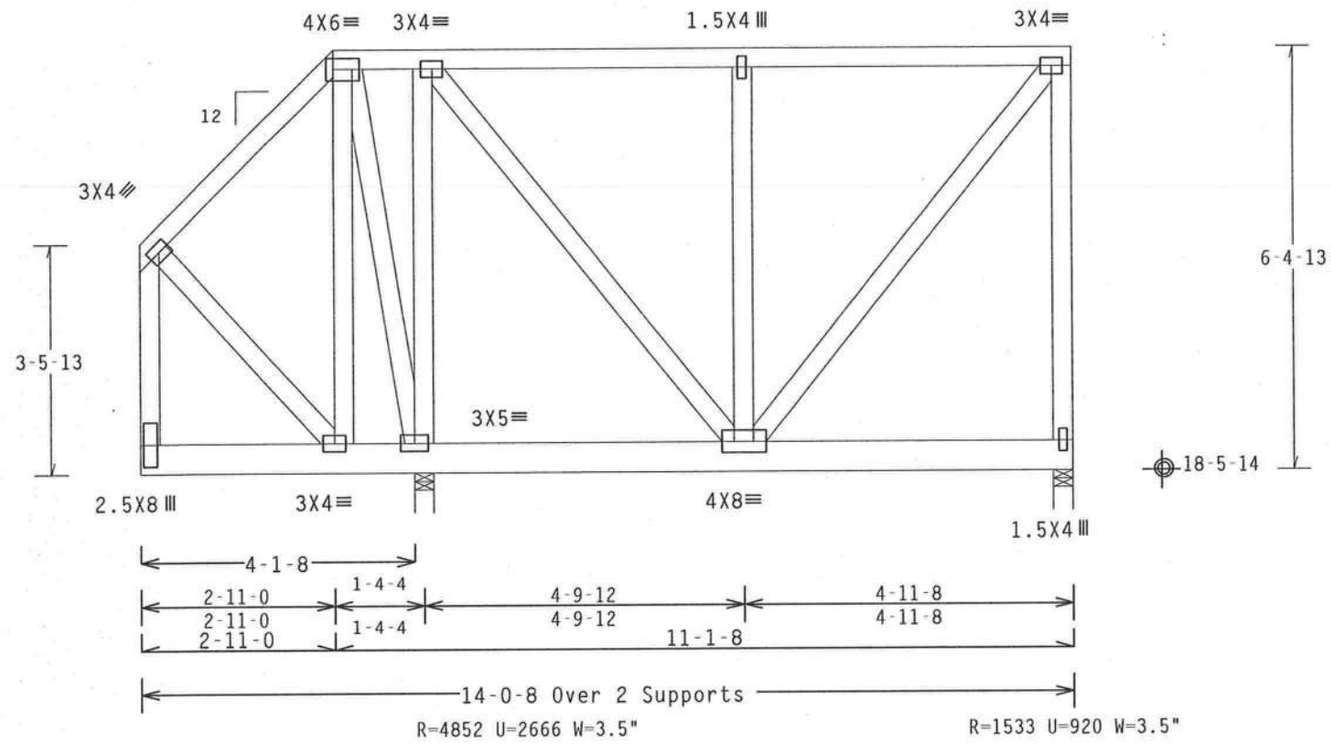

PLT TYP. Wave TPI | Design Crit: TPI-1995(STD)/FBC | 7.04.0805 | QTY:1 | FL/-/3/-/-/R/- | Scale =.375"/Ft.

ALPINE
Alpine Engineered Products, Inc
1950 Marley Drive
Haines City, FL 33844
FL Certificate of Authorization # 567

WARNING TRUSSES REQUIRE EXTREME CARE IN FABRICATION, HANDLING, SHIPPING, INSTALLING AND BRACING. REFER TO BCSI 1-03 (BUILDING COMPONENT SAFETY INFORMATION), PUBLISHED BY TPI (TRUSS PLATE INSTITUTE, 583 D'ONOFRIO DR., SUITE 200, MADISON, WI 53719) AND WTCA (WOOD TRUSS COUNCIL OF AMERICA, 6300 ENTERPRISE LN, MADISON, WI 53719) FOR SAFETY PRACTICES PRIOR TO PERFORMING THESE FUNCTIONS. UNLESS OTHERWISE INDICATED, TOP CHORD SHALL HAVE PROPERLY ATTACHED STRUCTURAL PANELS AND BOTTOM CHORD SHALL HAVE A PROPERLY ATTACHED RIGID CEILING.

IMPORTANT FURNISH A COPY OF THIS DESIGN TO THE INSTALLATION CONTRACTOR. ALPINE ENGINEERED PRODUCTS, INC. SHALL NOT BE RESPONSIBLE FOR ANY DEVIATION FROM THIS DESIGN; ANY FAILURE TO BUILD THE TRUSS IN CONFORMANCE WITH TPI; OR FABRICATING, HANDLING, SHIPPING, INSTALLING & BRACING OF TRUSSES. DESIGN CONFORMS WITH APPLICABLE PROVISIONS OF NDS (NATIONAL DESIGN SPEC. BY AF&PA) AND TPI. ALPINE CONNECTOR PLATES ARE MADE OF 20/18/16GA (W,H/S/K) ASTM A653 GRADE 40/60 (W, K/H,S) GALV. STEEL. APPLY PLATES TO EACH FACE OF TRUSS AND, UNLESS OTHERWISE LOCATED ON THIS DESIGN, POSITION PER DRAWINGS 160A-Z. ANY INSPECTION OF PLATES FOLLOWED BY (1) SHALL BE PER ANNEX A3 OF TPI1-2002 SEC.3. A SEAL ON THIS DRAWING INDICATES ACCEPTANCE OF PROFESSIONAL ENGINEERING RESPONSIBILITY SOLELY FOR THE TRUSS COMPONENT DESIGN SHOWN. THE SUITABILITY AND USE OF THIS COMPONENT FOR ANY BUILDING IS THE RESPONSIBILITY OF THE BUILDING DESIGNER PER ANSI/TPI 1 SEC. 2.

DENISE RUTLEDGE LICENSE No. 58752 STATE OF FLORIDA PROFESSIONAL ENGINEER
Sep 19 05

TC LL	20.0 PSF	REF R487-- 52902
TC DL	10.0 PSF	DATE 09/19/05
BC DL	10.0 PSF	DRW HCUSR487 05262025
BC LL	0.0 PSF	HC-ENG JB/ADR
TOT.LD.	40.0 PSF	SEQN- 155980
DUR.FAC.	1.25	
SPACING	24.0"	JREF- 1SQJ487_Z02

(5-220-STANLEY CRAWFORD/GRAHAM - ROOF - F)

Top chord 2x4 SP #2 Dense
Bot chord 2x6 SP #1 Dense
Webs 2x4 SP #3

110 mph wind, 22.50 ft mean hgt, ASCE 7-98, CLOSED bldg, not located within 4.50 ft from roof edge, CAT II, EXP B, wind TC DL=5.0 psf, wind BC DL=5.0 psf.

Deflection meets L/360 live and L/240 total load.

NOTE: IN THE CALCULATION OF DEFLECTION AT CANTILEVER END, CREEP WAS NOT CONSIDERED.

SPECIAL LOADS
------(LUMBER DUR.FAC.=1.25 / PLATE DUR.FAC.=1.25)
TC - From 60 PLF at 0.00 to 60 PLF at 14.04
BC - From 20 PLF at 0.00 to 20 PLF at 14.04
BC - 406 LB Conc. Load at 0.40
BC - 418 LB Conc. Load at 2.40, 3.90

End verticals not exposed to wind pressure.

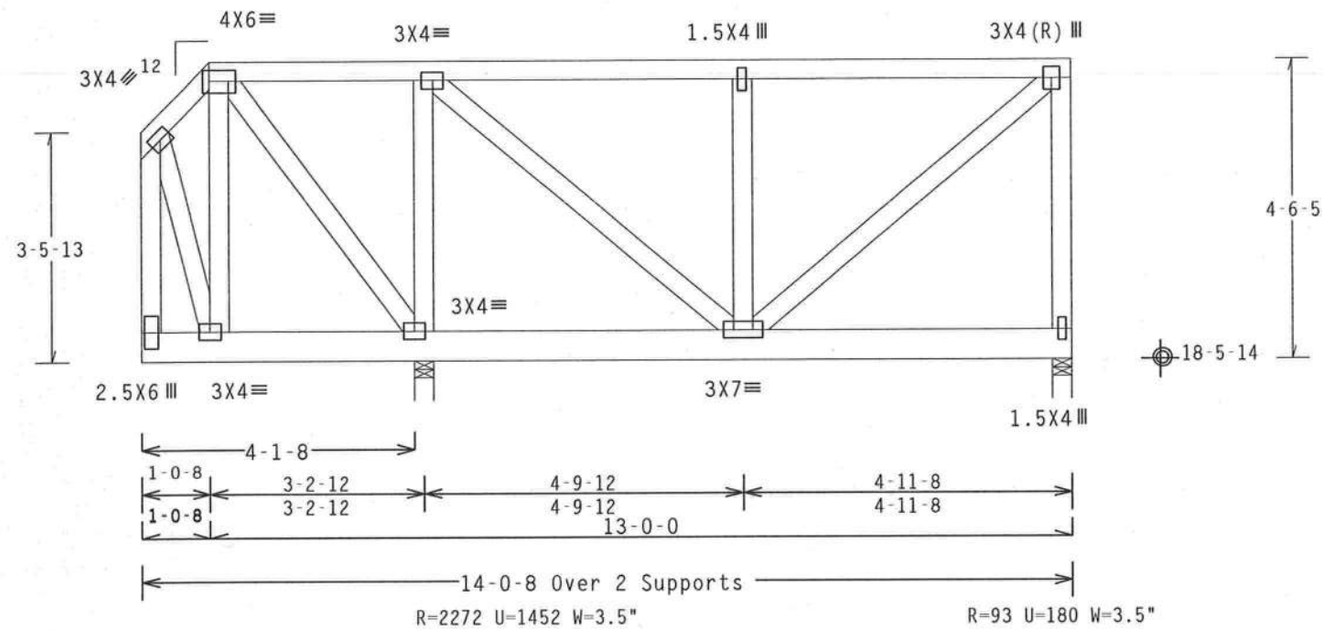

PLT TYP. Wave TPI | Design Crit: TPI-1995(STD)/FBC | 7.04.0805 | QTY:1 | FL/-/3/-/-/R/- | Scale =.375"/Ft.

ALPINE
Alpine Engineered Products, Inc
1950 Marley Drive
Haines City, FL 33844
FL Certificate of Authorization # 567

WARNING TRUSSES REQUIRE EXTREME CARE IN FABRICATION, HANDLING, SHIPPING, INSTALLING AND BRACING. REFER TO BCSI 1-03 (BUILDING COMPONENT SAFETY INFORMATION), PUBLISHED BY TPI (TRUSS PLATE INSTITUTE, 583 D'ONOFRIO DR., SUITE 200, MADISON, WI 53719) AND WTCA (WOOD TRUSS COUNCIL OF AMERICA, 6300 ENTERPRISE LN, MADISON, WI 53719) FOR SAFETY PRACTICES PRIOR TO PERFORMING THESE FUNCTIONS. UNLESS OTHERWISE INDICATED, TOP CHORD SHALL HAVE PROPERLY ATTACHED STRUCTURAL PANELS AND BOTTOM CHORD SHALL HAVE A PROPERLY ATTACHED RIGID CEILING.

IMPORTANT FURNISH A COPY OF THIS DESIGN TO THE INSTALLATION CONTRACTOR. ALPINE ENGINEERED PRODUCTS, INC. SHALL NOT BE RESPONSIBLE FOR ANY DEVIATION FROM THIS DESIGN; ANY FAILURE TO BUILD THE TRUSS IN CONFORMANCE WITH TPI: OR FABRICATING, HANDLING, SHIPPING, INSTALLING & BRACING OF TRUSSES. DESIGN CONFORMS WITH APPLICABLE PROVISIONS OF NDS (NATIONAL DESIGN SPEC, BY AF&PA) AND TPI. ALPINE CONNECTOR PLATES ARE MADE OF 20/18/16GA (W,H/S/K) ASTM A653 GRADE 40/60 (W, K/H,S) GALV. STEEL. APPLY PLATES TO EACH FACE OF TRUSS AND, UNLESS OTHERWISE LOCATED ON THIS DESIGN, POSITION PER DRAWINGS 160A-Z. ANY INSPECTION OF PLATES FOLLOWED BY (I) SHALL BE PER ANNEX A3 OF TPI1-2002 SEC.3. A SEAL ON THIS DRAWING INDICATES ACCEPTANCE OF PROFESSIONAL ENGINEERING RESPONSIBILITY SOLELY FOR THE TRUSS COMPONENT DESIGN SHOWN. THE SUITABILITY AND USE OF THIS COMPONENT FOR ANY BUILDING IS THE RESPONSIBILITY OF THE BUILDING DESIGNER PER ANSI/TPI 1 SEC. 2.

DENISE RUTLEDGE LICENSE No. 38752 STATE OF FLORIDA PROFESSIONAL ENGINEER
Sep 19 05

TC LL	20.0 PSF	REF R487-- 52903
TC DL	10.0 PSF	DATE 09/19/05
BC DL	10.0 PSF	DRW HCUSR487 05262026
BC LL	0.0 PSF	HC-ENG JB/ADR
TOT.LD.	40.0 PSF	SEQN- 155931
DUR.FAC.	1.25	
SPACING	24.0"	JREF- 1SQJ487_Z02

(5-220-STANLEY CRAWFORD/GRAHAM - ROOF - FS)

Top chord 2x4 SP #2 Dense
Bot chord 2x4 SP #2 Dense
Webs 2x4 SP #3

End verticals not exposed to wind pressure.

Provide for complete drainage of roof.

Truss must be installed as shown with top chord up.

110 mph wind, 21.02 ft mean hgt, ASCE 7-98, CLOSED bldg, not located within 4.50 ft from roof edge, CAT II, EXP B, wind TC DL=5.0 psf, wind BC DL=5.0 psf.

Deflection meets L/360 live and L/240 total load.

THE ARCHITECT OR ENGINEER OF RECORD SHALL EVALUATE AND APPROVE LOAD MAGNITUDES AND LOCATIONS FROM AREAS FIELD FRAMED BY OTHERS.
TRUSS ENGINEER IS NOT RESPONSIBLE FOR LOAD MAGNITUDES AND LOCATIONS FROM CONVENTIONAL FRAMING.

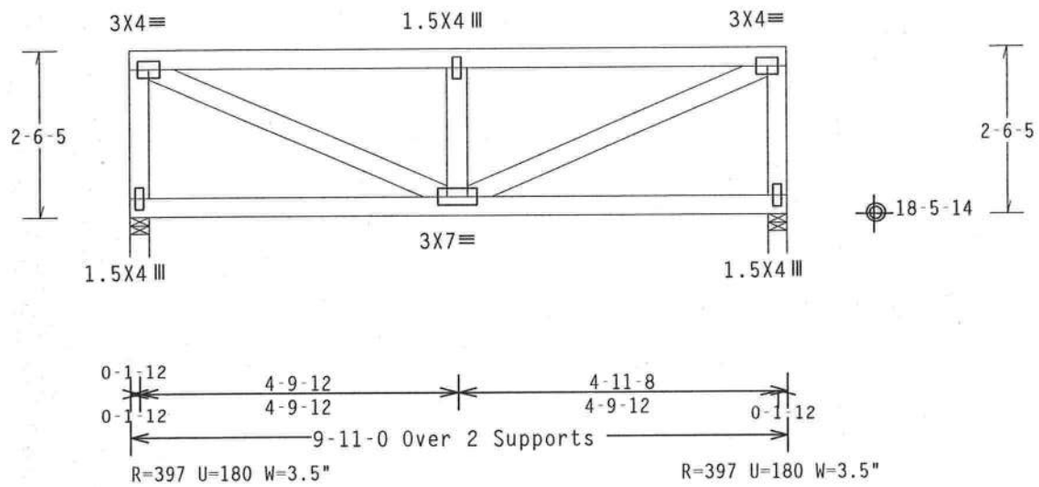

PLT TYP. Wave TPI | Design Crit: TPI-1995(STD)/FBC | 7.04.0805 | QTY:1 | FL/-/3/-/-/R/- | Scale =.375"/Ft.

ALPINE
Alpine Engineered Products, Inc
1950 Marley Drive
Haines City, FL 33844
FL Certificate of Authorization # 567

WARNING TRUSSES REQUIRE EXTREME CARE IN FABRICATION, HANDLING, SHIPPING, INSTALLING AND BRACING. REFER TO BCSI 1-03 (BUILDING COMPONENT SAFETY INFORMATION), PUBLISHED BY TPI (TRUSS PLATE INSTITUTE, 583 D'ONOFRIO DR., SUITE 200, MADISON, WI 53719) AND WTCA (WOOD TRUSS COUNCIL OF AMERICA, 6300 ENTERPRISE LN, MADISON, WI 53719) FOR SAFETY PRACTICES PRIOR TO PERFORMING THESE FUNCTIONS. UNLESS OTHERWISE INDICATED, TOP CHORD SHALL HAVE PROPERLY ATTACHED STRUCTURAL PANELS AND BOTTOM CHORD SHALL HAVE A PROPERLY ATTACHED RIGID CEILING.

IMPORTANT FURNISH A COPY OF THIS DESIGN TO THE INSTALLATION CONTRACTOR. ALPINE ENGINEERED PRODUCTS, INC. SHALL NOT BE RESPONSIBLE FOR ANY DEVIATION FROM THIS DESIGN; ANY FAILURE TO BUILD THE TRUSS IN CONFORMANCE WITH TPI: OR FABRICATING, HANDLING, SHIPPING, INSTALLING & BRACING OF TRUSSES. DESIGN CONFORMS WITH APPLICABLE PROVISIONS OF NDS (NATIONAL DESIGN SPEC, BY AF&PA) AND TPI. ALPINE CONNECTOR PLATES ARE MADE OF 20/18/16GA (W,H/S/K) ASTM A653 GRADE 40/60 (W, K/H,S) GALV. STEEL. APPLY PLATES TO EACH FACE OF TRUSS AND, UNLESS OTHERWISE LOCATED ON THIS DESIGN, POSITION PER DRAWINGS 160A-Z. ANY INSPECTION OF PLATES FOLLOWED BY (1) SHALL BE PER ANNEX A3 OF TPI1-2002 SEC.3. A SEAL ON THIS DRAWING INDICATES ACCEPTANCE OF PROFESSIONAL ENGINEERING RESPONSIBILITY SOLELY FOR THE TRUSS COMPONENT DESIGN SHOWN. THE SUITABILITY AND USE OF THIS COMPONENT FOR ANY BUILDING IS THE RESPONSIBILITY OF THE BUILDING DESIGNER PER ANSI/TPI 1 SEC. 2.

DENISE RUTLEDGE LICENSE No. 58752 STATE OF FLORIDA PROFESSIONAL ENGINEER
Sep 19 05

TC LL	20.0 PSF	REF	R487-- 52904
TC DL	10.0 PSF	DATE	09/19/05
BC DL	10.0 PSF	DRW	HCUSR487 05262003
BC LL	0.0 PSF	HC-ENG	JB/ADR *
TOT.LD.	40.0 PSF	SEQN-	155935
DUR.FAC.	1.25		
SPACING	24.0"	JREF-	1SQJ487_Z02

(5-220-STANLEY CRAWFORD/GRAHAM - ROOF - G)

Top chord 2x4 SP #2 Dense
Bot chord 2x4 SP #2 Dense
Webs 2x4 SP #3

Deflection meets L/360 live and L/240 total load.

110 mph wind, 12.62 ft mean hgt, ASCE 7-98, CLOSED bldg, Located anywhere in roof, CAT II, EXP B, wind TC DL=5.0 psf, wind BC DL=5.0 psf.

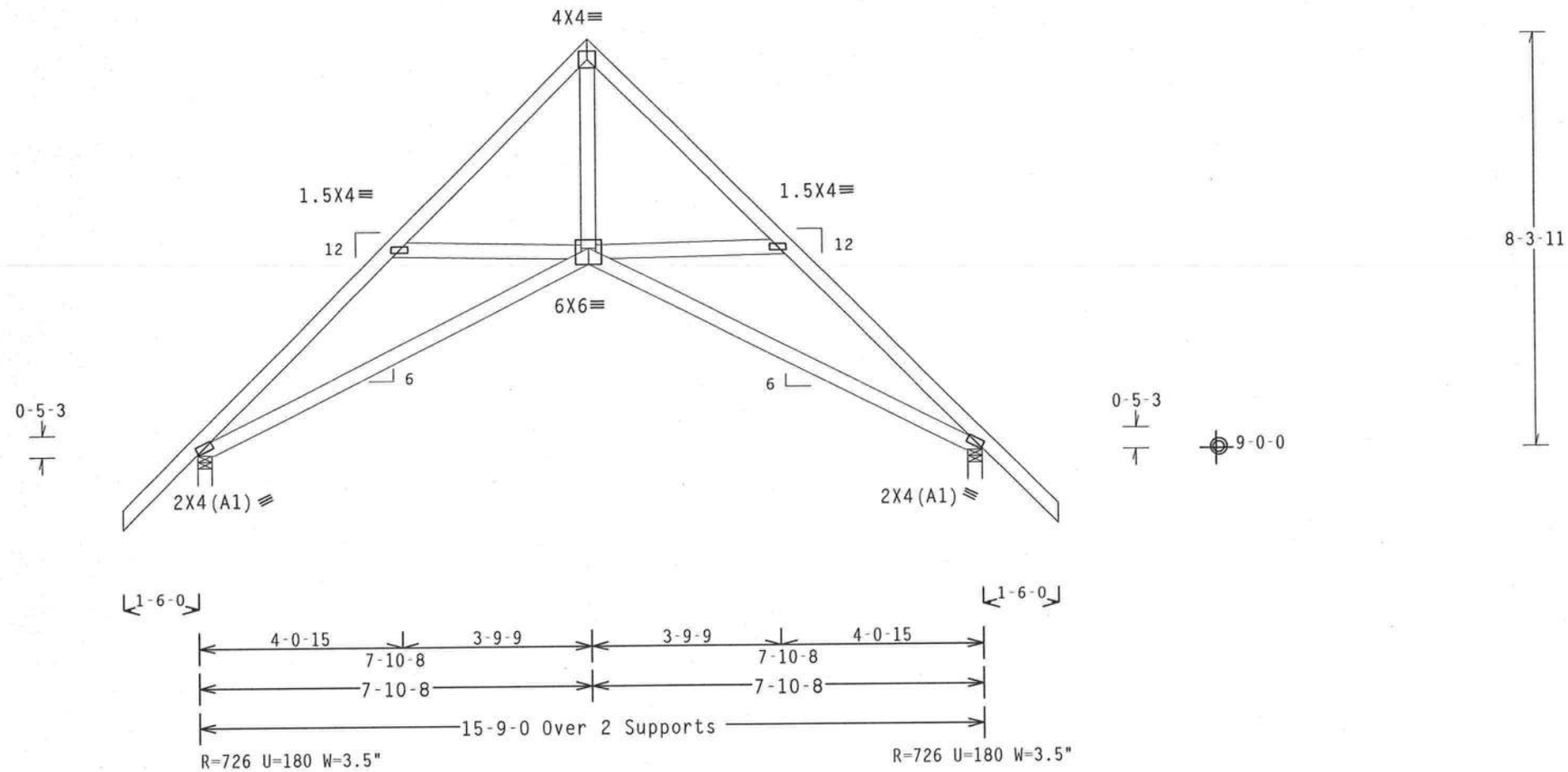

PLT TYP. Wave TPI | Design Crit: TPI-1995(STD)/FBC | 7.04.0805 | QTY:6 | FL/-/3/-/-/R/- | Scale =.3125"/Ft.

ALPINE

Alpine Engineered Products, Inc.
1950 Marley Drive
Haines City, FL 33844
FL Certificate of Authorization # 567

WARNING TRUSSES REQUIRE EXTREME CARE IN FABRICATION, HANDLING, SHIPPING, INSTALLING AND BRACING. REFER TO BCSI 1-03 (BUILDING COMPONENT SAFETY INFORMATION), PUBLISHED BY TPI (TRUSS PLATE INSTITUTE, 583 D'ONOFRIO DR., SUITE 200, MADISON, WI 53719) AND WTCA (WOOD TRUSS COUNCIL OF AMERICA, 6300 ENTERPRISE LN, MADISON, WI 53719) FOR SAFETY PRACTICES PRIOR TO PERFORMING THESE FUNCTIONS. UNLESS OTHERWISE INDICATED, TOP CHORD SHALL HAVE PROPERLY ATTACHED STRUCTURAL PANELS AND BOTTOM CHORD SHALL HAVE A PROPERLY ATTACHED RIGID CEILING.

IMPORTANTFURNISH A COPY OF THIS DESIGN TO THE INSTALLATION CONTRACTOR. ALPINE ENGINEERED PRODUCTS, INC. SHALL NOT BE RESPONSIBLE FOR ANY DEVIATION FROM THIS DESIGN; ANY FAILURE TO BUILD THE TRUSS IN CONFORMANCE WITH TPI; OR FABRICATING, HANDLING, SHIPPING, INSTALLING & BRACING OF TRUSSES. DESIGN CONFORMS WITH APPLICABLE PROVISIONS OF NDS (NATIONAL DESIGN SPEC. BY AF&PA) AND TPI. ALPINE CONNECTOR PLATES ARE MADE OF 20/18/16GA (W,H/S/K) ASTM A653 GRADE 40/60 (W, K/H,S) GALV. STEEL. APPLY PLATES TO EACH FACE OF TRUSS AND, UNLESS OTHERWISE LOCATED ON THIS DESIGN, POSITION PER DRAWINGS 160A-Z. ANY INSPECTION OF PLATES FOLLOWED BY (1) SHALL BE PER ANNEX A3 OF TPI1-2002 SEC.3. A SEAL ON THIS DRAWING INDICATES ACCEPTANCE OF PROFESSIONAL ENGINEERING RESPONSIBILITY SOLELY FOR THE TRUSS COMPONENT DESIGN SHOWN. THE SUITABILITY AND USE OF THIS COMPONENT FOR ANY BUILDING IS THE RESPONSIBILITY OF THE BUILDING DESIGNER PER ANSI/TPI 1 SEC. 2.

DENISE RUTLEDGE
LICENSE
No. 58752
STATE OF FLORIDA
PROFESSIONAL ENGINEER
Sep 19 '05

TC LL	20.0 PSF	REF	R487-- 52905
TC DL	10.0 PSF	DATE	09/19/05
BC DL	10.0 PSF	DRW	HCUSR487 05262004
BC LL	0.0 PSF	HC-ENG	JB/ADR *
TOT.LD.	40.0 PSF	SEQN-	123662
DUR.FAC.	1.25		
SPACING	24.0"	JREF-	1SOJ487_Z02

(5-220-STANLEY CRAWFORD/GRAHAM - ROOF - GGE)

Top chord 2x4 SP #2 Dense
Bot chord 2x4 SP #2 Dense
Webs 2x4 SP #3

SPECIAL LOADS
------(LUMBER DUR.FAC.=1.25 / PLATE DUR.FAC.=1.25)

TC - From	81 PLF	at -1.50	to	81 PLF	at 17.25
BC - From	4 PLF	at -1.50	to	4 PLF	at 0.00
BC - From	20 PLF	at 0.00	to	20 PLF	at 15.75
BC - From	4 PLF	at 15.75	to	4 PLF	at 17.25

(**) Plate relocated as shown.

110 mph wind, 12.41 ft mean hgt, ASCE 7-98, CLOSED bldg, Located anywhere in roof, CAT II, EXP B, wind TC DL=5.0 psf, wind BC DL=5.0 psf.

See DWGS A11015EC1103 & GBLLETIN0405 for more requirements.

Deflection meets L/360 live and L/240 total load.

+ MEMBER TO BE LATERALLY BRACED FOR HORIZONTAL WIND LOADS. BRACING SYSTEM TO BE DESIGNED AND FURNISHED BY OTHERS.

THE BUILDING DESIGNER IS RESPONSIBLE FOR THE DESIGN OF ROOF AND CEILING DIAPHRAGMS, GABLE END SHEAR WALLS, SUPPORTING SHEAR WALLS. SHEAR WALLS MUST PROVIDE CONTINUOUS LATERAL RESTRAINT TO GABLE END. ALL CONNECTIONS TO BE DESIGNED BY THE BUILDING DESIGNER.

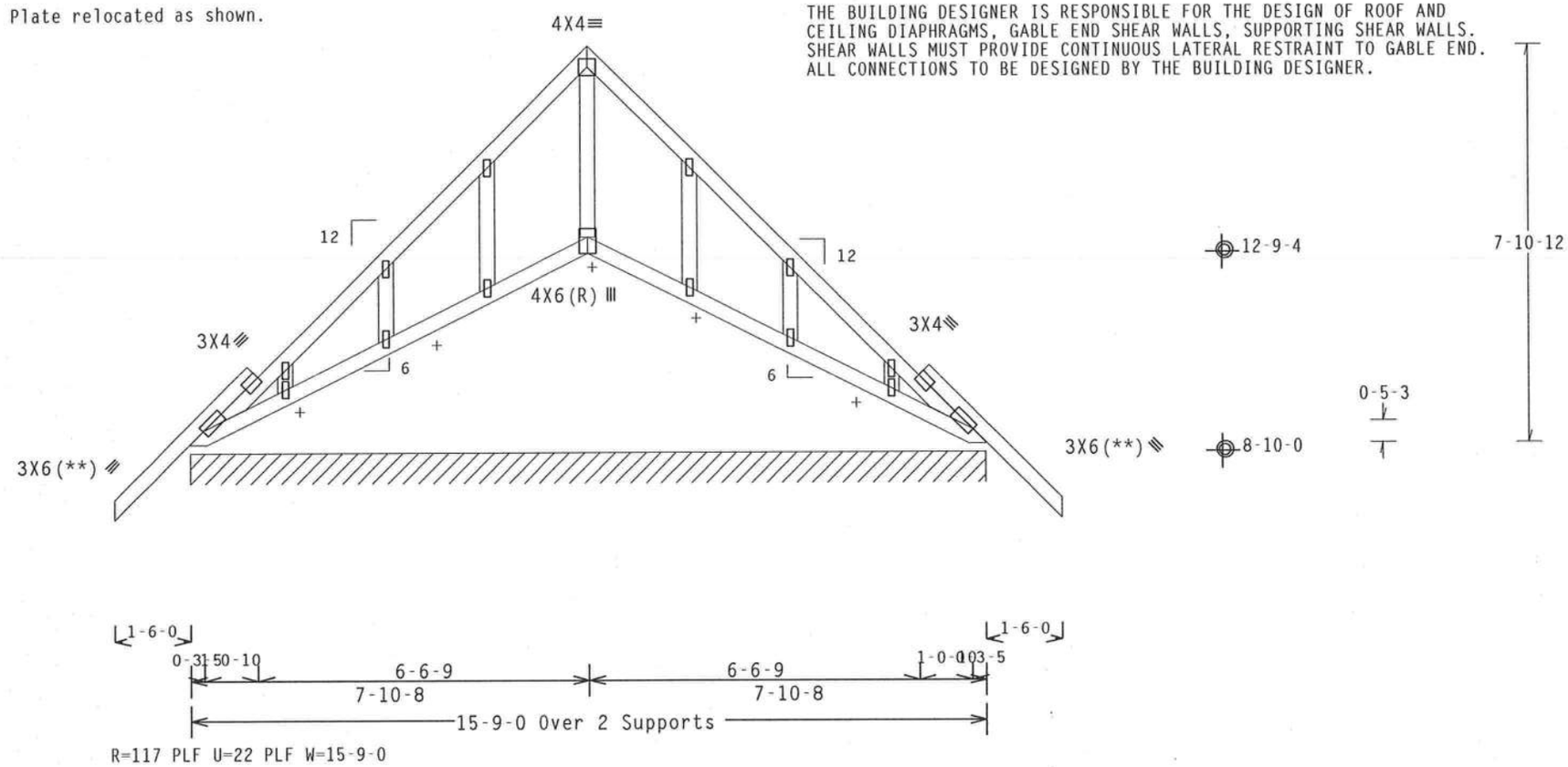

R=117 PLF U=22 PLF W=15-9-0

Note: All Plates Are 1.5X4 Except As Shown.

PLT TYP. Wave TPI Design Crit: TPI-1995(STD)/FBC 7.04.0805 QTY:1 FL/-/3/-/-/R/- Scale =.3125"/Ft.

ALPINE
Alpine Engineered Products, Inc
1950 Marley Drive
Haines City, FL 33844
FL Certificate of Authorization # 567

WARNING TRUSSES REQUIRE EXTREME CARE IN FABRICATION, HANDLING, SHIPPING, INSTALLING AND BRACING. REFER TO BCSI 1-03 (BUILDING COMPONENT SAFETY INFORMATION), PUBLISHED BY TPI (TRUSS PLATE INSTITUTE, 583 D'ONOFRIO DR., SUITE 200, MADISON, WI 53719) AND WTCA (WOOD TRUSS COUNCIL OF AMERICA, 6300 ENTERPRISE LN, MADISON, WI 53719) FOR SAFETY PRACTICES PRIOR TO PERFORMING THESE FUNCTIONS. UNLESS OTHERWISE INDICATED, TOP CHORD SHALL HAVE PROPERLY ATTACHED STRUCTURAL PANELS AND BOTTOM CHORD SHALL HAVE A PROPERLY ATTACHED RIGID CEILING.

IMPORTANT FURNISH A COPY OF THIS DESIGN TO THE INSTALLATION CONTRACTOR. ALPINE ENGINEERED PRODUCTS, INC. SHALL NOT BE RESPONSIBLE FOR ANY DEVIATION FROM THIS DESIGN; ANY FAILURE TO BUILD THE TRUSS IN CONFORMANCE WITH TPI; OR FABRICATING, HANDLING, SHIPPING, INSTALLING & BRACING OF TRUSSES. DESIGN CONFORMS WITH APPLICABLE PROVISIONS OF NDS (NATIONAL DESIGN SPEC, BY AF&PA) AND TPI. ALPINE CONNECTOR PLATES ARE MADE OF 20/18/16GA (W,H/S/K) ASTM A653 GRADE 40/60 (W, K/H,S) GALV. STEEL. APPLY PLATES TO EACH FACE OF TRUSS AND, UNLESS OTHERWISE LOCATED ON THIS DESIGN, POSITION PER DRAWINGS 160A-Z. ANY INSPECTION OF PLATES FOLLOWED BY (1) SHALL BE PER ANNEX A3 OF TPI1-2002 SEC.3. A SEAL ON THIS DRAWING INDICATES ACCEPTANCE OF PROFESSIONAL ENGINEERING RESPONSIBILITY SOLELY FOR THE TRUSS COMPONENT DESIGN SHOWN. THE SUITABILITY AND USE OF THIS COMPONENT FOR ANY BUILDING IS THE RESPONSIBILITY OF THE BUILDING DESIGNER PER ANSI/TPI 1 SEC. 2.

DENISE RUTLEDGE LICENSE No. 58752 STATE OF FLORIDA PROFESSIONAL ENGINEER
Sep 19 05

TC LL	20.0 PSF	REF R487-- 52906
TC DL	10.0 PSF	DATE 09/19/05
BC DL	10.0 PSF	DRW HCUSR487 05262027
BC LL	0.0 PSF	HC-ENG JB/ADR
TOT.LD.	40.0 PSF	SEQN- 123669
DUR.FAC.	1.25	
SPACING	24.0"	JREF- 1SQJ487_Z02

(5-220-STANLEY CRAWFORD/GRAHAM - ROOF - EJ7D)

Top chord 2x4 SP #2 Dense
Bot chord 2x4 SP #2 Dense
Webs 2x4 SP #3

H = recommended connection based on manufacturer tested capacities and calculations. Conditions may exist that require different connections than indicated. Refer to manufacturer publication for additional information.

110 mph wind, 11.93 ft mean hgt, ASCE 7-98, CLOSED bldg, not located within 4.50 ft from roof edge, CAT II, EXP B, wind TC DL=5.0 psf, wind BC DL=5.0 psf.

Right end vertical not exposed to wind pressure.

Deflection meets L/360 live and L/240 total load.

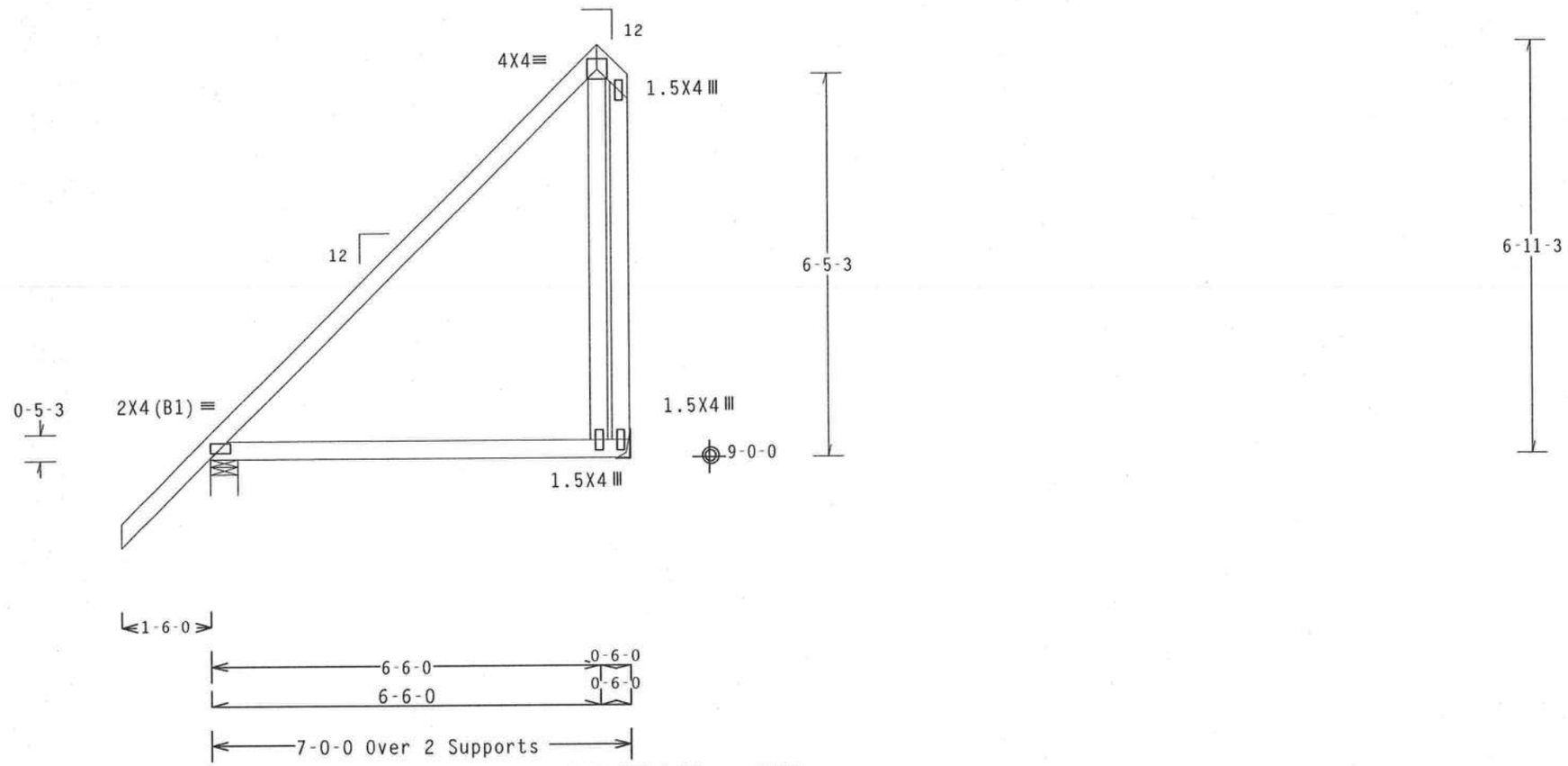

R=402 U=180 W=5.5"

R=254 U=180 H=Simpson LU24
w/ (2) 10d, 0.148"x1.5" nails in Truss
w/ (4) 10d Common, 0.148"x3.0" nails in Girder
Girder is (1)2X6 min. So.Pine

PLT TYP. Wave TPI | Design Crit: TPI-1995(STD)/FBC | 7.04.0805 | QTY:2 | FL/-/3/-/-/R/- | Scale =.375"/Ft.

ALPINE
Alpine Engineered Products, Inc.
1950 Marley Drive
Haines City, FL 33844
FL Certificate of Authorization # 567

WARNING TRUSSES REQUIRE EXTREME CARE IN FABRICATION, HANDLING, SHIPPING, INSTALLING AND BRACING. REFER TO BCSI 1-03 (BUILDING COMPONENT SAFETY INFORMATION), PUBLISHED BY TPI (TRUSS PLATE INSTITUTE, 583 D'ONOFRIO DR., SUITE 200, MADISON, WI 53719) AND WTCA (WOOD TRUSS COUNCIL OF AMERICA, 6300 ENTERPRISE LN, MADISON, WI 53719) FOR SAFETY PRACTICES PRIOR TO PERFORMING THESE FUNCTIONS. UNLESS OTHERWISE INDICATED, TOP CHORD SHALL HAVE PROPERLY ATTACHED STRUCTURAL PANELS AND BOTTOM CHORD SHALL HAVE A PROPERLY ATTACHED RIGID CEILING.

IMPORTANT FURNISH A COPY OF THIS DESIGN TO THE INSTALLATION CONTRACTOR. ALPINE ENGINEERED PRODUCTS, INC. SHALL NOT BE RESPONSIBLE FOR ANY DEVIATION FROM THIS DESIGN; ANY FAILURE TO BUILD THE TRUSS IN CONFORMANCE WITH TPI; OR FABRICATING, HANDLING, SHIPPING, INSTALLING & BRACING OF TRUSSES. DESIGN CONFORMS WITH APPLICABLE PROVISIONS OF NDS (NATIONAL DESIGN SPEC. BY AF&PA) AND TPI. ALPINE CONNECTOR PLATES ARE MADE OF 20/18/16GA (W,H/S/X) ASTM A653 GRADE 40/60 (W, K/H,S) GALV. STEEL. APPLY PLATES TO EACH FACE OF TRUSS AND, UNLESS OTHERWISE LOCATED ON THIS DESIGN, POSITION PER DRAWINGS 160A-Z. ANY INSPECTION OF PLATES FOLLOWED BY (1) SHALL BE PER ANNEX A3 OF TPI1-2002 SEC.3. A SEAL ON THIS DRAWING INDICATES ACCEPTANCE OF PROFESSIONAL ENGINEERING RESPONSIBILITY SOLELY FOR THE TRUSS COMPONENT DESIGN SHOWN. THE SUITABILITY AND USE OF THIS COMPONENT FOR ANY BUILDING IS THE RESPONSIBILITY OF THE BUILDING DESIGNER PER ANSI/TPI 1 SEC. 2.

DENISE RUTLEDGE
LICENSE
No. 58752
STATE OF
FLORIDA
PROFESSIONAL ENGINEER
Sep 19 '05

TC LL	20.0 PSF	REF R487-- 52907
TC DL	10.0 PSF	DATE 09/19/05
BC DL	10.0 PSF	DRW HCUSR487 05262028
BC LL	0.0 PSF	HC-ENG JB/ADR
TOT.LD.	40.0 PSF	SEQN- 123698
DUR.FAC.	1.25	
SPACING	24.0"	JREF- 1SQJ487_Z02

(5-220-STANLEY CRAWFORD/GRAHAM - ROOF - EJ7)

Top chord 2x4 SP #2 Dense
Bot chord 2x4 SP #2 Dense

Deflection meets L/360 live and L/240 total load.

110 mph wind, 12.18 ft mean hgt, ASCE 7-98, CLOSED bldg, not located within 4.50 ft from roof edge, CAT II, EXP B, wind TC DL=5.0 psf, wind BC DL=5.0 psf.

Provide (2) 16d common nails(0.162"x3.5"), toe nailed at Top chord.
Provide (2) 16d common nails(0.162"x3.5"), toe nailed at Bot chord.

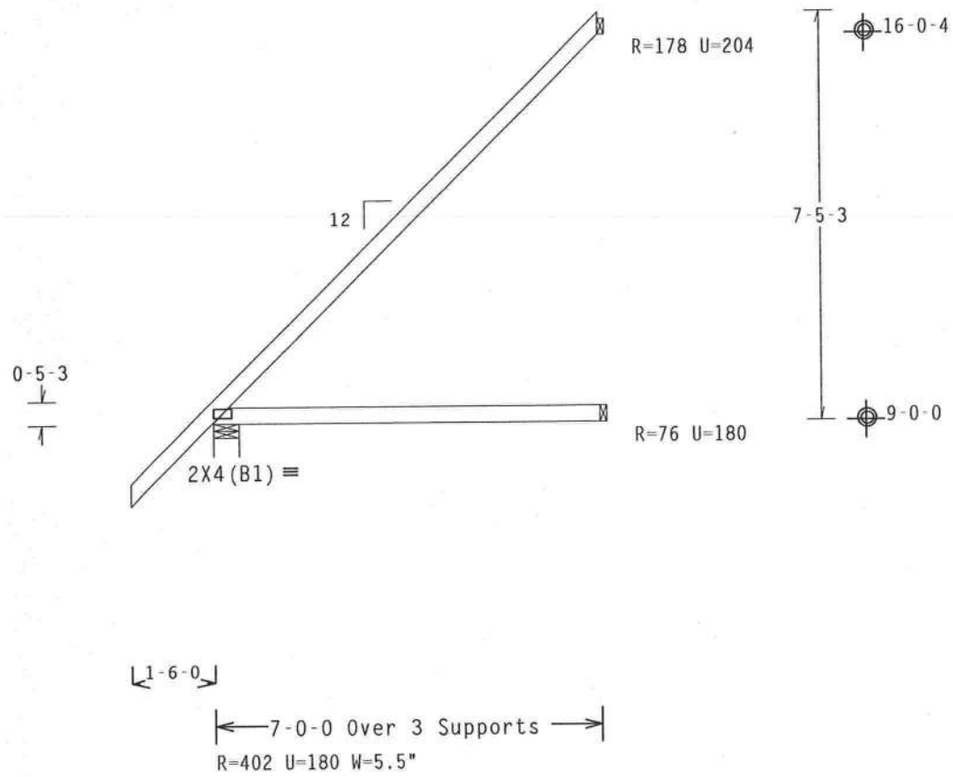

PLT TYP. Wave TPI | Design Crit: TPI-1995(STD)/FBC | 7.04.0805 | QTY:10 FL/-/3/-/-/R/- | Scale =.3125"/Ft.

ALPINE
Alpine Engineered Products, Inc.
1950 Marley Drive
Haines City, FL 33844
FL Certificate of Authorization # 567

WARNING TRUSSES REQUIRE EXTREME CARE IN FABRICATION, HANDLING, SHIPPING, INSTALLING AND BRACING. REFER TO BCSI 1-03 (BUILDING COMPONENT SAFETY INFORMATION), PUBLISHED BY TPI (TRUSS PLATE INSTITUTE, 583 D'ONOFRIO DR., SUITE 200, MADISON, WI 53719) AND WTCA (WOOD TRUSS COUNCIL OF AMERICA, 6300 ENTERPRISE LN, MADISON, WI 53719) FOR SAFETY PRACTICES PRIOR TO PERFORMING THESE FUNCTIONS. UNLESS OTHERWISE INDICATED, TOP CHORD SHALL HAVE PROPERLY ATTACHED STRUCTURAL PANELS AND BOTTOM CHORD SHALL HAVE A PROPERLY ATTACHED RIGID CEILING.

IMPORTANT FURNISH A COPY OF THIS DESIGN TO THE INSTALLATION CONTRACTOR. ALPINE ENGINEERED PRODUCTS, INC. SHALL NOT BE RESPONSIBLE FOR ANY DEVIATION FROM THIS DESIGN; ANY FAILURE TO BUILD THE TRUSS IN CONFORMANCE WITH TPI; OR FABRICATING, HANDLING, SHIPPING, INSTALLING & BRACING OF TRUSSES. DESIGN CONFORMS WITH APPLICABLE PROVISIONS OF NDS (NATIONAL DESIGN SPEC. BY AF&PA) AND TPI. ALPINE CONNECTOR PLATES ARE MADE OF 20/18/16GA (W,H/S/K) ASTM A653 GRADE 40/60 (W, K/H,S) GALV. STEEL. APPLY PLATES TO EACH FACE OF TRUSS AND, UNLESS OTHERWISE LOCATED ON THIS DESIGN, POSITION PER DRAWINGS 160A-Z. ANY INSPECTION OF PLATES FOLLOWED BY (1) SHALL BE PER ANNEX A3 OF TPI1-2002 SEC.3. A SEAL ON THIS DRAWING INDICATES ACCEPTANCE OF PROFESSIONAL ENGINEERING RESPONSIBILITY SOLELY FOR THE TRUSS COMPONENT DESIGN SHOWN. THE SUITABILITY AND USE OF THIS COMPONENT FOR ANY BUILDING IS THE RESPONSIBILITY OF THE BUILDING DESIGNER PER ANSI/TPI 1 SEC. 2.

DENISE RUTLEDGE LICENSE No. 58703 STATE OF FLORIDA PROFESSIONAL ENGINEER
Sep 19, 05

TC LL	20.0 PSF	REF	R487-- 52908
TC DL	10.0 PSF	DATE	09/19/05
BC DL	10.0 PSF	DRW	HCUSR487 05262029
BC LL	0.0 PSF	HC-ENG	JB/ADR
TOT.LD.	40.0 PSF	SEQN-	123706
DUR.FAC.	1.25		
SPACING	24.0"	JREF-	1SQJ487_Z02

(5-220-STANLEY CRAWFORD/GRAHAM - ROOF - EJ7G)

Top chord 2x4 SP #2 Dense
Bot chord 2x6 SP #1 Dense
Webs 2x4 SP #3

110 mph wind, 15.00 ft mean hgt, ASCE 7-98, CLOSED bldg, not located within 4.50 ft from roof edge, CAT II, EXP B, wind TC DL=5.0 psf, wind BC DL=5.0 psf.

H = recommended connection based on manufacturer tested capacities and calculations. Conditions may exist that require different connections than indicated. Refer to manufacturer publication for additional information.

SPECIAL LOADS
------(LUMBER DUR.FAC.=1.25 / PLATE DUR.FAC.=1.25)
TC - From 60 PLF at 0.00 to 60 PLF at 7.00
BC - From 20 PLF at 0.00 to 20 PLF at 7.00
BC - 211 LB Conc. Load at 1.09
BC - 1796 LB Conc. Load at 3.06
BC - 915 LB Conc. Load at 5.06

Right end vertical not exposed to wind pressure.

Deflection meets L/360 live and L/240 total load.

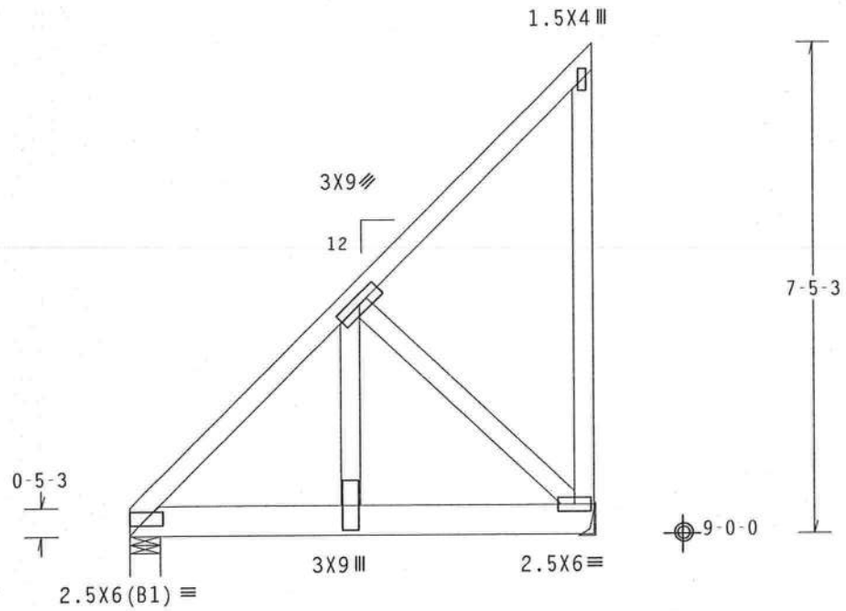

R=1685 U=355 H=Simpson HUS26
w/ (6) 10d Common, 0.148"x3.0" nails in Truss
w/ (14) 10d Common, 0.148"x3.0" nails in Girder
Girder is (1)2X6 min. So.Pine

PLT TYP. Wave TPI | Design Crit: TPI-1995(STD)/FBC | 7.04.0805 | QTY:1 | FL/-/3/-/-/R/- | Scale =.375"/Ft.

ALPINE
Alpine Engineered Products, Inc.
1950 Marley Drive
Haines City, FL 33844
FL Certificate of Authorization # 567

WARNING TRUSSES REQUIRE EXTREME CARE IN FABRICATION, HANDLING, SHIPPING, INSTALLING AND BRACING. REFER TO BCSI 1-03 (BUILDING COMPONENT SAFETY INFORMATION), PUBLISHED BY TPI (TRUSS PLATE INSTITUTE, 583 D'ONOFRIO DR., SUITE 200, MADISON, WI 53719) AND WTCA (WOOD TRUSS COUNCIL OF AMERICA, 6300 ENTERPRISE LN, MADISON, WI 53719) FOR SAFETY PRACTICES PRIOR TO PERFORMING THESE FUNCTIONS. UNLESS OTHERWISE INDICATED, TOP CHORD SHALL HAVE PROPERLY ATTACHED STRUCTURAL PANELS AND BOTTOM CHORD SHALL HAVE A PROPERLY ATTACHED RIGID CEILING.

IMPORTANTFURNISH A COPY OF THIS DESIGN TO THE INSTALLATION CONTRACTOR. ALPINE ENGINEERED PRODUCTS, INC. SHALL NOT BE RESPONSIBLE FOR ANY DEVIATION FROM THIS DESIGN; ANY FAILURE TO BUILD THE TRUSS IN CONFORMANCE WITH TPI; OR FABRICATING, HANDLING, SHIPPING, INSTALLING & BRACING OF TRUSSES. DESIGN CONFORMS WITH APPLICABLE PROVISIONS OF NDS (NATIONAL DESIGN SPEC, BY AF&PA) AND TPI. ALPINE CONNECTOR PLATES ARE MADE OF 20/18/16GA (W,H/S/K) ASTM A653 GRADE 40/60 (W, K/H,S) GALV. STEEL. APPLY PLATES TO EACH FACE OF TRUSS AND, UNLESS OTHERWISE LOCATED ON THIS DESIGN, POSITION PER DRAWINGS 160A-Z. ANY INSPECTION OF PLATES FOLLOWED BY (1) SHALL BE PER ANNEX A3 OF TPI1-2002 SEC.3. A SEAL ON THIS DRAWING INDICATES ACCEPTANCE OF PROFESSIONAL ENGINEERING RESPONSIBILITY SOLELY FOR THE TRUSS COMPONENT DESIGN SHOWN. THE SUITABILITY AND USE OF THIS COMPONENT FOR ANY BUILDING IS THE RESPONSIBILITY OF THE BUILDING DESIGNER PER ANSI/TPI 1 SEC. 2.

DENISE RUTLEDGE
LICENSE
No. 58152
STATE OF FLORIDA
PROFESSIONAL ENGINEER
Sep 19, 2005

TC LL	20.0 PSF	REF R487-- 52909
TC DL	10.0 PSF	DATE 09/19/05
BC DL	10.0 PSF	DRW HCUSR487 05262030
BC LL	0.0 PSF	HC-ENG JB/ADR
TOT.LD.	40.0 PSF	SEQN- 123857
DUR.FAC.	1.25	
SPACING	24.0"	JREF- 1SQJ487_Z02

(5-220-STANLEY CRAWFORD/GRAHAM - ROOF - HJ7)

Top chord 2x4 SP #2 Dense
Bot chord 2x4 SP #2 Dense
Webs 2x4 SP #3

Hipjack supports 7-0-0 setback jacks with no webs.

Provide (2) 16d common nails(0.162"x3.5"), toe nailed at Top chord.
Provide (3) 16d common nails(0.162"x3.5"), toe nailed at Bot chord.

110 mph wind, 15.00 ft mean hgt, ASCE 7-98, CLOSED bldg, Located anywhere in roof, CAT II, EXP B, wind TC DL=5.0 psf, wind BC DL=5.0 psf.

Deflection meets L/360 live and L/240 total load.

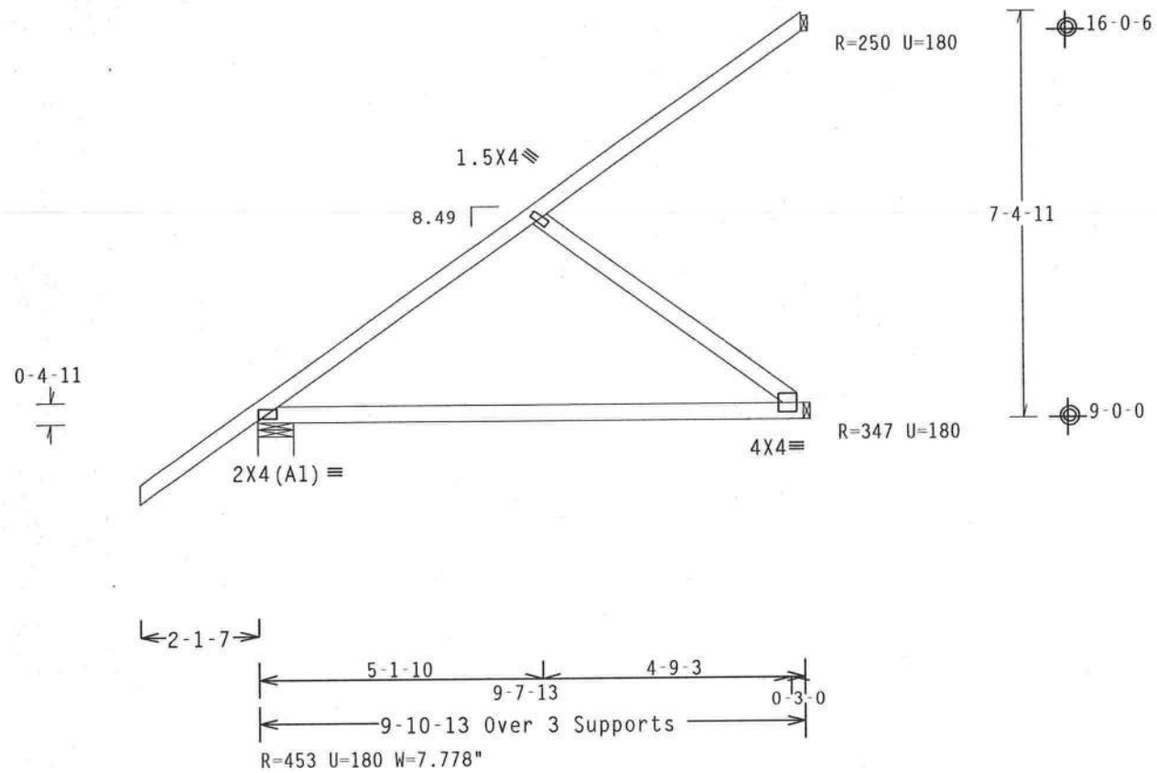

PLT TYP. Wave TPI | Design Crit: TPI-1995(STD)/FBC | 7.04.080 | QTY:2 | FL/-/3/-/-/R/- | Scale =.3125"/Ft.

ALPINE
Alpine Engineered Products, Inc
1950 Marley Drive
Haines City, FL 33844
FL Certificate of Authorization # 567

WARNING TRUSSES REQUIRE EXTREME CARE IN FABRICATION, HANDLING, SHIPPING, INSTALLING AND BRACING. REFER TO BCSI 1-03 (BUILDING COMPONENT SAFETY INFORMATION), PUBLISHED BY TPI (TRUSS PLATE INSTITUTE, 583 D'ONOFRIO DR., SUITE 200, MADISON, WI 53719) AND WTCA (WOOD TRUSS COUNCIL OF AMERICA, 6300 ENTERPRISE LN, MADISON, WI 53719) FOR SAFETY PRACTICES PRIOR TO PERFORMING THESE FUNCTIONS. UNLESS OTHERWISE INDICATED, TOP CHORD SHALL HAVE PROPERLY ATTACHED STRUCTURAL PANELS AND BOTTOM CHORD SHALL HAVE A PROPERLY ATTACHED RIGID CEILING.

IMPORTANT FURNISH A COPY OF THIS DESIGN TO THE INSTALLATION CONTRACTOR. ALPINE ENGINEERED PRODUCTS, INC. SHALL NOT BE RESPONSIBLE FOR ANY DEVIATION FROM THIS DESIGN; ANY FAILURE TO BUILD THE TRUSS IN CONFORMANCE WITH TPI; OR FABRICATING, HANDLING, SHIPPING, INSTALLING & BRACING OF TRUSSES. DESIGN CONFORMS WITH APPLICABLE PROVISIONS OF NDS (NATIONAL DESIGN SPEC, BY AF&PA) AND TPI. ALPINE CONNECTOR PLATES ARE MADE OF 20/18/16GA (W,H/S/K) ASTM A653 GRADE 40/60 (W, K/H,S) GALV. STEEL. APPLY PLATES TO EACH FACE OF TRUSS AND, UNLESS OTHERWISE LOCATED ON THIS DESIGN, POSITION PER DRAWINGS 160A-Z. ANY INSPECTION OF PLATES FOLLOWED BY (1) SHALL BE PER ANNEX A3 OF TPI1-2002 SEC.3. A SEAL ON THIS DRAWING INDICATES ACCEPTANCE OF PROFESSIONAL ENGINEERING RESPONSIBILITY SOLELY FOR THE TRUSS COMPONENT DESIGN SHOWN. THE SUITABILITY AND USE OF THIS COMPONENT FOR ANY BUILDING IS THE RESPONSIBILITY OF THE BUILDING DESIGNER PER ANSI/TPI 1 SEC. 2.

DENISE RUTLEDGE LICENSE No. 58762 STATE OF FLORIDA PROFESSIONAL ENGINEER
Sep 19 '05

TC LL	20.0 PSF	REF	R487-- 52910
TC DL	10.0 PSF	DATE	09/19/05
BC DL	10.0 PSF	DRW	HCUSR487 05262031
BC LL	0.0 PSF	HC-ENG	JB/ADR
TOT.LD.	40.0 PSF	SEQN-	123775
DUR.FAC.	1.25		
SPACING	24.0"	JREF-	1SQJ487_Z02

(5-220-STANLEY CRAWFORD/GRAHAM - ROOF - CJ5)

Top chord 2x4 SP #2 Dense
Bot chord 2x4 SP #2 Dense

Deflection meets L/360 live and L/240 total load.

110 mph wind, 11.18 ft mean hgt, ASCE 7-98, CLOSED bldg, not located within 4.50 ft from roof edge, CAT II, EXP B, wind TC DL=5.0 psf, wind BC DL=5.0 psf.

Provide (2) 16d common nails(0.162"x3.5"), toe nailed at Top chord.
Provide (2) 16d common nails(0.162"x3.5"), toe nailed at Bot chord.

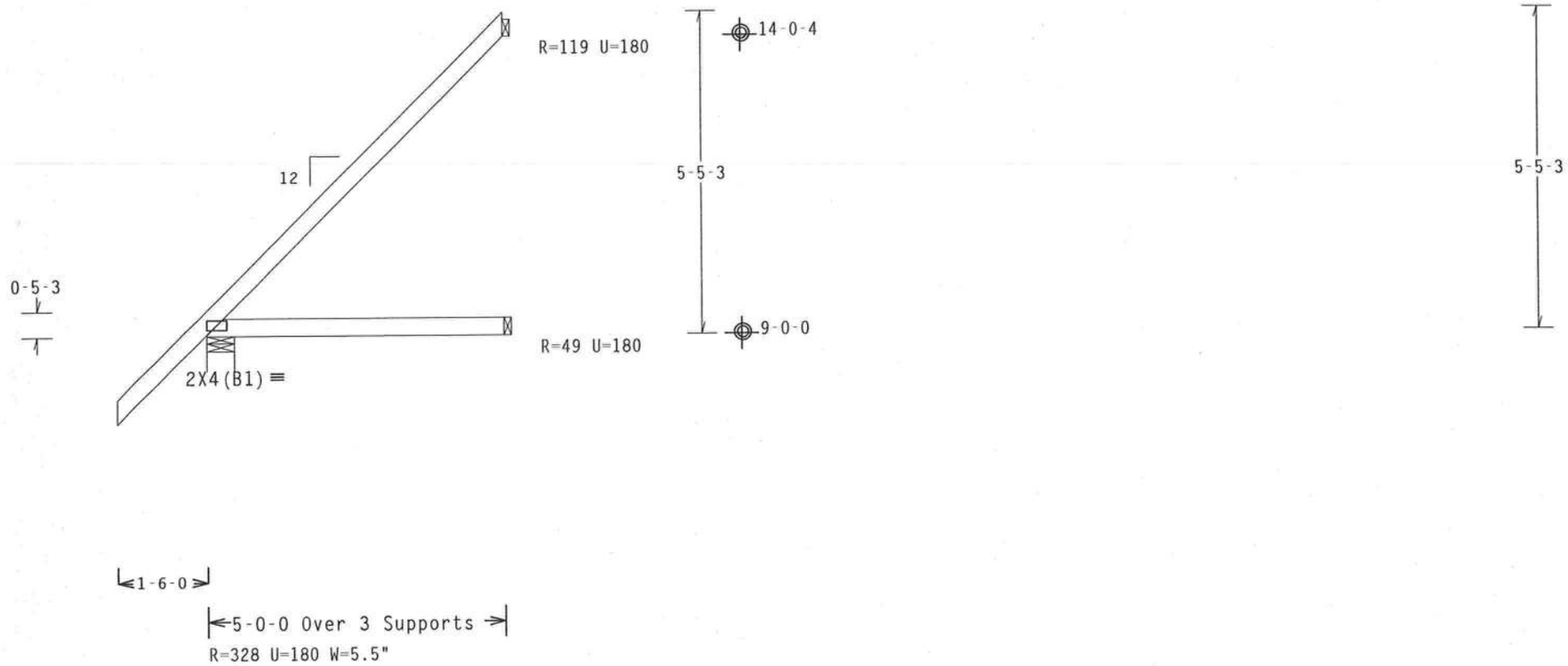

PLT TYP. Wave TPI | Design Crit: TPI-1995(STD)/FBC | 7.04.0805 | QTY:4 | FL/-/3/-/-/R/- | Scale =.375"/Ft.

ALPINE
Alpine Engineered Products, Inc.
1950 Marley Drive
Haines City, FL 33844
FL Certificate of Authorization # 567

WARNING TRUSSES REQUIRE EXTREME CARE IN FABRICATION, HANDLING, SHIPPING, INSTALLING AND BRACING. REFER TO BCSI 1-03 (BUILDING COMPONENT SAFETY INFORMATION), PUBLISHED BY TPI (TRUSS PLATE INSTITUTE, 583 D'ONOFRIO DR., SUITE 200, MADISON, WI 53719) AND WTCA (WOOD TRUSS COUNCIL OF AMERICA, 6300 ENTERPRISE LN, MADISON, WI 53719) FOR SAFETY PRACTICES PRIOR TO PERFORMING THESE FUNCTIONS. UNLESS OTHERWISE INDICATED, TOP CHORD SHALL HAVE PROPERLY ATTACHED STRUCTURAL PANELS AND BOTTOM CHORD SHALL HAVE A PROPERLY ATTACHED RIGID CEILING.

IMPORTANT FURNISH A COPY OF THIS DESIGN TO THE INSTALLATION CONTRACTOR. ALPINE ENGINEERED PRODUCTS, INC. SHALL NOT BE RESPONSIBLE FOR ANY DEVIATION FROM THIS DESIGN; ANY FAILURE TO BUILD THE TRUSS IN CONFORMANCE WITH TPI; OR FABRICATING, HANDLING, SHIPPING, INSTALLING & BRACING OF TRUSSES. DESIGN CONFORMS WITH APPLICABLE PROVISIONS OF NDS (NATIONAL DESIGN SPEC. BY AF&PA) AND TPI. ALPINE CONNECTOR PLATES ARE MADE OF 20/18/16GA (W,H/S/K) ASTM A653 GRADE 40/60 (W, K/H,S) GALV. STEEL. APPLY PLATES TO EACH FACE OF TRUSS AND, UNLESS OTHERWISE LOCATED ON THIS DESIGN, POSITION PER DRAWINGS 160A-Z. ANY INSPECTION OF PLATES FOLLOWED BY (1) SHALL BE PER ANNEX A3 OF TPI1-2002 SEC.3. A SEAL ON THIS DRAWING INDICATES ACCEPTANCE OF PROFESSIONAL ENGINEERING RESPONSIBILITY SOLELY FOR THE TRUSS COMPONENT DESIGN SHOWN. THE SUITABILITY AND USE OF THIS COMPONENT FOR ANY BUILDING IS THE RESPONSIBILITY OF THE BUILDING DESIGNER PER ANSI/TPI 1 SEC. 2.

DENISE RUTLEDGE LICENSE No. 58752 STATE OF FLORIDA PROFESSIONAL ENGINEER
Sep 19 '05

TC LL	20.0 PSF	REF	R487-- 52911
TC DL	10.0 PSF	DATE	09/19/05
BC DL	10.0 PSF	DRW	HCUSR487 05262032
BC LL	0.0 PSF	HC-ENG	JB/ADR
TOT.LD.	40.0 PSF	SEQN-	123718
DUR.FAC.	1.25		
SPACING	24.0"	JREF-	1SQJ487_Z02

(5-220-STANLEY CRAWFORD/GRAHAM - ROOF - CJ3)

Top chord 2x4 SP #2 Dense
Bot chord 2x4 SP #2 Dense

Deflection meets L/360 live and L/240 total load.

110 mph wind, 10.18 ft mean hgt, ASCE 7-98, CLOSED bldg, Located anywhere in roof, CAT II, EXP B, wind TC DL=5.0 psf, wind BC DL=5.0 psf.

Provide (2) 16d common nails(0.162"x3.5"), toe nailed at Top chord.
Provide (2) 16d common nails(0.162"x3.5"), toe nailed at Bot chord.

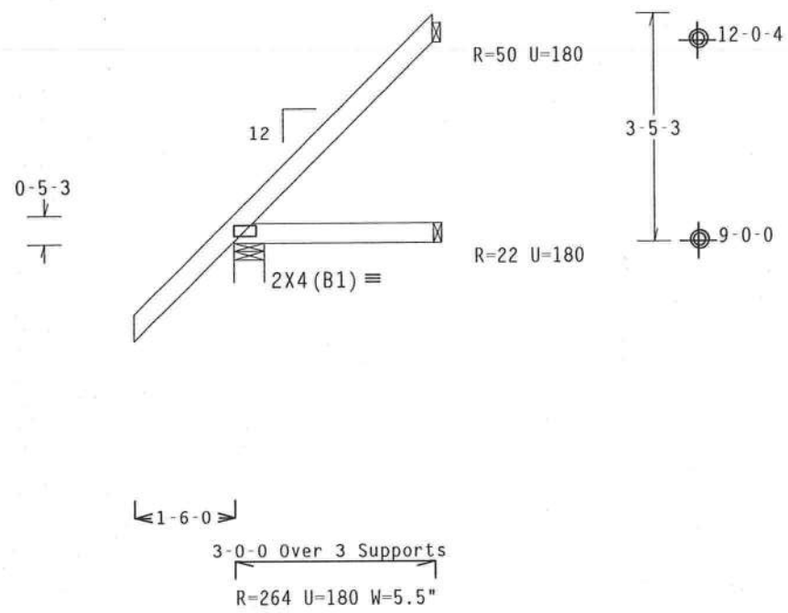

PLT TYP. Wave TPI | Design Crit: TPI-1995(STD)/FBC | 7.04.0805 | QTY:4 | FL/-/3/-/-/R/- | Scale =.375"/Ft.

ALPINE
Alpine Engineered Products, Inc.
1950 Marley Drive
Haines City, FL 33844
FL Certificate of Authorization # 567

WARNING TRUSSES REQUIRE EXTREME CARE IN FABRICATION, HANDLING, SHIPPING, INSTALLING AND BRACING. REFER TO BCSI 1-03 (BUILDING COMPONENT SAFETY INFORMATION), PUBLISHED BY TPI (TRUSS PLATE INSTITUTE, 583 D'ONOFRIO DR., SUITE 200, MADISON, WI 53719) AND WTCA (WOOD TRUSS COUNCIL OF AMERICA, 6300 ENTERPRISE LN, MADISON, WI 53719) FOR SAFETY PRACTICES PRIOR TO PERFORMING THESE FUNCTIONS. UNLESS OTHERWISE INDICATED, TOP CHORD SHALL HAVE PROPERLY ATTACHED STRUCTURAL PANELS AND BOTTOM CHORD SHALL HAVE A PROPERLY ATTACHED RIGID CEILING.

IMPORTANT FURNISH A COPY OF THIS DESIGN TO THE INSTALLATION CONTRACTOR. ALPINE ENGINEERED PRODUCTS, INC. SHALL NOT BE RESPONSIBLE FOR ANY DEVIATION FROM THIS DESIGN; ANY FAILURE TO BUILD THE TRUSS IN CONFORMANCE WITH TPI; OR FABRICATING, HANDLING, SHIPPING, INSTALLING & BRACING OF TRUSSES. DESIGN CONFORMS WITH APPLICABLE PROVISIONS OF NDS (NATIONAL DESIGN SPEC, BY AF&PA) AND TPI. ALPINE CONNECTOR PLATES ARE MADE OF 20/18/16GA (W,H/S/K) ASTM A653 GRADE 40/60 (W, K/H,S) GALV. STEEL. APPLY PLATES TO EACH FACE OF TRUSS AND, UNLESS OTHERWISE LOCATED ON THIS DESIGN, POSITION PER DRAWINGS 160A-Z. ANY INSPECTION OF PLATES FOLLOWED BY (1) SHALL BE PER ANNEX A3 OF TPI1-2002 SEC.3. A SEAL ON THIS DRAWING INDICATES ACCEPTANCE OF PROFESSIONAL ENGINEERING RESPONSIBILITY SOLELY FOR THE TRUSS COMPONENT DESIGN SHOWN. THE SUITABILITY AND USE OF THIS COMPONENT FOR ANY BUILDING IS THE RESPONSIBILITY OF THE BUILDING DESIGNER PER ANSI/TPI 1 SEC. 2.

DENISE RUTLEDGE LICENSE No. 68762 STATE OF FLORIDA PROFESSIONAL ENGINEER
Sep 19 '05

TC LL	20.0 PSF	REF	R487-- 52912
TC DL	10.0 PSF	DATE	09/19/05
BC DL	10.0 PSF	DRW	HCUSR487 05262033
BC LL	0.0 PSF	HC-ENG	JB/ADR
TOT.LD.	40.0 PSF	SEQN-	123722
DUR.FAC.	1.25		
SPACING	24.0"	JREF-	1SQJ487_Z02

(5-220-STANLEY CRAWFORD/GRAHAM - ROOF - CJ1)

Top chord 2x4 SP #2 Dense
Bot chord 2x4 SP #2 Dense

Deflection meets L/360 live and L/240 total load.

110 mph wind, 9.18 ft mean hgt, ASCE 7-98, CLOSED bldg, Located anywhere in roof, CAT II, EXP B, wind TC DL=5.0 psf, wind BC DL=5.0 psf.

Provide (2) 16d common nails(0.162"x3.5"), toe nailed at Top chord.
Provide (2) 16d common nails(0.162"x3.5"), toe nailed at Bot chord.

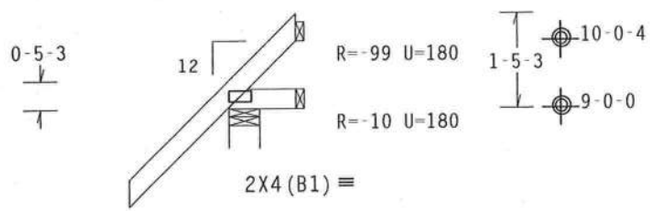

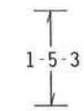

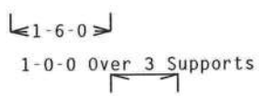

1-0-0 Over 3 Supports

R=285 U=180 W=5.5"

PLT TYP. Wave TPI | Design Crit: TPI-1995(STD)/FBC | 7.04.0805 | QTY:6 | FL/-/3/-/-/R/- | Scale =.375"/Ft.

ALPINE

Alpine Engineered Products, Inc.
1950 Marley Drive
Haines City, FL 33844
FL Certificate of Authorization # 567

WARNING TRUSSES REQUIRE EXTREME CARE IN FABRICATION, HANDLING, SHIPPING, INSTALLING AND BRACING. REFER TO BCSI 1-03 (BUILDING COMPONENT SAFETY INFORMATION), PUBLISHED BY TPI (TRUSS PLATE INSTITUTE, 583 D'ONOFRIO DR., SUITE 200, MADISON, WI 53719) AND WTCA (WOOD TRUSS COUNCIL OF AMERICA, 6300 ENTERPRISE LN, MADISON, WI 53719) FOR SAFETY PRACTICES PRIOR TO PERFORMING THESE FUNCTIONS. UNLESS OTHERWISE INDICATED, TOP CHORD SHALL HAVE PROPERLY ATTACHED STRUCTURAL PANELS AND BOTTOM CHORD SHALL HAVE A PROPERLY ATTACHED RIGID CEILING.

IMPORTANTFURNISH A COPY OF THIS DESIGN TO THE INSTALLATION CONTRACTOR. ALPINE ENGINEERED PRODUCTS, INC. SHALL NOT BE RESPONSIBLE FOR ANY DEVIATION FROM THIS DESIGN; ANY FAILURE TO BUILD THE TRUSS IN CONFORMANCE WITH TPI; OR FABRICATING, HANDLING, SHIPPING, INSTALLING & BRACING OF TRUSSES. DESIGN CONFORMS WITH APPLICABLE PROVISIONS OF NDS (NATIONAL DESIGN SPEC. BY AF&PA) AND TPI. ALPINE CONNECTOR PLATES ARE MADE OF 20/18/16GA (W,H/S/K) ASTM A653 GRADE 40/60 (W, K/H,S) GALV. STEEL. APPLY PLATES TO EACH FACE OF TRUSS AND, UNLESS OTHERWISE LOCATED ON THIS DESIGN, POSITION PER DRAWINGS 160A-Z. ANY INSPECTION OF PLATES FOLLOWED BY (1) SHALL BE PER ANNEX A3 OF TPI1-2002 SEC.3. A SEAL ON THIS DRAWING INDICATES ACCEPTANCE OF PROFESSIONAL ENGINEERING RESPONSIBILITY SOLELY FOR THE TRUSS COMPONENT DESIGN SHOWN. THE SUITABILITY AND USE OF THIS COMPONENT FOR ANY BUILDING IS THE RESPONSIBILITY OF THE BUILDING DESIGNER PER ANSI/TPI 1 SEC. 2.

DENISE RUTLEDGE LICENSE No. 58782 STATE OF FLORIDA PROFESSIONAL ENGINEER
Sep 19 '05

TC LL	20.0 PSF	REF	R487-- 52913
TC DL	10.0 PSF	DATE	09/19/05
BC DL	10.0 PSF	DRW	HCUSR487 05262034
BC LL	0.0 PSF	HC-ENG	JB/ADR
TOT.LD.	40.0 PSF	SEQN-	123726
DUR.FAC.	1.25		
SPACING	24.0"	JREF-	1SQJ487_Z02

(5-220-STANLEY CRAWFORD/GRAHAM - ROOF - CJ3T)

Top chord 2x4 SP #2 Dense
Bot chord 2x4 SP #2 Dense
Webs 2x4 SP #3

Deflection meets L/360 live and L/240 total load.

Provide (2) 16d common nails(0.162"x3.5"), toe nailed at Top chord.
Provide (2) 16d common nails(0.162"x3.5"), toe nailed at Bot chord.

110 mph wind, 10.18 ft mean hgt, ASCE 7-98, CLOSED bldg, Located anywhere in roof, CAT II, EXP B, wind TC DL=5.0 psf, wind BC DL=5.0 psf.

Shim all supports to solid bearing.

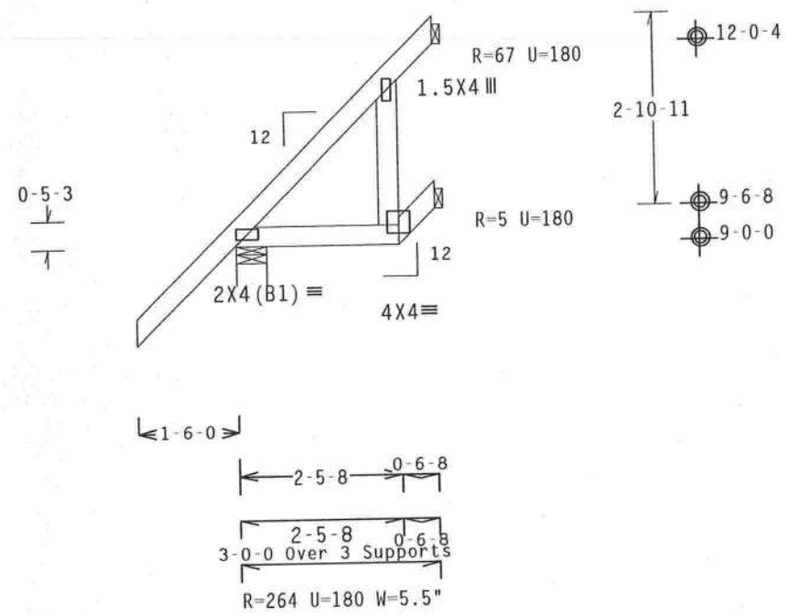

PLT TYP. Wave TPI

Design Crit: TPI-1995(STD)/FBC

7.04.0805

QTY:2

FL/-/3/-/-/R/-

Scale =.375"/Ft.

ALPINE

Alpine Engineered Products, Inc
1950 Marley Drive
Haines City, FL 33844
FL Certificate of Authorization # 567

WARNING TRUSSES REQUIRE EXTREME CARE IN FABRICATION, HANDLING, SHIPPING, INSTALLING AND BRACING. REFER TO BCSI 1-03 (BUILDING COMPONENT SAFETY INFORMATION), PUBLISHED BY TPI (TRUSS PLATE INSTITUTE, 583 D'ONOFRIO DR., SUITE 200, MADISON, WI 53719) AND WTCA (WOOD TRUSS COUNCIL OF AMERICA, 6300 ENTERPRISE LN, MADISON, WI 53719) FOR SAFETY PRACTICES PRIOR TO PERFORMING THESE FUNCTIONS. UNLESS OTHERWISE INDICATED, TOP CHORD SHALL HAVE PROPERLY ATTACHED STRUCTURAL PANELS AND BOTTOM CHORD SHALL HAVE A PROPERLY ATTACHED RIGID CEILING.

IMPORTANT FURNISH A COPY OF THIS DESIGN TO THE INSTALLATION CONTRACTOR. ALPINE ENGINEERED PRODUCTS, INC. SHALL NOT BE RESPONSIBLE FOR ANY DEVIATION FROM THIS DESIGN; ANY FAILURE TO BUILD THE TRUSS IN CONFORMANCE WITH TPI; OR FABRICATING, HANDLING, SHIPPING, INSTALLING & BRACING OF TRUSSES. DESIGN CONFORMS WITH APPLICABLE PROVISIONS OF NDS (NATIONAL DESIGN SPEC. BY AF&PA) AND TPI. ALPINE CONNECTOR PLATES ARE MADE OF 20/18/16GA (W,H/S/K) ASTM A653 GRADE 40/60 (W, K/H,S) GALV. STEEL. APPLY PLATES TO EACH FACE OF TRUSS AND, UNLESS OTHERWISE LOCATED ON THIS DESIGN, POSITION PER DRAWINGS 160A-Z. ANY INSPECTION OF PLATES FOLLOWED BY (I) SHALL BE PER ANNEX A3 OF TPI1-2002 SEC.3. A SEAL ON THIS DRAWING INDICATES ACCEPTANCE OF PROFESSIONAL ENGINEERING RESPONSIBILITY SOLELY FOR THE TRUSS COMPONENT DESIGN SHOWN. THE SUITABILITY AND USE OF THIS COMPONENT FOR ANY BUILDING IS THE RESPONSIBILITY OF THE BUILDING DESIGNER PER ANSI/TPI 1 SEC. 2.

DENISE RUTLEDGE LICENSE No. 58782 STATE OF FLORIDA PROFESSIONAL ENGINEER

Sep 19 '05

TC LL	20.0 PSF	REF R487-- 52914
TC DL	10.0 PSF	DATE 09/19/05
BC DL	10.0 PSF	DRW HCUSR487 05262005
BC LL	0.0 PSF	HC-ENG JB/ADR *
TOT.LD.	40.0 PSF	SEQN- 123735
DUR.FAC.	1.25	
SPACING	24.0"	JREF- 1SQJ487_Z02

(5-220-STANLEY CRAWFORD/GRAHAM - ROOF - CJ5T)

Top chord 2x4 SP #2 Dense
Bot chord 2x4 SP #2 Dense
Webs 2x4 SP #3

Deflection meets L/360 live and L/240 total load.

110 mph wind, 11.18 ft mean hgt, ASCE 7-98, CLOSED bldg, not located within 4.50 ft from roof edge, CAT II, EXP B, wind TC DL=5.0 psf, wind BC DL=5.0 psf.

Provide (2) 16d common nails(0.162"x3.5"), toe nailed at Top chord.
Provide (2) 16d common nails(0.162"x3.5"), toe nailed at Bot chord.

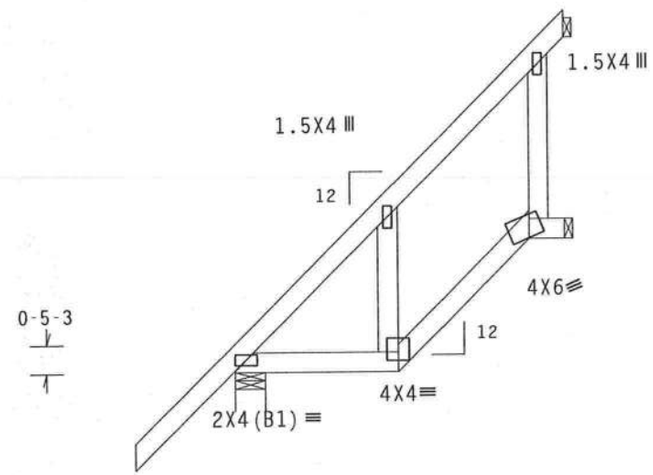

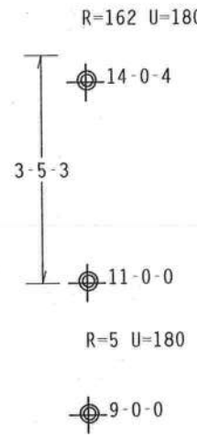

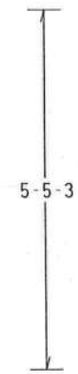

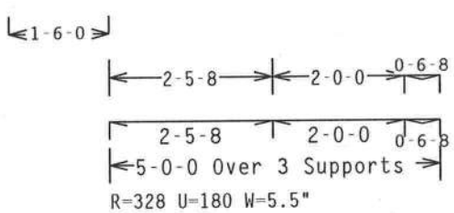

PLT TYP. Wave TPI | Design Crit: TPI-1995(STD)/FBC | 7.04.0805 | QTY:2 | FL/-/3/-/-/R/- | Scale =.375"/Ft.

ALPINE
Alpine Engineered Products, Inc.
1950 Marley Drive
Haines City, FL 33844
FL Certificate of Authorization # 567

WARNING TRUSSES REQUIRE EXTREME CARE IN FABRICATION, HANDLING, SHIPPING, INSTALLING AND BRACING. REFER TO BCSI 1-03 (BUILDING COMPONENT SAFETY INFORMATION), PUBLISHED BY TPI (TRUSS PLATE INSTITUTE, 583 D'ONOFRIO DR., SUITE 200, MADISON, WI 53719) AND WTCA (WOOD TRUSS COUNCIL OF AMERICA, 6300 ENTERPRISE LN, MADISON, WI 53719) FOR SAFETY PRACTICES PRIOR TO PERFORMING THESE FUNCTIONS. UNLESS OTHERWISE INDICATED, TOP CHORD SHALL HAVE PROPERLY ATTACHED STRUCTURAL PANELS AND BOTTOM CHORD SHALL HAVE A PROPERLY ATTACHED RIGID CEILING.

IMPORTANTFURNISH A COPY OF THIS DESIGN TO THE INSTALLATION CONTRACTOR. ALPINE ENGINEERED PRODUCTS, INC. SHALL NOT BE RESPONSIBLE FOR ANY DEVIATION FROM THIS DESIGN; ANY FAILURE TO BUILD THE TRUSS IN CONFORMANCE WITH TPI; OR FABRICATING, HANDLING, SHIPPING, INSTALLING & BRACING OF TRUSSES. DESIGN CONFORMS WITH APPLICABLE PROVISIONS OF NDS (NATIONAL DESIGN SPEC, BY AF&PA) AND TPI. ALPINE CONNECTOR PLATES ARE MADE OF 20/18/16GA (W,H/S/K) ASTM A653 GRADE 40/60 (W, K/H,S) GALV. STEEL. APPLY PLATES TO EACH FACE OF TRUSS AND, UNLESS OTHERWISE LOCATED ON THIS DESIGN, POSITION PER DRAWINGS 160A-Z. ANY INSPECTION OF PLATES FOLLOWED BY (1) SHALL BE PER ANNEX A3 OF TPI1-2002 SEC.3. A SEAL ON THIS DRAWING INDICATES ACCEPTANCE OF PROFESSIONAL ENGINEERING RESPONSIBILITY SOLELY FOR THE TRUSS COMPONENT DESIGN SHOWN. THE SUITABILITY AND USE OF THIS COMPONENT FOR ANY BUILDING IS THE RESPONSIBILITY OF THE BUILDING DESIGNER PER ANSI/TPI 1 SEC. 2.

DENISE RUTLEDGE
LICENSE
No. 58752
STATE OF FLORIDA
PROFESSIONAL ENGINEER
Sep 19 '05

TC LL	20.0 PSF	REF	R487-- 52915
TC DL	10.0 PSF	DATE	09/19/05
BC DL	10.0 PSF	DRW	HCUSR487 05262006
BC LL	0.0 PSF	HC-ENG	JB/ADR *
TOT.LD.	40.0 PSF	SEQN-	123746
DUR.FAC.	1.25		
SPACING	24.0"	JREF-	1SQJ487_Z02

(5-220-STANLEY CRAWFORD/GRAHAM - ROOF - EJ7T)

Top chord 2x4 SP #2 Dense
Bot chord 2x4 SP #2 Dense
Webs 2x4 SP #3

Calculated horizontal deflection is 0.13" due to live load and 0.12" due to dead load.

110 mph wind, 12.18 ft mean hgt, ASCE 7-98, CLOSED bldg, not located within 4.50 ft from roof edge, CAT II, EXP B, wind TC DL=5.0 psf, wind BC DL=5.0 psf.

Deflection meets L/360 live and L/240 total load.

Provide (2) 16d common nails(0.162"x3.5"), toe nailed at Top chord.
Provide (2) 16d common nails(0.162"x3.5"), toe nailed at Bot chord.

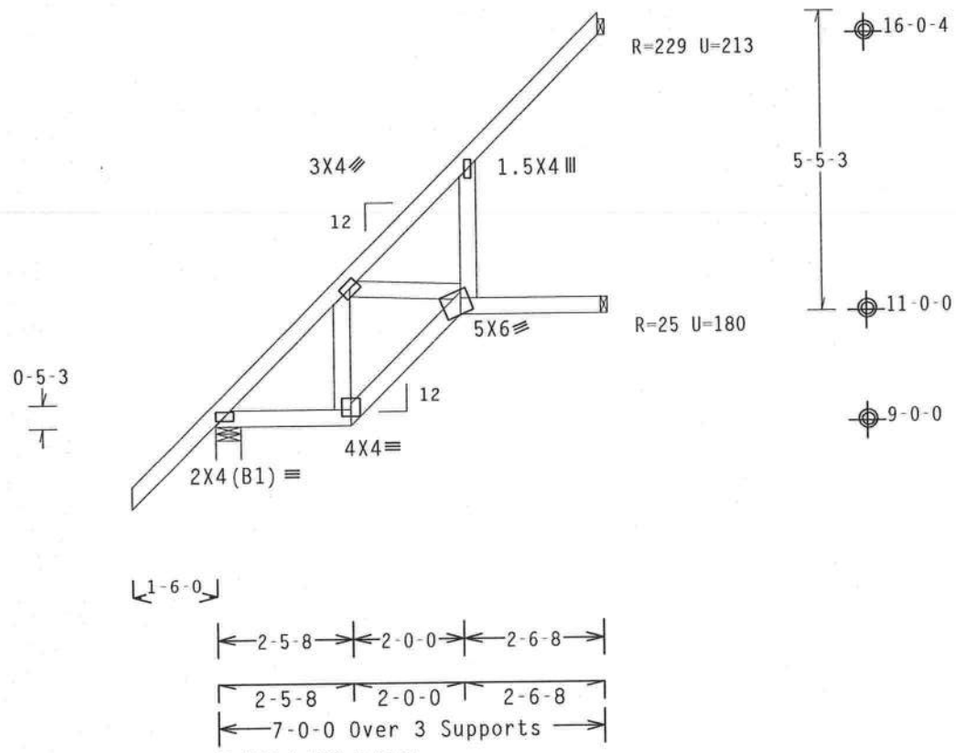

PLT TYP. Wave TPI | Design Crit: TPI-1995(STD)/FBC | 7.04.0805 | QTY:4 | FL/-/3/-/-/R/- | Scale =.3125"/Ft.

ALPINE
Alpine Engineered Products, Inc
1950 Marley Drive
Haines City, FL 33844
FL Certificate of Authorization # 567

WARNING TRUSSES REQUIRE EXTREME CARE IN FABRICATION, HANDLING, SHIPPING, INSTALLING AND BRACING. REFER TO BCSI 1-03 (BUILDING COMPONENT SAFETY INFORMATION), PUBLISHED BY TPI (TRUSS PLATE INSTITUTE, 583 D'ONOFRIO DR., SUITE 200, MADISON, WI 53719) AND WTCA (WOOD TRUSS COUNCIL OF AMERICA, 6300 ENTERPRISE LN, MADISON, WI 53719) FOR SAFETY PRACTICES PRIOR TO PERFORMING THESE FUNCTIONS. UNLESS OTHERWISE INDICATED, TOP CHORD SHALL HAVE PROPERLY ATTACHED STRUCTURAL PANELS AND BOTTOM CHORD SHALL HAVE A PROPERLY ATTACHED RIGID CEILING.

IMPORTANTFURNISH A COPY OF THIS DESIGN TO THE INSTALLATION CONTRACTOR. ALPINE ENGINEERED PRODUCTS, INC. SHALL NOT BE RESPONSIBLE FOR ANY DEVIATION FROM THIS DESIGN; ANY FAILURE TO BUILD THE TRUSS IN CONFORMANCE WITH TPI; OR FABRICATING, HANDLING, SHIPPING, INSTALLING & BRACING OF TRUSSES. DESIGN CONFORMS WITH APPLICABLE PROVISIONS OF NDS (NATIONAL DESIGN SPEC. BY AF&PA) AND TPI. ALPINE CONNECTOR PLATES ARE MADE OF 20/18/16GA (W,H/S/K) ASTM A653 GRADE 40/60 (W, K/H,S) GALV. STEEL. APPLY PLATES TO EACH FACE OF TRUSS AND, UNLESS OTHERWISE LOCATED ON THIS DESIGN, POSITION PER DRAWINGS 160A-Z. ANY INSPECTION OF PLATES FOLLOWED BY (1) SHALL BE PER ANNEX A3 OF TPI1-2002 SEC.3. A SEAL ON THIS DRAWING INDICATES ACCEPTANCE OF PROFESSIONAL ENGINEERING RESPONSIBILITY SOLELY FOR THE TRUSS COMPONENT DESIGN SHOWN. THE SUITABILITY AND USE OF THIS COMPONENT FOR ANY BUILDING IS THE RESPONSIBILITY OF THE BUILDING DESIGNER PER ANSI/TPI 1 SEC. 2.

DENISE RUTLEDGE LICENSE No. 58752 STATE OF FLORIDA PROFESSIONAL ENGINEER
Sep 19 05

TC LL	20.0 PSF	REF	R487-- 52916
TC DL	10.0 PSF	DATE	09/19/05
BC DL	10.0 PSF	DRW	HCUSR487 05262007
BC LL	0.0 PSF	HC-ENG	JB/ADR
TOT.LD.	40.0 PSF	SEQN-	123754
DUR.FAC.	1.25		
SPACING	24.0"	JREF-	1SQJ487_Z02

(5-220-STANLEY CRAWFORD/GRAHAM - ROOF - EJ7T1)

Top chord 2x4 SP #2 Dense
Bot chord 2x4 SP #2 Dense
Webs 2x4 SP #3

Calculated horizontal deflection is 0.18" due to live load and 0.17" due to dead load.

110 mph wind, 12.18 ft mean hgt, ASCE 7-98, CLOSED bldg, not located within 4.50 ft from roof edge, CAT II, EXP B, wind TC DL=5.0 psf, wind BC DL=5.0 psf.

Deflection meets L/360 live and L/240 total load.

Provide (2) 16d common nails(0.162"x3.5"), toe nailed at Top chord.
Provide (2) 16d common nails(0.162"x3.5"), toe nailed at Bot chord.

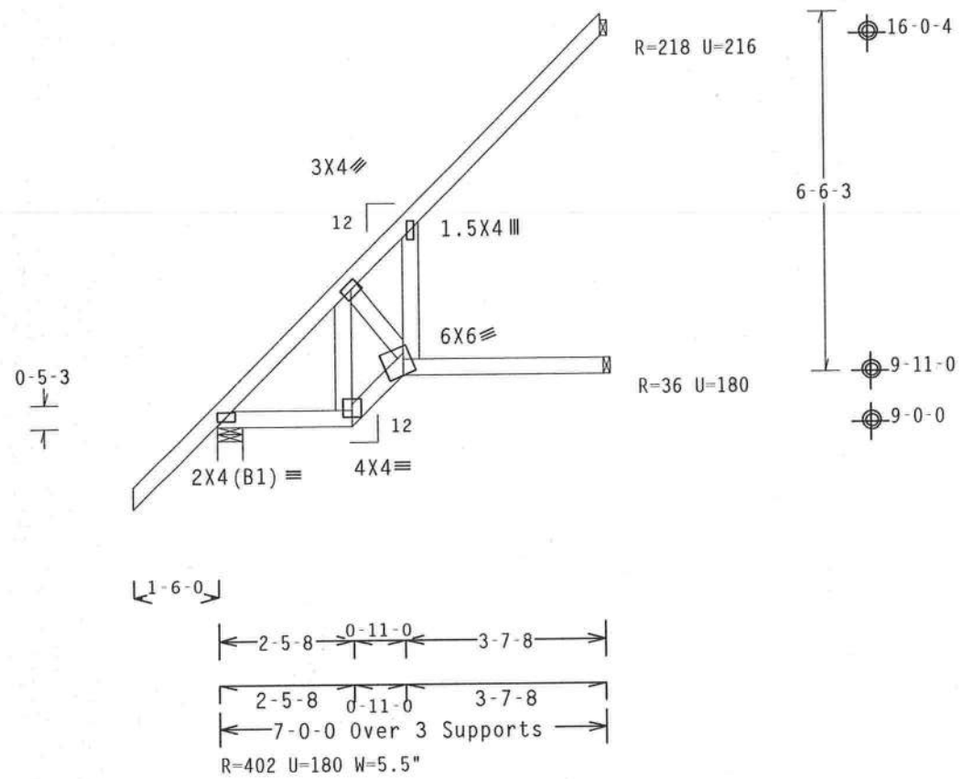

PLT TYP. Wave TPI | Design Crit: TPI-1995(STD)/FBC | 7.04.08 | QTY:1 | FL/-/3/-/-/R/- | Scale =.3125"/Ft.

ALPINE
Alpine Engineered Products, Inc
1950 Marley Drive
Haines City, FL 33844
FL Certificate of Authorization # 567

WARNING TRUSSES REQUIRE EXTREME CARE IN FABRICATION, HANDLING, SHIPPING, INSTALLING AND BRACING. REFER TO BCSI 1-03 (BUILDING COMPONENT SAFETY INFORMATION), PUBLISHED BY TPI (TRUSS PLATE INSTITUTE, 583 D'ONOFRIO DR., SUITE 200, MADISON, WI 53719) AND WTCA (WOOD TRUSS COUNCIL OF AMERICA, 6300 ENTERPRISE LN, MADISON, WI 53719) FOR SAFETY PRACTICES PRIOR TO PERFORMING THESE FUNCTIONS. UNLESS OTHERWISE INDICATED, TOP CHORD SHALL HAVE PROPERLY ATTACHED STRUCTURAL PANELS AND BOTTOM CHORD SHALL HAVE A PROPERLY ATTACHED RIGID CEILING.

IMPORTANT FURNISH A COPY OF THIS DESIGN TO THE INSTALLATION CONTRACTOR. ALPINE ENGINEERED PRODUCTS, INC. SHALL NOT BE RESPONSIBLE FOR ANY DEVIATION FROM THIS DESIGN; ANY FAILURE TO BUILD THE TRUSS IN CONFORMANCE WITH TPI; OR FABRICATING, HANDLING, SHIPPING, INSTALLING & BRACING OF TRUSSES. DESIGN CONFORMS WITH APPLICABLE PROVISIONS OF NDS (NATIONAL DESIGN SPEC, BY AF&PA) AND TPI. ALPINE CONNECTOR PLATES ARE MADE OF 20/18/16GA (W,H/S/K) ASTM A653 GRADE 40/60 (W, K/H,S) GALV. STEEL. APPLY PLATES TO EACH FACE OF TRUSS AND, UNLESS OTHERWISE LOCATED ON THIS DESIGN, POSITION PER DRAWINGS 160A-Z. ANY INSPECTION OF PLATES FOLLOWED BY (1) SHALL BE PER ANNEX A3 OF TPI1-2002 SEC.3. A SEAL ON THIS DRAWING INDICATES ACCEPTANCE OF PROFESSIONAL ENGINEERING RESPONSIBILITY SOLELY FOR THE TRUSS COMPONENT DESIGN SHOWN. THE SUITABILITY AND USE OF THIS COMPONENT FOR ANY BUILDING IS THE RESPONSIBILITY OF THE BUILDING DESIGNER PER ANSI/TPI 1 SEC. 2.

DENNIS RUTLEDGE LICENSE No. 58752 STATE OF FLORIDA PROFESSIONAL ENGINEER
Sep 19 '05

TC LL	20.0 PSF	REF	R487-- 52917
TC DL	10.0 PSF	DATE	09/19/05
BC DL	10.0 PSF	DRW	HCUSR487 05262008
BC LL	0.0 PSF	HC-ENG	JB/ADR *
TOT.LD.	40.0 PSF	SEQN-	123758
DUR.FAC.	1.25		
SPACING	24.0"	JREF-	1SQJ487_Z02

(5-220-STANLEY CRAWFORD/GRAHAM - ROOF - HJ7T)

Top chord 2x4 SP #2 Dense
Bot chord 2x4 SP #2 Dense
Webs 2x4 SP #3

Hipjack supports 7-0-0 setback jacks with no webs.

Provide (2) 16d common nails(0.162"x3.5"), toe nailed at Top chord.
Provide (3) 16d common nails(0.162"x3.5"), toe nailed at Bot chord.

110 mph wind, 15.00 ft mean hgt, ASCE 7-98, CLOSED bldg, Located anywhere in roof, CAT II, EXP B, wind TC DL=5.0 psf, wind BC DL=5.0 psf.

Deflection meets L/360 live and L/240 total load.

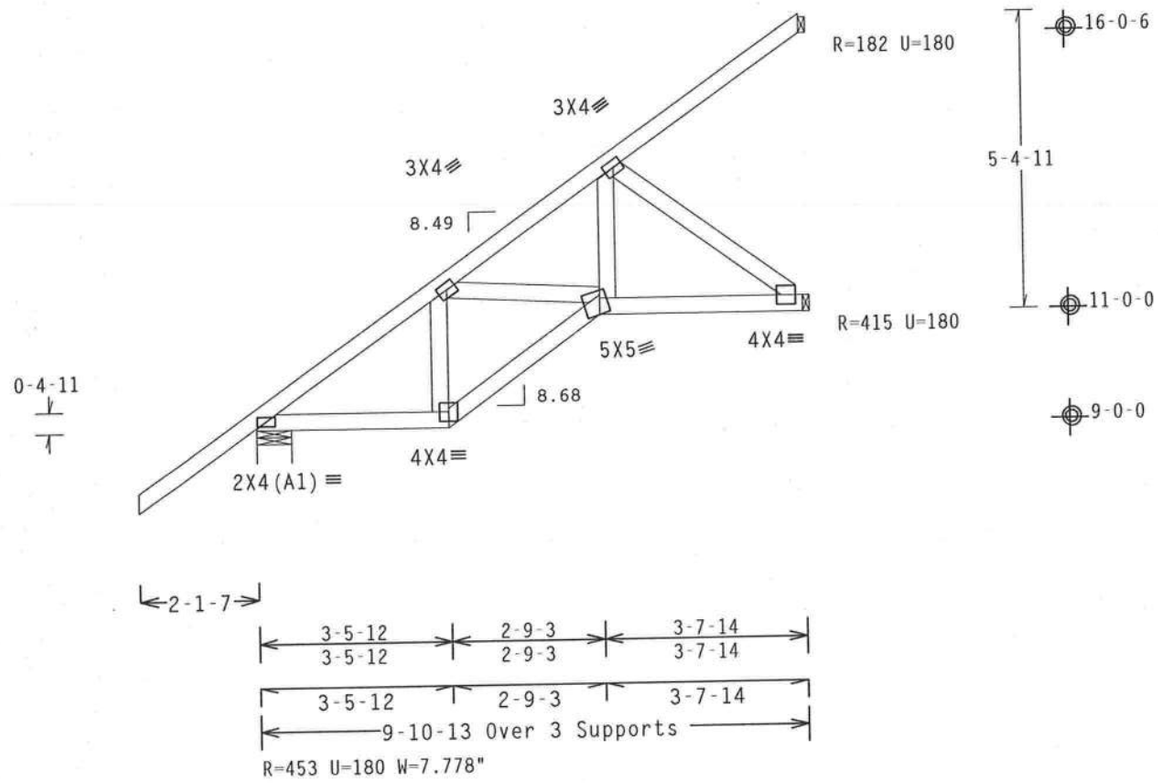

PLT TYP. Wave TPI | Design Crit: TPI-1995(STD)/FBC | 7.04.0805 | QTY:1 | FL/-/3/-/-/R/- | Scale =.3125"/Ft.

ALPINE
Alpine Engineered Products, Inc.
1950 Marley Drive
Haines City, FL 33844
FL Certificate of Authorization # 567

WARNING TRUSSES REQUIRE EXTREME CARE IN FABRICATION, HANDLING, SHIPPING, INSTALLING AND BRACING. REFER TO BCSI 1-03 (BUILDING COMPONENT SAFETY INFORMATION), PUBLISHED BY TPI (TRUSS PLATE INSTITUTE, 583 D'ONOFRIO DR., SUITE 200, MADISON, WI 53719) AND WTCA (WOOD TRUSS COUNCIL OF AMERICA, 6300 ENTERPRISE LN, MADISON, WI 53719) FOR SAFETY PRACTICES PRIOR TO PERFORMING THESE FUNCTIONS. UNLESS OTHERWISE INDICATED, TOP CHORD SHALL HAVE PROPERLY ATTACHED STRUCTURAL PANELS AND BOTTOM CHORD SHALL HAVE A PROPERLY ATTACHED RIGID CEILING.

IMPORTANT FURNISH A COPY OF THIS DESIGN TO THE INSTALLATION CONTRACTOR. ALPINE ENGINEERED PRODUCTS, INC. SHALL NOT BE RESPONSIBLE FOR ANY DEVIATION FROM THIS DESIGN; ANY FAILURE TO BUILD THE TRUSS IN CONFORMANCE WITH TPI; OR FABRICATING, HANDLING, SHIPPING, INSTALLING & BRACING OF TRUSSES. DESIGN CONFORMS WITH APPLICABLE PROVISIONS OF NDS (NATIONAL DESIGN SPEC. BY AF&PA) AND TPI. ALPINE CONNECTOR PLATES ARE MADE OF 20/18/16GA (W,H/S/K) ASTM A653 GRADE 40/60 (W, K/H,S) GALV. STEEL. APPLY PLATES TO EACH FACE OF TRUSS AND, UNLESS OTHERWISE LOCATED ON THIS DESIGN, POSITION PER DRAWINGS 160A-Z. ANY INSPECTION OF PLATES FOLLOWED BY (1) SHALL BE PER ANNEX A3 OF TPI1-2002 SEC.3. A SEAL ON THIS DRAWING INDICATES ACCEPTANCE OF PROFESSIONAL ENGINEERING RESPONSIBILITY SOLELY FOR THE TRUSS COMPONENT DESIGN SHOWN. THE SUITABILITY AND USE OF THIS COMPONENT FOR ANY BUILDING IS THE RESPONSIBILITY OF THE BUILDING DESIGNER PER ANSI/TPI 1 SEC. 2.

DENISE RUTLEDGE LICENSE No. 58702 STATE OF FLORIDA PROFESSIONAL ENGINEER
Sep 19 05

TC LL	20.0 PSF	REF	R487-- 52918
TC DL	10.0 PSF	DATE	09/19/05
BC DL	10.0 PSF	DRW	HCUSR487 05262035
BC LL	0.0 PSF	HC-ENG	JB/ADR
TOT.LD.	40.0 PSF	SEQN-	156207
DUR.FAC.	1.25		
SPACING	24.0"	JREF-	1SQJ487_Z02

(5-220-STANLEY CRAWFORD/GRAHAM - ROOF - MVH)

Top chord 2x4 SP #2 Dense :T2 2x6 SP #2:
Bot chord 2x4 SP #2 Dense
Webs 2x4 SP #3

(J) hanger connection not found in inventory file for this condition.
Provide connection.

110 mph wind, 16.62 ft mean hgt, ASCE 7-98, CLOSED bldg, not located within 4.50 ft from roof edge, CAT II, EXP B, wind TC DL=5.0 psf, wind BC DL=5.0 psf.

Right end vertical not exposed to wind pressure.

Deflection meets L/360 live and L/240 total load.

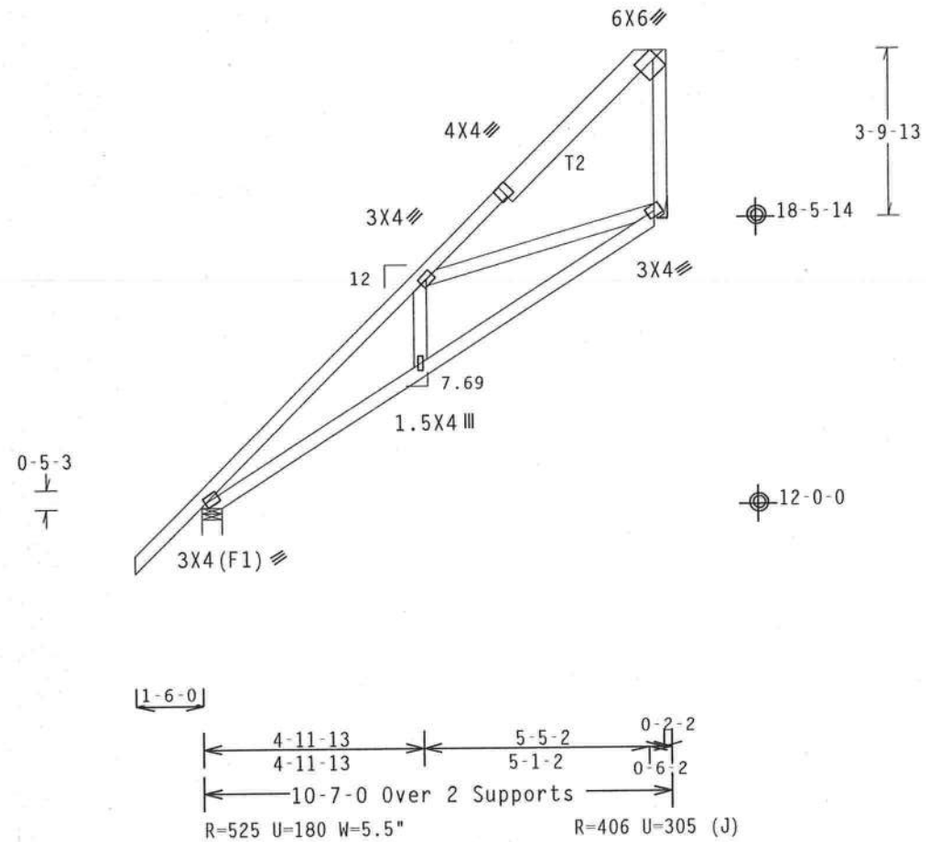

PLT TYP. Wave TPI | Design Crit: TPI-1995(STD)/FBC | 7.04.0805 | QTY:1 | FL/-/3/-/-/R/- | Scale =.25"/Ft.

ALPINE
Alpine Engineered Products, Inc.
1950 Marley Drive
Haines City, FL 33844
FL Certificate of Authorization # 567

WARNING TRUSSES REQUIRE EXTREME CARE IN FABRICATION, HANDLING, SHIPPING, INSTALLING AND BRACING. REFER TO BCSI 1-03 (BUILDING COMPONENT SAFETY INFORMATION), PUBLISHED BY TPI (TRUSS PLATE INSTITUTE, 583 D'ONOFRIO DR., SUITE 200, MADISON, WI 53719) AND WTCA (WOOD TRUSS COUNCIL OF AMERICA, 6300 ENTERPRISE LN, MADISON, WI 53719) FOR SAFETY PRACTICES PRIOR TO PERFORMING THESE FUNCTIONS. UNLESS OTHERWISE INDICATED, TOP CHORD SHALL HAVE PROPERLY ATTACHED STRUCTURAL PANELS AND BOTTOM CHORD SHALL HAVE A PROPERLY ATTACHED RIGID CEILING.

IMPORTANT FURNISH A COPY OF THIS DESIGN TO THE INSTALLATION CONTRACTOR. ALPINE ENGINEERED PRODUCTS, INC. SHALL NOT BE RESPONSIBLE FOR ANY DEVIATION FROM THIS DESIGN; ANY FAILURE TO BUILD THE TRUSS IN CONFORMANCE WITH TPI; OR FABRICATING, HANDLING, SHIPPING, INSTALLING & BRACING OF TRUSSES. DESIGN CONFORMS WITH APPLICABLE PROVISIONS OF NDS (NATIONAL DESIGN SPEC. BY AF&PA) AND TPI. ALPINE CONNECTOR PLATES ARE MADE OF 20/18/16GA (W,H/S/K) ASTM A653 GRADE 40/60 (W, K/H,S) GALV. STEEL. APPLY PLATES TO EACH FACE OF TRUSS AND, UNLESS OTHERWISE LOCATED ON THIS DESIGN, POSITION PER DRAWINGS 160A-Z. ANY INSPECTION OF PLATES FOLLOWED BY (1) SHALL BE PER ANNEX A3 OF TPI1-2002 SEC.3. A SEAL ON THIS DRAWING INDICATES ACCEPTANCE OF PROFESSIONAL ENGINEERING RESPONSIBILITY SOLELY FOR THE TRUSS COMPONENT DESIGN SHOWN. THE SUITABILITY AND USE OF THIS COMPONENT FOR ANY BUILDING IS THE RESPONSIBILITY OF THE BUILDING DESIGNER PER ANSI/TPI 1 SEC. 2.

DENISE RUTLEDGE LICENSE No.58752 STATE OF FLORIDA PROFESSIONAL ENGINEER
Sep 19 '05

TC LL	20.0 PSF	REF	R487-- 52919
TC DL	10.0 PSF	DATE	09/19/05
BC DL	10.0 PSF	DRW	HCUSR487 05262036
BC LL	0.0 PSF	HC-ENG	JB/ADR
TOT.LD.	40.0 PSF	SEQN-	155915
DUR.FAC.	1.25		
SPACING	24.0"	JREF-	1SQJ487_Z02

(5-220-STANLEY CRAWFORD/GRAHAM - ROOF - MV)

Top chord 2x4 SP #2 Dense
Bot chord 2x4 SP #2 Dense
Webs 2x4 SP #3

(J) hanger connection not found in inventory file for this condition.
Provide connection.

110 mph wind, 16.97 ft mean hgt, ASCE 7-98, CLOSED bldg, not located within 4.50 ft from roof edge, CAT II, EXP B, wind TC DL=5.0 psf, wind BC DL=5.0 psf.

Right end vertical not exposed to wind pressure.

Deflection meets L/360 live and L/240 total load.

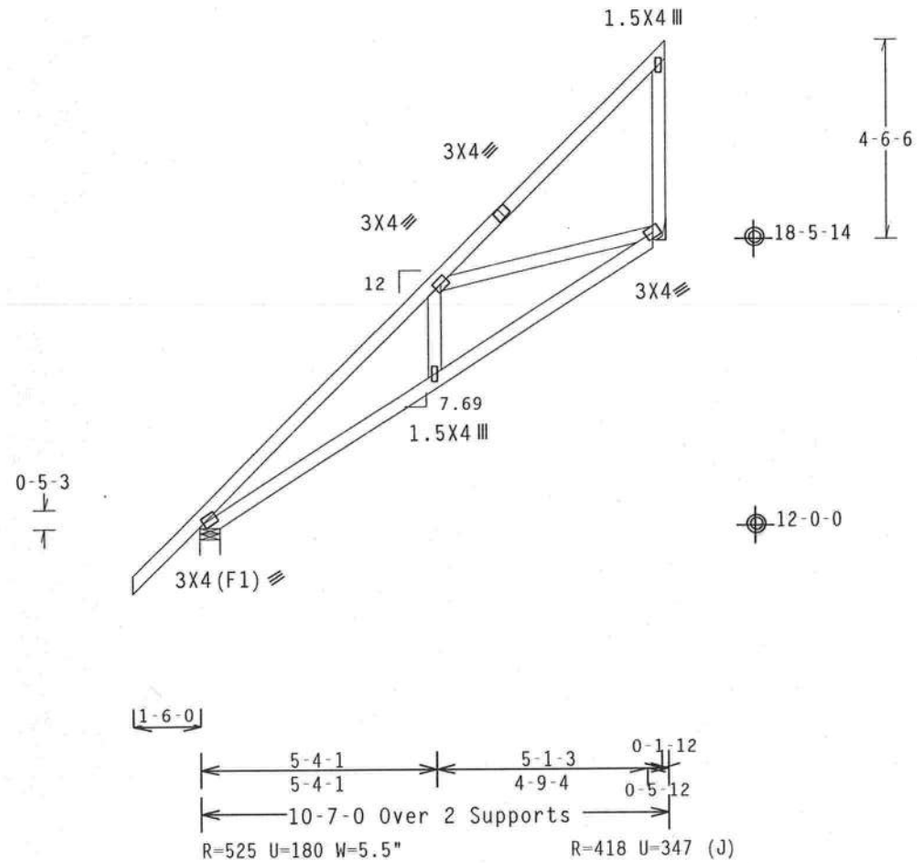

PLT TYP. Wave TPI | Design Crit: TPI-1995(STD)/FBC | 7.04.0805 | QTY:2 | FL/-/3/-/-/R/- | Scale =.25"/Ft.

ALPINE
Alpine Engineered Products, Inc.
1950 Marley Drive
Haines City, FL 33844
FL Certificate of Authorization # 567

WARNING TRUSSES REQUIRE EXTREME CARE IN FABRICATION, HANDLING, SHIPPING, INSTALLING AND BRACING. REFER TO BCSI 1-03 (BUILDING COMPONENT SAFETY INFORMATION), PUBLISHED BY TPI (TRUSS PLATE INSTITUTE, 583 D'ONOFRIO DR., SUITE 200, MADISON, WI 53719) AND WTCA (WOOD TRUSS COUNCIL OF AMERICA, 6300 ENTERPRISE LN, MADISON, WI 53719) FOR SAFETY PRACTICES PRIOR TO PERFORMING THESE FUNCTIONS. UNLESS OTHERWISE INDICATED, TOP CHORD SHALL HAVE PROPERLY ATTACHED STRUCTURAL PANELS AND BOTTOM CHORD SHALL HAVE A PROPERLY ATTACHED RIGID CEILING.

IMPORTANTFURNISH A COPY OF THIS DESIGN TO THE INSTALLATION CONTRACTOR. ALPINE ENGINEERED PRODUCTS, INC. SHALL NOT BE RESPONSIBLE FOR ANY DEVIATION FROM THIS DESIGN; ANY FAILURE TO BUILD THE TRUSS IN CONFORMANCE WITH TPI; OR FABRICATING, HANDLING, SHIPPING, INSTALLING & BRACING OF TRUSSES. DESIGN CONFORMS WITH APPLICABLE PROVISIONS OF NDS (NATIONAL DESIGN SPEC, BY AF&PA) AND TPI. ALPINE CONNECTOR PLATES ARE MADE OF 20/18/16GA (W,H/S/K) ASTM A653 GRADE 40/60 (W, K/H,S) GALV. STEEL. APPLY PLATES TO EACH FACE OF TRUSS AND, UNLESS OTHERWISE LOCATED ON THIS DESIGN, POSITION PER DRAWINGS 160A-Z. ANY INSPECTION OF PLATES FOLLOWED BY (I) SHALL BE PER ANNEX A3 OF TPI1-2002 SEC.3. A SEAL ON THIS DRAWING INDICATES ACCEPTANCE OF PROFESSIONAL ENGINEERING RESPONSIBILITY SOLELY FOR THE TRUSS COMPONENT DESIGN SHOWN. THE SUITABILITY AND USE OF THIS COMPONENT FOR ANY BUILDING IS THE RESPONSIBILITY OF THE BUILDING DESIGNER PER ANSI/TPI 1 SEC. 2.

DENISE RUTLEDGE LICENSE No. 58752 STATE OF FLORIDA PROFESSIONAL ENGINEER
Sep 19 '05

TC LL	20.0 PSF	REF R487-- 52920
TC DL	10.0 PSF	DATE 09/19/05
BC DL	10.0 PSF	DRW HCUSR487 05262037
BC LL	0.0 PSF	HC-ENG JB/ADR
TOT.LD.	40.0 PSF	SEQN- 155923
DUR.FAC.	1.25	
SPACING	24.0"	JREF- 1SQJ487_Z02

(5-220-STANLEY CRAWFORD/GRAHAM - ROOF - H11BP)

Top chord 2x4 SP #2 Dense
Bot chord 2x4 SP #2 Dense
Webs 2x4 SP #3

SPECIAL LOADS
------(LUMBER DUR.FAC.=1.25 / PLATE DUR.FAC.=1.25)
TC - From 60 PLF at -0.56 to 60 PLF at 4.44
BC - From 20 PLF at -0.56 to 20 PLF at 4.44

REFER TO DWG PIGBACKB0204 FOR PIGGYBACK DETAILS.
TOP CHORD OF SUPPORTING TRUSS UNDER PIGGYBACK TO BE BRACED @ 24"O.C., UNLESS OTHERWISE SPECIFIED

110 mph wind, 15.00 ft mean hgt, ASCE 7-98, CLOSED bldg, not located within 4.50 ft from roof edge, CAT II, EXP B, wind TC DL=5.0 psf, wind BC DL=5.0 psf.

Deflection meets L/360 live and L/240 total load.

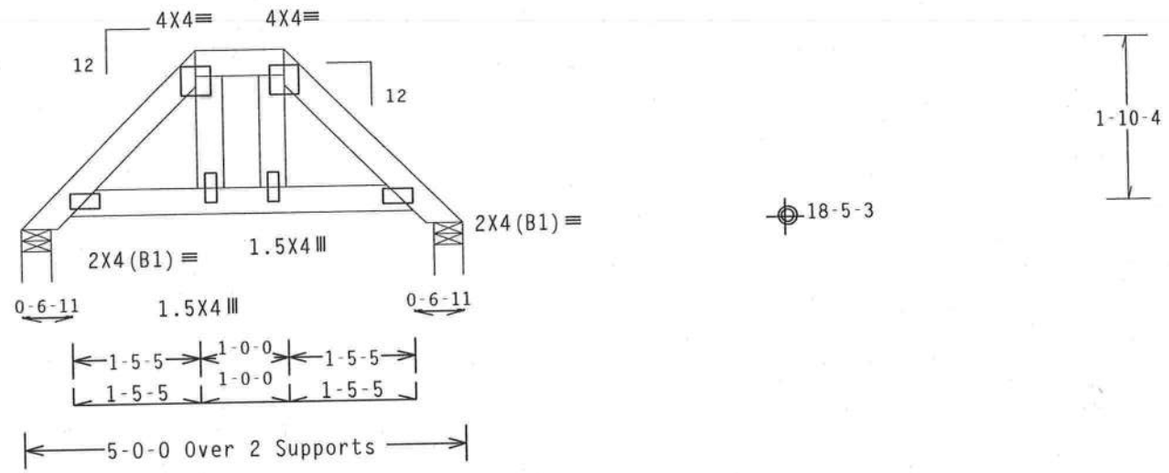

R=200 U=180 W=4" R=200 U=180 W=4"

PLT TYP. Wave TPI Design Crit: TPI-1995(STD)/FBC 7.04.0805 QTY:1 FL/-/3/-/-/R/- Scale =.5"/Ft.

ALPINE
Alpine Engineered Products, Inc
1950 Marley Drive
Haines City, FL 33844
FL Certificate of Authorization # 567

WARNING TRUSSES REQUIRE EXTREME CARE IN FABRICATION, HANDLING, SHIPPING, INSTALLING AND BRACING. REFER TO BCSI 1-03 (BUILDING COMPONENT SAFETY INFORMATION), PUBLISHED BY TPI (TRUSS PLATE INSTITUTE, 583 D'ONOFRIO DR., SUITE 200, MADISON, WI 53719) AND WTCA (WOOD TRUSS COUNCIL OF AMERICA, 6300 ENTERPRISE LN, MADISON, WI 53719) FOR SAFETY PRACTICES PRIOR TO PERFORMING THESE FUNCTIONS. UNLESS OTHERWISE INDICATED, TOP CHORD SHALL HAVE PROPERLY ATTACHED STRUCTURAL PANELS AND BOTTOM CHORD SHALL HAVE A PROPERLY ATTACHED RIGID CEILING.

IMPORTANTFURNISH A COPY OF THIS DESIGN TO THE INSTALLATION CONTRACTOR. ALPINE ENGINEERED PRODUCTS, INC. SHALL NOT BE RESPONSIBLE FOR ANY DEVIATION FROM THIS DESIGN; ANY FAILURE TO BUILD THE TRUSS IN CONFORMANCE WITH TPI; OR FABRICATING, HANDLING, SHIPPING, INSTALLING & BRACING OF TRUSSES. DESIGN CONFORMS WITH APPLICABLE PROVISIONS OF NDS (NATIONAL DESIGN SPEC, BY AF&PA) AND TPI. ALPINE CONNECTOR PLATES ARE MADE OF 20/18/16GA (W,H/S/K) ASTM A653 GRADE 40/60 (W, K/H,S) GALV. STEEL. APPLY PLATES TO EACH FACE OF TRUSS AND, UNLESS OTHERWISE LOCATED ON THIS DESIGN, POSITION PER DRAWINGS 160A-Z. ANY INSPECTION OF PLATES FOLLOWED BY (1) SHALL BE PER ANNEX A3 OF TPI1-2002 SEC.3. A SEAL ON THIS DRAWING INDICATES ACCEPTANCE OF PROFESSIONAL ENGINEERING RESPONSIBILITY SOLELY FOR THE TRUSS COMPONENT DESIGN SHOWN. THE SUITABILITY AND USE OF THIS COMPONENT FOR ANY BUILDING IS THE RESPONSIBILITY OF THE BUILDING DESIGNER PER ANSI/TPI 1 SEC. 2.

DENISE RUTLEDGE
LICENSE
No. 58702
STATE OF FLORIDA
PROFESSIONAL ENGINEER
Sep 19 05

TC LL	20.0 PSF	REF R487-- 52921
TC DL	10.0 PSF	DATE 09/19/05
BC DL	10.0 PSF	DRW HCUSR487 05262038
BC LL	0.0 PSF	HC-ENG JB/ADR
TOT.LD.	40.0 PSF	SEQN- 123869
DUR.FAC.	1.25	
SPACING	24.0"	JREF- 1SQJ487_Z02

(5-220-STANLEY CRAWFORD/GRAHAM - ROOF - BP)

Top chord 2x4 SP #2 Dense
Bot chord 2x4 SP #2 Dense
Webs 2x4 SP #3

Deflection meets L/360 live and L/240 total load.

110 mph wind, 19.68 ft mean hgt, ASCE 7-98, CLOSED bldg, not located within 4.50 ft from roof edge, CAT II, EXP B, wind TC DL=5.0 psf, wind BC DL=5.0 psf.

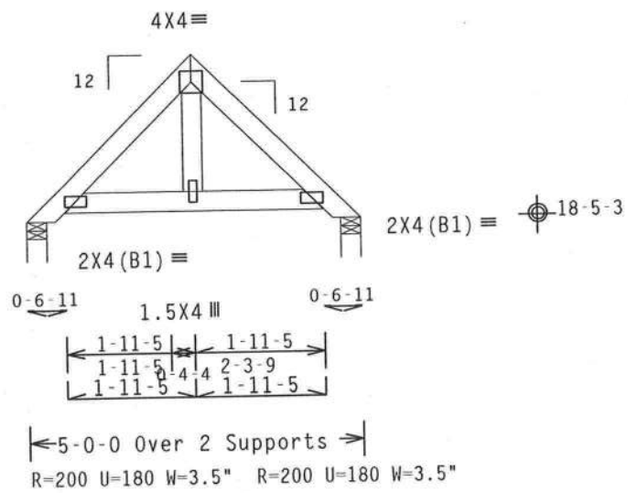

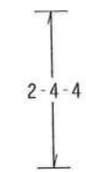

PLT TYP. Wave TPI

Design Crit: TPI-1995(STD)/FBC

7.04.0805 QTY:1

FL/-/3/-/-/R/-

Scale =.375"/Ft.

ALPINE

Alpine Engineered Products, Inc
1950 Marley Drive
Haines City, FL 33844
FL Certificate of Authorization # 567

WARNING TRUSSES REQUIRE EXTREME CARE IN FABRICATION, HANDLING, SHIPPING, INSTALLING AND BRACING. REFER TO BCSI 1-03 (BUILDING COMPONENT SAFETY INFORMATION), PUBLISHED BY TPI (TRUSS PLATE INSTITUTE, 583 D'ONOFRIO DR., SUITE 200, MADISON, WI 53719) AND WTCA (WOOD TRUSS COUNCIL OF AMERICA, 6300 ENTERPRISE LN, MADISON, WI 53719) FOR SAFETY PRACTICES PRIOR TO PERFORMING THESE FUNCTIONS. UNLESS OTHERWISE INDICATED, TOP CHORD SHALL HAVE PROPERLY ATTACHED STRUCTURAL PANELS AND BOTTOM CHORD SHALL HAVE A PROPERLY ATTACHED RIGID CEILING.

IMPORTANTFURNISH A COPY OF THIS DESIGN TO THE INSTALLATION CONTRACTOR. ALPINE ENGINEERED PRODUCTS, INC. SHALL NOT BE RESPONSIBLE FOR ANY DEVIATION FROM THIS DESIGN; ANY FAILURE TO BUILD THE TRUSS IN CONFORMANCE WITH TPI; OR FABRICATING, HANDLING, SHIPPING, INSTALLING & BRACING OF TRUSSES. DESIGN CONFORMS WITH APPLICABLE PROVISIONS OF NDS (NATIONAL DESIGN SPEC. BY AF&PA) AND TPI. ALPINE CONNECTOR PLATES ARE MADE OF 20/18/16GA (W,H/S/K) ASTM A653 GRADE 40/60 (W, K/H,S) GALV. STEEL. APPLY PLATES TO EACH FACE OF TRUSS AND, UNLESS OTHERWISE LOCATED ON THIS DESIGN, POSITION PER DRAWINGS 160A-Z. ANY INSPECTION OF PLATES FOLLOWED BY (1) SHALL BE PER ANNEX A3 OF TPI1-2002 SEC.3. A SEAL ON THIS DRAWING INDICATES ACCEPTANCE OF PROFESSIONAL ENGINEERING RESPONSIBILITY SOLELY FOR THE TRUSS COMPONENT DESIGN SHOWN. THE SUITABILITY AND USE OF THIS COMPONENT FOR ANY BUILDING IS THE RESPONSIBILITY OF THE BUILDING DESIGNER PER ANSI/TPI 1 SEC. 2.

DENISE RUTLEDGE LICENSE No. 58762 STATE OF FLORIDA PROFESSIONAL ENGINEER

Sep 19 '05

TC LL	20.0 PSF	REF R487-- 52922
TC DL	10.0 PSF	DATE 09/19/05
BC DL	10.0 PSF	DRW HCUSR487 05262039
BC LL	0.0 PSF	HC-ENG JB/ADR
TOT.LD.	40.0 PSF	SEQN- 155782
DUR.FAC.	1.25	
SPACING	24.0"	JREF- 1SQJ487_Z02

(5-220-STANLEY CRAWFORD/GRAHAM - ROOF - BHP)

Top chord 2x4 SP #2 Dense
Bot chord 2x4 SP #2 Dense
Webs 2x4 SP #3

Deflection meets L/360 live and L/240 total load.

REFER TO DWG PIGBACKB0204 FOR PIGGYBACK DETAILS.
TOP CHORD OF SUPPORTING TRUSS UNDER PIGGYBACK TO
BE BRACED @ 24"O.C., UNLESS OTHERWISE SPECIFIED

110 mph wind, 19.37 ft mean hgt, ASCE 7-98, CLOSED bldg, not located within 4.50 ft from roof edge, CAT II, EXP B, wind TC DL=5.0 psf, wind BC DL=5.0 psf.

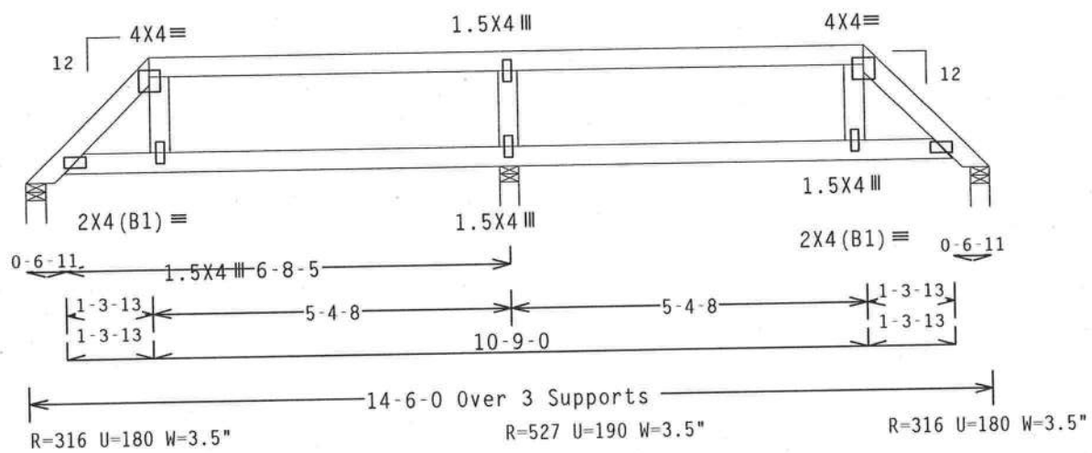

PLT TYP. Wave TPI

Design Crit: TPI-1995(STD)/FBC

7.04.080[illegible]6

QTY:1

FL/-/3/-/-/R/-

Scale =.375"/Ft.

ALPINE
Alpine Engineered Products, Inc.
1950 Marley Drive
Haines City, FL 33844
FL Certificate of Authorization # 567

WARNING TRUSSES REQUIRE EXTREME CARE IN FABRICATION, HANDLING, SHIPPING, INSTALLING AND BRACING. REFER TO BCSI 1-03 (BUILDING COMPONENT SAFETY INFORMATION), PUBLISHED BY TPI (TRUSS PLATE INSTITUTE, 583 D'ONOFRIO DR., SUITE 200, MADISON, WI 53719) AND WTCA (WOOD TRUSS COUNCIL OF AMERICA, 6300 ENTERPRISE LN, MADISON, WI 53719) FOR SAFETY PRACTICES PRIOR TO PERFORMING THESE FUNCTIONS. UNLESS OTHERWISE INDICATED, TOP CHORD SHALL HAVE PROPERLY ATTACHED STRUCTURAL PANELS AND BOTTOM CHORD SHALL HAVE A PROPERLY ATTACHED RIGID CEILING.

IMPORTANT FURNISH A COPY OF THIS DESIGN TO THE INSTALLATION CONTRACTOR. ALPINE ENGINEERED PRODUCTS, INC. SHALL NOT BE RESPONSIBLE FOR ANY DEVIATION FROM THIS DESIGN; ANY FAILURE TO BUILD THE TRUSS IN CONFORMANCE WITH TPI; OR FABRICATING, HANDLING, SHIPPING, INSTALLING & BRACING OF TRUSSES. DESIGN CONFORMS WITH APPLICABLE PROVISIONS OF NDS (NATIONAL DESIGN SPEC. BY AF&PA) AND TPI. ALPINE CONNECTOR PLATES ARE MADE OF 20/18/16GA (W,H/S/K) ASTM A653 GRADE 40/60 (W, K/H,S) GALV. STEEL. APPLY PLATES TO EACH FACE OF TRUSS AND, UNLESS OTHERWISE LOCATED ON THIS DESIGN, POSITION PER DRAWINGS 160A-Z. ANY INSPECTION OF PLATES FOLLOWED BY (1) SHALL BE PER ANNEX A3 OF TPI1-2002 SEC.3. A SEAL ON THIS DRAWING INDICATES ACCEPTANCE OF PROFESSIONAL ENGINEERING RESPONSIBILITY SOLELY FOR THE TRUSS COMPONENT DESIGN SHOWN. THE SUITABILITY AND USE OF THIS COMPONENT FOR ANY BUILDING IS THE RESPONSIBILITY OF THE BUILDING DESIGNER PER ANSI/TPI 1 SEC. 2.

DENISE RUTLEDGE
LICENSE
No. 58702
STATE OF FLORIDA
PROFESSIONAL ENGINEER
Sep 19 '05

TC LL	20.0 PSF	REF R487-- 52923
TC DL	10.0 PSF	DATE 09/19/05
BC DL	10.0 PSF	DRW HCUSR487 05262040
BC LL	0.0 PSF	HC-ENG JB/ADR
TOT.LD.	40.0 PSF	SEQN- 155790
DUR.FAC.	1.25	
SPACING	24.0"	JREF- 1SQJ487_Z02

(5-220-STANLEY CRAWFORD/GRAHAM - ROOF - AP)

Top chord 2x4 SP #2 Dense
Bot chord 2x4 SP #2 Dense

Deflection meets L/360 live and L/240 total load.

REFER TO DWG PIGBACKB0204 FOR PIGGYBACK DETAILS.
TOP CHORD OF SUPPORTING TRUSS UNDER PIGGYBACK TO BE BRACED @ 24"O.C., UNLESS OTHERWISE SPECIFIED

110 mph wind, 19.72 ft mean hgt, ASCE 7-98, CLOSED bldg, Located anywhere in roof, CAT II, EXP B, wind TC DL=5.0 psf, wind BC DL=5.0 psf.

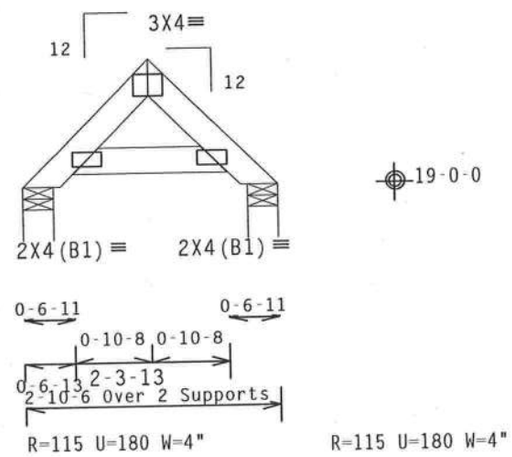

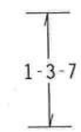

PLT TYP. Wave TPI

Design Crit: TPI-1995(STD)/FBC

7.04.080 QTY:7 FL/-/3/-/-/R/-

Scale =.5"/Ft.

ALPINE

Alpine Engineered Products, Inc
1950 Marley Drive
Haines City, FL 33844

WARNING TRUSSES REQUIRE EXTREME CARE IN FABRICATION, HANDLING, SHIPPING, INSTALLING AND BRACING. REFER TO BCSI 1-03 (BUILDING COMPONENT SAFETY INFORMATION), PUBLISHED BY TPI (TRUSS PLATE INSTITUTE, 583 D'ONOFRIO DR., SUITE 200, MADISON, WI 53719) AND WTCA (WOOD TRUSS COUNCIL OF AMERICA, 6300 ENTERPRISE LN, MADISON, WI 53719) FOR SAFETY PRACTICES PRIOR TO PERFORMING THESE FUNCTIONS. UNLESS OTHERWISE INDICATED, TOP CHORD SHALL HAVE PROPERLY ATTACHED STRUCTURAL PANELS AND BOTTOM CHORD SHALL HAVE A PROPERLY ATTACHED RIGID CEILING.

IMPORTANT FURNISH A COPY OF THIS DESIGN TO THE INSTALLATION CONTRACTOR. ALPINE ENGINEERED PRODUCTS, INC. SHALL NOT BE RESPONSIBLE FOR ANY DEVIATION FROM THIS DESIGN; ANY FAILURE TO BUILD THE TRUSS IN CONFORMANCE WITH TPI; OR FABRICATING, HANDLING, SHIPPING, INSTALLING & BRACING OF TRUSSES. DESIGN CONFORMS WITH APPLICABLE PROVISIONS OF NDS (NATIONAL DESIGN SPEC. BY AF&PA) AND TPI. ALPINE CONNECTOR PLATES ARE MADE OF 20/18/16GA (W,H/S/K) ASTM A653 GRADE 40/60 (W, K/H,S) GALV. STEEL. APPLY PLATES TO EACH FACE OF TRUSS AND. UNLESS OTHERWISE LOCATED ON THIS DESIGN, POSITION PER DRAWINGS 160A-Z. ANY INSPECTION OF PLATES FOLLOWED BY (I) SHALL BE PER ANNEX A3 OF TPI1-2002 SEC.3. A SEAL ON THIS DRAWING INDICATES ACCEPTANCE OF PROFESSIONAL ENGINEERING RESPONSIBILITY SOLELY FOR THE TRUSS COMPONENT DESIGN SHOWN. THE SUITABILITY AND USE OF THIS COMPONENT FOR ANY BUILDING IS THE RESPONSIBILITY OF THE BUILDING DESIGNER PER ANSI/TPI 1 SEC. 2.

DENISE RUTLEDGE LICENSE No. 58752 STATE OF FLORIDA PROFESSIONAL ENGINEER

Sep 19 '05

TC LL	20.0 PSF	REF	R487-- 52924
TC DL	10.0 PSF	DATE	09/19/05
BC DL	10.0 PSF	DRW	HCUSR487 05262041
BC LL	0.0 PSF	HC-ENG	JB/ADR
TOT.LD.	40.0 PSF	SEQN-	156044
DUR.FAC.	1.25		
SPACING	24.0"	JREF-	1SQJ487_Z02

(5-220-STANLEY CRAWFORD/GRAHAM - ROOF - AGP)

Top chord 2x4 SP #2 Dense
Bot chord 2x4 SP #2 Dense
Webs 2x4 SP #3

Deflection meets L/360 live and L/240 total load.

REFER TO DWG PIGBACKB0204 FOR PIGGYBACK DETAILS.
TOP CHORD OF SUPPORTING TRUSS UNDER PIGGYBACK TO BE BRACED @ 24"O.C., UNLESS OTHERWISE SPECIFIED

110 mph wind, 20.45 ft mean hgt, ASCE 7-98, CLOSED bldg, not located within 4.50 ft from roof edge, CAT II, EXP B, wind TC DL=5.0 psf, wind BC DL=5.0 psf.

Right end vertical not exposed to wind pressure.

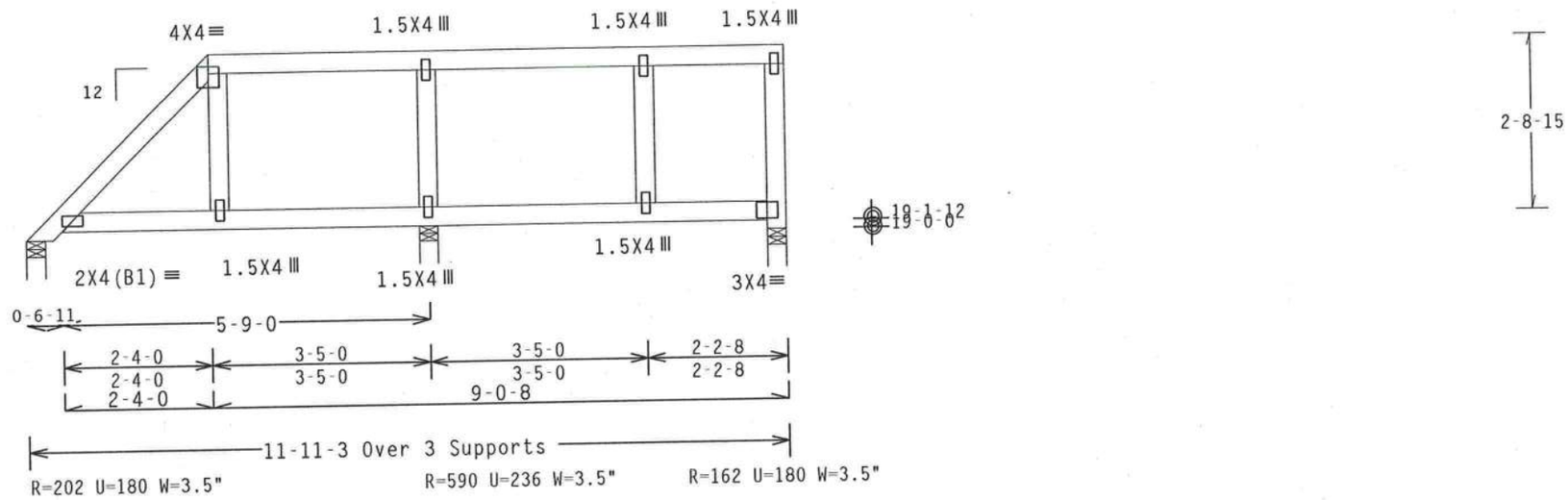

PLT TYP. Wave TPI

Design Crit: TPI-1995(STD)/FBC

7.04.0805

QTY:1

FL/-/3/-/-/R/-

Scale =.375"/Ft.

ALPINE

Alpine Engineered Products, Inc
1950 Marley Drive
Haines City, FL 33844
FL Certificate of Authorization # 567

WARNING TRUSSES REQUIRE EXTREME CARE IN FABRICATION, HANDLING, SHIPPING, INSTALLING AND BRACING. REFER TO BCSI 1-03 (BUILDING COMPONENT SAFETY INFORMATION), PUBLISHED BY TPI (TRUSS PLATE INSTITUTE, 583 D'ONOFRIO DR., SUITE 200, MADISON, WI 53719) AND WTCA (WOOD TRUSS COUNCIL OF AMERICA, 6300 ENTERPRISE LN, MADISON, WI 53719) FOR SAFETY PRACTICES PRIOR TO PERFORMING THESE FUNCTIONS. UNLESS OTHERWISE INDICATED, TOP CHORD SHALL HAVE PROPERLY ATTACHED STRUCTURAL PANELS AND BOTTOM CHORD SHALL HAVE A PROPERLY ATTACHED RIGID CEILING.

IMPORTANT FURNISH A COPY OF THIS DESIGN TO THE INSTALLATION CONTRACTOR. ALPINE ENGINEERED PRODUCTS, INC. SHALL NOT BE RESPONSIBLE FOR ANY DEVIATION FROM THIS DESIGN; ANY FAILURE TO BUILD THE TRUSS IN CONFORMANCE WITH TPI; OR FABRICATING, HANDLING, SHIPPING, INSTALLING & BRACING OF TRUSSES. DESIGN CONFORMS WITH APPLICABLE PROVISIONS OF NDS (NATIONAL DESIGN SPEC. BY AF&PA) AND TPI. ALPINE CONNECTOR PLATES ARE MADE OF 20/18/16GA (W,H/S/K) ASTM A653 GRADE 40/60 (W, K/H,S) GALV. STEEL. APPLY PLATES TO EACH FACE OF TRUSS AND, UNLESS OTHERWISE LOCATED ON THIS DESIGN, POSITION PER DRAWINGS 160A-Z. ANY INSPECTION OF PLATES FOLLOWED BY (1) SHALL BE PER ANNEX A3 OF TPI1-2002 SEC.3. A SEAL ON THIS DRAWING INDICATES ACCEPTANCE OF PROFESSIONAL ENGINEERING RESPONSIBILITY SOLELY FOR THE TRUSS COMPONENT DESIGN SHOWN. THE SUITABILITY AND USE OF THIS COMPONENT FOR ANY BUILDING IS THE RESPONSIBILITY OF THE BUILDING DESIGNER PER ANSI/TPI 1 SEC. 2.

DENISE RUTLEDGE LICENSE No. 58762 STATE OF FLORIDA PROFESSIONAL ENGINEER

Sep 19 05

TC LL	20.0 PSF	REF	R487-- 52925
TC DL	10.0 PSF	DATE	09/19/05
BC DL	10.0 PSF	DRW	HCUSR487 05262042
BC LL	0.0 PSF	HC-ENG	JB/ADR
TOT.LD.	40.0 PSF	SEQN-	156139
DUR.FAC.	1.25		
SPACING	24.0"	JREF-	1SQJ487_Z02

(5-220-STANLEY CRAWFORD/GRAHAM - ROOF - AH1P)

Top chord 2x4 SP #2 Dense
Bot chord 2x4 SP #2 Dense
Webs 2x4 SP #3

Deflection meets L/360 live and L/240 total load.

REFER TO DWG PIGBACKB0204 FOR PIGGYBACK DETAILS.
TOP CHORD OF SUPPORTING TRUSS UNDER PIGGYBACK TO BE BRACED @ 24"O.C., UNLESS OTHERWISE SPECIFIED

110 mph wind, 20.40 ft mean hgt, ASCE 7-98, CLOSED bldg, not located within 4.50 ft from roof edge, CAT II, EXP B, wind TC DL=5.0 psf, wind BC DL=5.0 psf.

Right end vertical not exposed to wind pressure.

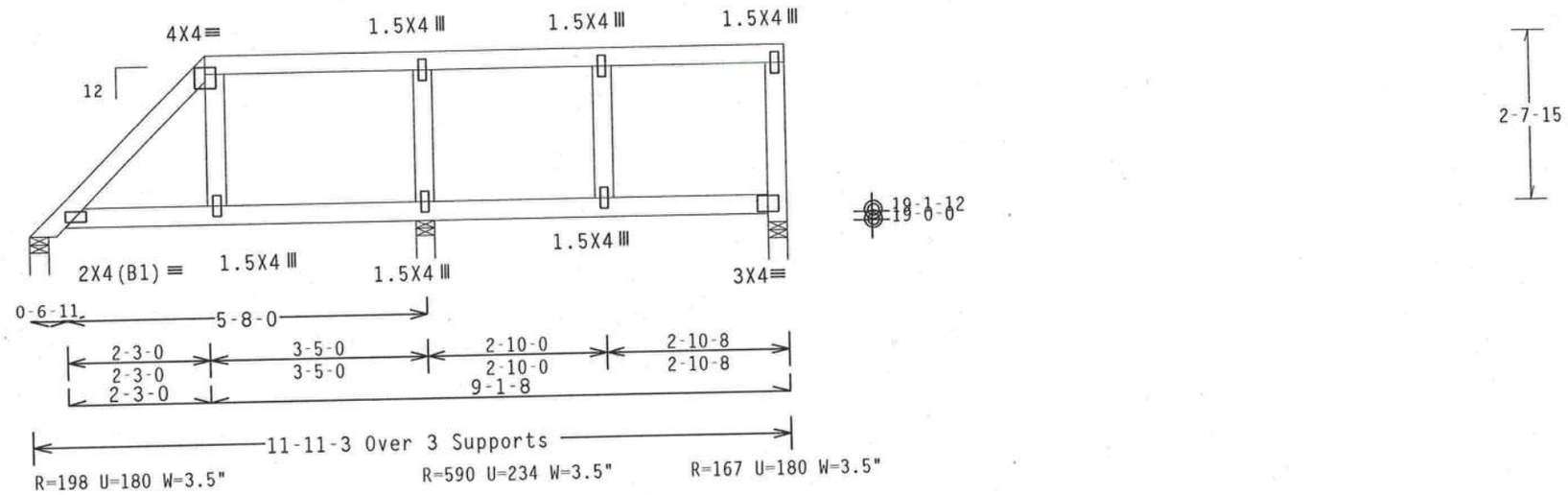

PLT TYP. Wave TPI

Design Crit: TPI-1995(STD)/FBC

7.04.0805 QTY:1

FL/-/3/-/-/R/-

Scale =.375"/Ft.

ALPINE

Alpine Engineered Products, Inc
1950 Marley Drive
Haines City, FL 33844
FL Certificate of Authorization # 567

WARNING TRUSSES REQUIRE EXTREME CARE IN FABRICATION, HANDLING, SHIPPING, INSTALLING AND BRACING. REFER TO BCSI 1-03 (BUILDING COMPONENT SAFETY INFORMATION), PUBLISHED BY TPI (TRUSS PLATE INSTITUTE, 583 D'ONOFRIO DR., SUITE 200, MADISON, WI 53719) AND WTCA (WOOD TRUSS COUNCIL OF AMERICA, 6300 ENTERPRISE LN, MADISON, WI 53719) FOR SAFETY PRACTICES PRIOR TO PERFORMING THESE FUNCTIONS. UNLESS OTHERWISE INDICATED, TOP CHORD SHALL HAVE PROPERLY ATTACHED STRUCTURAL PANELS AND BOTTOM CHORD SHALL HAVE A PROPERLY ATTACHED RIGID CEILING.

IMPORTANT FURNISH A COPY OF THIS DESIGN TO THE INSTALLATION CONTRACTOR. ALPINE ENGINEERED PRODUCTS, INC. SHALL NOT BE RESPONSIBLE FOR ANY DEVIATION FROM THIS DESIGN; ANY FAILURE TO BUILD THE TRUSS IN CONFORMANCE WITH TPI; OR FABRICATING, HANDLING, SHIPPING, INSTALLING & BRACING OF TRUSSES. DESIGN CONFORMS WITH APPLICABLE PROVISIONS OF NDS (NATIONAL DESIGN SPEC, BY AF&PA) AND TPI. ALPINE CONNECTOR PLATES ARE MADE OF 20/18/16GA (W,H/S/K) ASTM A653 GRADE 40/60 (W, K/H,S) GALV. STEEL. APPLY PLATES TO EACH FACE OF TRUSS AND, UNLESS OTHERWISE LOCATED ON THIS DESIGN, POSITION PER DRAWINGS 160A-Z. ANY INSPECTION OF PLATES FOLLOWED BY (1) SHALL BE PER ANNEX A3 OF TPI1-2002 SEC.3. A SEAL ON THIS DRAWING INDICATES ACCEPTANCE OF PROFESSIONAL ENGINEERING RESPONSIBILITY SOLELY FOR THE TRUSS COMPONENT DESIGN SHOWN. THE SUITABILITY AND USE OF THIS COMPONENT FOR ANY BUILDING IS THE RESPONSIBILITY OF THE BUILDING DESIGNER PER ANSI/TPI 1 SEC. 2.

DENISE RUTLEDGE
LICENSE
No. 58752
STATE OF FLORIDA
PROFESSIONAL ENGINEER
Sep 19 05

TC LL	20.0 PSF	REF R487-- 52926
TC DL	10.0 PSF	DATE 09/19/05
BC DL	10.0 PSF	DRW HCUSR487 05262043
BC LL	0.0 PSF	HC-ENG JB/ADR
TOT.LD.	40.0 PSF	SEQN- 156154
DUR.FAC.	1.25	
SPACING	24.0"	JREF- 1SQJ487_Z02

(5-220-STANLEY CRAWFORD/GRAHAM - ROOF - AHP)

Top chord 2x4 SP #2 Dense
Bot chord 2x4 SP #2 Dense
Webs 2x4 SP #3

Deflection meets L/360 live and L/240 total load.

REFER TO DWG PIGBACKB0204 FOR PIGGYBACK DETAILS.
TOP CHORD OF SUPPORTING TRUSS UNDER PIGGYBACK TO
BE BRACED @ 24"O.C., UNLESS OTHERWISE SPECIFIED

110 mph wind, 19.70 ft mean hgt, ASCE 7-98, CLOSED bldg, not located within 4.50 ft from roof edge, CAT II, EXP B, wind TC DL=5.0 psf, wind BC DL=5.0 psf.

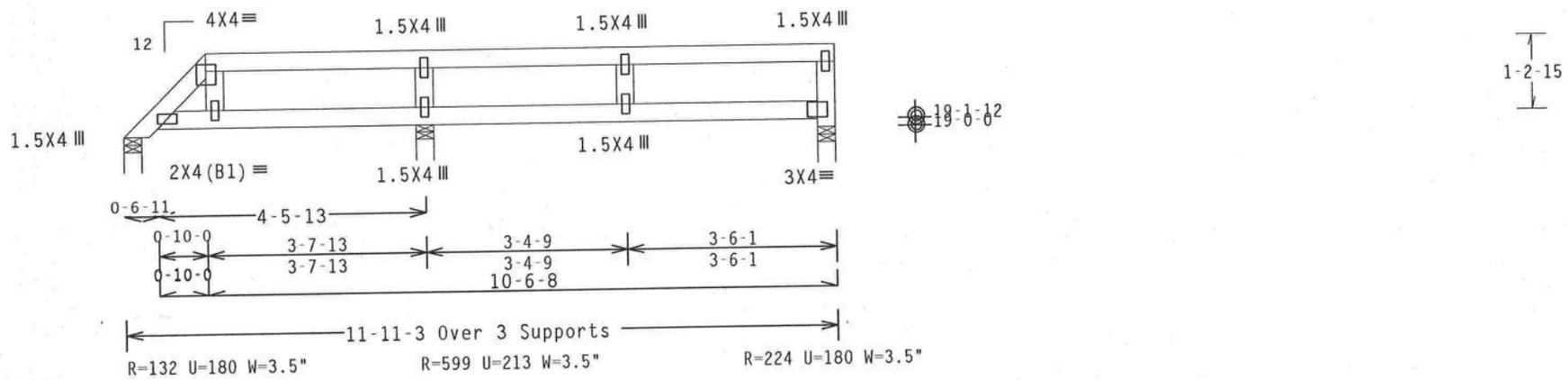

PLT TYP. Wave TPI

Design Crit: TPI-1995(STD)/FBC

7.04.0805 QTY:1

FL/-/3/-/-/R/-

Scale =.375"/Ft.

ALPINE

Alpine Engineered Products, Inc.
1950 Marley Drive
Haines City, FL 33844
FL Certificate of Authorization # 567

WARNING TRUSSES REQUIRE EXTREME CARE IN FABRICATION, HANDLING, SHIPPING, INSTALLING AND BRACING. REFER TO BCSI 1-03 (BUILDING COMPONENT SAFETY INFORMATION), PUBLISHED BY TPI (TRUSS PLATE INSTITUTE, 583 D'ONOFRIO DR., SUITE 200, MADISON, WI 53719) AND WTCA (WOOD TRUSS COUNCIL OF AMERICA, 6300 ENTERPRISE LN, MADISON, WI 53719) FOR SAFETY PRACTICES PRIOR TO PERFORMING THESE FUNCTIONS. UNLESS OTHERWISE INDICATED, TOP CHORD SHALL HAVE PROPERLY ATTACHED STRUCTURAL PANELS AND BOTTOM CHORD SHALL HAVE A PROPERLY ATTACHED RIGID CEILING.

IMPORTANT FURNISH A COPY OF THIS DESIGN TO THE INSTALLATION CONTRACTOR. ALPINE ENGINEERED PRODUCTS, INC. SHALL NOT BE RESPONSIBLE FOR ANY DEVIATION FROM THIS DESIGN; ANY FAILURE TO BUILD THE TRUSS IN CONFORMANCE WITH TPI; OR FABRICATING, HANDLING, SHIPPING, INSTALLING & BRACING OF TRUSSES. DESIGN CONFORMS WITH APPLICABLE PROVISIONS OF NDS (NATIONAL DESIGN SPEC, BY AF&PA) AND TPI. ALPINE CONNECTOR PLATES ARE MADE OF 20/18/16GA (W,H/S/K) ASTM A653 GRADE 40/60 (W, K/H,S) GALV. STEEL. APPLY PLATES TO EACH FACE OF TRUSS AND, UNLESS OTHERWISE LOCATED ON THIS DESIGN, POSITION PER DRAWINGS 160A-Z. ANY INSPECTION OF PLATES FOLLOWED BY (1) SHALL BE PER ANNEX A3 OF TPI1-2002 SEC.3. A SEAL ON THIS DRAWING INDICATES ACCEPTANCE OF PROFESSIONAL ENGINEERING RESPONSIBILITY SOLELY FOR THE TRUSS COMPONENT DESIGN SHOWN. THE SUITABILITY AND USE OF THIS COMPONENT FOR ANY BUILDING IS THE RESPONSIBILITY OF THE BUILDING DESIGNER PER ANSI/TPI 1 SEC. 2.

DENISE RUTLEDGE LICENSE No. 56752 STATE OF FLORIDA PROFESSIONAL ENGINEER

Sep 19 '05

TC LL	20.0 PSF	REF R487-- 52927
TC DL	10.0 PSF	DATE 09/19/05
BC DL	10.0 PSF	DRW HCUSR487 05262044
BC LL	0.0 PSF	HC-ENG JB/ADR
TOT.LD.	40.0 PSF	SEQN- 156162
DUR.FAC.	1.25	
SPACING	24.0"	JREF- 1SQJ487_Z02

(5-220-STANLEY CRAWFORD/GRAHAM - ROOF - RV)

Top chord 2x4 SP #2 Dense
Bot chord 2x4 SP #2 Dense
Webs 2x4 SP #3

End verticals not exposed to wind pressure.

H = recommended connection based on manufacturer tested capacities and calculations. Conditions may exist that require different connections than indicated. Refer to manufacturer publication for additional information.

110 mph wind, 18.43 ft mean hgt, ASCE 7-98, CLOSED bldg, not located within 4.50 ft from roof edge, CAT II, EXP B, wind TC DL=5.0 psf, wind BC DL=5.0 psf.

Max JT VERT DEFL: LL: 0.15" DL: 0.15" recommended camber 1/4"

Deflection meets L/360 live and L/240 total load.

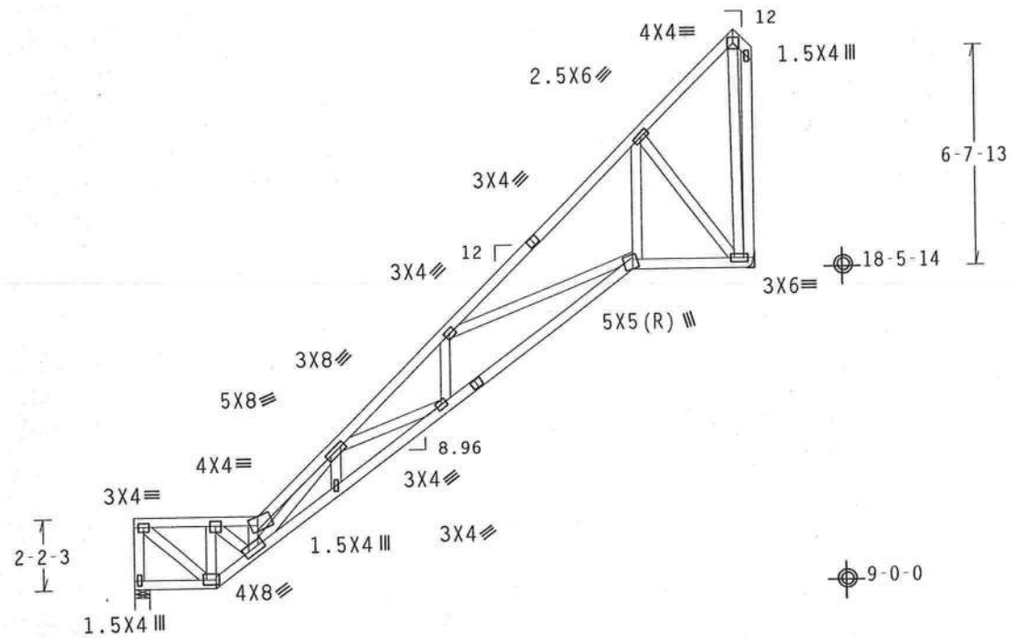

R=752 U=180 W=5.5"

R=752 U=477 H=Simpson LU26
w/ (4) 10d, 0.148"x1.5" nails in Truss
w/ (6) 16d, 0.162"x2.5" nails in Girder
Girder is (1)2X6 min. So.Pine

PLT TYP. Wave TPI | Design Crit: TPI-1995(STD)/FBC | 7.04.0805 | QTY:5 | FL/-/3/-/-/R/- | Scale =.1875"/Ft.

ALPINE
Alpine Engineered Products, Inc.
1950 Marley Drive
Haines City, FL 33844
FL Certificate of Authorization # 567

WARNING TRUSSES REQUIRE EXTREME CARE IN FABRICATION, HANDLING, SHIPPING, INSTALLING AND BRACING. REFER TO BCSI 1-03 (BUILDING COMPONENT SAFETY INFORMATION), PUBLISHED BY TPI (TRUSS PLATE INSTITUTE, 583 D'ONOFRIO DR., SUITE 200, MADISON, WI 53719) AND WTCA (WOOD TRUSS COUNCIL OF AMERICA, 6300 ENTERPRISE LN, MADISON, WI 53719) FOR SAFETY PRACTICES PRIOR TO PERFORMING THESE FUNCTIONS. UNLESS OTHERWISE INDICATED, TOP CHORD SHALL HAVE PROPERLY ATTACHED STRUCTURAL PANELS AND BOTTOM CHORD SHALL HAVE A PROPERLY ATTACHED RIGID CEILING.

IMPORTANT FURNISH A COPY OF THIS DESIGN TO THE INSTALLATION CONTRACTOR. ALPINE ENGINEERED PRODUCTS, INC. SHALL NOT BE RESPONSIBLE FOR ANY DEVIATION FROM THIS DESIGN; ANY FAILURE TO BUILD THE TRUSS IN CONFORMANCE WITH TPI; OR FABRICATING, HANDLING, SHIPPING, INSTALLING & BRACING OF TRUSSES. DESIGN CONFORMS WITH APPLICABLE PROVISIONS OF NDS (NATIONAL DESIGN SPEC. BY AF&PA) AND TPI. ALPINE CONNECTOR PLATES ARE MADE OF 20/18/16GA (W,H/S/K) ASTM A653 GRADE 40/60 (W, K/H,S) GALV. STEEL. APPLY PLATES TO EACH FACE OF TRUSS AND, UNLESS OTHERWISE LOCATED ON THIS DESIGN, POSITION PER DRAWINGS 160A-Z. ANY INSPECTION OF PLATES FOLLOWED BY (1) SHALL BE PER ANNEX A3 OF TPI1-2002 SEC.3. A SEAL ON THIS DRAWING INDICATES ACCEPTANCE OF PROFESSIONAL ENGINEERING RESPONSIBILITY SOLELY FOR THE TRUSS COMPONENT DESIGN SHOWN. THE SUITABILITY AND USE OF THIS COMPONENT FOR ANY BUILDING IS THE RESPONSIBILITY OF THE BUILDING DESIGNER PER ANSI/TPI 1 SEC. 2.

DENISE RUTLEDGE LICENSE No. 58750 STATE OF FLORIDA PROFESSIONAL ENGINEER
Sep 19 '05

TC LL	20.0 PSF	REF	R487-- 52928
TC DL	10.0 PSF	DATE	09/19/05
BC DL	10.0 PSF	DRW	HCUSR487 05262045
BC LL	0.0 PSF	HC-ENG	JB/ADR
TOT.LD.	40.0 PSF	SEQN-	156211
DUR.FAC.	1.25		
SPACING	24.0"	JREF-	1SQJ487_Z02

(5-220-STANLEY CRAWFORD/GRAHAM - ROOF - RVH)

Top chord 2x4 SP #2 Dense
Bot chord 2x4 SP #2 Dense
Webs 2x4 SP #3

End verticals not exposed to wind pressure.

H = recommended connection based on manufacturer tested capacities and calculations. Conditions may exist that require different connections than indicated. Refer to manufacturer publication for additional information.

110 mph wind, 16.75 ft mean hgt, ASCE 7-98, CLOSED bldg, not located within 4.50 ft from roof edge, CAT II, EXP B, wind TC DL=5.0 psf, wind BC DL=5.0 psf.

Max JT VERT DEFL: LL: 0.15" DL: 0.15" recommended camber 1/4"

Deflection meets L/360 live and L/240 total load.

Provide for complete drainage of roof.

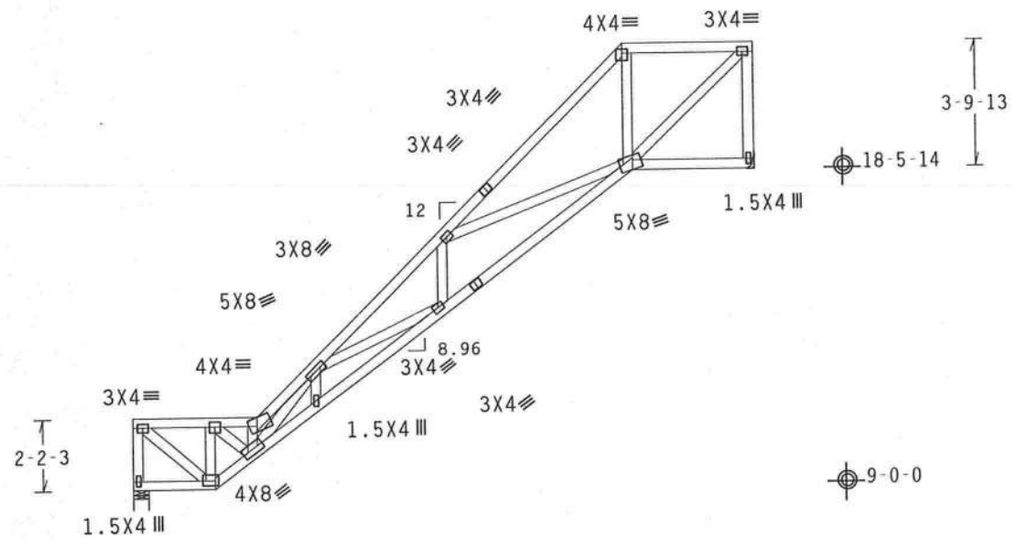

R=752 U=180 W=5.5"

R=752 U=375 H=Simpson LU26
w/ (4) 10d, 0.148"x1.5" nails in Truss
w/ (6) 16d, 0.162"x2.5" nails in Girder
Girder is (1)2X6 min. So.Pine

PLT TYP. Wave TPI Design Crit: TPI-1995(STD)/FBC 7.04.080 QTY:1 FL/-/3/-/-/R/- Scale =.1875"/Ft.

ALPINE
Alpine Engineered Products, Inc.
1950 Marley Drive
Haines City, FL 33844
FL Certificate of Authorization # 567

WARNING TRUSSES REQUIRE EXTREME CARE IN FABRICATION, HANDLING, SHIPPING, INSTALLING AND BRACING. REFER TO BCSI 1-03 (BUILDING COMPONENT SAFETY INFORMATION), PUBLISHED BY TPI (TRUSS PLATE INSTITUTE, 583 D'ONOFRIO DR., SUITE 200, MADISON, WI 53719) AND WTCA (WOOD TRUSS COUNCIL OF AMERICA, 6300 ENTERPRISE LN, MADISON, WI 53719) FOR SAFETY PRACTICES PRIOR TO PERFORMING THESE FUNCTIONS. UNLESS OTHERWISE INDICATED, TOP CHORD SHALL HAVE PROPERLY ATTACHED STRUCTURAL PANELS AND BOTTOM CHORD SHALL HAVE A PROPERLY ATTACHED RIGID CEILING.

IMPORTANT FURNISH A COPY OF THIS DESIGN TO THE INSTALLATION CONTRACTOR. ALPINE ENGINEERED PRODUCTS, INC. SHALL NOT BE RESPONSIBLE FOR ANY DEVIATION FROM THIS DESIGN; ANY FAILURE TO BUILD THE TRUSS IN CONFORMANCE WITH TPI; OR FABRICATING, HANDLING, SHIPPING, INSTALLING & BRACING OF TRUSSES. DESIGN CONFORMS WITH APPLICABLE PROVISIONS OF NDS (NATIONAL DESIGN SPEC, BY AF&PA) AND TPI. ALPINE CONNECTOR PLATES ARE MADE OF 20/18/16GA (W,H/S/K) ASTM A653 GRADE 40/60 (W, K/H,S) GALV. STEEL. APPLY PLATES TO EACH FACE OF TRUSS AND, UNLESS OTHERWISE LOCATED ON THIS DESIGN, POSITION PER DRAWINGS 160A-Z. ANY INSPECTION OF PLATES FOLLOWED BY (I) SHALL BE PER ANNEX A3 OF TPI1-2002 SEC.3. A SEAL ON THIS DRAWING INDICATES ACCEPTANCE OF PROFESSIONAL ENGINEERING RESPONSIBILITY SOLELY FOR THE TRUSS COMPONENT DESIGN SHOWN. THE SUITABILITY AND USE OF THIS COMPONENT FOR ANY BUILDING IS THE RESPONSIBILITY OF THE BUILDING DESIGNER PER ANSI/TPI 1 SEC. 2.

DENISE RUTLEDGE LICENSE No. 58782 STATE OF FLORIDA PROFESSIONAL ENGINEER
Sep 19 '05

TC LL	20.0 PSF	REF	R487-- 52929
TC DL	10.0 PSF	DATE	09/19/05
BC DL	10.0 PSF	DRW	HCUSR487 05262046
BC LL	0.0 PSF	HC-ENG	JB/ADR
TOT.LD.	40.0 PSF	SEQN-	155963
DUR.FAC.	1.25		
SPACING	24.0"	JREF-	1SQJ487_Z02

(5-220-STANLEY CRAWFORD/GRAHAM - ROOF - RVH1)

Top chord 2x4 SP #2 Dense
Bot chord 2x4 SP #2 Dense
Webs 2x4 SP #3

End verticals not exposed to wind pressure.

H = recommended connection based on manufacturer tested capacities and calculations. Conditions may exist that require different connections than indicated. Refer to manufacturer publication for additional information.

110 mph wind, 17.75 ft mean hgt, ASCE 7-98, CLOSED bldg, not located within 4.50 ft from roof edge, CAT II, EXP B, wind TC DL=5.0 psf, wind BC DL=5.0 psf.

Max JT VERT DEFL: LL: 0.16" DL: 0.16" recommended camber 1/4"

Deflection meets L/360 live and L/240 total load.

Provide for complete drainage of roof.

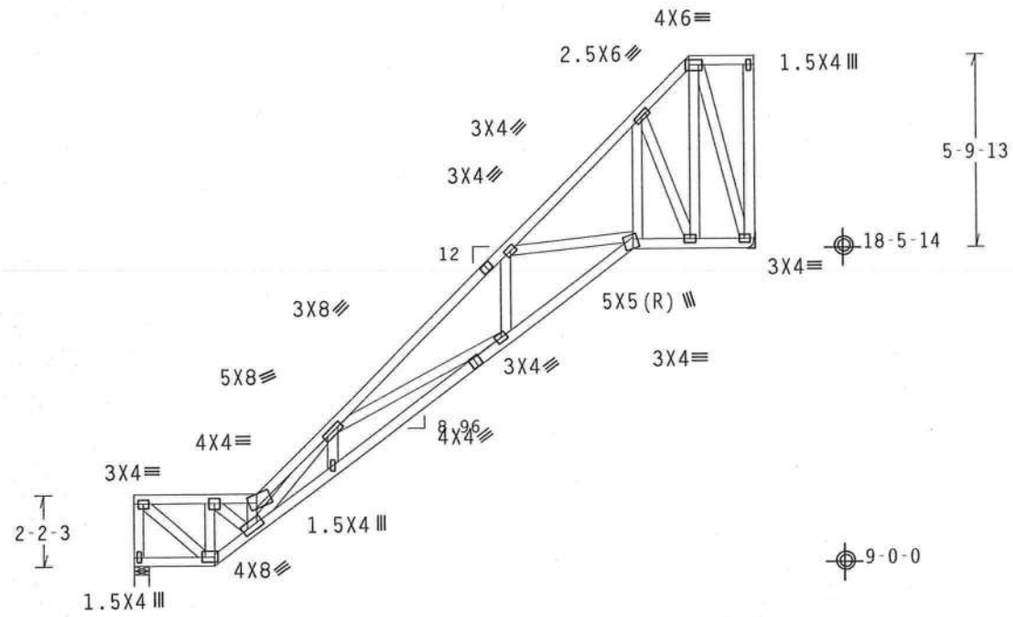

R=752 U=180 W=5.5"

R=752 U=445 H=Simpson LU26
w/ (4) 10d, 0.148"x1.5" nails in Truss
w/ (6) 16d, 0.162"x2.5" nails in Girder
Girder is (1)2X6 min. So.Pine

PLT TYP. Wave TPI | Design Crit: TPI-1995(STD)/FBC | 7.04.0805 | QTY:1 | FL/-/3/-/-/R/- | Scale =.1875"/Ft.

ALPINE
Alpine Engineered Products, Inc
1950 Marley Drive
Haines City, FL 33844
FL Certificate of Authorization # 567

WARNING TRUSSES REQUIRE EXTREME CARE IN FABRICATION, HANDLING, SHIPPING, INSTALLING AND BRACING. REFER TO BCSI 1-03 (BUILDING COMPONENT SAFETY INFORMATION), PUBLISHED BY TPI (TRUSS PLATE INSTITUTE, 583 D'ONOFRIO DR., SUITE 200, MADISON, WI 53719) AND WTCA (WOOD TRUSS COUNCIL OF AMERICA, 6300 ENTERPRISE LN, MADISON, WI 53719) FOR SAFETY PRACTICES PRIOR TO PERFORMING THESE FUNCTIONS. UNLESS OTHERWISE INDICATED, TOP CHORD SHALL HAVE PROPERLY ATTACHED STRUCTURAL PANELS AND BOTTOM CHORD SHALL HAVE A PROPERLY ATTACHED RIGID CEILING.

IMPORTANT FURNISH A COPY OF THIS DESIGN TO THE INSTALLATION CONTRACTOR. ALPINE ENGINEERED PRODUCTS, INC. SHALL NOT BE RESPONSIBLE FOR ANY DEVIATION FROM THIS DESIGN; ANY FAILURE TO BUILD THE TRUSS IN CONFORMANCE WITH TPI; OR FABRICATING, HANDLING, SHIPPING, INSTALLING & BRACING OF TRUSSES. DESIGN CONFORMS WITH APPLICABLE PROVISIONS OF NDS (NATIONAL DESIGN SPEC, BY AF&PA) AND TPI. ALPINE CONNECTOR PLATES ARE MADE OF 20/18/16GA (W,H/S/K) ASTM A653 GRADE 40/60 (W, K/H,S) GALV. STEEL. APPLY PLATES TO EACH FACE OF TRUSS AND, UNLESS OTHERWISE LOCATED ON THIS DESIGN, POSITION PER DRAWINGS 160A-Z. ANY INSPECTION OF PLATES FOLLOWED BY (1) SHALL BE PER ANNEX A3 OF TPI1-2002 SEC.3. A SEAL ON THIS DRAWING INDICATES ACCEPTANCE OF PROFESSIONAL ENGINEERING RESPONSIBILITY SOLELY FOR THE TRUSS COMPONENT DESIGN SHOWN. THE SUITABILITY AND USE OF THIS COMPONENT FOR ANY BUILDING IS THE RESPONSIBILITY OF THE BUILDING DESIGNER PER ANSI/TPI 1 SEC. 2.

DENISE RUTLEDGE LICENSE No. 58752 STATE OF FLORIDA PROFESSIONAL ENGINEER
Sep 19 '05

TC LL	20.0 PSF	REF	R487-- 52930
TC DL	10.0 PSF	DATE	09/19/05
BC DL	10.0 PSF	DRW	HCUSR487 05262047
BC LL	0.0 PSF	HC-ENG	JB/ADR
TOT.LD.	40.0 PSF	SEQN-	155970
DUR.FAC.	1.25		
SPACING	24.0"	JREF-	1SQJ487_Z02

(5-220-STANLEY CRAWFORD/GRAHAM - ROOF - TGE)

Top chord 2x4 SP #2 Dense
Bot chord 2x4 SP #2 Dense
Webs 2x4 SP #3 :C1, C7 2x4 SP #2 Dense:

SPECIAL LOADS
------(LUMBER DUR.FAC.=1.25 / PLATE DUR.FAC.=1.25)

TC - From	81 PLF at	-1.50 to	81 PLF at	13.25
BC - From	4 PLF at	-1.50 to	4 PLF at	0.00
BC - From	20 PLF at	0.00 to	20 PLF at	11.75
BC - From	4 PLF at	11.75 to	4 PLF at	13.25

Deflection meets L/360 live and L/240 total load.

110 mph wind, 24.21 ft mean hgt, ASCE 7-98, CLOSED bldg, Located anywhere in roof, CAT II, EXP B, wind TC DL=5.0 psf, wind BC DL=5.0 psf.

Calculated horizontal deflection is 0.49" due to live load and 0.29" due to dead load.

See DWGS A11030EC1103 & GBLLETIN0405 for more requirements.

Fasten rated sheathing to one face of this frame.

END VERTICAL(S) EXPOSED TO WIND PRESSURE. DEFLECTION MEETS L/240 CRITERIA FOR BRITTLE AND FLEXIBLE WALL COVERINGS.

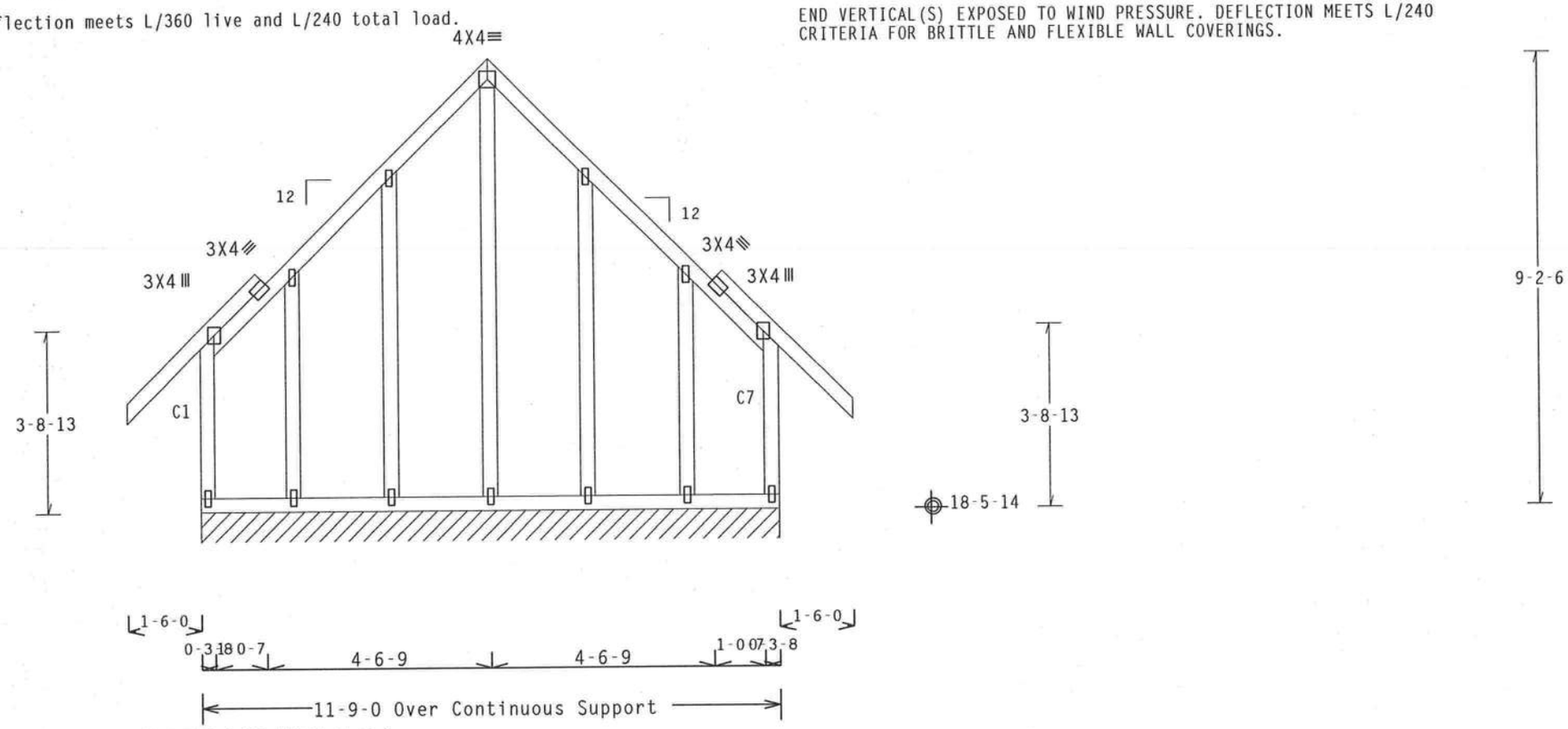

R=123 PLF U=42 PLF W=11-9-0

Note: All Plates Are 1.5X4 Except As Shown.

PLT TYP. Wave TPI | Design Crit: TPI-1995(STD)/FBC | 7.04.0805 | QTY:1 | FL/-/3/-/-/R/- | Scale =.3125"/Ft.

ALPINE
Alpine Engineered Products, Inc
1950 Marley Drive
Haines City, FL 33844
FL Certificate of Authorization # 567

WARNING TRUSSES REQUIRE EXTREME CARE IN FABRICATION, HANDLING, SHIPPING, INSTALLING AND BRACING. REFER TO BCSI 1-03 (BUILDING COMPONENT SAFETY INFORMATION), PUBLISHED BY TPI (TRUSS PLATE INSTITUTE, 583 D'ONOFRIO DR., SUITE 200, MADISON, WI 53719) AND WTCA (WOOD TRUSS COUNCIL OF AMERICA, 6300 ENTERPRISE LN, MADISON, WI 53719) FOR SAFETY PRACTICES PRIOR TO PERFORMING THESE FUNCTIONS. UNLESS OTHERWISE INDICATED, TOP CHORD SHALL HAVE PROPERLY ATTACHED STRUCTURAL PANELS AND BOTTOM CHORD SHALL HAVE A PROPERLY ATTACHED RIGID CEILING.

IMPORTANTFURNISH A COPY OF THIS DESIGN TO THE INSTALLATION CONTRACTOR. ALPINE ENGINEERED PRODUCTS, INC. SHALL NOT BE RESPONSIBLE FOR ANY DEVIATION FROM THIS DESIGN; ANY FAILURE TO BUILD THE TRUSS IN CONFORMANCE WITH TPI; OR FABRICATING, HANDLING, SHIPPING, INSTALLING & BRACING OF TRUSSES. DESIGN CONFORMS WITH APPLICABLE PROVISIONS OF NDS (NATIONAL DESIGN SPEC, BY AF&PA) AND TPI. ALPINE CONNECTOR PLATES ARE MADE OF 20/18/16GA (W,H/S/K) ASTM A653 GRADE 40/60 (W, K/H,S) GALV. STEEL. APPLY PLATES TO EACH FACE OF TRUSS AND, UNLESS OTHERWISE LOCATED ON THIS DESIGN, POSITION PER DRAWINGS 160A-Z. ANY INSPECTION OF PLATES FOLLOWED BY (1) SHALL BE PER ANNEX A3 OF TPI1-2002 SEC.3. A SEAL ON THIS DRAWING INDICATES ACCEPTANCE OF PROFESSIONAL ENGINEERING RESPONSIBILITY SOLELY FOR THE TRUSS COMPONENT DESIGN SHOWN. THE SUITABILITY AND USE OF THIS COMPONENT FOR ANY BUILDING IS THE RESPONSIBILITY OF THE BUILDING DESIGNER PER ANSI/TPI 1 SEC. 2.

DENISE RUTLEDGE LICENSE No. 58792 STATE OF FLORIDA PROFESSIONAL ENGINEER
Sep 19 05

TC LL	20.0 PSF	REF R487-- 52931
TC DL	10.0 PSF	DATE 09/19/05
BC DL	10.0 PSF	DRW HCUSR487 05262048
BC LL	0.0 PSF	HC-ENG JB/ADR
TOT.LD.	40.0 PSF	SEQN- 123787
DUR.FAC.	1.25	
SPACING	24.0"	JREF- 1SQJ487_Z02

(5-220-STANLEY CRAWFORD/GRAHAM - ROOF - T)

Top chord 2x4 SP #2 Dense
Bot chord 2x4 SP #2 Dense
Webs 2x4 SP #3

End verticals exposed to wind pressure. Deflection meets L/240 criteria for brittle and flexible wall coverings.

110 mph wind, 24.41 ft mean hgt, ASCE 7-98, CLOSED bldg, Located anywhere in roof, CAT II, EXP B, wind TC DL=5.0 psf, wind BC DL=5.0 psf.

(A) Continuous lateral bracing equally spaced on member.

Deflection meets L/360 live and L/240 total load.

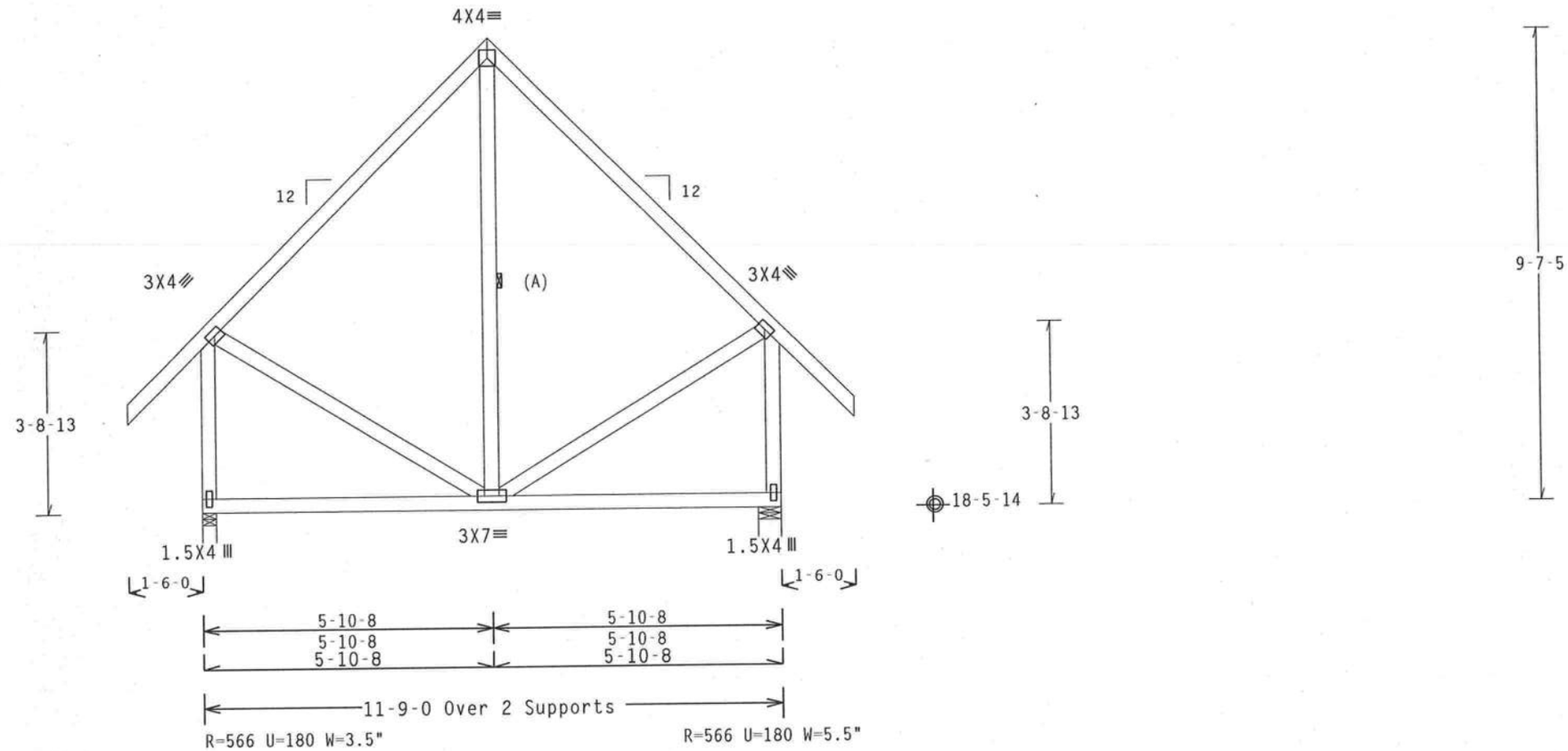

PLT TYP. Wave TPI | Design Crit: TPI-1995(STD)/FBC | 7.04.080 | QTY:8 | FL/-/3/-/-/R/- | Scale =.3125"/Ft.

ALPINE

Alpine Engineered Products, Inc.
1950 Marley Drive
Haines City, FL 33844
FL Certificate of Authorization # 567

WARNING TRUSSES REQUIRE EXTREME CARE IN FABRICATION, HANDLING, SHIPPING, INSTALLING AND BRACING. REFER TO BCSI 1-03 (BUILDING COMPONENT SAFETY INFORMATION), PUBLISHED BY TPI (TRUSS PLATE INSTITUTE, 583 D'ONOFRIO DR., SUITE 200, MADISON, WI 53719) AND WTCA (WOOD TRUSS COUNCIL OF AMERICA, 6300 ENTERPRISE LN, MADISON, WI 53719) FOR SAFETY PRACTICES PRIOR TO PERFORMING THESE FUNCTIONS. UNLESS OTHERWISE INDICATED, TOP CHORD SHALL HAVE PROPERLY ATTACHED STRUCTURAL PANELS AND BOTTOM CHORD SHALL HAVE A PROPERLY ATTACHED RIGID CEILING.

IMPORTANT FURNISH A COPY OF THIS DESIGN TO THE INSTALLATION CONTRACTOR. ALPINE ENGINEERED PRODUCTS, INC. SHALL NOT BE RESPONSIBLE FOR ANY DEVIATION FROM THIS DESIGN; ANY FAILURE TO BUILD THE TRUSS IN CONFORMANCE WITH TPI; OR FABRICATING, HANDLING, SHIPPING, INSTALLING & BRACING OF TRUSSES. DESIGN CONFORMS WITH APPLICABLE PROVISIONS OF NDS (NATIONAL DESIGN SPEC. BY AF&PA) AND TPI. ALPINE CONNECTOR PLATES ARE MADE OF 20/18/16GA (W,H/S/K) ASTM A653 GRADE 40/60 (W, K/H,S) GALV. STEEL. APPLY PLATES TO EACH FACE OF TRUSS AND, UNLESS OTHERWISE LOCATED ON THIS DESIGN, POSITION PER DRAWINGS 160A-Z. ANY INSPECTION OF PLATES FOLLOWED BY (1) SHALL BE PER ANNEX A3 OF TPI1-2002 SEC.3. A SEAL ON THIS DRAWING INDICATES ACCEPTANCE OF PROFESSIONAL ENGINEERING RESPONSIBILITY SOLELY FOR THE TRUSS COMPONENT DESIGN SHOWN. THE SUITABILITY AND USE OF THIS COMPONENT FOR ANY BUILDING IS THE RESPONSIBILITY OF THE BUILDING DESIGNER PER ANSI/TPI 1 SEC. 2.

DENISE RUTLEDGE LICENSE No. 58752 STATE OF FLORIDA PROFESSIONAL ENGINEER

Sep 19 '05

TC LL	20.0 PSF	REF	R487-- 52932
TC DL	10.0 PSF	DATE	09/19/05
BC DL	10.0 PSF	DRW	HCUSR487 05262009
BC LL	0.0 PSF	HC-ENG	JB/ADR *
TOT.LD.	40.0 PSF	SEQN-	123796
DUR.FAC.	1.25		
SPACING	24.0"	JREF-	1SQJ487_Z02

(5-220-STANLEY CRAWFORD/GRAHAM - ROOF - T1)

Top chord 2x4 SP #2 Dense
Bot chord 2x4 SP #2 Dense
Webs 2x4 SP #3

End verticals exposed to wind pressure. Deflection meets L/240 criteria for brittle and flexible wall coverings.

110 mph wind, 25.16 ft mean hgt, ASCE 7-98, CLOSED bldg, not located within 4.50 ft from roof edge, CAT II, EXP B, wind TC DL=5.0 psf, wind BC DL=5.0 psf.

(A) Continuous lateral bracing equally spaced on member.

Deflection meets L/360 live and L/240 total load.

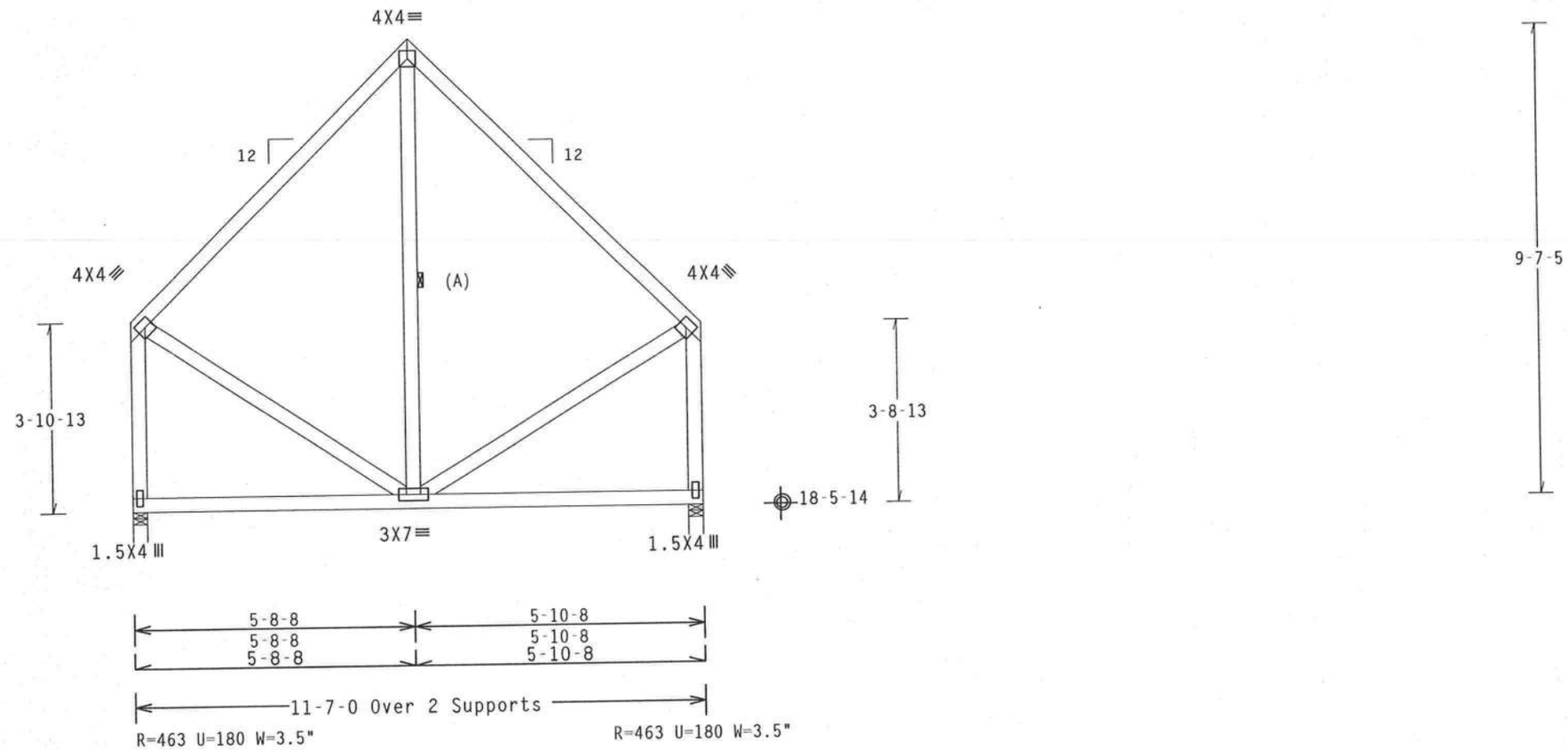

PLT TYP. Wave TPI | Design Crit: TPI-1995(STD)/FBC | 7.04.080[illegible]6 | QTY:2 | FL/-/3/-/-/R/- | Scale =.3125"/Ft.

ALPINE
Alpine Engineered Products, Inc.
1950 Marley Drive
Haines City, FL 33844
FL Certificate of Authorization # 567

WARNING TRUSSES REQUIRE EXTREME CARE IN FABRICATION, HANDLING, SHIPPING, INSTALLING AND BRACING. REFER TO BCSI 1-03 (BUILDING COMPONENT SAFETY INFORMATION), PUBLISHED BY TPI (TRUSS PLATE INSTITUTE, 583 D'ONOFRIO DR., SUITE 200, MADISON, WI 53719) AND WTCA (WOOD TRUSS COUNCIL OF AMERICA, 6300 ENTERPRISE LN, MADISON, WI 53719) FOR SAFETY PRACTICES PRIOR TO PERFORMING THESE FUNCTIONS. UNLESS OTHERWISE INDICATED, TOP CHORD SHALL HAVE PROPERLY ATTACHED STRUCTURAL PANELS AND BOTTOM CHORD SHALL HAVE A PROPERLY ATTACHED RIGID CEILING.

IMPORTANT FURNISH A COPY OF THIS DESIGN TO THE INSTALLATION CONTRACTOR. ALPINE ENGINEERED PRODUCTS, INC. SHALL NOT BE RESPONSIBLE FOR ANY DEVIATION FROM THIS DESIGN; ANY FAILURE TO BUILD THE TRUSS IN CONFORMANCE WITH TPI; OR FABRICATING, HANDLING, SHIPPING, INSTALLING & BRACING OF TRUSSES. DESIGN CONFORMS WITH APPLICABLE PROVISIONS OF NDS (NATIONAL DESIGN SPEC. BY AF&PA) AND TPI. ALPINE CONNECTOR PLATES ARE MADE OF 20/18/16GA (W,H/S/K) ASTM A653 GRADE 40/60 (W, K/H,S) GALV. STEEL. APPLY PLATES TO EACH FACE OF TRUSS AND, UNLESS OTHERWISE LOCATED ON THIS DESIGN, POSITION PER DRAWINGS 160A-Z. ANY INSPECTION OF PLATES FOLLOWED BY (1) SHALL BE PER ANNEX A3 OF TPI1-2002 SEC.3. A SEAL ON THIS DRAWING INDICATES ACCEPTANCE OF PROFESSIONAL ENGINEERING RESPONSIBILITY SOLELY FOR THE TRUSS COMPONENT DESIGN SHOWN. THE SUITABILITY AND USE OF THIS COMPONENT FOR ANY BUILDING IS THE RESPONSIBILITY OF THE BUILDING DESIGNER PER ANSI/TPI 1 SEC. 2.

DENISE RUTLEDGE LICENSE No. 58752 STATE OF FLORIDA PROFESSIONAL ENGINEER
Sep 19 '05

TC LL	20.0 PSF	REF	R487-- 52933
TC DL	10.0 PSF	DATE	09/19/05
BC DL	10.0 PSF	DRW	HCUSR487 05262010
BC LL	0.0 PSF	HC-ENG	JB/ADR *
TOT.LD.	40.0 PSF	SEQN-	156215
DUR.FAC.	1.25		
SPACING	24.0"	JREF-	1SQJ487_Z02

(5-220-STANLEY CRAWFORD/GRAHAM - ROOF - T2)

Top chord 2x4 SP #2 Dense
Bot chord 2x4 SP #2 Dense
Webs 2x4 SP #3

End verticals exposed to wind pressure. Deflection meets L/240 criteria for brittle and flexible wall coverings.

110 mph wind, 24.41 ft mean hgt, ASCE 7-98, CLOSED bldg, not located within 4.50 ft from roof edge, CAT II, EXP B, wind TC DL=5.0 psf, wind BC DL=5.0 psf.

(A) Continuous lateral bracing equally spaced on member.

Deflection meets L/360 live and L/240 total load.

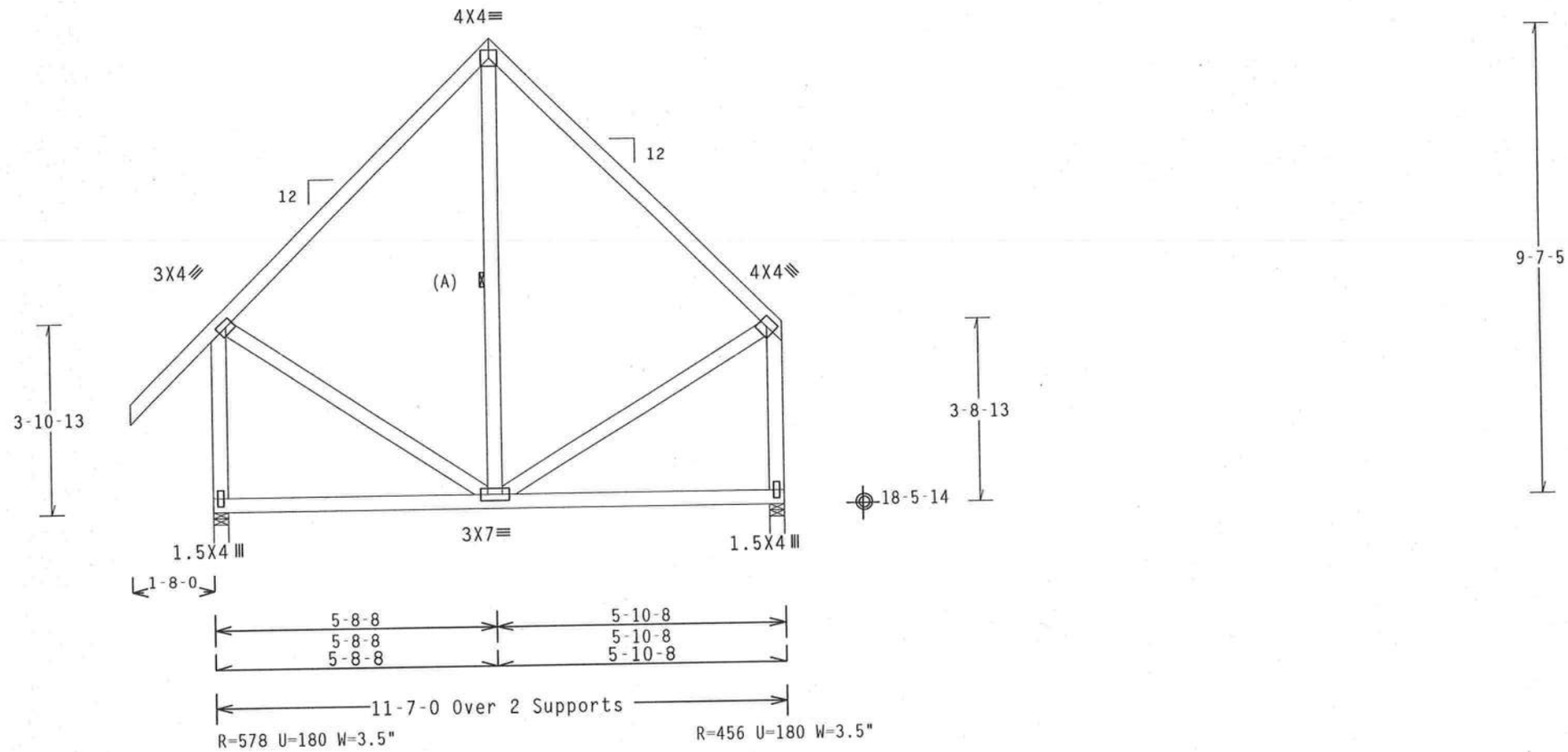

PLT TYP. Wave TPI | Design Crit: TPI-1995(STD)/FBC | 7.04.080 | QTY:5 | FL/-/3/-/-/R/- | Scale =.3125"/Ft.

ALPINE
Alpine Engineered Products, Inc
1950 Marley Drive
Haines City, FL 33844
FL Certificate of Authorization # 567

WARNING TRUSSES REQUIRE EXTREME CARE IN FABRICATION, HANDLING, SHIPPING, INSTALLING AND BRACING. REFER TO BCSI 1-03 (BUILDING COMPONENT SAFETY INFORMATION), PUBLISHED BY TPI (TRUSS PLATE INSTITUTE, 583 D'ONOFRIO DR., SUITE 200, MADISON, WI 53719) AND WTCA (WOOD TRUSS COUNCIL OF AMERICA, 6300 ENTERPRISE LN, MADISON, WI 53719) FOR SAFETY PRACTICES PRIOR TO PERFORMING THESE FUNCTIONS. UNLESS OTHERWISE INDICATED, TOP CHORD SHALL HAVE PROPERLY ATTACHED STRUCTURAL PANELS AND BOTTOM CHORD SHALL HAVE A PROPERLY ATTACHED RIGID CEILING.

IMPORTANT FURNISH A COPY OF THIS DESIGN TO THE INSTALLATION CONTRACTOR. ALPINE ENGINEERED PRODUCTS, INC. SHALL NOT BE RESPONSIBLE FOR ANY DEVIATION FROM THIS DESIGN; ANY FAILURE TO BUILD THE TRUSS IN CONFORMANCE WITH TPI: OR FABRICATING, HANDLING, SHIPPING, INSTALLING & BRACING OF TRUSSES. DESIGN CONFORMS WITH APPLICABLE PROVISIONS OF NDS (NATIONAL DESIGN SPEC, BY AF&PA) AND TPI. ALPINE CONNECTOR PLATES ARE MADE OF 20/18/16GA (W,H/S/K) ASTM A653 GRADE 40/60 (W, K/H,S) GALV. STEEL. APPLY PLATES TO EACH FACE OF TRUSS AND, UNLESS OTHERWISE LOCATED ON THIS DESIGN, POSITION PER DRAWINGS 160A-Z. ANY INSPECTION OF PLATES FOLLOWED BY (1) SHALL BE PER ANNEX A3 OF TPI1-2002 SEC.3. A SEAL ON THIS DRAWING INDICATES ACCEPTANCE OF PROFESSIONAL ENGINEERING RESPONSIBILITY SOLELY FOR THE TRUSS COMPONENT DESIGN SHOWN. THE SUITABILITY AND USE OF THIS COMPONENT FOR ANY BUILDING IS THE RESPONSIBILITY OF THE BUILDING DESIGNER PER ANSI/TPI 1 SEC. 2.

DENISE RUTLEDGE LICENSE No. 58752 STATE OF FLORIDA PROFESSIONAL ENGINEER
Sep 19 '05

TC LL	20.0 PSF	REF	R487-- 52934
TC DL	10.0 PSF	DATE	09/19/05
BC DL	10.0 PSF	DRW	HCUSR487 05262011
BC LL	0.0 PSF	HC-ENG	JB/ADR *
TOT.LD.	40.0 PSF	SEQN-	123811
DUR.FAC.	1.25		
SPACING	24.0"	JREF-	1SQJ487_Z02

(5-220-STANLEY CRAWFORD/GRAHAM - ROOF - T2GE)

Top chord 2x4 SP #2 Dense
Bot chord 2x4 SP #2 Dense
Webs 2x4 SP #3 :C1, C6 2x4 SP #2 Dense:

SPECIAL LOADS
------(LUMBER DUR.FAC.=1.25 / PLATE DUR.FAC.=1.25)
TC - From 81 PLF at -1.67 to 81 PLF at 11.58
BC - From 4 PLF at -1.67 to 4 PLF at 0.00
BC - From 20 PLF at 0.00 to 20 PLF at 11.58

See DWGS A11030EC1103 & GBLLETIN0405 for more requirements.

(A) 1x4 SP #3 or better "L" brace. 80% length of web member. Attach with 8d Box or Gun (0.113"x2.5",min.)nails @ 6" OC.

110 mph wind, 24.21 ft mean hgt, ASCE 7-98, CLOSED bldg, Located anywhere in roof, CAT II, EXP B, wind TC DL=5.0 psf, wind BC DL=5.0 psf.

End verticals not exposed to wind pressure.

Calculated horizontal deflection is 0.46" due to live load and 0.26" due to dead load.

Deflection meets L/360 live and L/240 total load.

Fasten rated sheathing to one face of this frame.

(**) Plate relocated as shown.

END VERTICAL(S) EXPOSED TO WIND PRESSURE. DEFLECTION MEETS L/240 CRITERIA FOR BRITTLE AND FLEXIBLE WALL COVERINGS.

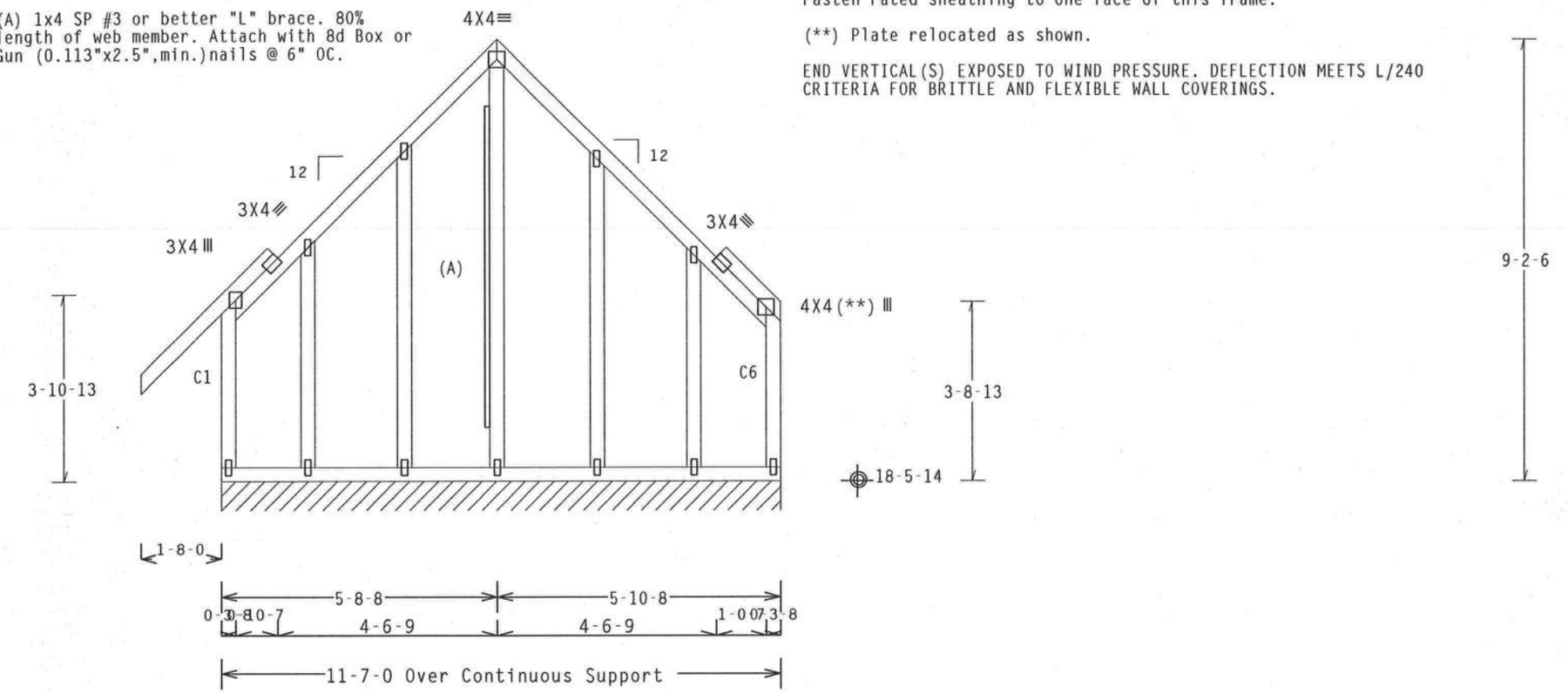

R=113 PLF U=39 PLF W=11-7-0

Note: All Plates Are 1.5X4 Except As Shown.

PLT TYP. Wave TPI | Design Crit: TPI-1995(STD)/FBC | 7.04.0805 | QTY:1 | FL/-/3/-/-/R/- | Scale =.3125"/Ft.

ALPINE

Alpine Engineered Products, Inc
1950 Marley Drive
Haines City, FL 33844
FL Certificate of Authorization # 567

WARNING TRUSSES REQUIRE EXTREME CARE IN FABRICATION, HANDLING, SHIPPING, INSTALLING AND BRACING. REFER TO BCSI 1-03 (BUILDING COMPONENT SAFETY INFORMATION), PUBLISHED BY TPI (TRUSS PLATE INSTITUTE, 583 D'ONOFRIO DR., SUITE 200, MADISON, WI 53719) AND WTCA (WOOD TRUSS COUNCIL OF AMERICA, 6300 ENTERPRISE LN, MADISON, WI 53719) FOR SAFETY PRACTICES PRIOR TO PERFORMING THESE FUNCTIONS. UNLESS OTHERWISE INDICATED, TOP CHORD SHALL HAVE PROPERLY ATTACHED STRUCTURAL PANELS AND BOTTOM CHORD SHALL HAVE A PROPERLY ATTACHED RIGID CEILING.

IMPORTANTFURNISH A COPY OF THIS DESIGN TO THE INSTALLATION CONTRACTOR. ALPINE ENGINEERED PRODUCTS, INC. SHALL NOT BE RESPONSIBLE FOR ANY DEVIATION FROM THIS DESIGN; ANY FAILURE TO BUILD THE TRUSS IN CONFORMANCE WITH TPI; OR FABRICATING, HANDLING, SHIPPING, INSTALLING & BRACING OF TRUSSES. DESIGN CONFORMS WITH APPLICABLE PROVISIONS OF NDS (NATIONAL DESIGN SPEC, BY AF&PA) AND TPI. ALPINE CONNECTOR PLATES ARE MADE OF 20/18/16GA (W,H/S/K) ASTM A653 GRADE 40/60 (W, K/H,S) GALV. STEEL. APPLY PLATES TO EACH FACE OF TRUSS AND, UNLESS OTHERWISE LOCATED ON THIS DESIGN, POSITION PER DRAWINGS 160A-Z. ANY INSPECTION OF PLATES FOLLOWED BY (1) SHALL BE PER ANNEX A3 OF TPI1-2002 SEC.3. A SEAL ON THIS DRAWING INDICATES ACCEPTANCE OF PROFESSIONAL ENGINEERING RESPONSIBILITY SOLELY FOR THE TRUSS COMPONENT DESIGN SHOWN. THE SUITABILITY AND USE OF THIS COMPONENT FOR ANY BUILDING IS THE RESPONSIBILITY OF THE BUILDING DESIGNER PER ANSI/TPI 1 SEC. 2.

DENISE RUTLEDGE LICENSE No. 58752 STATE OF FLORIDA PROFESSIONAL ENGINEER
Sep 19 '05

TC LL	20.0 PSF	REF	R487-- 52935
TC DL	10.0 PSF	DATE	09/19/05
BC DL	10.0 PSF	DRW	HCUSR487 05262049
BC LL	0.0 PSF	HC-ENG	ADR/ADR
TOT.LD.	40.0 PSF	SEQN-	123817
DUR.FAC.	1.25		
SPACING	24.0"	JREF-	1SQJ487_Z02

CLB WEB BRACE SUBSTITUTION

THIS DETAIL IS TO BE USED WHEN CONTINUOUS LATERAL BRACING (CLB) IS SPECIFIED ON AN ALPINE TRUSS DESIGN BUT AN ALTERNATIVE WEB BRACING METHOD IS DESIRED.

NOTES:

THIS DETAIL IS ONLY APPLICABLE FOR CHANGING THE SPECIFIED CLB SHOWN ON SINGLE PLY SEALED DESIGNS TO T-BRACING OR SCAB BRACING.

ALTERNATIVE BRACING SPECIFIED IN CHART BELOW MAY BE CONSERVATIVE. FOR MINIMUM ALTERNATIVE BRACING, RE-RUN DESIGN WITH APPROPRIATE BRACING.

WEB MEMBER SIZE	SPECIFIED CLB BRACING	ALTERNATIVE BRACING T OR L-BRACE	ALTERNATIVE BRACING SCAB BRACE
2X3 OR 2X4	1 ROW	2X4	1-2X4
2X3 OR 2X4	2 ROWS	2X6	2-2X4
2X6	1 ROW	2X4	1-2X6
2X6	2 ROWS	2X6	2-2X4(*)
2X8	1 ROW	2X6	1-2X8
2X8	2 ROWS	2X6	2-2X6(*)

T-BRACE, L-BRACE AND SCAB BRACE TO BE SAME SPECIES AND GRADE OR BETTER THAN WEB MEMBER UNLESS SPECIFIED OTHERWISE ON ENGINEER'S SEALED DESIGN.

(*) CENTER SCAB ON WIDE FACE OF WEB. APPLY (1) SCAB TO EACH FACE OF WEB.

T-BRACING OR L-BRACING:

APPLY TO EITHER SIDE OF WEB NARROW FACE

ATTACH WITH 16d NAILS AT 6" O.C.

BRACE IS A MINIMUM 80% OF WEB MEMBER LENGTH

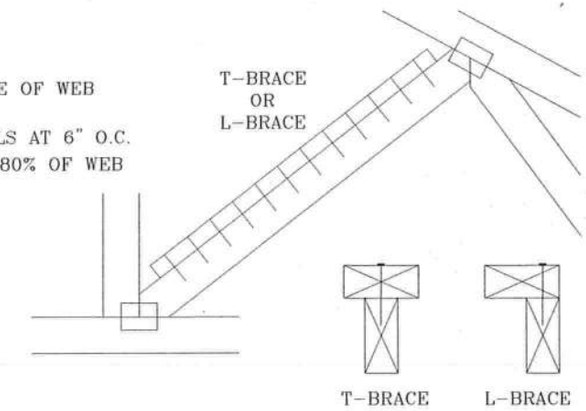

SCAB BRACING:

APPLY SCAB(S) TO WIDE FACE OF WEB.

NO MORE THAN (1) SCAB PER FACE.

ATTACH WITH 10d OR .128"x3" GUN NAILS AT 6" O.C. BRACE IS A MINIMUM 80% OF WEB MEMBER LENGTH

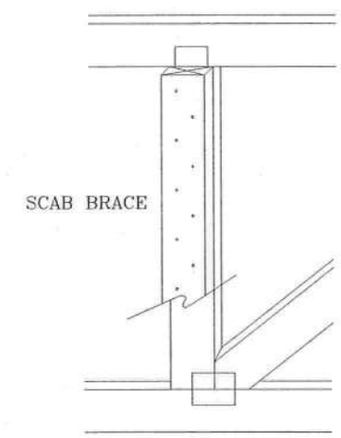

THIS DRAWING REPLACES DRAWING 579,640

ALPINE

ALPINE ENGINEERED PRODUCTS, INC.
POMPANO BEACH, FLORIDA

WARNING TRUSSES REQUIRE EXTREME CARE IN FABRICATING, HANDLING, SHIPPING, INSTALLING AND BRACING. REFER TO BCSI 1-03 (BUILDING COMPONENT SAFETY INFORMATION), PUBLISHED BY TPI (TRUSS PLATE INSTITUTE, 583 D'ONOFRIO DR., SUITE 200, MADISON, WI. 53719) AND WTCA (WOOD TRUSS COUNCIL OF AMERICA, 6300 ENTERPRISE LN. MADISON, WI 53719) FOR SAFETY PRACTICES PRIOR TO PERFORMING THESE FUNCTIONS. UNLESS OTHERWISE INDICATED, TOP CHORD SHALL HAVE PROPERLY ATTACHED STRUCTURAL PANELS AND BOTTOM CHORD SHALL HAVE A PROPERLY ATTACHED RIGID CEILING.

IMPORTANT FURNISH COPY OF THIS DESIGN TO INSTALLATION CONTRACTOR. ALPINE ENGINEERED PRODUCTS, INC., SHALL NOT BE RESPONSIBLE FOR ANY DEVIATION FROM THIS DESIGN; ANY FAILURE TO BUILD THE TRUSS IN CONFORMANCE WITH TPI; OR FABRICATING, HANDLING, SHIPPING, INSTALLING & BRACING OF TRUSSES. DESIGN CONFORMS WITH APPLICABLE PROVISIONS OF NDS (NATIONAL DESIGN SPEC. BY AF&PA) AND TPI. ALPINE CONNECTOR PLATES ARE MADE OF 20/18/16GA (W,H/S/K) ASTM A653 GRADE 40/60 (W,K/H,S) GALV. STEEL. APPLY PLATES TO EACH FACE OF TRUSS AND, UNLESS OTHERWISE LOCATED ON THIS DESIGN, POSITION PER DRAWINGS 160A-Z. ANY INSPECTION OF PLATES FOLLOWED BY (I) SHALL BE PER ANNEX A3 OF TPI 1-2002 SEC. 3. A SEAL ON THIS DRAWING INDICATES ACCEPTANCE OF PROFESSIONAL ENGINEERING RESPONSIBILITY SOLELY FOR THE TRUSS COMPONENT DESIGN SHOWN. THE SUITABILITY AND USE OF THIS COMPONENT FOR ANY BUILDING IS THE RESPONSIBILITY OF THE BUILDING DESIGNER, PER ANSI/TPI 1 SEC. 2.

DENISE RUTLEDGE
LICENSE
No. 36752
STATE OF FLORIDA
PROFESSIONAL ENGINEER

TC LL	PSF	REF	CLB SUBST.
TC DL	PSF	DATE	11/26/03
BC DL	PSF	DRWG	BRCLBSUB1103
BC LL	PSF	-ENG	MLH/KAR
TOT. LD.	PSF		
DUR. FAC.			
SPACING			

ASCE 7-98: 110 MPH WIND SPEED, 15' MEAN HEIGHT, ENCLOSED, I = 1.00, EXPOSURE C

MAX GABLE VERTICAL LENGTH

2X4 GABLE VERTICAL SPACING	SPECIES	BRACE GRADE	NO BRACES	(1) 1X4 "L" BRACE * GROUP A	(1) 1X4 "L" BRACE * GROUP B	(1) 2X4 "L" BRACE * GROUP A	(1) 2X4 "L" BRACE * GROUP B	(2) 2X4 "L" BRACE ** GROUP A	(2) 2X4 "L" BRACE ** GROUP B	(1) 2X6 "L" BRACE * GROUP A	(1) 2X6 "L" BRACE * GROUP B	(2) 2X6 "L" BRACE ** GROUP A	(2) 2X6 "L" BRACE ** GROUP B
24" O.C.	SPF HF	#1 / #2	3' 10"	6' 8"	6' 10"	7' 11"	8' 1"	9' 5"	9' 8"	12' 5"	12' 9"	14' 0"	14' 0"
		#3	3' 9"	6' 0"	6' 0"	7' 11"	7' 11"	9' 5"	9' 5"	12' 4"	12' 4"	14' 0"	14' 0"
		STUD	3' 9"	6' 0"	6' 0"	7' 11"	7' 11"	9' 5"	9' 5"	12' 3"	12' 3"	14' 0"	14' 0"
		STANDARD	3' 9"	5' 2"	5' 2"	6' 9"	6' 9"	9' 1"	9' 1"	10' 7"	10' 7"	14' 0"	14' 0"
	SP DFL	#1	4' 3"	6' 8"	7' 2"	7' 11"	8' 6"	9' 5"	10' 2"	12' 5"	13' 5"	14' 0"	14' 0"
		#2	4' 2"	6' 8"	7' 2"	7' 11"	8' 6"	9' 5"	10' 2"	12' 5"	13' 5"	14' 0"	14' 0"
		#3	4' 0"	6' 2"	6' 2"	7' 11"	8' 1"	9' 5"	9' 11"	12' 5"	12' 8"	14' 0"	14' 0"
		STUD	4' 0"	6' 1"	6' 1"	7' 11"	8' 0"	9' 5"	9' 11"	12' 5"	12' 6"	14' 0"	14' 0"
		STANDARD	3' 10"	5' 3"	5' 3"	6' 11"	6' 11"	9' 4"	9' 4"	10' 10"	10' 10"	14' 0"	14' 0"
16" O.C.	SPF HF	#1 / #2	4' 5"	7' 8"	7' 10"	9' 1"	9' 4"	10' 10"	11' 1"	14' 0"	14' 0"	14' 0"	14' 0"
		#3	4' 4"	7' 4"	7' 4"	9' 1"	9' 1"	10' 10"	10' 10"	14' 0"	14' 0"	14' 0"	14' 0"
		STUD	4' 4"	7' 4"	7' 4"	9' 1"	9' 1"	10' 10"	10' 10"	14' 0"	14' 0"	14' 0"	14' 0"
		STANDARD	4' 4"	6' 4"	6' 4"	8' 4"	8' 4"	10' 10"	10' 10"	12' 11"	12' 11"	14' 0"	14' 0"
	SP DFL	#1	4' 10"	7' 8"	8' 3"	9' 1"	9' 9"	10' 10"	11' 8"	14' 0"	14' 0"	14' 0"	14' 0"
		#2	4' 9"	7' 8"	8' 3"	9' 1"	9' 9"	10' 10"	11' 8"	14' 0"	14' 0"	14' 0"	14' 0"
		#3	4' 6"	7' 7"	7' 7"	9' 1"	9' 6"	10' 10"	11' 4"	14' 0"	14' 0"	14' 0"	14' 0"
		STUD	4' 6"	7' 6"	7' 6"	9' 1"	9' 6"	10' 10"	11' 4"	14' 0"	14' 0"	14' 0"	14' 0"
		STANDARD	4' 5"	6' 5"	6' 5"	8' 6"	8' 6"	10' 10"	11' 1"	13' 3"	13' 3"	14' 0"	14' 0"
12" O.C.	SPF HF	#1 / #2	4' 11"	8' 5"	8' 8"	10' 0"	10' 3"	11' 11"	12' 3"	14' 0"	14' 0"	14' 0"	14' 0"
		#3	4' 9"	8' 5"	8' 5"	10' 0"	10' 0"	11' 11"	11' 11"	14' 0"	14' 0"	14' 0"	14' 0"
		STUD	4' 9"	8' 5"	8' 5"	10' 0"	10' 0"	11' 11"	11' 11"	14' 0"	14' 0"	14' 0"	14' 0"
		STANDARD	4' 9"	7' 3"	7' 3"	9' 7"	9' 7"	11' 11"	11' 11"	14' 0"	14' 0"	14' 0"	14' 0"
	SP DFL	#1	5' 4"	8' 5"	9' 1"	10' 0"	10' 9"	11' 11"	12' 10"	14' 0"	14' 0"	14' 0"	14' 0"
		#2	5' 3"	8' 5"	9' 1"	10' 0"	10' 9"	11' 11"	12' 10"	14' 0"	14' 0"	14' 0"	14' 0"
		#3	5' 0"	8' 5"	8' 5"	10' 0"	10' 6"	11' 11"	12' 6"	14' 0"	14' 0"	14' 0"	14' 0"
		STUD	5' 0"	8' 5"	8' 7"	10' 0"	10' 6"	11' 11"	12' 6"	14' 0"	14' 0"	14' 0"	14' 0"
		STANDARD	4' 11"	7' 5"	7' 5"	9' 10"	9' 10"	11' 11"	12' 3"	14' 0"	14' 0"	14' 0"	14' 0"

BRACING GROUP SPECIES AND GRADES:

GROUP A:

SPRUCE-PINE-FIR: #1 / #2, STANDARD; #3, STUD

HEM-FIR: #2, STUD; #3, STANDARD

DOUGLAS FIR-LARCH: #3, STUD, STANDARD

SOUTHERN PINE: #3, STUD, STANDARD

GROUP B:

HEM-FIR: #1 & BTR, #1

SOUTHERN PINE: #1, #2

DOUGLAS FIR-LARCH: #1, #2

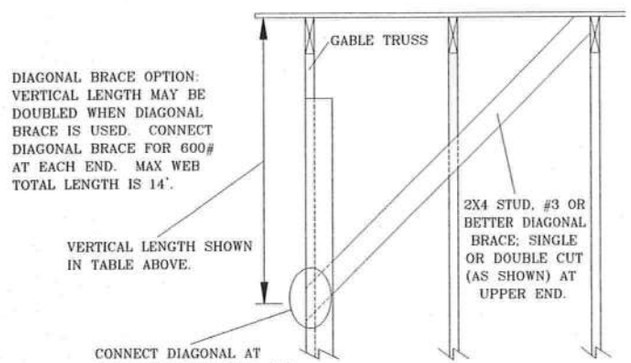

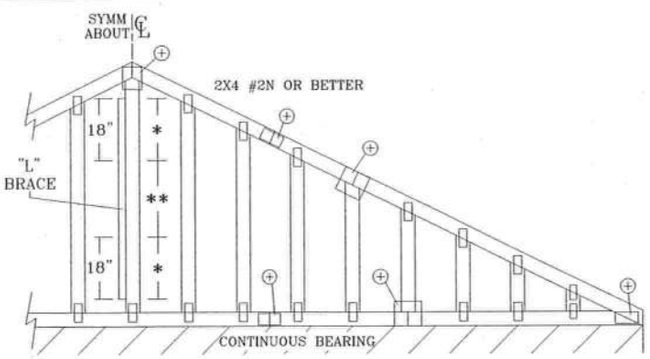

REFER TO CHART ABOVE FOR MAX GABLE VERTICAL LENGTH.

GABLE TRUSS DETAIL NOTES:

LIVE LOAD DEFLECTION CRITERIA IS L/240.

PROVIDE UPLIFT CONNECTIONS FOR 80 PLF OVER CONTINUOUS BEARING (5 PSF TC DEAD LOAD).

GABLE END SUPPORTS LOAD FROM 4' 0" OUTLOOKERS WITH 2' 0" OVERHANG, OR 12" PLYWOOD OVERHANG.

ATTACH EACH "L" BRACE WITH 10d NAILS.

* FOR (1) "L" BRACE: SPACE NAILS AT 2" O.C. IN 18" END ZONES AND 4" O.C. BETWEEN ZONES.

** FOR (2) "L" BRACES: SPACE NAILS AT 3" O.C. IN 18" END ZONES AND 6" O.C. BETWEEN ZONES.

"L" BRACING MUST BE A MINIMUM OF 80% OF WEB MEMBER LENGTH.

GABLE VERTICAL PLATE SIZES

VERTICAL LENGTH	NO SPLICE
LESS THAN 4' 0"	1X4 OR 2X3
GREATER THAN 4' 0", BUT LESS THAN 11' 6"	2X4
GREATER THAN 11' 6"	2.5X4

+ REFER TO COMMON TRUSS DESIGN FOR PEAK, SPLICE, AND HEEL PLATES.

ALPINE

ALPINE ENGINEERED PRODUCTS, INC.
POMPANO BEACH, FLORIDA

WARNING TRUSSES REQUIRE EXTREME CARE IN FABRICATING, HANDLING, SHIPPING, INSTALLING AND BRACING. REFER TO BCSI 1-03 (BUILDING COMPONENT SAFETY INFORMATION), PUBLISHED BY TPI (TRUSS PLATE INSTITUTE, 583 D'ONOFRIO DR., SUITE 200, MADISON, WI. 53719) AND WTCA (WOOD TRUSS COUNCIL OF AMERICA, 6300 ENTERPRISE LN, MADISON, WI 53719) FOR SAFETY PRACTICES PRIOR TO PERFORMING THESE FUNCTIONS. UNLESS OTHERWISE INDICATED, TOP CHORD SHALL HAVE PROPERLY ATTACHED STRUCTURAL PANELS AND BOTTOM CHORD SHALL HAVE A PROPERLY ATTACHED RIGID CEILING.

IMPORTANT FURNISH COPY OF THIS DESIGN TO INSTALLATION CONTRACTOR. ALPINE ENGINEERED PRODUCTS, INC., SHALL NOT BE RESPONSIBLE FOR ANY DEVIATION FROM THIS DESIGN; ANY FAILURE TO BUILD THE TRUSS IN CONFORMANCE WITH TPI; OR FABRICATING, HANDLING, SHIPPING, INSTALLING & BRACING OF TRUSSES. DESIGN CONFORMS WITH APPLICABLE PROVISIONS OF NDS (NATIONAL DESIGN SPEC. BY AF&PA) AND TPI. ALPINE CONNECTOR PLATES ARE MADE OF 20/18/16GA (W,H/S/K) ASTM A653 GRADE 40/60 (W,K/H,S) GALV. STEEL. APPLY PLATES TO EACH FACE OF TRUSS AND, UNLESS OTHERWISE LOCATED ON THIS DESIGN, POSITION PER DRAWINGS 160A-Z. ANY INSPECTION OF PLATES FOLLOWED BY (I) SHALL BE PER ANNEX A3 OF TPI 1-2002 SEC. 3. A SEAL ON THIS DRAWING INDICATES ACCEPTANCE OF PROFESSIONAL ENGINEERING RESPONSIBILITY SOLELY FOR THE TRUSS COMPONENT DESIGN SHOWN. THE SUITABILITY AND USE OF THIS COMPONENT FOR ANY BUILDING IS THE RESPONSIBILITY OF THE BUILDING DESIGNER, PER ANSI/TPI 1 SEC. 2.

DENISE RUTLEDGE LICENSE No. 53752 STATE OF FLORIDA PROFESSIONAL ENGINEER

Sep 30 '02

MAX. TOT. LD. 60 PSF

MAX. SPACING 24.0"

REF ASCE7-98-GAB11015
DATE 11/26/03
DRWG A11015EC1103
-ENG

GABLE DETAIL
FOR LET-IN VERTICALS

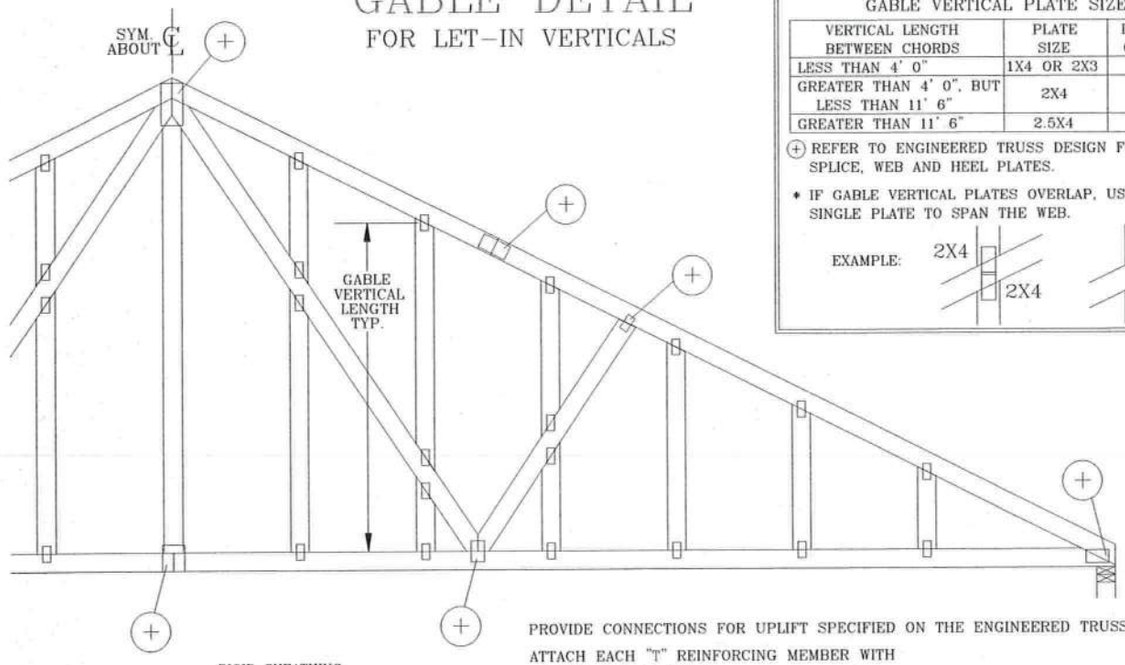

GABLE VERTICAL PLATE SIZES		
VERTICAL LENGTH BETWEEN CHORDS	PLATE SIZE	IF PLATES OVERLAP*
LESS THAN 4' 0"	1X4 OR 2X3	2X8
GREATER THAN 4' 0", BUT LESS THAN 11' 6"	2X4	2X8
GREATER THAN 11' 6"	2.5X4	2.5X8

(+) REFER TO ENGINEERED TRUSS DESIGN FOR PEAK, SPLICE, WEB AND HEEL PLATES.

* IF GABLE VERTICAL PLATES OVERLAP, USE A SINGLE PLATE TO SPAN THE WEB.

EXAMPLE:

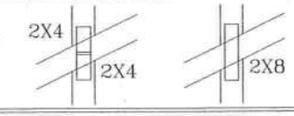

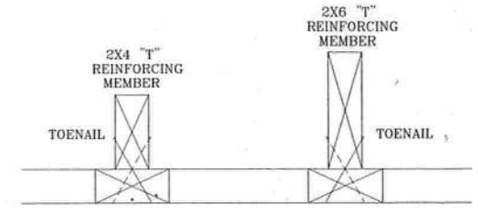

TO CONVERT FROM "L" TO "T" REINFORCING MEMBERS, MULTIPLY "T" FACTOR BY LENGTH (BASED ON GABLE VERTICAL SPECIES, GRADE AND SPACING) FOR (1) 2X4 "L" BRACE, GROUP A, OBTAINED FROM THE APPROPRIATE ALPINE GABLE DETAIL FOR ASCE OR SBCCI WIND LOAD.

MAXIMUM ALLOWABLE "T" REINFORCED GABLE VERTICAL LENGTH IS 14' FROM TOP TO BOTTOM CHORD.

WEB LENGTH INCREASE W/ "T" BRACE

WIND SPEED AND MRH	"T" REINF. MBR. SIZE	SBCCI	ASCE
110 MPH	2x4	10 %	10 %
15 FT	2x6	40 %	50 %
110 MPH	2x4	10 %	10 %
30 FT	2x6	50 %	50 %
100 MPH	2x4	10 %	10 %
15 FT	2x6	30 %	50 %
100 MPH	2x4	10 %	10 %
30 FT	2x6	40 %	40 %
90 MPH	2x4	20 %	10 %
15 FT	2x6	20 %	40 %
90 MPH	2x4	10 %	10 %
30 FT	2x6	30 %	50 %
80 MPH	2x4	10 %	20 %
15 FT	2x6	10 %	30 %
80 MPH	2x4	20 %	10 %
30 FT	2x6	20 %	40 %
70 MPH	2x4	0 %	20 %
15 FT	2x6	0 %	20 %
70 MPH	2x4	10 %	20 %
30 FT	2x6	10 %	30 %

EXAMPLE:
ASCE WIND SPEED = 100 MPH
MEAN ROOF HEIGHT = 30 FT
GABLE VERTICAL = 24" O.C. SP #3
"T" REINFORCING MEMBER SIZE = 2X4
"T" BRACE INCREASE (FROM ABOVE) = 10% = 1.10
(1) 2X4 "L" BRACE LENGTH = 6' 7"
MAXIMUM "T" REINFORCED GABLE VERTICAL LENGTH
1.10 x 6' 7" = 7' 3"

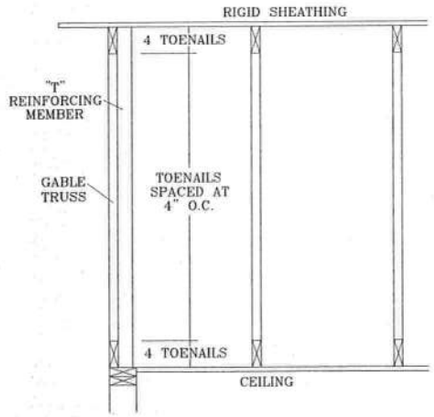

PROVIDE CONNECTIONS FOR UPLIFT SPECIFIED ON THE ENGINEERED TRUSS DESIGN.

ATTACH EACH "T" REINFORCING MEMBER WITH
HAND DRIVEN NAILS:
10d COMMON TOENAILS AT 4" O.C. PLUS (4) 16d COMMON TOENAILS IN TOP AND BOTTOM CHORD.
GUN DRIVEN NAILS – 0.131" X 3":
TOENAILS AT 4" O.C. PLUS (4) TOENAILS IN TOP AND BOTTOM CHORD.

THIS DETAIL TO BE USED WITH THE APPROPRIATE ALPINE GABLE DETAIL FOR ASCE OR SBCCI WIND LOAD.
ASCE 7-93 GABLE DETAIL DRAWINGS
A11015EN1103, A10015EN1103, A09015EN1103, A08015EN1103, A07015EN1103
A11030EN1103, A10030EN1103, A09030EN1103, A08030EN1103, A07030EN1103
ASCE 7-98 GABLE DETAIL DRAWINGS
A13015EC1103, A12015EC1103, A11015EC1103, A10015EC1103, A08515EC1103
A13030EC1103, A12030EC1103, A11030EC1103, A10030EC1103, A08530EC1103
SBCCI GABLE DETAIL DRAWINGS
S11015EN1103, S10015EN1103, S09015EN1103, S08015EN1103, S07015EN1103
S11030EN1103, S10030EN1103, S09030EN1103, S08030EN1103, S07030EN1103

SEE APPROPRIATE ALPINE GABLE DETAIL (ASCE OR SBCCI WIND LOAD) FOR MAXIMUM UNREINFORCED GABLE VERTICAL LENGTH.

THIS DRAWING REPLACES DRAWINGS GAB98117 876,719 & HC26294035

ALPINE
ALPINE ENGINEERED PRODUCTS, INC.
POMPANO BEACH, FLORIDA

WARNING TRUSSES REQUIRE EXTREME CARE IN FABRICATING, HANDLING, SHIPPING, INSTALLING AND BRACING. REFER TO BCSI 1-03 (BUILDING COMPONENT SAFETY INFORMATION), PUBLISHED BY TPI (TRUSS PLATE INSTITUTE, 583 D'ONOFRIO DR., SUITE 200, MADISON, WI. 53719) AND WTCA (WOOD TRUSS COUNCIL OF AMERICA, 6300 ENTERPRISE LN, MADISON, WI 53719) FOR SAFETY PRACTICES PRIOR TO PERFORMING THESE FUNCTIONS. UNLESS OTHERWISE INDICATED, TOP CHORD SHALL HAVE PROPERLY ATTACHED STRUCTURAL PANELS AND BOTTOM CHORD SHALL HAVE A PROPERLY ATTACHED RIGID CEILING.

IMPORTANT FURNISH COPY OF THIS DESIGN TO INSTALLATION CONTRACTOR. ALPINE ENGINEERED PRODUCTS, INC., SHALL NOT BE RESPONSIBLE FOR ANY DEVIATION FROM THIS DESIGN; ANY FAILURE TO BUILD THE TRUSS IN CONFORMANCE WITH TPI; OR FABRICATING, HANDLING, SHIPPING, INSTALLING & BRACING OF TRUSSES. DESIGN CONFORMS WITH APPLICABLE PROVISIONS OF NDS (NATIONAL DESIGN SPEC. BY AF&PA) AND TPI. ALPINE CONNECTOR PLATES ARE MADE OF 20/18/16GA (W,H/S/K) ASTM A653 GRADE 40/60 (W,K/H,S) GALV. STEEL. APPLY PLATES TO EACH FACE OF TRUSS AND, UNLESS OTHERWISE LOCATED ON THIS DESIGN, POSITION PER DRAWINGS 160A-Z. ANY INSPECTION OF PLATES FOLLOWED BY (I) SHALL BE PER ANNEX A3 OF TPI 1-2002 SEC. 3. A SEAL ON THIS DRAWING INDICATES ACCEPTANCE OF PROFESSIONAL ENGINEERING RESPONSIBILITY SOLELY FOR THE TRUSS COMPONENT DESIGN SHOWN. THE SUITABILITY AND USE OF THIS COMPONENT FOR ANY BUILDING IS THE RESPONSIBILITY OF THE BUILDING DESIGNER, PER ANSI/TPI 1 SEC. 2.

Sep 12, 05

DENISE RUTLEDGE LICENSE No. 58752 STATE OF FLORIDA PROFESSIONAL ENGINEER

MAX TOT. LD. 60 PSF
DUR. FAC. ANY
MAX SPACING 24.0"

REF	LET-IN VERT
DATE	01/16/04
DRWG	GBLLETIN1103
-ENG	DLJ/KAR

PIGGYBACK DETAIL

100 MPH WIND, 30.00 FT MEAN HGT, ASCE 7-02, CLOSED BLDG, LOCATED ANYWHERE IN ROOF, CAT II, EXP C, WIND TC DL=5.0 PSF, WIND BC DL=5.0 PSF.

80 MPH WIND, 30.00 FT MEAN HGT, SBC, ENCLOSED BLDG, LOCATED ANYWHERE IN ROOF WIND TC DL=5.0 PSF, WIND BC DL=5.0 PSF.

100 MPH WIND, 30.00 FT MEAN HGT, ASCE 7-98, CLOSED BLDG, LOCATED ANYWHERE IN ROOF, CAT II, EXP. C, WIND TC DL=5.0 PSF, WIND BC DL=5.0 PSF.

NOTE: TOP CHORDS OF TRUSSES SUPPORTING PIGGYBACK CAP TRUSSES MUST BE ADEQUATLY BRACED BY SHEATHING OR PURLINS. PROVIDE DIAGONAL BRACING OR OTHER SUITABLE ANCHORAGE TO PERMANENTLY RESTRAIN PURLINS.

DETAIL A

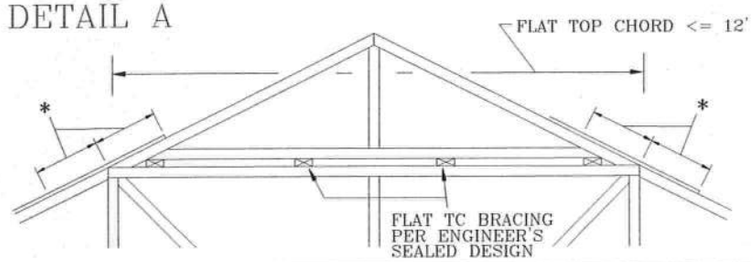

PIGGYBACK CAP TRUSS TOENAILED TO ALL TOP CHORD BRACING WITH (2) 10d COMMON (0.148"x3") NAILS.

* 12" MIN RIGID SHEATHING OVERLAP WITH 8d COMMON (0.131"x2.5") OR GUN NAILS IN OVERLAP ZONE SPACED AT 4" O.C.

DETAIL B

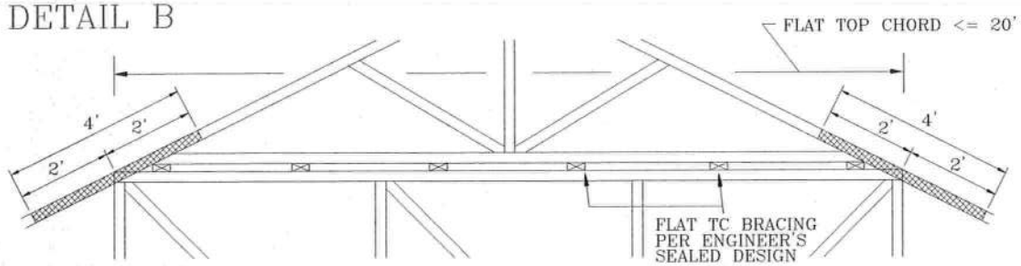

PIGGYBACK CAP TRUSS TOENAILED TO ALL TOP CHORD BRACING WITH (2) 10d COMMON (0.148"X3") NAILS AND SECURED WITH 2X4 #3 GRADE SCAB (1 SIDE ONLY) ATTACHED WITH 10d COMMON NAILS AT 4" O.C.

DETAIL C

CAP TRUSS TOENAILED TO TOP CHORD BRACING AND SECURED WITH 3X8 TRULOX PLATES (EACH FACE) AT EACH END AND AT 1/3 POINTS. CIRCLED NUMBER INDICATES REQUIRED NUMBER OF 0.120" X 1.375" NAILS PER FACE. SEE DRAWING 160TL FOR TRULOX INFORMATION.

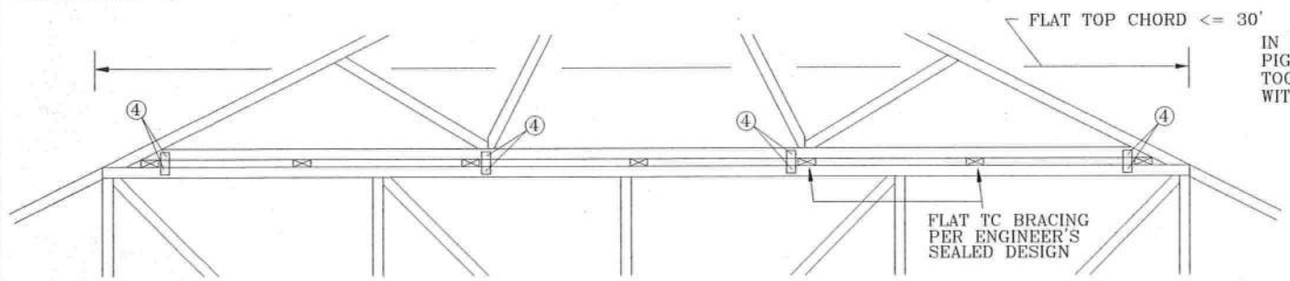

IN LIEU OF TRULOX CONNECTORS, ALPINE 62PB SPECIAL PIGGYBACK CONNECTORS MAY BE USED. SHOP APPLY TOOTHED PORTION, FIELD ATTACH TO MATING TRUSS WITH (4) 0.120" X 0.375" NAILS MINIMUM EACH FACE.

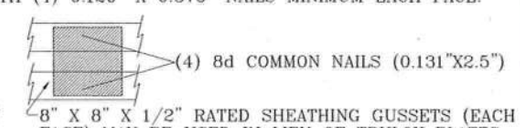

8" X 8" X 1/2" RATED SHEATHING GUSSETS (EACH FACE) MAY BE USED IN LIEU OF TRULOX PLATES, ATTACH WITH (8) 8d COMMON NAILS PER GUSSET, (4) IN CAP BC AND (4) IN BASE TRUSS FLAT TC.

THIS DRAWING REPLACES DRAWINGS 581,670 & 961,860

ALPINE

ALPINE ENGINEERED PRODUCTS, INC.
POMPANO BEACH, FLORIDA

WARNING TRUSSES REQUIRE EXTREME CARE IN FABRICATING, HANDLING, SHIPPING, INSTALLING AND BRACING. REFER TO BCSI 1-03 (BUILDING COMPONENT SAFETY INFORMATION), PUBLISHED BY TPI (TRUSS PLATE INSTITUTE, 583 D'ONOFRIO DR., SUITE 200, MADISON, WI. 53719) AND WTCA (WOOD TRUSS COUNCIL OF AMERICA, 6300 ENTERPRISE LN, MADISON, WI 53719) FOR SAFETY PRACTICES PRIOR TO PERFORMING THESE FUNCTIONS. UNLESS OTHERWISE INDICATED, TOP CHORD SHALL HAVE PROPERLY ATTACHED STRUCTURAL PANELS AND BOTTOM CHORD SHALL HAVE A PROPERLY ATTACHED RIGID CEILING.

IMPORTANT FURNISH COPY OF THIS DESIGN TO INSTALLATION CONTRACTOR. ALPINE ENGINEERED PRODUCTS, INC., SHALL NOT BE RESPONSIBLE FOR ANY DEVIATION FROM THIS DESIGN, ANY FAILURE TO BUILD THE TRUSS IN CONFORMANCE WITH TPI, OR FABRICATING, HANDLING, SHIPPING, INSTALLING & BRACING OF TRUSSES. DESIGN CONFORMS WITH APPLICABLE PROVISIONS OF NDS (NATIONAL DESIGN SPEC. BY AF&PA) AND TPI. ALPINE CONNECTOR PLATES ARE MADE OF 20/18/16GA (W,H/S/K) ASTM A653 GRADE 40/60 (W,K/H,S) GALV. STEEL. APPLY PLATES TO EACH FACE OF TRUSS AND, UNLESS OTHERWISE LOCATED ON THIS DESIGN, POSITION PER DRAWINGS 160A-Z. ANY INSPECTION OF PLATES FOLLOWED BY (I) SHALL BE PER ANNEX A3 OF TPI 1-2002 SEC. 3. A SEAL ON THIS DRAWING INDICATES ACCEPTANCE OF PROFESSIONAL ENGINEERING RESPONSIBILITY SOLELY FOR THE TRUSS COMPONENT DESIGN SHOWN. THE SUITABILITY AND USE OF THIS COMPONENT FOR ANY BUILDING IS THE RESPONSIBILITY OF THE BUILDING DESIGNER, PER ANSI/TPI 1 SEC. 2.

Sep 15, 2005

DENISE RUTLEDGE
LICENSE
No. 58752
STATE OF
FLORIDA
PROFESSIONAL ENGINEER

TC LL		PSF
TC DL		PSF
BC DL		PSF
BC LL		PSF
TOT. LD.	MAX 60	PSF
DUR. FAC.	1.15	
SPACING	24.0"	

REF	PIGGYBACK
DATE	04/14/05
DRWG	PIGBACKA0405
-ENG	DLJ/KAR

ASCE 7-98: 110 MPH WIND SPEED, 30' MEAN HEIGHT, ENCLOSED, I = 1.00, EXPOSURE C

MAX GABLE VERTICAL LENGTH

2X4 GABLE VERTICAL SPACING	SPECIES	BRACE GRADE	NO BRACES	(1) 1X4 "L" BRACE * GROUP A	(1) 1X4 "L" BRACE * GROUP B	(1) 2X4 "L" BRACE * GROUP A	(1) 2X4 "L" BRACE * GROUP B	(2) 2X4 "L" BRACE ** GROUP A	(2) 2X4 "L" BRACE ** GROUP B	(1) 2X6 "L" BRACE * GROUP A	(1) 2X6 "L" BRACE * GROUP B	(2) 2X6 "L" BRACE ** GROUP A	(2) 2X6 "L" BRACE ** GROUP B
24" O.C.	SPF HF	#1 / #2	3' 8"	6' 4"	6' 6"	7' 6"	7' 8"	8' 11"	9' 2"	11' 9"	12' 1"	14' 0"	14' 0"
		#3	3' 7"	5' 5"	5' 5"	7' 2"	7' 2"	8' 11"	8' 11"	11' 2"	11' 2"	14' 0"	14' 0"
		STUD	3' 7"	5' 5"	5' 5"	7' 1"	7' 1"	8' 11"	8' 11"	11' 1"	11' 1"	14' 0"	14' 0"
		STANDARD	3' 7"	4' 8"	4' 8"	6' 1"	6' 1"	8' 3"	8' 3"	9' 6"	9' 6"	12' 11"	12' 11"
	SP DFL	#1	4' 0"	6' 4"	6' 10"	7' 6"	8' 1"	8' 11"	9' 7"	11' 9"	12' 8"	14' 0"	14' 0"
		#2	3' 11"	6' 4"	6' 10"	7' 6"	8' 1"	8' 11"	9' 7"	11' 9"	12' 8"	14' 0"	14' 0"
		#3	3' 9"	5' 7"	5' 7"	7' 4"	7' 4"	8' 11"	9' 5"	11' 5"	11' 5"	14' 0"	14' 0"
		STUD	3' 9"	5' 6"	5' 6"	7' 3"	7' 3"	8' 11"	9' 5"	11' 4"	11' 4"	14' 0"	14' 0"
		STANDARD	3' 8"	4' 9"	4' 9"	6' 3"	6' 3"	8' 5"	8' 5"	9' 9"	9' 9"	13' 3"	14' 0"
16" O.C.	SPF HF	#1 / #2	4' 2"	7' 3"	7' 5"	8' 7"	8' 10"	10' 3"	10' 6"	13' 5"	13' 10"	14' 0"	14' 0"
		#3	4' 1"	6' 8"	6' 8"	8' 7"	8' 7"	10' 3"	10' 3"	13' 5"	13' 5"	14' 0"	14' 0"
		STUD	4' 1"	8' 0"	8' 0"	8' 7"	8' 7"	10' 3"	10' 3"	13' 5"	13' 5"	14' 0"	14' 0"
		STANDARD	4' 1"	5' 8"	5' 8"	7' 6"	7' 6"	10' 1"	10' 1"	11' 8"	11' 8"	14' 0"	14' 0"
	SP DFL	#1	4' 7"	7' 3"	7' 9"	8' 7"	9' 3"	10' 3"	11' 0"	13' 5"	14' 0"	14' 0"	14' 0"
		#2	4' 6"	7' 3"	7' 9"	8' 7"	9' 3"	10' 3"	11' 0"	13' 5"	14' 0"	14' 0"	14' 0"
		#3	4' 4"	6' 10"	6' 10"	8' 7"	9' 0"	10' 3"	10' 9"	13' 5"	14' 0"	14' 0"	14' 0"
		STUD	4' 4"	6' 9"	6' 9"	8' 7"	8' 11"	10' 3"	10' 9"	13' 5"	14' 0"	14' 0"	14' 0"
		STANDARD	4' 2"	5' 10"	5' 10"	7' 8"	7' 8"	10' 3"	10' 4"	11' 11"	11' 11"	14' 0"	14' 0"
12" O.C.	SPF HF	#1 / #2	4' 7"	8' 0"	8' 2"	9' 5"	9' 8"	11' 3"	11' 7"	14' 0"	14' 0"	14' 0"	14' 0"
		#3	4' 6"	7' 8"	7' 8"	9' 5"	9' 5"	11' 3"	11' 3"	14' 0"	14' 0"	14' 0"	14' 0"
		STUD	4' 6"	7' 8"	7' 8"	9' 5"	9' 5"	11' 3"	11' 3"	14' 0"	14' 0"	14' 0"	14' 0"
		STANDARD	4' 6"	6' 7"	6' 7"	8' 8"	8' 8"	11' 3"	11' 3"	13' 6"	13' 6"	14' 0"	14' 0"
	SP DFL	#1	5' 1"	8' 0"	8' 7"	9' 5"	10' 2"	11' 3"	12' 1"	14' 0"	14' 0"	14' 0"	14' 0"
		#2	4' 11"	8' 0"	8' 7"	9' 5"	10' 2"	11' 3"	12' 1"	14' 0"	14' 0"	14' 0"	14' 0"
		#3	4' 9"	7' 11"	7' 11"	9' 5"	9' 11"	11' 3"	11' 10"	14' 0"	14' 0"	14' 0"	14' 0"
		STUD	4' 9"	7' 9"	7' 9"	9' 5"	9' 11"	11' 3"	11' 10"	14' 0"	14' 0"	14' 0"	14' 0"
		STANDARD	4' 7"	6' 9"	6' 9"	8' 10"	8' 10"	11' 3"	11' 7"	13' 10"	13' 10"	14' 0"	14' 0"

BRACING GROUP SPECIES AND GRADES:

GROUP A:

SPRUCE-PINE-FIR

#1 / #2	STANDARD
#3	STUD

HEM-FIR

#2	STUD
#3	STANDARD

DOUGLAS FIR-LARCH

#3
STUD
STANDARD

SOUTHERN PINE

#3
STUD
STANDARD

GROUP B:

HEM-FIR

#1 & BTR
#1

SOUTHERN PINE

#1
#2

DOUGLAS FIR-LARCH

#1
#2

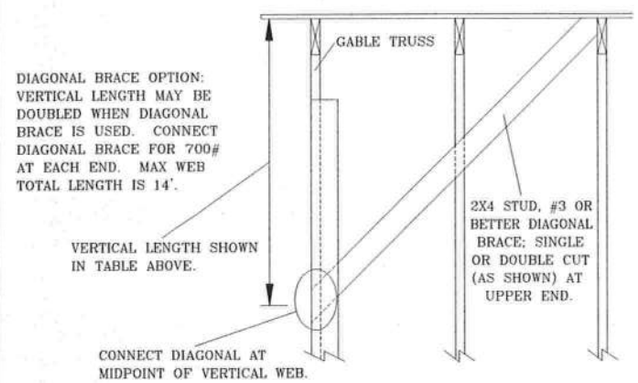

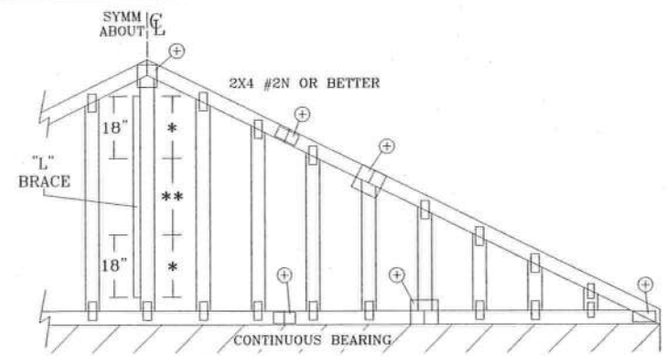

REFER TO CHART ABOVE FOR MAX GABLE VERTICAL LENGTH.

GABLE TRUSS DETAIL NOTES:

LIVE LOAD DEFLECTION CRITERIA IS L/240.

PROVIDE UPLIFT CONNECTIONS FOR 100 PLF OVER CONTINUOUS BEARING (5 PSF TC DEAD LOAD).

GABLE END SUPPORTS LOAD FROM 4' 0" OUTLOOKERS WITH 2' 0" OVERHANG, OR 12" PLYWOOD OVERHANG.

ATTACH EACH "L" BRACE WITH 10d NAILS.
* FOR (1) "L" BRACE: SPACE NAILS AT 2" O.C. IN 18" END ZONES AND 4" O.C. BETWEEN ZONES.
** FOR (2) "L" BRACES: SPACE NAILS AT 3" O.C. IN 18" END ZONES AND 6" O.C. BETWEEN ZONES.

"L" BRACING MUST BE A MINIMUM OF 80% OF WEB MEMBER LENGTH.

GABLE VERTICAL PLATE SIZES

VERTICAL LENGTH	NO SPLICE
LESS THAN 4' 0"	1X4 OR 2X3
GREATER THAN 4' 0", BUT LESS THAN 11' 6"	2X4
GREATER THAN 11' 6"	2.5X4

+ REFER TO COMMON TRUSS DESIGN FOR PEAK, SPLICE, AND HEEL PLATES.

ALPINE

ALPINE ENGINEERED PRODUCTS, INC.
POMPANO BEACH, FLORIDA

WARNING TRUSSES REQUIRE EXTREME CARE IN FABRICATING, HANDLING, SHIPPING, INSTALLING AND BRACING. REFER TO BCSI 1-03 (BUILDING COMPONENT SAFETY INFORMATION), PUBLISHED BY TPI (TRUSS PLATE INSTITUTE, 583 D'ONOFRIO DR., SUITE 200, MADISON, WI. 53719) AND WTCA (WOOD TRUSS COUNCIL OF AMERICA, 6300 ENTERPRISE LN, MADISON, WI 53719) FOR SAFETY PRACTICES PRIOR TO PERFORMING THESE FUNCTIONS. UNLESS OTHERWISE INDICATED, TOP CHORD SHALL HAVE PROPERLY ATTACHED STRUCTURAL PANELS AND BOTTOM CHORD SHALL HAVE A PROPERLY ATTACHED RIGID CEILING.

IMPORTANT FURNISH COPY OF THIS DESIGN TO INSTALLATION CONTRACTOR. ALPINE ENGINEERED PRODUCTS, INC., SHALL NOT BE RESPONSIBLE FOR ANY DEVIATION FROM THIS DESIGN; ANY FAILURE TO BUILD THE TRUSS IN CONFORMANCE WITH TPI; OR FABRICATING, HANDLING, SHIPPING, INSTALLING & BRACING OF TRUSSES. DESIGN CONFORMS WITH APPLICABLE PROVISIONS OF NDS (NATIONAL DESIGN SPEC. BY AF&PA) AND TPI. ALPINE CONNECTOR PLATES ARE MADE OF 20/18/16GA (W,H/S/K) ASTM A653 GRADE 40/60 (W,X/H,S) GALV. STEEL. APPLY PLATES TO EACH FACE OF TRUSS AND, UNLESS OTHERWISE LOCATED ON THIS DESIGN, POSITION PER DRAWINGS 160A-Z. ANY INSPECTION OF PLATES FOLLOWED BY (I) SHALL BE PER ANNEX A3 OF TPI 1-2002 SEC. 3. A SEAL ON THIS DRAWING INDICATES ACCEPTANCE OF PROFESSIONAL ENGINEERING RESPONSIBILITY SOLELY FOR THE TRUSS COMPONENT DESIGN SHOWN. THE SUITABILITY AND USE OF THIS COMPONENT FOR ANY BUILDING IS THE RESPONSIBILITY OF THE BUILDING DESIGNER, PER ANSI/TPI 1 SEC. 2.

DENISE RUTLEDGE
LICENSE
No. 58752
STATE OF FLORIDA
PROFESSIONAL ENGINEER

Sep 16 '05

MAX. TOT. LD. 60 PSF

MAX. SPACING 24.0"

REF	ASCE7-98-GAB11030
DATE	11/26/03
DRWG	A11030EC1103
-ENG	

CERTIFIED TESTING LABORATORIES

Architectural Division • 7252 Narcoossee Rd. • Orlando, Fl. 32822
(407) 384-7744 • Fax (407) 384-7751
Web Site: www.ctlarch.com
E-mail: ctlarch.com

Report Number: CTLA-991W-1-AWT
Report Date: February 18, 2003

STRUCTURAL PERFORMANCE TEST REPORT

Client: ACTION WINDOOR TECHNOLOGY INC
1312 W. CROSBY ROAD
CARROLLTON, TX 75006

Product Type and Series: **AWT Series 3950 Vinyl Fin Frame Single Hung Window with Reinforced Sash Top Rail, Stiles & Meeting Rail H-R40 (36"x 72")**

Test Specifications: AAMA/NWWDA 101/I.S.2-97 "Voluntary Specifications for Aluminum, Vinyl (PVC) and Wood Windows and Glass Doors"

Frame: Vinyl Fin frame measured 35.50" wide x 71.50" high overall. Mitered corner weld construction. Fixed meeting rail secured to each frame jamb with one (1) #8 x 2" PH., PH. screw.

Ventilator: Operable sash measured 33.375" wide x 35.25" high overall. Mitered corner weld construction. Clear lite measured 31.5625" high x 33.5625" high. Fixed lite measured 32.50" wide x 33.4375"high.

Weather Stripping: One (1) strip of woolpile .220" high with integral plastic fin frame sill. One (1) strip of woolpile .250" high with integral plastic fin sash top rail exterior. One (1) strip of woolpile .250" high each sash stile exterior leg. One (1) strip of woolpile .250" high with integral plastic fin each sash stile interior leg. One (1) strip of foam filled bulb weatherstrip sash bottom rail.

Hardware & Location: Two (2) metallic sweep locks located on sash top rail approx 8" from each end of rail. Two (2) metallic keepers located on fixed meeting rail. One (1) tilt latch at each end of sash top rail. One (1) block and tackle at each frame jamb. One (1) pivot bar at each end of sash bottom rail.

Glazing: 5/8" insulated annealed glass consisting of .125" glass .375" air space with swiggle .125" glass. Sash exterior glazed. Fixed lite interior glazed adhesive foam strip backbedding and vinyl snap in glazing bead.

Sealant: A silicone type sealant was used on sill and to seal specimen to test buck.

Weep System: Weep notch measuring 2.25" x leg height located each end of sill weeping to the exterior
Muntins: N/A
Reinforcement: Fixed meeting rail has one (1) piece of extruded aluminum reinforcement measuring .662" wide x .755" high x .099" thick x full length. Top rail, and sash stiles has one (1) piece of extruded aluminum reinforcement measuring .590" wide x .995" high x .115" thick x full length.

Additional Description: N/A

Screen: Roll formed aluminum frame, fiberglass mesh with vinyl spline. Two (2) metallic retainer clips and two (2) metallic plungers. Corners secured with plastic corner keys

Installation: Twenty-six (26) 1.75" roofing nails were used to secure the specimen to the wood test buck. Five (5) were located in head and sill measuring 4", 13", 21", 29", and 33" from left jamb. Eight (8) were located in each jamb measuring 4.50", 14.25", 24", 32.75", 42", 57.25", 60.50" and 70" from sill.

Surface Finish: White Vinyl

Comment: Nominal 2 mil polyethylene film was used to seal against air leakage during structural loads. The film was used in a manner that did not influence the test results

Performance Test Results

Paragraph No	Title of Test	Method	Measured	Allowed
2.1.2	Air Infiltration @1.57 psf	ASTM E283-91	.18 cfm/ft²	.34 cfm/ft²
	The tested specimen meets or exceeds the performance levels specified in AAMA/NWWDA 101/I.S.2-97. Results recorded in two (2) decimals at the clients request. Unit tested with shims installed under cam locks.			
2.1.3	Water Resistance @ 5.0 gph/ft²	ASTM E547-93 Four (4) five (5) minute cycles	No Entry	No Entry
	WTP= 6.75 psf	ASTM E331-93 Fifteen (15) minute duration	No Entry	No Entry
	Unit tested with insect screen.			
2.1.3	Water Resistance @ 5.0 gph/ft²	ASTM E547-93 Four (4) five (5) minute cycles	No Entry	No Entry
	WTP= 6 psf	ASTM E331-93 Fifteen (15) minute duration	No Entry	No Entry
	Unit tested without insect screen.			
2.1.4.2	Uniform Load Structural Permanent Deformation	ASTM E330-90 Ten (10) second load		
	@ 60 psf positive		.015"	.134"
	@ 60 psf negative		.005"	.134"
2.1.8	Forced Entry Resistance	AAMA 1302.5-76		
	Test A		0"	½"
	Test B		0"	½"
	Test C		0"	½"
	Test D, E and F		0"	½"
	Test G		0"	½"

Performance Test Results (continued)

Paragraph No	Title of Test		Method	Measured	Allowed
2.2.2.5.1	Operating Force Sash		AAMA/NWWDA 101/I.S.2-97	18 lbs.	30 lbs.
2.2.2.5.2	Deglazing		ASTM E987-88		
	Top Rail	70 lbs.		.039" = 7.8%<100%	
	Bottom Rail	70 lbs.		.038" = 7.6%<100%	
	Left Side	50 lbs.		.050" = 10%<100%	
	Right Side	50 lbs.		.035" = 7.0%<100%	
2.1.7	Welded Corner Test		AAMA/NWWDA 101/ IS2-97	Passed	

Test Date November 21, 2002

Test Completion Date: November 21, 2002

Remarks: Detailed drawings were available for laboratory records and comparison to the test specimen at the time of this report. A copy of this report along with representative sections of the test specimen will be retained by CTL for a period of four (4) years. The results obtained apply only to the specimen tested.

This test report does not constitute certification of this product, but only that the above test results were obtained using the designated test methods and they indicate compliance with the performance requirements (paragraphs as listed) of the above referenced specifications.

Certified Testing Laboratories assumes that all information provided by the client is accurate and that the physical and chemical properties of the components are as stated by the manufacturer.

Certified Testing Laboratories, Inc.

James W. Blakely
Vice President
Architectural Division

cc: Action Windoor Technology Inc. (3)
File (1)

Report Number: ETC-04-034-14644.0
Test Start Date: 04/10/03
Test Finish Date: 03/16/04
Report Date: 03/18/04
Expiration Date: 03/18/08

Fenestration Structural Test Report

Rendered To:

Vinyl Building Products, Inc.
One Raritan Road
Oakland, NJ 07436

Series/Model

2900 Horizontal Slider (OX)

Description: The product tested was a vinyl Horizontal Sliding window. The test specimen was glazed with 5/8-inch thick insulating glass units constructed with double strength annealed glass. The frame size was 69 inches wide by 48 inches high by 2-3/4 inches deep. See Appendix A.

Test Specification: ANSI/AAMA/NWWDA 101/I.S.2

Summary of Results

Overall Design Pressure	35.0 psf
Air Leakage Rate	0.18 scfm/ft^2
Maximum Water Pressure Achieved	5.25 psf
Maximum Structural Pressure Achieved	60.0 psf
Forced Entry Resistance – (ASTM)	Grade 10
Product Designation	**H–R35 69 x 48**

Specifications: The test specimen was evaluated in accordance with ANSI/AAMA/NWWDA 101/I.S.2 "Voluntary Specification for Aluminum, Vinyl and Wood Windows and Glass Doors". Sections 1, 2 and 4 only. All performance specifications in this standard shall be met for full compliance to the standard and for product certification, labeling or represented as conforming to this standard.

Referenced Test Reports: NONE

Note – The test data in any section below with an "RTR" comment have not been obtained from this specimen but from the Referenced Test Report with a specimen of the same or larger size and identical construction.

Design Pressure (DP): The product tested herein has been first evaluated to the Gateway pressure in the referenced specification for the performance class rating achieved.

Gateway Performance Tests

Specification Paragraph	Title of Test	Results	Allowed
2.1.2	*Air Infiltration – ASTM E283*		
	Test Pressure - 1.57 psf	0.18 scfm/ft^2	0.30 scfm/ft^2
	The tested specimen exceeds the performance levels specified in ANSI/AAMA/NWWDA 101/I.S.2 for air infiltration.		
2.1.3	*Water Resistance -- ASTM E547*		
	5 gal/hr-ft^2 – 4 Test cycles – 24 Minutes		
	Design Pressure - 15.0 psf		
	Test Pressure – 2.86 psf		
	With and Without Screen	Pass	No Leakage
2.1.4.2	*Uniform Structural Load - ASTM E330*		
	Design Pressure - 15.0 psf		
	Test Pressure		
	Positive Load – 22.5 psf (150% x DP)	0.033 in.	0.177 in.
	Negative Load – 22.5 psf (150% x DP)	0.020 in.	0.177 in.
	Note: Measurement taken after load from center of the meeting stile		
2.1.7	*Corner Weld*		
	Frame – 4 Corners	Pass	< 100%
	Sashes – 4 Corners	Pass	< 100%
2.1.8	*Forced Entry Resistance - ASTM F588*		
	Lock/Tool Manipulation	Pass	No Entry
	Tests A1 through A7	Pass	No Entry
	Lock/Tool Manipulation	Pass	No Entry
2.2.1.6.1	*Operating Force -- No Standardized Method*		
	Right Sash -- Open/Close	18/18 lbf	20 lbf
2.2.1.6.2	*Deglazing – ASTM E987*		
	Right Sash: Left Stile - 70 lbf	0.0%	<100%
	Right Stile - 70 lbf	0.0%	<100%
	Top Rail - 50 lbf	0.0%	<100%
	Bottom Rail - 50 lbf	0.0%	<100%

Optional Performance Tests

The manufacturer specified herein has successfully achieved all the required criteria in Section 2 of the referenced specification for the Gateway size of the achieved Performance Rating and has further successfully tested the product to higher performance levels as indicated below.

Design Pressure (DP): The product tested herein has been additionally evaluated to the Design Pressure referenced below.

Specification Paragraph	Title of Test	Results	Allowed
4.3	*Water Resistance - ASTM E547*		
	5 gal/hr-ft^2 – 4 Test cycles – 24 Minutes		
	Design Pressure - 35.0 psf		
	Test Pressure – 5.25 psf (15% x DP)		
	With and Without Screen	Pass	No Leakage
4.4	*Uniform Structural Load - ASTM E330*		
	Design Pressure - 40.0 psf		
	Test Pressure		
	Positive Load – 60.0 psf (150% x DP)	0.069 in.	0.177 in.
	Negative Load – 60.0 psf (150% x DP)	0.066 in.	0.177 in.
	Note: Measurement taken after load from center of meeting stile		

Conditions, Terms, and General Notes Regarding These Tests

The product tested **Has Been** compared to the detailed drawings, bill of materials and fabrication information supplied by the client so named herein. Our analysis, which includes dimensional and component description comparisons, indicate the tested product and engineering information supplied by the client **"Are Equivalent"**. **See Appendix A.** The report and representative samples will be retained for four years from the date of initial test.

These test results were obtained by employing all requirements of the designated test methods with no deviations. The test results and specimen supplied for testing are in compliance with the referenced specifications.

The test results are specific to the product tested by this laboratory and of the sample supplied by the client named herein, and they relate to no other product either manufactured by the client, a Fabricator of the client or of installed field performance.

This report does not constitute an AAMA or NWWDA certified product under the certification programs of these organizations. The program administrator of these programs and organizations may only grant product certification.

ETC Laboratories makes no opinions or endorsements regarding this product and its performance. This report may not be reproduced or quoted in partial form without the expressed written approval of ETC Laboratories.

No conclusions of any kind regarding the adequacy of the glass in the test specimen may be drawn from the test. Procedure "A" in ASTM E330 was used for this test.

ETC Laboratories letters, reports, its name or insignia or mark are for the exclusive use of the client so named herein and any other use is strictly prohibited. The report, letters and the name of ETC Laboratories, its seal or mark shall not be used in any circumstance to the general public or in any advertising.

Limitation of Liability: Due diligence was used in rendering this professional opinion. By acceptance of this report, this client agrees to hold harmless and indemnify ETC Laboratories, its employees and offices and owners against all claims and demands of any kind whatsoever, which arise out of or in any manner connected with the performance of work referred to herein.

FOR ETC LABORATORIES

Mark Sennett
AWS Supervisor

Arthur Murray, VP
Manager, Wind Engineering Laboratory

TEST REPORT

ETC Laboratories

Architectural

ELK Premium Roofing

March 6, 2002

Subject: Elk Product Approval Information

All Prestique® and Capstone® products manufactured in Tuscaloosa, AL are certified under the Miami – Dade County Building Code Office (BCCO). These products also meet the requirements for the Florida Building Code since they are MD approved. The following test protocols must be passed by each of the products in order for MD product certification:
ASTM D3462
PA 100 (110 mph uplift and wind driven rain resistance)
PA 107 (Modified ASTM D3161 - 110 mph wind uplift resistance)

The nailing patterns that were used during the PA 100 and PA 107 wind test protocols for the Prestique and Capstone products are listed below. Also listed below are the Miami – Dade Notice of Acceptance Numbers (NOA).

Raised Profile, Prestique High Definition, Prestique 25, or Prestique 30 –
PA 100 = 4 nails
PA 107 = 5 nails
MD NOA# = 01-1226.04

Prestique I 35 or Prestique I* –
PA 100 = 4 nails
PA 107 = 5 nails
MD NOA# = 01-1226.05

Prestique Plus or Prestique Gallery Collection* –
PA 100 = 4 nails
PA 107 = 4 nails
MD NOA# = 01-1226.03

Capstone*
PA 100 = 4 Nails
PA 107 = 4 Nails
MD NOA# = 01-0523.01

* As per the Elk Limited Warranty, six nails are required for the Elk high wind warranty.

If there are any questions please contact:

Mike Reed – Technical Manager
(205) 342-0287

or

Daniel DeJarnette – QA Engineer
(205) 342-0298

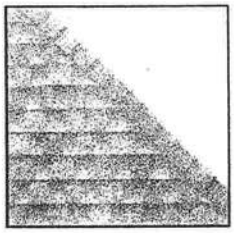

PRESTIQUE®
HIGH DEFINITION®

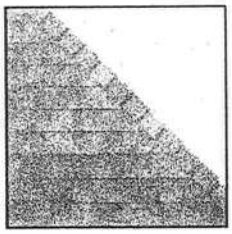

RAISED PROFILE™

High Definition

Product size	13¼"x 39⅜"
Exposure	5⅝"
Pieces/Bundle	16
Bundles/Square	4/98.5 sq.ft.
Squares/Pallet	11

50-year limited warranty period: non-prorated coverage for shingles and application labor for the initial 5 years, plus an option for transferability*; prorated coverage for application labor and shingles for balance of limited warranty period; 5-year limited wind warranty*.

Product size	13¼"x 38¾"
Exposure	5⅝"
Pieces/Bundle	22
Bundles/Square	3/100 sq.ft.
Squares/Pallet	16

30-year limited warranty period: non-prorated coverage for shingles and application labor for the initial 5 years, plus an option for transferability*; prorated coverage for application labor and shingles for balance of limited warranty period; 5-year limited wind warranty*.

High Definition

Product size	13¼"x 39⅜"
Exposure	5⅝"
Pieces/Bundle	16
Bundles/Square	4/98.5 sq.ft.
Squares/Pallet	14

40-year limited warranty period: non-prorated coverage for shingles and application labor for the initial 5 years, plus an option for transferability*; prorated coverage for application labor and shingles for balance of limited warranty period; 5-year limited wind warranty*.

HIP AND RIDGE SHINGLES

Size: 12"x 12"
Exposure: 6⅝"
Pieces/Bundle: 45
Coverage: 4 Bundles = 100 linear feet

High Definition

Product size	13¼"x 38¾"
Exposure	5⅝"
Pieces/Bundle	22
Bundles/Square	3/100 sq.ft.
Squares/Pallet	16

30-year limited warranty period: non-prorated coverage for shingles and application labor for the initial 5 years, plus an option for transferability*; prorated coverage for application labor and shingles for balance of limited warranty period; 5-year limited wind warranty*.

52 Bundles/Pallet
18 Pallets/Truck
936 Bundles/Truck
19 Pieces/Bundle
1 Bundle = 120.33 linear feet

Available Colors: Antique Slate, Weatheredwood, Shakewood, Sablewood, Hickory, Barkwood**, Forest Green, Wedgewood**, Birchwood**, Sandalwood. Gallery Collection: Balsam Forest™, Weathered Sage™, Sienna Sunset™.

All Prestique, Raised Profile and Seal-A-Ridge roofing products contain Elk WindGuard® sealant. WindGuard activates with the sun's heat, bonding shingles into a wind and weather resistant cover that resists blow-offs and leaks.

Check for availability with built-in StainGuard® treatment to inhibit the discoloration of roofing granules caused by the growth of certain types of algae. Not available in Sablewood.

All Prestique and Raised Profile shingles meet UL® Wind Resistant (UL 997) and Class "A" Fire Ratings (UL 790); and ASTM Specifications D 3018, Type-I; D 3161, Type-I; E 108 and the requirements of ASTM D 3462.

All Prestique and Raised Profile shingles meet the latest Metro Dade building code requirements.

***See actual limited warranty for conditions and limitations.**
****Check for product availability.**

SPECIFICATIONS

SCOPE: Work includes furnishing all labor, materials and equipment necessary to complete installation of (name) shingles specified herein. Color shall be (name of color). Hip and ridge type to be Elk Seal-A-Ridge with formula *FLX*.

All exposed metal surfaces (flashing, vents, etc.) to be painted with matching Elk roof accessory paint.

PREPARATION OF ROOF DECK: Roof deck to be dry, well-seasoned 1" x 6" (25.4mm x 152.4mm) boards; exterior-grade plywood (exposure 1 rated sheathing) at least 3/8" (9.525mm) thick conforming to the specifications of the American Plywood Association; 7/16" (11.074mm) oriented strandboard; or chipboard. Most fire retardant plywood decks are NOT approved substrates for Elk shingles. Consult Elk Field Service for application specifications over other decks and other slopes.

MATERIALS: Underlayment for standard roof slopes, 4" per foot (101.6/304.8mm) or greater: apply non-perforated No. 15 or 30 asphalt-saturated felt underlayment. For low slopes [4" per foot (101.6/304.8mm) to a minimum of 2" per foot (50.8/304.8mm)], use two plies of underlayment overlapped a minimum of 19". Fasteners shall be of sufficient length and holding power for securing material as required by the application instructions printed on shingle wrapper.

For areas where algae is a problem, shingles shall be (name) with StainGuard treatment, as manufactured by the Elk Tuscaloosa plant. Hip and ridge type to be Seal-A-Ridge with formula *FLX* with StainGuard treatment.

Complete application instructions are published by Elk and printed on the back of every shingle bundle. All warranties are contingent upon the correct installation as shown on the instructions. These instructions are the minimum required to meet Elk application requirements. In some areas, building codes may require additional application techniques or methods beyond our instructions. In these cases, the local code must be followed. Under no circumstances will Elk accept application requirements less than those contained in its application instructions.

For specifications in CSI format, call 800.354.SPEC (7732) or e-mail specinfo@elkcorp.com.

SOUTHEAST & ATLANTIC OFFICE:
800.945.5551

CORPORATE HEADQUARTERS:
800.354.7732

PLANT LOCATION:
800.945.5545

ELK
www.elkcorp.com

DIRECTIONS FOR APPLICATION

Please read carefully. Failure to follow these instructions may void the product warranty.
See specific application instructions for Prestique® Plus and Prestique Gallery Collection™ 110 MPH, and Prestique I 90 MPH limited wind warranty requirements.

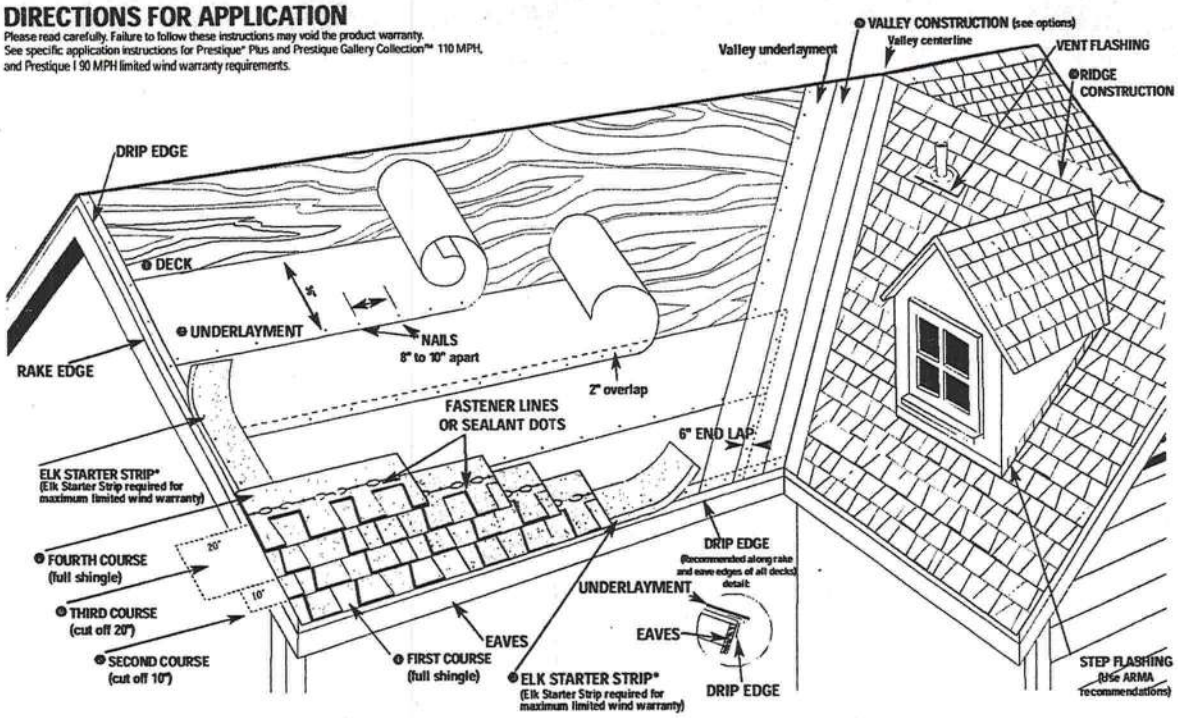

❺ **VALLEY CONSTRUCTION OPTION** (California Open and California Closed are also acceptable) NOTE: For complete ARMA valley installation details, see ARMA Residential Asphalt Roofing Manual.

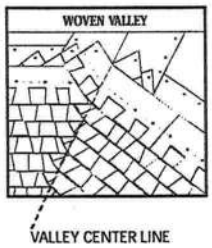

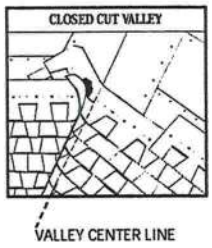

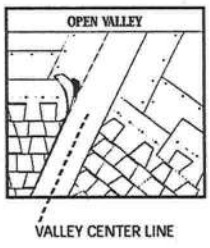

DIRECTIONS FOR APPLICATION

These application instructions are the minimum required to meet Elk's application requirements. Your failure to follow these instructions may void the product warranty. In some areas, the building codes may require additional application techniques or methods beyond our instructions. In these cases, the local code must be followed. Under no circumstances will Elk accept application requirements that are less than those printed here. Shingles should not be jammed tightly together. All attics should be properly ventilated. Note: It is not necessary to remove tape on back of shingle.

❶ DECK PREPARATION

Roof decks should be dry, well-seasoned 1" x 6" boards or exterior grade plywood minimum 3/8" thick and conform to the specifications of the American Plywood Association or 7/16" oriented strandboard, or 7/16" chipboard.

❷ UNDERLAYMENT

Apply underlayment (Non-Perforated No. 15 or 30 asphalt saturated felt). Cover drip edge at eaves only.

For low slope (2/12 up to 4/12), completely cover the deck with two plies of underlayment overlapping a minimum of 19". Begin by fastening a 19" wide strip of underlayment placed along the eaves. Place a full 36" wide sheet over the starter, horizontally placed along the eaves and completely overlapping the starter strip.

EAVE FLASHING FOR ICE DAMS (ASK A ROOFING CONTRACTOR, REFER TO ARMA MANUAL OR CHECK LOCAL CODES)

For standard slope (4/12 to less than 21/12), use coated roll roofing of no less than 50 pounds over the felt underlayment extending from the eave edge to a point at least 24" beyond the inside wall of the living space below or one layer of a self-adhered eave and flashing membrane.

For low slope (2/12 up to 4/12), use a continuous layer of asphalt plastic cement between the two plies of underlayment from the eave edge up roof to a point at least 24" beyond the inside wall of the living space below or one layer of a self-adhered eave and flashing membrane.

Consult the Elk Field Service Department for application specifications over other decks and other slopes.

❸ STARTER SHINGLE COURSE

USE AN ELK STARTER STRIP OR A STRIP SHINGLE INVERTED WITH THE HEADLAP APPLIED AT THE EAVE EDGE. With at least 4" trimmed from the end of the first shingle, start at the rake edge overhanging the eave 1/2" to 3/4". Fasten 2" from the lower edge and 1" from each side. Shingles may be applied with a course alignment of 45° on the roof.

❶ FIRST COURSE

Start at rake and continue course with full shingles laid flush with the starter course.

❷ SECOND COURSE

Start at the rake with the shingle having 10" trimmed off and continue across roof with full shingles.

❸ THIRD COURSE

Start at the rake with the shingle having 20" trimmed off and continue across roof with full shingles.

❹ FOURTH COURSE

Start at the rake and continue with full shingles across roof.

FIFTH AND SUCCEEDING COURSES.

Repeat application as shown for second, third, and fourth courses. Do not rack shingles straight up the roof.

❺ VALLEY CONSTRUCTION

Open, woven and closed cut valleys are acceptable when applied by Asphalt Roofing Manufacturing Association (ARMA) recommended procedures. For metal valleys, use 36" wide vertical underlayment prior to applying 18" metal flashing (secure edge with nails). No nails are to be within 6" of valley center.

❽ RIDGE CONSTRUCTION

For ridge construction use Class "A" Seal-A-Ridge® with formula *FLX*™ (See ridge package for installation instructions.)

FASTENERS

While nailing is the preferred method for Elk shingles, Elk will accept fastening methods according to the following instructions.

Always nail or staple through the fastener line or on products without fastener lines, nail or staple between and in line with sealant dots.

NAILS: Corrosive resistant, 3/8" head, minimum 12-gauge roofing nails. Elk recommends 1-1/4" for new roofs and 1-1/2" for roof-overs. In cases where you are applying shingles to a roof that has an exposed overhang, for new roofs only, 3/4" ring shank nails are allowed to be used from the eave's edge to a point up the roof that is past the outside wall line. 1" ring shank nails allowed for re-roof.

STAPLES: Corrosive resistant, 16-gauge minimum, crown width minimum of 15/16". Note: An improperly adjusted staple gun can result in raised staples that can cause a fish-mouthed appearance and can prevent sealing.

Fasteners should be long enough to obtain 3/4" deck penetration or penetration through deck, whichever is less.

MANSARD APPLICATIONS

Correct fastening is critical to the performance of the roof. For slopes exceeding 60° (or 21/12) use six fasteners per shingle. Locate fasteners in the fastener area 1" from each side edge with the remaining four fasteners equally spaced along the length of the double thickness (laminated) area. Only fastening methods according to the above instructions are acceptable.

LIMITED WIND WARRANTY

- For a Limited Wind Warranty, all Prestique and Raised Profile™ shingles must be applied with 4 properly placed fasteners, or in the case of mansard applications, 6 properly placed fasteners per shingle.
- For a Limited Wind Warranty up to 110 MPH for Prestique Gallery Collection or Prestique Plus or 90 MPH for Prestique I, shingles must be applied with 6 properly placed NAILS per shingle. SHINGLES APPLIED WITH STAPLES WILL NOT QUALIFY FOR THIS ENHANCED LIMITED WIND WARRANTY. Also, Elk Starter Strip shingles must be applied at the eaves and rake edges to qualify Prestique Plus, Prestique Gallery Collection and Prestique I shingles for this enhanced Limited Wind Warranty. Under no circumstances should the Elk Shingles or the Elk Starter Strip overhang the eaves or rake edge more than 3/4 of an inch.

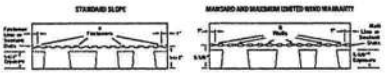

HELP STOP BLOW-OFFS AND CALL-BACKS

A minimum of four fasteners must be driven into the DOUBLE THICKNESS (laminated) area of the shingle. Nails or staples must be placed along – and through – the "fastener line" or on products without fastener lines, nail or staple between and in line with sealant dots. CAUTION: Do not use fastener line for shingle alignment.

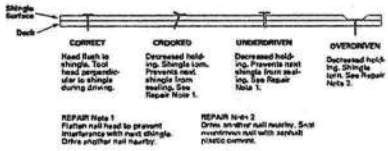

Refer to local codes which in some areas may require specific application techniques beyond those Elk has specified.
All Prestique and Raised Profile shingles have a U.L.® Wind Resistance Rating when applied in accordance with these instructions using nails or staples on re-roofs as well as new construction.

CAUTION TO WHOLESALER: Careless and improper storage or handling can harm fiberglass shingles. Keep these shingles completely covered, dry, reasonably cool, and protected from the weather. Do not store near various sources of heat. Do not store in direct sunlight until applied. DO NOT DOUBLE STACK. Systematically rotate all stock so that the material that has been stored the longest will be the first to be moved out.

ELK

www.elkcorp.com

333 Pfingsten Road
Northbrook, Illinois 60062-2096
United States Country Code (1)
(847) 272-8800
FAX No. (847) 272-8129
http://www.ul.com

Underwriters Laboratories Inc.®

March 4, 2002

GAF Materials Corporation
Mr Randall Ziegler
1361 Alps Road
Wayne, NJ 07470

Our Reference: R21

Subject: UL Listed products

Dear Mr Ziegler:

This is is response to your request to identify some of the products that are curently Listed with Underwriters Laboratories relating to various Standards. Following are those products:

Royal Sovereign®
Marquis®/Marquis® WeatherMax®
SLATELINE®
Grand canyon™
Grand Sequoia®
Country Mansion™
Country Estates™
Timberline 30™
Timberline Select™ 40
Timberline Ultra™
Sentinel®
The above products have been tested to ASTM D3462, Class A UL790/ASTM E108 and UL 997/ ASTM D3161(secured with 4 nails)with velocities up to 110 mph and have successfully met those test criteria.

If you have any questions please feel free to contact the writer.

Very truly yours,

Roger Anderson (Ext. 43283)
Senior Engineering Associate
Conformity Assessment Services- 3011E-NBK

Reviewed by,

Douglas C. Miller (Ext. 43262)
Engineering Group Leader
Conformity Assessment Services- 3011E-NBK

** TOTAL PAGE.01 **

GAF®
GAF MATERIALS CORPORATION

MARQUIS® WeatherMax® SHINGLES

ROYAL® SOVEREIGN® SHINGLES

SENTINEL® SHINGLES

APPLICATION INSTRUCTIONS

Note: These shingles must be nailed a nominal 5 5/8" (143mm) from bottom of shingles, not in or above self seal, as shown. Nails should remain unexposed.

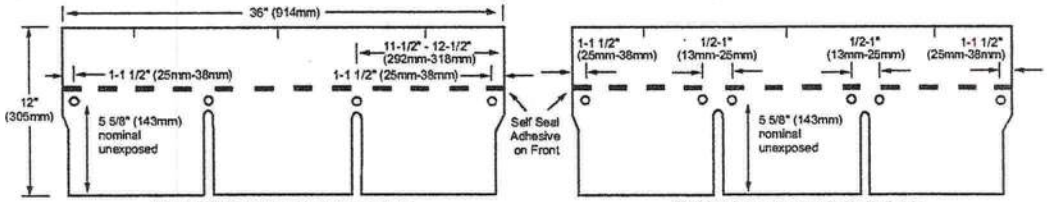

Standard Nailing Pattern - four nails per shingle

Six Nail Pattern - where required by local code

GENERAL INSTRUCTIONS

• **ROOF DECKS:** For use on new or reroofing work over well-seasoned, supported wood deck, tightly-constructed with maximum 6" (152mm) wide lumber, having adequate nail-holding capacity and smooth surface. Plywood decking as recommended by The Engineered Wood Assn. is acceptable. Plywood decks for Class A installations must be 3/8" (10mm) thick or greater with underlayments as noted below. Shingles must **not** be fastened directly to insulation or insulated deck unless authorized in writing by GAF Materials Corporation. Roof decks and existing surfacing material must be **dry** prior to application of shingles.

• **UNDERLAYMENT:** Underlayment is required on new construction and required for reroofing when old roof is removed from the deck. Use only "breather type" material like GAF Materials Corporation Shingle-Mate® Underlayment or equivalent. Underlayments must be installed flat, without wrinkles.

• **FASTENERS:** Use of nails is recommended. (Staple specifications and application instructions are available from GAF Materials Corporation, Contractor Services Dept., 1361 Alps Road, Wayne, NJ 07470.) Use only zinc coated steel or aluminum, 10-12 gauge, barbed, deformed or smooth shank roofing nails with heads 3/8" (10mm) to 7/16" (12mm) in diameter. Fasteners should be long enough to penetrate at least 3/4" (19mm) into wood decks or just through the plywood decks. Fasteners must be driven flush with the surface of the shingle. Over driving will damage the shingle. Raised fasteners will interfere with the sealing of the shingles. For normal installation, four fasteners must be installed per shingle, a nominal 5 5/8" (143mm) up from the bottom of the shingle. Fasteners must be installed approximately 1"- 1 1/2" (25-38mm) and 11 1/2"-12 1/2" (292-318mm) from each side.

• **WIND RESISTANT:** These shingles have a special thermal sealant that firmly bonds the shingles together after application when exposed to sun and warm temperatures. Shingles installed in Fall or Winter may not seal until the following Spring. If shingles are damaged by winds before sealing or are not exposed to adequate surface temperatures, or if the self-sealant gets dirty, the shingles may never seal. Failure to seal under these circumstances results from the nature of self-sealing shingles and is not a manufacturing defect. To insure immediate sealing, apply 2 quarter-sized dabs of shingle tab adhesive on the back of each tab, approximately 1" (25mm) from end and 1" (25mm) up from bottom of each tab corner. The shingle must be pressed firmly into the adhesive.

NOTE: Application of excess tab adhesive can cause blistering of the shingle.

For maximum wind resistance along rakes, cement shingles to underlayment and each other in a 4" (102mm) width of asphalt plastic roof cement.

NOTE: The film strips on the back of each shingle are to prevent sticking together of the shingles while in the bundle. Their removal is NOT required during application.

• **CANADIAN COLD WEATHER APPLICATIONS:** CSA A123.5-M90 mandates that shingles applied between September 1 and April 30 shall be adhered with a compatible field-applied adhesive. See Wind Resistant for GAF Materials Corporation's recommendations for the application of that adhesive.

• **MANSARD AND STEEP SLOPE APPLICATIONS:** For roof slopes greater than 21" (1750mm/m) per foot (do NOT use on vertical side walls), shingle sealing must be enhanced by hand sealing. After fastening the shingle in place, apply 2 quarter-sized dabs of shingle tab adhesive as indicated in Wind Resistant above. The shingle must be pressed firmly into the adhesive.

• **EXPOSURE:** 5" (127mm)

• **THROUGH VENTILATION:** All roof structures must be provided with through ventilation to prevent entrapment of moisture laden air behind roof sheathing. Ventilation provisions must at least meet or exceed current F.H.A., H.U.D. or local code minimum requirements.

• **NON-CORRODING METAL DRIP EDGES:** Recommended along rake and eave edges on all decks, especially plywood decks.

• **ASPHALT PLASTIC CEMENT:** For use as shingle tab adhesive. Must conform to ASTM D4586 Type I or II.

1 Underlayment: Standard Slope–4/12 (333mm/m) or more

Application of underlayment: Cover deck with one layer of underlayment installed without wrinkles. Use only enough nails to hold underlayment in place until covered by shingles.

Application of eave flashing: Install eave flashing such as GAF Materials Corporation Weather Watch® or StormGuard® Leak Barrier in localities where leaks may be caused by water backing up behind ice or debris dams. Eave flashing must overhang the roof edge by 3/8" (10mm) and extend 24" (610mm) beyond the inside wall line.

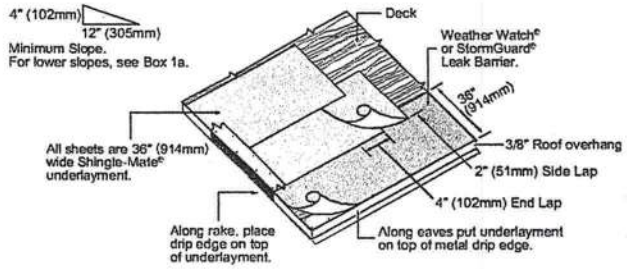

1a Underlayment: Low Slope 2/12-4/12 (167mm-333mm/m)

Application of underlayment and eave flashing: Completely cover the deck with two layers of underlayment as shown. Use only enough nails to hold underlayment in place until covered by shingles. Use blind nailing for eave flashings. At eaves and where ice dams can be expected, use one layer of GAF Materials Corporation Weather Watch® or StormGuard® Leak Barrier. Eave flashing must overhang the roof edge by 3/8" (10mm) and extend 24" (610mm) beyond the inside wall line. Where ice dams or debris dams are not expected, install 2 plies of Shingle-Mate® underlayment.

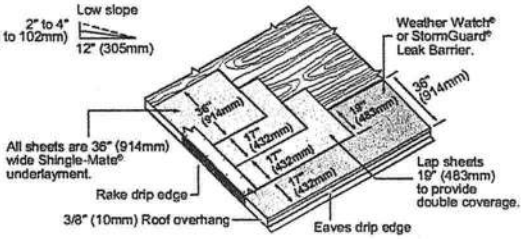

2 Starter Course

Use of any GAF MC 3-tab Shingle is recommended. Apply as shown.

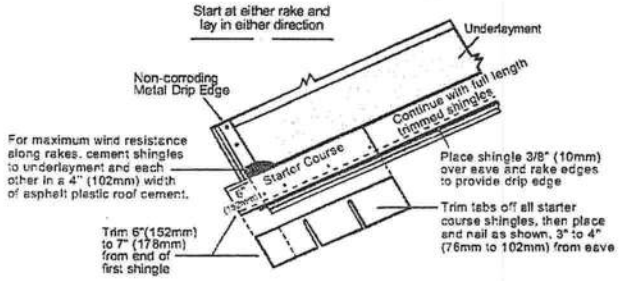

3 First Course

Start and continue with full shingles laid flush with the starter course. Shingles may be laid from left to right or right to left. DO NOT lay shingles straight up the roof since this procedure can cause an incorrect color blend on the roof and may damage the shingles.

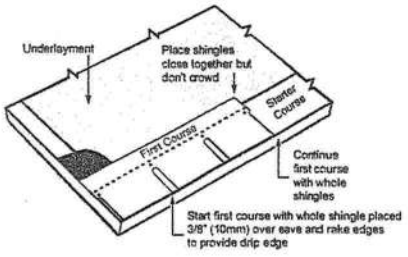

4 Second Course

Start and continue second course and all even numbered courses as shown. Position the shingle on the top of the cutouts of the underlying shingle so that there will be 5" (127mm) of each shingle exposed. Strike a chalk line about every 6 courses to check parallel alignment with eaves. Factory applied self-sealing dots on lower courses are designed to seal down the shingle tabs in an upper course.

NOTE: Shingles may be laid from either left or right hand side. Start at either rake edge with shingles having 6" (152mm) trimmed from rake.

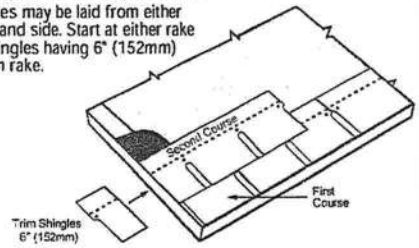

5 Hip and Ridge

Use GAF hip & ridge shingles, or cut hip & ridge shingles from these full shingles, and apply as shown. Position laps away from prevailing wind direction.

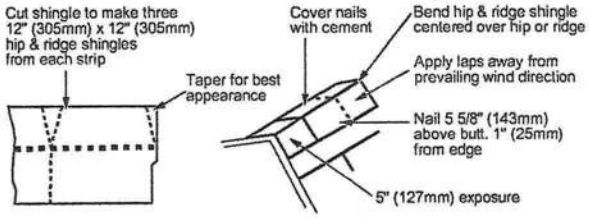

6 Wall Flashing (Sloped Roof to Vertical Wall)

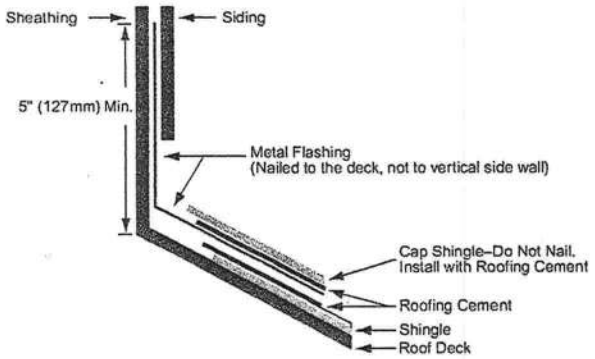

7 Chimney Flashing

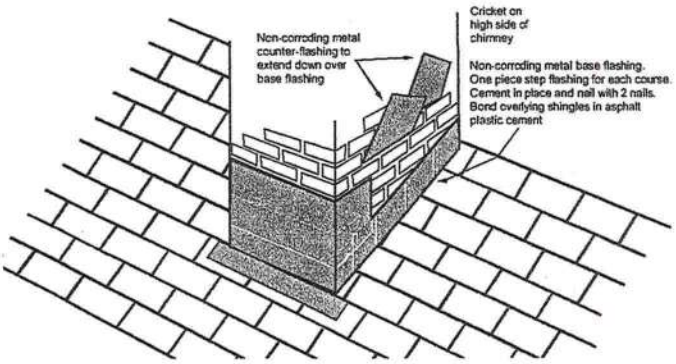

8 Valley Construction - Closed or Woven Valley

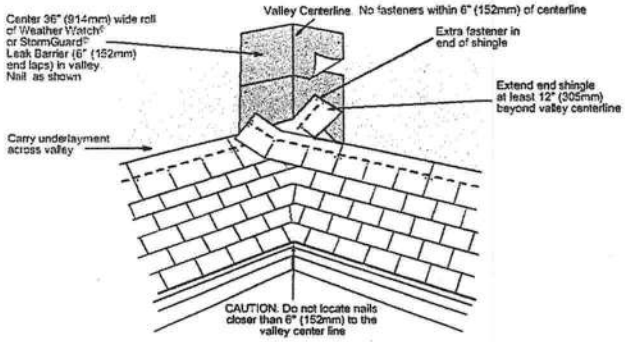

9 Valley Construction–Open Cut

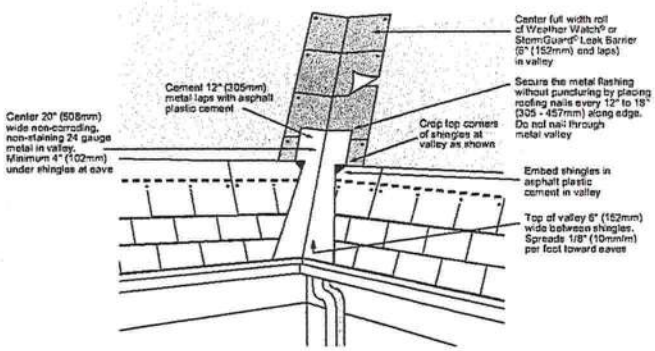

10 Valley Construction–Closed Cut

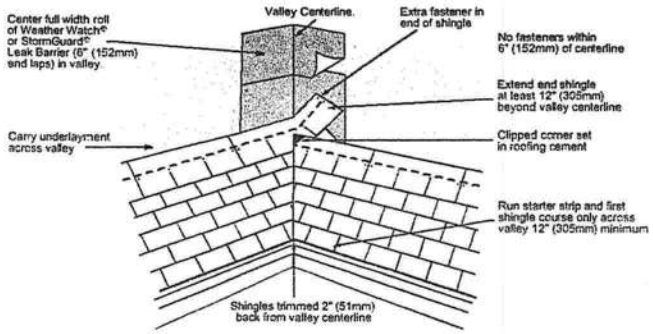

Precautionary Notes

These shingles are fiberglass, self-sealing asphalt shingles. Because of the natural characteristics of the high quality waterproofing material used, these shingles will be stiff in cold weather and flexible in hot weather.

1. Bundles should not be dropped on edge nor should attempt be made to separate shingles by "breaking" over ridge or other bundles.
2. Handle carefully. Shingles can easily be broken in cold weather or their edges damaged in hot weather.
3. All exposed materials must be of Class A type.
4. Storage should be in a covered, ventilated area–maximum temperature 110°F (43°C.) Store on flat surface and use weight equalization boards if pallets are to be double stacked. Shingles must be protected from weather when stored at job site. Do not store near steam pipes, radiators, etc., or in sunlight. All rolled product must be stored on ends.
5. If shingles are to be applied during PROLONGED COLD periods or in areas where airborne dust or sand can be expected before sealing occurs, the shingles MUST be hand sealed. See Wind Resistant instructions.

Re-Roofing

If old asphalt shingles are to remain in place, nail down or cut away all loose, curled or lifted shingles; replace with new; and just before applying the new roofing, sweep the surface clean of all loose debris. Since any irregularities may show through the new shingles, be sure the underlying shingles provide a smooth surface. Fasteners must be of sufficient length to penetrate the wood deck at least 3/4" (19mm) or just through plywood. Follow other above instructions for application. *Note:* Shingles can be applied over wood shingles when precautions have been taken to provide an acceptable smooth surface. This includes cutting back old shingles at eaves and rakes and installing new wood edging strips as needed. Make surface smooth and use beveled wood strips if necessary. Install #30 underlayment to maintain Class A rating.

This product is sold with an express LIMITED WARRANTY only. A copy of the LIMITED WARRANTY stating its terms and restrictions is printed on the product wrapper or may be obtained from the distributor of this product or directly from GAF Materials Corporation. Any deviation from printed instructions shall be the responsibility of applicator and/or specifier.

GAF®

GAF MATERIALS CORPORATION

TIMBERLINE® Ultra® SHINGLES

TIMBERLINE® 40 SHINGLES TIMBERLINE® 30 SHINGLES

APPLICATION INSTRUCTIONS

Timberline® Series shingles come in either 36" (914mm) or 36-15/16" (938mm) lengths, depending on shingle brand. Application instructions apply to both.

These shingles must be nailed a nominal 5-5/8" (143mm) from bottom of shingles, as shown, to allow for penetration through the double ply area just above the tabs. Nails should remain unexposed.

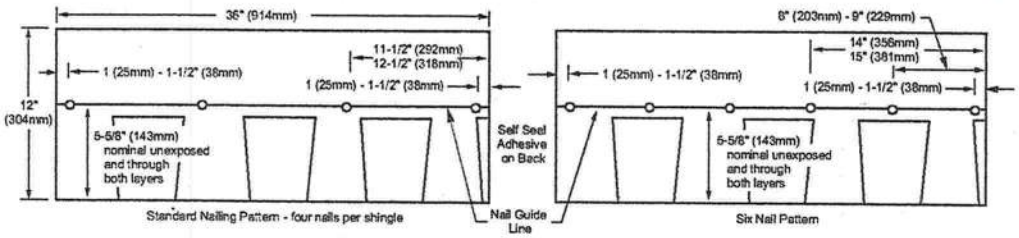

GENERAL INSTRUCTIONS

• **ROOF DECKS:** For use on new or reroofing work over well-seasoned, supported wood deck, tightly-constructed with maximum 6" (152mm) wide lumber, having adequate nail-holding capacity and smooth surface. Plywood decking as recommended by The Engineered Wood Assn. is acceptable. Plywood decks for Class A installations must be 3/8" (10mm) thick or greater with underlayments as noted below. Shingles must **not** be fastened directly to insulation or insulated deck unless authorized in writing by GAF Materials Corporation. Roof decks and existing surfacing material must be **dry** prior to application of shingles.

• **UNDERLAYMENT:** Underlayment beneath shingles has many benefits, including preventing wind driven rain from reaching the interior of the building and preventing sap in some wood decking from reacting with asphalt shingles. Underlayment is also required by many code bodies. Consult your local building department for its requirements. Where an underlayment is to be installed, a breather-type underlayment such as GAFMC's Shingle-Mate® underlayment is recommended. Underlayment must be installed flat, without wrinkles.

• **FASTENERS:** Use of nails is recommended. (Staple specifications and application instructions are available from GAF Materials Corporation, Contractor Services Dept., 1361 Alps Road, Wayne, NJ 07470.) Use only zinc coated steel or aluminum, 10-12 gauge, barbed, deformed or smooth shank roofing nails with heads 3/8" (10mm) to 7/16" (12mm) in diameter. Fasteners should be long enough to penetrate at least 3/4" (19mm) into wood decks or just through the plywood decks. Fasteners must be driven flush with the surface of the shingle. Over driving will damage the shingle. Raised fasteners will interfere with the sealing of the shingles. For normal installation, four fasteners must be installed per shingle, a nominal 5-5/8" (143mm) up from the bottom of the shingle, to penetrate both layers of the shingle. Fasteners must be installed approximately 1"- 1 1/2" (25-38mm) and 11-1/2"-12-1/2" (292-318mm) from each side.

• **WIND RESISTANT:** These shingles have a special thermal sealant that firmly bonds the shingles together after application when exposed to sun and warm temperatures. Shingles installed in Fall or Winter may not seal until the following Spring. If shingles are damaged by winds before sealing or are not exposed to adequate surface temperatures, or if the self-sealant gets dirty, the shingles may never seal. Failure to seal under these circumstances results from the nature of self-sealing shingles and is not a manufacturing defect. To insure immediate sealing, apply 4 quarter-sized dabs of shingle tab adhesive on the back of the shingle 1" (25mm) and 13" (330mm) in from each side and 1" (25mm) up from bottom of the shingle. The shingle must be pressed firmly into the adhesive.

NOTE: Application of excess tab adhesive can cause blistering of the shingle.

For maximum wind resistance along rakes, cement shingles to underlayment and each other in a 4" (102mm) width of asphalt plastic roof cement.

NOTE: The film strips on the back of each shingle are to prevent sticking together of the shingles while in the bundle. Their removal is NOT required during application.

• **CANADIAN COLD WEATHER APPLICATIONS:** CSA 123.5-M90 mandates that shingles applied between September 1 and April 30 shall be adhered with a compatible field-applied adhesive. See Wind Resistant for GAF Materials Corporation's recommendations for the application of that adhesive.

• **MANSARD AND STEEP SLOPE APPLICATIONS:** For roof slopes greater than 21" (1750mm/m) per foot (do NOT use on vertical side walls), shingle sealing must be enhanced by hand sealing. After fastening the shingle in place, apply 4 quarter-sized dabs of shingle tab adhesive as indicated in Wind Resistant above. The shingle must be pressed firmly into the adhesive.

• **EXPOSURE:** 5" (127mm)

• **THROUGH VENTILATION:** All roof structures must be provided with through ventilation to prevent entrapment of moisture laden air behind roof sheathing. Ventilation provisions must at least meet or exceed current F.H.A., H.U.D. or local code minimum requirements.

• **NON-CORRODING METAL DRIP EDGES:** Recommended along rake and eave edges on all decks, especially plywood decks.

• **ASPHALT PLASTIC CEMENT:** For use as shingle tab adhesive. Must conform to ASTM D4586 Type I or II.

1 Underlayment: Standard Slope–4/12 (333mm/m) or more

Application of underlayment: Cover deck with one layer of underlayment installed without wrinkles. Use only enough nails to hold underlayment in place until covered by shingles.

Application of eave flashing: Install eave flashing such as GAF Materials Corporation Weather Watch® or StormGuard® Leak Barrier in localities where leaks may be caused by water backing up behind ice or debris dams. Eave flashing must overhang the roof edge by 3/8" (10mm) and extend 24" (610mm) beyond the inside wall line.

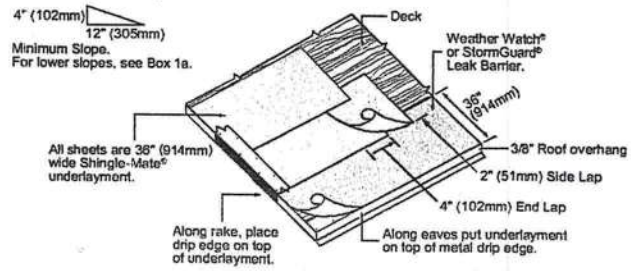

1a Underlayment: Low Slope 2/12-4/12 (167mm-333mm/m)

Application of underlayment and eave flashing: Completely cover the deck with two layers of underlayment as shown. Use only enough nails to hold underlayment in place until covered by shingles. Use blind nailing for eave flashings. At eaves and where ice dams can be expected, use one layer of GAF Materials Corporation Weather Watch® or StormGuard® Leak Barrier. Eave flashing must overhang the roof edge by 3/8" (10mm) and extend 24" (610mm) beyond the inside wall line. Where ice dams or debris dams are not expected, install 2 plies of Shingle-Mate® underlayment.

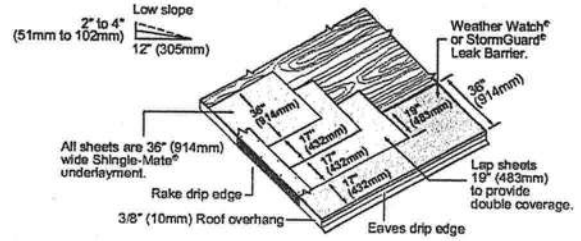

2 Starter Course

Apply as shown.

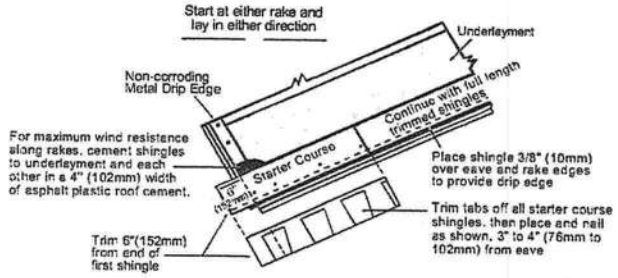

3 First Course

Start and continue with full shingles laid flush with the starter course. Shingles may be laid from left to right or right to left. DO NOT lay shingles straight up the roof since this procedure can cause an incorrect color blend on the roof and may damage the shingles.

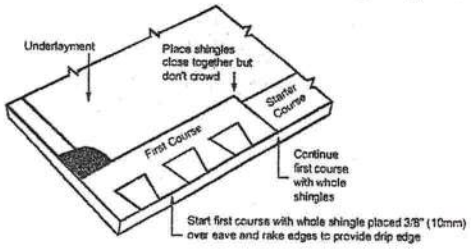

4 Second Course

Start and continue second course as shown. Trim 6" (152mm) from the end of the shingle. Position the shingles in the second and subsequent courses flush with the tops of the wide cutouts. This results in a 5" (127mm) exposure. Continue with full width shingles across the roof. Strike a chalk line about every 6 courses to check parallel alignment with eaves. NOTE: Shingles may be laid from either left or right hand side. Start at either rake edge with shingles having 6" (152mm) trimmed from rake.

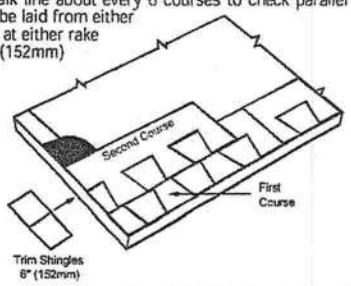

5 Third Course

Trim 11" (279mm) from the first shingle in the course then continue with full shingles across the roof.

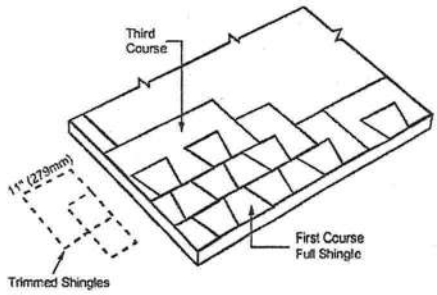

6 Fourth Course and Remaining Courses

Trim 17" (432 mm) from first shingle in the course, then continue with full shingles across the roof. Fifth and subsequent courses repeat full shingle instructions from Step 3.

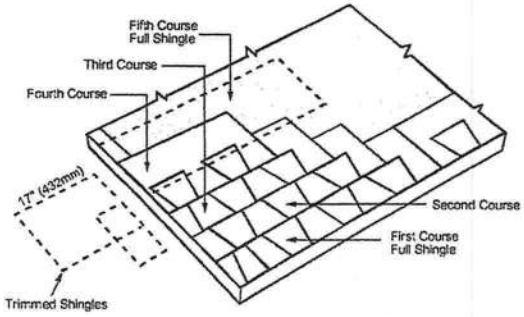

7 Hip and Ridge

For single layer application, use hip and ridge shingles and apply as shown. To enhance appearance, use GAF TIMBERTEX® or a double layer application of Universal Hip & Ridge. (One bundle of TIMBERTEX® Hip & Ridge covers 20 lineal ft.–6.1 meters.) For double application, start with triple thickness of precut Hip & Ridge shingles and continue remainder with double thickness. Fasten in same manner as single application shown. Apply laps away from prevailing wind direction.

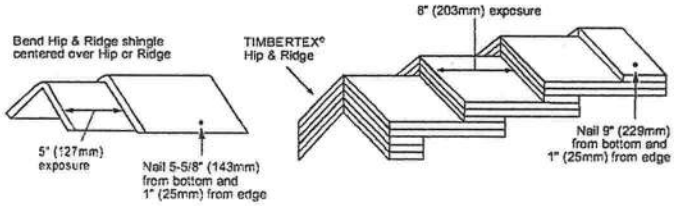

8 Wall Flashing (Sloped Roof to Vertical Wall)

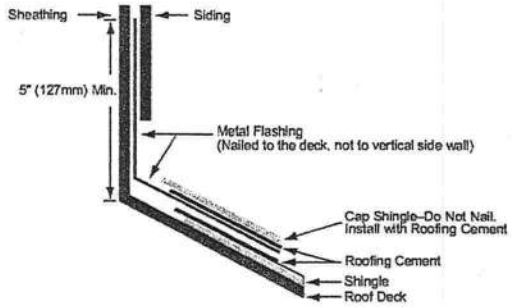

9 Chimney Flashing

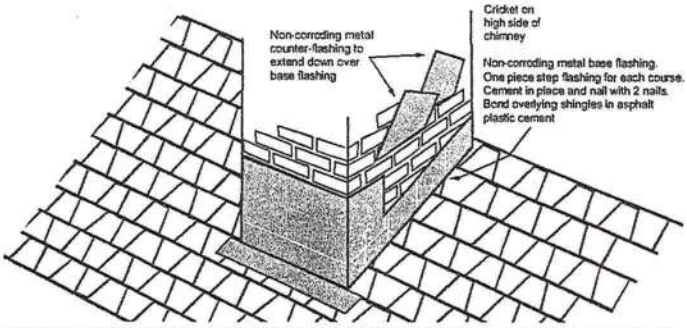

10 Valley Construction–Closed Cut

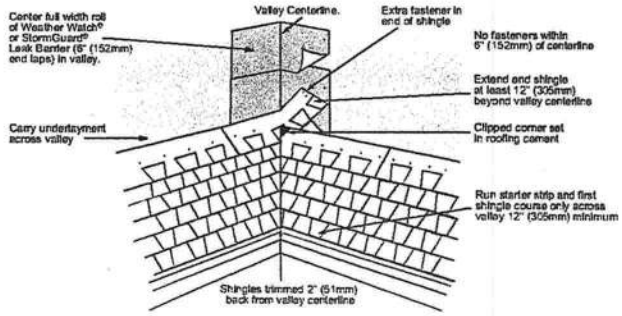

11 Valley Construction–Open

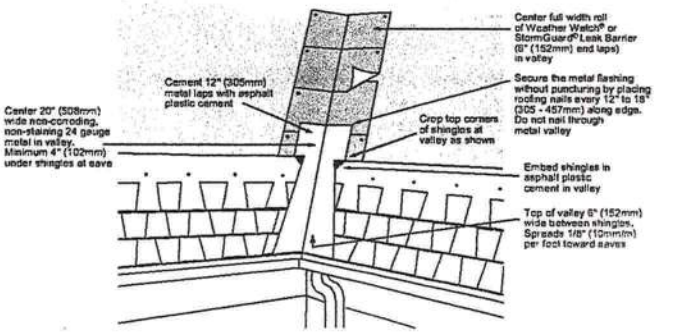

Precautionary Notes

Timberline® Series shingles are fiberglass, self-sealing asphalt shingles. Because of the natural characteristics of the high quality waterproofing material used, these shingles will be stiff in cold weather and flexible in hot weather.

1. Bundles should not be dropped on edge nor should attempt be made to separate shingles by "breaking" over ridge or other bundles.
2. Handle carefully. Shingles can easily be broken in cold weather or their edges damaged in hot weather.
3. All exposed materials must be of Class A type.
4. Storage should be in a covered, ventilated area–maximum temperature 110°F (43°C.) Store on flat surface and use weight equalization boards if pallets are to be double stacked. Shingles must be protected from weather when stored at job site. Do not store near steam pipes, radiators, etc., or in sunlight. All rolled product must be stored on ends.
5. If shingles are to be applied during PROLONGED COLD periods or in areas where airborne dust or sand can be expected before sealing occurs, the shingles MUST be hand sealed. See Wind Resistant instructions.

Re-Roofing

If old asphalt shingles are to remain in place, nail down or cut away all loose, curled or lifted shingles; replace with new; and just before applying the new roofing, sweep the surface clean of all loose debris. Since any irregularities may show through the new shingles, be sure the underlying shingles provide a smooth surface. Fasteners must be of sufficient length to penetrate the wood deck at least 3/4" (19mm) or just through plywood. Follow other above instructions for application.

Note: Shingles can be applied over wood shingles when precautions have been taken to provide an acceptable smooth surface. This includes cutting back old shingles at eaves and rakes and installing new wood edging strips as needed. Make surface smooth and use beveled wood strips if necessary. Install #30 underlayment to maintain Class A rating.

This product is sold with an express LIMITED WARRANTY only. A copy of the LIMITED WARRANTY stating its terms and restrictions is printed on the product wrapper or may be obtained from the distributor of this product or directly from GAF Materials Corporation. Any deviation from printed instructions shall be the responsibility of applicator and/or specifier.

10X8

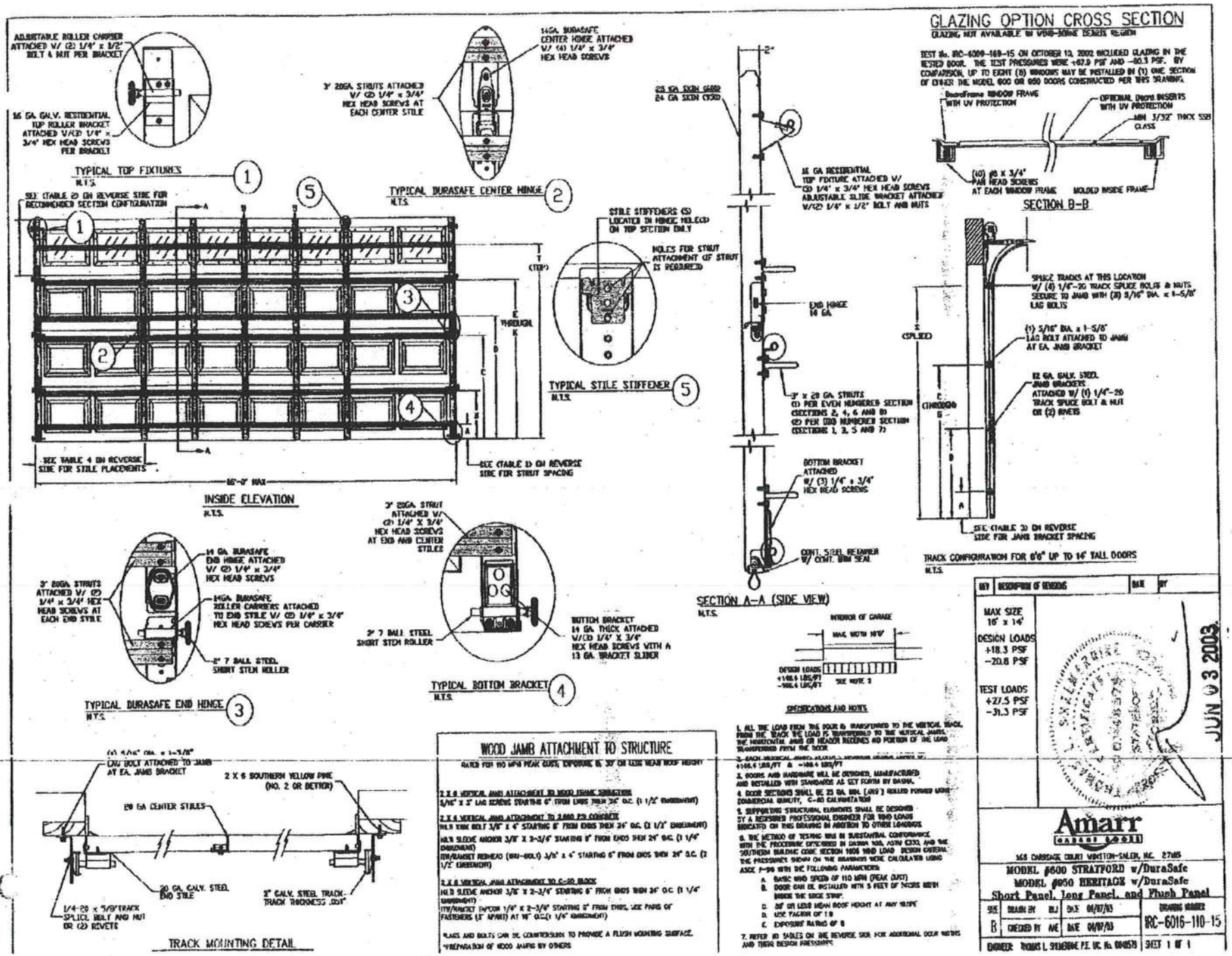
GLAZING OPTION CROSS SECTION
GLAZING NOT AVAILABLE IN WIND-BORNE DEBRIS REGION
TEST No. IRC-6309-169-15 ON OCTOBER 13, 2002 INCLUDED GLAZING IN THE TESTED DOOR. THE TEST PRESSURES WERE +67.0 PSF AND -80.3 PSF. BY COMPARISON, UP TO EIGHT (8) WINDOWS MAY BE INSTALLED IN (1) ONE SECTION OF EITHER THE MODEL 600 OR 650 DOORS CONSTRUCTED PER THIS DRAWING.
DuraFrame WINDOW FRAME WITH UV PROTECTION
OPTIONAL Decra INSERTS WITH UV PROTECTION
MIN 3/32" THICK SSB GLASS
(10) #8 x 3/4" PAN HEAD SCREWS AT EACH WINDOW FRAME
MOLDED INSIDE FRAME
SECTION B-B
SPLICE TRACKS AT THIS LOCATION W/ (4) 1/4"-20 TRACK SPLICE BOLTS & NUTS. SECURE TO JAMB WITH (8) 5/16" DIA. x 1-5/8" LAG BOLTS
(1) 5/16" DIA. x 1-5/8" LAG BOLT ATTACHED TO JAMB AT EA. JAMB BRACKET
22 GA. GALV. STEEL JAMB BRACKETS ATTACHED W/ (1) 1/4"-20 TRACK SPLICE BOLT & NUT OR (2) RIVETS
SEE (TABLE 3) ON REVERSE SIDE FOR JAMB BRACKET SPACING
TRACK CONFIGURATION FOR 8'6" UP TO 14' TALL DOORS
N.T.S.
ADJUSTABLE ROLLER CARRIER ATTACHED W/ (2) 1/4" x 1/2" BOLT & NUT PER BRACKET
16 GA. GALV. RESIDENTIAL TOP ROLLER BRACKET ATTACHED W/(3) 1/4" x 3/4" HEX HEAD SCREWS PER BRACKET
TYPICAL TOP FIXTURES
N.T.S.
1
14GA. DURASAFE CENTER HINGE ATTACHED W/ (4) 1/4" x 3/4" HEX HEAD SCREWS
3" 20GA. STRUTS ATTACHED W/ (2) 1/4" x 3/4" HEX HEAD SCREWS AT EACH CENTER STILE
TYPICAL DURASAFE CENTER HINGE
N.T.S.
2
SEE (TABLE 2) ON REVERSE SIDE FOR RECOMMENDED SECTION CONFIGURATION
INSIDE ELEVATION
N.T.S.
SEE TABLE 4 ON REVERSE SIDE FOR STILE PLACEMENTS
SEE (TABLE 1) ON REVERSE SIDE FOR STRUT SPACING
16'-0" MAX
STILE STIFFENERS (5) LOCATED IN HINGE HOLES (3) ON TOP SECTION ONLY
HOLES FOR STRUT ATTACHMENT OF STRUT IS REQUIRED
TYPICAL STILE STIFFENER
N.T.S.
5
25 GA. SKIN (6000)
24 GA. SKIN (7500)
16 GA RESIDENTIAL TOP FIXTURE ATTACHED W/ (3) 1/4" x 3/4" HEX HEAD SCREWS ADJUSTABLE SLIDE BRACKET ATTACHED W/(2) 1/4" x 1/2" BOLT AND NUTS
END HINGE 14 GA
3" x 20 GA. STRUTS (1) PER EVEN NUMBERED SECTION (SECTIONS 2, 4, 6 AND 8) (2) PER ODD NUMBERED SECTION (SECTIONS 1, 3, 5 AND 7)
BOTTOM BRACKET ATTACHED W/ (3) 1/4" x 3/4" HEX HEAD SCREWS
CONT. STEEL WEATHER W/ CONT. BRM SEAL
SECTION A-A (SIDE VIEW)
N.T.S.
INTERIOR OF GARAGE
MAX WIDTH 16'0"
DESIGN LOADS +148.6 LBS/FT -148.6 LBS/FT
SEE NOTE 2
3" 20GA STRUT ATTACHED W/ (2) 1/4" X 3/4" HEX HEAD SCREWS AT END AND CENTER STILES
2" 7 BALL STEEL SHORT STEM ROLLER
BOTTOM BRACKET 14 GA. THICK ATTACHED W/(3) 1/4" X 3/4" HEX HEAD SCREWS WITH A 13 GA. BRACKET SLIDER
TYPICAL BOTTOM BRACKET
N.T.S.
4
14 GA. DURASAFE END HINGE ATTACHED W/ (2) 1/4" x 3/4" HEX HEAD SCREWS
14GA. DURASAFE ROLLER CARRIERS ATTACHED TO END STILE W/ (2) 1/4" x 3/4" HEX HEAD SCREWS PER CARRIER
3" 20GA. STRUTS ATTACHED W/ (2) 1/4" x 3/4" HEX HEAD SCREWS AT EACH END STILE
2" 7 BALL STEEL SHORT STEM ROLLER
TYPICAL DURASAFE END HINGE
N.T.S.
3
(6) 5/16" DIA. x 1-5/8" LAG BOLT ATTACHED TO JAMB AT EA. JAMB BRACKET
2 X 6 SOUTHERN YELLOW PINE (NO. 2 OR BETTER)
20 GA CENTER STILES
20 GA. GALV. STEEL END STILE
2" GALV. STEEL TRACK-TRACK THICKNESS .031"
1/4-20 x 5/8" TRACK SPLICE, BOLT AND NUT OR (2) RIVETS
TRACK MOUNTING DETAIL
WOOD JAMB ATTACHMENT TO STRUCTURE
RATED FOR 110 MPH PEAK GUST, EXPOSURE B, 30' OR LESS MEAN ROOF HEIGHT
2 X 6 VERTICAL JAMB ATTACHMENT TO WOOD FRAME STRUCTURE
5/16" x 3" LAG SCREWS STARTING 6" FROM ENDS THEN 24" O.C. (1 1/2" EMBEDMENT)
2 X 6 VERTICAL JAMB ATTACHMENT TO 2,500 PSI CONCRETE
HILTI KWIK BOLT 3/8" X 4" STARTING 6" FROM ENDS THEN 24" O.C. (2 1/4" EMBEDMENT)
HILTI SLEEVE ANCHOR 3/8" X 2-3/4" STARTING 6" FROM ENDS THEN 24" O.C. (1 1/4" EMBEDMENT)
ITW/RAMset REDHEAD (GRU-BOLT) 3/8" x 4" STARTING 6" FROM ENDS THEN 24" O.C. (2 1/2" EMBEDMENT)
2 X 6 VERTICAL JAMB ATTACHMENT TO C-20 BLOCK
HILTI SLEEVE ANCHOR 3/8" X 2-3/4" STARTING 6" FROM ENDS THEN 24" O.C. (1 1/4" EMBEDMENT)
ITW/RAMset TAPCON 1/4" X 2-3/4" STARTING 6" FROM ENDS, SEE PAGE 6 FOR FASTENERS (5 REQUIRED) AT 16" O.C. (1 1/4" EMBEDMENT)
PLATES AND BOLTS CAN BE COUNTERSUNK TO PROVIDE A FLUSH MOUNTING SURFACE.
*PREPARATION OF WOOD JAMBS BY OTHERS
SPECIFICATIONS AND NOTES
1. ALL THE LOAD FROM THE DOOR IS TRANSFERRED TO THE VERTICAL TRACK. FROM THE TRACK THE LOAD IS TRANSFERRED TO THE VERTICAL JAMBS. THE HORIZONTAL JAMB OR HEADER RECEIVES NO PORTION OF THE LOAD TRANSFERRED FROM THE DOOR.
2. EACH VERTICAL JAMB HAS A MAXIMUM DESIGN LOADING OF: +148.6 LBS/FT & -148.6 LBS/FT
3. DOORS AND HARDWARE WILL BE DESIGNED, MANUFACTURED AND INSTALLED WITH STANDARDS AS SET FORTH BY DASMA.
4. DOOR SECTIONS SHALL BE 25 GA. MIN. (.022") ROLLED FORMED HIGH COMMERCIAL QUALITY, C-40 GALVANIZED.
5. SUPPORTING STRUCTURAL ELEMENTS SHALL BE DESIGNED BY A REGISTERED PROFESSIONAL ENGINEER FOR WIND LOADS INDICATED ON THIS DRAWING IN ADDITION TO OTHER LOADINGS.
6. THE METHOD OF TESTING WAS IN SUBSTANTIAL CONFORMANCE WITH THE PROCEDURE DESCRIBED IN DASMA 108, ASTM E330, AND THE SOUTHERN BUILDING CODE SECTION 1606 WIND LOAD DESIGN CRITERIA. THE PRESSURES SHOWN ON THE DRAWINGS WERE CALCULATED USING ASCE 7-98 WITH THE FOLLOWING PARAMETERS:
A. BASIC WIND SPEED OF 110 MPH (PEAK GUST)
B. DOOR CAN BE INSTALLED WITH 5 FEET OF NOTCH WITH UNDER THE SIDE STRIP.
C. 30' OR LESS MEAN ROOF HEIGHT AT ANY SLOPE
D. USE FACTOR OF 1.0
E. EXPOSURE RATING OF B
7. REFER TO TABLES ON THE REVERSE SIDE FOR ADDITIONAL DOOR WIDTHS AND THEIR DESIGN PRESSURES
REV | DESCRIPTION OF REVISIONS | DATE | BY
MAX SIZE 16' x 14'
DESIGN LOADS +18.3 PSF -20.8 PSF
TEST LOADS +27.5 PSF -31.3 PSF
JUN 03 2003
Amarr GARAGE DOORS
165 CARRIAGE COURT WINSTON-SALEM, NC. 27105
MODEL #600 STRATFORD w/DuraSafe
MODEL #650 HERITAGE w/DuraSafe
Short Panel, Long Panel, and Flush Panel
SIZE B
DRAWN BY BLJ DATE 06/07/03
CHECKED BY AVE DATE 06/07/03
DRAWING NUMBER IRC-6016-110-15
ENGINEER THOMAS L. SHIMMONS P.E. NC. No. 004578
SHEET 1 OF 1

MIAMI-DADE

MIAMI-DADE COUNTY, FLORIDA
METRO-DADE FLAGLER BUILDING

BUILDING CODE COMPLIANCE OFFICE
METRO-DADE FLAGLER BUILDING
140 WEST FLAGLER STREET, SUITE 1603
MIAMI, FLORIDA 33130-1563
(305) 375-2901 FAX (305) 375-2908

CONTRACTOR LICENSING SECTION
(305) 375-2527 FAX (305) 375-2558

CONTRACTOR ENFORCEMENT DIVISION
(305) 375-2966 FAX (305) 375-2908

PRODUCT CONTROL DIVISION
(305) 375-2902 FAX (305) 372-6339

PRODUCT CONTROL NOTICE OF ACCEPTANCE

Premdor Entry Systems
911 E. Jeferson, P.O. Box 76
Pittsburgh ,KS 66762

Your application for Notice of Acceptance (NOA) of:
Entergy 6-8 S/E Inswing Opaque Double w/sidelites Residential Insulated Steel Door
under Chapter 8 of the Code of Miami-Dade County governing the use of Alternate Materials and Types of Construction, and completely described herein, has been recommended for acceptance by the Miami-Dade County Building Code Compliance Office (BCCO) under the conditions specified herein.

This NOA shall not be valid after the expiration date stated below. BCCO reserves the right to secure this product or material at any time from a jobsite or manufacturer's plant for quality control testing. If this product or material fails to perform in the approved manner, BCCO may revoke, modify, or suspend the use of such product or material immediately. BCCO reserves the right to revoke this approval, if it is determined by BCCO that this product or material fails to meet the requirements of the South Florida Building Code.

The expense of such testing will be incurred by the manufacturer.

ACCEPTANCE NO.: 01-0314.23
EXPIRES: 04/02/2006

Raul Rodriguez
Chief Product Control Division

THIS IS THE COVERSHEET, SEE ADDITIONAL PAGES FOR SPECIFIC AND GENERAL CONDITIONS
BUILDING CODE & PRODUCT REVIEW COMMITTEE

This application for Product Approval has been reviewed by the BCCO and approved by the Building Code and Product Review Committee to be used in Miami-Dade County, Florida under the conditions set forth above.

Francisco J. Quintana, R.A.
Director
Miami-Dade County
Building Code Compliance Office

APPROVED: 06/05/2001

Premdor Entry Systems

ACCEPTANCE No: 01-0314.23

APPROVED : JUN 05 2001

EXPIRES : April 02, 2006

NOTICE OF ACCEPTANCE: SPECIFIC CONDITIONS

1. SCOPE

1.1 This renews the Notice of Acceptance No. 00-0321.25 which was issued on April 28, 2000. It approves a residential insulated door, as described in Section 2 of this Notice of Acceptance, designed to comply with the South Florida Building Code (SFBC), 1994 Edition for Miami-Dade County, for the locations where the pressure requirements, as determined by SFBC Chapter 23, do not exceed the Design Pressure Rating values indicated in the approved drawings.

2. PRODUCT DESCRIPTION

2.1 The **Series Entergy 6-8 S/E Inswing Opaque Double Residential Insulated Steel Doors with Sidelites-Impact Resistant Door Slab Only** and its components shall be constructed in strict compliance with the following documents: Drawing No **31-1029-EM-I**, Sheets 1 through 6 of 6, titled "Premdor (Entergy Brand) Double Door with Sidelites in Wood Frames with Bumper Threshold (Inswing)," prepared by manufacturer, dated 7/29/97 with revision C dated 01/11/00, bearing the Miami-Dade County Product Control approval stamp with the Notice of Acceptance number and approval date by the Miami-Dade County Product Control Division. These documents shall hereinafter be referred to as the approved drawings.

3. LIMITATIONS

3.1 This approval applies to single unit applications of pair of doors and single door only, as shown in approved drawings. Single door units shall include all components described in the active leaf of this approval.

3.2 Unit shall be installed only at locations protected by a canopy or overhang such that the angle between the edge of canopy or overhang to sill is less than 45 degrees. Unless unit is installed in non-habitable areas where the unit and the area are designed to accept water infiltration.

4. INSTALLATION

4.1 The residential insulated steel door and its components shall be installed in strict compliance with the approved drawings.

4.2 Hurricane protection system (shutters):

4.2.1 Door: the installation of this unit **will not require** a hurricane protection system.

4.2.2 Sidelite: the installation of this unit **will require** a hurricane protection system.

5. LABELING

5.1 Each unit shall bear a permanent label with the manufacturer's name or logo, city, state and following statement: "Miami-Dade County Product Control Approved".

6. BUILDING PERMIT REQUIREMENTS

6.1 Application for building permit shall be accompanied by copies of the following:

6.1.1 This Notice of Acceptance

6.1.2 Duplicate copies of the approved drawings, as identified in Section 2 of this Notice of Acceptance, clearly marked to show the components selected for the proposed installation.

6.1.3 Any other documents required by the Building Official or the South Florida Building Code (SFBC) in order to properly evaluate the installation of this system.

Manuel Perez

Manuel Perez, P.E. Product Control Examiner
Product Control Division

Premdor Entry Systems

ACCEPTANCE No. 01-0314.23

APPROVED : JUN 05-2001

EXPIRES : April 02, 2006

NOTICE OF ACCEPTANCE: STANDARD CONDITIONS

1. Renewal of this Acceptance (approval) shall be considered after a renewal application has been filed and the original submitted documentation, including test supporting data, engineering documents, are no older than eight (8) years.

2. Any and all approved products shall be permanently labeled with the manufacturer's name, city, state, and the following statement: "Miami-Dade County Product Control Approved", or as specifically stated in the specific conditions of this Acceptance.

3. Renewals of Acceptance will not be considered if:
   a. There has been a change in the South Florida Building Code affecting the evaluation of this product and the product is not in compliance with the code changes.
   b. The product is no longer the same product (identical) as the one originally approved.
   c. If the Acceptance holder has not complied with all the requirements of this acceptance, including the correct installation of the product.
   d. The engineer who originally prepared, signed and sealed the required documentation initially submitted, is no longer practicing the engineering profession.

4. Any revision or change in the materials, use, and/or manufacture of the product or process shall automatically be cause for termination of this Acceptance, unless prior written approval has been requested (through the filing of a revision application with appropriate fee) and granted by this office.

5. Any of the following shall also be grounds for removal of this Acceptance:
   a. Unsatisfactory performance of this product or process.
   b. Misuse of this Acceptance as an endorsement of any product, for sales, advertising or any other purposes.

6. The Notice of Acceptance number preceded by the words Miami-Dade County, Florida, and followed by the expiration date may be displayed in advertising literature. If any portion of the Notice of Acceptance is displayed, then it shall be done in its entirety.

7. A copy of this Acceptance as well as approved drawings and other documents, where it applies, shall be provided to the user by the manufacturer or its distributors and shall be available for inspection at the job site at all time. The engineer needs not reseal the copies.

8. Failure to comply with any section of this Acceptance shall be cause for termination and removal of Acceptance.

9. This Notice of Acceptance consists of pages 1, 2 and this last page 3.

END OF THIS ACCEPTANCE

Manuel Perez

Manuel Perez, P.E., Product Control Examiner
Product Control Division

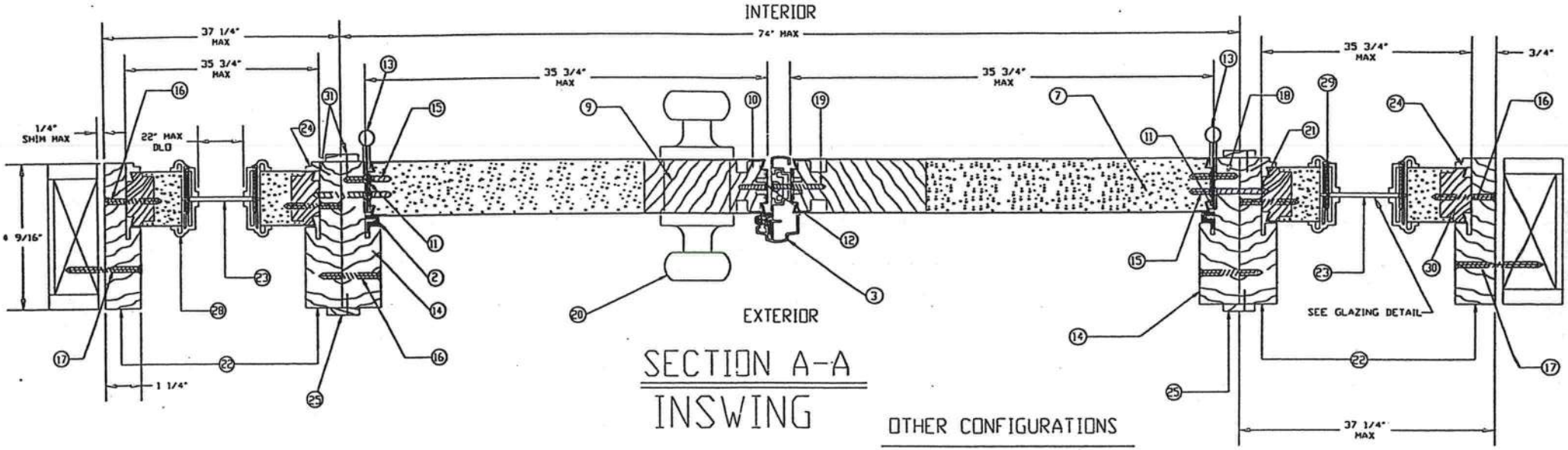

SECTION A-A
INSWING

OTHER CONFIGURATIONS

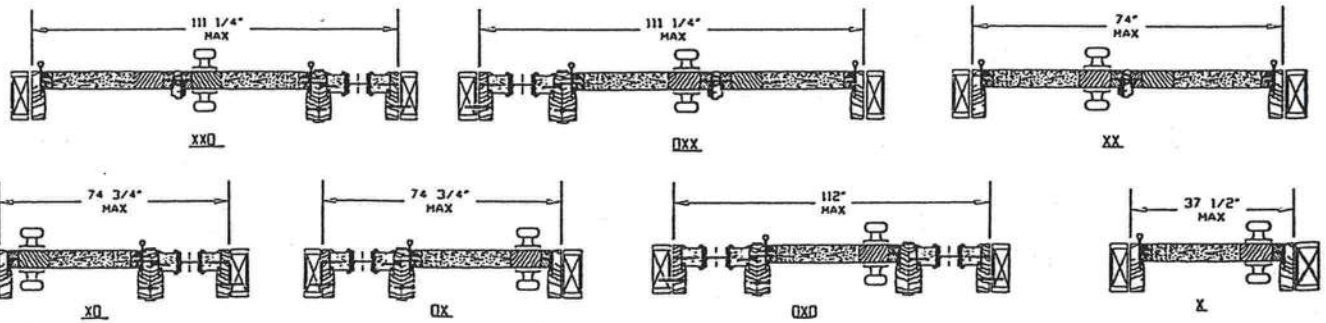

GLAZING DETAIL

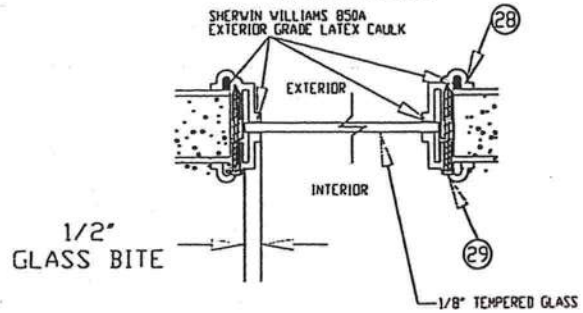

APPROVED AS COMPLYING WITH THE SOUTH FLORIDA BUILDING CODE
DATE JUN 05 2001
BY
PRODUCT CONTROL DIVISION
BUILDING CODE COMPLIANCE OFFICE
ACCEPTANCE NO. 01-0314.23

C	DADE COUNTY MODIFICATIONS	5/15/01	JI
B	ADDED PAGE 5 (DOOR OPTIONS)	10-1-98	RS
A	ADD SCREWS TO LITE FRAMES & ADD OTHER DOOR CONFIGURATIONS	12-18-97	RS
LTR	REVISIONS	DATE	

UNITS UNLESS NOTED, FRAC ± DEC ± ANG ±
EXTENSIONS UNLESS NOTED, STD COML TOLS.
ENGINEER:
DR. BY R.S. | DATE 7-29-97
PART NAME: ENTRY DOOR W/SIDELITES (A-A)
PART #:
SCALE: NTS

PREMDOR ENTRY SYSTEMS
911 E. JEFFERSON
PITTSBURG, KS 66762

31-1029-EM-1
SHEET 2 OF 6

REVISION LETTER C

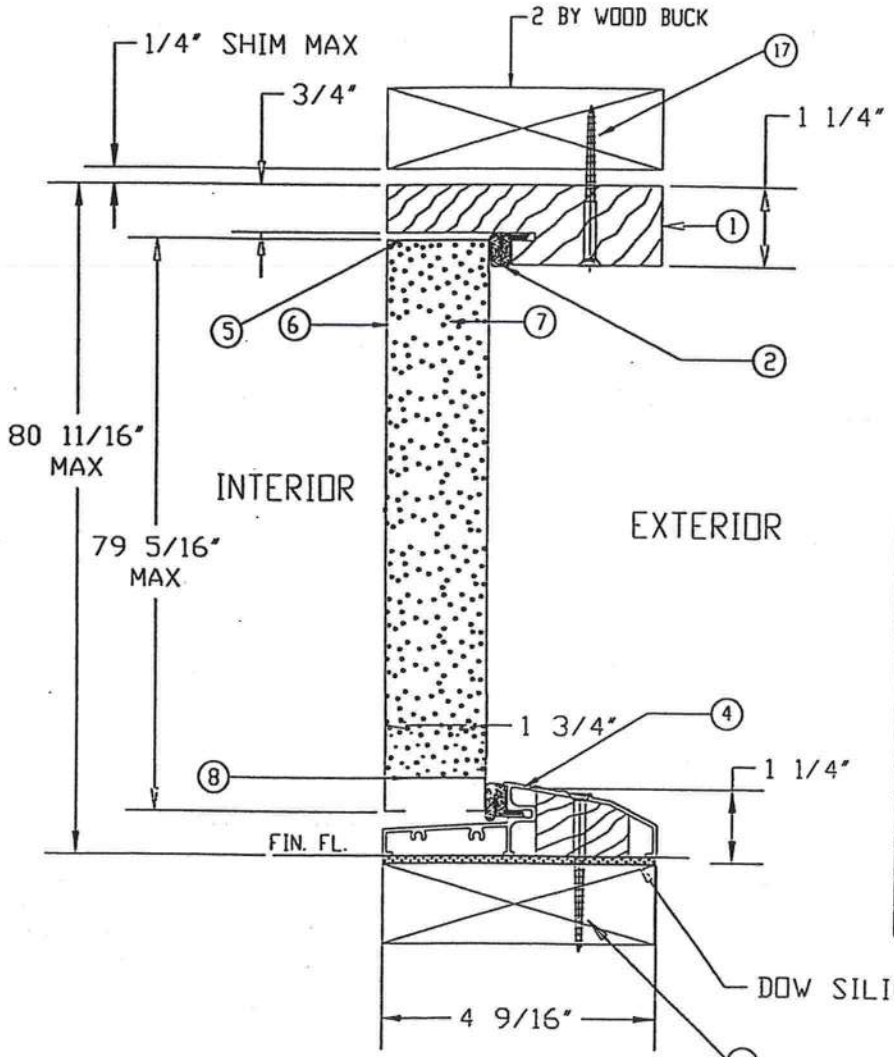

SECTION B-B

MATERIALS LIST

ITEM NO.	DESCRIPTION	PART NUMBER	COMMENTS
1	WOOD HEAD JAMB	EM-14	1 1/4" X 4 9/16" MTL. TO BE PINE OR EQUIVALENT
2	COMPRESSION WEATHERSTRIP	EM-25	LOCKSCREEN BRAND LOXSEAL 9650 (BRONZE)
3	ALUMINUM ASTRAGAL	EM-12	PREMDOR BRAND OR EQUIVALENT- 5/8" ALUMINUM ASTRAG
4	ALUMINUM-BUMPER THRESHOLD	EM-15	PREMDOR BRAND OR EQUIVALENT - 1 1/4" x 4 9/16"
5	TOP CHANNEL	EM-08	PREMDOR BRAND - 1 11/16" - 20 GA STEEL
6	STEEL SKIN	26 ga. (.017 +.004 -.000)	MIN. YIELD STRENGTH 35,000 PSI MIN. THICKNESS PER TENSILE TEST REPORT IS .021"
7	POLYURETHANE FOAM CORE	BASF FOAM - DENSITY 2.0 TO 2.5 lbs./ft³	
8	BOTTOM CHANNEL	EM-07	PREMDOR BRAND - 1 11/16" - 20 GA STEEL
9	WOOD LOCK BLOCK	EM-09	4" X 9 1/2" MTL. TO BE PINE OR EQUIVALENT
10	STRIKE STILE	EM-06	PREMDOR BRAND - 1 11/16" - 20 GA STEEL
11	HINGE STILE	EM-05	PREMDOR BRAND - 1 11/16" - 20 GA STEEL
12	LOCK PREP FILLER PLATE	EM-10	PREMDOR BRAND - .050" THICK- MTL. TO BE POLYETHYLEI
13	4"x4" HINGE	EM-16	HAGER BRAND HINGE OR EQUIVALENT - .097 THICK (STEE
14	WOOD HINGE JAMB	EM-13	1 1/4" X 4 9/16" MTL. TO BE PINE OR EQUIVALENT
15	#10-24 x 1/2" F.H.M.S.		(4) SCREWS PER HINGE INTO DOOR
16	#10 X 2" F.H.W.S.		(5) SCREWS THROUGH HINGE JAMB INTO SIDELITE JAMB, 8" DOWN FROM T MAX 18" O.C. THEREAFTER (10) SCREWS THROUGH STRIKE JAMB INTO SIDELITE JAMB, 4" DOWN FROM 1 MAX 8" O.C. THEREAFTER (6) SCREWS THROUGH EACH SIDELITE JAMB INTO SIDELITE, 4" DOWN FROM TOP, MAX 15" O.C. THEREAFTER
17	#10 F.H.W.S. W/MINIMUM 1 1/2 EMBEDMENT OR 3/16" PTH TAPCONS W/MINIMUM 1 1/2" EMBEDMENT		REFER TO ELEVATION VIEW, FOR # OF SCREWS USED AND LOCATIONS
18	#10 X 3/4" F.H.W.S.		(2) SCREWS PER HINGE INTO JAMB
19	#8 x 2" F.H.W.S.		(2) SCREWS AT EACH STRIKE PLATE
20	LOCKSET		KWIKSET BRAND 200 LOCK OR HARLOC BRAND 100 LOCK
21	#10 X 1 3/4" F.H.W.S.		(2) SCREWS PER HINGE INTO JAMB
22	WOOD SIDELITE JAMB	EM-18	1 1/4" X 4 9/16" MTL. TO BE PINE OR EQUIVALENT
23	22" X 64" SINGLE PANEL GLASS	EM-19	TEMPERED GLASS IN POLYPROPYLENE FRAME- DC-1643 - (ODL- 1/8" CLEAR TEMPERED GLASS
24	SIDELITE TRIM (WOOD)	EM-20	5/16 x 1/2" MTL. TO BE PINE OR EQUIVALENT
25	WOOD CASING	EM-21	1/8" x 1" MTL. TO BE PINE OR EQUIVALENT - ITEMS ARE MOLDINGS US FOR "SIDE BY SIDE JAMBS" AS MULLIONS
26	WOOD SIDELITE HEAD JAMB	EM-22	1 1/4" X 4 9/16" MTL. TO BE PINE OR EQUIVALENT
27	WOOD SIDELITE BASE	EM-23	1 1/4" X 4 9/16" MTL. TO BE PINE OR EQUIVALENT
28	POLYPROPYLENE LITE FRAME	DC-1643, ODL-2	HP Polypropylene by ODL
29	#6 X 1 1/2" PAN HEAD SCREWS		18 PER FRAME SCREW SPACING TO BE 3" IN FROM EACH CORNER AND N TO EXCEED 14" OC THERE AFTER.
30	SIDELITE STILES	EM-26	15/16" X 1 11/16" MTL. TO BE PINE OR EQUIVALENT
31	PIN NAIL		3/4" LONG NAIL, 4" IN FROM END, MAX 8" O.C. THERAFTER, USED ON MULLIONS AND TR

APPROVED AS COMPLYING WITH THE SOUTH FLORIDA BUILDING CODE
DATE JUN 05 2001
BY [signature]
PRODUCT CONTROL DIVISION
BUILDING CODE COMPLIANCE OFFICE
ACCEPTANCE NO. 01-0314.23

LIMITS: UNLESS NOTED, FRAC. : DEC. : ANG. :
EXTRUSIONS: UNLESS NOTED, STD. COM'L. TOL'S.
ENGINEER:
DR. BY R.S. | DATE 7-29-97

LTR.	REVISIONS	DATE	BY
B	DADE COUNTY MODIFICATIONS	1/11/01	JD
A	ADDED PAGE 5 (DOOR OPTIONS)	10-1-98	RS

PART NAME: ENTERGY STEEL EDGE DOOR (B-B)
MAT'L: SCALE:

PREMDOR ENTRY SYSTEMS
911 E. JEFFERSON
PITTSBURG, KS. 66762

A

31-1029-EM-I
SHEET 3 OF 6

REVISION LETTER B

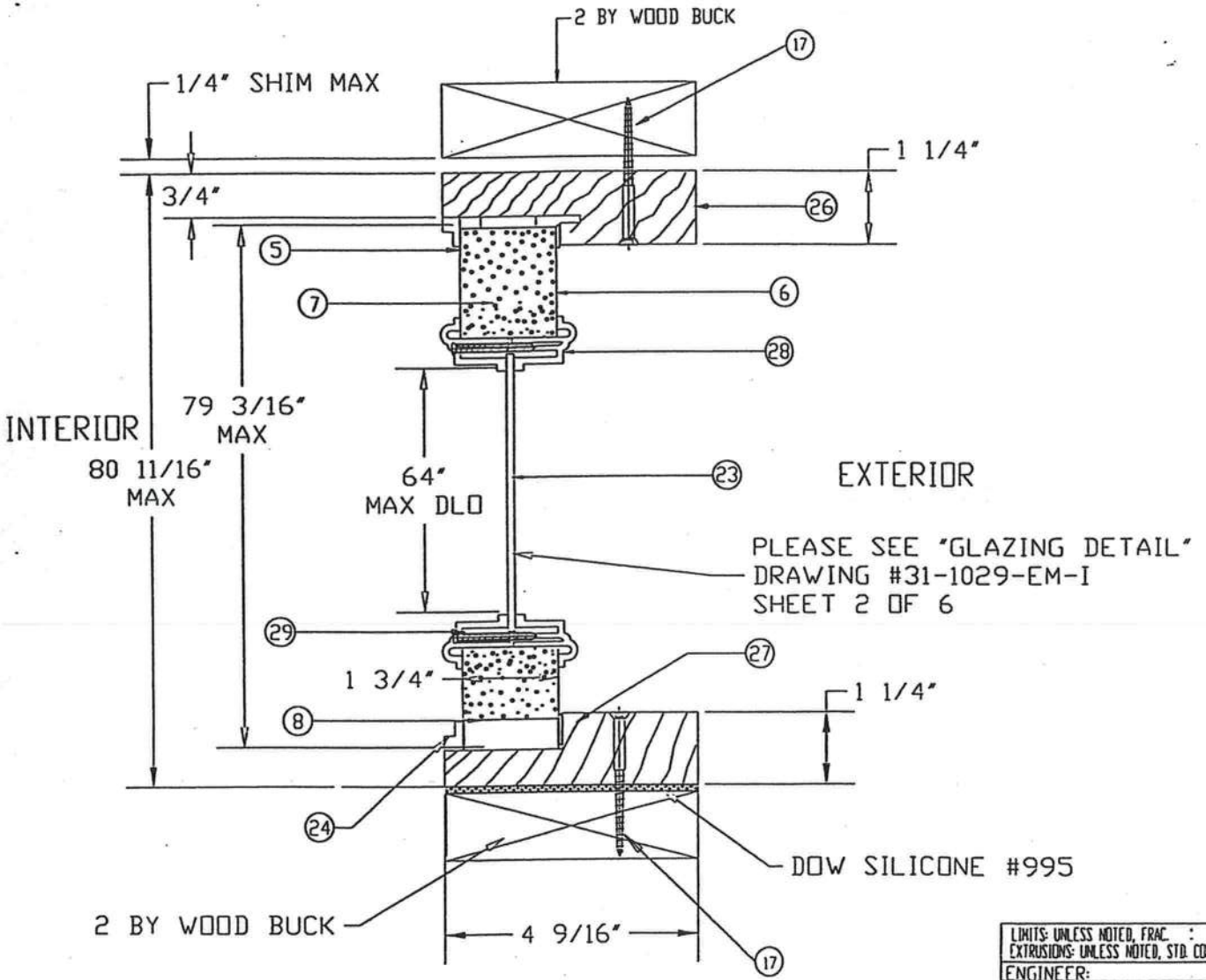

SECTION C-C

APPROVED AS COMPLYING WITH THE SOUTH FLORIDA BUILDING CODE
DATE JUN 05 2001
BY Manuel Arez
PRODUCT CONTROL DIVISION
BUILDING CODE COMPLIANCE OFFICE
ACCEPTANCE NO. 01-0314.23

LTR	REVISIONS	DATE	BY
D	DADE COUNTY MODIFICATIONS	1/11/01	JD
C	MATERIAL WAS POLYSTYRENE	6-2-99	RS
B	ADDED PAGE 5 (DOOR OPTIONS)	10-1-98	RS
A	ADD SCREWS TO LITE FRAME & MATERIAL LIST	12-18-97	R.S.

LIMITS: UNLESS NOTED, FRAC. : DEC. : ANG. :
EXTRUSIONS: UNLESS NOTED, STD. COM'L TOL'S.

ENGINEER:

PART NAME: ENTERGY METAL EDGE SIDELITE (C-C)

DR. BY R.S. | DATE 7-29-97 | MAT'L: | SCALE:

PREMDOR ENTRY SYSTEMS
911 E. JEFFERSON
PITTSBURG, KS. 66762

31-1029-EM-I
SHEET 4 OF 6

REVISION LETTER D

OTHER DOOR CONFIGURATIONS

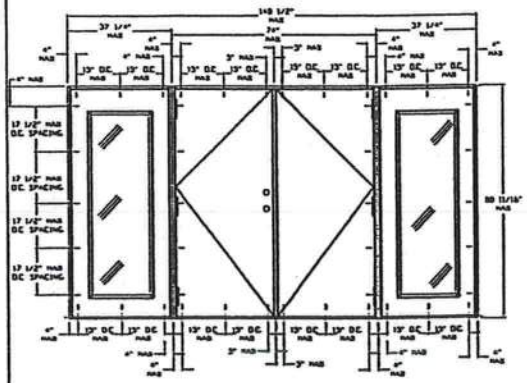

OXXO

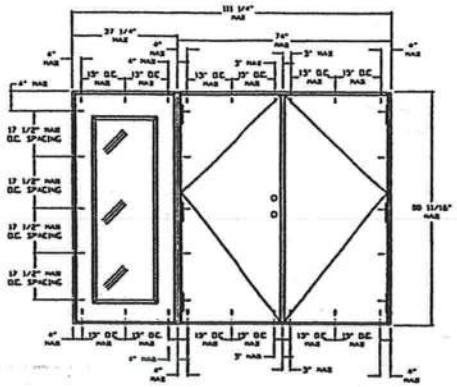

OXX

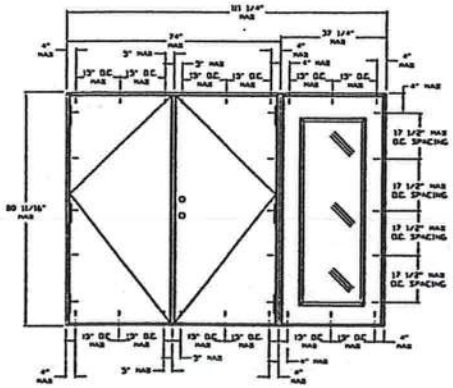

XXO

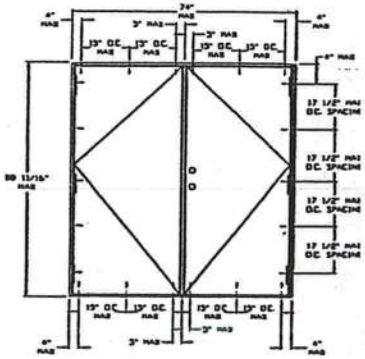

XX

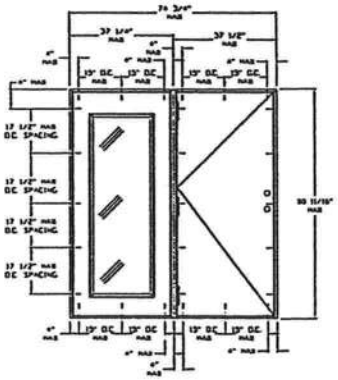

OX

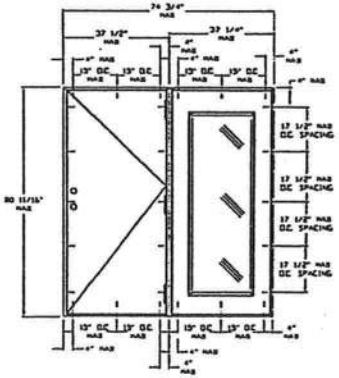

XO

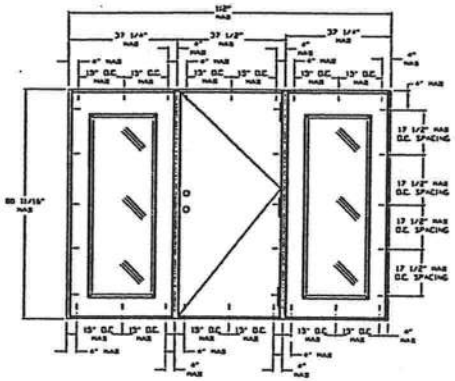

OXO

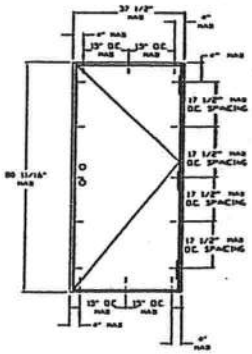

X

APPROVED AS COMPLYING WITH THE
SOUTH FLORIDA BUILDING CODE
DATE JUN 05 2001
BY [signature]
PRODUCT CONTROL DIVISION
BUILDING CODE COMPLIANCE OFFICE
ACCEPTANCE NO. 01-0314.23

LIMITS: UNLESS NOTED, FRAC : DEC : ANG :
EXTRUSIONS: UNLESS NOTED, STD. COML. TOL'S.

ENGINEER:

LTR	REVISIONS	DATE	BY

PART NAME:

DR. BY J.D. | DATE 1-11-01 | MAT'L: | SCALE:

PREMDOR ENTRY SYSTEMS
911 E. JEFFERSON
PITTSBURG, KS 66762

31-1029-EM-I
SHEET 5 OF 6

REVISION LETTER

OTHER DOOR PANEL STYLES

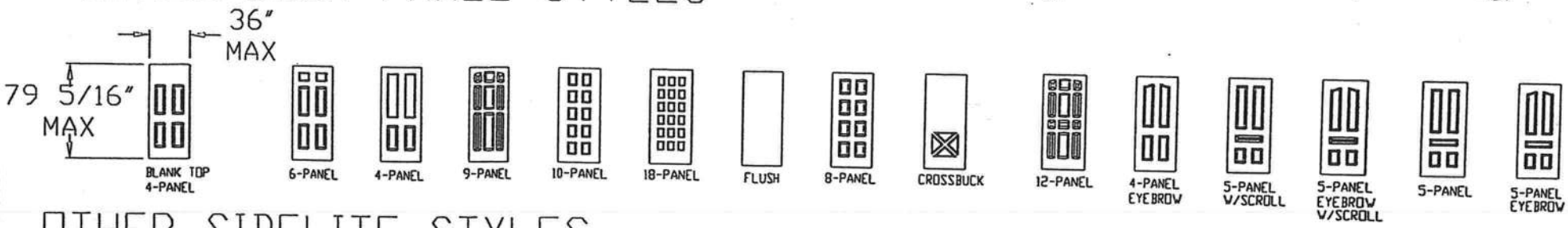

OTHER SIDELITE STYLES

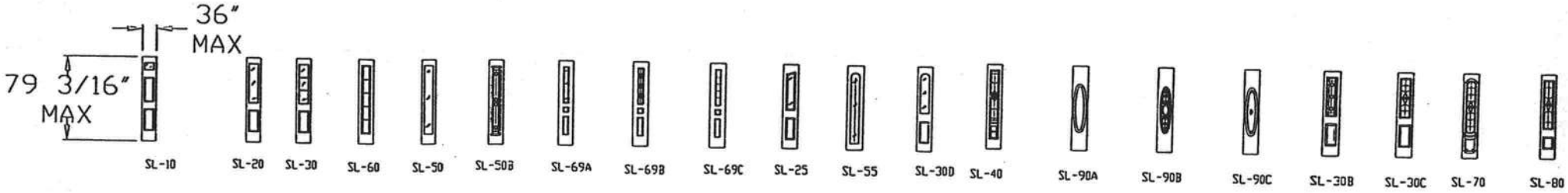

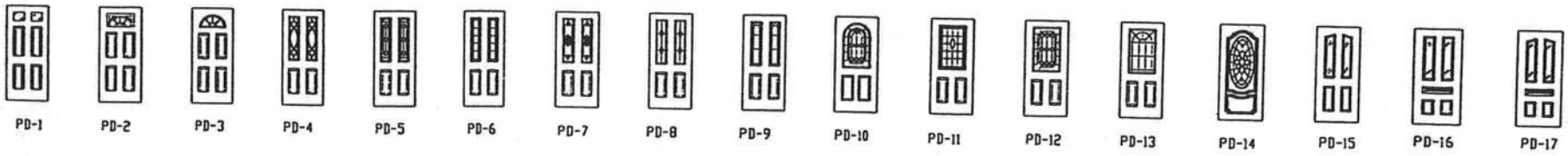

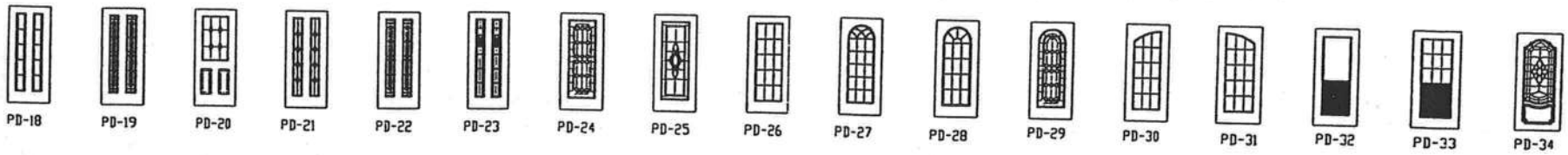

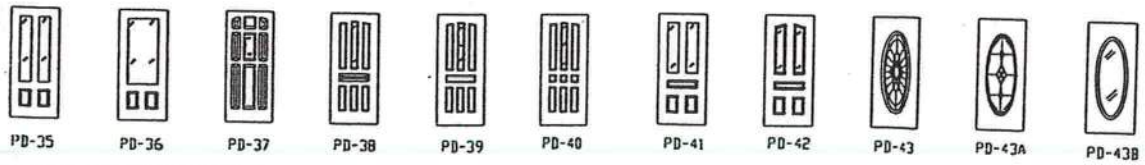

APPROVED AS COMPLYING WITH THE SOUTH FLORIDA BUILDING CODE
DATE JUN 05 2001
BY
PRODUCT CONTROL DIVISION
BUILDING CODE COMPLIANCE OFFICE
ACCEPTANCE NO 01-0314.23

LIMITS: UNLESS NOTED, FRAC. : DEC. : ANG. :
EXTRUSIONS: UNLESS NOTED, STD. COML. TOL'S
ENGINEER:
DR. BY J.D. | DATE 1/15/01
MAT'L:

LTR	REVISIONS	DATE	BY

PART NAME: PREMDOR DOOR OPTIONS
SCALE:

PREMDOR ENTRY SYSTEMS
911 E. JEFFERSON
PITTSBURG, KS. 66762

31-1029-EM-I
SHEET 6 OF 6

REVISION LETTER

PREMDOR (ENTERGY BRAND) DOUBLE DOOR WITH SIDELITES IN WOOD FRAMES WITH BUMPER THRESHOLD (INSWING)

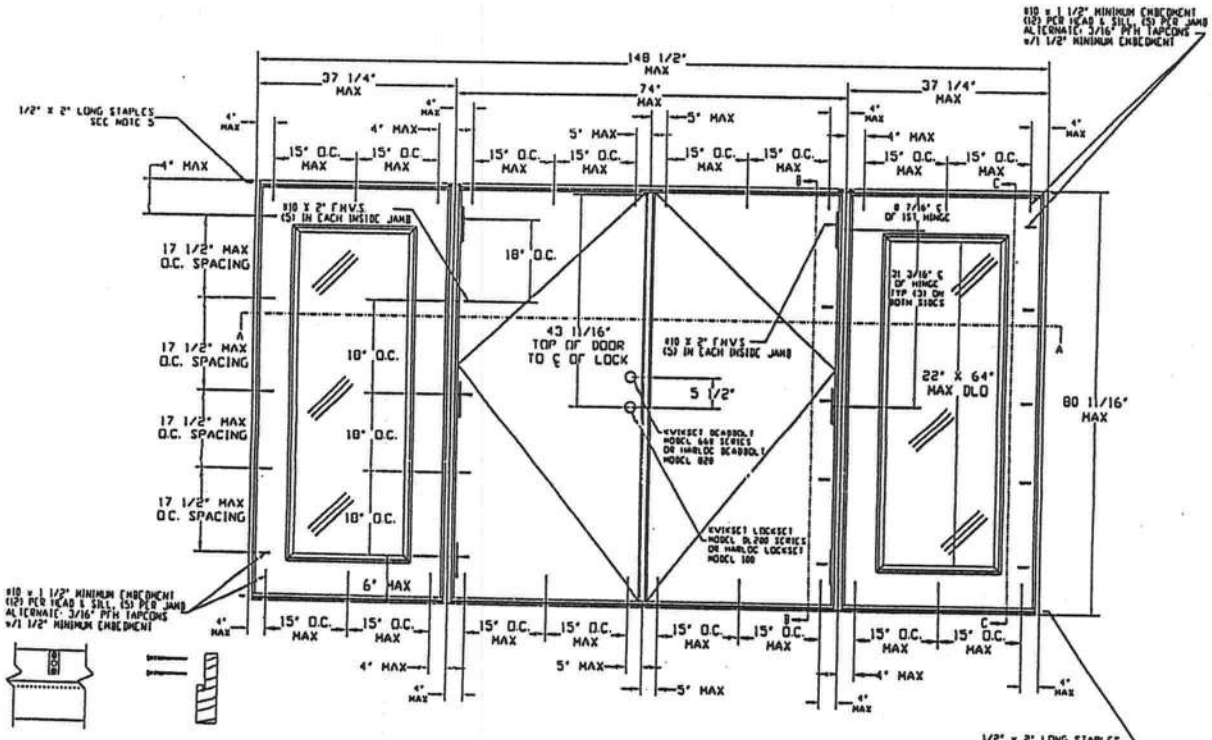

ATTACH ASTRAGAL THROW BOLT STRIKE PLATE TO THE HEADER AND THRESHOLD WITH #10 x 1 3/4" FLATHEAD SCREWS

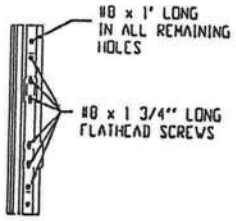

ASTRAGAL

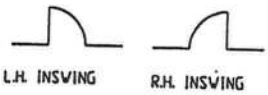

NOTES:

.) WOOD BUCKS BY OTHERS. MUST BE ANCHORED PROPERLY TO TRANSFER LOADS TO THE STRUCTURE.

2.) THE PRECEDING DRAWINGS ARE INTENDED TO QUALIFY THE FOLLOWING INSTALLATIONS.

\. WOOD FRAME CONSTRUCTION WHERE DOOR SYSTEM IS ANCHORED TO A MINIMUM TWO BY WOOD OPENING.

3. MASONRY OR CONCRETE CONSTRUCTION WHERE DOOR SYSTEM IS ANCHORED TO A MINIMUM TWO BY STRUCTURAL WOOD BUCK.

:. MASONRY OR CONCRETE CONSTRUCTION WHERE DOOR SYSTEM IS ANCHORED DIRECTLY TO CONCRETE OR MASONRY WITH OR WITHOUT A NON-STRUCTURAL INC BY WOOD BUCK.

. ALL ANCHORING SCREWS TO BE #10 WITH MINIMUM 1 1/2" EMBEDMENT INTO WOOD SUBSTRATE OR 3/16" PFH TAPCONS WITH 1 1/2" MINIMUM EMBEDMENT INTO MASONRY.

. UNIT MUST BE INSTALLED WITH "MIAMI-DADE COUNTY APPROVED" SHUTTERS

. THREE STAPLES PER SIDE JAMB INTO HEADER ON SIDELITES AND DOOR, THREE STAPLES PER JAMB INTO THRESHOLD ON SIDELITES AND DOOR.

. LATEX SEALANT TO BE APPLIED AT SIDE BY SIDE JAMBS AND SIDELITES.

. DOOR/SIDELITE HEADER, DOOR/SIDELITE JAMBS, AND SIDELITE BASE CORNERS ARE COPED AND BUTT JOINED.

. DOORS SHALL BE PRE-PAINTED WITH A WATER-BASED EPOXY RUST INHIBITIVE PRIMER PAINT WITH A DRY FILM THICKNESS OF 0.8 TO 1.2 MIL.

). FRAMES SHALL BE PRE-PAINTED WITH AN ACRYLIC LATEX WATER-BASED/ WATER-REDUCIBLE WHITE PRIMER WITH A DRY FILM THICKNESS OF 0.8 TO 1.2 MIL.

DESIGN PRESSURE RATINGS		
	WHERE WATER INFILTRATION REQUIREMENT IS NEEDED *	WHERE WATER INFILTRATION REQUIREMENT IS NOT NEEDED
Positive	NOT APPROVED *	+55.0 psf
Negative	NOT APPROVED *	-55.0 psf

* UNITS SHALL BE INSTALLED ONLY AT LOCATIONS PROTECTED BY A CANOPY OR OVERHANG SUCH THAT THE ANGLE BETWEEN THE EDGE OF CANOPY OR OVERHANG TO SILL IS LESS THAN 45 DEGREES. UNLESS UNIT IS INSTALLED IN NON-HABITABLE AREAS WHERE THE UNIT AND THE AREA ARE DESIGNED TO ACCEPT WATER INFILTRATION.

APPROVED AS COMPLYING WITH THE SOUTH FLORIDA BUILDING CODE
DATE JUN 05 2001
BY [signature]
PRODUCT CONTROL DIVISION
BUILDING CODE COMPLIANCE OFFICE
ACCEPTANCE NO. 01-0314.23

C	DADE COUNTY MODIFICATIONS	11/11/00	JO
B	ADDED PAGE 5 (DOOR OPTIONS)	10-1-98	RS
A	ADD OTHER DOOR CONFIGURATIONS	12/18/97	RS
LTR	REVISIONS	DATE	BY

LIMITS: UNLESS NOTED, FRAC. : DEC. : ANG. :
EXTRUSIONS: UNLESS NOTED, STD. COML. TOL'S.
ENGINEER:
DR. BY R.S. | DATE 7-29-97
PART NAME: ENTERGY METAL EDGE DOUBLE DOOR W/SIDELITES
MAT'L:
SCALE: N.T.S.

PREMDOR ENTRY SYSTEMS
911 E. JEFFERSON
PITTSBURG, KS 66762

31-1029-EM-I
SHEET 1 OF 6

RIGHT-J LOAD AND EQUIPMENT SUMMARY
Entire House

Touchstone Heating and Air, Inc.

Job: Willard & Marlene
Graham 10/03/05

490 SE 3rd Ave., Lake Butler, FL 32054 Phone: 386-496-3487 Fax: 386-496-3147

Project Information

For: Stanley Crawford Construction
1531 S.W. Commercial Glen, Lake City, Fl 32025
Phone: 386-752-5152 Fax: 386-755-2165

Notes: First Floor

Design Information

Weather: Gainesville, FL , US

Winter Design Conditions

Outside db	**30**	°F
Inside db	70	°F
Design TD	40	°F

Summer Design Conditions

Outside db	**93**	°F
Inside db	75	°F
Design TD	18	°F
Daily range	M	
Relative humidity	50	%
Moisture difference	50	gr/lb

Heating Summary

Building heat loss	44911	Btuh
Ventilation air	12	cfm
Ventilation air loss	541	Btuh
Design heat load	45452	Btuh

Infiltration

Method	Simplified
Construction quality	Average
Fireplaces	0

	Heating	Cooling
Area (ft²)	***1398***	***1398***
Volume (ft³)	***11866***	***11866***
Air changes/hour	***0.10***	***0.10***
Equiv. AVF (cfm)	20	20

Sensible Cooling Equipment Load Sizing

Structure	21579	Btuh
Ventilation	990	Btuh
Design temperature swing	3.0	°F
Use mfg. data	n	
Rate/swing multiplier	0.98	
Total sens. equip. load	22118	Btuh

Latent Cooling Equipment Load Sizing

Internal gains	230	Btuh
Ventilation	1697	Btuh
Infiltration	671	Btuh
Total latent equip. load	2598	Btuh
Total equipment load	24716	Btuh
Req. total capacity at 0.70% SHR	2.6	ton

Heating Equipment Summary

Make Trane
Trade E. XE 1200 Weathertron
4TWX3030A1000A

Efficiency	9.3 HSPF	
Heating input		
Heating output	21800	Btuh @ 47°F
Heating temp rise	25	°F
Actual heating fan	800	cfm
Heating air flow factor	0.018	cfm/Btuh

Space thermostat

Cooling Equipment Summary

Make Trane
Trade E. XE 1200 Weathertron
4TWX3030A1000A
TWG030A140B

Efficiency	13.0 SEER	
Sensible cooling	15260	Btuh
Latent cooling	6540	Btuh
Total cooling	21800	Btuh
Actual cooling fan	800	cfm
Cooling air flow factor	0.037	cfm/Btuh
Load sensible heat ratio	90	%

Bold/italic values have been manually overridden

Printout certified by ACCA to meet all requirements of Manual J 7th Ed.

RIGHT-J LOAD AND EQUIPMENT SUMMARY
Entire House

Touchstone Heating and Air, Inc.

Job: Willard & Marlene Graham 10/03/05

490 SE 3rd Ave., Lake Butler, FL 32054 Phone: 386-496-3467 Fax: 386-496-3147

Project Information

For: Stanley Crawford Construction
1531 S.W. Commercial Glen, Lake City, FL 32025
Phone: 386-752-5152 Fax: 386-755-2165

Notes: Second Floor

Design Information

Weather: Gainesville, FL , US

Winter Design Conditions

Outside db	30	°F
Inside db	70	°F
Design TD	40	°F

Summer Design Conditions

Outside db	93	°F
Inside db	75	°F
Design TD	18	°F
Daily range	M	
Relative humidity	50	%
Moisture difference	50	gr/lb

Heating Summary

Building heat loss	17318	Btuh
Ventilation air	0	cfm
Ventilation air loss	0	Btuh
Design heat load	17318	Btuh

Infiltration

Method	Simplified
Construction quality	Average
Fireplaces	0

	Heating	Cooling
Area (ft²)	*478*	*478*
Volume (ft³)	*4046*	*4046*
Air changes/hour	*0.44*	*0.82*
Equiv. AVF (cfm)	*30*	*55*

Sensible Cooling Equipment Load Sizing

Structure	12547	Btuh
Ventilation	0	Btuh
Design temperature swing	3.0	°F
Use mfg. data	n	
Rate/swing multiplier	0.98	
Total sens. equip. load	12296	Btuh

Latent Cooling Equipment Load Sizing

Internal gains	920	Btuh
Ventilation	0	Btuh
Infiltration	1867	Btuh
Total latent equip. load	2787	Btuh
Total equipment load	15083	Btuh
Req. total capacity at 0.70% SHR	1.5	ton

Heating Equipment Summary

Make Trane
Trade G. XE 1000 Weathertron
TWR018C+BAYKSKT

Efficiency	9.3 HSPF	
Heating input		
Heating output	16500	Btuh @ 47°F
Heating temp rise	23	°F
Actual heating fan	660	cfm
Heating air flow factor	0.038	cfm/Btuh

Space thermostat

Cooling Equipment Summary

Make Trane
Trade G. XE 1000 Weathertron
TWR018C+BAYKSKT
TWE024P13

Efficiency	13.0 SEER	
Sensible cooling	12180	Btuh
Latent cooling	5220	Btuh
Total cooling	17400	Btuh
Actual cooling fan	660	cfm
Cooling air flow factor	0.053	cfm/Btuh
Load sensible heat ratio	82	%

Bold/italic values have been manually overridden

Printout certified by ACCA to meet all requirements of Manual J 7th Ed.

Architectural

ELK Premium Roofing

March 6, 2002

Subject: Elk Product Approval Information

All Prestique® and Capstone® products manufactured in Tuscaloosa, AL are certified under the Miami – Dade County Building Code Office (BCCO). These products also meet the requirements for the Florida Building Code since they are MD approved. The following test protocols must be passed by each of the products in order for MD product certification:
ASTM D3462
PA 100 (110 mph uplift and wind driven rain resistance)
PA 107 (Modified ASTM D3161 - 110 mph wind uplift resistance)

The nailing patterns that were used during the PA 100 and PA 107 wind test protocols for the Prestique and Capstone products are listed below. Also listed below are the Miami – Dade Notice of Acceptance Numbers (NOA).

Raised Profile, Prestique High Definition, Prestique 25, or Prestique 30 –
PA 100 = 4 nails
PA 107 = 5 nails
MD NOA# = 01-1226.04

Prestique I 35 or Prestique I* –
PA 100 = 4 nails
PA 107 = 5 nails
MD NOA# = 01-1226.05

Prestique Plus or Prestique Gallery Collection* –
PA 100 = 4 nails
PA 107 = 4 nails
MD NOA# = 01-1226.03

Capstone*
PA 100 = 4 Nails
PA 107 = 4 Nails
MD NOA# = 01-0523.01
* As per the Elk Limited Warranty, six nails are required for the Elk high wind warranty.

If there are any questions please contact:

Mike Reed – Technical Manager
(205) 342-0287

or

Daniel DeJarnette – QA Engineer
(205) 342-0298

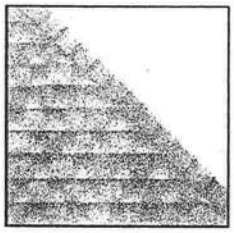

PRESTIQUE® HIGH DEFINITION®

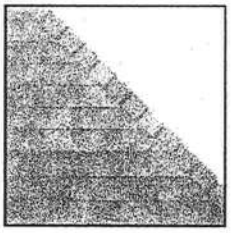

RAISED PROFILE™

High Definition

Product size	13¼"x 39⅜"
Exposure	5⅝"
Pieces/Bundle	16
Bundles/Square	4/98.5 sq.ft.
Squares/Pallet	11

50-year limited warranty period: non-prorated coverage for shingles and application labor for the initial 5 years, plus an option for transferability*; prorated coverage for application labor and shingles for balance of limited warranty period; 5-year limited wind warranty*.

Product size	13¼"x 38¾"
Exposure	5⅝"
Pieces/Bundle	22
Bundles/Square	3/100 sq.ft.
Squares/Pallet	16

30-year limited warranty period: non-prorated coverage for shingles and application labor for the initial 5 years, plus an option for transferability*; prorated coverage for application labor and shingles for balance of limited warranty period; 5-year limited wind warranty*.

High Definition

Product size	13¼"x 39⅜"
Exposure	5⅝"
Pieces/Bundle	16
Bundles/Square	4/98.5 sq.ft.
Squares/Pallet	14

40-year limited warranty period: non-prorated coverage for shingles and application labor for the initial 5 years, plus an option for transferability*; prorated coverage for application labor and shingles for balance of limited warranty period; 5-year limited wind warranty*.

High Definition

Product size	13¼"x 38¾"
Exposure	5⅝"
Pieces/Bundle	22
Bundles/Square	3/100 sq.ft.
Squares/Pallet	16

30-year limited warranty period: non-prorated coverage for shingles and application labor for the initial 5 years, plus an option for transferability*; prorated coverage for application labor and shingles for balance of limited warranty period; 5-year limited wind warranty*.

HIP AND RIDGE SHINGLES

Size: 12"x 12"
Exposure: 6⅔"
Pieces/Bundle: 45
Coverage: 4 Bundles = 100 linear feet

52 Bundles/Pallet
18 Pallets/Truck
936 Bundles/Truck
19 Pieces/Bundle
1 Bundle = 120.33 linear feet

Available Colors: Antique Slate, Weatheredwood, Shakewood, Sablewood, Hickory, Barkwood**, Forest Green, Wedgewood**, Birchwood**, Sandalwood. Gallery Collection: Balsam Forest**, Weathered Sage**, Sienna Sunset**.

All Prestique, Raised Profile and Seal-A-Ridge roofing products contain Elk WindGuard® sealant. WindGuard activates with the sun's heat, bonding shingles into a wind and weather resistant cover that resists blow-offs and leaks.

Check for availability with built-in StainGuard® treatment to inhibit the discoloration of roofing granules caused by the growth of certain types of algae. Not available in Sablewood.

All Prestique and Raised Profile shingles meet UL® Wind Resistant (UL 997) and Class "A" Fire Ratings (UL 790); and ASTM Specifications D 3018, Type-I; D 3161, Type-I; E 108 and the requirements of ASTM D 3462.

All Prestique and Raised Profile shingles meet the latest Metro Dade building code requirements.

***See actual limited warranty for conditions and limitations.**
****Check for product availability.**

SPECIFICATIONS

SCOPE: Work includes furnishing all labor, materials and equipment necessary to complete installation of (name) shingles specified herein. Color shall be (name of color). Hip and ridge type to be Elk Seal-A-Ridge with formula *FLX*.

All exposed metal surfaces (flashing, vents, etc.) to be painted with matching Elk roof accessory paint.

PREPARATION OF ROOF DECK: Roof deck to be dry, well-seasoned 1" x 6" (25.4mm x 152.4mm) boards; exterior-grade plywood (exposure 1 rated sheathing) at least 3/8" (9.525mm) thick conforming to the specifications of the American Plywood Association; 7/16" (11.074mm) oriented strandboard; or chipboard. Most fire retardant plywood decks are NOT approved substrates for Elk shingles. Consult Elk Field Service for application specifications over other decks and other slopes.

MATERIALS: Underlayment for standard roof slopes, 4" per foot (101.6/304.8mm) or greater: apply non-perforated No. 15 or 30 asphalt-saturated felt underlayment. For low slopes [4" per foot (101.6/304.8mm) to a minimum of 2" per foot (50.8/304.8mm)], use two plies of underlayment overlapped a minimum of 19". Fasteners shall be of sufficient length and holding power for securing material as required by the application instructions printed on shingle wrapper.

For areas where algae is a problem, shingles shall be (name) with StainGuard treatment, as manufactured by the Elk Tuscaloosa plant. Hip and ridge type to be Seal-A-Ridge with formula *FLX* with StainGuard treatment.

Complete application instructions are published by Elk and printed on the back of every shingle bundle. All warranties are contingent upon the correct installation as shown on the instructions. These instructions are the minimum required to meet Elk application requirements. In some areas, building codes may require additional application techniques or methods beyond our instructions. In these cases, the local code must be followed. Under no circumstances will Elk accept application requirements less than those contained in its application instructions.

For specifications in CSI format, call 800.354.SPEC (7732) or e-mail specinfo@elkcorp.com.

SOUTHEAST & ATLANTIC OFFICE:
800.945.5551

CORPORATE HEADQUARTERS:
800.354.7732

PLANT LOCATION:
800.945.5545

ELK
www.elkcorp.com

DIRECTIONS FOR APPLICATION

Please read carefully. Failure to follow these instructions may void the product warranty.
See specific application instructions for Prestique® Plus and Prestique Gallery Collection™ 110 MPH, and Prestique I 90 MPH limited wind warranty requirements.

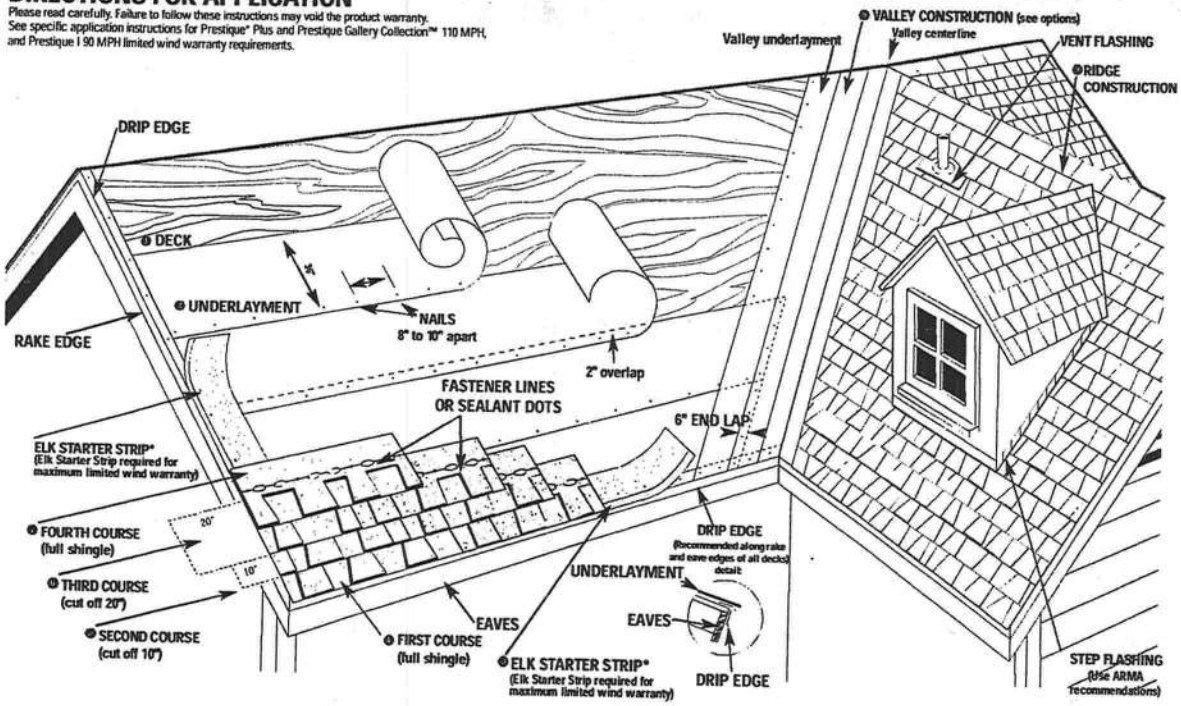

❺ **VALLEY CONSTRUCTION OPTION** (California Open and California Closed are also acceptable) NOTE: For complete ARMA valley installation details, see ARMA Residential Asphalt Roofing Manual.

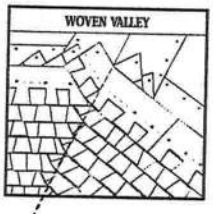

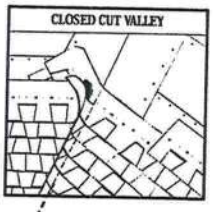

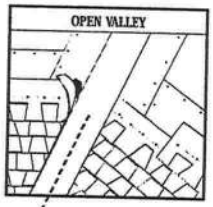

DIRECTIONS FOR APPLICATION

These application instructions are the minimum required to meet Elk's application requirements. Your failure to follow these instructions may void the product warranty. In some areas, the building codes may require additional application techniques or methods beyond our instructions. In these cases, the local code must be followed. Under no circumstances will Elk accept application requirements that are less than those printed here. Shingles should not be jammed tightly together. All attics should be properly ventilated. Note: It is not necessary to remove tape on back of shingle.

❶ DECK PREPARATION

Roof decks should be dry, well-seasoned 1" x 6" boards or exterior grade plywood minimum 3/8" thick and conform to the specifications of the American Plywood Association or 7/16" oriented strandboard, or 7/16" chipboard.

❷ UNDERLAYMENT

Apply underlayment (Non-Perforated No. 15 or 30 asphalt saturated felt). Cover drip edge at eaves only.

For low slope (2/12 up to 4/12), completely cover the deck with two plies of underlayment overlapping a minimum of 19". Begin by fastening a 19" wide strip of underlayment placed along the eaves. Place a full 36" wide sheet over the starter, horizontally placed along the eaves and completely overlapping the starter strip.

EAVE FLASHING FOR ICE DAMS (ASK A ROOFING CONTRACTOR, REFER TO ARMA MANUAL OR CHECK LOCAL CODES)

For standard slope (4/12 to less than 21/12), use coated roll roofing of no less than 50 pounds over the felt underlayment extending from the eave edge to a point at least 24" beyond the inside wall of the living space below or one layer of a self-adhered eave and flashing membrane.

For low slope (2/12 up to 4/12), use a continuous layer of asphalt plastic cement between the two plies of underlayment from the eave edge up roof to a point at least 24" beyond the inside wall of the living space below or one layer of a self-adhered eave and flashing membrane.

Consult the Elk Field Service Department for application specifications over other decks and other slopes.

❸ STARTER SHINGLE COURSE

USE AN ELK STARTER STRIP OR A STRIP SHINGLE INVERTED WITH THE HEADLAP APPLIED AT THE EAVE EDGE. With at least 4" trimmed from the end of the first shingle, start at the rake edge overhanging the eave 1/2" to 3/4". Fasten 2" from the lower edge and 1" from each side. Shingles may be applied with a course alignment of 45° on the roof.

❶ FIRST COURSE

Start at rake and continue course with full shingles laid flush with the starter course.

❷ SECOND COURSE

Start at the rake with the shingle having 10" trimmed off and continue across roof with full shingles.

❸ THIRD COURSE

Start at the rake with the shingle having 20" trimmed off and continue across roof with full shingles.

❹ FOURTH COURSE

Start at the rake and continue with full shingles across roof.

FIFTH AND SUCCEEDING COURSES.

Repeat application as shown for second, third, and fourth courses. Do not rack shingles straight up the roof.

❺ VALLEY CONSTRUCTION

Open, woven and closed cut valleys are acceptable when applied by Asphalt Roofing Manufacturing Association (ARMA) recommended procedures. For metal valleys, use 36" wide vertical underlayment prior to applying 18" metal flashing (secure edge with nails). No nails are to be within 6" of valley center.

❻ RIDGE CONSTRUCTION

For ridge construction use Class "A" Seal-A-Ridge® with formula *FLX*™ (See ridge package for installation instructions.)

FASTENERS

While nailing is the preferred method for Elk shingles, Elk will accept fastening methods according to the following instructions.

Always nail or staple through the fastener line or on products without fastener lines, nail or staple between and in line with sealant dots.

NAILS: Corrosive resistant, 3/8" head, minimum 12-gauge roofing nails. Elk recommends 1-1/4" for new roofs and 1-1/2" for roof-overs. In cases where you are applying shingles to a roof that has an exposed overhang, for new roofs only, 3/4" ring shank nails are allowed to be used from the eave's edge to a point up the roof that is past the outside wall line. 1" ring shank nails allowed for re-roof.

STAPLES: Corrosive resistant, 16-gauge minimum, crown width minimum of 15/16". Note: An improperly adjusted staple gun can result in raised staples that can cause a fish-mouthed appearance and can prevent sealing.

Fasteners should be long enough to obtain 3/4" deck penetration or penetration through deck, whichever is less.

MANSARD APPLICATIONS

Correct fastening is critical to the performance of the roof. For slopes exceeding 60° (or 21/12) use six fasteners per shingle. Locate fasteners in the fastener area 1" from each side edge with the remaining four fasteners equally spaced along the length of the double thickness (laminated) area. Only fastening methods according to the above instructions are acceptable.

LIMITED WIND WARRANTY

- For a Limited Wind Warranty, all Prestique and Raised Profile™ shingles must be applied with 4 properly placed fasteners, or in the case of mansard applications, 6 properly placed fasteners per shingle.
- For a Limited Wind Warranty up to 110 MPH for Prestique Gallery Collection or Prestique Plus or 90 MPH for Prestique I, shingles must be applied with 6 properly placed NAILS per shingle. SHINGLES APPLIED WITH STAPLES WILL NOT QUALIFY FOR THIS ENHANCED LIMITED WIND WARRANTY. Also, Elk Starter Strip shingles must be applied at the eaves and rake edges to qualify Prestique Plus, Prestique Gallery Collection and Prestique I shingles for this enhanced Limited Wind Warranty. Under no circumstances should the Elk Shingles or the Elk Starter Strip overhang the eaves or rake edge more than 3/4 of an inch.

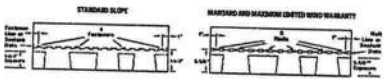

HELP STOP BLOW-OFFS AND CALL-BACKS

A minimum of four fasteners must be driven into the DOUBLE THICKNESS (laminated) area of the shingle. Nails or staples must be placed along – and through – the "fastener line" or on products without fastener lines, nail or staple between and in line with sealant dots. CAUTION: Do not use fastener line for shingle alignment.

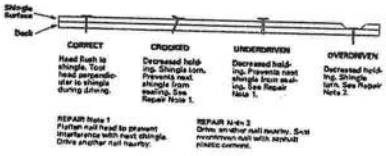

Refer to local codes which in some areas may require specific application techniques beyond those Elk has specified.
All Prestique and Raised Profile shingles have a U.L.® Wind Resistance Rating when applied in accordance with these instructions using nails or staples on re-roofs as well as new construction.

CAUTION TO WHOLESALER: Careless and improper storage or handling can harm fiberglass shingles. Keep these shingles completely covered, dry, reasonably cool, and protected from the weather. Do not store near various sources of heat. Do not store in direct sunlight until applied. DO NOT DOUBLE STACK. Systematically rotate all stock so that the material that has been stored the longest will be the first to be moved out.

ELK®
www.elkcorp.com

333 Pfingsten Road
Northbrook, Illinois 60062-2096
United States Country Code (1)
(847) 272-8800
FAX No. (847) 272-8129
http://www.ul.com

Underwriters Laboratories Inc.®

March 4, 2002

GAF Materials Corporation
Mr Randall Ziegler
1361 Alps Road
Wayne, NJ 07470

Our Reference: R21

Subject: UL Listed products

Dear Mr Ziegler:

This is is response to your request to identify some of the products that are currently Listed with Underwriters Laboratories relating to various Standards. Following are those products:

Royal Sovereign®
Marquis®/Marquis® WeatherMax®
SLATELINE®
Grand canyon™
Grand Sequoia®
Country Mansion™
Country Estates™
Timberline 30™
Timberline Select™ 40
Timberline Ultra™
Sentinel®
The above products have been tested to ASTM D3462 , Class A UL790/ASTM E108 and UL 997/ ASTM D3161(secured with 4 nails)with velocities up to 110 mph and have successfully met those test criteria.

If you have any questions please feel free to contact the writer.

Very truly yours,

Roger Anderson (Ext. 43283)
Senior Engineering Associate
Conformity Assessment Services- 3011E-NBK

Reviewed by,

Douglas C. Miller (Ext. 43262)
Engineering Group Leader
Conformity Assessment Services- 3011E-NBK

** TOTAL PAGE.01 **

GAF®
GAF MATERIALS CORPORATION

MARQUIS® WeatherMax® SHINGLES

ROYAL SOVEREIGN® SHINGLES

SENTINEL® SHINGLES

APPLICATION INSTRUCTIONS

Note: These shingles must be nailed a nominal 5 5/8" (143mm) from bottom of shingles, not in or above self seal, as shown. Nails should remain unexposed.

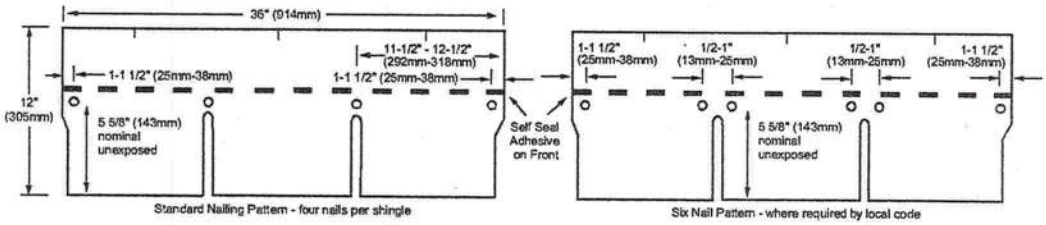

Standard Nailing Pattern - four nails per shingle

Six Nail Pattern - where required by local code

GENERAL INSTRUCTIONS

• **ROOF DECKS:** For use on new or reroofing work over well-seasoned, supported wood deck, tightly-constructed with maximum 6" (152mm) wide lumber, having adequate nail-holding capacity and smooth surface. Plywood decking as recommended by The Engineered Wood Assn. is acceptable. Plywood decks for Class A installations must be 3/8" (10mm) thick or greater with underlayments as noted below. Shingles must **not** be fastened directly to insulation or insulated deck unless authorized in writing by GAF Materials Corporation. Roof decks and existing surfacing material must be **dry** prior to application of shingles.

• **UNDERLAYMENT:** Underlayment is required on new construction and required for reroofing when old roof is removed from the deck. Use only "breather type" material like GAF Materials Corporation Shingle-Mate® Underlayment or equivalent. Underlayments must be installed flat, without wrinkles.

• **FASTENERS:** Use of nails is recommended. (Staple specifications and application instructions are available from GAF Materials Corporation, Contractor Services Dept., 1361 Alps Road, Wayne, NJ 07470.) Use only zinc coated steel or aluminum, 10-12 gauge, barbed, deformed or smooth shank roofing nails with heads 3/8" (10mm) to 7/16" (12mm) in diameter. Fasteners should be long enough to penetrate at least 3/4" (19mm) into wood decks or just through the plywood decks. Fasteners must be driven flush with the surface of the shingle. Over driving will damage the shingle. Raised fasteners will interfere with the sealing of the shingles. For normal installation, four fasteners must be installed per shingle, a nominal 5 5/8" (143mm) up from the bottom of the shingle. Fasteners must be installed approximately 1"- 1 1/2" (25-38mm) and 11 1/2"-12 1/2" (292-318mm) from each side.

• **WIND RESISTANT:** These shingles have a special thermal sealant that firmly bonds the shingles together after application when exposed to sun and warm temperatures. Shingles installed in Fall or Winter may not seal until the following Spring. If shingles are damaged by winds before sealing or are not exposed to adequate surface temperatures, or if the self-sealant gets dirty, the shingles may never seal. Failure to seal under these circumstances results from the nature of self-sealing shingles and is not a manufacturing defect. To insure immediate sealing, apply 2 quarter-sized dabs of shingle tab adhesive on the back of each tab, approximately 1" (25mm) from end and 1" (25mm) up from bottom of each tab corner. The shingle must be pressed firmly into the adhesive.

NOTE: Application of excess tab adhesive can cause blistering of the shingle.

For maximum wind resistance along rakes, cement shingles to underlayment and each other in a 4" (102mm) width of asphalt plastic roof cement.

NOTE: The film strips on the back of each shingle are to prevent sticking together of the shingles while in the bundle. Their removal is NOT required during application.

• **CANADIAN COLD WEATHER APPLICATIONS:** CSA A123.5-M90 mandates that shingles applied between September 1 and April 30 shall be adhered with a compatible field-applied adhesive. See Wind Resistant for GAF Materials Corporation's recommendations for the application of that adhesive.

• **MANSARD AND STEEP SLOPE APPLICATIONS:** For roof slopes greater than 21" (1750mm/m) per foot (do NOT use on vertical side walls), shingle sealing must be enhanced by hand sealing. After fastening the shingle in place, apply 2 quarter-sized dabs of shingle tab adhesive as indicated in Wind Resistant above. The shingle must be pressed firmly into the adhesive.

• **EXPOSURE:** 5" (127mm)

• **THROUGH VENTILATION:** All roof structures must be provided with through ventilation to prevent entrapment of moisture laden air behind roof sheathing. Ventilation provisions must at least meet or exceed current F.H.A., H.U.D. or local code minimum requirements.

• **NON-CORRODING METAL DRIP EDGES:** Recommended along rake and eave edges on all decks, especially plywood decks.

• **ASPHALT PLASTIC CEMENT:** For use as shingle tab adhesive. Must conform to ASTM D4586 Type I or II.

1 Underlayment: Standard Slope–4/12 (333mm/m) or more

Application of underlayment: Cover deck with one layer of underlayment installed without wrinkles. Use only enough nails to hold underlayment in place until covered by shingles.

Application of eave flashing: Install eave flashing such as GAF Materials Corporation Weather Watch® or StormGuard® Leak Barrier in localities where leaks may be caused by water backing up behind ice or debris dams. Eave flashing must overhang the roof edge by 3/8" (10mm) and extend 24" (610mm) beyond the inside wall line.

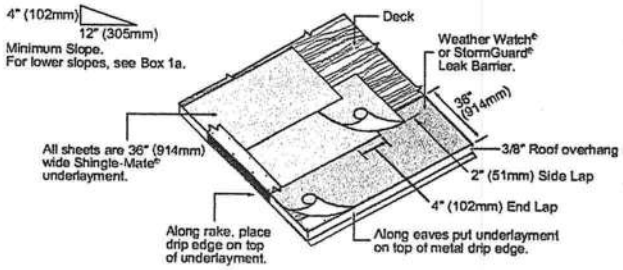

1a Underlayment: Low Slope 2/12-4/12 (167mm-333mm/m)

Application of underlayment and eave flashing: Completely cover the deck with two layers of underlayment as shown. Use only enough nails to hold underlayment in place until covered by shingles. Use blind nailing for eave flashings. At eaves and where ice dams can be expected, use one layer of GAF Materials Corporation Weather Watch® or StormGuard® Leak Barrier. Eave flashing must overhang the roof edge by 3/8" (10mm) and extend 24" (610mm) beyond the inside wall line. Where ice dams or debris dams are not expected, install 2 plies of Shingle-Mate® underlayment.

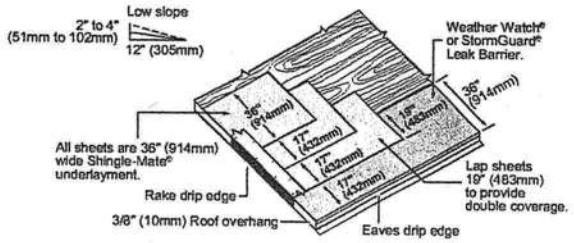

2 Starter Course

Use of any GAF MC 3-tab Shingle is recommended. Apply as shown.

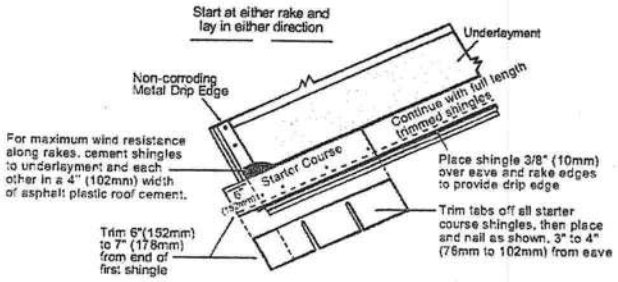

3 First Course

Start and continue with full shingles laid flush with the starter course. Shingles may be laid from left to right or right to left. DO NOT lay shingles straight up the roof since this procedure can cause an incorrect color blend on the roof and may damage the shingles.

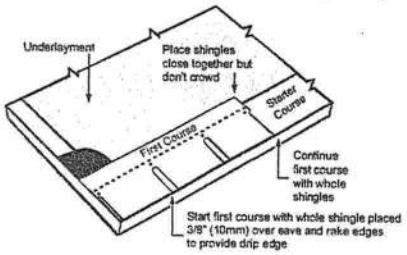

4 Second Course

Start and continue second course and all even numbered courses as shown. Position the shingle on the top of the cutouts of the underlying shingle so that there will be 5" (127mm) of each shingle exposed. Strike a chalk line about every 6 courses to check parallel alignment with eaves. Factory applied self-sealing dots on lower courses are designed to seal down the shingle tabs in an upper course.

NOTE: Shingles may be laid from either left or right hand side. Start at either rake edge with shingles having 6" (152mm) trimmed from rake.

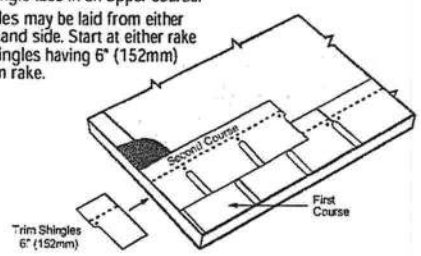

5 Hip and Ridge

Use GAF hip & ridge shingles, or cut hip & ridge shingles from these full shingles, and apply as shown. Position laps away from prevailing wind direction.

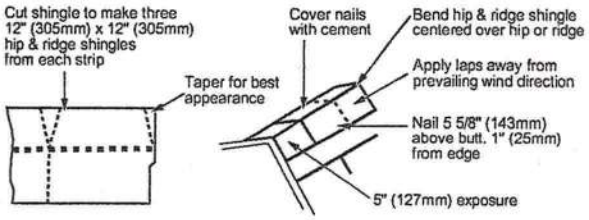

6 Wall Flashing (Sloped Roof to Vertical Wall)

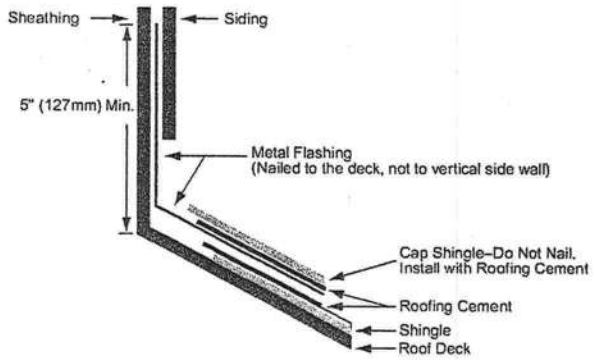

7 Chimney Flashing

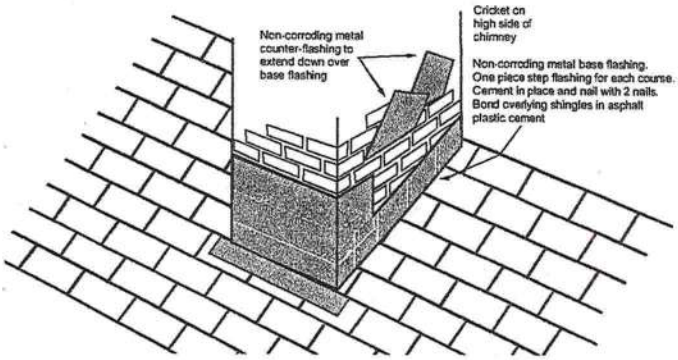

8 Valley Construction - Closed or Woven Valley

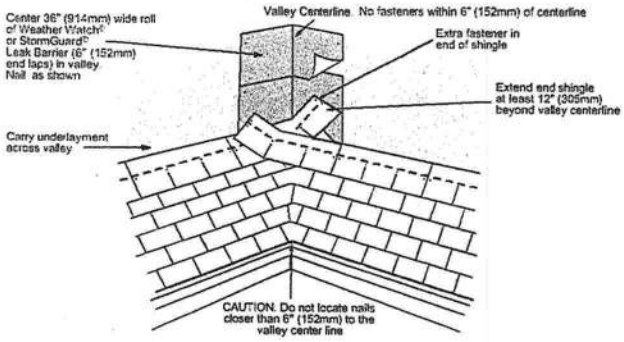

9 Valley Construction–Open Cut

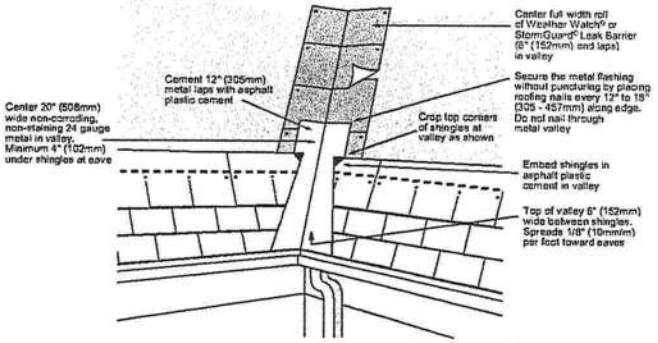

10 Valley Construction–Closed Cut

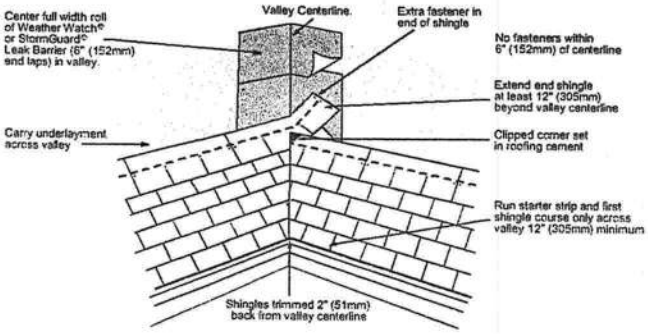

Precautionary Notes

These shingles are fiberglass, self-sealing asphalt shingles. Because of the natural characteristics of the high quality waterproofing material used, these shingles will be stiff in cold weather and flexible in hot weather.

1. Bundles should not be dropped on edge nor should attempt be made to separate shingles by "breaking" over ridge or other bundles.
2. Handle carefully. Shingles can easily be broken in cold weather or their edges damaged in hot weather.
3. All exposed materials must be of Class A type.
4. Storage should be in a covered, ventilated area–maximum temperature 110°F (43°C.) Store on flat surface and use weight equalization boards if pallets are to be double stacked. Shingles must be protected from weather when stored at job site. Do not store near steam pipes, radiators, etc., or in sunlight. All rolled product must be stored on ends.
5. If shingles are to be applied during PROLONGED COLD periods or in areas where airborne dust or sand can be expected before sealing occurs, the shingles MUST be hand sealed. See Wind Resistant instructions.

Re-Roofing

If old asphalt shingles are to remain in place, nail down or cut away all loose, curled or lifted shingles; replace with new; and just before applying the new roofing, sweep the surface clean of all loose debris. Since any irregularities may show through the new shingles, be sure the underlying shingles provide a smooth surface. Fasteners must be of sufficient length to penetrate the wood deck at least 3/4" (19mm) or just through plywood. Follow other above instructions for application. *Note*: Shingles can be applied over wood shingles when precautions have been taken to provide an acceptable smooth surface. This includes cutting back old shingles at eaves and rakes and installing new wood edging strips as needed. Make surface smooth and use beveled wood strips if necessary. Install #30 underlayment to maintain Class A rating.

This product is sold with an express LIMITED WARRANTY only. A copy of the LIMITED WARRANTY stating its terms and restrictions is printed on the product wrapper or may be obtained from the distributor of this product or directly from GAF Materials Corporation. Any deviation from printed instructions shall be the responsibility of applicator and/or specifier.

GAF MATERIALS CORPORATION

TIMBERLINE® Ultra® SHINGLES

TIMBERLINE® 40 SHINGLES TIMBERLINE® 30 SHINGLES

APPLICATION INSTRUCTIONS

Timberline® Series shingles come in either 36" (914mm) or 36-15/16" (938mm) lengths, depending on shingle brand. Application instructions apply to both.

These shingles must be nailed a nominal 5-5/8" (143mm) from bottom of shingles, as shown, to allow for penetration through the double ply area just above the tabs. Nails should remain unexposed.

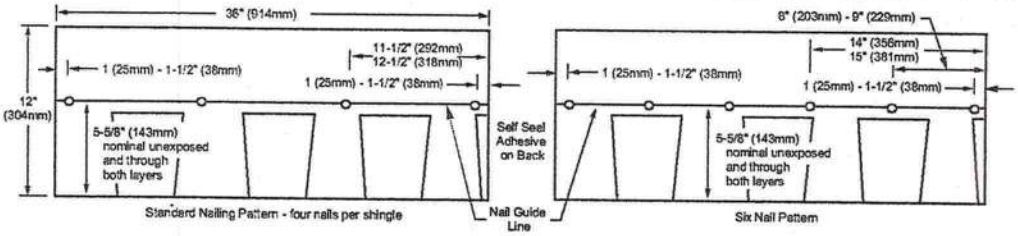

GENERAL INSTRUCTIONS

• **ROOF DECKS:** For use on new or reroofing work over well-seasoned, supported wood deck, tightly-constructed with maximum 6" (152mm) wide lumber, having adequate nail-holding capacity and smooth surface. Plywood decking as recommended by The Engineered Wood Assn. is acceptable. Plywood decks for Class A installations must be 3/8" (10mm) thick or greater with underlayments as noted below. Shingles must **not** be fastened directly to insulation or insulated deck unless authorized in writing by GAF Materials Corporation. Roof decks and existing surfacing material must be **dry** prior to application of shingles.

• **UNDERLAYMENT:** Underlayment beneath shingles has many benefits, including preventing wind driven rain from reaching the interior of the building and preventing sap in some wood decking from reacting with asphalt shingles. Underlayment is also required by many code bodies. Consult your local building department for its requirements. Where an underlayment is to be installed, a breather-type underlayment such as GAFMC's Shingle-Mate® underlayment is recommended. Underlayment must be installed flat, without wrinkles.

• **FASTENERS:** Use of nails is recommended. (Staple specifications and application instructions are available from GAF Materials Corporation, Contractor Services Dept., 1361 Alps Road, Wayne, NJ 07470.) Use only zinc coated steel or aluminum, 10-12 gauge, barbed, deformed or smooth shank roofing nails with heads 3/8" (10mm) to 7/16" (12mm) in diameter. Fasteners should be long enough to penetrate at least 3/4" (19mm) into wood decks or just through the plywood decks. Fasteners must be driven flush with the surface of the shingle. Over driving will damage the shingle. Raised fasteners will interfere with the sealing of the shingles. For normal installation, four fasteners must be installed per shingle, a nominal 5-5/8" (143mm) up from the bottom of the shingle, to penetrate both layers of the shingle. Fasteners must be installed approximately 1"- 1 1/2" (25-38mm) and 11-1/2"-12-1/2" (292-318mm) from each side.

• **WIND RESISTANT:** These shingles have a special thermal sealant that firmly bonds the shingles together after application when exposed to sun and warm temperatures. Shingles installed in Fall or Winter may not seal until the following Spring. If shingles are damaged by winds before sealing or are not exposed to adequate surface temperatures, or if the self-sealant gets dirty, the shingles may never seal. Failure to seal under these circumstances results from the nature of self-sealing shingles and is not a manufacturing defect. To insure immediate sealing, apply 4 quarter-sized dabs of shingle tab adhesive on the back of the shingle 1" (25mm) and 13" (330mm) in from each side and 1" (25mm) up from bottom of the shingle. The shingle must be pressed firmly into the adhesive.

NOTE: Application of excess tab adhesive can cause blistering of the shingle.

For maximum wind resistance along rakes, cement shingles to underlayment and each other in a 4" (102mm) width of asphalt plastic roof cement.

NOTE: The film strips on the back of each shingle are to prevent sticking together of the shingles while in the bundle. Their removal is NOT required during application.

• **CANADIAN COLD WEATHER APPLICATIONS:** CSA 123.5-M90 mandates that shingles applied between September 1 and April 30 shall be adhered with a compatible field-applied adhesive. See Wind Resistant for GAF Materials Corporation's recommendations for the application of that adhesive.

• **MANSARD AND STEEP SLOPE APPLICATIONS:** For roof slopes greater than 21" (1750mm/m) per foot (do NOT use on vertical side walls), shingle sealing must be enhanced by hand sealing. After fastening the shingle in place, apply 4 quarter-sized dabs of shingle tab adhesive as indicated in Wind Resistant above. The shingle must be pressed firmly into the adhesive.

• **EXPOSURE:** 5" (127mm)

• **THROUGH VENTILATION:** All roof structures must be provided with through ventilation to prevent entrapment of moisture laden air behind roof sheathing. Ventilation provisions must at least meet or exceed current F.H.A., H.U.D. or local code minimum requirements.

• **NON-CORRODING METAL DRIP EDGES:** Recommended along rake and eave edges on all decks, especially plywood decks.

• **ASPHALT PLASTIC CEMENT:** For use as shingle tab adhesive. Must conform to ASTM D4586 Type I or II.

1 Underlayment: Standard Slope–4/12 (333mm/m) or more

Application of underlayment: Cover deck with one layer of underlayment installed without wrinkles. Use only enough nails to hold underlayment in place until covered by shingles.

Application of eave flashing: Install eave flashing such as GAF Materials Corporation Weather Watch® or StormGuard® Leak Barrier in localities where leaks may be caused by water backing up behind ice or debris dams. Eave flashing must overhang the roof edge by 3/8" (10mm) and extend 24" (610mm) beyond the inside wall line.

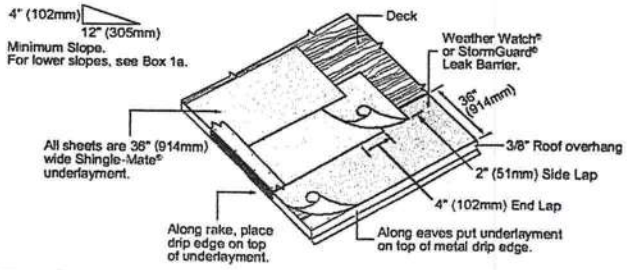

1a Underlayment: Low Slope 2/12-4/12 (167mm-333mm/m)

Application of underlayment and eave flashing: Completely cover the deck with two layers of underlayment as shown. Use only enough nails to hold underlayment in place until covered by shingles. Use blind nailing for eave flashings. At eaves and where ice dams can be expected, use one layer of GAF Materials Corporation Weather Watch® or StormGuard® Leak Barrier. Eave flashing must overhang the roof edge by 3/8" (10mm) and extend 24" (610mm) beyond the inside wall line. Where ice dams or debris dams are not expected, install 2 plies of Shingle-Mate® underlayment.

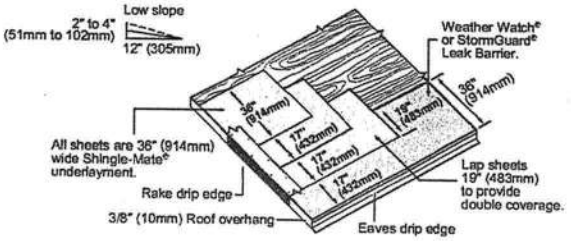

2 Starter Course

Apply as shown.

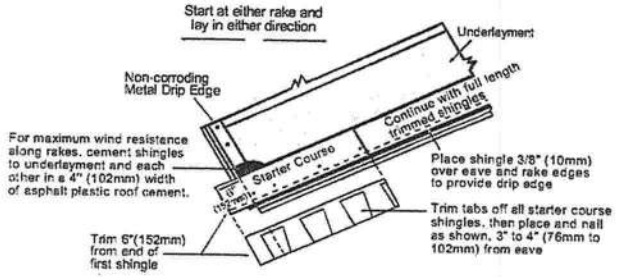

3 First Course

Start and continue with full shingles laid flush with the starter course. Shingles may be laid from left to right or right to left. DO NOT lay shingles straight up the roof since this procedure can cause an incorrect color blend on the roof and may damage the shingles.

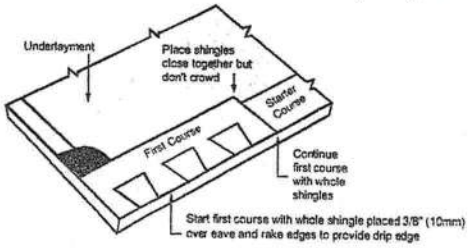

4 Second Course

Start and continue second course as shown. Trim 6" (152mm) from the end of the shingle. Position the shingles in the second and subsequent courses flush with the tops of the wide cutouts. This results in a 5" (127mm) exposure. Continue with full width shingles across the roof. Strike a chalk line about every 6 courses to check parallel alignment with eaves. NOTE: Shingles may be laid from either left or right hand side. Start at either rake edge with shingles having 6" (152mm) trimmed from rake.

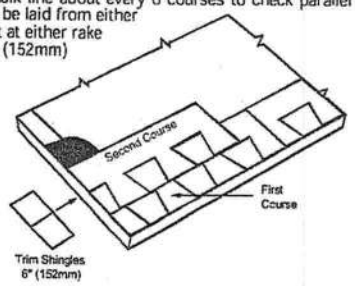

5 Third Course

Trim 11" (279mm) from the first shingle in the course then continue with full shingles across the roof.

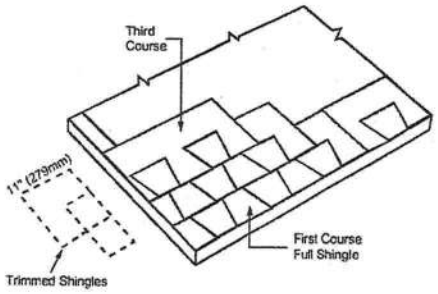

6 Fourth Course and Remaining Courses

Trim 17" (432 mm) from first shingle in the course, then continue with full shingles across the roof. Fifth and subsequent courses repeat full shingle instructions from Step 3.

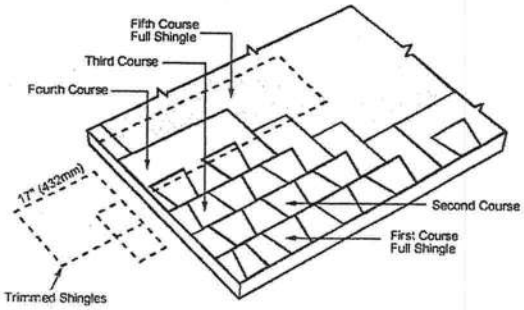

7 Hip and Ridge

For single layer application, use hip and ridge shingles and apply as shown. To enhance appearance, use GAF TIMBERTEX® or a double layer application of Universal Hip & Ridge. (One bundle of TIMBERTEX® Hip & Ridge covers 20 lineal ft.–6.1 meters.) For double application, start with triple thickness of precut Hip & Ridge shingles and continue remainder with double thickness. Fasten in same manner as single application shown. Apply laps away from prevailing wind direction.

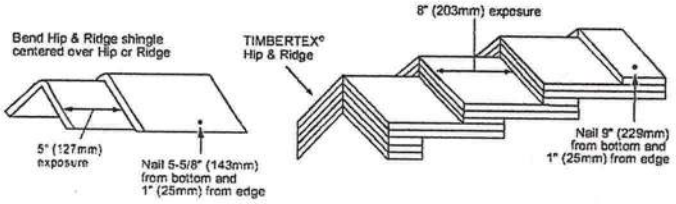

8 Wall Flashing (Sloped Roof to Vertical Wall)

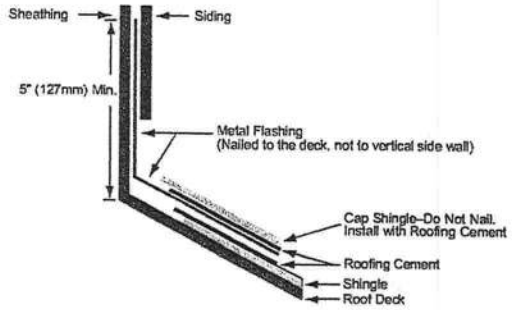

9 Chimney Flashing

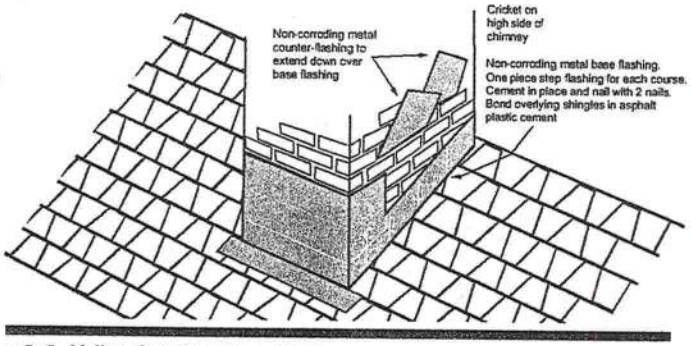

10 Valley Construction–Closed Cut

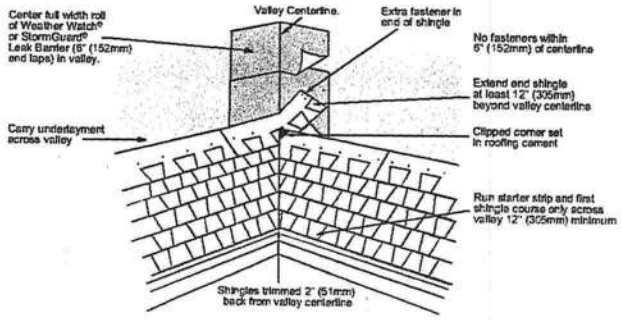

11 Valley Construction–Open

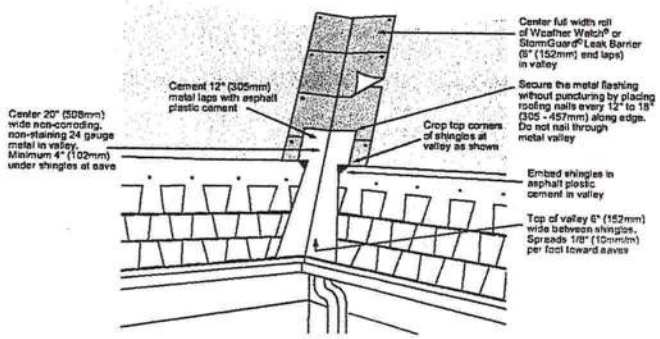

Precautionary Notes

Timberline® Series shingles are fiberglass, self-sealing asphalt shingles. Because of the natural characteristics of the high quality waterproofing material used, these shingles will be stiff in cold weather and flexible in hot weather.

1. Bundles should not be dropped on edge nor should attempt be made to separate shingles by "breaking" over ridge or other bundles.
2. Handle carefully. Shingles can easily be broken in cold weather or their edges damaged in hot weather.
3. All exposed materials must be of Class A type.
4. Storage should be in a covered, ventilated area–maximum temperature 110°F (43°C.) Store on flat surface and use weight equalization boards if pallets are to be double stacked. Shingles must be protected from weather when stored at job site. Do not store near steam pipes, radiators, etc., or in sunlight. All rolled product must be stored on ends.
5. If shingles are to be applied during PROLONGED COLD periods or in areas where airborne dust or sand can be expected before sealing occurs, the shingles MUST be hand sealed. See Wind Resistant instructions.

Re-Roofing

If old asphalt shingles are to remain in place, nail down or cut away all loose, curled or lifted shingles; replace with new; and just before applying the new roofing, sweep the surface clean of all loose debris. Since any irregularities may show through the new shingles, be sure the underlying shingles provide a smooth surface. Fasteners must be of sufficient length to penetrate the wood deck at least 3/4" (19mm) or just through plywood. Follow other above instructions for application.

Note: Shingles can be applied over wood shingles when precautions have been taken to provide an acceptable smooth surface. This includes cutting back old shingles at eaves and rakes and installing new wood edging strips as needed. Make surface smooth and use beveled wood strips if necessary. Install #30 underlayment to maintain Class A rating.

This product is sold with an express LIMITED WARRANTY only. A copy of the LIMITED WARRANTY stating its terms and restrictions is printed on the product wrapper or may be obtained from the distributor of this product or directly from GAF Materials Corporation. Any deviation from printed instructions shall be the responsibility of applicator and/or specifier.

Graham

Notice of Intent for Preventative Treatment for Term

(As required by Florida Building Code 104.2.6)

Date: 10/3/05

3949 SE High Falls Rd — Lake City

(Address of Treatment or Lot/Block of Treatment) — City

Florida Pest Control & Chemical Co.

www.flapest.com

Product to be used: Bora-Care Termiticide (Wood Treatment)

Chemical to be used: 23% Disodium Octaborate Tetrahydrate

Application will be performed onto structural wood at dried-in stage of constru Bora-Care Termiticide application shall be applied according to EPA registere directions as stated in the Florida Building Code Section 1861.1.8

(Information to be provided to local building code offices prior to concre foundation installation.)

Notice of Intent for Preventative Treatment for Ter

(As required by Florida Building Code 104.2.6)

Date: 10/19/05

304 NW Ambleside Dr, Lot 28 — Lake City

(Address of Treatment or Lot/Block of Treatment) Cobblestone — City

Florida Pest Control & Chemical Co.

www.flapest.com

Product to be used: Bora-Care Termiticide (Wood Treatment)

Chemical to be used: 23% Disodium Octaborate Tetrahydrate

Notice of Treatment 117

Applicator: Florida Pest Control & Chemical Co. (www.flape

Address: BAYARD

City Lake City Phone 752-1702

Site Location: Subdivision

Lot # Block# Permit # 23735

Address 3949 High Falls RD

Product used	Active Ingredient	% Concent
☐ Premise	Imidacloprid	0.1%
☐ Termidor	Fipronil	0.12%
☑ Bora-Care	Disodium Octaborate Tetrahydrate	23.0%

Type treatment: ☐ Soil ☑ Wood

Area Treated	Square feet	Linear feet	Gallons
Dwelling	3187	825	7

As per Florida Building Code 104.2.6 – If soil chemical barrier me termite prevention is used, final exterior treatment shall be complet to final building approval.

If this notice is for the final exterior treatment, initial this line

1/12/06 — 1500 — F254 Guan

Date — Time — Print Technician's I

Remarks:

Applicator - White Permit File - Canary Permit Holde

06172/TRI
BuyLine 4916

TrimJoist®

ENGINEERED WOOD PRODUCTS

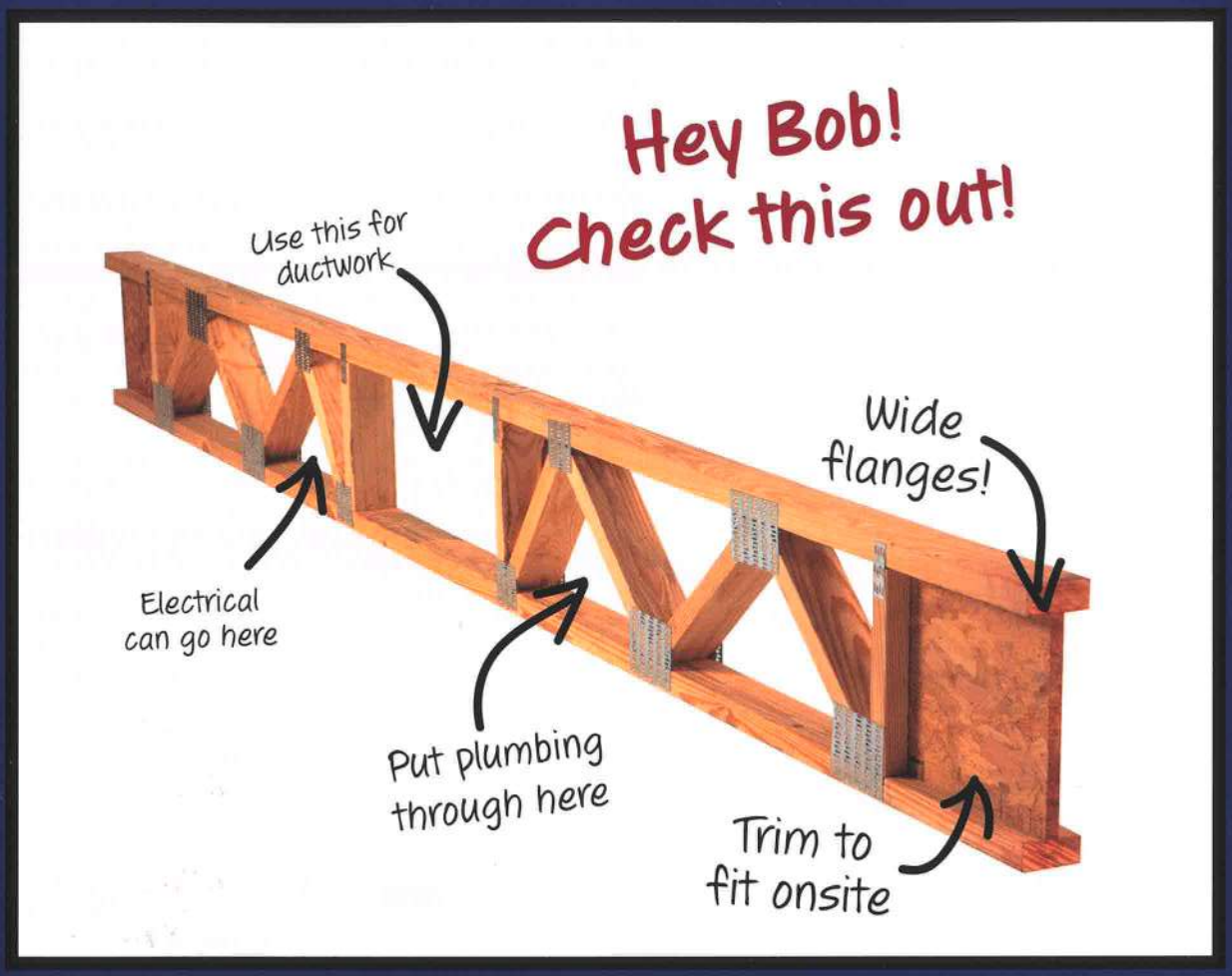

Wood truss joists that can be trimmed at the jobsite

IT'S CONTRACTOR FRIENDLY.
The end sections can be trimmed onsite.

IT SAVES MONEY AND TIME.
With strut-webbing, there's no need for subcontractors to cut holes.

IT'S STRONGER.
You don't weaken the joist with holes.

IT HAS WIDE FLANGES.
With 3.5-inch flanges on the top and bottom, subfloor application is simple. Nailing and gluing are easier.

IT COMES WITH A GREAT TECHNICAL SUPPORT TEAM.
Just call our toll-free number for custom engineering.

1 800 844-8281
www.trimjoist.com

LOAD TABLES AND DESIGN NOTES

The uniform load span charts below indicate the maximum design spans (including a 1-1/2" minimum bearing at each end) for each family of TrimJoist® floor joists. Each chart is divided into columns which represent common design loadings and rows which show typical spacings. Most residential designs require a minimum of 55 psf loading. Floors used for heavy traffic and/or heavy floor coverings (e.g. Tile) should be designed at 60 psf minimum. All loads are broken down into Live, Top-dead and Bottom-dead components. For example, the 55 psf column is really 40 psf live plus 10 psf top-dead plus 5 psf bottom-dead for a total of 55 psf. Dead loads are the weight of construction materials and are always present for the whole life of the structure. Live loads, on the other hand, are transient and are never constant over the life of the structure. Select the appropriate column based on the dead loads of your construction materials. These charts are for uniformly loaded, clear span, simply supported joists. For special applications requiring concentrated loads, asymmetric continuous loads, cantilevers, or special bearing conditions please consult a TrimJoist® representative or authorized dealer. The TPDS computer program can be used to analyze almost any loading and/or bearing condition.

11 1/4" Deep

Spacing \ Loading	55 PSF (40/10/5)		60 PSF (40/10/10)	
12	24'- 0"	L/497	24'- 0"	L/497
16	22'- 0"	L/485	22'- 0"	L/485
19.2	21'- 2"	L/453	21'- 2"	L/453
24	19'- 7"	L/455	19'- 7"	L/455

16" Deep

Spacing \ Loading	55 PSF (40/10/5)		60 PSF (40/10/10)	
12	28'- 0"	L/676	28'- 0"	L/676
16	28'- 0"	L/507	28'- 0"	L/507
19.2	27'- 4"	L/453	27'- 4"	L/453
24	25'- 5"	L/450	25'- 5"	L/450

14" Deep

Spacing				
12	26'- 0"	L/633	26'- 0"	L/633
16	26'- 0"	L/475	26'- 0"	L/475
19.2	24'-10"	L/453	24'-10"	L/453
24	23'- 0"	L/452	22'- 0"	L/517

18" Deep

Spacing				
12	30'- 0"	L/710	30'- 0"	L/710
16	30'- 0"	L/532	30'- 0"	L/532
19.2	29'-10"	L/451	29'-10"	L/451
24	27'- 7"	L/468	27'- 3"	L/473

Notes on Span Charts

1. Spans are based on uniformly loaded joists and include allowances for repetitive use members.
2. Live loads of 40 psf are assumed. Additional dead loads should be chosen based on construction materials.
3. All TrimJoist® floor joists have a TOP orientation and should not be installed upside-down.
4. Stiffness factors (L/xxx) assume a minimum 3/4-inch span-rated subfloor that has been both glued and nailed.
5. Limit total reaction (per end) to that indicated in the Maximum Reaction Table at the right.
6. Do not apply center supports, cantilevers, concentrated, or asymmetrical continuous loads without first consulting a TrimJoist® representative.

Maximum Reaction Table

Width	1 1/2	3 1/2	5 1/2
Max	3000	3500	4000

Width is the width of the loaded wall above, or the bearing wall width whichever is less.

Note About Floor Stiffness: Floor performance is greatly influenced by joist stiffness. Experience has shown that a floor system designed to minimum code acceptance may not meet the expectations of discerning owners. TrimJoist® Corporation strongly recommends that floor spans be limited to those indicated in the charts above. The numbers in these charts far exceed minimum code requirements and are based on both gluing and nailing the subfloor. In cases where the subfloor is nailed only, spans remain the same, but the stiffness must be reduced by 20%. For optimal performance use screws in lieu of nails.

Opening Sizes

	J12	J14	J16	J18
H	11 1/4"	14"	16"	18"
D	5"	8"	9"	10"
R1	8x16	10x24	12x24	14x24
R2	4x9	4x10 6x6	4x12 6x8	4x14 6x10 8x8

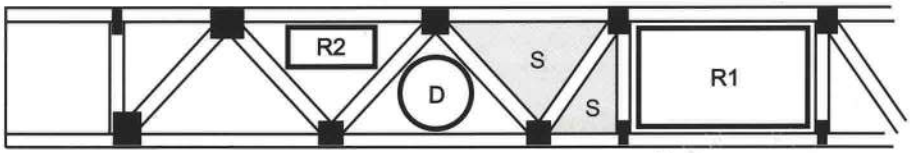

1. All sizes given are in inches and denote maximum expected clearance.
2. Rectangular opening (R1) is provided at centerline of stock length.
3. Only opening D available in 4' stock length (one opening only).
4. Only opening R1 available in 6' and 8' stock length.
5. Openings R2 & D not applicable in shaded areas (s).

Ammiley
June 1, 2004

GOOD FRAMING PRACTICE

DO Install TrimJoist® right side up. TOP is stamped on the top of each joist.

DO Make sure that each TrimJoist® bears on the bottom flange beneath the TrimEnd section or beneath the first metal plate if the TrimEnd section has been removed.

DO Use strongback stiffeners. Although not required for structural performance, strongback adds additional resistance to impact loadings.

DO Provide appropriate bearing width at each end of the TrimJoist®. The required width can be found in the Maximum Reaction Table above. Use vertical web stiffeners where reactions exceed these values.

DO Use TrimJoist® approved hangers for flush-mounted bearing conditions. These may be purchased from your local TrimJoist® dealer.

DO Use an appropriately rated sub-floor that has been both glued and nailed/screwed to the top flange of the TrimJoist®.

DO Consult your TrimJoist® dealer or representative about special loading or bearing conditions not addressed in this Application Guide.

DO NOT cut any part of the TrimJoist® except for the TrimEnd® sections which are specifically designed to be field cut.

DO NOT remove, cut or alter any metal plate connector on the TrimJoist® without first consulting a factory engineer.

DO NOT install the TrimJoist® upside down without first consulting a TrimJoist® factory engineer.

DO NOT use a TrimJoist® as a header or beam except as may be instructed by a TrimJoist® engineer.

DO NOT allow the TrimJoist® to be supported by the top flange. All support must be from under the bottom flange.

DO NOT depend on "toe nailing" to provide adequate support capacity for flush-mounted framing. Consult your local TrimJoist® dealer or a TrimJoist® factory engineer for proper hanger selection.

DO NOT apply special support or load conditions without first consulting a TrimJoist® representative.

TrimJoist®

SEE US IN DIRECTORY CATALOG FILES CD SWEETS.COM

TrimJoist®

Floor Application Guide

A product of the TrimJoist® Corporation
(800) 844-8281 • www.trimjoist.com

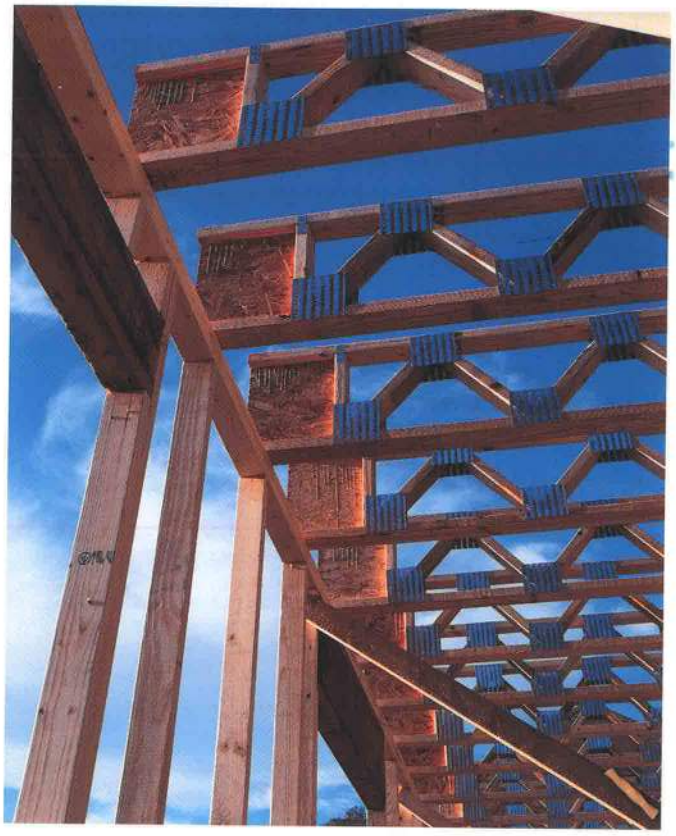

SILENCE. The TrimJoist® provides a full 3-1/2" wide surface for the proper nailing and gluing of subfloor materials. By providing such a wide surface, the TrimJoist® allows the builder to use subfloor framing tolerances that will prevent squeaks. The wide surface also allows for the application of sufficient glue to make the TrimJoist® and the subfloor truly act as a unified system.

QUALITY. The TrimJoist® addresses product consistency and product quality from three key perspectives:

DESIGN. The TrimJoist® was initially designed using the most capable structural engineers and computer software systems available from both inside and outside the forest products industry. This includes the PPSA system from Purdue University as well as Rasna finite element software from Parametric Technology.

MATERIAL CONTROL. All raw material components are structurally rated by various independent agencies such as the Truss Plate Institute (TPI), Southern Pine Inspection Bureau (SPIB), American Plywood Association (APA), American Society for Testing and Materials (ASTM), and of course ANSI. In fact, all TrimJoist® floor trusses now conform to the new ANSI/TPI-1995 standard. In addition, all lumber components of the TrimJoist® are subject to a strict "cull" process where questionable pieces are discarded before entering into the production process.

PRODUCTION TESTING. In addition to the rigorous testing performed on prototype units during the development phase of the TrimJoist®. All production runs are subject to periodic, random tests. These tests are conducted to the standards of the Truss Plate Institute (TPI) Test Truss Specification. No other production floor truss is subjected to such ongoing scrutiny and improvement.

ENVIRONMENT. The TrimJoist® design allows for the utilization of lumber from plantation-grown trees, thus sparing the "old-growth" forests that are necessary to produce all traditional wide-board joists. In addition, our engineered strength allows for longer spans and greater on-center spacing. This not only reduces construction costs, but can reduce the board footage of wood fiber required by up to 12% over traditional joists.

By design, approximately 40% of the TrimJoist® material content is from recycled sources. In addition, our manufacturing process recovers over 97% of its generated waste.

INNOVATION. The TrimJoist® is produced in stock lengths that range from 4' to 30', in standard 2-foot increments. Because each joist has 12-inches of trim at each end, a continuous range of spans is possible. Complex angled walls? No problem for the TrimJoist®.

The open web design of the TrimJoist® allows for the utilization of that valuable floor cavity space. It's now practical for duct work, wiring, and plumbing to be contained within this cavity. This eliminates unsightly and expensive furring. Free access to the floor cavity requires no cutting or notching that can severely impair the structural integrity of other joists products of inferior design.

SERVICE. Put simply, the TrimJoist® is the superior product for floor joist applications. To aid architects, building designers, and contractors we offer toll-free access to a TrimJoist® representative. By simply calling (800) 844-8281 you can gain immediate assistance with your question or framing issue.

U.S. Patent 5,761,872 • U.S. Patent 6,139,667 • Additional Patents Pending

Installation Details Available in CAD format at trimjoist.com and sweets.com

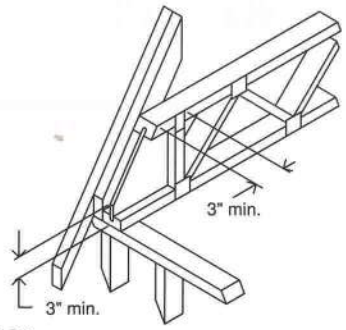

D1 RAFTER/FIRE CUT

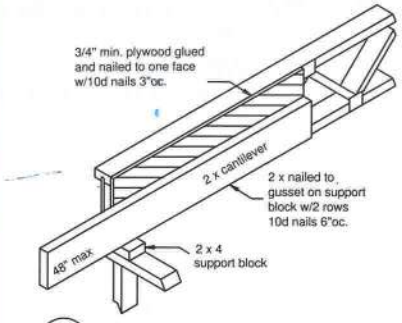

D2 DECK CANTILEVER

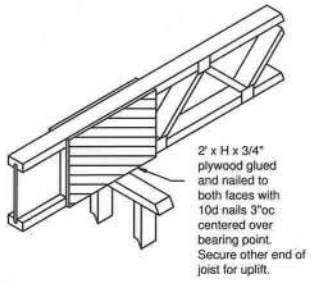

D3 CANTILEVER

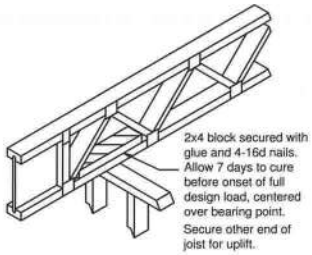

D4 CANTILEVER

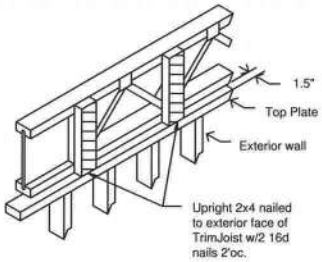

D5 EXTERIOR KNEE WALL

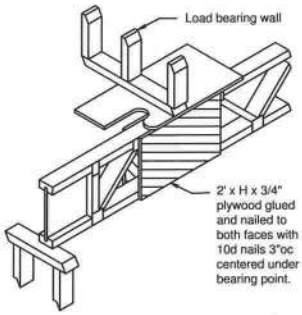

D6 POINT LOAD APPLICATION

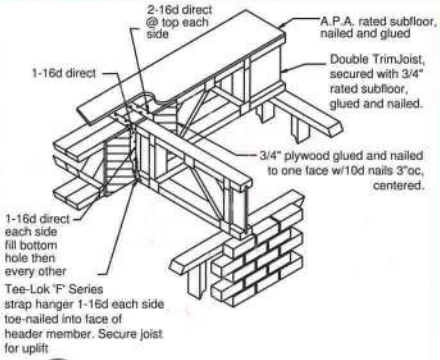

D7 HANGERED CANTILEVER

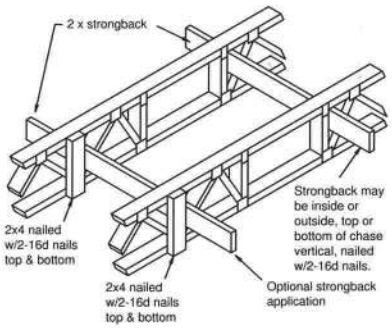

D8 STRONGBACK APPLICATION

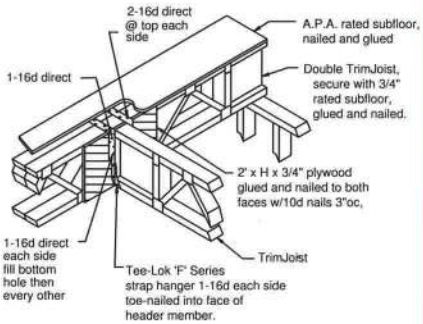

D9 HANGERED/ JOIST TO JOIST

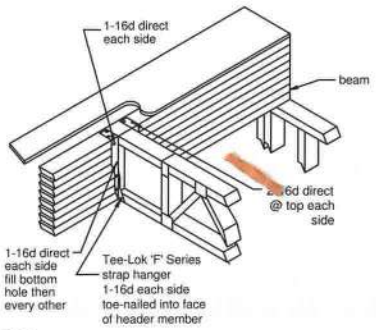

D10 HANGERED/ JOIST TO BEAM

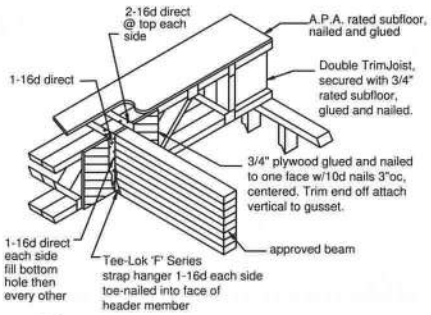

D11 HANGERED/ BEAM TO JOIST

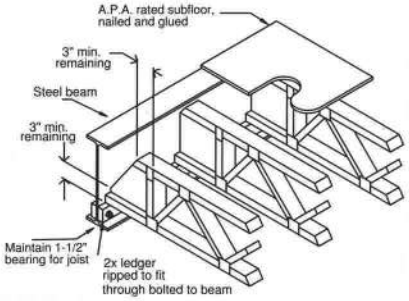

D12 FLUSH TO STEEL BEAM