DATE 07/31/2008

Columbia County Building Permit

This Permit Must Be Prominently Posted on Premises During Construction

PERMIT
000027224

APPLICANT PATRICK WILSON PHONE 352 206-5459

ADDRESS 6800 SOUTHPOINT PARKWAY JACKSONVILLE FL 32216

OWNER MARONDA HOMES PHONE 904 296-1490

ADDRESS 278 SW TIMBER RIDGE DRIVE LAKE CITY FL 32024

CONTRACTOR THEODORE BROCK PHONE 407 227-3504

LOCATION OF PROPERTY 90W, TL ON 247S, TR ON 252B, TL ON TIMBER RIDGE, 5TH ON LEFT

TYPE DEVELOPMENT SFD,UTILITY ESTIMATED COST OF CONSTRUCTION 89950.00

HEATED FLOOR AREA 1312.00 TOTAL AREA 1799.00 HEIGHT STORIES 1

FOUNDATION CONC WALLS FRAMED ROOF PITCH 6/12 FLOOR SLAB

LAND USE & ZONING RSF-2 MAX. HEIGHT

Minimum Set Back Requirments: STREET-FRONT 25.00 REAR 15.00 SIDE 10.00

NO. EX.D.U. 0 FLOOD ZONE X DEVELOPMENT PERMIT NO.

PARCEL ID 10-4S-16-02856-120 SUBDIVISION TIMBERLANDS

LOT 20 BLOCK PHASE UNIT TOTAL ACRES 0.50

000001647		CBC1256382		
Culvert Permit No.	Culvert Waiver	Contractor's License Number	Applicant/Owner/Contractor	
CULVERT	08-400	BK	WR	Y
Driveway Connection	Septic Tank Number	LU & Zoning checked by	Approved for Issuance	New Resident

COMMENTS: ELEVATION CONFIRMATION LETTER REQUIRED AT SLAB, MFE AT 96' PER PLAT

Check # or Cash 918688

FOR BUILDING & ZONING DEPARTMENT ONLY

Temporary Power _____ date/app. by Foundation _____ date/app. by Monolithic _____ date/app. by (footer/Slab)

Under slab rough-in plumbing _____ date/app. by Slab _____ date/app. by Sheathing/Nailing _____ date/app. by

Framing _____ date/app. by Rough-in plumbing above slab and below wood floor _____ date/app. by

Electrical rough-in _____ date/app. by Heat & Air Duct _____ date/app. by Peri. beam (Lintel) _____ date/app. by

Permanent power _____ date/app. by C.O. Final _____ date/app. by Culvert _____ date/app. by

M/H tie downs, blocking, electricity and plumbing _____ date/app. by Pool _____ date/app. by

Reconnection _____ date/app. by Pump pole _____ date/app. by Utility Pole _____ date/app. by

M/H Pole _____ date/app. by Travel Trailer _____ date/app. by Re-roof _____ date/app. by

BUILDING PERMIT FEE $ 450.00 CERTIFICATION FEE $ 9.00 SURCHARGE FEE $ 9.00

MISC. FEES $ 0.00 ZONING CERT. FEE $ 50.00 FIRE FEE $ 0.00 WASTE FEE $

FLOOD DEVELOPMENT FEE $ FLOOD ZONE FEE $ 25.00 CULVERT FEE $ 25.00 **TOTAL FEE** 568.00

INSPECTORS OFFICE _____ CLERKS OFFICE _____

NOTICE: IN ADDITION TO THE REQUIREMENTS OF THIS PERMIT, THERE MAY BE ADDITIONAL RESTRICTIONS APPLICABLE TO THIS PROPERTY THAT MAY BE FOUND IN THE PUBLIC RECORDS OF THIS COUNTY. AND THERE MAY BE ADDITIONAL PERMITS REQUIRED FROM OTHER GOVERNMENTAL ENTITIES SUCH AS WATER MANAGEMENT DISTRICTS, STATE AGENCIES, OR FEDERAL AGENCIES.

"WARNING TO OWNER: YOUR FAILURE TO RECORD A NOTICE OF COMMENCEMENT MAY RESULT IN YOUR PAYING TWICE FOR IMPROVEMENTS TO YOUR PROPERTY. IF YOU INTEND TO OBTAIN FINANCING, CONSULT WITH YOUR LENDER OR AN ATTORNEY BEFORE RECORDING YOUR NOTICE OF COMMENCEMENT."

EVERY PERMIT ISSUED SHALL BECOME INVALID UNLESS THE WORK AUTHORIZED BY SUCH PERMIT IS COMMENCED WITHIN 180 DAYS AFTER ITS ISSUANCE, OR IF THE WORK AUTHORIZED BY SUCH PERMIT IS SUSPENDED OR ABANDONED FOR A PERIOD OF 180 DAYS AFTER THE TIME THE WORK IS COMMENCED. A VALID PERMIT RECIEVES AN APPROVED INSPECTION EVERY 180 DAYS. WORK SHALL BE CONSIDERED TO BE IN ACTIVE PROGESS WHEN THE PERMIT HAS RECIEVED AN APPROVED INSPECTION WITHIN 180 DAYS.

The Issuance of this Permit Does Not Waive Compliance by Permittee with Deed Restrictions.

Columbia County Building Permit Application

For Office Use Only Application # 0806-54 Date Received 6/27 By JW Permit # 16471/27224

Zoning Official BLK Date 14.07.08 Flood Zone X FEMA Map # N/A Zoning RSF-2

Land Use Res. Low Den Elevation N/A MFE 96 ft River N/A Plans Examiner WR Date 7/3/08

Comments Elevation Confirmation Letter at slab

☒ NOC ☐ EH ☒ Deed or PA ☐ Site Plan ☐ State Road Info ☐ Parent Parcel #

☐ Dev Permit # ☐ In Floodway ☐ Letter of Authorization from Contractor

☐ Unincorporated area ☐ Incorporated area ☐ Town of Fort White ☐ Town of Fort White Compliance letter

Septic Permit No. 08-400 Fax (904)-332-6367

Name Authorized Person Signing Permit Theodore C. Brock, Patrick Wilson Phone (904)-296-1490

Address 6800 Southpoint Pkwy. #300 Jacksonville, FL 32216

Owners Name Maronda Homes Inc. of Florida Phone (904)-296-1490

911 Address 278 SW Timber Ridge Drive Lake City, FL, 32024

Contractors Name Theodore C. Brock Phone (407)-227-3504

Address 6800 Southpoint Pkwy. #300 Jacksonville, FL 32216

Fee Simple Owner Name & Address N/A

Bonding Co. Name & Address N/A

Architect/Engineer Name & Address Tomas Ponce 4005 Maronda Way Sanford, FL 32771

Mortgage Lenders Name & Address Bank of America 250 Park Ave. S. #400 Winter Park, FL 32789

Circle the correct power company – FL Power & Light – (Clay Elec.) – Suwannee Valley Elec. – Progress Energy

Property ID Number 10-4S-16-02856-120 Estimated Cost of Construction 56,745.00

Subdivision Name Timberlands Lot 20 Block 1 Unit ____ Phase ____

Driving Directions Hwy 90, Left on 247 South; Right on 252B; Left on Timber Ridge Drive; 5th Lot on left.

Number of Existing Dwellings on Property 0

Construction of Residential Single Family Dwelling Total Acreage .50 Lot Size NA

Do you need a - (Culvert Permit) or Culvert Waiver or Have an Existing Drive Total Building Height NA

Actual Distance of Structure from Property Lines - Front 50.0' Side 45.0' (L) Side 45' (R) Rear 65'

Number of Stories 1 Heated Floor Area 1312 Total Floor Area 1799 Roof Pitch 12/6

Application is hereby made to obtain a permit to do work and installations as indicated. I certify that no work or installation has commenced prior to the issuance of a permit and that all work be performed to meet the standards of all laws regulating construction in this jurisdiction.

568.00

WARNING TO OWNER: YOUR FAILURE TO RECORD A NOTICE OF COMMENCMENT MAY RESULT IN YOU PAYING TWICE FOR IMPROVEMENTS TO YOUR PROPERTY. A NOTICE OF COMMENCEMENT MUST BE RECORDED AND POSTED ON THE JOB SITE BEFORE THE FIRST INSPECTION. IF YOU INTEND TO OBTAIN FINANCING, CONSULT WITH YOUR LENDER OR ATTORNEY BEFORE RECORDING YOUR NOTICE OF COMMENCEMENT.

FLORIDA'S CONSTRUCTION LIEN LAW: Protect Yourself and Your Investment
According to Florida Law, those who work on your property or provide materials, and are not paid-in-full, have a right to enforce their claim for payment against your property. This claim is known as a construction lien. If your contractor fails to pay subcontractors or material suppliers or neglects to make other legally required payments, the people who are owed money may look to your property for payment, even if you have paid your contractor in full. This means if a lien is filed against your property, it could be sold against your will to pay for labor, materials or other services which your contractor may have failed to pay.

NOTICE OF RESPONSIBILITY TO BUILDING PERMITEE:
YOU ARE HEREBY NOTIFIED as the recipient of a building permit from Columbia County, Florida, you will be held responsible to the County for any damage to sidewalks and/or road curbs and gutters, concrete features and structures, together with damage to drainage facilities, removal of sod, major changes to lot grades that result in ponding of water, or other damage to roadway and other public infrastructure facilities caused by you or your contractor, subcontractors, agents or representatives in the construction and/or improvement of the building and lot for which this permit is issued. No certificate of occupancy will be issued until all corrective work to these public infrastructures and facilities has been corrected.

OWNERS CERTIFICATION: I hereby certify that all the foregoing information is accurate and all work will be done in compliance with all applicable laws and regulating construction and zoning. I further understand the above written responsibilities in Columbia County for obtaining this Building Permit.

Owners Signature Theodore C. Brock

CONTRACTORS AFFIDAVIT: By my signature I understand and agree that I have informed and provided this written statement to the owner of all the above written responsibilities in Columbia County for obtaining this Building Permit.

Contractor's Signature (Permitee)
Theodore C. Brock

Contractor's License Number CBC 1256382
Columbia County
Competency Card Number_____

Affirmed under penalty of perjury to by the Contractor and subscribed before me this 16 **day of** May **20**08.
Personally known XXX **or Produced Identification**_____

Melissa L McKague

State of Florida Notary Signature (For the Contractor)
Melissa L. McKague

SEAL:

Notary Public State of Florida
Melissa L McKague
My Commission DD493647
Expires 11/22/2009

Revised 11-30-07

WARNING TO OWNER: YOUR FAILURE TO RECORD A NOTICE OF COMMENCMENT MAY RESULT IN YOU PAYING TWICE FOR IMPROVEMENTS TO YOUR PROPERTY. A NOTICE OF COMMENCEMENT MUST BE RECORDED AND POSTED ON THE JOB SITE BEFORE THE FIRST INSPECTION. IF YOU INTEND TO OBTAIN FINANCING, CONSULT WITH YOUR LENDER OR ATTORNEY BEFORE RECORDING YOUR NOTICE OF COMMENCEMENT.

FLORIDA'S CONSTRUCTION LIEN LAW: Protect Yourself and Your Investment
According to Florida Law, those who work on your property or provide materials, and are not paid-in-full, have a right to enforce their claim for payment against your property. This claim is known as a construction lien. If your contractor fails to pay subcontractors or material suppliers or neglects to make other legally required payments, the people who are owed money may look to your property for payment, even if you have paid your contractor in full. This means if a lien is filed against your property, it could be sold against your will to pay for labor, materials or other services which your contractor may have failed to pay.

NOTICE OF RESPONSIBILITY TO BUILDING PERMITEE:
YOU ARE HEREBY NOTIFIED as the recipient of a building permit from Columbia County, Florida, you will be held responsible to the County for any damage to sidewalks and/or road curbs and gutters, concrete features and structures, together with damage to drainage facilities, removal of sod, major changes to lot grades that result in ponding of water, or other damage to roadway and other public infrastructure facilities caused by you or your contractor, subcontractors, agents or representatives in the construction and/or improvement of the building and lot for which this permit is issued. No certificate of occupancy will be issued until all corrective work to these public infrastructures and facilities has been corrected.

OWNERS CERTIFICATION: I hereby certify that all the foregoing information is accurate and all work will be done in compliance with all applicable laws and regulating construction and zoning. I further understand the above written responsibilities in Columbia County for obtaining this Building Permit.

Owners Signature Steve Hogg

CONTRACTORS AFFIDAVIT: By my signature I understand and agree that I have informed and provided this written statement to the owner of all the above written responsibilities in Columbia County for obtaining this Building Permit.

Contractor's Signature (Permitee)
Theodore C. Brock

Contractor's License Number CBC1256382
Columbia County
Competency Card Number_____

Affirmed under penalty of perjury to by the Contractor and subscribed before me this 24 **day of** June **2008.**

Personally known XXX **or Produced Identification**_____

Melissa L McKague

State of Florida Notary Signature (For the Contractor)
Melissa L. McKague

SEAL:

Notary Public State of Florida
Melissa L McKague
My Commission DD493647
Expires 11/22/2009

Page 2 of 2 (Both Pages must be submitted together.)

Revised 11-30-07

This Instrument Prepared by and Return to :
Amy Wesp
SOUTHERN TITLE HOLDING COMPANY, LLC.
3943 BAY MEADOWS ROAD
JACKSONVILLE, Florida 32217
as a necessary incident to the fulfillment of conditions contained in a title insurance commitment issued by it.

Property Appraisers Parcel I.D. (Folio) Number(s):
R02856-000
Grantee(s) I.D..#(s):
File No:**JX0812085**

Inst:200812010775 Date:6/6/2008 Time:1:05 PM
Doc Stamp-Deed:6293.00
DC,P.DeWitt Cason,Columbia County Page 1 of 1 B:1151 P:2385

WARRANTY DEED
(CORPORATION)

This Warranty Deed Made this **27th day of May, 2008**, by **RML HOLDINGS INC., A FLORIDA CORPORATION**, and having its place of business at **703 NW BLACKBERRY CIRCLE, LAKE CITY, Florida 32055,** hereinafter called the grantor,

to **MARONDA HOMES, INC. OF FLORIDA , A FLORIDA CORPORATION,** whose post office address is: **11200 ST. JOHNS INDUSTRIAL PARKWAY, JACKSONVILLE, FLORIDA 32246,** hereinafter called the grantee,

WITNESSETH: That said grantor, for and in consideration of the sum of ~~$10.00~~ $899,000.00 Dollars and other valuable considerations, receipt whereof is hereby acknowledged, by these presents grants, bargains, sells, aliens, remises, releases, conveys and confirms unto the grantee, all that certain land situate in **Columbia** County, Florida, viz:
LOTS 1, 9, 10, 11, 12, 13, 14, 15, 16, 17, 18, 19, 20, 24, 27, 28, 29, 30, 31, 32, 33, 34, 35, 36, 37, 38, 39, 40, AND 41, OF TIMBERLANDS, PHASE 1, ACCORDING TO PLAT THEREOF AS RECORDED IN PLAT BOOK 9, PAGE 26 AND 27 OF THE PUBLIC RECORDS OF COLUMBIA COUNTY, FLORIDA.

TOGETHER with all the tenements, hereditaments and appurtenances thereto belonging or in anywise appertaining.
To Have and to Hold, the same in fee simple forever.
And the grantor hereby covenants with said grantee that the grantor is lawfully seized of said land in fee simple; that the grantor has good right and lawful authority to sell and convey said land; that the grantor hereby fully warrants the title to said land and will defend the same against the lawful claims of all persons whomsoever; and that said land is free of all encumbrances, except taxes accruing subsequent to December 31, 2007, reservations, restrictions and easements of record, if any.
(Wherever used herein the terms "grantor" and "grantee" included all the parties to this instrument, and the heirs, legal representatives and assigns of individuals, and the successors and assigns of corporation.)

In Witness Whereof, the Grantor has caused these presents to be executed in its name, and its corporate seal to be hereunto affixed, by its proper officers thereunto duly authorized, the day and year first above written.

Signed, sealed and delivered in our presence:

ATTEST: _____
Secretary

RML HOLDINGS INC.

Witness Signature: Worth D. Morris
Printed Name: WORTH D. MORRIS

BY: _____
ROBERT R. LARDIZABAL, PRESIDENT

Witness Signature: Jodyn M. Gable. AVP
Printed Name: Jody M. Gable

STATE OF **FLORIDA**
COUNTY OF **DUVAL**

The foregoing instrument was acknowledged before me this 28th day of May, 2008, by **ROBERT R. LARDIZABAL** as **PRESIDENT** of **RML HOLDINGS INC., A FLORIDA CORPORATION**, on behalf of the corporation. He/she is personally known to me or who has produced driver license(s) as identification.

My Commission Expires:

Worth D. Morris
Printed Name: WORTH D MORRIS
Notary Public
Serial Number

WORTH D. MORRIS
Notary Public - State of Florida
My Commission Expires Jun 16, 2011
Commission # DD 664420

08-400

STATE OF FLORIDA
DEPARTMENT OF HEALTH

APPLICATION FOR ONSITE SEWAGE DISPOSAL SYSTEM CONSTRUCTION PERMIT

Permit Application Number _____

PART II - SITE PLAN

Scale: Each block represents 5 feet and 1 inch = 50 feet.

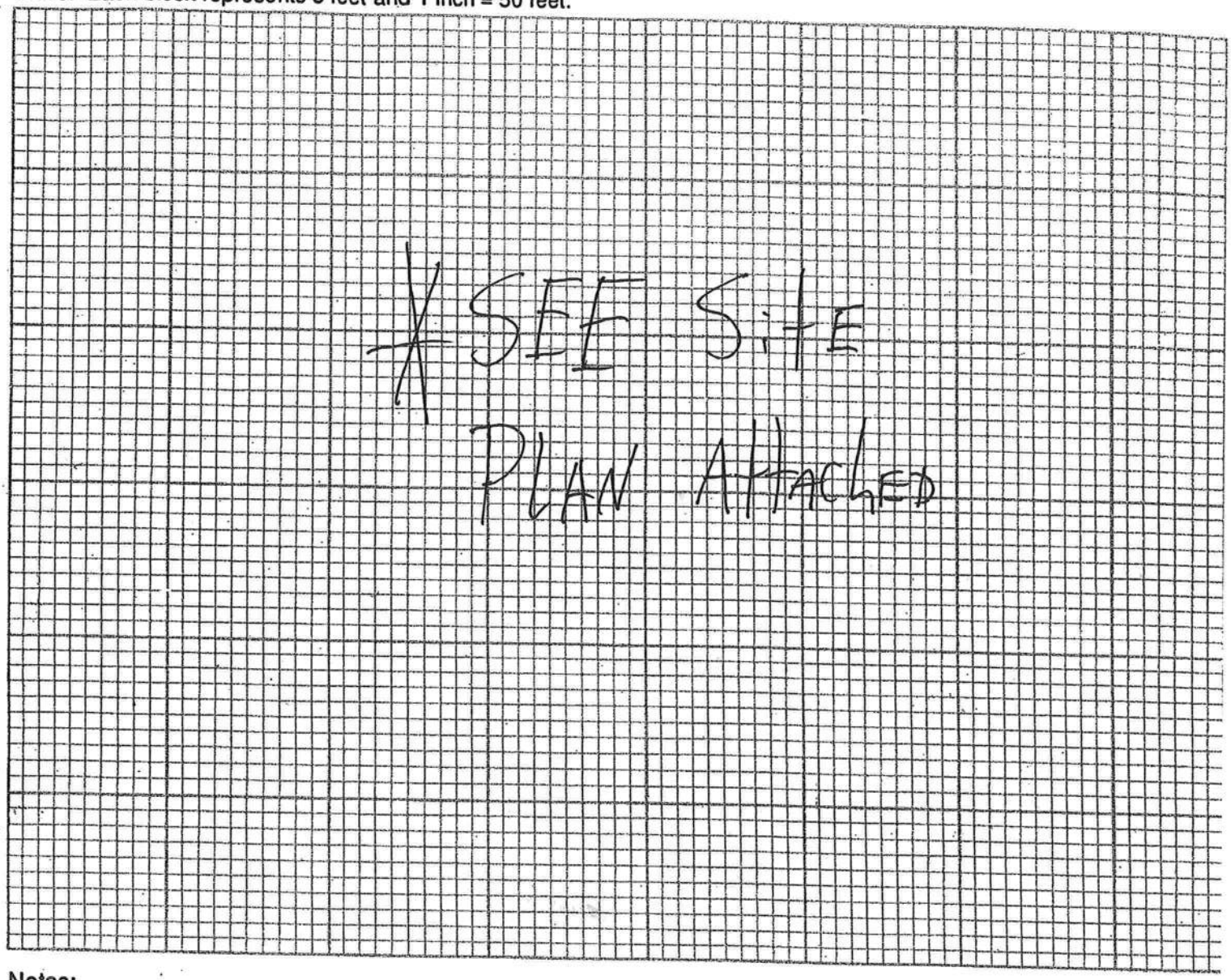

Notes: LOT20

Site Plan submitted by: _____ Signature _____ Title

Plan Approved X Not Approved _____ Date 6-23-08

By _____ Columbia County Health Depart

ALL CHANGES MUST BE APPROVED BY THE COUNTY HEALTH DEPARTMENT

FORM 600A-2004R

EnergyGauge® 4.5

FLORIDA ENERGY EFFICIENCY CODE FOR BUILDING CONSTRUCTION

Florida Department of Community Affairs

2011 TM

Residential Whole Building Performance Method A

Project Name:	**MONTGOMERY GAINESVILLE**	Builder:	**MARONDA HOMES**
Address:	278 SW Timber Ridge Dr.	Permitting Office:	Columbia
City, State:	Lake City, FL 32025	Permit Number:	27224
Owner:	**ELECTRIC**	Jurisdiction Number:	221000
Climate Zone:	**North**		

1. New construction or existing	New	
2. Single family or multi-family	Single family	
3. Number of units, if multi-family	1	
4. Number of Bedrooms	3	
5. Is this a worst case?	Yes	
6. Conditioned floor area (ft²)	1312 ft²	
7. Glass type[1] and area: (Label reqd. by 13-104.4.5 if not default)		
a. U-factor: (or Single or Double DEFAULT)	7a (Sngle Default) 118.0 ft²	
b. SHGC: (or Clear or Tint DEFAULT)	7b. (Clear) 118.0 ft²	
8. Floor types		
a. Slab-On-Grade Edge Insulation	R=0.0, 149.0(p) ft	
b. N/A		
c. N/A		
9. Wall types		
a. Concrete, Int Insul, Exterior	R=4.1, 874.0 ft²	
b. Frame, Steel, Adjacent	R=13.0, 231.0 ft²	
c. N/A		
d. N/A		
e. N/A		
10. Ceiling types		
a. Under Attic	R=19.0, 1339.0 ft²	
b. N/A		
c. N/A		
11. Ducts		
a. Sup: Unc. Ret: Con. AH(Sealed):Interior	Sup. R=6.0, 150.0 ft	
b. N/A		

12. Cooling systems		
a. Central Unit	Cap: 30.0 kBtu/hr	
	SEER: 13.00	
b. N/A		
c. N/A		
13. Heating systems		
a. Electric Heat Pump	Cap: 30.0 kBtu/hr	
	HSPF: 8.00	
b. N/A		
c. N/A		
14. Hot water systems		
a. Electric Resistance	Cap: 50.0 gallons	
	EF: 0.92	
b. N/A		
c. Conservation credits (HR-Heat recovery, Solar DHP-Dedicated heat pump)		
15. HVAC credits (CF-Ceiling fan, CV-Cross ventilation, HF-Whole house fan, PT-Programmable Thermostat, MZ-C-Multizone cooling, MZ-H-Multizone heating)	PT,	

Glass/Floor Area: 0.09

Total as-built points: 19496

Total base points: 20151

PASS

I hereby certify that the plans and specifications covered by this calculation are in compliance with the Florida Energy Code.

PREPARED BY: _____

DATE: Wayne Campbell 05/15/08

I hereby certify that this building, as designed, is in compliance with the Florida Energy Code.

OWNER/AGENT: Melissa McKague

DATE: Melissa McKague 05/15/08

Review of the plans and specifications covered by this calculation indicates compliance with the Florida Energy Code. Before construction is completed this building will be inspected for compliance with Section 553.908 Florida Statutes.

GREAT SEAL OF THE STATE OF FLORIDA — IN GOD WE TRUST

BUILDING OFFICIAL: _____

DATE: _____

1 Predominant glass type. For actual glass type and areas, see Summer & Winter Glass output on pages 2&4.

SUMMER CALCULATIONS

Residential Whole Building Performance Method A - Details

ADDRESS: **Lot: , Sub: , Plat: , , ,** PERMIT #:

BASE

GLASS TYPES

.18 X Conditioned Floor Area	X BSPM	= Points
.18 1312.0	18.59	4390.0

WALL TYPES	Area	X BSPM	= Points
Adjacent	231.0	0.70	161.7
Exterior	874.0	1.70	1485.8
Base Total:	**1105.0**		**1647.5**

DOOR TYPES	Area	X BSPM	= Points
Adjacent	17.0	2.40	40.8
Exterior	20.0	6.10	122.0
Base Total:	**37.0**		**162.8**

CEILING TYPES	Area	X BSPM	= Points
Under Attic	1312.0	1.73	2269.8
Base Total:	**1312.0**		**2269.8**

FLOOR TYPES	Area	X BSPM	= Points
Slab	149.0(p)	-37.0	-5513.0
Raised	0.0	0.00	0.0
Base Total:			**-5513.0**

INFILTRATION	Area	X BSPM	= Points
	1312.0	10.21	13395.5

AS-BUILT

Type/SC	Overhang Ornt	Len	Hgt	Area	X SPM	X SOF	= Points
1.Single, Clear	E	1.0	6.0	16.0	47.92	0.97	743.0
2.Single, Clear	E	1.0	8.0	40.0	47.92	0.99	1899.0
3.Single, Clear	W	3.0	6.0	11.0	43.84	0.73	351.0
4.Single, Clear	W	1.0	6.0	11.0	43.84	0.97	467.0
5.Single, Clear	E	1.0	6.0	16.0	47.92	0.97	743.0
6.Single, Clear	W	1.0	6.0	24.0	43.84	0.97	1020.0
As-Built Total:				**118.0**			**5223.0**

Type	R-Value	Area	X SPM	= Points
1. Concrete, Int Insul, Exterior	4.1	874.0	1.13	992.0
2. Frame, Steel, Adjacent	13.0	231.0	0.90	207.9
As-Built Total:		**1105.0**		**1199.9**

Type	Area	X SPM	= Points
1.Exterior Insulated	20.0	4.10	82.0
2.Adjacent Wood	17.0	2.40	40.8
As-Built Total:	**37.0**		**122.8**

Type	R-Value	Area	X SPM X SCM	= Points
1. Under Attic	19.0	1339.0	2.34 X 1.00	3133.3
As-Built Total:		**1339.0**		**3133.3**

Type	R-Value	Area	X SPM	= Points
1. Slab-On-Grade Edge Insulation	0.0	149.0(p	-41.20	-6138.8
As-Built Total:		**149.0**		**-6138.8**

Area	X SPM	= Points
1312.0	10.21	13395.5

SUMMER CALCULATIONS

Residential Whole Building Performance Method A - Details

ADDRESS: **Lot: , Sub: , Plat: , , ,**	PERMIT #:

BASE				AS-BUILT							
Summer Base Points: 16352.6				**Summer As-Built Points:**							**16935.7**
Total Summer Points	X System Multiplier	=	Cooling Points	Total Component (System - Points)	X Cap Ratio	X Duct Multiplier (DM x DSM x AHU)	X System Multiplier	X Credit Multiplier	=	Cooling Points	
				(sys 1: Central Unit 30000btuh ,SEER/EFF(13.0) Ducts:Unc(S),Con(R),Int(AH),R6.0(INS)							
				16936	1.00	(1.08 x 1.147 x 0.86)	0.260	0.950		4483.9	
16352.6	**0.3250**		**5314.6**	**16935.7**	**1.00**	**1.072**	**0.260**	**0.950**		**4483.9**	

WINTER CALCULATIONS

Residential Whole Building Performance Method A - Details

ADDRESS: **Lot: , Sub: , Plat: , , ,** PERMIT #:

BASE

GLASS TYPES .18 X Conditioned Floor Area	X BWPM	= Points
.18 1312.0	20.17	4763.0

WALL TYPES	Area	X BWPM	= Points
Adjacent	231.0	3.60	831.6
Exterior	874.0	3.70	3233.8
Base Total:	**1105.0**		**4065.4**

DOOR TYPES	Area	X BWPM	= Points
Adjacent	17.0	11.50	195.5
Exterior	20.0	12.30	246.0
Base Total:	**37.0**		**441.5**

CEILING TYPES	Area	X BWPM	= Points
Under Attic	1312.0	2.05	2689.6
Base Total:	**1312.0**		**2689.6**

FLOOR TYPES	Area	X BWPM	= Points
Slab	149.0(p)	8.9	1326.1
Raised	0.0	0.00	0.0
Base Total:			**1326.1**

INFILTRATION	Area	X BWPM	= Points
	1312.0	-0.59	-774.1

AS-BUILT

Type/SC	Overhang Ornt	Len	Hgt	Area	X WPM	X WOF	= Points
1.Single, Clear	E	1.0	6.0	16.0	26.41	1.02	429.0
2.Single, Clear	E	1.0	8.0	40.0	26.41	1.01	1065.0
3.Single, Clear	W	3.0	6.0	11.0	28.84	1.08	343.0
4.Single, Clear	W	1.0	6.0	11.0	28.84	1.01	319.0
5.Single, Clear	E	1.0	6.0	16.0	26.41	1.02	429.0
6.Single, Clear	W	1.0	6.0	24.0	28.84	1.01	697.0
As-Built Total:				**118.0**			**3282.0**

Type	R-Value	Area	X WPM	= Points
1. Concrete, Int Insul, Exterior	4.1	874.0	6.42	5611.1
2. Frame, Steel, Adjacent	13.0	231.0	4.90	1131.9
As-Built Total:		**1105.0**		**6743.0**

Type	Area	X WPM	= Points
1.Exterior Insulated	20.0	8.40	168.0
2.Adjacent Wood	17.0	11.50	195.5
As-Built Total:	**37.0**		**363.5**

Type	R-Value	Area	X WPM X WCM	= Points
1. Under Attic	19.0	1339.0	2.70 X 1.00	3615.3
As-Built Total:		**1339.0**		**3615.3**

Type	R-Value	Area	X WPM	= Points
1. Slab-On-Grade Edge Insulation	0.0	149.0(p	18.80	2801.2
As-Built Total:		**149.0**		**2801.2**

Area	X WPM	= Points
1312.0	-0.59	-774.1

WINTER CALCULATIONS

Residential Whole Building Performance Method A - Details

ADDRESS: **Lot: , Sub: , Plat: , , ,** PERMIT #:

BASE				AS-BUILT							
Winter Base Points:			**12511.5**	**Winter As-Built Points:**							**16030.9**
Total Winter Points	X	System Multiplier	= Heating Points	Total Component (System - Points)	X	Cap Ratio	X Duct Multiplier (DM x DSM x AHU)	X System Multiplier	X Credit Multiplier	=	Heating Points
				(sys 1: Electric Heat Pump 30000 btuh ,EFF(8.0) Ducts:Unc(S),Con(R),Int(AH),R6.0							
				16030.9		1.000	(1.060 x 1.169 x 0.88)	0.426	0.950		7106.8
12511.5		**0.5540**	**6931.4**	**16030.9**		**1.00**	**1.095**	**0.426**	**0.950**		**7106.8**

WATER HEATING & CODE COMPLIANCE STATUS

Residential Whole Building Performance Method A - Details

ADDRESS: **Lot: , Sub: , Plat: , , ,** PERMIT #:

BASE				AS-BUILT							
WATER HEATING											
Number of Bedrooms	X	Multiplier	= Total	Tank Volume	EF	Number of Bedrooms	X	Tank Ratio	X Multiplier	X Credit Multiplier	= Total
3		2635.00	7905.0	50.0	0.92	3		1.00	2635.00	1.00	7905.0
				As-Built Total:							**7905.0**

CODE COMPLIANCE STATUS

BASE				AS-BUILT			
Cooling Points +	Heating Points +	Hot Water Points =	Total Points	Cooling Points +	Heating Points +	Hot Water Points =	Total Points
5315	**6931**	**7905**	**20151**	**4484**	**7107**	**7905**	**19496**

PASS

Code Compliance Checklist

Residential Whole Building Performance Method A - Details

ADDRESS: **Lot: , Sub: , Plat: , , ,** PERMIT #:

6A-21 INFILTRATION REDUCTION COMPLIANCE CHECKLIST

COMPONENTS	SECTION	REQUIREMENTS FOR EACH PRACTICE	CHECK
Exterior Windows & Doors	606.1.ABC.1.1	Maximum:.3 cfm/sq.ft. window area; .5 cfm/sq.ft. door area.	✓
Exterior & Adjacent Walls	606.1.ABC.1.2.1	Caulk, gasket, weatherstrip or seal between: windows/doors & frames, surrounding wall; foundation & wall sole or sill plate; joints between exterior wall panels at corners; utility penetrations; between wall panels & top/bottom plates; between walls and floor. EXCEPTION: Frame walls where a continuous infiltration barrier is installed that extends from, and is sealed to, the foundation to the top plate.	✓
Floors	606.1.ABC.1.2.2	Penetrations/openings >1/8" sealed unless backed by truss or joint members. EXCEPTION: Frame floors where a continuous infiltration barrier is installed that is sealed to the perimeter, penetrations and seams.	✓
Ceilings	606.1.ABC.1.2.3	Between walls & ceilings; penetrations of ceiling plane of top floor; around shafts, chases, soffits, chimneys, cabinets sealed to continuous air barrier; gaps in gyp board & top plate; attic access. EXCEPTION: Frame ceilings where a continuous infiltration barrier is installed that is sealed at the perimeter, at penetrations and seams.	✓
Recessed Lighting Fixtures	606.1.ABC.1.2.4	Type IC rated with no penetrations, sealed; or Type IC or non-IC rated, installed inside a sealed box with 1/2" clearance & 3" from insulation; or Type IC rated with < 2.0 cfm from conditioned space, tested.	✓
Multi-story Houses	606.1.ABC.1.2.5	Air barrier on perimeter of floor cavity between floors.	✓
Additional Infiltration reqts	606.1.ABC.1.3	Exhaust fans vented to outdoors, dampers; combustion space heaters comply with NFPA, have combustion air.	✓

6A-22 OTHER PRESCRIPTIVE MEASURES (must be met or exceeded by all residences.)

COMPONENTS	SECTION	REQUIREMENTS	CHECK
Water Heaters	612.1	Comply with efficiency requirements in Table 612.1.ABC.3.2. Switch or clearly marked cir breaker (electric) or cutoff (gas) must be provided. External or built-in heat trap required.	✓
Swimming Pools & Spas	612.1	Spas & heated pools must have covers (except solar heated). Non-commercial pools must have a pump timer. Gas spa & pool heaters must have a minimum thermal efficiency of 78%.	
Shower heads	612.1	Water flow must be restricted to no more than 2.5 gallons per minute at 80 PSIG.	✓
Air Distribution Systems	610.1	All ducts, fittings, mechanical equipment and plenum chambers shall be mechanically attached, sealed, insulated, and installed in accordance with the criteria of Section 610. Ducts in unconditioned attics: R-6 min. insulation.	✓
HVAC Controls	607.1	Separate readily accessible manual or automatic thermostat for each system.	✓
Insulation	604.1, 602.1	Ceilings-Min. R-19. Common walls-Frame R-11 or CBS R-3 both sides. Common ceiling & floors R-11.	✓

ENERGY PERFORMANCE LEVEL (EPL) DISPLAY CARD

ESTIMATED ENERGY PERFORMANCE SCORE* = 85.2

The higher the score, the more efficient the home.

ELECTRIC, Lot: , Sub: , Plat: , , ,

1.	New construction or existing	New	
2.	Single family or multi-family	Single family	
3.	Number of units, if multi-family	1	
4.	Number of Bedrooms	3	
5.	Is this a worst case?	Yes	
6.	Conditioned floor area (ft²)	1312 ft²	
7.	Glass type[1] and area: (Label reqd. by 13-104.4.5 if not default)		
a.	U-factor: (or Single or Double DEFAULT)	Description Area 7a (Sngle Default) 118.0 ft²	
b.	SHGC: (or Clear or Tint DEFAULT)	7b. (Clear) 118.0 ft²	
8.	Floor types		
a.	Slab-On-Grade Edge Insulation	R=0.0, 149.0(p) ft	
b.	N/A		
c.	N/A		
9.	Wall types		
a.	Concrete, Int Insul, Exterior	R=4.1, 874.0 ft²	
b.	Frame, Steel, Adjacent	R=13.0, 231.0 ft²	
c.	N/A		
d.	N/A		
e.	N/A		
10.	Ceiling types		
a.	Under Attic	R=19.0, 1339.0 ft²	
b.	N/A		
c.	N/A		
11.	Ducts		
a.	Sup: Unc. Ret: Con. AH(Sealed):Interior	Sup. R=6.0, 150.0 ft	
b.	N/A		

12.	Cooling systems		
a.	Central Unit	Cap: 30.0 kBtu/hr SEER: 13.00	
b.	N/A		
c.	N/A		
13.	Heating systems		
a.	Electric Heat Pump	Cap: 30.0 kBtu/hr HSPF: 8.00	
b.	N/A		
c.	N/A		
14.	Hot water systems		
a.	Electric Resistance	Cap: 50.0 gallons EF: 0.92	
b.	N/A		
c.	Conservation credits (HR-Heat recovery, Solar DHP-Dedicated heat pump)		
15.	HVAC credits (CF-Ceiling fan, CV-Cross ventilation, HF-Whole house fan, PT-Programmable Thermostat, MZ-C-Multizone cooling, MZ-H-Multizone heating)	PT,	

I certify that this home has complied with the Florida Energy Efficiency Code For Building Construction through the above energy saving features which will be installed (or exceeded) in this home before final inspection. Otherwise, a new EPL Display Card will be completed based on installed Code compliant features.

Builder Signature: Melina Mulgrave Date: 05/15/08

Address of New Home: 278 SW Timber Ridge Ln City/FL Zip: Lake City, FL 32615

**NOTE: The home's estimated energy performance score is only available through the FLA/RES computer program. This is not a Building Energy Rating. If your score is 80 or greater (or 86 for a US EPA/DOE EnergyStar™ designation), your home may qualify for energy efficiency mortgage (EEM) incentives if you obtain a Florida Energy Gauge Rating. Contact the Energy Gauge Hotline at 321/638-1492 or see the Energy Gauge web site at www.fsec.ucf.edu for information and a list of certified Raters. For information about Florida's Energy Efficiency Code For Building Construction, contact the Department of Community Affairs at 850/487-1824.*

1 Predominant glass type. For actual glass type and areas, see Summer & Winter Glass output on pages 2&4.

EnergyGauge® (Version: FLRCSB v4.5)

Project Summary
Entire House
MARONDA HOMES

Job: MONTGOMERY
Date:
By: G. CARMACK

4005 MARONDA WAY, SANFORD, FL 32771 Phone: 407-321-0064

Project Information

For: MONTGOMERY

Notes:

Design Information

Weather: Gainesville, FL, US

Winter Design Conditions

Outside db	33	°F
Inside db	70	°F
Design TD	37	°F

Summer Design Conditions

Outside db	92	°F
Inside db	75	°F
Design TD	17	°F
Daily range	M	
Relative humidity	50	%
Moisture difference	52	gr/lb

Heating Summary

Structure	24549	Btuh
Ducts	2428	Btuh
Central vent (80 cfm)	***3238***	Btuh
Humidification	0	Btuh
Piping	0	Btuh
Equipment load	30215	Btuh

Infiltration

Method		Simplified
Construction quality		Average
Fireplaces		0
	Heating	**Cooling**
Area (ft²)	1261	1261
Volume (ft³)	10088	10088
Air changes/hour	0.45	0.23
Equiv. AVF (cfm)	76	39

Heating Equipment Summary

Make	TEMPSTAR
Trade	HEAT PUMP
Model	N4H330AKA

Efficiency	8 HSPF	
Heating input		
Heating output	0	Btuh @ 47°F
Temperature rise	0	°F
Actual air flow	***0***	cfm
Air flow factor	0.000	cfm/Btuh
Static pressure	0.60	in H2O
Space thermostat		

Sensible Cooling Equipment Load Sizing

Structure	13023	Btuh
Ducts	5274	Btuh
Central vent (80 cfm)	***1488***	Btuh
Blower	0	Btuh
Use manufacturer's data	n	
Rate/swing multiplier	0.97	
Equipment sensible load	19191	Btuh

Latent Cooling Equipment Load Sizing

Structure	2160	Btuh
Ducts	1179	Btuh
Central vent (80 cfm)	2813	Btuh
Equipment latent load	6151	Btuh
Equipment total load	25342	Btuh
Req. total capacity at 0.74 SHR	2.2	ton

Cooling Equipment Summary

Make	TEMPSTAR
Trade	HEAT PUMP
Cond	N4H330AKA
Coil	FSU4X3000A

Efficiency	13 SEER	
Sensible cooling	22200	Btuh
Latent cooling	7800	Btuh
Total cooling	30000	Btuh
Actual air flow	***935***	cfm
Air flow factor	0.051	cfm/Btuh
Static pressure	0.60	in H2O
Load sensible heat ratio	0.76	

Bold/italic values have been manually overridden

Printout certified by ACCA to meet all requirements of Manual J 8th Ed.

Building Analysis
Entire House
MARONDA HOMES

Job: MONTGOMERY
Date:
By: G. CARMACK

4005 MARONDA WAY, SANFORD, FL 32771 Phone: 407-321-0064

Project Information

For: MONTGOMERY

Design Conditions

Location:
Gainesville, FL, US
Elevation: 151 ft
Latitude: 30°N

Outdoor:	**Heating**	**Cooling**
Dry bulb (°F)	33	92
Daily range (°F)	-	19 (M)
Wet bulb (°F)	-	77
Wind speed (mph)	15.0	7.5

Indoor:	**Heating**	**Cooling**
Indoor temperature (°F)	70	75
Design TD (°F)	37	17
Relative humidity (%)	30	50
Moisture difference (gr/lb)	10.6	52.0

Infiltration:	
Method	Simplified
Construction quality	Average
Fireplaces	0

Heating

Component	Btuh/ft²	Btuh	% of load
Walls	4.4	4760	15.8
Glazing	47.0	6861	22.7
Doors	0.0	0	0.0
Ceilings	1.8	2379	7.9
Floors	19.9	7487	24.8
Infiltration	2.5	3063	10.1
Ducts		2428	8.0
Piping		0	0.0
Humidification		0	0.0
Ventilation		3238	10.7
Adjustments		0	
Total		**30215**	**100.0**

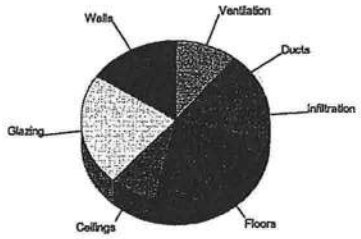

Cooling

Component	Btuh/ft²	Btuh	% of load
Walls	2.3	2507	12.7
Glazing	37.6	5492	27.8
Doors	0.0	0	0.0
Ceilings	2.6	3385	17.1
Floors	0.0	0	0.0
Infiltration	0.6	719	3.6
Ducts		5274	26.7
Ventilation		1488	7.5
Internal gains		920	4.7
Blower		0	0.0
Adjustments		0	
Total		**19784**	**100.0**

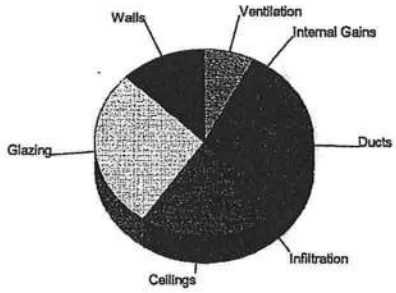

Overall U-value = 0.199 Btuh/ft²-°F

ERROR: negative wall area in MASTER BDR - check windows.

Duct System Summary
Entire House
MARONDA HOMES

Job: MONTGOMERY
Date:
By: G. CARMACK

4005 MARONDA WAY, SANFORD, FL 32771 Phone: 407-321-0064

Project Information

For: MONTGOMERY

	Heating	Cooling
External static pressure	0.60 in H2O	0.60 in H2O
Pressure losses	0.00 in H2O	0.00 in H2O
Available static pressure	0.60 in H2O	0.60 in H2O
Supply / return available pressure	0.43 / 0.17 in H2O	0.43 / 0.17 in H2O
Lowest friction rate	2.857 in/100ft	2.857 in/100ft
Actual air flow	935 cfm	***935*** cfm
Total effective length (TEL)	21 ft	

Supply Branch Detail Table

Name		Design (Btuh)	Htg (cfm)	Clg (cfm)	Design FR	Diam (in)	Rect Size (in)	Duct Matl	Actual Ln (ft)	Ftg.Eqv Ln (ft)	Trunk
MASTER BDR	h	4970	200	200	4.286	7	x0	VIFx	10.0	0.0	st5
MASTER BATH	h	2370	50	50	8.571	5	x0	VIFx	5.0	0.0	st5
UTILITY ROOM	c	863	50	50	2.857	4	x0	VIFx	15.0	0.0	st1
FAMILY/DINING RM	c	3991	240	240	2.857	8	x0	VIFx	15.0	0.0	ST1
KITCHEN	c	2069	100	100	4.286	5	x0	VIFx	10.0	0.0	ST1
BDR #2	h	3335	120	120	2.857	6	x0	VIFx	15.0	0.0	ST3
BATHROOM	h	763	20	20	4.286	4	x0	VIFx	10.0	0.0	ST2
BDR #3	h	3880	120	120	4.286	6	x0	VIFx	10.0	0.0	ST4
MASTER TOILET	c	794	35	35	2.857	4	x0	VIFx	15.0	0.0	st5

Supply Trunk Detail Table

Name	Trunk Type	Htg (cfm)	Clg (cfm)	Design FR	Veloc (fpm)	Diam (in)	Rect Duct Size (in)	Duct Material	Trunk
st1	Peak AVF	675	675	2.857	622	14	0 x 0	VinlFlx	
ST2	Peak AVF	20	20	4.286	369	4	0 x 0	VinlFlx	
ST3	Peak AVF	120	120	2.857	527	6	0 x 0	VinlFlx	
ST4	Peak AVF	120	120	4.286	613	6	0 x 0	VinlFlx	
st5	Peak AVF	285	285	2.857	595	10	0 x 0	VinlFlx	st1

Bold/italic values have been manually overridden

Return Branch Detail Table

Name	Grill Size (in)	Htg (cfm)	Clg (cfm)	TEL (ft)	Design FR	Veloc (fpm)	Diam (in)	RectSize (in)	Stud/Joist Opening (in)	Duct Matl	Trunk
rb1	0x 0	935	935	6.0	2.857	670	16	x0 0		VIFx	

Columbia County Building Department
Culvert Permit

Culvert Permit No.
000001647

DATE 07/31/2008 PARCEL ID # 10-4S-16-02856-120

APPLICANT PATRICK WILSON PHONE 352 206-5459

ADDRESS 6800 SOUTHPOINT PARKWAY JACKSONVILLE FL 32216

OWNER MARONDA HOMES PHONE 407 227-3504

ADDRESS 278 SW TIMBER RIDGE DRIVE LAKE CITY FL 32024

CONTRACTOR THEODORE BROCK PHONE 904 296-1490

LOCATION OF PROPERTY 90W, TL ON 247S, TR ON 252B, TL ON TIMBER RIDGE, 5TH LOT ON LEFT

SUBDIVISION/LOT/BLOCK/PHASE/UNIT TIMBERLANDS 20

SIGNATURE Patrick Wilson

INSTALLATION REQUIREMENTS

[X] Culvert size will be 18 inches in diameter with a total lenght of 32 feet, leaving 24 feet of driving surface. Both ends will be mitered 4 foot with a 4 : 1 slope and poured with a 4 inch thick reinforced concrete slab.

INSTALLATION NOTE: Turnouts will be required as follows:
a) a majority of the current and existing driveway turnouts are paved, or;
b) the driveway to be served will be paved or formed with concrete.
Turnouts shall be concrete or paved a minimum of 12 feet wide or the width of the concrete or paved driveway, whichever is greater. The width shall conform to the current and existing paved or concreted turnouts.

[ ] Culvert installation shall conform to the approved site plan standards.

[ ] Department of Transportation Permit installation approved standards.

[ ] Other

ALL PROPER SAFETY REQUIREMENTS SHOULD BE FOLLOWED DURING THE INSTALATION OF THE CULVERT.

135 NE Hernando Ave., Suite B-21
Lake City, FL 32055
Phone: 386-758-1008 Fax: 386-758-2160

Amount Paid 25.00

COLUMBIA COUNTY GATEWAY TO FLORIDA

FORM 600A-2004R

EnergyGauge® 4.5

FLORIDA ENERGY EFFICIENCY CODE FOR BUILDING CONSTRUCTION

Florida Department of Community Affairs

20/1 TM

Residential Whole Building Performance Method A

Project Name:	MONTGOMERY GAINESVILLE	Builder:	MARONDA HOMES
Address:	278 SW Timber Ridge Dr.	Permitting Office:	Columbia
City, State:	Lake City, FL 32055	Permit Number:	
Owner:	ELECTRIC	Jurisdiction Number:	
Climate Zone:	North		

1. New construction or existing	New	
2. Single family or multi-family	Single family	
3. Number of units, if multi-family	1	
4. Number of Bedrooms	3	
5. Is this a worst case?	Yes	
6. Conditioned floor area (ft²)	1312 ft²	
7. Glass type[1] and area: (Label reqd. by 13-104.4.5 if not default)		
a. U-factor: (or Single or Double DEFAULT)	Description Area 7a (Sngle Default) 118.0 ft²	
b. SHGC: (or Clear or Tint DEFAULT)	7b. (Clear) 118.0 ft²	
8. Floor types		
a. Slab-On-Grade Edge Insulation	R=0.0, 149.0(p) ft	
b. N/A		
c. N/A		
9. Wall types		
a. Concrete, Int Insul, Exterior	R=4.1, 874.0 ft²	
b. Frame, Steel, Adjacent	R=13.0, 231.0 ft²	
c. N/A		
d. N/A		
e. N/A		
10. Ceiling types		
a. Under Attic	R=19.0, 1339.0 ft²	
b. N/A		
c. N/A		
11. Ducts		
a. Sup: Unc. Ret: Con. AH(Sealed):Interior	Sup. R=6.0, 150.0 ft	
b. N/A		

12. Cooling systems		
a. Central Unit	Cap: 30.0 kBtu/hr SEER: 13.00	
b. N/A		
c. N/A		
13. Heating systems		
a. Electric Heat Pump	Cap: 30.0 kBtu/hr HSPF: 8.00	
b. N/A		
c. N/A		
14. Hot water systems		
a. Electric Resistance	Cap: 50.0 gallons EF: 0.92	
b. N/A		
c. Conservation credits (HR-Heat recovery, Solar DHP-Dedicated heat pump)		
15. HVAC credits (CF-Ceiling fan, CV-Cross ventilation, HF-Whole house fan, PT-Programmable Thermostat, MZ-C-Multizone cooling, MZ-H-Multizone heating)	PT,	

Glass/Floor Area: 0.09

Total as-built points: 19496
Total base points: 20151

PASS

I hereby certify that the plans and specifications covered by this calculation are in compliance with the Florida Energy Code.

PREPARED BY: _____

DATE: Wayne Campbell 05/15/08

I hereby certify that this building, as designed, is in compliance with the Florida Energy Code.

OWNER/AGENT: Melissa McKague

DATE: Melissa McKague 05/15/08

Review of the plans and specifications covered by this calculation indicates compliance with the Florida Energy Code. Before construction is completed this building will be inspected for compliance with Section 553.908 Florida Statutes.

GREAT SEAL OF THE STATE OF FLORIDA — IN GOD WE TRUST

BUILDING OFFICIAL: _____

DATE: _____

1 Predominant glass type. For actual glass type and areas, see Summer & Winter Glass output on pages 2&4.

SUMMER CALCULATIONS

Residential Whole Building Performance Method A - Details

ADDRESS: **Lot: , Sub: , Plat: , , ,** PERMIT #:

BASE				AS-BUILT							
GLASS TYPES .18 X Conditioned Floor Area	X BSPM	= Points		Type/SC	Overhang Ornt	Len	Hgt	Area X	SPM X	SOF	= Points
.18	1312.0	18.59	4390.0	1.Single, Clear	E	1.0	6.0	16.0	47.92	0.97	743.0
				2.Single, Clear	E	1.0	8.0	40.0	47.92	0.99	1899.0
				3.Single, Clear	W	3.0	6.0	11.0	43.84	0.73	351.0
				4.Single, Clear	W	1.0	6.0	11.0	43.84	0.97	467.0
				5.Single, Clear	E	1.0	6.0	16.0	47.92	0.97	743.0
				6.Single, Clear	W	1.0	6.0	24.0	43.84	0.97	1020.0
				As-Built Total:				**118.0**			**5223.0**

WALL TYPES	Area X	BSPM	= Points	Type	R-Value	Area X	SPM	= Points
Adjacent	231.0	0.70	161.7	1. Concrete, Int Insul, Exterior	4.1	874.0	1.13	992.0
Exterior	874.0	1.70	1485.8	2. Frame, Steel, Adjacent	13.0	231.0	0.90	207.9
Base Total:	**1105.0**		**1647.5**	**As-Built Total:**		**1105.0**		**1199.9**

DOOR TYPES	Area X	BSPM	= Points	Type	Area X	SPM	= Points
Adjacent	17.0	2.40	40.8	1.Exterior Insulated	20.0	4.10	82.0
Exterior	20.0	6.10	122.0	2.Adjacent Wood	17.0	2.40	40.8
Base Total:	**37.0**		**162.8**	**As-Built Total:**	**37.0**		**122.8**

CEILING TYPES	Area X	BSPM	= Points	Type	R-Value	Area X	SPM X SCM	= Points
Under Attic	1312.0	1.73	2269.8	1. Under Attic	19.0	1339.0	2.34 X 1.00	3133.3
Base Total:	**1312.0**		**2269.8**	**As-Built Total:**		**1339.0**		**3133.3**

FLOOR TYPES	Area X	BSPM	= Points	Type	R-Value	Area X	SPM	= Points
Slab	149.0(p)	-37.0	-5513.0	1. Slab-On-Grade Edge Insulation	0.0	149.0(p	-41.20	-6138.8
Raised	0.0	0.00	0.0					
Base Total:			**-5513.0**	**As-Built Total:**		**149.0**		**-6138.8**

INFILTRATION	Area X	BSPM	= Points	Area X	SPM	= Points
	1312.0	10.21	13395.5	1312.0	10.21	13395.5

SUMMER CALCULATIONS

Residential Whole Building Performance Method A - Details

ADDRESS: **Lot: , Sub: , Plat: , , ,**	PERMIT #:

BASE			AS-BUILT						
Summer Base Points: 16352.6			**Summer As-Built Points:**						**16935.7**
Total Summer Points	X System Multiplier	= Cooling Points	Total Component (System - Points)	X Cap Ratio	X Duct Multiplier (DM x DSM x AHU)	X System Multiplier	X Credit Multiplier	= Cooling Points	
			(sys 1: Central Unit 30000btuh ,SEER/EFF(13.0) Ducts:Unc(S),Con(R),Int(AH),R6.0(INS)						
			16936	1.00	(1.08 x 1.147 x 0.86)	0.260	0.950	4483.9	
16352.6	**0.3250**	**5314.6**	**16935.7**	**1.00**	**1.072**	**0.260**	**0.950**	**4483.9**	

WINTER CALCULATIONS

Residential Whole Building Performance Method A - Details

ADDRESS: **Lot: , Sub: , Plat: , , ,** PERMIT #:

BASE				AS-BUILT							
GLASS TYPES .18 X Conditioned Floor Area	X BWPM	= Points		Type/SC	Overhang Ornt	Len	Hgt	Area X	WPM X	WOF	= Points
.18	1312.0	20.17	4763.0	1.Single, Clear	E	1.0	6.0	16.0	26.41	1.02	429.0
				2.Single, Clear	E	1.0	8.0	40.0	26.41	1.01	1065.0
				3.Single, Clear	W	3.0	6.0	11.0	28.84	1.08	343.0
				4.Single, Clear	W	1.0	6.0	11.0	28.84	1.01	319.0
				5.Single, Clear	E	1.0	6.0	16.0	26.41	1.02	429.0
				6.Single, Clear	W	1.0	6.0	24.0	28.84	1.01	697.0
				As-Built Total:				**118.0**			**3282.0**

WALL TYPES	Area X	BWPM	= Points	Type	R-Value	Area X	WPM	= Points
Adjacent	231.0	3.60	831.6	1. Concrete, Int Insul, Exterior	4.1	874.0	6.42	5611.1
Exterior	874.0	3.70	3233.8	2. Frame, Steel, Adjacent	13.0	231.0	4.90	1131.9
Base Total:	**1105.0**		**4065.4**	**As-Built Total:**		**1105.0**		**6743.0**

DOOR TYPES	Area X	BWPM	= Points	Type	Area X	WPM	= Points
Adjacent	17.0	11.50	195.5	1.Exterior Insulated	20.0	8.40	168.0
Exterior	20.0	12.30	246.0	2.Adjacent Wood	17.0	11.50	195.5
Base Total:	**37.0**		**441.5**	**As-Built Total:**	**37.0**		**363.5**

CEILING TYPES	Area X	BWPM	= Points	Type	R-Value	Area X	WPM X	WCM =	Points
Under Attic	1312.0	2.05	2689.6	1. Under Attic	19.0	1339.0	2.70 X	1.00	3615.3
Base Total:	**1312.0**		**2689.6**	**As-Built Total:**		**1339.0**			**3615.3**

FLOOR TYPES	Area X	BWPM	= Points	Type	R-Value	Area X	WPM	= Points
Slab	149.0(p)	8.9	1326.1	1. Slab-On-Grade Edge Insulation	0.0	149.0(p	18.80	2801.2
Raised	0.0	0.00	0.0					
Base Total:			**1326.1**	**As-Built Total:**		**149.0**		**2801.2**

INFILTRATION	Area X	BWPM	= Points	Area X	WPM	= Points
	1312.0	-0.59	-774.1	1312.0	-0.59	-774.1

WINTER CALCULATIONS

Residential Whole Building Performance Method A - Details

ADDRESS: **Lot: , Sub: , Plat: , , ,**	PERMIT #:

BASE				AS-BUILT							
Winter Base Points:			**12511.5**	**Winter As-Built Points:**							**16030.9**
Total Winter Points	X System Multiplier	= Heating Points		Total Component (System - Points)	X Cap Ratio	X Duct Multiplier (DM x DSM x AHU)	X System Multiplier	X Credit Multiplier	= Heating Points		
				(sys 1: Electric Heat Pump 30000 btuh ,EFF(8.0) Ducts:Unc(S),Con(R),Int(AH),R6.0							
				16030.9	1.000	(1.060 x 1.169 x 0.88)	0.426	0.950	7106.8		
12511.5	**0.5540**	**6931.4**		**16030.9**	**1.00**	**1.095**	**0.426**	**0.950**	**7106.8**		

WATER HEATING & CODE COMPLIANCE STATUS

Residential Whole Building Performance Method A - Details

ADDRESS: **Lot: , Sub: , Plat: , , ,** PERMIT #:

BASE					AS-BUILT							
WATER HEATING												
Number of Bedrooms	X	Multiplier	=	Total	Tank Volume	EF	Number of Bedrooms	X	Tank Ratio	X Multiplier	X Credit Multiplier	= Total
3		2635.00		7905.0	50.0	0.92	3		1.00	2635.00	1.00	7905.0
					As-Built Total:							**7905.0**

CODE COMPLIANCE STATUS

BASE				AS-BUILT			
Cooling Points +	Heating Points +	Hot Water Points =	Total Points	Cooling Points +	Heating Points +	Hot Water Points =	Total Points
5315	**6931**	**7905**	**20151**	**4484**	**7107**	**7905**	**19496**

PASS

Code Compliance Checklist

Residential Whole Building Performance Method A - Details

ADDRESS: **Lot: , Sub: , Plat: , , ,** PERMIT #:

6A-21 INFILTRATION REDUCTION COMPLIANCE CHECKLIST

COMPONENTS	SECTION	REQUIREMENTS FOR EACH PRACTICE	CHECK
Exterior Windows & Doors	606.1.ABC.1.1	Maximum:.3 cfm/sq.ft. window area; .5 cfm/sq.ft. door area.	✓
Exterior & Adjacent Walls	606.1.ABC.1.2.1	Caulk, gasket, weatherstrip or seal between: windows/doors & frames, surrounding wall; foundation & wall sole or sill plate; joints between exterior wall panels at corners; utility penetrations; between wall panels & top/bottom plates; between walls and floor. EXCEPTION: Frame walls where a continuous infiltration barrier is installed that extends from, and is sealed to, the foundation to the top plate.	✓
Floors	606.1.ABC.1.2.2	Penetrations/openings >1/8" sealed unless backed by truss or joint members. EXCEPTION: Frame floors where a continuous infiltration barrier is installed that is sealed to the perimeter, penetrations and seams.	✓
Ceilings	606.1.ABC.1.2.3	Between walls & ceilings; penetrations of ceiling plane of top floor; around shafts, chases, soffits, chimneys, cabinets sealed to continuous air barrier; gaps in gyp board & top plate; attic access. EXCEPTION: Frame ceilings where a continuous infiltration barrier is installed that is sealed at the perimeter, at penetrations and seams.	✓
Recessed Lighting Fixtures	606.1.ABC.1.2.4	Type IC rated with no penetrations, sealed; or Type IC or non-IC rated, installed inside a sealed box with 1/2" clearance & 3" from insulation; or Type IC rated with < 2.0 cfm from conditioned space, tested.	✓
Multi-story Houses	606.1.ABC.1.2.5	Air barrier on perimeter of floor cavity between floors.	✓
Additional Infiltration reqts	606.1.ABC.1.3	Exhaust fans vented to outdoors, dampers; combustion space heaters comply with NFPA, have combustion air.	✓

6A-22 OTHER PRESCRIPTIVE MEASURES (must be met or exceeded by all residences.)

COMPONENTS	SECTION	REQUIREMENTS	CHECK
Water Heaters	612.1	Comply with efficiency requirements in Table 612.1.ABC.3.2. Switch or clearly marked cir breaker (electric) or cutoff (gas) must be provided. External or built-in heat trap required.	✓
Swimming Pools & Spas	612.1	Spas & heated pools must have covers (except solar heated). Non-commercial pools must have a pump timer. Gas spa & pool heaters must have a minimum thermal efficiency of 78%.	
Shower heads	612.1	Water flow must be restricted to no more than 2.5 gallons per minute at 80 PSIG.	✓
Air Distribution Systems	610.1	All ducts, fittings, mechanical equipment and plenum chambers shall be mechanically attached, sealed, insulated, and installed in accordance with the criteria of Section 610. Ducts in unconditioned attics: R-6 min. insulation.	✓
HVAC Controls	607.1	Separate readily accessible manual or automatic thermostat for each system.	✓
Insulation	604.1, 602.1	Ceilings-Min. R-19. Common walls-Frame R-11 or CBS R-3 both sides. Common ceiling & floors R-11.	✓

ENERGY PERFORMANCE LEVEL (EPL) DISPLAY CARD

ESTIMATED ENERGY PERFORMANCE SCORE* = 85.2

The higher the score, the more efficient the home.

ELECTRIC, Lot: , Sub: , Plat: , , ,

1. New construction or existing	New	
2. Single family or multi-family	Single family	
3. Number of units, if multi-family	1	
4. Number of Bedrooms	3	
5. Is this a worst case?	Yes	
6. Conditioned floor area (ft²)	1312 ft²	
7. Glass type[1] and area: (Label reqd. by 13-104.4.5 if not default)		
a. U-factor: (or Single or Double DEFAULT)	Description Area 7a (Sngle Default) 118.0 ft²	
b. SHGC: (or Clear or Tint DEFAULT)	7b. (Clear) 118.0 ft²	
8. Floor types		
a. Slab-On-Grade Edge Insulation	R=0.0, 149.0(p) ft	
b. N/A		
c. N/A		
9. Wall types		
a. Concrete, Int Insul, Exterior	R=4.1, 874.0 ft²	
b. Frame, Steel, Adjacent	R=13.0, 231.0 ft²	
c. N/A		
d. N/A		
e. N/A		
10. Ceiling types		
a. Under Attic	R=19.0, 1339.0 ft²	
b. N/A		
c. N/A		
11. Ducts		
a. Sup: Unc. Ret: Con. AH(Sealed):Interior	Sup. R=6.0, 150.0 ft	
b. N/A		
12. Cooling systems		
a. Central Unit	Cap: 30.0 kBtu/hr SEER: 13.00	
b. N/A		
c. N/A		
13. Heating systems		
a. Electric Heat Pump	Cap: 30.0 kBtu/hr HSPF: 8.00	
b. N/A		
c. N/A		
14. Hot water systems		
a. Electric Resistance	Cap: 50.0 gallons EF: 0.92	
b. N/A		
c. Conservation credits (HR-Heat recovery, Solar DHP-Dedicated heat pump)		
15. HVAC credits (CF-Ceiling fan, CV-Cross ventilation, HF-Whole house fan, PT-Programmable Thermostat, MZ-C-Multizone cooling, MZ-H-Multizone heating)	PT,	

I certify that this home has complied with the Florida Energy Efficiency Code For Building Construction through the above energy saving features which will be installed (or exceeded) in this home before final inspection. Otherwise, a new EPL Display Card will be completed based on installed Code compliant features.

Builder Signature: Melina McGuire Date: 05/15/08

Address of New Home: 278 SW Timber Ridge Dr City/FL Zip: Lake City, FL 32615

**NOTE: The home's estimated energy performance score is only available through the FLA/RES computer program. This is not a Building Energy Rating. If your score is 80 or greater (or 86 for a US EPA/DOE EnergyStar™ designation), your home may qualify for energy efficiency mortgage (EEM) incentives if you obtain a Florida Energy Gauge Rating. Contact the Energy Gauge Hotline at 321/638-1492 or see the Energy Gauge web site at www.fsec.ucf.edu for information and a list of certified Raters. For information about Florida's Energy Efficiency Code For Building Construction, contact the Department of Community Affairs at 850/487-1824.*

1 Predominant glass type. For actual glass type and areas, see Summer & Winter Glass output on pages 2&4.

EnergyGauge® (Version: FLRCSB v4.5)

Project Summary
Entire House
MARONDA HOMES

Job: MONTGOMERY
Date:
By: G. CARMACK

4005 MARONDA WAY, SANFORD, FL 32771 Phone: 407-321-0064

Project Information

For: MONTGOMERY

Notes:

Design Information

Weather: Gainesville, FL, US

Winter Design Conditions

Outside db	33	°F
Inside db	70	°F
Design TD	37	°F

Summer Design Conditions

Outside db	92	°F
Inside db	75	°F
Design TD	17	°F
Daily range	M	
Relative humidity	50	%
Moisture difference	52	gr/lb

Heating Summary

Structure	24549	Btuh
Ducts	2428	Btuh
Central vent (80 cfm)	***3238***	Btuh
Humidification	0	Btuh
Piping	0	Btuh
Equipment load	30215	Btuh

Sensible Cooling Equipment Load Sizing

Structure	13023	Btuh
Ducts	5274	Btuh
Central vent (80 cfm)	***1488***	Btuh
Blower	0	Btuh
Use manufacturer's data	n	
Rate/swing multiplier	0.97	
Equipment sensible load	19191	Btuh

Infiltration

Method	Simplified
Construction quality	Average
Fireplaces	0

	Heating	Cooling
Area (ft²)	1261	1261
Volume (ft³)	10088	10088
Air changes/hour	0.45	0.23
Equiv. AVF (cfm)	76	39

Latent Cooling Equipment Load Sizing

Structure	2160	Btuh
Ducts	1179	Btuh
Central vent (80 cfm)	2813	Btuh
Equipment latent load	6151	Btuh
Equipment total load	25342	Btuh
Req. total capacity at 0.74 SHR	2.2	ton

Heating Equipment Summary

Make	TEMPSTAR
Trade	HEAT PUMP
Model	N4H330AKA

Efficiency	8 HSPF	
Heating input		
Heating output	0	Btuh @ 47°F
Temperature rise	0	°F
Actual air flow	***0***	cfm
Air flow factor	0.000	cfm/Btuh
Static pressure	0.60	in H2O
Space thermostat		

Cooling Equipment Summary

Make	TEMPSTAR
Trade	HEAT PUMP
Cond	N4H330AKA
Coil	FSU4X3000A

Efficiency	13 SEER	
Sensible cooling	22200	Btuh
Latent cooling	7800	Btuh
Total cooling	30000	Btuh
Actual air flow	***935***	cfm
Air flow factor	0.051	cfm/Btuh
Static pressure	0.60	in H2O
Load sensible heat ratio	0.76	

Bold/italic values have been manually overridden

Printout certified by ACCA to meet all requirements of Manual J 8th Ed.

Building Analysis
Entire House
MARONDA HOMES

Job: MONTGOMERY
Date:
By: G. CARMACK

4005 MARONDA WAY, SANFORD, FL 32771 Phone: 407-321-0064

Project Information

For: MONTGOMERY

Design Conditions

Location:
Gainesville, FL, US
Elevation: 151 ft
Latitude: 30°N

Outdoor:	**Heating**	**Cooling**
Dry bulb (°F)	33	92
Daily range (°F)	-	19 (M)
Wet bulb (°F)	-	77
Wind speed (mph)	15.0	7.5

Indoor:	**Heating**	**Cooling**
Indoor temperature (°F)	70	75
Design TD (°F)	37	17
Relative humidity (%)	30	50
Moisture difference (gr/lb)	10.6	52.0

Infiltration:

Method	Simplified
Construction quality	Average
Fireplaces	0

Heating

Component	Btuh/ft²	Btuh	% of load
Walls	4.4	4760	15.8
Glazing	47.0	6861	22.7
Doors	0.0	0	0.0
Ceilings	1.8	2379	7.9
Floors	19.9	7487	24.8
Infiltration	2.5	3063	10.1
Ducts		2428	8.0
Piping		0	0.0
Humidification		0	0.0
Ventilation		3238	10.7
Adjustments		0	
Total		**30215**	**100.0**

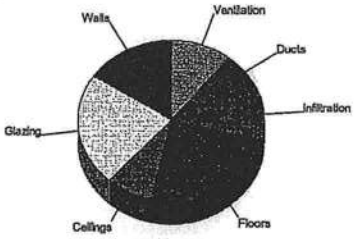

Cooling

Component	Btuh/ft²	Btuh	% of load
Walls	2.3	2507	12.7
Glazing	37.6	5492	27.8
Doors	0.0	0	0.0
Ceilings	2.6	3385	17.1
Floors	0.0	0	0.0
Infiltration	0.6	719	3.6
Ducts		5274	26.7
Ventilation		1488	7.5
Internal gains		920	4.7
Blower		0	0.0
Adjustments		0	
Total		**19784**	**100.0**

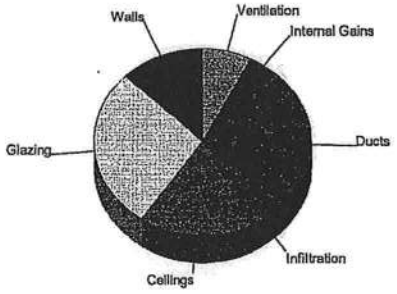

Overall U-value = 0.199 Btuh/ft²-°F

ERROR: negative wall area in MASTER BDR - check windows.

Duct System Summary
Entire House
MARONDA HOMES

Job: MONTGOMERY
Date:
By: G. CARMACK

4005 MARONDA WAY, SANFORD, FL 32771 Phone: 407-321-0064

Project Information

For: MONTGOMERY

	Heating	Cooling
External static pressure	0.60 in H2O	0.60 in H2O
Pressure losses	0.00 in H2O	0.00 in H2O
Available static pressure	0.60 in H2O	0.60 in H2O
Supply / return available pressure	0.43 / 0.17 in H2O	0.43 / 0.17 in H2O
Lowest friction rate	2.857 in/100ft	2.857 in/100ft
Actual air flow	935 cfm	***935*** cfm
Total effective length (TEL)	21 ft	

Supply Branch Detail Table

Name		Design (Btuh)	Htg (cfm)	Clg (cfm)	Design FR	Diam (in)	Rect Size (in)	Duct Matl	Actual Ln (ft)	Ftg.Eqv Ln (ft)	Trunk
MASTER BDR	h	4970	200	200	4.286	7	x0	VIFx	10.0	0.0	st5
MASTER BATH	h	2370	50	50	8.571	5	x0	VIFx	5.0	0.0	st5
UTILITY ROOM	c	863	50	50	2.857	4	x0	VIFx	15.0	0.0	st1
FAMILY/DINING RM	c	3991	240	240	2.857	8	x0	VIFx	15.0	0.0	ST1
KITCHEN	c	2069	100	100	4.286	5	x0	VIFx	10.0	0.0	ST1
BDR #2	h	3335	120	120	2.857	6	x0	VIFx	15.0	0.0	ST3
BATHROOM	h	763	20	20	4.286	4	x0	VIFx	10.0	0.0	ST2
BDR #3	h	3880	120	120	4.286	6	x0	VIFx	10.0	0.0	ST4
MASTER TOILET	c	794	35	35	2.857	4	x0	VIFx	15.0	0.0	st5

Supply Trunk Detail Table

Name	Trunk Type	Htg (cfm)	Clg (cfm)	Design FR	Veloc (fpm)	Diam (in)	Rect Duct Size (in)	Duct Material	Trunk
st1	Peak AVF	675	675	2.857	622	14	0 x 0	VinlFlx	
ST2	Peak AVF	20	20	4.286	369	4	0 x 0	VinlFlx	
ST3	Peak AVF	120	120	2.857	527	6	0 x 0	VinlFlx	
ST4	Peak AVF	120	120	4.286	613	6	0 x 0	VinlFlx	
st5	Peak AVF	285	285	2.857	595	10	0 x 0	VinlFlx	st1

Bold/italic values have been manually overridden

Return Branch Detail Table

Name	Grill Size (in)	Htg (cfm)	Clg (cfm)	TEL (ft)	Design FR	Veloc (fpm)	Diam (in)	RectSize (in)	Stud/Joist Opening (in)	Duct Matl	Trunk
rb1	0x 0	935	935	6.0	2.857	670	16	x0 0		VIFx	

Maronda Systems

Maronda Systems 4005 Maronda Way Sanford FL 32771 (407) 321-0064 Fax (407) 321-3913
Engineer/Architect of Record: Tomas Ponce, P.E. 367 Medallion Pl. Chuluota, Fl. 32766 FL PE # 50068,
Design Criteria: TPI Design: Matrix Analysis MiTek software

PLAN JOB #	LOT	ADDRESS	DIV/SUB	MODEL	MONTGOMERY C
9TM02001	20-1	278 SW TIMBER RIDGE DR	JAX-9TM	MGMC3 RIGHT	Vault Standard

This structure was designed in accordance with, and meets the requirements of TPI standards and the FLORIDA 2004 BUILDING CODE for 125 M.P.H. Wind Zone. Truss loading is in accordance with ASCE 7-02. These trusses are designed for an enclosed building.

The Truss Engineering package for the above referenced site was generated by the Truss Designer/Architect/MiTek/Trenco.
I, Tomas Ponce, P.E. the Architect/Engineer of Record for the above referenced lot Have reviewed the package and confirmed that it matches the physical and structural Parameters found on the set of permit drawings.

Truss ID	Run Date	Drawing Reviewed	Truss ID	Run Date	Drawing Reviewed
Layout	11/15/07	2/22/2008			
V	07/27/05	02/25/08			
HIP	11/02/06	02/25/08			
C	01/23/08	2/22/2008	JS5	01/23/08	2/22/2008
C1	01/23/08	2/22/2008	JS6	01/23/08	2/22/2008
C2	01/23/08	2/22/2008	JS7	01/23/08	2/22/2008
FG2	01/23/08	2/22/2008	JSGRD1	01/23/08	2/22/2008
G1	01/23/08	2/22/2008	MHSGRD	01/23/08	2/22/2008
GRD1	01/23/08	2/22/2008	S1B	01/23/08	2/22/2008
H1A	01/23/08	2/22/2008	S1C	01/23/08	2/22/2008
H2A	01/23/08	2/22/2008	S1D	01/23/08	2/22/2008
HGRD1A	01/23/08	2/22/2008	T1	01/23/08	2/22/2008
HGRD3	01/23/08	2/22/2008	T1A	01/23/08	2/22/2008
HS1	01/23/08	2/22/2008	V1	01/23/08	2/22/2008
HS2	01/23/08	2/22/2008	V2	01/23/08	2/22/2008
J	01/23/08	2/22/2008	V3	01/23/08	2/22/2008
J1	01/23/08	2/22/2008	V30	01/23/08	2/22/2008
J11	01/23/08	2/22/2008	V31	01/23/08	2/22/2008
J12	01/23/08	2/22/2008	V32	01/23/08	2/22/2008
J2	01/23/08	2/22/2008	V33	01/23/08	2/22/2008
J3	01/23/08	2/22/2008	V34	01/23/08	2/22/2008
J4	01/23/08	2/22/2008	V4	01/23/08	2/22/2008
J5	01/23/08	2/22/2008	V5	01/23/08	2/22/2008
J5A	01/23/08	2/22/2008	V6	01/23/08	2/22/2008
J6	01/23/08	2/22/2008			
J6A	01/23/08	2/22/2008			
J7	01/23/08	2/22/2008	**INV #**	**DESC**	**QNTY**
J7A	01/23/08	2/22/2008	**50060.0114**	**THD48**	
JGRD1	01/23/08	2/22/2008	**50060.0047**	**THD28**	
JGRD1A	01/23/08	2/22/2008	**50060.0110**	**JUS26**	**11**
JGRD3	01/23/08	2/22/2008	**50060.0058**	**THJ26**	**4**
JS	01/23/08	2/22/2008	**50060.0049**	**THD28-2**	**1**
JS1	01/23/08	2/22/2008	**50060.0050**	**THD28-3**	**1**
JS2	01/23/08	2/22/2008			
JS3	01/23/08	2/22/2008	**SEAT PLATES**		**111**
JS4	01/23/08	2/22/2008			

No. of Eng. Dwgs:	57
Roof Loads-	
TC Live:	16.0 psf
TC Dead:	7.0 psf
BC Live:	10.0 psf
BC Dead:	10.0 psf
Total	43.0 psf
DurFac- Lbr:	1.25
DurFac- Plt:	1.25
O.C. Spacing:	24.0"

DATE: MAY 0 9 2008

HARDWARE LEGEND

1	HUS26
2	HUS28
3	JUS26
4	MP6F
5	MPA1 & MPA1F
6	SKH26 L/R
7	SKHH26 L/R
8	SUS26
9	SUS28
10	THD26
11	THD28
12	THD28-2
13	THDH28-3
14	THD48
15	THJ26**
16	LTW12

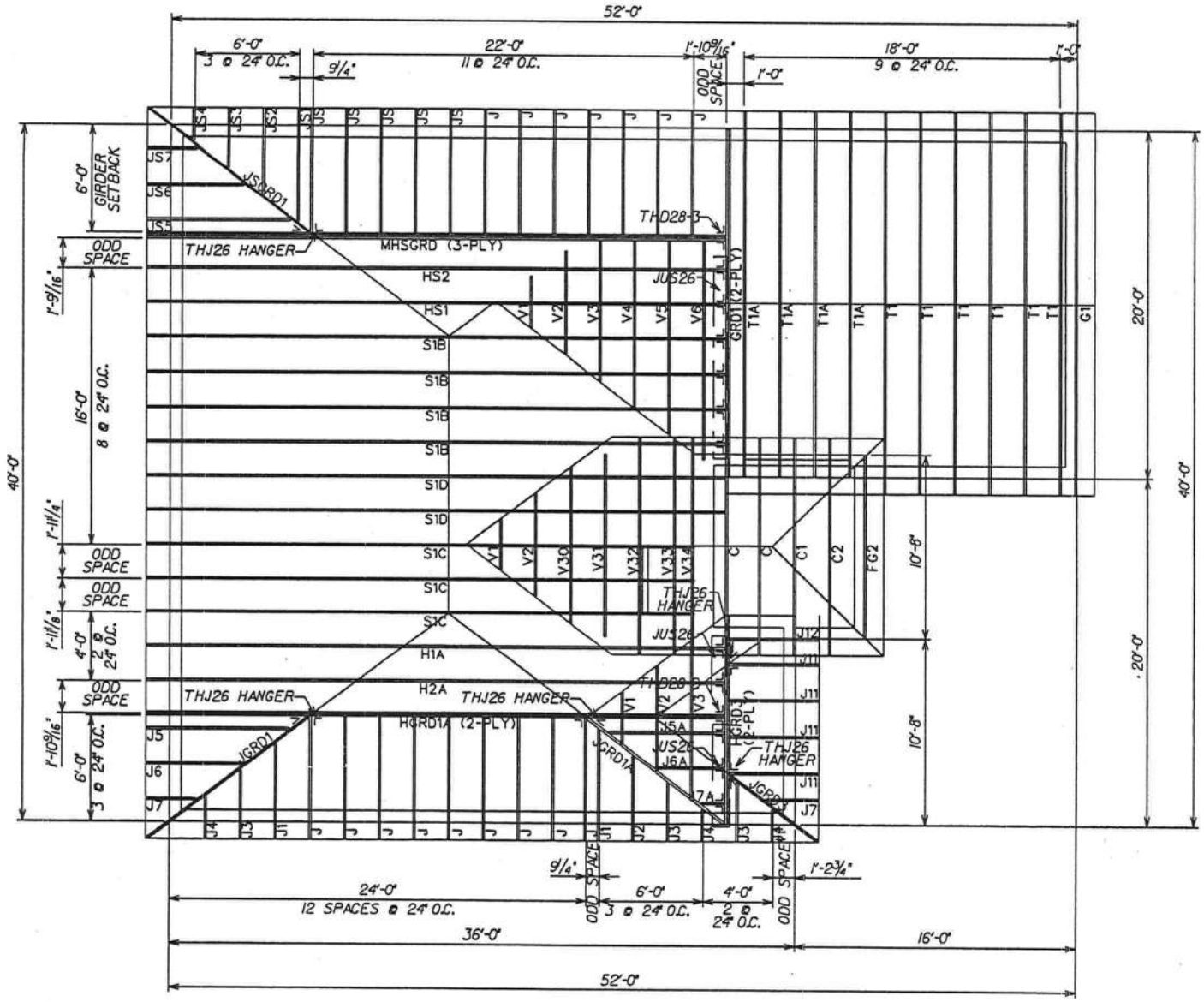

HARDWARE MANUFACTURED BY USP

* HARDWARE MANUFACTURED BY SIMPSON

** HARDWARE MANUFACTURED BY CLEVELAND

MAY 09 2008

MONTGOMERY "C" - FL

GARAGE : RIGHT

Maronda Homes

(407) 321-0064 4005 MARONDA WAY SANFORD, FLORIDA

DESIGNER:
CHECKER: MIKE
DRAWN BY: K WARD

SCALE: 1/8" = 1'-0"
DATE: 11/15/2007

LOADING-FBC2004/TPI2002

TC LIVE	16.00	SNOW LOAD	0.00
TC DEAD	7.00	LUMBER DOL	1.25
BC LIVE	10.00	PLATE DOL	1.25
BC DEAD	10.00	WIND	125
TOTAL	43.00	SPACING	2'-0"

MITEK 2000 LAYOUT SYSTEM
Copyright ©1985 Mitek Industries, Inc.
1.800.648.3587 - miteksupport@mii.com

GENERAL NOTES

Trusses are not marked in any way to identify the frequency or location of temporary lateral restraint and diagonal bracing. Follow the recommendations for handling, installing and temporary restraining and bracing of trusses. Refer to BCSI Guide to Good Practice for Handling, Installing, Restraining & Bracing of Metal Plate Connected Wood Trusses for more detailed information.

Truss Design Drawings may specify locations of permanent lateral restraint or reinforcement for individual truss members. Refer to the BCSI-B3 Summary Sheet – Permanent Restraint/Bracing of Chords & Web Members for more information. All other permanent bracing design is the responsibility of the Building Designer.

NOTAS GENERALES

Los trusses no están marcados de ningún modo que identifique la frecuencia o localización de restricción lateral y arriostre diagonal temporales. Use las recomendaciones de manejo, instalación, restricción y arriostre temporal de los trusses. Vea el folleto BCSI Guía de Buena Práctica para el Manejo, Instalación, Restricción y Arriostre de los Trusses de Madera Conectados con Placas de Metal para información más detallada.

Los dibujos de diseño de los trusses pueden especificar las localizaciones de restricción lateral permanente o refuerzo en los miembros individuales del truss. Vea la hoja resumen BCSI-B3 – Restricción/Arriostre Permanente de Cuerdas y Miembros Secundarios para más información. El resto de los diseños de arriostres permanentes son la responsabilidad del Diseñador del Edificio.

⚠ The consequences of improper handling, erecting, installing, restraining and bracing can result in a collapse of the structure, or worse, serious personal injury or death.

El resultado de un manejo, levantamiento, instalación, restricción y arrisotre incorrecto puede ser la caída de la estructura o aún peor, heridos o muertos.

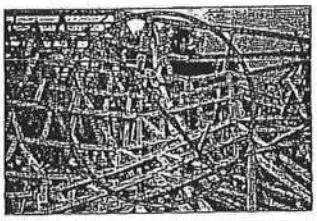

⚠ Banding and truss plates have sharp edges. Wear gloves when handling and safety glasses when cutting banding.

Empaques y placas de metal tienen bordes afilados. Use guantes y lentes protectores cuando corte los empaques.

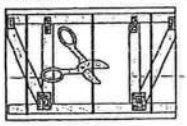

HANDLING — MANEJO

⚠ Avoid lateral bending. — Evite la flexión lateral.

⚠ Use special care in windy weather or near power lines and airports.

Utilice cuidado especial en días ventosos o cerca de cables eléctricos o de aeropuertos.

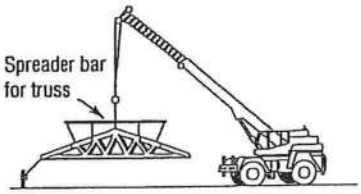

⚠ The contractor is responsible for properly receiving, unloading and storing the trusses at the jobsite.

El contratista tiene la responsabilidad de recibir, descargar y almacenar adecuadamente los trusses en la obra.

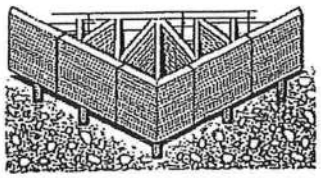

☑ Use proper rigging and hoisting equipment.

Use equipo apropiado para levantar e improvisar.

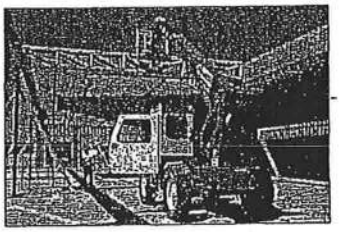

☑ If trusses are to be stored horizontally, place blocking of sufficient height beneath the stack of trusses at 8' to 10' on center.

For trusses stored for more than one week, cover bundles to prevent moisture gain but allow for ventilation.

Refer to BCSI Guide to Good Practice for Handling, Installing, Restraining & Bracing of Metal Plate Connected Wood Trusses for more detailed information pertaining to handling and jobsite storage of trusses.

Si los trusses estarán guardados horizontalmente, ponga bloqueando de altura suficiente detrás de la pila de los trusses.

Para trusses guardados por más de una semana, cubra los paquetes para prevenir aumento de humedad pero permita ventilación.

Vea el folleto BCSI Guía de Buena Práctica para el Manejo, Instalación, Restricción y Arriostres de los Trusses de Madera Conectados con Placas de Metal para información más detallada sobre el manejo y almacenado de los trusses en área de trabajo.

⊘ Do not store unbraced bundles upright.

No almacene verticalmente los trusses sueltos.

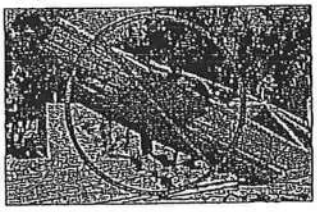

⊘ Do not store on uneven ground.

No almacene en tierra desigual.

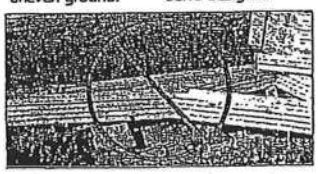

HOISTING RECOMMENDATIONS FOR TRUSS BUNDLES
RECOMENDACIONES PARA LEVANTAR PAQUETES DE TRUSSES.

⚠ Warning! Don't overload the crane.
¡Advertencia! ¡No sobrecarga la grúa!

⊘ Never use banding alone to lift a bundle.
Do not lift a group of individually banded bundles.

Nunca use sólo los empaques para levantar un paquete.
No levante un grupo de empaques individuales.

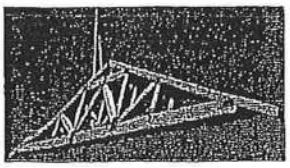

☑ A single lift point may be used for bundles with trusses up to 45'.
Two lift points may be used for bundles with trusses up to 60'.
Usé at least 3 lift points for bundles with trusses greater than 60'.

Puede usar un solo lugar de levantar para paquetes de trusses hasta 45 pies.
Puede usar dos puntos de levantar para paquetes más de 60 pies.
Use por lo menos tres puntos de levantar para paquetes más de 60 pies.

⚠ Warning! Do not over load supporting structure with truss bundle.
¡Advertencia! No sobrecargue la estructura apoyada con el paquete de trusses.

☑ Place truss bundles in stable position.
Puse paquetes de trusses en una posición estable.

INSTALLATION OF SINGLE TRUSSES BY HAND
INSTALACIÓN POR LA MANO DE TRUSSES INDIVIDUALES

☑ Trusses 20' or less, support at peak.

Levante del pico los trusses de 20 pies o menos.

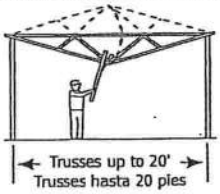

☑ Trusses 30' or less, support at quarter points.

Levante de los cuartos de tramo los trusses de 30 pies o menos.

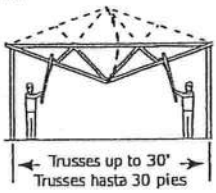

HOISTING OF SINGLE TRUSSES — LEVANTAMIENTO DE TRUSSES INDIVIDUALI

☑ Hold each truss in position with the erection equipment until top chord temporary lateral restraint is installed and the truss is fastened to the bearing points.

Sostenga cada truss en posición con equipo de grúa hasta que la restricción lateral temporal de la cuerda superior esté instalado y el truss está asegurado en los soportes.

⚠ Warning! Using a single pick-point at the peak can damage the truss.

¡Advertencia! El uso de un solo lugar para levantar en el pico puede hacer daño al truss.

HOISTING RECOMMENDATIONS FOR SINGLE TRUSSES

RECOMENDACIONES PARA LEVANTAR TRUSSES INDIVIDUALES

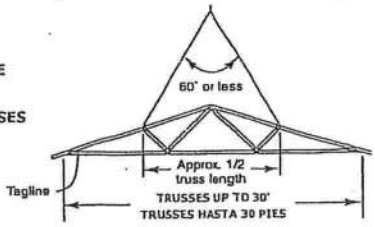

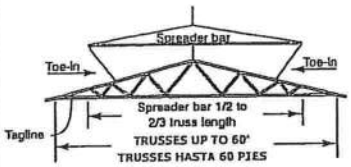

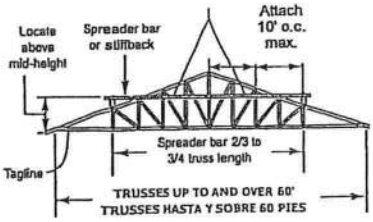

TEMPORARY RESTRAINT & BRACING
RESTRICCIÓN Y ARRIOSTRE TEMPORAL

⚠ Refer to BCSI-B2 Summary Sheet – Truss Installation & Temporary Restraint/Bracing for more information.

Vea el resumen BCSI B2 – Restricción/ Arriostre Temporal y Instalación de los Trusses para más información.

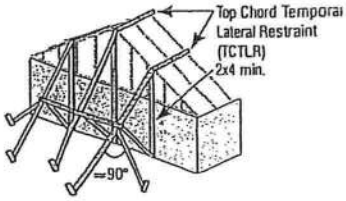

☑ Locate ground braces for first truss directly in line with all rows of top chord temporary lateral restraint (see table in the next column).

Coloque los arriostres de tierra para el primer truss directamente en línea con cada una de las filas de restricción lateral temporal de la cuerda superior (vea la table en la próxima columna).

⊘ Do not walk on unbraced trusses.

No camine en trusses sueltos.

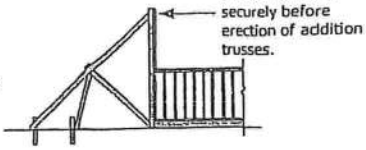

TEPS TO SETTING TRUSSES
AS MEDIDAS DE LA INSTALLACIÓN DE LOS TRUSSES

1) Install ground bracing. 2) Set first truss and attach securely to ground bracing. 3) Set next 4 trusses with short member temporary lateral restraint (see below). 4) Install top chord diagonal bracing (see below). 5) Install web member plane diagonal bracing to stabilize the first five trusses (see below). 6) Install bottom chord temporary lateral restraint and diagonal bracing (see below). 7) Repeat process on groups of four trusses until all trusses are set.

1) Instale los arriostres de tierra. 2) Instale el primero truss y ate seguramente al arriostre de tierra. 3) Instale los próximos cuatro trusses con restricción lateral temporal de miembro corto (vea abajo). 4) Instale el arriostre diagonal de la cuerda superior (vea abajo). 5) Instale arriostre diagonal para los planos de los miembros secundarios para estable los primeros cinco trusses (vea abajo). 6) Instale la restricción lateral temporal y arriostre diagonal para la cuerda inferior (vea abajo). 7) Repita éste procedimiento en grupos de cuatro trusses hasta que todos los trusses estén instalados.

Refer to BCSI-B2 Summary Sheet - Truss Installation & Temporary Restraint/Bracing for more information.

Vea el resúmen BCSI-B2 - Instalación de Trusses y Arriostre Temporal para mayor información.

ESTRAINT/BRACING FOR ALL PLANES OF TRUSSES
RESTRICCIÓN/ARRIOSTRE EN TODOS PLANOS DE TRUSSES.

This restraint & bracing method is for all trusses except 3x2 and 4x2 parallel chord trusses.

Este método de restricción y arriostre es para todo trusses excepto trusses de cuerdas paralelas 3x2 y 4x2.

) TOP CHORD — CUERDA SUPERIOR

Truss Span Longitud de Tramo	Top Chord Temporary Lateral Restraint (TCTLR) Spacing Espaciamiento del Arriostre Temporal de la Cuerda Superior
Up to 30' Hasta 30 pies	10' o.c. max. 10 pies máximo
30' to 45' 30 a 45 pies	8' o.c. max. 8 pies máximo
45' to 60' 45 a 60 pies	6' o.c. max. 6 pies máximo
60' to 80'* 60 a 80 pies*	4' o.c. max. 4 pies máximo

*Consult a Professional Engineer for trusses longer than 60'.
*Consulte a un Ingeniero para trusses de mas de 60 pies.

See BCSI-B2 for TCTLR options.
Vea el BCSI-B2 para las opciones de TCTLR.

Refer to BCSI-B3 Summary Sheet – Permanent Restraint/Bracing of Chords & Web Members for Gable End Frame restraint/bracing/reinforcement information.

Para información sobre restricción/arriostre/refuerzo para armazón de hastial vea el resumen BCSI-B3 – Restricción/Arriostre Permanente de Cuerdas y Miembros Secundarios.

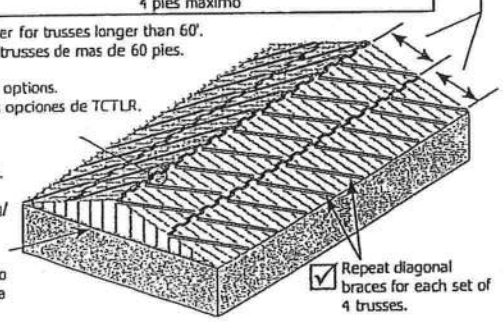

Repeat diagonal braces for each set of 4 trusses.

Repita los arriostres diagonales para cada grupo de 4 trusses.

Ground bracing not shown for clarity.

) WEB MEMBER PLANE — PLANO DE LOS MIEMBROS SECUNDARIOS

LATERAL RESTRAINT & DIAGONAL BRACING ARE VERY IMPORTANT
LA RESTRICCIÓN LATERAL Y EL ARRIOSTRE DIAGONAL SON MUY IMPORTANTES!

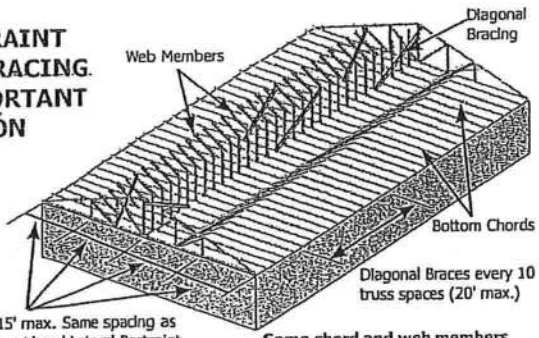

Some chord and web members not shown for clarity.

3) BOTTOM CHORD — CUERDA INFERIOR

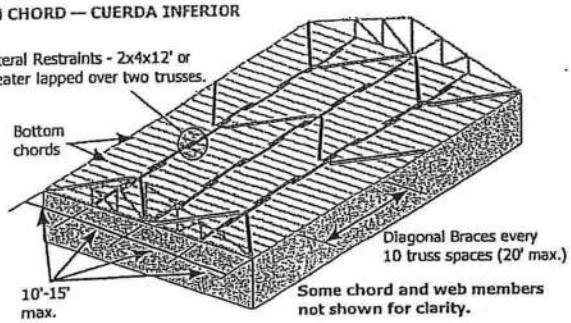

Some chord and web members not shown for clarity.

RESTRAINT & BRACING FOR 3x2 AND 4x2 PARALLEL CHORD TRUSSES
LA RESTRICCIÓN Y EL ARRIOSTRE PARA TRUSSES DE CUERDAS PARALELAS 3X2 Y 4X2

Refer to BCSI-B7 Summary Sheet - Temporary & Permanent Restraint/Bracing for Parallel Chord Trusses for more information.

Vea el resumen BCSI-B7 – Restricción y Arriostre Temporal y Permanente de Trusses de Cuerdas Paralelas para más información.

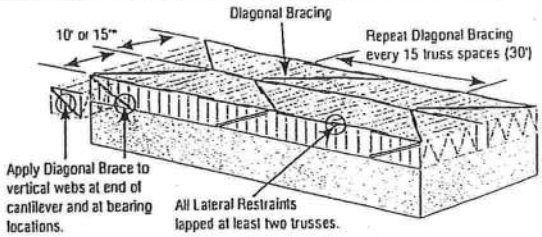

*Top chord Temporary Lateral Restraint spacing shall be 10' o.c. max. for 3x2 chords and 15' o.c. for 4x2 chords.

INSTALLING — INSTALACION

Tolerances for Out-of-Plane.
Tolerancias para Fuera-de-Plano.

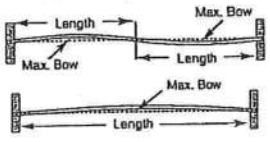

Out-of-Plane	
D/50	D (ft.)
1/4"	1'
1/2"	2'
3/4"	3'
1"	4'
1-1/4"	5'
1-1/2"	6'
1-3/4"	7'
2"	≥8'

Out-of-Plane	
Max. Bow	Truss Length
3/4"	12.5'
7/8"	14.6'
1"	16.7'
1-1/8"	18.8'
1-1/4"	20.8'
1-3/8"	22.9'
1-1/2"	25.0'
1-3/4"	29.2'
2"	≥33.3'

Tolerances for Out-of-Plumb.
Tolerancias para Fuera-de-Plomada.

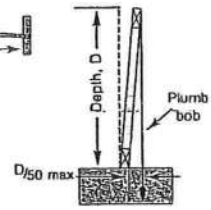

CONSTRUCTION LOADING — CARGA DE CONSTRUCCION

Do not proceed with construction until all lateral restraint and bracing is securely and properly in place.

No proceda con la construcción hasta que todas las restricciones laterales y los arriostres estén colocados en forma apropiada y segura.

Do not exceed maximum stack heights. Refer to BCSI-B4 Summary Sheet - Construction Loading for more information.

No exceda las máximas alturas recomendadas. Vea el resúmen BCSI-B4 Carga de Construcción para mayor información.

Maximum Stack Heights for Lightweight Materials	
Material	Height
Gypsum Board	12"
Plywood or OSB	16"
Asphalt Shingles	2 bundles
Concrete Block	8"
Clay Tile	3-4 tiles high

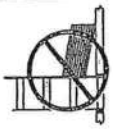

Do not overload small groups or single trusses.
No sobrecargue pequeños grupos o trusses individuales.

Never stack materials near a peak.
Nunca amontone material cerca del pico.

Place loads over as many trusses as possible.
Coloque las cargas sobre tantos trusses como sea posible.

Position loads over load bearing walls.
Coloque las cargas sobre las paredes soportantes.

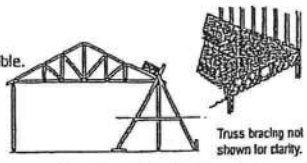

Truss bracing not shown for clarity.

ALTERATIONS — ALTERACIONES

Refer to BCSI-B5 Summary Sheet - Truss Damage, Jobsite Modifications & Installation Errors.

Vea el resúmen BCSI-B5 Daños de trusses, Modificaciones en la Obra y Errores de Instalación.

Do not cut, alter, or drill any structural member of a truss unless specifically permitted by the Truss Design Drawing.

No corte, altere o perfore ningún miembro estructural de los trusses, a menos que esté específicamente permitido en el dibujo del diseño del truss.

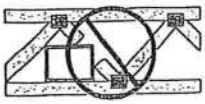

Trusses that have been overloaded during construction or altered without the Truss Manufacturer's prior approval may render the Truss Manufacturer's limited warranty null and void.

Trusses que se han sobrecargado durante la construcción o han sido alterados sin una autorización previa del Fabricante de Trusses, pueden reducir o eliminar la garantía del Fabricante de Trusses.

WTCA
6300 Enterprise Lane • Madison, WI 53719
608/274-4849 • www.sbcindustry.com

TPI
TRUSS PLATE INSTITUTE
218 N. Lee St., Ste. 312 • Alexandria, VA 22314
703/683-1010 • www.tpinst.org

B1WARN11x17 20061115

Maronda Systems

MARONDA SYSTEMS *4005 Maronda Way* *Sanford, FL 32771* *(407) 321-0064* *Fax (407) 321-3913*

Date: November 1, 2006

To: Building Department

From: Maronda Systems
Tomas Ponce
Professional Engineer
State of Florida #0050068

Subject: Valley Trusses

All valley trusses labeled V-1 through 100 are covered under the general valley sheet provided in the truss package signed and sealed by the engineer of record. The connections are noted on the structural info sheet of the plans. All criteria of the valley trusses are noted on the general sheet.

If you have any questions please feel free to call at 407-321-0064.

Sincerely,

Tomas Ponce, P.E.
Date: 11/1/06

Job: MARONDA SYSTEMS | Customer: | WO:VALLEY SET | TI:V | Qty:1

DESIGN INFORMATION

This design is for an individual building component and has been based on information provided by the client. The designer disclaims any responsibility for damages as a result of faulty or incorrect information, specifications and/or designs furnished to the truss designer by the client and the correctness or accuracy of this information as it may relate to a specific project and accepts no responsibility or exercises no control with regard to fabrication, handling, shipment and installation of trusses. This truss has been designed as an individual building component in accordance with ANSI/TPI 1-1995 and NDS-97 to be incorporated as part of the building design by a Building Designer (registered architect or professional engineer). When reviewed for approval by the building designer, the design loadings shown must be checked to be sure that the data shown are in agreement with the local building codes, local climatic records for wind or snow loads, project specifications or special applied loads. Unless shown, truss has not been designed for storage or occupancy loads. The design assumes compression chords (top or bottom) are continuously braced by sheathing unless otherwise specified. Where bottom chords in tension are not fully braced laterally by a properly applied rigid ceiling, they should be braced at a maximum spacing of 10'-0" o.c. Connector plates shall be manufactured from 20 gauge hot dipped galvanized steel meeting ASTM A 653, Grade 40, unless otherwise shown.

FABRICATION NOTES

Prior to fabrication, the fabricator shall review this drawing to verify that this drawing is in conformance with the fabricator's plans and to realize a continuing responsibility for such verification. Any discrepancies are to be put in writing before cutting or fabrication. Plates shall not be installed over knotholes, knots or distorted grain. Members shall be cut for tight fitting wood to wood bearing. Connector plates shall be located on both faces of the truss with nails fully imbedded and shall be sym. about the joint unless otherwise shown. A 5x4 plate is 5" wide x 4" long. A 6x8 plate is 6" wide x 8" long. Slots (holes) run parallel to the plate length specified. Double cuts on web members shall meet at the centroid of the webs unless otherwise shown. Connector plate sizes are minimum sizes based on the forces shown and may need to be increased for certain handling and/or erection stresses. This truss is not to be fabricated with fire retardant treated lumber unless otherwise shown. For additional information on Quality Control refer to ANSI/TPI 1-1995

PRECAUTIONARY NOTES

All bracing and erection recommendations are to be followed in accordance with "Handling, Installing and Bracing", HIB-91. Trusses are to be handled with particular care during banding and bundling, delivery and installation to avoid damage. Temporary and permanent bracing for holding trusses in a straight and plumb position and for resisting lateral forces shall be designed and installed by others. Careful handling is essential and erection bracing is always required. Normal precautionary action for trusses requires such temporary bracing during installation between trusses to avoid toppling and domino-ing. The supervision of erection of trusses shall be under the control of persons experienced in the installation of trusses. Professional advice shall be sought if needed. Concentration of construction loads greater than the design loads shall not be applied to trusses at any time. No loads other than the weight of the erectors shall be applied to trusses until after all fastening and bracing is completed.

TOP CHORDS: 2X4 SP #2
BOT CHORDS: 2X4 SP #2
WEBS: 2X4 SP #3

T/C MUST BE CONTINUOUSLY BRACED BY ROOF SHEATHING UNLESS NOTED OTHERWISE.

VALLEY MEMBERS TO BE SET PERPENDICULAR TO TRUSSES BELOW.

IT IS NOT REQUIRED TO SHEATH TRUSSES BELOW VALLEY SET. VALLEY MEMBERS PROVIDE ALL NECESSARY TOP CHORD BRACING.

WHEN VALLEY MEMBERS ARE NAILED DIRECTLY TO TRUSS TOP CHORDS USE (2) 16D NAILS PER INTERSECTION, OR TWO FEET ON CENTER. WHEN BELOW TRUSSES ARE SHEATHED FIRST USE (2) 10d NAILS OR (1) 16d NAIL PER INTERSECTION, OR TWO FEET ON CENTER.

2X4 TRANSVERSE BRACING NAILED FLAT TO EDGE OF WEB WITH 12d NAILS AT 8" O.C. OR A SCAB OF THE SAME DIMENSION AND GRADE AS WEB; NAILED TO FACE (S) OF WEB WITH 10d NAILS STAGGERED 8" O.C. SCAB OR TRANSVERSE BRACKING TO EXTEND FOR 90% OF WEB LENGTH. 2X8 BRACE REQUIRED ON ANY WEB EXCEEDING 14'.

*** denotes ONE edge or one face

**** denotes BOTH edges or Both faces.

(1) ONE BRACE REQUIRED ON WEBS > = 94.0" LONG *
(2) TWO BRACES REQ'D ON WEBS > =126.0" LONG. **

VALLEY TRUSSES ARE ACCEPTABLE TO BE CANTILEVERED UP TO TWO FEET.

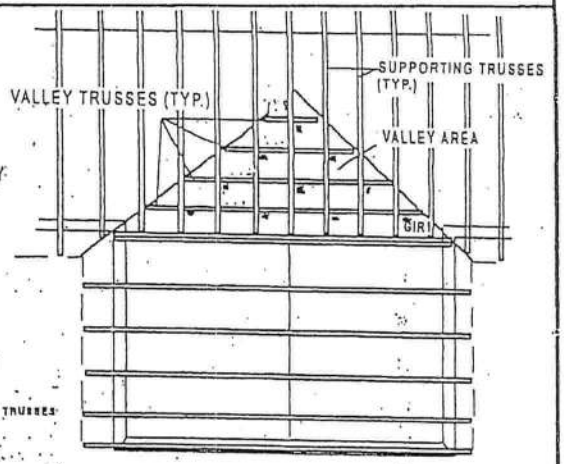

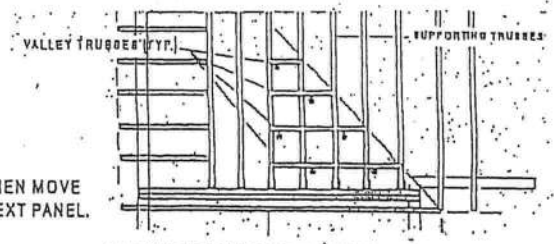

(*) WHEN DIAGONAL WEB PRESENT USE 4X8 PLATE
(#) WHEN NO DIAGONAL WEB PRESENT USE 2X4 PLATE

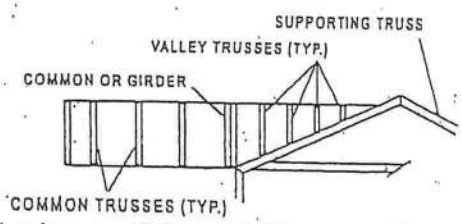

* VALLEY STRAPPING TO TRUSS BELOW @ 4' O.C.

IF LESS THEN 3-0-0 THEN MOVE DIAGONAL WEB TO NEXT PANEL.

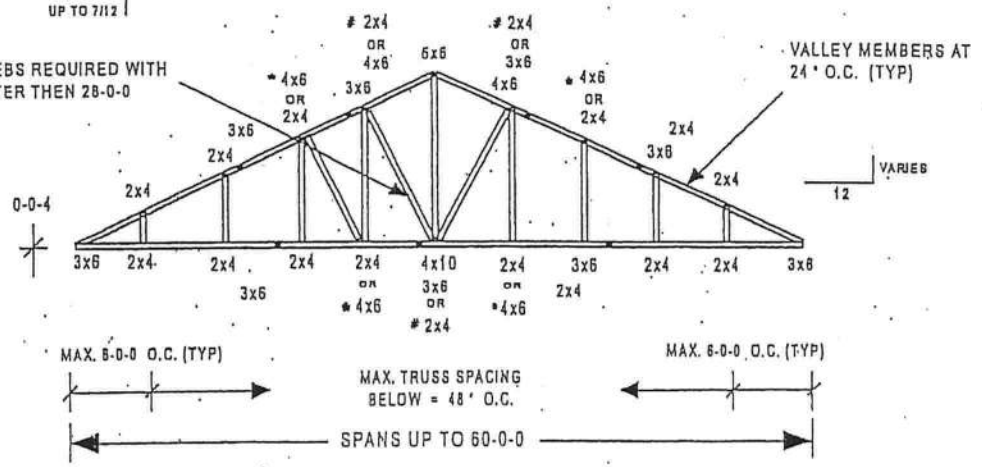

DEC 17 2005

EXCEPT AS SHOWN PLATES ARE TL20 GA TESTED PER ANSI/TPI 1-1995 Cont. Support Studs @ 6-0-0 O.C. ----

Maronda Systems
4005 MARONDA WAY
Sanford, FL. 32771
(407) 321-0064 Fax (407) 321-3913
TOMAS PONCE P.E. LICENSE #0050068
1005 VANNESSA DR. OVIEDO FL 32766

WARNING:
READ ALL NOTES ON THIS SHEET. A COPY OF THIS DRAWING TO BE GIVEN TO ERECTING CONTRACTOR. BRACING WARNING:
Bracing shown on this drawing is not erection bracing, wind bracing, portal bracing or similar bracing which is a part of the building design and which must be considered by the building designer. Bracing shown is for lateral support of truss members only to reduce buckling length. Provisions must be made to anchor lateral bracing at ends and specified locations determined by the building designer. Additional bracing of the overall structure may be required. (See HIB-91 of TPI). For specific truss bracing requirements, contact building designer. (Truss Plate Institute, TPI is located at 583 D'Onofrio Drive, Madison, Wisconsin 53719).

Eng Job:			WO: VALLEY SET
Dwg:			TI: V
Dsgnr:TLY Chk:			7/27/2005
TC Live	16.0	psf	Lbr DF: 1.25
TC Dead	7.0	psf	Plt DF: 1.25
BC Live	10.0	psf	O.C.: 2- 0- 0
BC Dead	2.0	psf	TPI-02/FBC-04
TOTAL	35.0	psf	Code: FLA
			v4.7.21-4355

Design: Matrix Analysis Profile Path: C:\TEE-LOK\Work\Jobs\MARONDA SYSTEMS\VT.prx

DESIGN INFORMATION

This design is for an individual building component and has been based on information provided by the client. The designer disclaims any responsibility for damages as a result of faulty or incorrect information, specifications and/or designs furnished to the truss designer by the client and the correctness or accuracy of this information as it may relate to a specific project and accepts no responsibility or exercises no control with regard to fabrication, handling, shipment and installation of trusses. This truss has been designed as an individual building component in accordance with ANSI/TPI 1-1995 and NDS-97 to be incorporated as part of the building design by a Building Designer. When reviewed for approval by the building designer, the design loadings shown must be checked to be sure that the data shown are in agreement with the local building codes, local climatic records for wind or snow loads, project specifications or special applied loads. Unless shown, truss has not been designed for storage or occupancy loads. The design assumes compression chords (top or bottom) are continuously braced by sheathing unless otherwise specified. Where bottom chords in tension are not fully braced laterally by a properly applied rigid ceiling, they should be braced at a maximum spacing of 10'-0" o.c. Connector plates shall be manufactured from 20 gauge hot dipped galvanized steel meeting ASTM A 653, Grade 40, unless otherwise shown.

FABRICATION NOTES

Prior to fabrication, the fabricator shall review this drawing to verify that this drawing is in conformance with the fabricator's plans and to realize a continuing responsibility for such verification. Any discrepancies are to be put in writing before cutting or fabrication. Plates shall not be installed over knotholes, knots or distorted grain. Members shall be cut for tight fitting wood to wood bearing. Connector plates shall be located on both faces of the truss with nails fully imbedded and shall be sym. about the joint unless otherwise shown. A 5x4 plate is 5" wide x 4" long. A 6x8 plate is 6" wide x 8" long. Slots (holes) run parallel to the plate length specified. Double cuts on web members shall meet at the centroid of the webs unless otherwise shown. Connector plate sizes are minimum sizes based on the forces shown and may need to be increased for certain handling and/or erection stresses. This truss is not to be fabricated with fire retardant treated lumber unless otherwise shown. For additional information on Quality Control refer to ANSI/TPI 1-1995

PRECAUTIONARY NOTES

All bracing and erection recommendations are to be followed in accordance with accepted industry publications. Trusses are to be handled with particular care during banding and bundling, delivery and installation to avoid damage. Temporary and permanent bracing for holding trusses in a straight and plumb position and for resisting lateral forces shall be designed and installed by others. Careful handling is essential and erection bracing is always required. Normal precautionary action for trusses requires such temporary bracing during installation between trusses to avoid toppling and domino. The supervision of erection of trusses shall be under the control of persons experienced in the installation of trusses. Professional advice shall be sought if needed. Concentration of construction loads greater than the design loads shall not be applied to trusses at any time. No loads other than the weight of the erectors shall be applied to trusses until after all fastening and bracing is completed

HIP TRUSS BLOCKING REQUIREMENTS

APA-FORM NO. TT-083

SPAN RATING AND BLOCKING RECOMMENDATIONS FOR USE OVER HIP-ROOFS SUPPORT AT 24" O.C

Roof Slope	Panel Span Rating			
	24/16	32/16	40/20	48/24
≤ 1:12	OK	OK	OK	OK
≤ 2:12	OK	OK	OK	OK
≤ 3:12	OK	OK	OK	OK
≤ 4:12	OK	OK	OK	OK
≤ 5:12	OK	OK	OK	OK
≤ 6:12	OK	OK	OK	OK
≤ 8:12	OK	OK	OK	OK
≤ 7:12	OK	OK	OK	OK
≤ 8:12	OK	OK	OK	OK
≤ 9:12	OK	OK	OK	OK
≤ 10:12	OK	OK	OK	OK
≤ 11:12	OK	OK	OK	OK
≤ 12:12	OK	OK	OK	OK
≤ 13:12	OK	OK	OK	OK
≤ 14:12	OK	OK	OK	OK

NOTE: SHADED AREA REQUIRE 2X LUMBER BLOCKING BETWEEN TRUSS AT UN SUPPORTED PANEL EDGES IN HIP ROOF AREAS

NOV 0 2 2006

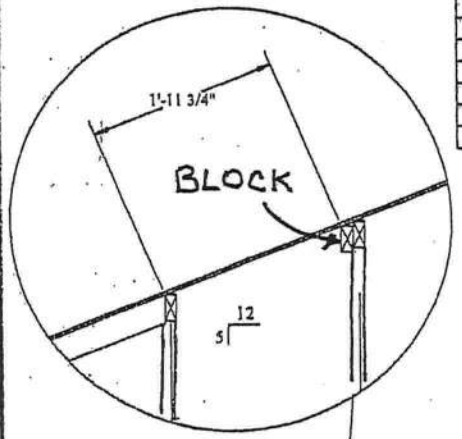

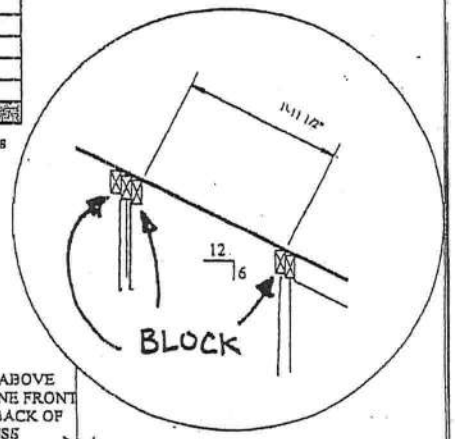

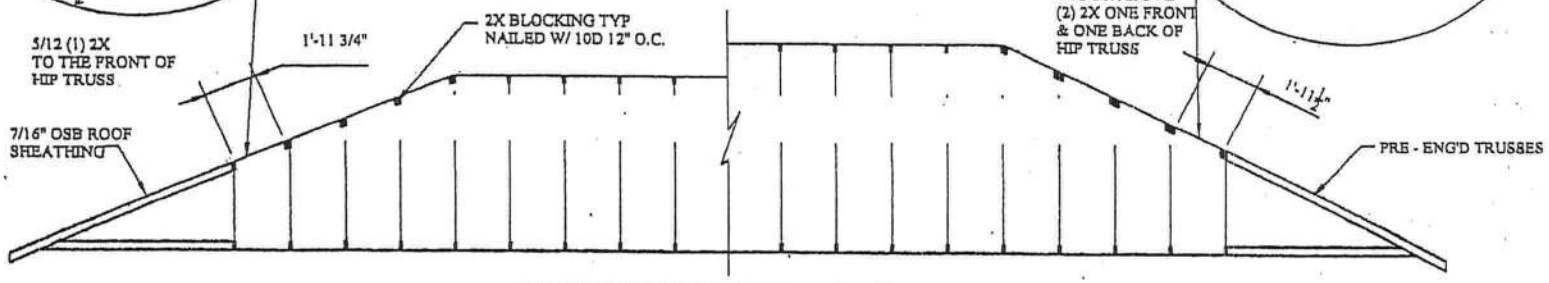

NOTE: NO BLOCKING IS REQUIRED ON 4/12 AND BELOW PITCHED ROOFS

Maronda Systems
4005 MARONDA WAY
Sanford, FL 32771
(407) 321-0064 Fax (407) 321-3913
TOMAS PONCE P.E. LICENSE #0050068
367 Medallion Pl. Chuluota, FL 32766

WARNING:
READ ALL NOTES ON THIS SHEET. A COPY OF THIS DRAWING TO BE GIVEN TO ERECTING CONTRACTOR. BRACING WARNING:
Bracing shown on this drawing is not erection bracing, wind bracing, portal bracing or similar bracing which is a part of the building design and which must be considered by the building designer. Bracing shown is for lateral support of truss members only to reduce buckling length. Provisions must be made to anchor lateral bracing at ends and specified locations determined by the building designer. Additional bracing of the overall structure may be required. (See HIB-91 of TPI).For specific truss bracing requirements, contact building designer.(Truss Plate Institute, TPI is located at 583 D'Onofrio Drive, Madison, Wisconsin 53719).
Component Engineering by: Truss Engineering Co., P.A., 818 Soundside Rd, Edenton, NC 27932

Eng Job:			WO: HIPDETAIL
Dwg:			TI: HIP
Dsgnr:TLY Chk:			11/2/2006
TC Live	16.0	psf	Lbr DF: 1.25
TC Dead	7.0	psf	Plt DF: 1.25
BC Live	10.0	psf	O.C.: 2- 0- 0
BC Dead	10.0	psf	TPI-02/FBC-04
TOTAL	43.0	psf	Code: FLA
			v4.7.32-0

ENGINEERING BY
TRENCO
A MiTek Affiliate

Trenco
818 Soundside Rd
Edenton, NC 27932

Re: MONTGOMERY
MONTGOMERY_FLORIDA_125

The truss drawing(s) referenced below have been prepared by Truss Engineering Co. under my direct supervision based on the parameters provided by Maronda Homes-Pittsburgh, PA.

Pages or sheets covered by this seal: E4632329 thru E4632392

My license renewal date for the state of Florida is February 28, 2009.

MARVIN A. STRZYZEWSKI
LICENSE
No 43144
STATE OF
FLORIDA
PROFESSIONAL ENGINEER

Marvin A. Strzyzewski, FL Lic. #43144
Truss Engineering Co.
818 Soundside Road
Edenton, NC 27932
FL COA #7239

January 23,2008

Strzyzewski, Marvin

The seal on these drawings indicate acceptance of professional engineering responsibility solely for the truss components shown. The suitability and use of this component for any particular building is the responsibility of the building designer, per ANSI/TPI-2002 Chapter 2.
Engineering services provided by Truss Engineering Company.

Job	Truss	Truss Type	Qty	Ply	MONTGOMERY_FLORIDA_125
MONTGOMERY	C	COMMON	2	1	E4B32329 Job Reference (optional)

Maronda Homes Inc., Sanford, FL

7.030 s Jan 3 2008 MiTek Industries, Inc. Wed Jan 23 13:37:08 2008 Page 1

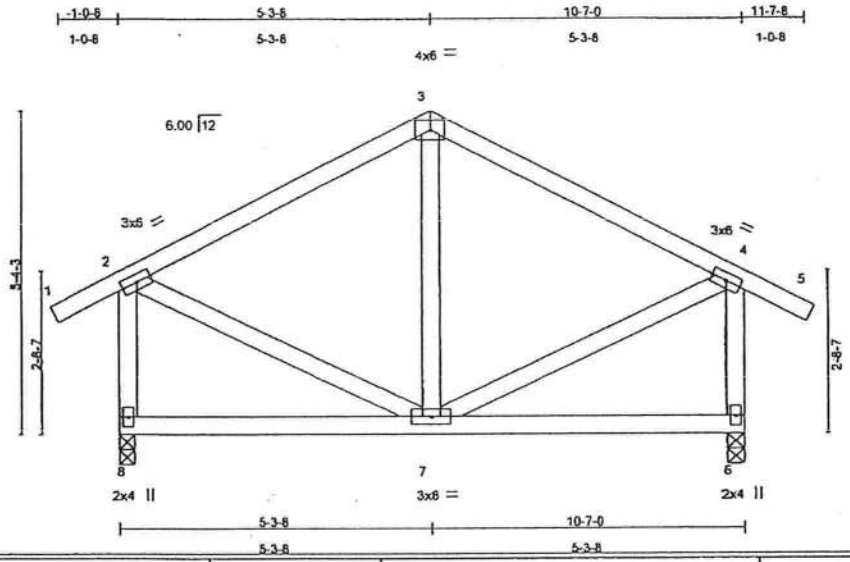

LOADING (psf)		SPACING	2-0-0	CSI		DEFL	in	(loc)	l/defl	L/d	PLATES	GRIP
TCLL	16.0	Plates Increase	1.25	TC	0.17	Vert(LL)	-0.01	6-7	>999	240	MT20	244/190
TCDL	7.0	Lumber Increase	1.25	BC	0.14	Vert(TL)	-0.03	6-7	>999	180		
BCLL	10.0 *	Rep Stress Incr	YES	WB	0.07	Horz(TL)	0.00	6	n/a	n/a		
BCDL	10.0	Code FBC2004/TPI2002		(Matrix)							Weight: 87 lb	

LUMBER
TOP CHORD 2 X 4 SYP No.2
BOT CHORD 2 X 4 SYP No.2
WEBS 2 X 4 SYP No.3 *Except*
2-8 2 X 4 SYP No.2, 4-6 2 X 4 SYP No.2

BRACING
TOP CHORD Structural wood sheathing directly applied or 6-0-0 oc purlins, except end verticals.
BOT CHORD Rigid ceiling directly applied or 10-0-0 oc bracing.

REACTIONS (lb/size) 8=500/0-3-0, 6=500/0-3-8
Max Horz 8=69(LC 6)
Max Uplift8=-143(LC 6), 6=-143(LC 7)

FORCES (lb) - Maximum Compression/Maximum Tension
TOP CHORD 1-2=0/26, 2-3=-340/160, 3-4=-340/160, 4-5=0/26, 2-8=-402/293, 4-6=-402/293
BOT CHORD 7-8=-76/66, 6-7=-12/56
WEBS 3-7=0/96, 2-7=-38/230, 4-7=-38/230

NOTES
1) Unbalanced roof live loads have been considered for this design.
2) Wind: ASCE 7-02; 125mph (3-second gust); h=25ft; TCDL=4.2psf; BCDL=6.0psf; Category II; Exp B; enclosed; MWFRS (low-rise) and C-C Interior(1) zone; Lumber DOL=1.33 plate grip DOL=1.33. This truss is designed for C-C for members and forces, and for MWFRS for reactions specified.
3) This truss has been designed for a 10.0 psf bottom chord live load nonconcurrent with any other live loads.
4) * This truss has been designed for a live load of 20.0psf on the bottom chord in all areas where a rectangle 3-6-0 tall by 1-0-0 wide will fit between the bottom chord and any other members.
5) Provide mechanical connection (by others) of truss to bearing plate capable of withstanding 143 lb uplift at joint 8 and 143 lb uplift at joint 6.

LOAD CASE(S) Standard

MARVIN A. STRZYZEWSKI
LICENSE
No. 43144
STATE OF
FLORIDA
PROFESSIONAL ENGINEER

Marvin A. Strzyzewski, FL Lic. #43144
Truss Engineering Co.
818 Soundside Road
Edenton, NC 27932
FL COA #7239

January 23,2008

ENGINEERING BY TRENCO
A MiTek Affiliate
818 Soundside Road
Edenton, NC 27932

Job	Truss	Truss Type	Qty	Ply	MONTGOMERY_FLORIDA_125
MONTGOMERY	C1	SPECIAL	1	1	E4632330 Job Reference (optional)

Maronda Homes Inc., Sanford, FL

7.030 s Jan 3 2008 MiTek Industries, Inc. Wed Jan 23 13:37:08 2008 Page 1

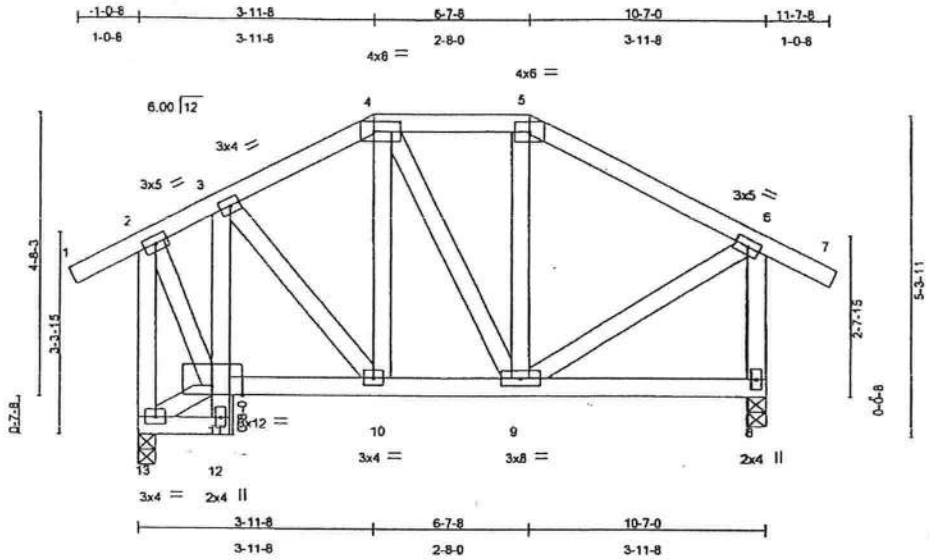

Plate Offsets (X,Y): [4:0-5-4,0-2-0]

LOADING (psf)		SPACING 2-0-0	CSI	DEFL in (loc) l/defl L/d	PLATES GRIP
TCLL 16.0		Plates Increase 1.25	TC 0.23	Vert(LL) -0.01 8-9 >999 240	MT20 244/190
TCDL 7.0		Lumber Increase 1.25	BC 0.12	Vert(TL) -0.02 8-9 >999 180	
BCLL 10.0	*	Rep Stress Incr YES	WB 0.10	Horz(TL) 0.00 8 n/a n/a	
BCDL 10.0		Code FBC2004/TPI2002	(Matrix)		Weight: 86 lb

LUMBER
TOP CHORD 2 X 4 SYP No.2
BOT CHORD 2 X 4 SYP No.2
WEBS 2 X 4 SYP No.3 *Except*
2-13 2 X 4 SYP No.2, 6-8 2 X 4 SYP No.2

BRACING
TOP CHORD Structural wood sheathing directly applied or 6-0-0 oc purlins, except end verticals.
BOT CHORD Rigid ceiling directly applied or 10-0-0 oc bracing, Except: 6-0-0 oc bracing: 12-13.

REACTIONS (lb/size) 8=500/0-3-8, 13=500/0-3-8
Max Horz 13=-59(LC 7)
Max Uplift8=-223(LC 7), 13=-223(LC 6)

FORCES (lb) - Maximum Compression/Maximum Tension
TOP CHORD 1-2=0/26, 2-3=-189/218, 3-4=-302/355, 4-5=-256/378, 5-6=-329/339, 6-7=0/26, 2-13=-466/478, 6-8=-419/514
BOT CHORD 10-11=-99/159, 9-10=-126/247, 8-9=-15/30, 11-12=0/20, 3-11=-204/223, 12-13=-45/9
WEBS 4-10=-9/58, 4-9=-42/47, 5-9=-34/138, 3-10=-50/133, 6-9=-144/266, 11-13=-20/77, 2-11=-193/309

NOTES
1) Unbalanced roof live loads have been considered for this design.
2) Wind: ASCE 7-02; 125mph (3-second gust); h=25ft; TCDL=4.2psf; BCDL=6.0psf; Category II; Exp B; partially; MWFRS (low-rise) and C-C Exterior(2) zone; Lumber DOL=1.33 plate grip DOL=1.33. This truss is designed for C-C for members and forces, and for MWFRS for reactions specified.
3) Provide adequate drainage to prevent water ponding.
4) This truss has been designed for a 10.0 psf bottom chord live load nonconcurrent with any other live loads.
5) * This truss has been designed for a live load of 20.0psf on the bottom chord in all areas where a rectangle 3-6-0 tall by 1-0-0 wide will fit between the bottom chord and any other members.
6) Provide mechanical connection (by others) of truss to bearing plate capable of withstanding 223 lb uplift at joint 8 and 223 lb uplift at joint 13.

LOAD CASE(S) Standard

MARVIN A. STRZYZEWSKI
LICENSE
No 43144
STATE OF
FLORIDA
PROFESSIONAL ENGINEER

Marvin A. Strzyzewski, FL Lic. #43144
Truss Engineering Co.
818 Soundside Road
Edenton, NC 27932
FL COA #7239

January 23,2008

ENGINEERING BY TRENCO
A MiTek Affiliate
818 Soundside Road
Edenton, NC 27932

Job	Truss	Truss Type	Qty	Ply	MONTGOMERY_FLORIDA_125	
MONTGOMERY	C2	SPECIAL	1	1	Job Reference (optional)	E4632331

Maronda Homes Inc., Sanford, FL

7.030 s Jan 3 2008 MiTek Industries, Inc. Wed Jan 23 13:37:09 2008 Page 1

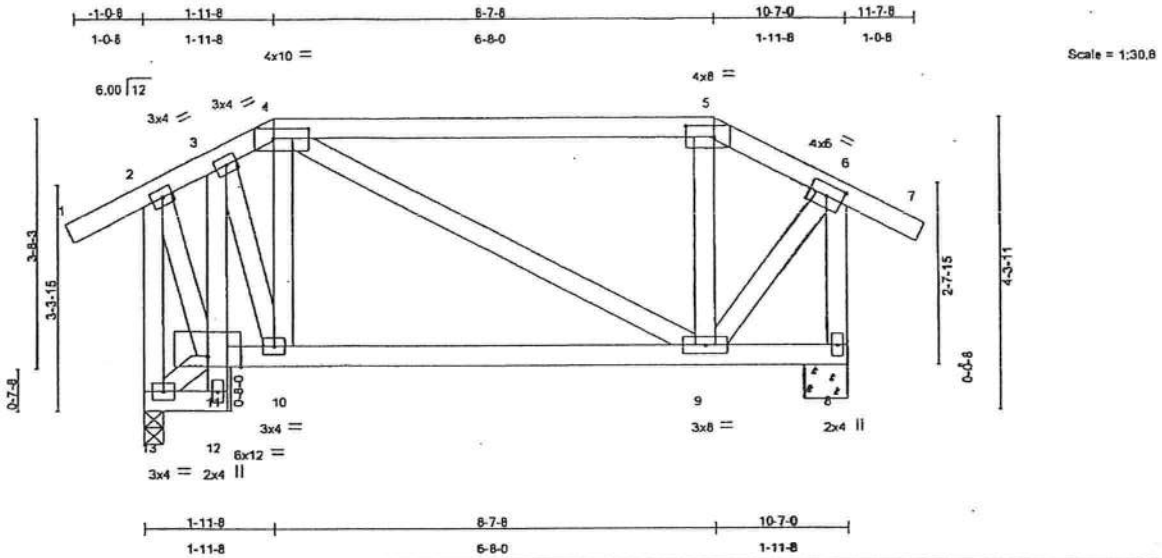

Plate Offsets (X,Y): [4:0-6-8,0-1-12], [5:0-5-0,0-2-0], [6:0-2-15,0-2-0]

LOADING (psf)			SPACING	2-0-0	CSI		DEFL	in	(loc)	l/defl	L/d	PLATES	GRIP
TCLL	16.0		Plates Increase	1.25	TC	0.53	Vert(LL)	-0.03	9-10	>999	240	MT20	244/190
TCDL	7.0		Lumber Increase	1.25	BC	0.25	Vert(TL)	-0.06	9-10	>999	180		
BCLL	10.0	*	Rep Stress Incr	YES	WB	0.17	Horz(TL)	0.01	8	n/a	n/a		
BCDL	10.0		Code FBC2004/TPI2002		(Matrix)							Weight: 81 lb	

LUMBER
TOP CHORD 2 X 4 SYP No.2
BOT CHORD 2 X 4 SYP No.2
WEBS 2 X 4 SYP No.3 *Except*
4-9 2 X 4 SYP No.2, 2-13 2 X 4 SYP No.2, 6-8 2 X 4 SYP No.2

BRACING
TOP CHORD Structural wood sheathing directly applied or 6-0-0 oc purlins, except end verticals.
BOT CHORD Rigid ceiling directly applied or 10-0-0 oc bracing, Except: 6-0-0 oc bracing: 8-9.

REACTIONS (lb/size) 8=500/0-7-8, 13=500/0-3-8
Max Horz 13=-44(LC 7)
Max Uplift8=-208(LC 7), 13=-208(LC 6)

FORCES (lb) - Maximum Compression/Maximum Tension
TOP CHORD 1-2=0/26, 2-3=-157/214, 3-4=-236/202, 4-5=-267/323, 5-6=-286/276, 6-7=0/26, 2-13=-444/495, 6-8=-527/493
BOT CHORD 10-11=-60/109, 9-10=-182/276, 8-9=-23/35, 11-12=0/14, 3-11=-364/87, 12-13=-5/43
WEBS 4-10=-233/537, 4-9=-21/29, 5-9=-132/331, 6-9=-351/470, 11-13=-43/26, 2-11=-141/251, 3-10=-455/544

NOTES
1) Unbalanced roof live loads have been considered for this design.
2) Wind: ASCE 7-02; 125mph (3-second gust); h=25ft; TCDL=4.2psf; BCDL=6.0psf; Category II; Exp B; partially; MWFRS (low-rise) and C-C Exterior(2) zone; Lumber DOL=1.33 plate grip DOL=1.33. This truss is designed for C-C for members and forces, and for MWFRS for reactions specified.
3) Provide adequate drainage to prevent water ponding.
4) This truss has been designed for a 10.0 psf bottom chord live load nonconcurrent with any other live loads.
5) * This truss has been designed for a live load of 20.0psf on the bottom chord in all areas where a rectangle 3-6-0 tall by 1-0-0 wide will fit between the bottom chord and any other members.
6) Provide mechanical connection (by others) of truss to bearing plate capable of withstanding 208 lb uplift at joint 8 and 208 lb uplift at joint 13.

LOAD CASE(S) Standard

MARVIN A. STRZYZEWSKI
LICENSE
No 43144
STATE OF
FLORIDA
PROFESSIONAL ENGINEER

Marvin A. Strzyzewski, FL Lic. #43144
Truss Engineering Co.
818 Soundside Road
Edenton, NC 27932
FL COA #7239

January 23,2008

ENGINEERING BY TRENCO
A MiTek Affiliate
818 Soundside Road
Edenton, NC 27932

Job	Truss	Truss Type	Qty	Ply	MONTGOMERY_FLORIDA_125
MONTGOMERY	FG2	GABLE	1	1	E4632332 Job Reference (optional)

Maronda Homes Inc., Sanford, FL

7.030 s Jan 3 2008 MiTek Industries, Inc. Wed Jan 23 13:37:10 2008 Page 1

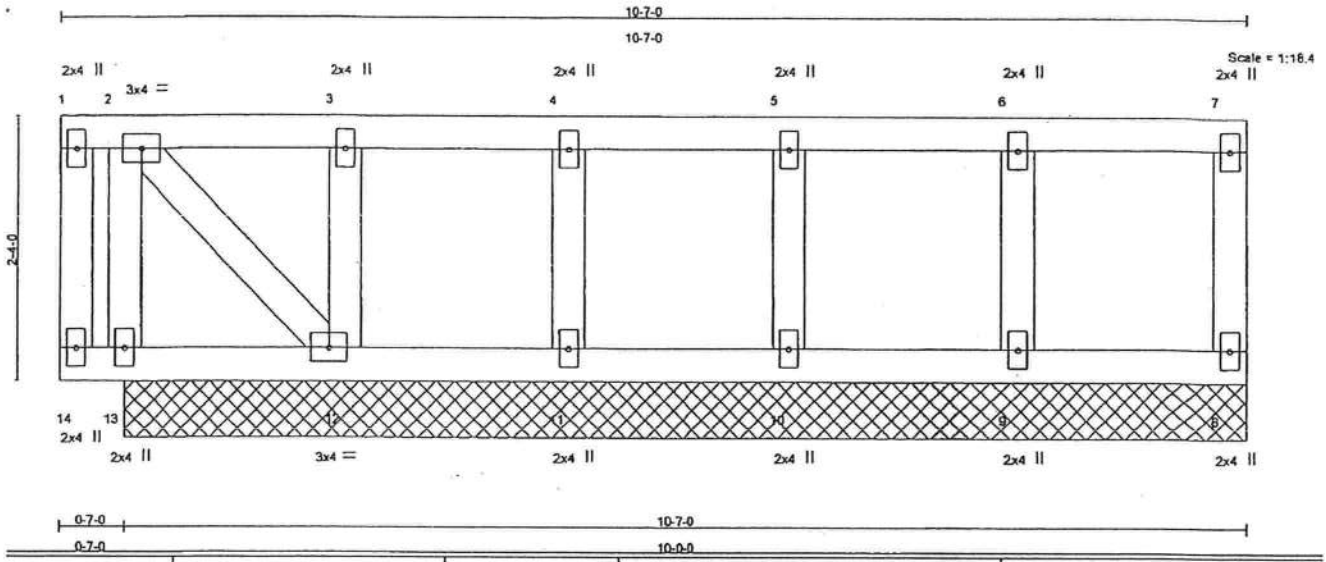

LOADING (psf)		SPACING 2-0-0	CSI		DEFL	in	(loc)	l/defl	L/d	PLATES	GRIP
TCLL	16.0	Plates Increase 1.25	TC	0.05	Vert(LL)	n/a	-	n/a	999	MT20	244/190
TCDL	7.0	Lumber Increase 1.25	BC	0.02	Vert(TL)	n/a	-	n/a	999		
BCLL	10.0 *	Rep Stress Incr NO	WB	0.05	Horz(TL)	0.00	8	n/a	n/a		
BCDL	10.0	Code FBC2004/TPI2002	(Matrix)							Weight: 53 lb	

LUMBER

TOP CHORD 2 X 4 SYP No.2
BOT CHORD 2 X 4 SYP No.2
WEBS 2 X 4 SYP No.3
OTHERS 2 X 4 SYP No.3

BRACING

TOP CHORD Structural wood sheathing directly applied or 6-0-0 oc purlins, except end verticals.
BOT CHORD Rigid ceiling directly applied or 10-0-0 oc bracing.

REACTIONS (lb/size) 8=71/10-0-0, 9=175/10-0-0, 10=172/10-0-0, 11=170/10-0-0, 12=179/10-0-0, 13=118/10-0-0
Max UpliftB=-47(LC 4), 9=-116(LC 4), 10=-114(LC 4), 11=-112(LC 4), 12=-118(LC 4), 13=-78(LC 4)

FORCES (lb) - Maximum Compression/Maximum Tension
TOP CHORD 1-14=-9/0, 1-2=-4/4, 2-3=-6/5, 3-4=-6/5, 4-5=-6/5, 5-6=-6/5, 6-7=-6/5, 7-8=-38/88
BOT CHORD 13-14=-4/4, 12-13=-4/4, 11-12=-5/6, 10-11=-5/6, 9-10=-5/6, 8-9=-5/6
WEBS 6-9=-93/174, 5-10=-92/169, 4-11=-91/167, 3-12=-98/177, 2-13=-60/124, 2-12=-1/3

NOTES

1) Wind: ASCE 7-02; 125mph (3-second gust); h=25ft; TCDL=4.2psf; BCDL=6.0psf; Category II; Exp B; partially; MWFRS (low-rise) gable end zone and C-C Exterior(2) zone; Lumber DOL=1.33 plate grip DOL=1.33. This truss is designed for C-C for members and forces, and for MWFRS for reactions specified.
2) Truss designed for wind loads in the plane of the truss only. For studs exposed to wind (normal to the face), see Standard Industry Gable End Details as applicable, or consult qualified building designer as per ANSI/TPI 1-2002.
3) Provide adequate drainage to prevent water ponding.
4) This truss has been designed for a 10.0 psf bottom chord live load nonconcurrent with any other live loads.
5) Truss to be fully sheathed from one face or securely braced against lateral movement (i.e. diagonal web).
6) Gable studs spaced at 2-0-0 oc.
7) * This truss has been designed for a live load of 20.0psf on the bottom chord in all areas where a rectangle 3-6-0 tall by 1-0-0 wide will fit between the bottom chord and any other members.
8) Provide mechanical connection (by others) of truss to bearing plate capable of withstanding 47 lb uplift at joint 8, 116 lb uplift at joint 9, 114 lb uplift at joint 10, 112 lb uplift at joint 11, 118 lb uplift at joint 12 and 78 lb uplift at joint 13.
9) Non Standard bearing condition. Review required.

LOAD CASE(S) Standard

Marvin A. Strzyzewski, FL Lic. #43144
Truss Engineering Co.
818 Soundside Road
Edenton, NC 27932
FL COA #7239

January 23,2008

ENGINEERING BY TRENCO
A MiTek Affiliate
818 Soundside Road
Edenton, NC 27932

Job	Truss	Truss Type	Qty	Ply	MONTGOMERY_FLORIDA_125
MONTGOMERY	G1	GABLE	1	1	E4632333 Job Reference (optional)

Maronda Homes Inc., Sanford, FL

7.030 s Jan 3 2008 MiTek Industries, Inc. Wed Jan 23 13:37:11 2008 Page 1

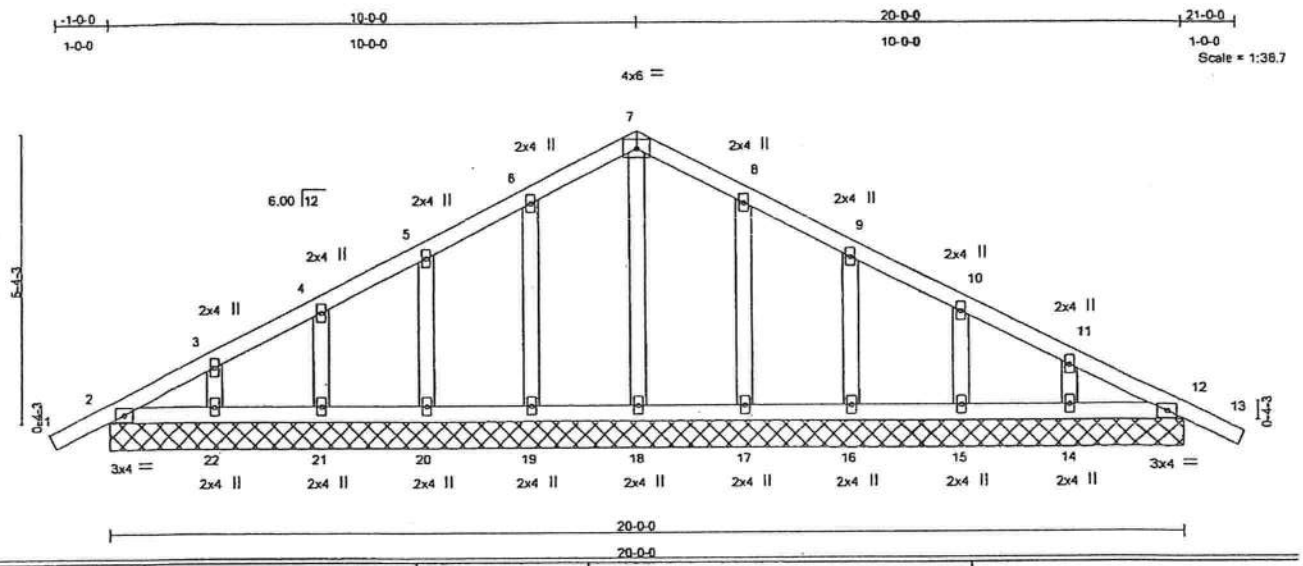

LOADING (psf)		SPACING 2-0-0	CSI		DEFL	in	(loc)	l/defl	L/d	PLATES	GRIP
TCLL 16.0		Plates Increase 1.25	TC	0.13	Vert(LL)	-0.00	13	n/r	120	MT20	244/190
TCDL 7.0		Lumber Increase 1.25	BC	0.06	Vert(TL)	-0.00	13	n/r	120		
BCLL 10.0	*	Rep Stress Incr NO	WB	0.04	Horz(TL)	0.00	12	n/a	n/a		
BCDL 10.0		Code FBC2004/TPI2002	(Matrix)							Weight: 101 lb	

LUMBER
TOP CHORD 2 X 4 SYP No.2
BOT CHORD 2 X 4 SYP No.2
OTHERS 2 X 4 SYP No.3

BRACING
TOP CHORD Structural wood sheathing directly applied or 6-0-0 oc purlins.
BOT CHORD Rigid ceiling directly applied or 10-0-0 oc bracing.

REACTIONS (lb/size) 2=139/20-0-0, 12=139/20-0-0, 18=253/20-0-0, 19=210/20-0-0, 20=167/20-0-0, 21=173/20-0-0, 22=174/20-0-0, 17=210/20-0-0, 16=167/20-0-0, 15=173/20-0-0, 14=174/20-0-0
Max Horz 2=100(LC 6)
Max Uplift2=-57(LC 6), 12=-77(LC 7), 19=-61(LC 6), 20=-63(LC 6), 21=-69(LC 6), 22=-41(LC 6), 17=-59(LC 7), 16=-63(LC 7), 15=-68(LC 7), 14=-41(LC 7)
Max Grav2=139(LC 1), 12=139(LC 1), 18=253(LC 1), 19=214(LC 10), 20=167(LC 1), 21=173(LC 10), 22=174(LC 10), 17=214(LC 11), 16=167(LC 1), 15=173(LC 11), 14=174(LC 11)

FORCES (lb) - Maximum Compression/Maximum Tension
TOP CHORD 1-2=0/21, 2-3=-93/43, 3-4=-50/60, 4-5=-32/89, 5-6=-32/127, 6-7=-32/176, 7-8=-32/176, 8-9=-32/127, 9-10=-32/74, 10-11=-32/23, 11-12=-51/14, 12-13=0/21
BOT CHORD 2-22=0/108, 21-22=0/108, 20-21=0/108, 19-20=0/108, 18-19=0/108, 17-18=0/108, 16-17=0/108, 15-16=0/108, 14-15=0/108, 12-14=0/108
WEBS 7-18=-82/0, 6-19=-96/92, 5-20=-92/102, 4-21=-92/104, 3-22=-93/80, 8-17=-96/92, 9-16=-92/102, 10-15=-92/104, 11-14=-93/80

NOTES
1) Unbalanced roof live loads have been considered for this design.
2) Wind: ASCE 7-02; 125mph (3-second gust); h=25ft; TCDL=4.2psf; BCDL=6.0psf; Category II; Exp B; enclosed; MWFRS (low-rise) and C-C Interior(1) zone; Lumber DOL=1.33 plate grip DOL=1.33. This truss is designed for C-C for members and forces, and for MWFRS for reactions specified.
3) Truss designed for wind loads in the plane of the truss only. For studs exposed to wind (normal to the face), see Standard Industry Gable End Details as applicable, or consult qualified building designer as per ANSI/TPI 1-2002.
4) This truss has been designed for a 10.0 psf bottom chord live load nonconcurrent with any other live loads.
5) Gable requires continuous bottom chord bearing.
6) Gable studs spaced at 2-0-0 oc.
7) * This truss has been designed for a live load of 20.0psf on the bottom chord in all areas where a rectangle 3-6-0 tall by 1-0-0 wide will fit between the bottom chord and any other members.
8) Provide mechanical connection (by others) of truss to bearing plate capable of withstanding 57 lb uplift at joint 2, 77 lb uplift at joint 12, 61 lb uplift at joint 19, 63 lb uplift at joint 20, 69 lb uplift at joint 21, 41 lb uplift at joint 22, 59 lb uplift at joint 17, 63 lb uplift at joint 16, 68 lb uplift at joint 15 and 41 lb uplift at joint 14.

LOAD CASE(S) Standard

Marvin A. Strzyzewski, FL Lic. #43144
Truss Engineering Co.
818 Soundside Road
Edenton, NC 27932
FL COA #7239

January 23,2008

ENGINEERING BY TRENCO A MiTek Affiliate
818 Soundside Road
Edenton, NC 27932

Job	Truss	Truss Type	Qty	Ply	MONTGOMERY_FLORIDA_125
MONTGOMERY	GRD1	COMMON	1	2	E4632334 Job Reference (optional)

Maronda Homes Inc., Sanford, FL

7.030 s Jan 3 2008 MiTek Industries, Inc. Wed Jan 23 13:37:12 2008 Page 1

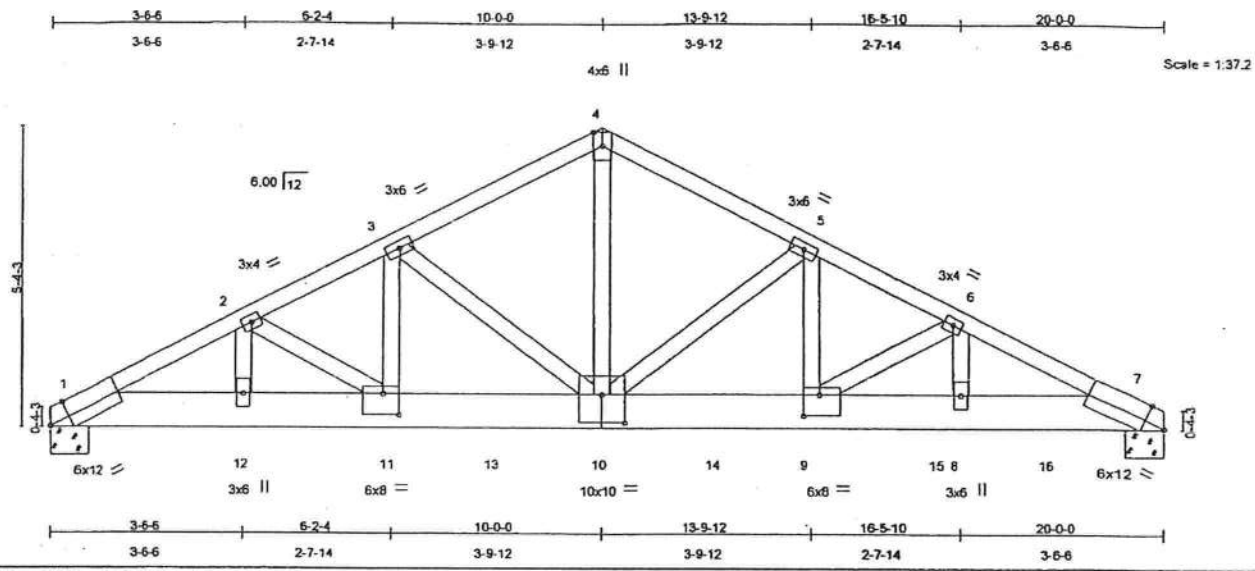

Plate Offsets (X,Y): [1:0-4-7,Edge], [2:0-0-0,0-0-0], [3:0-0-0,0-0-0], [5:0-0-0,0-0-0], [6:0-0-0,0-0-0], [7:0-4-7,Edge], [9:0-3-8,0-4-8], [10:0-5-0,0-6-0], [11:0-3-8,0-4-8]

LOADING (psf)		SPACING	2-0-0	CSI		DEFL	in	(loc)	l/defl	L/d	PLATES	GRIP
TCLL	16.0	Plates Increase	1.25	TC	0.51	Vert(LL)	0.17	10-11	>999	240	MT20	244/190
TCDL	7.0	Lumber Increase	1.25	BC	0.82	Vert(TL)	-0.31	9-10	>752	180		
BCLL	10.0 *	Rep Stress Incr	NO	WB	0.66	Horz(TL)	0.07	7	n/a	n/a		
BCDL	10.0	Code FBC2004/TPI2002		(Matrix)							Weight: 268 lb	

LUMBER
TOP CHORD 2 X 4 SYP No.2
BOT CHORD 2 X 8 SYP No.1D
WEBS 2 X 4 SYP No.3 *Except*
4-10 2 X 4 SYP No.2

BRACING
TOP CHORD Structural wood sheathing directly applied or 3-5-6 oc purlins.
BOT CHORD Rigid ceiling directly applied or 9-7-12 oc bracing.

REACTIONS (lb/size) 1=5315/0-8-0, 7=6787/0-8-0
Max Horz 1=81(LC 4)
Max Uplift1=-2359(LC 5), 7=-2782(LC 6)

FORCES (lb) - Maximum Compression/Maximum Tension
TOP CHORD 1-2=-10451/4691, 2-3=-10980/4991, 3-4=-8298/3594, 4-5=-8299/3595, 5-6=-11067/4636, 6-7=-12245/5056
BOT CHORD 1-12=-4199/9254, 11-12=-4199/9254, 11-13=-4442/9805, 10-13=-4442/9805, 10-14=-4052/9888, 9-14=-4052/9888, 9-15=-4451/10854, 8-15=-4451/10854, 8-16=-4451/10854, 7-16=-4451/10854
WEBS 2-12=-571/311, 2-11=-367/713, 3-11=-1571/2956, 3-10=-3047/1683, 4-10=-3069/7142, 5-10=-3152/1282, 5-9=-1161/3048, 6-9=-1148/471, 6-8=-420/1168

NOTES
1) 2-ply truss to be connected together with 10d (0.131"x3") nails as follows:
Top chords connected as follows: 2 X 4 - 1 row at 0-9-0 oc.
Bottom chords connected as follows: 2 X 8 - 2 rows at 0-4-0 oc.
Webs connected as follows: 2 X 4 - 1 row at 0-9-0 oc.
2) All loads are considered equally applied to all plies, except if noted as front (F) or back (B) face in the LOAD CASE(S) section. Ply to ply connections have been provided to distribute only loads noted as (F) or (B), unless otherwise indicated.
3) Unbalanced roof live loads have been considered for this design.
4) Wind: ASCE 7-02; 125mph (3-second gust); h=25ft; TCDL=4.2psf; BCDL=6.0psf; Category II; Exp B; enclosed; MWFRS (low-rise); Lumber DOL=1.33 plate grip DOL=1.33.
5) This truss has been designed for a 10.0 psf bottom chord live load nonconcurrent with any other live loads.
6) * This truss has been designed for a live load of 20.0psf on the bottom chord in all areas where a rectangle 3-6-0 tall by 1-0-0 wide will fit between the bottom chord and any other members.
7) Provide mechanical connection (by others) of truss to bearing plate capable of withstanding 2359 lb uplift at joint 1 and 2782 lb uplift at joint 7.
8) Hanger(s) or other connection device(s) shall be provided sufficient to support concentrated load(s) 2528 lb down and 1528 lb up at 6-2-4, 1317 lb down and 563 lb up at 8-0-13, 1317 lb down and 537 lb up at 10-0-13, 1320 lb down and 550 lb up at 12-0-13, 1320 lb down and 550 lb up at 14-0-13, and 1320 lb down and 550 lb up at 16-0-13, and 1320 lb down and 550 lb up at 18-0-13 on bottom chord. The design/selection of such connection device(s) is the responsibility of others.

LOAD CASE(S) Standard

Continued on page 2

Marvin A. Strzyzewski, FL Lic. #43144
Truss Engineering Co.
818 Soundside Road
Edenton, NC 27932
FL COA #7239

January 23,2008

ENGINEERING BY TRENCO A MiTek Affiliate
818 Soundside Road
Edenton, NC 27932

LOAD CASE(S) Standard

1) Regular: Lumber Increase=1.25, Plate Increase=1.25

Uniform Loads (plf)

Vert: 1-4=-46, 4-7=-46, 1-7=-40

Concentrated Loads (lb)

Vert: 11=-2528(B) 10=-1317(B) 9=-1320(B) 13=-1317(B) 14=-1320(B) 15=-1320(B) 16=-1320(B)

Job	Truss	Truss Type	Qty	Ply	MONTGOMERY_FLORIDA_125	
MONTGOMERY	H1A	HIP	1	1	Job Reference (optional)	E4632335

Maronda Homes Inc., Sanford, FL

7.030 s Jan 3 2008 MiTek Industries, Inc. Wed Jan 23 13:37:12 2008 Page 1

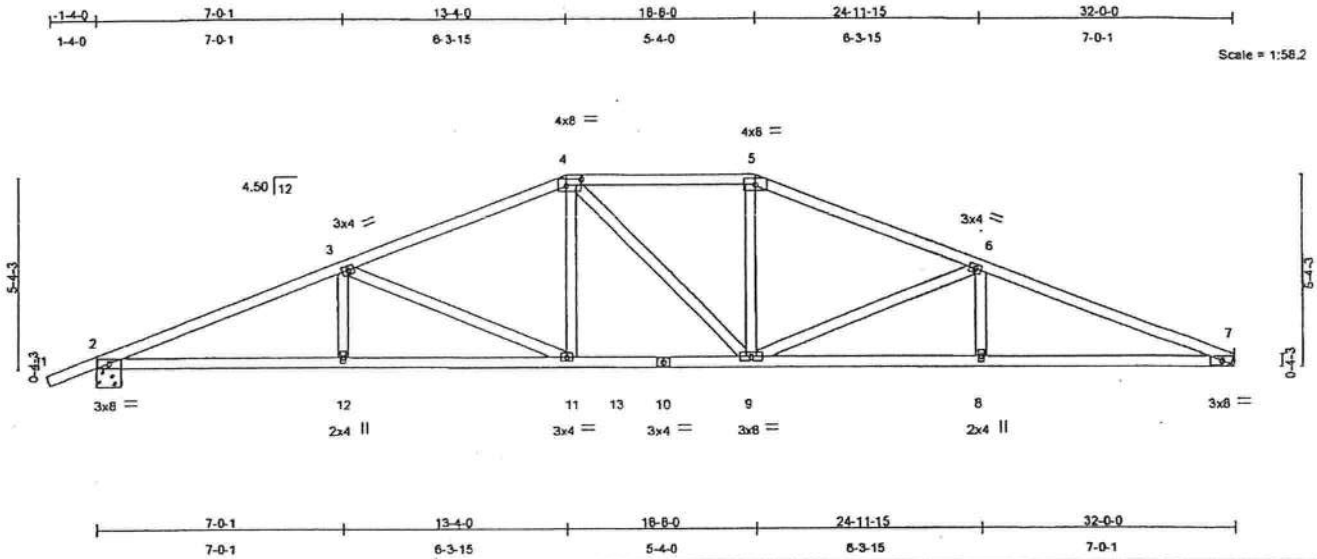

Plate Offsets (X,Y): [4:0-5-4,0-2-0]

LOADING (psf)		SPACING 2-0-0	CSI		DEFL	in	(loc)	l/defl	L/d	PLATES	GRIP
TCLL	16.0	Plates Increase 1.25	TC	0.46	Vert(LL)	-0.22	8-9	>999	240	MT20	244/190
TCDL	7.0	Lumber Increase 1.25	BC	0.83	Vert(TL)	-0.44	8-9	>865	180		
BCLL	10.0 *	Rep Stress Incr YES	WB	0.62	Horz(TL)	0.15	7	n/a	n/a		
BCDL	10.0	Code FBC2004/TPI2002	(Matrix)							Weight: 151 lb	

LUMBER
TOP CHORD 2 X 4 SYP No.2
BOT CHORD 2 X 4 SYP No.2
WEBS 2 X 4 SYP No.3 *Except*
3-11 2 X 4 SYP No.2, 4-9 2 X 4 SYP No.2, 6-9 2 X 4 SYP No.2

BRACING
TOP CHORD Structural wood sheathing directly applied or 3-1-4 oc purlins.
BOT CHORD Rigid ceiling directly applied or 6-6-12 oc bracing.

REACTIONS (lb/size) 7=1378/Mechanical, 2=1467/0-8-0
Max Horz 2=108(LC 6)
Max Uplift7=-277(LC 5), 2=-373(LC 4)

FORCES (lb) - Maximum Compression/Maximum Tension
TOP CHORD 1-2=0/21, 2-3=-3107/915, 3-4=-2355/784, 4-5=-2167/785, 5-6=-2353/791, 6-7=-3178/986
BOT CHORD 2-12=-776/2837, 11-12=-776/2837, 11-13=-544/2171, 10-13=-544/2171, 9-10=-544/2171, 8-9=-851/2931, 7-8=-851/2931
WEBS 3-12=0/288, 3-11=-744/251, 4-11=-33/552, 4-9=-149/133, 5-9=-50/551, 6-9=-845/328, 6-8=0/305

NOTES
1) Unbalanced roof live loads have been considered for this design.
2) Wind: ASCE 7-02; 125mph (3-second gust); h=25ft; TCDL=4.2psf; BCDL=6.0psf; Category II; Exp B; enclosed; MWFRS (low-rise) and C-C Interior(1) zone; Lumber DOL=1.33 plate grip DOL=1.33. This truss is designed for C-C for members and forces, and for MWFRS for reactions specified.
3) Provide adequate drainage to prevent water ponding.
4) This truss has been designed for a 10.0 psf bottom chord live load nonconcurrent with any other live loads.
5) * This truss has been designed for a live load of 20.0psf on the bottom chord in all areas where a rectangle 3-6-0 tall by 1-0-0 wide will fit between the bottom chord and any other members.
6) Refer to girder(s) for truss to truss connections.
7) Provide mechanical connection (by others) of truss to bearing plate capable of withstanding 277 lb uplift at joint 7 and 373 lb uplift at joint 2.

LOAD CASE(S) Standard

MARVIN A. STRZYZEWSKI
LICENSE
No. 43144
STATE OF FLORIDA
PROFESSIONAL ENGINEER

Marvin A. Strzyzewski, FL Lic. #43144
Truss Engineering Co.
818 Soundside Road
Edenton, NC 27932
FL COA #7239

January 23,2008

ENGINEERING BY TRENCO A MiTek Affiliate
818 Soundside Road
Edenton, NC 27932

Job	Truss	Truss Type	Qty	Ply	MONTGOMERY_FLORIDA_125
MONTGOMERY	H2A	HIP	1	1	E4632336 Job Reference (optional)

Maronda Homes Inc., Sanford, FL — 7.030 s Jan 3 2008 MiTek Industries, Inc. Wed Jan 23 13:37:13 2008 Page 1

1-4-0	5-8-1	10-8-0	16-0-0	21-4-0	26-3-15	32-0-0
1-4-0	5-8-1	4-11-15	5-4-0	5-4-0	4-11-15	5-8-1

Scale = 1:58.2

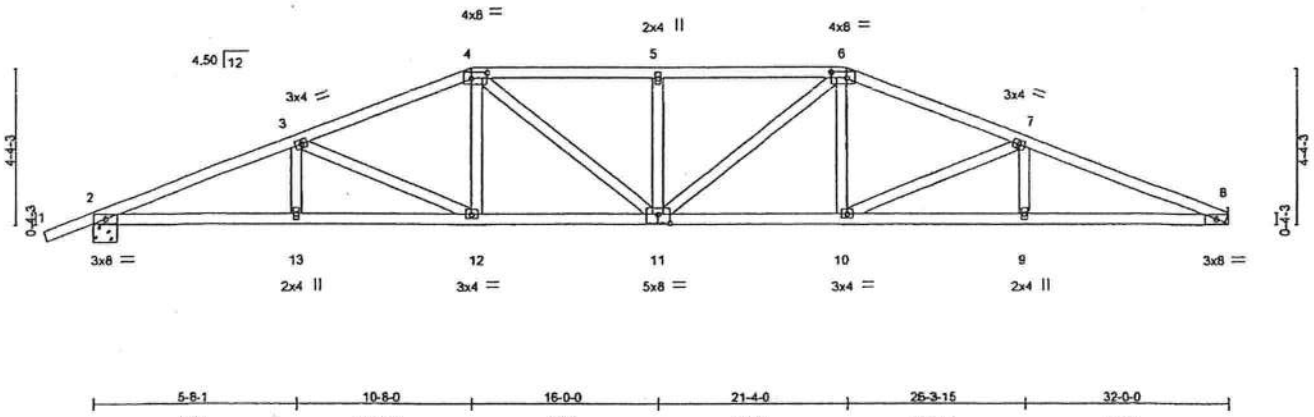

Plate Offsets (X,Y): [4:0-5-4,0-2-0], [6:0-5-4,0-2-0], [11:0-4-0,0-3-0]

LOADING (psf)		SPACING 2-0-0		CSI		DEFL	in	(loc)	l/defl	L/d	PLATES	GRIP
TCLL	16.0	Plates Increase	1.25	TC	0.31	Vert(LL)	-0.23	10-11	>999	240	MT20	244/190
TCDL	7.0	Lumber Increase	1.25	BC	0.74	Vert(TL)	-0.45	10-11	>841	180		
BCLL	10.0 *	Rep Stress Incr	YES	WB	0.34	Horz(TL)	0.15	8	n/a	n/a		
BCDL	10.0	Code FBC2004/TPI2002		(Matrix)							Weight: 156 lb	

LUMBER
TOP CHORD 2 X 4 SYP No.2
BOT CHORD 2 X 4 SYP No.2
WEBS 2 X 4 SYP No.3 "Except"
4-11 2 X 4 SYP No.2, 6-11 2 X 4 SYP No.2

BRACING
TOP CHORD Structural wood sheathing directly applied or 3-3-5 oc purlins.
BOT CHORD Rigid ceiling directly applied or 6-5-8 oc bracing.

REACTIONS (lb/size) 8=1357/Mechanical, 2=1440/0-8-0
Max Horz 2=93(LC 6)
Max Uplift8=-292(LC 5), 2=-389(LC 4)

FORCES (lb) - Maximum Compression/Maximum Tension
TOP CHORD 1-2=0/21, 2-3=-3076/945, 3-4=-2557/884, 4-5=-2680/982, 5-6=-2680/982, 6-7=-2594/906, 7-8=-3200/1042
BOT CHORD 2-13=-812/2808, 12-13=-812/2808, 11-12=-677/2372, 10-11=-697/2407, 9-10=-914/2954, 8-9=-914/2954
WEBS 3-13=0/213, 3-12=-498/163, 4-12=-5/408, 4-11=-146/486, 5-11=-248/227, 6-11=-120/449, 6-10=-34/449, 7-10=-617/238, 7-9=0/230

NOTES
1) Unbalanced roof live loads have been considered for this design.
2) Wind: ASCE 7-02; 125mph (3-second gust); h=25ft; TCDL=4.2psf; BCDL=6.0psf; Category II; Exp B; enclosed; MWFRS (low-rise) and C-C Interior(1) zone; Lumber DOL=1.33 plate grip DOL=1.33. This truss is designed for C-C for members and forces, and for MWFRS for reactions specified.
3) Provide adequate drainage to prevent water ponding.
4) This truss has been designed for a 10.0 psf bottom chord live load nonconcurrent with any other live loads.
5) * This truss has been designed for a live load of 20.0psf on the bottom chord in all areas where a rectangle 3-6-0 tall by 1-0-0 wide will fit between the bottom chord and any other members.
6) Refer to girder(s) for truss to truss connections.
7) Provide mechanical connection (by others) of truss to bearing plate capable of withstanding 292 lb uplift at joint 8 and 389 lb uplift at joint 2.

LOAD CASE(S) Standard

MARVIN A. STRZYZEWSKI LICENSE No. 43144 STATE OF FLORIDA PROFESSIONAL ENGINEER

Marvin A. Strzyzewski, FL Lic. #43144
Truss Engineering Co.
818 Soundside Road
Edenton, NC 27932
FL COA #7239

January 23,2008

ENGINEERING BY TRENCO A MiTek Affiliate
818 Soundside Road
Edenton, NC 27932

Job	Truss	Truss Type	Qty	Ply	MONTGOMERY_FLORIDA_125
MONTGOMERY	HGRD1A	HIP	1	2	E4632340 Job Reference (optional)

Maronda Homes Inc., Sanford, FL — 7.030 s Jan 3 2008 MiTek Industries, Inc. Wed Jan 23 13:37:16 2008 Page 1

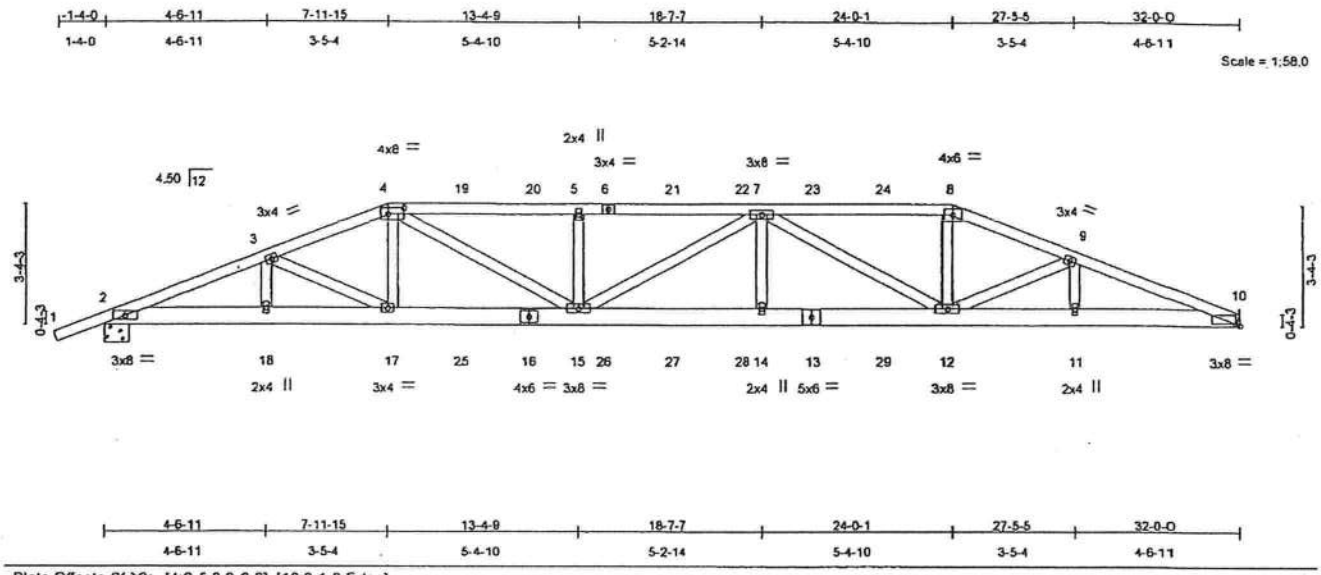

Plate Offsets (X,Y): [4:0-5-8,0-2-0], [10:0-1-8,Edge]

LOADING (psf)		SPACING 2-0-0	CSI		DEFL	in	(loc)	l/defl	L/d	PLATES	GRIP
TCLL	16.0	Plates Increase 1.25	TC	0.40	Vert(LL)	0.33	14-15	>999	240	MT20	244/190
TCDL	7.0	Lumber Increase 1.25	BC	0.65	Vert(TL)	-0.56	14-15	>676	180		
BCLL	10.0 *	Rep Stress Incr NO	WB	0.32	Horz(TL)	0.12	10	n/a	n/a		
BCDL	10.0	Code FBC2004/TPI2002	(Matrix)							Weight: 363 lb	

LUMBER
TOP CHORD 2 X 4 SYP No.2
BOT CHORD 2 X 6 SYP No.2
WEBS 2 X 4 SYP No.3

BRACING
TOP CHORD Structural wood sheathing directly applied or 4-8-8 oc purlins.
BOT CHORD Rigid ceiling directly applied or 8-11-2 oc bracing.

REACTIONS (lb/size) 10=2663/Mechanical, 2=2724/0-8-0
Max Horz 2=81(LC 5)
Max Uplift10=-1231(LC 8), 2=-1293(LC 7)

FORCES (lb) - Maximum Compression/Maximum Tension
TOP CHORD 1-2=0/24, 2-3=-6438/2939, 3-4=-6463/3120, 4-19=-7627/3687, 19-20=-7627/3687, 5-20=-7627/3687, 5-6=-7627/3687, 6-21=-7627/3687, 21-22=-7627/3687, 7-22=-7627/3687, 7-23=-6362/3199, 23-24=-6362/3199, 8-24=-6362/3199, 8-9=-6698/3337, 9-10=-6875/3273
BOT CHORD 2-18=-2731/5943, 17-18=-2731/5943, 17-25=-2895/6098, 16-25=-2895/6098, 15-16=-2895/6098, 15-26=-3680/7760, 26-27=-3680/7760, 27-28=-3680/7760, 14-28=-3680/7760, 13-14=-3680/7760, 13-29=-3680/7760, 12-29=-3680/7760, 11-12=-3023/6402, 10-11=-3023/6402
WEBS 3-18=-62/168, 3-17=-214/255, 4-17=-448/1039, 4-15=-884/1812, 5-15=-414/270, 7-15=-208/142, 7-14=-129/434, 7-12=-1677/758, 8-12=-921/1975, 9-12=-154/31, 9-11=-17/136

NOTES
1) 2-ply truss to be connected together with 10d (0.131"x3") nails as follows:
Top chords connected as follows: 2 X 4 - 1 row at 0-9-0 oc.
Bottom chords connected as follows: 2 X 6 - 2 rows at 0-9-0 oc.
Webs connected as follows: 2 X 4 - 1 row at 0-9-0 oc.
2) All loads are considered equally applied to all plies, except if noted as front (F) or back (B) face in the LOAD CASE(S) section. Ply to ply connections have been provided to distribute only loads noted as (F) or (B), unless otherwise indicated.
3) Unbalanced roof live loads have been considered for this design.
4) Wind: ASCE 7-02; 125mph (3-second gust); h=25ft; TCDL=4.2psf; BCDL=6.0psf; Category II; Exp B; enclosed; MWFRS (low-rise); Lumber DOL=1.33 plate grip DOL=1.33.
5) Provide adequate drainage to prevent water ponding.
6) This truss has been designed for a 10.0 psf bottom chord live load nonconcurrent with any other live loads.
7) * This truss has been designed for a live load of 20.0psf on the bottom chord in all areas where a rectangle 3-6-0 tall by 1-0-0 wide will fit between the bottom chord and any other members.
8) Refer to girder(s) for truss to truss connections.
9) Provide mechanical connection (by others) of truss to bearing plate capable of withstanding 1231 lb uplift at joint 10 and 1293 lb uplift at joint 2.

Continued on page 2

Marvin A. Strzyzewski, FL Lic. #43144
Truss Engineering Co.
818 Soundside Road
Edenton, NC 27932
FL COA #7239

January 23,2008

ENGINEERING BY TRENCO A MiTek Affiliate
818 Soundside Road
Edenton, NC 27932

NOTES

10) Hanger(s) or other connection device(s) shall be provided sufficient to support concentrated load(s) 69 lb down and 69 lb up at 7-11-15, 69 lb down and 69 lb up at 10-0-11, 69 lb down and 69 lb up at 12-0-11, 69 lb down and 69 lb up at 14-0-11, 69 lb down and 69 lb up at 16-0-11, 69 lb down and 69 lb up at 18-0-11, 69 lb down and 69 lb up at 20-0-11, and 69 lb down and 69 lb up at 22-0-11, and 69 lb down and 69 lb up at 24-0-1 on top chord, and 671 lb down and 419 lb up at 7-11-15, 78 lb down and 68 lb up at 10-0-11, 78 lb down and 68 lb up at 12-0-11, 78 lb down and 68 lb up at 14-0-11, 78 lb down and 68 lb up at 16-0-11, 78 lb down and 68 lb up at 18-0-11, 78 lb down and 68 lb up at 20-0-11, and 78 lb down and 68 lb up at 22-0-11, and 753 lb down and 521 lb up at 23-11-5 on bottom chord. The design/selection of such connection device(s) is the responsibility of others.

LOAD CASE(S) Standard

1) Regular: Lumber Increase=1.25, Plate Increase=1.25

Uniform Loads (plf)

Vert: 1-4=-46, 4-8=-46, 8-10=-46, 2-10=-40

Concentrated Loads (lb)

Vert: 4=-69(B) 6=-69(B) 8=-69(B) 16=-78(B) 13=-78(B) 17=-671(B) 12=-753(B) 19=-69(B) 20=-69(B) 21=-69(B) 22=-69(B) 23=-69(B) 24=-69(B) 25=-78(B) 26=-78(B) 27=-78(B) 28=-78(B) 29=-78(B)

Job	Truss	Truss Type	Qty	Ply	MONTGOMERY_FLORIDA_125
MONTGOMERY	HGRD3	HIP	1	2	Job Reference (optional)

E4632342

Maronda Homes Inc., Sanford, FL — 7.030 s Jan 3 2008 MiTek Industries, Inc. Wed Jan 23 13:37:18 2008 Page 1

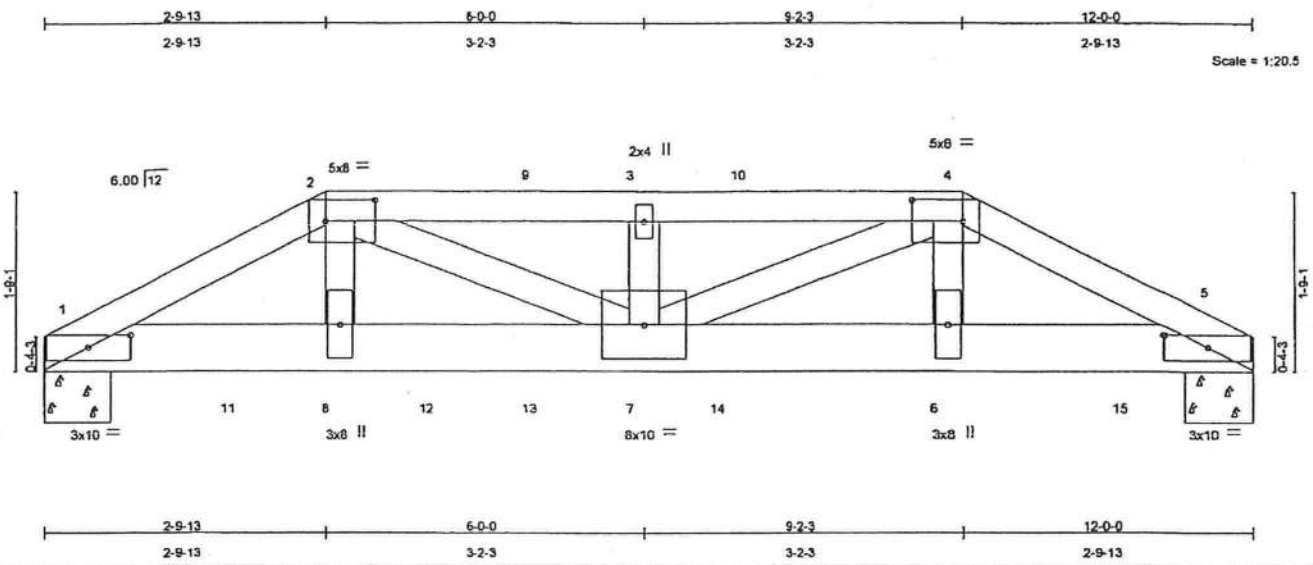

Plate Offsets (X,Y): [1:0-5-0,0-1-7], [2:0-6-0,0-2-8], [4:0-6-0,0-2-8], [5:0-5-0,0-1-7]

LOADING (psf)		SPACING 2-0-0	CSI		DEFL	in	(loc)	l/defl	L/d	PLATES	GRIP
TCLL	16.0	Plates Increase 1.25	TC	0.49	Vert(LL)	0.12	7	>999	240	MT20	244/190
TCDL	7.0	Lumber Increase 1.25	BC	0.87	Vert(TL)	-0.20	7-8	>673	180		
BCLL	10.0 *	Rep Stress Incr NO	WB	0.73	Horz(TL)	0.04	5	n/a	n/a		
BCDL	10.0	Code FBC2004/TPI2002	(Matrix)							Weight: 121 lb	

LUMBER
TOP CHORD 2 X 4 SYP No.2
BOT CHORD 2 X 6 SYP No.2
WEBS 2 X 4 SYP No.3

BRACING
TOP CHORD Structural wood sheathing directly applied or 4-0-15 oc purlins.
BOT CHORD Rigid ceiling directly applied or 9-3-0 oc bracing.

REACTIONS (lb/size) 1=4170/0-8-0, 5=2848/0-8-0
Max Horz 1=23(LC 4)
Max Uplift1=-1876(LC 7), 5=-1366(LC 8)

FORCES (lb) - Maximum Compression/Maximum Tension
TOP CHORD 1-2=-7702/3557, 2-9=-9293/4523, 3-9=-9293/4523, 3-10=-9293/4523, 4-10=-9293/4523, 4-5=-5762/2784
BOT CHORD 1-11=-3109/6742, 8-11=-3109/6742, 8-12=-3213/7003, 12-13=-3213/7003, 7-13=-3213/7003, 7-14=-2440/5113, 6-14=-2440/5113, 6-15=-2411/5039, 5-15=-2411/5039
WEBS 2-8=-979/2469, 2-7=-1424/2522, 3-7=0/73, 4-7=-2245/4580, 4-6=-276/707

NOTES
1) 2-ply truss to be connected together with 10d (0.131"x3") nails as follows:
Top chords connected as follows: 2 X 4 - 1 row at 0-9-0 oc.
Bottom chords connected as follows: 2 X 6 - 2 rows at 0-4-0 oc.
Webs connected as follows: 2 X 4 - 1 row at 0-9-0 oc.
2) All loads are considered equally applied to all plies, except if noted as front (F) or back (B) face in the LOAD CASE(S) section. Ply to ply connections have been provided to distribute only loads noted as (F) or (B), unless otherwise indicated.
3) Unbalanced roof live loads have been considered for this design.
4) Wind: ASCE 7-02; 125mph (3-second gust); h=25ft; TCDL=4.2psf; BCDL=6.0psf; Category II; Exp B; enclosed; MWFRS (low-rise); Lumber DOL=1.33 plate grip DOL=1.33.
5) Provide adequate drainage to prevent water ponding.
6) This truss has been designed for a 10.0 psf bottom chord live load nonconcurrent with any other live loads.
7) * This truss has been designed for a live load of 20.0psf on the bottom chord in all areas where a rectangle 3-6-0 tall by 1-0-0 wide will fit between the bottom chord and any other members.
8) Provide mechanical connection (by others) of truss to bearing plate capable of withstanding 1876 lb uplift at joint 1 and 1366 lb uplift at joint 5.
9) Hanger(s) or other connection device(s) shall be provided sufficient to support concentrated load(s) 11 lb down and 50 lb up at 2-9-13, 11 lb down and 50 lb up at 4-11-8, and 11 lb down and 50 lb up at 7-0-8, and 11 lb down and 50 lb up at 9-2-3 on top chord, and 1338 lb down and 537 lb up at 1-11-3, 140 lb down and 62 lb up at 2-9-12, 1317 lb down and 563 lb up at 3-11-3, 27 lb down at 4-11-8, 2623 lb down and 1473 lb up at 5-11-4, 243 lb down and 112 lb up at 6-10-0, 27 lb down at 7-0-8, 128 lb down and 70 lb up at 8-10-0, and 140 lb down and 62 lb up at 9-1-7, and 18 lb down and 31 lb up at 10-10-0 on bottom chord. The design/selection of such connection device(s) is the responsibility of others.

LOAD CASE(S) Standard
Continued on page 2

MARVIN A. STRZYZEWSKI LICENSE No. 43144 STATE OF FLORIDA PROFESSIONAL ENGINEER

Marvin A. Strzyzewski, FL Lic. #43144
Truss Engineering Co.
818 Soundside Road
Edenton, NC 27932
FL COA #7239

January 23,2008

ENGINEERING BY TRENCO A MiTek Affiliate
818 Soundside Road
Edenton, NC 27932

LOAD CASE(S) Standard

1) Regular: Lumber Increase=1.25, Plate Increase=1.25

Uniform Loads (plf)

Vert: 1-2=-46, 2-4=-46, 4-5=-46, 1-5=-40

Concentrated Loads (lb)

Vert: 2=-11(F) 4=-11(F) 8=-140(F) 7=-2623(B) 6=-268(F=-140, B=-128) 9=-11(F) 10=-11(F) 11=-1338(B) 12=-1317(B) 13=-27(F) 14=-270(F=-27, B=-243) 15=-18(B)

Job	Truss	Truss Type	Qty	Ply	MONTGOMERY_FLORIDA_125
MONTGOMERY	HS1	SPECIAL	1	1	E4632343 Job Reference (optional)

Maronda Homes Inc., Sanford, FL — 7.030 s Jan 3 2008 MiTek Industries, Inc. Wed Jan 23 13:37:18 2008 Page 1

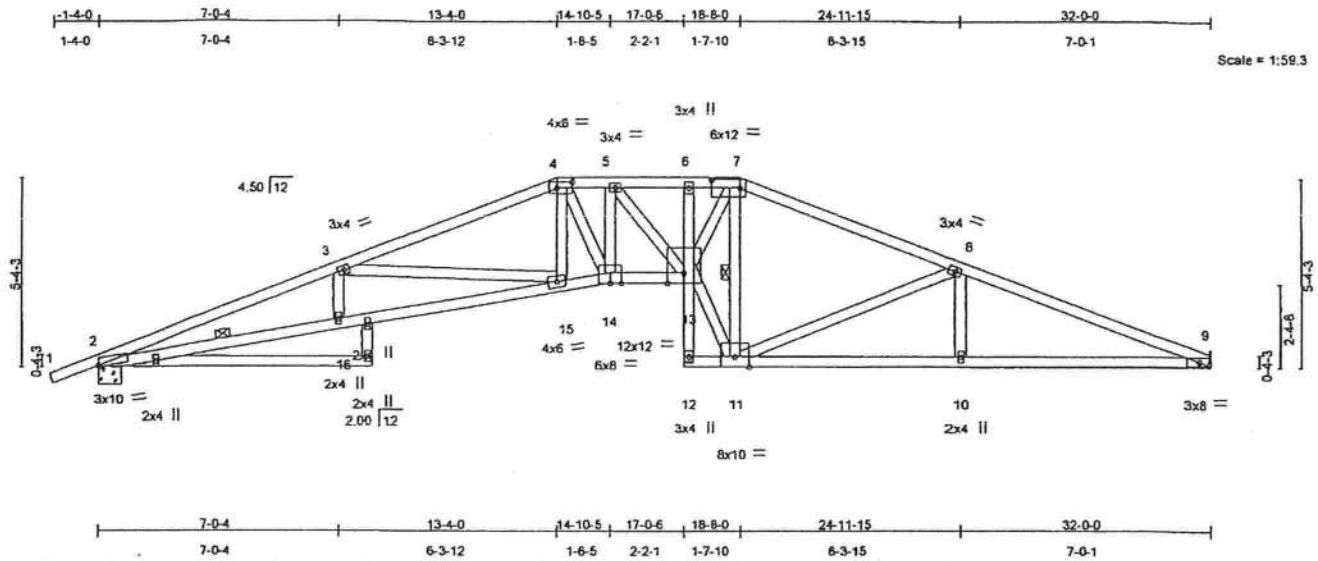

Plate Offsets (X,Y): [2:0-0-7,Edge], [4:0-5-4,0-2-0], [7:0-10-0,0-2-12], [17:0-0-1,0-0-0]

LOADING (psf)			SPACING 2-0-0	CSI		DEFL	in	(loc)	l/defl	L/d	PLATES	GRIP
TCLL	16.0		Plates Increase 1.25	TC	0.72	Vert(LL)	-0.48	15-16	>787	240	MT20	244/190
TCDL	7.0		Lumber Increase 1.25	BC	0.83	Vert(TL)	-0.97	15-16	>393	180		
BCLL	10.0	*	Rep Stress Incr YES	WB	0.70	Horz(TL)	0.49	9	n/a	n/a		
BCDL	10.0		Code FBC2004/TPI2002	(Matrix)							Weight: 176 lb	

LUMBER
TOP CHORD 2 X 4 SYP No.2
BOT CHORD 2 X 4 SYP No.1D *Except*
6-12 2 X 4 SYP No.3, 17-18 2 X 4 SYP No.2
WEBS 2 X 4 SYP No.3 *Except*
3-15 2 X 4 SYP No.2, 11-13 2 X 4 SYP No.2, 7-13 2 X 4 SYP No.2
8-11 2 X 4 SYP No.2

BRACING
TOP CHORD Structural wood sheathing directly applied or 2-2-12 oc purlins.
BOT CHORD Rigid ceiling directly applied or 5-10-0 oc bracing. Except:
5-10-0 oc bracing: 2-16
WEBS 1 Row at midpt 7-11

REACTIONS (lb/size) 9=1357/Mechanical, 2=1440/0-8-0
Max Horz 2=107(LC 6)
Max Uplift9=-277(LC 5), 2=-373(LC 4)

FORCES (lb) - Maximum Compression/Maximum Tension
TOP CHORD 1-2=0/19, 2-3=-4920/1443, 3-4=-3887/1203, 4-5=-3935/1257, 5-6=-3910/1254, 6-7=-3833/1228, 7-8=-2295/791, 8-9=-3122/987
BOT CHORD 2-16=-1285/4588, 15-16=-1287/4587, 14-15=-955/3655, 13-14=-1021/3935, 12-13=-47/20, 6-13=-51/77, 11-12=-47/140, 10-11=-852/2879, 9-10=-852/2879
WEBS 3-16=0/269, 3-15=-951/326, 4-15=-28/492, 4-14=-168/718, 5-14=-97/141, 5-13=-134/67, 11-13=-966/3798, 7-13=-963/3750, 7-11=-2824/816, 8-11=-852/328, 8-10=0/303

NOTES
1) Unbalanced roof live loads have been considered for this design.
2) Wind: ASCE 7-02; 125mph (3-second gust); h=25ft; TCDL=4.2psf; BCDL=6.0psf; Category II; Exp B; enclosed; MWFRS (low-rise) and C-C Interior(1) zone; Lumber DOL=1.33 plate grip DOL=1.33. This truss is designed for C-C for members and forces, and for MWFRS for reactions specified.
3) Provide adequate drainage to prevent water ponding.
4) This truss has been designed for a 10.0 psf bottom chord live load nonconcurrent with any other live loads.
5) * This truss has been designed for a live load of 20.0psf on the bottom chord in all areas where a rectangle 3-6-0 tall by 1-0-0 wide will fit between the bottom chord and any other members.
6) Refer to girder(s) for truss to truss connections.
7) Bearing at joint(s) 2 considers parallel to grain value using ANSI/TPI 1 angle to grain formula. Building designer should verify capacity of bearing surface.
8) Provide mechanical connection (by others) of truss to bearing plate capable of withstanding 277 lb uplift at joint 9 and 373 lb uplift at joint 2.

LOAD CASE(S) Standard

MARVIN A. STRZYZEWSKI LICENSE No. 43144 STATE OF FLORIDA PROFESSIONAL ENGINEER

Marvin A. Strzyzewski, FL Lic. #43144
Truss Engineering Co.
818 Soundside Road
Edenton, NC 27932
FL COA #7239

January 23,2008

ENGINEERING BY TRENCO A MiTek Affiliate
818 Soundside Road
Edenton, NC 27932

Job	Truss	Truss Type	Qty	Ply	MONTGOMERY_FLORIDA_125
MONTGOMERY	HS2	SPECIAL	1	1	E4632344 Job Reference (optional)

Maronda Homes Inc., Sanford, FL — 7.030 s Jan 3 2008 MiTek Industries, Inc. Wed Jan 23 13:37:19 2008 Page 1

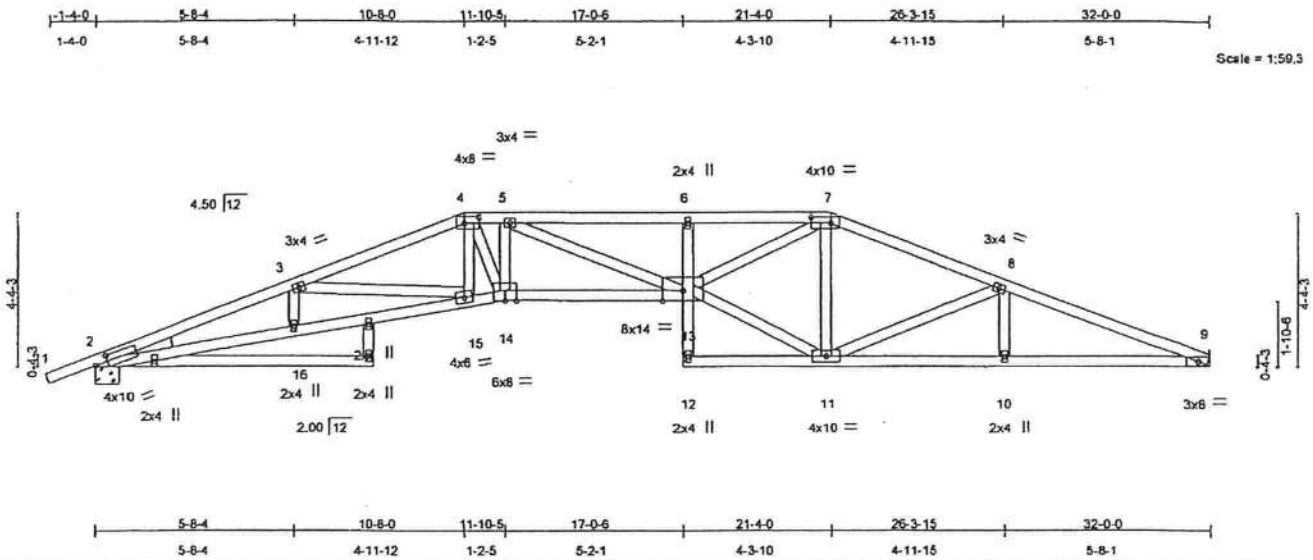

Plate Offsets (X,Y): [2:0-4-4,0-2-0], [4:0-5-4,0-2-0], [7:0-7-0,0-2-0], [17:0-0-1,0-0-0]

LOADING (psf)		SPACING 2-0-0	CSI		DEFL	in	(loc)	l/defl	L/d	PLATES	GRIP
TCLL	16.0	Plates Increase 1.25	TC	0.57	Vert(LL)	-0.53	13-14	>721	240	MT20	244/190
TCDL	7.0	Lumber Increase 1.25	BC	0.88	Vert(TL)	-1.05	13-14	>362	180		
BCLL	10.0 *	Rep Stress Incr YES	WB	0.88	Horz(TL)	0.44	9	n/a	n/a		
BCDL	10.0	Code FBC2004/TPI2002	(Matrix)							Weight: 174 lb	

LUMBER
TOP CHORD 2 X 4 SYP No.2
BOT CHORD 2 X 4 SYP No.1D *Except*
6-12 2 X 4 SYP No.3, 17-18 2 X 4 SYP No.2
WEBS 2 X 4 SYP No.3
WEDGE
Left: 2 X 4 SYP No.3

BRACING
TOP CHORD Structural wood sheathing directly applied or 2-4-8 oc purlins.
BOT CHORD Rigid ceiling directly applied or 5-9-1 oc bracing.

REACTIONS (lb/size) 9=1357/Mechanical, 2=1440/0-8-0
Max Horz 2=91(LC 6)
Max Uplift9=-292(LC 5), 2=-388(LC 4)

FORCES (lb) - Maximum Compression/Maximum Tension
TOP CHORD 1-2=0/19, 2-3=-4883/1469, 3-4=-4303/1388, 4-5=-4572/1510, 5-6=-4896/1640, 6-7=-4779/1608, 7-8=-2589/903, 8-9=-3203/1045
BOT CHORD 2-16=-1312/4535, 15-16=-1318/4542, 14-15=-1162/4074, 13-14=-1320/4572, 12-13=0/85, 6-13=-204/196, 11-12=-50/133, 10-11=-917/2956, 9-10=-917/2956
WEBS 3-16=0/199, 3-15=-490/203, 4-15=-38/290, 4-14=-357/1193, 5-14=-333/178, 5-13=-140/482, 11-13=-697/2461, 7-13=-832/2729, 7-11=-622/264, 8-11=-624/245, 8-10=0/236

NOTES
1) Unbalanced roof live loads have been considered for this design.
2) Wind: ASCE 7-02; 125mph (3-second gust); h=25ft; TCDL=4.2psf; BCDL=6.0psf; Category II; Exp B; enclosed; MWFRS (low-rise) and C-C Interior(1) zone; Lumber DOL=1.33 plate grip DOL=1.33. This truss is designed for C-C for members and forces, and for MWFRS for reactions specified.
3) Provide adequate drainage to prevent water ponding.
4) This truss has been designed for a 10.0 psf bottom chord live load nonconcurrent with any other live loads.
5) * This truss has been designed for a live load of 20.0psf on the bottom chord in all areas where a rectangle 3-6-0 tall by 1-0-0 wide will fit between the bottom chord and any other members.
6) Refer to girder(s) for truss to truss connections.
7) Bearing at joint(s) 2 considers parallel to grain value using ANSI/TPI 1 angle to grain formula. Building designer should verify capacity of bearing surface.
8) Provide mechanical connection (by others) of truss to bearing plate capable of withstanding 292 lb uplift at joint 9 and 388 lb uplift at joint 2.

LOAD CASE(S) Standard

MARVIN A. STRZYZEWSKI LICENSE No. 43144 STATE OF FLORIDA PROFESSIONAL ENGINEER

Marvin A. Strzyzewski, FL Lic. #43144
Truss Engineering Co.
818 Soundside Road
Edenton, NC 27932
FL COA #7239

January 23,2008

ENGINEERING BY TRENCO A MiTek Affiliate
818 Soundside Road
Edenton, NC 27932

Job	Truss	Truss Type	Qty	Ply	MONTGOMERY_FLORIDA_125
MONTGOMERY	J	JACK	16	1	E4632345 Job Reference (optional)

Maronda Homes Inc., Sanford, FL

7.030 s Jan 3 2008 MiTek Industries, Inc. Wed Jan 23 13:37:20 2008 Page 1

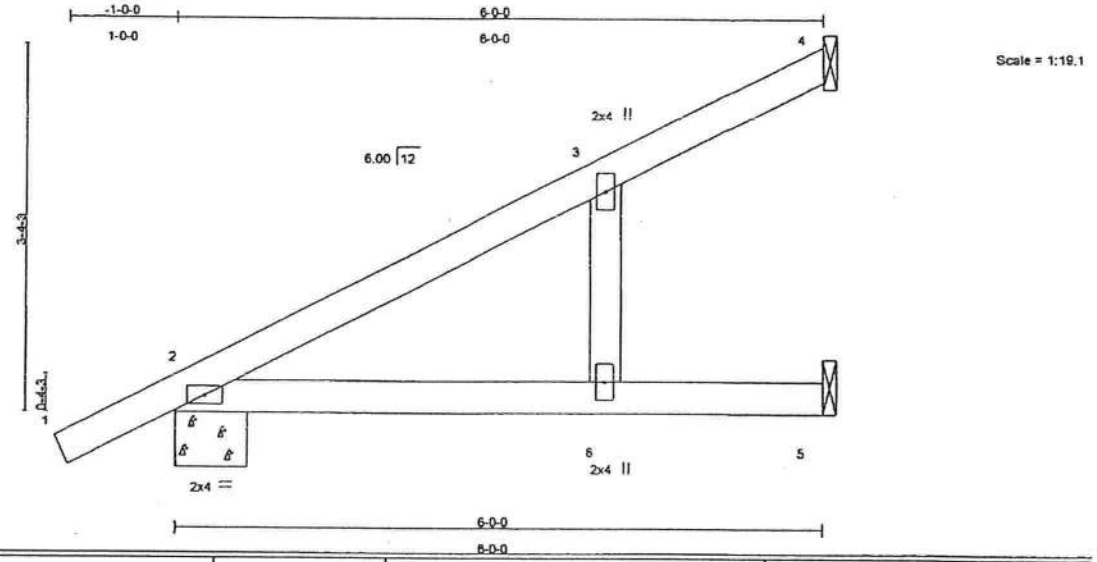

LOADING (psf)			SPACING 2-0-0	CSI		DEFL	in	(loc)	l/defl	L/d	PLATES	GRIP
TCLL	16.0		Plates Increase 1.25	TC	0.27	Vert(LL)	0.07	2-6	>999	240	MT20	244/190
TCDL	7.0		Lumber Increase 1.25	BC	0.32	Vert(TL)	-0.13	2-6	>511	180		
BCLL	10.0	*	Rep Stress Incr YES	WB	0.03	Horz(TL)	0.01	4	n/a	n/a		
BCDL	10.0		Code FBC2004/TPI2002	(Matrix)							Weight: 23 lb	

LUMBER

TOP CHORD 2 X 4 SYP No.2
BOT CHORD 2 X 4 SYP No.2
WEBS 2 X 4 SYP No.3

BRACING

TOP CHORD Structural wood sheathing directly applied or 6-0-0 oc purlins.
BOT CHORD Rigid ceiling directly applied or 10-0-0 oc bracing.

REACTIONS (lb/size) 4=115/Mechanical, 2=313/0-8-0, 5=118/Mechanical
Max Horz 2=157(LC 6)
Max Uplift4=-52(LC 6), 2=-116(LC 6), 5=-29(LC 6)

FORCES (lb) - Maximum Compression/Maximum Tension
TOP CHORD 1-2=0/21, 2-3=-105/9, 3-4=-38/47
BOT CHORD 2-6=0/0, 5-6=0/0
WEBS 3-6=-9/109

NOTES (6)

1) Wind: ASCE 7-02; 125mph (3-second gust); h=25ft; TCDL=4.2psf; BCDL=6.0psf; Category II; Exp B; enclosed; MWFRS (low-rise) and C-C Interior(1) zone; Lumber DOL=1.33 plate grip DOL=1.33. This truss is designed for C-C for members and forces, and for MWFRS for reactions specified.
2) This truss has been designed for a 10.0 psf bottom chord live load nonconcurrent with any other live loads.
3) * This truss has been designed for a live load of 20.0psf on the bottom chord in all areas where a rectangle 3-6-0 tall by 1-0-0 wide will fit between the bottom chord and any other members.
4) Refer to girder(s) for truss to truss connections.
5) Provide mechanical connection (by others) of truss to bearing plate capable of withstanding 52 lb uplift at joint 4, 116 lb uplift at joint 2 and 29 lb uplift at joint 5.
6) Attach with (2) 16d Common Toe-Nails (0.162"x 3.5") at joints 4 and 5.

LOAD CASE(S) Standard

MARVIN A. STRZYZEWSKI
LICENSE
No 43144
STATE OF
FLORIDA
PROFESSIONAL ENGINEER

Marvin A. Strzyzewski, FL Lic. #43144
Truss Engineering Co.
818 Soundside Road
Edenton, NC 27932
FL COA #7239

January 23,2008

ENGINEERING BY TRENCO
A MiTek Affiliate
818 Soundside Road
Edenton, NC 27932

Job	Truss	Truss Type	Qty	Ply	MONTGOMERY_FLORIDA_125	
MONTGOMERY	J1	JACK	2	1	Job Reference (optional)	E4632346

Maronda Homes Inc., Sanford, FL

7.030 s Jan 3 2008 MiTek Industries, Inc. Wed Jan 23 13:37:20 2008 Page 1

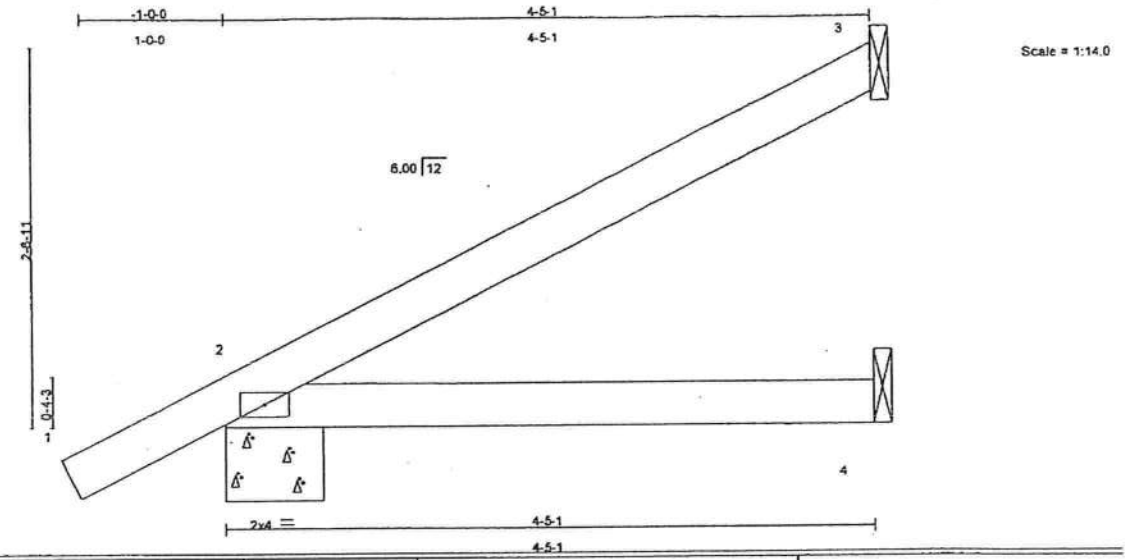

LOADING (psf)		SPACING	2-0-0	CSI		DEFL	in	(loc)	l/defl	L/d	PLATES	GRIP
TCLL	16.0	Plates Increase	1.25	TC	0.18	Vert(LL)	-0.01	2-4	>999	240	MT20	244/190
TCDL	7.0	Lumber Increase	1.25	BC	0.15	Vert(TL)	-0.03	2-4	>999	180		
BCLL	10.0 *	Rep Stress Incr	YES	WB	0.00	Horz(TL)	-0.00	3	n/a	n/a		
BCDL	10.0	Code FBC2004/TPI2002		(Matrix)							Weight: 16 lb	

LUMBER
TOP CHORD 2 X 4 SYP No.2
BOT CHORD 2 X 4 SYP No.2

BRACING
TOP CHORD Structural wood sheathing directly applied or 4-5-1 oc purlins.
BOT CHORD Rigid ceiling directly applied or 10-0-0 oc bracing.

REACTIONS (lb/size) 3=81/Mechanical, 2=249/0-8-0, 4=81/Mechanical
Max Horz 2=124(LC 6)
Max Uplift3=-76(LC 6), 2=-112(LC 6)

FORCES (lb) - Maximum Compression/Maximum Tension
TOP CHORD 1-2=0/21, 2-3=-60/30
BOT CHORD 2-4=0/0

NOTES (6)
1) Wind: ASCE 7-02; 125mph (3-second gust); h=25ft; TCDL=4.2psf; BCDL=6.0psf; Category II; Exp B; enclosed; MWFRS (low-rise) and C-C Interior(1) zone; Lumber DOL=1.33 plate grip DOL=1.33. This truss is designed for C-C for members and forces, and for MWFRS for reactions specified.
2) This truss has been designed for a 10.0 psf bottom chord live load nonconcurrent with any other live loads.
3) * This truss has been designed for a live load of 20.0psf on the bottom chord in all areas where a rectangle 3-6-0 tall by 1-0-0 wide will fit between the bottom chord and any other members.
4) Refer to girder(s) for truss to truss connections.
5) Provide mechanical connection (by others) of truss to bearing plate capable of withstanding 76 lb uplift at joint 3 and 112 lb uplift at joint 2.
6) Attach with (2) 16d Common Toe-Nails (0.162"x 3.5") at joints 3 and 4.

LOAD CASE(S) Standard

MARVIN A. STRZYZEWSKI
LICENSE
No 43144
STATE OF
FLORIDA
PROFESSIONAL ENGINEER

Marvin A. Strzyzewski, FL Lic. #43144
Truss Engineering Co.
818 Soundside Road
Edenton, NC 27932
FL COA #7239

January 23,2008

ENGINEERING BY TRENCO A MiTek Affiliate
818 Soundside Road
Edenton, NC 27932

Job	Truss	Truss Type	Qty	Ply	MONTGOMERY_FLORIDA_125
MONTGOMERY	J11	JACK	4	1	E4632348 Job Reference (optional)

Maronda Homes Inc., Sanford, FL

7.030 s Jan 3 2008 MiTek Industries, Inc. Wed Jan 23 13:37:21 2008 Page 1

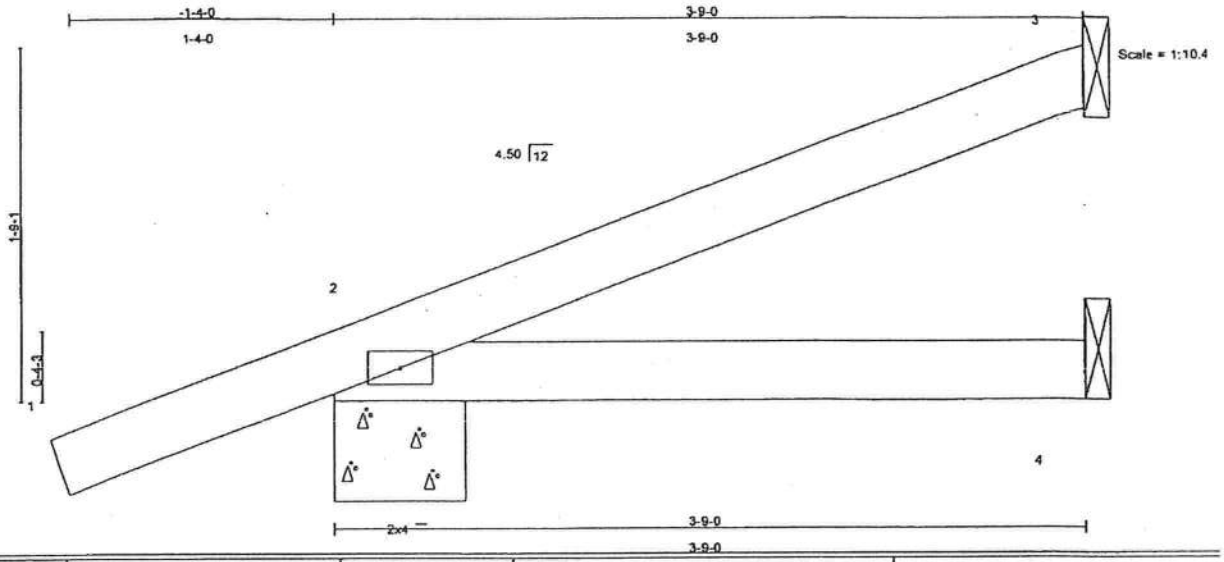

LOADING (psf)			SPACING	2-0-0	CSI		DEFL	in	(loc)	l/defl	L/d	PLATES	GRIP
TCLL	16.0		Plates Increase	1.25	TC	0.26	Vert(LL)	-0.01	2-4	>999	240	MT20	244/190
TCDL	7.0		Lumber Increase	1.25	BC	0.11	Vert(TL)	-0.02	2-4	>999	180		
BCLL	10.0	*	Rep Stress Incr	YES	WB	0.00	Horz(TL)	-0.00	3	n/a	n/a		
BCDL	10.0		Code FBC2004/TPI2002		(Matrix)							Weight: 14 lb	

LUMBER
TOP CHORD 2 X 4 SYP No.2
BOT CHORD 2 X 4 SYP No.2

BRACING
TOP CHORD Structural wood sheathing directly applied or 3-9-0 oc purlins.
BOT CHORD Rigid ceiling directly applied or 10-0-0 oc bracing.

REACTIONS (lb/size) 3=57/Mechanical, 2=243/0-8-0, 4=67/Mechanical
Max Horz 2=90(LC 6)
Max Uplift3=-41(LC 5), 2=-148(LC 6)

FORCES (lb) - Maximum Compression/Maximum Tension
TOP CHORD 1-2=0/21, 2-3=-38/16
BOT CHORD 2-4=0/0

NOTES (6)
1) Wind: ASCE 7-02; 125mph (3-second gust); h=25ft; TCDL=4.2psf; BCDL=6.0psf; Category II; Exp B; enclosed; MWFRS (low-rise) and C-C Interior(1) zone; Lumber DOL=1.33 plate grip DOL=1.33. This truss is designed for C-C for members and forces, and for MWFRS for reactions specified.
2) This truss has been designed for a 10.0 psf bottom chord live load nonconcurrent with any other live loads.
3) * This truss has been designed for a live load of 20.0psf on the bottom chord in all areas where a rectangle 3-6-0 tall by 1-0-0 wide will fit between the bottom chord and any other members.
4) Refer to girder(s) for truss to truss connections.
5) Provide mechanical connection (by others) of truss to bearing plate capable of withstanding 41 lb uplift at joint 3 and 148 lb uplift at joint 2.
6) Attach with (2) 16d Common Toe-Nails (0.162"x 3.5") at joints 3 and 4.

LOAD CASE(S) Standard

MARVIN A. STRZYZEWSKI
LICENSE
No. 43144
STATE OF FLORIDA
PROFESSIONAL ENGINEER

Marvin A. Strzyzewski, FL Lic. #43144
Truss Engineering Co.
818 Soundside Road
Edenton, NC 27932
FL COA #7239

January 23,2008

ENGINEERING BY TRENCO A MiTek Affiliate
818 Soundside Road
Edenton, NC 27932

Job	Truss	Truss Type	Qty	Ply	MONTGOMERY_FLORIDA_125
MONTGOMERY	J12	SPECIAL	1	1	E4632349
					Job Reference (optional)

Maronda Homes Inc., Sanford, FL

7.030 s Jan 3 2008 MiTek Industries, Inc. Wed Jan 23 13:37:21 2008 Page 1

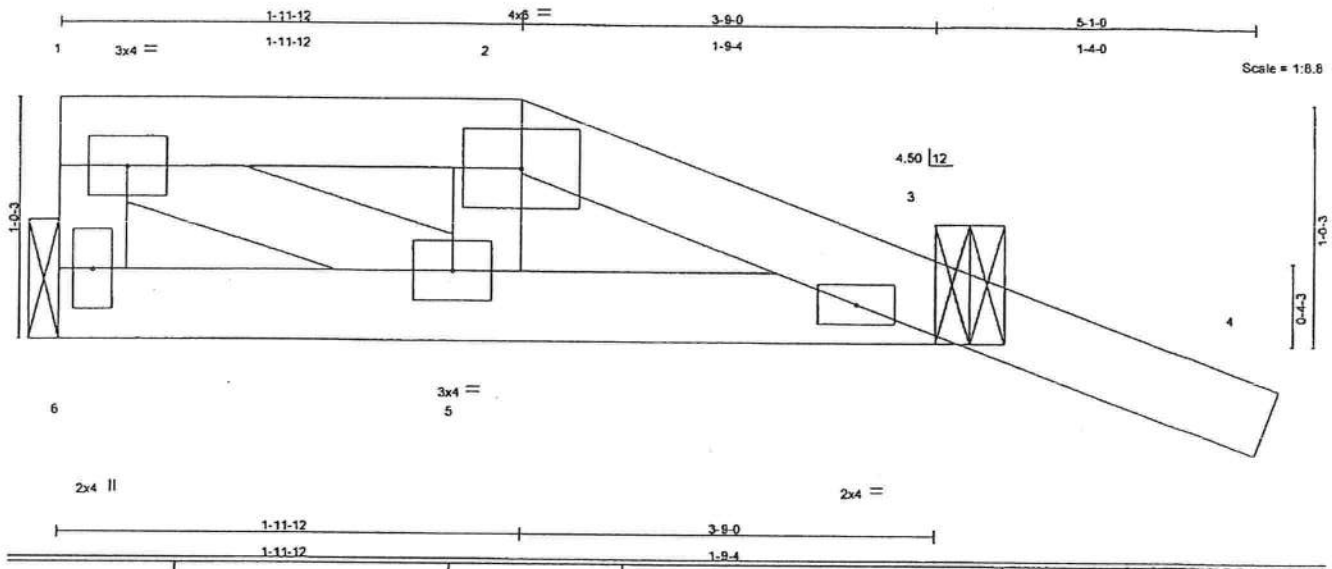

LOADING (psf)		SPACING 2-0-0	CSI		DEFL	in	(loc)	l/defl	L/d	PLATES	GRIP
TCLL	16.0	Plates Increase 1.25	TC	0.21	Vert(LL)	-0.00	5	>999	240	MT20	244/190
TCDL	7.0	Lumber Increase 1.25	BC	0.05	Vert(TL)	-0.00	5	>999	180		
BCLL	10.0 *	Rep Stress Incr YES	WB	0.05	Horz(TL)	0.00	3	n/a	n/a		
BCDL	10.0	Code FBC2004/TPI2002	(Matrix)							Weight: 17 lb	

LUMBER

TOP CHORD 2 X 4 SYP No.2
BOT CHORD 2 X 4 SYP No.2
WEBS 2 X 4 SYP No.3

BRACING

TOP CHORD Structural wood sheathing directly applied or 3-9-0 oc purlins, except end verticals.
BOT CHORD Rigid ceiling directly applied or 10-0-0 oc bracing.

REACTIONS (lb/size) 6=133/Mechanical, 3=235/0-3-8
Max Horz 6=-61(LC 7)
Max Uplift6=-29(LC 4), 3=-134(LC 5)

FORCES (lb) - Maximum Compression/Maximum Tension
TOP CHORD 1-6=-102/37, 1-2=-142/14, 2-3=-180/18, 3-4=0/21
BOT CHORD 5-6=0/87, 3-5=0/139
WEBS 1-5=-16/154, 2-5=0/33

NOTES (7)

1) Wind: ASCE 7-02; 125mph (3-second gust); h=25ft; TCDL=4.2psf; BCDL=6.0psf; Category II; Exp B; enclosed; MWFRS (low-rise) and C-C Interior(1) zone; Lumber DOL=1.33 plate grip DOL=1.33. This truss is designed for C-C for members and forces, and for MWFRS for reactions specified.
2) Provide adequate drainage to prevent water ponding.
3) This truss has been designed for a 10.0 psf bottom chord live load nonconcurrent with any other live loads.
4) * This truss has been designed for a live load of 20.0psf on the bottom chord in all areas where a rectangle 3-6-0 tall by 1-0-0 wide will fit between the bottom chord and any other members.
5) Refer to girder(s) for truss to truss connections.
6) Provide mechanical connection (by others) of truss to bearing plate capable of withstanding 29 lb uplift at joint 6 and 134 lb uplift at joint 3.
7) Attach with (2) 16d Common Toe-Nails (0.162"x 3.5") at joint 6.

LOAD CASE(S) Standard

MARVIN A. STRZYZEWSKI
LICENSE
No. 43144
STATE OF
FLORIDA
PROFESSIONAL ENGINEER

Marvin A. Strzyzewski, FL Lic. #43144
Truss Engineering Co.
818 Soundside Road
Edenton, NC 27932
FL COA #7239

January 23,2008

ENGINEERING BY TRENCO
A MiTek Affiliate
818 Soundside Road
Edenton, NC 27932

Job	Truss	Truss Type	Qty	Ply	MONTGOMERY_FLORIDA_125
MONTGOMERY	J2	JACK	1	1	E4632350 Job Reference (optional)

Maronda Homes Inc., Sanford, FL

7.030 s Jan 3 2008 MiTek Industries, Inc. Wed Jan 23 13:37:21 2008 Page 1

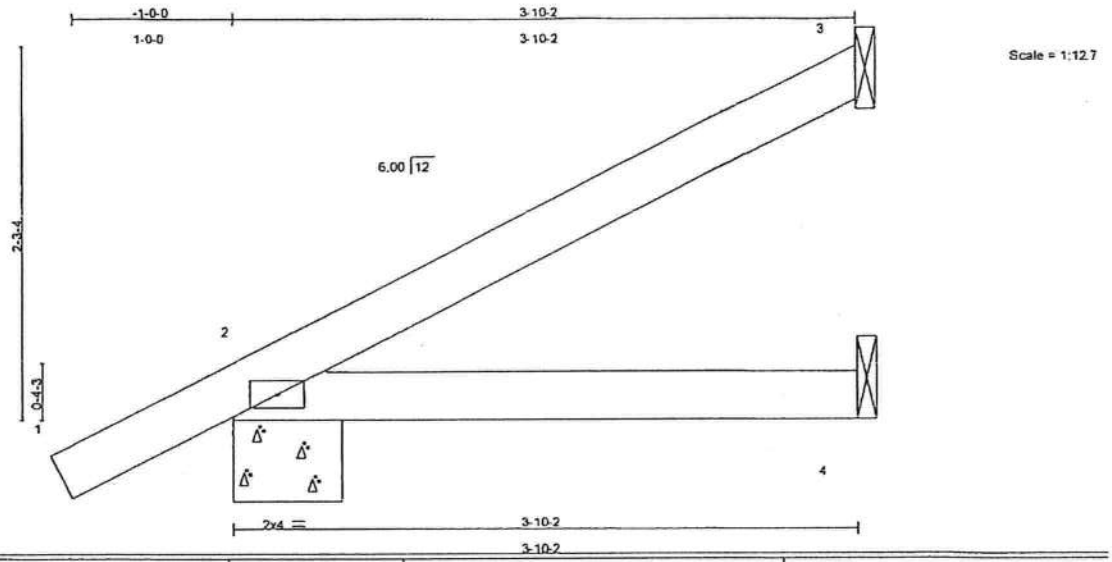

LOADING (psf)		SPACING 2-0-0	CSI		DEFL	in	(loc)	l/defl	L/d	PLATES	GRIP
TCLL	16.0	Plates Increase 1.25	TC	0.18	Vert(LL)	-0.01	2-4	>999	240	MT20	244/190
TCDL	7.0	Lumber Increase 1.25	BC	0.11	Vert(TL)	-0.02	2-4	>999	180		
BCLL	10.0 *	Rep Stress Incr YES	WB	0.00	Horz(TL)	-0.00	3	n/a	n/a		
BCDL	10.0	Code FBC2004/TPI2002	(Matrix)							Weight: 14 lb	

LUMBER
TOP CHORD 2 X 4 SYP No.2
BOT CHORD 2 X 4 SYP No.2

BRACING
TOP CHORD Structural wood sheathing directly applied or 3-10-2 oc purlins.
BOT CHORD Rigid ceiling directly applied or 10-0-0 oc bracing.

REACTIONS (lb/size) 3=66/Mechanical, 2=226/0-8-0, 4=69/Mechanical
Max Horz 2=112(LC 6)
Max Uplift3=-61(LC 6), 2=-112(LC 6)

FORCES (lb) - Maximum Compression/Maximum Tension
TOP CHORD 1-2=0/21, 2-3=-49/25
BOT CHORD 2-4=0/0

NOTES (6)
1) Wind: ASCE 7-02; 125mph (3-second gust); h=25ft; TCDL=4.2psf; BCDL=6.0psf; Category II; Exp B; enclosed; MWFRS (low-rise) and C-C Interior(1) zone; Lumber DOL=1.33 plate grip DOL=1.33. This truss is designed for C-C for members and forces, and for MWFRS for reactions specified.
2) This truss has been designed for a 10.0 psf bottom chord live load nonconcurrent with any other live loads.
3) * This truss has been designed for a live load of 20.0psf on the bottom chord in all areas where a rectangle 3-6-0 tall by 1-0-0 wide will fit between the bottom chord and any other members.
4) Refer to girder(s) for truss to truss connections.
5) Provide mechanical connection (by others) of truss to bearing plate capable of withstanding 61 lb uplift at joint 3 and 112 lb uplift at joint 2.
6) Attach with (2) 16d Common Toe-Nails (0.162"x 3.5") at joints 3 and 4.

LOAD CASE(S) Standard

MARVIN A. STRZYZEWSKI
LICENSE
No. 43144
STATE OF FLORIDA
PROFESSIONAL ENGINEER

Marvin A. Strzyzewski, FL Lic. #43144
Truss Engineering Co.
818 Soundside Road
Edenton, NC 27932
FL COA #7239

January 23,2008

ENGINEERING BY TRENCO A MiTek Affiliate
818 Soundside Road
Edenton, NC 27932

3

Job	Truss	Truss Type	Qty	Ply	MONTGOMERY_FLORIDA_125
MONTGOMERY	J3	JACK	3	1	E4632351 Job Reference (optional)

Maronda Homes Inc., Sanford, FL

7.030 s Jan 3 2008 MiTek Industries, Inc. Wed Jan 23 13:37:22 2008 Page 1

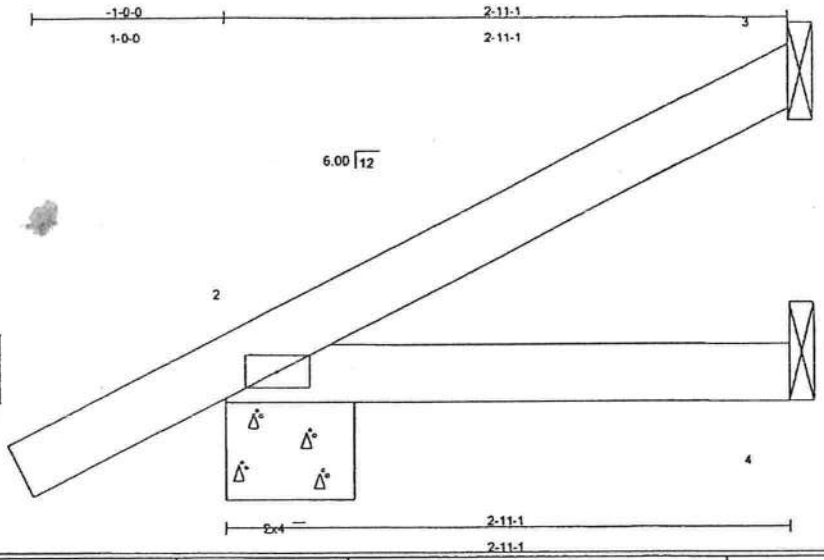

LOADING (psf)		SPACING 2-0-0	CSI		DEFL	in	(loc)	l/defl	L/d	PLATES	GRIP
TCLL	16.0	Plates Increase 1.25	TC	0.18	Vert(LL)	-0.00	2-4	>999	240	MT20	244/190
TCDL	7.0	Lumber Increase 1.25	BC	0.06	Vert(TL)	-0.01	2-4	>999	180		
BCLL	10.0 *	Rep Stress Incr YES	WB	0.00	Horz(TL)	-0.00	3	n/a	n/a		
BCDL	10.0	Code FBC2004/TPI2002	(Matrix)							Weight: 11 lb	

LUMBER
TOP CHORD 2 X 4 SYP No.2
BOT CHORD 2 X 4 SYP No.2

BRACING
TOP CHORD Structural wood sheathing directly applied or 2-11-1 oc purlins.
BOT CHORD Rigid ceiling directly applied or 10-0-0 oc bracing.

REACTIONS (lb/size) 3=40/Mechanical, 2=191/0-8-0, 4=51/Mechanical
Max Horz 2=93(LC 6)
Max Uplift3=-34(LC 6), 2=-114(LC 6)

FORCES (lb) - Maximum Compression/Maximum Tension
TOP CHORD 1-2=0/21, 2-3=-38/14
BOT CHORD 2-4=0/0

NOTES (6)
1) Wind: ASCE 7-02; 125mph (3-second gust); h=25ft; TCDL=4.2psf; BCDL=6.0psf; Category II; Exp B; enclosed; MWFRS (low-rise) and C-C Interior(1) zone; Lumber DOL=1.33 plate grip DOL=1.33. This truss is designed for C-C for members and forces, and for MWFRS for reactions specified.
2) This truss has been designed for a 10.0 psf bottom chord live load nonconcurrent with any other live loads.
3) * This truss has been designed for a live load of 20.0psf on the bottom chord in all areas where a rectangle 3-6-0 tall by 1-0-0 wide will fit between the bottom chord and any other members.
4) Refer to girder(s) for truss to truss connections.
5) Provide mechanical connection (by others) of truss to bearing plate capable of withstanding 34 lb uplift at joint 3 and 114 lb uplift at joint 2.
6) Attach with (2) 16d Common Toe-Nails (0.162"x 3.5") at joints 3 and 4.

LOAD CASE(S) Standard

MARVIN A. STRZYZEWSKI
LICENSE
No 43144
STATE OF
FLORIDA
PROFESSIONAL ENGINEER

Marvin A. Strzyzewski, FL Lic. #43144
Truss Engineering Co.
818 Soundside Road
Edenton, NC 27932
FL COA #7239

January 23,2008

ENGINEERING BY TRENCO
A MiTek Affiliate
818 Soundside Road
Edenton, NC 27932

Job	Truss	Truss Type	Qty	Ply	MONTGOMERY_FLORIDA_125
MONTGOMERY	J4	JACK	3	1	E4532352 Job Reference (optional)

Maronda Homes Inc., Sanford, FL

7.030 s Jan 3 2008 MiTek Industries, Inc. Wed Jan 23 13:37:22 2008 Page 1

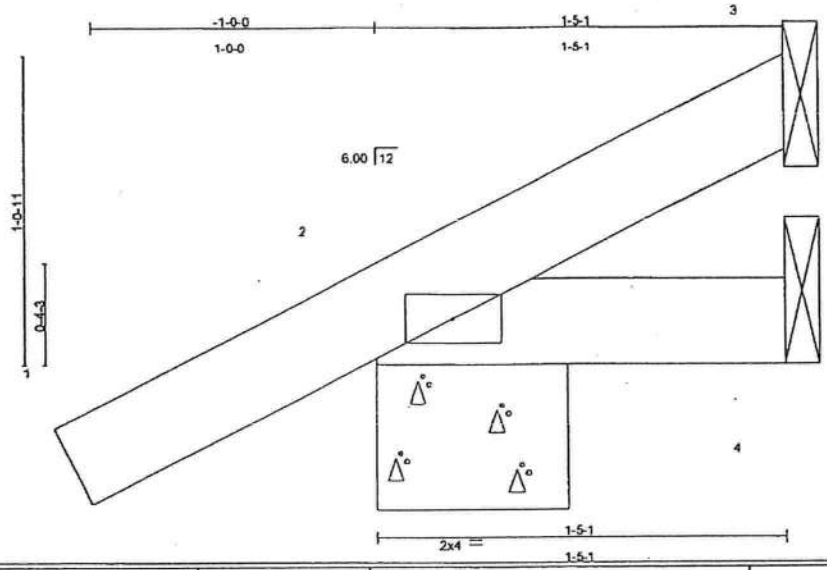

LOADING (psf)		SPACING	2-0-0	CSI		DEFL	In	(loc)	l/defl	L/d	PLATES	GRIP
TCLL	16.0	Plates Increase	1.25	TC	0.13	Vert(LL)	-0.00	2	>999	240	MT20	244/190
TCDL	7.0	Lumber Increase	1.25	BC	0.02	Vert(TL)	-0.00	2	>999	180		
BCLL	10.0 *	Rep Stress Incr	YES	WB	0.00	Horz(TL)	-0.00	3	n/a	n/a		
BCDL	10.0	Code FBC2004/TPI2002		(Matrix)							Weight: 6 lb	

LUMBER
TOP CHORD 2 X 4 SYP No.2
BOT CHORD 2 X 4 SYP No.2

BRACING
TOP CHORD Structural wood sheathing directly applied or 1-5-1 oc purlins.
BOT CHORD Rigid ceiling directly applied or 10-0-0 oc bracing.

REACTIONS (lb/size) 2=132/0-8-0, 4=27/Mechanical, 3=9/Mechanical
Max Horz 2=63(LC 6)
Max Uplift2=-103(LC 6), 3=-12(LC 5)
Max Grav2=132(LC 1), 4=27(LC 1), 3=11(LC 4)

FORCES (lb) - Maximum Compression/Maximum Tension
TOP CHORD 1-2=0/21, 2-3=-26/7
BOT CHORD 2-4=0/0

NOTES (6)
1) Wind: ASCE 7-02; 125mph (3-second gust); h=25ft; TCDL=4.2psf; BCDL=6.0psf; Category II; Exp B; enclosed; MWFRS (low-rise) and C-C Interior(1) zone; Lumber DOL=1.33 plate grip DOL=1.33. This truss is designed for C-C for members and forces, and for MWFRS for reactions specified.
2) This truss has been designed for a 10.0 psf bottom chord live load nonconcurrent with any other live loads.
3) * This truss has been designed for a live load of 20.0psf on the bottom chord in all areas where a rectangle 3-6-0 tall by 1-0-0 wide will fit between the bottom chord and any other members.
4) Refer to girder(s) for truss to truss connections.
5) Provide mechanical connection (by others) of truss to bearing plate capable of withstanding 103 lb uplift at joint 2 and 12 lb uplift at joint 3.
6) Attach with (2) 16d Common Toe-Nails (0.162"x 3.5") at joints 3 and 4.

LOAD CASE(S) Standard

MARVIN A. STRZYZEWSKI
LICENSE
No. 43144
STATE OF FLORIDA
PROFESSIONAL ENGINEER

Marvin A. Strzyzewski, FL Lic. #43144
Truss Engineering Co.
818 Soundside Road
Edenton, NC 27932
FL COA #7239

January 23,2008

ENGINEERING BY TRENCO A MiTek Affiliate
818 Soundside Road
Edenton, NC 27932

Job	Truss	Truss Type	Qty	Ply	MONTGOMERY_FLORIDA_125
MONTGOMERY	J5	JACK	1	1	E4632353 Job Reference (optional)

Maronda Homes Inc., Sanford, FL

7.030 s Jan 3 2008 MiTek Industries, Inc. Wed Jan 23 13:37:22 2008 Page 1

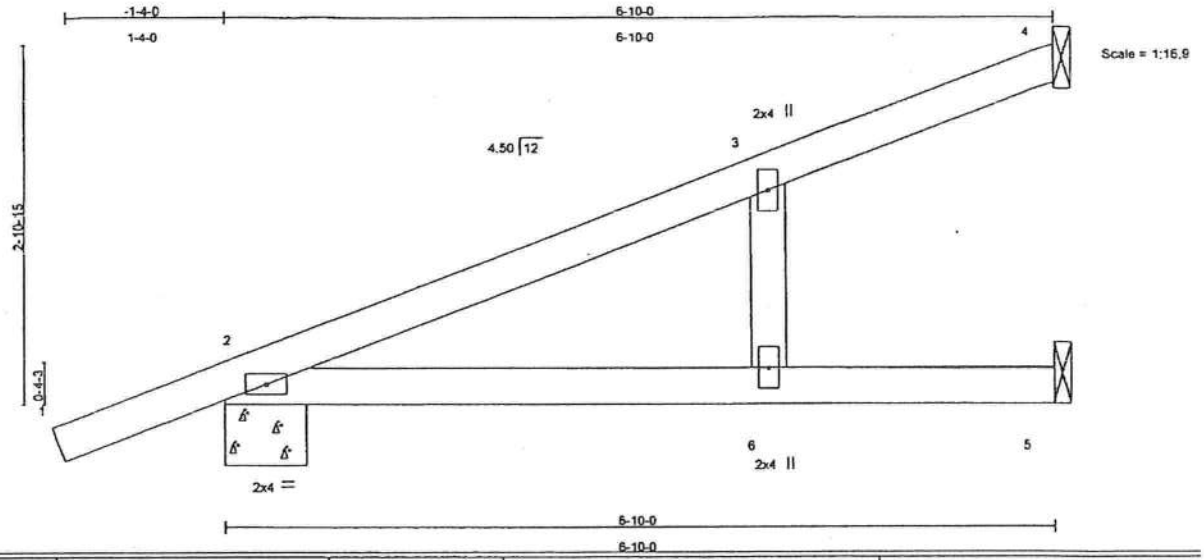

LOADING (psf)		SPACING 2-0-0	CSI		DEFL	In	(loc)	l/defl	L/d	PLATES	GRIP
TCLL	16.0	Plates Increase 1.25	TC	0.37	Vert(LL)	-0.11	2-6	>709	240	MT20	244/190
TCDL	7.0	Lumber Increase 1.25	BC	0.40	Vert(TL)	-0.22	2-6	>348	180		
BCLL	10.0 *	Rep Stress Incr YES	WB	0.03	Horz(TL)	0.01	4	n/a	n/a		
BCDL	10.0	Code FBC2004/TPI2002	(Matrix)							Weight: 26 lb	

LUMBER
TOP CHORD 2 X 4 SYP No.2
BOT CHORD 2 X 4 SYP No.2
WEBS 2 X 4 SYP No.3

BRACING
TOP CHORD Structural wood sheathing directly applied or 6-0-0 oc purlins.
BOT CHORD Rigid ceiling directly applied or 10-0-0 oc bracing.

REACTIONS (lb/size) 4=135/Mechanical, 2=366/0-8-0, 5=131/Mechanical
Max Horz 2=138(LC 6)
Max Uplift4=-53(LC 6), 2=-158(LC 6), 5=-22(LC 6)

FORCES (lb) - Maximum Compression/Maximum Tension
TOP CHORD 1-2=0/21, 2-3=-83/6, 3-4=-31/44
BOT CHORD 2-6=0/0, 5-6=0/0
WEBS 3-6=-4/102

NOTES (6)
1) Wind: ASCE 7-02; 125mph (3-second gust); h=25ft; TCDL=4.2psf; BCDL=6.0psf; Category II; Exp B; enclosed; MWFRS (low-rise) and C-C Interior(1) zone; Lumber DOL=1.33 plate grip DOL=1.33. This truss is designed for C-C for members and forces, and for MWFRS for reactions specified.
2) This truss has been designed for a 10.0 psf bottom chord live load nonconcurrent with any other live loads.
3) * This truss has been designed for a live load of 20.0psf on the bottom chord in all areas where a rectangle 3-6-0 tall by 1-0-0 wide will fit between the bottom chord and any other members.
4) Refer to girder(s) for truss to truss connections.
5) Provide mechanical connection (by others) of truss to bearing plate capable of withstanding 53 lb uplift at joint 4, 158 lb uplift at joint 2 and 22 lb uplift at joint 5.
6) Attach with (2) 16d Common Toe-Nails (0.162"x 3.5") at joints 4 and 5.

LOAD CASE(S) Standard

MARVIN A. STRZYZEWSKI ★ LICENSE No 43144 ★ STATE OF FLORIDA ★ PROFESSIONAL ENGINEER

Marvin A. Strzyzewski, FL Lic. #43144
Truss Engineering Co.
818 Soundside Road
Edenton, NC 27932
FL COA #7239

January 23,2008

ENGINEERING BY TRENCO A MiTek Affiliate
818 Soundside Road
Edenton, NC 27932

Job	Truss	Truss Type	Qty	Ply	MONTGOMERY_FLORIDA_125
MONTGOMERY	J5A	JACK	1	1	E4632354 Job Reference (optional)

Maronda Homes Inc., Sanford, FL — 7.030 s Jan 3 2008 MiTek Industries, Inc. Wed Jan 23 13:37:23 2008 Page 1

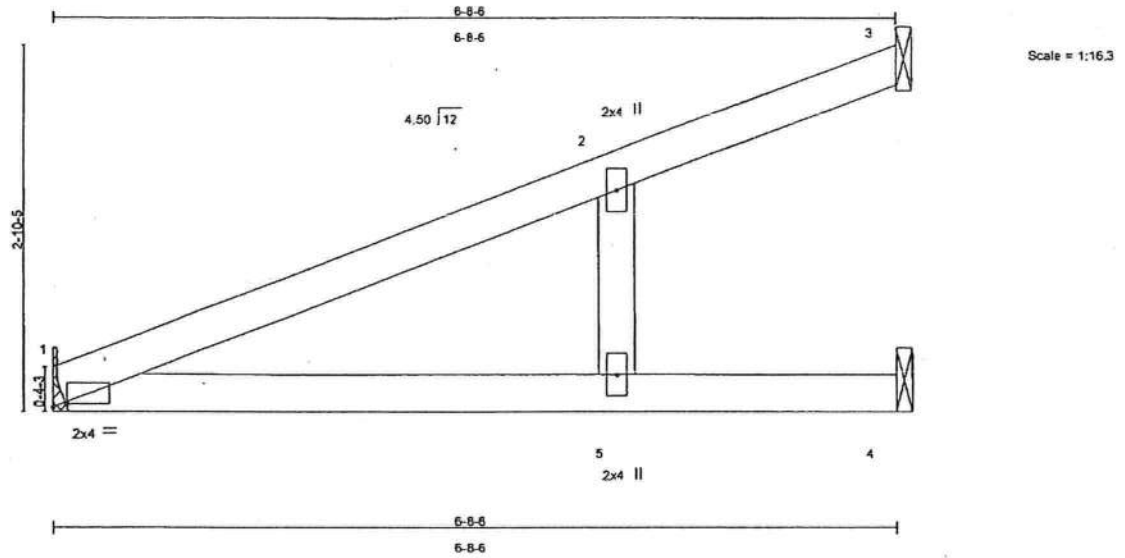

Plate Offsets (X,Y): [1:0-1-5,0-0-4]

LOADING (psf)			SPACING	2-0-0	CSI		DEFL	in	(loc)	l/defl	L/d	PLATES	GRIP
TCLL	16.0		Plates Increase	1.25	TC	0.41	Vert(LL)	0.14	1-5	>568	240	MT20	244/190
TCDL	7.0		Lumber Increase	1.25	BC	0.45	Vert(TL)	-0.26	1-5	>304	180		
BCLL	10.0	*	Rep Stress Incr	YES	WB	0.04	Horz(TL)	0.00	3	n/a	n/a		
BCDL	10.0		Code FBC2004/TPI2002		(Matrix)							Weight: 23 lb	

LUMBER
TOP CHORD 2 X 4 SYP No.2
BOT CHORD 2 X 4 SYP No.2
WEBS 2 X 4 SYP No.3

BRACING
TOP CHORD Structural wood sheathing directly applied or 6-0-0 oc purlins.
BOT CHORD Rigid ceiling directly applied or 10-0-0 oc bracing.

REACTIONS (lb/size) 1=283/Mechanical, 3=137/Mechanical, 4=145/Mechanical
Max Horz 1=105(LC 6)
Max Uplift1=-49(LC 6), 3=-48(LC 6), 4=-41(LC 6)

FORCES (lb) - Maximum Compression/Maximum Tension
TOP CHORD 1-2=-94/14, 2-3=-29/45
BOT CHORD 1-5=0/0, 4-5=0/0
WEBS 2-5=-21/144

NOTES
1) Wind: ASCE 7-02; 125mph (3-second gust); h=25ft; TCDL=4.2psf; BCDL=6.0psf; Category II; Exp B; enclosed; MWFRS (low-rise) and C-C Interior(1) zone; Lumber DOL=1.33 plate grip DOL=1.33. This truss is designed for C-C for members and forces, and for MWFRS for reactions specified.
2) This truss has been designed for a 10.0 psf bottom chord live load nonconcurrent with any other live loads.
3) * This truss has been designed for a live load of 20.0psf on the bottom chord in all areas where a rectangle 3-6-0 tall by 1-0-0 wide will fit between the bottom chord and any other members.
4) Refer to girder(s) for truss to truss connections.
5) Refer to girder(s) for truss to truss connections.
6) Provide mechanical connection (by others) of truss to bearing plate capable of withstanding 49 lb uplift at joint 1, 48 lb uplift at joint 3 and 41 lb uplift at joint 4.

LOAD CASE(S) Standard

MARVIN A. STRZYZEWSKI
LICENSE
No. 43144
STATE OF
FLORIDA
PROFESSIONAL ENGINEER

Marvin A. Strzyzewski, FL Lic. #43144
Truss Engineering Co.
818 Soundside Road
Edenton, NC 27932
FL COA #7239

January 23,2008

ENGINEERING BY TRENCO A MiTek Affiliate
818 Soundside Road
Edenton, NC 27932

Job	Truss	Truss Type	Qty	Ply	MONTGOMERY_FLORIDA_125
MONTGOMERY	J6	JACK	1	1	E4632355 Job Reference (optional)

Meronda Homes Inc., Sanford, FL

7.030 s Jan 3 2008 MiTek Industries, Inc. Wed Jan 23 13:37:23 2008 Page 1

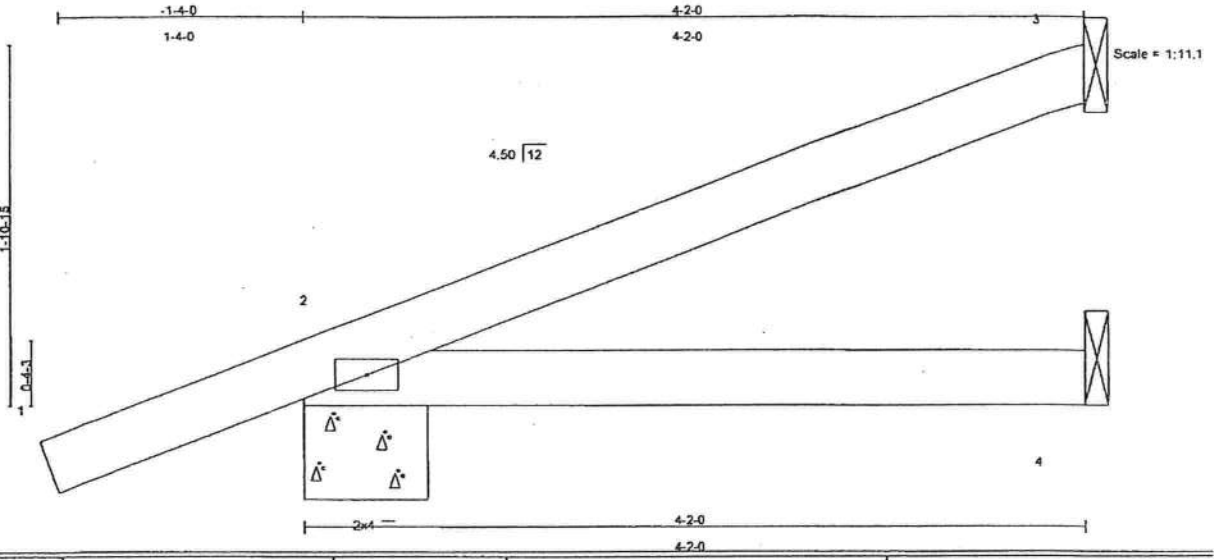

LOADING (psf)		SPACING 2-0-0	CSI	DEFL in (loc) l/defl L/d	PLATES GRIP
TCLL 16.0		Plates Increase 1.25	TC 0.26	Vert(LL) -0.01 2-4 >999 240	MT20 244/190
TCDL 7.0		Lumber Increase 1.25	BC 0.14	Vert(TL) -0.03 2-4 >999 180	
BCLL 10.0	*	Rep Stress Incr YES	WB 0.00	Horz(TL) -0.00 3 n/a n/a	
BCDL 10.0		Code FBC2004/TPI2002	(Matrix)		Weight: 15 lb

LUMBER
TOP CHORD 2 X 4 SYP No.2
BOT CHORD 2 X 4 SYP No.2

BRACING
TOP CHORD Structural wood sheathing directly applied or 4-2-0 oc purlins.
BOT CHORD Rigid ceiling directly applied or 10-0-0 oc bracing.

REACTIONS (lb/size) 3=69/Mechanical, 2=259/0-8-0, 4=75/Mechanical
Max Horz 2=97(LC 6)
Max Uplift3=-52(LC 6), 2=-148(LC 6)

FORCES (lb) - Maximum Compression/Maximum Tension
TOP CHORD 1-2=0/21, 2-3=-41/20
BOT CHORD 2-4=0/0

NOTES (6)
1) Wind: ASCE 7-02; 125mph (3-second gust); h=25ft; TCDL=4.2psf; BCDL=6.0psf; Category II; Exp B; enclosed; MWFRS (low-rise) and C-C Interior(1) zone; Lumber DOL=1.33 plate grip DOL=1.33. This truss is designed for C-C for members and forces, and for MWFRS for reactions specified.
2) This truss has been designed for a 10.0 psf bottom chord live load nonconcurrent with any other live loads.
3) * This truss has been designed for a live load of 20.0psf on the bottom chord in all areas where a rectangle 3-6-0 tall by 1-0-0 wide will fit between the bottom chord and any other members.
4) Refer to girder(s) for truss to truss connections.
5) Provide mechanical connection (by others) of truss to bearing plate capable of withstanding 52 lb uplift at joint 3 and 148 lb uplift at joint 2.
6) Attach with (2) 16d Common Toe-Nails (0.162"x 3.5") at joints 3 and 4.

LOAD CASE(S) Standard

MARVIN A. STRZYZEWSKI
LICENSE
No 43144
STATE OF
FLORIDA
PROFESSIONAL ENGINEER

Marvin A. Strzyzewski, FL Lic. #43144
Truss Engineering Co.
818 Soundside Road
Edenton, NC 27932
FL COA #7239

January 23,2008

ENGINEERING BY TRENCO A MiTek Affiliate
818 Soundside Road
Edenton, NC 27932

Job	Truss	Truss Type	Qty	Ply	MONTGOMERY_FLORIDA_125
MONTGOMERY	J6A	JACK	1	1	E4632356 Job Reference (optional)

Maronda Homes Inc., Sanford, FL

7.030 s Jan 3 2008 MiTek Industries, Inc. Wed Jan 23 13:37:23 2008 Page 1

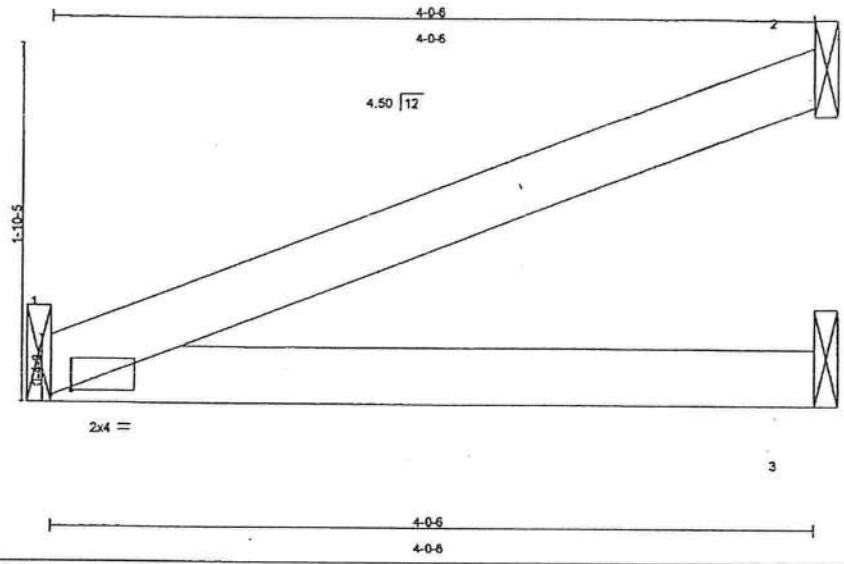

Plate Offsets (X,Y): [1:0-1-5,0-0-4]

LOADING (psf)			SPACING 2-0-0	CSI		DEFL	in	(loc)	l/defl	L/d	PLATES	GRIP
TCLL	16.0		Plates Increase 1.25	TC	0.17	Vert(LL)	-0.01	1-3	>999	240	MT20	244/190
TCDL	7.0		Lumber Increase 1.25	BC	0.14	Vert(TL)	-0.03	1-3	>999	180		
BCLL	10.0	*	Rep Stress Incr YES	WB	0.00	Horz(TL)	-0.00	2	n/a	n/a		
BCDL	10.0		Code FBC2004/TPI2002	(Matrix)							Weight: 13 lb	

LUMBER
TOP CHORD 2 X 4 SYP No.2
BOT CHORD 2 X 4 SYP No.2

BRACING
TOP CHORD Structural wood sheathing directly applied or 4-0-6 oc purlins.
BOT CHORD Rigid ceiling directly applied or 10-0-0 oc bracing.

REACTIONS (lb/size) 1=168/Mechanical, 2=90/Mechanical, 3=78/Mechanical
Max Horz 1=64(LC 6)
Max Uplift1=-29(LC 6), 2=-77(LC 6)

FORCES (lb) - Maximum Compression/Maximum Tension
TOP CHORD 1-2=-47/26
BOT CHORD 1-3=0/0

NOTES
1) Wind: ASCE 7-02; 125mph (3-second gust); h=25ft; TCDL=4.2psf; BCDL=6.0psf; Category II; Exp B; enclosed; MWFRS (low-rise) and C-C Interior(1) zone; Lumber DOL=1.33 plate grip DOL=1.33. This truss is designed for C-C for members and forces, and for MWFRS for reactions specified.
2) This truss has been designed for a 10.0 psf bottom chord live load nonconcurrent with any other live loads.
3) * This truss has been designed for a live load of 20.0psf on the bottom chord in all areas where a rectangle 3-6-0 tall by 1-0-0 wide will fit between the bottom chord and any other members.
4) Refer to girder(s) for truss to truss connections.
5) Refer to girder(s) for truss to truss connections.
6) Provide mechanical connection (by others) of truss to bearing plate capable of withstanding 29 lb uplift at joint 1 and 77 lb uplift at joint 2.

LOAD CASE(S) Standard

MARVIN A. STRZYZEWSKI
LICENSE
No 43144
STATE OF FLORIDA
PROFESSIONAL ENGINEER

Marvin A. Strzyzewski, FL Lic. #43144
Truss Engineering Co.
818 Soundside Road
Edenton, NC 27932
FL COA #7239

January 23,2008

ENGINEERING BY TRENCO
A MiTek Affiliate
818 Soundside Road
Edenton, NC 27932

Job	Truss	Truss Type	Qty	Ply	MONTGOMERY_FLORIDA_125	
MONTGOMERY	J7	JACK	4	1	Job Reference (optional)	E4632357

Maronda Homes Inc., Sanford, FL

7.030 s Jan 3 2008 MiTek Industries, Inc. Wed Jan 23 13:37:24 2008 Page 1

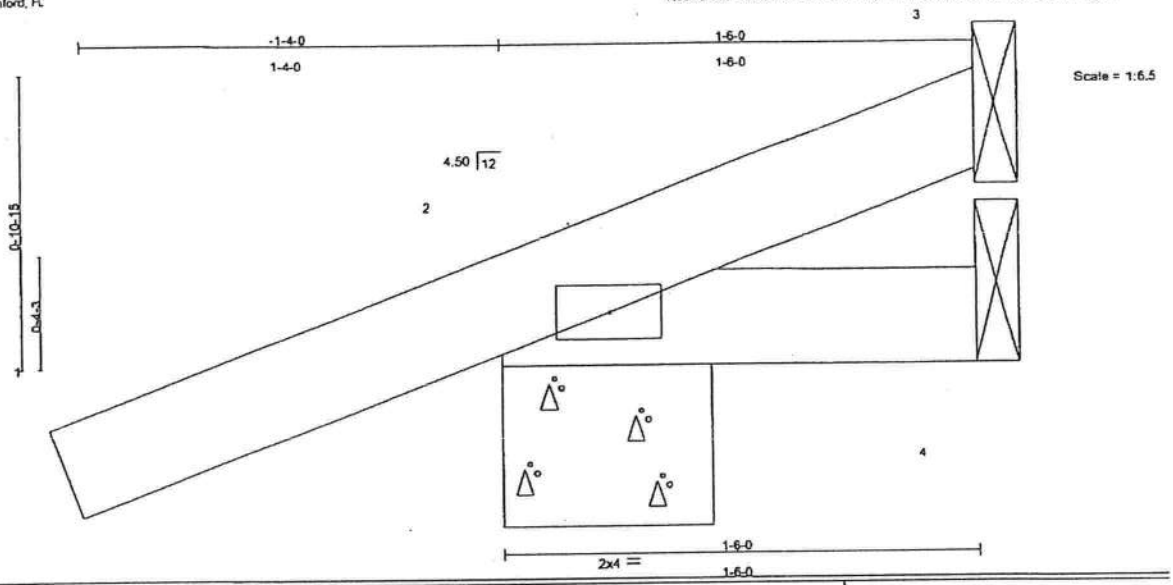

LOADING (psf)		SPACING 2-0-0	CSI	DEFL in (loc) l/defl L/d	PLATES GRIP
TCLL 16.0		Plates Increase 1.25	TC 0.20	Vert(LL) -0.00 2 >999 240	MT20 244/190
TCDL 7.0		Lumber Increase 1.25	BC 0.02	Vert(TL) -0.00 2 >999 180	
BCLL 10.0	*	Rep Stress Incr YES	WB 0.00	Horz(TL) 0.00 3 n/a n/a	
BCDL 10.0		Code FBC2004/TPI2002	(Matrix)		Weight: 7 lb

LUMBER
TOP CHORD 2 X 4 SYP No.2
BOT CHORD 2 X 4 SYP No.2

BRACING
TOP CHORD Structural wood sheathing directly applied or 1-6-0 oc purlins.
BOT CHORD Rigid ceiling directly applied or 10-0-0 oc bracing.

REACTIONS (lb/size) 2=162/0-8-0, 4=28/Mechanical, 3=-1/Mechanical
Max Horz 2=56(LC 6)
Max Uplift2=-139(LC 6), 3=-8(LC 5)
Max Grav2=162(LC 1), 4=28(LC 1), 3=18(LC 4)

FORCES (lb) - Maximum Compression/Maximum Tension
TOP CHORD 1-2=0/21, 2-3=-26/16
BOT CHORD 2-4=0/0

NOTES (6)
1) Wind: ASCE 7-02; 125mph (3-second gust); h=25ft; TCDL=4.2psf; BCDL=8.0psf; Category II; Exp B; enclosed; MWFRS (low-rise) and C-C Interior(1) zone; Lumber DOL=1.33 plate grip DOL=1.33. This truss is designed for C-C for members and forces, and for MWFRS for reactions specified.
2) This truss has been designed for a 10.0 psf bottom chord live load nonconcurrent with any other live loads.
3) * This truss has been designed for a live load of 20.0psf on the bottom chord in all areas where a rectangle 3-6-0 tall by 1-0-0 wide will fit between the bottom chord and any other members.
4) Refer to girder(s) for truss to truss connections.
5) Provide mechanical connection (by others) of truss to bearing plate capable of withstanding 139 lb uplift at joint 2 and 8 lb uplift at joint 3.
6) Attach with (2) 16d Common Toe-Nails (0.162"x 3.5") at joints 3 and 4.

LOAD CASE(S) Standard

MARVIN A. STRZYZEWSKI LICENSE No 43144 STATE OF FLORIDA PROFESSIONAL ENGINEER

Marvin A. Strzyzewski, FL Lic. #43144
Truss Engineering Co.
818 Soundside Road
Edenton, NC 27932
FL COA #7239

January 23,2008

ENGINEERING BY TRENCO A MiTek Affiliate
818 Soundside Road
Edenton, NC 27932

Job	Truss	Truss Type	Qty	Ply	MONTGOMERY_FLORIDA_125
MONTGOMERY	J7A	JACK	1	1	E4632358 Job Reference (optional)

Maronda Homes Inc., Sanford, FL

7.030 s Jan 3 2008 MiTek Industries, Inc. Wed Jan 23 13:37:24 2008 Page 1

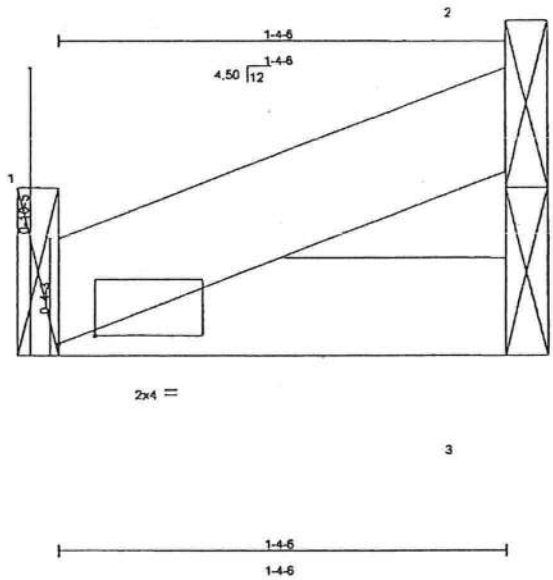

Plate Offsets (X,Y): [1:0-1-5,0-0-4]

LOADING (psf)			SPACING	2-0-0	CSI		DEFL	in	(loc)	l/defl	L/d	PLATES	GRIP
TCLL	16.0		Plates Increase	1.25	TC	0.02	Vert(LL)	-0.00	1	>999	240	MT20	244/190
TCDL	7.0		Lumber Increase	1.25	BC	0.02	Vert(TL)	-0.00	1	>999	180		
BCLL	10.0	*	Rep Stress Incr	YES	WB	0.00	Horz(TL)	-0.00	2	n/a	n/a		
BCDL	10.0		Code FBC2004/TPI2002		(Matrix)							Weight: 4 lb	

LUMBER
TOP CHORD 2 X 4 SYP No.2
BOT CHORD 2 X 4 SYP No.2

BRACING
TOP CHORD Structural wood sheathing directly applied or 1-4-6 oc purlins.
BOT CHORD Rigid ceiling directly applied or 10-0-0 oc bracing.

REACTIONS (lb/size) 1=58/Mechanical, 3=27/Mechanical, 2=31/Mechanical
Max Horz 1=23(LC 6)
Max Uplift1=-9(LC 6), 2=-27(LC 6)

FORCES (lb) - Maximum Compression/Maximum Tension
TOP CHORD 1-2=-17/9
BOT CHORD 1-3=0/0

NOTES
1) Wind: ASCE 7-02; 125mph (3-second gust); h=25ft; TCDL=4.2psf; BCDL=6.0psf; Category II; Exp B; enclosed; MWFRS (low-rise) and C-C Interior(1) zone; Lumber DOL=1.33 plate grip DOL=1.33. This truss is designed for C-C for members and forces, and for MWFRS for reactions specified.
2) This truss has been designed for a 10.0 psf bottom chord live load nonconcurrent with any other live loads.
3) * This truss has been designed for a live load of 20.0psf on the bottom chord in all areas where a rectangle 3-6-0 tall by 1-0-0 wide will fit between the bottom chord and any other members.
4) Refer to girder(s) for truss to truss connections.
5) Refer to girder(s) for truss to truss connections.
6) Provide mechanical connection (by others) of truss to bearing plate capable of withstanding 9 lb uplift at joint 1 and 27 lb uplift at joint 2.

LOAD CASE(S) Standard

MARVIN A. STRZYZEWSKI
LICENSE
No. 43144
STATE OF FLORIDA
PROFESSIONAL ENGINEER

Marvin A. Strzyzewski, FL Lic. #43144
Truss Engineering Co.
818 Soundside Road
Edenton, NC 27932
FL COA #7239

January 23,2008

ENGINEERING BY TRENCO A MiTek Affiliate
818 Soundside Road
Edenton, NC 27932

Job	Truss	Truss Type	Qty	Ply	MONTGOMERY_FLORIDA_125
MONTGOMERY	JGRD1	MONO TRUSS	1	1	E4632361 Job Reference (optional)

Maronda Homes Inc., Sanford, FL

7.030 s Jan 3 2008 MiTek Industries, Inc. Wed Jan 23 13:37:25 2008 Page 1

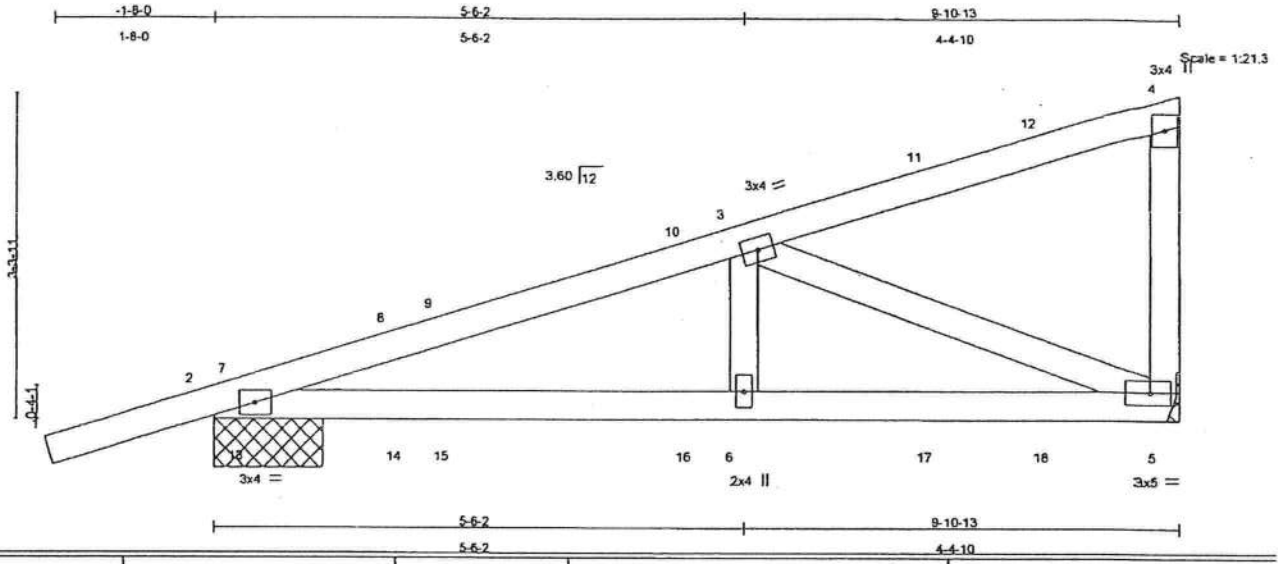

LOADING (psf)		SPACING 2-0-0	CSI	DEFL in (loc) l/defl L/d	PLATES GRIP
TCLL 16.0		Plates Increase 1.25	TC 0.41	Vert(LL) -0.03 2-6 >999 240	MT20 244/190
TCDL 7.0		Lumber Increase 1.25	BC 0.32	Vert(TL) -0.07 2-8 >999 180	
BCLL 10.0	*	Rep Stress Incr NO	WB 0.32	Horz(TL) 0.01 5 n/a n/a	
BCDL 10.0		Code FBC2004/TPI2002	(Matrix)		Weight: 45 lb

LUMBER

TOP CHORD 2 X 4 SYP No.2
BOT CHORD 2 X 4 SYP No.2
WEBS 2 X 4 SYP No.3

BRACING

TOP CHORD Structural wood sheathing directly applied or 6-0-0 oc purlins, except end verticals.
BOT CHORD Rigid ceiling directly applied or 9-9-2 oc bracing.

REACTIONS (lb/size) 5=651/Mechanical, 2=507/1-1-11
Max Horz 2=153(LC 3)
Max Uplift5=-338(LC 7), 2=-244(LC 7)

FORCES (lb) - Maximum Compression/Maximum Tension

TOP CHORD 1-2=0/21, 2-7=-927/324, 7-8=-923/326, 8-9=-903/336, 9-10=-903/345, 3-10=-869/337, 3-11=-115/47, 11-12=-76/18, 4-12=-38/4, 4-5=-161/154
BOT CHORD 2-13=-409/863, 13-14=-409/863, 14-15=-409/863, 15-16=-409/863, 6-16=-409/863, 6-17=-409/863, 17-18=-409/863, 5-18=-409/863
WEBS 3-6=0/283, 3-5=-851/389

NOTES

1) Wind: ASCE 7-02; 125mph (3-second gust); h=25ft; TCDL=4.2psf; BCDL=6.0psf; Category II; Exp B; enclosed; MWFRS (low-rise); Lumber DOL=1.33 plate grip DOL=1.33.
2) This truss has been designed for a 10.0 psf bottom chord live load nonconcurrent with any other live loads.
3) * This truss has been designed for a live load of 20.0psf on the bottom chord in all areas where a rectangle 3-6-0 tall by 1-0-0 wide will fit between the bottom chord and any other members.
4) Refer to girder(s) for truss to truss connections.
5) Provide mechanical connection (by others) of truss to bearing plate capable of withstanding 338 lb uplift at joint 5 and 244 lb uplift at joint 2.
6) Hanger(s) or other connection device(s) shall be provided sufficient to support concentrated load(s) 35 lb down and 37 lb up at 2-5-12, 39 lb up at 4-11-12, 23 lb down and 67 lb up at 5-3-12, 35 lb down and 101 lb up at 7-5-12, and 89 lb down and 72 lb up at 8-7-12, and 43 lb down at 1-11-12 on top chord, and 12 lb up at 1-11-12, 13 lb up at 2-5-12, 11 lb down at 4-11-12, 35 lb down at 5-3-12, and 41 lb down at 7-5-12, and 91 lb down and 60 lb up at 8-7-12 on bottom chord. The design/selection of such connection device(s) is the responsibility of others.
7) In the LOAD CASE(S) section, loads applied to the face of the truss are noted as front (F) or back (B).

LOAD CASE(S) Standard

1) Regular: Lumber Increase=1.25, Plate Increase=1.25
Uniform Loads (plf)
Vert: 1-2=-46, 2-7=-14, 4-7=-46, 2-13=-20, 5-13=-40
Concentrated Loads (lb)
Vert: 3=-23(F) 6=-35(F) 9=37(B) 10=6(B) 11=-35(B) 12=-89(F) 14=12(F) 15=13(B) 16=-11(B) 17=-41(B) 18=-91(F)

MARVIN A. STRZYZEWSKI
LICENSE
No 43144
STATE OF
FLORIDA
PROFESSIONAL ENGINEER

Marvin A. Strzyzewski, FL Lic. #43144
Truss Engineering Co.
818 Soundside Road
Edenton, NC 27932
FL COA #7239

January 23,2008

ENGINEERING BY TRENCO
A MiTek Affiliate
818 Soundside Road
Edenton, NC 27932

Job	Truss	Truss Type	Qty	Ply	MONTGOMERY_FLORIDA_125
MONTGOMERY	JGRD1A	MONO TRUSS	1	1	E4632362 Job Reference (optional)

Maronda Homes Inc., Sanford, FL

7.030 s Jan 3 2008 MiTek Industries, Inc. Wed Jan 23 13:37:26 2008 Page 1

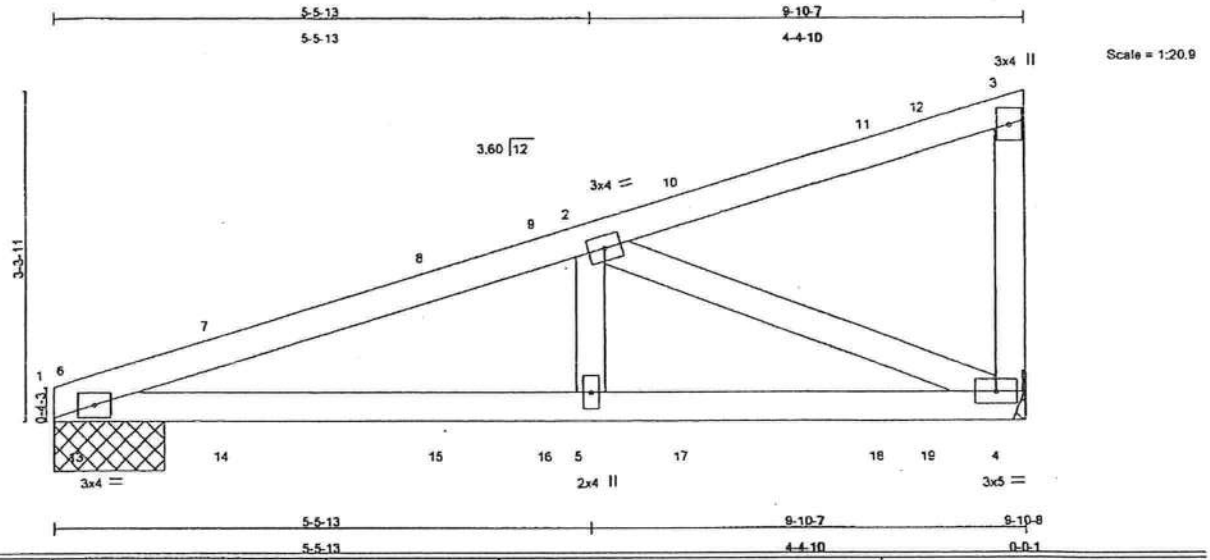

LOADING (psf)		SPACING 2-0-0	CSI		DEFL	in	(loc)	l/defl	L/d	PLATES	GRIP
TCLL	16.0	Plates Increase 1.25	TC	0.41	Vert(LL)	-0.04	1-5	>999	240	MT20	244/190
TCDL	7.0	Lumber Increase 1.25	BC	0.44	Vert(TL)	-0.09	1-5	>999	180		
BCLL	10.0 *	Rep Stress Incr NO	WB	0.37	Horz(TL)	0.02	4	n/a	n/a		
BCDL	10.0	Code FBC2004/TPI2002	(Matrix)							Weight: 43 lb	

LUMBER
TOP CHORD 2 X 4 SYP No.2
BOT CHORD 2 X 4 SYP No.2
WEBS 2 X 4 SYP No.3

BRACING
TOP CHORD Structural wood sheathing directly applied or 5-11-9 oc purlins, except end verticals.
BOT CHORD Rigid ceiling directly applied or 8-2-2 oc bracing.

REACTIONS (lb/size) 1=468/1-1-5, 4=731/Mechanical
Max Horz 1=119(LC 7)
Max Uplift1=-195(LC 7), 4=-444(LC 7)

FORCES (lb) - Maximum Compression/Maximum Tension
TOP CHORD 1-6=-1060/501, 6-7=-1057/505, 7-8=-1036/503, 8-9=-1017/500, 2-9=-984/473, 2-10=-120/56, 10-11=-77/40, 11-12=-49/21, 3-12=-27/0, 3-4=-169/184
BOT CHORD 1-13=-570/990, 13-14=-570/990, 14-15=-570/990, 15-16=-570/990, 5-16=-570/990, 5-17=-570/990, 17-18=-570/990, 18-19=-570/990, 4-19=-570/990
WEBS 2-5=0/320, 2-4=-987/562

NOTES
1) Wind: ASCE 7-02; 125mph (3-second gust); h=25ft; TCDL=4.2psf; BCDL=6.0psf; Category II; Exp B; enclosed; MWFRS (low-rise); Lumber DOL=1.33 plate grip DOL=1.33.
2) This truss has been designed for a 10.0 psf bottom chord live load nonconcurrent with any other live loads.
3) * This truss has been designed for a live load of 20.0psf on the bottom chord in all areas where a rectangle 3-6-0 tall by 1-0-0 wide will fit between the bottom chord and any other members.
4) Refer to girder(s) for truss to truss connections.
5) Provide mechanical connection (by others) of truss to bearing plate capable of withstanding 195 lb uplift at joint 1 and 444 lb uplift at joint 4.
6) Hanger(s) or other connection device(s) shall be provided sufficient to support concentrated load(s) 10 lb down and 23 lb up at 1-9-5, 39 lb up at 3-11-13, 44 lb down and 100 lb up at 5-1-5, 20 lb down and 78 lb up at 6-5-13, and 91 lb down and 66 lb up at 8-5-5, and 35 lb down and 101 lb up at 8-11-13 on top chord, and 13 lb up at 1-9-5, 11 lb down at 3-11-13, 38 lb down at 5-1-5, 29 lb down at 6-5-13, and 105 lb down and 86 lb up at 8-5-5, and 41 lb down at 8-11-13 on bottom chord. The design/selection of such connection device(s) is the responsibility of others.
7) In the LOAD CASE(S) section, loads applied to the face of the truss are noted as front (F) or back (B).

LOAD CASE(S) Standard
1) Regular: Lumber Increase=1.25, Plate Increase=1.25
Uniform Loads (plf)
Vert: 1-6=-14, 3-6=-46, 1-13=-20, 4-13=-40

Marvin A. Strzyzewski, FL Lic. #43144
Truss Engineering Co.
818 Soundside Road
Edenton, NC 27932
FL COA #7239

January 23,2008

Continued on page 2

ENGINEERING BY TRENCO A MiTek Affiliate
818 Soundside Road
Edenton, NC 27932

LOAD CASE(S) Standard

Concentrated Loads (lb)

Vert: 7=15(B) 8=6(F) 9=-44(B) 10=-20(F) 11=-91(B) 12=-35(F) 14=13(B) 15=-11(F) 16=-38(B) 17=-29(F) 18=-105(B) 19=-41(F)

Job	Truss	Truss Type	Qty	Ply	MONTGOMERY_FLORIDA_125
MONTGOMERY	JGRD3	JACK	1	1	E4632364 Job Reference (optional)

Maronda Homes Inc., Sanford, FL

7.030 s Jan 3 2008 MiTek Industries, Inc. Wed Jan 23 13:37:27 2008 Page 1

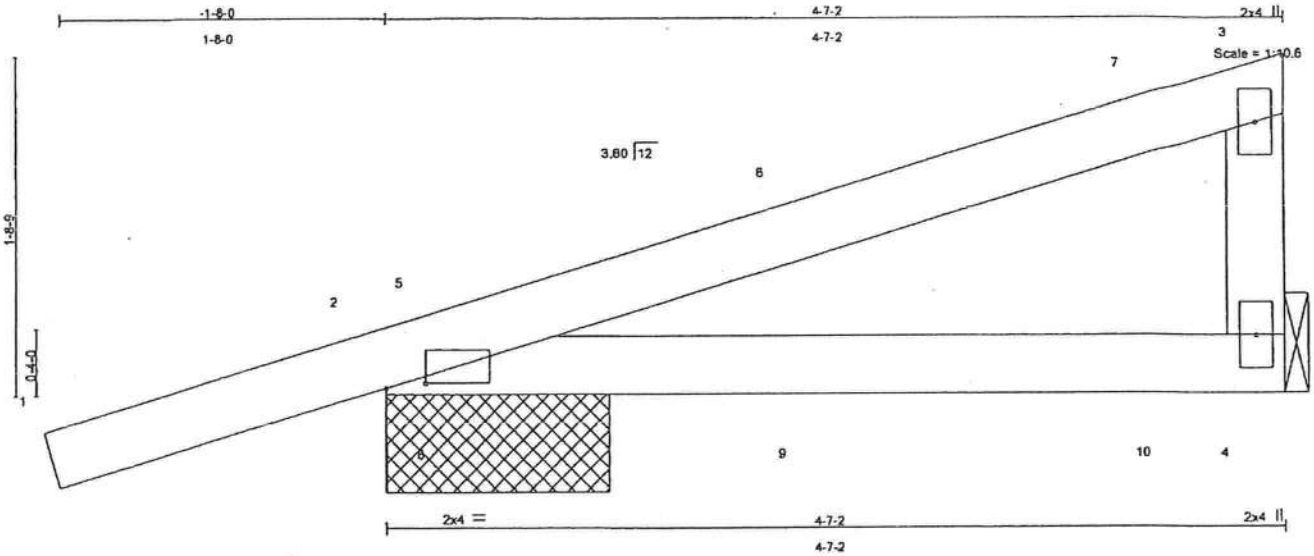

Plate Offsets (X,Y): [2:0-2-7,0-0-5]

LOADING (psf)		SPACING	2-0-0	CSI		DEFL	in	(loc)	l/defl	L/d	PLATES	GRIP
TCLL	16.0	Plates Increase	1.25	TC	0.18	Vert(LL)	-0.02	2-4	>999	240	MT20	244/190
TCDL	7.0	Lumber Increase	1.25	BC	0.19	Vert(TL)	-0.05	2-4	>999	180		
BCLL	10.0 *	Rep Stress Incr	NO	WB	0.02	Horz(TL)	0.00		n/a	n/a		
BCDL	10.0	Code FBC2004/TPI2002		(Matrix)							Weight: 18 lb	

LUMBER
TOP CHORD 2 X 4 SYP No.2
BOT CHORD 2 X 4 SYP No.2
WEBS 2 X 4 SYP No.3

BRACING
TOP CHORD Structural wood sheathing directly applied or 4-7-2 oc purlins.
BOT CHORD Rigid ceiling directly applied or 10-0-0 oc bracing.

REACTIONS (lb/size) 2=263/1-1-12, 4=174/Mechanical
Max Horz 2=87(LC 3)
Max Uplift2=-147(LC 7), 4=-55(LC 7)

FORCES (lb) - Maximum Compression/Maximum Tension
TOP CHORD 1-2=0/21, 2-5=-36/0, 5-6=-35/0, 6-7=-18/20, 3-7=-25/18
BOT CHORD 2-8=0/0, 8-9=0/0, 9-10=0/0, 4-10=0/0
WEBS 3-4=-82/82

NOTES
1) Wind: ASCE 7-02; 125mph (3-second gust); h=25ft; TCDL=4.2psf; BCDL=6.0psf; Category II; Exp B; enclosed; MWFRS (low-rise); Lumber DOL=1.33 plate grip DOL=1.33.
2) This truss has been designed for a 10.0 psf bottom chord live load nonconcurrent with any other live loads.
3) * This truss has been designed for a live load of 20.0psf on the bottom chord in all areas where a rectangle 3-6-0 tall by 1-0-0 wide will fit between the bottom chord and any other members.
4) Refer to girder(s) for truss to truss connections.
5) Provide mechanical connection (by others) of truss to bearing plate capable of withstanding 147 lb uplift at joint 2 and 55 lb uplift at joint 4.
6) Hanger(s) or other connection device(s) shall be provided sufficient to support concentrated load(s) 39 lb up at 4-0-4, and 43 lb down at 2-2-4 on top chord, and 12 lb up at 2-2-4, and 11 lb down at 4-0-4 on bottom chord. The design/selection of such connection device(s) is the responsibility of others.
7) In the LOAD CASE(S) section, loads applied to the face of the truss are noted as front (F) or back (B).

LOAD CASE(S) Standard
1) Regular: Lumber Increase=1.25, Plate Increase=1.25
Uniform Loads (plf)
Vert: 1-2=-46, 2-5=-14, 3-5=-46, 2-8=-20, 4-8=-40
Concentrated Loads (lb)
Vert: 7=6(F) 9=12(B) 10=-11(F)

Marvin A. Strzyzewski, FL Lic. #43144
Truss Engineering Co.
818 Soundside Road
Edenton, NC 27932
FL COA #7239

January 23,2008

ENGINEERING BY TRENCO A MiTek Affiliate
818 Soundside Road
Edenton, NC 27932

Job	Truss	Truss Type	Qty	Ply	MONTGOMERY_FLORIDA_125	E4632365
MONTGOMERY	JS	SPECIAL	5	1	Job Reference (optional)	

Maronda Homes Inc., Sanford, FL

7.030 s Jan 3 2008 MiTek Industries, Inc. Wed Jan 23 13:37:27 2008 Page 1

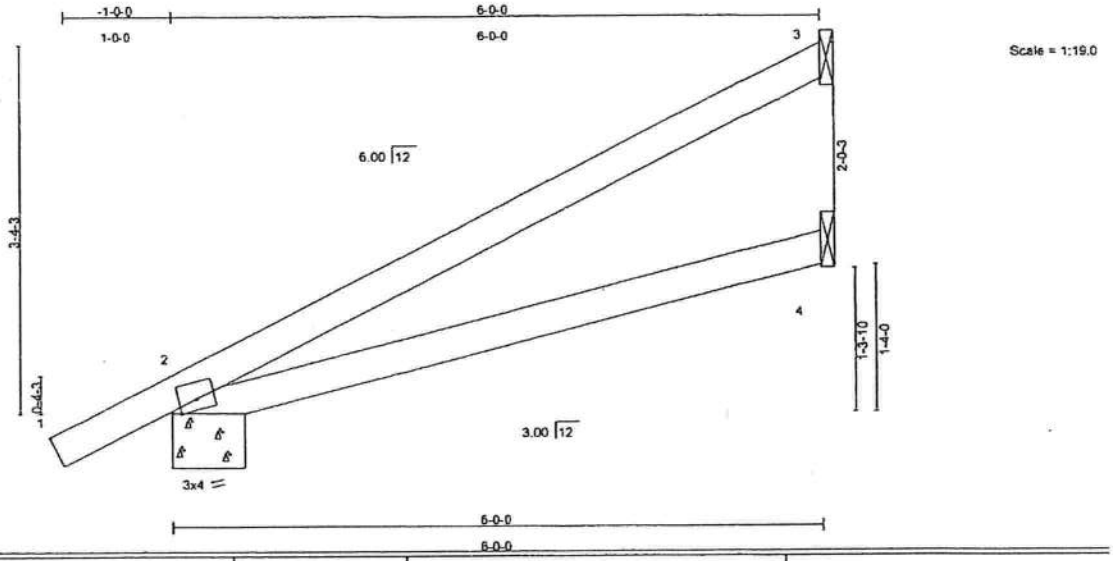

LOADING (psf)		SPACING 2-0-0	CSI	DEFL	In	(loc)	l/defl	L/d	PLATES	GRIP
TCLL 16.0		Plates Increase 1.25	TC 0.31	Vert(LL)	-0.05	2-4	>999	240	MT20	244/190
TCDL 7.0		Lumber Increase 1.25	BC 0.30	Vert(TL)	-0.13	2-4	>504	180		
BCLL 10.0	*	Rep Stress Incr YES	WB 0.00	Horz(TL)	-0.00	3	n/a	n/a		
BCDL 10.0		Code FBC2004/TPI2002	(Matrix)						Weight: 21 lb	

LUMBER
TOP CHORD 2 X 4 SYP No.2
BOT CHORD 2 X 4 SYP No.2

BRACING
TOP CHORD Structural wood sheathing directly applied or 6-0-0 oc purlins.
BOT CHORD Rigid ceiling directly applied or 10-0-0 oc bracing.

REACTIONS (lb/size) 3=121/Mechanical, 2=313/0-8-0, 4=112/Mechanical
Max Horz 2=155(LC 6)
Max Uplift3=-117(LC 6), 2=-114(LC 6)

FORCES (lb) - Maximum Compression/Maximum Tension
TOP CHORD 1-2=0/18, 2-3=-92/46
BOT CHORD 2-4=-22/22

NOTES (7)
1) Wind: ASCE 7-02; 125mph (3-second gust); h=25ft; TCDL=4.2psf; BCDL=6.0psf; Category II; Exp B; enclosed; MWFRS (low-rise) and C-C Interior(1) zone; Lumber DOL=1.33 plate grip DOL=1.33. This truss is designed for C-C for members and forces, and for MWFRS for reactions specified.
2) This truss has been designed for a 10.0 psf bottom chord live load nonconcurrent with any other live loads.
3) * This truss has been designed for a live load of 20.0psf on the bottom chord in all areas where a rectangle 3-6-0 tall by 1-0-0 wide will fit between the bottom chord and any other members.
4) Refer to girder(s) for truss to truss connections.
5) Bearing at joint(s) 2 considers parallel to grain value using ANSI/TPI 1 angle to grain formula. Building designer should verify capacity of bearing surface.
6) Provide mechanical connection (by others) of truss to bearing plate capable of withstanding 117 lb uplift at joint 3 and 114 lb uplift at joint 2.
7) Attach with (2) 16d Common Toe-Nails (0.162"x 3.5") at joints 3 and 4.

LOAD CASE(S) Standard

Marvin A. Strzyzewski, FL Lic. #43144
Truss Engineering Co.
818 Soundside Road
Edenton, NC 27932
FL COA #7239

January 23,2008

ENGINEERING BY TRENCO A MiTek Affiliate
818 Soundside Road
Edenton, NC 27932

Job	Truss	Truss Type	Qty	Ply	MONTGOMERY_FLORIDA_125
MONTGOMERY	JS1	SPECIAL	1	1	E4632366 Job Reference (optional)

Maronda Homes Inc., Sanford, FL

7.030 s Jan 3 2008 MiTek Industries, Inc. Wed Jan 23 13:37:27 2008 Page 1

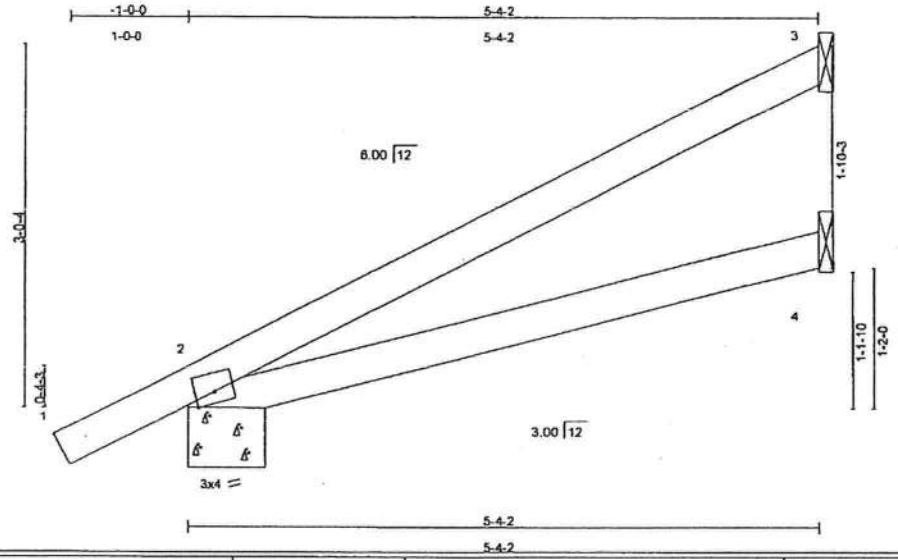

LOADING (psf)		SPACING 2-0-0	CSI		DEFL in (loc) l/defl L/d	PLATES GRIP
TCLL 18.0		Plates Increase 1.25	TC 0.23		Vert(LL) -0.03 2-4 >999 240	MT20 24-4/190
TCDL 7.0		Lumber Increase 1.25	BC 0.23		Vert(TL) -0.08 2-4 >732 180	
BCLL 10.0	*	Rep Stress Incr YES	WB 0.00		Horz(TL) -0.00 3 n/a n/a	
BCDL 10.0		Code FBC2004/TPI2002	(Matrix)			Weight: 19 lb

LUMBER
TOP CHORD 2 X 4 SYP No.2
BOT CHORD 2 X 4 SYP No.2

BRACING
TOP CHORD Structural wood sheathing directly applied or 5-4-2 oc purlins.
BOT CHORD Rigid ceiling directly applied or 10-0-0 oc bracing.

REACTIONS (lb/size) 3=105/Mechanical, 2=286/0-8-0, 4=99/Mechanical
Max Horz 2=141(LC 6)
Max Uplift3=-101(LC 6), 2=-112(LC 6)

FORCES (lb) - Maximum Compression/Maximum Tension
TOP CHORD 1-2=0/18, 2-3=-81/40
BOT CHORD 2-4=-19/19

NOTES (7)
1) Wind: ASCE 7-02; 125mph (3-second gust); h=25ft; TCDL=4.2psf; BCDL=6.0psf; Category II; Exp B; enclosed; MWFRS (low-rise) and C-C Interior(1) zone; Lumber DOL=1.33 plate grip DOL=1.33. This truss is designed for C-C for members and forces, and for MWFRS for reactions specified.
2) This truss has been designed for a 10.0 psf bottom chord live load nonconcurrent with any other live loads.
3) * This truss has been designed for a live load of 20.0psf on the bottom chord in all areas where a rectangle 3-6-0 tall by 1-0-0 wide will fit between the bottom chord and any other members.
4) Refer to girder(s) for truss to truss connections.
5) Bearing at joint(s) 2 considers parallel to grain value using ANSI/TPI 1 angle to grain formula. Building designer should verify capacity of bearing surface.
6) Provide mechanical connection (by others) of truss to bearing plate capable of withstanding 101 lb uplift at joint 3 and 112 lb uplift at joint 2.
7) Attach with (2) 16d Common Toe-Nails (0.162"x 3.5") at joints 3 and 4.

LOAD CASE(S) Standard

MARVIN A. STRZYZEWSKI
LICENSE
No. 43144
STATE OF FLORIDA
PROFESSIONAL ENGINEER

Marvin A. Strzyzewski, FL Lic. #43144
Truss Engineering Co.
818 Soundside Road
Edenton, NC 27932
FL COA #7239

January 23,2008

ENGINEERING BY TRENCO A MiTek Affiliate
818 Soundside Road
Edenton, NC 27932

Job	Truss	Truss Type	Qty	Ply	MONTGOMERY_FLORIDA_125	
MONTGOMERY	JS2	SPECIAL	1	1	Job Reference (optional)	E4632367

Maronda Homes Inc., Sanford, FL

7.030 s Jan 3 2008 MiTek Industries, Inc. Wed Jan 23 13:37:28 2008 Page 1

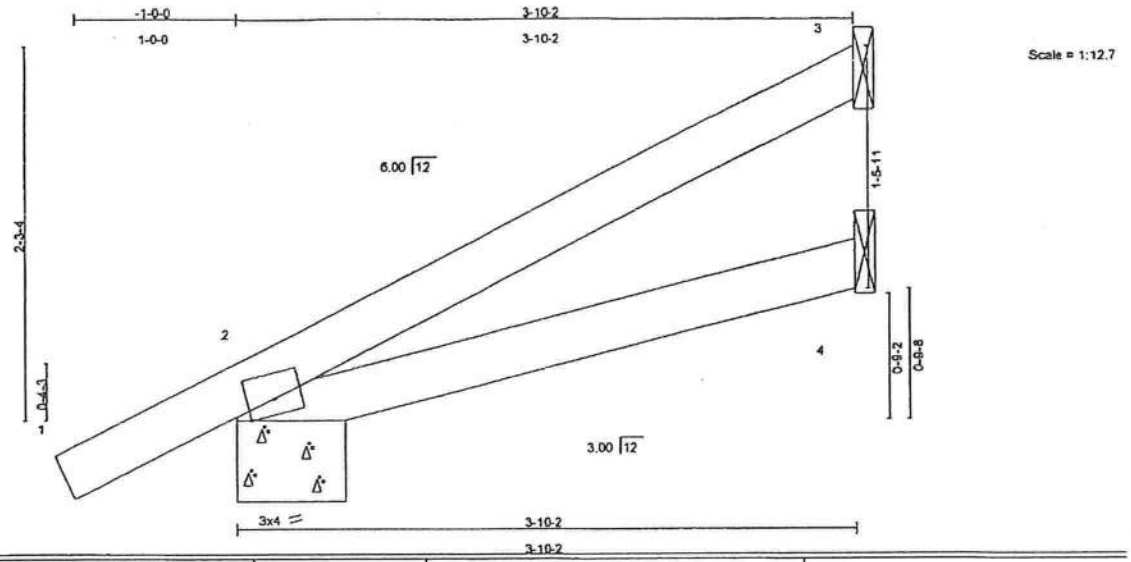

LOADING (psf)		SPACING 2-0-0	CSI		DEFL	in	(loc)	l/defl	L/d	PLATES	GRIP
TCLL 16.0		Plates Increase 1.25	TC	0.18	Vert(LL)	-0.01	2-4	>999	240	MT20	244/190
TCDL 7.0		Lumber Increase 1.25	BC	0.11	Vert(TL)	-0.02	2-4	>999	180		
BCLL 10.0	*	Rep Stress Incr YES	WB	0.00	Horz(TL)	-0.00	3	n/a	n/a		
BCDL 10.0		Code FBC2004/TPI2002	(Matrix)							Weight: 14 lb	

LUMBER
TOP CHORD 2 X 4 SYP No.2
BOT CHORD 2 X 4 SYP No.2

BRACING
TOP CHORD Structural wood sheathing directly applied or 3-10-2 oc purlins.
BOT CHORD Rigid ceiling directly applied or 10-0-0 oc bracing.

REACTIONS (lb/size) 3=66/Mechanical, 2=226/0-8-0, 4=69/Mechanical
Max Horz 2=110(LC 6)
Max Uplift3=-63(LC 6), 2=-109(LC 6)

FORCES (lb) - Maximum Compression/Maximum Tension
TOP CHORD 1-2=0/18, 2-3=-52/25
BOT CHORD 2-4=-13/13

NOTES (7)
1) Wind: ASCE 7-02; 125mph (3-second gust); h=25ft; TCDL=4.2psf; BCDL=6.0psf; Category II; Exp B; enclosed; MWFRS (low-rise) and C-C Interior(1) zone; Lumber DOL=1.33 plate grip DOL=1.33. This truss is designed for C-C for members and forces, and for MWFRS for reactions specified.
2) This truss has been designed for a 10.0 psf bottom chord live load nonconcurrent with any other live loads.
3) * This truss has been designed for a live load of 20.0psf on the bottom chord in all areas where a rectangle 3-6-0 tall by 1-0-0 wide will fit between the bottom chord and any other members.
4) Refer to girder(s) for truss to truss connections.
5) Bearing at joint(s) 2 considers parallel to grain value using ANSI/TPI 1 angle to grain formula. Building designer should verify capacity of bearing surface.
6) Provide mechanical connection (by others) of truss to bearing plate capable of withstanding 63 lb uplift at joint 3 and 109 lb uplift at joint 2.
7) Attach with (2) 16d Common Toe-Nails (0.162"x 3.5") at joints 3 and 4.

LOAD CASE(S) Standard

MARVIN A. STRZYZEWSKI
LICENSE
No. 43144
STATE OF
FLORIDA
PROFESSIONAL ENGINEER

Marvin A. Strzyzewski, FL Lic. #43144
Truss Engineering Co.
818 Soundside Road
Edenton, NC 27932
FL COA #7239

January 23,2008

ENGINEERING BY TRENCO
A MiTek Affiliate
818 Soundside Road
Edenton, NC 27932

Job	Truss	Truss Type	Qty	Ply	MONTGOMERY_FLORIDA_125	
MONTGOMERY	JS3	SPECIAL	1	1	Job Reference (optional)	E4632368

Maronda Homes Inc., Sanford, FL

7.030 s Jan 3 2008 MiTek Industries, Inc. Wed Jan 23 13:37:28 2008 Page 1

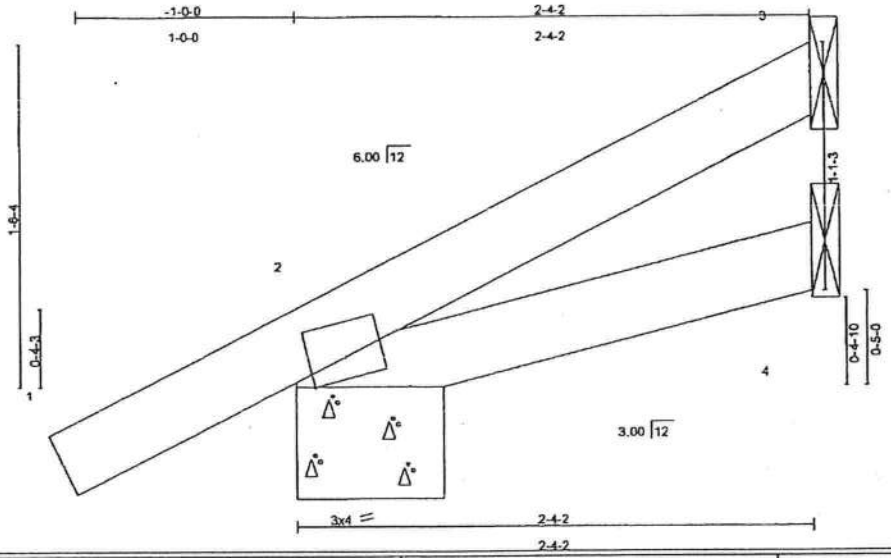

LOADING (psf)		SPACING 2-0-0	CSI		DEFL	in	(loc)	l/defl	L/d	PLATES	GRIP
TCLL	16.0	Plates Increase 1.25	TC	0.18	Vert(LL)	-0.00	2	>999	240	MT20	244/190
TCDL	7.0	Lumber Increase 1.25	BC	0.04	Vert(TL)	-0.00	2-4	>999	180		
BCLL	10.0 *	Rep Stress Incr YES	WB	0.00	Horz(TL)	-0.00	3	n/a	n/a		
BCDL	10.0	Code FBC2004/TPI2002	(Matrix)							Weight: 9 lb	

LUMBER
TOP CHORD 2 X 4 SYP No.2
BOT CHORD 2 X 4 SYP No.2

BRACING
TOP CHORD Structural wood sheathing directly applied or 2-4-2 oc purlins.
BOT CHORD Rigid ceiling directly applied or 10-0-0 oc bracing.

REACTIONS (lb/size) 3=22/Mechanical, 2=171/0-8-0, 4=39/Mechanical
Max Horz 2=79(LC 6)
Max Uplift3=-26(LC 5), 2=-115(LC 6)

FORCES (lb) - Maximum Compression/Maximum Tension
TOP CHORD 1-2=0/18, 2-3=-37/7
BOT CHORD 2-4=-8/8

NOTES (7)
1) Wind: ASCE 7-02; 125mph (3-second gust); h=25ft; TCDL=4.2psf; BCDL=6.0psf; Category II; Exp B; enclosed; MWFRS (low-rise) and C-C Interior(1) zone; Lumber DOL=1.33 plate grip DOL=1.33. This truss is designed for C-C for members and forces, and for MWFRS for reactions specified.
2) This truss has been designed for a 10.0 psf bottom chord live load nonconcurrent with any other live loads.
3) * This truss has been designed for a live load of 20.0psf on the bottom chord in all areas where a rectangle 3-6-0 tall by 1-0-0 wide will fit between the bottom chord and any other members.
4) Refer to girder(s) for truss to truss connections.
5) Bearing at joint(s) 2 considers parallel to grain value using ANSI/TPI 1 angle to grain formula. Building designer should verify capacity of bearing surface.
6) Provide mechanical connection (by others) of truss to bearing plate capable of withstanding 26 lb uplift at joint 3 and 115 lb uplift at joint 2.
7) Attach with (2) 16d Common Toe-Nails (0.162"x 3.5") at joints 3 and 4.

LOAD CASE(S) Standard

MARVIN A. STRZYZEWSKI
LICENSE
No 43144
STATE OF FLORIDA
PROFESSIONAL ENGINEER

Marvin A. Strzyzewski, FL Lic. #43144
Truss Engineering Co.
818 Soundside Road
Edenton, NC 27932
FL COA #7239

January 23,2008

ENGINEERING BY TRENCO
A MiTek Affiliate
818 Soundside Road
Edenton, NC 27932

Job	Truss	Truss Type	Qty	Ply	MONTGOMERY_FLORIDA_125
MONTGOMERY	JS4	SPECIAL	1	1	E4632369 Job Reference (optional)

Maronda Homes Inc., Sanford, FL

7.030 s Jan 3 2008 MiTek Industries, Inc. Wed Jan 23 13:37:28 2008 Page 1

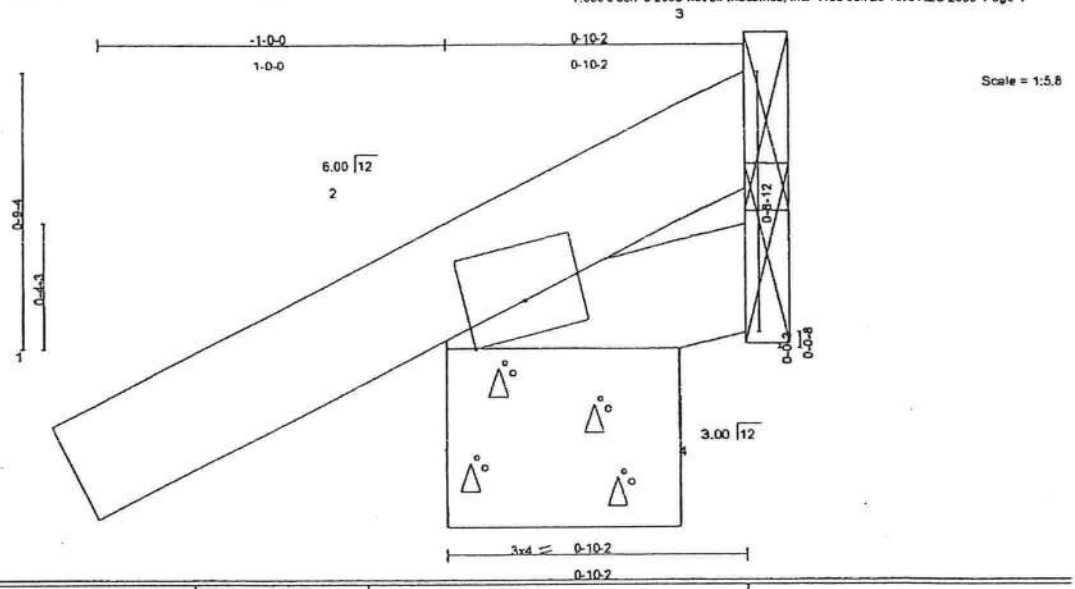

LOADING (psf)		SPACING 2-0-0	CSI		DEFL	In	(loc)	l/defl	L/d	PLATES	GRIP
TCLL	16.0	Plates Increase 1.25	TC	0.12	Vert(LL)	-0.00	2	>999	240	MT20	244/190
TCDL	7.0	Lumber Increase 1.25	BC	0.01	Vert(TL)	-0.00	2	>999	180		
BCLL	10.0 *	Rep Stress Incr YES	WB	0.00	Horz(TL)	0.00	3	n/a	n/a		
BCDL	10.0	Code FBC2004/TPI2002	(Matrix)							Weight: 5 lb	

LUMBER
TOP CHORD 2 X 4 SYP No.2
BOT CHORD 2 X 4 SYP No.2

BRACING
TOP CHORD Structural wood sheathing directly applied or 0-10-2 oc purlins.
BOT CHORD Rigid ceiling directly applied or 10-0-0 oc bracing.

REACTIONS (lb/size) 2=123/0-8-0, 4=15/Mechanical, 3=-21/Mechanical
Max Horz 2=48(LC 6)
Max Uplift2=-115(LC 6), 3=-21(LC 1)
Max Grav2=123(LC 1), 4=15(LC 1), 3=30(LC 6)

FORCES (lb) - Maximum Compression/Maximum Tension
TOP CHORD 1-2=0/15, 2-3=-35/37
BOT CHORD 2-4=-3/3

NOTES (7)
1) Wind: ASCE 7-02; 125mph (3-second gust); h=25ft; TCDL=4.2psf; BCDL=6.0psf; Category II; Exp B; enclosed; MWFRS (low-rise) and C-C Interior(1) zone; Lumber DOL=1.33 plate grip DOL=1.33. This truss is designed for C-C for members and forces, and for MWFRS for reactions specified.
2) This truss has been designed for a 10.0 psf bottom chord live load nonconcurrent with any other live loads.
3) * This truss has been designed for a live load of 20.0psf on the bottom chord in all areas where a rectangle 3-6-0 tall by 1-0-0 wide will fit between the bottom chord and any other members.
4) Refer to girder(s) for truss to truss connections.
5) Bearing at joint(s) 2 considers parallel to grain value using ANSI/TPI 1 angle to grain formula. Building designer should verify capacity of bearing surface.
6) Provide mechanical connection (by others) of truss to bearing plate capable of withstanding 115 lb uplift at joint 2 and 21 lb uplift at joint 3.
7) Attach with (2) 16d Common Toe-Nails (0.162"x 3.5") at joints 3 and 4.

LOAD CASE(S) Standard

MARVIN A. STRZYZEWSKI
LICENSE
No. 43144
STATE OF
FLORIDA
PROFESSIONAL ENGINEER

Marvin A. Strzyzewski, FL Lic. #43144
Truss Engineering Co.
818 Soundside Road
Edenton, NC 27932
FL COA #7239

January 23,2008

ENGINEERING BY TRENCO A MiTek Affiliate
818 Soundside Road
Edenton, NC 27932

Job	Truss	Truss Type	Qty	Ply	MONTGOMERY_FLORIDA_125
MONTGOMERY	JS5	SPECIAL	1	1	E4632370 Job Reference (optional)

Maronda Homes Inc., Sanford, FL

7.030 s Jan 3 2008 MiTek Industries, Inc. Wed Jan 23 13:37:29 2008 Page 1

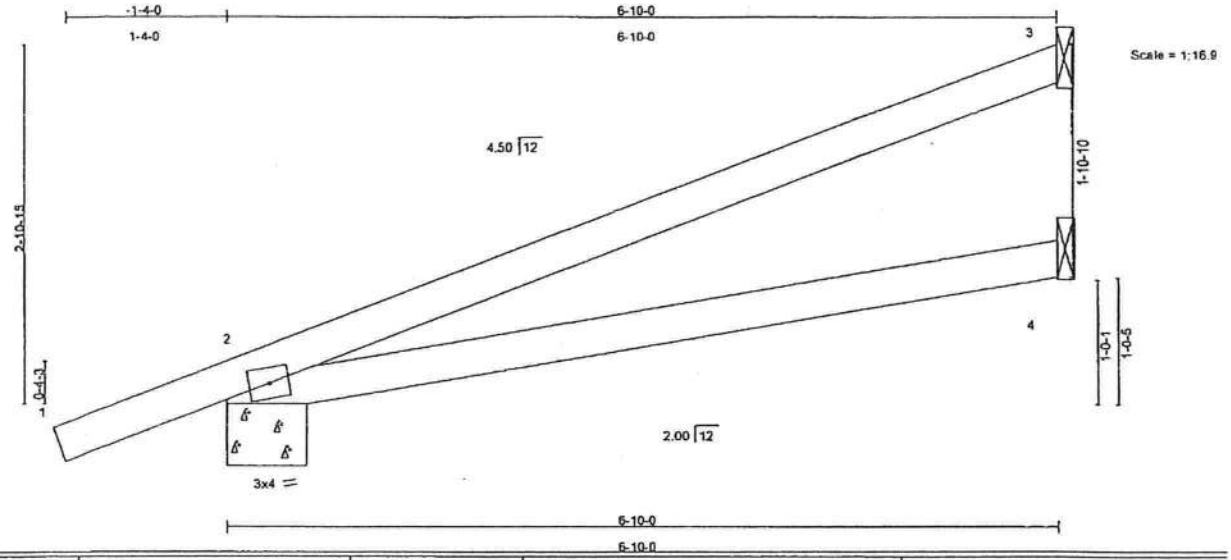

LOADING (psf)		SPACING 2-0-0		CSI		DEFL	in	(loc)	l/defl	L/d	PLATES	GRIP
TCLL	16.0	Plates Increase	1.25	TC	0.37	Vert(LL)	-0.09	2-4	>845	240	MT20	244/190
TCDL	7.0	Lumber Increase	1.25	BC	0.39	Vert(TL)	-0.23	2-4	>338	180		
BCLL	10.0 *	Rep Stress Incr	YES	WB	0.00	Horz(TL)	-0.00	3	n/a	n/a		
BCDL	10.0	Code FBC2004/TPI2002		(Matrix)							Weight: 23 lb	

LUMBER
TOP CHORD 2 X 4 SYP No.2
BOT CHORD 2 X 4 SYP No.2

BRACING
TOP CHORD Structural wood sheathing directly applied or 6-0-0 oc purlins.
BOT CHORD Rigid ceiling directly applied or 10-0-0 oc bracing.

REACTIONS (lb/size) 3=138/Mechanical, 2=366/0-8-0, 4=129/Mechanical
Max Horz 2=137(LC 6)
Max Uplift3=-115(LC 6), 2=-157(LC 6)

FORCES (lb) - Maximum Compression/Maximum Tension
TOP CHORD 1-2=0/19, 2-3=-73/41
BOT CHORD 2-4=-17/17

NOTES (7)
1) Wind: ASCE 7-02; 125mph (3-second gust); h=25ft; TCDL=4.2psf; BCDL=6.0psf; Category II; Exp B; enclosed; MWFRS (low-rise) and C-C Interior(1) zone; Lumber DOL=1.33 plate grip DOL=1.33. This truss is designed for C-C for members and forces, and for MWFRS for reactions specified.
2) This truss has been designed for a 10.0 psf bottom chord live load nonconcurrent with any other live loads.
3) * This truss has been designed for a live load of 20.0psf on the bottom chord in all areas where a rectangle 3-6-0 tall by 1-0-0 wide will fit between the bottom chord and any other members.
4) Refer to girder(s) for truss to truss connections.
5) Bearing at joint(s) 2 considers parallel to grain value using ANSI/TPI 1 angle to grain formula. Building designer should verify capacity of bearing surface.
6) Provide mechanical connection (by others) of truss to bearing plate capable of withstanding 115 lb uplift at joint 3 and 157 lb uplift at joint 2.
7) Attach with (2) 16d Common Toe-Nails (0.162"x 3.5") at joints 3 and 4.

LOAD CASE(S) Standard

MARVIN A. STRZYZEWSKI
LICENSE
No. 43144
STATE OF
FLORIDA
PROFESSIONAL ENGINEER

Marvin A. Strzyzewski, FL Lic. #43144
Truss Engineering Co.
818 Soundside Road
Edenton, NC 27932
FL COA #7239

January 23,2008

ENGINEERING BY TRENCO
A MiTek Affiliate
818 Soundside Road
Edenton, NC 27932

Job	Truss	Truss Type	Qty	Ply	MONTGOMERY_FLORIDA_125
MONTGOMERY	JS6	SPECIAL	1	1	E4632371 Job Reference (optional)

Maronda Homes Inc., Sanford, FL

7.030 s Jan 3 2008 MiTek Industries, Inc. Wed Jan 23 13:37:29 2008 Page 1

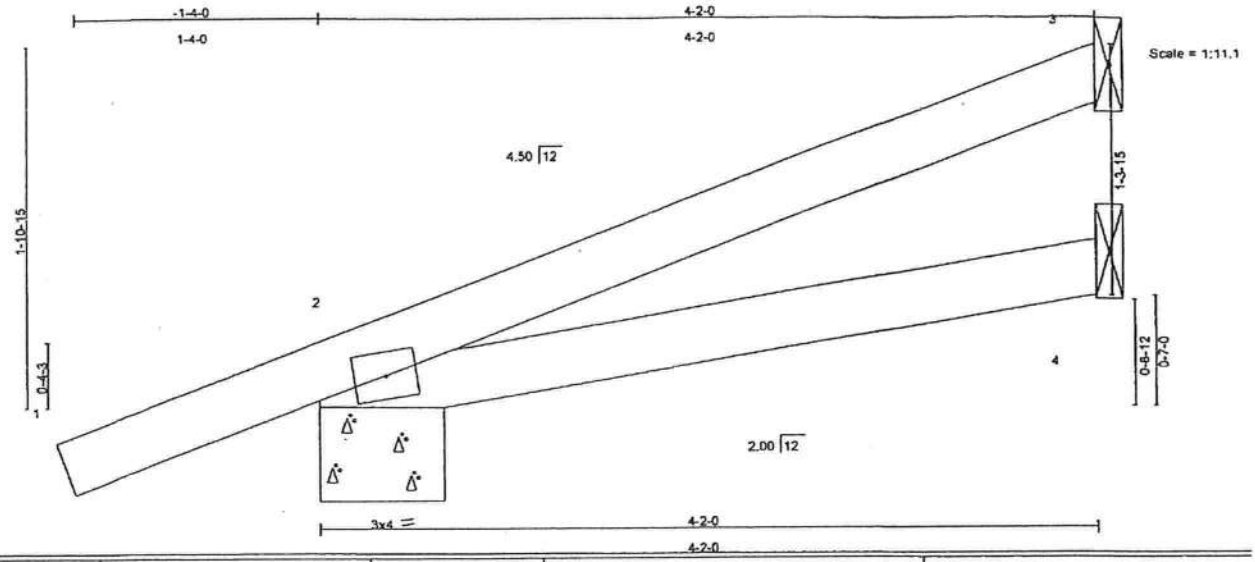

LOADING (psf)		SPACING 2-0-0	CSI	DEFL in (loc) l/defl L/d	PLATES GRIP
TCLL 16.0		Plates Increase 1.25	TC 0.26	Vert(LL) -0.01 2-4 >999 240	MT20 244/190
TCDL 7.0		Lumber Increase 1.25	BC 0.14	Vert(TL) -0.03 2-4 >999 180	
BCLL 10.0	*	Rep Stress Incr YES	WB 0.00	Horz(TL) -0.00 3 n/a n/a	
BCDL 10.0		Code FBC2004/TPI2002	(Matrix)		Weight: 15 lb

LUMBER
TOP CHORD 2 X 4 SYP No.2
BOT CHORD 2 X 4 SYP No.2

BRACING
TOP CHORD Structural wood sheathing directly applied or 4-2-0 oc purlins.
BOT CHORD Rigid ceiling directly applied or 10-0-0 oc bracing.

REACTIONS (lb/size) 3=69/Mechanical, 2=259/0-8-0, 4=75/Mechanical
Max Horz 2=95(LC 6)
Max Uplift3=-53(LC 6), 2=-146(LC 6)

FORCES (lb) - Maximum Compression/Maximum Tension
TOP CHORD 1-2=0/19, 2-3=-42/21
BOT CHORD 2-4=-10/10

NOTES (7)
1) Wind: ASCE 7-02; 125mph (3-second gust); h=25ft; TCDL=4.2psf; BCDL=6.0psf; Category II; Exp B; enclosed; MWFRS (low-rise) and C-C Interior(1) zone; Lumber DOL=1.33 plate grip DOL=1.33. This truss is designed for C-C for members and forces, and for MWFRS for reactions specified.
2) This truss has been designed for a 10.0 psf bottom chord live load nonconcurrent with any other live loads.
3) * This truss has been designed for a live load of 20.0psf on the bottom chord in all areas where a rectangle 3-6-0 tall by 1-0-0 wide will fit between the bottom chord and any other members.
4) Refer to girder(s) for truss to truss connections.
5) Bearing at joint(s) 2 considers parallel to grain value using ANSI/TPI 1 angle to grain formula. Building designer should verify capacity of bearing surface.
6) Provide mechanical connection (by others) of truss to bearing plate capable of withstanding 53 lb uplift at joint 3 and 146 lb uplift at joint 2.
7) Attach with (2) 16d Common Toe-Nails (0.162"x 3.5") at joints 3 and 4.

LOAD CASE(S) Standard

MARVIN A. STRZYZEWSKI
LICENSE
No. 43144
STATE OF
FLORIDA
PROFESSIONAL ENGINEER

Marvin A. Strzyzewski, FL Lic. #43144
Truss Engineering Co.
818 Soundside Road
Edenton, NC 27932
FL COA #7239

January 23,2008

ENGINEERING BY TRENCO
A MiTek Affiliate
818 Soundside Road
Edenton, NC 27932

Job	Truss	Truss Type	Qty	Ply	MONTGOMERY_FLORIDA_125
MONTGOMERY	JS7	SPECIAL	1	1	E4632372 Job Reference (optional)

Maronda Homes Inc., Sanford, FL

7.030 s Jan 3 2008 MiTek Industries, Inc. Wed Jan 23 13:37:29 2008 Page 1

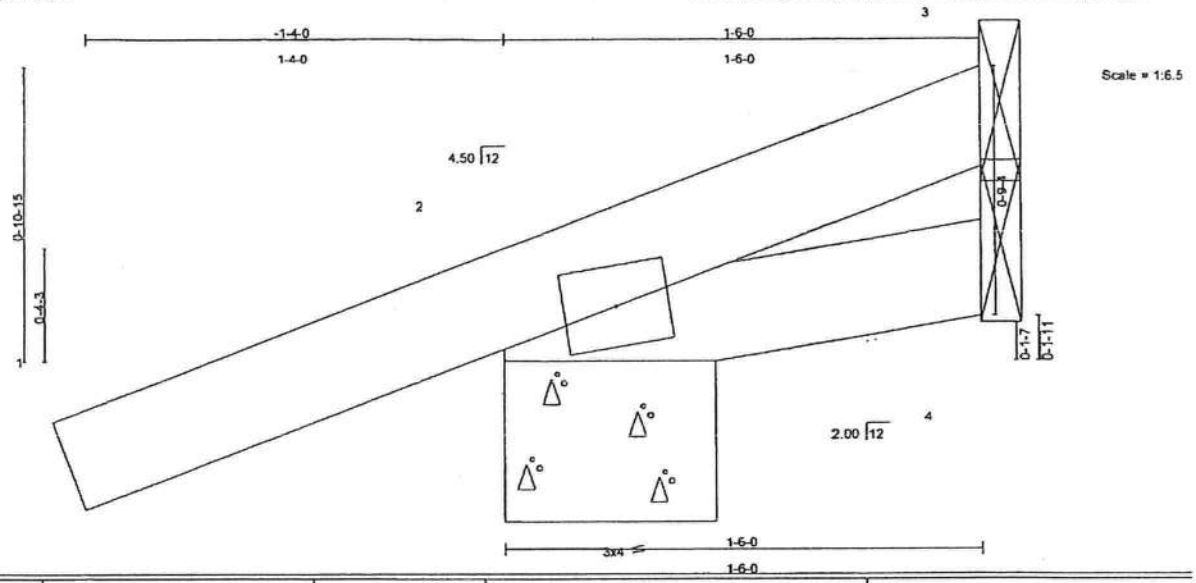

LOADING (psf)			SPACING 2-0-0	CSI		DEFL	in	(loc)	l/defl	L/d	PLATES	GRIP
TCLL	16.0		Plates Increase 1.25	TC	0.19	Vert(LL)	-0.00	2	>999	240	MT20	244/190
TCDL	7.0		Lumber Increase 1.25	BC	0.02	Vert(TL)	-0.00	2	>999	180		
BCLL	10.0	*	Rep Stress Incr YES	WB	0.00	Horz(TL)	-0.00	3	n/a	n/a		
BCDL	10.0		Code FBC2004/TPI2002	(Matrix)							Weight: 7 lb	

LUMBER
TOP CHORD 2 X 4 SYP No.2
BOT CHORD 2 X 4 SYP No.2

BRACING
TOP CHORD Structural wood sheathing directly applied or 1-6-0 oc purlins.
BOT CHORD Rigid ceiling directly applied or 10-0-0 oc bracing.

REACTIONS (lb/size) 2=162/0-8-0, 4=28/Mechanical, 3=-1/Mechanical
Max Horz 2=54(LC 6)
Max Uplift2=-136(LC 6), 3=-10(LC 5)
Max Grav2=162(LC 1), 4=28(LC 1), 3=15(LC 4)

FORCES (lb) - Maximum Compression/Maximum Tension
TOP CHORD 1-2=0/17, 2-3=-30/16
BOT CHORD 2-4=-4/4

NOTES (7)
1) Wind: ASCE 7-02; 125mph (3-second gust); h=25ft; TCDL=4.2psf; BCDL=6.0psf; Category II; Exp B; enclosed; MWFRS (low-rise) and C-C Interior(1) zone; Lumber DOL=1.33 plate grip DOL=1.33. This truss is designed for C-C for members and forces, and for MWFRS for reactions specified.
2) This truss has been designed for a 10.0 psf bottom chord live load nonconcurrent with any other live loads.
3) * This truss has been designed for a live load of 20.0psf on the bottom chord in all areas where a rectangle 3-6-0 tall by 1-0-0 wide will fit between the bottom chord and any other members.
4) Refer to girder(s) for truss to truss connections.
5) Bearing at joint(s) 2 considers parallel to grain value using ANSI/TPI 1 angle to grain formula. Building designer should verify capacity of bearing surface.
6) Provide mechanical connection (by others) of truss to bearing plate capable of withstanding 136 lb uplift at joint 2 and 10 lb uplift at joint 3.
7) Attach with (2) 16d Common Toe-Nails (0.162"x 3.5") at joints 3 and 4.

LOAD CASE(S) Standard

MARVIN A. STRZYZEWSKI
LICENSE
No. 43144
STATE OF
FLORIDA
PROFESSIONAL ENGINEER

Marvin A. Strzyzewski, FL Lic. #43144
Truss Engineering Co.
818 Soundside Road
Edenton, NC 27932
FL COA #7239

January 23,2008

ENGINEERING BY TRENCO
A MiTek Affiliate
818 Soundside Road
Edenton, NC 27932

Job	Truss	Truss Type	Qty	Ply	MONTGOMERY_FLORIDA_125
MONTGOMERY	JSGRD1	SPECIAL	1	1	E4632373 Job Reference (optional)

Maronda Homes Inc., Sanford, FL — 7.030 s Jan 3 2008 MiTek Industries, Inc. Wed Jan 23 13:37:30 2008 Page 1

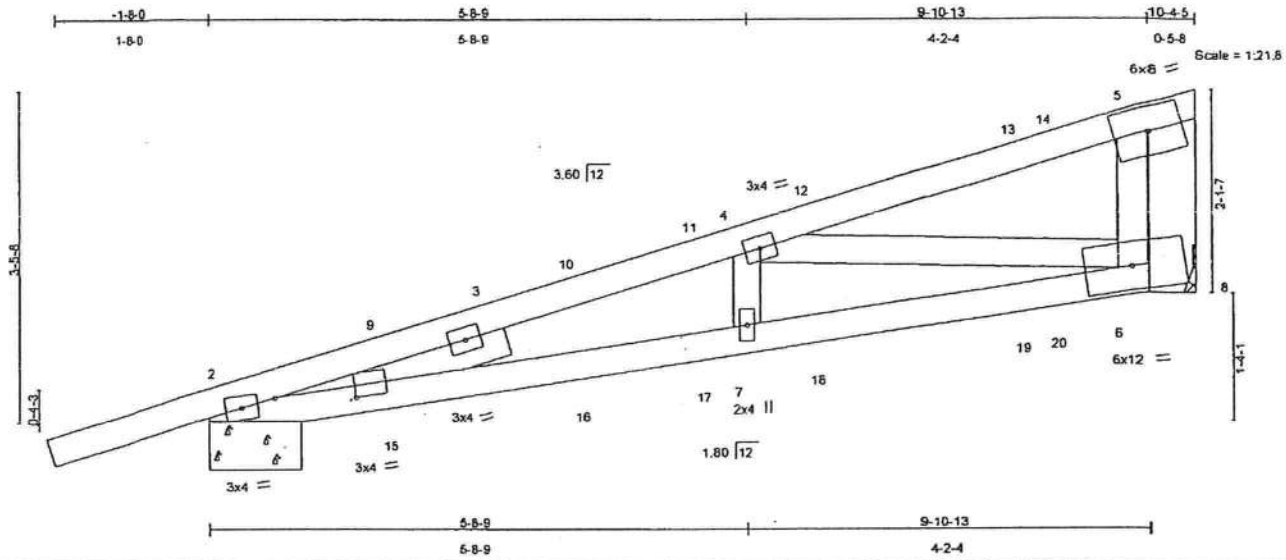

Plate Offsets (X,Y): [2:0-10-5,0-1-8]

LOADING (psf)		SPACING 2-0-0	CSI		DEFL	in	(loc)	l/defl	L/d	PLATES	GRIP
TCLL	16.0	Plates Increase 1.25	TC	0.61	Vert(LL)	0.07	7	>999	240	MT20	244/190
TCDL	7.0	Lumber Increase 1.25	BC	0.41	Vert(TL)	-0.09	2-7	>999	180		
BCLL	10.0 *	Rep Stress Incr NO	WB	0.26	Horz(TL)	0.02	8	n/a	n/a		
BCDL	10.0	Code FBC2004/TPI2002	(Matrix)							Weight: 51 lb	

LUMBER
TOP CHORD 2 X 4 SYP No.2
BOT CHORD 2 X 4 SYP No.2
WEBS 2 X 4 SYP No.3 *Except*
5-6 2 X 6 SYP No.2
SLIDER Left 2 X 4 SYP No.2 2-6-8

BRACING
TOP CHORD Structural wood sheathing directly applied or 5-8-7 oc purlins, except end verticals.
BOT CHORD Rigid ceiling directly applied or 6-3-14 oc bracing.

REACTIONS (lb/size) 2=540/0-11-11, 8=573/Mechanical
Max Horz 2=151(LC 3)
Max Uplift2=-375(LC 3), 8=-505(LC 3)

FORCES (lb) - Maximum Compression/Maximum Tension
TOP CHORD 1-2=0/17, 2-9=-1260/917, 3-9=-1241/916, 3-10=-1224/920, 10-11=-1214/913, 4-11=-1214/890, 4-12=-357/331, 12-13=-344/306, 13-14=-310/256, 5-14=-293/214, 5-6=-201/472
BOT CHORD 2-15=-958/1163, 15-16=-957/1176, 16-17=-951/1187, 7-17=-950/1195, 7-18=-958/1161, 18-19=-957/1171, 19-20=-954/1185, 6-20=-953/1197
WEBS 4-7=0/287, 4-6=-842/637, 5-8=-610/562, 6-8=-269/215

NOTES
1) Wind: ASCE 7-02; 125mph (3-second gust); h=25ft; TCDL=4.2psf; BCDL=6.0psf; Category II; Exp B; enclosed; MWFRS (low-rise); Lumber DOL=1.33 plate grip DOL=1.33.
2) This truss has been designed for a 10.0 psf bottom chord live load nonconcurrent with any other live loads.
3) * This truss has been designed for a live load of 20.0psf on the bottom chord in all areas where a rectangle 3-6-0 tall by 1-0-0 wide will fit between the bottom chord and any other members.
4) Refer to girder(s) for truss to truss connections.
5) Bearing at joint(s) 2 considers parallel to grain value using ANSI/TPI 1 angle to grain formula. Building designer should verify capacity of bearing surface.
6) Provide mechanical connection (by others) of truss to bearing plate capable of withstanding 375 lb uplift at joint 2 and 505 lb uplift at joint 8.
7) Hanger(s) or other connection device(s) shall be provided sufficient to support concentrated load(s) 56 lb up at 4-0-3, 7 lb down and 86 lb up at 5-3-12, 6 lb down and 99 lb up at 6-6-3, 60 lb down and 178 lb up at 8-7-12, and 27 lb down and 156 lb up at 9-0-3, and 11 lb up at 1-11-12 on top chord, and 12 lb up at 1-11-12, 1 lb up at 4-0-3, 35 lb down at 5-3-12, 29 lb down at 6-6-3, and 89 lb down at 8-7-12, and 59 lb down at 9-0-3 on bottom chord. The design/selection of such connection device(s) is the responsibility of others.
8) In the LOAD CASE(S) section, loads applied to the face of the truss are noted as front (F) or back (B).

LOAD CASE(S) Standard

Continued on page 2

MARVIN A. STRZYZEWSKI LICENSE No 43144 STATE OF FLORIDA PROFESSIONAL ENGINEER

Marvin A. Strzyzewski, FL Lic. #43144
Truss Engineering Co.
818 Soundside Road
Edenton, NC 27932
FL COA #7239

January 23,2008

ENGINEERING BY TRENCO A MiTek Affiliate
818 Soundside Road
Edenton, NC 27932

LOAD CASE(S) Standard

1) Regular: Lumber Increase=1.25, Plate Increase=1.25

Uniform Loads (plf)

Vert: 1-5=-46, 2-6=-40

Concentrated Loads (lb)

Vert: 10=56(F) 11=9(B) 12=12(F) 13=-60(B) 14=-27(F) 15=12(B) 16=1(F) 17=-35(B) 18=-29(F) 19=-89(B) 20=-59(F)

Job	Truss	Truss Type	Qty	Ply	MONTGOMERY_FLORIDA_125
MONTGOMERY	MHSGRD	SPECIAL	1	3	Job Reference (optional)

E4632374

Maronda Homes Inc., Sanford, FL

7.030 s Jan 3 2008 MiTek Industries, Inc. Wed Jan 23 13:37:31 2008 Page 1

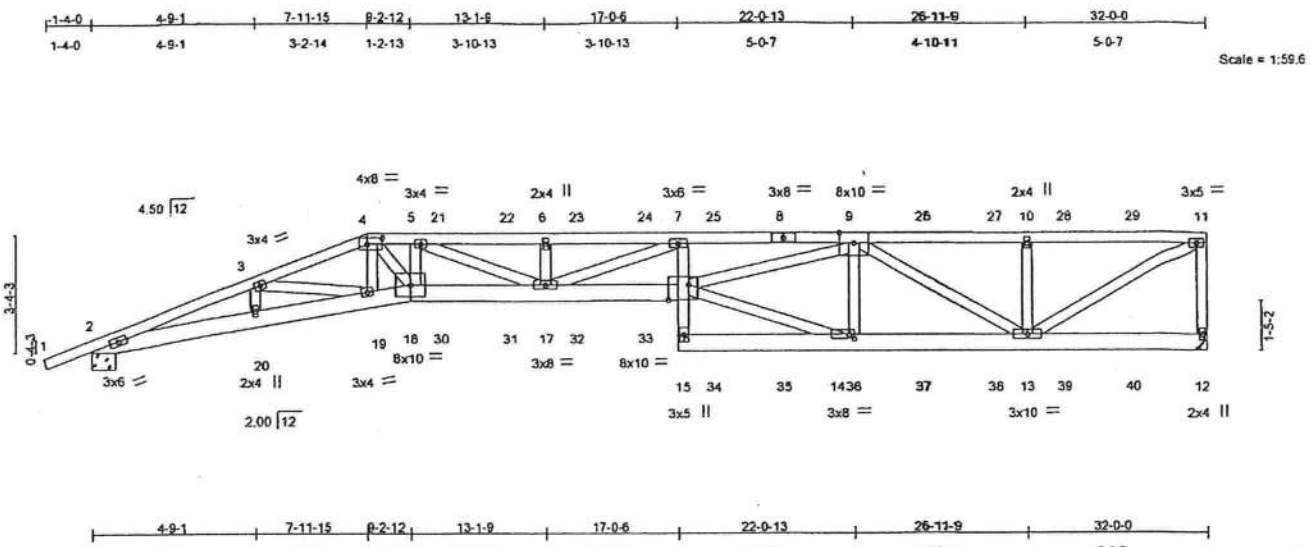

4-9-1 7-11-15 9-2-12 13-1-9 17-0-6 22-0-13 26-11-9 32-0-0
4-9-1 3-2-14 1-2-13 3-10-13 3-10-13 5-0-7 4-10-11 5-0-7

Plate Offsets (X,Y): [4:0-5-4,0-2-0], [14:0-1-12,0-1-8], [16:0-7-0,0-5-4]

LOADING (psf)			SPACING	2-0-0	CSI		DEFL	in	(loc)	l/defl	L/d	PLATES	GRIP
TCLL	16.0		Plates Increase	1.25	TC	0.52	Vert(LL)	0.62	16-17	>605	240	MT20	244/190
TCDL	7.0		Lumber Increase	1.25	BC	0.93	Vert(TL)	-1.04	16-17	>363	180		
BCLL	10.0	*	Rep Stress Incr	NO	WB	0.88	Horz(TL)	0.34	12	n/a	n/a		
BCDL	10.0		Code FBC2004/TPI2002		(Matrix)							Weight: 588 lb	

LUMBER

TOP CHORD 2 X 4 SYP No.2
BOT CHORD 2 X 6 SYP No.2 *Except*
7-15 2 X 4 SYP No.1D
WEBS 2 X 4 SYP No.3

BRACING

TOP CHORD Structural wood sheathing directly applied or 5-10-10 oc purlins, except end verticals.
BOT CHORD Rigid ceiling directly applied or 10-0-0 oc bracing.

REACTIONS (lb/size) 12=2568/Mechanical, 2=2659/0-8-0
Max Horz 2=158(LC 7)
Max Uplift12=-1244(LC 7), 2=-1376(LC 7)

FORCES (lb) - Maximum Compression/Maximum Tension

TOP CHORD 1-2=0/22, 2-3=-9729/4973, 3-4=-10520/5640, 4-5=-11872/6355, 5-21=-13502/7111, 21-22=-13502/7111, 6-22=-13502/7111, 6-23=-13502/7111, 23-24=-13502/7111, 7-24=-13502/7111, 7-25=-13819/7150, 8-25=-13819/7150, 8-9=-13819/7150, 9-26=-3723/1851, 26-27=-3723/1851, 10-27=-3723/1851, 10-28=-3723/1851, 28-29=-3723/1851, 11-29=-3723/1851, 11-12=-2377/1194

BOT CHORD 2-20=-4729/9067, 19-20=-4768/9131, 18-19=-5400/10032, 18-30=-6404/11948, 30-31=-6404/11948, 17-31=-6404/11947, 17-32=-7496/14435, 32-33=-7495/14439, 16-33=-7495/14442, 15-16=-121/298, 7-16=0/131, 15-34=-685/1310, 34-35=-685/1310, 14-35=-685/1310, 14-36=-3115/6152, 36-37=-3115/6152, 37-38=-3115/6152, 13-38=-3115/6152, 13-39=-61/118, 39-40=-61/118, 12-40=-61/118

WEBS 3-20=-269/291, 3-19=-686/892, 4-19=-497/1001, 4-18=-1612/3107, 5-18=-801/543, 5-17=-799/1681, 6-17=-296/383, 7-17=-999/437, 14-16=-2441/4895, 9-16=-4335/8219, 9-14=-1372/777, 9-13=-2841/1478, 10-13=-342/233, 11-13=-2095/4218

NOTES

1) 3-ply truss to be connected together with 10d (0.131"x3") nails as follows:
Top chords connected as follows: 2 X 4 - 1 row at 0-9-0 oc.
Bottom chords connected as follows: 2 X 6 - 2 rows at 0-9-0 oc, 2 X 4 - 1 row at 0-9-0 oc.
Webs connected as follows: 2 X 4 - 1 row at 0-9-0 oc.
2) All loads are considered equally applied to all plies, except if noted as front (F) or back (B) face in the LOAD CASE(S) section. Ply to ply connections have been provided to distribute only loads noted as (F) or (B), unless otherwise indicated.
3) Wind: ASCE 7-02; 125mph (3-second gust); h=25ft; TCDL=4.2psf; BCDL=6.0psf; Category II; Exp B; enclosed; MWFRS (low-rise); Lumber DOL=1.33 plate grip DOL=1.33.
4) Provide adequate drainage to prevent water ponding.
5) This truss has been designed for a 10.0 psf bottom chord live load nonconcurrent with any other live loads.
6) * This truss has been designed for a live load of 20.0psf on the bottom chord in all areas where a rectangle 3-6-0 tall by 1-0-0 wide will fit between the bottom chord and any other members.
7) Refer to girder(s) for truss to truss connections.
8) Bearing at joint(s) 2 considers parallel to grain value using ANSI/TPI 1 angle to grain formula. Building designer should verify capacity of bearing surface.

Continued on page 2

MARVIN A. STRZYZEWSKI LICENSE No 43144 STATE OF FLORIDA PROFESSIONAL ENGINEER

Marvin A. Strzyzewski, FL Lic. #43144
Truss Engineering Co.
818 Soundside Road
Edenton, NC 27932
FL COA #7239

January 23,2008

ENGINEERING BY TRENCO A MiTek Affiliate
818 Soundside Road
Edenton, NC 27932

NOTES

9) Provide mechanical connection (by others) of truss to bearing plate capable of withstanding 1244 lb uplift at joint 12 and 1376 lb uplift at joint 2.

10) Hanger(s) or other connection device(s) shall be provided sufficient to support concentrated load(s) 75 lb down and 162 lb up at 7-11-15, 75 lb down and 162 lb up at 10-0-11, 75 lb down and 162 lb up at 12-0-11, 75 lb down and 162 lb up at 14-0-11, 75 lb down and 162 lb up at 16-0-11, 69 lb down and 69 lb up at 18-0-11, 69 lb down and 69 lb up at 20-0-11, 69 lb down and 69 lb up at 22-0-11, 69 lb down and 69 lb up at 24-0-11, 69 lb down and 69 lb up at 26-0-11, and 69 lb down and 69 lb up at 28-0-11, and 69 lb down and 69 lb up at 30-0-11 on top chord, and 745 lb down and 454 lb up at 7-11-15, 72 lb down at 10-0-11, 72 lb down at 12-0-11, 72 lb down at 14-0-11, 72 lb down at 16-0-11, 78 lb down and 68 lb up at 18-0-11, 78 lb down and 68 lb up at 20-0-11, 78 lb down and 68 lb up at 22-0-11, 78 lb down and 68 lb up at 24-0-11, 78 lb down and 68 lb up at 26-0-11, and 78 lb down and 68 lb up at 28-0-11, and 78 lb down and 68 lb up at 30-0-11 on bottom chord. The design/selection of such connection device(s) is the responsibility of others.

LOAD CASE(S) Standard

1) Regular: Lumber Increase=1.25, Plate Increase=1.25

Uniform Loads (plf)

Vert: 1-4=-46, 4-11=-46, 2-18=-40, 16-18=-40, 12-15=-40

Concentrated Loads (lb)

Vert: 4=-75(F) 8=-69(F) 19=-745(F) 9=-69(F) 21=-75(F) 22=-75(F) 23=-75(F) 24=-75(F) 25=-69(F) 26=-69(F) 27=-69(F) 28=-69(F) 29=-69(F) 30=-72(F) 31=-72(F) 32=-72(F) 33=-72(F) 34=-78(F) 35=-78(F) 36=-78(F) 37=-78(F) 38=-78(F) 39=-78(F) 40=-78(F)

Job	Truss	Truss Type	Qty	Ply	MONTGOMERY_FLORIDA_125
MONTGOMERY	S1B	SPECIAL	4	1	E4632377 Job Reference (optional)

Maronda Homes Inc., Sanford, FL — 7.030 s Jan 3 2008 MiTek Industries, Inc. Wed Jan 23 13:37:33 2008 Page 1

1-4-0	5-9-10	10-10-13	16-0-0	21-1-3	26-2-6	32-0-0
1-4-0	5-9-10	5-1-3	5-1-3	5-1-3	5-1-3	5-9-10

Scale = 1:59.4

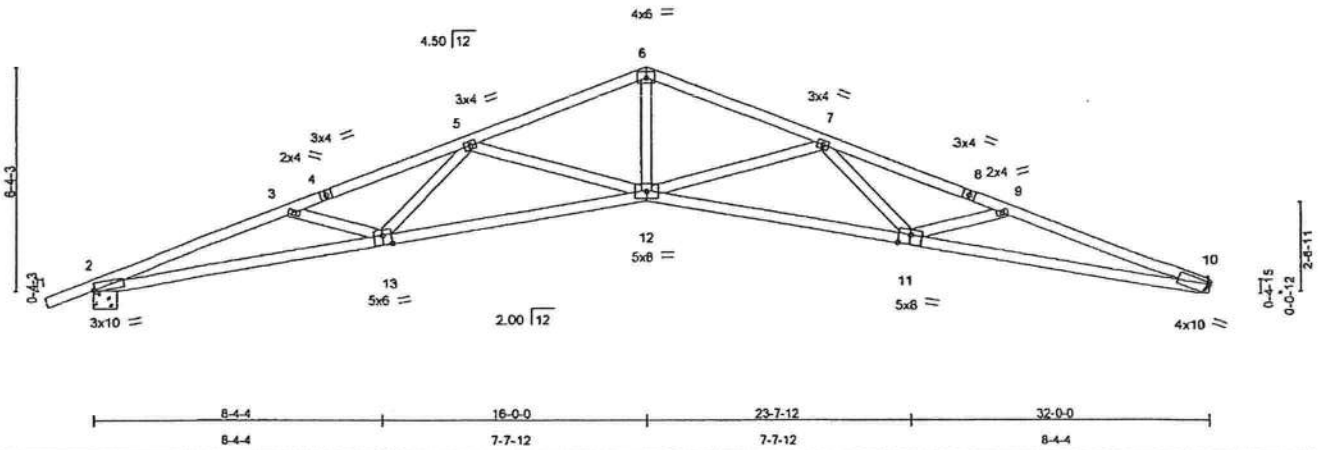

Plate Offsets (X,Y): [2:0-0-7,Edge], [10:Edge,0-0-11], [11:0-4-0,0-3-4], [13:0-3-0,0-3-4]

LOADING (psf)			SPACING 2-0-0	CSI		DEFL	in	(loc)	l/defl	L/d	PLATES	GRIP
TCLL	16.0		Plates Increase 1.25	TC	0.69	Vert(LL)	-0.57	11-12	>661	240	MT20	244/190
TCDL	7.0		Lumber Increase 1.25	BC	0.93	Vert(TL)	-1.15	11-12	>330	180		
BCLL	10.0	*	Rep Stress Incr YES	WB	0.68	Horz(TL)	0.59	10	n/a	n/a		
BCDL	10.0		Code FBC2004/TPI2002	(Matrix)							Weight: 141 lb	

LUMBER
TOP CHORD 2 X 4 SYP No.2
BOT CHORD 2 X 4 SYP No.2 *Except*
2-13 2 X 4 SYP No.1D, 10-11 2 X 4 SYP No.1D
WEBS 2 X 4 SYP No.3

BRACING
TOP CHORD Structural wood sheathing directly applied or 2-2-0 oc purlins.
BOT CHORD Rigid ceiling directly applied or 2-2-0 oc bracing.

REACTIONS (lb/size) 2=1443/0-8-0, 10=1360/Mechanical
Max Horz 2=119(LC 6)
Max Uplift2=-363(LC 6), 10=-265(LC 7)

FORCES (lb) - Maximum Compression/Maximum Tension
TOP CHORD 1-2=0/19, 2-3=-4787/1436, 3-4=-4633/1254, 4-5=-4592/1266, 5-6=-3414/995, 6-7=-3414/995, 7-8=-4745/1358, 8-9=-4787/1344, 9-10=-5042/1587
BOT CHORD 2-13=-1279/4475, 12-13=-1056/4004, 11-12=-1095/4076, 10-11=-1437/4742
WEBS 3-13=-127/236, 5-13=-1/594, 5-12=-837/368, 6-12=-500/2123, 7-12=-905/409, 7-11=-63/694, 9-11=-239/309

NOTES
1) Unbalanced roof live loads have been considered for this design.
2) Wind: ASCE 7-02; 125mph (3-second gust); h=25ft; TCDL=4.2psf; BCDL=6.0psf; Category II; Exp B; enclosed; MWFRS (low-rise) and C-C Interior(1) zone; Lumber DOL=1.33 plate grip DOL=1.33. This truss is designed for C-C for members and forces, and for MWFRS for reactions specified.
3) This truss has been designed for a 10.0 psf bottom chord live load nonconcurrent with any other live loads.
4) * This truss has been designed for a live load of 20.0psf on the bottom chord in all areas where a rectangle 3-6-0 tall by 1-0-0 wide will fit between the bottom chord and any other members.
5) Refer to girder(s) for truss to truss connections.
6) Bearing at joint(s) 2 considers parallel to grain value using ANSI/TPI 1 angle to grain formula. Building designer should verify capacity of bearing surface.
7) Provide mechanical connection (by others) of truss to bearing plate capable of withstanding 363 lb uplift at joint 2 and 265 lb uplift at joint 10.

LOAD CASE(S) Standard

MARVIN A. STRZYZEWSKI LICENSE No 43144 STATE OF FLORIDA PROFESSIONAL ENGINEER

Marvin A. Strzyzewski, FL Lic. #43144
Truss Engineering Co.
818 Soundside Road
Edenton, NC 27932
FL COA #7239

January 23,2008

ENGINEERING BY TRENCO A MiTek Affiliate
818 Soundside Road
Edenton, NC 27932

Job	Truss	Truss Type	Qty	Ply	MONTGOMERY_FLORIDA_125	E4632378
MONTGOMERY	S1C	SPECIAL	3	1	Job Reference (optional)	

7.030 s Jan 3 2008 MiTek Industries, Inc. Wed Jan 23 13:37:34 2008 Page 1

Maronds Homes Inc., Sanford, FL

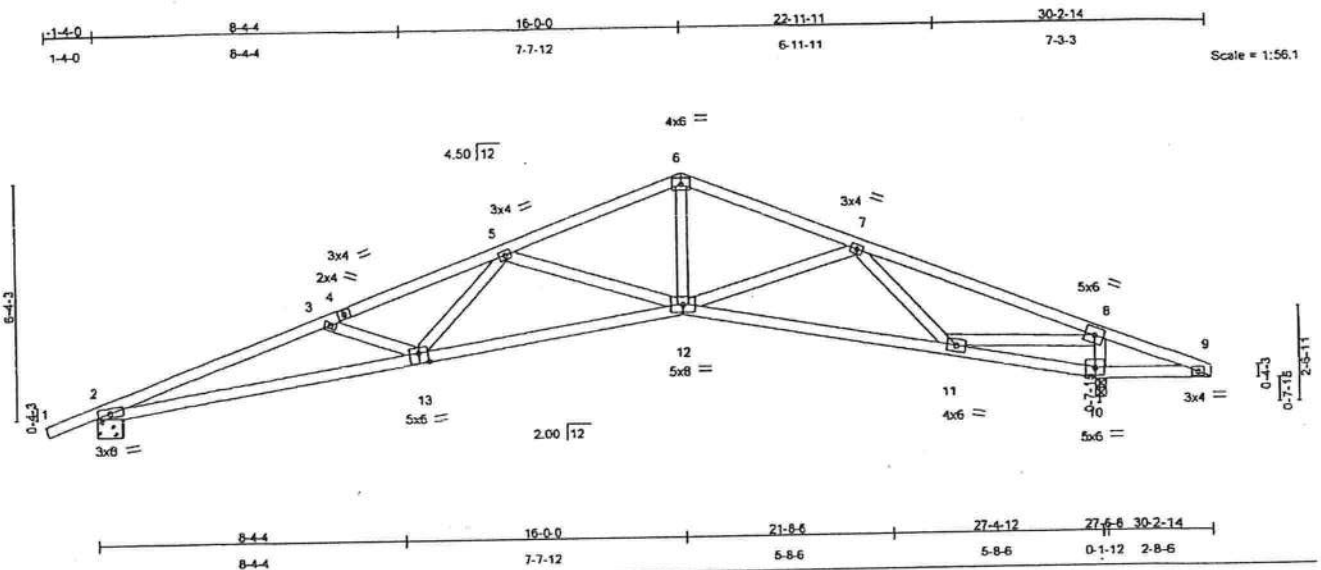

Plate Offsets (X,Y): [13:0-3-0,0-3-4]

LOADING (psf)		SPACING 2-0-0	CSI	DEFL	in	(loc)	l/defl	L/d	PLATES	GRIP
TCLL 16.0		Plates Increase 1.25	TC 0.58	Vert(LL)	-0.32	2-13	>999	240	MT20	244/190
TCDL 7.0		Lumber Increase 1.25	BC 0.89	Vert(TL)	-0.67	2-13	>485	180		
BCLL 10.0	*	Rep Stress Incr YES	WB 0.67	Horz(TL)	0.28	10	n/a	n/a		
BCDL 10.0		Code FBC2004/TPI2002	(Matrix)						Weight: 138 lb	

LUMBER
TOP CHORD 2 X 4 SYP No.2
BOT CHORD 2 X 4 SYP No.2
WEBS 2 X 4 SYP No.3

BRACING
TOP CHORD Structural wood sheathing directly applied or 2-7-9 oc purlins.
BOT CHORD Rigid ceiling directly applied or 6-0-0 oc bracing.

REACTIONS (lb/size) 10=1426/0-3-8, 2=1225/0-8-0
Max Horz 2=139(LC 6)
Max Uplift10=-269(LC 7), 2=-337(LC 6)

FORCES (lb) - Maximum Compression/Maximum Tension
TOP CHORD 1-2=0/19, 2-3=-3854/1173, 3-4=-3619/985, 4-5=-3577/998, 5-6=-2359/702, 6-7=-2362/705, 7-8=-1963/531, 8-9=0/187
BOT CHORD 2-13=-1067/3608, 12-13=-802/3009, 11-12=-604/2205, 10-11=-300/58, 9-10=-130/0
WEBS 6-12=-317/1409, 7-12=-88/201, 3-13=-209/255, 5-13=-36/648, 5-12=-836/363, 7-11=-550/317, 8-10=-1252/454, 8-11=-433/2084

NOTES
1) Unbalanced roof live loads have been considered for this design.
2) Wind: ASCE 7-02; 125mph (3-second gust); h=25ft; TCDL=4.2psf; BCDL=6.0psf; Category II; Exp B; enclosed; MWFRS (low-rise) and C-C Interior(1) zone; Lumber DOL=1.33 plate grip DOL=1.33. This truss is designed for C-C for members and forces, and for MWFRS for reactions specified.
3) This truss has been designed for a 10.0 psf bottom chord live load nonconcurrent with any other live loads.
4) * This truss has been designed for a live load of 20.0psf on the bottom chord in all areas where a rectangle 3-6-0 tall by 1-0-0 wide will fit between the bottom chord and any other members.
5) Bearing at joint(s) 2 considers parallel to grain value using ANSI/TPI 1 angle to grain formula. Building designer should verify capacity of bearing surface.
6) Provide mechanical connection (by others) of truss to bearing plate capable of withstanding 269 lb uplift at joint 10 and 337 lb uplift at joint 2.

LOAD CASE(S) Standard

MARVIN A. STRZYZEWSKI
LICENSE
No. 43144
STATE OF FLORIDA
PROFESSIONAL ENGINEER

Marvin A. Strzyzewski, FL Lic. #43144
Truss Engineering Co.
818 Soundside Road
Edenton, NC 27932
FL COA #7239

January 23,2008

ENGINEERING BY TRENCO A MiTek Affiliate
818 Soundside Road
Edenton, NC 27932

Job	Truss	Truss Type	Qty	Ply	MONTGOMERY_FLORIDA_125	E4632379
MONTGOMERY	S1D	SPECIAL	2	1	Job Reference (optional)	

Maronda Homes Inc., Sanford, FL

7.030 s Jan 3 2008 MiTek Industries, Inc. Wed Jan 23 13:37:34 2008 Page 1

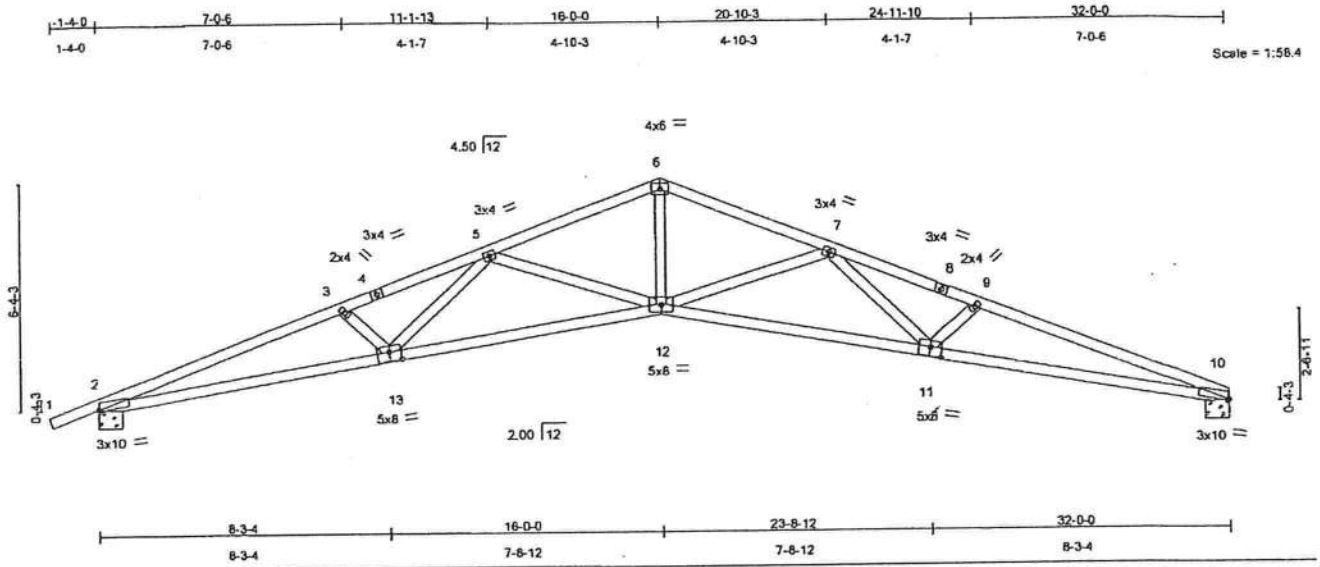

Plate Offsets (X,Y): [2:0-0-7,Edge], [8:0-0-0,0-0-0], [10:0-0-7,Edge], [11:0-4-0,0-3-0], [13:0-4-0,0-3-0]

LOADING (psf)		SPACING	2-0-0	CSI		DEFL	in	(loc)	l/defl	L/d	PLATES	GRIP
TCLL	16.0	Plates Increase	1.25	TC	0.92	Vert(LL)	-0.55	12-13	>681	240	MT20	244/190
TCDL	7.0	Lumber Increase	1.25	BC	0.90	Vert(TL)	-1.11	12-13	>338	180		
BCLL	10.0 *	Rep Stress Incr	YES	WB	0.66	Horz(TL)	0.56	10	n/a	n/a		
BCDL	10.0	Code FBC2004/TPI2002		(Matrix)							Weight: 138 lb	

LUMBER
TOP CHORD 2 X 4 SYP No.2
BOT CHORD 2 X 4 SYP No.2 *Except*
2-13 2 X 4 SYP No.1D, 10-11 2 X 4 SYP No.1D
WEBS 2 X 4 SYP No.3

BRACING
TOP CHORD Structural wood sheathing directly applied.
BOT CHORD Rigid ceiling directly applied or 5-8-8 oc bracing.

REACTIONS (lb/size) 10=1345/0-8-0, 2=1429/0-8-0
Max Horz 2=120(LC 6)
Max Uplift10=-260(LC 7), 2=-362(LC 6)

FORCES (lb) - Maximum Compression/Maximum Tension
TOP CHORD 1-2=0/19, 2-3=-4776/1382, 3-4=-4624/1303, 4-5=-4586/1314, 5-6=-3344/975, 6-7=-3343/975, 7-8=-4612/1376, 8-9=-4652/1364, 9-10=-4807/1451
BOT CHORD 2-13=-1224/4470, 12-13=-1012/3880, 11-12=-1033/3889, 10-11=-1295/4502
WEBS 3-13=-140/198, 5-13=-100/736, 5-12=-779/342, 6-12=-476/2068, 7-12=-789/364, 7-11=-150/758, 9-11=-149/218

NOTES
1) Unbalanced roof live loads have been considered for this design.
2) Wind: ASCE 7-02; 125mph (3-second gust); h=25ft; TCDL=4.2psf; BCDL=6.0psf; Category II; Exp B; enclosed; MWFRS (low-rise) and C-C Interior(1) zone; Lumber DOL=1.33 plate grip DOL=1.33. This truss is designed for C-C for members and forces, and for MWFRS for reactions specified.
3) This truss has been designed for a 10.0 psf bottom chord live load nonconcurrent with any other live loads.
4) * This truss has been designed for a live load of 20.0psf on the bottom chord in all areas where a rectangle 3-6-0 tall by 1-0-0 wide will fit between the bottom chord and any other members.
5) Bearing at joint(s) 10, 2 considers parallel to grain value using ANSI/TPI 1 angle to grain formula. Building designer should verify capacity of bearing surface.
6) Provide mechanical connection (by others) of truss to bearing plate capable of withstanding 260 lb uplift at joint 10 and 362 lb uplift at joint 2.

LOAD CASE(S) Standard

MARVIN A. STRZYZEWSKI
LICENSE
No. 43144
STATE OF FLORIDA
PROFESSIONAL ENGINEER

Marvin A. Strzyzewski, FL Lic. #43144
Truss Engineering Co.
818 Soundside Road
Edenton, NC 27932
FL COA #7239

January 23,2008

ENGINEERING BY TRENCO
A MiTek Affiliate
818 Soundside Road
Edenton, NC 27932

Job	Truss	Truss Type	Qty	Ply	MONTGOMERY_FLORIDA_125	
MONTGOMERY	T1	COMMON	60	1	Job Reference (optional)	E4632380

Maronda Homes Inc., Sanford, FL

7.030 s Jan 3 2008 MiTek Industries, Inc. Wed Jan 23 13:37:35 2008 Page 1

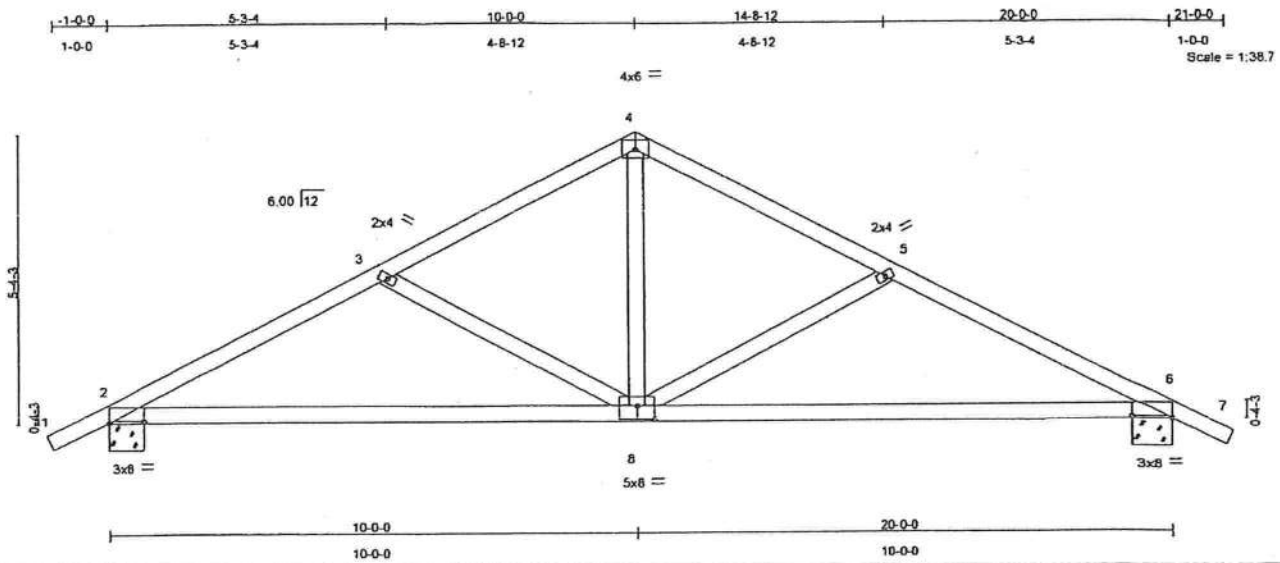

Plate Offsets (X,Y): [2:0-8-0,0-0-6], [6:0-8-0,0-0-6], [8:0-4-0,0-3-0]

LOADING (psf)		SPACING 2-0-0	CSI		DEFL	in	(loc)	l/defl	L/d	PLATES	GRIP
TCLL	16.0	Plates Increase 1.25	TC	0.32	Vert(LL)	-0.17	2-8	>999	240	MT20	244/190
TCDL	7.0	Lumber Increase 1.25	BC	0.69	Vert(TL)	-0.39	2-8	>591	180		
BCLL	10.0 *	Rep Stress Incr YES	WB	0.22	Horz(TL)	0.04	6	n/a	n/a		
BCDL	10.0	Code FBC2004/TPI2002	(Matrix)							Weight: 89 lb	

LUMBER
TOP CHORD 2 X 4 SYP No.2
BOT CHORD 2 X 4 SYP No.2
WEBS 2 X 4 SYP No.3

BRACING
TOP CHORD Structural wood sheathing directly applied or 5-0-7 oc purlins.
BOT CHORD Rigid ceiling directly applied or 10-0-0 oc bracing.

REACTIONS (lb/size) 2=896/0-8-0, 6=896/0-8-0
Max Horz 2=100(LC 6)
Max Uplift2=-239(LC 6), 6=-239(LC 7)

FORCES (lb) - Maximum Compression/Maximum Tension
TOP CHORD 1-2=0/21, 2-3=-1279/429, 3-4=-1036/322, 4-5=-1036/322, 5-6=-1279/429, 6-7=0/21
BOT CHORD 2-8=-249/1109, 6-8=-249/1109
WEBS 3-8=-283/222, 4-8=-80/676, 5-8=-283/222

NOTES
1) Unbalanced roof live loads have been considered for this design.
2) Wind: ASCE 7-02; 125mph (3-second gust); h=25ft; TCDL=4.2psf; BCDL=6.0psf; Category II; Exp B; enclosed; MWFRS (low-rise) and C-C Interior(1) zone; Lumber DOL=1.33 plate grip DOL=1.33. This truss is designed for C-C for members and forces, and for MWFRS for reactions specified.
3) This truss has been designed for a 10.0 psf bottom chord live load nonconcurrent with any other live loads.
4) * This truss has been designed for a live load of 20.0psf on the bottom chord in all areas where a rectangle 3-6-0 tall by 1-0-0 wide will fit between the bottom chord and any other members.
5) Provide mechanical connection (by others) of truss to bearing plate capable of withstanding 239 lb uplift at joint 2 and 239 lb uplift at joint 6.

LOAD CASE(S) Standard

MARVIN A. STRZYZEWSKI LICENSE No. 43144 STATE OF FLORIDA PROFESSIONAL ENGINEER

Marvin A. Strzyzewski, FL Lic. #43144
Truss Engineering Co.
818 Soundside Road
Edenton, NC 27932
FL COA #7239

January 23,2008

ENGINEERING BY TRENCO A MiTek Affiliate
818 Soundside Road
Edenton, NC 27932

Job	Truss	Truss Type	Qty	Ply	MONTGOMERY_FLORIDA_125
MONTGOMERY	T1A	COMMON	4	1	E4632381 Job Reference (optional)

Maronda Homes Inc., Sanford, FL

7.030 s Jan 3 2008 MiTek Industries, Inc. Wed Jan 23 13:37:36 2008 Page 1

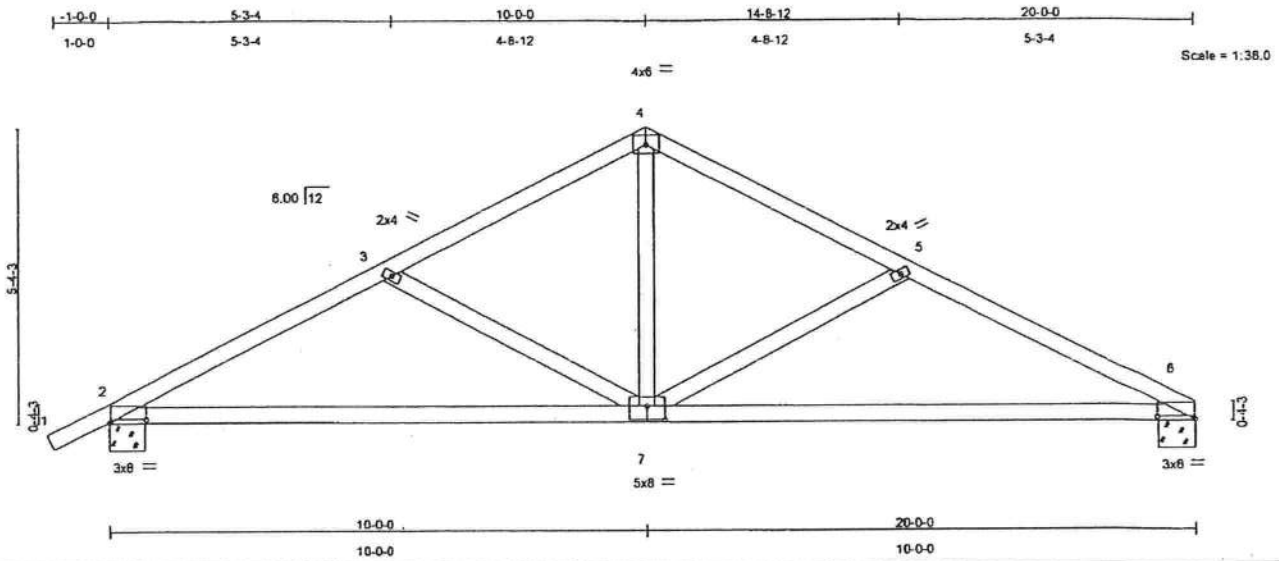

Plate Offsets (X,Y): [2:0-8-4,0-0-10], [6:0-8-4,0-0-10], [7:0-4-0,0-3-0]

LOADING (psf)			SPACING 2-0-0	CSI		DEFL	in	(loc)	l/defl	L/d	PLATES	GRIP
TCLL	16.0		Plates Increase 1.25	TC	0.36	Vert(LL)	-0.18	6-7	>999	240	MT20	244/190
TCDL	7.0		Lumber Increase 1.25	BC	0.70	Vert(TL)	-0.41	6-7	>566	180		
BCLL	10.0	*	Rep Stress Incr YES	WB	0.22	Horz(TL)	0.04	6	n/a	n/a		
BCDL	10.0		Code FBC2004/TPI2002	(Matrix)							Weight: 88 lb	

LUMBER
TOP CHORD 2 X 4 SYP No.2
BOT CHORD 2 X 4 SYP No.2
WEBS 2 X 4 SYP No.3

BRACING
TOP CHORD Structural wood sheathing directly applied or 4-11-0 oc purlins.
BOT CHORD Rigid ceiling directly applied or 10-0-0 oc bracing.

REACTIONS (lb/size) 6=829/0-8-0, 2=898/0-8-0
Max Horz 2=109(LC 6)
Max Uplift6=-156(LC 7), 2=-239(LC 6)

FORCES (lb) - Maximum Compression/Maximum Tension
TOP CHORD 1-2=0/21, 2-3=-1284/443, 3-4=-1041/335, 4-5=-1042/337, 5-6=-1290/457
BOT CHORD 2-7=-312/1113, 6-7=-332/1122
WEBS 3-7=-282/222, 4-7=-97/682, 5-7=-292/245

NOTES
1) Unbalanced roof live loads have been considered for this design.
2) Wind: ASCE 7-02; 125mph (3-second gust); h=25ft; TCDL=4.2psf; BCDL=6.0psf; Category II; Exp B; enclosed; MWFRS (low-rise) and C-C Interior(1) zone; Lumber DOL=1.33 plate grip DOL=1.33. This truss is designed for C-C for members and forces, and for MWFRS for reactions specified.
3) This truss has been designed for a 10.0 psf bottom chord live load nonconcurrent with any other live loads.
4) * This truss has been designed for a live load of 20.0psf on the bottom chord in all areas where a rectangle 3-6-0 tall by 1-0-0 wide will fit between the bottom chord and any other members.
5) Provide mechanical connection (by others) of truss to bearing plate capable of withstanding 156 lb uplift at joint 6 and 239 lb uplift at joint 2.

LOAD CASE(S) Standard

MARVIN A. STRZYZEWSKI
LICENSE
No 43144
STATE OF
FLORIDA
PROFESSIONAL ENGINEER

Marvin A. Strzyzewski, FL Lic. #43144
Truss Engineering Co.
818 Soundside Road
Edenton, NC 27932
FL COA #7239

January 23,2008

ENGINEERING BY TRENCO A MiTek Affiliate
818 Soundside Road
Edenton, NC 27932

Job	Truss	Truss Type	Qty	Ply	MONTGOMERY_FLORIDA_125	E4632352
MONTGOMERY	V1	VALLEY	3	1	Job Reference (optional)	

Maronda Homes Inc., Sanford, FL

7.030 s Jan 3 2008 MiTek Industries, Inc. Wed Jan 23 13:37:36 2008 Page 1

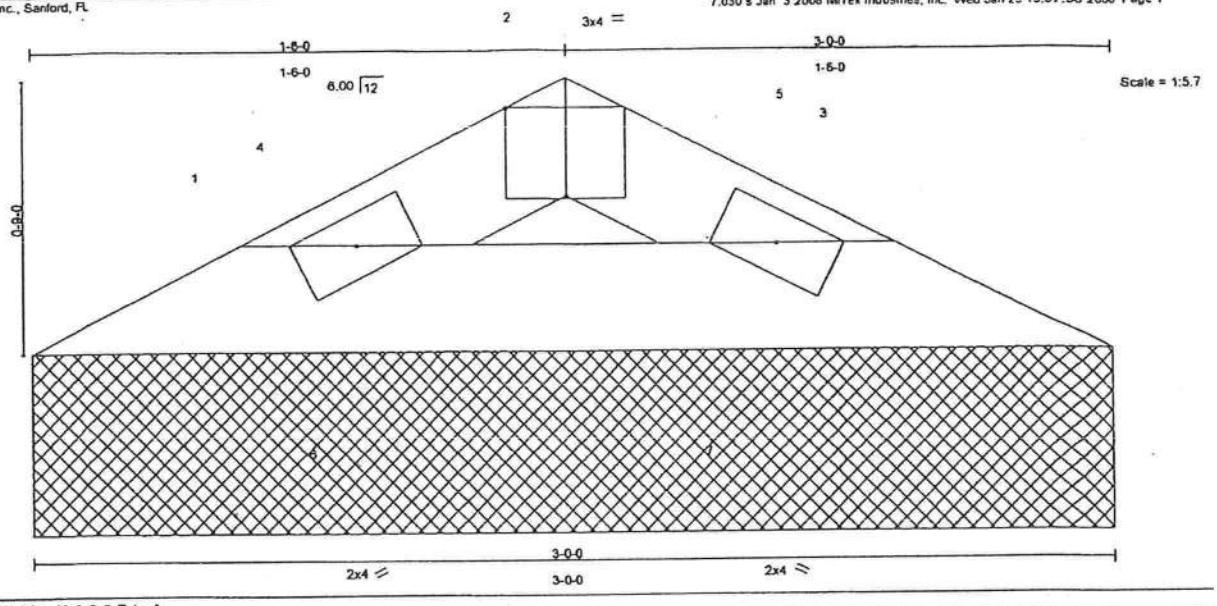

Plate Offsets (X,Y): [2:0-2-0,Edge]

LOADING (psf)			SPACING	2-0-0	CSI		DEFL	in	(loc)	l/defl	L/d	PLATES	GRIP
TCLL	16.0		Plates Increase	1.25	TC	0.02	Vert(LL)	n/a	-	n/a	999	MT20	244/190
TCDL	7.0		Lumber Increase	1.25	BC	0.04	Vert(TL)	n/a	-	n/a	999		
BCLL	10.0	*	Rep Stress Incr	YES	WB	0.00	Horz(TL)	0.00	3	n/a	n/a		
BCDL	10.0		Code FBC2004/TPI2002		(Matrix)							Weight: 8 lb	

LUMBER
TOP CHORD 2 X 4 SYP No.2
BOT CHORD 2 X 4 SYP No.2

BRACING
TOP CHORD Structural wood sheathing directly applied or 3-0-0 oc purlins.
BOT CHORD Rigid ceiling directly applied or 10-0-0 oc bracing.

REACTIONS (lb/size) 1=76/3-0-0, 3=76/3-0-0
Max Horz 1=-7(LC 4)
Max Uplift1=-14(LC 6), 3=-14(LC 7)

FORCES (lb) - Maximum Compression/Maximum Tension
TOP CHORD 1-4=-53/42, 2-4=-45/44, 2-5=-45/44, 3-5=-53/42
BOT CHORD 1-6=-27/41, 6-7=-27/41, 3-7=-27/41

NOTES
1) Unbalanced roof live loads have been considered for this design.
2) Wind: ASCE 7-02; 125mph (3-second gust); h=25ft; TCDL=4.2psf; BCDL=6.0psf; Category II; Exp B; enclosed; MWFRS (low-rise) and C-C Interior(1) zone; Lumber DOL=1.33 plate grip DOL=1.33. This truss is designed for C-C for members and forces, and for MWFRS for reactions specified.
3) This truss has been designed for a 10.0 psf bottom chord live load nonconcurrent with any other live loads.
4) Gable requires continuous bottom chord bearing.
5) * This truss has been designed for a live load of 20.0psf on the bottom chord in all areas where a rectangle 3-6-0 tall by 1-0-0 wide will fit between the bottom chord and any other members.
6) Provide mechanical connection (by others) of truss to bearing plate capable of withstanding 14 lb uplift at joint 1 and 14 lb uplift at joint 3.

LOAD CASE(S) Standard

MARVIN A. STRZYZEWSKI
LICENSE
No. 43144
STATE OF
FLORIDA
PROFESSIONAL ENGINEER

Marvin A. Strzyzewski, FL Lic. #43144
Truss Engineering Co.
818 Soundside Road
Edenton, NC 27932
FL COA #7239

January 23,2008

ENGINEERING BY TRENCO A MiTek Affiliate
818 Soundside Road
Edenton, NC 27932

Job	Truss	Truss Type	Qty	Ply	MONTGOMERY_FLORIDA_125
MONTGOMERY	V2	VALLEY	7	1	E4632383 Job Reference (optional)

Maronda Homes Inc., Sanford, FL

7.030 s Jan 3 2008 MiTek Industries, Inc. Wed Jan 23 13:37:36 2008 Page 1

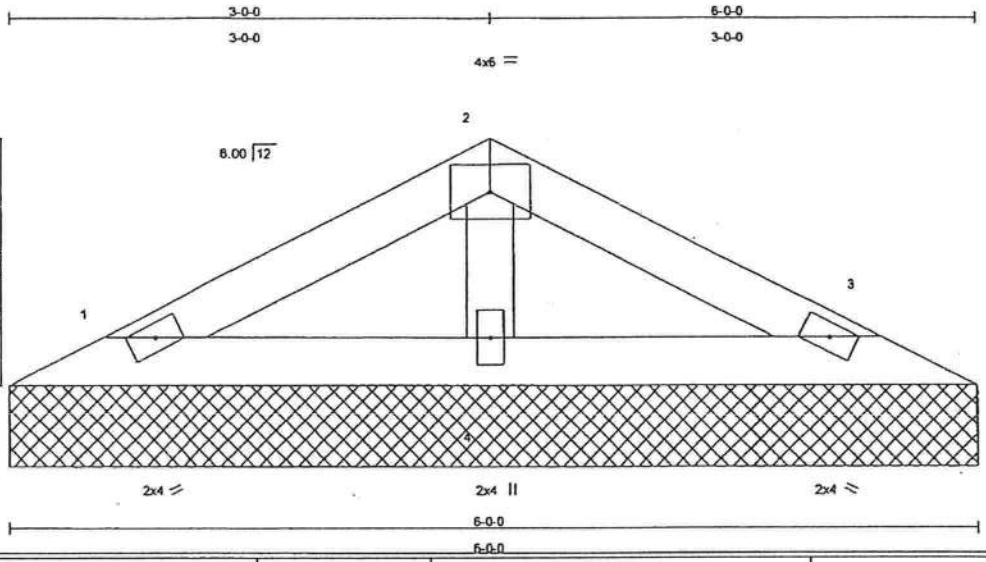

LOADING (psf)			SPACING 2-0-0	CSI		DEFL	in	(loc)	l/defl	L/d	PLATES	GRIP
TCLL	16.0		Plates Increase 1.25	TC	0.07	Vert(LL)	n/a	-	n/a	999	MT20	244/190
TCDL	7.0		Lumber Increase 1.25	BC	0.06	Vert(TL)	n/a	-	n/a	999		
BCLL	10.0	*	Rep Stress Incr YES	WB	0.02	Horz(TL)	0.00	3	n/a	n/a		
BCDL	10.0		Code FBC2004/TPI2002	(Matrix)							Weight: 18 lb	

LUMBER

TOP CHORD 2 X 4 SYP No.2
BOT CHORD 2 X 4 SYP No.2
OTHERS 2 X 4 SYP No.3

BRACING

TOP CHORD Structural wood sheathing directly applied or 6-0-0 oc purlins.
BOT CHORD Rigid ceiling directly applied or 10-0-0 oc bracing.

REACTIONS (lb/size) 1=96/6-0-0, 3=96/6-0-0, 4=217/6-0-0
Max Horz 1=-20(LC 4)
Max Uplift1=-32(LC 6), 3=-35(LC 7), 4=-14(LC 6)

FORCES (lb) - Maximum Compression/Maximum Tension
TOP CHORD 1-2=-33/28, 2-3=-33/28
BOT CHORD 1-4=-1/12, 3-4=-1/12
WEBS 2-4=-98/79

NOTES
1) Unbalanced roof live loads have been considered for this design.
2) Wind: ASCE 7-02; 125mph (3-second gust); h=25ft; TCDL=4.2psf; BCDL=6.0psf; Category II; Exp B; enclosed; MWFRS (low-rise) and C-C Interior(1) zone; Lumber DOL=1.33 plate grip DOL=1.33. This truss is designed for C-C for members and forces, and for MWFRS for reactions specified.
3) This truss has been designed for a 10.0 psf bottom chord live load nonconcurrent with any other live loads.
4) Gable requires continuous bottom chord bearing.
5) * This truss has been designed for a live load of 20.0psf on the bottom chord in all areas where a rectangle 3-6-0 tall by 1-0-0 wide will fit between the bottom chord and any other members.
6) Provide mechanical connection (by others) of truss to bearing plate capable of withstanding 32 lb uplift at joint 1, 35 lb uplift at joint 3 and 14 lb uplift at joint 4.

LOAD CASE(S) Standard

MARVIN A. STRZYZEWSKI
LICENSE
No 43144
STATE OF FLORIDA
PROFESSIONAL ENGINEER

Marvin A. Strzyzewski, FL Lic. #43144
Truss Engineering Co.
818 Soundside Road
Edenton, NC 27932
FL COA #7239

January 23,2008

ENGINEERING BY TRENCO
A MiTek Affiliate
818 Soundside Road
Edenton, NC 27932

Job	Truss	Truss Type	Qty	Ply	MONTGOMERY_FLORIDA_125
MONTGOMERY	V3	GABLE	2	1	E4632384 Job Reference (optional)

Maronda Homes Inc., Sanford, FL

7.030 s Jan 3 2008 MiTek Industries, Inc. Wed Jan 23 13:37:37 2008 Page 1

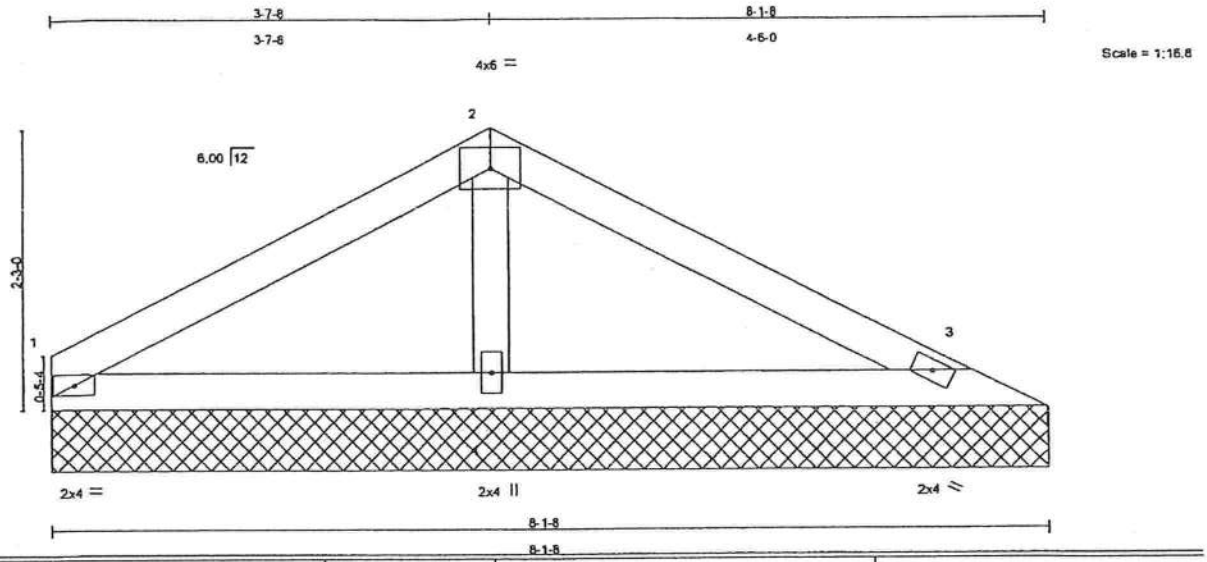

LOADING (psf)			SPACING 2-0-0	CSI		DEFL	in	(loc)	l/defl	L/d	PLATES	GRIP
TCLL	16.0		Plates Increase 1.25	TC	0.18	Vert(LL)	n/a	-	n/a	999	MT20	244/190
TCDL	7.0		Lumber Increase 1.25	BC	0.14	Vert(TL)	n/a	-	n/a	999		
BCLL	10.0	*	Rep Stress Incr YES	WB	0.04	Horz(TL)	0.00	3	n/a	n/a		
BCDL	10.0		Code FBC2004/TPI2002	(Matrix)							Weight: 27 lb	

LUMBER
TOP CHORD 2 X 4 SYP No.2
BOT CHORD 2 X 4 SYP No.2
OTHERS 2 X 4 SYP No.3

BRACING
TOP CHORD Structural wood sheathing directly applied or 6-0-0 oc purlins.
BOT CHORD Rigid ceiling directly applied or 10-0-0 oc bracing.

REACTIONS (lb/size) 1=147/8-1-8, 3=158/8-1-8, 4=341/8-1-8
Max Horz 1=-32(LC 4)
Max Uplift1=-49(LC 6), 3=-57(LC 7), 4=-21(LC 6)

FORCES (lb) - Maximum Compression/Maximum Tension
TOP CHORD 1-2=-53/46, 2-3=-53/45
BOT CHORD 1-4=-2/20, 3-4=-2/20
WEBS 2-4=-153/119

NOTES
1) Unbalanced roof live loads have been considered for this design.
2) Wind: ASCE 7-02; 125mph (3-second gust); h=25ft; TCDL=4.2psf; BCDL=6.0psf; Category II; Exp B; enclosed; MWFRS (low-rise) and C-C Interior(1) zone; Lumber DOL=1.33 plate grip DOL=1.33. This truss is designed for C-C for members and forces, and for MWFRS for reactions specified.
3) This truss has been designed for a 10.0 psf bottom chord live load nonconcurrent with any other live loads.
4) Gable requires continuous bottom chord bearing.
5) * This truss has been designed for a live load of 20.0psf on the bottom chord in all areas where a rectangle 3-6-0 tall by 1-0-0 wide will fit between the bottom chord and any other members.
6) Provide mechanical connection (by others) of truss to bearing plate capable of withstanding 49 lb uplift at joint 1, 57 lb uplift at joint 3 and 21 lb uplift at joint 4.

LOAD CASE(S) Standard

Marvin A. Strzyzewski, FL Lic. #43144
Truss Engineering Co.
818 Soundside Road
Edenton, NC 27932
FL COA #7239

January 23,2008

ENGINEERING BY TRENCO
A MiTek Affiliate
818 Soundside Road
Edenton, NC 27932

Job	Truss	Truss Type	Qty	Ply	MONTGOMERY_FLORIDA_125
MONTGOMERY	V30	GABLE	1	1	E4632385 Job Reference (optional)

Maronda Homes Inc., Sanford, FL

7.030 s Jan 3 2008 MiTek Industries, Inc. Wed Jan 23 13:37:37 2008 Page 1

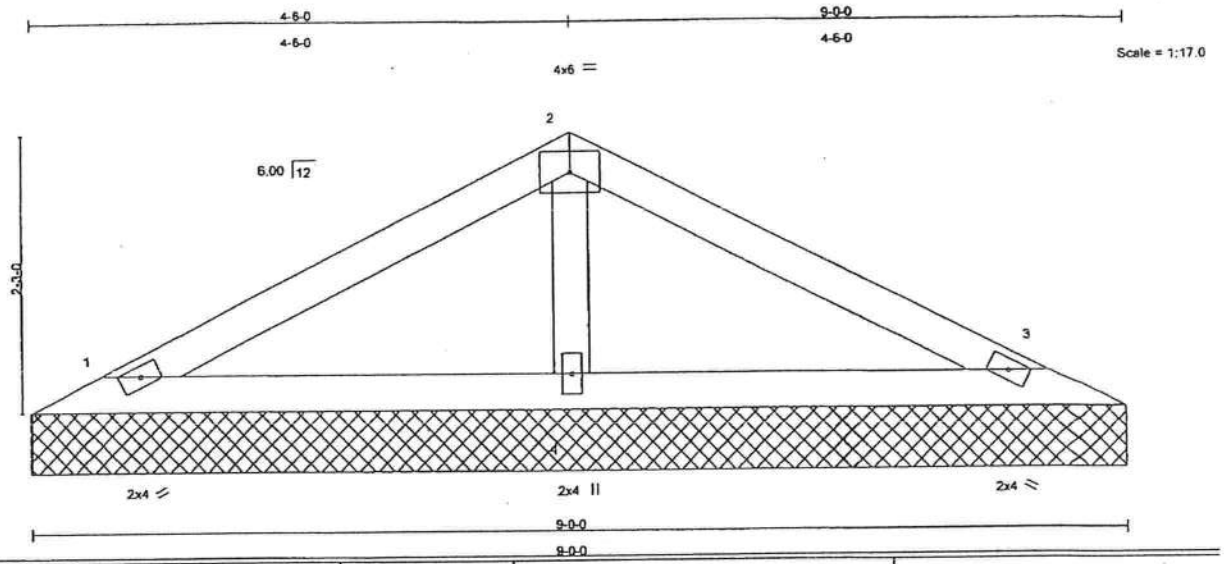

LOADING (psf)			SPACING 2-0-0	CSI		DEFL	in	(loc)	l/defl	L/d	PLATES	GRIP
TCLL	16.0		Plates Increase 1.25	TC	0.18	Vert(LL)	n/a	-	n/a	999	MT20	244/190
TCDL	7.0		Lumber Increase 1.25	BC	0.15	Vert(TL)	n/a	-	n/a	999		
BCLL	10.0	*	Rep Stress Incr YES	WB	0.04	Horz(TL)	0.00	3	n/a	n/a		
BCDL	10.0		Code FBC2004/TPI2002	(Matrix)							Weight: 29 lb	

LUMBER
TOP CHORD 2 X 4 SYP No.2
BOT CHORD 2 X 4 SYP No.2
OTHERS 2 X 4 SYP No.3

BRACING
TOP CHORD Structural wood sheathing directly applied or 6-0-0 oc purlins.
BOT CHORD Rigid ceiling directly applied or 10-0-0 oc bracing.

REACTIONS (lb/size) 1=157/9-0-0, 3=157/9-0-0, 4=354/9-0-0
Max Horz 1=-32(LC 4)
Max Uplift1=-52(LC 6), 3=-57(LC 7), 4=-23(LC 6)

FORCES (lb) - Maximum Compression/Maximum Tension
TOP CHORD 1-2=-53/46, 2-3=-53/45
BOT CHORD 1-4=-2/19, 3-4=-2/19
WEBS 2-4=-160/124

NOTES
1) Unbalanced roof live loads have been considered for this design.
2) Wind: ASCE 7-02; 125mph (3-second gust); h=25ft; TCDL=4.2psf; BCDL=6.0psf; Category II; Exp B; enclosed; MWFRS (low-rise) and C-C Interior(1) zone; Lumber DOL=1.33 plate grip DOL=1.33. This truss is designed for C-C for members and forces, and for MWFRS for reactions specified.
3) This truss has been designed for a 10.0 psf bottom chord live load nonconcurrent with any other live loads.
4) Gable requires continuous bottom chord bearing.
5) * This truss has been designed for a live load of 20.0psf on the bottom chord in all areas where a rectangle 3-6-0 tall by 1-0-0 wide will fit between the bottom chord and any other members.
6) Provide mechanical connection (by others) of truss to bearing plate capable of withstanding 52 lb uplift at joint 1, 57 lb uplift at joint 3 and 23 lb uplift at joint 4.

LOAD CASE(S) Standard

MARVIN A. STRZYZEWSKI
LICENSE
No 43144
STATE OF
FLORIDA
PROFESSIONAL ENGINEER

Marvin A. Strzyzewski, FL Lic. #43144
Truss Engineering Co.
818 Soundside Road
Edenton, NC 27932
FL COA #7239

January 23,2008

ENGINEERING BY TRENCO A MiTek Affiliate
818 Soundside Road
Edenton, NC 27932

Job	Truss	Truss Type	Qty	Ply	MONTGOMERY_FLORIDA_125
MONTGOMERY	V31	GABLE	1	1	E4632386 Job Reference (optional)

Maronda Homes Inc., Sanford, FL

7.030 s Jan 3 2008 MiTek Industries, Inc. Wed Jan 23 13:37:38 2008 Page 1

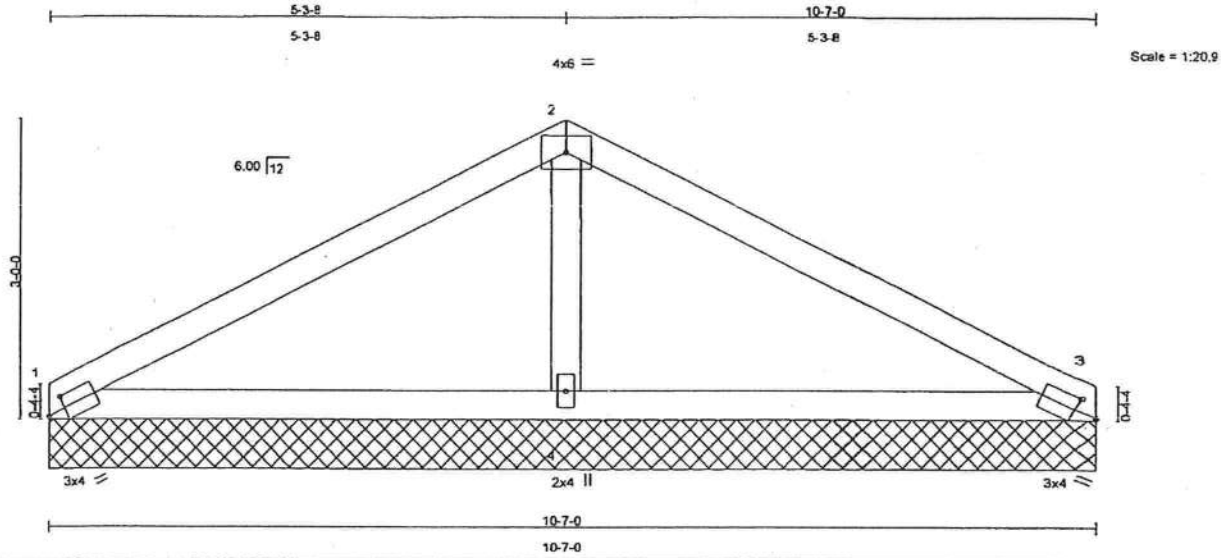

Plate Offsets (X,Y): [1:0-2-5,0-1-8], [3:0-2-5,0-1-8]

LOADING (psf)		SPACING	2-0-0	CSI		DEFL	in	(loc)	l/defl	L/d	PLATES	GRIP
TCLL	16.0	Plates Increase	1.25	TC	0.20	Vert(LL)	n/a	-	n/a	999	MT20	244/190
TCDL	7.0	Lumber Increase	1.25	BC	0.28	Vert(TL)	n/a	-	n/a	999		
BCLL	10.0 *	Rep Stress Incr	YES	WB	0.06	Horz(TL)	0.00	3	n/a	n/a		
BCDL	10.0	Code FBC2004/TPI2002		(Matrix)							Weight: 37 lb	

LUMBER
TOP CHORD 2 X 4 SYP No.2
BOT CHORD 2 X 4 SYP No.2
OTHERS 2 X 4 SYP No.3

BRACING
TOP CHORD Structural wood sheathing directly applied or 6-0-0 oc purlins.
BOT CHORD Rigid ceiling directly applied or 10-0-0 oc bracing.

REACTIONS (lb/size) 1=190/10-7-0, 3=190/10-7-0, 4=530/10-7-0
Max Horz 1=-45(LC 4)
Max Uplift1=-49(LC 6), 3=-57(LC 7), 4=-73(LC 6)
Max Grav 1=195(LC 10), 3=195(LC 11), 4=530(LC 1)

FORCES (lb) - Maximum Compression/Maximum Tension
TOP CHORD 1-2=-75/64, 2-3=-75/64
BOT CHORD 1-4=-4/38, 3-4=-4/38
WEBS 2-4=-258/185

NOTES
1) Unbalanced roof live loads have been considered for this design.
2) Wind: ASCE 7-02; 125mph (3-second gust); h=25ft; TCDL=4.2psf; BCDL=6.0psf; Category II; Exp B; enclosed; MWFRS (low-rise) and C-C Interior(1) zone; Lumber DOL=1.33 plate grip DOL=1.33. This truss is designed for C-C for members and forces, and for MWFRS for reactions specified.
3) This truss has been designed for a 10.0 psf bottom chord live load nonconcurrent with any other live loads.
4) Gable requires continuous bottom chord bearing.
5) * This truss has been designed for a live load of 20.0psf on the bottom chord in all areas where a rectangle 3-6-0 tall by 1-0-0 wide will fit between the bottom chord and any other members.
6) Provide mechanical connection (by others) of truss to bearing plate capable of withstanding 49 lb uplift at joint 1, 57 lb uplift at joint 3 and 73 lb uplift at joint 4.

LOAD CASE(S) Standard

MARVIN A. STRZYZEWSKI
LICENSE
No 43144
STATE OF
FLORIDA
PROFESSIONAL ENGINEER

Marvin A. Strzyzewski, FL Lic. #43144
Truss Engineering Co.
818 Soundside Road
Edenton, NC 27932
FL COA #7239

January 23,2008

ENGINEERING BY TRENCO
A MiTek Affiliate
818 Soundside Road
Edenton, NC 27932

Job	Truss	Truss Type	Qty	Ply	MONTGOMERY_FLORIDA_125	E4632367
MONTGOMERY	V32	GABLE	1	1	Job Reference (optional)	

Maronda Homes Inc., Sanford, FL

7.030 s Jan 3 2008 MiTek Industries, Inc. Wed Jan 23 13:37:38 2008 Page 1

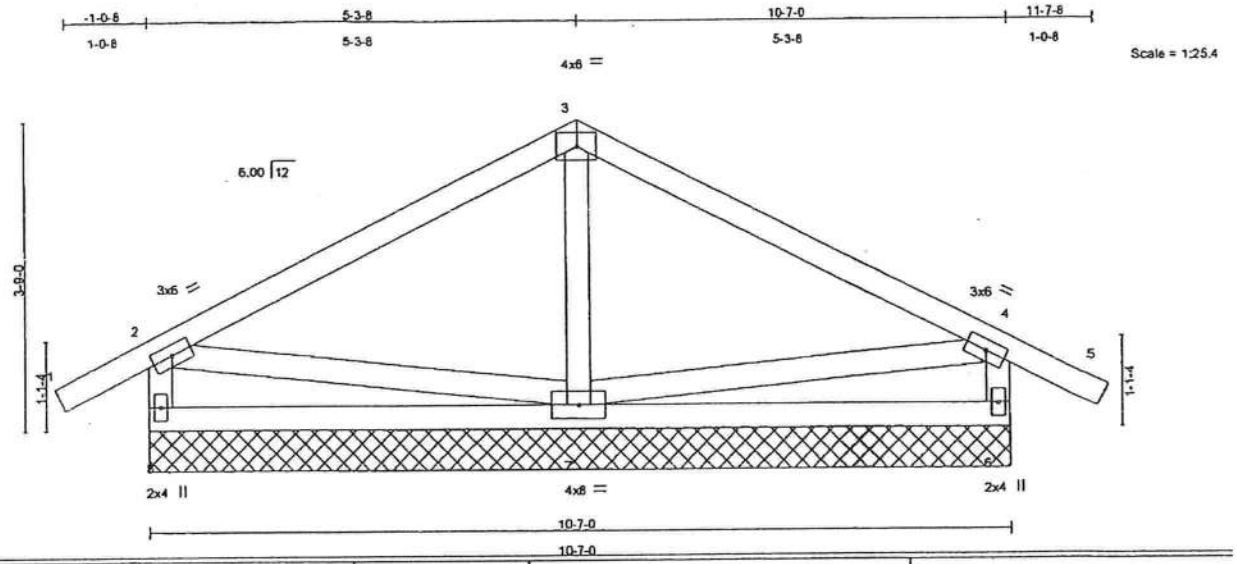

LOADING (psf)		SPACING	2-0-0	CSI		DEFL	in	(loc)	l/defl	L/d	PLATES	GRIP
TCLL	16.0	Plates Increase	1.25	TC	0.24	Vert(LL)	0.00	5	n/r	120	MT20	244/190
TCDL	7.0	Lumber Increase	1.25	BC	0.16	Vert(TL)	0.00	5	n/r	120		
BCLL	10.0 *	Rep Stress Incr	YES	WB	0.05	Horz(TL)	0.00	6	n/a	n/a		
BCDL	10.0	Code FBC2004/TPI2002		(Matrix)							Weight: 58 lb	

LUMBER
TOP CHORD 2 X 4 SYP No.2
BOT CHORD 2 X 4 SYP No.2
WEBS 2 X 4 SYP No.3
OTHERS 2 X 4 SYP No.3

BRACING
TOP CHORD Structural wood sheathing directly applied or 6-0-0 oc purlins, except end verticals.
BOT CHORD Rigid ceiling directly applied or 10-0-0 oc bracing.

REACTIONS (lb/size) 8=300/10-7-0, 6=300/10-7-0, 7=400/10-7-0
Max Horz 8=69(LC 6)
Max Uplift8=-134(LC 6), 6=-136(LC 7), 7=-39(LC 6)

FORCES (lb) - Maximum Compression/Maximum Tension
TOP CHORD 2-8=-203/246, 1-2=0/26, 2-3=-142/81, 3-4=-142/81, 4-5=0/26, 4-6=-203/246
BOT CHORD 7-8=-84/161, 6-7=-32/161
WEBS 3-7=-162/147, 2-7=-99/75, 4-7=-99/78

NOTES
1) Unbalanced roof live loads have been considered for this design.
2) Wind: ASCE 7-02; 125mph (3-second gust); h=25ft; TCDL=4.2psf; BCDL=6.0psf; Category II; Exp B; enclosed; MWFRS (low-rise) and C-C Interior(1) zone; Lumber DOL=1.33 plate grip DOL=1.33. This truss is designed for C-C for members and forces, and for MWFRS for reactions specified.
3) This truss has been designed for a 10.0 psf bottom chord live load nonconcurrent with any other live loads.
4) Gable requires continuous bottom chord bearing.
5) * This truss has been designed for a live load of 20.0psf on the bottom chord in all areas where a rectangle 3-6-0 tall by 1-0-0 wide will fit between the bottom chord and any other members.
6) Provide mechanical connection (by others) of truss to bearing plate capable of withstanding 134 lb uplift at joint 8, 136 lb uplift at joint 6 and 39 lb uplift at joint 7.

LOAD CASE(S) Standard

MARVIN A. STRZYZEWSKI LICENSE No. 43144 STATE OF FLORIDA PROFESSIONAL ENGINEER

Marvin A. Strzyzewski, FL Lic. #43144
Truss Engineering Co.
818 Soundside Road
Edenton, NC 27932
FL COA #7239

January 23,2008

ENGINEERING BY TRENCO A MiTek Affiliate
818 Soundside Road
Edenton, NC 27932

Job	Truss	Truss Type	Qty	Ply	MONTGOMERY_FLORIDA_125
MONTGOMERY	V33	GABLE	1	1	E4632388 Job Reference (optional)

Maronda Homes Inc., Sanford, FL

7.030 s Jan 3 2008 MiTek Industries, Inc. Wed Jan 23 13:37:39 2008 Page 1

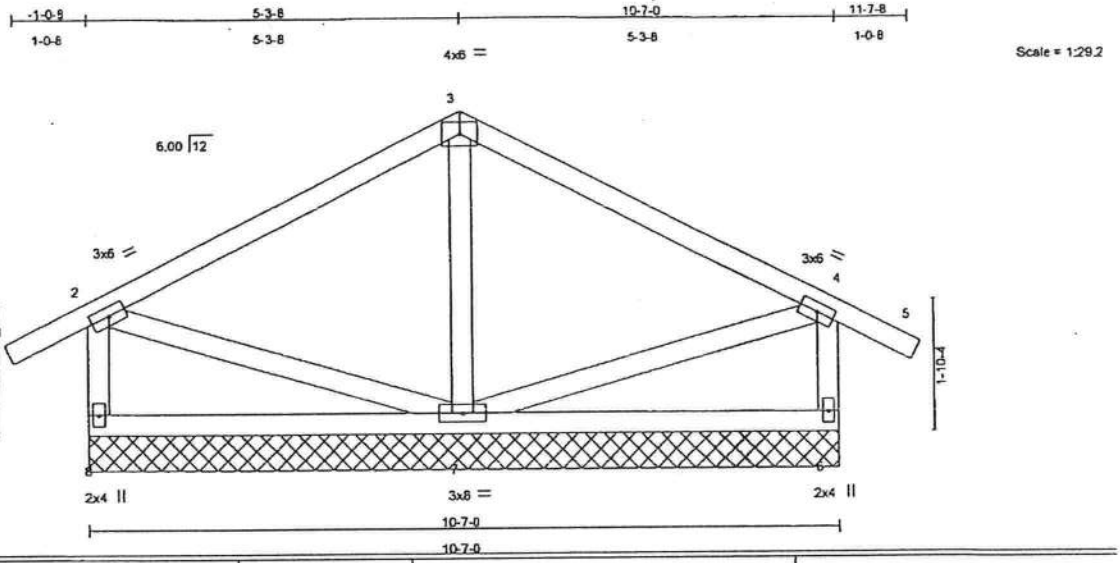

LOADING (psf)		SPACING	2-0-0	CSI		DEFL	In	(loc)	l/defl	L/d	PLATES	GRIP
TCLL	16.0	Plates Increase	1.25	TC	0.24	Vert(LL)	0.00	5	n/r	120	MT20	244/190
TCDL	7.0	Lumber Increase	1.25	BC	0.15	Vert(TL)	0.00	5	n/r	120		
BCLL	10.0 *	Rep Stress Incr	YES	WB	0.06	Horz(TL)	0.00	6	n/a	n/a		
BCDL	10.0	Code FBC2004/TPI2002		(Matrix)							Weight: 62 lb	

LUMBER
TOP CHORD 2 X 4 SYP No.2
BOT CHORD 2 X 4 SYP No.2
WEBS 2 X 4 SYP No.3
OTHERS 2 X 4 SYP No.3

BRACING
TOP CHORD Structural wood sheathing directly applied or 6-0-0 oc purlins, except end verticals.
BOT CHORD Rigid ceiling directly applied or 10-0-0 oc bracing.

REACTIONS (lb/size) 8=287/10-7-0, 6=287/10-7-0, 7=427/10-7-0
Max Horz 8=69(LC 6)
Max Uplift 8=-124(LC 6), 6=-124(LC 7), 7=-50(LC 6)

FORCES (lb) - Maximum Compression/Maximum Tension
TOP CHORD 2-8=-190/233, 1-2=0/26, 2-3=-108/78, 3-4=-108/78, 4-5=0/26, 4-6=-190/233
BOT CHORD 7-8=-79/85, 6-7=-18/85
WEBS 3-7=-192/151, 2-7=-49/75, 4-7=-49/76

NOTES
1) Unbalanced roof live loads have been considered for this design.
2) Wind: ASCE 7-02; 125mph (3-second gust); h=25ft; TCDL=4.2psf; BCDL=6.0psf; Category II; Exp B; enclosed; MWFRS (low-rise) and C-C Interior(1) zone; Lumber DOL=1.33 plate grip DOL=1.33. This truss is designed for C-C for members and forces, and for MWFRS for reactions specified.
3) This truss has been designed for a 10.0 psf bottom chord live load nonconcurrent with any other live loads.
4) Gable requires continuous bottom chord bearing.
5) * This truss has been designed for a live load of 20.0psf on the bottom chord in all areas where a rectangle 3-6-0 tall by 1-0-0 wide will fit between the bottom chord and any other members.
6) Provide mechanical connection (by others) of truss to bearing plate capable of withstanding 124 lb uplift at joint 8, 124 lb uplift at joint 6 and 50 lb uplift at joint 7.

LOAD CASE(S) Standard

Marvin A. Strzyzewski, FL Lic. #43144
Truss Engineering Co.
818 Soundside Road
Edenton, NC 27932
FL COA #7239

January 23,2008

ENGINEERING BY TRENCO A MiTek Affiliate
818 Soundside Road
Edenton, NC 27932

Job	Truss	Truss Type	Qty	Ply	MONTGOMERY_FLORIDA_125
MONTGOMERY	V34	GABLE	1	1	E4632389 Job Reference (optional)

Maronda Homes Inc., Sanford, FL

7.030 s Jan 3 2008 MiTek Industries, Inc. Wed Jan 23 13:37:39 2008 Page 1

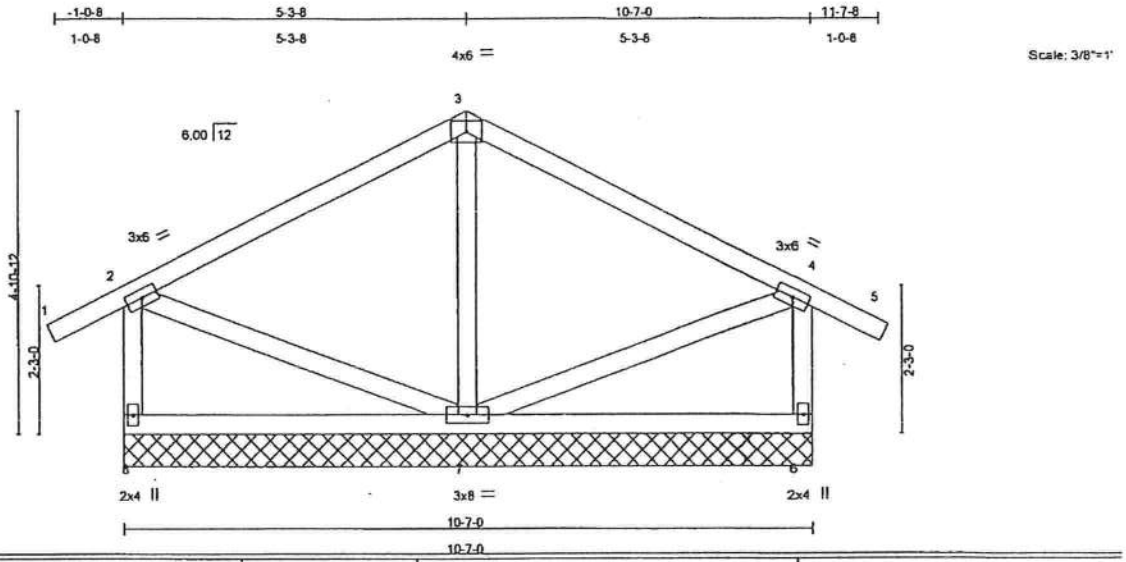

LOADING (psf)			SPACING	2-0-0	CSI		DEFL	in	(loc)	l/defl	L/d	PLATES	GRIP
TCLL	16.0		Plates Increase	1.25	TC	0.25	Vert(LL)	0.00	5	n/r	120	MT20	244/190
TCDL	7.0		Lumber Increase	1.25	BC	0.15	Vert(TL)	0.00	5	n/r	120		
BCLL	10.0	*	Rep Stress Incr	YES	WB	0.08	Horz(TL)	0.00	6	n/a	n/a		
BCDL	10.0		Code FBC2004/TPI2002		(Matrix)							Weight: 64 lb	

LUMBER

TOP CHORD 2 X 4 SYP No.2
BOT CHORD 2 X 4 SYP No.2
WEBS 2 X 4 SYP No.3
OTHERS 2 X 4 SYP No.3

BRACING

TOP CHORD Structural wood sheathing directly applied or 6-0-0 oc purlins, except end verticals.
BOT CHORD Rigid ceiling directly applied or 10-0-0 oc bracing.

REACTIONS (lb/size) 8=282/10-7-0, 6=282/10-7-0, 7=436/10-7-0
Max Horz 8=69(LC 6)
Max Uplift8=-118(LC 6), 6=-118(LC 7), 7=-56(LC 6)

FORCES (lb) - Maximum Compression/Maximum Tension
TOP CHORD 2-8=-186/226, 1-2=0/26, 2-3=-97/75, 3-4=-97/75, 4-5=0/26, 4-6=-186/226
BOT CHORD 7-8=-77/67, 6-7=-15/67
WEBS 3-7=-203/154, 2-7=-38/76, 4-7=-38/77

NOTES

1) Unbalanced roof live loads have been considered for this design.
2) Wind: ASCE 7-02; 125mph (3-second gust); h=25ft; TCDL=4.2psf; BCDL=6.0psf; Category II; Exp B; enclosed; MWFRS (low-rise) and C-C Interior(1) zone; Lumber DOL=1.33 plate grip DOL=1.33. This truss is designed for C-C for members and forces, and for MWFRS for reactions specified.
3) This truss has been designed for a 10.0 psf bottom chord live load nonconcurrent with any other live loads.
4) Gable requires continuous bottom chord bearing.
5) * This truss has been designed for a live load of 20.0psf on the bottom chord in all areas where a rectangle 3-6-0 tall by 1-0-0 wide will fit between the bottom chord and any other members.
6) Provide mechanical connection (by others) of truss to bearing plate capable of withstanding 118 lb uplift at joint 8, 118 lb uplift at joint 6 and 56 lb uplift at joint 7.

LOAD CASE(S) Standard

MARVIN A. STRZYZEWSKI
LICENSE
No 43144
STATE OF FLORIDA
PROFESSIONAL ENGINEER

Marvin A. Strzyzewski, FL Lic. #43144
Truss Engineering Co.
818 Soundside Road
Edenton, NC 27932
FL COA #7239

January 23,2008

ENGINEERING BY TRENCO A MiTek Affiliate
818 Soundside Road
Edenton, NC 27932

Job	Truss	Truss Type	Qty	Ply	MONTGOMERY_FLORIDA_125
MONTGOMERY	V4	GABLE	1	1	E4632390 Job Reference (optional)

Maronda Homes Inc., Sanford, FL

7.030 s Jan 3 2008 MiTek Industries, Inc. Wed Jan 23 13:37:40 2008 Page 1

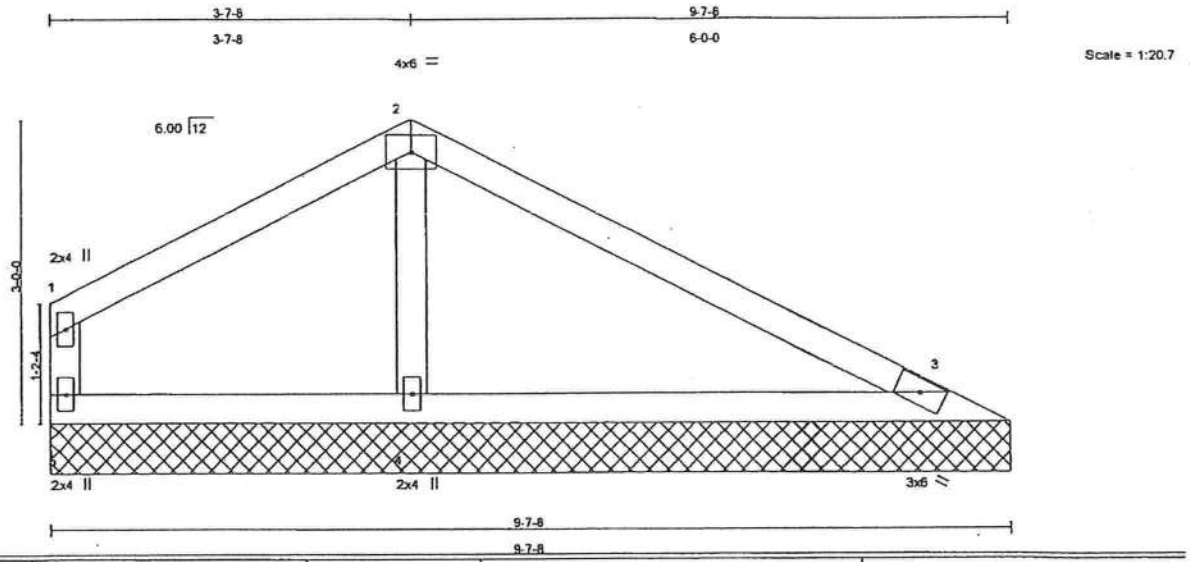

LOADING (psf)		SPACING	2-0-0	CSI		DEFL	in	(loc)	l/defl	L/d	PLATES	GRIP
TCLL	16.0	Plates Increase	1.25	TC	0.22	Vert(LL)	n/a	-	n/a	999	MT20	244/190
TCDL	7.0	Lumber Increase	1.25	BC	0.22	Vert(TL)	n/a	-	n/a	999		
BCLL	10.0 *	Rep Stress Incr	YES	WB	0.05	Horz(TL)	0.00	3	n/a	n/a		
BCDL	10.0	Code FBC2004/TPI2002		(Matrix)							Weight: 34 lb	

LUMBER

TOP CHORD 2 X 4 SYP No.2
BOT CHORD 2 X 4 SYP No.2
WEBS 2 X 4 SYP No.3
OTHERS 2 X 4 SYP No.3

BRACING

TOP CHORD Structural wood sheathing directly applied or 6-0-0 oc purlins, except end verticals.
BOT CHORD Rigid ceiling directly applied or 6-0-0 oc bracing.

REACTIONS (lb/size) 5=95/9-7-8, 3=196/9-7-8, 4=471/9-7-8
Max Horz 5=-66(LC 7)
Max Uplift5=-56(LC 6), 3=-35(LC 7), 4=-103(LC 7)
Max Grav5=134(LC 10), 3=196(LC 1), 4=471(LC 1)

FORCES (lb) - Maximum Compression/Maximum Tension
TOP CHORD 1-5=-90/74, 1-2=-76/62, 2-3=-55/79
BOT CHORD 4-5=-31/71, 3-4=-31/71
WEBS 2-4=-238/172

NOTES

1) Unbalanced roof live loads have been considered for this design.
2) Wind: ASCE 7-02; 125mph (3-second gust); h=25ft; TCDL=4.2psf; BCDL=6.0psf; Category II; Exp B; enclosed; MWFRS (low-rise) and C-C Interior(1) zone; Lumber DOL=1.33 plate grip DOL=1.33. This truss is designed for C-C for members and forces, and for MWFRS for reactions specified.
3) This truss has been designed for a 10.0 psf bottom chord live load nonconcurrent with any other live loads.
4) Gable requires continuous bottom chord bearing.
5) * This truss has been designed for a live load of 20.0psf on the bottom chord in all areas where a rectangle 3-6-0 tall by 1-0-0 wide will fit between the bottom chord and any other members.
6) Provide mechanical connection (by others) of truss to bearing plate capable of withstanding 56 lb uplift at joint 5, 35 lb uplift at joint 3 and 103 lb uplift at joint 4.

LOAD CASE(S) Standard

MARVIN A. STRZYZEWSKI
LICENSE
No 43144
STATE OF FLORIDA
PROFESSIONAL ENGINEER

Marvin A. Strzyzewski, FL Lic. #43144
Truss Engineering Co.
818 Soundside Road
Edenton, NC 27932
FL COA #7239

January 23,2008

ENGINEERING BY TRENCO A MiTek Affiliate
818 Soundside Road
Edenton, NC 27932

Job	Truss	Truss Type	Qty	Ply	MONTGOMERY_FLORIDA_125
MONTGOMERY	V5	GABLE	1	1	E4632391 Job Reference (optional)

Maronda Homes Inc., Sanford, FL

7.030 s Jan 3 2008 MiTek Industries, Inc. Wed Jan 23 13:37:40 2008 Page 1

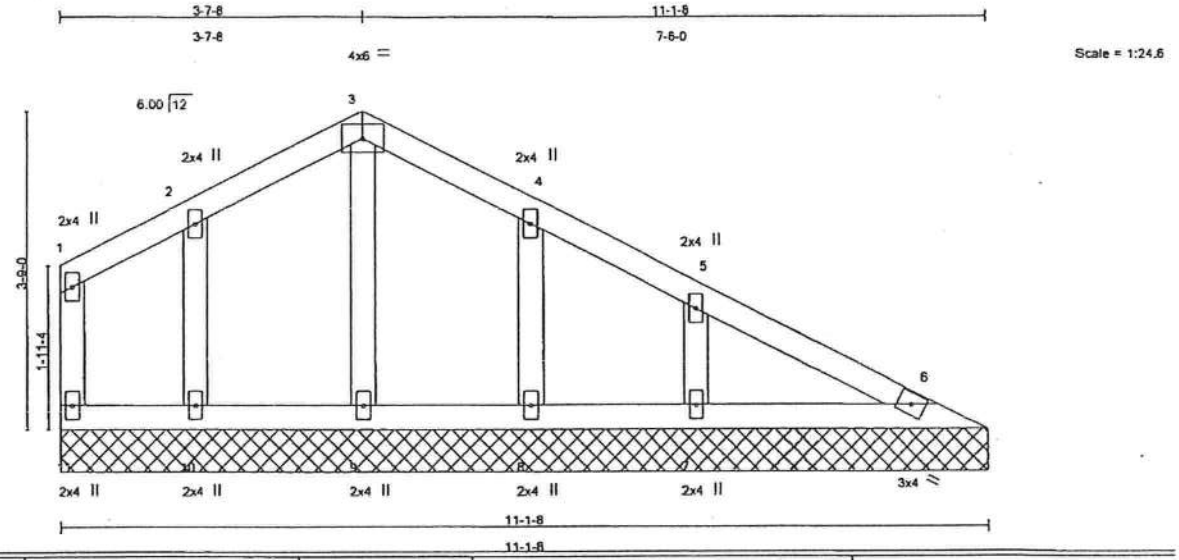

LOADING (psf)			SPACING 2-0-0	CSI		DEFL	in	(loc)	l/defl	L/d	PLATES	GRIP
TCLL	16.0		Plates Increase 1.25	TC	0.06	Vert(LL)	n/a	-	n/a	999	MT20	244/190
TCDL	7.0		Lumber Increase 1.25	BC	0.06	Vert(TL)	n/a	-	n/a	999		
BCLL	10.0	*	Rep Stress Incr YES	WB	0.04	Horz(TL)	0.00	6	n/a	n/a		
BCDL	10.0		Code FBC2004/TPI2002	(Matrix)							Weight: 49 lb	

LUMBER
TOP CHORD 2 X 4 SYP No.2
BOT CHORD 2 X 4 SYP No.2
WEBS 2 X 4 SYP No.3
OTHERS 2 X 4 SYP No.3

BRACING
TOP CHORD Structural wood sheathing directly applied or 6-0-0 oc purlins, except end verticals.
BOT CHORD Rigid ceiling directly applied or 10-0-0 oc bracing.

REACTIONS (lb/size) 11=58/11-1-8, 6=104/11-1-8, 9=177/11-1-8, 10=154/11-1-8, 8=142/11-1-8, 7=257/11-1-8
Max Horz 11=-97(LC 7)
Max Uplift11=-22(LC 7), 6=-6(LC 6), 10=-59(LC 6), 8=-53(LC 7), 7=-94(LC 7)
Max Grav11=58(LC 1), 6=104(LC 1), 9=177(LC 1), 10=160(LC 10), 8=146(LC 11), 7=257(LC 1)

FORCES (lb) - Maximum Compression/Maximum Tension
TOP CHORD 1-11=-32/38, 1-2=-20/28, 2-3=-27/76, 3-4=-26/76, 4-5=-32/43, 5-6=-73/30
BOT CHORD 10-11=-5/90, 9-10=-5/90, 8-9=-5/90, 7-8=-5/90, 6-7=-5/90
WEBS 3-9=-91/23, 2-10=-88/90, 4-8=-82/90, 5-7=-134/140

NOTES
1) Unbalanced roof live loads have been considered for this design.
2) Wind: ASCE 7-02; 125mph (3-second gust); h=25ft; TCDL=4.2psf; BCDL=6.0psf; Category II; Exp B; enclosed; MWFRS (low-rise) and C-C Interior(1) zone; Lumber DOL=1.33 plate grip DOL=1.33. This truss is designed for C-C for members and forces, and for MWFRS for reactions specified.
3) This truss has been designed for a 10.0 psf bottom chord live load nonconcurrent with any other live loads.
4) Gable requires continuous bottom chord bearing.
5) * This truss has been designed for a live load of 20.0psf on the bottom chord in all areas where a rectangle 3-6-0 tall by 1-0-0 wide will fit between the bottom chord and any other members.
6) Provide mechanical connection (by others) of truss to bearing plate capable of withstanding 22 lb uplift at joint 11, 6 lb uplift at joint 6, 59 lb uplift at joint 10, 53 lb uplift at joint 8 and 94 lb uplift at joint 7.

LOAD CASE(S) Standard

MARVIN A. STRZYZEWSKI
LICENSE
No 43144
STATE OF FLORIDA
PROFESSIONAL ENGINEER

Marvin A. Strzyzewski, FL Lic. #43144
Truss Engineering Co.
818 Soundside Road
Edenton, NC 27932
FL COA #7239

January 23,2008

ENGINEERING BY TRENCO A MiTek Affiliate
818 Soundside Road
Edenton, NC 27932

GEO-TECH, INC.

Engineering Consultants in Geotechnical • Environmental • Construction Materials Testing

7242
27224

FIELD DENSITY WORKSHEET

CLIENT MAHONDA HOMES

DATE 08JUL/08

PROJECT NO.

PROJECT NAME TIMBER LANDS LAKE CITY

PERMIT NO.

EARTH CONTRACTOR Lot #20 JOB # 9TM02201

TESTED BY JKC

COMPACTION REQUIREMENT (%) 95% ☐ Standard Proctor ☑ Modified Proctor

PATRICK FIELD CONTACT

TOTAL ON-SITE TIME

MILES FROM OFFICE

☐ Limerock ☐ Subgrade ☐ Pipe Backfill ☑ Building Pad ☑ Building Footing ☐ Other

TEST LOCATION	LAB PROCTOR DENS.	LAB PROCTOR OMC	TEST DEPTH	PROBE DEPTH	% MOIST.	WET DENSITY (PCF)	DRY DENSITY (PCF)	% COMP.
CTR. of PAD	104.9	10.1	FL	12"	7.2	111.3	103.9	99.0
CTR. of E. FTG	)	)	)	)	8.6	110.3	101.6	96.8
CTR. of W. FTG	)	)	)	)	8.0	109.3	101.2	96.5

REMARKS

* Density failed to meet minimum project requirement

** Retest indicates minimum density requirement was obtained.

( ) Client is aware of unsatisfactory test results.

2603 NW 74TH PLACE • GAINESVILLE, FLORIDA 32653 • PHONE: (352) 372-1274 • FAX: (352) 372-2721

CERTIFICATE OF

OCCUPANCY

COLUMBIA COUNTY, FLORIDA

Department of Building and Zoning Inspection

This Certificate of Occupancy is issued to the below named permit holder for the building and premises at the below named location, and certifies that the work has been completed in accordance with the Columbia County Building Code.

Parcel Number 10-4S-16-02856-120 **Building permit No.** 000027224

Use Classification SFD,UTILITY **Fire:** 70.62

Permit Holder THEODORE BROCK **Waste:** 184.25

Owner of Building MARONDA HOMES **Total:** 254.87

Location: 278 SW TIMBERRIDGE DRIVE, LAKE CITY, FL

Date: 11/14/2008

Wayne H. Russ

Building Inspector

POST IN A CONSPICUOUS PLACE
(Business Places Only)

27224

Inst:200812014516 Date:8/5/2008 Time:8:11 AM
DC,P.DeWitt Cason,Columbia County Page 1 of 1 B:1155 P:2456

NOTICE OF COMMENCEMENT

County Clerk's Office Stamp or Seal

Tax Parcel Identification Number 10-4S-16-02856-120

THE UNDERSIGNED hereby gives notice that improvements will be made to certain real property, and in accordance with Section 713.13 of the Florida Statutes, the following information is provided in this **NOTICE OF COMMENCEMENT**.

1. Description of property *(legal description)*: 2011 Timberlands
   a) Street *(job)* Address: 218 SW Timber Ridge Drive
2. General description of improvements: Construction of a single family dwelling
3. Owner Information
   a) Name and address: Maronda Homes Inc of FL 6800 Southpoint Pkwy #300 Jax FL 32216
   b) Name and address of fee simple titleholder (if other than owner)
   c) Interest in property
4. Contractor Information
   a) Name and address: Maronda Homes Inc of FL 6800 Southpoint Pkwy #300 Jax FL 32216
   b) Telephone No. (904) 296-1490 Fax No. (Opt.) (904) 332-6375
5. Surety Information
   a) Name and address:
   b) Amount of Bond:
   c) Telephone No.: Fax No. (Opt.)
6. Lender
   a) Name and address:
   b) Phone No.
7. Identity of person within the State of Florida designated by owner upon whom notices or other documents may be served:
   a) Name and address: Southern Title Holding Co LLC 3943 Baymeadows Rd Jax FL 32217
   b) Telephone No.: (904) 739-2205 Fax No. (Opt.)
8. In addition to himself, owner designates the following person to receive a copy of the Lienor's Notice as provided in Section 713.13(l)(b), Florida Statutes:
   a) Name and address:
   b) Telephone No.: Fax No. (Opt.)
9. Expiration date of Notice of Commencement **(the expiration date is one year from the date of recording unless a different date is specified)**:

WARNING TO OWNER: ANY PAYMENTS MADE BY THE OWNER AFTER THE EXPIRATION OF THE NOTICE OF COMMENCEMENT ARE CONSIDERED IMPROPER PAYMENTS UNDER CHAPTER 713, PART I, SECTION 713.13, FLORIDA STATUTES, AND CAN RESULT IN YOUR PAYING TWICE FOR IMPROVEMENTS TO YOUR PROPERTY; A NOTICE OF COMMENCEMENT MUST BE RECORDED AND POSTED ON THE JOB SITE BEFORE THE FIRST INSPECTION. IF YOU INTEND TO OBTAIN FINANCING, CONSULT YOUR LENDER OR AN ATTORNEY BEFORE COMMENCING WORK OR RECORDING YOUR NOTICE OF COMMENCEMENT.

STATE OF FLORIDA
COUNTY OF COLUMBIA

10. Signature of Owner or Owner's Authorized Office/Director/Partner/Manager

Theodore C. Brock
Print Name

The foregoing instrument was acknowledged before me, a Florida Notary, this 31 day of July, 2008, by: Theodore C. Brock as V.P. of Construction (type of authority, e.g. officer, trustee, attorney fact) for Maronda Homes Inc of Florida (name of party on behalf of whom instrument was executed).

Personally Known XX OR Produced Identification ____ Type ____

Notary Signature Melissa L McKague Notary Stamp or Seal:

Notary Public State of Florida
Melissa L McKague
My Commission DD493647
Expires 11/22/2009

—AND—

11. Verification pursuant to Section 92.525, Florida Statutes. Under penalties of perjury, I declare that I have read the foregoing and that the facts stated in it are true to the best of my knowledge and belief.

Signature of Natural Person Signing (in line #10 above.)

BOUNDARY SURVEY

IN SECTION 10, TOWNSHIP 4 SOUTH, RANGE 16 EAST, COLUMBIA COUNTY, FLORIDA

LEGAL DESCRIPTION:

LOT TWENTY (20) OF "TIMBERLANDS, PHASE 1" AS PER PLAT THEREOF, AS RECORDED IN PLAT BOOK '9', PAGES 26–27 OF THE PUBLIC RECORDS OF COLUMBIA COUNTY, FLORIDA.

N
W E
S

30 0 30 60 90
1" = 30'

CERTIFIED TO:

1) MARONDA HOMES

Permit # 27224

BUILDING SETBACK NOTE:

BUILDING SETBACK INFORMATION FOR "TIMBERLANDS" IS AS FOLLOWS: FRONT 25', REAR 15', SIDE 10'

BENCHMARK NOTE:

ELEVATIONS SHOWN HEREON ARE BASED UPON A BENCHMARK SET IN A 8" PINE AT THE FRONT OF LOT 2, WITH AN ELEVATION OF 98.76'. THIS INFORMATION WAS PROVIDED TO THIS SURVEYOR BY BRITT SURVEYING (PLATTING SURVEYOR) DATUM UNKNOWN.

SURVEYOR NOTES:

1) TO THE BEST OF MY KNOWLEDGE, THERE ARE NO ENCROACHMENTS, BOUNDARY LINE DISPUTES, EASEMENTS, OR CLAIMS OF EASEMENTS, OTHER THAN ARE DEPICTED ON THIS DRAWING.
2) ALL UTILITIES AND OR IMPROVEMENTS, IF ANY, MAY NOT BE SHOWN ON THIS DRAWING.
3) IN THE OPINION OF THIS SURVEYOR THE BOUNDARY SHOWN HEREON BEST REPRESENTS THE LOCATION OF THE SUBJECT PROPERTY IN RELATION TO THE DESCRIPTION AND THOSE PROPERTY CORNERS FOUND TO BE ACCEPTABLE TO THIS SURVEYOR.
4) BUILDING SETBACK LINES DEPICTED HEREON ARE SHOWN AS PER THE RECORD PLAT, BUT ARE SUBJECT TO CHANGE. PRIOR TO ANY NEW CONSTRUCTION, THE APPROPRIATE GOVERNING AUTHORITY SHOULD BE CONTACTED FOR THE CURRENT SETBACK REQUIREMENTS.
5) THIS MAP OF SURVEY REFLECTS CONDITIONS LOCATED AS OF THE DATE OF FIELD WORK COMPLETION (SEE TITLE BLOCK).
6) AREAS OF ENVIRONMENTAL CONCERN HAVE NOT BEEN LOCATED BY THIS SURVEYOR, UNLESS OTHERWISE DEPICTED HEREON.

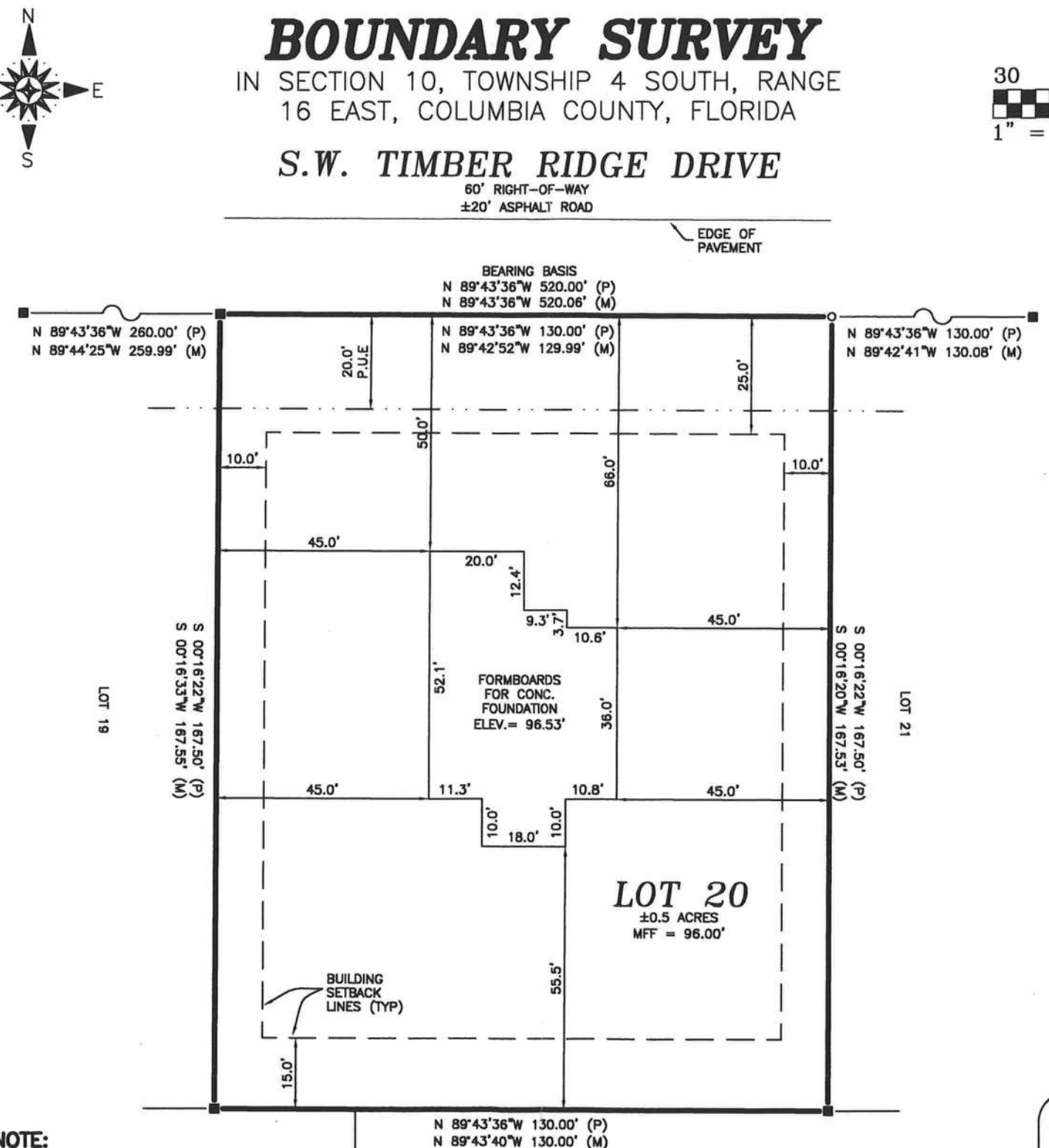

LEGEND:

- ● = FOUND 1/2" REBAR NO IDENTIFICATION
- ⊙ = FOUND 1/2" REBAR & CAP L.B. 6894
- ○ = SET 1/2" REBAR & CAP L.B. 6894
- ⊘ = FOUND 3/4" IRON PIPE
- ■ = FOUND 4" X 4" CONC. MON. P.S.M 5757
- □ = SET 4" X 4" CONC. MON. P.S.M. 5582
- ✕ = SET NAIL & DISK P.S.M. 5582
- ✕ = FOUND NAIL & DISK
- ⊠ = FOUND 6" X 6" S.R.D. R/W MON.
- ⊟ = CATV RISER
- ⊠ = TELEPHONE PEDESTAL
- ⊘ = WOOD POWER POLE

ABBREVIATIONS:

A/C = AIR CONDITIONER
ASPH = ASPHALT
C = CALCULATED FROM MEASURED
CATV = CABLE TELEVISION
C/B = CONCRETE BLOCK
CLF = CHAIN LINK FENCE
CM = CONCRETE MONUMENT
CONC = CONCRETE
ELEC = ELECTRIC
ELEV = ELEVATION
FND = FOUND
FNC = FENCE
LB = LICENSED SURVEYOR BUSINESS
(M) = FIELD MEASURED
MFF = MINIMUM FINISHED FLOOR ELEVATION
MH = MANHOLE
O.U. = OVERHEAD UTILITIES
P = PLAT
PB = PLAT BOOK
P.U.E. = PUBLIC UTILITIES EASEMENT
TRANS = TRANSFORMER
TYP = TYPICAL
WM = WATER METER
WV = WATER VALVE

FLOOD NOTE:

IN THE OPINION OF THIS SURVEYOR, ACCORDING TO THE NATIONAL FLOOD INSURANCE PROGRAM, FLOOD INSURANCE RATE MAP COMMUNITY PANEL NO. 120070–0175–B, DATED 1–6–88, THIS PROPERTY IS IN FLOOD ZONE "X" WHICH IS AN AREA DETERMINED TO BE OUTSIDE 500–YEAR FLOOD PLAIN, AS SCALED FROM SAID MAP. INFORMATION FROM THE FEDERAL EMERGENCY MANAGEMENT AGENCY (FEMA) FLOOD INSURANCE RATE MAPS, SHOWN ON THIS MAP, WAS CURRENT AS OF THE REFERENCED DATE. MAP REVISIONS AND AMENDMENTS ARE PERIODICALLY MADE BY LETTER AND MAY NOT BE REFLECTED ON THE MOST CURRENT MAP.

TITLE NOTE:

THIS SURVEY IS SUBJECT TO ANY FACTS THAT MAY BE DISCLOSED BY A FULL AND ACCURATE TITLE SEARCH. THIS SURVEYOR HAS NOT PERFORMED A SEARCH OF THE PUBLIC RECORDS ON THIS PARCEL FOR ANY CLAIMS OF TITLE, EASEMENTS, OR RESTRICTIONS THAT MAY EFFECT THIS PARCEL. THE PRESENCE OR ABSENCE OF ANY SUCH CLAIMS ARE NOT CERTIFIED HEREON.

CERTIFICATE OF SURVEYOR:

NOT VALID WITHOUT THE SIGNATURE AND THE ORIGINAL RAISED SEAL OF A FLORIDA LICENSED SURVEYOR AND MAPPER. ADDITIONS OR DELETIONS TO THIS MAP BY ANYONE OTHER THAN THIS SURVEYOR IS PROHIBITED.

I HEREBY CERTIFY THAT THE SURVEY DATA SHOWN HEREON, IS A TRUE AND CORRECT REPRESENTATION OF A SURVEY PERFORMED UNDER MY SUPERVISION OF THE HEREON DESCRIBED PROPERTY, AND IT MEETS THE MINIMUM TECHNICAL STANDARDS AS SET FORTH BY THE FLORIDA BOARD OF LAND SURVEYORS, PURSUANT TO SECTION 472.027, FLORIDA STATUTES, AND CHAPTER 61G17–6, FLORIDA ADMINISTRATIVE CODE.

BY: _____
JAMES E. BRINKMAN, PSM – FLA. CERT# 5582
DATE: 8/6/08

BRINKMAN SURVEYING & MAPPING INC.
4607 NW 6th STREET SUITE C, GAINESVILLE, FL. 32609
PHONE: (352) 374–7707 FAX: (352) 374–8757

SCALE: 1" = 30'	"THE BENCHMARK IN QUALITY SERVICE"	DRAWN BY: ZL
DATE: 8/6/08		CHECKED BY: J.B.
FIELD WORK COMPLETED ON 7/31/08 FIELDBOOK 98, PAGE 25		
PREPARED FOR: MARONDA		DRAWING NUMBER 103–08

LEGAL DESCRIPTION:

LOT TWENTY (20) OF "TIMBERLANDS" AS PER PLAT THEREOF, AS RECORDED IN PLAT BOOK '9', PAGE 27 OF THE PUBLIC RECORDS OF COLUMBIA COUNTY, FLORIDA.

PROPOSED BUILDING LAYOUT

IN SECTION 10, TOWNSHIP 4 SOUTH, RANGE 16 EAST, COLUMBIA COUNTY, FLORIDA

30 0 30 60 90

1" = 30'

CERTIFIED TO:

1) MARONDA HOMES

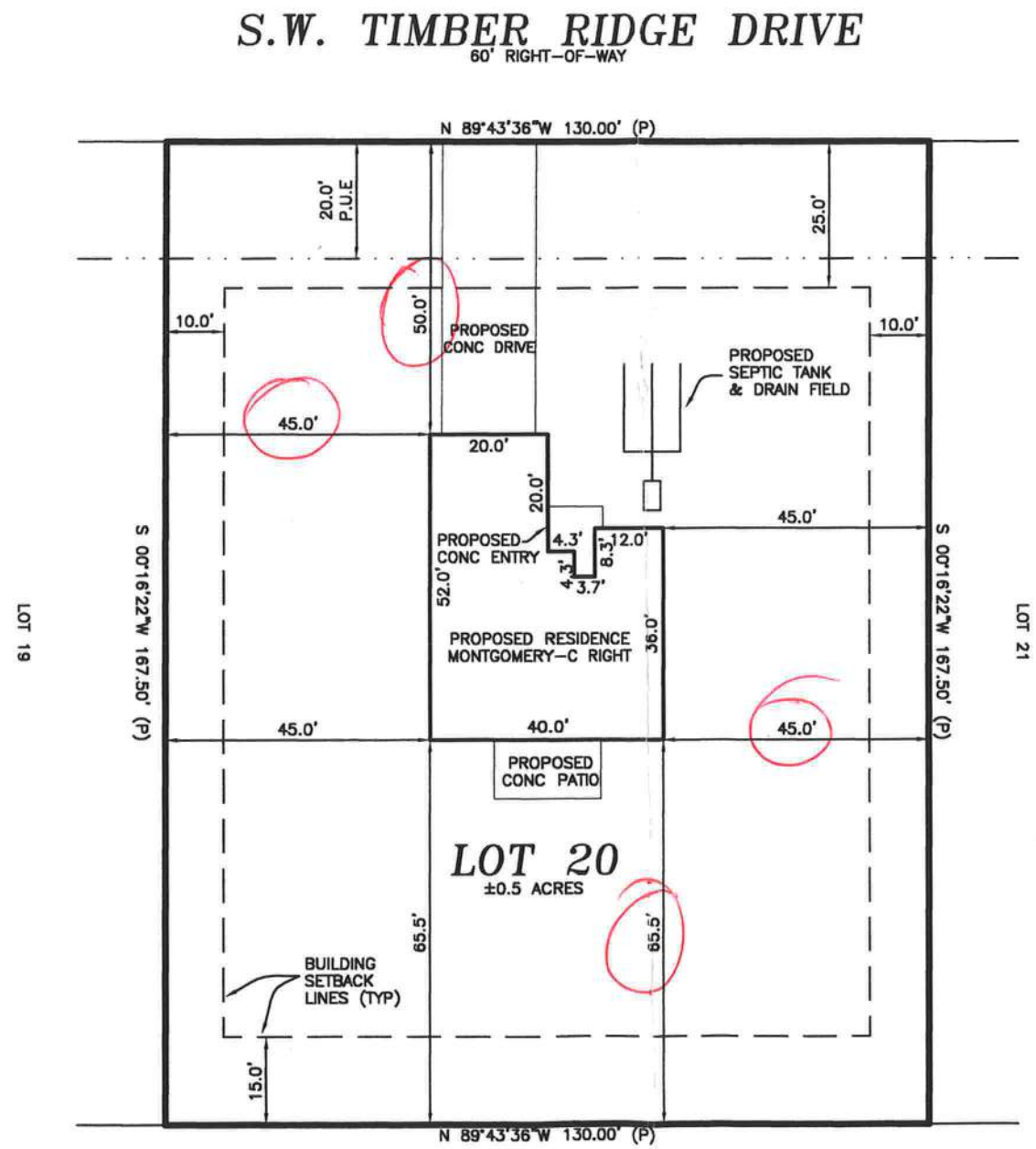

LEGEND:

- ● = FOUND 1/2" REBAR NO IDENTIFICATION
- ⊙ = FOUND 1/2" REBAR & CAP L.B. 6894
- ○ = SET 1/2" REBAR & CAP L.B. 6894
- ⌀ = FOUND 3/4" IRON PIPE
- ■ = FOUND 4" X 4" CONC. MON. NO IDENTIFICATION
- □ = SET 4" X 4" CONC. MON. P.S.M. 5582
- ⨯ = SET NAIL & DISK P.S.M. 5582
- ⨯ = FOUND NAIL & DISK
- ⊠ = FOUND 6" X 6" S.R.D. R/W MON.
- ⊟ = CATV RISER
- ⊠ = TELEPHONE PEDESTAL
- ⌀ = WOOD POWER POLE

ABBREVIATIONS:

A/C = AIR CONDITIONER
ASPH = ASPHALT
C = CALCULATED FROM MEASURED
CATV = CABLE TELEVISION
C/B = CONCRETE BLOCK
CLF = CHAIN LINK FENCE
CM = CONCRETE MONUMENT
CONC = CONCRETE
ELEC = ELECTRIC
ELEV = ELEVATION
FND = FOUND
FNC = FENCE
LB = LICENSED SURVEYOR BUSINESS
(M) = FIELD MEASURED
MH = MANHOLE
O.U. = OVERHEAD UTILITIES
P = PLAT
PB = PLAT BOOK
P.U.E. = PUBLIC UTILITIES EASEMENT
TRANS = TRANSFORMER
TYP = TYPICAL
WM = WATER METER
WV = WATER VALVE

BUILDING SETBACK NOTE:

BUILDING SETBACK INFORMATION FOR "TIMBERLANDS" IS AS FOLLOWS: FRONT 25', REAR 15', SIDE 10'

SURVEYOR NOTES:

1) TO THE BEST OF MY KNOWLEDGE, THERE ARE NO ENCROACHMENTS, BOUNDARY LINE DISPUTES, EASEMENTS, OR CLAIMS OF EASEMENTS, OTHER THAN ARE DEPICTED ON THIS DRAWING.
2) ALL UTILITIES AND OR IMPROVEMENTS, IF ANY, MAY NOT BE SHOWN ON THIS DRAWING.
3) IN THE OPINION OF THIS SURVEYOR THE BOUNDARY SHOWN HEREON BEST REPRESENTS THE LOCATION OF THE SUBJECT PROPERTY IN RELATION TO THE DESCRIPTION AND THOSE PROPERTY CORNERS FOUND TO BE ACCEPTABLE TO THIS SURVEYOR.
4) BUILDING SETBACK LINES DEPICTED HEREON ARE SHOWN AS PER THE RECORD PLAT, BUT ARE SUBJECT TO CHANGE. PRIOR TO ANY NEW CONSTRUCTION, THE APPROPRIATE GOVERNING AUTHORITY SHOULD BE CONTACTED FOR THE CURRENT SETBACK REQUIREMENTS.
5) THIS MAP OF SURVEY REFLECTS CONDITIONS LOCATED AS OF THE DATE OF FIELD WORK COMPLETION (SEE TITLE BLOCK).
6) AREAS OF ENVIRONMENTAL CONCERN HAVE NOT BEEN LOCATED BY THIS SURVEYOR, UNLESS OTHERWISE DEPICTED HEREON.

FLOOD NOTE:

IN THE OPINION OF THIS SURVEYOR, ACCORDING TO THE NATIONAL FLOOD INSURANCE PROGRAM, FLOOD INSURANCE RATE MAP COMMUNITY PANEL NO. 120070-0175-B, DATED 1-6-88, THIS PROPERTY IS IN FLOOD ZONE "X" WHICH IS AN AREA DETERMINED TO BE OUTSIDE 500-YEAR FLOOD PLAIN, AS SCALED FROM SAID MAP. INFORMATION FROM THE FEDERAL EMERGENCY MANAGEMENT AGENCY (FEMA) FLOOD INSURANCE RATE MAPS, SHOWN ON THIS MAP, WAS CURRENT AS OF THE REFERENCED DATE. MAP REVISIONS AND AMENDMENTS ARE PERIODICALLY MADE BY LETTER AND MAY NOT BE REFLECTED ON THE MOST CURRENT MAP.

TITLE NOTE:

THIS SURVEY IS SUBJECT TO ANY FACTS THAT MAY BE DISCLOSED BY A FULL AND ACCURATE TITLE SEARCH. THIS SURVEYOR HAS NOT PERFORMED A SEARCH OF THE PUBLIC RECORDS ON THIS PARCEL FOR ANY CLAIMS OF TITLE, EASEMENTS, OR RESTRICTIONS THAT MAY EFFECT THIS PARCEL. THE PRESENCE OR ABSENCE OF ANY SUCH CLAIMS ARE NOT CERTIFIED HEREON.

THIS IS NOT A BOUNDARY SURVEY

CERTIFICATE OF SURVEYOR:

NOT VALID WITHOUT THE SIGNATURE AND THE ORIGINAL RAISED SEAL OF A FLORIDA LICENSED SURVEYOR AND MAPPER. ADDITIONS OR DELETIONS TO THIS MAP BY ANYONE OTHER THAN THIS SURVEYOR IS PROHIBITED.

I HEREBY CERTIFY THAT THE SURVEY DATA SHOWN HEREON, IS A TRUE AND CORRECT REPRESENTATION OF A SURVEY PERFORMED UNDER MY SUPERVISION OF THE HEREON DESCRIBED PROPERTY, AND IT MEETS THE MINIMUM TECHNICAL STANDARDS AS SET FORTH BY THE FLORIDA BOARD OF LAND SURVEYORS, PURSUANT TO SECTION 472.027, FLORIDA STATUTES, AND CHAPTER 61G17-6, FLORIDA ADMINISTRATIVE CODE.

BY: _____
JAMES E. BRINKMAN, PSM - FLA. CERT# 5582

DATE: 5/20/08

BRINKMAN SURVEYING & MAPPING INC.
4607 NW 6th STREET SUITE C, GAINESVILLE, FL. 32609
PHONE: (352) 374-7707 FAX: (352) 374-8757

SCALE: 1" = 30'	"THE BENCHMARK IN QUALITY SERVICE"	DRAWN BY: ZL
DATE: 5/19/08		CHECKED BY: J.B.
FIELD WORK COMPLETED ON **** FIELDBOOK **, PAGE **		
PREPARED FOR: MARONDA		DRAWING NUMBER 103-08

LEGAL DESCRIPTION:

LOT TWENTY (20) OF "TIMBERLANDS" AS PER PLAT THEREOF, AS RECORDED IN PLAT BOOK '9', PAGE 27 OF THE PUBLIC RECORDS OF COLUMBIA COUNTY, FLORIDA.

PROPOSED BUILDING LAYOUT

IN SECTION 10, TOWNSHIP 4 SOUTH, RANGE 16 EAST, COLUMBIA COUNTY, FLORIDA

30 0 30 60 90

1" = 30'

CERTIFIED TO:

1) MARONDA HOMES

BUILDING SETBACK NOTE:

BUILDING SETBACK INFORMATION FOR "TIMBERLANDS" IS AS FOLLOWS: FRONT 25', REAR 15', SIDE 10'

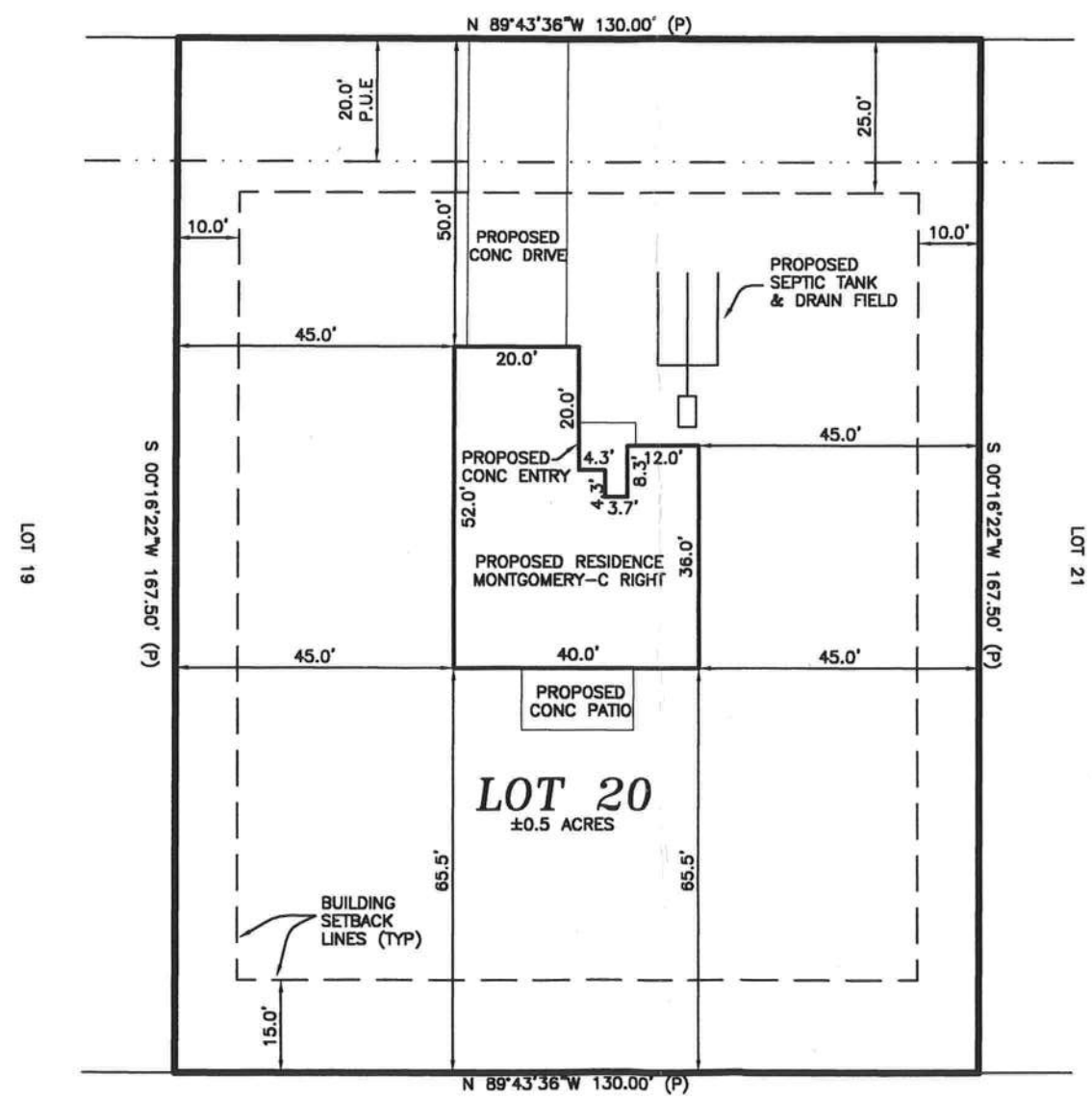

LEGEND:

- ● = FOUND 1/2" REBAR NO IDENTIFICATION
- ⊙ = FOUND 1/2" REBAR & CAP L.B. 6894
- ○ = SET 1/2" REBAR & CAP L.B. 6894
- ⌀ = FOUND 3/4" IRON PIPE
- ■ = FOUND 4" X 4" CONC. MON. NO IDENTIFICATION
- □ = SET 4" X 4" CONC. MON. P.S.M. 5582
- ✕ = SET NAIL & DISK P.S.M. 5582
- ✕ = FOUND NAIL & DISK
- ⊠ = FOUND 6" X 6" S.R.D. R/W MON.
- ⊟ = CATV RISER
- ⊡ = TELEPHONE PEDESTAL
- ⌀ = WOOD POWER POLE

ABBREVIATIONS:

A/C = AIR CONDITIONER
ASPH = ASPHALT
C = CALCULATED FROM MEASURED
CATV = CABLE TELEVISION
C/B = CONCRETE BLOCK
CLF = CHAIN LINK FENCE
CM = CONCRETE MONUMENT
CONC = CONCRETE
ELEC = ELECTRIC
ELEV = ELEVATION
FND = FOUND
FNC = FENCE
LB = LICENSED SURVEYOR BUSINESS
(M) = FIELD MEASURED
MH = MANHOLE
O.U. = OVERHEAD UTILITIES
P = PLAT
PB = PLAT BOOK
P.U.E. = PUBLIC UTILITIES EASEMENT
TRANS = TRANSFORMER
TYP = TYPICAL
WM = WATER METER
WV = WATER VALVE

SURVEYOR NOTES:

1) TO THE BEST OF MY KNOWLEDGE, THERE ARE NO ENCROACHMENTS, BOUNDARY LINE DISPUTES, EASEMENTS, OR CLAIMS OF EASEMENTS, OTHER THAN ARE DEPICTED ON THIS DRAWING.
2) ALL UTILITIES AND OR IMPROVEMENTS, IF ANY, MAY NOT BE SHOWN ON THIS DRAWING.
3) IN THE OPINION OF THIS SURVEYOR THE BOUNDARY SHOWN HEREON BEST REPRESENTS THE LOCATION OF THE SUBJECT PROPERTY IN RELATION TO THE DESCRIPTION AND THOSE PROPERTY CORNERS FOUND TO BE ACCEPTABLE TO THIS SURVEYOR.
4) BUILDING SETBACK LINES DEPICTED HEREON ARE SHOWN AS PER THE RECORD PLAT, BUT ARE SUBJECT TO CHANGE. PRIOR TO ANY NEW CONSTRUCTION, THE APPROPRIATE GOVERNING AUTHORITY SHOULD BE CONTACTED FOR THE CURRENT SETBACK REQUIREMENTS.
5) THIS MAP OF SURVEY REFLECTS CONDITIONS LOCATED AS OF THE DATE OF FIELD WORK COMPLETION (SEE TITLE BLOCK).
6) AREAS OF ENVIRONMENTAL CONCERN HAVE NOT BEEN LOCATED BY THIS SURVEYOR, UNLESS OTHERWISE DEPICTED HEREON.

FLOOD NOTE:

IN THE OPINION OF THIS SURVEYOR, ACCORDING TO THE NATIONAL FLOOD INSURANCE PROGRAM, FLOOD INSURANCE RATE MAP COMMUNITY PANEL NO. 120070-0175-B, DATED 1-6-88, THIS PROPERTY IS IN FLOOD ZONE "X" WHICH IS AN AREA DETERMINED TO BE OUTSIDE 500-YEAR FLOOD PLAIN, AS SCALED FROM SAID MAP. INFORMATION FROM THE FEDERAL EMERGENCY MANAGEMENT AGENCY (FEMA) FLOOD INSURANCE RATE MAPS, SHOWN ON THIS MAP, WAS CURRENT AS OF THE REFERENCED DATE. MAP REVISIONS AND AMENDMENTS ARE PERIODICALLY MADE BY LETTER AND MAY NOT BE REFLECTED ON THE MOST CURRENT MAP.

TITLE NOTE:

THIS SURVEY IS SUBJECT TO ANY FACTS THAT MAY BE DISCLOSED BY A FULL AND ACCURATE TITLE SEARCH. THIS SURVEYOR HAS NOT PERFORMED A SEARCH OF THE PUBLIC RECORDS ON THIS PARCEL FOR ANY CLAIMS OF TITLE, EASEMENTS, OR RESTRICTIONS THAT MAY EFFECT THIS PARCEL. THE PRESENCE OR ABSENCE OF ANY SUCH CLAIMS ARE NOT CERTIFIED HEREON.

THIS IS NOT A BOUNDARY SURVEY

CERTIFICATE OF SURVEYOR:

NOT VALID WITHOUT THE SIGNATURE AND THE ORIGINAL RAISED SEAL OF A FLORIDA LICENSED SURVEYOR AND MAPPER. ADDITIONS OR DELETIONS TO THIS MAP BY ANYONE OTHER THAN THIS SURVEYOR IS PROHIBITED.

I HEREBY CERTIFY THAT THE SURVEY DATA SHOWN HEREON, IS A TRUE AND CORRECT REPRESENTATION OF A SURVEY PERFORMED UNDER MY SUPERVISION OF THE HEREON DESCRIBED PROPERTY, AND IT MEETS THE MINIMUM TECHNICAL STANDARDS AS SET FORTH BY THE FLORIDA BOARD OF LAND SURVEYORS, PURSUANT TO SECTION 472.027, FLORIDA STATUTES, AND CHAPTER 61G17-6, FLORIDA ADMINISTRATIVE CODE.

BY: _____
JAMES E. BRINKMAN, PSM - FLA. CERT# 5582

DATE: 5/20/08

BRINKMAN SURVEYING & MAPPING INC.

4607 NW 6th STREET SUITE C, GAINESVILLE, FL. 32609

PHONE: (352) 374-7707 FAX: (352) 374-8757

SCALE: 1" = 30'	"THE BENCHMARK IN QUALITY SERVICE"	DRAWN BY: ZL
DATE: 5/19/08		CHECKED BY: J.B.
FIELD WORK COMPLETED ON **** FIELDBOOK **, PAGE **		
PREPARED FOR: MARONDA		DRAWING NUMBER 103-08

HOMETEAM
PEST DEFENSE®

TREATMENT WORKORDER

27224

☐ Termite Baiting System w/Tubes-under-the slab

☐ Treat Only ☒ Tubes-under-the slab and Treat ☐ Bora-Care

DATE CALLED IN:	7/30	DATE OF SCHEDULE:	8/6
TIME CALLED IN:		TIME SCHEDULE:	10:00

JOB NAME: Maronda SUBDIVISION: Timberland

JOB ADDRESS: 278 SW Timber Ridge Dr.

BILLING NAME: BILLING PHONE:

BILLING ADDRESS:

CALLED IN BY: PHONE: PERMIT NUMBER:

LOT & MODEL NUMBER: 20

DATE & TIME COMPLETED: 8/6/08

SQUARE FOOT: 1799 LINEAR FOOT: BLOCKVOIDS:

SLAB TYPE: mono TYPE OF FILL: dirt/sand

APPROX. DEPTH OF FOOTING: Outside: Inside:

☐ Addition ☐ Spot Treat ☐ Pool Addition ☐ Driveway

☐ Final/Completion ☐ Other

PESTICIDE USED: Fmax Pro TOTAL APPLIED: 90gal

PERCENT (%) USED: .1% STICKER POSTED: permit box

PRICE PER SQ. FT. =	TOTAL FOR P.T.		
	ADDITIONAL		
	TAX:		
/ /	TOTAL AMOUNT	$	

X X TECHNICIAN: Casey

I hereby acknowledge the satisfactory completion of the above described work.

GT 23 / TCI 12/05

FEES:

ROAD IMPACT FEE $1,046.00 CODE 210 UNIT 1
10100003632400

EMS IMPACT FEE $29.88
10300003632210

FIRE PROTECTION IMPACT FEE $78.63
10200003632220

CORRECTIONS IMPACT FEE $409.16
00100003632200

SCHOOL IMPACT FEE $1,500.00
00100003632900

TOTAL FEES CHARGED $3,063.67 CHECK NUMBER _____