DATE 05/05/2010

Columbia County Building Permit

This Permit Must Be Prominently Posted on Premises During Construction

PERMIT
000028537

APPLICANT JEFF GANSKOP PHONE 755-7413

ADDRESS P.O. BOX 1875 LAKE CITY FL 32056

OWNER JEFF GANSKOP PHONE 755-7413

ADDRESS 334 SW HAMLET CIRCLE LAKE CITY FL 32024

CONTRACTOR OWNER BUILDER PHONE

LOCATION OF PROPERTY 47S, TL HAMLET CIRCLE, 4TH HOUSE ON RIGHT

TYPE DEVELOPMENT ADDITION SFD ESTIMATED COST OF CONSTRUCTION 342450.00

HEATED FLOOR AREA 4370.00 TOTAL AREA 6849.00 HEIGHT STORIES 2

FOUNDATION CONC WALLS FRAMED ROOF PITCH 12/12 FLOOR SLAB

LAND USE & ZONING A-3 MAX. HEIGHT 41

Minimum Set Back Requirments: STREET-FRONT 30.00 REAR 25.00 SIDE 25.00

NO. EX.D.U. 0 FLOOD ZONE X DEVELOPMENT PERMIT NO.

PARCEL ID 36-4S-16-03355-000 SUBDIVISION SOUTHWOOD ACRES

LOT 8 BLOCK B PHASE UNIT TOTAL ACRES 2.79

Culvert Permit No.	Culvert Waiver	Contractor's License Number	Applicant/Owner/Contractor	
EXISTING	10-0095	BK	HD	N
Driveway Connection	Septic Tank Number	LU & Zoning checked by	Approved for Issuance	New Resident

COMMENTS: MUST COMPLY WITH THE FLORIDA BUILDING CODE-EXISTING BUILDING REQUIREMENTS, NOC ON FILE, FEE IS DOUBLED DUE TO NO PERMIT ISSUANCE BEFORE STARTING OF JOB

Check # or Cash 15540

FOR BUILDING & ZONING DEPARTMENT ONLY

(footer/Slab)

Temporary Power _____ date/app. by Foundation _____ date/app. by Monolithic _____ date/app. by

Under slab rough-in plumbing _____ date/app. by Slab _____ date/app. by Sheathing/Nailing _____ date/app. by

Framing _____ date/app. by Insulation _____ date/app. by

Rough-in plumbing above slab and below wood floor _____ date/app. by Electrical rough-in _____ date/app. by

Heat & Air Duct _____ date/app. by Peri. beam (Lintel) _____ date/app. by Pool _____ date/app. by

Permanent power _____ date/app. by C.O. Final _____ date/app. by Culvert _____ date/app. by

Pump pole _____ date/app. by Utility Pole _____ date/app. by M/H tie downs, blocking, electricity and plumbing _____ date/app. by

Reconnection _____ date/app. by RV _____ date/app. by Re-roof _____ date/app. by

BUILDING PERMIT FEE $ 1715.00 CERTIFICATION FEE $ 34.24 SURCHARGE FEE $ 34.24

MISC. FEES $ 1715.00 ZONING CERT. FEE $ 50.00 FIRE FEE $ 0.00 WASTE FEE $ 0.00

FLOOD DEVELOPMENT FEE $ FLOOD ZONE FEE $ 25.00 CULVERT FEE $ **TOTAL FEE** 3573.48

INSPECTORS OFFICE CLERKS OFFICE

NOTICE: IN ADDITION TO THE REQUIREMENTS OF THIS PERMIT, THERE MAY BE ADDITIONAL RESTRICTIONS APPLICABLE TO THIS PROPERTY THAT MAY BE FOUND IN THE PUBLIC RECORDS OF THIS COUNTY. AND THERE MAY BE ADDITIONAL PERMITS REQUIRED FROM OTHER GOVERNMENTAL ENTITIES SUCH AS WATER MANAGEMENT DISTRICTS, STATE AGENCIES, OR FEDERAL AGENCIES.

"WARNING TO OWNER: YOUR FAILURE TO RECORD A NOTICE OF COMMENCEMENT MAY RESULT IN YOUR PAYING TWICE FOR IMPROVEMENTS TO YOUR PROPERTY. IF YOU INTEND TO OBTAIN FINANCING, CONSULT WITH YOUR LENDER OR AN ATTORNEY BEFORE RECORDING YOUR NOTICE OF COMMENCEMENT."

EVERY PERMIT ISSUED SHALL BECOME INVALID UNLESS THE WORK AUTHORIZED BY SUCH PERMIT IS COMMENCED WITHIN 180 DAYS AFTER ITS ISSUANCE, OR IF THE WORK AUTHORIZED BY SUCH PERMIT IS SUSPENDED OR ABANDONED FOR A PERIOD OF 180 DAYS AFTER THE TIME THE WORK IS COMMENCED. A VALID PERMIT RECIEVES AN APPROVED INSPECTION EVERY 180 DAYS. WORK SHALL BE CONSIDERED NOT SUSPENDED, ABANDONED OR INVALID WHEN THE PERMIT HAS RECIEVED AN APPROVED INSPECTION WITHIN 180 DAYS OT THE PREVIOUS INSPECTION.

The Issuance of this Permit Does Not Waive Compliance by Permittee with Deed Restrictions.

DATE 05/05/2010

Columbia County Building Permit

This Permit Must Be Prominently Posted on Premises During Construction

PERMIT
000028537

APPLICANT JEFF GANSKOP PHONE 755-7413

ADDRESS P.O. BOX 1875 LAKE CITY FL 32056

OWNER JEFF GANSKOP PHONE 755-7413

ADDRESS 334 SW HAMLET CIRCLE LAKE CITY FL 32024

CONTRACTOR OWNER BUILDER PHONE

LOCATION OF PROPERTY 47S, TL HAMLET CIRCLE, 4TH HOUSE ON RIGHT

TYPE DEVELOPMENT ADDITION SFD ESTIMATED COST OF CONSTRUCTION 342450.00

HEATED FLOOR AREA 4370.00 TOTAL AREA 6849.00 HEIGHT STORIES 2

FOUNDATION CONC WALLS FRAMED ROOF PITCH 12/12 FLOOR SLAB

LAND USE & ZONING A-3 MAX. HEIGHT 41

Minimum Set Back Requirments: STREET-FRONT 30.00 REAR 25.00 SIDE 25.00

NO. EX.D.U. 0 FLOOD ZONE X DEVELOPMENT PERMIT NO.

PARCEL ID 36-4S-16-03355-000 SUBDIVISION SOUTHWOOD ACRES

LOT 8 BLOCK B PHASE UNIT TOTAL ACRES 2.79

Culvert Permit No.	Culvert Waiver	Contractor's License Number	Applicant/Owner/Contractor	
EXISTING	10-0095	BK	HD	N
Driveway Connection	Septic Tank Number	LU & Zoning checked by	Approved for Issuance	New Resident

COMMENTS: MUST COMPLY WITH THE FLORIDA BUILDING CODE-EXISTING BUILDING REQUIREMENTS, NOC ON FILE, FEE IS DOUBLED DUE TO NO PERMIT

ISSUANCE BEFORE STARTING OF JOB Check # or Cash 15540

FOR BUILDING & ZONING DEPARTMENT ONLY

(footer/Slab)

Temporary Power _____ date/app. by Foundation _____ date/app. by Monolithic _____ date/app. by

Under slab rough-in plumbing _____ date/app. by Slab _____ date/app. by Sheathing/Nailing _____ date/app. by

Framing _____ date/app. by Insulation _____ date/app. by

Rough-in plumbing above slab and below wood floor _____ date/app. by Electrical rough-in _____ date/app. by

Heat & Air Duct _____ date/app. by Peri. beam (Lintel) _____ date/app. by Pool _____ date/app. by

Permanent power _____ date/app. by C.O. Final _____ date/app. by Culvert _____ date/app. by

Pump pole _____ date/app. by Utility Pole _____ date/app. by M/H tie downs, blocking, electricity and plumbing _____ date/app. by

Reconnection _____ date/app. by RV _____ date/app. by Re-roof _____ date/app. by

BUILDING PERMIT FEE $ 1715.00 CERTIFICATION FEE $ 34.24 SURCHARGE FEE $ 34.24

MISC. FEES $ 1715.00 ZONING CERT. FEE $ 50.00 FIRE FEE $ 0.00 WASTE FEE $ 0.00

FLOOD DEVELOPMENT FEE $ FLOOD ZONE FEE $ 25.00 CULVERT FEE $ **TOTAL FEE** 3573.48

INSPECTORS OFFICE CLERKS OFFICE

NOTICE: IN ADDITION TO THE REQUIREMENTS OF THIS PERMIT, THERE MAY BE ADDITIONAL RESTRICTIONS APPLICABLE TO THIS PROPERTY THAT MAY BE FOUND IN THE PUBLIC RECORDS OF THIS COUNTY. AND THERE MAY BE ADDITIONAL PERMITS REQUIRED FROM OTHER GOVERNMENTAL ENTITIES SUCH AS WATER MANAGEMENT DISTRICTS, STATE AGENCIES, OR FEDERAL AGENCIES.

"WARNING TO OWNER: YOUR FAILURE TO RECORD A NOTICE OF COMMENCEMENT MAY RESULT IN YOUR PAYING TWICE FOR IMPROVEMENTS TO YOUR PROPERTY. IF YOU INTEND TO OBTAIN FINANCING, CONSULT WITH YOUR LENDER OR AN ATTORNEY BEFORE RECORDING YOUR NOTICE OF COMMENCEMENT."

EVERY PERMIT ISSUED SHALL BECOME INVALID UNLESS THE WORK AUTHORIZED BY SUCH PERMIT IS COMMENCED WITHIN 180 DAYS AFTER ITS ISSUANCE, OR IF THE WORK AUTHORIZED BY SUCH PERMIT IS SUSPENDED OR ABANDONED FOR A PERIOD OF 180 DAYS AFTER THE TIME THE WORK IS COMMENCED. A VALID PERMIT RECIEVES AN APPROVED INSPECTION EVERY 180 DAYS. WORK SHALL BE CONSIDERED NOT SUSPENDED, ABANDONED OR INVALID WHEN THE PERMIT HAS RECIEVED AN APPROVED INSPECTION WITHIN 180 DAYS OT THE PREVIOUS INSPECTION.

The Issuance of this Permit Does Not Waive Compliance by Permittee with Deed Restrictions.

☑ J. GANSKOP - CERT of LIABILITY ☑ LICENSE ☑ MARK GANSKOP LIAB. ELEC. HVAC
☑ W.C. **Columbia County Building Permit Application** ☑ LETTERS ENG. PLUMB.

For Office Use Only Application # 1003-25 Date Received 3/16 By JW Permit # 28537

Zoning Official BLK Date 30.03.10 Flood Zone X Land Use A-3 Zoning A-3

FEMA Map # N/A Elevation N/A MFE N/A River N/A Plans Examiner HD Date 3-30-10

Comments Must comply with the Florida Building Code - Existing Building requirements

☑ NOC ☑ EH ☑ Deed or PA ☐ Site Plan ☐ State Road Info ☐ Parent Parcel #

☐ Dev Permit # ☐ In Floodway ☐ Letter of Auth. from Contractor ☐ F W Comp. letter

IMPACT FEES: EMS Fire Corr Road/Code

School = TOTAL Ø SUSPENDED addition to existing dwelling

Septic Permit No. 10-0095 Fax

dropped off by Linda Roder

Name Authorized Person Signing Permit Jeff Ganskop Phone (386) 755-7413

Address P.O. Box 1815 Lake City FL 32056

Owners Name Jeff and Linda Ganskop Phone (386) 755-7413

911 Address 334 SW Hamlet Circle, Lake City, FL 32024

Contractors Name Owner-Builder-Jeff Ganskop Phone (386-755-7413

Address P.O. Box 1815 Lake City FL 32056

Fee Simple Owner Name & Address NA

Bonding Co. Name & Address NA - 1858.48 -

Architect/Engineer Name & Address Mark Disosway double 3716.96

Mortgage Lenders Name & Address NA

Circle the correct power company - FL Power & Light - Clay Elec. - Suwannee Valley Elec. - Progress Energy

Property ID Number 36-4S-16-03355-000 Estimated Cost of Construction $150,000.00 X

Subdivision Name Southwood Acres Lot 8 Block B Unit 1 Phase

Driving Directions Hwy 47 S, Lon Southwood Acre entrance, 4th House down on R on Hamlet Circle

Number of Existing Dwellings on Property 1

Construction of SFD addition Total Acreage 2.79 Lot Size 2.79

Do you need a - Culvert Permit or Culvert Waiver or Have an Existing Drive Total Building Height ~~33~~ 41'

Actual Distance of Structure from Property Lines - Front 68' Side 104' Side 206' Rear 100'

Number of Stories 2 Heated Floor Area 4370 Total Floor Area 6849 Roof Pitch 12-12

Application is hereby made to obtain a permit to do work and installations as indicated. I certify that no work or installation has commenced prior to the issuance of a permit and that all work be performed to meet the standards of all laws regulating construction in this jurisdiction.

HD: CALL JEFF 386-755-7413 SPOKE TO JEFF 5/14 * CHARGE DOUBLE: PER HARRY & RANDY

Columbia County Building Permit Application

TIME LIMITATIONS OF APPLICATION : An application for a permit for any proposed work shall be deemed to have been abandoned 180 days after the date of filing, unless such application has been pursued in good faith or a permit has been issued; except that the building official is authorized to grant one or more extensions of time for additional periods not exceeding 90 days each. The extension shall be requested in writing and justifiable cause demonstrated.

TIME LIMITATIONS OF PERMITS: Every permit issued shall become invalid unless the work authorized by such permit is commenced within 180 days after its issuance, or if the work authorized by such permit is suspended or abandoned for a period of 180 days after the time work is commenced. A valid permit receives an approved inspection every 180 days. Work shall be considered not suspended, abandoned or invalid when the permit has received an approved inspection within 180 days of the previous approved inspection.

FLORIDA'S CONSTRUCTION LIEN LAW: Protect Yourself and Your Investment: According to Florida Law, those who work on your property or provide materials, and are not paid-in-full, have a right to enforce their claim for payment against your property. This claim is known as a construction lien. If your contractor fails to pay subcontractors or material suppliers or neglects to make other legally required payments, the people who are owed money may look to your property for payment, even if you have paid your contractor in full.
This means if a lien is filed against your property, it could be sold against your will to pay for labor, materials or othe services which your contractor may have failed to pay.

NOTICE OF RESPONSIBILITY TO BUILDING PERMITEE: ***YOU ARE HEREBY NOTIFIED*** as the recipient of a building permit from Columbia County, Florida, you will be held responsible to the County for any damage to sidewalks and/or road curbs and gutters, concrete features and structures, together with damage to drainage facilities, removal of sod, major changes to lot grades that result in ponding of water, or other damage to roadway and other public infrastructure facilities caused by you or your contractor, subcontractors, agents or representatives in the construction and/or improvement of the building and lot for which this permit is issued. No certificate of occupancy will be issued until all corrective work to these public infrastructures and facilities has been corrected.

WARNING TO OWNER: YOUR FAILURE TO RECORD A NOTICE OF COMMENCMENT MAY RESULT IN YOU PAYING TWICE FOR IMPROVEMENTS TO YOUR PROPERTY. A NOTICE OF COMMENCEMENT MUST BE RECORDED AND POSTED ON THE JOB SITE BEFORE THE FIRST INSPECTION. IF YOU INTEND TO OBTAIN FINANCING, CONSULT WITH YOUR LENDER OR ATTORNEY BEFORE RECORDING YOUR NOTICE OF COMMENCEMENT.

OWNERS CERTIFICATION: I CERTIFY THAT ALL THE FOREGOING INFORMATION IS ACCURATE AND THAT ALL WORK WILL BE DONE IN COMPLIANCE WITH ALL APPLICABLE LAWS REGULATING CONSTRUCTION AND ZONING.

NOTICE TO OWNER: There are some properties that may have deed restrictions recorded upon them. These restrictions may limit or prohibit the work applied for in your building permit. It may be to your advantage to check and see if your property is encumbered by any restrictions.

(Owners Must Sign All Applications Before Permit Issuance.)

X Jeff Sanstrop

Owners Signature ****OWNER BUILDERS MUST PERSONALLY APPEAR AND SIGN THE BUILDING PERMIT**

CONTRACTORS AFFIDAVIT: By my signature I understand and agree that I have informed and provided this written statement to the owner of all the above written responsibilities in Columbia County for obtaining this Building Permit including all application and permit time limitations.

NOTARY PUBLIC-STATE OF FLORIDA
Linda R. Roder
Commission # DD755608
Expires: MAR. 24, 2012
BONDED THRU ATLANTIC BONDING CO., INC.

Contractor's Signature (Permitee)

Contractor's License Number_____
Columbia County
Competency Card Number_____

Affirmed under penalty of perjury to by the Contractor and subscribed before me this 15 **day of** March **20**10.

Personally known ✓ **or Produced Identification**_____

Linda Roder Linda Roder **SEAL:**

State of Florida Notary Signature (For the Contractor)

Florida Building Code – Existing Building
An existing building or portion thereof shall not be altered such that the building becomes less safe or energy efficient than its existing condition. All new work shall comply with materials and methods requirements of the Florida Building Code including all trades.

Linda Gans
387
Lake

Inst:201012004067 Date:3/16/2010 Time:11:25 AM
DC,P.DeWitt Cason,Columbia County Page 1 of 1 B:1190 P:2084

NOTICE OF COMMENCEMENT

County Clerk's Office Stamp or Seal

Tax Parcel Identification Number 36-4S-16-03355-000

THE UNDERSIGNED hereby gives notice that improvements will be made to certain real property, and in accordance with Section 713.13 of the Florida Statutes, the following information is provided in this **NOTICE OF COMMENCEMENT**.

1. Description of property *(legal description)*: Lot 8 Block B Southwood Acres Unit 1
   a) Street *(job)* Address:
2. General description of improvements: remodel and an addition
3. Owner Information
   a) Name and address: Jeff and Linda Ganskop P.O. Box 1815 Lake City FL 32056
   b) Name and address of fee simple titleholder (if other than owner) NA
   c) Interest in property homesite
4. Contractor Information
   a) Name and address: Owner Builder Jeff Ganskop
   b) Telephone No.: (386) 755-7413 Fax No. (Opt.)
5. Surety Information
   a) Name and address: NA
   b) Amount of Bond: NA
   c) Telephone No.: Fax No. (Opt.)
6. Lender
   a) Name and address: NA
   b) Phone No.
7. Identity of person within the State of Florida designated by owner upon whom notices or other documents may be served:
   a) Name and address: NA
   b) Telephone No.: Fax No. (Opt.)
8. In addition to himself, owner designates the following person to receive a copy of the Lienor's Notice as provided in Section 713.13(l)(b), Florida Statutes:
   a) Name and address: NA
   b) Telephone No.: Fax No. (Opt.)
9. Expiration date of Notice of Commencement **(the expiration date is one year from the date of recording unless a different date is specified)**:

WARNING TO OWNER: ANY PAYMENTS MADE BY THE OWNER AFTER THE EXPIRATION OF THE NOTICE OF COMMENCEMENT ARE CONSIDERED IMPROPER PAYMENTS UNDER CHAPTER 713, PART I, SECTION 713.13, FLORIDA STATUTES, AND CAN RESULT IN YOUR PAYING TWICE FOR IMPROVEMENTS TO YOUR PROPERTY; A NOTICE OF COMMENCEMENT MUST BE RECORDED AND POSTED ON THE JOB SITE BEFORE THE FIRST INSPECTION. IF YOU INTEND TO OBTAIN FINANCING, CONSULT YOUR LENDER OR AN ATTORNEY BEFORE COMMENCING WORK OR RECORDING YOUR NOTICE OF COMMENCEMENT.

NOTARY PUBLIC-STATE OF FLORIDA
Linda R. Roder
Commission #DD755608
Expires: MAR. 24, 2012
BONDED THRU ATLANTIC BONDING CO., INC.

STATE OF FLORIDA
COUNTY OF COLUMBIA

X Jeff Ganskop
10. X Linda J. Ganskop
Signature of Owner or Owner's Authorized Office/Director/Partner/Manager

Print Name

The foregoing instrument was acknowledged before me, a Florida Notary, this 15 day of March, 20 10, by: Jeff + Linda Ganskop as owners **(type of authority, e.g. officer, trustee, attorney fact) for** **(name of party on behalf of whom instrument was executed).**

Personally Known ✓ OR Produced Identification ____ Type Linda Roder

Notary Signature Notary Stamp or Seal: Linda Roder

---AND---

11. Verification pursuant to Section 92.525, Florida Statutes. Under penalties of perjury, I declare that I have read the foregoing and that the facts stated in it are true to the best of my knowledge and belief.

X Jeff Ganskop
Signature of Natural Person Signing (in line #10 above.)

NOTARY PUBLIC-STATE OF FLORIDA
Linda R. Roder
Commission #DD755608
Expires: MAR. 24, 2012
BONDED THRU ATLANTIC BONDING CO., INC.

X Linda J. Ganskop

Jeff and Linda Ganskop

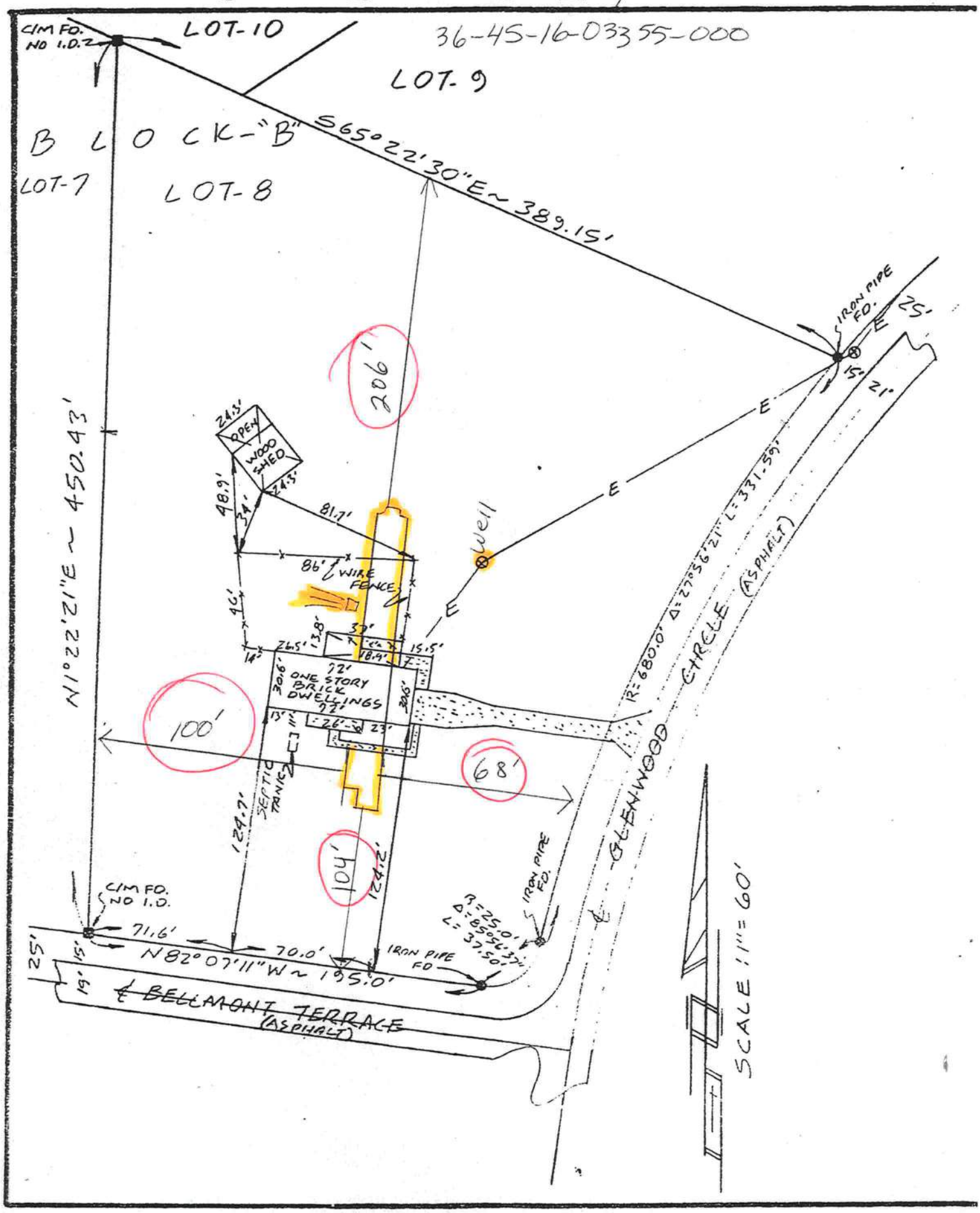

(1005-20 Gansko P)

Application for Onsite Sewage Disposal System Construction Permit. Part II Site Plan

Permit Application Number: 10-0095

ALL CHANGES MUST BE APPROVED BY THE COUNTY HEALTH UNIT

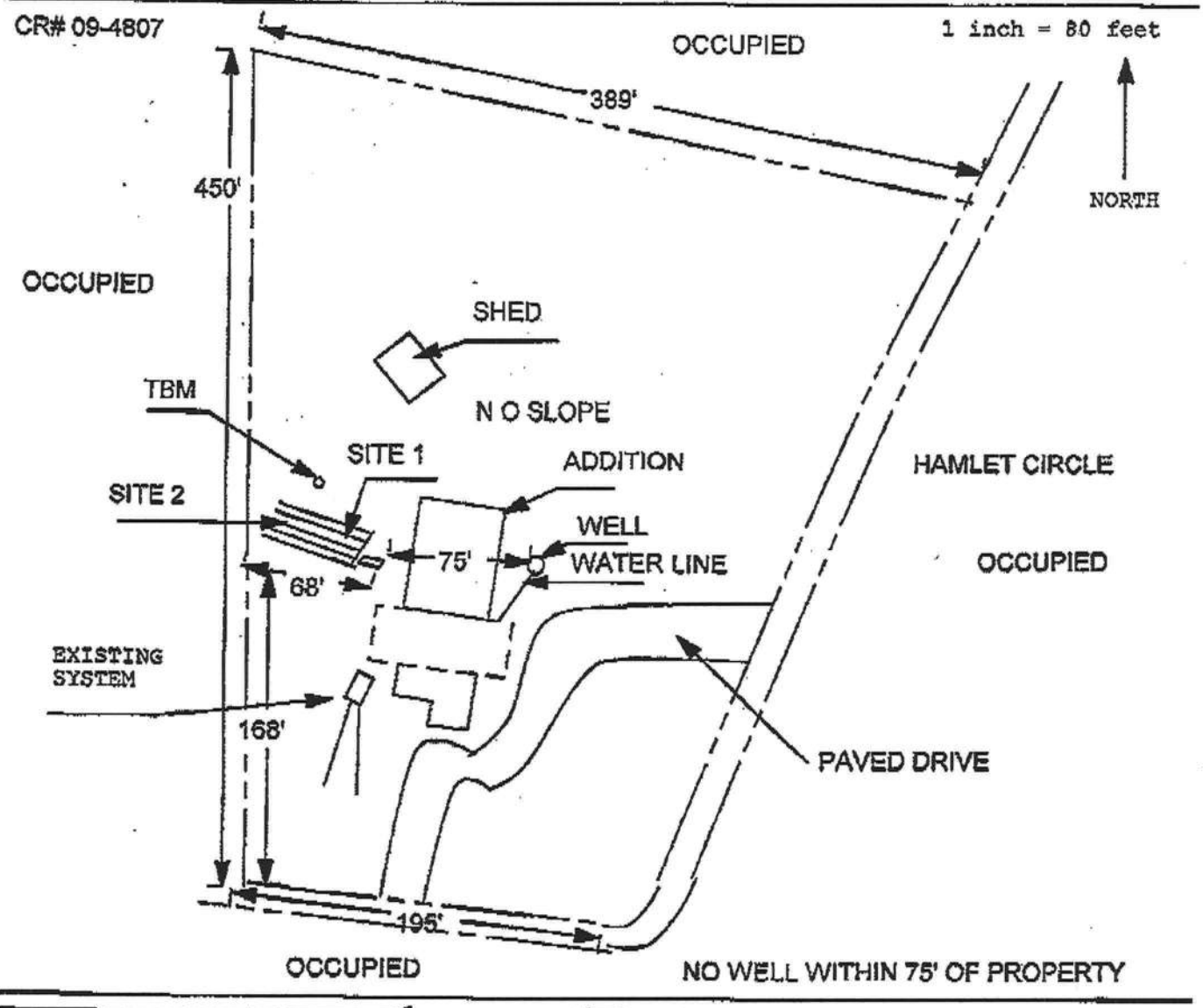

Site Plan Submitted By Paul L Boyd Date 2/16/10

Plan Approved ✓ Not Approved ____ Date ____

By Sallie Ford - EH Director CPHU

Notes: 3-17-10

Columbia CHD

1003-25
Ganskop

STATE OF FLORIDA
DEPARTMENT OF HEALTH
ONSITE SEWAGE TREATMENT AND DISPOSAL SYSTEM

PERMIT #: 12-SC-1123018
APPLICATION #: AP954209
DATE PAID: 2-26-10
FEE PAID: 310.00
RECEIPT #: 1240207
DOCUMENT #: PR802821

CONSTRUCTION PERMIT FOR: OSTDS New

APPLICANT: JEFF**10-0095 GANSKOP

PROPERTY ADDRESS: 334 HAMLET Cir Lake City, FL 32025

LOT: 8 BLOCK: B SUBDIVISION: Southwood Acres, Unit 1

PROPERTY ID #: 03355-000 [SECTION, TOWNSHIP, RANGE, PARCEL NUMBER] [OR TAX ID NUMBER]

SYSTEM MUST BE CONSTRUCTED IN ACCORDANCE WITH SPECIFICATIONS AND STANDARDS OF SECTION 381.0065, F.S., AND CHAPTER 64E-6, F.A.C. DEPARTMENT APPROVAL OF SYSTEM DOES NOT GUARANTEE SATISFACTORY PERFORMANCE FOR ANY SPECIFIC PERIOD OF TIME. ANY CHANGE IN MATERIAL FACTS, WHICH SERVED AS A BASIS FOR ISSUANCE OF THIS PERMIT, REQUIRE THE APPLICANT TO MODIFY THE PERMIT APPLICATION. SUCH MODIFICATIONS MAY RESULT IN THIS PERMIT BEING MADE NULL AND VOID. ISSUANCE OF THIS PERMIT DOES NOT EXEMPT THE APPLICANT FROM COMPLIANCE WITH OTHER FEDERAL, STATE, OR LOCAL PERMITTING REQUIRED FOR DEVELOPMENT OF THIS PROPERTY.

SYSTEM DESIGN AND SPECIFICATIONS

T [1,350] GALLONS / GPD Septic CAPACITY
A [ ] GALLONS / GPD N/A CAPACITY
N [ ] GALLONS GREASE INTERCEPTOR CAPACITY (MAXIMUM CAPACITY SINGLE TANK:1250 GALLONS)
K [ ] GALLONS DOSING TANK CAPACITY [ ]GALLONS @[ ]DOSES PER 24 HRS #Pumps [ ]

D [750] SQUARE FEET SYSTEM
R [ ] SQUARE FEET N/A SYSTEM
A TYPE SYSTEM: [X] STANDARD [ ] FILLED [ ] MOUND [ ]
I CONFIGURATION: [X] TRENCH [ ] BED [ ]
N
F LOCATION OF BENCHMARK: nail in oak tree north of system siteq
I ELEVATION OF PROPOSED SYSTEM SITE [24.00] [INCHES / FT] [ABOVE / BELOW] BENCHMARK/REFERENCE POINT
E BOTTOM OF DRAINFIELD TO BE [54.00] [INCHES / FT] [ABOVE / BELOW] BENCHMARK/REFERENCE POINT
L
D FILL REQUIRED: [0.00] INCHES EXCAVATION REQUIRED: [0.00] INCHES

O
T
H
E
R

1. original sealed engineer flow letter required before final approval.

SPECIFICATIONS BY: Paul Lloyd* TITLE: ~~Use this one~~ Soil Scientist

APPROVED BY: Sallie Ford Sallie A Ford TITLE: EH Director Columbia CHD

DATE ISSUED: 03/17/2010 EXPIRATION DATE: 09/17/2011

FORM 1100A-08

FLORIDA ENERGY EFFICIENCY CODE FOR BUILDING CONSTRUCTION

Florida Department of Community Affairs Residential Performance Method A

Project Name:	Jeff and Linda Ganskop	Builder Name:	Ganskop
Street:		Permit Office:	Columbia County
City, State, Zip:	Lake City , FL , 32024-	Permit Number:	28537
Owner:	Jeff and Linda Ganskop	Jurisdiction:	221000
Design Location:	FL, Gainesville		

1. New construction or existing	New (From Plans)
2. Single family or multiple family	Single-family
3. Number of units, if multiple family	1
4. Number of Bedrooms	3
5. Is this a worst case?	No
6. Conditioned floor area (ft²)	7118

7. Windows	Description	Area
a. U-Factor:	Sgl, U=0.34	1206.00 ft²
SHGC:	SHGC=0.31	
b. U-Factor:	N/A	ft²
SHGC:		
c. U-Factor:	N/A	ft²
SHGC:		
d. U-Factor:	N/A	ft²
SHGC:		
e. U-Factor:	N/A	ft²
SHGC:		

8. Floor Types	Insulation	Area
a. Slab-On-Grade Edge Insulation	R=0.0	7118.00 ft²
b. N/A	R=	ft²
c. N/A	R=	ft²

9. Wall Types	Insulation	Area
a. Frame - Wood, Exterior	R=13.0	7101.40 ft²
b. N/A	R=	ft²
c. N/A	R=	ft²
d. N/A	R=	ft²

10. Ceiling Types	Insulation	Area
a. Cathedral/Single Assembly (Vented)	R=30.0	4727.00 ft²
b. Knee Wall (Vented)	R=30.0	2391.00 ft²
c. N/A	R=	ft²

11. Ducts
a. Sup: Exterior Ret: Interior AH: Interior Sup. R= 6, 1779.5 ft²

12. Cooling systems
a. Central Unit — Cap: 144.0 kBtu/hr, SEER: 14
1/2 Ton

13. Heating systems
a. Electric Heat Pump — Cap: 144.0 kBtu/hr, HSPF: 7.7

14. Hot water systems
a. Electric — Cap: 40 gallons, EF: 0.92

b. Conservation features
None

15. Credits — CF, CV

Glass/Floor Area: 0.169

Total As-Built Modified Loads: 86.35
Total Baseline Loads: 123.59

PASS

I hereby certify that the plans and specifications covered by this calculation are in compliance with the Florida Energy Code.

PREPARED BY: Nora L. Jerry
DATE: 2/12/10

I hereby certify that this building, as designed, is in compliance with the Florida Energy Code.

OWNER/AGENT: [signature]
DATE: 2-5-10

Review of the plans and specifications covered by this calculation indicates compliance with the Florida Energy Code. Before construction is completed this building will be inspected for compliance with Section 553.908 Florida Statutes.

GREAT SEAL OF THE STATE OF FLORIDA — IN GOD WE TRUST

BUILDING OFFICIAL:
DATE:

PROJECT

Title:	Jeff and Linda Ganskop	Bedrooms:	3	Adress Type:	Lot Information
Building Type:	FLAsBuilt	Bathrooms:	0	Lot #	8/B
Owner:	Jeff and Linda Ganskop	Conditioned Area:	7118	SubDivision:	Southwood Acres
# of Units:	1	Total Stories:	2	PlatBook:	
Builder Name:		Worst Case:	No	Street:	
Permit Office:	Columbia County	Rotate Angle:	0	County:	Columbia
Jurisdiction:		Cross Ventilation:	Yes	City, State, Zip:	Lake City ,
Family Type:	Single-family	Whole House Fan:	No		FL , 32024-
New/Existing:	New (From Plans)				
Comment:					

CLIMATE

√	Design Location	TMY Site	IECC Zone	Design Temp 97.5 %	Design Temp 2.5 %	Int Design Temp Winter	Int Design Temp Summer	Heating Degree Days	Design Moisture	Daily Temp Range
____	FL, Gainesville	FL_GAINESVILLE_REGI	2	32	92	75	70	1305.5	51	Medium

FLOORS

√	#	Floor Type	Perimeter	R-Value	Area	Tile	Wood	Carpet
____	1	Slab-On-Grade Edge Insulatio	384.3 ft	0	7118 ft²	0	0.5	0.5

ROOF

√	#	Type	Materials	Roof Area	Gable Area	Roof Color	Solar Absor.	Tested	Deck Insul.	Pitch
____	1	Gable or shed	Flat tile/slate	10066 ft²	3558 ft²	Light	0.96	No	30	45 deg

ATTIC

√	#	Type	Ventilation	Vent Ratio (1 in)	Area	RBS	IRCC
____	1	Partial cathedral cei	Vented	300	7118 ft²	N	N

CEILING

√	#	Ceiling Type	R-Value	Area	Framing Frac	Truss Type
____	1	Cathedral/Single Assembly (Vented)	30	4727 ft²	0.11	Wood
____	2	Knee Wall (Vented)	30	2391 ft²	0.11	Wood

WALLS

√	#	Ornt	Adjacent To	Wall Type	Cavity R-Value	Area	Sheathing R-Value	Framing Fraction	Solar Absor.
____	1	N	Exterior	Frame - Wood	13	425.5 ft²		0.23	0.75
____	2	W	Exterior	Frame - Wood	13	157.33 ft²		0.23	0.75
____	3	N	Exterior	Frame - Wood	13	246.67 ft²		0.23	0.75
____	4	E	Exterior	Frame - Wood	13	157.33 ft²		0.23	0.75
____	5	N	Exterior	Frame - Wood	13	780 ft²		0.23	0.75
____	6	E	Exterior	Frame - Wood	13	146.25 ft²		0.23	0.75
____	7	N	Exterior	Frame - Wood	13	26 ft²		0.23	0.75
____	8	E	Exterior	Frame - Wood	13	97.5 ft²		0.23	0.75

WALLS

√	#	Ornt	Adjacent To	Wall Type	Cavity R-Value	Area	Sheathing R-Value	Framing Fraction	Solar Absor.
_____	9	S	Exterior	Frame - Wood	13	26 ft²		0.23	0.75
_____	10	E	Exterior	Frame - Wood	13	146.25 ft²		0.23	0.75
_____	11	S	Exterior	Frame - Wood	13	780 ft²		0.23	0.75
_____	12	E	Exterior	Frame - Wood	13	178.67 ft²		0.23	0.75
_____	13	S	Exterior	Frame - Wood	13	246.67 ft²		0.23	0.75
_____	14	W	Exterior	Frame - Wood	13	178.67 ft²		0.23	0.75
_____	15	S	Exterior	Frame - Wood	13	628.67 ft²		0.23	0.75
_____	16	W	Exterior	Frame - Wood	13	352.67 ft²		0.23	0.75
_____	17	N	Exterior	Frame - Wood	13	203.17 ft²		0.23	0.75
_____	18	W	Exterior	Frame - Wood	13	337.33 ft²		0.23	0.75
_____	19	W	Exterior	Frame - Wood	13	270 ft²		0.23	0.75
_____	20	N	Exterior	Frame - Wood	13	700.5 ft²		0.23	0.75
_____	21	E	Exterior	Frame - Wood	13	101.25 ft²		0.23	0.75
_____	22	N	Exterior	Frame - Wood	13	18 ft²		0.23	0.75
_____	23	E	Exterior	Frame - Wood	13	67.5 ft²		0.23	0.75
_____	24	S	Exterior	Frame - Wood	13	18 ft²		0.23	0.75
_____	25	E	Exterior	Frame - Wood	13	101.25 ft²		0.23	0.75
_____	26	S	Exterior	Frame - Wood	13	710.25 ft²		0.23	0.75

DOORS

√	#	Ornt	Door Type	Storms	U-Value	Area
_____	1	E	Wood	None	0.46	20 ft²
_____	2	E	Wood	None	0.46	20 ft²
_____	3	N	Wood	None	0.46	24 ft²
_____	4	N	Wood	None	0.46	24 ft²
_____	5	N	Wood	None	0.46	24 ft²
_____	6	S	Wood	None	0.46	24 ft²
_____	7	S	Wood	None	0.46	24 ft²
_____	8	S	Wood	None	0.46	24 ft²
_____	9	E	Wood	None	0.46	20 ft²
_____	10	E	Wood	None	0.46	20 ft²
_____	11	S	Wood	None	0.46	20 ft²
_____	12	S	Wood	None	0.46	20 ft²
_____	13	W	Wood	None	0.46	24 ft²
_____	14	W	Wood	None	0.46	24 ft²
_____	15	N	Wood	None	0.46	20 ft²
_____	16	N	Wood	None	0.46	20 ft²
_____	17	N	Wood	None	0.46	20 ft²
_____	18	S	Wood	None	0.46	20 ft²
_____	19	S	Wood	None	0.46	20 ft²
_____	20	S	Wood	None	0.46	20 ft²

WINDOWS

Window orientation below is as entered. Actual orientation is modified by rotate angle shown in "Project" section above.

√	#	Ornt	Frame	Panes	NFRC	U-Factor	SHGC	Storms	Area	Overhang Depth	Overhang Separation	Int Shade	Screening
____	1	N	Vinyl	Low-E Single	Yes	0.34	0.31	N	54 ft²	0 ft 0 in	0 ft 0 in	HERS 2006	None
____	2	W	Vinyl	Low-E Single	Yes	0.34	0.31	N	42 ft²	0 ft 0 in	0 ft 0 in	HERS 2006	None
____	3	N	Vinyl	Low-E Single	Yes	0.34	0.31	N	36 ft²	0 ft 0 in	0 ft 0 in	HERS 2006	None
____	4	N	Vinyl	Low-E Single	Yes	0.34	0.31	N	108 ft²	0 ft 0 in	0 ft 0 in	HERS 2006	None
____	5	N	Vinyl	Low-E Single	Yes	0.34	0.31	N	24 ft²	0 ft 0 in	0 ft 0 in	HERS 2006	None
____	6	N	Vinyl	Low-E Single	Yes	0.34	0.31	N	36 ft²	0 ft 0 in	0 ft 0 in	HERS 2006	None
____	7	N	Vinyl	Low-E Single	Yes	0.34	0.31	N	18 ft²	15 ft 0 in	2 ft 0 in	HERS 2006	None
____	8	N	Vinyl	Low-E Single	Yes	0.34	0.31	N	8 ft²	0 ft 0 in	0 ft 0 in	HERS 2006	None
____	9	E	Vinyl	Low-E Single	Yes	0.34	0.31	N	24 ft²	0 ft 0 in	0 ft 0 in	HERS 2006	None
____	10	E	Vinyl	Low-E Single	Yes	0.34	0.31	N	8 ft²	0 ft 0 in	0 ft 0 in	HERS 2006	None
____	11	E	Vinyl	Low-E Single	Yes	0.34	0.31	N	24 ft²	0 ft 0 in	0 ft 0 in	HERS 2006	None
____	12	E	Vinyl	Low-E Single	Yes	0.34	0.31	N	8 ft²	0 ft 0 in	0 ft 0 in	HERS 2006	None
____	13	S	Vinyl	Low-E Single	Yes	0.34	0.31	N	24 ft²	0 ft 0 in	0 ft 0 in	HERS 2006	None
____	14	S	Vinyl	Low-E Single	Yes	0.34	0.31	N	108 ft²	16 ft 0 in	2 ft 0 in	HERS 2006	None
____	15	S	Vinyl	Low-E Single	Yes	0.34	0.31	N	8 ft²	16 ft 0 in	2 ft 0 in	HERS 2006	None
____	16	S	Vinyl	Low-E Single	Yes	0.34	0.31	N	54 ft²	16 ft 0 in	2 ft 0 in	HERS 2006	None
____	17	W	Vinyl	Low-E Single	Yes	0.34	0.31	N	18 ft²	0 ft 0 in	0 ft 0 in	HERS 2006	None
____	18	W	Vinyl	Low-E Single	Yes	0.34	0.31	N	12 ft²	0 ft 0 in	0 ft 0 in	HERS 2006	None
____	19	S	Vinyl	Low-E Single	Yes	0.34	0.31	N	54 ft²	0 ft 0 in	0 ft 0 in	HERS 2006	None
____	20	S	Vinyl	Low-E Single	Yes	0.34	0.31	N	24 ft²	0 ft 0 in	0 ft 0 in	HERS 2006	None
____	21	W	Vinyl	Low-E Single	Yes	0.34	0.31	N	42 ft²	0 ft 0 in	0 ft 0 in	HERS 2006	None
____	22	W	Vinyl	Low-E Single	Yes	0.34	0.31	N	40 ft²	0 ft 0 in	0 ft 0 in	HERS 2006	None
____	23	W	Vinyl	Low-E Single	Yes	0.34	0.31	N	24 ft²	0 ft 0 in	0 ft 0 in	HERS 2006	None
____	24	N	Vinyl	Low-E Single	Yes	0.34	0.31	N	36 ft²	0 ft 0 in	0 ft 0 in	HERS 2006	None
____	25	N	Vinyl	Low-E Single	Yes	0.34	0.31	N	108 ft²	0 ft 0 in	0 ft 0 in	HERS 2006	None
____	26	N	Vinyl	Low-E Single	Yes	0.34	0.31	N	24 ft²	0 ft 0 in	0 ft 0 in	HERS 2006	None
____	27	E	Vinyl	Low-E Single	Yes	0.34	0.31	N	30 ft²	0 ft 0 in	0 ft 0 in	HERS 2006	None
____	28	E	Vinyl	Low-E Single	Yes	0.34	0.31	N	30 ft²	0 ft 0 in	0 ft 0 in	HERS 2006	None
____	29	S	Vinyl	Low-E Single	Yes	0.34	0.31	N	120 ft²	0 ft 0 in	0 ft 0 in	HERS 2006	None
____	30	S	Vinyl	Low-E Single	Yes	0.34	0.31	N	24 ft²	0 ft 0 in	0 ft 0 in	HERS 2006	None
____	31	S	Vinyl	Low-E Single	Yes	0.34	0.31	N	36 ft²	0 ft 0 in	0 ft 0 in	HERS 2006	None

INFILTRATION & VENTING

√	Method	SLA	CFM 50	ACH 50	ELA	EqLA	---- Forced Ventilation ---- Supply CFM	Exhaust CFM	Run Time Fraction	Fan Watts
____	Default	0.00036	6721	5.67	369.0	694.0	0 cfm	0 cfm	0	0

COOLING SYSTEM

√	#	System Type	Subtype	Efficiency	Capacity	Air Flow	SHR	Ductless
_____	1	Central Unit	None	SEER: 14	144 kBtu/hr	4320 cfm	0.7	False

HEATING SYSTEM

√	#	System Type	Subtype	Efficiency	Capacity	Ductless
_____	1	Electric Heat Pump	None	HSPF: 7.7	144 kBtu/hr	False

HOT WATER SYSTEM

√	#	System Type	EF	Cap	Use	SetPnt	Conservation
_____	1	Electric	0.92	40 gal	60 gal	120 deg	None

SOLAR HOT WATER SYSTEM

√	FSEC Cert #	Company Name	System Model #	Collector Model #	Collector Area	Storage Volume	FEF
_____	None	None			ft²		

DUCTS

√	#	---- Supply ---- Location	R-Value	Area	---- Return ---- Location	Area	Leakage Type	Air Handler	CFM 25	Percent Leakage	QN	RLF
_____	1	Exterior	6	1779.5	Interior	355.9 ft	Default Leakage	Interior				

TEMPERATURES

Programable Thermostat: None

Ceiling Fans:

Cooling	[X] Jan	[X] Feb	[X] Mar	[X] Apr	[X] May	[X] Jun	[X] Jul	[X] Aug	[X] Sep	[X] Oct	[X] Nov	[X] Dec
Heating	[X] Jan	[X] Feb	[X] Mar	[X] Apr	[X] May	[X] Jun	[X] Jul	[X] Aug	[X] Sep	[X] Oct	[X] Nov	[X] Dec
Venting	[X] Jan	[X] Feb	[X] Mar	[X] Apr	[X] May	[X] Jun	[X] Jul	[X] Aug	[X] Sep	[X] Oct	[X] Nov	[X] Dec

Thermostat Schedule: HERS 2006 Reference

Schedule Type		Hours 1	2	3	4	5	6	7	8	9	10	11	12
Cooling (WD)	AM	78	78	78	78	78	78	78	78	78	78	78	78
	PM	78	78	78	78	78	78	78	78	78	78	78	78
Cooling (WEH)	AM	78	78	78	78	78	78	78	78	78	78	78	78
	PM	78	78	78	78	78	78	78	78	78	78	78	78
Heating (WD)	AM	68	68	68	68	68	68	68	68	68	68	68	68
	PM	68	68	68	68	68	68	68	68	68	68	68	68
Heating (WEH)	AM	68	68	68	68	68	68	68	68	68	68	68	68
	PM	68	68	68	68	68	68	68	68	68	68	68	68

ENERGY PERFORMANCE LEVEL (EPL) DISPLAY CARD

ESTIMATED ENERGY PERFORMANCE INDEX* = 70

The lower the EnergyPerformance Index, the more efficient the home.

, Lake City, FL, 32024-

1. New construction or existing	New (From Plans)
2. Single family or multiple family	Single-family
3. Number of units, if multiple family	1
4. Number of Bedrooms	3
5. Is this a worst case?	No
6. Conditioned floor area (ft²)	7118

7. Windows**	Description	Area
a. U-Factor:	Sgl, U=0.34	1206.00 ft²
SHGC:	SHGC=0.31	
b. U-Factor:	N/A	ft²
SHGC:		
c. U-Factor:	N/A	ft²
SHGC:		
d. U-Factor:	N/A	ft²
SHGC:		
e. U-Factor:	N/A	ft²
SHGC:		

8. Floor Types	Insulation	Area
a. Slab-On-Grade Edge Insulation	R=0.0	7118.00 ft²
b. N/A	R=	ft²
c. N/A	R=	ft²

9. Wall Types	Insulation	Area
a. Frame - Wood, Exterior	R=13.0	7101.40 ft²
b. N/A	R=	ft²
c. N/A	R=	ft²
d. N/A	R=	ft²

10. Ceiling Types	Insulation	Area
a. Cathedral/Single Assembly (Vented)	R=30.0	4727.00 ft²
b. Knee Wall (Vented)	R=30.0	2391.00 ft²
c. N/A	R=	ft²

11. Ducts
a. Sup: Exterior Ret: Interior AH: Interior Sup. R= 6, 1779.5 ft²

12. Cooling systems
a. Central Unit — Cap: 144.0 kBtu/hr, SEER: 14

13. Heating systems
a. Electric Heat Pump — Cap: 144.0 kBtu/hr, HSPF: 7.7

14. Hot water systems
a. Electric — Cap: 40 gallons, EF: 0.92

b. Conservation features
None

15. Credits — CF, CV

I certify that this home has complied with the Florida Energy Efficiency Code for Building Construction through the above energy saving features which will be installed (or exceeded) in this home before final inspection. Otherwise, a new EPL Display Card will be completed based on installed Code compliant features.

Builder Signature: _____ Date: _____

Address of New Home: _____ City/FL Zip: _____

*Note: The home's estimated Energy Performance Index is only available through the EnergyGauge USA - FlaRes2008 computer program. This is not a Building Energy Rating. If your Index is below 100, your home may qualify for incentives if you obtain a Florida Energy Gauge Rating. Contact the Energy Gauge Hotline at (321) 638-1492 or see the Energy Gauge web site at energygauge.com for information and a list of certified Raters. For information about Florida's Energy Efficiency Code for Building Construction, contact the Department of Community Affairs at (850) 487-1824.

**Label required by Section 13-104.4.5 of the Florida Building Code, Building, or Section B2.1.1 of Appendix G of the Florida Building Code, Residential, if not DEFAULT.

SUBCONTRACTOR VERIFICATION FORM

APPLICATION NUMBER _____ CONTRACTOR Owner - Builder PHONE 386-755-7413

THIS FORM MUST BE SUBMITTED PRIOR TO THE ISSUANCE OF A PERMIT

In Columbia County one permit will cover all trades doing work at the permitted site. It is REQUIRED that we have records of the subcontractors who actually did the trade specific work under the permit. Per Florida Statute 440 and Ordinance 89-6, a contractor shall require all subcontractors to provide evidence of workers' compensation or exemption, general liability insurance and a valid Certificate of Competency license in Columbia County.

Any changes, the permitted contractor is responsible for the corrected form being submitted to this office prior to the start of that subcontractor beginning any work. Violations will result in stop work orders and/or fines.

ELECTRICAL	Print Name Part Owner - Builder Part - Rainbolt Tech Services License #: EC13001835	Signature Phone #: 867-1004
MECHANICAL/ A/C OK	Print Name Rainbolt Tech Services License #: RA0066590	Signature Phone #: 867-1004
PLUMBING/ GAS OK	Print Name Express Plumbing Inc License #: CFC1428040	Signature Mark Ganskop Phone #: 386-867-0269
ROOFING	Print Name Jeff Ganskop Owner-Builder License #: CCC057557	Signature Phone #: 386-755-7413
SHEET METAL	Print Name License #:	Signature Phone #:
FIRE SYSTEM/ SPRINKLER	Print Name License#:	Signature Phone #:
SOLAR	Print Name License #:	Signature Phone #:

Specialty License	License Number	Sub-Contractors Printed Name	Sub-Contractors Signature
MASON	Own / Bldr	Jeff Ganskop	
CONCRETE FINISHER	Own / Bldr	Jeff Ganskop	"
FRAMING OK	000102	Tim Peterson Framing	
INSULATION	Own / Bldr	Jeff Ganskop	"
STUCCO	Own / Bldr	Jeff Ganskop	"
DRYWALL	Own / Bldr	Jeff Ganskop	"
PLASTER			
CABINET INSTALLER	Own / Bldr	Jeff Ganskop	"
PAINTING	Own / Bldr	Jeff Ganskop	"
ACOUSTICAL CEILING			
GLASS	Own / Bldr	Jeff Ganskop	"
CERAMIC TILE			
FLOOR COVERING	Own / Bldr	Jeff Ganskop	"
ALUM/VINYL SIDING			
GARAGE DOOR			
METAL BLDG ERECTOR			

F. S. 440.103 Building permits; identification of minimum premium policy.—Every employer shall, as a condition to applying for and receiving a building permit, show proof and certify to the permit issuer that it has secured compensation for its employees under this chapter as provided in ss. 440.10 and 440.38, and shall be presented each time the employer applies for a building permit.

SUBCONTRACTOR VERIFICATION FORM

APPLICATION NUMBER _____ CONTRACTOR Owner - Builder PHONE 386-755-7413

THIS FORM MUST BE SUBMITTED PRIOR TO THE ISSUANCE OF A PERMIT

In Columbia County one permit will cover all trades doing work at the permitted site. It is REQUIRED that we have records of the subcontractors who actually did the trade specific work under the permit. Per Florida Statute 440 and Ordinance 89-6, a contractor shall require all subcontractors to provide evidence of workers' compensation or exemption, general liability insurance and a valid Certificate of Competency license in Columbia County.

Any changes, the permitted contractor is responsible for the corrected form being submitted to this office prior to the start of that subcontractor beginning any work. Violations will result in stop work orders and/or fines.

ELECTRICAL	Print Name Owner - Builder Part - Rainbolt Tech Services Signature License #: EC13001835	Phone #: 867-1004
MECHANICAL/ A/C	Print Name Rainbolt Tech Services Signature License #: RA0066590	Phone #: 867-1004
PLUMBING/ GAS	Print Name Express Plumbing Inc Signature License #: CFC1428040	Phone #: 386-867-0269
ROOFING	Print Name Jeff Gamskop Owner-Builder Signature License #: CCC057557	Phone #: 386-755-7413
SHEET METAL	Print Name _____ Signature _____ License #:	Phone #:
FIRE SYSTEM/ SPRINKLER	Print Name _____ Signature _____ License #:	Phone #:
SOLAR	Print Name _____ Signature _____ License #:	Phone #:

Specialty Licensee	License Number	Sub Contractor's Full Name	Sub-Contractor's Signature
MASON	Own / Bider	Jeff Gamskop	
CONCRETE FINISHER	Own / Bider	Jeff Gamskop	"
FRAMING	000102	Tim Peterson Framing	
INSULATION	Own / Bider	Jeff Gamskop	"
STUCCO	Own / Bider	Jeff Gamskop	"
DRYWALL	Own / Bider	Jeff Gamskop	"
PLASTER			
CABINET INSTALLER	Own / Bider	Jeff Gamskop	"
PAINTING	Own / Bider	Jeff Gamskop	"
ACOUSTICAL CEILING			
GLASS	Own / Bider	Jeff Gamskop	"
CERAMIC TILE			
FLOOR COVERING	Own / Bider	Jeff Gamskop	"
ALUM/VINYL SIDING			
GARAGE DOOR			
METAL BLDG ERECTOR			

F. S. 440.103 Building permits; identification of minimum premium policy.--Every employer shall, as a condition to applying for and receiving a building permit, show proof and certify to the permit issuer that it has secured compensation for its employees under this chapter as provided in ss. 440.10 and 440.38, and shall be presented each time the employer applies for a building permit.

BOARD OF COUNTY COMMISSIONERS
OFFICE OF

BUILDING & ZONING

COLUMBIA COUNTY, FLORIDA

BUILDING PERMIT RECEIPT

RECEIPT NUMBER / PERMIT NUMBER 000028537 DATE 05/05/2010

APPLICANT JEFF GANSKOP

OWNER JEFF GANSKOP

CONTRACTOR OWNER BUILDER

PARCEL ID NUMBER 36-4S-16-03355-000 NUMBER OF EXISTING DWELLINGS 0

TYPE OF DEVELOPMENT ADDITION SFD

COMMENTS: MUST COMPLY WITH THE FLORIDA BUILDING CODE-EXISTING BUILDING REQUIREMENTS, NOC ON FILE, FEE IS DOUBLED DUE TO NO PERMIT ISSUANCE BEFORE STARTING OF JOB

FEES:

BUILDING PERMIT 1715.00

CERTIFICATION FEE 34.24

ZONING FEE 50.00

SURCHARGE FEE 34.24

FLOOD ZONE FEE 25.00

FLOOD DEVELOPMENT PERMIT

MOBILE HOME PERMIT

RELOCATION PERMIT

TRAVEL TRAILER PERMIT

RECONNECTION PERMIT

UTILITY POLE PERMIT

WASTE ASSESSMENT FEE

FIRE FEE (5 ACRES OR LESS)

CULVERT PERMIT

FIRE FEE (MORE THAN 5 ACRES)

PERMIT PENALTY 1715.00

CHECK NUMBER 15540

TOTAL FEES CHARGES 3573.48

MAKE CHECKS PAYABLE TO: BCC (Board of County Commissioners)

NOTE: A SEPARATE CHECK IS REQUIRED FOR THE CULVERT WAIVER PERMITS

135 NE HERNANDO AVE.
SUITE B-21
LAKE CITY, FL 32055
Phone: 386-758-1008
Fax: 386-758-2160

ACORD®

CERTIFICATE OF LIABILITY INSURANCE

DATE (MM/DD/YYYY) 11/16/2010

PRODUCER (954)943-5050 FAX: (954)942-6310
Frank H. Furman, Inc.
1314 East Atlantic Blvd.
P. O. Box 1927
Pompano Beach FL 33061

THIS CERTIFICATE IS ISSUED AS A MATTER OF INFORMATION ONLY AND CONFERS NO RIGHTS UPON THE CERTIFICATE HOLDER. THIS CERTIFICATE DOES NOT AMEND, EXTEND OR ALTER THE COVERAGE AFFORDED BY THE POLICIES BELOW.

INSURED
Old World Craftsmen, Inc.
P O Box 710
Lake City FL 32056

INSURERS AFFORDING COVERAGE	NAIC #
INSURER A: First Mercury Insurance Co	10657
INSURER B: Praetorian Insurance Company	
INSURER C: Commerce & Industry Ins Co	19410
INSURER D: Travelers Property Casualty	25674
INSURER E:	

COVERAGES

THE POLICIES OF INSURANCE LISTED BELOW HAVE BEEN ISSUED TO THE INSURED NAMED ABOVE FOR THE POLICY PERIOD INDICATED. NOTWITHSTANDING ANY REQUIREMENT, TERM OR CONDITION OF ANY CONTRACT OR OTHER DOCUMENT WITH RESPECT TO WHICH THIS CERTIFICATE MAY BE ISSUED OR MAY PERTAIN, THE INSURANCE AFFORDED BY THE POLICIES DESCRIBED HEREIN IS SUBJECT TO ALL THE TERMS, EXCLUSIONS AND CONDITIONS OF SUCH POLICIES. AGGREGATE LIMITS SHOWN MAY HAVE BEEN REDUCED BY PAID CLAIMS.

INSR LTR	ADD'L INSRD	TYPE OF INSURANCE	POLICY NUMBER	POLICY EFFECTIVE DATE (MM/DD/YYYY)	POLICY EXPIRATION DATE (MM/DD/YYYY)	LIMITS	
A		GENERAL LIABILITY X COMMERCIAL GENERAL LIABILITY CLAIMS MADE X OCCUR X Per project Agg capped at $5MM GEN'L AGGREGATE LIMIT APPLIES PER: POLICY X PRO-JECT LOC	FMGA001300	2/2/2010	2/2/2011	EACH OCCURRENCE	$ 1,000,000
						DAMAGE TO RENTED PREMISES (Ea occurrence)	$ 50,000
						MED EXP (Any one person)	$
						PERSONAL & ADV INJURY	$ 1,000,000
						GENERAL AGGREGATE	$ 2,000,000
						PRODUCTS - COMP/OP AGG	$ 2,000,000
B		AUTOMOBILE LIABILITY X ANY AUTO ALL OWNED AUTOS SCHEDULED AUTOS X HIRED AUTOS X NON-OWNED AUTOS	PICFL0001574	11/15/2010	11/15/2011	COMBINED SINGLE LIMIT (Ea accident)	$ 1,000,000
						BODILY INJURY (Per person)	$
						BODILY INJURY (Per accident)	$
						PROPERTY DAMAGE (Per accident)	$
		GARAGE LIABILITY ANY AUTO				AUTO ONLY - EA ACCIDENT	$
						OTHER THAN AUTO ONLY: EA ACC	$
						AGG	$
C		EXCESS / UMBRELLA LIABILITY X OCCUR CLAIMS MADE DEDUCTIBLE RETENTION $	BE080778864	2/2/2010	2/2/2011	EACH OCCURRENCE	$ 2,000,000
						AGGREGATE	$ 2,000,000
							$
							$
							$
		WORKERS COMPENSATION AND EMPLOYERS' LIABILITY ANY PROPRIETOR/PARTNER/EXECUTIVE OFFICER/MEMBER EXCLUDED? Y / N (Mandatory in NH) If yes, describe under SPECIAL PROVISIONS below				WC STATU-TORY LIMITS OTH-ER	
						E.L. EACH ACCIDENT	$
						E.L. DISEASE - EA EMPLOYEE	$
						E.L. DISEASE - POLICY LIMIT	$
D		OTHER Inland Marine	6602016N775	2/2/2010	2/2/2011	Leased/Rented	$50,000

DESCRIPTION OF OPERATIONS / LOCATIONS / VEHICLES / EXCLUSIONS ADDED BY ENDORSEMENT / SPECIAL PROVISIONS
Project: Jeff Ganskop, Owner/Builder Personal Residence, Lake City, Florida

#28537

CERTIFICATE HOLDER

(386)758-2160

Columbia County
Building & Zoning
Attn: Janice
135 NE Hernando Ave.
Suite B-21
Lake City, FL 32099

CANCELLATION

SHOULD ANY OF THE ABOVE DESCRIBED POLICIES BE CANCELLED BEFORE THE EXPIRATION DATE THEREOF, THE ISSUING INSURER WILL ENDEAVOR TO MAIL 10 DAYS WRITTEN NOTICE TO THE CERTIFICATE HOLDER NAMED TO THE LEFT, BUT FAILURE TO DO SO SHALL IMPOSE NO OBLIGATION OR LIABILITY OF ANY KIND UPON THE INSURER, ITS AGENTS OR REPRESENTATIVES.

AUTHORIZED REPRESENTATIVE
Frank Furman, Jr/LV F.H. Furman Jr.

© 1988-2009 ACORD CORPORATION. All rights reserved.
The ACORD name and logo are registered marks of ACORD

COLUMBIA COUNTY BUILDING DEPARTMENT
135 NE Hernando Ave., Suite B-21
Lake City, FL 32055
Office: 386-758-1008 Fax: 386-758-2160

OWNER BUILDER DISCLOSURE STATEMENT

I understand that state law requires construction to be done by a licensed contractor and have applied for an owner-builder permit under an exemption from the law. The exemption specifies that I, as the owner of the property listed, may act as my own contractor with certain restrictions even though I do not have a license.

I understand that building permits are not required to be signed by a property owner unless he or she is responsible for the construction and is not hiring a licensed contractor to assume responsibility.

I understand that, as an owner-builder, I am the responsible party of record on a permit. I understand that I may protect myself from potential financial risk by hiring a licensed contractor and having the permit filed in his or her name instead of my own name. I also understand that a contractor is required by law to be licensed and bonded in Florida and to list his or her license numbers on permits and contracts.

I understand that I may build or improve a one-family or two-family residence or farm outbuilding. I may also build or improve a commercial building if the costs do not exceed $75,000. The building or residence must be for my own use or occupancy. It may not be built or substantially improved for sale or lease. If a building or residence that I have built or substantially improved myself is sold or leased with in 1 year after the construction is complete, the law will presume that I built or substantially improved it for sale or lease, which violates the exemption.

I understand that, as the owner-builder, I must provide direct, onsite supervision of the construction.

I understand that I may not hire an unlicensed person to act as my contractor or to supervise persons working on my building or residence. It is my responsibility to ensure that the persons whom I employ have the licenses required by law and by county or municipal ordinance.

I understand that it is frequent practice of unlicensed persons to have the property owner obtain an owner-builder permit that erroneously implies that the property owner is providing his or her own labor and materials. I, as an owner-builder, may be held liable and subjected to serious financial risk for any injuries sustained by an unlicensed person or his or her employees while working on my property. My homeowner's insurance may not provide coverage for those injuries. I am willfully acting as an owner-builder and am aware of the limits of my insurance coverage for injuries to workers on my property.

I understand that I may not delegate the responsibility for supervising work to a licensed contractor who is not licensed to perform the work being done. Any person working on my building who is not licensed must work under my direct supervision and must be employed by me, which means that I must comply with laws requiring the withholding of federal income tax and social security contributions under the Federal Insurance Contributions Act (FICA) and must provide workers' compensation for the employee. I understand that my failure to follow these laws may subject me to serious financial risk.

I agree that, as the party legally and financially responsible for this proposed construction activity, I will abide by all applicable laws and requirements that govern owner-builders as well as employers. I also understand that the construction must comply with all applicable laws, ordinances, building codes, and zoning regulations.

I understand that I may obtain more information regarding my obligations as an employer from the Internal Revenue Service, the United States Small Business Administration, the Florida Department of Financial Services, and the Florida Department of Revenue. I also understand that I may contact the Florida Construction Industry Licensing Board at 850-487-1395 or Internet website address http://www.myflorida.com/dbpr/pro/cilb/index.html for more information about licensed contractors.

I am aware of, and consent to, an owner-builder building permit applied for in my name and understand that I am the party legally and financially responsible for the proposed construction activity at the following address:

334 SW Hamlet Circle Lake City, FL 32024.

I agree to notify Columbia County Building Department immediately of any additions, deletions, or changes to any of the information that I have provided on this disclosure. Licensed contractors are regulated by laws designed to protect the public. If you contract with a person who does not have a license, the Construction Industry Licensing Board and Department of Business and Professional Regulation may be unable to assist you with any financial loss that you sustain as a result of a complaint. Your only remedy against an unlicensed contractor may be in civil court. It is also important for you to understand that, if an unlicensed contractor or employee of an individual of firm is injured while working on your property, you may be held liable for damages. If you obtain an owner-builder permit and wish to hire a licensed contractor, you will be responsible for verifying whether the contractor is properly licensed and the status of the contractor's workers' compensation coverage.

I understand that if I hire subcontractors they must be licensed for that type of work in Columbia County, ex: framing, stucco, masonry, and state registered builders. Registered Contractors must have a minimum of $300,000.00 in General Liability insurance coverage and the proper workers' compensation. Specialty Contractors must have a minimum of $100,000.00 in General Liability insurance coverage and the proper workers' compensation coverage.

Before a building permit can be issued, this disclosure statement must be completed and signed by the property owner and returned to Columbia County Building Department.

TYPE OF CONSTRUCTION

( ) Single Family Dwelling ( ) Two-Family Residence ( ) Farm Outbuilding

(X) Addition, Alteration, Modification or other Improvement

( ) Commercial, Cost of Construction_____ Construction of_____

( ) Other_____

I Jeff L. Ganskop, have been advised of the above disclosure statement for exemption from contractor licensing as an owner/builder. I agree to comply with all requirements provided for in Florida Statutes allowing this exception for the construction permitted by Columbia County Building Permit.

Owner Builder Signature _____ Date 3-15-10

NOTARY PUBLIC-STATE OF FLORIDA
Linda R. Roder
Commission #DD755608
Expires: MAR. 24, 2012
BONDED THRU ATLANTIC BONDING CO., INC.

NOTARY OF OWNER BUILDER SIGNATURE

The above signer is personally known to me or produced identification _____

Notary Signature _____ Date 3-15-10 (Seal)

FOR BUILDING DEPARTMENT USE ONLY

I hereby certify that the above listed owner builder has been given notice of the restriction stated above.

Building Official/Representative_____

Revised: 7-23-09
DISCLOSURE STATEMENT 09
Documents: B&Z Forms

FORM 104 WARRANTY DEED - (Statutory Form)

executive line

THIS INSTRUMENT PREPARED BY

REGIONAL TITLE COMPANY
2015 South First Street
Post Office Box 1672
Lake City, Florida 32055
MARTHA J. TEDDER, BY:

BK 0697 PG 0271

OFFICIAL RECORDS

R-6148

This Indenture,

(The terms "grantor" and "grantee" herein shall be construed to include all gender and singular or plural as the context indicates.)

Made this 19th *day of* September *19* 89 , *Between*
Joseph L. Hurley and Sandra F. Hurley, his wife
Social Security No(s) [redacted]

of the County of Columbia *, State of* Florida *, grantor, and*
Jeffrey L. Ganskop and Linda J. Ganskop, his wife
Social Security No(s) [redacted]

whose post office address is Rt. 9, Box 970 Lake City, Florida 32055
of the County of Columbia *, State of* Florida *, grantee,*

Witnesseth: That said grantor, for and in consideration of the sum of TEN AND NO/100'S------*Dollars, and other good and valuable considerations to said grantor in hand paid by said grantee, the receipt whereof is hereby acknowledged, has granted, bargained and sold to the said grantee, and grantee's heirs, successors and assigns forever, the following described land, situate, lying and being in* Columbia *County, Florida, to-wit:*

Lot 8 of Block 8 of Southwood Acres, Unit 1 a subdivision according to a plat thereof recorded in Plat book 3, page 78, in the office of the Clerk of Circuit Court in and for Columbia County, Florida.

Subject to Restrictions as recorded in O.R. Book 207, page 362 public records of Columbia County, Florida.

DOCUMENTARY STAMP 445.50
INTANGIBLE TAX 0
P. DeWITT CASON, CLERK OF COURTS, COLUMBIA COUNTY
BY D.C.

89 : 11281

1989 SEP 20 PM 2:23

FLORIDA

The property appraiser's parcel identification number of the property is: 36-4S-16-03355-000

and said grantor does hereby fully warrant the title to said land, and will defend the same against the lawful claims of all persons whomsoever.

In Witness Whereof, Grantor has hereunto set grantor's hand and seal the day and year first above written.
Signed, sealed and delivered in our presence:

Witness — Joseph L. Hurley (Seal)
Witness — Sandra F. Hurley (Seal)
Witness — (Seal)
Witness — (Seal)

STATE OF FLORIDA
COUNTY OF COLUMBIA
I HEREBY CERTIFY that on this day before me, an officer duly qualified to take acknowledgments, personally appeared

Joseph L. Hurley and Sandra F. Hurley, his wife

to me known to be the person(s) described in and who executed the foregoing instrument and acknowledged before me the execution of same.
WITNESS my hand and official seal in the County and State last aforesaid this 19 *day of* September

Bldg Application 1003-25

Express Plumbing
120 SW Thrasher Lane
Lake City, FL 32024
License no. CFC1428040

Date: April 5, 2010

Columbia County Building and Zoning
135 NE Hernando Ave. #B21
Lake City, FL 32055

Re: Jeff Ganskop Residence
334 SW Hamlet Circle
Lake City, FL 32024

Gentlemen:

This letter is notification that Express Plumbing Inc. has not installed nor altered any plumbing in the new addition or the existing residence, as of the above date.

Sincerely,

Mark Ganskop, President

Affirmed to and subscribed before me
this 5th day of April, 2010

Signature of Notary Public
Commissioned State of Florida

Linda Roder
Print, Type or Stamp
Name of Notary Public

Personally known to me or produced _____ as identification.

NOTARY PUBLIC-STATE OF FLORIDA
Linda R. Roder
Commission #DD755608
Expires: MAR. 24, 2012
BONDED THRU ATLANTIC BONDING CO., INC.

Bldg Application 1003-25

RAINBOLT TECHNICAL SERVICE
P.O.BOX 773
LAKE CITY, FL 32056
OFFICE (386)755-5079
FAX (386)758-6195
E-MAIL lynrainbolt@bellsouth.net

4/07/2010

To Whom It May Concern:

I have inspected the HVAC work that has been done at the Jeff & Linda Ganskop Residence at 334 SW Hamlet Circle in conjunction with the remodel/additions through 4/05/2010. Everything in the new/remodeled parts of the house appears to have been done in compliance with code & in a competent manner.

We have been hired by the Ganskops to continue the HVAC work.

If you have any questions please feel free to call me at (386) 867-1004.

Lyndon Rainbolt
RA0066590

Affirmed to and subscribed before me
this 7th day of April, 2010

Signature of Notary Public
Commissioned State of Florida

Linda Roder
Print, Type or Stamp
Name of Notary Public

Personally known to me or produced _____ as identification.

NOTARY PUBLIC-STATE OF FLORIDA
Linda R. Roder
Commission #DD755608
Expires: MAR. 24, 2012
BONDED THRU ATLANTIC BONDING CO., INC.

RAINBOLT TECHNICAL SERVICE
P.O.BOX 773
LAKE CITY, FL 32056
OFFICE (386)755-5079
FAX (386)758-6195
E-MAIL lynrainbolt@bellsouth.net

4/07/2010

To Whom It May Concern:

I have inspected the electrical work that has been done at the Jeff & Linda Ganskop Residence at 334 SW Hamlet Circle in conjunction with the remodel / additions through 4/05/2010. And although I can not inspect the wiring that has already been covered by wall materials, everything in the new/remodeled parts of the house appear to have been done in compliance with the National Electrical Code & in a competent manner.

We have been hired by the Ganskops to continue the electrical work & are planning to up-grade their main electrical service to 400/amps, replace their existing 200/amp electrical panel & add a second, new, 200/amp electrical panel.

If you have any questions please feel free to call me at (386) 867-1004.

Lyndon Rainbolt
EC13001835

Bldg Application 1003-25

Mark Disosway, P.E.
POB 868, Lake City, FL 32056, Ph 386-754-5419, Fax 386-269-4871

STRUCTURAL INSPECTION REPORT

Ganscop, Jeff Linda Addition / Renovation, Lake City, FL

Introduction

This report documents an inspection I made at the above referenced building at the request of Jeff Ganscop, owner. Jeff stated that construction of an addition / renovation project was started without a permit. Jeff subsequently submitted plans and engineering documenting the project and applied for a building permit (Columbia County Application No. 1003-25, Mark Disosway, PE Job #100120, dated 31Mar10). Since some of the work was already completed and covered the building department requested a letter from an engineer documenting structural inspection.

Limits of Inspection

This inspection report is limited to a visual inspection of the structure. Certain parts of the construction were completed and covered and were not visible. I relied on a sketches and verbal description from the owner / builder and cursory inspection with a Zircon MetalliScanner 6.0 to approximately locate rebar and purlin nails. I did not inspect electrical, mechanical, plumbing, energy, egress, accessibility.

General Information and Comments

- Wind Loads – Due to the weight of the heavy roofing slate and steep roof pitch wind uplift is not important (Wind uplift is 25 psf which is less than the roof dead load, 50 psf / 1.5 safety factor). Lateral load from wind is very important in the two story addition due to the steep pitch of the roof, high roof height, and lack of shear wall in the transverse direction. At the time of inspection in its current state of completion the two story addition is not adequately braced to withstand design wind loads.
- Seismic Loads – For this house seismic design was not considered because single family residences in Columbia County are exempt from the seismic requirements of ASCE7-05 (Short term spectral response parameter, Ss < 0.4). Due to the relatively high mass of the roofing slate, heavy stone decorative finishes on walls, heavy floor logs, and high center of gravity this house would be more sensitive to seismic loading than a typical house. If the seismic requirements of Charleston applied here the house would require significantly more shear wall and lateral bracing than is required for wind.

Inspection Data

- The plan, S-7, shows 2x12 SYP#2 floor decking running parallel to the log floor joists. They actually run perpendicular to the floor joists and are adequate to support 2nd floor 40 psf live load.
    - The 2x10s above the floor deck are intended to provide space in the floor system for ducts and plumbing.
    - It is OK to cut any of the 2x10s in any location to provide a duct chase as long as the ¾" T&G finished floor above them is adequately supported at 2'OC.
- The fireplaces and chimneys are light weight metal fireplaces with multi wall sheet metal chimneys which would not require additional foundation footings. However, the decorative finish using stacked stone appears to be heavy enough that normally a thickened slab would have been designed. There does not appear to be any significant settling. One floor tile at the rear corner is cracked and the owner states it has been replaced already.
    - The weight at point of bearing on the slab could be 150 pcf * 20' = 3000 psf or more. The fireplaces load is bearing on a typical unreinforced 4" concrete slab on grade floor. The soil under the slab is likely fine sugar sand like the rest of the site.
    - Verbal advice from Cal-Tech is, "don't allow the soil to get wet" because it could lower bearing capacity. Since the soil is sand and not clay it has high elasticity and settling would occur immediately as the load is applied. If future settling occurs they can reinforce the soil by grouting.

Corrective Actions Required

- Repair loft floor trusses.
    - Webs and top chord on the east end of several floor trusses supporting the loft have been cut during installation.
    - An engineered repair drawing from the truss manufacturer should be used to do the repair.
- Brace the gable end wall of the master bedroom.
    - Studs are not continuous between points of lateral support. The wall was not balloon framed and even if it had been only 2 full height studs would be possible due to window locations.
    - If the 2-2x8 top plate at mid height of the wall is strapped horizontally to the fireplace and the fireplace is

05 APR 10

adequately reinforced it should be OK.

- Add more lateral bracing in the transverse direction to the two story addition.
  - The existing shear wall at each end of the first floor of the addition is inadequate. The end of the room attached to the house has no shearwall at all. The fireplace end has small shear wall segments and a fireplace with unknown reinforcement.
  - Add foundation with reinforced grade beams and reinforced CMU columns to brace the future deck floor and attach the deck with horizontal straps to the floor system of the addition.
- Verify rafter to ridge beam attachment in great room.
  - The plan calls for 9 Log Hog screws. The owner recalls 2 lag screws. Even if the lag screws were ½" the connection would require 5 additional Log Hogs.

Summary

- To the best of my knowledge, based on visual observations and verbal information from the owner and construction workers, at this point in time, the addition and renovation generally matches the permit plans and meets FBC2007 structural requirements. Exceptions are noted above.

OSAP 12D

Jeff & Linda Ganskop

Location: **Project Name:**

As required by Florida Statute 553.842 and Florida Administrative Code 9B-72, please provide the information and the product approval number(s) on the building components listed below if they will be utilized on the construction project for which you are applying for a building permit on or after April 1, 2004. We recommend you contact your local product supplier should you not know the product approval number for any of the applicable listed products. More information about statewide product approval can be obtained at www.floridabuilding.org

Category/Subcategory	Manufacturer	Product Description	Approval Number(s)
A. EXTERIOR DOORS			
1. Swinging	Anderson		FL1097-R1
2. Sliding			
3. Sectional			
4. Roll up			
5. Automatic			
6. Other			
B. WINDOWS			
1. Single hung	Anderson		FL1091
2. Horizontal Slider			
3. Casement			
4. Double Hung			
5. Fixed			
6. Awning			
7. Pass -through			
8. Projected			
9. Mullion			
10. Wind Breaker			
11 Dual Action			
12. Other			
C. PANEL WALL			
1. Siding			
2. Soffits	Ashley	Aluminum Soffits	FL406
3. EIFS			
4. Storefronts			
5. Curtain walls			
6. Wall louver			
7. Glass block			
8. Membrane			
9. Greenhouse			
10. Other			
D. ROOFING PRODUCTS			
1. Asphalt Shingles			
2. Underlayments			
3. Roofing Fasteners			
4. Non-structural Metal Rf			
5. Built-Up Roofing			
6. Modified Bitumen			
7. Single Ply Roofing Sys			
8. Roofing Tiles			
9. Roofing Insulation			
10. Waterproofing			
11. Wood shingles /shakes			
12. Roofing Slate	slate	a natural product	none

Category/Subcategory (Form)	Manufacturer	Product Description	Approval Number(s)
13. Liquid Applied Roof Sys			
14. Cements-Adhesives – Coatings			
15. Roof Tile Adhesive			
16. Spray Applied Polyurethane Roof			
17. Other			
E. SHUTTERS			
1. Accordion			
2. Bahama			
3. Storm Panels			
4. Colonial			
5. Roll-up			
6. Equipment			
7. Others			
F. SKYLIGHTS			
1. Skylight			
2. Other			
G. STRUCTURAL COMPONENTS			
1. Wood connector/anchor			
2. Truss plates			
3. Engineered lumber			
4. Railing			
5. Coolers-freezers			
6. Concrete Admixtures			
7. Material			
8. Insulation Forms			
9. Plastics			
10. Deck-Roof			
11. Wall			
12. Sheds			
13. Other			
H. NEW EXTERIOR ENVELOPE PRODUCTS			
1.			
2.			

The products listed below did not demonstrate product approval at plan review. I understand that at the time of inspection of these products, the following information must be available to the inspector on the jobsite; 1) copy of the product approval, 2) the performance characteristics which the product was tested and certified to comply with, 3) copy of the applicable manufacturers installation requirements.

I understand these products may have to be removed if approval cannot be demonstrated during inspecti

Contractor or Contractor's Authorized Agent Signature

Linda Ganskop

Location

Jeff & Linda Ganskop

Print Name

Date

Permit # **(FOR STAFF USE ONLY)**

ITW Building Components Group, Inc.

1950 Marley Drive Haines City, FL 33844
Florida Engineering Certificate of Authorization Number: 0 278
Florida Certificate of Product Approval # FL1999
 Document ID:1TIH8228Z0318131637

Truss Fabricator: Anderson Truss Company
Job Identification: 8-155--Fill in later ganskop -- , **
Truss Count: 7
Model Code: Florida Building Code 2004 and 2006 Supplement
Truss Criteria: ANSI/TPI-2002(STD)/FBC
Engineering Software: Alpine Software,Versions 7.36, 7.37.
Structural Engineer of Record: The identity of the structural EOR did not exist as of
Address: the seal date per section 61G15-31.003(5a) of the FAC
Minimum Design Loads: Roof - 71.0 PSF @ 1.25 Duration
Floor - N/A
Wind - 110 MPH ASCE 7-02 -Closed

Seal Date: 06/18/2008

-Truss Design Engineer-
James F. Collins Jr.
Florida License Number: 52212
1950 Marley Drive
Haines City, FL 33844

Notes:

1. Determination as to the suitability of these truss components for the structure is the responsibility of the building designer/engineer of record, as defined in ANSI/TPI 1
2. The drawing date shown on this index sheet must match the date shown on the individual truss component drawing.
3. As shown on attached drawings; the drawing number is preceded by: HCUSR8228

Details: A12030EE-GBLLETIN-140PB-140GC-

#	Ref Description	Drawing#	Date
1	42842--A	08170069	06/18/08
2	42843--AGE	08170067	06/18/08
3	42844--A-1	08170071	06/18/08
4	42845--D1	08170019	06/18/08
5	42846--DRGE	08170018	06/18/08
6	42847--AP	08170068	06/18/08
7	42848--APGE	08170070	06/18/08

ITW Building Components Group, Inc.

1950 Marley Drive Haines City, FL 33844
 Document ID:1TIH8228Z0318131637

Truss Fabricator:	Anderson Truss Company
Job Identification:	8-155--Fill in later ganskop -- , **
Truss Count:	1
Model Code:	Florida Building Code 2004 and 2006 Supplement
Truss Criteria:	ANSI/TPI-2002(STD)/FBC
Engineering Software:	Alpine Software,Versions 7.36, 7.37.
Structural Engineer of Record:	
Address:	
Minimum Design Loads:	Roof - 71.0 PSF @ 1.25 Duration Floor - N/A Wind - 110 MPH ASCE 7-02 -Closed

Notes:

1. Determination as to the suitability of these truss components for the structure is the responsibility of the building designer/engineer of record, as defined in ANSI/TPI 1
2. The drawing date shown on this index sheet must match the date shown on the individual truss component drawing.
3. As shown on attached drawings; the drawing number is preceded by: HCUSR8228

Seal Date: 06/18/2008

-Truss Design Engineer-
James F. Collins Jr.
Florida License Number: 52212
1950 Marley Drive
Haines City, FL 33844

Revised Trusses

#	Ref	Description	Drawing#	Date
1	42847--AP		08170068	06/18/08

ALPINE

(8-155--Fill in later ganskop -- , ** - A)

Top chord 2x6 SP #1 Dense
Bot chord 2x6 SP #1 Dense
Webs 2x4 SP #3 :W8, W10 2x4 SP #2 Dense:

Roof overhang supports 2.00 psf soffit load.

Calculated horizontal deflection is 0.13" due to live load and 0.89" due to dead load.

In lieu of structural panels use purlins to brace all flat TC @ 24" OC.

WARNING: Furnish a copy of this DWG to the installation contractor. Special care must be taken during handling, shipping and installation of trusses. See "WARNING" note below.

(**) 1 plate(s) require special positioning. Refer to scaled plate plot details for special positioning requirements.

110 mph wind, 32.54 ft mean hgt, ASCE 7-02, CLOSED bldg, Located anywhere in roof, CAT II, EXP B, wind TC DL=5.0 psf, wind BC DL=5.0 psf. Iw=1.00 GCpi(+/-)=0.18

Wind reactions based on MWFRS pressures.

Trusses to be spaced at 12.0" OC maximum.

Deflection meets L/240 live and L/180 total load. Creep increase factor for dead load is 1.50.

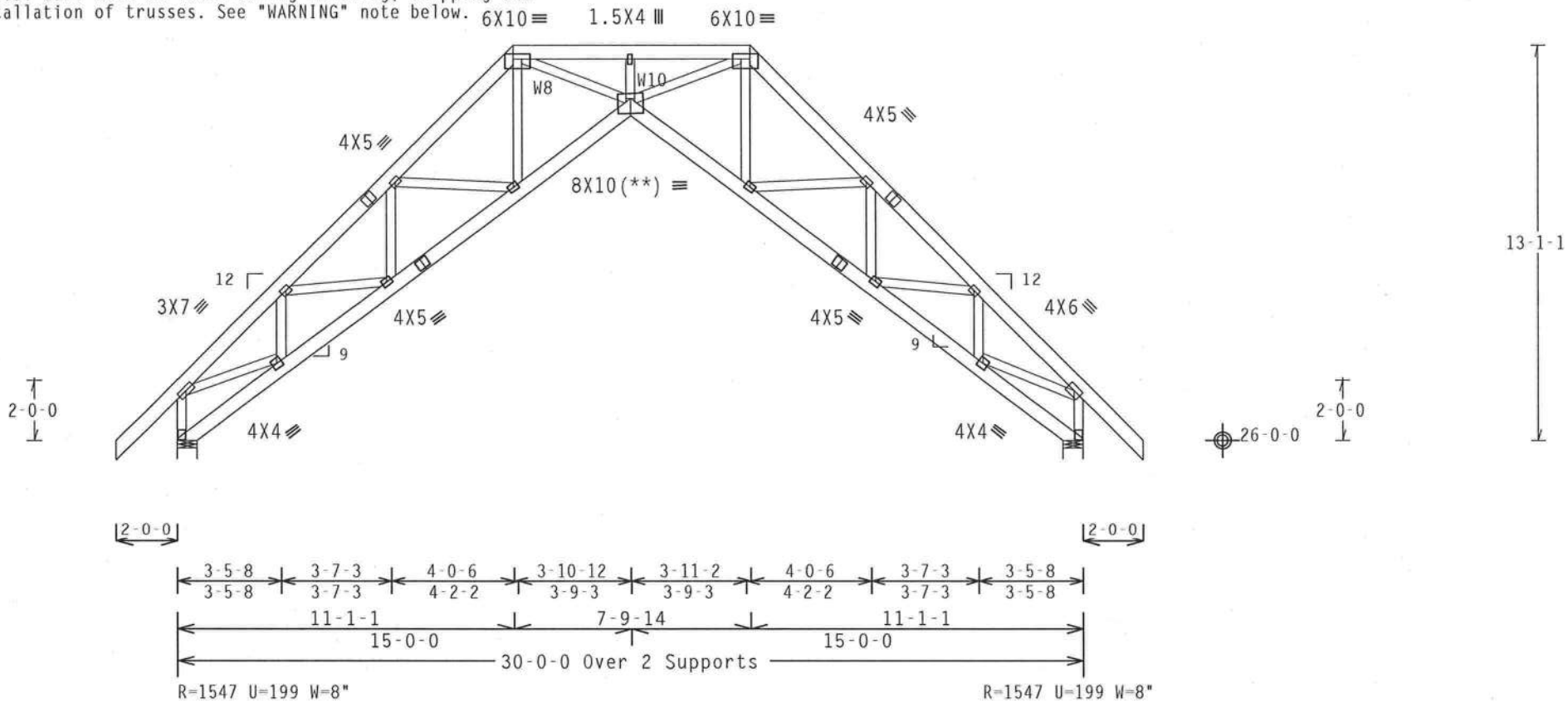

Note: All Plates Are 3X4 Except As Shown.

Design Crit: TPI-2002(STD)/FBC

PLT TYP. Wave — Cq/RT=1.00(1.25)/10(0) 7.36.0424.10 — QTY:42 FL/-/4/-/-/R/- — Scale =.1875"/Ft.

ALPINE
ITW Building Components Group Inc.
Haines City, FL 33844
FL COA #0 278

WARNING TRUSSES REQUIRE EXTREME CARE IN FABRICATION, HANDLING, SHIPPING, INSTALLING AND BRACING. REFER TO BCSI (BUILDING COMPONENT SAFETY INFORMATION), PUBLISHED BY TPI (TRUSS PLATE INSTITUTE, 218 NORTH LEE STREET, SUITE 312, ALEXANDRIA, VA, 22314) AND WTCA (WOOD TRUSS COUNCIL OF AMERICA, 6300 ENTERPRISE LANE, MADISON, WI 53719) FOR SAFETY PRACTICES PRIOR TO PERFORMING THESE FUNCTIONS. UNLESS OTHERWISE INDICATED TOP CHORD SHALL HAVE PROPERLY ATTACHED STRUCTURAL PANELS AND BOTTOM CHORD SHALL HAVE A PROPERLY ATTACHED RIGID CEILING.

IMPORTANTFURNISH A COPY OF THIS DESIGN TO THE INSTALLATION CONTRACTOR. ITW BCG, INC. SHALL NOT BE RESPONSIBLE FOR ANY DEVIATION FROM THIS DESIGN; ANY FAILURE TO BUILD THE TRUSS IN COMFORMANCE WITH TPI; OR FABRICATING, HANDLING, SHIPPING, INSTALLING & BRACING OF TRUSSES. DESIGN CONFORMS WITH APPLICABLE PROVISIONS OF NDS (NATIONAL DESIGN SPEC. BY AF&PA) AND TPI. ITW BCG CONNECTOR PLATES ARE MADE OF 20/18/16GA (W,H/SS/K) ASTM A653 GRADE 40/60 (W, K/H,SS) GALV. STEEL. APPLY PLATES TO EACH FACE OF TRUSS AND, UNLESS OTHERWISE LOCATED ON THIS DESIGN, POSITION PER DRAWINGS 160A-Z. ANY INSPECTION OF PLATES FOLLOWED BY (1) SHALL BE PER ANNEX A3 OF TPI1-2002 SEC.3. A SEAL ON THIS DRAWING INDICATES ACCEPTANCE OF PROFESSIONAL ENGINEERING RESPONSIBILITY SOLELY FOR THE TRUSS COMPONENT DESIGN SHOWN. THE SUITABILITY AND USE OF THIS COMPONENT FOR ANY BUILDING IS THE RESPONSIBILITY OF THE BUILDING DESIGNER PER ANSI/TPI 1 SEC. 2.

JAMES F. COLLINS JR. LICENSE No. 52212 STATE OF FLORIDA PROFESSIONAL ENGINEER
Jun 10, 2008

TC LL	16.0 PSF	REF	R8228- 42842
TC DL	45.0 PSF	DATE	06/18/08
BC DL	10.0 PSF	DRW	HCUSR8228 08170069
BC LL	0.0 PSF	HC-ENG	DF/DF
TOT.LD.	71.0 PSF	SEQN-	34325
DUR.FAC.	1.25	FROM	AH
SPACING	12.0"	JREF-	1TIH8228Z03

(8-155--Fill in later ganskop -- , ** - AGE)

Top chord 2x6 SP #1 Dense
Bot chord 2x6 SP #1 Dense
Webs 2x4 SP #3

Truss spaced at 12.0" OC designed to support 2-0-0 top chord outlookers. Cladding load shall not exceed 10.00 PSF. Top chord must not be cut or notched.

In lieu of structural panels use purlins to brace all flat TC @ 24" OC.

Deflection meets L/240 live and L/180 total load. Creep increase factor for dead load is 1.50.

THE BUILDING DESIGNER IS RESPONSIBLE FOR THE DESIGN OF THE ROOF, FLOOR AND CEILING DIAPHRAGMS, GABLE END SHEAR WALLS, AND SUPPORTING SHEAR WALLS. DIAPHRAGMS AND SHEAR WALLS MUST PROVIDE CONTINUOUS LATERAL RESTRAINT TO THE GABLE END. ALL CONNECTIONS ARE TO BE PROVIDED BY THE BUILDING DESIGNER.

See DWGS A12030EE0207 & GBLLETIN0207 for more requirements.

(**) 2 plate(s) require special positioning. Refer to scaled plate plot details for special positioning requirements.

110 mph wind, 33.13 ft mean hgt, ASCE 7-02, CLOSED bldg, Located anywhere in roof, CAT II, EXP B, wind TC DL=5.0 psf, wind BC DL=5.0 psf. Iw=1.00 GCpi(+/-)=0.18

Wind reactions based on MWFRS pressures.

Trusses to be spaced at 12.0" OC maximum.

Shim all supports to solid bearing.

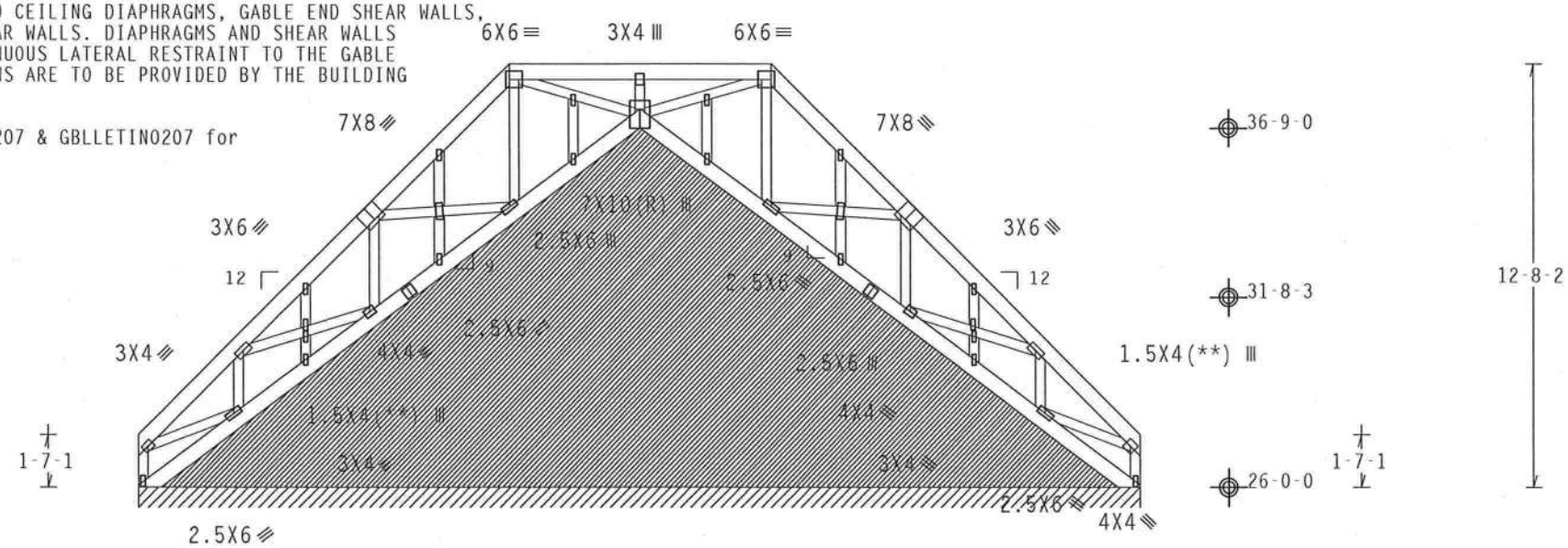

R=399 PLF U=24 PLF W=30-0-0

Note: All Plates Are 1.5X4 Except As Shown.

Design Crit: TPI-2002(STD)/FBC

PLT TYP. Wave Cq/RT=1.00(1.25)/10(0) 7.36.0424 QTY:2 FL/-/4/-/-/R/- Scale =.1875"/Ft.

ALPINE
ITW Building Components Group Inc.
Haines City, FL 33844
FL COA #0 278

WARNING TRUSSES REQUIRE EXTREME CARE IN FABRICATION, HANDLING, SHIPPING, INSTALLING AND BRACING. REFER TO BCSI (BUILDING COMPONENT SAFETY INFORMATION), PUBLISHED BY TPI (TRUSS PLATE INSTITUTE, 218 NORTH LEE STREET, SUITE 312, ALEXANDRIA, VA, 22314) AND WTCA (WOOD TRUSS COUNCIL OF AMERICA, 6300 ENTERPRISE LANE, MADISON, WI 53719) FOR SAFETY PRACTICES PRIOR TO PERFORMING THESE FUNCTIONS. UNLESS OTHERWISE INDICATED TOP CHORD SHALL HAVE PROPERLY ATTACHED STRUCTURAL PANELS AND BOTTOM CHORD SHALL HAVE A PROPERLY ATTACHED RIGID CEILING.

IMPORTANTFURNISH A COPY OF THIS DESIGN TO THE INSTALLATION CONTRACTOR. ITW BCG, INC. SHALL NOT BE RESPONSIBLE FOR ANY DEVIATION FROM THIS DESIGN; ANY FAILURE TO BUILD THE TRUSS IN COMFORMANCE WITH TPI; OR FABRICATING, HANDLING, SHIPPING, INSTALLING & BRACING OF TRUSSES. DESIGN CONFORMS WITH APPLICABLE PROVISIONS OF NDS (NATIONAL DESIGN SPEC, BY AF&PA) AND TPI. ITW BCG CONNECTOR PLATES ARE MADE OF 20/18/16GA (W,H/SS/K) ASTM A653 GRADE 40/60 (W, K/H,SS) GALV. STEEL. APPLY PLATES TO EACH FACE OF TRUSS AND, UNLESS OTHERWISE LOCATED ON THIS DESIGN, POSITION PER DRAWINGS 160A-Z. ANY INSPECTION OF PLATES FOLLOWED BY (1) SHALL BE PER ANNEX A3 OF TPI1-2002 SEC.3. A SEAL ON THIS DRAWING INDICATES ACCEPTANCE OF PROFESSIONAL ENGINEERING RESPONSIBILITY SOLELY FOR THE TRUSS COMPONENT DESIGN SHOWN. THE SUITABILITY AND USE OF THIS COMPONENT FOR ANY BUILDING IS THE RESPONSIBILITY OF THE BUILDING DESIGNER PER ANSI/TPI 1 SEC. 2.

JAMES F. COLLINS JR. LICENSE No. 52212 STATE OF FLORIDA PROFESSIONAL ENGINEER
Jun 18 '08

TC LL	16.0 PSF	REF	R8228- 42843
TC DL	45.0 PSF	DATE	06/18/08
BC DL	10.0 PSF	DRW	HCUSR8228 08170067
BC LL	0.0 PSF	HC-ENG	DF/DF
TOT.LD.	71.0 PSF	SEQN-	34331
DUR.FAC.	1.25	FROM	AH
SPACING	SEE ABOVE	JREF-	1TIH8228Z03

(8-155--Fill in later ganskop -- , ** - A-1)

Top chord 2x8 SP #1 Dense :T3 2x6 SP #1 Dense:
Bot chord 2x8 SP #1 Dense
Webs 2x4 SP #3
:W1, W2, W3, W15, W16, W17 2x6 SP #2:
:W8, W10 2x4 SP #2 Dense:

Calculated horizontal deflection of 1.26" exceeds TPI limit of 1.25" due to total load. Building designer must determine that this movement is acceptable.

In lieu of structural panels use purlins to brace TC @ 24" OC.

Trusses to be spaced at 54.0" OC maximum.

Deflection meets L/240 live and L/180 total load. Creep increase factor for dead load is 1.50.

WARNING: Furnish a copy of this DWG to the installation contractor. Special care must be taken during handling, shipping and installation of trusses. See "WARNING" note below.

THE BUILDING DESIGNER SHALL EVALUATE AND APPROVE LOAD MAGNITUDES AND LOCATIONS AS SHOWN ("SPECIAL LOADS"). TRUSS ENGINEER & FABRICATOR ARE NOT RESPONSIBLE FOR LOAD MAGNITUDES AND LOCATIONS.

SPECIAL LOADS
------(LUMBER DUR.FAC.=1.25 / PLATE DUR.FAC.=1.25)

TC - From	358 PLF	at	-2.00	to	358 PLF	at	2.00
TC - From	1067 PLF	at	2.00	to	1011 PLF	at	6.06
TC - From	1011 PLF	at	6.06	to	984 PLF	at	8.00
TC - From	358 PLF	at	8.00	to	358 PLF	at	11.09
TC - From	358 PLF	at	11.09	to	358 PLF	at	18.91
TC - From	358 PLF	at	18.91	to	358 PLF	at	22.00
TC - From	984 PLF	at	22.00	to	1011 PLF	at	23.94
TC - From	1011 PLF	at	23.94	to	1067 PLF	at	28.00
TC - From	358 PLF	at	28.00	to	358 PLF	at	32.00
BC - From	13 PLF	at	-2.00	to	13 PLF	at	0.00
BC - From	56 PLF	at	0.00	to	56 PLF	at	8.24
BC - From	56 PLF	at	8.24	to	56 PLF	at	15.00
BC - From	56 PLF	at	15.00	to	56 PLF	at	21.76
BC - From	56 PLF	at	21.76	to	56 PLF	at	30.00
BC - From	13 PLF	at	30.00	to	13 PLF	at	32.00

TC - 165 LB Conc. Load at 2.00, 28.00

5 COMPLETE TRUSSES REQUIRED

Nailing Schedule: (12d_Common_(0.148"x3.25",_min.)_nails)
Top Chord: 2 Rows @ 4.50" o.c. (Each Row)
Bot Chord: 1 Row @12.00" o.c.
Webs : 1 Row @ 4" o.c.
Repeat nailing as each layer is applied. Use equal spacing between rows and stagger nails in each row to avoid splitting. In addition apply (1) 1/2" bolt at each joint location.

(**) 2 plate(s) require special positioning. Refer to scaled plate plot details for special positioning requirements.

110 mph wind, 32.54 ft mean hgt, ASCE 7-02, CLOSED bldg, Located anywhere in roof, CAT II, EXP B, wind TC DL=5.0 psf, wind BC DL=5.0 psf. Iw=1.00 GCpi(+/-)=0.18

Wind reactions based on MWFRS pressures.

Roof overhang supports 2.00 psf soffit load.

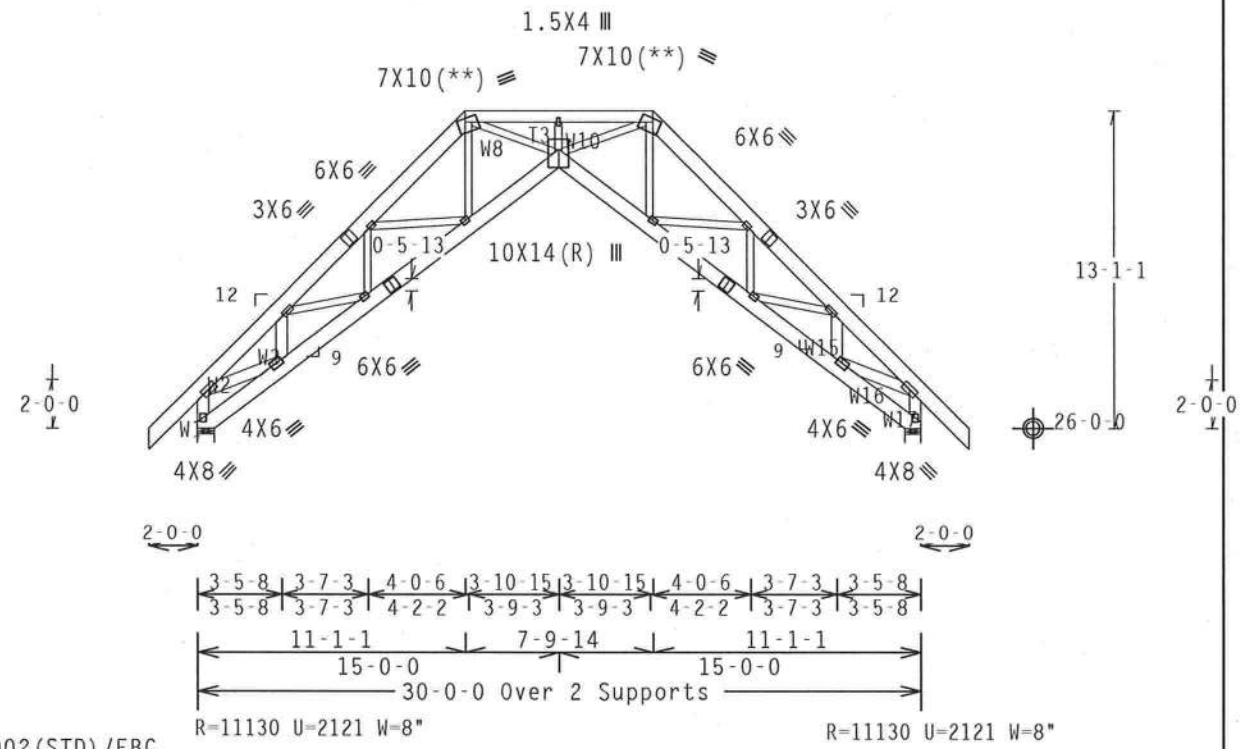

Note: All Plates Are 3X4 Except As Shown.

Design Crit: TPI-2002(STD)/FBC

PLT TYP. Wave Cq/RT=1.00(1.25)/10(0) 7.36.0424 QTY:6 FL/-/4/-/-/R/- Scale =.125"/Ft.

ALPINE
ITW Building Components Group Inc.
Haines City, FL 33844
FL COA #0 278

WARNING TRUSSES REQUIRE EXTREME CARE IN FABRICATION, HANDLING, SHIPPING, INSTALLING AND BRACING. REFER TO BCSI (BUILDING COMPONENT SAFETY INFORMATION), PUBLISHED BY TPI (TRUSS PLATE INSTITUTE, 218 NORTH LEE STREET, SUITE 312, ALEXANDRIA, VA. 22314) AND WTCA (WOOD TRUSS COUNCIL OF AMERICA, 6300 ENTERPRISE LANE, MADISON, WI 53719) FOR SAFETY PRACTICES PRIOR TO PERFORMING THESE FUNCTIONS. UNLESS OTHERWISE INDICATED TOP CHORD SHALL HAVE PROPERLY ATTACHED STRUCTURAL PANELS AND BOTTOM CHORD SHALL HAVE A PROPERLY ATTACHED RIGID CEILING.

IMPORTANTFURNISH A COPY OF THIS DESIGN TO THE INSTALLATION CONTRACTOR. ITW BCG, INC. SHALL NOT BE RESPONSIBLE FOR ANY DEVIATION FROM THIS DESIGN; ANY FAILURE TO BUILD THE TRUSS IN COMFORMANCE WITH TPI; OR FABRICATING, HANDLING, SHIPPING, INSTALLING & BRACING OF TRUSSES.
DESIGN CONFORMS WITH APPLICABLE PROVISIONS OF NDS (NATIONAL DESIGN SPEC. BY AF&PA) AND TPI. ITW BCG CONNECTOR PLATES ARE MADE OF 20/18/16GA (W,H/SS/K) ASTM A653 GRADE 40/60 (W, K/H,SS) GALV. STEEL. APPLY PLATES TO EACH FACE OF TRUSS AND, UNLESS OTHERWISE LOCATED ON THIS DESIGN, POSITION PER DRAWINGS 160A-Z. ANY INSPECTION OF PLATES FOLLOWED BY (1) SHALL BE PER ANNEX A3 OF TPI1-2002 SEC.3. A SEAL ON THIS DRAWING INDICATES ACCEPTANCE OF PROFESSIONAL ENGINEERING RESPONSIBILITY SOLELY FOR THE TRUSS COMPONENT DESIGN SHOWN. THE SUITABILITY AND USE OF THIS COMPONENT FOR ANY BUILDING IS THE RESPONSIBILITY OF THE BUILDING DESIGNER PER ANSI/TPI 1 SEC. 2.

JAMES F. COLLINS JR. LICENSE No. 52212 STATE OF FLORIDA PROFESSIONAL ENGINEER
Jun 18 08

TC LL	16.0 PSF	REF	R8228- 42844
TC DL	45.0 PSF	DATE	06/18/08
BC DL	10.0 PSF	DRW	HCUSR8228 08170071
BC LL	0.0 PSF	HC-ENG	DF/DF
TOT.LD.	71.0 PSF	SEQN-	34312
DUR.FAC.	1.25	FROM	AH
SPACING	SEE ABOVE	JREF-	1TIH8228Z03

(8-155--Fill in later ganskop -- , ** - D1)

Top chord 2x4 SP #2 Dense
Bot chord 2x4 SP #2 Dense
Webs 2x4 SP #3

Roof overhang supports 2.00 psf soffit load.

Calculated horizontal deflection is 0.04" due to live load and 0.31" due to dead load.

110 mph wind, 27.75 ft mean hgt, ASCE 7-02, CLOSED bldg, Located anywhere in roof, CAT II, EXP B, wind TC DL=5.0 psf, wind BC DL=5.0 psf. Iw=1.00 GCpi(+/-)=0.18

Wind reactions based on MWFRS pressures.

Deflection meets L/240 live and L/180 total load. Creep increase factor for dead load is 1.50.

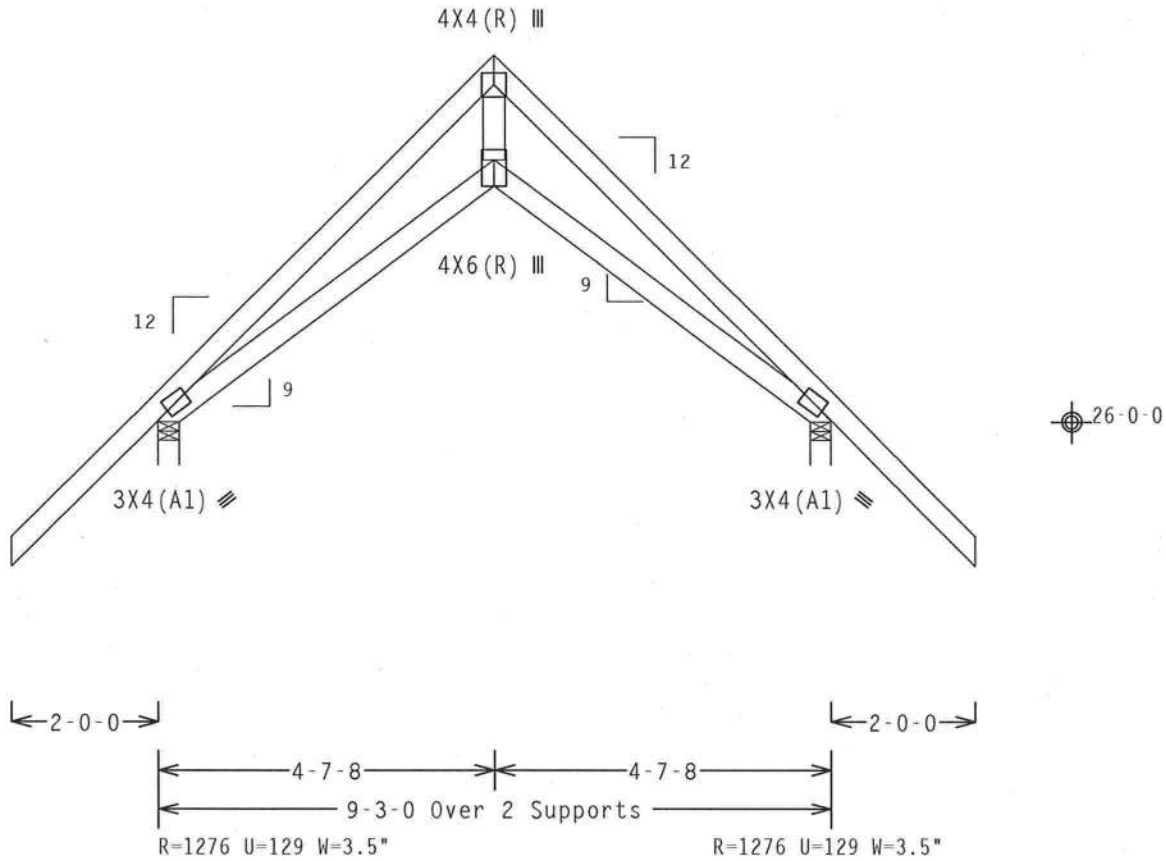

Design Crit: TPI-2002(STD)/FBC
Cq/RT=1.00(1.25)/10(0) 7.36.0424

PLT TYP. Wave QTY:18 FL/-/4/-/-/R/- Scale =.375"/Ft.

ALPINE
ITW Building Components Group Inc.
Haines City, FL 33844
FL COA #0 278

WARNING TRUSSES REQUIRE EXTREME CARE IN FABRICATION, HANDLING, SHIPPING, INSTALLING AND BRACING. REFER TO BCSI (BUILDING COMPONENT SAFETY INFORMATION), PUBLISHED BY TPI (TRUSS PLATE INSTITUTE, 218 NORTH LEE STREET, SUITE 312, ALEXANDRIA, VA, 22314) AND WTCA (WOOD TRUSS COUNCIL OF AMERICA, 6300 ENTERPRISE LANE, MADISON, WI 53719) FOR SAFETY PRACTICES PRIOR TO PERFORMING THESE FUNCTIONS. UNLESS OTHERWISE INDICATED TOP CHORD SHALL HAVE PROPERLY ATTACHED STRUCTURAL PANELS AND BOTTOM CHORD SHALL HAVE A PROPERLY ATTACHED RIGID CEILING.

IMPORTANTFURNISH A COPY OF THIS DESIGN TO THE INSTALLATION CONTRACTOR. ITW BCG, INC. SHALL NOT BE RESPONSIBLE FOR ANY DEVIATION FROM THIS DESIGN; ANY FAILURE TO BUILD THE TRUSS IN CONFORMANCE WITH TPI; OR FABRICATING, HANDLING, SHIPPING, INSTALLING & BRACING OF TRUSSES.
DESIGN CONFORMS WITH APPLICABLE PROVISIONS OF NDS (NATIONAL DESIGN SPEC. BY AF&PA) AND TPI. ITW BCG CONNECTOR PLATES ARE MADE OF 20/18/16GA (W,H/SS/K) ASTM A653 GRADE 40/60 (W, K/H,SS) GALV. STEEL. APPLY PLATES TO EACH FACE OF TRUSS AND, UNLESS OTHERWISE LOCATED ON THIS DESIGN, POSITION PER DRAWINGS 160A-Z. ANY INSPECTION OF PLATES FOLLOWED BY (I) SHALL BE PER ANNEX A3 OF TPI1-2002 SEC.3. A SEAL ON THIS DRAWING INDICATES ACCEPTANCE OF PROFESSIONAL ENGINEERING RESPONSIBILITY SOLELY FOR THE TRUSS COMPONENT DESIGN SHOWN. THE SUITABILITY AND USE OF THIS COMPONENT FOR ANY BUILDING IS THE RESPONSIBILITY OF THE BUILDING DESIGNER PER ANSI/TPI 1 SEC. 2.

JAMES F. COLLINS JR. LICENSE No. 52212 STATE OF FLORIDA PROFESSIONAL ENGINEER
Jun 18 08

TC LL	16.0 PSF	REF	R8228- 42845
TC DL	50.0 PSF	DATE	06/18/08
BC DL	10.0 PSF	DRW	HCUSR8228 08170019
BC LL	0.0 PSF	HC-ENG	EC/WHK
TOT.LD.	76.0 PSF	SEQN-	92092
DUR.FAC.	1.25	FROM	AH
SPACING	24.0"	JREF-	1TIH8228Z03

(8-155--Fill in later ganskop -- , ** - DRGE)

Top chord 2x4 SP #2 Dense
Bot chord 2x4 SP #2 Dense
Webs 2x4 SP #3

Deflection meets L/240 live and L/180 total load. Creep increase factor for dead load is 1.50.

THE BUILDING DESIGNER IS RESPONSIBLE FOR THE DESIGN OF THE ROOF AND CEILING DIAPHRAGMS, GABLE END SHEAR WALLS, AND SUPPORTING SHEAR WALLS. SHEAR WALLS MUST PROVIDE CONTINUOUS LATERAL RESTRAINT TO THE GABLE END. ALL CONNECTIONS TO BE DESIGNED BY THE BUILDING DESIGNER.

SEE DWGS A11030EC0207 FOR ADDITIONAL REQUIREMENTS.

110 mph wind, 28.58 ft mean hgt, ASCE 7-02, CLOSED bldg, Located anywhere in roof, CAT II, EXP B, wind TC DL=5.0 psf, wind BC DL=5.0 psf. Iw=1.00 GCpi(+/-)=0.18

Wind reactions based on MWFRS pressures.

Shim all supports to solid bearing.

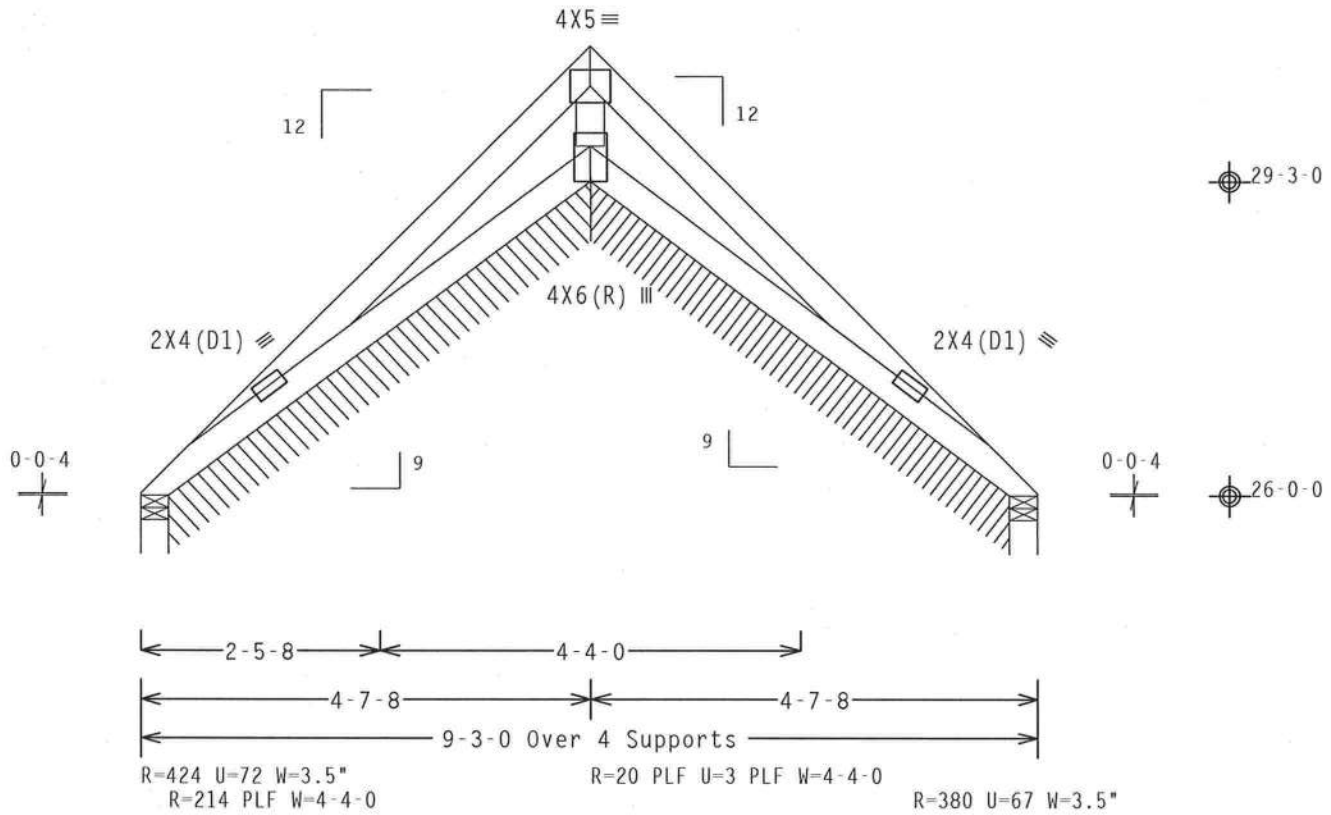

Design Crit: TPI-2002(STD)/FBC

PLT TYP. Wave — Cq/RT=1.00(1.25)/10(0) 7.36.0424.12 — QTY:6 — FL/-/4/-/-/R/- — Scale =.5"/Ft.

ALPINE
ITW Building Components Group Inc.
Haines City, FL 33844
FL COA #0 278

WARNING TRUSSES REQUIRE EXTREME CARE IN FABRICATION, HANDLING, SHIPPING, INSTALLING AND BRACING. REFER TO BCSI (BUILDING COMPONENT SAFETY INFORMATION), PUBLISHED BY TPI (TRUSS PLATE INSTITUTE, 218 NORTH LEE STREET, SUITE 312, ALEXANDRIA, VA. 22314) AND WTCA (WOOD TRUSS COUNCIL OF AMERICA, 6300 ENTERPRISE LANE, MADISON, WI 53719) FOR SAFETY PRACTICES PRIOR TO PERFORMING THESE FUNCTIONS. UNLESS OTHERWISE INDICATED TOP CHORD SHALL HAVE PROPERLY ATTACHED STRUCTURAL PANELS AND BOTTOM CHORD SHALL HAVE A PROPERLY ATTACHED RIGID CEILING.

IMPORTANT FURNISH A COPY OF THIS DESIGN TO THE INSTALLATION CONTRACTOR. ITW BCG, INC. SHALL NOT BE RESPONSIBLE FOR ANY DEVIATION FROM THIS DESIGN; ANY FAILURE TO BUILD THE TRUSS IN COMFORMANCE WITH TPI; OR FABRICATING, HANDLING, SHIPPING, INSTALLING & BRACING OF TRUSSES. DESIGN CONFORMS WITH APPLICABLE PROVISIONS OF NDS (NATIONAL DESIGN SPEC. BY AF&PA) AND TPI. ITW BCG CONNECTOR PLATES ARE MADE OF 20/18/16GA (W,H/SS/K) ASTM A653 GRADE 40/60 (W, K/H,SS) GALV. STEEL. APPLY PLATES TO EACH FACE OF TRUSS AND, UNLESS OTHERWISE LOCATED ON THIS DESIGN, POSITION PER DRAWINGS 160A-Z. ANY INSPECTION OF PLATES FOLLOWED BY (1) SHALL BE PER ANNEX A3 OF TPI1-2002 SEC.3. A SEAL ON THIS DRAWING INDICATES ACCEPTANCE OF PROFESSIONAL ENGINEERING RESPONSIBILITY SOLELY FOR THE TRUSS COMPONENT DESIGN SHOWN. THE SUITABILITY AND USE OF THIS COMPONENT FOR ANY BUILDING IS THE RESPONSIBILITY OF THE BUILDING DESIGNER PER ANSI/TPI 1 SEC. 2.

JAMES F. COLLINS, JR. LICENSE No. 52232 STATE OF FLORIDA PROFESSIONAL ENGINEER
Jun

TC LL	16.0 PSF	REF R8228- 42846
TC DL	50.0 PSF	DATE 06/18/08
BC DL	10.0 PSF	DRW HCUSR8228 08170018
BC LL	0.0 PSF	HC-ENG EC/WHK
TOT.LD.	76.0 PSF	SEQN- 92100
DUR.FAC.	1.25	FROM AH
SPACING	24.0"	JREF- 1TIH8228Z03

(8-155--Fill in later ganskop -- , ** - AP)

Top chord 2x4 SP #2 Dense
Bot chord 2x4 SP #2 Dense
Webs 2x4 SP #3

110 mph wind, 41.04 ft mean hgt, ASCE 7-02, CLOSED bldg, Located anywhere in roof, CAT II, EXP B, wind TC DL=5.0 psf, wind BC DL=2.0 psf. Iw=1.00 GCpi(+/-)=0.18

In lieu of rigid ceiling use purlins to brace BC @ 24" OC.

Deflection meets L/240 live and L/180 total load. Creep increase factor for dead load is 1.50.

SEE DRW HCUSR001 02086006 FOR PIGGYBACK DETAILS.
PORTION OF TRUSS UNDER PIGGYBACK IS TO BE BRACED @ 24" OC, UNLESS OTHERWISE SPECIFIED.

SPECIAL LOADS
------(LUMBER DUR.FAC.=1.25 / PLATE DUR.FAC.=1.25)

TC - From	91 PLF at	0.00 to	91 PLF at	3.91
TC - From	91 PLF at	3.91 to	91 PLF at	7.82
BC - From	2 PLF at	0.00 to	2 PLF at	7.82

Wind reactions based on MWFRS pressures.

Trusses to be spaced at 12.0" OC maximum.

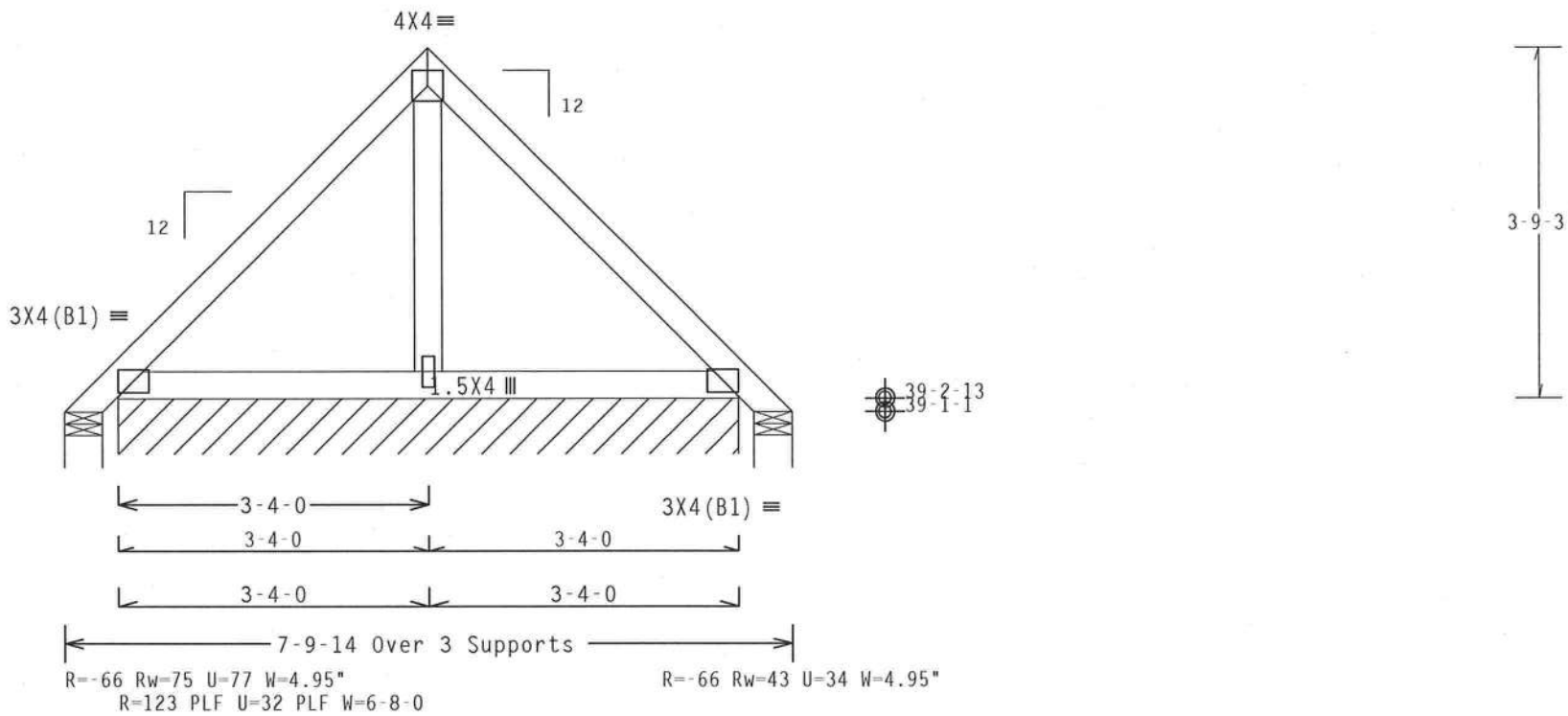

Design Crit: TPI-2002(STD)/FBC
Cq/RT=1.00(1.25)/10(0) 7.37.0521 12

PLT TYP. Wave QTY:36 FL/-/4/-/-/R/- Scale =.5"/Ft.

ALPINE
ITW Building Components Group Inc.
Haines City, FL 33844
FL COA #0 278

WARNING TRUSSES REQUIRE EXTREME CARE IN FABRICATION, HANDLING, SHIPPING, INSTALLING AND BRACING. REFER TO BCSI (BUILDING COMPONENT SAFETY INFORMATION), PUBLISHED BY TPI (TRUSS PLATE INSTITUTE, 218 NORTH LEE STREET, SUITE 312, ALEXANDRIA, VA. 22314) AND WTCA (WOOD TRUSS COUNCIL OF AMERICA, 6300 ENTERPRISE LANE, MADISON, WI 53719) FOR SAFETY PRACTICES PRIOR TO PERFORMING THESE FUNCTIONS. UNLESS OTHERWISE INDICATED TOP CHORD SHALL HAVE PROPERLY ATTACHED STRUCTURAL PANELS AND BOTTOM CHORD SHALL HAVE A PROPERLY ATTACHED RIGID CEILING.

IMPORTANT FURNISH A COPY OF THIS DESIGN TO THE INSTALLATION CONTRACTOR. ITW BCG, INC. SHALL NOT BE RESPONSIBLE FOR ANY DEVIATION FROM THIS DESIGN; ANY FAILURE TO BUILD THE TRUSS IN CONFORMANCE WITH TPI; OR FABRICATING, HANDLING, SHIPPING, INSTALLING & BRACING OF TRUSSES.
DESIGN CONFORMS WITH APPLICABLE PROVISIONS OF NDS (NATIONAL DESIGN SPEC, BY AF&PA) AND TPI. ITW BCG CONNECTOR PLATES ARE MADE OF 20/18/16GA (W,H/SS/K) ASTM A653 GRADE 40/60 (W, K/H,SS) GALV. STEEL. APPLY PLATES TO EACH FACE OF TRUSS AND, UNLESS OTHERWISE LOCATED ON THIS DESIGN, POSITION PER DRAWINGS 160A-2. ANY INSPECTION OF PLATES FOLLOWED BY (I) SHALL BE PER ANNEX A3 OF TPI1-2002 SEC.3. A SEAL ON THIS DRAWING INDICATES ACCEPTANCE OF PROFESSIONAL ENGINEERING RESPONSIBILITY SOLELY FOR THE TRUSS COMPONENT DESIGN SHOWN. THE SUITABILITY AND USE OF THIS COMPONENT FOR ANY BUILDING IS THE RESPONSIBILITY OF THE BUILDING DESIGNER PER ANSI/TPI 1 SEC. 2.

JAMES F. COLLINS, JR. LICENSE No. 52212 STATE OF FLORIDA PROFESSIONAL ENGINEER
Jun 18 '08

TC LL	20.0 PSF	REF	R8228- 42847
TC DL	50.0 PSF	DATE	06/18/08
BC DL	10.0 PSF	DRW	HCUSR8228 08170068
BC LL	0.0 PSF	HC-ENG	DF/DF
TOT.LD.	80.0 PSF	SEQN-	31256 REV
DUR.FAC.	1.25	FROM	AH
SPACING	12.0"	JREF-	1TIH8228Z03

THIS DWG PREPARED FROM COMPUTER INPUT (LOADS & DIMENSIONS) SUBMITTED BY TRUSS MFR.

Top chord 2x4 SP #2 Dense
Bot chord 2x4 SP #2 Dense
Webs 2x4 SP #3

110 mph wind, 41.04 ft mean hgt, ASCE 7-02, CLOSED bldg, Located anywhere in roof, CAT II, EXP B, wind TC DL=5.0 psf, wind BC DL=2.0 psf. Iw=1.00 GCpi(+/-)=0.18

Wind reactions based on MWFRS pressures.

See DWG GBLLETIN0207 for more requirements.

Trusses to be spaced at 12.0" OC maximum.

SEE DRW HCUSR001 02086015 FOR GABLE DETAILS.

SEE DRW HCUSR001 02086006 FOR PIGGYBACK DETAILS. PORTION OF TRUSS UNDER PIGGYBACK IS TO BE BRACED @ 24" OC, UNLESS OTHERWISE SPECIFIED.

SPECIAL LOADS
------(LUMBER DUR.FAC.=1.25 / PLATE DUR.FAC.=1.25)

TC - From	91 PLF	at	0.00 to	91 PLF	at	3.91
TC - From	91 PLF	at	3.91 to	91 PLF	at	7.82
BC - From	2 PLF	at	0.00 to	2 PLF	at	7.82

Truss spaced at 12.0" OC designed to support 2-0-0 top chord outlookers. Cladding load shall not exceed 10.00 PSF. Top chord must not be cut or notched.

In lieu of rigid ceiling use purlins to brace BC @ 24" OC.

Deflection meets L/240 live and L/180 total load. Creep increase factor for dead load is 1.50.

THE BUILDING DESIGNER IS RESPONSIBLE FOR THE DESIGN OF THE ROOF, FLOOR AND CEILING DIAPHRAGMS, GABLE END SHEAR WALLS, AND SUPPORTING SHEAR WALLS. DIAPHRAGMS AND SHEAR WALLS MUST PROVIDE CONTINUOUS LATERAL RESTRAINT TO THE GABLE END. ALL CONNECTIONS ARE TO BE PROVIDED BY THE BUILDING DESIGNER.

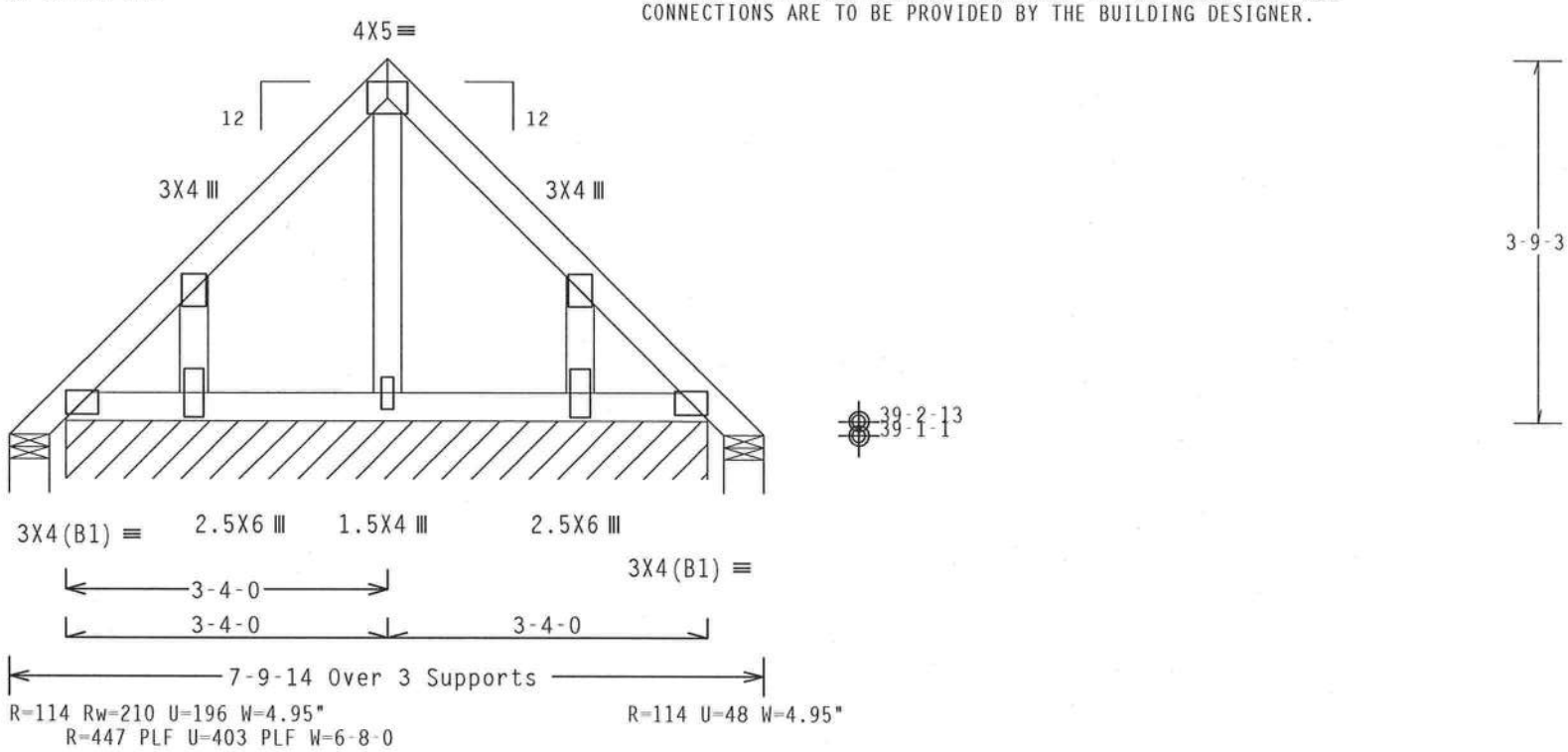

Design Crit: TPI-2002(STD)/FBC
Cq/RT=1.00(1.25)/10(0) 7.36.0424

PLT TYP. Wave QTY:2 FL/-/4/-/-/R/- Scale =.5"/Ft.

ALPINE
ITW Building Components Group Inc.
Haines City, FL 33844
FL COA #0 278

WARNING TRUSSES REQUIRE EXTREME CARE IN FABRICATION, HANDLING, SHIPPING, INSTALLING AND BRACING. REFER TO BCSI (BUILDING COMPONENT SAFETY INFORMATION), PUBLISHED BY TPI (TRUSS PLATE INSTITUTE, 218 NORTH LEE STREET, SUITE 312, ALEXANDRIA, VA, 22314) AND WTCA (WOOD TRUSS COUNCIL OF AMERICA, 6300 ENTERPRISE LANE, MADISON, WI 53719) FOR SAFETY PRACTICES PRIOR TO PERFORMING THESE FUNCTIONS. UNLESS OTHERWISE INDICATED TOP CHORD SHALL HAVE PROPERLY ATTACHED STRUCTURAL PANELS AND BOTTOM CHORD SHALL HAVE A PROPERLY ATTACHED RIGID CEILING.

IMPORTANTFURNISH A COPY OF THIS DESIGN TO THE INSTALLATION CONTRACTOR. ITW BCG, INC. SHALL NOT BE RESPONSIBLE FOR ANY DEVIATION FROM THIS DESIGN; ANY FAILURE TO BUILD THE TRUSS IN COMFORMANCE WITH TPI; OR FABRICATING, HANDLING, SHIPPING, INSTALLING & BRACING OF TRUSSES.
DESIGN CONFORMS WITH APPLICABLE PROVISIONS OF NDS (NATIONAL DESIGN SPEC, BY AF&PA) AND TPI. ITW BCG CONNECTOR PLATES ARE MADE OF 20/18/16GA (W,H/SS/K) ASTM A653 GRADE 40/60 (W, K/H,SS) GALV. STEEL. APPLY PLATES TO EACH FACE OF TRUSS AND, UNLESS OTHERWISE LOCATED ON THIS DESIGN, POSITION PER DRAWINGS 160A-Z. ANY INSPECTION OF PLATES FOLLOWED BY (1) SHALL BE PER ANNEX A3 OF TPI1-2002 SEC.3. A SEAL ON THIS DRAWING INDICATES ACCEPTANCE OF PROFESSIONAL ENGINEERING RESPONSIBILITY SOLELY FOR THE TRUSS COMPONENT DESIGN SHOWN. THE SUITABILITY AND USE OF THIS COMPONENT FOR ANY BUILDING IS THE RESPONSIBILITY OF THE BUILDING DESIGNER PER ANSI/TPI 1 SEC. 2.

JAMES F. COLLINS JR. LICENSE No 52212 STATE OF FLORIDA PROFESSIONAL ENGINEER
Jun 18 '08

TC LL	20.0 PSF	REF	R8228- 42848
TC DL	50.0 PSF	DATE	06/18/08
BC DL	10.0 PSF	DRW	HCUSR8228 08170070
BC LL	0.0 PSF	HC-ENG	DF/DF
TOT.LD.	80.0 PSF	SEQN-	34064
DUR.FAC.	1.25	FROM	AH
SPACING	SEE ABOVE	JREF-	1TIH8228Z03

ASCE 7-02: 120 MPH WIND SPEED, 30' MEAN HEIGHT, ENCLOSED, I = 1.00, EXPOSURE C

MAX GABLE VERTICAL LENGTH

2X4 GABLE VERTICAL SPACING	SPECIES	BRACE GRADE	NO BRACES	(1) 1X4 "L" BRACE * GROUP A	(1) 1X4 "L" BRACE * GROUP B	(1) 2X4 "L" BRACE * GROUP A	(1) 2X4 "L" BRACE * GROUP B	(2) 2X4 "L" BRACE ** GROUP A	(2) 2X4 "L" BRACE ** GROUP B	(1) 2X6 "L" BRACE * GROUP A	(1) 2X6 "L" BRACE * GROUP B	(2) 2X6 "L" BRACE ** GROUP A	(2) 2X6 "L" BRACE ** GROUP B
24" O.C.	SPF HF	#1 / #2	3' 5"	5' 11"	6' 0"	7' 0"	7' 2"	8' 4"	8' 6"	10' 11"	11' 3"	13' 1"	13' 5"
		#3	3' 4"	4' 11"	4' 11"	6' 5"	6' 5"	8' 4"	8' 4"	10' 0"	10' 0"	13' 1"	13' 1"
		STUD	3' 4"	4' 10"	4' 10"	6' 5"	6' 5"	8' 4"	8' 4"	10' 0"	10' 0"	13' 1"	13' 1"
		STANDARD	3' 3"	4' 2"	4' 2"	5' 6"	5' 6"	7' 5"	7' 5"	8' 7"	8' 7"	11' 8"	11' 8"
	SP DFL	#1	3' 9"	5' 11"	6' 4"	7' 0"	7' 6"	8' 4"	8' 11"	10' 11"	11' 10"	13' 1"	14' 0"
		#2	3' 8"	5' 11"	6' 4"	7' 0"	7' 6"	8' 4"	8' 11"	10' 11"	11' 10"	13' 1"	14' 0"
		#3	3' 6"	5' 0"	5' 0"	6' 7"	6' 7"	8' 4"	8' 9"	10' 3"	10' 3"	13' 1"	13' 9"
		STUD	3' 6"	4' 11"	4' 11"	6' 6"	6' 6"	8' 4"	8' 9"	10' 2"	10' 2"	13' 1"	13' 9"
		STANDARD	3' 4"	4' 3"	4' 3"	5' 8"	5' 8"	7' 7"	7' 7"	8' 9"	8' 9"	11' 11"	11' 11"
16" O.C.	SPF HF	#1 / #2	3' 11"	6' 9"	6' 11"	8' 0"	8' 2"	9' 6"	9' 9"	12' 6"	12' 11"	14' 0"	14' 0"
		#3	3' 10"	6' 0"	6' 0"	7' 11"	7' 11"	9' 6"	9' 6"	12' 3"	12' 3"	14' 0"	14' 0"
		STUD	3' 10"	5' 11"	5' 11"	7' 10"	7' 10"	9' 6"	9' 6"	12' 3"	12' 3"	14' 0"	14' 0"
		STANDARD	3' 10"	5' 1"	5' 1"	6' 9"	6' 9"	9' 1"	9' 1"	10' 6"	10' 6"	14' 0"	14' 0"
	SP DFL	#1	4' 3"	6' 9"	7' 3"	8' 0"	8' 7"	9' 6"	10' 3"	12' 6"	13' 6"	14' 0"	14' 0"
		#2	4' 2"	6' 9"	7' 3"	8' 0"	8' 7"	9' 6"	10' 3"	12' 6"	13' 6"	14' 0"	14' 0"
		#3	4' 0"	6' 2"	6' 2"	8' 0"	8' 1"	9' 6"	10' 0"	12' 6"	12' 7"	14' 0"	14' 0"
		STUD	4' 0"	6' 1"	6' 1"	8' 0"	8' 0"	9' 6"	10' 0"	12' 5"	12' 5"	14' 0"	14' 0"
		STANDARD	3' 11"	5' 3"	5' 3"	6' 11"	6' 11"	9' 3"	9' 3"	10' 9"	10' 9"	14' 0"	14' 0"
12" O.C.	SPF HF	#1 / #2	4' 4"	7' 5"	7' 7"	8' 9"	9' 0"	10' 6"	10' 9"	13' 10"	14' 0"	14' 0"	14' 0"
		#3	4' 2"	6' 11"	6' 11"	8' 9"	8' 9"	10' 6"	10' 6"	13' 10"	13' 10"	14' 0"	14' 0"
		STUD	4' 2"	6' 11"	6' 11"	8' 9"	8' 9"	10' 6"	10' 6"	13' 10"	13' 10"	14' 0"	14' 0"
		STANDARD	4' 2"	5' 11"	5' 11"	7' 10"	7' 10"	10' 6"	10' 6"	12' 2"	12' 2"	14' 0"	14' 0"
	SP DFL	#1	4' 8"	7' 5"	8' 0"	8' 9"	9' 6"	10' 6"	11' 4"	13' 10"	14' 0"	14' 0"	14' 0"
		#2	4' 7"	7' 5"	8' 0"	8' 9"	9' 6"	10' 6"	11' 4"	13' 10"	14' 0"	14' 0"	14' 0"
		#3	4' 5"	7' 1"	7' 1"	8' 9"	9' 3"	10' 6"	11' 0"	13' 10"	14' 0"	14' 0"	14' 0"
		STUD	4' 5"	7' 0"	7' 0"	8' 9"	9' 3"	10' 6"	11' 0"	13' 10"	14' 0"	14' 0"	14' 0"
		STANDARD	4' 4"	6' 1"	6' 1"	8' 0"	8' 0"	10' 6"	10' 9"	12' 5"	12' 5"	14' 0"	14' 0"

BRACING GROUP SPECIES AND GRADES:

GROUP A:

SPRUCE-PINE-FIR

#1 / #2	STANDARD
#3	STUD

HEM-FIR

#2	STUD
#3	STANDARD

DOUGLAS FIR-LARCH

#3
STUD
STANDARD

SOUTHERN PINE

#3
STUD
STANDARD

GROUP B:

HEM-FIR

#1 & BTR
#1

SOUTHERN PINE

#1
#2

DOUGLAS FIR-LARCH

#1
#2

GABLE TRUSS DETAIL NOTES:

LIVE LOAD DEFLECTION CRITERIA IS L/240.

PROVIDE UPLIFT CONNECTIONS FOR 130 PLF OVER CONTINUOUS BEARING (5 PSF TC DEAD LOAD).

GABLE END SUPPORTS LOAD FROM 4' 0" OUTLOOKERS WITH 2' 0" OVERHANG, OR 12" PLYWOOD OVERHANG.

ATTACH EACH "L" BRACE WITH 10d NAILS.
* FOR (1) "L" BRACE: SPACE NAILS AT 2" O.C. IN 18" END ZONES AND 4" O.C. BETWEEN ZONES.
** FOR (2) "L" BRACES: SPACE NAILS AT 3" O.C. IN 18" END ZONES AND 6" O.C. BETWEEN ZONES.

"L" BRACING MUST BE A MINIMUM OF 80% OF WEB MEMBER LENGTH.

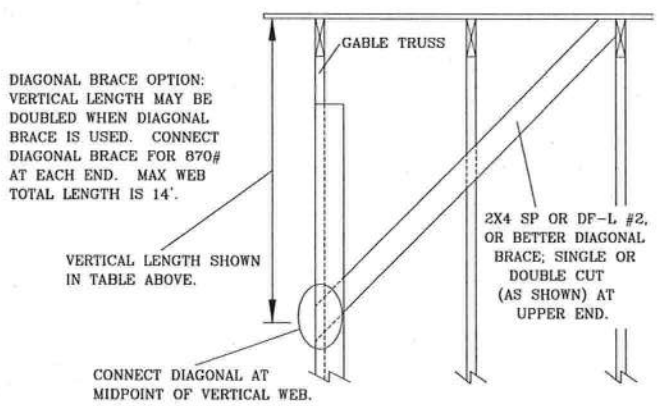

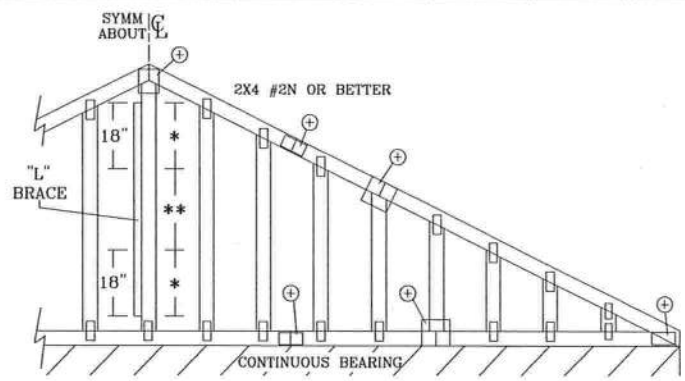

REFER TO CHART ABOVE FOR MAX GABLE VERTICAL LENGTH.

GABLE VERTICAL PLATE SIZES

VERTICAL LENGTH	NO SPLICE
LESS THAN 4' 0"	1X4 OR 2X3
GREATER THAN 4' 0", BUT LESS THAN 11' 6"	2X4
GREATER THAN 11' 6"	2.5X4

\+ REFER TO COMMON TRUSS DESIGN FOR PEAK, SPLICE, AND HEEL PLATES.

ALPINE

ITW BUILDING COMPONENTS GROUP, INC.
POMPANO BEACH, FLORIDA

WARNING TRUSSES REQUIRE EXTREME CARE IN FABRICATING, HANDLING, SHIPPING, INSTALLING AND BRACING. REFER TO BCSI (BUILDING COMPONENT SAFETY INFORMATION), PUBLISHED BY TPI (TRUSS PLATE INSTITUTE, 218 NORTH LEE STR., SUITE 312, ALEXANDRIA, VA. 22314) AND WTCA (WOOD TRUSS COUNCIL OF AMERICA, 6300 ENTERPRISE LN, MADISON, WI 53719) FOR SAFETY PRACTICES PRIOR TO PERFORMING THESE FUNCTIONS. UNLESS OTHERWISE INDICATED, TOP CHORD SHALL HAVE PROPERLY ATTACHED STRUCTURAL PANELS AND BOTTOM CHORD SHALL HAVE A PROPERLY ATTACHED RIGID CEILING.

IMPORTANT FURNISH COPY OF THIS DESIGN TO INSTALLATION CONTRACTOR. ITW BCG, INC., SHALL NOT BE RESPONSIBLE FOR ANY DEVIATION FROM THIS DESIGN; ANY FAILURE TO BUILD THE TRUSS IN CONFORMANCE WITH TPI; OR FABRICATING, HANDLING, SHIPPING, INSTALLING & BRACING OF TRUSSES DESIGN CONFORMS WITH APPLICABLE PROVISIONS OF NDS (NATIONAL DESIGN SPEC, BY AF&PA) AND TPI. ITW, BCG CONNECTOR PLATES ARE MADE OF 20/18/16GA (W,H/SS/K) ASTM A653 GRADE 40/60 (W,K/HSS) GALV. STEEL. APPLY PLATES TO EACH FACE OF TRUSS AND, UNLESS OTHERWISE LOCATED ON THIS DESIGN, POSITION PER DRAWINGS 160A-Z. ANY INSPECTION OF PLATES FOLLOWED BY (I) SHALL BE PER ANNEX A3 OF TPI 1-2002 SEC. 3. A SEAL ON THIS DRAWING INDICATES ACCEPTANCE OF PROFESSIONAL ENGINEERING RESPONSIBILITY SOLELY FOR THE TRUSS COMPONENT DESIGN SHOWN. THE SUITABILITY AND USE OF THIS COMPONENT FOR ANY BUILDING IS THE RESPONSIBILITY OF THE BUILDING DESIGNER, PER ANSI/TPI 1 SEC. 2.

JAMES F. COLLINS, JR. LICENSE No. 52212 STATE OF FLORIDA PROFESSIONAL ENGINEER

JUL 02 '08

MAX. TOT. LD. 60 PSF

MAX. SPACING 24.0"

REF	ASCE7-02-GAB12030
DATE	2/23/07
DRWG	A12030EE0207
-ENG	

GABLE DETAIL
FOR LET-IN VERTICALS

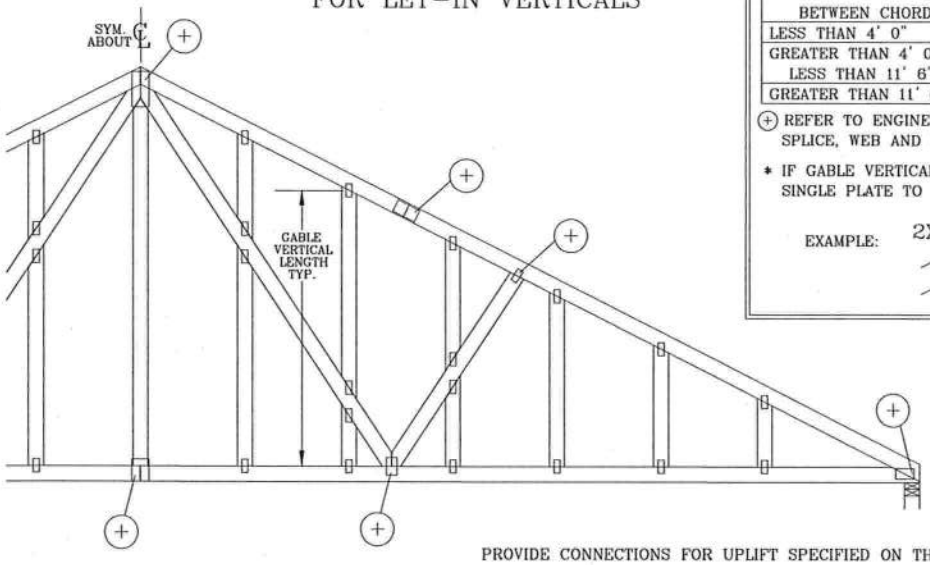

GABLE VERTICAL PLATE SIZES		
VERTICAL LENGTH BETWEEN CHORDS	PLATE SIZE	IF PLATES OVERLAP*
LESS THAN 4' 0"	1X4 OR 2X3	2X8
GREATER THAN 4' 0", BUT LESS THAN 11' 6"	2X4	2X8
GREATER THAN 11' 6"	2.5X4	2.5X8

(+) REFER TO ENGINEERED TRUSS DESIGN FOR PEAK, SPLICE, WEB AND HEEL PLATES.

* IF GABLE VERTICAL PLATES OVERLAP, USE A SINGLE PLATE TO SPAN THE WEB.

EXAMPLE:

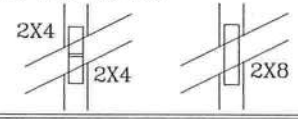

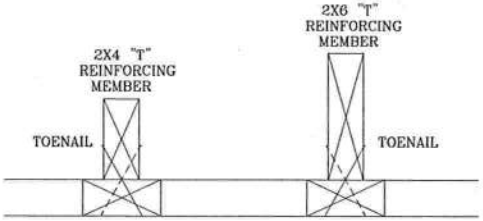

TO CONVERT FROM "L" TO "T" REINFORCING MEMBERS, MULTIPLY "T" FACTOR BY LENGTH (BASED ON GABLE VERTICAL SPECIES, GRADE AND SPACING) FOR (1) 2X4 "L" BRACE, GROUP A, OBTAINED FROM THE APPROPRIATE ALPINE GABLE DETAIL FOR ASCE OR SBCCI WIND LOAD.

MAXIMUM ALLOWABLE "T" REINFORCED GABLE VERTICAL LENGTH IS 14' FROM TOP TO BOTTOM CHORD.

WEB LENGTH INCREASE W/ "T" BRACE

WIND SPEED AND MRH	"T" REINF. MBR. SIZE	SBCCI	ASCE
110 MPH	2x4	10 %	10 %
15 FT	2x6	40 %	50 %
110 MPH	2x4	10 %	10 %
30 FT	2x6	50 %	50 %
100 MPH	2x4	10 %	10 %
15 FT	2x6	30 %	50 %
100 MPH	2x4	10 %	10 %
30 FT	2x6	40 %	40 %
90 MPH	2x4	20 %	10 %
15 FT	2x6	20 %	40 %
90 MPH	2x4	10 %	10 %
30 FT	2x6	30 %	50 %
80 MPH	2x4	10 %	20 %
15 FT	2x6	10 %	30 %
80 MPH	2x4	20 %	10 %
30 FT	2x6	20 %	40 %
70 MPH	2x4	0 %	20 %
15 FT	2x6	0 %	20 %
70 MPH	2x4	10 %	20 %
30 FT	2x6	10 %	30 %

EXAMPLE:
ASCE WIND SPEED = 100 MPH
MEAN ROOF HEIGHT = 30 FT
GABLE VERTICAL = 24" O.C. SP #3
"T" REINFORCING MEMBER SIZE = 2X4
"T" BRACE INCREASE (FROM ABOVE) = 10% = 1.10
(1) 2X4 "L" BRACE LENGTH = 6' 7"
MAXIMUM "T" REINFORCED GABLE VERTICAL LENGTH
1.10 x 6' 7" = 7' 3"

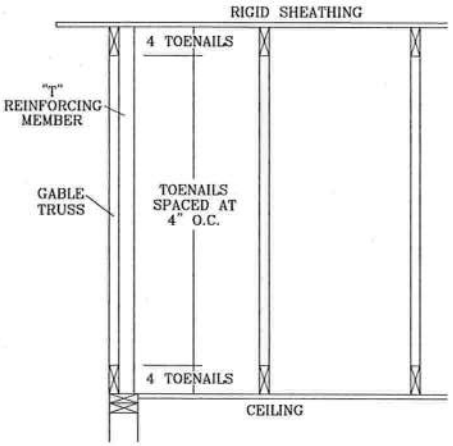

PROVIDE CONNECTIONS FOR UPLIFT SPECIFIED ON THE ENGINEERED TRUSS DESIGN.

ATTACH EACH "T" REINFORCING MEMBER WITH
HAND DRIVEN NAILS:
10d COMMON (0.148"X 3.",MIN) TOENAILS AT 4" O.C. PLUS
(4) 16d COMMON (0.162" X 3.5",MIN) TOENAILS IN TOP AND BOTTOM CHORD.

GUN DRIVEN NAILS:
8d COMMON (0.131"X 2.5",MIN) TOENAILS AT 4" O.C. PLUS
(4) TOENAILS IN TOP AND BOTTOM CHORD.

THIS DETAIL TO BE USED WITH THE APPROPRIATE ALPINE GABLE DETAIL FOR ASCE OR SBCCI WIND LOAD.

ASCE 7-93 GABLE DETAIL DRAWINGS
A11015EN0207, A10015EN0207, A09015EN0207, A08015EN0207, A07015EN0207, A11030EN0207, A10030EN0207, A09030EN0207, A08030EN0207, A07030EN0207

ASCE 7-98 GABLE DETAIL DRAWINGS
A13015EC0207, A12015EC0207, A11015EC0207, A10015EC0207, A08515EC0207, A13030EC0207, A12030EC0207, A11030EC0207, A10030EC0207, A08530EC0207

ASCE 7-02 GABLE DETAIL DRAWINGS
A13015EE0207, A12015EE0207, A11015EE0207, A10015EE0207, A08515EE0207, A13030EE0207, A12030EE0207, A11030EE0207, A10030EE0207, A08530EE0207

ASCE 7-05 GABLE DETAIL DRAWINGS
A13015E50207, A12015E50207, A11015E50207, A10015E50207, A08515E50207, A13030E50207, A12030E50207, A11030E50207, A10030E50207, A08530E50207

SEE APPROPRIATE ALPINE GABLE DETAIL (ASCE OR SBCCI WIND LOAD) FOR MAXIMUM UNREINFORCED GABLE VERTICAL LENGTH.

THIS DRAWING REPLACES DRAWINGS GAB98117 876,719 & HC26294035

ALPINE
ITW BUILDING COMPONENTS GROUP, INC.
POMPANO BEACH, FLORIDA

WARNING TRUSSES REQUIRE EXTREME CARE IN FABRICATING, HANDLING, SHIPPING, INSTALLING AND BRACING. REFER TO BCSI (BUILDING COMPONENT SAFETY INFORMATION), PUBLISHED BY TPI (TRUSS PLATE INSTITUTE, 218 NORTH LEE STR., SUITE 312, ALEXANDRIA, VA. 22314) AND WTCA (WOOD TRUSS COUNCIL OF AMERICA, 6300 ENTERPRISE LN, MADISON, WI 53719) FOR SAFETY PRACTICES PRIOR TO PERFORMING THESE FUNCTIONS. UNLESS OTHERWISE INDICATED, TOP CHORD SHALL HAVE PROPERLY ATTACHED STRUCTURAL PANELS AND BOTTOM CHORD SHALL HAVE A PROPERLY ATTACHED RIGID CEILING.

IMPORTANT FURNISH COPY OF THIS DESIGN TO INSTALLATION CONTRACTOR. ITW BCG, INC., SHALL NOT BE RESPONSIBLE FOR ANY DEVIATION FROM THIS DESIGN; ANY FAILURE TO BUILD THE TRUSS IN CONFORMANCE WITH TPI; OR FABRICATING, HANDLING, SHIPPING, INSTALLING & BRACING OF TRUSSES. DESIGN CONFORMS WITH APPLICABLE PROVISIONS OF NDS (NATIONAL DESIGN SPEC, BY AF&PA) AND TPI. ITW, BCG CONNECTOR PLATES ARE MADE OF 20/18/16GA (W,H/SS/K) ASTM A653 GRADE 40/60 (W,K/H,SS) GALV. STEEL. APPLY PLATES TO EACH FACE OF TRUSS AND, UNLESS OTHERWISE LOCATED ON THIS DESIGN, POSITION PER DRAWINGS 160A-Z. ANY INSPECTION OF PLATES FOLLOWED BY (D SHALL BE PER ANNEX A3 OF TPI 1-2002 SEC. 3. A SEAL ON THIS DRAWING INDICATES ACCEPTANCE OF PROFESSIONAL ENGINEERING RESPONSIBILITY SOLELY FOR THE TRUSS COMPONENT DESIGN SHOWN. THE SUITABILITY AND USE OF THIS COMPONENT FOR ANY BUILDING IS THE RESPONSIBILITY OF THE BUILDING DESIGNER, PER ANSI/TPI 1 SEC. 2.

JAN 18 '08

JAMES P. COLLINS, JR. LICENSE No. 52212 STATE OF FLORIDA PROFESSIONAL ENGINEER

MAX TOT. LD. 60 PSF
DUR. FAC. ANY
MAX SPACING 24.0"

REF	LET-IN VERT
DATE	2/23/07
DRWG	GBLLETIN0207
-ENG	DLJ/KAR

(PIGGYBACK -)

THIS DWG PREPARED FROM COMPUTER INPUT (LOADS & DIMENSIONS) SUBMITTED BY TRUSS MFR.

TOP CHORD 2x4 SP SP #2N
BOT CHORD 2x4 SP #3 OR #2N
WEBS 2x4 SP #3

*,E (4) 0.131"X1.375" SCOTCH NAILS OR EQUAL IN EACH MEMBER. TRULOX PLATE TO BE APPLIED TO EACH FACE AT 2'0" O.C. MAXIMUM SPACING, REFER TO DRAWING 142 FOR TRULOX INFORMATION.

NOTE: PIGGYBACK VERTICALS TO BE SPACED AT 4'0" O.C. MAXIMUM.

** MAXIMUM SIZE OF 2X12, #2 HEM-FIR OR BETTER.

E - 4X6 ALPINE, 3X6 TRULOX AT 2'0" OC. MAX.

++ PIGGYBACY BOTTOM CHORD MAY BE OMITTED. ATTACH VERTICAL WEBS TO TRUSS TOP CHORD WITH W1.5X3 ALPINE.

* - 3X8 TRULOX PLATE OR ALPINE PIGGYBACK SPECIAL PLATE (SEE DRWG. 847,847)

TRUSSES BUILT PER THIS DETAIL DESIGNED TO BE USED FOR THE FOLLOWING:
140 MPH WIND, 30.0 FT MEAN HGT, ASCE 7-98, PART. ENC.BLDG, CAT II, EXP C.

140 MPH WIND, 30.0 FT MEAN HGT, ASCE 7-02, PART. ENC.BLDG, CAT II, EXP C.

NOTE: THIS DETAIL MAY ALSO BE USED FOR A MONO OR HIP-MONO PIGGYBACK USING A TYPE-C PLATE AT THE HIGH END. AND END VERTICAL WHICH IS GREATER THAN 6-0-0 IN LENGTH AND EXPOSED TO WIND MUST BE VERIFIED BY ALPINE ENGINEERED PRODUCTS.

NOTE: TOP AND BOTTOM CHORD SPLICES MUST BE STAGGERED SO THAT ONE SPLICE IS NOT DIRECTLY OVER ANOTHER.

+ 2X4 CONTINUOUS LATERAL BRACING AT 24" OC. MAX SPACING. ATTACH TO TOP SIDE OF SUPPORTED TRUSS TOP CHORD WITH 2-16D NAILS IN EACH TRUSS.
OR
1X4 CONTINUOUS LATERAL BRACING AT 24" OC. MAX. SPACING. ATTACH TO BOTTOM SIDE OF SUPPORTED TRUSS TOP CHORD WITH 2-16D NAILS IN EACH TRUSS. BOTTOM CHORD OF PIGGYBACK SHOULD REST DIRECTLY ON THE TOP CHORD OF THE SUPPORTED TRUSS.

NOTE: BRACING MATERIAL IS TO BE ATTACHED TO A SUITABLE SUPPORT AT EACH END, AND MUST BE #3 HEM-FIR OR BETTER.

JOINT TYPE	SPANS UP TO 30'0"	34'0"	38'0"	42'0"
A	W2X4	W2X5	W3X4	W3X5
B	W5X4	W5X5	W5X5	W5X5
C	W1X3	W1X3	W1.5X3	W1.5X3
D	W5X4	W5X4	W5X5	W5X5

WEB BRACING	
UP TO 7'9"	NO BRACING
7'9" TO 12'3"	1X4 "T" BRACE, SAME GRADE AND LENGTH AS WEB, ATTACH WITH 8D NAILS AT 6" OC.
12'3" TO 14'0"	2X4 "T" BRACE, SAME GRADE AND LENGTH AS WEB, ATTACH WITH 16D NAILS AT 4" OC.

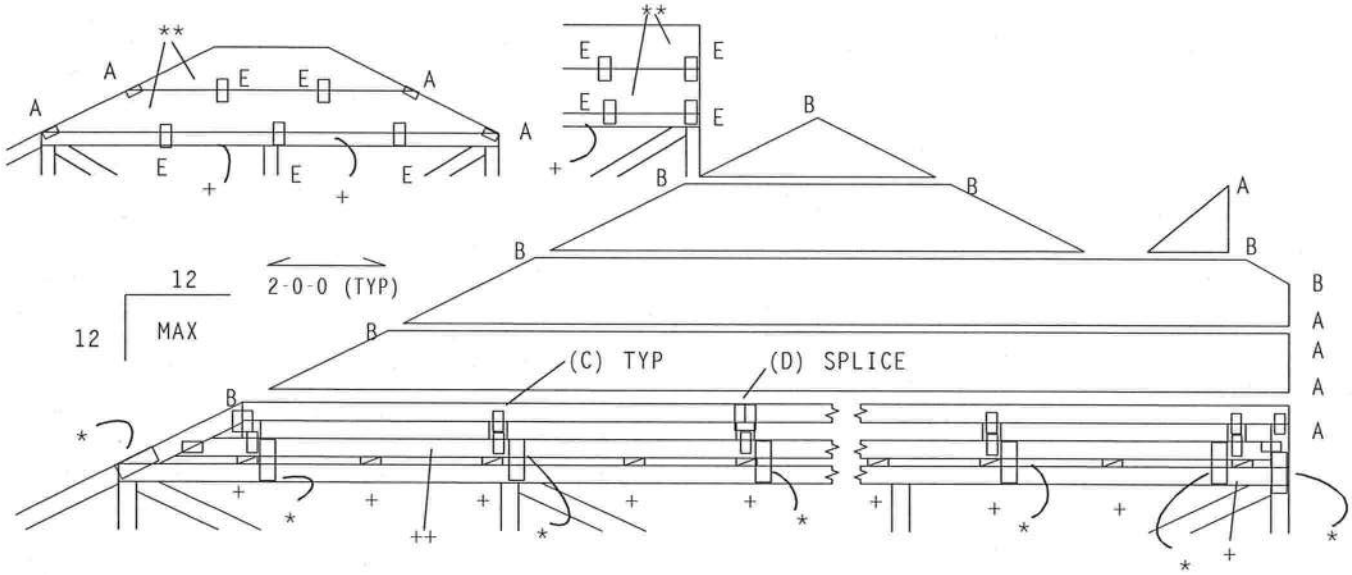

42-0-0 MAXIMUM PIGGYBACK SPAN

ALTERNATE LOADING:
TCLL 20 PSF
TCDL 20 PSF
BCDL 10 PSF
TOTAL 50 PSF
@ 1.25 DF

R1: REVISED FOR ASCE 7-02. R2: REVISED NOTE *,E.
DLJ 09/10/2005 DLJ 04/29/2008

DETAIL: 140PB

PLT TYP. High Strength,Wave TPI-95 Design Criteria: TPI(STD) QTY:1 HI/-/1/-/-/R/-

ALPINE
ITW Building Components Group Inc.
Haines City, FL 33844

WARNING TRUSSES REQUIRE EXTREME CARE IN FABRICATION, HANDLING, SHIPPING, INSTALLING AND BRACING. REFER TO BCSI (BUILDING COMPONENT SAFETY INFORMATION), PUBLISHED BY TPI (TRUSS PLATE INSTITUTE, 218 NORTH LEE STREET, SUITE 312, ALEXANDRIA, VA, 22314) AND WTCA (WOOD TRUSS COUNCIL OF AMERICA, 6300 ENTERPRISE LANE, MADISON, WI 53719) FOR SAFETY PRACTICES PRIOR TO PERFORMING THESE FUNCTIONS. UNLESS OTHERWISE INDICATED TOP CHORD SHALL HAVE PROPERLY ATTACHED STRUCTURAL PANELS AND BOTTOM CHORD SHALL HAVE A PROPERLY ATTACHED RIGID CEILING.

IMPORTANT FURNISH A COPY OF THIS DESIGN TO THE INSTALLATION CONTRACTOR. ITW BCG, INC. SHALL NOT BE RESPONSIBLE FOR ANY DEVIATION FROM THIS DESIGN; ANY FAILURE TO BUILD THE TRUSS IN COMFORMANCE WITH TPI; OR FABRICATING, HANDLING, SHIPPING, INSTALLING & BRACING OF TRUSSES.
DESIGN CONFORMS WITH APPLICABLE PROVISIONS OF NDS (NATIONAL DESIGN SPEC. BY AF&PA) AND TPI. ITW BCG CONNECTOR PLATES ARE MADE OF 20/18/16GA (W,H/SS/K) ASTM A653 GRADE 40/60 (W, K/H,SS) GALV. STEEL. APPLY PLATES TO EACH FACE OF TRUSS AND, UNLESS OTHERWISE LOCATED ON THIS DESIGN, POSITION PER DRAWINGS 160A-Z. ANY INSPECTION OF PLATES FOLLOWED BY (1) SHALL BE PER ANNEX A3 OF TPI1-2002 SEC.3. A SEAL ON THIS DRAWING INDICATES ACCEPTANCE OF PROFESSIONAL ENGINEERING RESPONSIBILITY SOLELY FOR THE TRUSS COMPONENT DESIGN SHOWN. THE SUITABILITY AND USE OF THIS COMPONENT FOR ANY BUILDING IS THE RESPONSIBILITY OF THE BUILDING DESIGNER PER ANSI/TPI 1 SEC. 2.

JAMES F. COLLINS JR. LICENSE No. 52212 STATE OF FLORIDA PROFESSIONAL ENGINEER
Jun 18 '08

TC LL	20.0 PSF	REF	R001--0
TC DL	7.0 PSF	DATE	03/27/02
BC DL	10.0 PSF	DRW	HCUSR001 02086006
BC LL	0.0 PSF	HC-ENG	DLJ/DLJ
TOT.LD.	37.0 PSF	SEQN	- 24938
DUR.FAC.	1.25		
SPACING	24.0"	JREF-	1TH3001_R12

(Copy-ASCE 7-98 DETAILS - GABLE)

140 MPH WIND, 30.0 FT MEAN HGT, ASCE 7-98, PART. ENC. BLDG, LOCATED ANYWHERE IN ROOF, CAT II, EXP C, WIND TCDL=5.0 PSF, WIND BCDL=5.0 PSF.

140 MPH WIND, 30.0 FT MEAN HGT, ASCE 7-02, PART. ENC. BLDG, LOCATED ANYWHERE IN ROOF, CAT II, EXP C, WIND TCDL=5.0 PSF, WIND BCDL=5.0 PSF.

+ FOR VERTICAL WEBS LESS THAN 4'0": W1X4
FOR VERTICAL WEBS GREATER THAN 4'0" BUT NO MORE THAN 11'6": W2X4.

* SPLICE, PEAK, AND HEEL PLATES TO MATCH COMMON TRUSS.

** 2X4 OR GREATER CHORDS.

DROP GABLE WILL SUPPORT 4'0" OUTLOOKERS WITH 2'0" OVERHANG (DROP HEEL GABLE) SPACED 24" O.C., OR THE LOAD FROM 12" PLYWOOD OVERHANG (NOMINAL HEEL GABLE).

IT IS THE RESPONSIBILITY OF THE BUILDING DESIGNER TO DESIGN THE ROOF AND CEILING DIAPHRAGMS AND SPECIFY CONNECTIONS TO TRANSFER ALL OUT-OF-PLANE LOADS INTO THE ROOF AND CEILING DIAPHRAGMS.

THE BUILDING DESIGNER IS RESPONSIBLE FOR THE GABLE SHEAR WALL DESIGN, CEILING AND ROOF SHEATHING DIAPHRAGM CONNECTIONS, AND ALL TRUSS TO WALL CONNECTIONS.

++ 7/16 MINIMUM APA RATED SHEATHING PROPERLY ATTACHED WITH LONG DIMENSION PERPENDICULAR TO SUPPORTS.

R1 NOTE: NAIL STEPS OF LADDER TRUSS ONTO THE OUTSIDE PIECES WITH 2-16D NAILS AT EACH END.

R1 NOTE: ATTACH LADDER TRUSS TO TOP CHORD OF GABLE TRUSS WITH TWO ROWS OF 16D NAILS @ 8" O.C. STAGGERED 4"

BRACING DEFINITIONS:
NOTE: "END ZONE" EXISTS 18" AT BOTH ENDS OF VERTICAL WEB.

(A) (1) 2X4 SP #3 "L" BRACE. ATTACH WITH 0.128"X3" NAILS @ 2" OC. IN END ZONES; 4" OC. BETWEEN ZONES.

(B) (2) 2X4 SP #3 "L" BRACES. ATTACH EACH WITH 0.128"X3" NAILS @ 3" OC. IN END ZONES; 6" OC. BETWEEN ZONES.

(C) (1) 2X6 SP #2 N "L" BRACE. ATTACH WITH 0.128"X3" NAILS @ 2" OC. IN END ZONES; 4" OC. BETWEEN ZONES.

(D) (2) 2X6 SP #2 N "L" BRACES. ATTACH EACH WITH 0.128"X3" NAILS @ 3" OC. IN END ZONES; 6" OC. BETWEEN ZONES.

STUD SPACING / BRACING TABLE:

2X4 SP #3 STUD SPACING	DEFLECTION CRITERIA	NO BRACE	(1) 2X4 "L" BRACE TYPE (A)	(2) 2X4 "L" BRACE TYPE (B)	(1) 2X6 "L" BRACE TYPE (C)	(2) 2X6 "L" BRACE TYPE (D)
24"	L/360	-----	3' 1"	4' 2"	6' 3"	8' 0"
24"	L/180	-----	3' 4"	5' 7"	6' 3"	11' 0"
16"	L/360	-----	3'11"	5' 3"	7'10"	9'11"
16"	L/180	-----	4' 9"	7' 4"	9' 6"	11' 0"
12"	L/360	-----	4' 7"	6' 1"	8'11"	11' 0"
12"	L/180	-----	5'11"	8' 5"	11' 0"	11' 0"

OVERHANG DETAIL

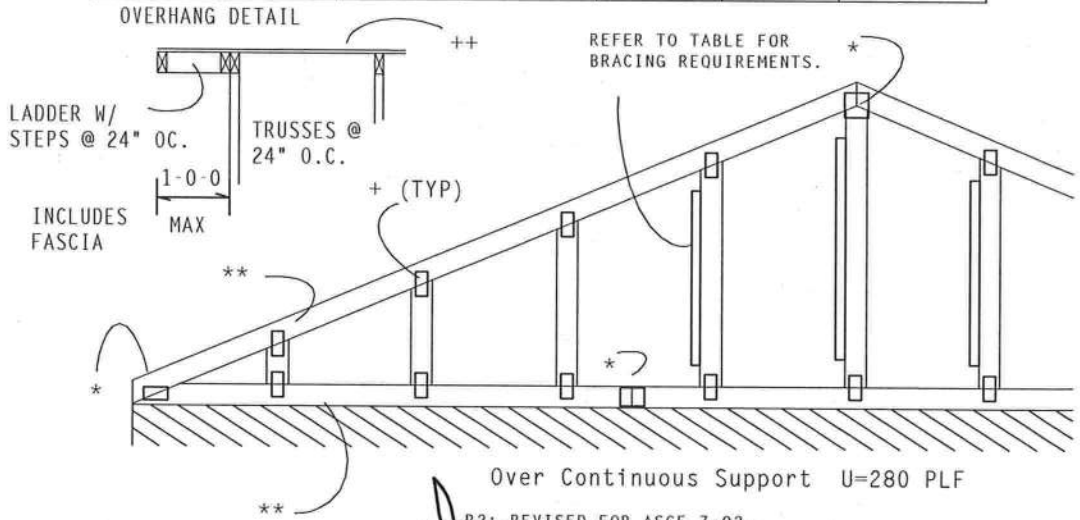

Over Continuous Support U=280 PLF

ALT. GABLE SHAPES:

Note: All Plates Are 2X4 Except As Shown.

PLT TYP. Wave TPI-95 Design Crit: TPI-1995(STD)

R3: REVISED DIAPHRAGM NOTE.
DLJ 02/27/2006

R2: REVISED FOR ASCE 7-02.
DLJ 09/30/2005
R1 REV 2-5-02 JWC
HI/-/1/-/-/R/-

DETAIL: 140GC
Scale =.375"/Ft.

ALPINE
Alpine Engineered Products, Inc.
1950 Marley Drive
Haines City, FL 33844
FL Certificate of Authorization # 567

WARNING TRUSSES REQUIRE EXTREME CARE IN FABRICATION, HANDLING, SHIPPING, INSTALLING AND BRACING. REFER TO BCSI 1-03 (BUILDING COMPONENT SAFETY INFORMATION), PUBLISHED BY TPI (TRUSS PLATE INSTITUTE, 583 D'ONOFRIO DR., SUITE 200, MADISON, WI 53719) AND WTCA (WOOD TRUSS COUNCIL OF AMERICA, 6300 ENTERPRISE LN, MADISON, WI 53719) FOR SAFETY PRACTICES PRIOR TO PERFORMING THESE FUNCTIONS. UNLESS OTHERWISE INDICATED, TOP CHORD SHALL HAVE PROPERLY ATTACHED STRUCTURAL PANELS AND BOTTOM CHORD SHALL HAVE A PROPERLY ATTACHED RIGID CEILING.

IMPORTANT FURNISH A COPY OF THIS DESIGN TO THE INSTALLATION CONTRACTOR. ALPINE ENGINEERED PRODUCTS, INC. SHALL NOT BE RESPONSIBLE FOR ANY DEVIATION FROM THIS DESIGN; ANY FAILURE TO BUILD THE TRUSS IN CONFORMANCE WITH TPI; OR FABRICATING, HANDLING, SHIPPING, INSTALLING & BRACING OF TRUSSES. DESIGN CONFORMS WITH APPLICABLE PROVISIONS OF NDS (NATIONAL DESIGN SPEC, BY AF&PA) AND TPI. ALPINE CONNECTOR PLATES ARE MADE OF 20/18/16GA (W.H/S/K) ASTM A653 GRADE 40/60 (W. K/H.S) GALV. STEEL. APPLY PLATES TO EACH FACE OF TRUSS AND, UNLESS OTHERWISE LOCATED ON THIS DESIGN, POSITION PER DRAWINGS 1600-Z. ANY INSPECTION OF PLATES FOLLOWED BY (1) SHALL BE PER ANNEX A3 OF TPI1-2002 SEC.3. A SEAL ON THIS DRAWING INDICATES ACCEPTANCE OF PROFESSIONAL ENGINEERING RESPONSIBILITY SOLELY FOR THE TRUSS COMPONENT DESIGN SHOWN. THE SUITABILITY AND USE OF THIS COMPONENT FOR ANY BUILDING IS THE RESPONSIBILITY OF THE BUILDING DESIGNER PER ANSI/TPI 1 SEC. 2.

JAMES F. COLLINS, JR. LICENSE No. 52212 STATE OF FLORIDA PROFESSIONAL ENGINEER
JUN 18 06

TC LL	30.0 PSF	REF	R001-- 0
TC DL	7.0 PSF	DATE	03/27/02
BC DL	10.0 PSF	DRW	HCUSR001 02086015
BC LL	0.0 PSF	HC-ENG	DLJ/DLJ
TOT.LD.	47.0 PSF	SEQN-	24860
DUR.FAC.	1.33		
SPACING	24.0"	JREF-	1SV3001_R03

COLUMBIA COUNTY BUILDING DEPARTMENT
RESIDENTIAL MINIMUM PLAN REQUIREMENTS AND CHECKLIST
FOR THE FLORIDA RESIDENTIAL BUILDING CODE 2004 with 2005 & 2006
Supplements and One (1) and Two (2) Family Dwellings

ALL REQUIREMENTS ARE SUBJECT TO CHANGE

ALL BUILDING PLANS MUST INDICATE COMPLIANCE with the Current FLORIDA BUILDING CODES and the Current FLORIDA RESIDENTIAL CODE. ALL PLANS OR DRAWING SHALL PROVIDED CALCULATIONS AND DETAILS THAT HAVE THE SEAL AND SIGNATURE OF A CERTIFIED ARCHITECT OR ENGINEER REGISTERED IN THE STATE OF FLORIDA, OR ALTERNATE METHODOLOGIES, APPROVED BY THE STATE OF FLORIDA BUILDING COMMISSION FOR ONE-AND-TWO FAMILY DWELLINGS.

FOR DESIGN PURPOSES THE FOLLOWING BASIC WIND SPEEDS ARE PER FIGURE R301.2(4) of the Residential Code (Florida Wind speed map) **SHALL BE USED.**

WIND SPEED LINE SHALL BE DEFINED AS FOLLOWS: THE CENTERLINE OF INTERSTATE 75.

1. ALL BUILDINGS CONSTRUCTED EAST OF SAID LINE SHALL BE -------- 100 MPH
2. ALL BUILDINGS CONSTRUCTED WEST OF SAID LINE SHALL BE --------110 MPH
3. NO AREA IN COLUMBIA COUNTY IS IN A WIND BORNE DEBRIS REGION

GENERAL REQUIREMENTS:

- Two (2) complete sets of plans containing the following:
- All drawings must be clear, concise and drawn to scale, details that are not used shall be marked void
- Condition space (Sq. Ft.) and total (Sq. Ft.) under roof shall be shown on the plans.
- Designers name and signature shall be on all documents and a licensed architect or engineer, signature and official embossed seal shall be affixed to the plans and documents per FBC 106.1.

Site Plan information including:

- Dimensions of lot or parcel of land
- Dimensions of all building set backs
- Location of all other structures (include square footage of structures) on parcel, existing or proposed well and septic tank and all utility easements.
- Provide a full legal description of property.

Wind-load Engineering Summary, calculations and any details required:

- Plans or specifications must meet state compliance with FRC Chapter 3
- The following information must be shown as per section FRC
- Basic wind speed (3-second gust), miles per hour
- Wind importance factor and nature of occupancy
- Wind exposure – if more than one wind exposure is used, the wind exposure and applicable wind direction shall be indicated
- The applicable internal pressure coefficient, Components and Cladding The design wind pressure in terms of psf (kN/m²), to be used for the design of exterior component and cladding materials not specifally designed by the registered design professional.

Elevations Drawing including:

- All side views of the structure
- Roof pitch
- Overhang dimensions and detail with attic ventilation
- Location, size and height above roof of chimneys
- Location and size of skylights with Florida Product Approval
- Number of stories
- e) Building height from the established grade to the roofs highest peak

Floor Plan including:

- o Dimensioned area plan showing rooms, attached garage, breeze ways, covered porches, deck, balconies and raised floor surfaces located more than 30 inches above the floor or grade
- o All exterior and interior shear walls indicated
- o Shear wall opening shown (Windows, Doors and Garage doors
- o Emergency escape and rescue opening in each bedroom (net clear opening shown)
- o Safety glazing of glass where needed
- o Fireplaces types (gas appliance) (vented or non-vented) or wood burning with Hearth (see chapter 10 of FRC)
- o Stairs with dimensions (width, tread and riser and total run) details of guardrails, Handrails (see FRC 311)
- o Plans must show and identify accessibility of bathroom (see FRC 322)

All materials placed within opening or onto/into exterior shear walls, soffits or roofs shall have Florida product approval number and mfg. installation information submitted with the plans (see Florida product approval form)

Foundation Plans Per FRC 403:

- o a) Location of all load-bearing walls footings indicated as standard, monolithic, dimensions, size and type of reinforcing.
- o b) All posts and/or column footing including size and reinforcing
- o c) Any special support required by soil analysis such as piling.
- o d) Assumed load-bearing valve of soil_____ (psf)
- o e) Location of horizontal and vertical steel, for foundation or walls (include # size and type)

CONCRETE SLAB ON GRADE Per FRC R506

- o Show Vapor retarder (6mil. Polyethylene with joints lapped 6 inches and sealed)
- o Show control joints, synthetic fiber reinforcement or welded fire fabric reinforcement and Supports

PROTECTION AGAINST TERMITES Per FRC 320:

- o Indicate on the foundation plan if soil treatment is used for subterranean termite prevention or submit other approved termite protection methods. Protection shall be provided by registered termiticides

Masonry Walls and Stem walls (load bearing & shear Walls) FRC Section R606

- o Show all materials making up walls, wall height, and Block size, mortar type
- o Show all Lintel sizes, type, spans and tie-beam sizes and spacing of reinforcement

Metal frame shear wall and roof systems shall be designed, signed and sealed by Florida Prof. Engineer or Architect

Floor Framing System: First and/or second story

- o Floor truss package shall including layout and details, signed and sealed by Florida Registered Professional Engineer
- o Show conventional floor joist type, size, span, spacing and attachment to load bearing walls, stem walls and/or priers
- o Girder type, size and spacing to load bearing walls, stem wall and/or priers
- o Attachment of joist to girder
- o Wind load requirements where applicable
- o Show required under-floor crawl space
- o Show required amount of ventilation opening for under-floor spaces
- o Show required covering of ventilation opening.
- o Show the required access opening to access to under-floor spaces
- o Show the sub-floor structural panel sheathing type, thickness and fastener schedule on the edges & intermediate of the areas structural panel sheathing
- o Show Draft stopping, Fire caulking and Fire blocking
- o Show fireproofing requirements for garages attached to living spaces, per FRC section R309
- o Provide live and dead load rating of floor framing systems (psf).

WOOD WALL FRAMING CONSTRUCTION FRC CHAPTER 6

- Stud type, grade, size, wall height and oc spacing for all load bearing or shear walls.
- Fastener schedule for structural members per table R602.3 (1) are to be shown.
- Show wood structural panel's sheathing attachment to studs, joist, trusses, rafters and structural members, showing fastener schedule attachment on the edges & intermediate of the areas structural panel sheathing
- Show all required connectors with a max uplift rating and required number of connectors and oc spacing for continuous connection of structural walls to foundation and roof trusses or rafter systems.
- Show sizes, type, span lengths and required number of support jack studs, king studs for shear wall opening and girder or header per FRC Table R502.5 (1)
- Indicate where pressure treated wood will be placed.
- Show all wall structural panel sheathing, grade, thickness and show fastener schedule for structural panel sheathing edges & intermediate areas
- A detail showing gable truss bracing, wall balloon framing details or/ and wall hinge bracing detail

ROOF SYSTEMS:

- Truss design drawing shall meet section FRC R802.10 Wood trusses. Include a layout and truss details and be signed and sealed by Fl. Pro. Eng.
- Show types of connector's assemblies' and resistance uplift rating for all trusses and rafters
- Show gable ends with rake beams showing reinforcement or gable truss and wall bracing details
- Provide dead load rating of trusses

Conventional Roof Framing Layout Per FRC 802:

- Rafter and ridge beams sizes, span, species and spacing
- Connectors to wall assemblies' include assemblies' resistance to uplift rating.
- Valley framing and support details
- Provide dead load rating of rafter system.

ROOF SHEATHING FRC Table R602,3(2) FRC 803

- Include all materials which will make up the roof decking, identification of structural panel sheathing, grade, thickness and show fastener schedule for structural panel sheathing on the edges & intermediate areas

ROOF ASSEMBLIES FRC Chapter 9

- Include all materials which will make up the roof assembles covering; with Florida Product Approval numbers for each component of the roof assembles covering.

FCB Chapter 13 Florida Energy Efficiency Code for Building Construction

- Residential construction shall comply with this code by using the following compliance methods in the FBC Subchapter 13-6, Residential buildings compliance methods. Two of the required forms are to be submitted, showing dimensions condition area equal to the total condition living space area
- Show the insulation R value for the following areas of the structure: Attic space, Exterior wall cavity and Crawl space (if applicable)

HVAC information shown

- Manual J sizing equipment or equivalent computation
- Exhaust fans locations in bathrooms

Plumbing Fixture layout shown

- All fixtures waste water lines shall be shown on the foundation plan

Electrical layout shown including:

- Switches, outlets/receptacles, lighting and all required GFCI outlets identified
- Ceiling fans
- Smoke detectors
- Service panel, sub-panel, location(s) and total ampere ratings

- On the electrical plans identify the electrical service overcurrent protection device for the main electrical service. This device shall be installed on the exterior of structures to serve as a disconnecting means for the utility company electrical service. Conductors used from the exterior disconnecting means to a panel or sub panel shall have four-wire conductors, of which one conductor shall be used as an equipment ground. Indicate if the utility company service entrance cable will be of the overhead or underground type.
- Appliances and HVAC equipment and disconnects
- Arc Fault Circuits (AFCI) in bedrooms

- Notarized Disclosure Statement for Owner Builders

- Notice of Commencement Recorded (in the Columbia County Clerk Office) Notice Of Commencement is required to be filed with the building department Before Any Inspections Will Be Done.

Private Potable Water

existing

- Size of pump motor
- Size of pressure tank
- Cycle stop valve if used

THE FOLLOWING ITEMS MUST BE SUBMITTED WITH BUILDING PLANS

- Building Permit Application: A current Building Permit Application form is to be completed and submitted for all residential projects.

- Parcel Number: The parcel number (Tax ID number) from the Property Appraiser (386) 758-1084 is required. A copy of property deed is also requested.

- Environmental Health Permit or Sewer Tap Approval: A copy of the Environmental Health permit, existing septic approval or sewer tap approval is required before a building permit can be issued. (386) 758-1058 (Toilet facilities shall be provided for construction workers)

- City Approval: If the project is to be located within the city limits of the Town of Fort White, prior approval is required. The Town of Fort White approval letter is required to be submitted by the owner or contractor to this office when applying for a Building Permit. (386) 497-2321

- Flood Information: All projects within the Floodway of the Suwannee or Santa Fe Rivers shall require permitting through the Suwannee River Water Management District, before submitting application to this office. Any project located within a flood zone where the base flood elevation (100 year flood) has been established shall meet the requirements of Section 8.8 of the Columbia County Land Development Regulations. Any project located within a flood zone where the base flood elevation has not been established (Zone A) shall meet the requirements of Section 8.7 of the Columbia County Land Development Regulations. CERTIFIED FINISHED FLOOR ELEVATIONS WILL BE REQUIRED ON ANY PROJECT WHERE THE BASE FLOOD ELEVATION (100 YEAR FLOOD) HAS BEEN ESTABLISHED. A development permit will also be required. The permit cost is $50.00.

- Driveway Connection: If the property does not have an existing access to a public road, then an application for a culvert permit ($25.00) must be made. If the applicant feels that a culvert is not needed, they may apply for a culvert waiver ($50.00). All culvert waivers are sent to the Columbia County Public Works Department for approval or denial.

- 911 Address: If the project is located in an area where the 911 address has been issued, then the proper Paper work from the 911 Addressing Departments must be submitted. (386) 758-1125

ALL REQUIRED INFORMATION IS TO BE SUBMITTED FOR REVIEW. NOTIFICATION WILL BE GIVEN WHEN THE APPLICATION AND PLANS ARE APPROVED AND READY TO PERMIT.

(8-249--Fill in later GANSKOP -- , ** - T2)

THIS DWG PREPARED FROM COMPUTER INPUT (LOADS & DIMENSIONS) SUBMITTED BY TRUSS MFR.

Top chord 2x4 SP #2 Dense
Bot chord 2x4 SP #2 Dense
Webs 2x4 SP #3
:Lt Splice Block 2x4 SP #3::Rt Splice Block 2x4 SP #3:

Calculated vertical deflection is 0.69" due to live load and 0.39" due to dead load at X = 13-8-8.

Truss must be installed as shown with top chord up.

See ANSI/TPI 1-02 Sect 7.5 for additional bracing requirements.

Trusses to be spaced at 12.0" OC maximum.

Deflection meets L/360 live and L/240 total load. Creep increase factor for dead load is 1.50.

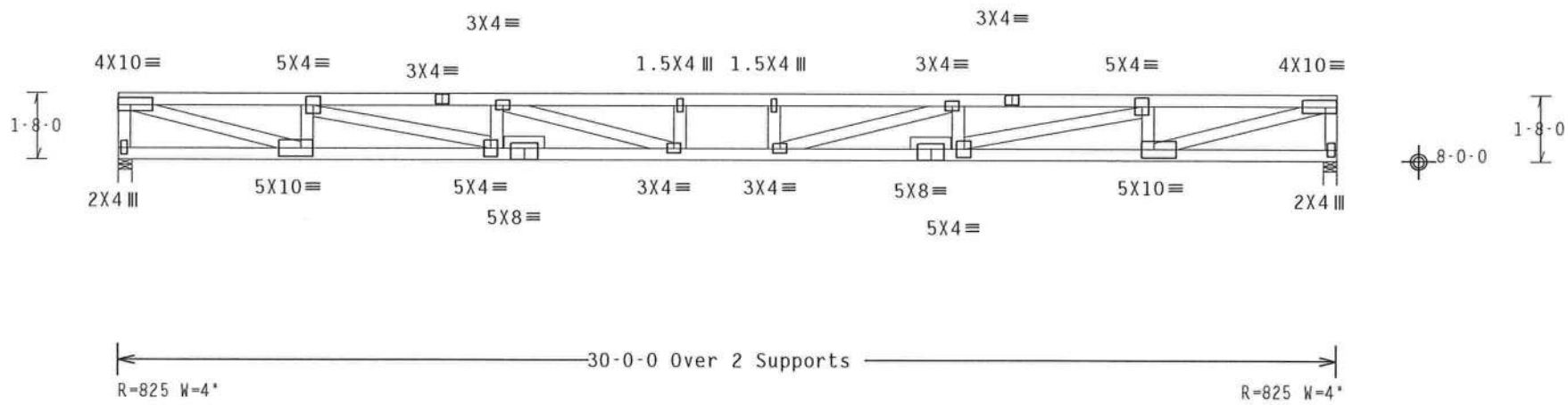

Design Crit: TPI-2002(STD)/FBC
Cq/RT=1.00(1.25)/10(0) 7.36.00.0424.12

PLT TYP. Wave

QTY:1 FL/-/4/-/-/R/-

Scale =.25"/Ft.

ALPINE
ITW Building Components Group Inc.
Haines City, FL 33844
FL COA #0 278

WARNING TRUSSES REQUIRE EXTREME CARE IN FABRICATION, HANDLING, SHIPPING, INSTALLING AND BRACING. REFER TO BCSI (BUILDING COMPONENT SAFETY INFORMATION), PUBLISHED BY TPI (TRUSS PLATE INSTITUTE, 218 NORTH LEE STREET, SUITE 312, ALEXANDRIA, VA, 22314) AND WTCA (WOOD TRUSS COUNCIL OF AMERICA, 6300 ENTERPRISE LANE, MADISON, WI 53719) FOR SAFETY PRACTICES PRIOR TO PERFORMING THESE FUNCTIONS. UNLESS OTHERWISE INDICATED TOP CHORD SHALL HAVE PROPERLY ATTACHED STRUCTURAL PANELS AND BOTTOM CHORD SHALL HAVE A PROPERLY ATTACHED RIGID CEILING.

IMPORTANTFURNISH A COPY OF THIS DESIGN TO THE INSTALLATION CONTRACTOR. ITW BCG, INC. SHALL NOT BE RESPONSIBLE FOR ANY DEVIATION FROM THIS DESIGN; ANY FAILURE TO BUILD THE TRUSS IN COMFORMANCE WITH TPI; OR FABRICATING, HANDLING, SHIPPING, INSTALLING & BRACING OF TRUSSES.
DESIGN CONFORMS WITH APPLICABLE PROVISIONS OF NDS (NATIONAL DESIGN SPEC, BY AF&PA) AND TPI. ITW BCG CONNECTOR PLATES ARE MADE OF 20/18/16GA (W,H/SS/K) ASTM A653 GRADE 40/60 (W, K/H,SS) GALV. STEEL. APPLY PLATES TO EACH FACE OF TRUSS AND, UNLESS OTHERWISE LOCATED ON THIS DESIGN, POSITION PER DRAWINGS 160A-Z. ANY INSPECTION OF PLATES FOLLOWED BY (1) SHALL BE PER ANNEX A3 OF TPI1-2002 SEC.3. A SEAL ON THIS DRAWING INDICATES ACCEPTANCE OF PROFESSIONAL ENGINEERING RESPONSIBILITY SOLELY FOR THE TRUSS COMPONENT DESIGN SHOWN. THE SUITABILITY AND USE OF THIS COMPONENT FOR ANY BUILDING IS THE RESPONSIBILITY OF THE BUILDING DESIGNER PER ANSI/TPI 1 SEC. 2.

JAMES F. COLLINS, JR. LICENSE No. 52212 STATE OF FLORIDA PROFESSIONAL ENGINEER

Oct

TC LL	40.0 PSF	REF R8228- 57647
TC DL	10.0 PSF	DATE 10/13/08
BC DL	5.0 PSF	DRW HCUSR8228 08287004
BC LL	0.0 PSF	HC-ENG JB/AP
TOT.LD.	55.0 PSF	SEQN- 45326
DUR.FAC.	1.00	
SPACING	12.0"	JREF- 1TLQ8228Z03

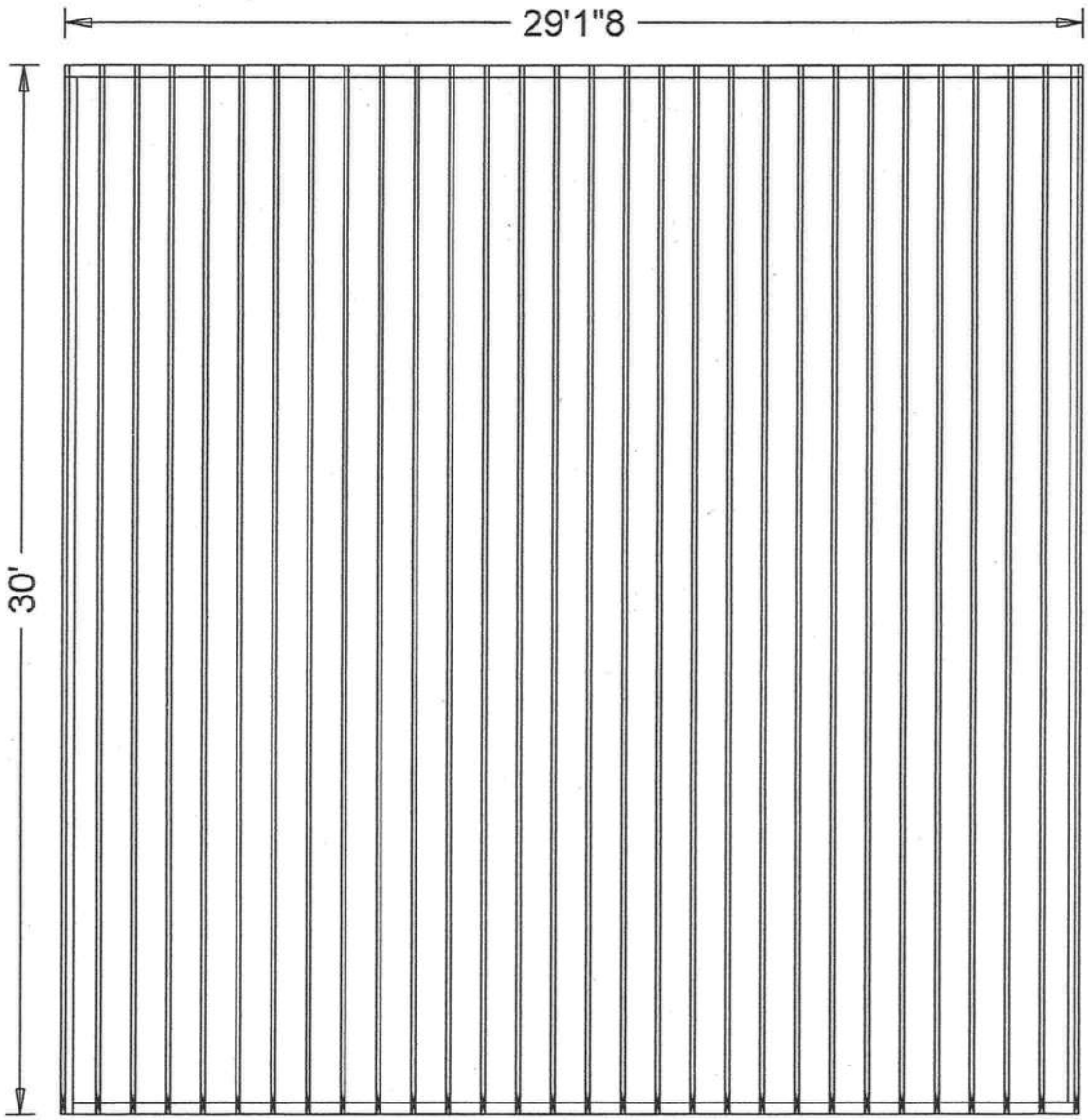

JEFF GANSKOP / FLOOR

JOB DESCRIPTION:: Fill in later
/: GANSKOP

JOB NO:
8-249

PAGE NO:
1 OF 1

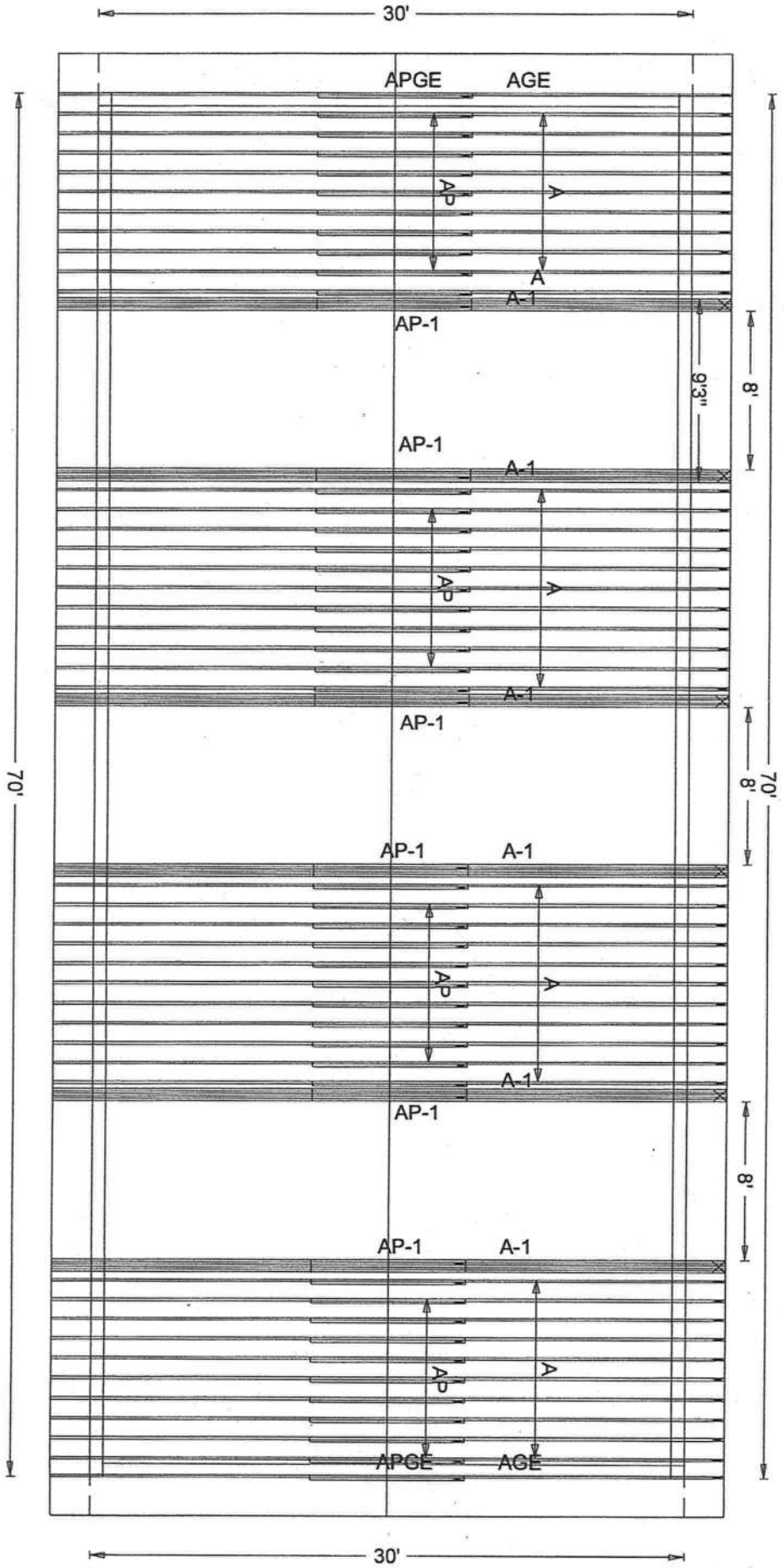

#8-155
JEFF GANSKOP

Craftsman

42" *Woodburning Fireplace*

Vent Pipe Size	10"
Min. Pipe Clearance	1"
Min. System Height	14' 6"
- w/ Single Offset	14' 6"
- w/ Two Offsets	22' 0"
Max. Dist. Between Elbows	6' 0"
Max. System Height	50' 0"

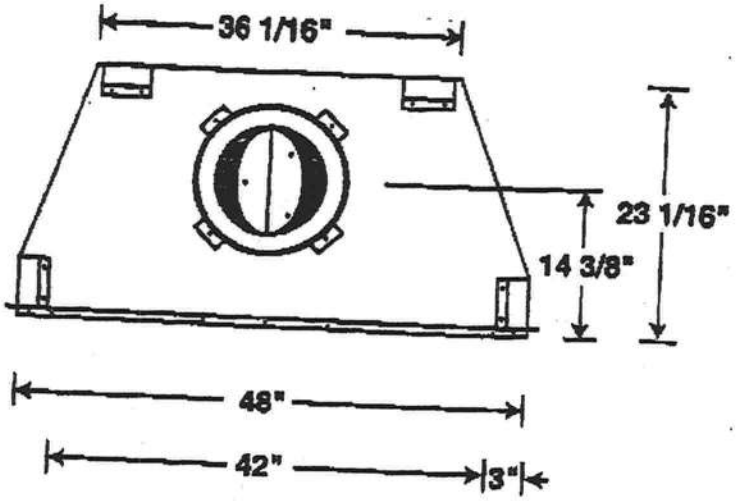

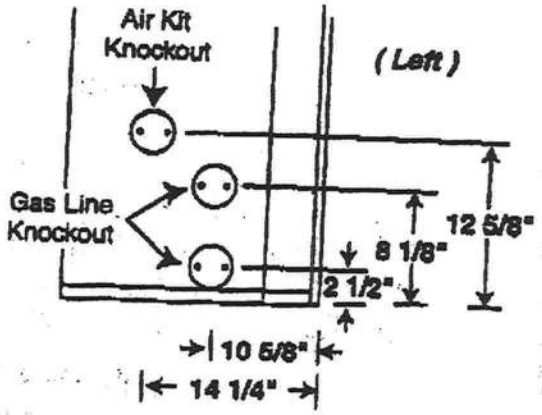

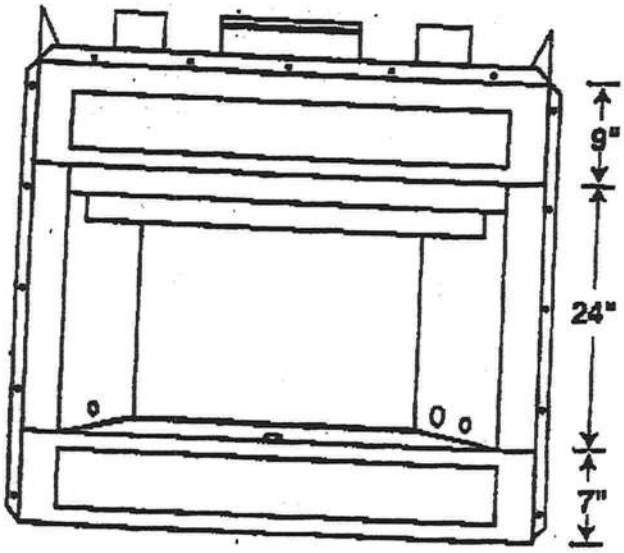

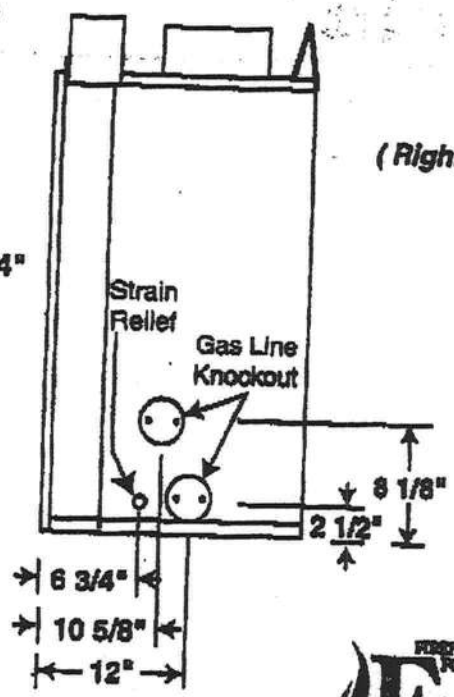

FIREPLACES FOR BUILDERS
Fmi

05/06/2005 10:58 3867584735 LAKE CITY INDUSTRIES PAGE 01/02

ACORD®

CERTIFICATE OF LIABILITY INSURANCE

DATE (MM/DD/YYYY) 2/1/2011

PRODUCER (954)943-5050 FAX: (954)942-6310
Frank H. Furman, Inc.
1314 East Atlantic Blvd.
P. O. Box 1927
Pompano Beach FL 33061

THIS CERTIFICATE IS ISSUED AS A MATTER OF INFORMATION ONLY AND CONFERS NO RIGHTS UPON THE CERTIFICATE HOLDER. THIS CERTIFICATE DOES NOT AMEND, EXTEND OR ALTER THE COVERAGE AFFORDED BY THE POLICIES BELOW.

INSURED
Old World Craftsmen, Inc.
P O Box 710
Lake City FL 32056

INSURERS AFFORDING COVERAGE	NAIC #
INSURER A: Starr Indemnity & Liability	38318
INSURER B: Praetorian Insurance Company	37257
INSURER C: Commerce & Industry Ins Co	19410
INSURER D: Travelers Property Casualty	25674
INSURER E:	

COVERAGES

THE POLICIES OF INSURANCE LISTED BELOW HAVE BEEN ISSUED TO THE INSURED NAMED ABOVE FOR THE POLICY PERIOD INDICATED. NOTWITHSTANDING ANY REQUIREMENT, TERM OR CONDITION OF ANY CONTRACT OR OTHER DOCUMENT WITH RESPECT TO WHICH THIS CERTIFICATE MAY BE ISSUED OR MAY PERTAIN, THE INSURANCE AFFORDED BY THE POLICIES DESCRIBED HEREIN IS SUBJECT TO ALL THE TERMS, EXCLUSIONS AND CONDITIONS OF SUCH POLICIES. AGGREGATE LIMITS SHOWN MAY HAVE BEEN REDUCED BY PAID CLAIMS.

INSR LTR	ADD'L INSRD	TYPE OF INSURANCE	POLICY NUMBER	POLICY EFFECTIVE DATE (MM/DD/YYYY)	POLICY EXPIRATION DATE (MM/DD/YYYY)	LIMITS	
A		GENERAL LIABILITY X COMMERCIAL GENERAL LIABILITY CLAIMS MADE X OCCUR X Per project agg capped at $5M GEN'L AGGREGATE LIMIT APPLIES PER: POLICY X PRO-JECT LOC	SIPGGL008600	2/2/2011	2/2/2012	EACH OCCURRENCE DAMAGE TO RENTED PREMISES (Ea occurrence) MED EXP (Any one person) PERSONAL & ADV INJURY GENERAL AGGREGATE PRODUCTS - COMP/OP AGG	$ 1,000,000 $ 50,000 $ $ 1,000,000 $ 2,000,000 $ 2,000,000
B		AUTOMOBILE LIABILITY X ANY AUTO ALL OWNED AUTOS SCHEDULED AUTOS X HIRED AUTOS X NON-OWNED AUTOS	PICFL0001574	11/15/2010	11/15/2011	COMBINED SINGLE LIMIT (Ea accident) BODILY INJURY (Per person) BODILY INJURY (Per accident) PROPERTY DAMAGE (Per accident)	$ 1,000,000 $ $ $
		GARAGE LIABILITY ANY AUTO				AUTO ONLY - EA ACCIDENT OTHER THAN AUTO ONLY: EA ACC AGG	$ $ $
C		EXCESS / UMBRELLA LIABILITY X OCCUR CLAIMS MADE DEDUCTIBLE RETENTION $	BE013002622	2/2/2011	2/2/2012	EACH OCCURRENCE AGGREGATE	$ 2,000,000 $ 2,000,000 $ $ $
		WORKERS COMPENSATION AND EMPLOYERS' LIABILITY ANY PROPRIETOR/PARTNER/EXECUTIVE OFFICER/MEMBER EXCLUDED? Y / N (Mandatory in NH) If yes, describe under SPECIAL PROVISIONS below				WC STATU-TORY LIMITS OTH-ER E.L. EACH ACCIDENT E.L. DISEASE - EA EMPLOYEE E.L. DISEASE - POLICY LIMIT	$ $ $
D		OTHER Inland Marine	6602016N775	2/2/2011	2/2/2012	Leased/Rented Equip	$50,000

DESCRIPTION OF OPERATIONS / LOCATIONS / VEHICLES / EXCLUSIONS ADDED BY ENDORSEMENT / SPECIAL PROVISIONS
Project: Jeff Ganskop, Owner/Builder Personal Residence, Lake City, Florida

28537

CERTIFICATE HOLDER

(386)758-2160

Columbia County
Building & Zoning
Attn: Janice
135 NE Hernando Ave.
Suite B-21
Lake City, FL 32099

CANCELLATION

SHOULD ANY OF THE ABOVE DESCRIBED POLICIES BE CANCELLED BEFORE THE EXPIRATION DATE THEREOF, THE ISSUING INSURER WILL ENDEAVOR TO MAIL 10 DAYS WRITTEN NOTICE TO THE CERTIFICATE HOLDER NAMED TO THE LEFT, BUT FAILURE TO DO SO SHALL IMPOSE NO OBLIGATION OR LIABILITY OF ANY KIND UPON THE INSURER, ITS AGENTS OR REPRESENTATIVES.

AUTHORIZED REPRESENTATIVE
Frank Furman, Jr/LV F. H. Furman Jr.

© 1988-2009 ACORD CORPORATION. All rights reserved.
The ACORD name and logo are registered marks of ACORD

ACORD®

CERTIFICATE OF LIABILITY INSURANCE

DATE (MM/DD/YYYY) 2/2/2012

THIS CERTIFICATE IS ISSUED AS A MATTER OF INFORMATION ONLY AND CONFERS NO RIGHTS UPON THE CERTIFICATE HOLDER. THIS CERTIFICATE DOES NOT AFFIRMATIVELY OR NEGATIVELY AMEND, EXTEND OR ALTER THE COVERAGE AFFORDED BY THE POLICIES BELOW. THIS CERTIFICATE OF INSURANCE DOES NOT CONSTITUTE A CONTRACT BETWEEN THE ISSUING INSURER(S), AUTHORIZED REPRESENTATIVE OR PRODUCER, AND THE CERTIFICATE HOLDER.

IMPORTANT: If the certificate holder is an ADDITIONAL INSURED, the policy(ies) must be endorsed. If SUBROGATION IS WAIVED, subject to the terms and conditions of the policy, certain policies may require an endorsement. A statement on this certificate does not confer rights to the certificate holder in lieu of such endorsement(s).

PRODUCER
Frank H. Furman, Inc.
1314 East Atlantic Blvd.
P. O. Box 1927
Pompano Beach FL 33061

CONTACT NAME: Liz van der Berg
PHONE (A/C, No, Ext): (954)943-5050 FAX (A/C, No): (954)942-6310
E-MAIL ADDRESS: liz@furmaninsurance.com

INSURER(S) AFFORDING COVERAGE	NAIC #
INSURER A: First Mercury Insurance Co	10657
INSURER B: Praetorian Insurance Company	37257
INSURER C: Commerce & Industry Ins Co	19410
INSURER D: Travelers Property Casualty Co	25674
INSURER E:	
INSURER F:	

INSURED
Old World Craftsmen, Inc.
P O Box 710
Lake City FL 32056

COVERAGES CERTIFICATE NUMBER: (B) 12-13 Master Cert REVISION NUMBER:

THIS IS TO CERTIFY THAT THE POLICIES OF INSURANCE LISTED BELOW HAVE BEEN ISSUED TO THE INSURED NAMED ABOVE FOR THE POLICY PERIOD INDICATED. NOTWITHSTANDING ANY REQUIREMENT, TERM OR CONDITION OF ANY CONTRACT OR OTHER DOCUMENT WITH RESPECT TO WHICH THIS CERTIFICATE MAY BE ISSUED OR MAY PERTAIN, THE INSURANCE AFFORDED BY THE POLICIES DESCRIBED HEREIN IS SUBJECT TO ALL THE TERMS, EXCLUSIONS AND CONDITIONS OF SUCH POLICIES. LIMITS SHOWN MAY HAVE BEEN REDUCED BY PAID CLAIMS.

INSR LTR	TYPE OF INSURANCE	ADDL INSR	SUBR WVD	POLICY NUMBER	POLICY EFF (MM/DD/YYYY)	POLICY EXP (MM/DD/YYYY)	LIMITS	
A	GENERAL LIABILITY X COMMERCIAL GENERAL LIABILITY CLAIMS-MADE X OCCUR X Per project Agg capped at $5M GEN'L AGGREGATE LIMIT APPLIES PER: POLICY X PRO-JECT LOC			CGL0000005164-01	2/2/2012	2/2/2013	EACH OCCURRENCE DAMAGE TO RENTED PREMISES (Ea occurrence) MED EXP (Any one person) PERSONAL & ADV INJURY GENERAL AGGREGATE PRODUCTS - COMP/OP AGG	$ 1,000,000 $ 100,000 $ Excluded $ 1,000,000 $ 2,000,000 $ 2,000,000 $
B	AUTOMOBILE LIABILITY X ANY AUTO ALL OWNED AUTOS SCHEDULED AUTOS X HIRED AUTOS X NON-OWNED AUTOS			PICFL0002121	11/15/2011	11/15/2012	COMBINED SINGLE LIMIT (Ea accident) BODILY INJURY (Per person) BODILY INJURY (Per accident) PROPERTY DAMAGE (Per accident) PIP-Basic	$ 1,000,000 $ $ $ $ 10,000
C	X UMBRELLA LIAB X OCCUR EXCESS LIAB CLAIMS-MADE DED RETENTION $			BE042297818	2/2/2012	2/2/2013	EACH OCCURRENCE AGGREGATE 	$ 2,000,000 $ 2,000,000 $
	WORKERS COMPENSATION AND EMPLOYERS' LIABILITY ANY PROPRIETOR/PARTNER/EXECUTIVE OFFICER/MEMBER EXCLUDED? Y/N (Mandatory in NH) If yes, describe under DESCRIPTION OF OPERATIONS below	N/A					WC STATU-TORY LIMITS OTH-ER E.L. EACH ACCIDENT E.L. DISEASE - EA EMPLOYEE E.L. DISEASE - POLICY LIMIT	 $ $ $
D	Inland Marine			6602016N775	2/2/2011	2/2/2012	Leased/Rented Equipment	$50,000

DESCRIPTION OF OPERATIONS / LOCATIONS / VEHICLES (Attach ACORD 101, Additional Remarks Schedule, if more space is required)
Project: Jeff Ganskop, Owner/Builder Personal Residence, Lake City, Florida

28537

CERTIFICATE HOLDER

(386)758-2160

Columbia County
Building & Zoning
Attn: Janice
135 NE Hernando Ave.
Suite B-21
Lake City, FL 32099

CANCELLATION

SHOULD ANY OF THE ABOVE DESCRIBED POLICIES BE CANCELLED BEFORE THE EXPIRATION DATE THEREOF, NOTICE WILL BE DELIVERED IN ACCORDANCE WITH THE POLICY PROVISIONS.

AUTHORIZED REPRESENTATIVE

Frank Furman, Jr/LV F.H. Furman Jr.

© 1988-2010 ACORD CORPORATION. All rights reserved.
The ACORD name and logo are registered marks of ACORD