LOT 21 BLOCK A DEERWOOD FOREST
UNIT 3.
657-55, 719-590, FJ 1403-718,

TALMADGE VICTORIA A
321 SE FAWN GLN
LAKE CITY, FL 32025

2025

16-4S-17-08302-172

COLUMBIA COUNTY PROPERTY

BUILDING CHARACTERISTICS

ELEMENT	CD	CONSTRUCTION
Exterior Wall	19	COMMON BRK 80
Exterior Wall	31	VINYL SID 20
Roof Structur	03	GABLE/HIP 100
Roof Cover	03	COMP SHNGL 100
Interior Wall	05	DRYWALL 100
Interior Floo	14	CARPET 90
Interior Floo	12	HARDWOOD 10
Air Condition	03	CENTRAL 100
Heating Type	04	AIR DUCTED 100
Bedrooms		4 100
Bathrooms		2.5 100
Frame	01	NONE 100
Stories	1.5	1.5 100
Architectual	05	CONV 100
Units		0 100
Condition Adj	03	03 100
Kitchen Adjus	01	01 100
Quality	05	05
DOR CODE	0100	SINGLE FAMILY
MAP NUM		MKT AREA 06
NEIGHBORHOOD/LOC	9417.0800	1.00/

AREA TYPE	TOTAL GROSS AREA	PCT OF BASE	YEAR	TOT ADJ AREA	SUBAREA MARKET VALUE
BAS	1,655	100		1,655	127,466
FEP	280	80		224	17,252
FGR	575	55		316	24,338
FOP	210	30		63	4,852
FUS	1,458	100		1,458	112,293
TOTALS	4,178			3,716	286,201

MARKET ADJUSTMENTS

TYPE	MDL	EFF. AREA	TOT ADJ PTS	EFF. BASE RATE	REPL. COST NEW	AYB	EYB	ECON	FNCT		NORM	% COND
0100	01	3,716	112.8498	118.49	440,309	1988	1988	0	0	0	35.00	65.00

1 SINGLE FAM – 100% - 0 Heated Area: 3113 HX Base Yr

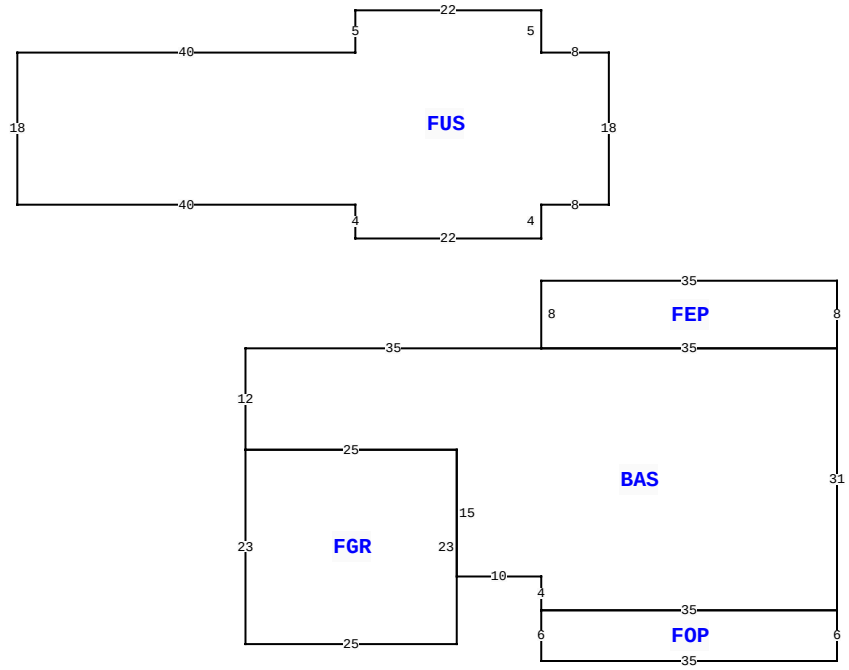

321 SE FAWN GLN, LAKE CITY

BLD DATE		LGL DATE	
XF DATE		LAND DATE	04/21/2023 MLU
INC DATE		AG DATE	

VALUATION SUMMARY

VALUATION BY		STANDARD
Tax Group: 2	Tax Dist:	
BUILDING MARKET VALUE		286,201
TOTAL MARKET OB/XF VALUE		6,140
TOTAL LAND VALUE - MARKET		18,500
TOTAL MARKET VALUE		310,841
SOH/AGL Deduction		104,976
ASSESSED VALUE		205,865
TOTAL EXEMPTION VALUE	HX HB	50,722
BASE TAXABLE VALUE		155,143
TOTAL JUST VALUE		310,841
NCON VALUE		0
INCOME VALUE		
PREVIOUS YEAR MKT VALUE		310,841

SALE:1:1: LOT 21, BLOCK A, DEERWOOD FOREST UNIT II

PERMIT NUM	DESCRIPTION	AMT	ISSUED

SALES DATA

OFF RECORD Number	DATE	TYPE INST	Q / U	V / I	RSN CD	SALE PRICE
1414/2328	7/08/2020	LE	U	I	14	100
GRANTOR: VICTORIA ANN TALMADGE						
GRANTEE: WILLIAM R TALMADGE						
1404/2027	1/17/2020	QC	U	I	11	100
GRANTOR: JAMES TALMADGE						
GRANTEE: VICTORIA ANN TALMAD						

BUILDING NOTES

BUILDING DIMENSIONS

BAS= W35 S12 FGR= S23 E25 N23 W25$ E25 S15 E10 S4 FOP= S6 E35 N6 W35$ E35 N31 FEP= N8 W35 S8 E35$ W35$ PTR=N40 FUS= W22 S5 W40 S18 E40 S4 E22 N4 E8 N18 W8 N5$ S40$.

EXTRA FEATURES

LN	OB/XF CODE	DESCRIPTION	BLD	CAP	L	W	UNITS	UT	Adj R	ADJ UNIT PRICE	ORIG COND	YEAR ON	YEAR ACTUAL	Q	% COND	OB/XF MKT VALUE	NOTES
1	0166	CONC,PAVMT	0	100	0	0	1.00	UT	0.00	0.00	100	0	0	3	100	2,940	
2	0180	FPLC 1STRY	0	100	0	0	1.00	UT	2,000.00	2,000.00	100	0	0	3	100	2,000	
3	0120	CLFENCE 4	0	100	0	0	1.00	UT	0.00	0.00	100	1998	1998	3	100	300	
4	0296	SHED METAL	0	100	0	0	1.00	UT	0.00	0.00	100	2013	2013	3	100	600	
5	0070	CARPORT UF	0	100	0	0	1.00	UT	0.00	0.00	100	2013	2013	3	100	300	

LAND DESCRIPTION

TOTAL OB/XF 6,140

LN	USE CODE	CLS	LAND USE DESCRIPTION	CAP	RD	LOC ZONE	FRONT	DEPTH	TOT LND UTS	UNIT TYPE	DT	DPTH FACT	% COND	TOT ADJ	UNIT PRICE	ADJ UNIT PRICE	LAND VALUE	OTHER ADJUSTMENTS AND NOTES	YEAR	DENSITY	DECL	FRZ	YR	CONSRV
1	0100	C	SFR	100		RSF-1	0.00	0.00	1.00	LT		1.00	1.00	1.00	18,500.00	18,500.00	18,500							

REVIEW DATE 09/04/2013 BY DF Total Acres: 1.07 Total Land Value: 18,500 Market: 0 Agricultural: 0 Common: 18,500 PRINTED 02/12/2025 BY SYS