Ridgway Roof Truss Company

(Trusses and Prefabricated Building Components)

Mailing: P.O. Box 1309 – Gainesville, Florida 32602
Physical: 235 SW 11th Place – Gainesville, Florida 32601

Telephone: (352) 376-4436
FAX: (352) 371-3316

Email: Sales@RidgwayTruss.com
www.RidgwayTruss.com

WARNING

THESE TRUSSES MUST BE HANDLED ACCORDING TO BCSI-B1 SUMMARY SHEETS

SEE TABLE OF CONTENTS

SEALED

DESIGN MANUAL

PROJECT NAME: Hornsby Residence, Roof and shop roof
JOB NUMBER: 07-0790 and 07-0791
CONTRACTOR: Magura Construction
DATE: 12/21/2007 jrt
REVISIONS:
COMMENTS:

Permit Number: _____ Lot Number: _____
Miscellaneous: _____ Address: __Clay County_____
The information in this box if for administrative purposes only and is not part of this engineering review.

Truss Fabricator: RIDGWAY ROOF TRUSS

Job Reference: Hornsby Residence, Roof, Magura

Gary Dounson- (PE35054) (truss designer)	GARY DOUNSON AND ASSOC., INC., 2830 NW 41st STREET SUITE D GAINESVILLE, FL 32606 (352) 375-8593, CA 5201	**Engineering Index Sheet** Index Page 1 of 1

Job Number	Date	FBC - 2004 Chapter 16 and 23	Specification Quantity
070790	12/21/2007		55

A Professional Engineer's Seal affixed to this Index Sheet indicates the acceptance of professional Engineering responsibilities for individual truss components fabricated in accordance with the listed and attached Truss Specification Sheets. Determination as to the suitability of these individual truss components for any structure is the responsibilty of the Building Designer, as defined in ANSI/TPI 1-95, Section 2.2.
Questions regarding this Index Sheet and/or the attached Specification Sheets may be directed to the truss fabricator listed above or Gary Dounson- (PE35054) (truss designer), (Software - Online Plus)

	Date	Mark		Date	Mark		Date	Mark		Date	Mark
1	11/14/07	R1	2	11/14/07	R2	3	11/14/07	R3	4	11/14/07	R4
5	11/14/07	R5	6	11/14/07	R6	7	11/14/07	R7	8	11/14/07	R8
9	11/14/07	R9	10	11/14/07	R10	11	11/14/07	R11	12	11/14/07	R12
13	11/14/07	R13	14	11/14/07	R14	15	12/20/07	R15	16	11/14/07	R16
17	11/14/07	R17	18	11/14/07	R18	19	11/14/07	R19	20	11/14/07	R20
21	11/14/07	R21	22	11/14/07	R22	23	11/14/07	R23	24	11/14/07	R24
25	11/14/07	R25	26	11/14/07	R26	27	11/14/07	R27	28	11/14/07	R28
29	11/14/07	R29	30	11/14/07	R30	31	11/14/07	R31	32	11/14/07	R32
33	11/14/07	R33	34	11/14/07	R34	35	11/14/07	R35	36	11/14/07	R36
37	11/14/07	R37	38	11/14/07	R38	39	11/14/07	R39	40	11/14/07	R40
41	11/14/07	R41	42	11/14/07	R42	43	11/14/07	R43	44	11/14/07	R44
45	11/14/07	R45	46	11/14/07	R46	47	11/14/07	R47	48	11/14/07	R48
49	11/14/07	R49	50	11/14/07	R50	51	11/14/07	R51	52	11/14/07	R52
53	11/14/07	R53	54	11/14/07	R54	55	12/20/07	R55			

Standard Loading:

T.C. Live	20 psf
T.C. Dead	7 psf
B.C. Live	0 psf
B.C. Dead	10 psf
Total	37 psf

ANSI / ASCE 7-02
Components and Claddings*
Exterior
Wind Speed: 110
Mean Roof Ht.: 25
Exposure Category: B
Occupancy Factor : 1.00
Building Type: Enclosed
TC Dead Load : 4.0
BC Dead Load : 6.0

Notes: Refer to individual truss design drawings for special loading conditions.

MD 12-21-07

Permit Number: _____ Lot Number: _____
Miscellaneous: _____ Address: ___Clay County_____
The information in this box if for administrative purposes only and is not part of this engineering review.

Truss Fabricator: RIDGWAY ROOF TRUSS

Job Reference: Hornsby Shop, Roof, Magura

Gary Dounson- (PE35054) (truss designer)	GARY DOUNSON AND ASSOC., INC., 2830 NW 41st STREET SUITE D GAINESVILLE, FL 32606 (352) 375-8593, CA 5201	**Engineering Index Sheet** Index Page 1 of 1

Job Number	Date	FBC - 2004 Chapter 16 and 23	Specification Quantity
070791	12/21/2007		16

A Professional Engineer's Seal affixed to this Index Sheet indicates the acceptance of professional Engineering responsibilities for individual truss components fabricated in accordance with the listed and attached Truss Specification Sheets. Determination as to the suitability of these individual truss components for any structure is the responsibilty of the Building Designer, as defined in ANSI/TPI 1-95, Section 2.2.
Questions regarding this Index Sheet and/or the attached Specification Sheets may be directed to the truss fabricator listed above or Gary Dounson- (PE35054) (truss designer), (Software - Online Plus)

	Date	Mark		Date	Mark		Date	Mark		Date	Mark
1	11/14/07	R1	2	11/14/07	R2	3	11/14/07	R2A	4	11/14/07	R3
5	11/14/07	R4	6	11/14/07	R5	7	11/14/07	R6	8	11/14/07	R7
9	11/14/07	R8	10	11/14/07	R9	11	11/14/07	R10	12	11/14/07	R11
13	11/14/07	R12	14	11/14/07	R13	15	11/14/07	R14	16	11/14/07	R15

Standard Loading:

T.C. Live	20 psf
T.C. Dead	7 psf
B.C. Live	0 psf
B.C. Dead	10 psf
Total	37 psf

ANSI / ASCE 7-02
Components and Claddings*
Exterior
Wind Speed: 110
Mean Roof Ht.: 25
Exposure Category: B
Occupancy Factor : 1.00
Building Type: Enclosed
TC Dead Load : 4.0
BC Dead Load : 6.0

Notes: Refer to individual truss design drawings for special loading conditions.

12-21-07

TABLE OF CONTENTS

1. GENERAL NOTES

2. WTCA 1-1995 (STANDARD RESPONSIBILITIES IN THE DESIGN PROCESS INVOLVING METAL PLATE CONNECTED WOOD TRUSSES)

ENGINEERING (INSERT)

BLUEPRINT OF TRUSS PLACEMENT PLAN (INSERT)

6. **BCSI-B1 SUMMARY SHEET**
HANDLING, INSTALLING & BRACING INFORMATION

8. STANDARD CHORD & WEB REPAIRS

11. EXAMPLES OF PERMANENT WEB BRACING

ROBBINS ENG. GENERAL NOTES & SYMBOLS

PLATE LOCATION

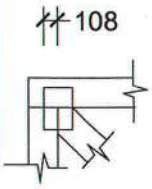

Center plates on joints unless otherwise noted in plate list or on drawing. Dimensions are given in inches (i.e. 1 1/2" or 1.5") or IN-16ths (i.e. 108)

FLOOR TRUSS SPLICE
(3X2, 4X2, 6X2)

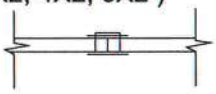

(W) = Wide Face Plate
(N) = Narrow Face Plate

LATERAL BRACING

Designates the location for continuous lateral bracing (CLB) for support of individual truss members only. CLBs must be properly anchored or restrained to prevent simultaneous buckling of adjacent truss members.

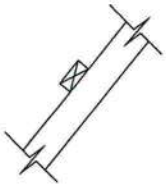

PLATE SIZE AND ORIENTATION

3x5 ||

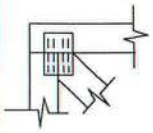

The first dimension is the width measured perpendicular to slots. The second dimension is the length measured parallel to slots. Plate orientation, shown next to plate size, indicates direction of slots in connector plates.

DIMENSIONS

All dimensions are shown in FT-IN-SX (i.e. 6' 8 1/2" or 6-08-08). Dimensions less than one foot are shown in IN-SX only (i.e. 708).

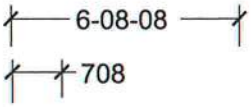

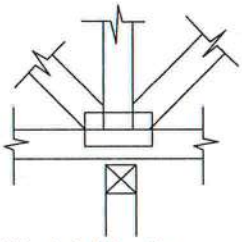

W = Actual Bearing Width (IN-SX)
R = Reaction (lbs.)
U = Uplift (lbs.)

BEARING

When truss is designed to bear on multiple supports, interior bearing locations should be marked on the truss. Interior support or temporary shoring must be in place before erecting this truss. If necessary, shim bearings to assure solid contact with truss.

ROBBINS connector plates shall be applied on both faces of truss at each joint. Center the plates, unless indicated otherwise. No loose knots or wane in plate contact area. Splice only where shown. Overall spans assume 4" bearing at each end, unless indicated otherwise. Cutting and fabrication shall be performed using equipment which produces snug-fitting joints and plates. Unless otherwise noted, moisture content of lumber shall not exceed 19% at time of fabrication and the attached truss designs are not applicable for use with fire retardant lumber and some preservative treatments. Nails specified on truss design drawings refer to common wire nails, except as noted.
The attached design drawings were prepared in accordance with " National Design Specifications for Wood Construction" (AF & PA)," National Design Standard for Metal Plate Connected Wood Truss Construction" (ANSI/TPI 1), and HUD Design Criteria for Trussed Rafters.

Robbins Eng. Co. bears no responsibility for the erection of trusses, field bracing or permanent truss bracing. Refer to BCSI 1-03 as published by Truss Plate Institute, 218 North Lee Street, Suite 312, Alexandria, Virginia 22314. Persons erecting trusses are cautioned to seek professional advice concerning proper erection bracing to prevent toppling and " dominoing ". Care should be taken to prevent damage during fabrication, storage, shipping and erection. Top and bottom chords shall be adequately braced in the absence of sheathing or rigid ceiling, respectively. It is the responsibility of others to ascertain that design loads utilized on these drawings meet or exceed the actual dead loads imposed by the structure and the live loads imposed by the local building code or historical climatic records.

FURNISH A COPY OF THE ATTACHED TRUSS DESIGN DRAWINGS TO ERECTION CONTRACTOR. IT IS THE RESPONSIBILITY OF THE BUILDING DESIGNER TO REVIEW THESE DRAWINGS AND VERIFY THAT DATA, INCLUDING DIMENSIONS & LOADS, CONFORM TO ARCHITECTURAL PLAN / SPECS AND THE TRUSS PLACEMENT DIAGRAM FURNISHED BY THE TRUSS FABRICATOR.

Robbins Engineering, Inc.

6904 Parke East Blvd.
Tampa, Fl 33610-4115
Tel: 813-972-1135 Fax: 813-971-6117

www.robbinseng.com

Wood Truss Council of America
5937 Meadowood Dr., Ste. 14 • Madison, WI 53711-4125 • 608/274-3329 (fax)

Standard Responsibilities in the Design Process Involving Metal Plate Connected Wood Trusses

WTCA 1-1995

Developed by the WTCA Engineering Review Committee
in cooperation with the Truss Plate Institute

The Wood Truss Council of America publishes standard practice materials prepared and edited by knowledgeable authors from the construction industry to give as much assistance as possible to owners, architects, engineers, contractors, building officials, and others involved in the metal plate connected wood truss industry. The competence of the authors ensures accurate and authoritative information in regard to the subject matter covered, but, of course, neither the Wood Truss Council of America, nor the authors make either express or implied warranties in regard to the use of the materials.

1.0 SCOPEAND DEFINITIONS

1.1 This standard defines the design responsibilities of the individuals and organizations involved in the preparation, submittal, review and approval of each Truss Design Drawing and Truss Placement Plan associated with the use of metal plate connected wood trusses. These guidelines are presented as industry standard practice. The guidelines are not intended to preclude alternate provisions as agreed upon by the parties involved.

1.2 The following definitions shall apply:

1.2.1 "Architect" shall mean the individual registered architect responsible for the architectural design of the structure and who produces the architectural drawings included in the Construction Design Documents.

1.2.2 "Building Designer" is the individual or organization having responsibility for the overall building or structure design in accordance with the state's statutes and regulations governing the professional registration and certification of architects or engineers. This responsibility includes but is not limited to foundation design, structural member sizing, load transfer, bearing conditions, and the structure's compliance with the applicable building codes. Also referred to as registered architect or engineer, building designer, and registered building designer, but hereinafter will be referred to as Building Designer.

1.2.3 "Construction Design Documents" are the architectural drawings, structural drawings, mechanical drawings, electrical drawings, and any other drawings, specifications, and addenda which set forth the overall design of the structure and issued by the Building Designer.

1.2.4 "Contractor" shall mean the individual or organization responsible for the field storage, handling, and installation of trusses including, but not limited to, temporary bracing, permanent bracing, anchorage, connections and field assembly. The term "Contractor" shall include those subcontractors who have a direct contract with the Contractor to perform all or a portion of the storage, handling, and installation of the trusses.

1.2.5 "Engineer-of-Record" shall mean the registered professional engineer responsible for the structural design of the structure and who produces the structural drawings included in the Construction Design Documents.

1.2.6 "Owner" shall mean the individual or organization for whom the structure is designed.

1.2.7 "Truss" is an individual metal plate connected wood structural component manufactured by the Truss Manufacturer.

1.2.8 "Truss Designer" is the design professional, individual or organization, having responsibility for the design of metal plate connected wood trusses. This responsibility shall be in accordance with the state's statutes and regulations governing the professional registration and certification of architects or engineers. Also referred to as truss engineer, design engineer, registered engineer, and engineer, but hereinafter will be referred to as Truss Designer.

1.2.9 "Truss Design Drawing" shall mean the graphic depiction of an individual Truss prepared by the Truss Designer.

1.2.10 "Truss Manufacturer" shall mean an individual or organization regularly engaged in the manufacturing of Trusses.

1.2.11 "Truss Placement Plan" is the drawing identifying the location assumed for each Truss based on the Truss Manufacturer's interpretation of the Construction Design Documents.

2.0 OWNER RESPONSIBILITIES

2.1 Directly or through its representatives, which may include the Contractor and/or Building Designer; (a) review and approve each Truss Design Drawing; (b) review and approve the Truss Placement Plan; (c) resolve and approve all design issues arising out of the preparation of each Truss Design Drawing and Truss Placement Plan; and (d) coordinate the return of each approved Truss Design Drawing and Truss Placement Plan to the Truss Manufacturer prior to truss manufacturing.

3.0 BUILDING DESIGNER RESPONSIBILITIES

3.1 Design a structure suitable to ensure that the intended function of each Truss is not affected by adverse influences including, but not limited to, moisture, temperature, corrosive chemicals and gases;

3.2 Prepare the Construction Design Documents, showing all trussed areas, which must provide as a minimum the following:

3.2.1 All truss orientations and locations;

3.2.2 Information to fully determine all truss profiles;

3.2.3 Adequate support of the Truss and all truss bearing conditions;

3.2.4 Permanent bracing design for the structure including the Trusses, except as provided in 3.4 and 6.2.12.

3.2.5 The location, direction and magnitude of all dead and live loads applicable to each Truss including, but not limited to, loads attributable to: roof, floor, partition, mechanical, fire sprinkler, attic, storage, wind, snow drift and seismic;

3.2.6 All Truss anchorage designs required to resist uplift, gravity, and lateral loads;

3.2.7 Allowable vertical and horizontal deflection criteria;

3.2.8 Proper transfer of design loads affecting the Truss; and

3.2.9 Adequate connections between Truss and non-Truss components, except as noted in Section 6.2.9.

3.3 Review and approve the Truss Placement Plan and each Truss Design Drawing for conformance with the requirements and intent of the Construction Design Documents, the effect of each Truss Design Drawing and Truss Placement Plan on other parts of the structure, and the effect of the structure on each Truss.

3.4 Specify permanent lateral bracing where indicated by the Truss Designer on the Truss Design Drawings, to prevent buckling of the individual truss members due to design loads. The Building Designer shall specify how the permanent lateral bracing is to be anchored or restrained to prevent lateral movement if all truss members, so braced, buckle together. This shall be accomplished by: (a) anchorage to solid end walls; (b) permanent diagonal bracing in the plane of the web members; or (c) other means when demonstrated by the Building Designer to provide equivalent bracing.

4.0 CONTRACTOR RESPONSIBILITIES

4.1 Provide to the Truss Manufacturer the Construction Design Documents and all revisions and supplements thereto.

4.2 Review and approve the Truss Placement Plan and each Truss Design Drawing for conformance with the requirements and intent of the Construction Design Documents, and the effect of the Truss Placement Plan and each Truss Design Drawing on other trades involved in the construction of the structure and the effect of the other trades on the Trusses.

4.3 Coordinate the review, approval and return of each Truss Design Drawing and the Truss Placement Plan by the Owner and Building Designer.

4.4 Provide the approved Truss Design Drawings, approved Truss Placement Plans, and any supplemental information provided by the Truss Manufacturer to the individual or organization responsible for the installation of the Trusses.

4.5 Comply with the field storage, handling, installation, permanent bracing, anchorage, connections and field assembly requirements of the Construction Design Documents.

4.6 Determine and install the temporary bracing for the structure, including the Trusses.

5.0 TRUSS MANUFACTURER RESPONSIBILITIES

5.1 Communicate the design criteria from the Construction Design Documents to the Truss Designer.

5.2 Where required by the Construction Design Documents, prepare the Truss Placement Plan, providing as a minimum the location assumed for each Truss based on the Truss Manufacturer's interpretation of the Construction Design Documents.

5.3 Submit to the Contractor the Truss Placement Plan, as may be required, and each Truss Design Drawing for review and approval.

5.4 Manufacture the Trusses in accordance with the final approved Truss Design Drawings using the quality criteria for Metal Plate Connected Wood Trusses established by the ANSI/TPI 1-1995 "National Design Standard for Metal Plate Connected Wood Truss Construction."

6.0 TRUSS DESIGNER RESPONSIBILITIES

6.1 Prepare the Truss Design Drawings in conformance with the requirements set forth in the latest approved edition of ANSI/TPI 1-1995 "National Design Standard for Metal Plate Connected Wood Truss Construction."

6.2 For each Truss Design Drawing, set forth as a minimum the following:

6.2.1 Slope or depth, span and spacing;

6.2.2 Location of all joints;

6.2.3 Required bearing widths;

6.2.4 Design loads as applicable:

6.2.4.1 Top chord live load (including snow loads);

6.2.4.2 Top chord dead load;

6.2.4.3 Bottom chord live load;

6.2.4.4 Bottom chord dead load;

6.2.4.5 Concentrated loads and their points of application; and

6.2.4.6 Controlling wind and earthquake loads;

6.2.5 Adjustments to lumber and metal connector plate design values for conditions of use;

6.2.6 Each reaction force and direction;

6.2.7 Metal connector plate type, size, thickness or gage, and the dimensioned location of each metal connector plate except where symmetrically located relative to the joint interface;

6.2.8 Lumber size, species, and grade for each member;

6.2.9 Connection Requirements for:

(a) Truss to Truss girder;

(b) Truss ply to ply; and

(c) Field splices;

6.2.10 Calculated deflection ratio and/or maximum deflection for live and total load;

6.2.11 Maximum axial compression forces in the Truss members to enable the Building Designer to design the size, connections and anchorage of the permanent continuous lateral bracing. Forces may be shown on the Truss Design Drawing or on supplemental documents; and

6.2.12 Required permanent Truss member bracing location.

7.0 OTHER RESPONSIBILITIES

7.1 Any party who cuts or damages a truss shall be responsible for securing the engineering required for the repair and for subsequent costs.

Wood Truss Council of America's Objective

WTCA is committed to promoting the common interests of all engaged in the manufacture of wood trusses and related components to ensure growth, continuity, and increased professionalism in our industry. Fundamental to this is promoting the safe, economic, and structurally sound use of trusses in all applications.

Job	Mark	Quan	Type	Span	P1-H1	Left OH	Right OH	*Engineering*
070790	*R1*	1	HIPP	250400	5	2- 9- 2	2- 9- 2	

Hornsby Residence, Roof, Magura

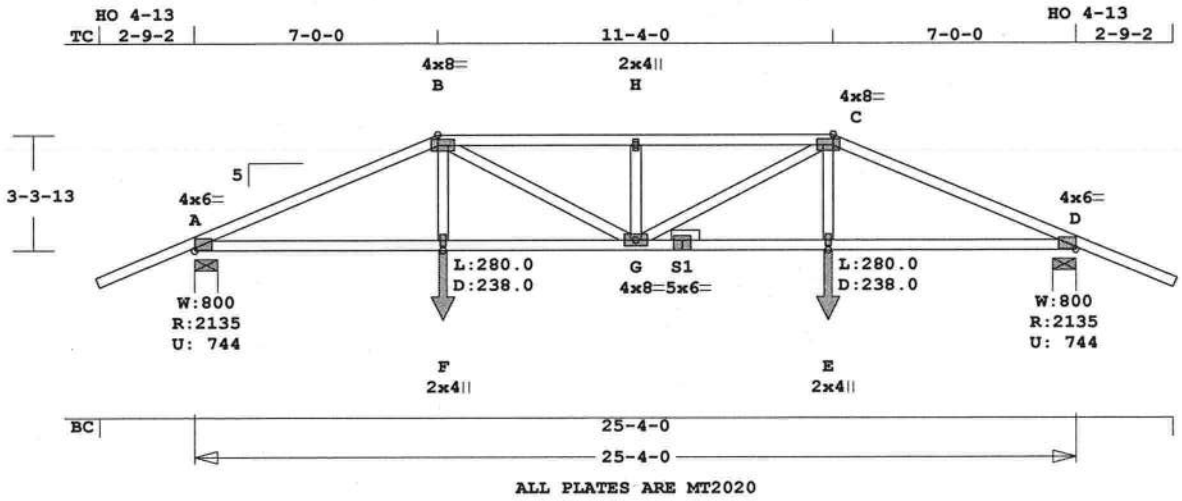

Scale: 0.188" = 1'

Robbins Engineering, Inc./Online Plus™ APPROX. TRUSS WEIGHT: 149.0 LBS

Online Plus -- Version 21.0.059
RUN DATE: 14-NOV-07

	CSI	-Size-	----Lumber----
TC	0.63	2x 4	SP-2400
--	0.61	2x 4	SP-#2
	A -B	C -D	
BC	0.56	2x 4	SP-2400
WB	0.37	2x 4	SP-#3
PB	---	2x 4	SP-#3

Brace truss as follows:

	O.C.	From	To
TC	Cont.	0- 0- 0	25- 4- 0
BC	Cont.	0- 0- 0	25- 4- 0

psf-Ld	Dead	Live
TC	7.0	20.0
BC	10.0	0.0
TC+BC	17.0	20.0
Total	37.0	Spacing 24.0"

Lumber Duration Factor 1.25
Plate Duration Factor 1.25
TC Fb=1.00 Fc=1.00 Ft=1.00
BC Fb=1.00 Fc=1.00 Ft=1.00

Total Load Reactions (Lbs)

Jt	Down	Uplift	Horiz-
A	2136	745 U	1 R
D	2136	745 U	1 R

Jt	Brg Size	Required
A	8.0"	1.8"
D	8.0"	1.8"

LC# 1 Girder Loading
Dur Fctrs - Lbr 1.25 Plt 1.25

plf -	Dead	Live*	From	To
TC V	14	40	0.0'	25.3'
BC V	20	0	0.0'	25.3'
TC V	18	50	7.0'	18.3'
BC V	25	0	7.1'	18.2'
BC V	238	280	7.1'	CL-LB
BC V	238	280	18.2'	CL-LB

Plus 9 Wind Load Case(s)
Plus 1 UBC LL Load Case(s)

Membr	CSI	P Lbs	Axl-CSI-Bnd	
----------Top Chords----------				
A -B	0.61	4284 C	0.30	0.31
B -H	0.63	4957 C	0.14	0.49
H -C	0.63	4957 C	0.14	0.49
C -D	0.61	4284 C	0.30	0.31
--------Bottom Chords---------				
A -F	0.56	3949 T	0.31	0.25
F -G	0.50	3924 T	0.31	0.19
G -S1	0.50	3924 T	0.31	0.19
S1-E	0.46	3924 T	0.31	0.15
E -D	0.56	3949 T	0.31	0.25
----------Webs----------				
F -B	0.20	701 T		
B -G	0.37	1168 T		
G -H	0.15	781 C		
G -C	0.37	1168 T		
E -C	0.20	701 T		

TL Defl -0.49" in G -E L/585
LL Defl -0.25" in G -E L/999
Shear // Grain in B -H 0.47

Plates for each ply each face.
Plate - MT20 20 Ga, Gross Area
Plate - MT2H 20 Ga, Gross Area

Jt	Type	Plt Size	X	Y	JSI
A	MT20	4.0x 6.0	Ctr	Ctr	0.94
B	MT20	4.0x 8.0	Ctr	Ctr	0.95
H	MT20	2.0x 4.0	Ctr	Ctr	0.38
C	MT20	4.0x 8.0	Ctr	Ctr	0.95
D	MT20	4.0x 6.0	Ctr	Ctr	0.94
F	MT20	2.0x 4.0	Ctr	Ctr	0.46
G	MT20	4.0x 8.0	Ctr	Ctr	0.54
S1	MT20	5.0x 6.0	Ctr	0.8	0.85
E	MT20	2.0x 4.0	Ctr	Ctr	0.46

NOTES:
Trusses Manufactured by:
RIDGWAY ROOF TRUSS
Analysis Conforms To:
FBC2004
Girder Step Down Hip
Framing King Jacks
Jack Open Faced
Setback 7- 0- 0
OH Loading
Soffit psf 2.0
Design checked for 10 psf non-concurrent LL on BC.
Wind Loads - ANSI / ASCE 7-02
Truss is designed as
Components and Claddings*
for Exterior zone location.
Wind Speed: 110 mph
Mean Roof Height: 25-0
Exposure Category: B
Occupancy Factor : 1.00
Building Type: Enclosed
TC Dead Load: 4.0 psf
BC Dead Load: 6.0 psf
Max comp. force 4957 Lbs
Max tens. force 3949 Lbs
Quality Control Factor 1.25
FABRICATOR NOTES:
1. Delegated Engineer (Truss Designer)
Gary Dounson, PE 35054
Gary Dounson & Associates, Inc.
2830 NW 41st Street Suite D
Gainesville, FL 32606
(352)375-8593
CA 5201

Job	Mark	Quan	Type	Span	P1-H1	Left OH	Right OH	Engineering
070790	R2	12	JACK	70000	5	2- 9- 2	0	

Hornsby Residence, Roof, Magura

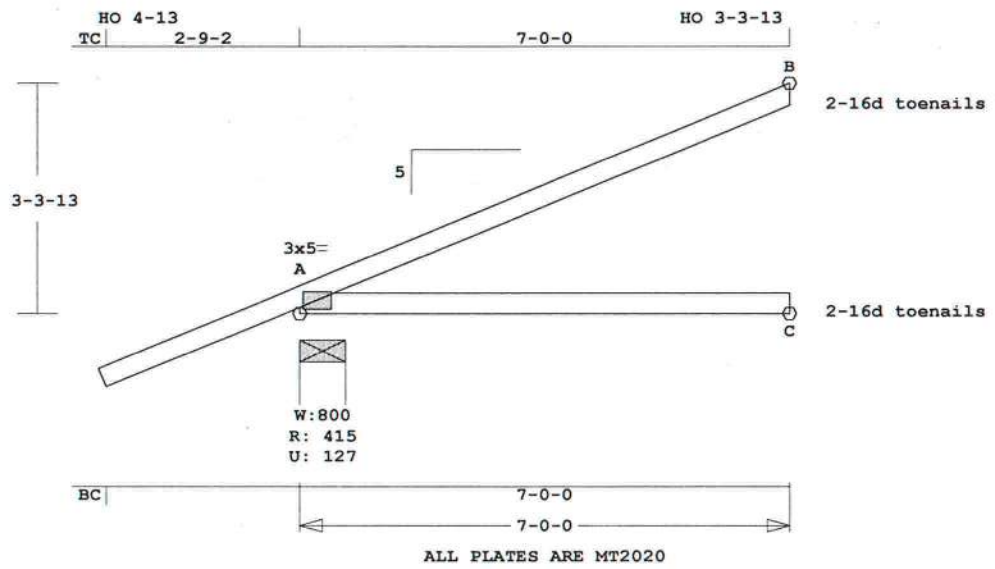

Scale: 0.375" = 1'

Robbins Engineering, Inc./Online Plus™ APPROX. TRUSS WEIGHT: 33.4 LBS

Online Plus -- Version 21.0.059
RUN DATE: 14-NOV-07

	CSI	-Size-	----Lumber----
TC	0.49	2x 4	SP-#2
BC	0.39	2x 4	SP-#2

Brace truss as follows:

	O.C.	From	To
TC	Cont.	0- 0- 0	7- 0- 0
BC	Cont.	0- 0- 0	7- 0- 0

psf-Ld	Dead	Live
TC	7.0	20.0
BC	10.0	0.0
TC+BC	17.0	20.0
Total	37.0	Spacing 24.0"

Lumber Duration Factor 1.25
Plate Duration Factor 1.25
TC Fb=1.15 Fc=1.10 Ft=1.10
BC Fb=1.10 Fc=1.10 Ft=1.10

Total Load Reactions (Lbs)

Jt	Down	Uplift	Horiz-
A	415	128 U	237 R
C	129		
B	178	136 U	70 R

Jt	Brg Size	Required
A	8.0"	1.5"
C	3.5"	1.5"
B	3.5"	1.5"

Plus 7 Wind Load Case(s)
Plus 1 UBC LL Load Case(s)

Membr	CSI	P Lbs	Axl-CSI-Bnd
----------Top Chords----------			
A -B	0.49	134 C	0.00 0.49
--------Bottom Chords---------			
A -C	0.39	0 T	0.00 0.39

TL Defl -0.17" in A -C L/427
LL Defl -0.07" in A -C L/988
Shear // Grain in A -B 0.27

Plates for each ply each face.
Plate - MT20 20 Ga, Gross Area
Plate - MT2H 20 Ga, Gross Area

Jt	Type	Plt Size	X	Y	JSI
A	MT20	3.0x 5.0	Ctr	Ctr	0.53

For proper installation of toe-nails, refer to the 2001 National Design Specification (NDS) for Wood Construction
NOTES:
Trusses Manufactured by:
RIDGWAY ROOF TRUSS
Analysis Conforms To:
FBC2004
OH Loading
Soffit psf 2.0
Design checked for 10 psf non-concurrent LL on BC.
Wind Loads - ANSI / ASCE 7-02
Truss is designed as
Components and Claddings*
for Exterior zone location.
Wind Speed: 110 mph
Mean Roof Height: 25-0
Exposure Category: B
Occupancy Factor : 1.00
Building Type: Enclosed
TC Dead Load: 4.0 psf
BC Dead Load: 6.0 psf
Max comp. force 134 Lbs
Max tens. force 42 Lbs

Quality Control Factor 1.25
FABRICATOR NOTES:
1. Delegated Engineer (Truss Designer)
Gary Dounson, PE 35054
Gary Dounson & Associates, Inc.
2830 NW 41st Street Suite D
Gainesville, FL 32606
(352)375-8593
CA 5201

Job	Mark	Quan	Type	Span	P1-H1	Left OH	Right OH	*Engineering*
070790	*R3*	3	KING	91013	3.536	3-10-14	0	

Hornsby Residence, Roof, Magura

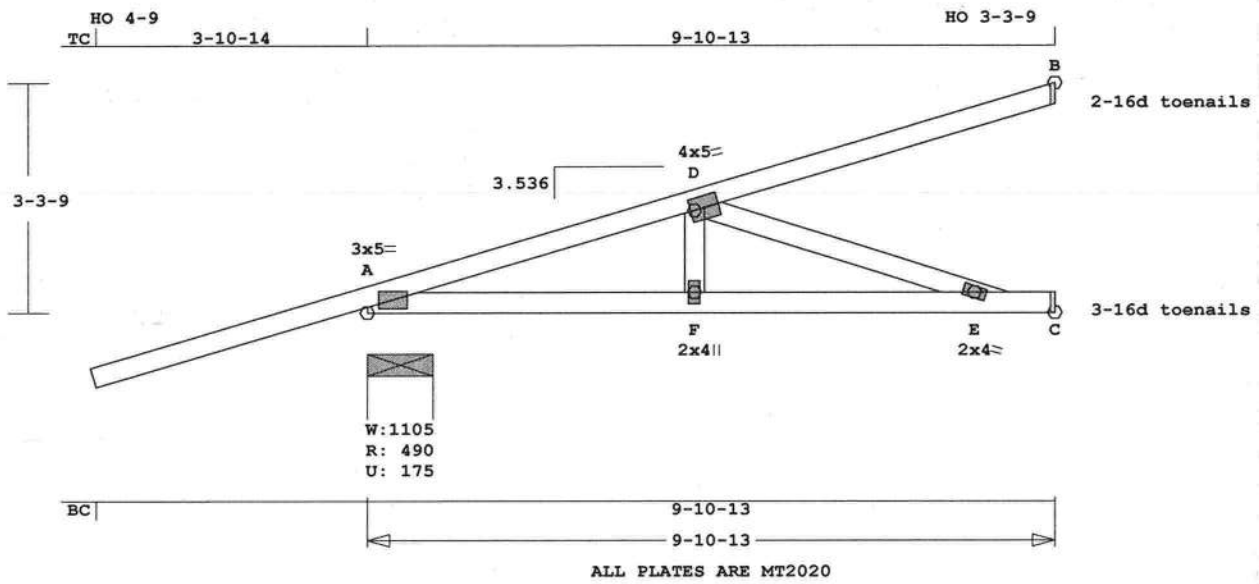

Scale: 0.375" = 1'

Robbins Engineering, Inc./Online Plus™ APPROX. TRUSS WEIGHT: 56.9 LBS

Online Plus -- Version 21.0.059
RUN DATE: 14-NOV-07

	CSI	-Size-	----Lumber----
TC	0.44	2x 4	SP-#2
BC	0.46	2x 4	SP-#2
WB	0.26	2x 4	SP-#3

Brace truss as follows:

	O.C.	From	To
TC	Cont.	0- 0- 0	9-10-13
BC	Cont.	0- 0- 0	9-10-13

psf-Ld	Dead	Live
TC	7.0	20.0
BC	10.0	0.0
TC+BC	17.0	20.0

Total 37.0 Spacing 24.0"
Lumber Duration Factor 1.25
Plate Duration Factor 1.25
TC Fb=1.00 Fc=1.00 Ft=1.00
BC Fb=1.00 Fc=1.00 Ft=1.00

Total Load Reactions (Lbs)

Jt	Down	Uplift	Horiz-
A	491	175 U	216 R
C	315	34 U	75 R
B	237	174 U	

Jt	Brg Size	Required
A	11.3"	1.5"
C	3.5"	1.5"
B	3.5"	1.5"

LC# 1 Girder Loading
Dur Fctrs - Lbr 1.25 Plt 1.25

plf -	Dead	Live*	From	To
TC V	14	40	0.0'	9.9'
BC V	20	0	0.0'	9.9'
TC V	-14	-40	0.0'	
	16	45		9.9'
BC V	-20	0	0.0'	
	22	0		9.9'

Plus 8 Wind Load Case(s)
Plus 1 UBC LL Load Case(s)

Membr	CSI	P Lbs	Axl-CSI-Bnd	
----------Top Chords----------				
A -D	0.33	726 C	0.04	0.29
D -B	0.44	108 C	0.00	0.44
--------Bottom Chords---------				
A -F	0.26	706 T	0.07	0.19
F -E	0.46	706 T	0.13	0.33
E -C	0.30	74 T	0.00	0.30
----------Webs----------				
F -D	0.06	261 T		
D -E	0.26	743 C		

TL Defl -0.12" in F -E L/838
LL Defl -0.06" in F -E L/999
Shear // Grain in E -C 0.36

Plates for each ply each face.
Plate - MT20 20 Ga, Gross Area
Plate - MT2H 20 Ga, Gross Area

Jt	Type	Plt Size	X	Y	JSI
A	MT20	3.0x 5.0	Ctr	Ctr	0.62
D	MT20	4.0x 5.0	Ctr	Ctr	0.63
F	MT20	2.0x 4.0	Ctr	Ctr	0.38
E	MT20	2.0x 4.0	Ctr	Ctr	0.46

For proper installation of toe-nails, refer to the 2001 National Design Specification (NDS) for Wood Construction
NOTES:
Trusses Manufactured by:
RIDGWAY ROOF TRUSS
Analysis Conforms To:
FBC2004
Girder King Jack
Loading TC and BC
Setback 7- 0- 0
OH Loading
Soffit psf 2.0
Excessive Left OH condition. Max allowable length is 2-11-10. Support end or provide level return.
Design checked for 10 psf non-concurrent LL on BC.
Use properly rated hangers for loads framing into girder truss.
Wind Loads - ANSI / ASCE 7-02
Truss is designed as Components and Claddings* for Exterior zone location.
Wind Speed: 110 mph
Mean Roof Height: 25-0
Exposure Category: B
Occupancy Factor : 1.00
Building Type: Enclosed
TC Dead Load: 4.0 psf
BC Dead Load: 6.0 psf
Max comp. force 743 Lbs
Max tens. force 706 Lbs
Quality Control Factor 1.25
FABRICATOR NOTES:

1. Delegated Engineer (Truss Designer)
   Gary Dounson, PE 35054
   Gary Dounson & Associates, Inc.
   2830 NW 41st Street Suite D
   Gainesville, FL 32606
   (352)375-8593
   CA 5201

Job	Mark	Quan	Type	Span	P1-H1	Left OH	Right OH	Engineering
070790	R4	12	JACK1	1111	5	2- 9- 2	0	

Hornsby Residence, Roof, Magura

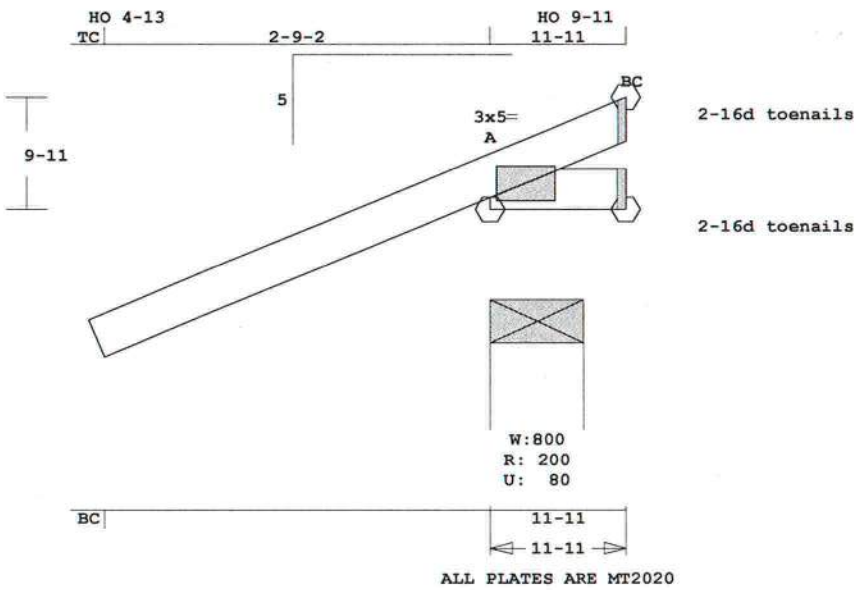

Scale: 0.750" = 1'

Robbins Engineering, Inc./Online Plus™ APPROX. TRUSS WEIGHT: 9.7 LBS

Online Plus -- Version 21.0.059
RUN DATE: 14-NOV-07

	CSI	-Size-	----Lumber----
TC	0.00	2x 4	SP-#2
BC	0.00	2x 4	SP-#2

Brace truss as follows:

	O.C.	From	To
TC	Cont.	0- 0- 0	0-11-11
BC	Cont.	0- 0- 0	0-11-11

psf-Ld	Dead	Live
TC	7.0	20.0
BC	10.0	0.0
TC+BC	17.0	20.0

Total 37.0 Spacing 24.0"
Lumber Duration Factor 1.25
Plate Duration Factor 1.25
TC Fb=1.15 Fc=1.10 Ft=1.10
BC Fb=1.10 Fc=1.10 Ft=1.10

Total Load Reactions (Lbs)

Jt	Down	Uplift	Horiz-
A	200	81 U	42 R
B	18	14 U	
C	13	1 U	9 R

Jt	Brg Size	Required
A	3.5"	1.5"
B	1.5"	1.5"
C	1.5"	1.5"

Plus 7 Wind Load Case(s)
Plus 1 UBC LL Load Case(s)

Membr	CSI	P Lbs	Axl-CSI-Bnd
----------Top Chords----------			
A -B	0.00	16 C	
--------Bottom Chords---------			
A -C	0.00	8 T	

TL Defl 0.00" in F -E L/999
LL Defl 0.00" in F -E L/999
Shear // Grain in A -B 0.03

Plates for each ply each face.
Plate - MT20 20 Ga, Gross Area
Plate - MT2H 20 Ga, Gross Area

Jt	Type	Plt Size	X	Y	JSI
A	MT20	3.0x 5.0	Ctr	Ctr	0.49

For proper installation of toe-nails, refer to the 2001 National Design Specification (NDS) for Wood Construction
NOTES:
Trusses Manufactured by:
RIDGWAY ROOF TRUSS
Analysis Conforms To:
FBC2004
OH Loading
Soffit psf 2.0
Design checked for 10 psf non-concurrent LL on BC.
Wind Loads - ANSI / ASCE 7-02
Truss is designed as
Components and Claddings*
for Exterior zone location.
Wind Speed: 110 mph
Mean Roof Height: 25-0
Exposure Category: B
Occupancy Factor : 1.00
Building Type: Enclosed
TC Dead Load: 4.0 psf
BC Dead Load: 6.0 psf
Max comp. force 16 Lbs
Max tens. force 8 Lbs

Quality Control Factor 1.25
FABRICATOR NOTES:
1. Delegated Engineer (Truss Designer)
Gary Dounson, PE 35054
Gary Dounson & Associates, Inc.
2830 NW 41st Street Suite D
Gainesville, FL 32606
(352)375-8593
CA 5201

Job	Mark	Quan	Type	Span	P1-H1	Left OH	Right OH	Engineering
070790	R5	12	JACK1	21111	5	2- 9- 2	0	

Hornsby Residence, Roof, Magura

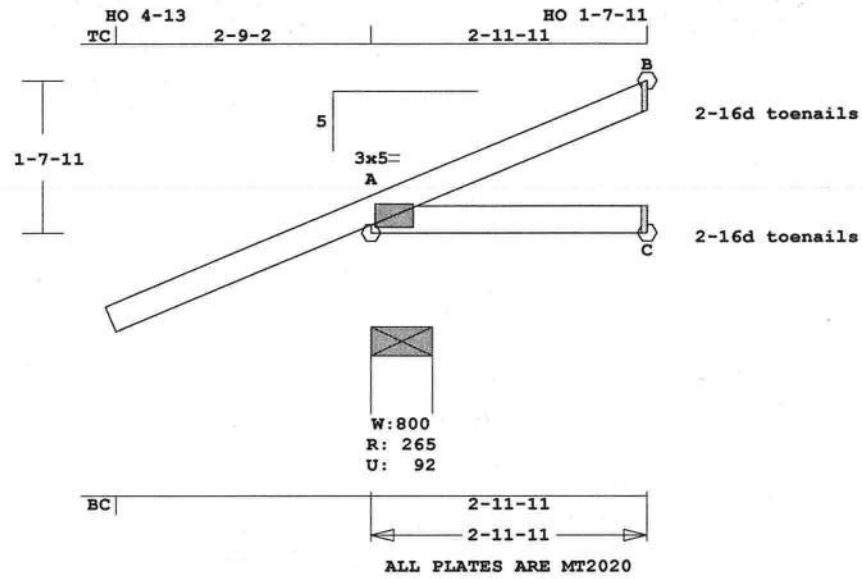

Scale: 0.500" = 1'

Robbins Engineering, Inc./Online Plus™ APPROX. TRUSS WEIGHT: 17.6 LBS

Online Plus -- Version 21.0.059
RUN DATE: 14-NOV-07

	CSI	-Size-	----Lumber----
TC	0.10	2x 4	SP-#2
BC	0.09	2x 4	SP-#2

Brace truss as follows:

	O.C.	From	To
TC	Cont.	0- 0- 0	2-11-11
BC	Cont.	0- 0- 0	2-11-11

psf-Ld	Dead	Live
TC	7.0	20.0
BC	10.0	0.0
TC+BC	17.0	20.0

Total 37.0 Spacing 24.0"
Lumber Duration Factor 1.25
Plate Duration Factor 1.25
TC Fb=1.15 Fc=1.10 Ft=1.10
BC Fb=1.10 Fc=1.10 Ft=1.10

Total Load Reactions (Lbs)

Jt	Down	Uplift	Horiz-
A	266	93 U	139 R
C	54		
B	79	62 U	30 R

Jt	Brg Size	Required
A	8.0"	1.5"
C	3.5"	1.5"
B	3.5"	1.5"

Plus 7 Wind Load Case(s)
Plus 1 UBC LL Load Case(s)

Membr	CSI	P Lbs	Axl-CSI-Bnd
----------Top Chords----------			
A -B	0.10	72 C	0.00 0.10
--------Bottom Chords---------			
A -C	0.09	0 T	0.00 0.09

TL Defl 0.00" in A -C L/999
LL Defl 0.00" in A -C L/999
Shear // Grain in A -B 0.13

Plates for each ply each face.
Plate - MT20 20 Ga, Gross Area
Plate - MT2H 20 Ga, Gross Area

Jt	Type	Plt Size	X	Y	JSI
A	MT20	3.0x 5.0	Ctr	Ctr	0.49

For proper installation of toe-nails, refer to the 2001 National Design Specification (NDS) for Wood Construction
NOTES:
Trusses Manufactured by:
RIDGWAY ROOF TRUSS
Analysis Conforms To:
FBC2004
OH Loading
Soffit psf 2.0
Design checked for 10 psf non-concurrent LL on BC.
Wind Loads - ANSI / ASCE 7-02
Truss is designed as
Components and Claddings*
for Exterior zone location.
Wind Speed: 110 mph
Mean Roof Height: 25-0
Exposure Category: B
Occupancy Factor : 1.00
Building Type: Enclosed
TC Dead Load: 4.0 psf
BC Dead Load: 6.0 psf
Max comp. force 72 Lbs
Max tens. force 17 Lbs

Quality Control Factor 1.25
FABRICATOR NOTES:
1. Delegated Engineer (Truss Designer)
Gary Dounson, PE 35054
Gary Dounson & Associates, Inc.
2830 NW 41st Street Suite D
Gainesville, FL 32606
(352)375-8593
CA 5201

Job	Mark	Quan	Type	Span	P1-H1	Left OH	Right OH	*Engineering*
070790	*R6*	13	JACK1	41111	5	2- 9- 2	0	

Hornsby Residence, Roof, Magura

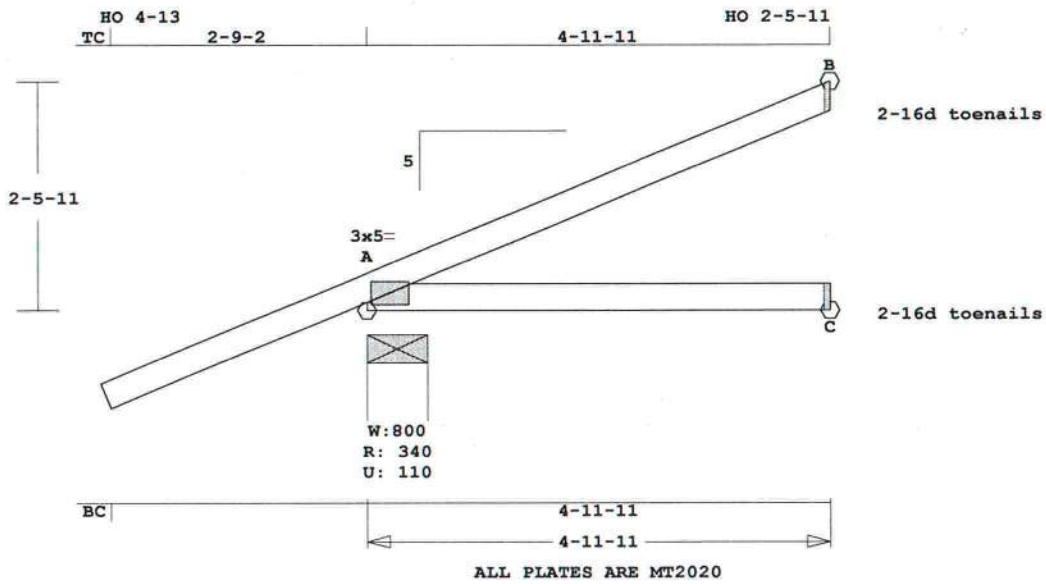

Scale: 0.500" = 1'

Robbins Engineering, Inc./Online Plus™ APPROX. TRUSS WEIGHT: 25.5 LBS

Online Plus -- Version 21.0.059
RUN DATE: 14-NOV-07

	CSI	-Size-	----Lumber----
TC	0.29	2x 4	SP-#2
BC	0.23	2x 4	SP-#2

Brace truss as follows:

	O.C.	From	To
TC	Cont.	0- 0- 0	4-11-11
BC	Cont.	0- 0- 0	4-11-11

psf-Ld	Dead	Live
TC	7.0	20.0
BC	10.0	0.0
TC+BC	17.0	20.0
Total	37.0	Spacing 24.0"

Lumber Duration Factor 1.25
Plate Duration Factor 1.25
TC Fb=1.15 Fc=1.10 Ft=1.10
BC Fb=1.10 Fc=1.10 Ft=1.10

Total Load Reactions (Lbs)

Jt	Down	Uplift	Horiz-
A	340	110 U	195 R
C	91		
B	128	99 U	50 R

Jt	Brg Size	Required
A	8.0"	1.5"
C	3.5"	1.5"
B	3.5"	1.5"

Plus 7 Wind Load Case(s)
Plus 1 UBC LL Load Case(s)

Membr	CSI	P Lbs	Axl-CSI-Bnd
----------Top Chords----------			
A -B	0.29	110 C	0.00 0.29
--------Bottom Chords---------			
A -C	0.23	0 T	0.00 0.23

TL Defl -0.04" in A -C L/999
LL Defl -0.02" in A -C L/999
Shear // Grain in A -B 0.21

Plates for each ply each face.
Plate - MT20 20 Ga, Gross Area
Plate - MT2H 20 Ga, Gross Area

Jt	Type	Plt Size	X	Y	JSI
A	MT20	3.0x 5.0	Ctr	Ctr	0.50

For proper installation of toe-nails, refer to the 2001 National Design Specification (NDS) for Wood Construction
NOTES:
Trusses Manufactured by:
RIDGWAY ROOF TRUSS
Analysis Conforms To:
FBC2004
OH Loading
Soffit psf 2.0
Design checked for 10 psf non-concurrent LL on BC.
Wind Loads - ANSI / ASCE 7-02
Truss is designed as
Components and Claddings*
for Exterior zone location.
Wind Speed: 110 mph
Mean Roof Height: 25-0
Exposure Category: B
Occupancy Factor : 1.00
Building Type: Enclosed
TC Dead Load: 4.0 psf
BC Dead Load: 6.0 psf
Max comp. force 110 Lbs
Max tens. force 30 Lbs

Quality Control Factor 1.25
FABRICATOR NOTES:
1. Delegated Engineer (Truss Designer)
Gary Dounson, PE 35054
Gary Dounson & Associates, Inc.
2830 NW 41st Street Suite D
Gainesville, FL 32606
(352)375-8593
CA 5201

Job	Mark	Quan	Type	Span	P1-H1	Left OH	Right OH	*Engineering*
070790	*R7*	1	HIPP	250400	5	2- 9- 2	2- 9- 2	

Hornsby Residence, Roof, Magura

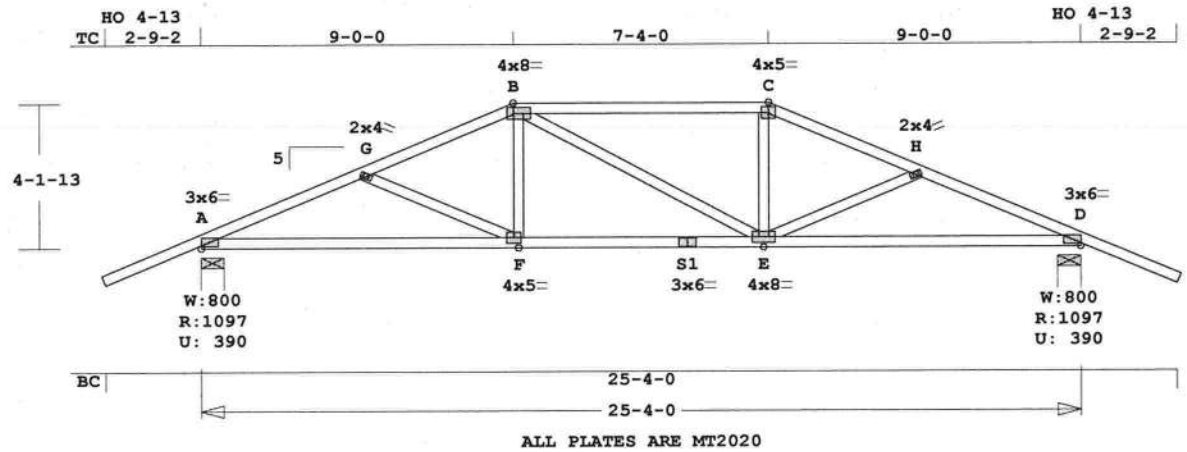

Scale: 0.188" = 1'

Robbins Engineering, Inc./Online Plus™ APPROX. TRUSS WEIGHT: 156.1 LBS

Online Plus -- Version 21.0.059
RUN DATE: 14-NOV-07

	CSI	-Size-	----Lumber----
TC	0.51	2x 4	SP-#2
BC	0.49	2x 4	SP-#2
WB	0.09	2x 4	SP-#3

Brace truss as follows:

	O.C.	From	To
TC	Cont.	0- 0- 0	25- 4- 0
BC	Cont.	0- 0- 0	25- 4- 0

psf-Ld	Dead	Live
TC	7.0	20.0
BC	10.0	0.0
TC+BC	17.0	20.0
Total	37.0	Spacing 24.0"

Lumber Duration Factor 1.25
Plate Duration Factor 1.25
TC Fb=1.15 Fc=1.10 Ft=1.10
BC Fb=1.10 Fc=1.10 Ft=1.10

Total Load Reactions (Lbs)

Jt	Down	Uplift	Horiz-
A	1097	390 U	1 R
D	1097	390 U	1 R

Jt	Brg Size	Required
A	8.0"	1.5"
D	8.0"	1.5"

Plus 9 Wind Load Case(s)
Plus 1 UBC LL Load Case(s)

Membr	CSI	P Lbs	Axl-CSI-Bnd		
----------Top Chords----------					
A -G	0.28	1799 C	0.12	0.16	
G -B	0.28	1547 C	0.01	0.27	
B -C	0.51	1438 C	0.03	0.48	
C -H	0.26	1548 C	0.01	0.25	
H -D	0.28	1804 C	0.12	0.16	
--------Bottom Chords---------					
A -F	0.48	1656 T	0.16	0.32	
F -S1	0.46	1430 T	0.14	0.32	
S1-E	0.47	1430 T	0.14	0.33	
E -D	0.49	1660 T	0.16	0.33	
----------Webs----------					
G -F	0.09	284 T			
F -B	0.09	347 T			
B -E	0.05	56 C			
E -C	0.09	348 T			
E -H	0.09	285 T			

TL Defl -0.27" in A -F L/999
LL Defl -0.13" in A -F L/999
Shear // Grain in B -C 0.24

Plates for each ply each face.
Plate - MT20 20 Ga, Gross Area
Plate - MT2H 20 Ga, Gross Area

Jt	Type	Plt Size	X	Y	JSI
A	MT20	3.0x 6.0	Ctr	Ctr	0.75
G	MT20	2.0x 4.0	Ctr	Ctr	0.38
B	MT20	4.0x 8.0	Ctr	Ctr	0.95
C	MT20	4.0x 5.0	Ctr	Ctr	0.95
H	MT20	2.0x 4.0	Ctr	Ctr	0.38
D	MT20	3.0x 6.0	Ctr	Ctr	0.75
F	MT20	4.0x 5.0	Ctr	Ctr	0.60
S1	MT20	3.0x 6.0	Ctr	Ctr	0.88
E	MT20	4.0x 8.0	Ctr	Ctr	0.57

NOTES:
Trusses Manufactured by:
RIDGWAY ROOF TRUSS
Analysis Conforms To:
FBC2004
OH Loading
Soffit psf 2.0
Design checked for 10 psf non-concurrent LL on BC.
Wind Loads - ANSI / ASCE 7-02
Truss is designed as
Components and Claddings*
for Exterior zone location.
Wind Speed: 110 mph
Mean Roof Height: 25-0

Exposure Category: B
Occupancy Factor : 1.00
Building Type: Enclosed
TC Dead Load: 4.0 psf
BC Dead Load: 6.0 psf
Max comp. force 1804 Lbs
Max tens. force 1660 Lbs
Quality Control Factor 1.25
FABRICATOR NOTES:
1. Delegated Engineer (Truss Designer)
Gary Dounson, PE 35054
Gary Dounson & Associates, Inc.
2830 NW 41st Street Suite D
Gainesville, FL 32606
(352)375-8593
CA 5201

Job	Mark	Quan	Type	Span	P1-H1	Left OH	Right OH	*Engineering*
070790	*R8*	1	HIPP	250400	5	2- 9- 2	2- 9- 2	

Hornsby Residence, Roof, Magura

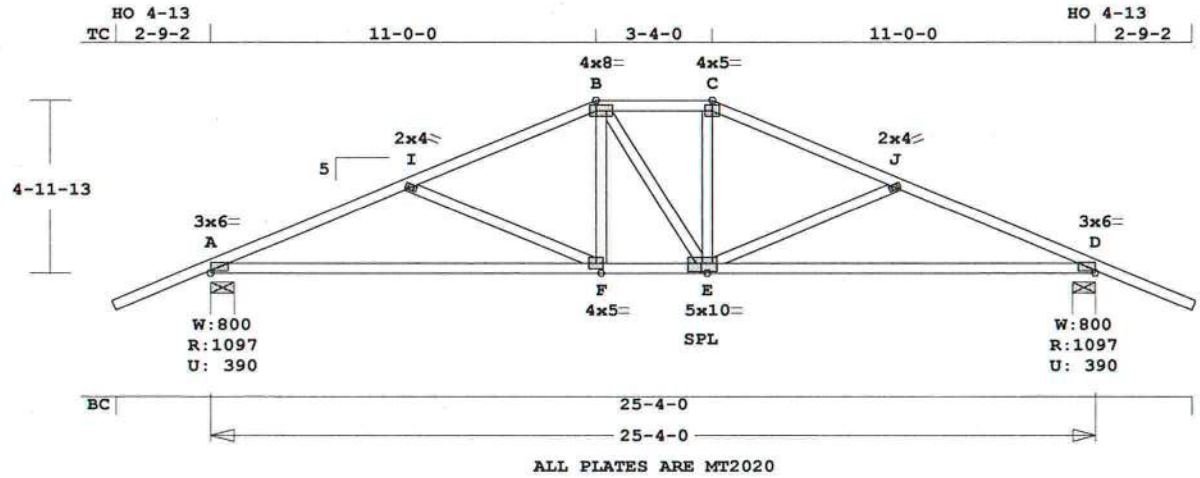

Scale: 0.188" = 1'

Robbins Engineering, Inc./Online Plus™ APPROX. TRUSS WEIGHT: 159.4 LBS

Online Plus -- Version 21.0.059
RUN DATE: 14-NOV-07

	CSI	-Size-	----Lumber----
TC	0.33	2x 4	SP-#2
BC	0.62	2x 4	SP-#2
WB	0.22	2x 4	SP-#3

Brace truss as follows:

	O.C.	From	To
TC	Cont.	0- 0- 0	25- 4- 0
BC	Cont.	0- 0- 0	25- 4- 0

psf-Ld	Dead	Live
TC	7.0	20.0
BC	10.0	0.0
TC+BC	17.0	20.0
Total	37.0	Spacing 24.0"

Lumber Duration Factor 1.25
Plate Duration Factor 1.25
TC Fb=1.15 Fc=1.10 Ft=1.10
BC Fb=1.10 Fc=1.10 Ft=1.10

Total Load Reactions (Lbs)

Jt	Down	Uplift	Horiz-
A	1097	390 U	2 R
D	1097	390 U	2 R

Jt	Brg Size	Required
A	8.0"	1.5"
D	8.0"	1.5"

Plus 9 Wind Load Case(s)
Plus 1 UBC LL Load Case(s)

Membr	CSI	P Lbs	Axl-CSI-Bnd	
----------Top Chords----------				
A -I	0.33	1756 C	0.12	0.21
I -B	0.32	1367 C	0.09	0.23
B -C	0.18	1256 C	0.09	0.09
C -J	0.32	1366 C	0.09	0.23
J -D	0.32	1757 C	0.12	0.20
--------Bottom Chords---------				
A -F	0.62	1628 T	0.15	0.47
F -E	0.60	1251 T	0.13	0.47
E -D	0.62	1629 T	0.15	0.47
----------Webs----------				
I -F	0.22	403 C		
F -B	0.09	339 T		
B -E	0.02	48 C		
E -C	0.09	334 T		
E -J	0.22	406 C		

TL Defl -0.57" in A -F L/509
LL Defl -0.28" in A -F L/999
Shear // Grain in A -F 0.23

Plates for each ply each face.
Plate - MT20 20 Ga, Gross Area
Plate - MT2H 20 Ga, Gross Area

Jt	Type	Plt Size	X	Y	JSI
A	MT20	3.0x 6.0	Ctr	Ctr	0.75
I	MT20	2.0x 4.0	Ctr	Ctr	0.38
B	MT20	4.0x 8.0	Ctr	Ctr	0.95
C	MT20	4.0x 5.0	Ctr	Ctr	0.95
J	MT20	2.0x 4.0	Ctr	Ctr	0.38
D	MT20	3.0x 6.0	Ctr	Ctr	0.75
F	MT20	4.0x 5.0	Ctr	Ctr	0.60
E	MT20	5.0x10.0	0.5	-0.5	0.88

NOTES:
Trusses Manufactured by:
RIDGWAY ROOF TRUSS
Analysis Conforms To:
FBC2004
OH Loading
Soffit psf 2.0
Design checked for 10 psf non-concurrent LL on BC.
Wind Loads - ANSI / ASCE 7-02
Truss is designed as
Components and Claddings*
for Exterior zone location.
Wind Speed: 110 mph
Mean Roof Height: 25-0

Exposure Category: B
Occupancy Factor : 1.00
Building Type: Enclosed
TC Dead Load: 4.0 psf
BC Dead Load: 6.0 psf
Max comp. force 1757 Lbs
Max tens. force 1629 Lbs
Quality Control Factor 1.25
FABRICATOR NOTES:
1. Delegated Engineer (Truss Designer)
Gary Dounson, PE 35054
Gary Dounson & Associates, Inc.
2830 NW 41st Street Suite D
Gainesville, FL 32606
(352)375-8593
CA 5201

Job	Mark	Quan	Type	Span	P1-H1	Left OH	Right OH	*Engineering*
070790	*R9*	2	TR	250400	5	2- 9- 2	2- 9- 2	

Hornsby Residence, Roof, Magura

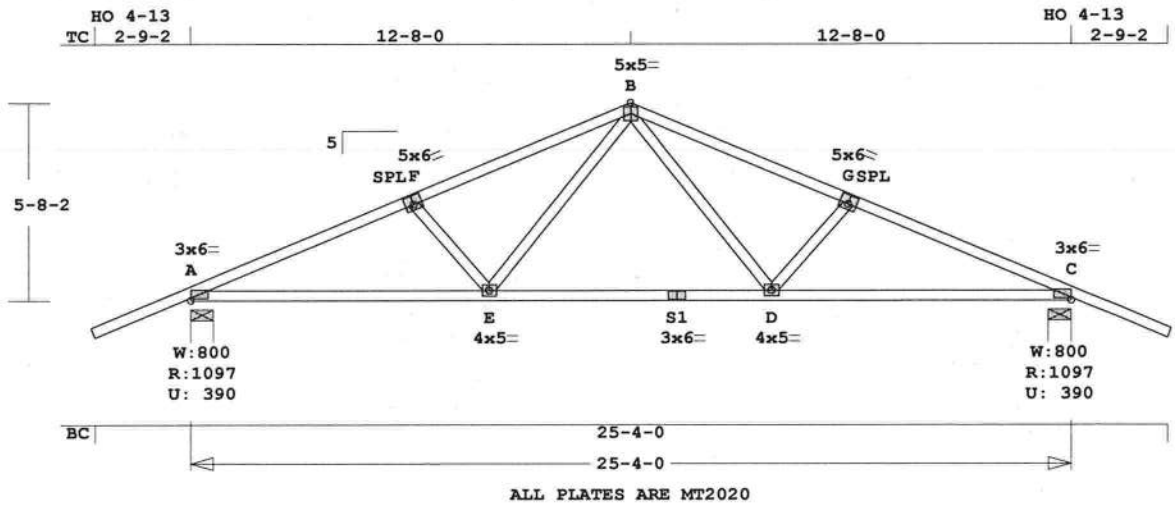

Scale: 0.188" = 1'

Robbins Engineering, Inc./Online Plus™ APPROX. TRUSS WEIGHT: 148.6 LBS

Online Plus -- Version 21.0.059
RUN DATE: 14-NOV-07

	CSI	-Size-	----Lumber----
TC	0.39	2x 4	SP-#2
BC	0.51	2x 4	SP-#2
WB	0.17	2x 4	SP-#3

Brace truss as follows:

	O.C.	From	To
TC	Cont.	0- 0- 0	25- 4- 0
BC	Cont.	0- 0- 0	25- 4- 0

psf-Ld	Dead	Live
TC	7.0	20.0
BC	10.0	0.0
TC+BC	17.0	20.0

Total 37.0 Spacing 24.0"
Lumber Duration Factor 1.25
Plate Duration Factor 1.25
TC Fb=1.15 Fc=1.10 Ft=1.10
BC Fb=1.10 Fc=1.10 Ft=1.10

Total Load Reactions (Lbs)

Jt	Down	Uplift	Horiz-
A	1097	390 U	2 R
C	1097	390 U	2 R

Jt	Brg Size	Required
A	8.0"	1.5"
C	8.0"	1.5"

Plus 7 Wind Load Case(s)
Plus 1 UBC LL Load Case(s)

Membr	CSI	P Lbs	Axl-CSI-Bnd	
----------Top Chords----------				
A -F	0.39	1758 C	0.12	0.27
F -B	0.37	1533 C	0.10	0.27
B -G	0.37	1533 C	0.10	0.27
G -C	0.39	1758 C	0.12	0.27
--------Bottom Chords---------				
A -E	0.51	1627 T	0.16	0.35
E -S1	0.45	1077 T	0.10	0.35
S1-D	0.45	1077 T	0.10	0.35
D -C	0.51	1627 T	0.16	0.35
----------Webs----------				
F -E	0.08	345 T		
E -B	0.17	539 T		
B -D	0.17	539 T		
D -G	0.08	345 T		

TL Defl -0.20" in D -C L/999
LL Defl -0.09" in D -C L/999
Shear // Grain in F -B 0.21

Plates for each ply each face.
Plate - MT20 20 Ga, Gross Area
Plate - MT2H 20 Ga, Gross Area

Jt	Type	Plt Size	X	Y	JSI
A	MT20	3.0x 6.0	Ctr	Ctr	0.75
F	MT20	5.0x 6.0	-0.2	0.5	0.86
B	MT20	5.0x 5.0	Ctr	Ctr	0.58
G	MT20	5.0x 6.0	0.2	0.5	0.86
C	MT20	3.0x 6.0	Ctr	Ctr	0.75
E	MT20	4.0x 5.0	Ctr	Ctr	0.50
S1	MT20	3.0x 6.0	Ctr	Ctr	0.88
D	MT20	4.0x 5.0	Ctr	Ctr	0.50

NOTES:
Trusses Manufactured by:
RIDGWAY ROOF TRUSS
Analysis Conforms To:
FBC2004
OH Loading
Soffit psf 2.0
Design checked for 10 psf non-concurrent LL on BC.
Wind Loads - ANSI / ASCE 7-02
Truss is designed as
Components and Claddings*
for Exterior zone location.
Wind Speed: 110 mph

Mean Roof Height: 25-0
Exposure Category: B
Occupancy Factor : 1.00
Building Type: Enclosed
TC Dead Load: 4.0 psf
BC Dead Load: 6.0 psf
Max comp. force 1758 Lbs
Max tens. force 1627 Lbs
Quality Control Factor 1.25
FABRICATOR NOTES:
1. Delegated Engineer (Truss Designer)
Gary Dounson, PE 35054
Gary Dounson & Associates, Inc.
2830 NW 41st Street Suite D
Gainesville, FL 32606
(352)375-8593
CA 5201

Job	Mark	Quan	Type	Span	P1-H1	Left OH	Right OH	*Engineering*
070790	*R10*	1*2P	TR	250400	5	0	0	

Hornsby Residence, Roof, Magura

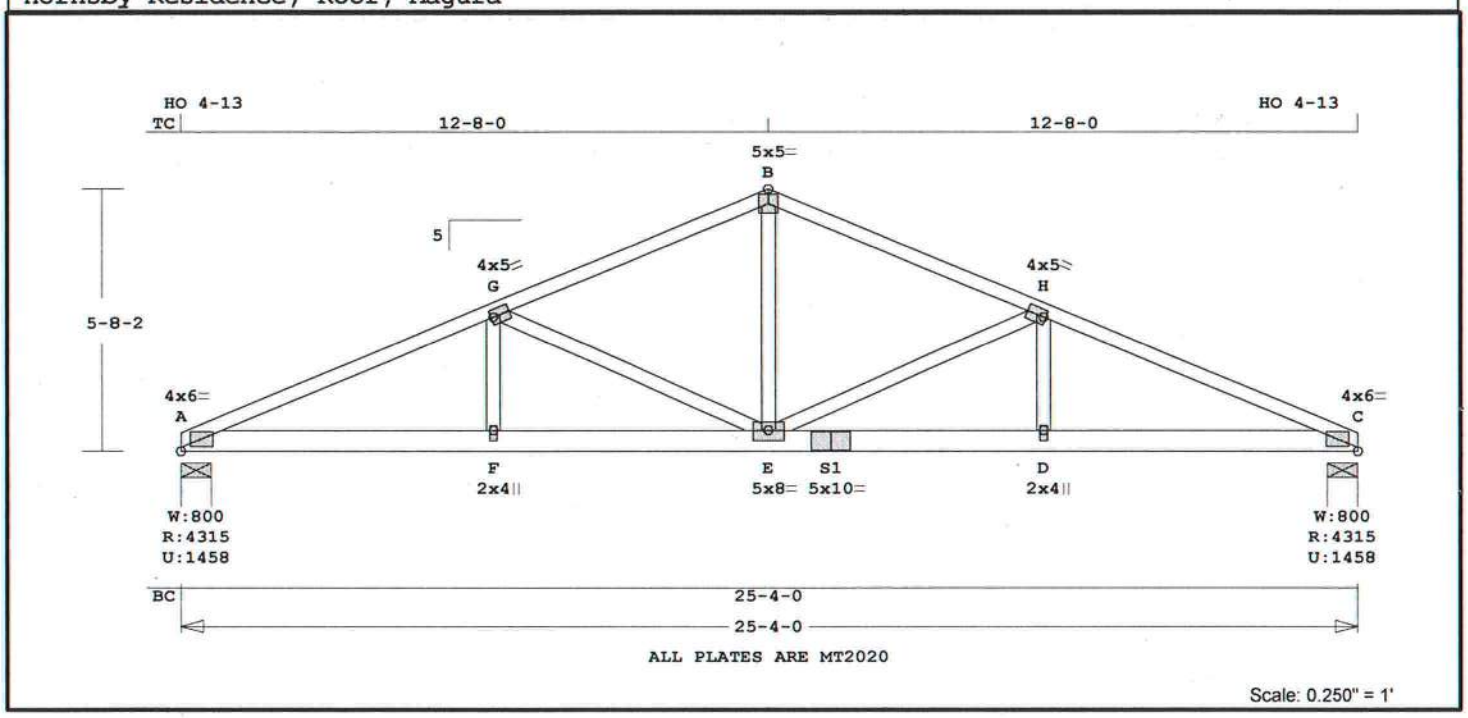

Robbins Engineering, Inc./Online Plus™ APPROX. TRUSS WEIGHT: 166.0 LBS

Online Plus -- Version 21.0.059
RUN DATE: 14-NOV-07
****
* 2-Ply Truss *
****

	CSI	-Size-	----Lumber----
TC	0.60	2x 4	SP-#2
BC	0.98	2x 6	SP-#2
WB	0.64	2x 4	SP-#3

Brace truss as follows:

	O.C.	From	To
TC	Cont.	0- 0- 0	25- 4- 0
BC	Cont.	0- 0- 0	25- 4- 0

psf-Ld	Dead	Live
TC	7.0	20.0
BC	10.0	0.0
TC+BC	17.0	20.0

Total 37.0 Spacing 24.0"
Lumber Duration Factor 1.25
Plate Duration Factor 1.25
TC Fb=1.00 Fc=1.00 Ft=1.00
BC Fb=1.00 Fc=1.00 Ft=1.00

Total Load Reactions (Lbs)

Jt	Down	Uplift	Horiz-
A	4316	1458 U	1540 R
C	4316	1458 U	1540 R

Jt	Brg Size	Required
A	8.0"	2.5"
C	8.0"	2.5"

LC# 1 Girder Loading
Dur Fctrs - Lbr 1.25 Plt 1.25

plf -	Dead	Live*	From	To
TC V	14	40	0.0'	25.3'
BC V	143	144	0.0'	25.3'

Plus 7 Wind Load Case(s)
Plus 2 Drag Load Case(s)
Plus 1 UBC LL Load Case(s)

Membr	CSI	P Lbs	Axl-CSI-Bnd
----------Top Chords----------			
A -G	0.60	8263 C	0.27 0.33
G -B	0.35	5662 C	0.21 0.14
B -H	0.35	5662 C	0.21 0.14
H -C	0.60	8263 C	0.27 0.33
--------Bottom Chords---------			
A -F	0.98	7639 T	0.51 0.47
F -E	0.91	7639 T	0.51 0.40
E -S1	0.91	7639 T	0.51 0.40
S1-D	0.89	7639 T	0.51 0.38
D -C	0.98	7639 T	0.51 0.47
----------Webs----------			
F -G	0.29	1819 T	
G -E	0.28	2679 C	
E -B	0.64	4033 T	
E -H	0.28	2679 C	
D -H	0.29	1819 T	

TL Defl -0.30" in E -D L/965
LL Defl -0.16" in E -D L/999
Shear // Grain in A -F 0.40

Plates for each ply each face.
Plate - MT20 20 Ga, Gross Area
Plate - MT2H 20 Ga, Gross Area

Jt	Type	Plt Size	X	Y	JSI
A	MT20	4.0x 6.0	Ctr	Ctr	0.91
G	MT20	4.0x 5.0	Ctr	Ctr	0.65
B	MT20	5.0x 5.0	Ctr	Ctr	0.65
H	MT20	4.0x 5.0	Ctr	Ctr	0.65
C	MT20	4.0x 6.0	Ctr	Ctr	0.91
F	MT20	2.0x 4.0	Ctr	-0.8	0.60
E	MT20	5.0x 8.0	Ctr	-0.3	0.65
S1	MT20	5.0x10.0	Ctr	Ctr	0.82
D	MT20	2.0x 4.0	Ctr	-0.8	0.60

NOTES:
Trusses Manufactured by:
RIDGWAY ROOF TRUSS
Analysis Conforms To:
FBC2004
Girder Common
Loading BC
Span 16- 5- 0
2 COMPLETE TRUSSES REQUIRED.
Fasten together in staggered pattern. (1/2" bolts -OR- SDS3 screws -OR- 10d nails as each layer is applied.)

	----Spacing (In)----			
	Rows	Nails	Screws	Bolts
TC	1	12	24	0
BC	2	12	24	0
WB	1	8	8	

Plus clusters of nails where shown.
Designed for shear loads (plf)
TC 60.8 BC 0.0
Design checked for 10 psf non-concurrent LL on BC.
Use properly rated hangers for loads framing into girder truss.
Wind Loads - ANSI / ASCE 7-02
Truss is designed as Components and Claddings* for Exterior zone location.
Wind Speed: 110 mph
Mean Roof Height: 25-0
Exposure Category: B
Occupancy Factor : 1.00
Building Type: Enclosed
TC Dead Load: 4.0 psf
BC Dead Load: 6.0 psf
Max comp. force 8263 Lbs
Max tens. force 7639 Lbs
Quality Control Factor 1.25
FABRICATOR NOTES:
1. Delegated Engineer (Truss Designer)
Gary Dounson, PE 35054
Gary Dounson & Associates, Inc.
2830 NW 41st Street Suite D
Gainesville, FL 32606
(352)375-8593
CA 5201

Job	Mark	Quan	Type	Span	P1-H1	Left OH	Right OH	Engineering
070790	R11	1	HIPP	250400	5	2- 9- 2	0	

Hornsby Residence, Roof, Magura

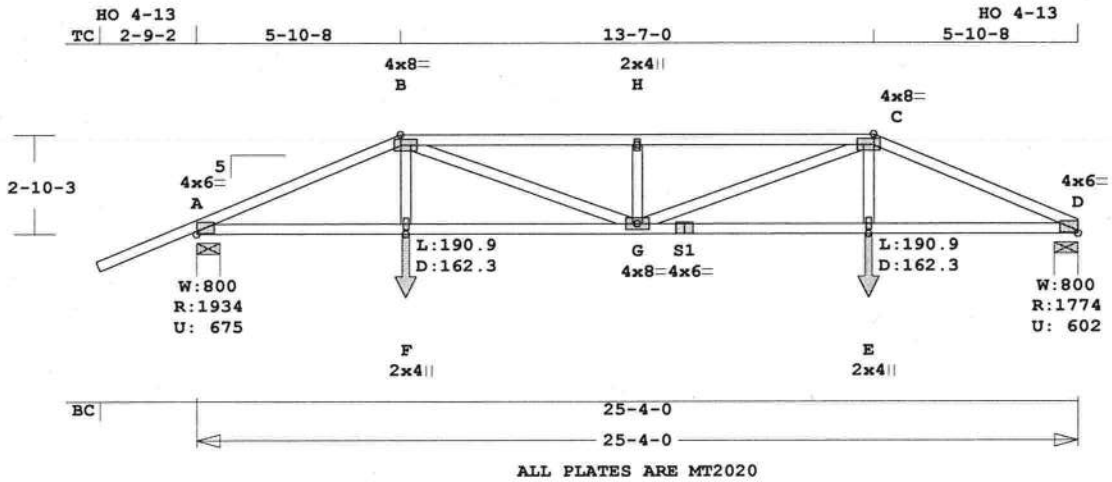

Scale: 0.188" = 1'

Robbins Engineering, Inc./Online Plus™ APPROX. TRUSS WEIGHT: 142.0 LBS

Online Plus -- Version 21.0.059
RUN DATE: 14-NOV-07

	CSI	-Size-	----Lumber----
TC	0.78	2x 4	SP-2400
--	0.61	2x 4	SP-#2
	A -B	C -D	
BC	0.53	2x 4	SP-2400
WB	0.52	2x 4	SP-#3

Brace truss as follows:

	O.C.	From	To
TC	Cont.	0- 0- 0	25- 4- 0
BC	Cont.	0- 0- 0	25- 4- 0

psf-Ld	Dead	Live
TC	7.0	20.0
BC	10.0	0.0
TC+BC	17.0	20.0

Total 37.0 Spacing 24.0"
Lumber Duration Factor 1.25
Plate Duration Factor 1.25
TC Fb=1.00 Fc=1.00 Ft=1.00
BC Fb=1.00 Fc=1.00 Ft=1.00

Total Load Reactions (Lbs)

Jt	Down	Uplift	Horiz-
A	1935	676 U	1 R
D	1775	602 U	1 R

Jt	Brg Size	Required
A	8.0"	1.6"
D	8.0"	1.5"

LC# 1 Girder Loading
Dur Fctrs - Lbr 1.25 Plt 1.25

plf -	Dead	Live*	From	To
TC V	14	40	0.0'	25.3'
BC V	20	0	0.0'	25.3'
TC V	14	39	5.9'	19.5'
BC V	19	0	6.0'	19.3'
BC V	162	191	6.0'	CL-LB
BC V	162	191	19.3'	CL-LB

Plus 9 Wind Load Case(s)
Plus 1 UBC LL Load Case(s)

Membr	CSI	P Lbs	Axl-CSI-Bnd		
----------Top Chords----------					
A -B	0.61	3858 C	0.20	0.41	
B -H	0.78	5056 C	0.24	0.54	
H -C	0.78	5056 C	0.24	0.54	
C -D	0.61	3858 C	0.20	0.41	
--------Bottom Chords---------					
A -F	0.53	3556 T	0.28	0.25	
F -G	0.53	3531 T	0.17	0.36	
G -S1	0.53	3531 T	0.17	0.36	
S1-E	0.46	3531 T	0.27	0.19	
E -D	0.53	3556 T	0.28	0.25	
----------Webs----------					
F -B	0.15	576 T			
B -G	0.52	1623 T			
G -H	0.15	801 C			
G -C	0.52	1623 T			
E -C	0.15	576 T			

TL Defl -0.55" in G -E L/521
LL Defl -0.27" in G -E L/999
Shear // Grain in B -H 0.48

Plates for each ply each face.
Plate - MT20 20 Ga, Gross Area
Plate - MT2H 20 Ga, Gross Area

Jt	Type	Plt Size	X	Y	JSI
A	MT20	4.0x 6.0	Ctr	Ctr	0.85
B	MT20	4.0x 8.0	Ctr	Ctr	0.95
H	MT20	2.0x 4.0	Ctr	Ctr	0.38
C	MT20	4.0x 8.0	Ctr	Ctr	0.95
D	MT20	4.0x 6.0	Ctr	Ctr	0.85
F	MT20	2.0x 4.0	Ctr	Ctr	0.38
G	MT20	4.0x 8.0	Ctr	Ctr	0.73
S1	MT20	4.0x 6.0	Ctr	0.2	0.81
E	MT20	2.0x 4.0	Ctr	Ctr	0.38

NOTES:
Trusses Manufactured by:
RIDGWAY ROOF TRUSS
Analysis Conforms To:
FBC2004
Girder Step Down Hip
Framing King Jacks
Jack Open Faced
Setback 5-10- 8
OH Loading
Soffit psf 2.0
Design checked for 10 psf non-concurrent LL on BC.
Wind Loads - ANSI / ASCE 7-02
Truss is designed as
Components and Claddings*
for Exterior zone location.
Wind Speed: 110 mph
Mean Roof Height: 25-0
Exposure Category: B
Occupancy Factor : 1.00
Building Type: Enclosed
TC Dead Load: 4.0 psf
BC Dead Load: 6.0 psf
Max comp. force 5056 Lbs
Max tens. force 3556 Lbs
Quality Control Factor 1.25
FABRICATOR NOTES:
1. Delegated Engineer (Truss Designer)
Gary Dounson, PE 35054
Gary Dounson & Associates, Inc.
2830 NW 41st Street Suite D
Gainesville, FL 32606
(352)375-8593
CA 5201

Job	Mark	Quan	Type	Span	P1-H1	Left OH	Right OH	*Engineering*
070790	*R12*	4	JACK	51008	5	2- 9- 2	0	

Hornsby Residence, Roof, Magura

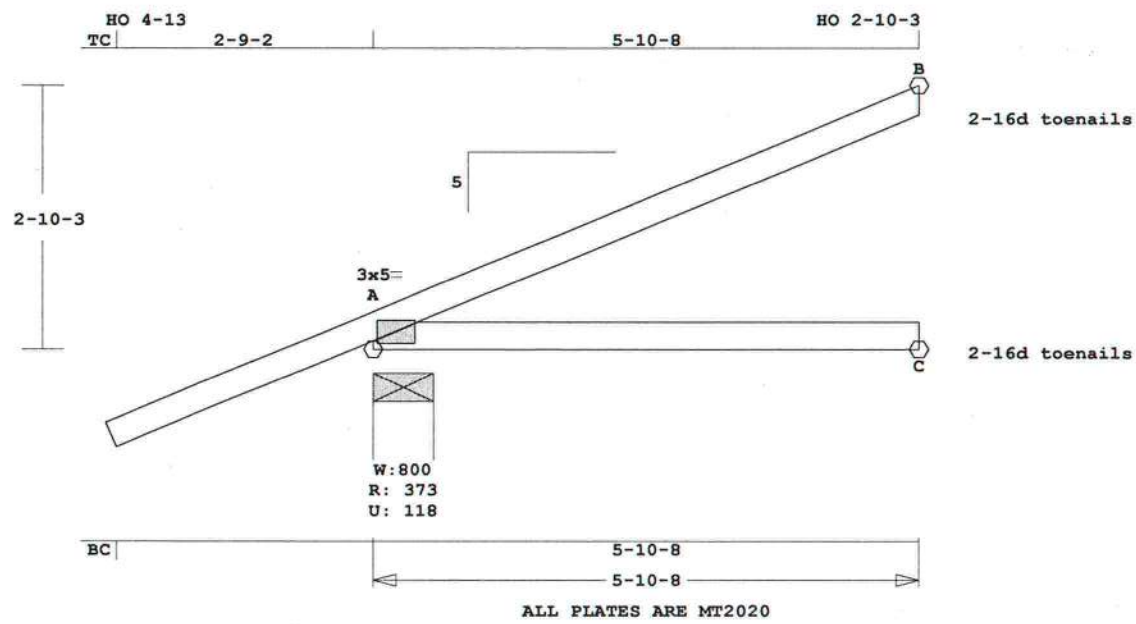

Scale: 0.500" = 1'

Robbins Engineering, Inc./Online Plus™ APPROX. TRUSS WEIGHT: 29.0 LBS

Online Plus -- Version 21.0.059
RUN DATE: 14-NOV-07

	CSI	-Size-	----Lumber----
TC	0.39	2x 4	SP-#2
BC	0.30	2x 4	SP-#2

Brace truss as follows:

	O.C.	From	To
TC	Cont.	0- 0- 0	5-10- 8
BC	Cont.	0- 0- 0	5-10- 8

psf-Ld	Dead	Live
TC	7.0	20.0
BC	10.0	0.0
TC+BC	17.0	20.0
Total	37.0	Spacing 24.0"

Lumber Duration Factor 1.25
Plate Duration Factor 1.25
TC Fb=1.15 Fc=1.10 Ft=1.10
BC Fb=1.10 Fc=1.10 Ft=1.10

Total Load Reactions (Lbs)

Jt	Down	Uplift	Horiz-
A	374	118 U	216 R
C	108		
B	150	115 U	59 R

Jt	Brg Size	Required
A	8.0"	1.5"
C	3.5"	1.5"
B	3.5"	1.5"

Plus 7 Wind Load Case(s)
Plus 1 UBC LL Load Case(s)

Membr	CSI	P Lbs	Axl-CSI-Bnd
----------Top Chords----------			
A -B	0.39	123 C	0.00 0.39
--------Bottom Chords---------			
A -C	0.30	0 T	0.00 0.30

TL Defl -0.08" in A -C L/728
LL Defl -0.04" in A -C L/999
Shear // Grain in A -B 0.24

Plates for each ply each face.
Plate - MT20 20 Ga, Gross Area
Plate - MT2H 20 Ga, Gross Area

Jt	Type	Plt Size	X	Y	JSI
A	MT20	3.0x 5.0	Ctr	Ctr	0.51

For proper installation of toe-nails, refer to the 2001 National Design Specification (NDS) for Wood Construction
NOTES:
Trusses Manufactured by:
RIDGWAY ROOF TRUSS
Analysis Conforms To:
FBC2004
OH Loading
Soffit psf 2.0
Design checked for 10 psf non-concurrent LL on BC.
Wind Loads - ANSI / ASCE 7-02
Truss is designed as
Components and Claddings*
for Exterior zone location.
Wind Speed: 110 mph
Mean Roof Height: 25-0
Exposure Category: B
Occupancy Factor : 1.00
Building Type: Enclosed
TC Dead Load: 4.0 psf
BC Dead Load: 6.0 psf
Max comp. force 123 Lbs
Max tens. force 35 Lbs

Quality Control Factor 1.25
FABRICATOR NOTES:
1. Delegated Engineer (Truss Designer)
Gary Dounson, PE 35054
Gary Dounson & Associates, Inc.
2830 NW 41st Street Suite D
Gainesville, FL 32606
(352)375-8593
CA 5201

Job	Mark	Quan	Type	Span	P1-H1	Left OH	Right OH	*Engineering*
070790	*R13*	4	JACK	51008	5	0	0	

Hornsby Residence, Roof, Magura

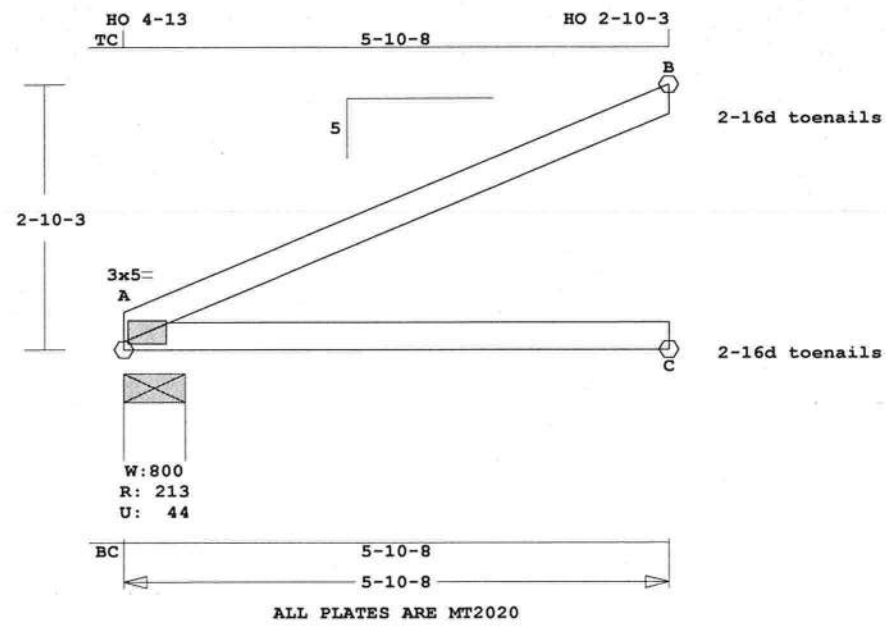

Scale: 0.500" = 1'

Robbins Engineering, Inc./Online Plus™ APPROX. TRUSS WEIGHT: 23.3 LBS

Online Plus -- Version 21.0.059
RUN DATE: 14-NOV-07

	CSI	-Size-	----Lumber----
TC	0.39	2x 4	SP-#2
BC	0.30	2x 4	SP-#2

Brace truss as follows:

	O.C.	From	To
TC	Cont.	0- 0- 0	5-10- 8
BC	Cont.	0- 0- 0	5-10- 8

psf-Ld	Dead	Live
TC	7.0	20.0
BC	10.0	0.0
TC+BC	17.0	20.0

Total 37.0 Spacing 24.0"
Lumber Duration Factor 1.25
Plate Duration Factor 1.25
TC Fb=1.15 Fc=1.10 Ft=1.10
BC Fb=1.10 Fc=1.10 Ft=1.10

Total Load Reactions (Lbs)

Jt	Down	Uplift	Horiz-
A	213	44 U	216 R
C	108		
B	150	115 U	59 R

Jt	Brg Size	Required
A	8.0"	1.5"
C	3.5"	1.5"
B	3.5"	1.5"

Plus 7 Wind Load Case(s)
Plus 1 UBC LL Load Case(s)

Membr	CSI	P Lbs	Axl-CSI-Bnd
----------Top Chords----------			
A -B	0.39	123 C	0.00 0.39
--------Bottom Chords---------			
A -C	0.30	0 T	0.00 0.30

TL Defl -0.08" in A -C L/728
LL Defl -0.04" in A -C L/999
Shear // Grain in A -B 0.24

Plates for each ply each face.
Plate - MT20 20 Ga, Gross Area
Plate - MT2H 20 Ga, Gross Area

Jt	Type	Plt Size	X	Y	JSI
A	MT20	3.0x 5.0	Ctr	Ctr	0.51

For proper installation of toe-nails, refer to the 2001 National Design Specification (NDS) for Wood Construction
NOTES:
Trusses Manufactured by:
RIDGWAY ROOF TRUSS
Analysis Conforms To:
FBC2004
Design checked for 10 psf non-concurrent LL on BC.
Wind Loads - ANSI / ASCE 7-02
Truss is designed as
Components and Claddings*
for Exterior zone location.
Wind Speed: 110 mph
Mean Roof Height: 25-0
Exposure Category: B
Occupancy Factor : 1.00
Building Type: Enclosed
TC Dead Load: 4.0 psf
BC Dead Load: 6.0 psf
Max comp. force 123 Lbs
Max tens. force 35 Lbs
Quality Control Factor 1.25
FABRICATOR NOTES:

1. Delegated Engineer (Truss Designer)
Gary Dounson, PE 35054
Gary Dounson & Associates, Inc.
2830 NW 41st Street Suite D
Gainesville, FL 32606
(352)375-8593
CA 5201

Job	Mark	Quan	Type	Span	P1-H1	Left OH	Right OH	*Engineering*
070790	*R14*	2	KING	80311	3.536	3-10-14	0	

Hornsby Residence, Roof, Magura

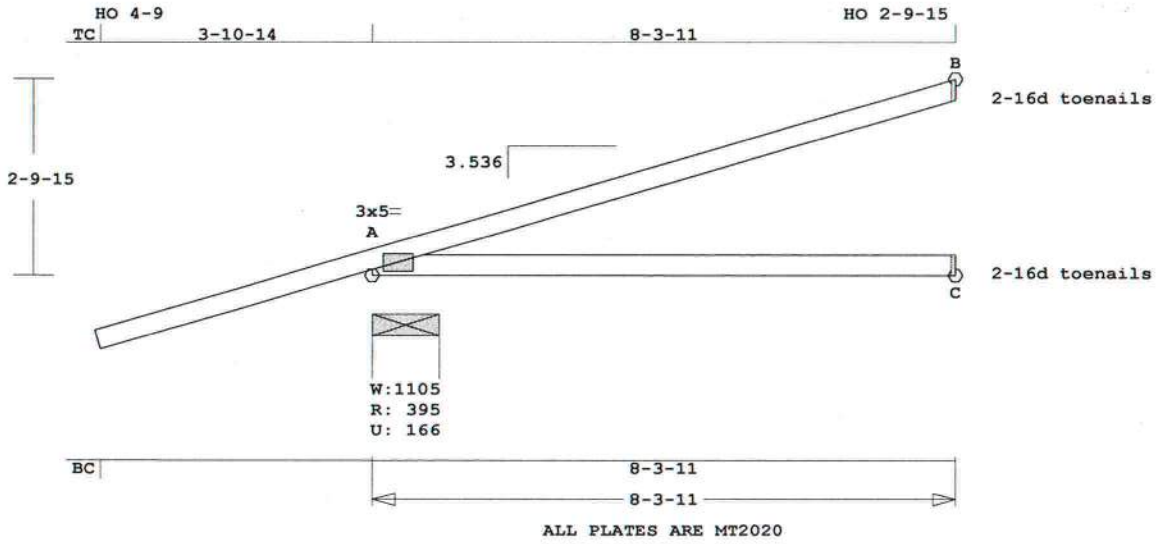

Scale: 0.375" = 1'

Robbins Engineering, Inc./Online Plus™ APPROX. TRUSS WEIGHT: 39.9 LBS

Online Plus -- Version 21.0.059
RUN DATE: 14-NOV-07

	CSI	-Size-	----Lumber----
TC	0.65	2x 4	SP-#2
BC	0.42	2x 4	SP-#2

Brace truss as follows:

	O.C.	From	To
TC	Cont.	0- 0- 0	8- 3-11
BC	Cont.	0- 0- 0	8- 3-11

psf-Ld	Dead	Live
TC	7.0	20.0
BC	10.0	0.0
TC+BC	17.0	20.0

Total 37.0 Spacing 24.0"
Lumber Duration Factor 1.25
Plate Duration Factor 1.25
TC Fb=1.00 Fc=1.00 Ft=1.00
BC Fb=1.00 Fc=1.00 Ft=1.00

Total Load Reactions (Lbs)

Jt	Down	Uplift	Horiz-
A	395	167 U	159 R
C	181		
B	250	178 U	51 R

Jt	Brg Size	Required
A	11.3"	1.5"
C	3.5"	1.5"
B	3.5"	1.5"

LC# 1 Girder Loading
Dur Fctrs - Lbr 1.25 Plt 1.25

plf -	Dead	Live*	From	To
TC V	14	40	0.0'	8.3'
BC V	20	0	0.0'	8.3'
TC V	-14	-40	0.0'	
	10	29		8.3'
BC V	-20	0	0.0'	
	14	0		8.3'

Plus 8 Wind Load Case(s)
Plus 1 UBC LL Load Case(s)

Membr	CSI	P Lbs	Axl-CSI-Bnd
----------Top Chords----------			
A -B	0.65	114 C	0.00 0.65
--------Bottom Chords---------			
A -C	0.42	0 T	0.00 0.42

TL Defl -0.30" in A -C L/285
LL Defl -0.13" in A -C L/654
Shear // Grain in A -B 0.32

Plates for each ply each face.
Plate - MT20 20 Ga, Gross Area
Plate - MT2H 20 Ga, Gross Area

Jt	Type	Plt Size	X	Y	JSI
A	MT20	3.0x 5.0	Ctr	Ctr	0.60

For proper installation of toe-nails, refer to the 2001 National Design Specification (NDS) for Wood Construction
NOTES:
Trusses Manufactured by:
RIDGWAY ROOF TRUSS
Analysis Conforms To:
FBC2004
Girder King Jack
Loading TC and BC
Setback 5-10- 8
OH Loading
Soffit psf 2.0
Excessive Left OH condition.
Max allowable length is 2-10-14. Support end or provide level return.

Design checked for 10 psf non-concurrent LL on BC.
Use properly rated hangers for loads framing into girder truss.
Wind Loads - ANSI / ASCE 7-02
Truss is designed as Components and Claddings* for Exterior zone location.
Wind Speed: 110 mph
Mean Roof Height: 25-0
Exposure Category: B
Occupancy Factor : 1.00
Building Type: Enclosed
TC Dead Load: 4.0 psf
BC Dead Load: 6.0 psf
Max comp. force 114 Lbs
Max tens. force 30 Lbs
Quality Control Factor 1.25
FABRICATOR NOTES:

1. Delegated Engineer (Truss Designer)
   Gary Dounson, PE 35054
   Gary Dounson & Associates, Inc.
   2830 NW 41st Street Suite D
   Gainesville, FL 32606
   (352)375-8593
   CA 5201

Job	Mark	Quan	Type	Span	P1-H1	Left OH	Right OH	*Engineering*
070790	*R15*	1	HIPP	250400	5	2- 9- 2	0	

Hornsby Residence, Roof, Magura

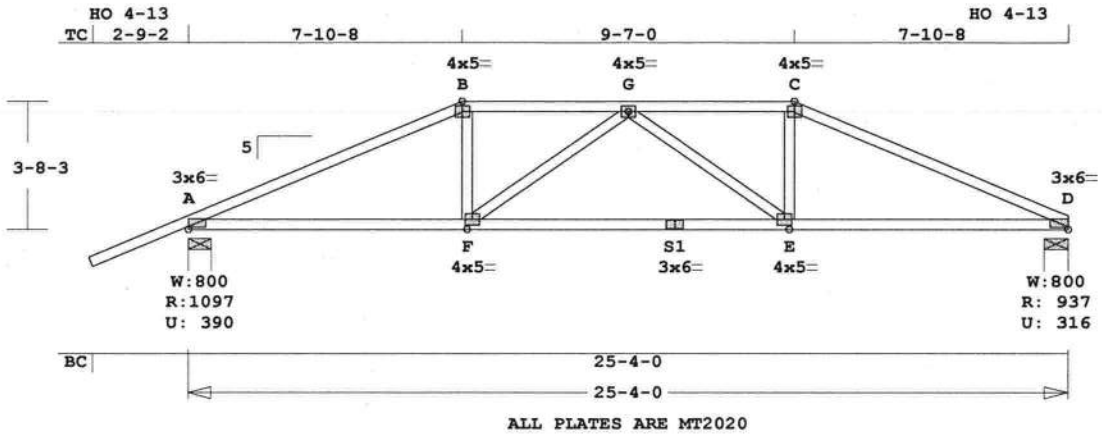

Scale: 0.188" = 1'

Robbins Engineering, Inc./Online Plus™ APPROX. TRUSS WEIGHT: 136.6 LBS

Online Plus -- Version 21.0.059
RUN DATE: 20-DEC-07

	CSI	-Size-	----Lumber----
TC	0.52	2x 4	SP-#2
BC	0.57	2x 4	SP-#2
WB	0.10	2x 4	SP-#3

Brace truss as follows:

	O.C.	From	To
TC	Cont.	0- 0- 0	25- 4- 0
BC	Cont.	0- 0- 0	25- 4- 0

psf-Ld	Dead	Live
TC	7.0	20.0
BC	10.0	0.0
TC+BC	17.0	20.0

Total 37.0 Spacing 24.0"
Lumber Duration Factor 1.25
Plate Duration Factor 1.25
TC Fb=1.15 Fc=1.10 Ft=1.10
BC Fb=1.10 Fc=1.10 Ft=1.10

Total Load Reactions (Lbs)

Jt	Down	Uplift	Horiz-
A	1097	390 U	1 R
D	937	317 U	1 R

Jt	Brg Size	Required
A	8.0"	1.5"
D	8.0"	1.5"

Plus 9 Wind Load Case(s)
Plus 1 UBC LL Load Case(s)

Membr	CSI	P Lbs		Axl-CSI-Bnd	
----------Top Chords----------					
A -B	0.52	1679	C	0.06	0.46
B -G	0.29	1547	C	0.10	0.19
G -C	0.29	1547	C	0.10	0.19
C -D	0.52	1679	C	0.06	0.46
--------Bottom Chords---------					
A -F	0.57	1547	T	0.16	0.41
F -S1	0.57	1710	T	0.16	0.41
S1-E	0.57	1710	T	0.16	0.41
E -D	0.57	1547	T	0.16	0.41
----------Webs----------					
F -B	0.10	390	T		
F -G	0.09	201	C		
G -E	0.09	201	C		
E -C	0.10	390	T		

TL Defl -0.32" in F -E L/907
LL Defl -0.15" in F -E L/999
Shear // Grain in A -B 0.26

Plates for each ply each face.
Plate - MT20 20 Ga, Gross Area
Plate - MT2H 20 Ga, Gross Area

Jt	Type	Plt Size	X	Y	JSI
A	MT20	3.0x 6.0	Ctr	Ctr	0.75
B	MT20	4.0x 5.0	Ctr	Ctr	0.95
G	MT20	4.0x 5.0	Ctr	Ctr	0.49
C	MT20	4.0x 5.0	Ctr	Ctr	0.95
D	MT20	3.0x 6.0	Ctr	Ctr	0.75
F	MT20	4.0x 5.0	Ctr	Ctr	0.60
S1	MT20	3.0x 6.0	Ctr	Ctr	0.89
E	MT20	4.0x 5.0	Ctr	Ctr	0.60

NOTES:
Trusses Manufactured by:
RIDGWAY ROOF TRUSS
Analysis Conforms To:
FBC2004
OH Loading
Soffit psf 2.0
Design checked for 10 psf non-concurrent LL on BC.
Wind Loads - ANSI / ASCE 7-02
Truss is designed as
Components and Claddings*
for Exterior zone location.
Wind Speed: 110 mph
Mean Roof Height: 25-0
Exposure Category: B

Occupancy Factor : 1.00
Building Type: Enclosed
TC Dead Load: 4.0 psf
BC Dead Load: 6.0 psf
Max comp. force 1679 Lbs
Max tens. force 1710 Lbs
Quality Control Factor 1.25
FABRICATOR NOTES:
1. Delegated Engineer (Truss Designer)
Gary Dounson, PE 35054
Gary Dounson & Associates, Inc.
2830 NW 41st Street Suite D
Gainesville, FL 32606
(352)375-8593
CA 5201

Job	Mark	Quan	Type	Span	P1-H1	Left OH	Right OH	*Engineering*
070790	*R16*	1	HIPP	250400	5	2- 9- 2	0	

Hornsby Residence, Roof, Magura

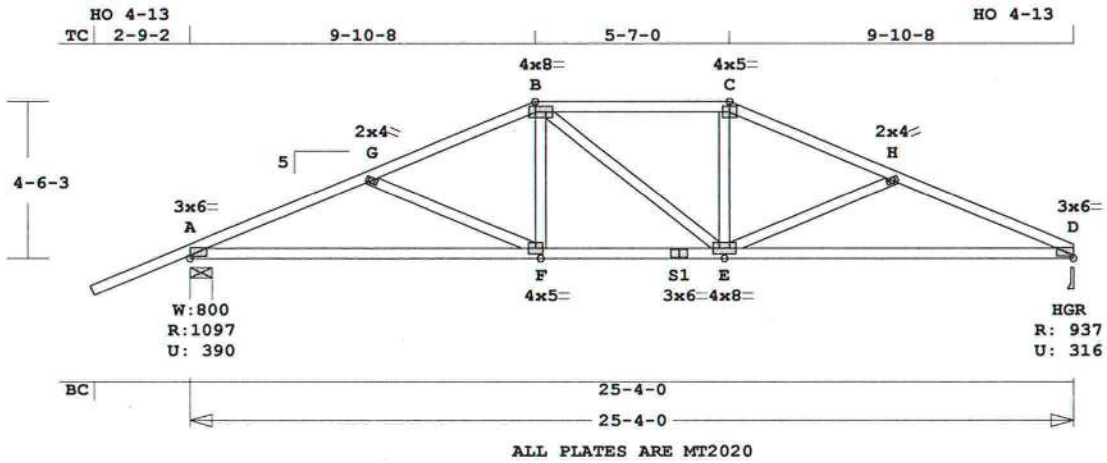

Scale: 0.188" = 1'

Robbins Engineering, Inc./Online Plus™ APPROX. TRUSS WEIGHT: 151.5 LBS

Online Plus -- Version 21.0.059
RUN DATE: 14-NOV-07

	CSI	-Size-	----Lumber----
TC	0.30	2x 4	SP-#2
BC	0.50	2x 4	SP-#2
WB	0.14	2x 4	SP-#3

Brace truss as follows:

	O.C.	From	To
TC	Cont.	0- 0- 0	25- 4- 0
BC	Cont.	0- 0- 0	25- 4- 0

psf-Ld	Dead	Live
TC	7.0	20.0
BC	10.0	0.0
TC+BC	17.0	20.0
Total	37.0	Spacing 24.0"

Lumber Duration Factor 1.25
Plate Duration Factor 1.25
TC Fb=1.15 Fc=1.10 Ft=1.10
BC Fb=1.10 Fc=1.10 Ft=1.10

Total Load Reactions (Lbs)

Jt	Down	Uplift	Horiz-
A	1097	390 U	1 R
D	937	317 U	1 R

Jt	Brg Size	Required
A	8.0"	1.5"
D	3.5"	1.5"

Plus 9 Wind Load Case(s)
Plus 1 UBC LL Load Case(s)

Membr	CSI	P Lbs		Axl-CSI-Bnd	
----------Top Chords----------					
A -G	0.30	1783	C	0.12	0.18
G -B	0.28	1463	C	0.09	0.19
B -C	0.26	1351	C	0.01	0.25
C -H	0.28	1462	C	0.09	0.19
H -D	0.30	1785	C	0.12	0.18
--------Bottom Chords---------					
A -F	0.50	1648	T	0.15	0.35
F -S1	0.48	1345	T	0.14	0.34
S1-E	0.48	1345	T	0.14	0.34
E -D	0.50	1650	T	0.15	0.35
----------Webs----------					
G -F	0.14	333	T		
F -B	0.09	343	T		
B -E	0.03	50	C		
E -C	0.09	342	T		
E -H	0.14	334	T		

TL Defl -0.40" in A -F L/734
LL Defl -0.19" in A -F L/999
Shear // Grain in A -F 0.21

Plates for each ply each face.
Plate - MT20 20 Ga, Gross Area
Plate - MT2H 20 Ga, Gross Area

Jt	Type	Plt Size	X	Y	JSI
A	MT20	3.0x 6.0	Ctr	Ctr	0.75
G	MT20	2.0x 4.0	Ctr	Ctr	0.38
B	MT20	4.0x 8.0	Ctr	Ctr	0.95
C	MT20	4.0x 5.0	Ctr	Ctr	0.95
H	MT20	2.0x 4.0	Ctr	Ctr	0.38
D	MT20	3.0x 6.0	Ctr	Ctr	0.75
F	MT20	4.0x 5.0	Ctr	Ctr	0.60
S1	MT20	3.0x 6.0	Ctr	Ctr	0.88
E	MT20	4.0x 8.0	Ctr	Ctr	0.57

NOTES:
Trusses Manufactured by:
RIDGWAY ROOF TRUSS
Analysis Conforms To:
FBC2004
OH Loading
Soffit psf 2.0
Design checked for 10 psf non-concurrent LL on BC.
Wind Loads - ANSI / ASCE 7-02
Truss is designed as
Components and Claddings*
for Exterior zone location.

Wind Speed: 110 mph
Mean Roof Height: 25-0
Exposure Category: B
Occupancy Factor : 1.00
Building Type: Enclosed
TC Dead Load: 4.0 psf
BC Dead Load: 6.0 psf
Max comp. force 1785 Lbs
Max tens. force 1650 Lbs
Quality Control Factor 1.25
FABRICATOR NOTES:
1. Delegated Engineer (Truss Designer)
Gary Dounson, PE 35054
Gary Dounson & Associates, Inc.
2830 NW 41st Street Suite D
Gainesville, FL 32606
(352)375-8593
CA 5201

Job	Mark	Quan	Type	Span	P1-H1	Left OH	Right OH	*Engineering*
070790	*R17*	1	HIPP	250400	5	2- 9- 2	0	

Hornsby Residence, Roof, Magura

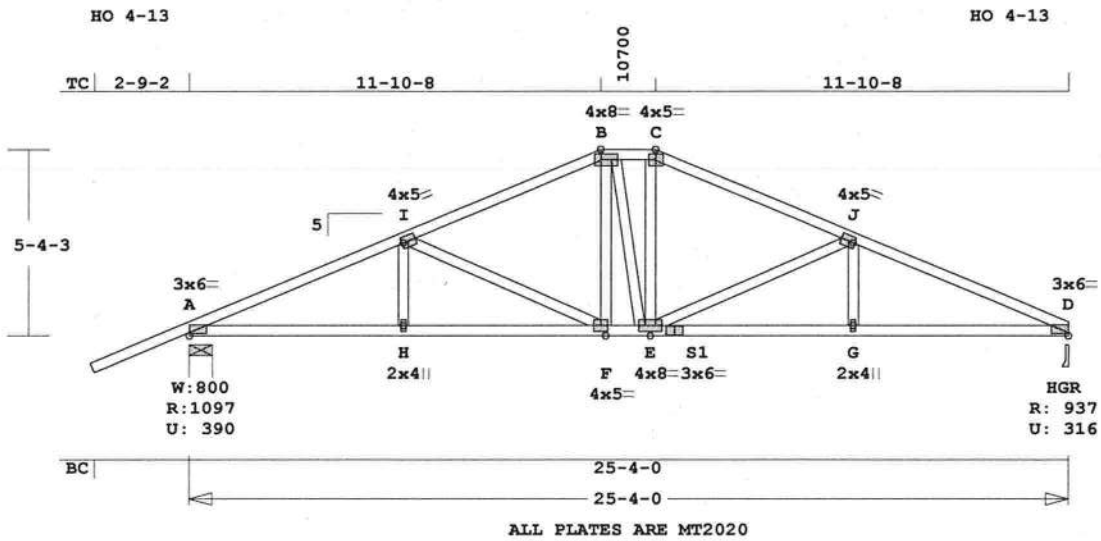

Scale: 0.188" = 1'

Robbins Engineering, Inc./Online Plus™ APPROX. TRUSS WEIGHT: 164.8 LBS

Online Plus -- Version 21.0.059
RUN DATE: 14-NOV-07

	CSI	-Size-	----Lumber----
TC	0.37	2x 4	SP-#2
BC	0.36	2x 4	SP-#2
WB	0.31	2x 4	SP-#3

Brace truss as follows:

	O.C.	From	To
TC	Cont.	0- 0- 0	25- 4- 0
BC	Cont.	0- 0- 0	25- 4- 0

psf-Ld	Dead	Live
TC	7.0	20.0
BC	10.0	0.0
TC+BC	17.0	20.0

Total 37.0 Spacing 24.0"
Lumber Duration Factor 1.25
Plate Duration Factor 1.25
TC Fb=1.15 Fc=1.10 Ft=1.10
BC Fb=1.10 Fc=1.10 Ft=1.10

Total Load Reactions (Lbs)

Jt	Down	Uplift	Horiz-
A	1097	390 U	2 R
D	937	317 U	2 R

Jt	Brg Size	Required
A	8.0"	1.5"
D	3.5"	1.5"

Plus 9 Wind Load Case(s)
Plus 1 UBC LL Load Case(s)

Membr	CSI	P Lbs	Axl-CSI-Bnd
----------Top Chords----------			
A -I	0.37	1789 C	0.12 0.25
I -B	0.35	1265 C	0.09 0.26
B -C	0.19	1163 C	0.09 0.10
C -J	0.34	1265 C	0.09 0.25
J -D	0.37	1789 C	0.12 0.25
--------Bottom Chords---------			
A -H	0.35	1651 T	0.27 0.08
H -F	0.35	1651 T	0.27 0.08
F -E	0.28	1155 T	0.19 0.09
E -S1	0.36	1652 T	0.27 0.09
S1-G	0.35	1652 T	0.27 0.08
G -D	0.35	1652 T	0.27 0.08
----------Webs----------			
H -I	0.06	235 T	
I -F	0.31	536 C	
F -B	0.09	291 T	
B -E	0.03	89 C	
E -C	0.08	273 T	
E -J	0.31	537 C	
G -J	0.06	232 T	

TL Defl -0.16" in H -F L/999
LL Defl -0.08" in H -F L/999
Shear // Grain in A -I 0.19

Plates for each ply each face.
Plate - MT20 20 Ga, Gross Area
Plate - MT2H 20 Ga, Gross Area

Jt	Type	Plt Size	X	Y	JSI
A	MT20	3.0x 6.0	Ctr	Ctr	0.75
I	MT20	4.0x 5.0	Ctr	Ctr	0.65
B	MT20	4.0x 8.0	Ctr	Ctr	0.95
C	MT20	4.0x 5.0	Ctr	Ctr	0.95
J	MT20	4.0x 5.0	Ctr	Ctr	0.65
D	MT20	3.0x 6.0	Ctr	Ctr	0.75
H	MT20	2.0x 4.0	Ctr	Ctr	0.38
F	MT20	4.0x 5.0	Ctr	Ctr	0.60
E	MT20	4.0x 8.0	Ctr	Ctr	0.67
S1	MT20	3.0x 6.0	Ctr	Ctr	0.88
G	MT20	2.0x 4.0	Ctr	Ctr	0.38

NOTES:
Trusses Manufactured by:
RIDGWAY ROOF TRUSS

Analysis Conforms To:
FBC2004
OH Loading
Soffit psf 2.0
Design checked for 10 psf non-concurrent LL on BC.
Wind Loads - ANSI / ASCE 7-02
Truss is designed as
Components and Claddings*
for Exterior zone location.
Wind Speed: 110 mph
Mean Roof Height: 25-0
Exposure Category: B
Occupancy Factor : 1.00
Building Type: Enclosed
TC Dead Load: 4.0 psf
BC Dead Load: 6.0 psf
Max comp. force 1789 Lbs
Max tens. force 1652 Lbs
Quality Control Factor 1.25
FABRICATOR NOTES:

1. Delegated Engineer (Truss Designer)
   Gary Dounson, PE 35054
   Gary Dounson & Associates, Inc.
   2830 NW 41st Street Suite D
   Gainesville, FL 32606
   (352)375-8593
   CA 5201

Job	Mark	Quan	Type	Span	P1-H1	Left OH	Right OH	Engineering
070790	R18	1	MONO	71008	5	0	0	

Hornsby Residence, Roof, Magura

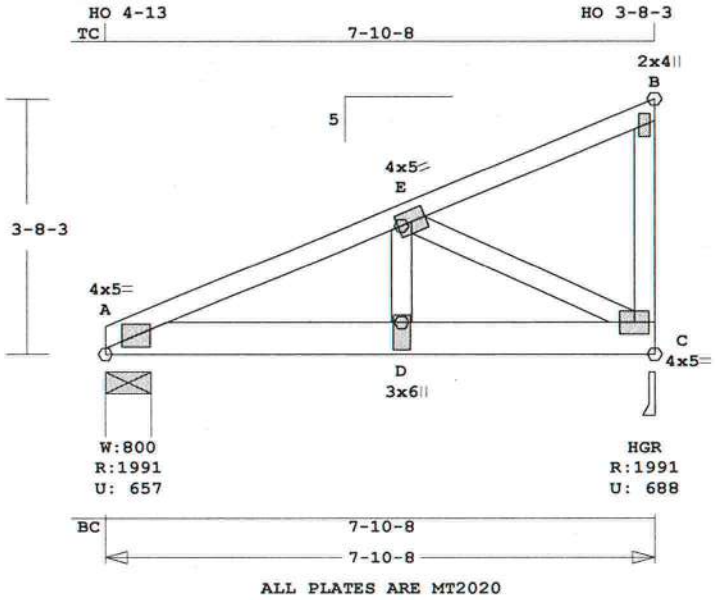

Scale: 0.375" = 1'

Robbins Engineering, Inc./Online Plus™ APPROX. TRUSS WEIGHT: 53.5 LBS

Online Plus -- Version 21.0.059
RUN DATE: 14-NOV-07

	CSI	-Size-	----Lumber----
TC	0.46	2x 4	SP-#2
BC	0.88	2x 6	SP-#2
WB	0.65	2x 4	SP-#3

Brace truss as follows:

	O.C.	From	To
TC	Cont.	0- 0- 0	7-10- 8
BC	Cont.	0- 0- 0	7-10- 8

psf-Ld	Dead	Live
TC	7.0	20.0
BC	10.0	0.0
TC+BC	17.0	20.0

Total 37.0 Spacing 24.0"
Lumber Duration Factor 1.25
Plate Duration Factor 1.25
TC Fb=1.00 Fc=1.00 Ft=1.00
BC Fb=1.00 Fc=1.00 Ft=1.00

Total Load Reactions (Lbs)

Jt	Down	Uplift	Horiz-
A	1991	657 U	108 R
C	1991	688 U	140 R

Jt	Brg Size	Required
A	8.0"	2.3"
C	3.5"	2.3"

LC# 1 Girder Loading
Dur Fctrs - Lbr 1.25 Plt 1.25

plf -	Dead	Live*	From	To
TC V	14	40	0.0'	7.9'
BC V	218	233	0.0'	7.9'

Plus 7 Wind Load Case(s)
Plus 1 UBC LL Load Case(s)

Membr	CSI	P Lbs	Axl-CSI-Bnd
----------Top Chords----------			
A -E	0.46	2515 C	0.27 0.19
E -B	0.19	53 C	0.00 0.19
--------Bottom Chords---------			
A -D	0.88	2343 T	0.31 0.57
D -C	0.80	2343 T	0.31 0.49
----------Webs----------			
D -E	0.61	1906 T	
E -C	0.65	2630 C	
C -B	0.08	144 T	WindLd

TL Defl -0.08" in A -D L/999
LL Defl -0.04" in A -D L/999
Shear // Grain in A -D 0.81

Plates for each ply each face.
Plate - MT20 20 Ga, Gross Area
Plate - MT2H 20 Ga, Gross Area

Jt	Type	Plt Size	X	Y	JSI
A	MT20	4.0x 5.0	Ctr	Ctr	0.67
E	MT20	4.0x 5.0	Ctr	Ctr	0.93
B	MT20	2.0x 4.0	Ctr	Ctr	0.38
D	MT20	3.0x 6.0	Ctr	-1.7	0.79
C	MT20	4.0x 5.0	Ctr	Ctr	0.86

NOTES:
Trusses Manufactured by:
RIDGWAY ROOF TRUSS
Analysis Conforms To:
FBC2004
Girder Common
Loading BC
Span 25- 4- 0
Design checked for 10 psf non-concurrent LL on BC.
Use properly rated hangers for loads framing into girder truss.
Wind Loads - ANSI / ASCE 7-02
Truss is designed as
Components and Claddings*
for Exterior zone location.
Wind Speed: 110 mph
Mean Roof Height: 25-0
Exposure Category: B
Occupancy Factor : 1.00
Building Type: Enclosed
TC Dead Load: 4.0 psf
BC Dead Load: 6.0 psf
Max comp. force 2630 Lbs
Max tens. force 2343 Lbs
Quality Control Factor 1.25
FABRICATOR NOTES:
1. Delegated Engineer (Truss Designer)
Gary Dounson, PE 35054
Gary Dounson & Associates, Inc.
2830 NW 41st Street Suite D
Gainesville, FL 32606
(352)375-8593
CA 5201

Job	Mark	Quan	Type	Span	P1-H1	Left OH	Right OH	*Engineering*
070790	*R19*	2	JACK1	61111	5	2- 9- 2	0	

Hornsby Residence, Roof, Magura

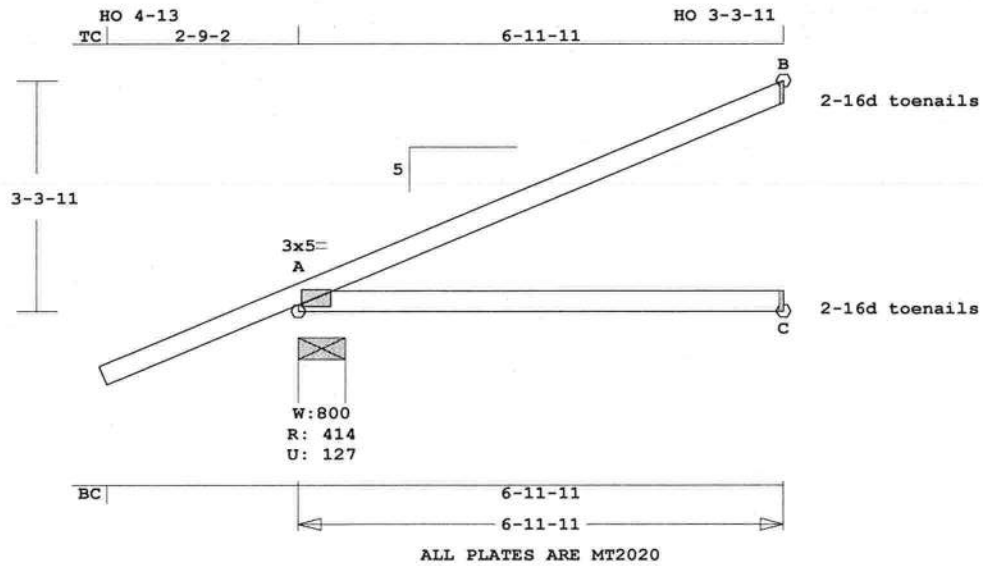

Scale: 0.375" = 1'

Robbins Engineering, Inc./Online Plus™ APPROX. TRUSS WEIGHT: 33.3 LBS

Online Plus -- Version 21.0.059
RUN DATE: 14-NOV-07

	CSI	-Size-	----Lumber----
TC	0.49	2x 4	SP-#2
BC	0.39	2x 4	SP-#2

Brace truss as follows:

	O.C.	From	To
TC	Cont.	0- 0- 0	6-11-11
BC	Cont.	0- 0- 0	6-11-11

psf-Ld	Dead	Live
TC	7.0	20.0
BC	10.0	0.0
TC+BC	17.0	20.0

Total 37.0 Spacing 24.0"
Lumber Duration Factor 1.25
Plate Duration Factor 1.25
TC Fb=1.15 Fc=1.10 Ft=1.10
BC Fb=1.10 Fc=1.10 Ft=1.10

Total Load Reactions (Lbs)

Jt	Down	Uplift	Horiz-
A	414	128 U	236 R
C	128		
B	177	136 U	70 R

Jt	Brg Size	Required
A	8.0"	1.5"
C	3.5"	1.5"
B	3.5"	1.5"

Plus 7 Wind Load Case(s)
Plus 1 UBC LL Load Case(s)

Membr	CSI	P Lbs	Axl-CSI-Bnd
----------Top Chords----------			
A -B	0.49	133 C	0.00 0.49
--------Bottom Chords---------			
A -C	0.39	0 T	0.00 0.39

TL Defl -0.17" in A -C L/431
LL Defl -0.07" in A -C L/999
Shear // Grain in A -B 0.27

Plates for each ply each face.
Plate - MT20 20 Ga, Gross Area
Plate - MT2H 20 Ga, Gross Area

Jt	Type	Plt Size	X	Y	JSI
A	MT20	3.0x 5.0	Ctr	Ctr	0.53

For proper installation of toe-nails, refer to the 2001 National Design Specification (NDS) for Wood Construction
NOTES:
Trusses Manufactured by:
RIDGWAY ROOF TRUSS
Analysis Conforms To:
FBC2004
OH Loading
Soffit psf 2.0
Design checked for 10 psf non-concurrent LL on BC.
Wind Loads - ANSI / ASCE 7-02
Truss is designed as
Components and Claddings*
for Exterior zone location.
Wind Speed: 110 mph
Mean Roof Height: 25-0
Exposure Category: B
Occupancy Factor : 1.00
Building Type: Enclosed
TC Dead Load: 4.0 psf
BC Dead Load: 6.0 psf
Max comp. force 133 Lbs
Max tens. force 42 Lbs

Quality Control Factor 1.25
FABRICATOR NOTES:
1. Delegated Engineer (Truss Designer)
Gary Dounson, PE 35054
Gary Dounson & Associates, Inc.
2830 NW 41st Street Suite D
Gainesville, FL 32606
(352)375-8593
CA 5201

Job	Mark	Quan	Type	Span	P1-H1	Left OH	Right OH	Engineering
070790	R20	1	JACK	71008	5	0	0	

Hornsby Residence, Roof, Magura

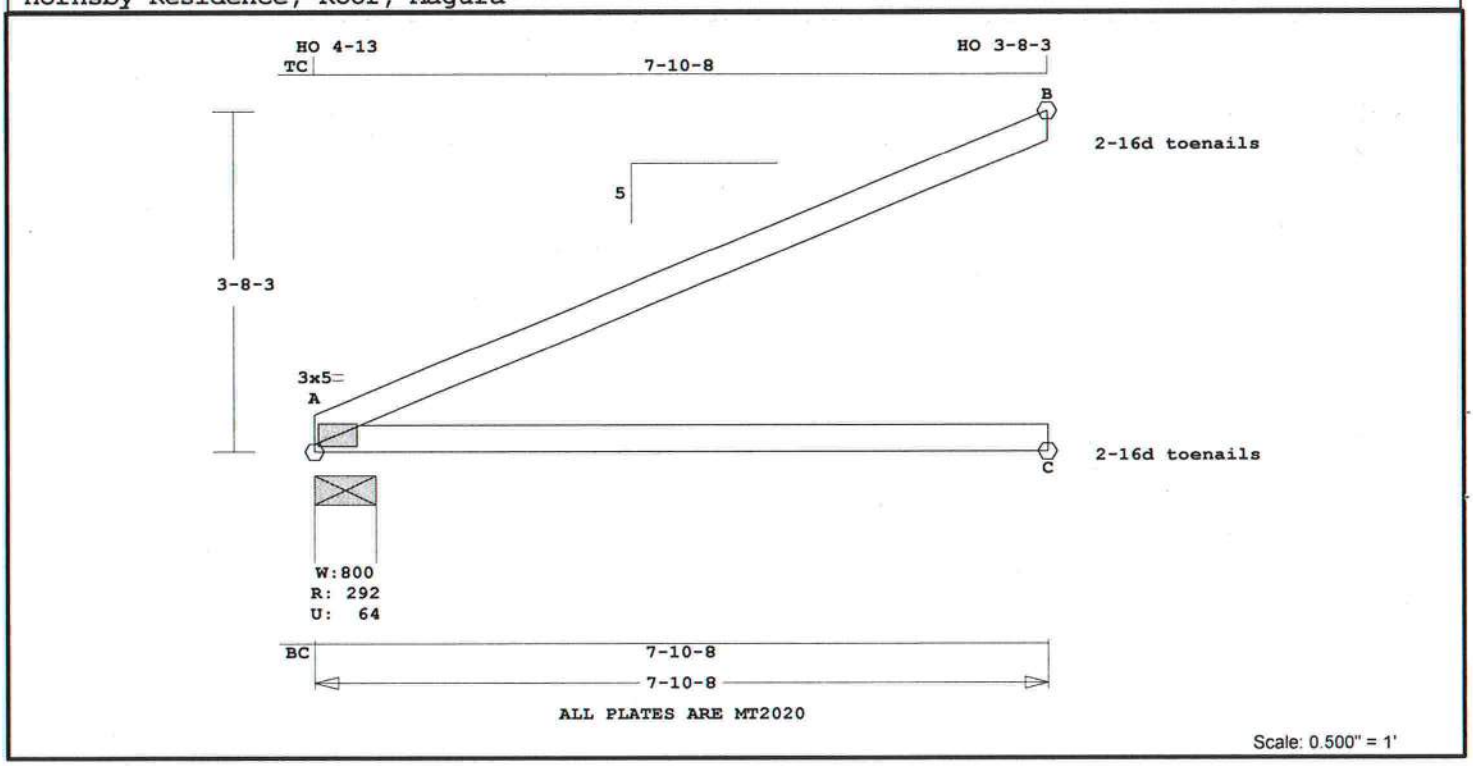

Robbins Engineering, Inc./Online Plus™ APPROX. TRUSS WEIGHT: 31.2 LBS

Online Plus -- Version 21.0.059
RUN DATE: 14-NOV-07

	CSI	-Size-	----Lumber----
TC	0.62	2x 4	SP-#2
BC	0.50	2x 4	SP-#2

Brace truss as follows:

	O.C.	From	To
TC	Cont.	0- 0- 0	7-10- 8
BC	Cont.	0- 0- 0	7-10- 8

psf-Ld	Dead	Live
TC	7.0	20.0
BC	10.0	0.0
TC+BC	17.0	20.0

Total 37.0 Spacing 24.0"
Lumber Duration Factor 1.25
Plate Duration Factor 1.25
TC Fb=1.15 Fc=1.10 Ft=1.10
BC Fb=1.10 Fc=1.10 Ft=1.10

Total Load Reactions (Lbs)

Jt	Down	Uplift	Horiz-
A	293	65 U	252 R
C	141		
B	194	148 U	79 R

Jt	Brg Size	Required
A	8.0"	1.5"
C	1.5"	1.5"
B	1.5"	1.5"

Plus 7 Wind Load Case(s)
Plus 1 UBC LL Load Case(s)

Membr	CSI	P Lbs	Axl-CSI-Bnd
----------Top Chords----------			
A -B	0.62	137 C	0.00 0.62
--------Bottom Chords---------			
A -C	0.50	0 T	0.00 0.50

TL Defl -0.29" in A -C L/290
LL Defl -0.13" in A -C L/673
Shear // Grain in A -B 0.29

Plates for each ply each face.
Plate - MT20 20 Ga, Gross Area
Plate - MT2H 20 Ga, Gross Area

Jt	Type	Plt Size	X	Y	JSI
A	MT20	3.0x 5.0	Ctr	Ctr	0.54

For proper installation of toe-nails, refer to the 2001 National Design Specification (NDS) for Wood Construction
NOTES:
Trusses Manufactured by:
RIDGWAY ROOF TRUSS
Analysis Conforms To:
FBC2004
Design checked for 10 psf non-concurrent LL on BC.
Wind Loads - ANSI / ASCE 7-02
Truss is designed as
Components and Claddings*
for Exterior zone location.
Wind Speed: 110 mph
Mean Roof Height: 25-0
Exposure Category: B
Occupancy Factor : 1.00
Building Type: Enclosed
TC Dead Load: 4.0 psf
BC Dead Load: 6.0 psf
Max comp. force 137 Lbs
Max tens. force 49 Lbs
Quality Control Factor 1.25
FABRICATOR NOTES:

1. Delegated Engineer (Truss Designer)
Gary Dounson, PE 35054
Gary Dounson & Associates, Inc.
2830 NW 41st Street Suite D
Gainesville, FL 32606
(352)375-8593
CA 5201

Job	Mark	Quan	Type	Span	P1-H1	Left OH	Right OH	*Engineering*
070790	*R21*	1	KING	110110	3.536	3-10-14	0	

Hornsby Residence, Roof, Magura

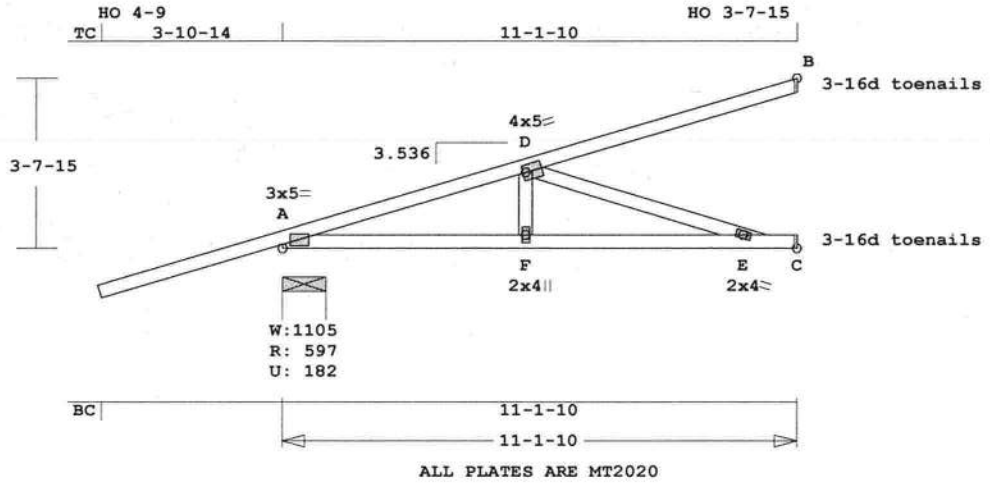

Scale: 0.250" = 1'

Robbins Engineering, Inc./Online Plus™ APPROX. TRUSS WEIGHT: 63.3 LBS

Online Plus -- Version 21.0.059
RUN DATE: 14-NOV-07

	CSI	-Size-	----Lumber----
TC	0.59	2x 4	SP-#2
BC	0.62	2x 4	SP-#2
WB	0.44	2x 4	SP-#3

Brace truss as follows:

	O.C.	From	To
TC	Cont.	0- 0- 0	11- 1-10
BC	Cont.	0- 0- 0	11- 1-10

psf-Ld	Dead	Live
TC	7.0	20.0
BC	10.0	0.0
TC+BC	17.0	20.0

Total 37.0 Spacing 24.0"
Lumber Duration Factor 1.25
Plate Duration Factor 1.25
TC Fb=1.00 Fc=1.00 Ft=1.00
BC Fb=1.00 Fc=1.00 Ft=1.00

Total Load Reactions (Lbs)

Jt	Down	Uplift	Horiz-
A	597	183 U	265 R
C	407	45 U	96 R
B	301	223 U	

Jt	Brg Size	Required
A	11.3"	1.5"
C	3.5"	1.5"
B	3.5"	1.5"

LC# 1 Girder Loading
Dur Fctrs - Lbr 1.25 Plt 1.25

plf -	Dead	Live*	From	To
TC V	14	40	0.0'	11.1'
BC V	20	0	0.0'	11.1'
TC V	-14	-40	0.0'	
	20	57		11.1'
BC V	-20	0	0.0'	
	29	0		11.1'

Plus 8 Wind Load Case(s)
Plus 1 UBC LL Load Case(s)

Membr	CSI	P Lbs	Axl-CSI-Bnd	
----------Top Chords----------				
A -D	0.47	965 C	0.05	0.42
D -B	0.59	128 C	0.00	0.59
--------Bottom Chords---------				
A -F	0.40	939 T	0.10	0.30
F -E	0.62	939 T	0.17	0.45
E -C	0.40	96 T	0.00	0.40
----------Webs----------				
F -D	0.09	338 T		
D -E	0.44	985 C		

TL Defl -0.22" in F -E L/548
LL Defl -0.10" in F -E L/999
Shear // Grain in E -C 0.48

Plates for each ply each face.
Plate - MT20 20 Ga, Gross Area
Plate - MT2H 20 Ga, Gross Area

Jt	Type	Plt Size	X	Y	JSI
A	MT20	3.0x 5.0	Ctr	Ctr	0.64
D	MT20	4.0x 5.0	Ctr	Ctr	0.63
F	MT20	2.0x 4.0	Ctr	Ctr	0.38
E	MT20	2.0x 4.0	Ctr	Ctr	0.50

For proper installation of toe-nails, refer to the 2001 National Design Specification (NDS) for Wood Construction
NOTES:
Trusses Manufactured by:
RIDGWAY ROOF TRUSS
Analysis Conforms To:
FBC2004
Girder King Jack
Loading TC and BC
Setback 7-10- 8
OH Loading
Soffit psf 2.0
Excessive Left OH condition.
Max allowable length is 3- 0- 3. Support end or provide level return.
Design checked for 10 psf non-concurrent LL on BC.
Use properly rated hangers for loads framing into girder truss.
Wind Loads - ANSI / ASCE 7-02
Truss is designed as Components and Claddings* for Exterior zone location.
Wind Speed: 110 mph
Mean Roof Height: 25-0
Exposure Category: B
Occupancy Factor : 1.00
Building Type: Enclosed
TC Dead Load: 4.0 psf
BC Dead Load: 6.0 psf
Max comp. force 985 Lbs
Max tens. force 939 Lbs
Quality Control Factor 1.25
FABRICATOR NOTES:

1. Delegated Engineer (Truss Designer)
   Gary Dounson, PE 35054
   Gary Dounson & Associates, Inc.
   2830 NW 41st Street Suite D
   Gainesville, FL 32606
   (352)375-8593
   CA 5201

Job	Mark	Quan	Type	Span	P1-H1	Left OH	Right OH	Engineering
070790	R22	1*2P	SP	340000	5	2- 9- 2	2- 9- 2	

Hornsby Residence, Roof, Magura

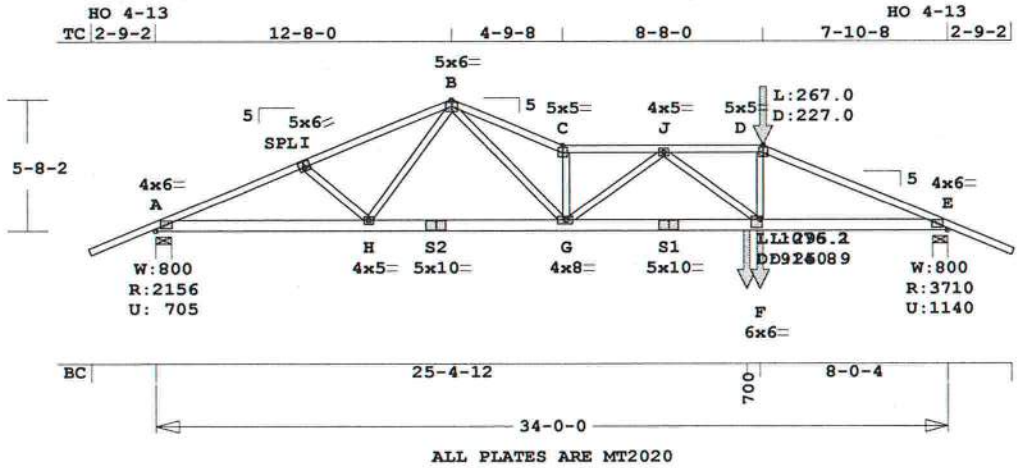

Scale: 0.125" = 1'

Robbins Engineering, Inc./Online Plus™ APPROX. TRUSS WEIGHT: 237.7 LBS

Online Plus -- Version 21.0.059
RUN DATE: 14-NOV-07
****
* 2-Ply Truss *
****

	CSI	-Size-	----Lumber----
TC	0.71	2x 4	SP-#2
BC	0.89	2x 6	SP-#2
WB	0.83	2x 4	SP-#3

Brace truss as follows:

	O.C.	From	To
TC	Cont.	0- 0- 0	34- 0- 0
BC	Cont.	0- 0- 0	34- 0- 0

psf-Ld	Dead	Live
TC	7.0	20.0
BC	10.0	0.0
TC+BC	17.0	20.0

Total 37.0 Spacing 24.0"
Lumber Duration Factor 1.25
Plate Duration Factor 1.25
TC Fb=1.00 Fc=1.00 Ft=1.00
BC Fb=1.00 Fc=1.00 Ft=1.00

Total Load Reactions (Lbs)

Jt	Down	Uplift	Horiz-
A	2157	705 U	100 R
E	3710	1140 U	100 R

Jt	Brg Size	Required
A	8.0"	1.5"
E	8.0"	2.2"

LC# 1 Standard Loading
Dur Fctrs - Lbr 1.25 Plt 1.25

plf -	Dead	Live*	From	To
TC V	14	40	0.0'	34.0'
BC V	20	0	0.0'	34.0'
BC V	915	1076	25.4'	CL-LB
TC V	227	267	26.1'	CL-LB
BC V	251	295	26.0'	CL-LB

Plus 9 Wind Load Case(s)
Plus 1 UBC LL Load Case(s)

Membr	CSI	P Lbs	Axl-CSI-Bnd
----------Top Chords----------			
A -I	0.32	4492 C	0.15 0.17
I -B	0.41	4198 C	0.07 0.34
B -C	0.71	7681 C	0.12 0.59
C -J	0.34	7158 C	0.24 0.10
J -D	0.33	7804 C	0.27 0.06
D -E	0.45	8458 C	0.28 0.17
--------Bottom Chords---------			
A -H	0.31	4155 T	0.27 0.04
H -S2	0.27	3541 T	0.23 0.04
S2-G	0.27	3541 T	0.23 0.04
G -S1	0.78	7602 T	0.50 0.28
S1-F	0.89	7602 T	0.50 0.39
F -E	0.70	7805 T	0.52 0.18
-------------Webs-------------			
I -H	0.04	409 C	
H -B	0.08	548 T	
B -G	0.83	5177 T	
G -C	0.25	3084 C	
G -J	0.05	576 C	
J -F	0.07	526 T	
F -D	0.39	2457 T	

TL Defl -0.59" in G -F L/665
LL Defl -0.31" in G -F L/999
Shear // Grain in S1-F 0.81

Plates for each ply each face.
Plate - MT20 20 Ga, Gross Area
Plate - MT2H 20 Ga, Gross Area

Jt	Type	Plt Size	X	Y	JSI
A	MT20	4.0x 6.0	Ctr	Ctr	0.76
I	MT20	5.0x 6.0	-0.2	0.5	0.86
B	MT20	5.0x 6.0	Ctr	Ctr	0.96
C	MT20	5.0x 5.0	Ctr	Ctr	0.88
J	MT20	4.0x 5.0	Ctr	Ctr	0.49
D	MT20	5.0x 5.0	Ctr	Ctr	0.89
E	MT20	4.0x 6.0	Ctr	Ctr	0.93
H	MT20	4.0x 5.0	Ctr	Ctr	0.52
S2	MT20	5.0x10.0	Ctr	Ctr	0.82
G	MT20	4.0x 8.0	-0.5	Ctr	0.92
S1	MT20	5.0x10.0	Ctr	Ctr	0.82
F	MT20	6.0x 6.0	Ctr	-1.3	0.50

NOTES:

Trusses Manufactured by:
RIDGWAY ROOF TRUSS
Analysis Conforms To:
FBC2004
2 COMPLETE TRUSSES REQUIRED.
Fasten together in staggered pattern. (1/2" bolts -OR- SDS3 screws -OR- 10d nails as each layer is applied.)

	Rows	Nails	Screws	Bolts
		----Spacing (In)----		
TC	1	12	24	0
BC	2	12	24	0
WB	1	8	8	

Plus clusters of nails where shown.
OH Loading
Soffit psf 2.0
Design checked for 10 psf non-concurrent LL on BC.
Wind Loads - ANSI / ASCE 7-02
Truss is designed as
Components and Claddings*
for Exterior zone location.
Wind Speed: 110 mph
Mean Roof Height: 25-0
Exposure Category: B
Occupancy Factor : 1.00
Building Type: Enclosed
TC Dead Load: 4.0 psf
BC Dead Load: 6.0 psf
Max comp. force 8458 Lbs
Max tens. force 7805 Lbs
Quality Control Factor 1.25
FABRICATOR NOTES:
1. Delegated Engineer (Truss Designer)
Gary Dounson, PE 35054
Gary Dounson & Associates, Inc.
2830 NW 41st Street Suite D
Gainesville, FL 32606
(352)375-8593
CA 5201

Job	Mark	Quan	Type	Span	P1-H1	Left OH	Right OH	*Engineering*
070790	*R23*	5	SP	330100	5	2- 9- 2	0	

Hornsby Residence, Roof, Magura

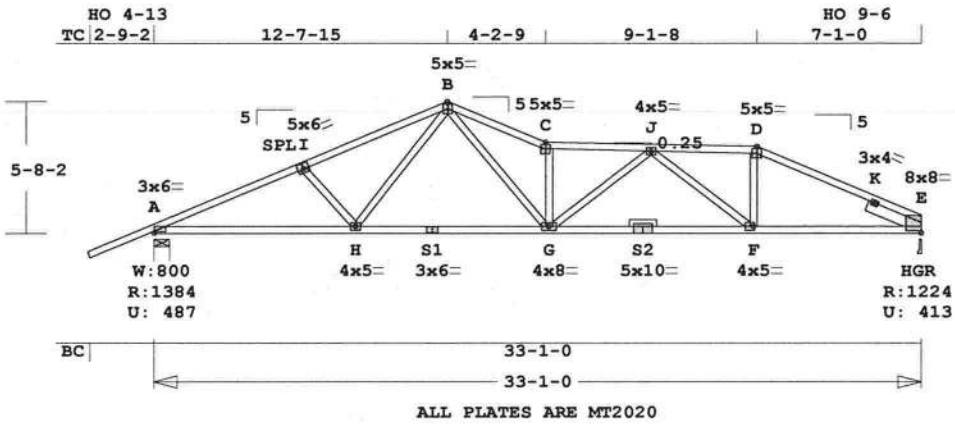

Scale: 0.125" = 1'

Robbins Engineering, Inc./Online Plus™ APPROX. TRUSS WEIGHT: 208.0 LBS

Online Plus -- Version 21.0.059
RUN DATE: 14-NOV-07

	CSI	-Size-	----Lumber----
TC	0.59	2x 4	SP-#2
BC	0.78	2x 4	SP-#2
WB	0.53	2x 4	SP-#3
SL	0.08	2x 6	SP-#2
PB	---	2x 4	SP-#3

Brace truss as follows:

	O.C.	From	To
TC	Cont.	0- 0- 0	33- 1- 0
BC	Cont.	0- 0- 0	33- 1- 0

psf-Ld	Dead	Live
TC	7.0	20.0
BC	10.0	0.0
TC+BC	17.0	20.0

Total 37.0 Spacing 24.0"
Lumber Duration Factor 1.25
Plate Duration Factor 1.25
TC Fb=1.15 Fc=1.10 Ft=1.10
BC Fb=1.10 Fc=1.10 Ft=1.10

Total Load Reactions (Lbs)

Jt	Down	Uplift	Horiz-
A	1384	487 U	93 R
E	1224	414 U	96 R

Jt	Brg Size	Required
A	8.0"	1.6"
E	3.5"	1.5"

Plus 9 Wind Load Case(s)
Plus 1 UBC LL Load Case(s)

Membr	CSI	P Lbs	Axl-CSI-Bnd	
----------Top Chords----------				
A -I	0.43	2464 C	0.16	0.27
I -B	0.43	2231 C	0.07	0.36
B -C	0.42	3009 C	0.05	0.37
C -J	0.29	2805 C	0.18	0.11
J -D	0.23	1958 C	0.03	0.20
D -K	0.59	2142 C	0.03	0.56
K -E	0.56	1131 C	0.00	0.56
--------Bottom Chords---------				
A -H	0.56	2274 T	0.38	0.18
H -S1	0.51	1730 T	0.17	0.34
S1-G	0.57	1730 T	0.17	0.40
G -S2	0.66	2555 T	0.42	0.24
S2-F	0.64	2555 T	0.42	0.22
F -E	0.78	1958 T	0.32	0.46
----------Webs----------				
I -H	0.08	349 T		
H -B	0.16	525 T		
B -G	0.53	1660 T		
G -C	0.30	1279 C		
G -J	0.10	337 T		
J -F	0.36	764 C		
F -D	0.18	588 T		
----------Sliders----------				
K -E	0.08	1168 C		

TL Defl -0.54" in G -F L/713
LL Defl -0.23" in G -F L/999
Shear // Grain in K -E 0.36

Plates for each ply each face.
Plate - MT20 20 Ga, Gross Area
Plate - MT2H 20 Ga, Gross Area

Jt	Type	Plt Size	X	Y	JSI
A	MT20	3.0x 6.0	Ctr	Ctr	0.85
I	MT20	5.0x 6.0	-0.2	0.5	0.86
B	MT20	5.0x 5.0	Ctr	Ctr	0.66
C	MT20	5.0x 5.0	Ctr	Ctr	0.86
J	MT20	4.0x 5.0	Ctr	Ctr	0.49
D	MT20	5.0x 5.0	Ctr	Ctr	0.87
K	MT20	3.0x 4.0	Ctr	Ctr	0.80
E	MT20	8.0x 8.0	-4.0	0.7	0.97
H	MT20	4.0x 5.0	Ctr	Ctr	0.50
S1	MT20	3.0x 6.0	Ctr	Ctr	0.88
G	MT20	4.0x 8.0	Ctr	Ctr	0.69
S2	MT20	5.0x10.0	Ctr	0.8	0.95
F	MT20	4.0x 5.0	Ctr	Ctr	0.60

NOTES:
Trusses Manufactured by:
RIDGWAY ROOF TRUSS
Analysis Conforms To:
FBC2004
OH Loading
Soffit psf 2.0
Design checked for 10 psf non-concurrent LL on BC.
Wind Loads - ANSI / ASCE 7-02
Truss is designed as
Components and Claddings*
for Exterior zone location.
Wind Speed: 110 mph
Mean Roof Height: 25-0
Exposure Category: B
Occupancy Factor : 1.00
Building Type: Enclosed
TC Dead Load: 4.0 psf
BC Dead Load: 6.0 psf
Max comp. force 3009 Lbs
Max tens. force 2555 Lbs
Quality Control Factor 1.25
FABRICATOR NOTES:
1. Delegated Engineer (Truss Designer)
Gary Dounson, PE 35054
Gary Dounson & Associates, Inc.
2830 NW 41st Street Suite D
Gainesville, FL 32606
(352)375-8593
CA 5201

Job	Mark	Quan	Type	Span	P1-H1	Left OH	Right OH	Engineering
070790	R24	1	SP	330100	5	0	0	

Hornsby Residence, Roof, Magura

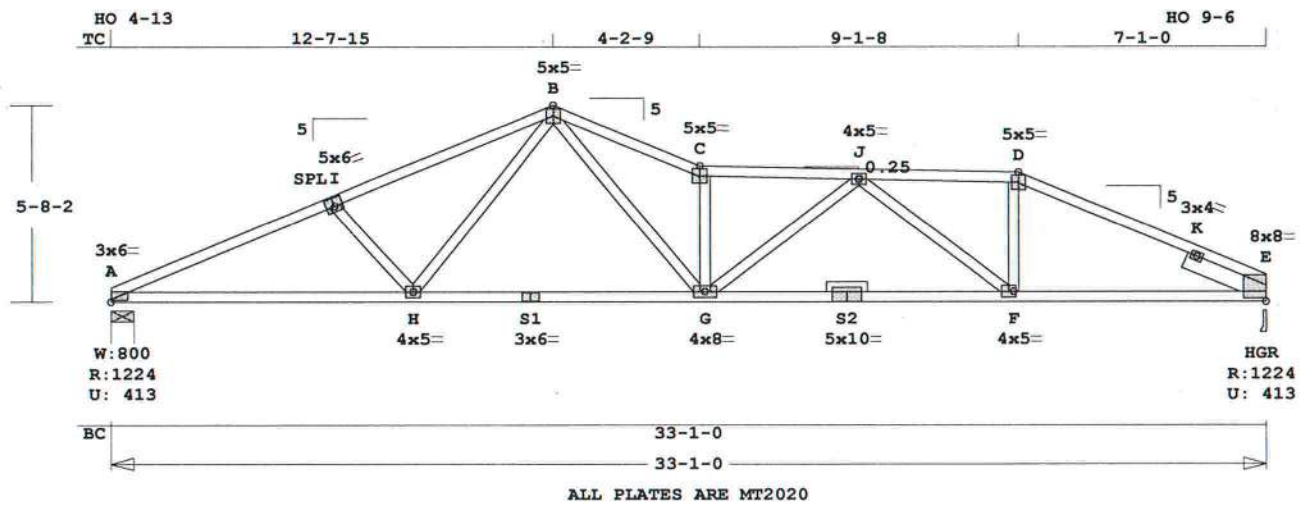

Scale: 0.188" = 1'

Robbins Engineering, Inc./Online Plus™ APPROX. TRUSS WEIGHT: 202.3 LBS

Online Plus -- Version 21.0.059
RUN DATE: 14-NOV-07

	CSI	-Size-	----Lumber----
TC	0.59	2x 4	SP-#2
BC	0.78	2x 4	SP-#2
WB	0.53	2x 4	SP-#3
SL	0.08	2x 6	SP-#2
PB	---	2x 4	SP-#3

Brace truss as follows:

	O.C.	From	To
TC	Cont.	0- 0- 0	33- 1- 0
BC	Cont.	0- 0- 0	33- 1- 0

psf-Ld	Dead	Live
TC	7.0	20.0
BC	10.0	0.0
TC+BC	17.0	20.0

Total 37.0 Spacing 24.0"
Lumber Duration Factor 1.25
Plate Duration Factor 1.25
TC Fb=1.15 Fc=1.10 Ft=1.10
BC Fb=1.10 Fc=1.10 Ft=1.10

Total Load Reactions (Lbs)

Jt	Down	Uplift	Horiz-
A	1224	413 U	93 R
E	1224	414 U	96 R

Jt	Brg Size	Required
A	8.0"	1.5"
E	3.5"	1.5"

Plus 9 Wind Load Case(s)
Plus 1 UBC LL Load Case(s)

Membr	CSI	P Lbs	Axl-CSI-Bnd
----------Top Chords----------			
A -I	0.43	2464 C	0.16 0.27
I -B	0.43	2231 C	0.07 0.36
B -C	0.42	3009 C	0.05 0.37
C -J	0.29	2805 C	0.18 0.11
J -D	0.23	1958 C	0.03 0.20
D -K	0.59	2142 C	0.03 0.56
K -E	0.56	1131 C	0.00 0.56
--------Bottom Chords---------			
A -H	0.56	2274 T	0.38 0.18
H -S1	0.51	1730 T	0.17 0.34
S1-G	0.57	1730 T	0.17 0.40
G -S2	0.66	2555 T	0.42 0.24
S2-F	0.64	2555 T	0.42 0.22
F -E	0.78	1958 T	0.32 0.46
----------Webs----------			
I -H	0.08	349 T	
H -B	0.16	525 T	
B -G	0.53	1660 T	
G -C	0.30	1279 C	
G -J	0.10	337 T	
J -F	0.36	764 C	
F -D	0.18	588 T	
----------Sliders----------			
K -E	0.08	1168 C	

TL Defl -0.54" in G -F L/713
LL Defl -0.23" in G -F L/999
Shear // Grain in K -E 0.36

Plates for each ply each face.
Plate - MT20 20 Ga, Gross Area
Plate - MT2H 20 Ga, Gross Area

Jt	Type	Plt Size	X	Y	JSI
A	MT20	3.0x 6.0	Ctr	Ctr	0.85
I	MT20	5.0x 6.0	-0.2	0.5	0.86
B	MT20	5.0x 5.0	Ctr	Ctr	0.66
C	MT20	5.0x 5.0	Ctr	Ctr	0.86
J	MT20	4.0x 5.0	Ctr	Ctr	0.49
D	MT20	5.0x 5.0	Ctr	Ctr	0.87
K	MT20	3.0x 4.0	Ctr	Ctr	0.80
E	MT20	8.0x 8.0	-4.0	0.7	0.97
H	MT20	4.0x 5.0	Ctr	Ctr	0.50
S1	MT20	3.0x 6.0	Ctr	Ctr	0.88
G	MT20	4.0x 8.0	Ctr	Ctr	0.69
S2	MT20	5.0x10.0	Ctr	0.8	0.95
F	MT20	4.0x 5.0	Ctr	Ctr	0.60

NOTES:
Trusses Manufactured by:
RIDGWAY ROOF TRUSS
Analysis Conforms To:
FBC2004
Design checked for 10 psf non-concurrent LL on BC.
Wind Loads - ANSI / ASCE 7-02
Truss is designed as
Components and Claddings*
for Exterior zone location.
Wind Speed: 110 mph
Mean Roof Height: 25-0
Exposure Category: B
Occupancy Factor : 1.00
Building Type: Enclosed
TC Dead Load: 4.0 psf
BC Dead Load: 6.0 psf
Max comp. force 3009 Lbs
Max tens. force 2555 Lbs
Quality Control Factor 1.25
FABRICATOR NOTES:
1. Delegated Engineer (Truss Designer)
Gary Dounson, PE 35054
Gary Dounson & Associates, Inc.
2830 NW 41st Street Suite D
Gainesville, FL 32606
(352)375-8593
CA 5201

Job	Mark	Quan	Type	Span	P1-H1	Left OH	Right OH	*Engineering*
070790	*R25*	1*2P	SP	330100	5	0	0	

Hornsby Residence, Roof, Magura

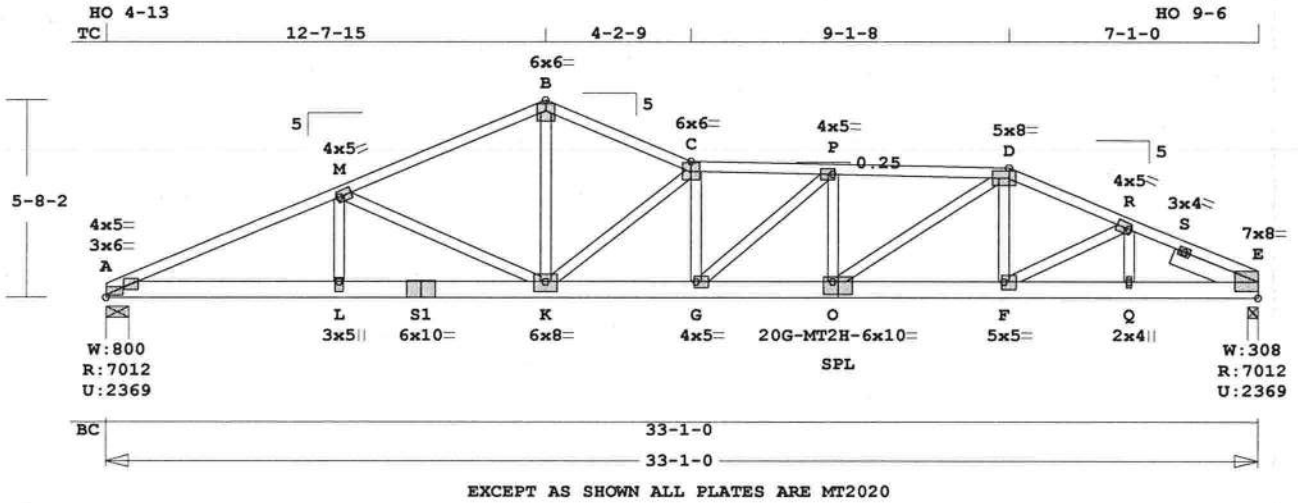

EXCEPT AS SHOWN ALL PLATES ARE MT2020

Scale: 0.188" = 1'

Robbins Engineering, Inc./Online Plus™ APPROX. TRUSS WEIGHT: 249.9 LBS

Online Plus -- Version 21.0.059
RUN DATE: 14-NOV-07
****
* 2-Ply Truss *
****

	CSI	-Size-	----Lumber----
TC	0.86	2x 4	SP-2400
BC	0.67	2x 6	SP-2400
WB	0.75	2x 4	SP-#2
--	0.71	2x 4	SP-#3
	L -M	M -K	K -C G -C
	G -P	O -P	O -D F -D
	F -R	Q -R	
SL	0.09	2x 6	SP-#2

Brace truss as follows:

	O.C.	From	To
TC	Cont.	0- 0- 0	33- 1- 0
BC	Cont.	0- 0- 0	33- 1- 0

psf-Ld	Dead	Live
TC	7.0	20.0
BC	10.0	0.0
TC+BC	17.0	20.0
Total	37.0	Spacing 24.0"

Lumber Duration Factor 1.25
Plate Duration Factor 1.25
TC Fb=1.00 Fc=1.00 Ft=1.00
BC Fb=1.00 Fc=1.00 Ft=1.00

Total Load Reactions (Lbs)

Jt	Down	Uplift	Horiz-
A	7013	2369 U	93 R
E	7013	2369 U	96 R

Jt	Brg Size	Required
A	8.0"	2.9"
E	3.5"	2.9"

LC# 1 Girder Loading
Dur Fctrs - Lbr 1.25 Plt 1.25

plf -	Dead	Live*	From	To
TC V	14	40	0.0'	33.1'
BC V	181	189	0.0'	33.1'

Plus 9 Wind Load Case(s)
Plus 1 UBC LL Load Case(s)

Membr	CSI	P Lbs	Axl-CSI-Bnd
----------Top Chords----------			
A -M	0.72	14376 C	0.47 0.25
M -B	0.36	11269 C	0.18 0.18
B -C	0.68	11202 C	0.22 0.46
C -P	0.86	16197 C	0.43 0.43
P -D	0.59	15348 C	0.42 0.17
D -R	0.61	12522 C	0.25 0.36
R -S	0.66	11933 C	0.21 0.45
S -E	0.57	9299 C	0.12 0.45
--------Bottom Chords---------			
A -L	0.63	13274 T	0.33 0.30
L -S1	0.53	13274 T	0.33 0.20
S1-K	0.60	13274 T	0.33 0.27
K -G	0.67	16188 T	0.40 0.27
G -O	0.54	15342 T	0.38 0.16
O -F	0.45	11612 T	0.29 0.16
F -Q	0.46	10726 T	0.27 0.19
Q -E	0.57	10726 T	0.27 0.30
----------Webs----------			
L -M	0.36	2252 T	
M -K	0.34	3158 C	
K -B	0.75	8137 T	
K -C	0.70	7356 C	
G -C	0.05	348 T	
G -P	0.18	1140 T	
O -P	0.06	733 C	
O -D	0.71	4478 T	
F -D	0.23	1467 T	
F -R	0.16	1055 T	
Q -R	0.01	136 T	
----------Sliders----------			
S -E	0.09	3083 C	

TL Defl -0.82" in G -O L/469
LL Defl -0.44" in G -O L/870
Shear // Grain in R -S 0.47

Plates for each ply each face.
Plate - MT20 20 Ga, Gross Area
Plate - MT2H 20 Ga, Gross Area

Jt	Type	Plt Size	X	Y	JSI
A	MT20	3.0x 6.0	0.3	0.1	0.98
A	MT20	4.0x 5.0	0.5	0.3	0.94
M	MT20	4.0x 5.0	Ctr	Ctr	0.65
B	MT20	6.0x 6.0	Ctr	-0.5	0.79
C	MT20	6.0x 6.0	Ctr	Ctr	0.99
P	MT20	4.0x 5.0	Ctr	Ctr	0.60
D	MT20	5.0x 8.0	Ctr	Ctr	0.89
R	MT20	4.0x 5.0	Ctr	Ctr	0.65
S	MT20	3.0x 4.0	Ctr	Ctr	0.80
E	MT20	7.0x 8.0	-4.0	0.3	0.99
L	MT20	3.0x 5.0	Ctr	-1.0	0.45
S1	MT20	6.0x10.0	Ctr	0.2	0.99
K	MT20	6.0x 8.0	Ctr	-0.4	0.99
G	MT20	4.0x 5.0	Ctr	Ctr	0.60
O	MT2H	6.0x10.0	Ctr	-1.2	0.97
F	MT20	5.0x 5.0	Ctr	-0.2	0.60
Q	MT20	2.0x 4.0	Ctr	Ctr	0.43

NOTES:
Trusses Manufactured by:
RIDGWAY ROOF TRUSS
Analysis Conforms To:
FBC2004
Girder Common
Loading BC
Span 20-11- 0
2 COMPLETE TRUSSES REQUIRED.
Fasten together in staggered pattern. (1/2" bolts -OR- SDS3 screws -OR- 10d nails as each layer is applied.)

	Rows	Nails	Screws	Bolts
		----Spacing (In)----		
TC	1	12	24	0
BC	2	12	24	0
WB	1	8	8	

Web Connection Exception --
Use 4" spacing for screws or nails on the following webs
K -C
Design checked for 10 psf non-concurrent LL on BC.
Use properly rated hangers for loads framing into girder truss.
Wind Loads - ANSI / ASCE 7-02
Truss is designed as Components and Claddings* for Exterior zone location.
Wind Speed: 110 mph
Mean Roof Height: 25-0
Exposure Category: B
Occupancy Factor : 1.00
Building Type: Enclosed
TC Dead Load: 4.0 psf
BC Dead Load: 6.0 psf
Max comp. force 16197 Lbs
Max tens. force 16188 Lbs
Quality Control Factor 1.25
FABRICATOR NOTES:
1. Delegated Engineer (Truss Designer)
Gary Dounson, PE 35054
Gary Dounson & Associates, Inc.
2830 NW 41st Street Suite D
Gainesville, FL 32606
(352)375-8593
CA 5201

Job	Mark	Quan	Type	Span	P1-H1	Left OH	Right OH	*Engineering*
070790	*R26*	1	SP	91001	3.536	3-11-10	0	

Hornsby Residence, Roof, Magura

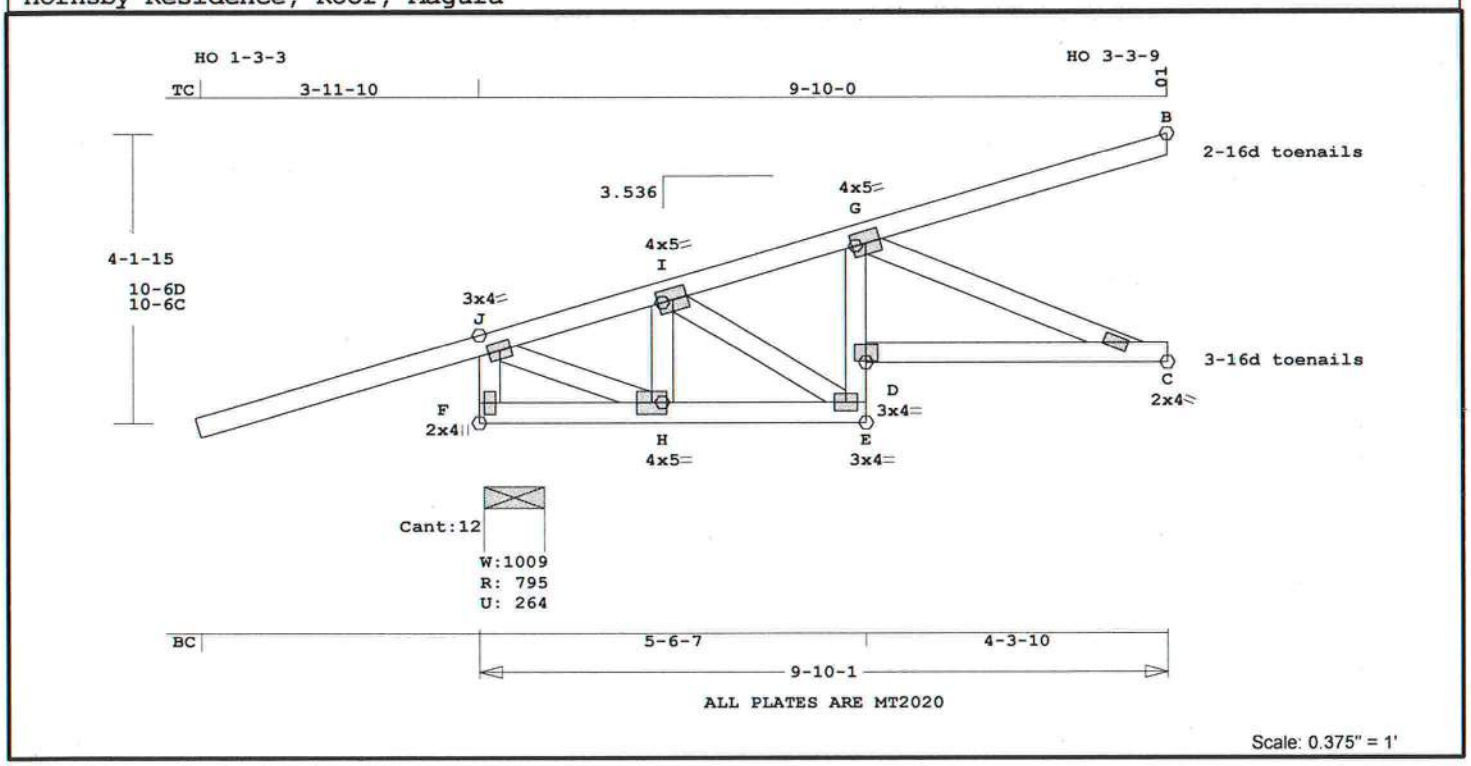

Robbins Engineering, Inc./Online Plus™ APPROX. TRUSS WEIGHT: 72.3 LBS

Online Plus -- Version 21.0.059
RUN DATE: 14-NOV-07

	CSI	-Size-	----Lumber----
TC	0.34	2x 4	SP-#2
BC	0.54	2x 4	SP-#2
CW	0.74	2x 4	SP-2400
WB	0.32	2x 4	SP-#3

Brace truss as follows:

	O.C.	From	To
TC	Cont.	0- 0- 0	9-10- 1
BC	Cont.	0- 0- 0	9-10- 1

psf-Ld	Dead	Live
TC	7.0	20.0
BC	10.0	0.0
TC+BC	17.0	20.0

Total 37.0 Spacing 24.0"
Lumber Duration Factor 1.25
Plate Duration Factor 1.25
TC Fb=1.00 Fc=1.00 Ft=1.00
BC Fb=1.00 Fc=1.00 Ft=1.00

Total Load Reactions (Lbs)

Jt	Down	Uplift	Horiz-
F	796	264 U	248 R
C	439	134 U	89 R
B	141	97 U	

Jt	Brg Size	Required
F	10.6"	1.5"
C	1.5"	1.5"
B	1.5"	1.5"

LC# 1 Standard Loading
Dur Fctrs - Lbr 1.25 Plt 1.25

plf -	Dead	Live*	From	To
TC V	14	40	0.0'	9.8'
BC V	20	0	0.0'	9.8'
TC V	0	0	1.4'	
	28	80		7.1'
BC V	0	0	1.4'	
	40	0		7.1'

Plus 8 Wind Load Case(s)

Plus 1 UBC LL Load Case(s)

Membr	CSI	P Lbs	Axl-CSI-Bnd	
----------Top Chords----------				
J -I	0.10	707 C	0.05	0.05
I -G	0.28	680 C	0.05	0.23
G -B	0.34	40 C	0.00	0.34
--------Bottom Chords---------				
F -H	0.05	222 C	0.00	0.05
H -E	0.18	684 T	0.12	0.06
D -C	0.54	940 T	0.17	0.37
----------Chord-Webs----------				
E -D	0.74	108 T	0.00	0.74
D -G	0.63	259 T	0.01	0.62
----------Webs----------				
F -J	0.08	541 C	WindLd	
J -H	0.23	739 T		
H -I	0.04	192 C		
I -E	0.01	65 C		
G -C	0.32	1018 C		

TL Defl -0.16" in D -C L/675
LL Defl -0.08" in D -C L/999
Shear // Grain in E -D 0.79

Plates for each ply each face.
Plate - MT20 20 Ga, Gross Area
Plate - MT2H 20 Ga, Gross Area

Jt	Type	Plt Size	X	Y	JSI
J	MT20	3.0x 4.0	Ctr	Ctr	0.53
I	MT20	4.0x 5.0	Ctr	Ctr	0.63
G	MT20	4.0x 5.0	Ctr	Ctr	0.45
F	MT20	2.0x 4.0	Ctr	Ctr	0.38
H	MT20	4.0x 5.0	Ctr	Ctr	0.60
E	MT20	3.0x 4.0	Ctr	Ctr	0.77
D	MT20	3.0x 4.0	Ctr	Ctr	0.67
C	MT20	2.0x 4.0	Ctr	Ctr	0.51

For proper installation of toe-nails, refer to the 2001 National Design Specification (NDS) for Wood Construction
NOTES:
Trusses Manufactured by:

RIDGWAY ROOF TRUSS
Analysis Conforms To:
FBC2004
OH Loading
Soffit psf 2.0
Excessive Left OH condition.
Max allowable length is 2-11-10. Support end or provide level return.
Design checked for 10 psf non-concurrent LL on BC.
Wind Loads - ANSI / ASCE 7-02
Truss is designed as Components and Claddings* for Exterior zone location.
Wind Speed: 110 mph
Mean Roof Height: 25-0
Exposure Category: B
Occupancy Factor : 1.00
Building Type: Enclosed
TC Dead Load: 4.0 psf
BC Dead Load: 6.0 psf
Max comp. force 1018 Lbs
Max tens. force 940 Lbs
Quality Control Factor 1.25
FABRICATOR NOTES:
1. Delegated Engineer (Truss Designer)
Gary Dounson, PE 35054
Gary Dounson & Associates, Inc.
2830 NW 41st Street Suite D
Gainesville, FL 32606
(352)375-8593
CA 5201

Job	Mark	Quan	Type	Span	P1-H1	Left OH	Right OH	*Engineering*
070790	*R27*	1	SP	70011	5	8- 2	0	

Hornsby Residence, Roof, Magura

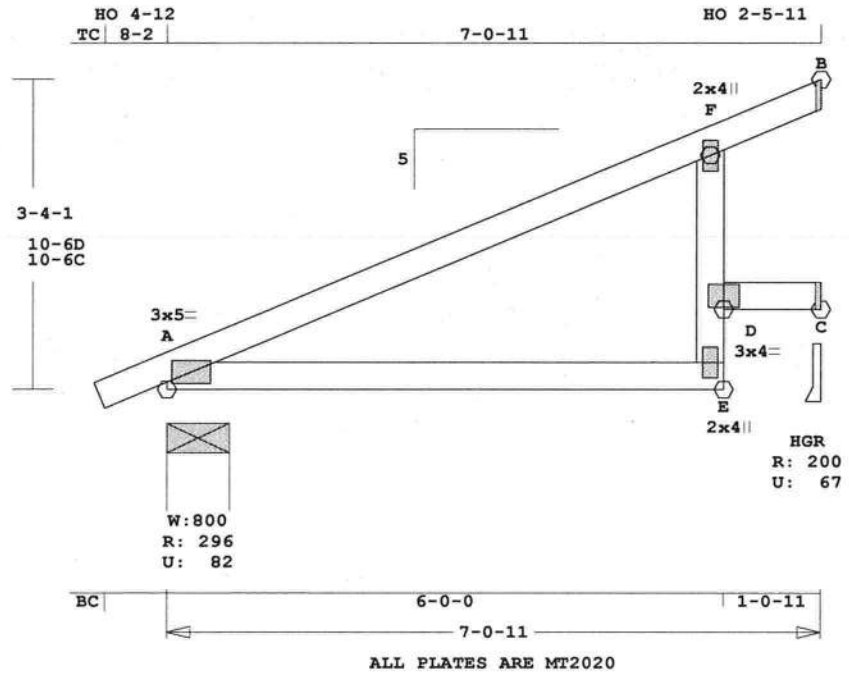

Scale: 0.500" = 1'

Robbins Engineering, Inc./Online Plus™ APPROX. TRUSS WEIGHT: 33.7 LBS

Online Plus -- Version 21.0.059
RUN DATE: 14-NOV-07

	CSI	-Size-	----Lumber----
TC	0.32	2x 4	SP-#2
BC	0.37	2x 4	SP-#2
CW	0.65	2x 4	SP-#3

Brace truss as follows:

	O.C.	From	To
TC	Cont.	0- 0- 0	7- 0-11
BC	Cont.	0- 0- 0	7- 0-11

psf-Ld	Dead	Live
TC	7.0	20.0
BC	10.0	0.0
TC+BC	17.0	20.0

Total 37.0 Spacing 24.0"
Lumber Duration Factor 1.25
Plate Duration Factor 1.25
TC Fb=1.15 Fc=1.10 Ft=1.10
BC Fb=1.10 Fc=1.10 Ft=1.10

Total Load Reactions (Lbs)

Jt	Down	Uplift	Horiz-
A	296	82 U	184 R
C	201	68 U	59 R

Jt	Brg Size	Required
A	8.0"	1.5"
C	3.5"	1.5"

Plus 7 Wind Load Case(s)
Plus 1 UBC LL Load Case(s)

Membr	CSI	P Lbs	Axl-CSI-Bnd	
----------Top Chords----------				
A -F	0.32	119 C	0.00	0.32
--------Bottom Chords---------				
A -E	0.22	106 T	0.01	0.21
E -D	0.13	65 T	0.00	0.13
D -C	0.37	58 T	0.00	0.37
----------Chord-Webs----------				
E -D	0.07	57 T	0.00	0.07
D -F	0.65	192 T	0.00	0.65

TL Defl -0.08" in A -E L/918
LL Defl -0.04" in A -E L/999
Shear // Grain in D -C 0.25

Plates for each ply each face.
Plate - MT20 20 Ga, Gross Area
Plate - MT2H 20 Ga, Gross Area

Jt	Type	Plt Size	X	Y	JSI
A	MT20	3.0x 5.0	Ctr	Ctr	0.53
F	MT20	2.0x 4.0	Ctr	Ctr	0.38
E	MT20	2.0x 4.0	Ctr	Ctr	0.58
D	MT20	3.0x 4.0	Ctr	Ctr	0.62

NOTES:
Trusses Manufactured by:
RIDGWAY ROOF TRUSS
Analysis Conforms To:
FBC2004
OH Loading
Soffit psf 2.0
Design checked for 10 psf non-concurrent LL on BC.
Wind Loads - ANSI / ASCE 7-02
Truss is designed as
Components and Claddings*
for Exterior zone location.
Wind Speed: 110 mph
Mean Roof Height: 25-0
Exposure Category: B
Occupancy Factor : 1.00
Building Type: Enclosed
TC Dead Load: 4.0 psf
BC Dead Load: 6.0 psf

Max comp. force 119 Lbs
Max tens. force 192 Lbs
Quality Control Factor 1.25
FABRICATOR NOTES:
1. Delegated Engineer (Truss Designer)
Gary Dounson, PE 35054
Gary Dounson & Associates, Inc.
2830 NW 41st Street Suite D
Gainesville, FL 32606
(352)375-8593
CA 5201

Job	Mark	Quan	Type	Span	P1-H1	Left OH	Right OH	*Engineering*
070790	*R28*	1	JACK1	50011	5	8- 2	0	

Hornsby Residence, Roof, Magura

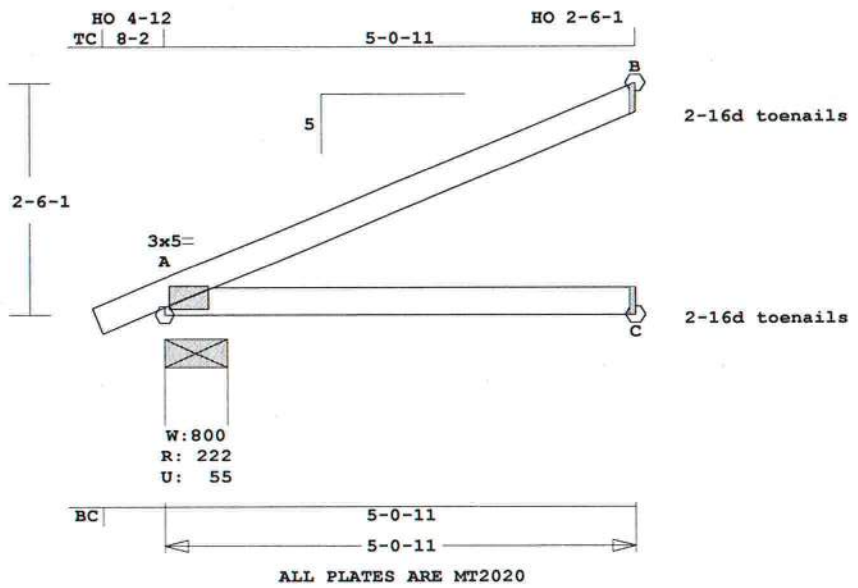

Scale: 0.500" = 1'

Robbins Engineering, Inc./Online Plus™ APPROX. TRUSS WEIGHT: 21.5 LBS

Online Plus -- Version 21.0.059
RUN DATE: 14-NOV-07

	CSI	-Size-	----Lumber----
TC	0.30	2x 4	SP-#2
BC	0.24	2x 4	SP-#2

Brace truss as follows:

	O.C.	From	To
TC	Cont.	0- 0- 0	5- 0-11
BC	Cont.	0- 0- 0	5- 0-11

psf-Ld	Dead	Live
TC	7.0	20.0
BC	10.0	0.0
TC+BC	17.0	20.0

Total 37.0 Spacing 24.0"
Lumber Duration Factor 1.25
Plate Duration Factor 1.25
TC Fb=1.15 Fc=1.10 Ft=1.10
BC Fb=1.10 Fc=1.10 Ft=1.10

Total Load Reactions (Lbs)

Jt	Down	Uplift	Horiz-
A	222	55 U	197 R
C	93		
B	130	100 U	51 R

Jt	Brg Size	Required
A	8.0"	1.5"
C	3.5"	1.5"
B	3.5"	1.5"

Plus 7 Wind Load Case(s)
Plus 1 UBC LL Load Case(s)

Membr	CSI	P Lbs	Axl-CSI-Bnd
----------Top Chords----------			
A -B	0.30	112 C	0.00 0.30
--------Bottom Chords---------			
A -C	0.24	0 T	0.00 0.24

TL Defl -0.04" in A -C L/999
LL Defl -0.02" in A -C L/999
Shear // Grain in A -B 0.22

Plates for each ply each face.
Plate - MT20 20 Ga, Gross Area
Plate - MT2H 20 Ga, Gross Area

Jt	Type	Plt Size	X	Y	JSI
A	MT20	3.0x 5.0	Ctr	Ctr	0.50

For proper installation of toe-nails, refer to the 2001 National Design Specification (NDS) for Wood Construction
NOTES:
Trusses Manufactured by:
RIDGWAY ROOF TRUSS
Analysis Conforms To:
FBC2004
OH Loading
Soffit psf 2.0
Design checked for 10 psf non-concurrent LL on BC.
Wind Loads - ANSI / ASCE 7-02
Truss is designed as
Components and Claddings*
for Exterior zone location.
Wind Speed: 110 mph
Mean Roof Height: 25-0
Exposure Category: B
Occupancy Factor : 1.00
Building Type: Enclosed
TC Dead Load: 4.0 psf
BC Dead Load: 6.0 psf
Max comp. force 112 Lbs
Max tens. force 30 Lbs

Quality Control Factor 1.25
FABRICATOR NOTES:
1. Delegated Engineer (Truss Designer)
Gary Dounson, PE 35054
Gary Dounson & Associates, Inc.
2830 NW 41st Street Suite D
Gainesville, FL 32606
(352)375-8593
CA 5201

Job	Mark	Quan	Type	Span	P1-H1	Left OH	Right OH	*Engineering*
070790	*R29*	1	JACK1	30011	5	8- 2	0	

Hornsby Residence, Roof, Magura

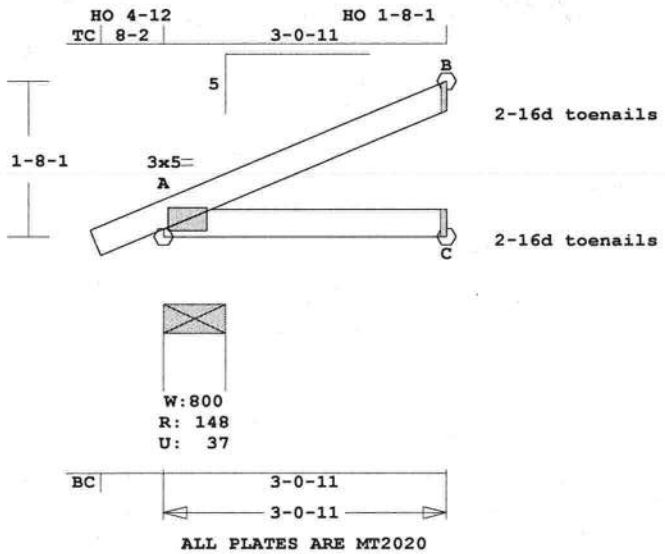

Scale: 0.500" = 1'

Robbins Engineering, Inc./Online Plus™ APPROX. TRUSS WEIGHT: 13.6 LBS

Online Plus -- Version 21.0.059
RUN DATE: 14-NOV-07

	CSI	-Size-	----Lumber----
TC	0.11	2x 4	SP-#2
BC	0.09	2x 4	SP-#2

Brace truss as follows:

	O.C.	From	To
TC	Cont.	0- 0- 0	3- 0-11
BC	Cont.	0- 0- 0	3- 0-11

psf-Ld	Dead	Live
TC	7.0	20.0
BC	10.0	0.0
TC+BC	17.0	20.0

Total 37.0 Spacing 24.0"
Lumber Duration Factor 1.25
Plate Duration Factor 1.25
TC Fb=1.15 Fc=1.10 Ft=1.10
BC Fb=1.10 Fc=1.10 Ft=1.10

Total Load Reactions (Lbs)

Jt	Down	Uplift	Horiz-
A	148	38 U	142 R
C	56		
B	81	63 U	30 R

Jt	Brg Size	Required
A	8.0"	1.5"
C	3.5"	1.5"
B	3.5"	1.5"

Plus 7 Wind Load Case(s)
Plus 1 UBC LL Load Case(s)

Membr	CSI	P Lbs	Axl-CSI-Bnd
----------Top Chords----------			
A -B	0.11	73 C	0.00 0.11
--------Bottom Chords---------			
A -C	0.09	0 T	0.00 0.09

TL Defl 0.00" in A -C L/999
LL Defl 0.00" in A -C L/999
Shear // Grain in A -B 0.13

Plates for each ply each face.
Plate - MT20 20 Ga, Gross Area
Plate - MT2H 20 Ga, Gross Area

Jt	Type	Plt Size	X	Y	JSI
A	MT20	3.0x 5.0	Ctr	Ctr	0.49

For proper installation of toe-nails, refer to the 2001 National Design Specification (NDS) for Wood Construction

NOTES:
Trusses Manufactured by:
RIDGWAY ROOF TRUSS
Analysis Conforms To:
FBC2004
OH Loading
Soffit psf 2.0
Design checked for 10 psf non-concurrent LL on BC.
Wind Loads - ANSI / ASCE 7-02
Truss is designed as
Components and Claddings*
for Exterior zone location.
Wind Speed: 110 mph
Mean Roof Height: 25-0
Exposure Category: B
Occupancy Factor : 1.00
Building Type: Enclosed
TC Dead Load: 4.0 psf
BC Dead Load: 6.0 psf
Max comp. force 73 Lbs
Max tens. force 18 Lbs

Quality Control Factor 1.25
FABRICATOR NOTES:
1. Delegated Engineer (Truss Designer)
Gary Dounson, PE 35054
Gary Dounson & Associates, Inc.
2830 NW 41st Street Suite D
Gainesville, FL 32606
(352)375-8593
CA 5201

Job	Mark	Quan	Type	Span	P1-H1	Left OH	Right OH	*Engineering*
070790	*R30*	1	JACK1	21111	5	2- 9- 2	0	

Hornsby Residence, Roof, Magura

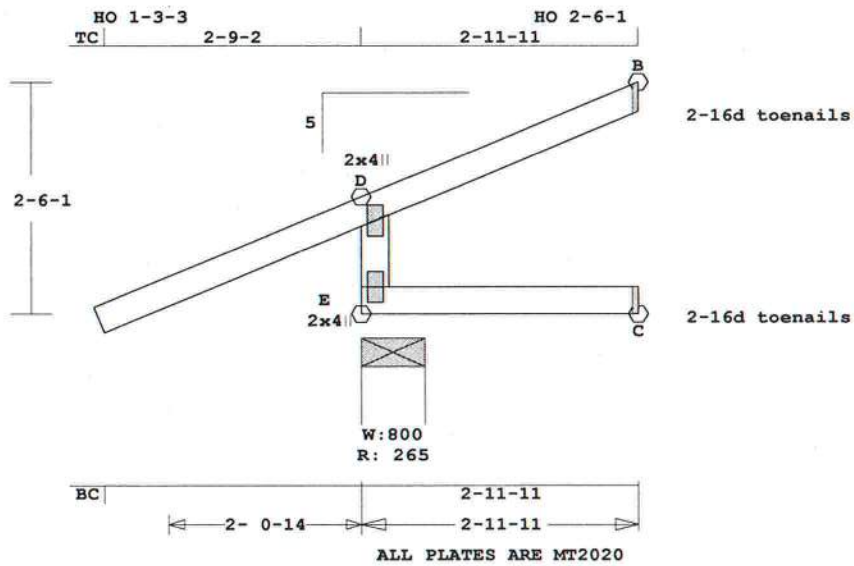

Scale: 0.500" = 1'

Robbins Engineering, Inc./Online Plus™ APPROX. TRUSS WEIGHT: 19.1 LBS

Online Plus -- Version 21.0.059
RUN DATE: 14-NOV-07

	CSI	-Size-	----Lumber----
TC	0.17	2x 4	SP-#2
BC	0.17	2x 4	SP-#2
WB	0.35	2x 4	SP-#3

Brace truss as follows:

	O.C.	From	To
TC	Cont.	0- 0- 0	2-11-11
BC	Cont.	0- 0- 0	2-11-11

psf-Ld	Dead	Live
TC	7.0	20.0
BC	10.0	0.0
TC+BC	17.0	20.0

Total 37.0 Spacing 24.0"
Lumber Duration Factor 1.25
Plate Duration Factor 1.25
TC Fb=1.15 Fc=1.10 Ft=1.10
BC Fb=1.10 Fc=1.10 Ft=1.10

Total Load Reactions (Lbs)

Jt	Down	Uplift	Horiz-
E	266		191 R
C	57		48 R
B	82	78 U	

Jt	Brg Size	Required
E	8.0"	1.5"
C	3.5"	1.5"
B	3.5"	1.5"

Plus 7 Wind Load Case(s)
Plus 1 UBC LL Load Case(s)

Membr	CSI	P Lbs	Axl-CSI-Bnd
----------Top Chords----------			
D -B	0.17	87 C	0.00 0.17
--------Bottom Chords---------			
E -C	0.17	48 T	0.00 0.17
----------Webs----------			
E -D	0.35	97 T	0.02 0.33

TL Defl 0.00" in E -C L/999
LL Defl 0.00" in E -C L/999
Shear // Grain in D -B 0.16

Plates for each ply each face.
Plate - MT20 20 Ga, Gross Area
Plate - MT2H 20 Ga, Gross Area

Jt	Type	Plt Size	X	Y	JSI
D	MT20	2.0x 4.0	Ctr	Ctr	0.38
E	MT20	2.0x 4.0	Ctr	Ctr	0.38

For proper installation of toe-nails, refer to the 2001 National Design Specification (NDS) for Wood Construction
NOTES:
Trusses Manufactured by:
RIDGWAY ROOF TRUSS
Analysis Conforms To:
FBC2004
OH Loading
Soffit psf 2.0
Design checked for 10 psf non-concurrent LL on BC.
Wind Loads - ANSI / ASCE 7-02
Truss is designed as Components and Claddings* for Exterior zone location.
Wind Speed: 110 mph
Mean Roof Height: 25-0
Exposure Category: B
Occupancy Factor : 1.00
Building Type: Enclosed

TC Dead Load: 4.0 psf
BC Dead Load: 6.0 psf
Max comp. force 87 Lbs
Max tens. force 97 Lbs
Quality Control Factor 1.25
FABRICATOR NOTES:
1. Delegated Engineer (Truss Designer)
Gary Dounson, PE 35054
Gary Dounson & Associates, Inc.
2830 NW 41st Street Suite D
Gainesville, FL 32606
(352)375-8593
CA 5201

Job	Mark	Quan	Type	Span	P1-H1	Left OH	Right OH	*Engineering*
070790	*R31*	1	JACK1	1111	5	2- 9- 2	0	

Hornsby Residence, Roof, Magura

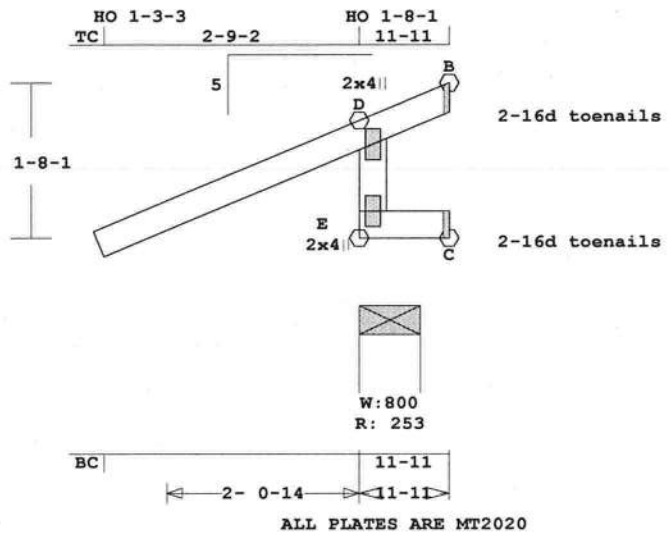

Scale: 0.500" = 1'

Robbins Engineering, Inc./Online Plus™ APPROX. TRUSS WEIGHT: 11.2 LBS

Online Plus -- Version 21.0.059
RUN DATE: 14-NOV-07

	CSI	-Size-	----Lumber----
TC	0.04	2x 4	SP-#2
BC	0.05	2x 4	SP-#2
WB	0.10	2x 4	SP-#3

Brace truss as follows:

	O.C.	From	To
TC	Cont.	0- 0- 0	0-11-11
BC	Cont.	0- 0- 0	0-11-11

psf-Ld	Dead	Live
TC	7.0	20.0
BC	10.0	0.0
TC+BC	17.0	20.0

Total 37.0 Spacing 24.0"
Lumber Duration Factor 1.25
Plate Duration Factor 1.25
TC Fb=1.15 Fc=1.10 Ft=1.10
BC Fb=1.10 Fc=1.10 Ft=1.10

Total Load Reactions (Lbs)

Jt	Down	Uplift	Horiz-
E	254		96 R
C	28	18 U	28 R
B	40	51 U	

Jt	Brg Size	Required
E	8.0"	1.5"
C	3.5"	1.5"
B	3.5"	1.5"

Plus 7 Wind Load Case(s)
Plus 1 UBC LL Load Case(s)

Membr	CSI	P Lbs	Axl-CSI-Bnd
----------Top Chords----------			
D -B	0.04	53 C	0.00 0.04
--------Bottom Chords---------			
E -C	0.05	28 T	0.00 0.05
----------Webs----------			
E -D	0.10	32 C	0.00 0.10

TL Defl 0.00" in E -C L/999
LL Defl 0.00" in E -C L/999
Shear // Grain in D -B 0.09

Plates for each ply each face.
Plate - MT20 20 Ga, Gross Area
Plate - MT2H 20 Ga, Gross Area

Jt	Type	Plt Size	X	Y	JSI
D	MT20	2.0x 4.0	Ctr	Ctr	0.38
E	MT20	2.0x 4.0	Ctr	Ctr	0.38

For proper installation of toe-nails, refer to the 2001 National Design Specification (NDS) for Wood Construction

NOTES:
Trusses Manufactured by:
RIDGWAY ROOF TRUSS
Analysis Conforms To:
FBC2004
OH Loading
Soffit psf 2.0
Design checked for 10 psf non-concurrent LL on BC.
Wind Loads - ANSI / ASCE 7-02
Truss is designed as
Components and Claddings*
for Exterior zone location.
Wind Speed: 110 mph
Mean Roof Height: 25-0
Exposure Category: B
Occupancy Factor : 1.00
Building Type: Enclosed

TC Dead Load: 4.0 psf
BC Dead Load: 6.0 psf
Max comp. force 53 Lbs
Max tens. force 28 Lbs
Quality Control Factor 1.25
FABRICATOR NOTES:
1. Delegated Engineer (Truss Designer)
Gary Dounson, PE 35054
Gary Dounson & Associates, Inc.
2830 NW 41st Street Suite D
Gainesville, FL 32606
(352)375-8593
CA 5201

Job	Mark	Quan	Type	Span	P1-H1	Left OH	Right OH	*Engineering*
070790	*R32*	1	HIPP	201100	5	2- 9- 2	2- 9- 2	

Hornsby Residence, Roof, Magura

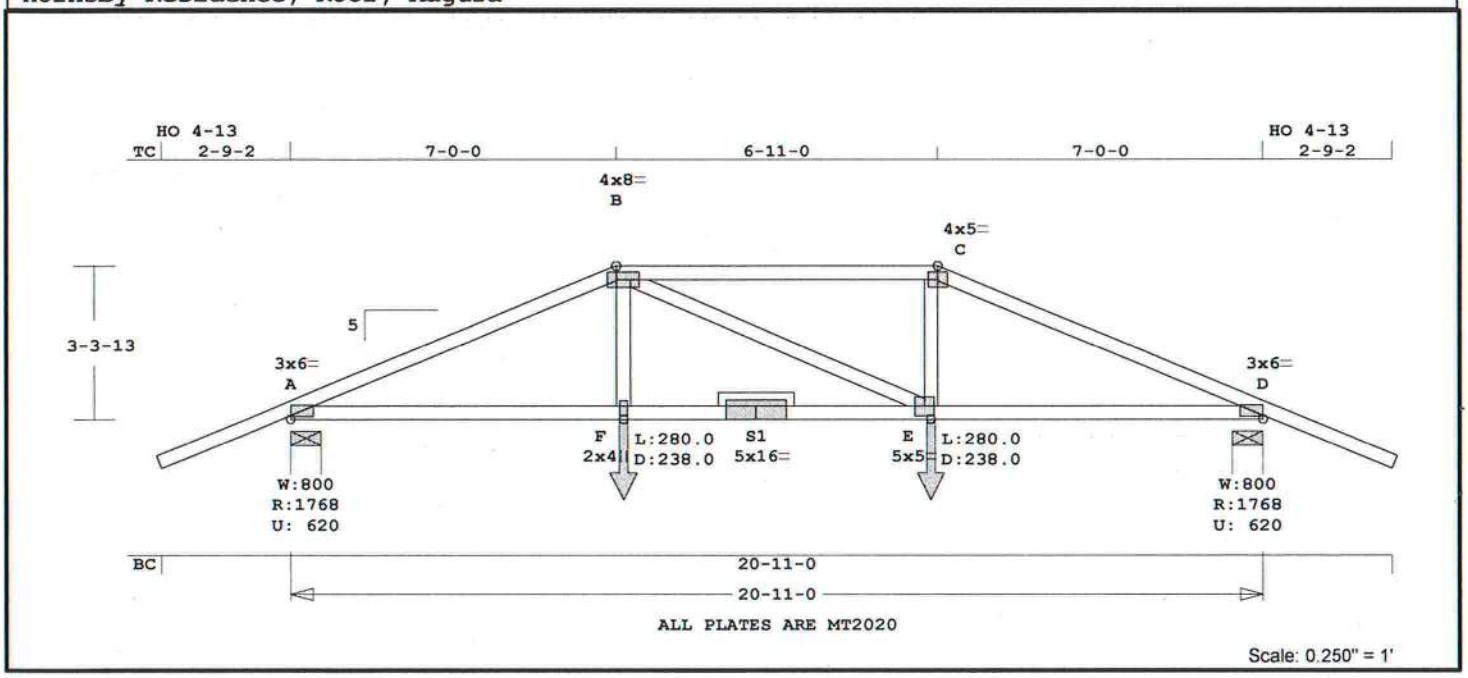

Robbins Engineering, Inc./Online Plus™ APPROX. TRUSS WEIGHT: 119.5 LBS

Online Plus -- Version 21.0.059
RUN DATE: 14-NOV-07

	CSI	-Size-	----Lumber----
TC	0.92	2x 4	SP-2400
--	0.69	2x 4	SP-#2
	A -B	C -D	
BC	0.95	2x 4	SP-#2
WB	0.22	2x 4	SP-#3
PB	---	2x 4	SP-#3

Brace truss as follows:

	O.C.	From	To
TC	Cont.	0- 0- 0	20-11- 0
BC	Cont.	0- 0- 0	20-11- 0

psf-Ld	Dead	Live
TC	7.0	20.0
BC	10.0	0.0
TC+BC	17.0	20.0

Total 37.0 Spacing 24.0"
Lumber Duration Factor 1.25
Plate Duration Factor 1.25
TC Fb=1.00 Fc=1.00 Ft=1.00
BC Fb=1.00 Fc=1.00 Ft=1.00

Total Load Reactions (Lbs)

Jt	Down	Uplift	Horiz-
A	1768	620 U	1 R
D	1768	620 U	1 R

Jt	Brg Size	Required
A	8.0"	2.1"
D	8.0"	2.1"

LC# 1 Girder Loading
Dur Fctrs - Lbr 1.25 Plt 1.25

plf -	Dead	Live*	From	To
TC V	14	40	0.0'	20.9'
BC V	20	0	0.0'	20.9'
TC V	18	50	7.0'	13.9'
BC V	25	0	7.1'	13.8'
BC V	238	280	7.1'	CL-LB
BC V	238	280	13.8'	CL-LB

Plus 9 Wind Load Case(s)
Plus 1 UBC LL Load Case(s)

Membr	CSI	P Lbs	Axl-CSI-Bnd		
----------Top Chords----------					
A -B	0.69	3432	C	0.09	0.60
B -C	0.92	3177	C	0.09	0.83
C -D	0.64	3441	C	0.09	0.55
--------Bottom Chords---------					
A -F	0.90	3171	T	0.58	0.32
F -S1	0.94	3142	T	0.58	0.36
S1-E	0.95	3142	T	0.58	0.37
E -D	0.87	3177	T	0.58	0.29
----------Webs----------					
F -B	0.22	802	T		
B -E	0.04	64	C		
E -C	0.22	803	T		

TL Defl -0.45" in F -E L/526
LL Defl -0.19" in F -E L/999
Shear // Grain in B -C 0.47

Plates for each ply each face.
Plate - MT20 20 Ga, Gross Area
Plate - MT2H 20 Ga, Gross Area

Jt	Type	Plt Size	X	Y	JSI
A	MT20	3.0x 6.0	Ctr	Ctr	0.95
B	MT20	4.0x 8.0	Ctr	Ctr	0.87
C	MT20	4.0x 5.0	Ctr	Ctr	0.87
D	MT20	3.0x 6.0	Ctr	Ctr	0.95
F	MT20	2.0x 4.0	Ctr	-0.6	0.48
S1	MT20	5.0x16.0	Ctr	0.8	0.94
E	MT20	5.0x 5.0	Ctr	-0.1	0.60

NOTES:
Trusses Manufactured by:
RIDGWAY ROOF TRUSS
Analysis Conforms To:
FBC2004
Girder Step Down Hip
Framing King Jacks
Jack Open Faced
Setback 7- 0- 0
OH Loading
Soffit psf 2.0
Design checked for 10 psf non-concurrent LL on BC.
Wind Loads - ANSI / ASCE 7-02
Truss is designed as
Components and Claddings*
for Exterior zone location.
Wind Speed: 110 mph
Mean Roof Height: 25-0
Exposure Category: B
Occupancy Factor : 1.00
Building Type: Enclosed
TC Dead Load: 4.0 psf
BC Dead Load: 6.0 psf
Max comp. force 3441 Lbs
Max tens. force 3177 Lbs
Quality Control Factor 1.25
FABRICATOR NOTES:
1. Delegated Engineer (Truss Designer)
Gary Dounson, PE 35054
Gary Dounson & Associates, Inc.
2830 NW 41st Street Suite D
Gainesville, FL 32606
(352)375-8593
CA 5201

Job	Mark	Quan	Type	Span	P1-H1	Left OH	Right OH	*Engineering*
070790	*R33*	1	HIPP	201100	5	2- 9- 2	2- 9- 2	

Hornsby Residence, Roof, Magura

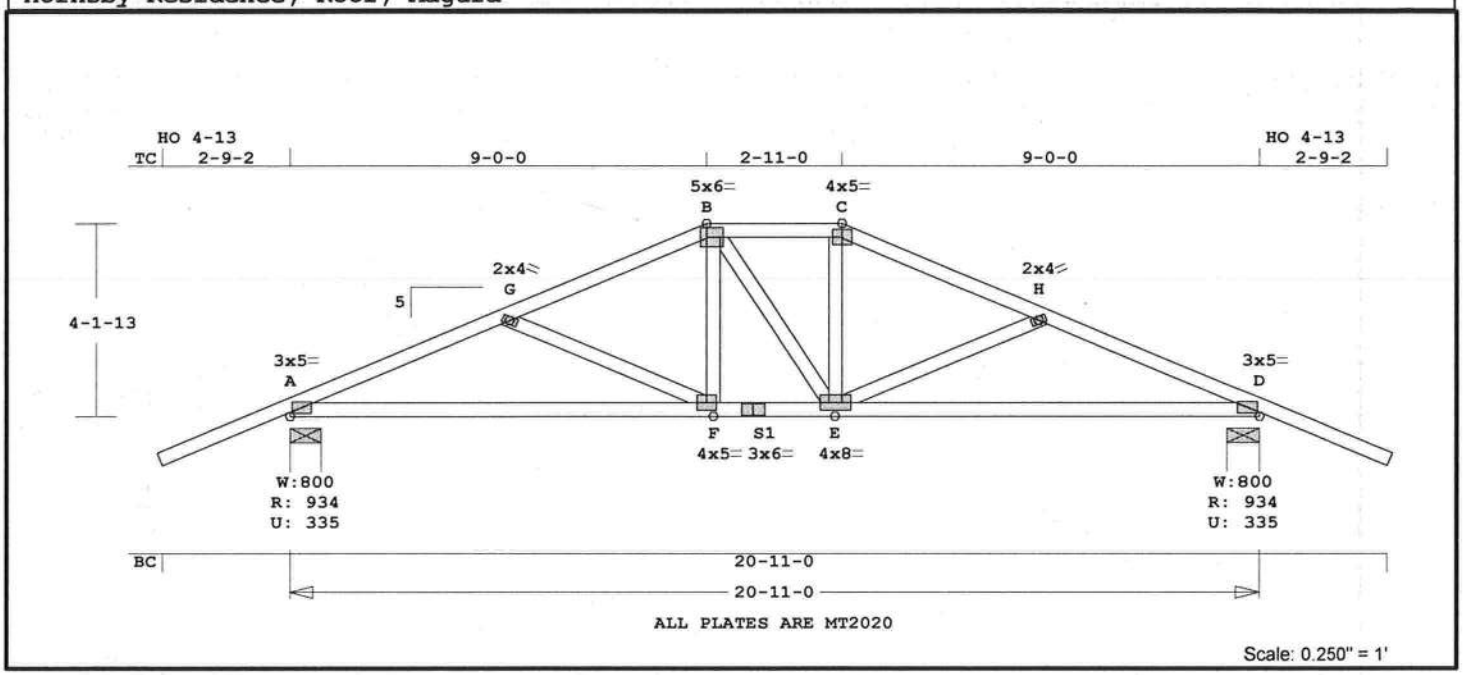

Robbins Engineering, Inc./Online Plus™ APPROX. TRUSS WEIGHT: 133.1 LBS

Online Plus -- Version 21.0.059
RUN DATE: 14-NOV-07

	CSI	-Size-	----Lumber----
TC	0.25	2x 4	SP-#2
BC	0.42	2x 4	SP-#2
WB	0.12	2x 4	SP-#3

Brace truss as follows:

	O.C.	From	To
TC	Cont.	0- 0- 0	20-11- 0
BC	Cont.	0- 0- 0	20-11- 0

psf-Ld	Dead	Live
TC	7.0	20.0
BC	10.0	0.0
TC+BC	17.0	20.0
Total	37.0	Spacing 24.0"

Lumber Duration Factor 1.25
Plate Duration Factor 1.25
TC Fb=1.15 Fc=1.10 Ft=1.10
BC Fb=1.10 Fc=1.10 Ft=1.10

Total Load Reactions (Lbs)

Jt	Down	Uplift	Horiz-
A	934	335 U	1 R
D	934	335 U	1 R

Jt	Brg Size	Required
A	8.0"	1.5"
D	8.0"	1.5"

Plus 9 Wind Load Case(s)
Plus 1 UBC LL Load Case(s)

Membr	CSI	P Lbs	Axl-CSI-Bnd		
----------Top Chords----------					
A -G	0.25	1423	C	0.10	0.15
G -B	0.24	1122	C	0.07	0.17
B -C	0.14	1032	C	0.08	0.06
C -H	0.24	1121	C	0.07	0.17
H -D	0.25	1425	C	0.10	0.15
--------Bottom Chords---------					
A -F	0.42	1317	T	0.12	0.30
F -S1	0.40	1028	T	0.10	0.30
S1-E	0.40	1028	T	0.10	0.30
E -D	0.42	1318	T	0.12	0.30
----------Webs----------					
G -F	0.11	319	T		
F -B	0.07	273	T		
B -E	0.01	43	C		
E -C	0.07	268	T		
E -H	0.12	320	T		

TL Defl -0.26" in A -F L/891
LL Defl -0.13" in A -F L/999
Shear // Grain in A -F 0.19

Plates for each ply each face.
Plate - MT20 20 Ga, Gross Area
Plate - MT2H 20 Ga, Gross Area

Jt	Type	Plt Size	X	Y	JSI
A	MT20	3.0x 5.0	Ctr	Ctr	0.74
G	MT20	2.0x 4.0	Ctr	Ctr	0.38
B	MT20	5.0x 6.0-0.5	Ctr	Ctr	0.70
C	MT20	4.0x 5.0	Ctr	Ctr	0.87
H	MT20	2.0x 4.0	Ctr	Ctr	0.38
D	MT20	3.0x 5.0	Ctr	Ctr	0.74
F	MT20	4.0x 5.0	Ctr	Ctr	0.60
S1	MT20	3.0x 6.0	Ctr	Ctr	0.88
E	MT20	4.0x 8.0	Ctr	Ctr	0.57

NOTES:
Trusses Manufactured by:
RIDGWAY ROOF TRUSS
Analysis Conforms To:
FBC2004
OH Loading
Soffit psf 2.0
Design checked for 10 psf non-concurrent LL on BC.
Wind Loads - ANSI / ASCE 7-02
Truss is designed as
Components and Claddings*
for Exterior zone location.
Wind Speed: 110 mph
Mean Roof Height: 25-0

Exposure Category: B
Occupancy Factor : 1.00
Building Type: Enclosed
TC Dead Load: 4.0 psf
BC Dead Load: 6.0 psf
Max comp. force 1425 Lbs
Max tens. force 1318 Lbs
Quality Control Factor 1.25
FABRICATOR NOTES:
1. Delegated Engineer (Truss Designer)
Gary Dounson, PE 35054
Gary Dounson & Associates, Inc.
2830 NW 41st Street Suite D
Gainesville, FL 32606
(352)375-8593
CA 5201

Job	Mark	Quan	Type	Span	P1-H1	Left OH	Right OH	Engineering
070790	R34	2	TR	201100	5	2- 9- 2	2- 9- 2	

Hornsby Residence, Roof, Magura

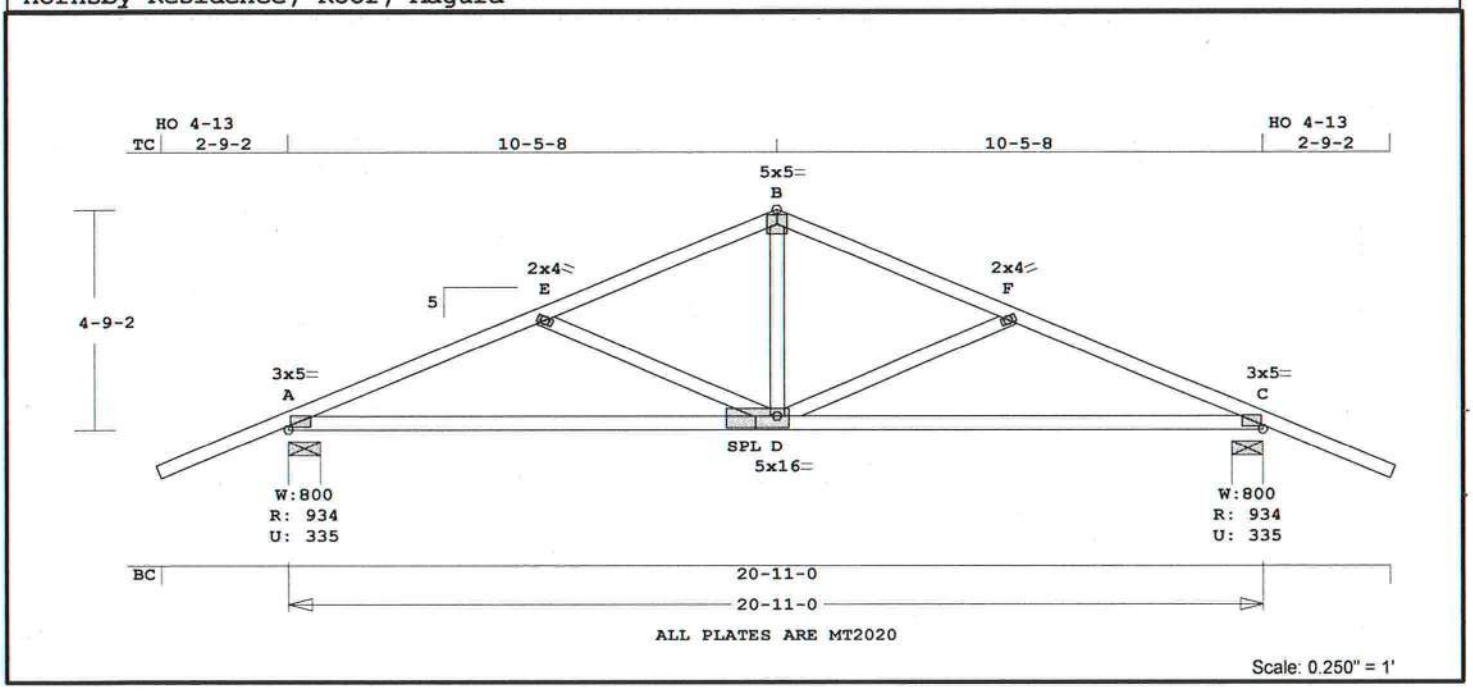

Robbins Engineering, Inc./Online Plus™ APPROX. TRUSS WEIGHT: 122.3 LBS

Online Plus -- Version 21.0.059
RUN DATE: 14-NOV-07

	CSI	-Size-	----Lumber----
TC	0.26	2x 4	SP-#2
BC	0.73	2x 4	SP-#2
WB	0.18	2x 4	SP-#3

Brace truss as follows:

	O.C.	From	To
TC	Cont.	0- 0- 0	20-11- 0
BC	Cont.	0- 0- 0	20-11- 0

psf-Ld	Dead	Live
TC	7.0	20.0
BC	10.0	0.0
TC+BC	17.0	20.0

Total 37.0 Spacing 24.0"
Lumber Duration Factor 1.25
Plate Duration Factor 1.25
TC Fb=1.15 Fc=1.10 Ft=1.10
BC Fb=1.10 Fc=1.10 Ft=1.10

Total Load Reactions (Lbs)

Jt	Down	Uplift	Horiz-
A	934	335 U	1 R
C	934	335 U	1 R

Jt	Brg Size	Required
A	8.0"	1.5"
C	8.0"	1.5"

Plus 7 Wind Load Case(s)
Plus 1 UBC LL Load Case(s)

Membr	CSI	P Lbs	Axl-CSI-Bnd	
----------Top Chords----------				
A -E	0.26	1387 C	0.10	0.16
E -B	0.26	1026 C	0.07	0.19
B -F	0.26	1026 C	0.07	0.19
F -C	0.26	1387 C	0.10	0.16
--------Bottom Chords---------				
A -D	0.73	1287 T	0.12	0.61
D -C	0.73	1287 T	0.12	0.61
----------Webs----------				
E -D	0.18	376 C		
D -B	0.16	559 T		
D -F	0.18	376 C		

TL Defl -0.33" in A -D L/718
LL Defl -0.16" in D -C L/999
Shear // Grain in A -D 0.23

Plates for each ply each face.
Plate - MT20 20 Ga, Gross Area
Plate - MT2H 20 Ga, Gross Area

Jt	Type	Plt Size	X	Y	JSI
A	MT20	3.0x 5.0	Ctr	Ctr	0.74
E	MT20	2.0x 4.0	Ctr	Ctr	0.38
B	MT20	5.0x 5.0	Ctr	Ctr	0.53
F	MT20	2.0x 4.0	Ctr	Ctr	0.37
C	MT20	3.0x 5.0	Ctr	Ctr	0.74
D	MT20	5.0x16.0	0.5	-0.5	0.88

NOTES:
Trusses Manufactured by:
RIDGWAY ROOF TRUSS
Analysis Conforms To:
FBC2004
OH Loading
Soffit psf 2.0
Design checked for 10 psf non-concurrent LL on BC.
Wind Loads - ANSI / ASCE 7-02
Truss is designed as
Components and Claddings*
for Exterior zone location.
Wind Speed: 110 mph
Mean Roof Height: 25-0
Exposure Category: B
Occupancy Factor : 1.00
Building Type: Enclosed
TC Dead Load: 4.0 psf
BC Dead Load: 6.0 psf
Max comp. force 1387 Lbs
Max tens. force 1287 Lbs
Quality Control Factor 1.25
FABRICATOR NOTES:
1. Delegated Engineer (Truss Designer)
Gary Dounson, PE 35054
Gary Dounson & Associates, Inc.
2830 NW 41st Street Suite D
Gainesville, FL 32606
(352)375-8593
CA 5201

Job	Mark	Quan	Type	Span	P1-H1	Left OH	Right OH	*Engineering*
070790	*R35*	1	TR	201100	5	2- 9- 2	0	

Hornsby Residence, Roof, Magura

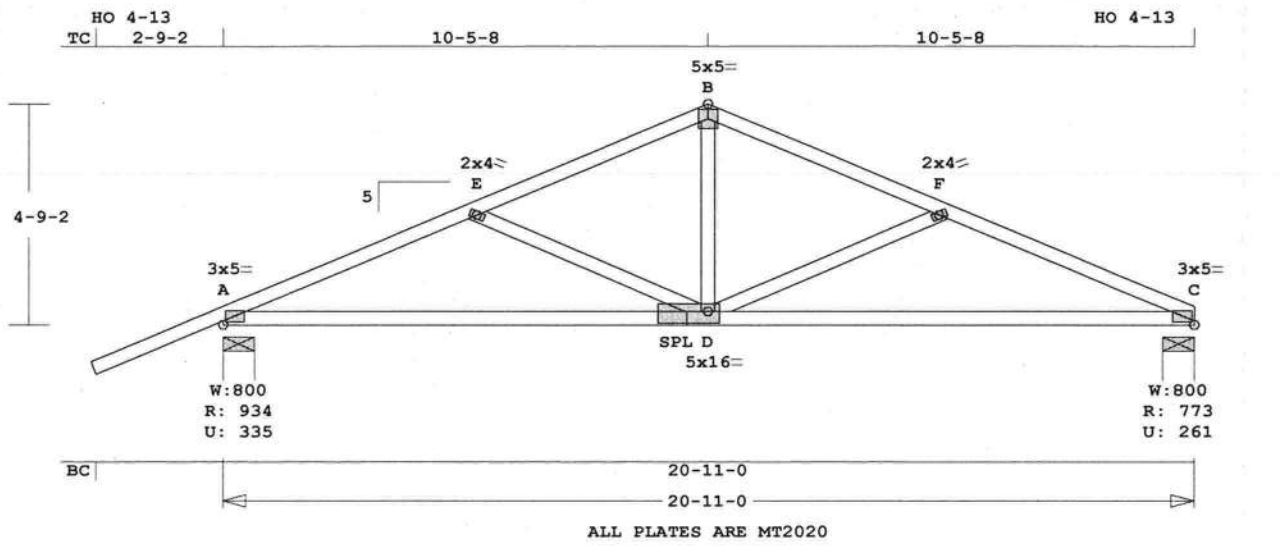

Scale: 0.250" = 1'

Robbins Engineering, Inc./Online Plus™ APPROX. TRUSS WEIGHT: 116.7 LBS

Online Plus -- Version 21.0.059
RUN DATE: 14-NOV-07

	CSI	-Size-	----Lumber----
TC	0.27	2x 4	SP-#2
BC	0.73	2x 4	SP-#2
WB	0.18	2x 4	SP-#3

Brace truss as follows:

	O.C.	From	To
TC	Cont.	0- 0- 0	20-11- 0
BC	Cont.	0- 0- 0	20-11- 0

psf-Ld	Dead	Live
TC	7.0	20.0
BC	10.0	0.0
TC+BC	17.0	20.0
Total	37.0	Spacing 24.0"

Lumber Duration Factor 1.25
Plate Duration Factor 1.25
TC Fb=1.15 Fc=1.10 Ft=1.10
BC Fb=1.10 Fc=1.10 Ft=1.10

Total Load Reactions (Lbs)

Jt	Down	Uplift	Horiz-
A	934	335 U	1680 R
C	774	261 U	1680 R

Jt	Brg Size	Required
A	8.0"	1.5"
C	8.0"	1.5"

Plus 7 Wind Load Case(s)
Plus 2 Drag Load Case(s)
Plus 1 UBC LL Load Case(s)

Membr	CSI	P Lbs	Axl-CSI-Bnd
----------Top Chords----------			
A -E	0.27	1478 C	0.04 0.23
E -B	0.26	1026 C	0.07 0.19
B -F	0.26	1026 C	0.07 0.19
F -C	0.27	1478 C	0.04 0.23
--------Bottom Chords---------			
A -D	0.73	1435 T	0.12 0.61
D -C	0.73	1435 T	0.12 0.61
----------Webs----------			
E -D	0.18	376 C	
D -B	0.16	559 T	
D -F	0.18	376 C	

TL Defl -0.33" in D -C L/718
LL Defl -0.16" in D -C L/999
Shear // Grain in A -D 0.23

Plates for each ply each face.
Plate - MT20 20 Ga, Gross Area
Plate - MT2H 20 Ga, Gross Area

Jt	Type	Plt Size	X	Y	JSI
A	MT20	3.0x 5.0	Ctr	Ctr	0.74
E	MT20	2.0x 4.0	Ctr	Ctr	0.38
B	MT20	5.0x 5.0	Ctr	Ctr	0.53
F	MT20	2.0x 4.0	Ctr	Ctr	0.37
C	MT20	3.0x 5.0	Ctr	Ctr	0.74
D	MT20	5.0x16.0	0.5	-0.5	0.88

NOTES:
Trusses Manufactured by:
RIDGWAY ROOF TRUSS
Analysis Conforms To:
FBC2004
OH Loading
Soffit psf 2.0
Designed for shear loads (plf)
TC 80.3 BC 0.0
Design checked for 10 psf non-concurrent LL on BC.
Wind Loads - ANSI / ASCE 7-02
Truss is designed as
Components and Claddings*
for Exterior zone location.
Wind Speed: 110 mph
Mean Roof Height: 25-0
Exposure Category: B

Occupancy Factor : 1.00
Building Type: Enclosed
TC Dead Load: 4.0 psf
BC Dead Load: 6.0 psf
Max comp. force 1478 Lbs
Max tens. force 1435 Lbs
Quality Control Factor 1.25
FABRICATOR NOTES:
1. Delegated Engineer (Truss Designer)
Gary Dounson, PE 35054
Gary Dounson & Associates, Inc.
2830 NW 41st Street Suite D
Gainesville, FL 32606
(352)375-8593
CA 5201

Job	Mark	Quan	Type	Span	P1-H1	Left OH	Right OH	*Engineering*
070790	*R36*	8	TR	201100	5	2- 9- 2	0	

Hornsby Residence, Roof, Magura

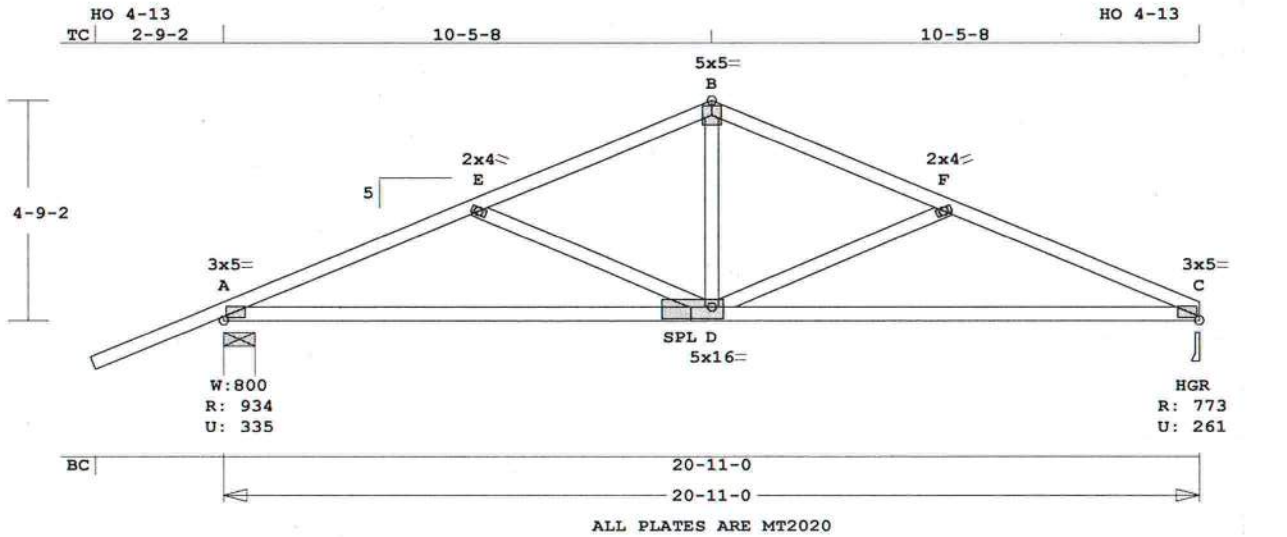

Scale: 0.250" = 1'

Robbins Engineering, Inc./Online Plus™ APPROX. TRUSS WEIGHT: 116.7 LBS

Online Plus -- Version 21.0.059
RUN DATE: 14-NOV-07

	CSI	-Size-	----Lumber----
TC	0.26	2x 4	SP-#2
BC	0.73	2x 4	SP-#2
WB	0.18	2x 4	SP-#3

Brace truss as follows:

	O.C.	From	To
TC	Cont.	0- 0- 0	20-11- 0
BC	Cont.	0- 0- 0	20-11- 0

psf-Ld	Dead	Live
TC	7.0	20.0
BC	10.0	0.0
TC+BC	17.0	20.0

Total 37.0 Spacing 24.0"
Lumber Duration Factor 1.25
Plate Duration Factor 1.25
TC Fb=1.15 Fc=1.10 Ft=1.10
BC Fb=1.10 Fc=1.10 Ft=1.10

Total Load Reactions (Lbs)

Jt	Down	Uplift	Horiz-
A	934	335 U	1 R
C	774	261 U	1 R

Jt	Brg Size	Required
A	8.0"	1.5"
C	3.5"	1.5"

Plus 7 Wind Load Case(s)
Plus 1 UBC LL Load Case(s)

Membr	CSI	P Lbs	Axl-CSI-Bnd	
----------Top Chords----------				
A -E	0.26	1387 C	0.10	0.16
E -B	0.26	1026 C	0.07	0.19
B -F	0.26	1026 C	0.07	0.19
F -C	0.26	1387 C	0.10	0.16
--------Bottom Chords---------				
A -D	0.73	1287 T	0.12	0.61
D -C	0.73	1287 T	0.12	0.61
----------Webs----------				
E -D	0.18	376 C		
D -B	0.16	559 T		
D -F	0.18	376 C		

TL Defl -0.33" in D -C L/732
LL Defl -0.16" in D -C L/999
Shear // Grain in A -D 0.23

Plates for each ply each face.
Plate - MT20 20 Ga, Gross Area
Plate - MT2H 20 Ga, Gross Area

Jt	Type	Plt Size	X	Y	JSI
A	MT20	3.0x 5.0	Ctr	Ctr	0.74
E	MT20	2.0x 4.0	Ctr	Ctr	0.38
B	MT20	5.0x 5.0	Ctr	Ctr	0.53
F	MT20	2.0x 4.0	Ctr	Ctr	0.37
C	MT20	3.0x 5.0	Ctr	Ctr	0.74
D	MT20	5.0x16.0	0.5	-0.5	0.88

NOTES:
Trusses Manufactured by:
RIDGWAY ROOF TRUSS
Analysis Conforms To:
FBC2004
OH Loading
Soffit psf 2.0
Design checked for 10 psf non-concurrent LL on BC.
Wind Loads - ANSI / ASCE 7-02
Truss is designed as
Components and Claddings*
for Exterior zone location.
Wind Speed: 110 mph
Mean Roof Height: 25-0
Exposure Category: B
Occupancy Factor : 1.00
Building Type: Enclosed
TC Dead Load: 4.0 psf
BC Dead Load: 6.0 psf
Max comp. force 1387 Lbs
Max tens. force 1287 Lbs
Quality Control Factor 1.25
FABRICATOR NOTES:
1. Delegated Engineer (Truss Designer)
Gary Dounson, PE 35054
Gary Dounson & Associates, Inc.
2830 NW 41st Street Suite D
Gainesville, FL 32606
(352)375-8593
CA 5201

Job	Mark	Quan	Type	Span	P1-H1	Left OH	Right OH	*Engineering*
070790	*R37*	2	TR	201100	5	0	0	

Hornsby Residence, Roof, Magura

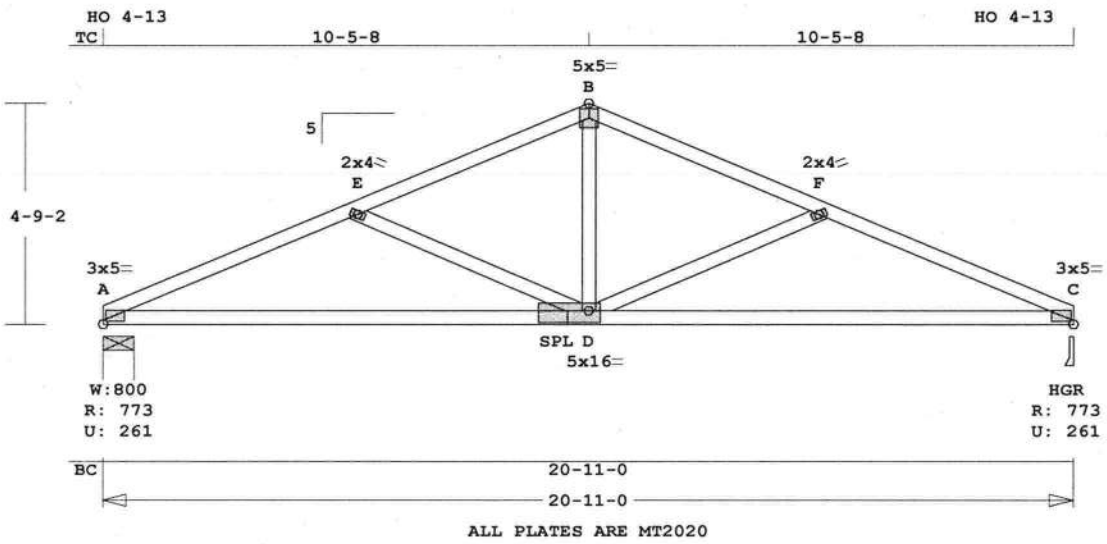

Scale: 0.250" = 1'

Robbins Engineering, Inc./Online Plus™ APPROX. TRUSS WEIGHT: 111.0 LBS

Online Plus -- Version 21.0.059
RUN DATE: 14-NOV-07

	CSI	-Size-	----Lumber----
TC	0.26	2x 4	SP-#2
BC	0.73	2x 4	SP-#2
WB	0.18	2x 4	SP-#3

Brace truss as follows:

	O.C.	From	To
TC	Cont.	0- 0- 0	20-11- 0
BC	Cont.	0- 0- 0	20-11- 0

psf-Ld	Dead	Live
TC	7.0	20.0
BC	10.0	0.0
TC+BC	17.0	20.0
Total	37.0	Spacing 24.0"

Lumber Duration Factor 1.25
Plate Duration Factor 1.25
TC Fb=1.15 Fc=1.10 Ft=1.10
BC Fb=1.10 Fc=1.10 Ft=1.10

Total Load Reactions (Lbs)

Jt	Down	Uplift	Horiz-
A	774	261 U	1 R
C	774	261 U	1 R

Jt	Brg Size	Required
A	8.0"	1.5"
C	3.5"	1.5"

Plus 7 Wind Load Case(s)
Plus 1 UBC LL Load Case(s)

Membr	CSI	P Lbs	Axl-CSI-Bnd
----------Top Chords----------			
A -E	0.26	1387 C	0.10 0.16
E -B	0.26	1026 C	0.07 0.19
B -F	0.26	1026 C	0.07 0.19
F -C	0.26	1387 C	0.10 0.16
--------Bottom Chords--------			
A -D	0.73	1287 T	0.12 0.61
D -C	0.73	1287 T	0.12 0.61
----------Webs----------			
E -D	0.18	376 C	
D -B	0.16	559 T	
D -F	0.18	376 C	

TL Defl -0.33" in A -D L/732
LL Defl -0.16" in A -D L/999
Shear // Grain in A -D 0.23

Plates for each ply each face.
Plate - MT20 20 Ga, Gross Area
Plate - MT2H 20 Ga, Gross Area

Jt	Type	Plt Size	X	Y	JSI
A	MT20	3.0x 5.0	Ctr	Ctr	0.74
E	MT20	2.0x 4.0	Ctr	Ctr	0.38
B	MT20	5.0x 5.0	Ctr	Ctr	0.53
F	MT20	2.0x 4.0	Ctr	Ctr	0.37
C	MT20	3.0x 5.0	Ctr	Ctr	0.74
D	MT20	5.0x16.0	0.5	-0.5	0.88

NOTES:
Trusses Manufactured by:
RIDGWAY ROOF TRUSS
Analysis Conforms To:
FBC2004
Design checked for 10 psf non-concurrent LL on BC.
Wind Loads - ANSI / ASCE 7-02
Truss is designed as
Components and Claddings*
for Exterior zone location.
Wind Speed: 110 mph
Mean Roof Height: 25-0
Exposure Category: B
Occupancy Factor : 1.00
Building Type: Enclosed
TC Dead Load: 4.0 psf
BC Dead Load: 6.0 psf
Max comp. force 1387 Lbs
Max tens. force 1287 Lbs
Quality Control Factor 1.25
FABRICATOR NOTES:
1. Delegated Engineer (Truss Designer)
Gary Dounson, PE 35054
Gary Dounson & Associates, Inc.
2830 NW 41st Street Suite D
Gainesville, FL 32606
(352)375-8593
CA 5201

Job	Mark	Quan	Type	Span	P1-H1	Left OH	Right OH	Engineering
070790	R38	3	TR	201100	5	0	0	

Hornsby Residence, Roof, Magura

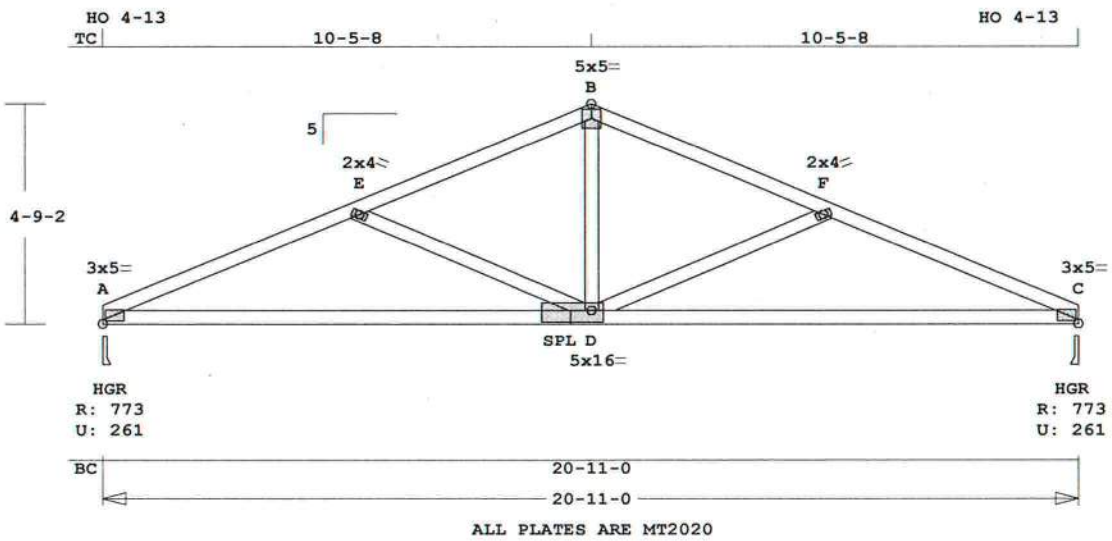

Scale: 0.250" = 1'

Robbins Engineering, Inc./Online Plus™ APPROX. TRUSS WEIGHT: 111.0 LBS

Online Plus -- Version 21.0.059
RUN DATE: 14-NOV-07

	CSI	-Size-	----Lumber----
TC	0.26	2x 4	SP-#2
BC	0.73	2x 4	SP-#2
WB	0.18	2x 4	SP-#3

Brace truss as follows:

	O.C.	From	To
TC	Cont.	0- 0- 0	20-11- 0
BC	Cont.	0- 0- 0	20-11- 0

psf-Ld	Dead	Live
TC	7.0	20.0
BC	10.0	0.0
TC+BC	17.0	20.0

Total 37.0 Spacing 24.0"
Lumber Duration Factor 1.25
Plate Duration Factor 1.25
TC Fb=1.15 Fc=1.10 Ft=1.10
BC Fb=1.10 Fc=1.10 Ft=1.10

Total Load Reactions (Lbs)

Jt	Down	Uplift	Horiz-
A	774	261 U	1 R
C	774	261 U	1 R

Jt	Brg Size	Required
A	3.5"	1.5"
C	3.5"	1.5"

Plus 7 Wind Load Case(s)
Plus 1 UBC LL Load Case(s)

Membr	CSI	P Lbs	Axl-CSI-Bnd	
----------Top Chords----------				
A -E	0.26	1387 C	0.10	0.16
E -B	0.26	1026 C	0.07	0.19
B -F	0.26	1026 C	0.07	0.19
F -C	0.26	1387 C	0.10	0.16
--------Bottom Chords---------				
A -D	0.73	1287 T	0.12	0.61
D -C	0.73	1287 T	0.12	0.61
----------Webs----------				
E -D	0.18	376 C		
D -B	0.16	559 T		
D -F	0.18	376 C		

TL Defl -0.33" in A -D L/745
LL Defl -0.16" in A -D L/999
Shear // Grain in A -D 0.23

Plates for each ply each face.
Plate - MT20 20 Ga, Gross Area
Plate - MT2H 20 Ga, Gross Area

Jt	Type	Plt Size	X	Y	JSI
A	MT20	3.0x 5.0	Ctr	Ctr	0.74
E	MT20	2.0x 4.0	Ctr	Ctr	0.38
B	MT20	5.0x 5.0	Ctr	Ctr	0.53
F	MT20	2.0x 4.0	Ctr	Ctr	0.37
C	MT20	3.0x 5.0	Ctr	Ctr	0.74
D	MT20	5.0x16.0	0.5	-0.5	0.88

NOTES:
Trusses Manufactured by:
RIDGWAY ROOF TRUSS
Analysis Conforms To:
FBC2004
Design checked for 10 psf non-concurrent LL on BC.
Wind Loads - ANSI / ASCE 7-02
Truss is designed as
Components and Claddings*
for Exterior zone location.
Wind Speed: 110 mph
Mean Roof Height: 25-0
Exposure Category: B
Occupancy Factor : 1.00
Building Type: Enclosed
TC Dead Load: 4.0 psf
BC Dead Load: 6.0 psf
Max comp. force 1387 Lbs
Max tens. force 1287 Lbs
Quality Control Factor 1.25
FABRICATOR NOTES:
1. Delegated Engineer (Truss Designer)
Gary Dounson, PE 35054
Gary Dounson & Associates, Inc.
2830 NW 41st Street Suite D
Gainesville, FL 32606
(352)375-8593
CA 5201

Job	Mark	Quan	Type	Span	P1-H1	Left OH	Right OH	*Engineering*
070790	*R39*	1	HHIP	201100	5	0	0	

Hornsby Residence, Roof, Magura

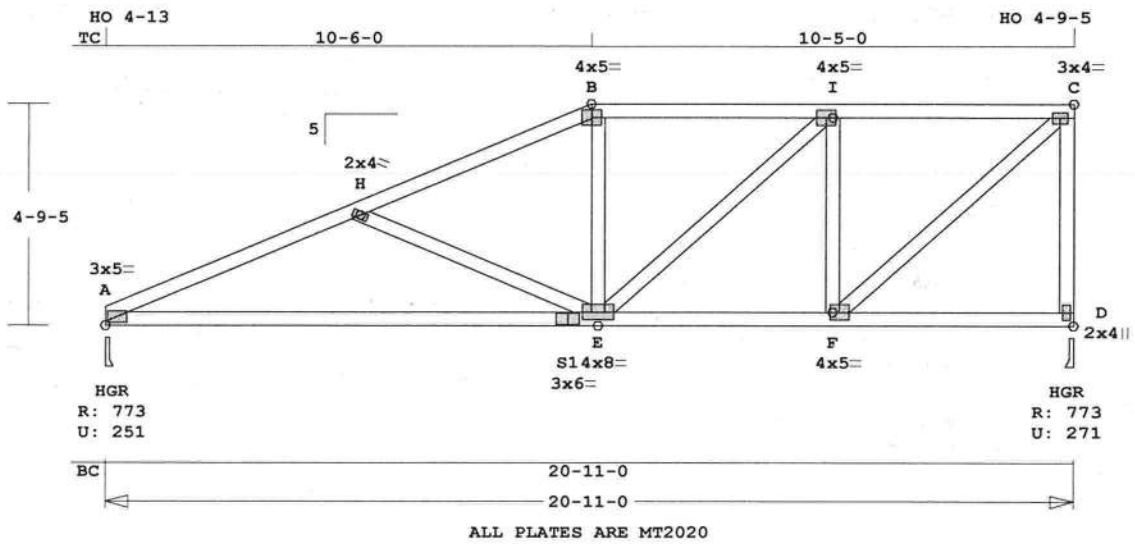

Scale: 0.250" = 1'

Robbins Engineering, Inc./Online Plus™ APPROX. TRUSS WEIGHT: 139.1 LBS

Online Plus -- Version 21.0.059
RUN DATE: 14-NOV-07

	CSI	-Size-	----Lumber----
TC	0.27	2x 4	SP-#2
BC	0.57	2x 4	SP-#2
WB	0.29	2x 4	SP-#3

Brace truss as follows:

	O.C.	From	To
TC	Cont.	0- 0- 0	20-11- 0
BC	Cont.	0- 0- 0	20-11- 0

psf-Ld	Dead	Live
TC	7.0	20.0
BC	10.0	0.0
TC+BC	17.0	20.0

Total 37.0 Spacing 24.0"
Lumber Duration Factor 1.25
Plate Duration Factor 1.25
TC Fb=1.15 Fc=1.10 Ft=1.10
BC Fb=1.10 Fc=1.10 Ft=1.10

Total Load Reactions (Lbs)

Jt	Down	Uplift	Horiz-
A	774	252 U	79 R
D	774	271 U	183 R

Jt	Brg Size	Required
A	3.5"	1.5"
D	3.5"	1.5"

Plus 9 Wind Load Case(s)
Plus 1 UBC LL Load Case(s)

Membr	CSI	P Lbs	Axl-CSI-Bnd
----------Top Chords----------			
A -H	0.26	1378 C	0.09 0.17
H -B	0.27	1001 C	0.06 0.21
B -I	0.27	919 C	0.00 0.27
I -C	0.27	688 C	0.00 0.27
--------Bottom Chords---------			
A -S1	0.50	1281 T	0.12 0.38
S1-E	0.57	1281 T	0.12 0.45
E -F	0.51	688 T	0.06 0.45
F -D	0.16	143 T	0.00 0.16
----------Webs----------			
H -E	0.20	394 C	
E -B	0.06	236 T	
E -I	0.10	309 T	
F -I	0.16	526 C	
F -C	0.29	919 T	
D -C	0.22	725 C	WindLd

TL Defl -0.45" in A -E L/544
LL Defl -0.22" in A -E L/999
Shear // Grain in S1-E 0.22

Plates for each ply each face.
Plate - MT20 20 Ga, Gross Area
Plate - MT2H 20 Ga, Gross Area

Jt	Type	Plt Size	X	Y	JSI
A	MT20	3.0x 5.0	Ctr	Ctr	0.74
H	MT20	2.0x 4.0	Ctr	Ctr	0.37
B	MT20	4.0x 5.0	Ctr	Ctr	0.87
I	MT20	4.0x 5.0	Ctr	Ctr	0.60
C	MT20	3.0x 4.0	Ctr	Ctr	0.70
S1	MT20	3.0x 6.0	Ctr	Ctr	0.88
E	MT20	4.0x 8.0	Ctr	Ctr	0.57
F	MT20	4.0x 5.0	Ctr	Ctr	0.60
D	MT20	2.0x 4.0	Ctr	Ctr	0.38

NOTES:
Trusses Manufactured by:
RIDGWAY ROOF TRUSS
Analysis Conforms To:
FBC2004
Design checked for 10 psf non-concurrent LL on BC.
Wind Loads - ANSI / ASCE 7-02
Truss is designed as
Components and Claddings*
for Exterior zone location.
Wind Speed: 110 mph
Mean Roof Height: 25-0
Exposure Category: B
Occupancy Factor : 1.00
Building Type: Enclosed
TC Dead Load: 4.0 psf
BC Dead Load: 6.0 psf
Max comp. force 1378 Lbs
Max tens. force 1281 Lbs
Quality Control Factor 1.25
FABRICATOR NOTES:
1. Delegated Engineer (Truss Designer)
Gary Dounson, PE 35054
Gary Dounson & Associates, Inc.
2830 NW 41st Street Suite D
Gainesville, FL 32606
(352)375-8593
CA 5201

Job	Mark	Quan	Type	Span	P1-H1	Left OH	Right OH	Engineering
070790	R40	1	HHIP	201100	5	0	0	

Hornsby Residence, Roof, Magura

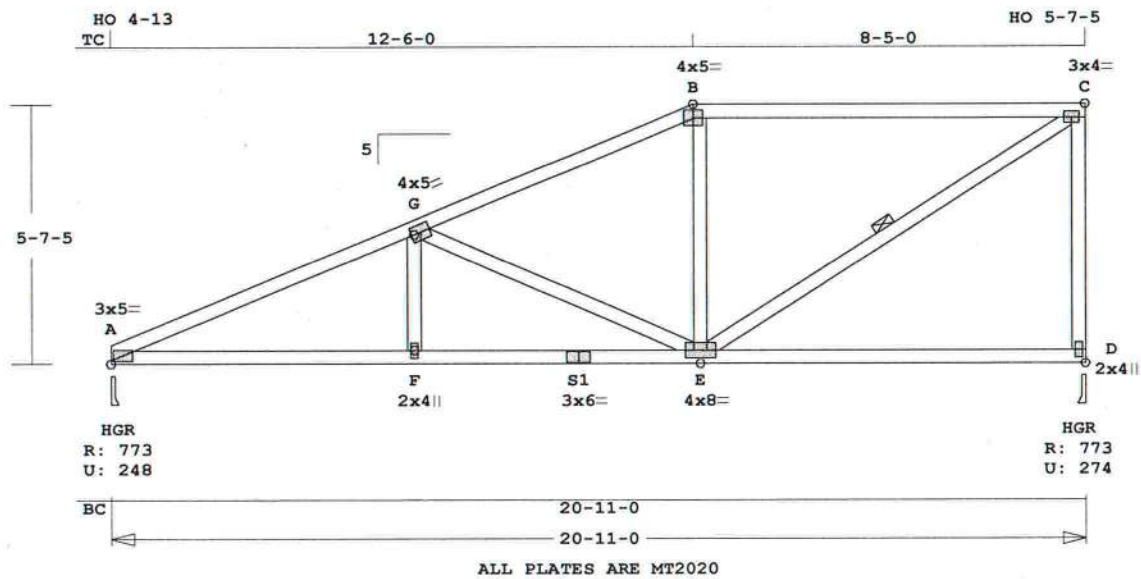

Scale: 0.250" = 1'

Robbins Engineering, Inc./Online Plus™ APPROX. TRUSS WEIGHT: 134.7 LBS

Online Plus -- Version 21.0.059
RUN DATE: 14-NOV-07

	CSI	-Size-	----Lumber----
TC	0.72	2x 4	SP-#2
BC	0.50	2x 4	SP-#2
WB	0.35	2x 4	SP-#3

Brace truss as follows:

	O.C.	From	To
TC	Cont.	0- 0- 0	20-11- 0
BC	Cont.	0- 0- 0	20-11- 0

One Continuous Lateral Brace
E -C
Attach CLB with (2)-10d nails at each web.

psf-Ld	Dead	Live
TC	7.0	20.0
BC	10.0	0.0
TC+BC	17.0	20.0

Total 37.0 Spacing 24.0"
Lumber Duration Factor 1.25
Plate Duration Factor 1.25
TC Fb=1.15 Fc=1.10 Ft=1.10
BC Fb=1.10 Fc=1.10 Ft=1.10

Total Load Reactions (Lbs)

Jt	Down	Uplift	Horiz-
A	774	248 U	94 R
D	774	275 U	217 R

Jt	Brg Size	Required
A	3.5"	1.5"
D	3.5"	1.5"

Plus 9 Wind Load Case(s)
Plus 1 UBC LL Load Case(s)

Membr	CSI	P Lbs	Axl-CSI-Bnd
----------Top Chords----------			
A -G	0.34	1367 C	0.08 0.26
G -B	0.33	826 C	0.00 0.33
B -C	0.72	765 C	0.01 0.71
--------Bottom Chords--------			
A -F	0.32	1263 T	0.21 0.11
F -S1	0.29	1263 T	0.21 0.08
S1-E	0.50	1263 T	0.12 0.38
E -D	0.38	170 T	0.00 0.38
----------Webs----------			
F -G	0.05	219 T	
G -E	0.35	547 C	
E -B	0.05	207 T	
E -C	0.29	914 T	1 Br
D -C	0.29	704 C	WindLd

TL Defl -0.28" in E -D L/869
LL Defl -0.14" in E -D L/999
Shear // Grain in B -C 0.30

Plates for each ply each face.
Plate - MT20 20 Ga, Gross Area
Plate - MT2H 20 Ga, Gross Area

Jt	Type	Plt Size	X	Y	JSI
A	MT20	3.0x 5.0	Ctr	Ctr	0.74
G	MT20	4.0x 5.0	Ctr	Ctr	0.65
B	MT20	4.0x 5.0	Ctr	Ctr	0.87
C	MT20	3.0x 4.0	Ctr	Ctr	0.70
F	MT20	2.0x 4.0	Ctr	Ctr	0.38
S1	MT20	3.0x 6.0	Ctr	Ctr	0.88
E	MT20	4.0x 8.0	Ctr	Ctr	0.57
D	MT20	2.0x 4.0	Ctr	Ctr	0.38

NOTES:
Trusses Manufactured by:
RIDGWAY ROOF TRUSS
Analysis Conforms To:
FBC2004
Design checked for 10 psf non-concurrent LL on BC.
Wind Loads - ANSI / ASCE 7-02
Truss is designed as
Components and Claddings*
for Exterior zone location.
Wind Speed: 110 mph
Mean Roof Height: 25-0
Exposure Category: B
Occupancy Factor : 1.00
Building Type: Enclosed
TC Dead Load: 4.0 psf
BC Dead Load: 6.0 psf
Max comp. force 1367 Lbs
Max tens. force 1263 Lbs
Quality Control Factor 1.25
FABRICATOR NOTES:
1. Delegated Engineer (Truss Designer)
Gary Dounson, PE 35054
Gary Dounson & Associates, Inc.
2830 NW 41st Street Suite D
Gainesville, FL 32606
(352)375-8593
CA 5201

Job	Mark	Quan	Type	Span	P1-H1	Left OH	Right OH	*Engineering*
070790	*R41*	1	HHIP	201100	5	0	0	

Hornsby Residence, Roof, Magura

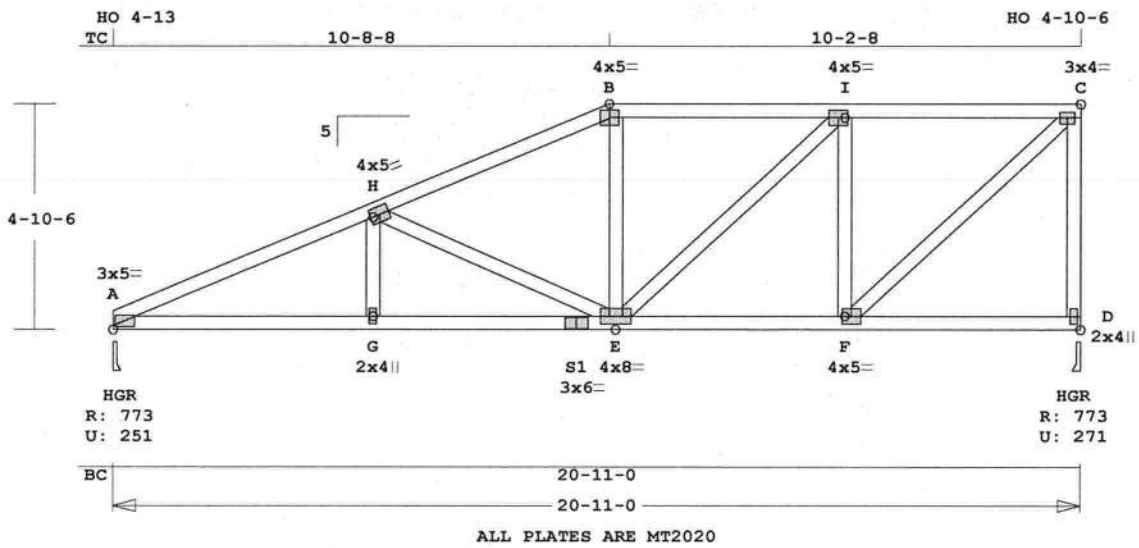

ALL PLATES ARE MT2020

Scale: 0.250" = 1'

Robbins Engineering, Inc./Online Plus™ APPROX. TRUSS WEIGHT: 143.5 LBS

Online Plus -- Version 21.0.059
RUN DATE: 14-NOV-07

	CSI	-Size-	----Lumber----
TC	0.30	2x 4	SP-#2
BC	0.30	2x 4	SP-#2
WB	0.29	2x 4	SP-#3

Brace truss as follows:

	O.C.	From	To
TC	Cont.	0- 0- 0	20-11- 0
BC	Cont.	0- 0- 0	20-11- 0

psf-Ld	Dead	Live
TC	7.0	20.0
BC	10.0	0.0
TC+BC	17.0	20.0

Total 37.0 Spacing 24.0"
Lumber Duration Factor 1.25
Plate Duration Factor 1.25
TC Fb=1.15 Fc=1.10 Ft=1.10
BC Fb=1.10 Fc=1.10 Ft=1.10

Total Load Reactions (Lbs)

Jt	Down	Uplift	Horiz-
A	774	252 U	81 R
D	774	271 U	186 R

Jt	Brg Size	Required
A	3.5"	1.5"
D	3.5"	1.5"

Plus 9 Wind Load Case(s)
Plus 1 UBC LL Load Case(s)

Membr	CSI	P Lbs	Axl-CSI-Bnd	
----------Top Chords----------				
A -H	0.30	1424 C	0.09	0.21
H -B	0.27	958 C	0.06	0.21
B -I	0.25	880 C	0.00	0.25
I -C	0.25	669 C	0.00	0.25
--------Bottom Chords---------				
A -G	0.28	1314 T	0.22	0.06
G -S1	0.28	1314 T	0.22	0.06
S1-E	0.30	1314 T	0.22	0.08
E -F	0.21	669 T	0.06	0.15
F -D	0.15	146 T	0.00	0.15
----------Webs----------				
G -H	0.05	207 T		
H -E	0.23	478 C		
E -B	0.05	198 T		
E -I	0.12	288 T		
F -I	0.16	508 C		
F -C	0.29	910 T		
D -C	0.23	730 C	WindLd	

TL Defl -0.09" in G -E L/999
LL Defl -0.04" in G -E L/999
Shear // Grain in I -C 0.21

Plates for each ply each face.
Plate - MT20 20 Ga, Gross Area
Plate - MT2H 20 Ga, Gross Area

Jt	Type	Plt Size	X	Y	JSI
A	MT20	3.0x 5.0	Ctr	Ctr	0.74
H	MT20	4.0x 5.0	Ctr	Ctr	0.65
B	MT20	4.0x 5.0	Ctr	Ctr	0.87
I	MT20	4.0x 5.0	Ctr	Ctr	0.60
C	MT20	3.0x 4.0	Ctr	Ctr	0.70
G	MT20	2.0x 4.0	Ctr	Ctr	0.38
S1	MT20	3.0x 6.0	Ctr	Ctr	0.88
E	MT20	4.0x 8.0	Ctr	Ctr	0.56
F	MT20	4.0x 5.0	Ctr	Ctr	0.60
D	MT20	2.0x 4.0	Ctr	Ctr	0.38

NOTES:
Trusses Manufactured by:
RIDGWAY ROOF TRUSS
Analysis Conforms To:
FBC2004
Design checked for 10 psf non-concurrent LL on BC.
Wind Loads - ANSI / ASCE 7-02
Truss is designed as
Components and Claddings*
for Exterior zone location.
Wind Speed: 110 mph
Mean Roof Height: 25-0
Exposure Category: B
Occupancy Factor : 1.00
Building Type: Enclosed
TC Dead Load: 4.0 psf
BC Dead Load: 6.0 psf
Max comp. force 1424 Lbs
Max tens. force 1314 Lbs
Quality Control Factor 1.25
FABRICATOR NOTES:
1. Delegated Engineer (Truss Designer)
Gary Dounson, PE 35054
Gary Dounson & Associates, Inc.
2830 NW 41st Street Suite D
Gainesville, FL 32606
(352)375-8593
CA 5201

Job	Mark	Quan	Type	Span	P1-H1	Left OH	Right OH	Engineering
070790	R42	1	SP	130600	5	0	0	

Hornsby Residence, Roof, Magura

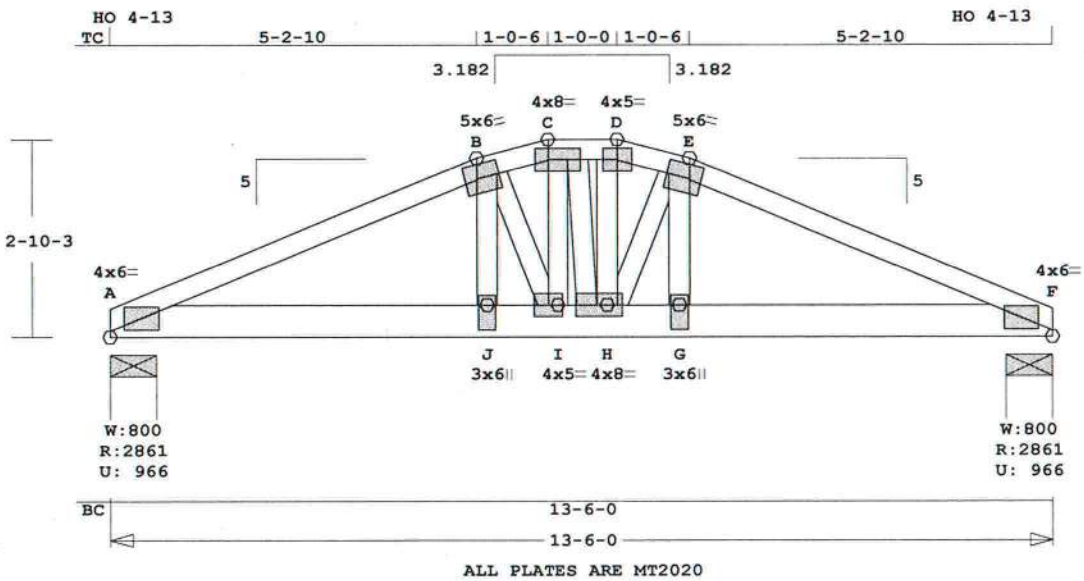

Scale: 0.375" = 1'

Robbins Engineering, Inc./Online Plus™ APPROX. TRUSS WEIGHT: 93.0 LBS

Online Plus -- Version 21.0.059
RUN DATE: 14-NOV-07

	CSI	-Size-	----Lumber----
TC	0.75	2x 4	SP-#2
BC	0.64	2x 6	SP-2400
WB	0.49	2x 4	SP-#3

Brace truss as follows:

	O.C.	From	To
TC	Cont.	0- 0- 0	13- 6- 0
BC	Cont.	0- 0- 0	13- 6- 0

psf-Ld	Dead	Live
TC	7.0	20.0
BC	10.0	0.0
TC+BC	17.0	20.0

Total 37.0 Spacing 24.0"
Lumber Duration Factor 1.25
Plate Duration Factor 1.25
TC Fb=1.00 Fc=1.00 Ft=1.00
BC Fb=1.00 Fc=1.00 Ft=1.00

Total Load Reactions (Lbs)

Jt	Down	Uplift	Horiz-
A	2862	967 U	4 R
F	2862	967 U	4 R

Jt	Brg Size	Required
A	8.0"	2.4"
F	8.0"	2.4"

LC# 1 Girder Loading
Dur Fctrs - Lbr 1.25 Plt 1.25

plf -	Dead	Live*	From	To
TC V	14	40	0.0'	13.5'
BC V	181	189	0.0'	13.5'

Plus 9 Wind Load Case(s)
Plus 1 UBC LL Load Case(s)

Membr	CSI	P Lbs	Axl-CSI-Bnd	
----------Top Chords----------				
A -B	0.75	4528 C	0.48	0.27
B -C	0.59	3852 C	0.42	0.17
C -D	0.42	3793 C	0.41	0.01
D -E	0.54	3873 C	0.42	0.12
E -F	0.74	4531 C	0.48	0.26
--------Bottom Chords---------				
A -J	0.64	4199 T	0.21	0.43
J -I	0.44	4130 T	0.20	0.24
I -H	0.25	3753 T	0.18	0.07
H -G	0.44	4137 T	0.20	0.24
G -F	0.64	4202 T	0.21	0.43
----------Webs----------				
J -B	0.49	1550 T		
B -I	0.17	816 C		
I -C	0.19	600 T		
C -H	0.05	170 T		
H -D	0.21	678 T		
H -E	0.17	825 C		
G -E	0.47	1485 T		

TL Defl -0.20" in A -J L/737
LL Defl -0.11" in A -J L/999
Shear // Grain in A -J 0.75

Plates for each ply each face.
Plate - MT20 20 Ga, Gross Area
Plate - MT2H 20 Ga, Gross Area

Jt	Type	Plt Size	X	Y	JSI
A	MT20	4.0x 6.0	Ctr	Ctr	1.00
B	MT20	5.0x 6.0	1.0	0.3	0.88
C	MT20	4.0x 8.0	Ctr	Ctr	0.86
D	MT20	4.0x 5.0	Ctr	Ctr	0.89
E	MT20	5.0x 6.0	-1.0	0.3	0.88
F	MT20	4.0x 6.0	Ctr	Ctr	1.00
J	MT20	3.0x 6.0	Ctr	-1.3	0.61
I	MT20	4.0x 5.0	Ctr	Ctr	0.61
H	MT20	4.0x 8.0	0.4	Ctr	0.97
G	MT20	3.0x 6.0	Ctr	-1.2	0.59

NOTES:
Trusses Manufactured by:
RIDGWAY ROOF TRUSS
Analysis Conforms To:
FBC2004
Girder Common
Loading BC
Span 20-11- 0
Design checked for 10 psf non-concurrent LL on BC.
Use properly rated hangers for loads framing into girder truss.
Wind Loads - ANSI / ASCE 7-02
Truss is designed as
Components and Claddings*
for Exterior zone location.
Wind Speed: 110 mph
Mean Roof Height: 25-0
Exposure Category: B
Occupancy Factor : 1.00
Building Type: Enclosed
TC Dead Load: 4.0 psf
BC Dead Load: 6.0 psf
Max comp. force 4531 Lbs
Max tens. force 4202 Lbs
Quality Control Factor 1.25
FABRICATOR NOTES:
1. Delegated Engineer (Truss Designer)
Gary Dounson, PE 35054
Gary Dounson & Associates, Inc.
2830 NW 41st Street Suite D
Gainesville, FL 32606
(352)375-8593
CA 5201

Job	Mark	Quan	Type	Span	P1-H1	Left OH	Right OH	*Engineering*
070790	*R43*	1	SP	130600	5	0	0	

Hornsby Residence, Roof, Magura

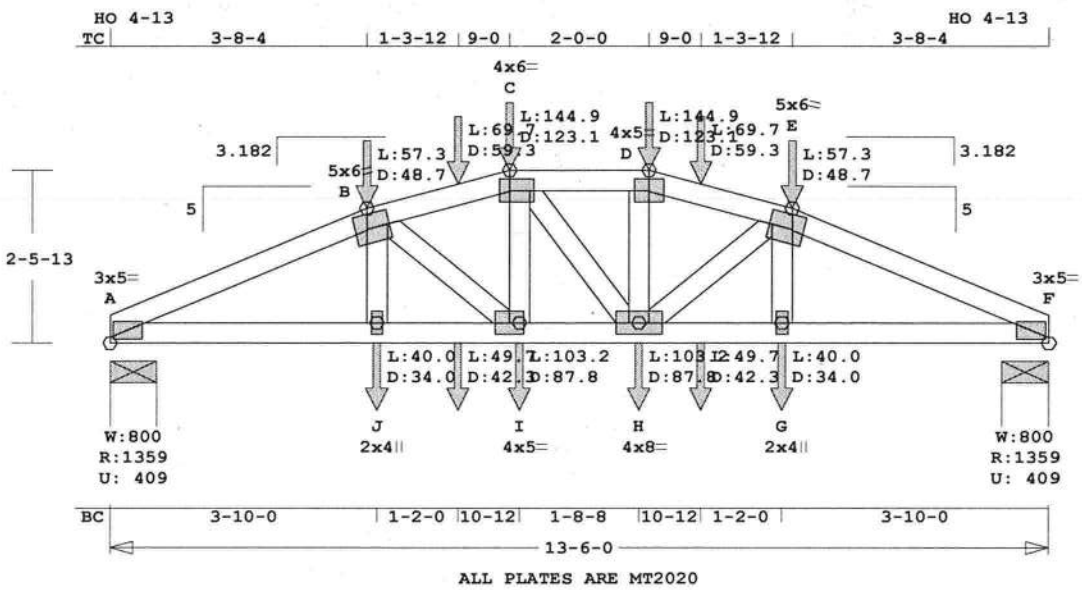

ALL PLATES ARE MT2020

Scale: 0.375" = 1'

Robbins Engineering, Inc./Online Plus™ APPROX. TRUSS WEIGHT: 78.8 LBS

Online Plus -- Version 21.0.059
RUN DATE: 14-NOV-07

	CSI	-Size-	----Lumber----
TC	0.50	2x 4	SP-#2
BC	0.75	2x 4	SP-#2
WB	0.07	2x 4	SP-#3

Brace truss as follows:

	O.C.	From	To
TC	Cont.	0- 0- 0	13- 6- 0
BC	Cont.	0- 0- 0	13- 6- 0

psf-Ld	Dead	Live
TC	7.0	20.0
BC	10.0	0.0
TC+BC	17.0	20.0

Total 37.0 Spacing 24.0"
Lumber Duration Factor 1.25
Plate Duration Factor 1.25
TC Fb=1.00 Fc=1.00 Ft=1.00
BC Fb=1.00 Fc=1.00 Ft=1.00

Total Load Reactions (Lbs)

Jt	Down	Uplift	Horiz-
A	1360	409 U	7 R
F	1359	409 U	7 R

Jt	Brg Size	Required
A	8.0"	1.6"
F	8.0"	1.6"

LC# 1 Standard Loading
Dur Fctrs - Lbr 1.25 Plt 1.25

plf -	Dead	Live*	From	To
TC V	14	40	0.0'	13.5'
BC V	20	0	0.0'	13.5'
TC V	49	57	3.7'	CL-LB
TC V	49	57	9.8'	CL-LB
BC V	34	40	3.8'	CL-LB
BC V	34	40	9.7'	CL-LB
TC V	59	70	5.0'	CL-LB
BC V	42	50	5.0'	CL-LB
BC V	42	50	8.5'	CL-LB
TC V	59	70	8.5'	CL-LB
TC V	123	145	5.8'	CL-LB
TC V	123	145	7.8'	CL-LB
BC V	88	103	5.9'	CL-LB
BC V	88	103	7.6'	CL-LB

Plus 9 Wind Load Case(s)
Plus 1 UBC LL Load Case(s)

Membr	CSI	P Lbs	Axl-CSI-Bnd
----------Top Chords----------			
A -B	0.50	2829 C	0.31 0.19
B -C	0.37	2788 C	0.31 0.06
C -D	0.34	2697 C	0.30 0.04
D -E	0.38	2783 C	0.31 0.07
E -F	0.50	2829 C	0.31 0.19
--------Bottom Chords---------			
A -J	0.75	2594 T	0.47 0.28
J -I	0.66	2592 T	0.47 0.19
I -H	0.52	2692 T	0.49 0.03
H -G	0.67	2593 T	0.47 0.20
G -F	0.75	2595 T	0.47 0.28
----------Webs----------			
J -B	0.02	95 T	
B -I	0.04	161 T	
I -C	0.07	266 T	
C -H	0.00	16 T	
H -D	0.07	263 T	
H -E	0.04	153 T	
G -E	0.02	95 T	

TL Defl -0.15" in I -H L/993
LL Defl -0.08" in I -H L/999
Shear // Grain in A -B 0.17

Plates for each ply each face.
Plate - MT20 20 Ga, Gross Area
Plate - MT2H 20 Ga, Gross Area

Jt	Type	Plt Size	X	Y	JSI
A	MT20	3.0x 5.0	Ctr	Ctr	0.94
B	MT20	5.0x 6.0	1.0	0.3	0.59
C	MT20	4.0x 6.0	-0.5	Ctr	0.85
D	MT20	4.0x 5.0	Ctr	Ctr	0.74
E	MT20	5.0x 6.0	-1.0	0.3	0.59
F	MT20	3.0x 5.0	Ctr	Ctr	0.94
J	MT20	2.0x 4.0	Ctr	Ctr	0.38
I	MT20	4.0x 5.0	Ctr	Ctr	0.60
H	MT20	4.0x 8.0	Ctr	Ctr	0.51
G	MT20	2.0x 4.0	Ctr	Ctr	0.38

NOTES:
Trusses Manufactured by:
RIDGWAY ROOF TRUSS
Analysis Conforms To:
FBC2004
Design checked for 10 psf non-concurrent LL on BC.
Wind Loads - ANSI / ASCE 7-02
Truss is designed as
Components and Claddings*
for Exterior zone location.
Wind Speed: 110 mph
Mean Roof Height: 25-0
Exposure Category: B
Occupancy Factor : 1.00
Building Type: Enclosed
TC Dead Load: 4.0 psf
BC Dead Load: 6.0 psf
Max comp. force 2829 Lbs
Max tens. force 2692 Lbs
Quality Control Factor 1.25
FABRICATOR NOTES:
1. Delegated Engineer (Truss Designer)
Gary Dounson, PE 35054
Gary Dounson & Associates, Inc.
2830 NW 41st Street Suite D
Gainesville, FL 32606
(352)375-8593
CA 5201

Job	Mark	Quan	Type	Span	P1-H1	Left OH	Right OH	*Engineering*
070790	*R44*	2	JACK	50000	5	2- 9- 2	0	

Hornsby Residence, Roof, Magura

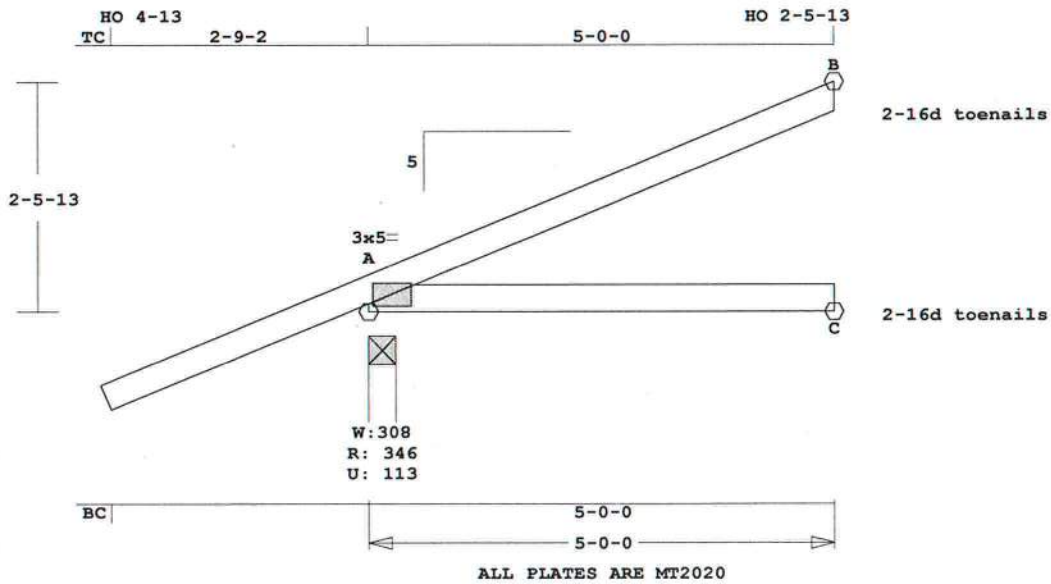

Scale: 0.500" = 1'

Robbins Engineering, Inc./Online Plus™ APPROX. TRUSS WEIGHT: 25.6 LBS

Online Plus -- Version 21.0.059
RUN DATE: 14-NOV-07

	CSI	-Size-	----Lumber----
TC	0.32	2x 4	SP-#2
BC	0.26	2x 4	SP-#2

Brace truss as follows:

	O.C.	From	To
TC	Cont.	0- 0- 0	5- 0- 0
BC	Cont.	0- 0- 0	5- 0- 0

psf-Ld	Dead	Live
TC	7.0	20.0
BC	10.0	0.0
TC+BC	17.0	20.0
Total	37.0	Spacing 24.0"

Lumber Duration Factor 1.25
Plate Duration Factor 1.25
TC Fb=1.15 Fc=1.10 Ft=1.10
BC Fb=1.10 Fc=1.10 Ft=1.10

Total Load Reactions (Lbs)

Jt	Down	Uplift	Horiz-
A	347	114 U	196 R
C	88		
B	123	94 U	50 R

Jt	Brg Size	Required
A	3.5"	1.5"
C	1.5"	1.5"
B	1.5"	1.5"

Plus 7 Wind Load Case(s)
Plus 1 UBC LL Load Case(s)

Membr	CSI	P Lbs	Axl-CSI-Bnd
----------Top Chords----------			
A -B	0.32	106 C	0.00 0.32
--------Bottom Chords---------			
A -C	0.26	0 T	0.00 0.26

TL Defl -0.04" in A -C L/999
LL Defl -0.02" in A -C L/999
Shear // Grain in A -B 0.22

Plates for each ply each face.
Plate - MT20 20 Ga, Gross Area
Plate - MT2H 20 Ga, Gross Area

Jt	Type	Plt Size	X	Y	JSI
A	MT20	3.0x 5.0	Ctr	Ctr	0.50

For proper installation of toe-nails, refer to the 2001 National Design Specification (NDS) for Wood Construction
NOTES:
Trusses Manufactured by:
RIDGWAY ROOF TRUSS
Analysis Conforms To:
FBC2004
OH Loading
Soffit psf 2.0
Design checked for 10 psf non-concurrent LL on BC.
Wind Loads - ANSI / ASCE 7-02
Truss is designed as
Components and Claddings*
for Exterior zone location.
Wind Speed: 110 mph
Mean Roof Height: 25-0
Exposure Category: B
Occupancy Factor : 1.00
Building Type: Enclosed
TC Dead Load: 4.0 psf
BC Dead Load: 6.0 psf
Max comp. force 106 Lbs
Max tens. force 31 Lbs

Quality Control Factor 1.25
FABRICATOR NOTES:
1. Delegated Engineer (Truss Designer)
Gary Dounson, PE 35054
Gary Dounson & Associates, Inc.
2830 NW 41st Street Suite D
Gainesville, FL 32606
(352)375-8593
CA 5201

Job	Mark	Quan	Type	Span	P1-H1	Left OH	Right OH	*Engineering*
070790	*R45*	2	JACK1	60014	4.341	3- 2- 2	0	

Hornsby Residence, Roof, Magura

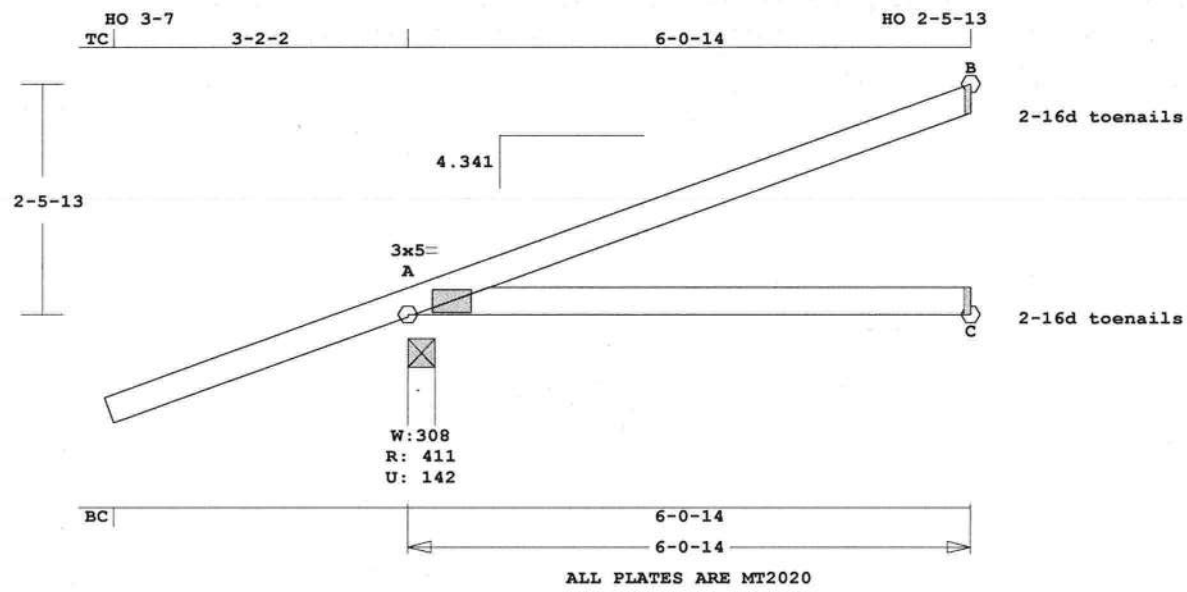

Scale: 0.500" = 1'

Robbins Engineering, Inc./Online Plus™ APPROX. TRUSS WEIGHT: 30.1 LBS

Online Plus -- Version 21.0.059
RUN DATE: 14-NOV-07

	CSI	-Size-	----Lumber----
TC	0.39	2x 4	SP-#2
BC	0.32	2x 4	SP-#2

Brace truss as follows:

	O.C.	From	To
TC	Cont.	0- 0- 0	6- 0-14
BC	Cont.	0- 0- 0	6- 0-14

psf-Ld	Dead	Live
TC	7.0	20.0
BC	10.0	0.0
TC+BC	17.0	20.0

Total 37.0 Spacing 24.0"
Lumber Duration Factor 1.25
Plate Duration Factor 1.25
TC Fb=1.15 Fc=1.10 Ft=1.10
BC Fb=1.10 Fc=1.10 Ft=1.10

Total Load Reactions (Lbs)

Jt	Down	Uplift	Horiz-
A	412	143 U	186 R
C	105		
B	146	105 U	51 R

Jt	Brg Size	Required
A	3.5"	1.5"
C	1.5"	1.5"
B	1.5"	1.5"

Plus 7 Wind Load Case(s)
Plus 1 UBC LL Load Case(s)

Membr	CSI	P Lbs	Axl-CSI-Bnd
----------Top Chords----------			
A -B	0.39	99 C	0.00 0.39
--------Bottom Chords---------			
A -C	0.32	0 T	0.00 0.32

TL Defl -0.10" in A -C L/698
LL Defl -0.04" in A -C L/999
Shear // Grain in A -B 0.24

Plates for each ply each face.
Plate - MT20 20 Ga, Gross Area
Plate - MT2H 20 Ga, Gross Area

Jt	Type	Plt Size	X	Y	JSI
A	MT20	3.0x 5.0	Ctr	Ctr	0.53

For proper installation of toe-nails, refer to the 2001 National Design Specification (NDS) for Wood Construction
NOTES:
Trusses Manufactured by:
RIDGWAY ROOF TRUSS
Analysis Conforms To:
FBC2004
OH Loading
Soffit psf 2.0
Excessive Left OH condition.
Max allowable length is
2- 9-11. Support end or
provide level return.
Design checked for 10 psf non-concurrent LL on BC.
Wind Loads - ANSI / ASCE 7-02
Truss is designed as
Components and Claddings*
for Exterior zone location.
Wind Speed: 110 mph
Mean Roof Height: 25-0
Exposure Category: B
Occupancy Factor : 1.00
Building Type: Enclosed
TC Dead Load: 4.0 psf
BC Dead Load: 6.0 psf

Max comp. force 99 Lbs
Max tens. force 32 Lbs
Quality Control Factor 1.25
FABRICATOR NOTES:
1. Delegated Engineer (Truss Designer)
Gary Dounson, PE 35054
Gary Dounson & Associates, Inc.
2830 NW 41st Street Suite D
Gainesville, FL 32606
(352)375-8593
CA 5201

Job	Mark	Quan	Type	Span	P1-H1	Left OH	Right OH	*Engineering*
070790	*R46*	2	JACK1	40314	4.341	3- 2- 2	0	

Hornsby Residence, Roof, Magura

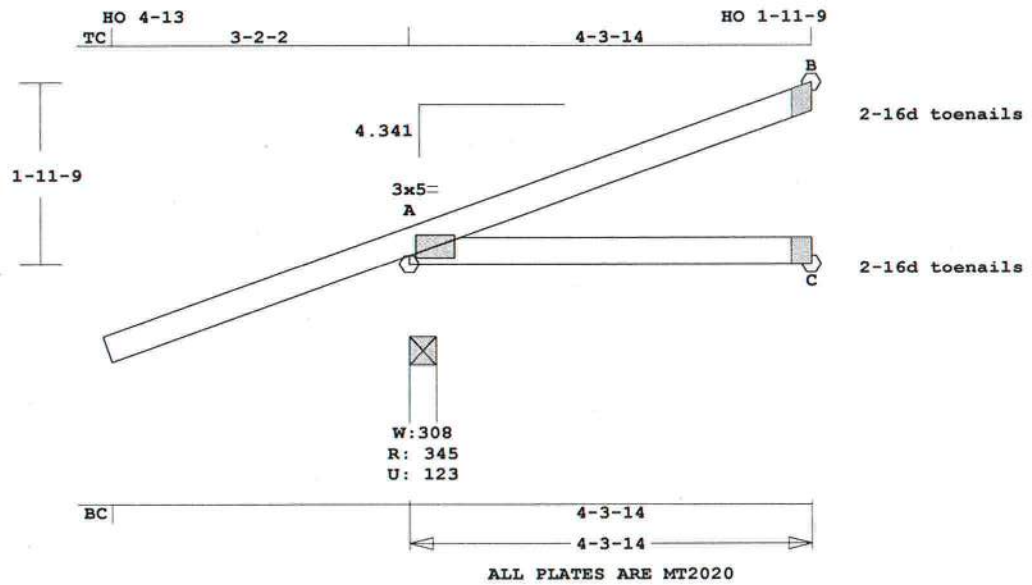

Scale: 0.500" = 1'

Robbins Engineering, Inc./Online Plus™ APPROX. TRUSS WEIGHT: 23.4 LBS

Online Plus -- Version 21.0.059
RUN DATE: 14-NOV-07

	CSI	-Size-	----Lumber----
TC	0.24	2x 4	SP-#2
BC	0.19	2x 4	SP-#2

Brace truss as follows:

	O.C.	From	To
TC	Cont.	0- 0- 0	4- 3-14
BC	Cont.	0- 0- 0	4- 3-14

psf-Ld	Dead	Live
TC	7.0	20.0
BC	10.0	0.0
TC+BC	17.0	20.0
Total	37.0	Spacing 24.0"

Lumber Duration Factor 1.25
Plate Duration Factor 1.25
TC Fb=1.15 Fc=1.10 Ft=1.10
BC Fb=1.10 Fc=1.10 Ft=1.10

Total Load Reactions (Lbs)

Jt	Down	Uplift	Horiz-
A	346	124 U	154 R
C	75		
B	106	77 U	37 R

Jt	Brg Size	Required
A	3.5"	1.5"
C	1.5"	1.5"
B	1.5"	1.5"

Plus 7 Wind Load Case(s)
Plus 1 UBC LL Load Case(s)

Membr	CSI	P Lbs	Axl-CSI-Bnd
----------Top Chords----------			
A -B	0.24	79 C	0.00 0.24
--------Bottom Chords---------			
A -C	0.19	0 T	0.00 0.19

TL Defl -0.02" in A -C L/999
LL Defl -0.01" in A -C L/999
Shear // Grain in A -B 0.19

Plates for each ply each face.
Plate - MT20 20 Ga, Gross Area
Plate - MT2H 20 Ga, Gross Area

Jt	Type	Plt Size	X	Y	JSI
A	MT20	3.0x 5.0	Ctr	Ctr	0.51

For proper installation of toe-nails, refer to the 2001 National Design Specification (NDS) for Wood Construction
NOTES:
Trusses Manufactured by:
RIDGWAY ROOF TRUSS
Analysis Conforms To:
FBC2004
OH Loading
Soffit psf 2.0
Excessive Left OH condition.
Max allowable length is 2- 9- 5. Support end or provide level return.
Design checked for 10 psf non-concurrent LL on BC.
Wind Loads - ANSI / ASCE 7-02
Truss is designed as Components and Claddings* for Exterior zone location.
Wind Speed: 110 mph
Mean Roof Height: 25-0
Exposure Category: B
Occupancy Factor : 1.00
Building Type: Enclosed

TC Dead Load: 4.0 psf
BC Dead Load: 6.0 psf
Max comp. force 79 Lbs
Max tens. force 23 Lbs
Quality Control Factor 1.25
FABRICATOR NOTES:
1. Delegated Engineer (Truss Designer)
Gary Dounson, PE 35054
Gary Dounson & Associates, Inc.
2830 NW 41st Street Suite D
Gainesville, FL 32606
(352)375-8593
CA 5201

Job	Mark	Quan	Type	Span	P1-H1	Left OH	Right OH	*Engineering*
070790	*R47*	2	JACK1	50412	4.5	2- 9- 2	0	

Hornsby Residence, Roof, Magura

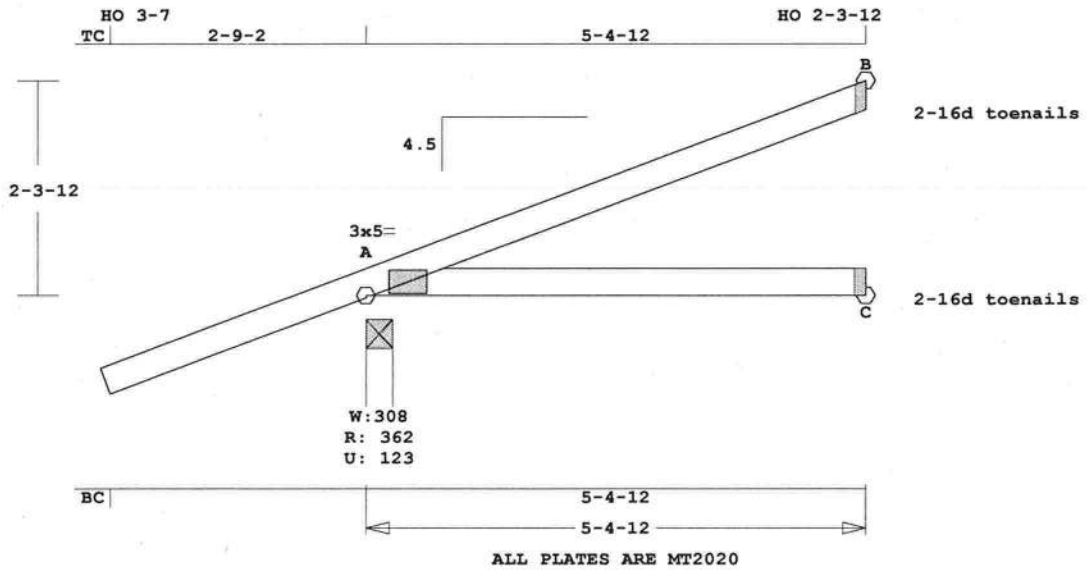

Scale: 0.500" = 1'

Robbins Engineering, Inc./Online Plus™ APPROX. TRUSS WEIGHT: 26.7 LBS

Online Plus -- Version 21.0.059
RUN DATE: 14-NOV-07

	CSI	-Size-	----Lumber----
TC	0.33	2x 4	SP-#2
BC	0.27	2x 4	SP-#2

Brace truss as follows:

	O.C.	From	To
TC	Cont.	0- 0- 0	5- 4-12
BC	Cont.	0- 0- 0	5- 4-12

psf-Ld	Dead	Live
TC	7.0	20.0
BC	10.0	0.0
TC+BC	17.0	20.0

Total 37.0 Spacing 24.0"
Lumber Duration Factor 1.25
Plate Duration Factor 1.25
TC Fb=1.15 Fc=1.10 Ft=1.10
BC Fb=1.10 Fc=1.10 Ft=1.10

Total Load Reactions (Lbs)

Jt	Down	Uplift	Horiz-
A	363	124 U	181 R
C	93		
B	130	94 U	47 R

Jt	Brg Size	Required
A	3.5"	1.5"
C	1.5"	1.5"
B	1.5"	1.5"

Plus 7 Wind Load Case(s)
Plus 1 UBC LL Load Case(s)

Membr	CSI	P Lbs	Axl-CSI-Bnd
----------Top Chords----------			
A -B	0.33	96 C	0.00 0.33
--------Bottom Chords---------			
A -C	0.27	0 T	0.00 0.27

TL Defl -0.06" in A -C L/999
LL Defl -0.03" in A -C L/999
Shear // Grain in A -B 0.22

Plates for each ply each face.
Plate - MT20 20 Ga, Gross Area
Plate - MT2H 20 Ga, Gross Area

Jt	Type	Plt Size	X	Y	JSI
A	MT20	3.0x 5.0	Ctr	Ctr	0.52

For proper installation of toe-nails, refer to the 2001 National Design Specification (NDS) for Wood Construction
NOTES:
Trusses Manufactured by:
RIDGWAY ROOF TRUSS
Analysis Conforms To:
FBC2004
OH Loading
Soffit psf 2.0
Excessive Left OH condition.
Max allowable length is 2- 9- 5. Support end or provide level return.
Design checked for 10 psf non-concurrent LL on BC.
Wind Loads - ANSI / ASCE 7-02
Truss is designed as Components and Claddings* for Exterior zone location.
Wind Speed: 110 mph
Mean Roof Height: 25-0
Exposure Category: B
Occupancy Factor : 1.00
Building Type: Enclosed

TC Dead Load: 4.0 psf
BC Dead Load: 6.0 psf
Max comp. force 96 Lbs
Max tens. force 29 Lbs
Quality Control Factor 1.25
FABRICATOR NOTES:
1. Delegated Engineer (Truss Designer)
Gary Dounson, PE 35054
Gary Dounson & Associates, Inc.
2830 NW 41st Street Suite D
Gainesville, FL 32606
(352)375-8593
CA 5201

Job	Mark	Quan	Type	Span	P1-H1	Left OH	Right OH	*Engineering*
070790	*R48*	13	SCISSOR	190400	10	0	0	

Hornsby Residence, Roof, Magura

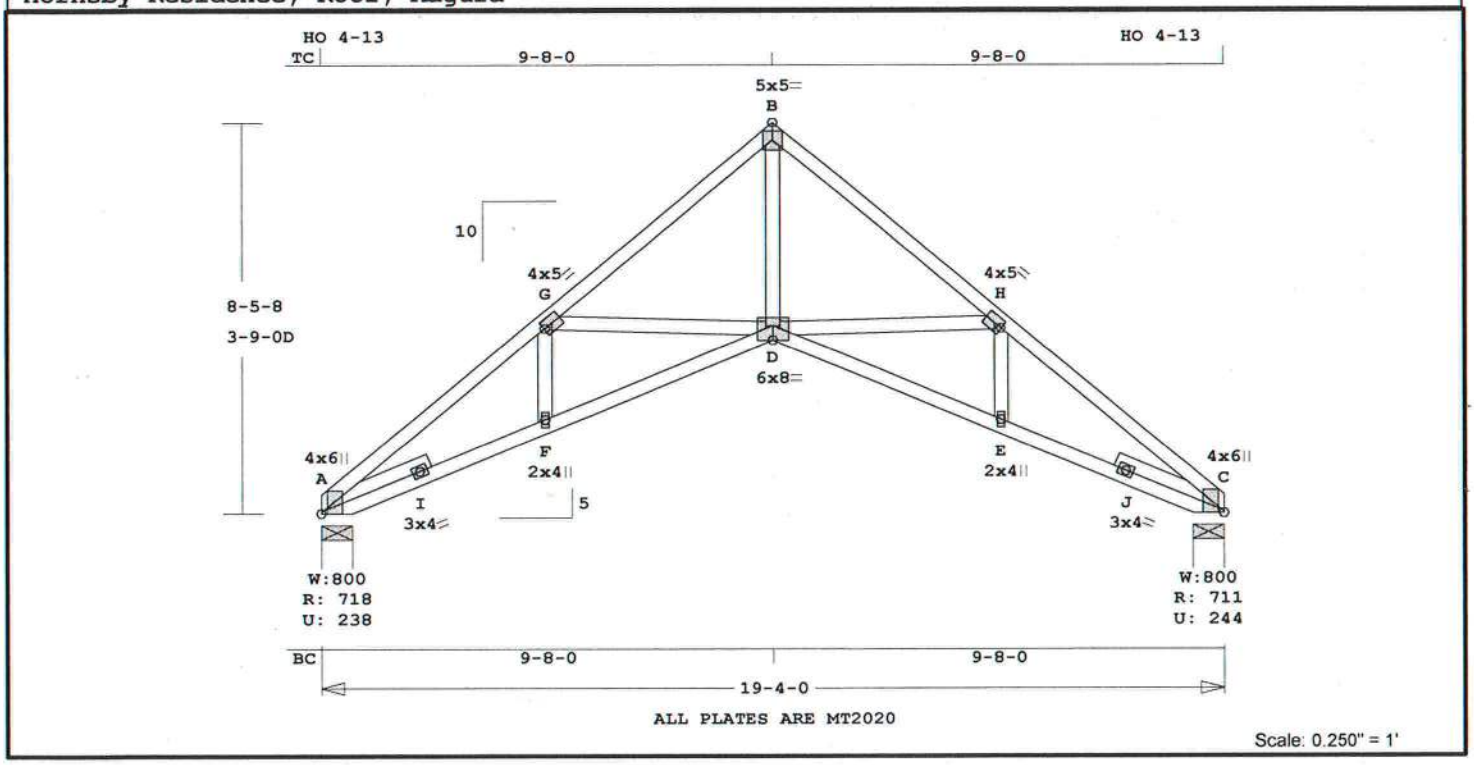

Robbins Engineering, Inc./Online Plus™ APPROX. TRUSS WEIGHT: 130.6 LBS

Online Plus -- Version 21.0.059
RUN DATE: 14-NOV-07

	CSI	-Size-	----Lumber----
TC	0.27	2x 4	SP-#2
BC	0.40	2x 4	SP-#2
WB	0.33	2x 4	SP-#3
SL	0.11	2x 4	SP-#3

Brace truss as follows:

	O.C.	From	To
TC	Cont.	0- 0- 0	19- 4- 0
BC	Cont.	0- 0- 0	19- 4- 0

psf-Ld	Dead	Live
TC	7.0	20.0
BC	10.0	0.0
TC+BC	17.0	20.0
Total	37.0	Spacing 24.0"

Lumber Duration Factor 1.25
Plate Duration Factor 1.25
TC Fb=1.15 Fc=1.10 Ft=1.10
BC Fb=1.10 Fc=1.10 Ft=1.10

Total Load Reactions (Lbs)

Jt	Down	Uplift	Horiz-
A	719	238 U	201 R
C	712	245 U	201 R

Jt	Brg Size	Required
A	8.0"	1.5"
C	8.0"	1.5"

Plus 9 Wind Load Case(s)
Plus 1 UBC LL Load Case(s)

Membr	CSI	P Lbs	Axl-CSI-Bnd	
----------Top Chords----------				
A -G	0.23	1420 C	0.05	0.18
G -B	0.21	1038 C	0.03	0.18
B -H	0.20	1036 C	0.03	0.17
H -C	0.27	1447 C	0.01	0.26
--------Bottom Chords---------				
A -I	0.30	833 T	0.14	0.16
I -F	0.35	1163 T	0.19	0.16
F -D	0.29	1183 T	0.19	0.10
D -E	0.29	1195 T	0.20	0.09
E -J	0.40	1180 T	0.19	0.21
J -C	0.21	1005 C	0.00	0.21
----------Webs----------				
F -G	0.03	137 T		
G -D	0.13	393 C		
D -B	0.33	1052 T		
D -H	0.13	384 C		
E -H	0.04	164 T		
----------Sliders----------				
A -I	0.11	348 T		
J -C	0.03	225 C		

TL Defl -0.14" in D -E L/999
LL Defl -0.07" in D -E L/999

Hz Disp	LL	DL	TL
Jt C	0.07"	0.06"	0.14"

Shear // Grain in C -C 0.29

Plates for each ply each face.
Plate - MT20 20 Ga, Gross Area
Plate - MT2H 20 Ga, Gross Area

Jt	Type	Plt Size	X	Y	JSI
A	MT20	4.0x 6.0	3.2	2.5	0.67
G	MT20	4.0x 5.0	Ctr	Ctr	0.78
B	MT20	5.0x 5.0	Ctr	Ctr	0.48
H	MT20	4.0x 5.0	Ctr	Ctr	0.78
C	MT20	4.0x 6.0	-3.2	2.5	0.67
I	MT20	3.0x 4.0	Ctr	Ctr	0.50
F	MT20	2.0x 4.0	Ctr	Ctr	0.38
D	MT20	6.0x 8.0	Ctr	-0.8	0.48
E	MT20	2.0x 4.0	Ctr	Ctr	0.38
J	MT20	3.0x 4.0	Ctr	Ctr	0.50

NOTES:
Trusses Manufactured by:
RIDGWAY ROOF TRUSS
Analysis Conforms To:
FBC2004
Design checked for 10 psf non-concurrent LL on BC.
Wind Loads - ANSI / ASCE 7-02
Truss is designed as
Components and Claddings*
for Exterior zone location.
Wind Speed: 110 mph
Mean Roof Height: 25-0
Exposure Category: B
Occupancy Factor : 1.00
Building Type: Enclosed
TC Dead Load: 4.0 psf
BC Dead Load: 6.0 psf
Max comp. force 1447 Lbs
Max tens. force 1195 Lbs
Quality Control Factor 1.25
FABRICATOR NOTES:
1. Delegated Engineer (Truss Designer)
Gary Dounson, PE 35054
Gary Dounson & Associates, Inc.
2830 NW 41st Street Suite D
Gainesville, FL 32606
(352)375-8593
CA 5201

Job	Mark	Quan	Type	Span	P1-H1	Left OH	Right OH	*Engineering*
070790	*R49*	6	SCISSOR	190400	10	0	0	

Hornsby Residence, Roof, Magura

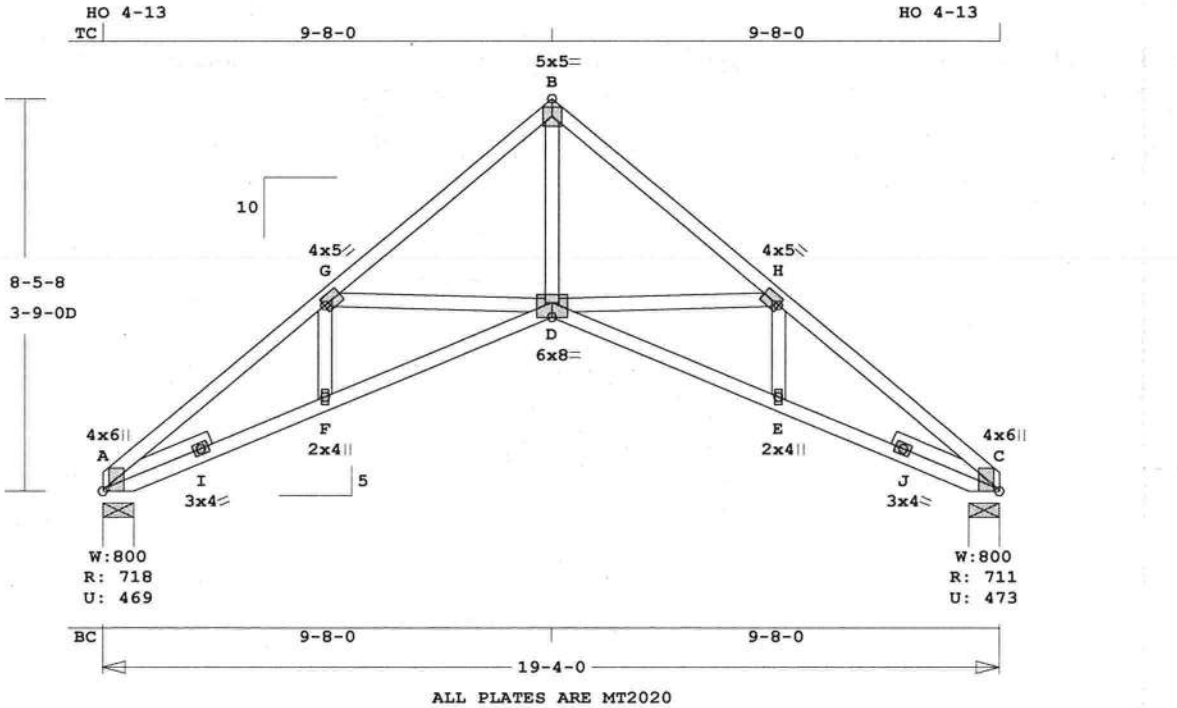

Robbins Engineering, Inc./Online Plus™ APPROX. TRUSS WEIGHT: 130.6 LBS

Online Plus -- Version 21.0.059
RUN DATE: 14-NOV-07

	CSI	-Size-	----Lumber----
TC	0.31	2x 4	SP-#2
BC	0.40	2x 4	SP-#2
WB	0.33	2x 4	SP-#3
SL	0.11	2x 4	SP-#3

Brace truss as follows:

	O.C.	From	To
TC	Cont.	0- 0- 0	19- 4- 0
BC	Cont.	0- 0- 0	19- 4- 0

psf-Ld	Dead	Live
TC	7.0	20.0
BC	10.0	0.0
TC+BC	17.0	20.0
Total	37.0	Spacing 24.0"

Lumber Duration Factor 1.25
Plate Duration Factor 1.25
TC Fb=1.15 Fc=1.10 Ft=1.10
BC Fb=1.10 Fc=1.10 Ft=1.10

Total Load Reactions (Lbs)

Jt	Down	Uplift	Horiz-
A	719	470 U	201 R
C	712	474 U	201 R

Jt	Brg Size	Required
A	8.0"	1.5"
C	8.0"	1.5"

Plus 9 Wind Load Case(s)
Plus 1 UBC LL Load Case(s)

Membr	CSI	P Lbs	Axl-CSI-Bnd
----------Top Chords----------			
A -G	0.31	1420 C	0.16 0.15
G -B	0.24	1038 C	0.09 0.15
B -H	0.22	1036 C	0.09 0.13
H -C	0.29	1447 C	0.13 0.16
--------Bottom Chords---------			
A -I	0.30	833 T	0.14 0.16
I -F	0.35	1163 T	0.19 0.16
F -D	0.29	1183 T	0.19 0.10
D -E	0.29	1195 T	0.20 0.09
E -J	0.40	1180 T	0.19 0.21
J -C	0.21	1005 C	0.00 0.21
----------Webs----------			
F -G	0.03	175 C	
G -D	0.13	554 T	
D -B	0.33	1052 T	
D -H	0.11	439 T	
E -H	0.04	164 T	
----------Sliders----------			
A -I	0.11	348 T	
J -C	0.03	225 C	

TL Defl -0.14" in D -E L/999
LL Defl -0.07" in D -E L/999

Hz Disp	LL	DL	TL
Jt C	0.07"	0.06"	0.14"

Shear // Grain in C -C 0.29

Plates for each ply each face.
Plate - MT20 20 Ga, Gross Area
Plate - MT2H 20 Ga, Gross Area

Jt	Type	Plt Size	X	Y	JSI
A	MT20	4.0x 6.0	3.2	2.5	0.67
G	MT20	4.0x 5.0	Ctr	Ctr	0.78
B	MT20	5.0x 5.0	Ctr	Ctr	0.48
H	MT20	4.0x 5.0	Ctr	Ctr	0.78
C	MT20	4.0x 6.0	-3.2	2.5	0.67
I	MT20	3.0x 4.0	Ctr	Ctr	0.50
F	MT20	2.0x 4.0	Ctr	Ctr	0.38
D	MT20	6.0x 8.0	Ctr	-0.8	0.48
E	MT20	2.0x 4.0	Ctr	Ctr	0.38
J	MT20	3.0x 4.0	Ctr	Ctr	0.50

NOTES:
Trusses Manufactured by:
RIDGWAY ROOF TRUSS
Analysis Conforms To:
FBC2004
Design checked for 10 psf non-concurrent LL on BC.
Wind Loads - ANSI / ASCE 7-02
Truss is designed as Components and Claddings* for Exterior zone location.
Wind Speed: 110 mph
Mean Roof Height: 25-0
Exposure Category: B
Occupancy Factor : 1.00
Building Type: Enclosed
TC Dead Load: 4.0 psf
BC Dead Load: 6.0 psf
User-defined wind-exposed BC regions --From-- ---To---
0- 0- 0 19- 4- 0
Max comp. force 1447 Lbs
Max tens. force 1234 Lbs
Quality Control Factor 1.25
FABRICATOR NOTES:
1. Delegated Engineer (Truss Designer)
Gary Dounson, PE 35054
Gary Dounson & Associates, Inc.
2830 NW 41st Street Suite D
Gainesville, FL 32606
(352)375-8593
CA 5201

Job	Mark	Quan	Type	Span	P1-H1	Left OH	Right OH	Engineering
070790	R50	1	SCISSOR	190400	10	0	0	

Hornsby Residence, Roof, Magura

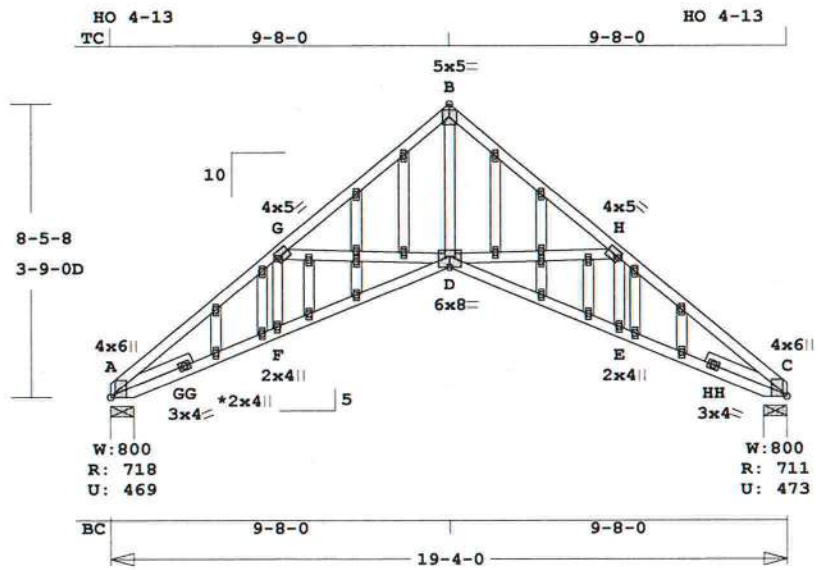

ALL PLATES ARE MT2020

See * For Typical Gable Plate Size and Placement

Scale: 0.188" = 1'

Robbins Engineering, Inc./Online Plus™ APPROX. TRUSS WEIGHT: 171.1 LBS

Online Plus -- Version 21.0.059
RUN DATE: 14-NOV-07

	CSI	-Size-	----Lumber----
TC	0.31	2x 4	SP-#2
BC	0.40	2x 4	SP-#2
WB	0.33	2x 4	SP-#3
SL	0.11	2x 4	SP-#3

Brace truss as follows:

	O.C.	From	To
TC	Cont.	0- 0- 0	19- 4- 0
BC	Cont.	0- 0- 0	19- 4- 0

psf-Ld	Dead	Live
TC	7.0	20.0
BC	10.0	0.0
TC+BC	17.0	20.0

Total 37.0 Spacing 24.0"
Lumber Duration Factor 1.25
Plate Duration Factor 1.25
TC Fb=1.15 Fc=1.10 Ft=1.10
BC Fb=1.10 Fc=1.10 Ft=1.10

Total Load Reactions (Lbs)

Jt	Down	Uplift	Horiz-
A	719	470 U	201 R
C	712	474 U	201 R

Jt	Brg Size	Required
A	8.0"	1.5"
C	8.0"	1.5"

Plus 9 Wind Load Case(s)
Plus 1 UBC LL Load Case(s)

Membr	CSI	P Lbs	Axl-CSI-Bnd
----------Top Chords----------			
A -G	0.31	1420 C	0.16 0.15
G -B	0.24	1038 C	0.09 0.15
B -H	0.22	1036 C	0.09 0.13
H -C	0.29	1447 C	0.13 0.16
--------Bottom Chords---------			
A -GG	0.30	833 T	0.14 0.16
GG-F	0.35	1163 T	0.19 0.16
F -D	0.29	1183 T	0.19 0.10
D -E	0.29	1195 T	0.20 0.09
E -HH	0.40	1180 T	0.19 0.21
HH-C	0.21	1005 C	0.00 0.21
----------Webs----------			
F -G	0.03	175 C	
G -D	0.13	554 T	
D -B	0.33	1052 T	
D -H	0.11	439 T	
E -H	0.04	164 T	
----------Sliders----------			
A -GG	0.11	348 T	
HH-C	0.03	225 C	

TL Defl -0.14" in D -E L/999
LL Defl -0.07" in D -E L/999

Hz Disp	LL	DL	TL
Jt C	0.07"	0.06"	0.14"

Shear // Grain in C -C 0.29

Plates for each ply each face.
Plate - MT20 20 Ga, Gross Area
Plate - MT2H 20 Ga, Gross Area

Jt	Type	Plt Size	X	Y	JSI
A	MT20	4.0x 6.0	3.2	2.5	0.67
G	MT20	4.0x 5.0	Ctr	Ctr	0.78
B	MT20	5.0x 5.0	Ctr	Ctr	0.48
H	MT20	4.0x 5.0	Ctr	Ctr	0.78
C	MT20	4.0x 6.0	-3.2	2.5	0.67
GG	MT20	3.0x 4.0	Ctr	Ctr	0.50
F	MT20	2.0x 4.0	Ctr	Ctr	0.38
D	MT20	6.0x 8.0	Ctr	-0.8	0.48
E	MT20	2.0x 4.0	Ctr	Ctr	0.38
HH	MT20	3.0x 4.0	Ctr	Ctr	0.50

12 Gable studs to be attached with 2.0x4.0 plates each end.

NOTES:
Trusses Manufactured by:
RIDGWAY ROOF TRUSS
Analysis Conforms To:
FBC2004
Design checked for 10 psf non-concurrent LL on BC.
Refer to Gen Det 3 series for web bracing and plating.
Wind Loads - ANSI / ASCE 7-02
Truss is designed as
Components and Claddings*
for Exterior zone location.
Wind Speed: 110 mph
Mean Roof Height: 25-0
Exposure Category: B
Occupancy Factor : 1.00
Building Type: Enclosed
TC Dead Load: 4.0 psf
BC Dead Load: 6.0 psf
User-defined wind-exposed BC regions --From-- ---To---
0- 0- 0 19- 4- 0
Max comp. force 1447 Lbs
Max tens. force 1234 Lbs
Quality Control Factor 1.25
FABRICATOR NOTES:
1. Delegated Engineer (Truss Designer)
Gary Dounson, PE 35054
Gary Dounson & Associates, Inc.
2830 NW 41st Street Suite D
Gainesville, FL 32606
(352)375-8593
CA 5201

Job	Mark	Quan	Type	Span	P1-H1	Left OH	Right OH	*Engineering*
070790	*R51*	2	SCISSOR	170400	10	0	0	

Hornsby Residence, Roof, Magura

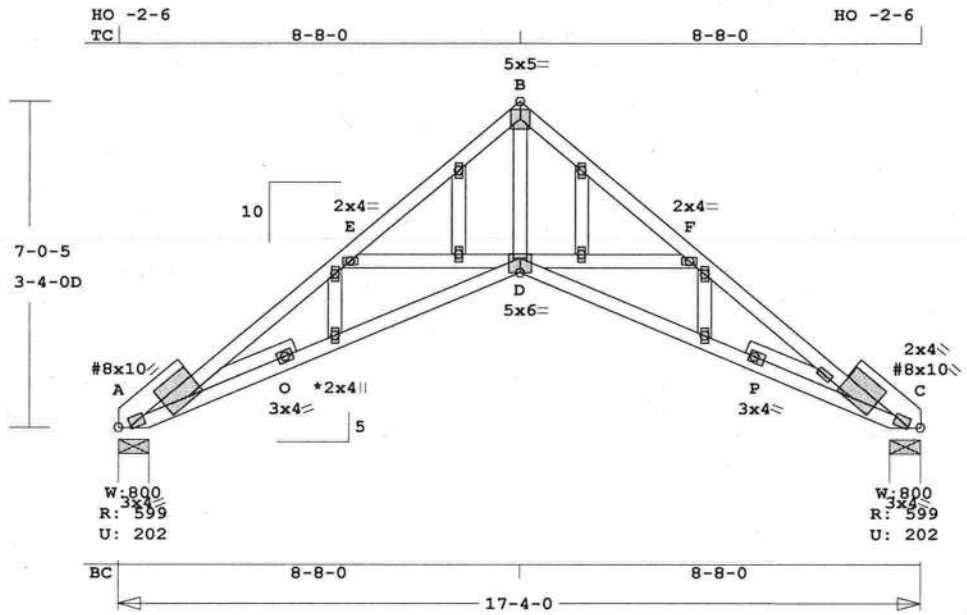

ALL PLATES ARE MT2020, # = PLATE SELECTED IN PLATE MONITOR
See * For Typical Gable Plate Size and Placement

Scale: 0.250" = 1'

Robbins Engineering, Inc./Online Plus™ APPROX. TRUSS WEIGHT: 127.6 LBS

Online Plus -- Version 21.0.059
RUN DATE: 14-NOV-07

	CSI	-Size-	----Lumber----
TC	0.28	2x 4	SP-#2
BC	0.32	2x 4	SP-#2
WB	0.32	2x 4	SP-#3
SL	0.04	2x 4	SP-#3

Brace truss as follows:

	O.C.	From	To
TC	Cont.	0- 0- 0	17- 4- 0
BC	Cont.	0- 0- 0	17- 4- 0

psf-Ld	Dead	Live
TC	7.0	20.0
BC	10.0	0.0
TC+BC	17.0	20.0

Total 37.0 Spacing 24.0"
Lumber Duration Factor 1.25
Plate Duration Factor 1.25
TC Fb=1.15 Fc=1.10 Ft=1.10
BC Fb=1.10 Fc=1.10 Ft=1.10

Total Load Reactions (Lbs)

Jt	Down	Uplift	Horiz-
A	600	203 U	166 R
C	600	203 U	166 R

Jt	Brg Size	Required
A	8.0"	1.5"
C	8.0"	1.5"

Plus 9 Wind Load Case(s)
Plus 1 UBC LL Load Case(s)

Membr	CSI	P Lbs	Axl-CSI-Bnd
----------Top Chords----------			
A -E	0.28	1306 C	0.00 0.28
E -B	0.15	948 C	0.00 0.15
B -F	0.15	948 C	0.00 0.15
F -C	0.28	1306 C	0.00 0.28
--------Bottom Chords---------			
A -O	0.26	1056 T	0.17 0.09
O -D	0.32	1138 T	0.19 0.13
D -P	0.32	1138 T	0.19 0.13
P -C	0.26	1055 T	0.17 0.09
----------Webs----------			
E -D	0.09	377 C	
D -B	0.32	1012 T	
D -F	0.09	378 C	
----------Sliders----------			
A -O	0.04	150 T	
P -C	0.04	152 T	

TL Defl -0.15" in O -D L/999
LL Defl -0.07" in O -D L/999

Hz Disp	LL	DL	TL
Jt C	0.06"	0.05"	0.10"

Shear // Grain in O -E 0.15

Plates for each ply each face.
Plate - MT20 20 Ga, Gross Area
Plate - MT2H 20 Ga, Gross Area

Jt	Type	Plt Size	X	Y	JSI
A#	MT20	8.0x10.0	3.3	3.8	0.90
E	MT20	2.0x 4.0	Ctr	Ctr	0.38
B	MT20	5.0x 5.0	Ctr	Ctr	0.46
F	MT20	2.0x 4.0	Ctr	Ctr	0.38
C#	MT20	8.0x10.0	-3.0	4.0	0.94
C#	MT20	2.0x 4.0	Ctr	Ctr	0.00
O	MT20	3.0x 4.0	Ctr	Ctr	0.50
D	MT20	5.0x 6.0	Ctr	-1.3	0.53
P	MT20	3.0x 4.0	Ctr	Ctr	0.50

= Plate Monitor used
4 Gable studs to be attached with 2.0x4.0 plates each end.

NOTES:

Trusses Manufactured by:
RIDGWAY ROOF TRUSS
Analysis Conforms To:
FBC2004
Design checked for 10 psf non-concurrent LL on BC.
Refer to Gen Det 3 series for web bracing and plating.
NOTE: USER MODIFIED PLATES
This design may have plates selected through a plate monitor.
Wind Loads - ANSI / ASCE 7-02
Truss is designed as
Components and Claddings*
for Exterior zone location.
Wind Speed: 110 mph
Mean Roof Height: 25-0
Exposure Category: B
Occupancy Factor : 1.00
Building Type: Enclosed
TC Dead Load: 4.0 psf
BC Dead Load: 6.0 psf
Max comp. force 1306 Lbs
Max tens. force 1138 Lbs
Quality Control Factor 1.25
FABRICATOR NOTES:

1. Delegated Engineer (Truss Designer)
   Gary Dounson, PE 35054
   Gary Dounson & Associates, Inc.
   2830 NW 41st Street Suite D
   Gainesville, FL 32606
   (352)375-8593
   CA 5201

Job	Mark	Quan	Type	Span	P1-H1	Left OH	Right OH	Engineering
070790	R52	6	SP	160500	10	0	0	

Hornsby Residence, Roof, Magura

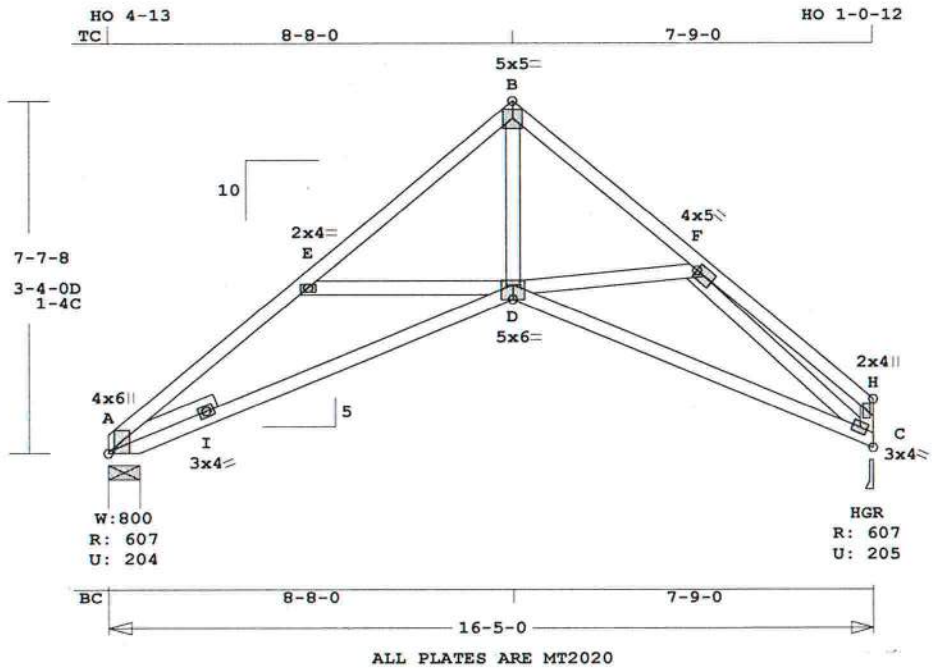

Scale: 0.250" = 1'

Robbins Engineering, Inc./Online Plus™ APPROX. TRUSS WEIGHT: 113.0 LBS

Online Plus -- Version 21.0.059
RUN DATE: 14-NOV-07

	CSI	-Size-	----Lumber----
TC	0.19	2x 4	SP-#2
BC	0.39	2x 4	SP-#2
WB	0.42	2x 4	SP-#3
SL	0.09	2x 4	SP-#3

Brace truss as follows:

	O.C.	From	To
TC	Cont.	0- 0- 0	16- 5- 0
BC	Cont.	0- 0- 0	16- 5- 0

psf-Ld	Dead	Live
TC	7.0	20.0
BC	10.0	0.0
TC+BC	17.0	20.0

Total 37.0 Spacing 24.0"
Lumber Duration Factor 1.25
Plate Duration Factor 1.25
TC Fb=1.15 Fc=1.10 Ft=1.10
BC Fb=1.10 Fc=1.10 Ft=1.10

Total Load Reactions (Lbs)

Jt	Down	Uplift	Horiz-
A	607	204 U	176 R
C	607	206 U	186 R

Jt	Brg Size	Required
A	8.0"	1.5"
C	3.5"	1.5"

Plus 9 Wind Load Case(s)
Plus 1 UBC LL Load Case(s)

Membr	CSI	P Lbs	Axl-CSI-Bnd
----------Top Chords----------			
A -E	0.19	1160 C	0.05 0.14
E -B	0.16	831 C	0.02 0.14
B -F	0.15	830 C	0.02 0.13
F -H	0.14	91 T	0.01 0.13
--------Bottom Chords---------			
A -I	0.22	678 T	0.11 0.11
I -D	0.35	964 T	0.10 0.25
D -C	0.39	771 T	0.06 0.33
----------Webs----------			
E -D	0.11	354 C	
D -B	0.26	828 T	
D -F	0.06	255 T	
F -C	0.42	1026 C	
C -H	0.02	120 C	WindLd
----------Sliders----------			
A -I	0.09	366 T	

TL Defl -0.27" in D -C L/679
LL Defl -0.13" in D -C L/999

Hz Disp	LL	DL	TL
Jt C	0.05"	0.03"	0.08"

Shear // Grain in D -C 0.16

Plates for each ply each face.
Plate - MT20 20 Ga, Gross Area
Plate - MT2H 20 Ga, Gross Area

Jt	Type	Plt Size	X	Y	JSI
A	MT20	4.0x 6.0	3.2	2.5	0.63
E	MT20	2.0x 4.0	Ctr	Ctr	0.38
B	MT20	5.0x 5.0	Ctr	Ctr	0.45
F	MT20	4.0x 5.0	Ctr	Ctr	0.84
H	MT20	2.0x 4.0	Ctr	Ctr	0.38
I	MT20	3.0x 4.0	Ctr	Ctr	0.50
D	MT20	5.0x 6.0	Ctr	-1.3	0.52
C	MT20	3.0x 4.0	Ctr	Ctr	0.67

NOTES:
Trusses Manufactured by:
RIDGWAY ROOF TRUSS
Analysis Conforms To:
FBC2004

Design checked for 10 psf non-concurrent LL on BC.
Wind Loads - ANSI / ASCE 7-02
Truss is designed as
Components and Claddings*
for Exterior zone location.
Wind Speed: 110 mph
Mean Roof Height: 25-0
Exposure Category: B
Occupancy Factor : 1.00
Building Type: Enclosed
TC Dead Load: 4.0 psf
BC Dead Load: 6.0 psf
Max comp. force 1160 Lbs
Max tens. force 964 Lbs
Quality Control Factor 1.25
FABRICATOR NOTES:

1. Delegated Engineer (Truss Designer)
   Gary Dounson, PE 35054
   Gary Dounson & Associates, Inc.
   2830 NW 41st Street Suite D
   Gainesville, FL 32606
   (352)375-8593
   CA 5201

Job	Mark	Quan	Type	Span	P1-H1	Left OH	Right OH	*Engineering*
070790	*R53*	9	SP	160500	10	0	0	

Hornsby Residence, Roof, Magura

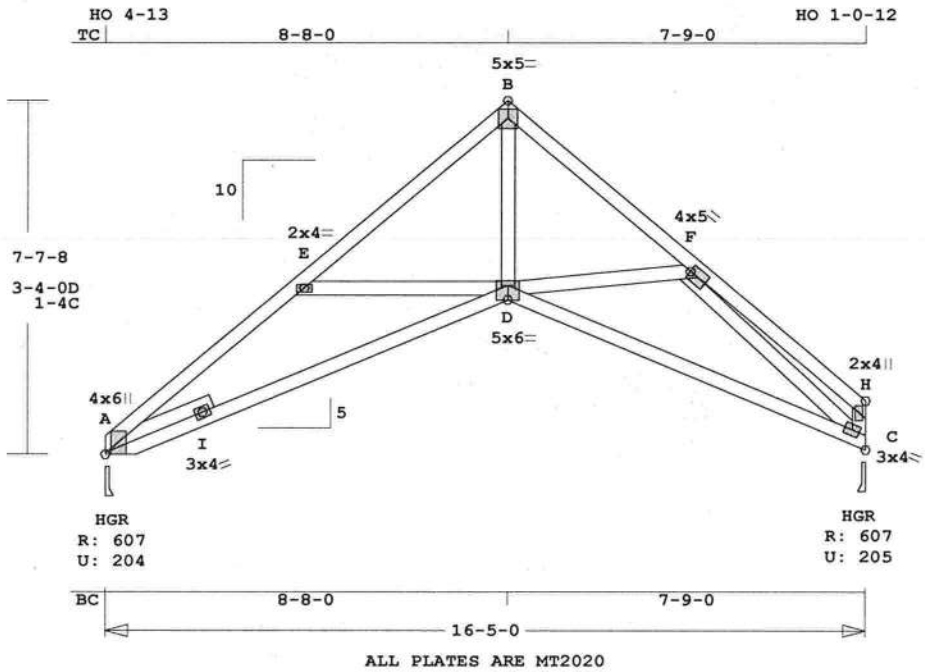

Scale: 0.250" = 1'

Robbins Engineering, Inc./Online Plus™ APPROX. TRUSS WEIGHT: 113.0 LBS

Online Plus -- Version 21.0.059
RUN DATE: 14-NOV-07

	CSI	-Size-	----Lumber----
TC	0.19	2x 4	SP-#2
BC	0.39	2x 4	SP-#2
WB	0.42	2x 4	SP-#3
SL	0.09	2x 4	SP-#3

Brace truss as follows:

	O.C.	From	To
TC	Cont.	0- 0- 0	16- 5- 0
BC	Cont.	0- 0- 0	16- 5- 0

psf-Ld	Dead	Live
TC	7.0	20.0
BC	10.0	0.0
TC+BC	17.0	20.0

Total 37.0 Spacing 24.0"
Lumber Duration Factor 1.25
Plate Duration Factor 1.25
TC Fb=1.15 Fc=1.10 Ft=1.10
BC Fb=1.10 Fc=1.10 Ft=1.10

Total Load Reactions (Lbs)

Jt	Down	Uplift	Horiz-
A	607	204 U	176 R
C	607	206 U	186 R

Jt	Brg Size	Required
A	3.5"	1.5"
C	3.5"	1.5"

Plus 9 Wind Load Case(s)
Plus 1 UBC LL Load Case(s)

Membr	CSI	P Lbs	Axl-CSI-Bnd	
----------Top Chords----------				
A -E	0.19	1160 C	0.05	0.14
E -B	0.16	831 C	0.02	0.14
B -F	0.15	830 C	0.02	0.13
F -H	0.14	91 T	0.01	0.13
--------Bottom Chords---------				
A -I	0.22	678 T	0.11	0.11
I -D	0.35	964 T	0.10	0.25
D -C	0.39	771 T	0.06	0.33
----------Webs----------				
E -D	0.11	354 C		
D -B	0.26	828 T		
D -F	0.06	255 T		
F -C	0.42	1026 C		
C -H	0.02	120 C WindLd		
----------Sliders----------				
A -I	0.09	366 T		

TL Defl -0.27" in D -C L/695
LL Defl -0.13" in D -C L/999

Hz Disp	LL	DL	TL
Jt C	0.05"	0.03"	0.08"

Shear // Grain in D -C 0.16

Plates for each ply each face.
Plate - MT20 20 Ga, Gross Area
Plate - MT2H 20 Ga, Gross Area

Jt	Type	Plt Size	X	Y	JSI
A	MT20	4.0x 6.0	3.2	2.5	0.63
E	MT20	2.0x 4.0	Ctr	Ctr	0.38
B	MT20	5.0x 5.0	Ctr	Ctr	0.45
F	MT20	4.0x 5.0	Ctr	Ctr	0.84
H	MT20	2.0x 4.0	Ctr	Ctr	0.38
I	MT20	3.0x 4.0	Ctr	Ctr	0.50
D	MT20	5.0x 6.0	Ctr	-1.3	0.52
C	MT20	3.0x 4.0	Ctr	Ctr	0.67

NOTES:
Trusses Manufactured by:
RIDGWAY ROOF TRUSS
Analysis Conforms To:
FBC2004

Design checked for 10 psf non-concurrent LL on BC.
Wind Loads - ANSI / ASCE 7-02
Truss is designed as
Components and Claddings*
for Exterior zone location.
Wind Speed: 110 mph
Mean Roof Height: 25-0
Exposure Category: B
Occupancy Factor : 1.00
Building Type: Enclosed
TC Dead Load: 4.0 psf
BC Dead Load: 6.0 psf
Max comp. force 1160 Lbs
Max tens. force 964 Lbs
Quality Control Factor 1.25
FABRICATOR NOTES:

1. Delegated Engineer (Truss Designer)
   Gary Dounson, PE 35054
   Gary Dounson & Associates, Inc.
   2830 NW 41st Street Suite D
   Gainesville, FL 32606
   (352)375-8593
   CA 5201

Job	Mark	Quan	Type	Span	P1-H1	Left OH	Right OH	Engineering
070790	R54	2	SCISSOR	160500	10	0	0	

Hornsby Residence, Roof, Magura

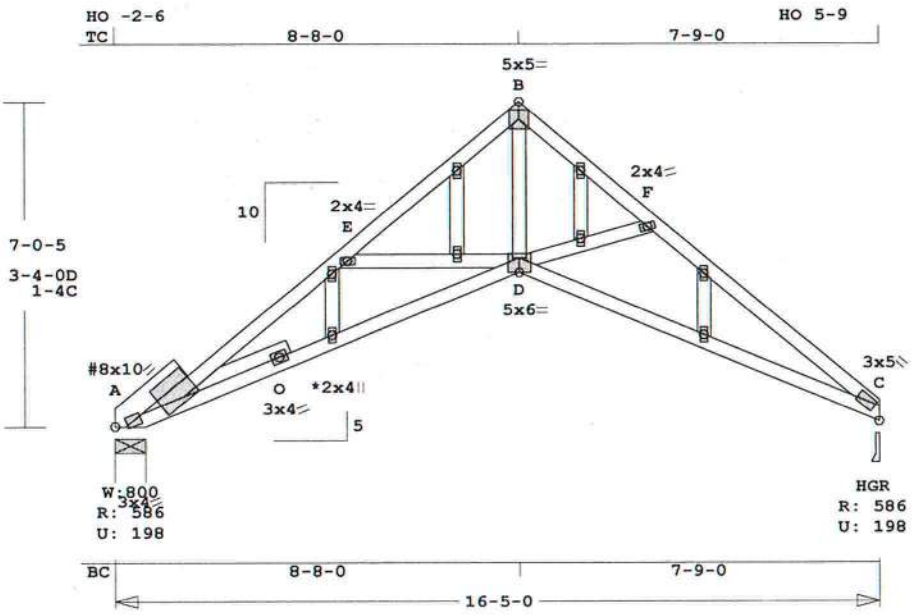

ALL PLATES ARE MT2020, # = PLATE SELECTED IN PLATE MONITOR
See * For Typical Gable Plate Size and Placement

Scale: 0.250" = 1'

Robbins Engineering, Inc./Online Plus™ APPROX. TRUSS WEIGHT: 113.2 LBS

Online Plus -- Version 21.0.059
RUN DATE: 14-NOV-07

	CSI	-Size-	----Lumber----
TC	0.27	2x 4	SP-#2
BC	0.31	2x 4	SP-#2
WB	0.31	2x 4	SP-#3
SL	0.03	2x 4	SP-#3

Brace truss as follows:

	O.C.	From	To
TC	Cont.	0- 0- 0	16- 5- 0
BC	Cont.	0- 0- 0	16- 5- 0

psf-Ld	Dead	Live
TC	7.0	20.0
BC	10.0	0.0
TC+BC	17.0	20.0

Total 37.0 Spacing 24.0"
Lumber Duration Factor 1.25
Plate Duration Factor 1.25
TC Fb=1.15 Fc=1.10 Ft=1.10
BC Fb=1.10 Fc=1.10 Ft=1.10

Total Load Reactions (Lbs)

Jt	Down	Uplift	Horiz-
A	587	198 U	163 R
C	587	198 U	163 R

Jt	Brg Size	Required
A	8.0"	1.5"
C	3.5"	1.5"

Plus 9 Wind Load Case(s)
Plus 1 UBC LL Load Case(s)

Membr	CSI	P Lbs	Axl-CSI-Bnd		
----------Top Chords----------					
A -E	0.27	1268 C	0.00	0.27	
E -B	0.15	910 C	0.00	0.15	
B -F	0.15	903 C	0.03	0.12	
F -C	0.16	1145 C	0.01	0.15	
--------Bottom Chords---------					
A -O	0.26	1034 T	0.17	0.09	
O -D	0.31	1106 T	0.18	0.13	
D -C	0.31	957 T	0.09	0.22	
----------Webs----------					
E -D	0.09	383 C			
D -B	0.31	986 T			
D -F	0.06	271 C			
----------Sliders----------					
A -O	0.03	132 T			

TL Defl -0.17" in D -C L/999
LL Defl -0.08" in D -C L/999

Hz Disp	LL	DL	TL
Jt C	0.05"	0.04"	0.09"

Shear // Grain in O -E 0.14

Plates for each ply each face.
Plate - MT20 20 Ga, Gross Area
Plate - MT2H 20 Ga, Gross Area

Jt	Type	Plt Size	X	Y	JSI
A#	MT20	8.0x10.0	3.2	3.8	0.93
E	MT20	2.0x 4.0	Ctr	Ctr	0.38
B	MT20	5.0x 5.0	Ctr	Ctr	0.45
F	MT20	2.0x 4.0	Ctr	Ctr	0.37
C	MT20	3.0x 5.0	Ctr	-1.4	0.72
O	MT20	3.0x 4.0	Ctr	Ctr	0.50
D	MT20	5.0x 6.0	Ctr	-1.3	0.52

= Plate Monitor used
4 Gable studs to be attached with 2.0x4.0 plates each end.

NOTES:
Trusses Manufactured by:
RIDGWAY ROOF TRUSS
Analysis Conforms To:
FBC2004

Design checked for 10 psf non-concurrent LL on BC.
Refer to Gen Det 3 series for web bracing and plating.
NOTE: USER MODIFIED PLATES
This design may have plates selected through a plate monitor.
Wind Loads - ANSI / ASCE 7-02
Truss is designed as
Components and Claddings*
for Exterior zone location.
Wind Speed: 110 mph
Mean Roof Height: 25-0
Exposure Category: B
Occupancy Factor : 1.00
Building Type: Enclosed
TC Dead Load: 4.0 psf
BC Dead Load: 6.0 psf
Max comp. force 1268 Lbs
Max tens. force 1106 Lbs
Quality Control Factor 1.25
FABRICATOR NOTES:

1. Delegated Engineer (Truss Designer)
   Gary Dounson, PE 35054
   Gary Dounson & Associates, Inc.
   2830 NW 41st Street Suite D
   Gainesville, FL 32606
   (352)375-8593
   CA 5201

Job	Mark	Quan	Type	Span	P1-H1	Left OH	Right OH	*Engineering*
070790	*R55*	1	TR	250400	5	0	2- 9- 2	

Hornsby Residence, Roof, Magura

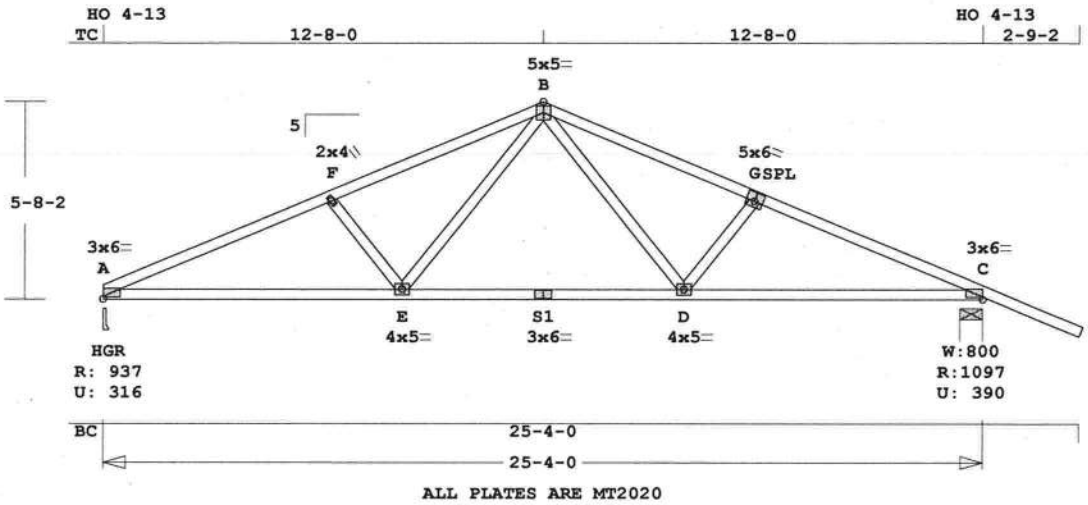

Scale: 0.188" = 1'

Robbins Engineering, Inc./Online Plus™ APPROX. TRUSS WEIGHT: 142.7 LBS

Online Plus -- Version 21.0.059
RUN DATE: 20-DEC-07

	CSI	-Size-	----Lumber----
TC	0.39	2x 4	SP-#2
BC	0.51	2x 4	SP-#2
WB	0.17	2x 4	SP-#3

Brace truss as follows:

	O.C.	From	To
TC	Cont.	0- 0- 0	25- 4- 0
BC	Cont.	0- 0- 0	25- 4- 0

psf-Ld	Dead	Live
TC	7.0	20.0
BC	10.0	0.0
TC+BC	17.0	20.0
Total	37.0	Spacing 24.0"

Lumber Duration Factor 1.25
Plate Duration Factor 1.25
TC Fb=1.15 Fc=1.10 Ft=1.10
BC Fb=1.10 Fc=1.10 Ft=1.10

Total Load Reactions (Lbs)

Jt	Down	Uplift	Horiz-
A	937	317 U	2 R
C	1097	390 U	2 R

Jt	Brg Size	Required
A	3.5"	1.5"
C	8.0"	1.5"

Plus 7 Wind Load Case(s)
Plus 1 UBC LL Load Case(s)

Membr	CSI	P Lbs	Axl-CSI-Bnd
----------Top Chords----------			
A -F	0.39	1748 C	0.12 0.27
F -B	0.37	1539 C	0.10 0.27
B -G	0.37	1539 C	0.10 0.27
G -C	0.39	1748 C	0.12 0.27
--------Bottom Chords---------			
A -E	0.51	1617 T	0.16 0.35
E -S1	0.45	1075 T	0.10 0.35
S1-D	0.45	1075 T	0.10 0.35
D -C	0.51	1617 T	0.16 0.35
----------Webs----------			
F -E	0.08	342 T	
E -B	0.17	550 T	
B -D	0.17	550 T	
D -G	0.08	342 T	

TL Defl -0.20" in A -E L/999
LL Defl -0.09" in A -E L/999
Shear // Grain in A -F 0.21

Plates for each ply each face.
Plate - MT20 20 Ga, Gross Area
Plate - MT2H 20 Ga, Gross Area

Jt	Type	Plt Size	X	Y	JSI
A	MT20	3.0x 6.0	Ctr	Ctr	0.75
F	MT20	2.0x 4.0	Ctr	Ctr	0.38
B	MT20	5.0x 5.0	Ctr	Ctr	0.58
G	MT20	5.0x 6.0	0.2	0.5	0.86
C	MT20	3.0x 6.0	Ctr	Ctr	0.75
E	MT20	4.0x 5.0	Ctr	Ctr	0.50
S1	MT20	3.0x 6.0	Ctr	Ctr	0.88
D	MT20	4.0x 5.0	Ctr	Ctr	0.50

NOTES:
Trusses Manufactured by:
RIDGWAY ROOF TRUSS
Analysis Conforms To:
FBC2004
OH Loading
Soffit psf 2.0
Design checked for 10 psf non-concurrent LL on BC.
Wind Loads - ANSI / ASCE 7-02
Truss is designed as
Components and Claddings*
for Exterior zone location.
Wind Speed: 110 mph
Mean Roof Height: 25-0
Exposure Category: B
Occupancy Factor : 1.00
Building Type: Enclosed
TC Dead Load: 4.0 psf
BC Dead Load: 6.0 psf
Max comp. force 1748 Lbs
Max tens. force 1617 Lbs
Quality Control Factor 1.25
FABRICATOR NOTES:
1. Delegated Engineer (Truss Designer)
Gary Dounson, PE 35054
Gary Dounson & Associates, Inc.
2830 NW 41st Street Suite D
Gainesville, FL 32606
(352)375-8593
CA 5201

Job	Mark	Quan	Type	Span	P1-H1	Left OH	Right OH	*Engineering*
070791	*R1*	1	HIPP	200400	5	2- 9- 2	2- 9- 2	

Hornsby Shop, Roof, Magura

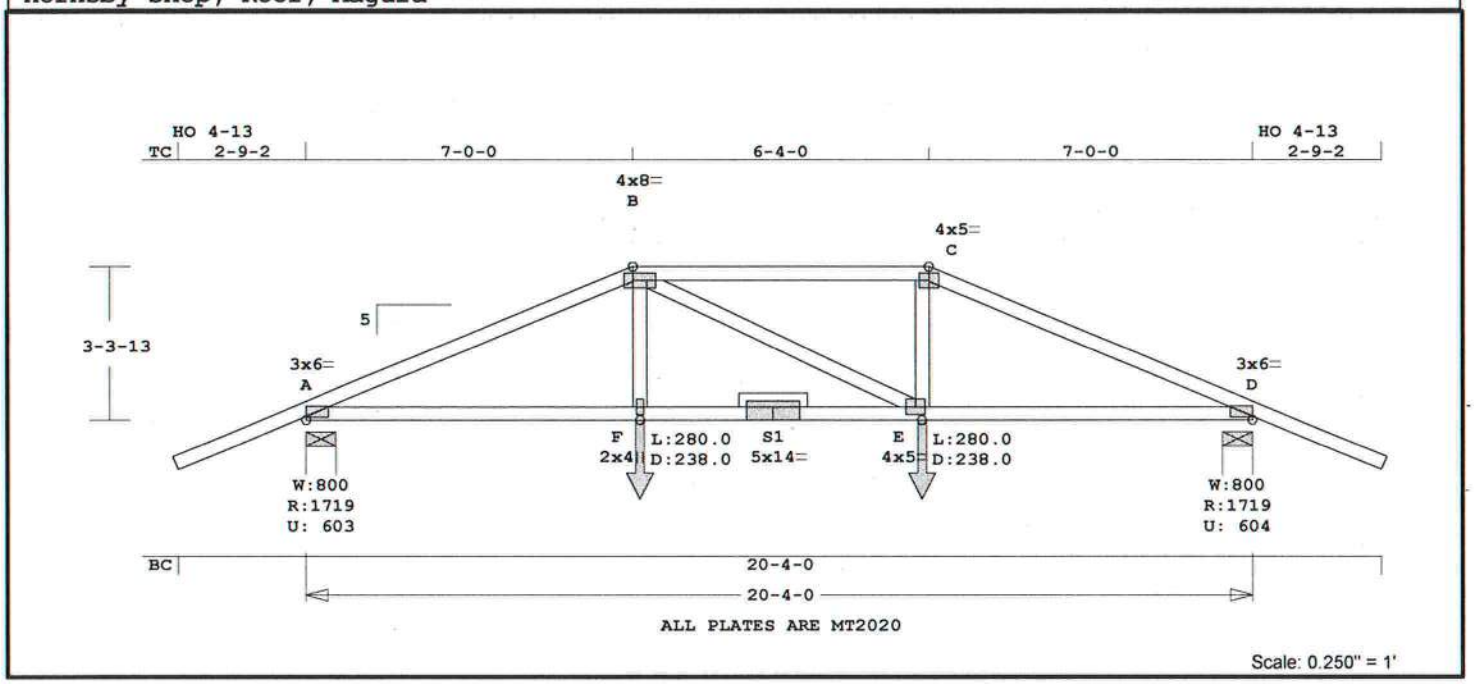

Robbins Engineering, Inc./Online Plus™ APPROX. TRUSS WEIGHT: 116.0 LBS

Online Plus -- Version 21.0.059
RUN DATE: 14-NOV-07

	CSI	-Size-	----Lumber----
TC	0.74	2x 4	SP-2400
--	0.61	2x 4	SP-#2
	A -B	C -D	
BC	0.86	2x 4	SP-#2
WB	0.22	2x 4	SP-#3
PB	---	2x 4	SP-#3

Brace truss as follows:

	O.C.	From	To
TC	Cont.	0- 0- 0	20- 4- 0
BC	Cont.	0- 0- 0	20- 4- 0

psf-Ld	Dead	Live
TC	7.0	20.0
BC	10.0	0.0
TC+BC	17.0	20.0

Total 37.0 Spacing 24.0"
Lumber Duration Factor 1.25
Plate Duration Factor 1.25
TC Fb=1.00 Fc=1.00 Ft=1.00
BC Fb=1.00 Fc=1.00 Ft=1.00

Total Load Reactions (Lbs)

Jt	Down	Uplift	Horiz-
A	1720	604 U	1 R
D	1720	604 U	1 R

Jt	Brg Size	Required
A	8.0"	2.0"
D	8.0"	2.0"

LC# 1 Girder Loading
Dur Fctrs - Lbr 1.25 Plt 1.25

plf -	Dead	Live*	From	To
TC V	14	40	0.0'	20.3'
BC V	20	0	0.0'	20.3'
TC V	18	50	7.0'	13.3'
BC V	25	0	7.1'	13.2'
BC V	238	280	7.1'	CL-LB
BC V	238	280	13.2'	CL-LB

Plus 9 Wind Load Case(s)
Plus 1 UBC LL Load Case(s)

Membr	CSI	P Lbs	Axl-CSI-Bnd	
----------Top Chords----------				
A -B	0.61	3297 C	0.08	0.53
B -C	0.74	3049 C	0.07	0.67
C -D	0.56	3304 C	0.08	0.48
--------Bottom Chords---------				
A -F	0.85	3045 T	0.56	0.29
F -S1	0.86	3017 T	0.55	0.31
S1-E	0.86	3017 T	0.55	0.31
E -D	0.83	3049 T	0.56	0.27
----------Webs----------				
F -B	0.22	772 T		
B -E	0.03	60 C		
E -C	0.22	772 T		

TL Defl -0.38" in F -E L/605
LL Defl -0.17" in F -E L/999
Shear // Grain in B -C 0.43

Plates for each ply each face.
Plate - MT20 20 Ga, Gross Area
Plate - MT2H 20 Ga, Gross Area

Jt	Type	Plt Size	X	Y	JSI
A	MT20	3.0x 6.0	Ctr	Ctr	0.92
B	MT20	4.0x 8.0	Ctr	Ctr	0.86
C	MT20	4.0x 5.0	Ctr	Ctr	0.86
D	MT20	3.0x 6.0	Ctr	Ctr	0.92
F	MT20	2.0x 4.0	Ctr	Ctr	0.51
S1	MT20	5.0x14.0	Ctr	0.8	0.90
E	MT20	4.0x 5.0	Ctr	Ctr	0.60

NOTES:
Trusses Manufactured by:
RIDGWAY ROOF TRUSS
Analysis Conforms To:
FBC2004
Girder Step Down Hip
Framing King Jacks
Jack Open Faced
Setback 7- 0- 0
OH Loading
Soffit psf 2.0
Design checked for 10 psf non-concurrent LL on BC.
Wind Loads - ANSI / ASCE 7-02
Truss is designed as
Components and Claddings*
for Exterior zone location.
Wind Speed: 110 mph
Mean Roof Height: 25-0
Exposure Category: B
Occupancy Factor : 1.00
Building Type: Enclosed
TC Dead Load: 4.0 psf
BC Dead Load: 6.0 psf
Max comp. force 3304 Lbs
Max tens. force 3049 Lbs
Quality Control Factor 1.25
FABRICATOR NOTES:
1. Delegated Engineer (Truss Designer)
Gary Dounson, PE 35054
Gary Dounson & Associates, Inc.
2830 NW 41st Street Suite D
Gainesville, FL 32606
(352)375-8593
CA 5201

Job	Mark	Quan	Type	Span	P1-H1	Left OH	Right OH	*Engineering*
070791	*R2*	11	JACK	70000	5	2- 9- 2	0	

Hornsby Shop, Roof, Magura

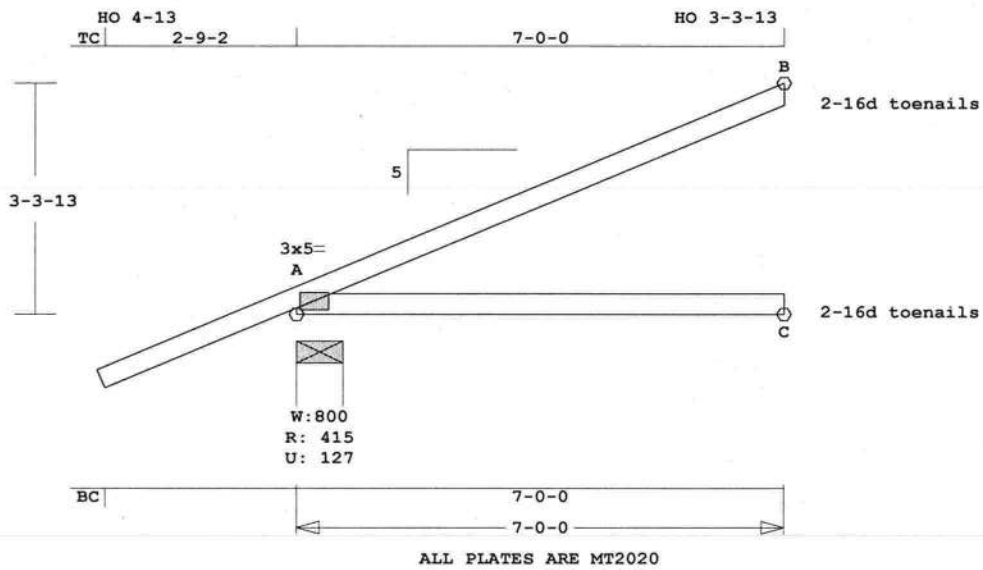

Scale: 0.375" = 1'

Robbins Engineering, Inc./Online Plus™ APPROX. TRUSS WEIGHT: 33.4 LBS

Online Plus -- Version 21.0.059
RUN DATE: 14-NOV-07

	CSI	-Size-	----Lumber----
TC	0.49	2x 4	SP-#2
BC	0.39	2x 4	SP-#2

Brace truss as follows:

	O.C.	From	To
TC	Cont.	0- 0- 0	7- 0- 0
BC	Cont.	0- 0- 0	7- 0- 0

psf-Ld	Dead	Live
TC	7.0	20.0
BC	10.0	0.0
TC+BC	17.0	20.0

Total 37.0 Spacing 24.0"
Lumber Duration Factor 1.25
Plate Duration Factor 1.25
TC Fb=1.15 Fc=1.10 Ft=1.10
BC Fb=1.10 Fc=1.10 Ft=1.10

Total Load Reactions (Lbs)

Jt	Down	Uplift	Horiz-
A	415	128 U	237 R
C	129		
B	178	136 U	70 R

Jt	Brg Size	Required
A	8.0"	1.5"
C	3.5"	1.5"
B	3.5"	1.5"

Plus 7 Wind Load Case(s)
Plus 1 UBC LL Load Case(s)

Membr	CSI	P Lbs	Axl-CSI-Bnd
----------Top Chords----------			
A -B	0.49	134 C	0.00 0.49
--------Bottom Chords---------			
A -C	0.39	0 T	0.00 0.39

TL Defl -0.17" in A -C L/427
LL Defl -0.07" in A -C L/988
Shear // Grain in A -B 0.27

Plates for each ply each face.
Plate - MT20 20 Ga, Gross Area
Plate - MT2H 20 Ga, Gross Area

Jt	Type	Plt Size	X	Y	JSI
A	MT20	3.0x 5.0	Ctr	Ctr	0.53

For proper installation of toe-nails, refer to the 2001 National Design Specification (NDS) for Wood Construction
NOTES:
Trusses Manufactured by:
RIDGWAY ROOF TRUSS
Analysis Conforms To:
FBC2004
OH Loading
Soffit psf 2.0
Design checked for 10 psf non-concurrent LL on BC.
Wind Loads - ANSI / ASCE 7-02
Truss is designed as
Components and Claddings*
for Exterior zone location.
Wind Speed: 110 mph
Mean Roof Height: 25-0
Exposure Category: B
Occupancy Factor : 1.00
Building Type: Enclosed
TC Dead Load: 4.0 psf
BC Dead Load: 6.0 psf
Max comp. force 134 Lbs
Max tens. force 42 Lbs

Quality Control Factor 1.25
FABRICATOR NOTES:
1. Delegated Engineer (Truss Designer)
Gary Dounson, PE 35054
Gary Dounson & Associates, Inc.
2830 NW 41st Street Suite D
Gainesville, FL 32606
(352)375-8593
CA 5201

Job	Mark	Quan	Type	Span	P1-H1	Left OH	Right OH	*Engineering*
070791	*R2A*	1	JACK	70000	5	0	0	

Hornsby Shop, Roof, Magura

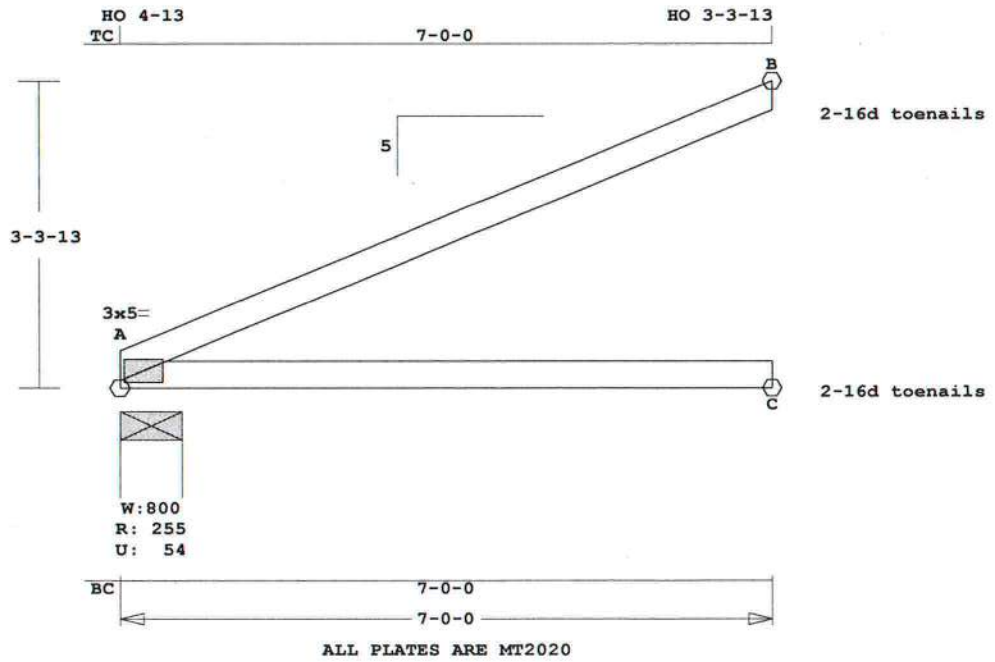

Scale: 0.500" = 1'

Robbins Engineering, Inc./Online Plus™ APPROX. TRUSS WEIGHT: 27.8 LBS

Online Plus -- Version 21.0.059
RUN DATE: 14-NOV-07

	CSI	-Size-	----Lumber----
TC	0.49	2x 4	SP-#2
BC	0.39	2x 4	SP-#2

Brace truss as follows:

	O.C.	From	To
TC	Cont.	0- 0- 0	7- 0- 0
BC	Cont.	0- 0- 0	7- 0- 0

psf-Ld	Dead	Live
TC	7.0	20.0
BC	10.0	0.0
TC+BC	17.0	20.0
Total	37.0	Spacing 24.0"

Lumber Duration Factor 1.25
Plate Duration Factor 1.25
TC Fb=1.15 Fc=1.10 Ft=1.10
BC Fb=1.10 Fc=1.10 Ft=1.10

Total Load Reactions (Lbs)

Jt	Down	Uplift	Horiz-
A	255	54 U	237 R
C	129		
B	178	136 U	70 R

Jt	Brg Size	Required
A	8.0"	1.5"
C	3.5"	1.5"
B	3.5"	1.5"

Plus 7 Wind Load Case(s)
Plus 1 UBC LL Load Case(s)

Membr	CSI	P Lbs	Axl-CSI-Bnd
----------Top Chords----------			
A -B	0.49	134 C	0.00 0.49
--------Bottom Chords---------			
A -C	0.39	0 T	0.00 0.39

TL Defl -0.17" in A -C L/427
LL Defl -0.07" in A -C L/988
Shear // Grain in A -B 0.27

Plates for each ply each face.
Plate - MT20 20 Ga, Gross Area
Plate - MT2H 20 Ga, Gross Area

Jt	Type	Plt Size	X	Y	JSI
A	MT20	3.0x 5.0	Ctr	Ctr	0.53

For proper installation of toe-nails, refer to the 2001 National Design Specification (NDS) for Wood Construction
NOTES:
Trusses Manufactured by:
RIDGWAY ROOF TRUSS
Analysis Conforms To:
FBC2004
Design checked for 10 psf non-concurrent LL on BC.
Wind Loads - ANSI / ASCE 7-02
Truss is designed as
Components and Claddings*
for Exterior zone location.
Wind Speed: 110 mph
Mean Roof Height: 25-0
Exposure Category: B
Occupancy Factor : 1.00
Building Type: Enclosed
TC Dead Load: 4.0 psf
BC Dead Load: 6.0 psf
Max comp. force 134 Lbs
Max tens. force 42 Lbs
Quality Control Factor 1.25
FABRICATOR NOTES:

1. Delegated Engineer (Truss Designer)
Gary Dounson, PE 35054
Gary Dounson & Associates, Inc.
2830 NW 41st Street Suite D
Gainesville, FL 32606
(352)375-8593
CA 5201

Job	Mark	Quan	Type	Span	P1-H1	Left OH	Right OH	*Engineering*
070791	*R3*	3	KING	91013	3.536	3-10-14	0	

Hornsby Shop, Roof, Magura

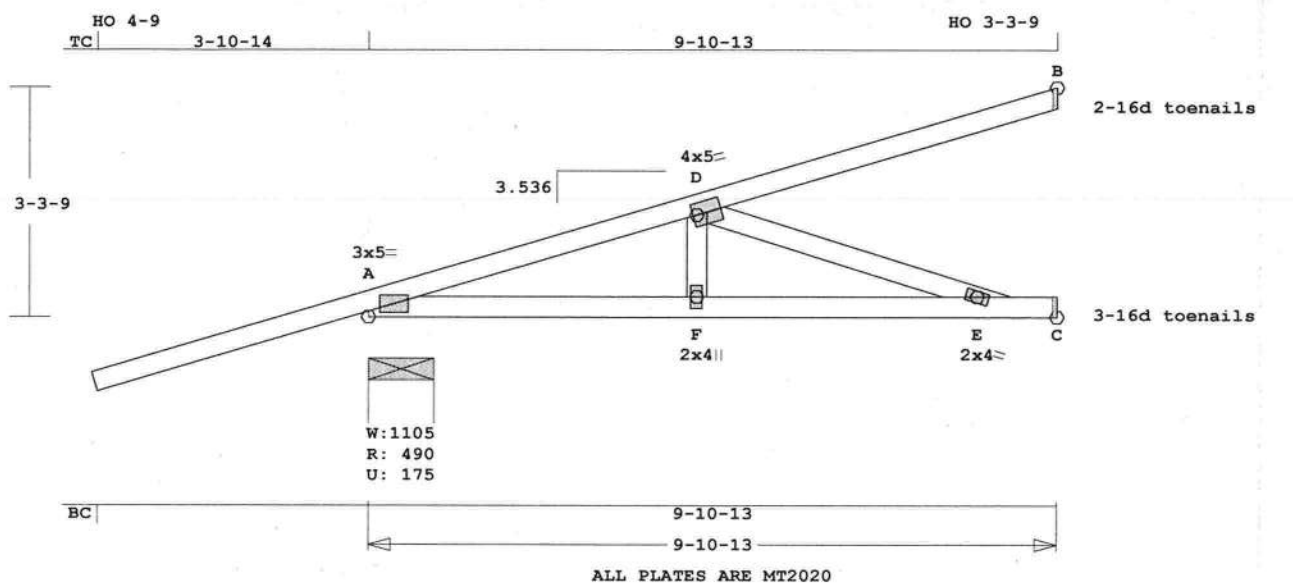

Robbins Engineering, Inc./Online Plus™ APPROX. TRUSS WEIGHT: 56.9 LBS

Online Plus -- Version 21.0.059
RUN DATE: 14-NOV-07

	CSI	-Size-	----Lumber----
TC	0.44	2x 4	SP-#2
BC	0.46	2x 4	SP-#2
WB	0.26	2x 4	SP-#3

Brace truss as follows:

	O.C.	From	To
TC	Cont.	0- 0- 0	9-10-13
BC	Cont.	0- 0- 0	9-10-13

psf-Ld	Dead	Live
TC	7.0	20.0
BC	10.0	0.0
TC+BC	17.0	20.0

Total 37.0 Spacing 24.0"
Lumber Duration Factor 1.25
Plate Duration Factor 1.25
TC Fb=1.00 Fc=1.00 Ft=1.00
BC Fb=1.00 Fc=1.00 Ft=1.00

Total Load Reactions (Lbs)

Jt	Down	Uplift	Horiz-
A	491	175 U	216 R
C	315	34 U	75 R
B	237	174 U	

Jt	Brg Size	Required
A	11.3"	1.5"
C	3.5"	1.5"
B	3.5"	1.5"

LC# 1 Girder Loading
Dur Fctrs - Lbr 1.25 Plt 1.25

plf -	Dead	Live*	From	To
TC V	14	40	0.0'	9.9'
BC V	20	0	0.0'	9.9'
TC V	-14	-40	0.0'	
	16	45		9.9'
BC V	-20	0	0.0'	
	22	0		9.9'

Plus 8 Wind Load Case(s)
Plus 1 UBC LL Load Case(s)

Membr	CSI	P Lbs	Axl-CSI-Bnd	
----------Top Chords----------				
A -D	0.33	726 C	0.04	0.29
D -B	0.44	108 C	0.00	0.44
--------Bottom Chords---------				
A -F	0.26	706 T	0.07	0.19
F -E	0.46	706 T	0.13	0.33
E -C	0.30	74 T	0.00	0.30
----------Webs----------				
F -D	0.06	261 T		
D -E	0.26	743 C		

TL Defl -0.12" in F -E L/838
LL Defl -0.06" in F -E L/999
Shear // Grain in E -C 0.36

Plates for each ply each face.
Plate - MT20 20 Ga, Gross Area
Plate - MT2H 20 Ga, Gross Area

Jt	Type	Plt Size	X	Y	JSI
A	MT20	3.0x 5.0	Ctr	Ctr	0.62
D	MT20	4.0x 5.0	Ctr	Ctr	0.63
F	MT20	2.0x 4.0	Ctr	Ctr	0.38
E	MT20	2.0x 4.0	Ctr	Ctr	0.46

For proper installation of toe-nails, refer to the 2001 National Design Specification (NDS) for Wood Construction
NOTES:
Trusses Manufactured by:
RIDGWAY ROOF TRUSS
Analysis Conforms To:
FBC2004
Girder King Jack
Loading TC and BC
Setback 7- 0- 0
OH Loading
Soffit psf 2.0
Excessive Left OH condition.
Max allowable length is 2-11-10. Support end or provide level return.
Design checked for 10 psf non-concurrent LL on BC.
Use properly rated hangers for loads framing into girder truss.
Wind Loads - ANSI / ASCE 7-02
Truss is designed as Components and Claddings* for Exterior zone location.
Wind Speed: 110 mph
Mean Roof Height: 25-0
Exposure Category: B
Occupancy Factor : 1.00
Building Type: Enclosed
TC Dead Load: 4.0 psf
BC Dead Load: 6.0 psf
Max comp. force 743 Lbs
Max tens. force 706 Lbs
Quality Control Factor 1.25
FABRICATOR NOTES:

1. Delegated Engineer (Truss Designer)
   Gary Dounson, PE 35054
   Gary Dounson & Associates, Inc.
   2830 NW 41st Street Suite D
   Gainesville, FL 32606
   (352)375-8593
   CA 5201

Job	Mark	Quan	Type	Span	P1-H1	Left OH	Right OH	Engineering
070791	R4	6	JACK1	1111	5	2- 9- 2	0	

Hornsby Shop, Roof, Magura

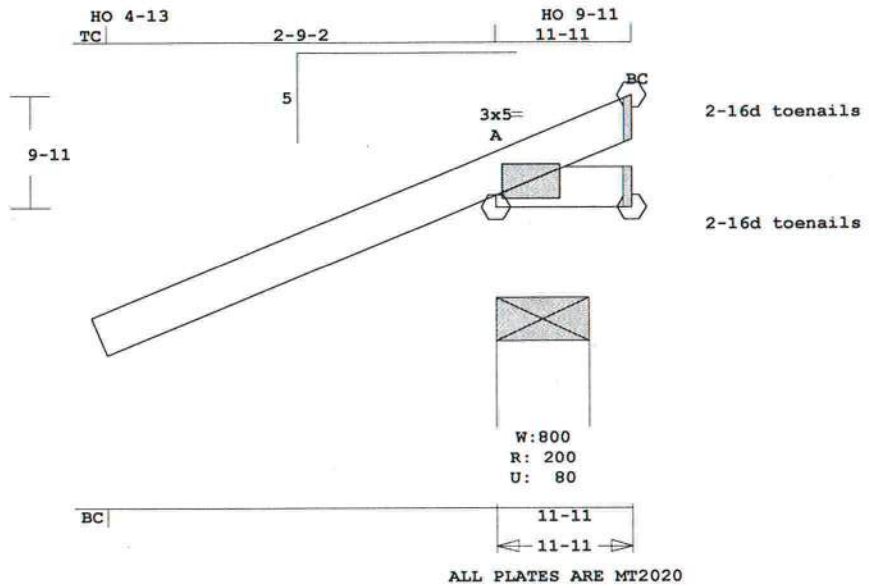

Scale: 0.750" = 1'

Robbins Engineering, Inc./Online Plus™ APPROX. TRUSS WEIGHT: 9.7 LBS

Online Plus -- Version 21.0.059
RUN DATE: 14-NOV-07

	CSI	-Size-	----Lumber----
TC	0.00	2x 4	SP-#2
BC	0.00	2x 4	SP-#2

Brace truss as follows:

	O.C.	From	To
TC	Cont.	0- 0- 0	0-11-11
BC	Cont.	0- 0- 0	0-11-11

psf-Ld	Dead	Live
TC	7.0	20.0
BC	10.0	0.0
TC+BC	17.0	20.0

Total 37.0 Spacing 24.0"
Lumber Duration Factor 1.25
Plate Duration Factor 1.25
TC Fb=1.15 Fc=1.10 Ft=1.10
BC Fb=1.10 Fc=1.10 Ft=1.10

Total Load Reactions (Lbs)

Jt	Down	Uplift	Horiz-
A	200	81 U	42 R
B	18	14 U	
C	13	1 U	9 R

Jt	Brg Size	Required
A	3.5"	1.5"
B	1.5"	1.5"
C	1.5"	1.5"

Plus 7 Wind Load Case(s)
Plus 1 UBC LL Load Case(s)

Membr	CSI	P Lbs	Axl-CSI-Bnd
----------Top Chords----------			
A -B	0.00	16 C	
--------Bottom Chords---------			
A -C	0.00	8 T	

TL Defl 0.00" in A -E L/999
LL Defl 0.00" in A -E L/999
Shear // Grain in A -B 0.03

Plates for each ply each face.
Plate - MT20 20 Ga, Gross Area
Plate - MT2H 20 Ga, Gross Area

Jt	Type	Plt Size	X	Y	JSI
A	MT20	3.0x 5.0	Ctr	Ctr	0.49

For proper installation of toe-nails, refer to the 2001 National Design Specification (NDS) for Wood Construction
NOTES:
Trusses Manufactured by:
RIDGWAY ROOF TRUSS
Analysis Conforms To:
FBC2004
OH Loading
Soffit psf 2.0
Design checked for 10 psf non-concurrent LL on BC.
Wind Loads - ANSI / ASCE 7-02
Truss is designed as
Components and Claddings*
for Exterior zone location.
Wind Speed: 110 mph
Mean Roof Height: 25-0
Exposure Category: B
Occupancy Factor : 1.00
Building Type: Enclosed
TC Dead Load: 4.0 psf
BC Dead Load: 6.0 psf
Max comp. force 16 Lbs
Max tens. force 8 Lbs

Quality Control Factor 1.25
FABRICATOR NOTES:
1. Delegated Engineer (Truss Designer)
Gary Dounson, PE 35054
Gary Dounson & Associates, Inc.
2830 NW 41st Street Suite D
Gainesville, FL 32606
(352)375-8593
CA 5201

Job	Mark	Quan	Type	Span	P1-H1	Left OH	Right OH	*Engineering*
070791	*R5*	6	JACK1	21111	5	2- 9- 2	0	

Hornsby Shop, Roof, Magura

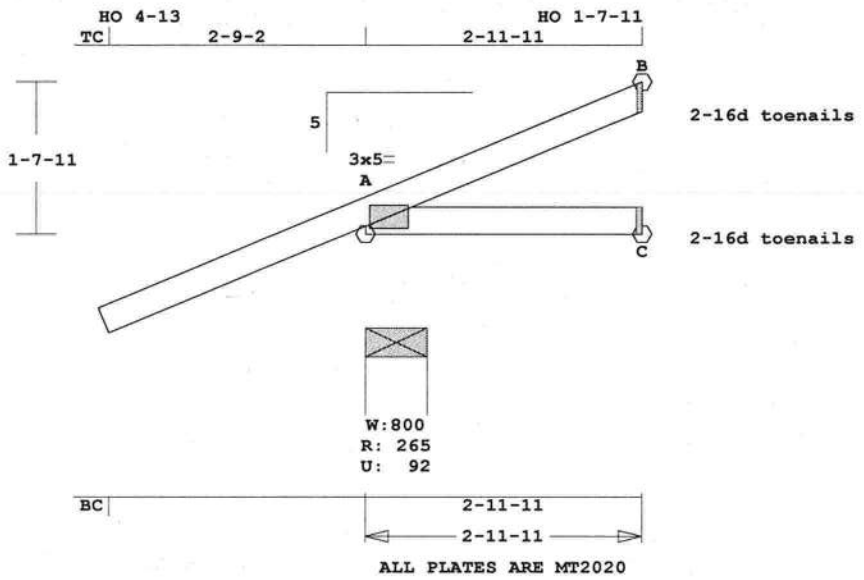

Scale: 0.500" = 1'

Robbins Engineering, Inc./Online Plus™ APPROX. TRUSS WEIGHT: 17.6 LBS

Online Plus -- Version 21.0.059
RUN DATE: 14-NOV-07

	CSI	-Size-	----Lumber----
TC	0.10	2x 4	SP-#2
BC	0.09	2x 4	SP-#2

Brace truss as follows:

	O.C.	From	To
TC	Cont.	0- 0- 0	2-11-11
BC	Cont.	0- 0- 0	2-11-11

psf-Ld	Dead	Live
TC	7.0	20.0
BC	10.0	0.0
TC+BC	17.0	20.0

Total 37.0 Spacing 24.0"
Lumber Duration Factor 1.25
Plate Duration Factor 1.25
TC Fb=1.15 Fc=1.10 Ft=1.10
BC Fb=1.10 Fc=1.10 Ft=1.10

Total Load Reactions (Lbs)

Jt	Down	Uplift	Horiz-
A	266	93 U	139 R
C	54		
B	79	62 U	30 R

Jt	Brg Size	Required
A	8.0"	1.5"
C	3.5"	1.5"
B	3.5"	1.5"

Plus 7 Wind Load Case(s)
Plus 1 UBC LL Load Case(s)

Membr	CSI	P Lbs	Axl-CSI-Bnd
----------Top Chords----------			
A -B	0.10	72 C	0.00 0.10
--------Bottom Chords---------			
A -C	0.09	0 T	0.00 0.09

TL Defl 0.00" in A -C L/999
LL Defl 0.00" in A -C L/999
Shear // Grain in A -B 0.13

Plates for each ply each face.
Plate - MT20 20 Ga, Gross Area
Plate - MT2H 20 Ga, Gross Area

Jt	Type	Plt Size	X	Y	JSI
A	MT20	3.0x 5.0	Ctr	Ctr	0.49

For proper installation of toe-nails, refer to the 2001 National Design Specification (NDS) for Wood Construction
NOTES:
Trusses Manufactured by:
RIDGWAY ROOF TRUSS
Analysis Conforms To:
FBC2004
OH Loading
Soffit psf 2.0
Design checked for 10 psf non-concurrent LL on BC.
Wind Loads - ANSI / ASCE 7-02
Truss is designed as
Components and Claddings*
for Exterior zone location.
Wind Speed: 110 mph
Mean Roof Height: 25-0
Exposure Category: B
Occupancy Factor : 1.00
Building Type: Enclosed
TC Dead Load: 4.0 psf
BC Dead Load: 6.0 psf
Max comp. force 72 Lbs
Max tens. force 17 Lbs

Quality Control Factor 1.25
FABRICATOR NOTES:
1. Delegated Engineer (Truss Designer)
Gary Dounson, PE 35054
Gary Dounson & Associates, Inc.
2830 NW 41st Street Suite D
Gainesville, FL 32606
(352)375-8593
CA 5201

Job	Mark	Quan	Type	Span	P1-H1	Left OH	Right OH	Engineering
070791	R6	6	JACK1	41111	5	2- 9- 2	0	

Hornsby Shop, Roof, Magura

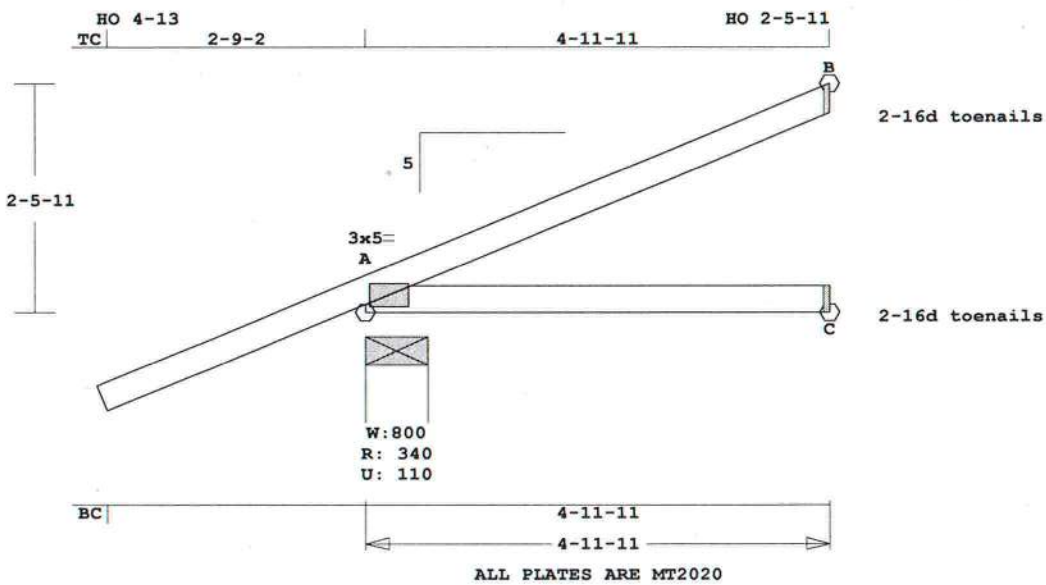

Scale: 0.500" = 1'

Robbins Engineering, Inc./Online Plus™ APPROX. TRUSS WEIGHT: 25.5 LBS

Online Plus -- Version 21.0.059
RUN DATE: 14-NOV-07

	CSI	-Size-	----Lumber----
TC	0.29	2x 4	SP-#2
BC	0.23	2x 4	SP-#2

Brace truss as follows:

	O.C.	From	To
TC	Cont.	0- 0- 0	4-11-11
BC	Cont.	0- 0- 0	4-11-11

psf-Ld	Dead	Live
TC	7.0	20.0
BC	10.0	0.0
TC+BC	17.0	20.0
Total	37.0	Spacing 24.0"

Lumber Duration Factor 1.25
Plate Duration Factor 1.25
TC Fb=1.15 Fc=1.10 Ft=1.10
BC Fb=1.10 Fc=1.10 Ft=1.10

Total Load Reactions (Lbs)

Jt	Down	Uplift	Horiz-
A	340	110 U	195 R
C	91		
B	128	99 U	50 R

Jt	Brg Size	Required
A	8.0"	1.5"
C	3.5"	1.5"
B	3.5"	1.5"

Plus 7 Wind Load Case(s)
Plus 1 UBC LL Load Case(s)

Membr	CSI	P Lbs	Axl-CSI-Bnd
----------Top Chords----------			
A -B	0.29	110 C	0.00 0.29
--------Bottom Chords---------			
A -C	0.23	0 T	0.00 0.23

TL Defl -0.04" in A -C L/999
LL Defl -0.02" in A -C L/999
Shear // Grain in A -B 0.21

Plates for each ply each face.
Plate - MT20 20 Ga, Gross Area
Plate - MT2H 20 Ga, Gross Area

Jt	Type	Plt Size	X	Y	JSI
A	MT20	3.0x 5.0	Ctr	Ctr	0.50

For proper installation of toe-nails, refer to the 2001 National Design Specification (NDS) for Wood Construction
NOTES:
Trusses Manufactured by:
RIDGWAY ROOF TRUSS
Analysis Conforms To:
FBC2004
OH Loading
Soffit psf 2.0
Design checked for 10 psf non-concurrent LL on BC.
Wind Loads - ANSI / ASCE 7-02
Truss is designed as
Components and Claddings*
for Exterior zone location.
Wind Speed: 110 mph
Mean Roof Height: 25-0
Exposure Category: B
Occupancy Factor : 1.00
Building Type: Enclosed
TC Dead Load: 4.0 psf
BC Dead Load: 6.0 psf
Max comp. force 110 Lbs
Max tens. force 30 Lbs

Quality Control Factor 1.25
FABRICATOR NOTES:
1. Delegated Engineer (Truss Designer)
Gary Dounson, PE 35054
Gary Dounson & Associates, Inc.
2830 NW 41st Street Suite D
Gainesville, FL 32606
(352)375-8593
CA 5201

Job	Mark	Quan	Type	Span	P1-H1	Left OH	Right OH	Engineering
070791	R7	1	HIPP	200400	5	0	2- 9- 2	

Hornsby Shop, Roof, Magura

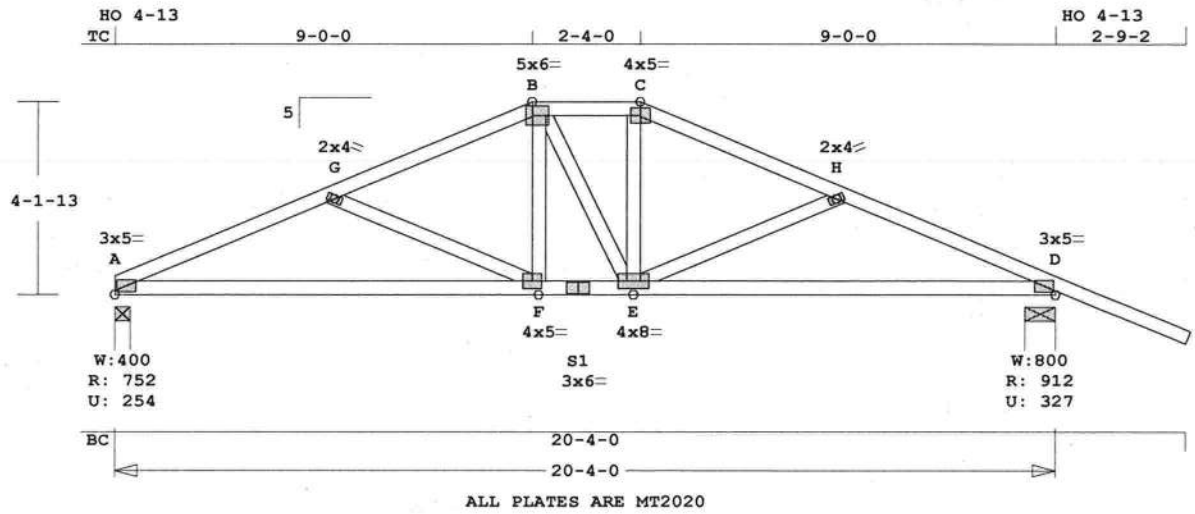

Scale: 0.250" = 1'

Robbins Engineering, Inc./Online Plus™ APPROX. TRUSS WEIGHT: 124.7 LBS

Online Plus -- Version 21.0.059
RUN DATE: 14-NOV-07

	CSI	-Size-	----Lumber----
TC	0.24	2x 4	SP-#2
BC	0.44	2x 4	SP-#2
WB	0.12	2x 4	SP-#3

Brace truss as follows:

	O.C.	From	To
TC	Cont.	0- 0- 0	20- 4- 0
BC	Cont.	0- 0- 0	20- 4- 0

psf-Ld	Dead	Live
TC	7.0	20.0
BC	10.0	0.0
TC+BC	17.0	20.0
Total	37.0	Spacing 24.0"

Lumber Duration Factor 1.25
Plate Duration Factor 1.25
TC Fb=1.15 Fc=1.10 Ft=1.10
BC Fb=1.10 Fc=1.10 Ft=1.10

Total Load Reactions (Lbs)

Jt	Down	Uplift	Horiz-
A	752	254 U	1 R
D	912	328 U	1 R

Jt	Brg Size	Required
A	4.0"	1.5"
D	8.0"	1.5"

Plus 9 Wind Load Case(s)
Plus 1 UBC LL Load Case(s)

Membr	CSI	P Lbs	Axl-CSI-Bnd	
----------Top Chords----------				
A -G	0.24	1373 C	0.10	0.14
G -B	0.24	1069 C	0.07	0.17
B -C	0.13	983 C	0.07	0.06
C -H	0.24	1068 C	0.07	0.17
H -D	0.24	1374 C	0.10	0.14
--------Bottom Chords---------				
A -F	0.44	1271 T	0.12	0.32
F -S1	0.42	978 T	0.10	0.32
S1-E	0.42	978 T	0.10	0.32
E -D	0.44	1272 T	0.12	0.32
----------Webs----------				
G -F	0.12	322 T		
F -B	0.07	263 T		
B -E	0.01	44 C		
E -C	0.07	257 T		
E -H	0.12	323 T		

TL Defl -0.25" in A -F L/914
LL Defl -0.12" in A -F L/999
Shear // Grain in A -F 0.19

Plates for each ply each face.
Plate - MT20 20 Ga, Gross Area
Plate - MT2H 20 Ga, Gross Area

Jt	Type	Plt Size	X	Y	JSI
A	MT20	3.0x 5.0	Ctr	Ctr	0.73
G	MT20	2.0x 4.0	Ctr	Ctr	0.38
B	MT20	5.0x 6.0	-0.5	Ctr	0.73
C	MT20	4.0x 5.0	Ctr	Ctr	0.86
H	MT20	2.0x 4.0	Ctr	Ctr	0.38
D	MT20	3.0x 5.0	Ctr	Ctr	0.73
F	MT20	4.0x 5.0	Ctr	Ctr	0.60
S1	MT20	3.0x 6.0	Ctr	Ctr	0.88
E	MT20	4.0x 8.0	Ctr	Ctr	0.57

NOTES:
Trusses Manufactured by:
RIDGWAY ROOF TRUSS
Analysis Conforms To:
FBC2004
OH Loading
Soffit psf 2.0
Design checked for 10 psf non-concurrent LL on BC.
Wind Loads - ANSI / ASCE 7-02
Truss is designed as

Components and Claddings*
for Exterior zone location.
Wind Speed: 110 mph
Mean Roof Height: 25-0
Exposure Category: B
Occupancy Factor : 1.00
Building Type: Enclosed
TC Dead Load: 4.0 psf
BC Dead Load: 6.0 psf
Max comp. force 1374 Lbs
Max tens. force 1272 Lbs
Quality Control Factor 1.25
FABRICATOR NOTES:
1. Delegated Engineer (Truss Designer)
Gary Dounson, PE 35054
Gary Dounson & Associates, Inc.
2830 NW 41st Street Suite D
Gainesville, FL 32606
(352)375-8593
CA 5201

Job	Mark	Quan	Type	Span	P1-H1	Left OH	Right OH	Engineering
070791	R8	4	TR	200400	5	0	2- 9- 2	

Hornsby Shop, Roof, Magura

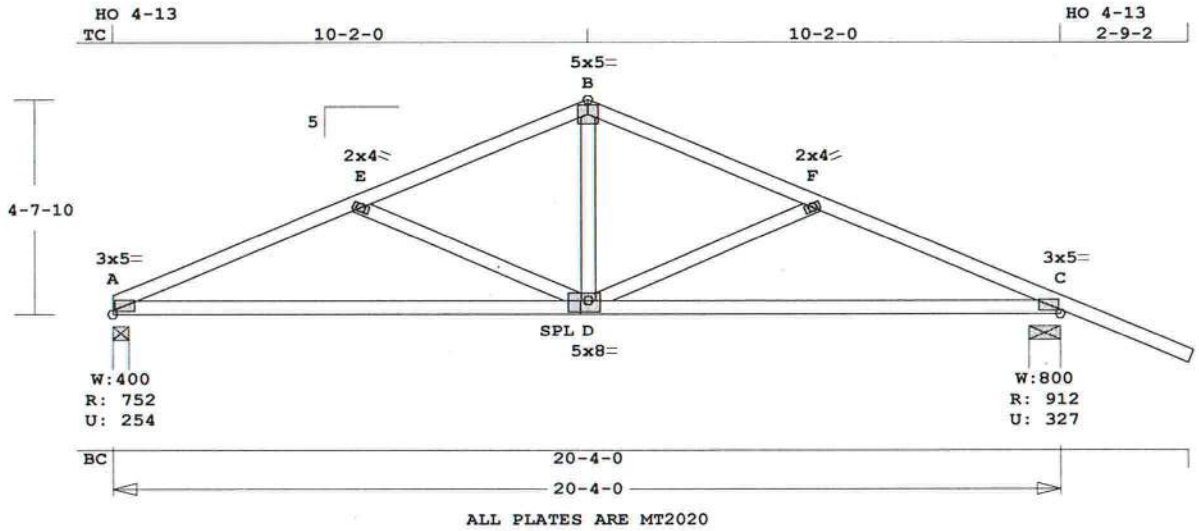

Scale: 0.250" = 1'

Robbins Engineering, Inc./Online Plus™ APPROX. TRUSS WEIGHT: 113.5 LBS

Online Plus -- Version 21.0.059
RUN DATE: 14-NOV-07

	CSI	-Size-	----Lumber----
TC	0.25	2x 4	SP-#2
BC	0.68	2x 4	SP-#2
WB	0.16	2x 4	SP-#3

Brace truss as follows:

	O.C.	From	To
TC	Cont.	0- 0- 0	20- 4- 0
BC	Cont.	0- 0- 0	20- 4- 0

psf-Ld	Dead	Live
TC	7.0	20.0
BC	10.0	0.0
TC+BC	17.0	20.0

Total 37.0 Spacing 24.0"
Lumber Duration Factor 1.25
Plate Duration Factor 1.25
TC Fb=1.15 Fc=1.10 Ft=1.10
BC Fb=1.10 Fc=1.10 Ft=1.10

Total Load Reactions (Lbs)

Jt	Down	Uplift	Horiz-
A	752	254 U	1 R
C	912	328 U	1 R

Jt	Brg Size	Required
A	4.0"	1.5"
C	8.0"	1.5"

Plus 7 Wind Load Case(s)
Plus 1 UBC LL Load Case(s)

Membr	CSI	P Lbs	Axl-CSI-Bnd	
----------Top Chords----------				
A -E	0.25	1345 C	0.10	0.15
E -B	0.25	995 C	0.07	0.18
B -F	0.25	995 C	0.07	0.18
F -C	0.25	1345 C	0.10	0.15
--------Bottom Chords---------				
A -D	0.68	1247 T	0.11	0.57
D -C	0.68	1247 T	0.11	0.57
----------Webs----------				
E -D	0.16	363 C		
D -B	0.16	542 T		
D -F	0.16	363 C		

TL Defl -0.29" in A -D L/792
LL Defl -0.14" in D -C L/999
Shear // Grain in A -D 0.22

Plates for each ply each face.
Plate - MT20 20 Ga, Gross Area
Plate - MT2H 20 Ga, Gross Area

Jt	Type	Plt Size	X	Y	JSI
A	MT20	3.0x 5.0	Ctr	Ctr	0.73
E	MT20	2.0x 4.0	Ctr	Ctr	0.38
B	MT20	5.0x 5.0	Ctr	Ctr	0.53
F	MT20	2.0x 4.0	Ctr	Ctr	0.38
C	MT20	3.0x 5.0	Ctr	Ctr	0.73
D	MT20	5.0x 8.0	1.0	-0.5	0.88

NOTES:
Trusses Manufactured by:
RIDGWAY ROOF TRUSS
Analysis Conforms To:
FBC2004
OH Loading
Soffit psf 2.0
Design checked for 10 psf non-concurrent LL on BC.
Wind Loads - ANSI / ASCE 7-02
Truss is designed as
Components and Claddings*
for Exterior zone location.
Wind Speed: 110 mph
Mean Roof Height: 25-0
Exposure Category: B
Occupancy Factor : 1.00
Building Type: Enclosed
TC Dead Load: 4.0 psf
BC Dead Load: 6.0 psf
Max comp. force 1345 Lbs
Max tens. force 1247 Lbs
Quality Control Factor 1.25
FABRICATOR NOTES:
1. Delegated Engineer (Truss Designer)
Gary Dounson, PE 35054
Gary Dounson & Associates, Inc.
2830 NW 41st Street Suite D
Gainesville, FL 32606
(352)375-8593
CA 5201

Job	Mark	Quan	Type	Span	P1-H1	Left OH	Right OH	*Engineering*
070791	*R9*	1	HHIP	200400	5	2- 9- 2	0	

Hornsby Shop, Roof, Magura

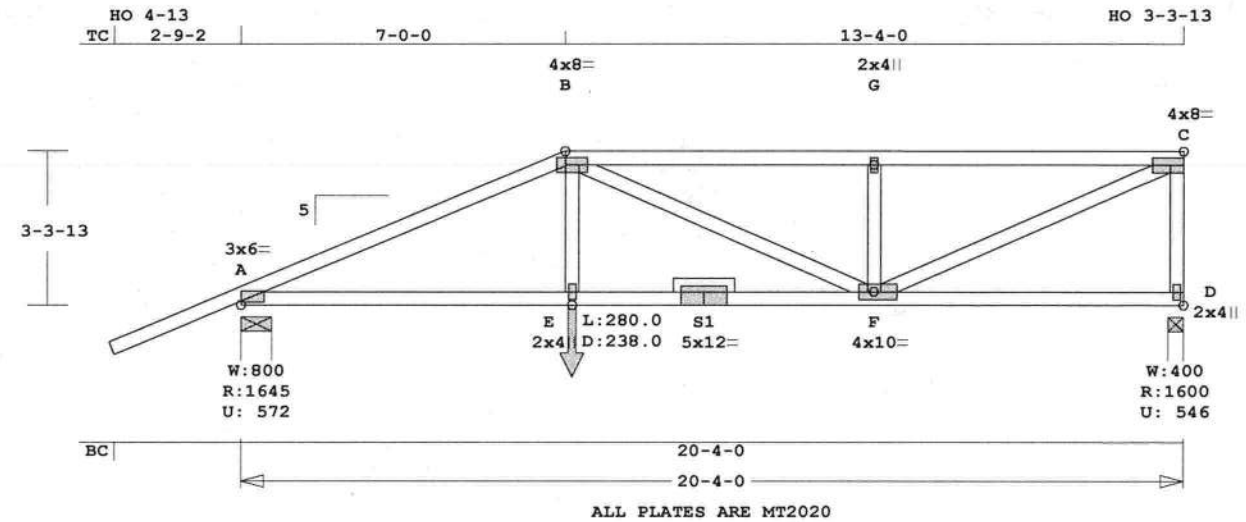

Scale: 0.250" = 1'

Robbins Engineering, Inc./Online Plus™ APPROX. TRUSS WEIGHT: 127.5 LBS

Online Plus -- Version 21.0.059
RUN DATE: 14-NOV-07

	CSI	-Size-	----Lumber----
TC	0.80	2x 4	SP-2400
--	0.55	2x 4	SP-#2
	A -B		
BC	0.79	2x 4	SP-#2
--	0.57	2x 4	SP-2400
	S1-D		
WB	0.99	2x 4	SP-#3
PB	---	2x 4	SP-#3

Brace truss as follows:

	O.C.	From	To
TC	Cont.	0- 0- 0	20- 4- 0
BC	Cont.	0- 0- 0	20- 4- 0

psf-Ld	Dead	Live
TC	7.0	20.0
BC	10.0	0.0
TC+BC	17.0	20.0

Total 37.0 Spacing 24.0"
Lumber Duration Factor 1.25
Plate Duration Factor 1.25
TC Fb=1.00 Fc=1.00 Ft=1.00
BC Fb=1.00 Fc=1.00 Ft=1.00

Total Load Reactions (Lbs)

Jt	Down	Uplift	Horiz-
A	1645	573 U	62 R
D	1600	547 U	123 R

Jt	Brg Size	Required
A	8.0"	1.9"
D	4.0"	1.5"

LC# 1 Girder Loading
Dur Fctrs - Lbr 1.25 Plt 1.25

plf -	Dead	Live*	From	To
TC V	14	40	0.0'	20.3'
BC V	20	0	0.0'	20.3'
TC V	18	50	7.0'	19.3'
TC V	-14	-40	19.3'	20.3'
BC V	25	0	7.1'	19.3'
BC V	-20	0	19.3'	20.3'
BC V	238	280	7.1'	CL-LB

Plus 9 Wind Load Case(s)
Plus 1 UBC LL Load Case(s)

Membr	CSI	P Lbs	Axl-CSI-Bnd		
----------Top Chords----------					
A -B	0.55	3107	C	0.07	0.48
B -G	0.80	2823	C	0.04	0.76
G -C	0.80	2823	C	0.04	0.76
--------Bottom Chords---------					
A -E	0.78	2869	T	0.52	0.26
E -S1	0.79	2840	T	0.52	0.27
S1-F	0.57	2840	T	0.13	0.44
F -D	0.44	96	T	0.00	0.44
----------Webs----------					
E -B	0.22	759	T		
B -F	0.05	118	T		
F -G	0.18	955	C		
F -C	0.99	3112	T		
D -C	0.30	1520	C	WindLd	

TL Defl -0.32" in E -F L/718
LL Defl -0.15" in E -F L/999
Shear // Grain in B -G 0.57

Plates for each ply each face.
Plate - MT20 20 Ga, Gross Area
Plate - MT2H 20 Ga, Gross Area

Jt	Type	Plt Size	X	Y	JSI
A	MT20	3.0x 6.0	Ctr	Ctr	0.86
B	MT20	4.0x 8.0	Ctr	Ctr	0.86
G	MT20	2.0x 4.0	Ctr	Ctr	0.38
C	MT20	4.0x 8.0-0.5	Ctr		0.97
E	MT20	2.0x 4.0	Ctr	Ctr	0.50
S1	MT20	5.0x12.0	Ctr	0.8	0.92
F	MT20	4.0x10.0	1.0	Ctr	0.98
D	MT20	2.0x 4.0	Ctr	Ctr	0.38

NOTES:
Trusses Manufactured by:
RIDGWAY ROOF TRUSS
Analysis Conforms To:
FBC2004
Girder Half Hip
Framing King Jacks
Jack Open Faced
Setback 7- 0- 0
OH Loading
Soffit psf 2.0
Design checked for 10 psf non-concurrent LL on BC.
Wind Loads - ANSI / ASCE 7-02
Truss is designed as
Components and Claddings*
for Exterior zone location.
Wind Speed: 110 mph
Mean Roof Height: 25-0
Exposure Category: B
Occupancy Factor : 1.00
Building Type: Enclosed
TC Dead Load: 4.0 psf
BC Dead Load: 6.0 psf
Max comp. force 3107 Lbs
Max tens. force 3112 Lbs
Quality Control Factor 1.25
FABRICATOR NOTES:

1. Delegated Engineer (Truss Designer)
   Gary Dounson, PE 35054
   Gary Dounson & Associates, Inc.
   2830 NW 41st Street Suite D
   Gainesville, FL 32606
   (352)375-8593
   CA 5201

Job	Mark	Quan	Type	Span	P1-H1	Left OH	Right OH	*Engineering*
070791	*R10*	1	HHIP	200400	5	2- 9- 2	0	

Hornsby Shop, Roof, Magura

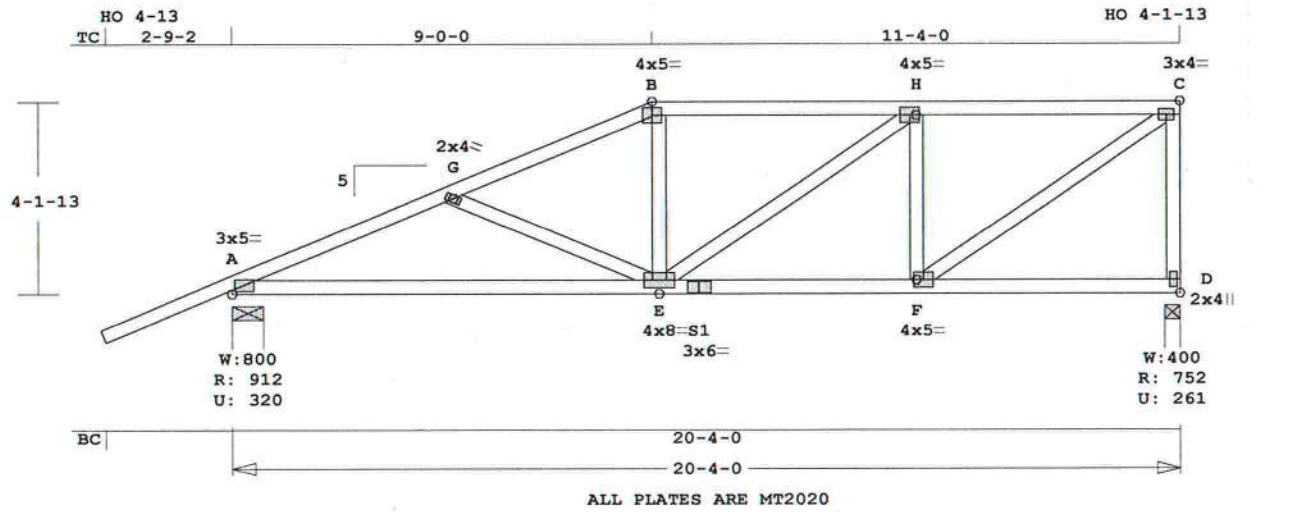

Scale: 0.250" = 1'

Robbins Engineering, Inc./Online Plus™ APPROX. TRUSS WEIGHT: 137.2 LBS

Online Plus -- Version 21.0.059
RUN DATE: 14-NOV-07

	CSI	-Size-	----Lumber----
TC	0.32	2x 4	SP-#2
BC	0.44	2x 4	SP-#2
WB	0.32	2x 4	SP-#3

Brace truss as follows:

	O.C.	From	To
TC	Cont.	0- 0- 0	20- 4- 0
BC	Cont.	0- 0- 0	20- 4- 0

psf-Ld	Dead	Live
TC	7.0	20.0
BC	10.0	0.0
TC+BC	17.0	20.0

Total 37.0 Spacing 24.0"
Lumber Duration Factor 1.25
Plate Duration Factor 1.25
TC Fb=1.15 Fc=1.10 Ft=1.10
BC Fb=1.10 Fc=1.10 Ft=1.10

Total Load Reactions (Lbs)

Jt	Down	Uplift	Horiz-
A	912	321 U	68 R
D	752	262 U	157 R

Jt	Brg Size	Required
A	8.0"	1.5"
D	4.0"	1.5"

Plus 9 Wind Load Case(s)
Plus 1 UBC LL Load Case(s)

Membr	CSI	P Lbs	Axl-CSI-Bnd	
----------Top Chords----------				
A -G	0.22	1371 C	0.09	0.13
G -B	0.23	1073 C	0.07	0.16
B -H	0.32	990 C	0.00	0.32
H -C	0.32	826 C	0.00	0.32
--------Bottom Chords---------				
A -E	0.44	1269 T	0.12	0.32
E -S1	0.40	826 T	0.08	0.32
S1-F	0.23	826 T	0.08	0.15
F -D	0.17	122 T	0.00	0.17
----------Webs----------				
G -E	0.11	318 T		
E -B	0.06	248 T		
E -H	0.08	199 T		
F -H	0.11	468 C		
F -C	0.32	1008 T		
D -C	0.17	702 C WindLd		

TL Defl -0.25" in A -E L/926
LL Defl -0.12" in A -E L/999
Shear // Grain in H -C 0.23

Plates for each ply each face.
Plate - MT20 20 Ga, Gross Area
Plate - MT2H 20 Ga, Gross Area

Jt	Type	Plt Size	X	Y	JSI
A	MT20	3.0x 5.0	Ctr	Ctr	0.73
G	MT20	2.0x 4.0	Ctr	Ctr	0.38
B	MT20	4.0x 5.0	Ctr	Ctr	0.86
H	MT20	4.0x 5.0	Ctr	Ctr	0.60
C	MT20	3.0x 4.0	Ctr	Ctr	0.69
E	MT20	4.0x 8.0	Ctr	Ctr	0.57
S1	MT20	3.0x 6.0	Ctr	Ctr	0.88
F	MT20	4.0x 5.0	Ctr	Ctr	0.60
D	MT20	2.0x 4.0	Ctr	Ctr	0.38

NOTES:
Trusses Manufactured by:
RIDGWAY ROOF TRUSS
Analysis Conforms To:
FBC2004
OH Loading
Soffit psf 2.0
Design checked for 10 psf non-concurrent LL on BC.
Wind Loads - ANSI / ASCE 7-02
Truss is designed as
Components and Claddings*
for Exterior zone location.

Wind Speed: 110 mph
Mean Roof Height: 25-0
Exposure Category: B
Occupancy Factor : 1.00
Building Type: Enclosed
TC Dead Load: 4.0 psf
BC Dead Load: 6.0 psf
Max comp. force 1371 Lbs
Max tens. force 1269 Lbs
Quality Control Factor 1.25
FABRICATOR NOTES:
1. Delegated Engineer (Truss Designer)
Gary Dounson, PE 35054
Gary Dounson & Associates, Inc.
2830 NW 41st Street Suite D
Gainesville, FL 32606
(352)375-8593
CA 5201

Job	Mark	Quan	Type	Span	P1-H1	Left OH	Right OH	*Engineering*
070791	*R11*	4	HHIP	200400	5	2- 9- 2	0	

Hornsby Shop, Roof, Magura

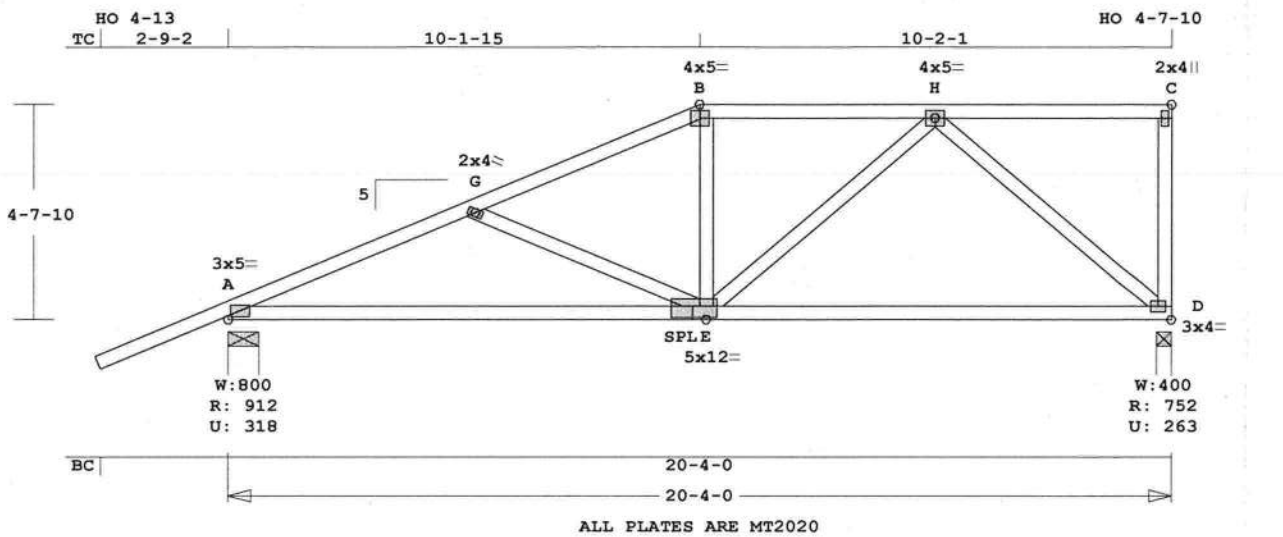

Scale: 0.250" = 1'

Robbins Engineering, Inc./Online Plus™ APPROX. TRUSS WEIGHT: 133.5 LBS

Online Plus -- Version 21.0.059
RUN DATE: 14-NOV-07

	CSI	-Size-	----Lumber----
TC	0.26	2x 4	SP-#2
BC	0.79	2x 4	SP-#2
WB	0.53	2x 4	SP-#3

Brace truss as follows:

	O.C.	From	To
TC	Cont.	0- 0- 0	20- 4- 0
BC	Cont.	0- 0- 0	20- 4- 0

psf-Ld	Dead	Live
TC	7.0	20.0
BC	10.0	0.0
TC+BC	17.0	20.0

Total 37.0 Spacing 24.0"
Lumber Duration Factor 1.25
Plate Duration Factor 1.25
TC Fb=1.15 Fc=1.10 Ft=1.10
BC Fb=1.10 Fc=1.10 Ft=1.10

Total Load Reactions (Lbs)

Jt	Down	Uplift	Horiz-
A	912	319 U	77 R
D	752	263 U	177 R

Jt	Brg Size	Required
A	8.0"	1.5"
D	4.0"	1.5"

Plus 9 Wind Load Case(s)
Plus 1 UBC LL Load Case(s)

Membr	CSI	P Lbs	Axl-CSI-Bnd	
----------Top Chords----------				
A -G	0.26	1349 C	0.09	0.17
G -B	0.26	995 C	0.06	0.20
B -H	0.26	915 C	0.00	0.26
H -C	0.26	88 T	0.00	0.26
--------Bottom Chords---------				
A -E	0.79	1250 T	0.11	0.68
E -D	0.73	636 T	0.05	0.68
----------Webs----------				
G -E	0.17	372 T		
E -B	0.06	241 T		
E -H	0.11	418 T		
H -D	0.53	847 C		
D -C	0.14	112 C WindLd		

TL Defl -0.50" in E -D L/467
LL Defl -0.24" in E -D L/948
Shear // Grain in E -D 0.26

Plates for each ply each face.
Plate - MT20 20 Ga, Gross Area
Plate - MT2H 20 Ga, Gross Area

Jt	Type	Plt Size	X	Y	JSI
A	MT20	3.0x 5.0	Ctr	Ctr	0.73
G	MT20	2.0x 4.0	Ctr	Ctr	0.37
B	MT20	4.0x 5.0	Ctr	Ctr	0.86
H	MT20	4.0x 5.0	Ctr	Ctr	0.48
C	MT20	2.0x 4.0	Ctr	Ctr	0.38
E	MT20	5.0x12.0	0.5	-0.5	0.88
D	MT20	3.0x 4.0	Ctr	Ctr	0.69

NOTES:
Trusses Manufactured by:
RIDGWAY ROOF TRUSS
Analysis Conforms To:
FBC2004
OH Loading
Soffit psf 2.0
Design checked for 10 psf non-concurrent LL on BC.
Wind Loads - ANSI / ASCE 7-02
Truss is designed as
Components and Claddings*
for Exterior zone location.
Wind Speed: 110 mph
Mean Roof Height: 25-0
Exposure Category: B

Occupancy Factor : 1.00
Building Type: Enclosed
TC Dead Load: 4.0 psf
BC Dead Load: 6.0 psf
Max comp. force 1349 Lbs
Max tens. force 1250 Lbs
Quality Control Factor 1.25
FABRICATOR NOTES:

1. Delegated Engineer (Truss Designer)
   Gary Dounson, PE 35054
   Gary Dounson & Associates, Inc.
   2830 NW 41st Street Suite D
   Gainesville, FL 32606
   (352)375-8593
   CA 5201

Job	Mark	Quan	Type	Span	P1-H1	Left OH	Right OH	*Engineering*
070791	*R12*	2	SCISSOR	150912	10	0	0	

Hornsby Shop, Roof, Magura

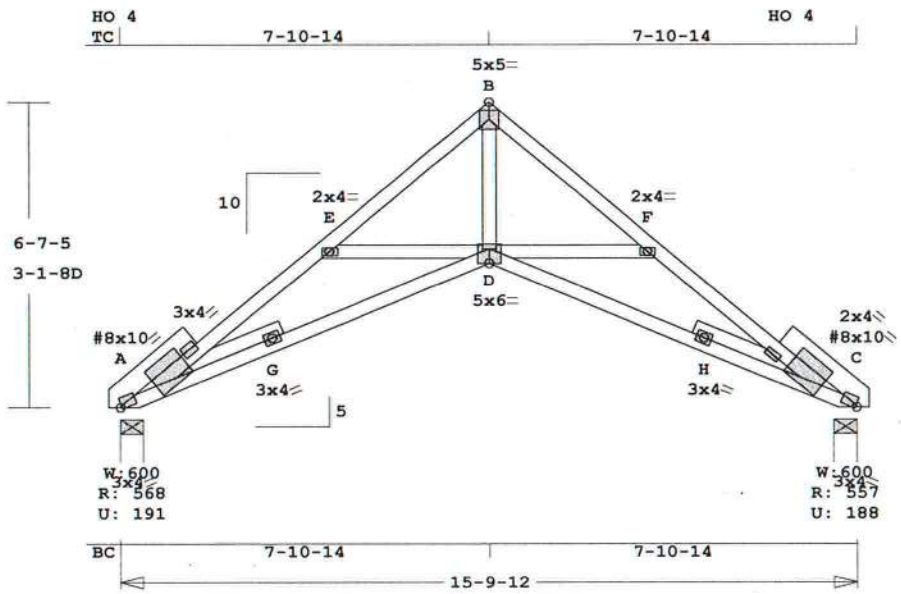

ALL PLATES ARE MT2020, # = PLATE SELECTED IN PLATE MONITOR

Scale: 0.250" = 1'

Robbins Engineering, Inc./Online Plus™ APPROX. TRUSS WEIGHT: 111.2 LBS

Online Plus -- Version 21.0.059
RUN DATE: 14-NOV-07

	CSI	-Size-	----Lumber----
TC	0.28	2x 4	SP-#2
BC	0.31	2x 4	SP-#2
WB	0.31	2x 4	SP-#3
SL	0.03	2x 4	SP-#3

Brace truss as follows:

	O.C.	From	To
TC	Cont.	0- 0- 0	15- 9-12
BC	Cont.	0- 0- 0	15- 9-12

psf-Ld	Dead	Live
TC	7.0	20.0
BC	10.0	0.0
TC+BC	17.0	20.0
Total	37.0	Spacing 24.0"

Lumber Duration Factor 1.25
Plate Duration Factor 1.25
TC Fb=1.15 Fc=1.10 Ft=1.10
BC Fb=1.10 Fc=1.10 Ft=1.10

Total Load Reactions (Lbs)

Jt	Down	Uplift	Horiz-
A	568	192 U	155 R
C	557	188 U	155 R

Jt	Brg Size	Required
A	6.0"	1.5"
C	6.0"	1.5"

Plus 9 Wind Load Case(s)
Plus 1 UBC LL Load Case(s)

Membr	CSI	P Lbs	Axl-CSI-Bnd	
----------Top Chords----------				
A -E	0.25	1235 C	0.00	0.25
E -B	0.12	903 C	0.00	0.12
B -F	0.14	905 C	0.00	0.14
F -C	0.28	1255 C	0.00	0.28
--------Bottom Chords---------				
A -G	0.24	1004 T	0.16	0.08
G -D	0.29	1077 T	0.18	0.11
D -H	0.31	1104 T	0.18	0.13
H -C	0.28	1063 T	0.17	0.11
----------Webs----------				
E -D	0.07	354 C		
D -B	0.31	969 T		
D -F	0.08	372 C		
----------Sliders----------				
A -G	0.03	130 T		
H -C	0.03	113 T		

TL Defl -0.14" in D -H L/999
LL Defl -0.06" in D -H L/999

Hz Disp	LL	DL	TL
Jt C	0.05"	0.05"	0.10"

Shear // Grain in F -H 0.15

Plates for each ply each face.
Plate - MT20 20 Ga, Gross Area
Plate - MT2H 20 Ga, Gross Area

Jt	Type	Plt Size	X	Y	JSI
A#	MT20	8.0x10.0	3.6	3.9	0.85
E	MT20	2.0x 4.0	Ctr	Ctr	0.38
B	MT20	5.0x 5.0	Ctr	Ctr	0.44
F	MT20	2.0x 4.0	Ctr	Ctr	0.38
C#	MT20	8.0x10.0	-3.4	3.7	0.90
C#	MT20	2.0x 4.0	Ctr	Ctr	0.00
G	MT20	3.0x 4.0	Ctr	Ctr	0.50
D	MT20	5.0x 6.0	Ctr	-1.3	0.51
H	MT20	3.0x 4.0	Ctr	Ctr	0.50

= Plate Monitor used

NOTES:
Trusses Manufactured by:
RIDGWAY ROOF TRUSS

Analysis Conforms To:
FBC2004
Design checked for 10 psf non-concurrent LL on BC.
NOTE: USER MODIFIED PLATES
This design may have plates selected through a plate monitor.
Wind Loads - ANSI / ASCE 7-02
Truss is designed as
Components and Claddings*
for Exterior zone location.
Wind Speed: 110 mph
Mean Roof Height: 25-0
Exposure Category: B
Occupancy Factor : 1.00
Building Type: Enclosed
TC Dead Load: 4.0 psf
BC Dead Load: 6.0 psf
Max comp. force 1255 Lbs
Max tens. force 1104 Lbs
Quality Control Factor 1.25
FABRICATOR NOTES:
1. Delegated Engineer (Truss Designer)
Gary Dounson, PE 35054
Gary Dounson & Associates, Inc.
2830 NW 41st Street Suite D
Gainesville, FL 32606
(352)375-8593
CA 5201

Job	Mark	Quan	Type	Span	P1-H1	Left OH	Right OH	*Engineering*
070791	*R13*	2	SCISSOR	160400	10	0	0	

Hornsby Shop, Roof, Magura

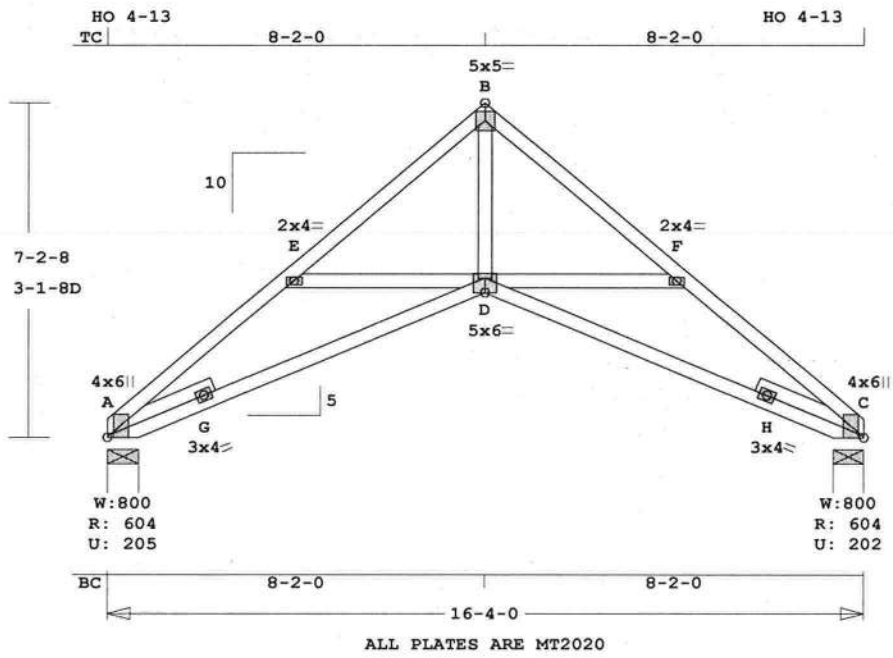

Scale: 0.250" = 1'

Robbins Engineering, Inc./Online Plus™ APPROX. TRUSS WEIGHT: 106.1 LBS

Online Plus -- Version 21.0.059
RUN DATE: 14-NOV-07

	CSI	-Size-	----Lumber----
TC	0.18	2x 4	SP-#2
BC	0.40	2x 4	SP-#2
WB	0.27	2x 4	SP-#3
SL	0.09	2x 4	SP-#3

Brace truss as follows:

	O.C.	From	To
TC	Cont.	0- 0- 0	16- 4- 0
BC	Cont.	0- 0- 0	16- 4- 0

psf-Ld	Dead	Live
TC	7.0	20.0
BC	10.0	0.0
TC+BC	17.0	20.0

Total 37.0 Spacing 24.0"
Lumber Duration Factor 1.25
Plate Duration Factor 1.25
TC Fb=1.15 Fc=1.10 Ft=1.10
BC Fb=1.10 Fc=1.10 Ft=1.10

Total Load Reactions (Lbs)

Jt	Down	Uplift	Horiz-
A	605	206 U	169 R
C	604	202 U	169 R

Jt	Brg Size	Required
A	8.0"	1.5"
C	8.0"	1.5"

Plus 9 Wind Load Case(s)
Plus 1 UBC LL Load Case(s)

Membr	CSI	P Lbs	Axl-CSI-Bnd	
----------Top Chords----------				
A -E	0.17	1158 C	0.05	0.12
E -B	0.13	858 C	0.02	0.11
B -F	0.14	857 C	0.00	0.14
F -C	0.18	1136 C	0.00	0.18
--------Bottom Chords---------				
A -G	0.22	666 T	0.11	0.11
G -D	0.26	959 T	0.15	0.11
D -H	0.40	927 T	0.07	0.33
H -C	0.33	752 C	0.00	0.33
----------Webs----------				
E -D	0.09	323 C		
D -B	0.27	848 T		
D -F	0.08	308 T		
----------Sliders----------				
A -G	0.09	358 T		
H -C	0.03	207 C		

TL Defl -0.16" in D -C L/999
LL Defl -0.08" in D -C L/999

Hz Disp	LL	DL	TL
Jt C	0.06"	0.04"	0.09"

Shear // Grain in C -C 0.32

Plates for each ply each face.
Plate - MT20 20 Ga, Gross Area
Plate - MT2H 20 Ga, Gross Area

Jt	Type	Plt Size	X	Y	JSI
A	MT20	4.0x 6.0	3.2	2.5	0.63
E	MT20	2.0x 4.0	Ctr	Ctr	0.38
B	MT20	5.0x 5.0	Ctr	Ctr	0.45
F	MT20	2.0x 4.0	Ctr	Ctr	0.38
C	MT20	4.0x 6.0-	3.2	2.5	0.63
G	MT20	3.0x 4.0	Ctr	Ctr	0.50
D	MT20	5.0x 6.0	Ctr-	1.3	0.52
H	MT20	3.0x 4.0	Ctr	Ctr	0.50

NOTES:
Trusses Manufactured by:
RIDGWAY ROOF TRUSS
Analysis Conforms To:
FBC2004

Design checked for 10 psf non-concurrent LL on BC.
Wind Loads - ANSI / ASCE 7-02
Truss is designed as
Components and Claddings*
for Exterior zone location.
Wind Speed: 110 mph
Mean Roof Height: 25-0
Exposure Category: B
Occupancy Factor : 1.00
Building Type: Enclosed
TC Dead Load: 4.0 psf
BC Dead Load: 6.0 psf
Max comp. force 1158 Lbs
Max tens. force 959 Lbs
Quality Control Factor 1.25
FABRICATOR NOTES:
1. Delegated Engineer (Truss Designer)
Gary Dounson, PE 35054
Gary Dounson & Associates, Inc.
2830 NW 41st Street Suite D
Gainesville, FL 32606
(352)375-8593
CA 5201

Job	Mark	Quan	Type	Span	P1-H1	Left OH	Right OH	Engineering
070791	R14	11	SP	160000	10	0	0	

Hornsby Shop, Roof, Magura

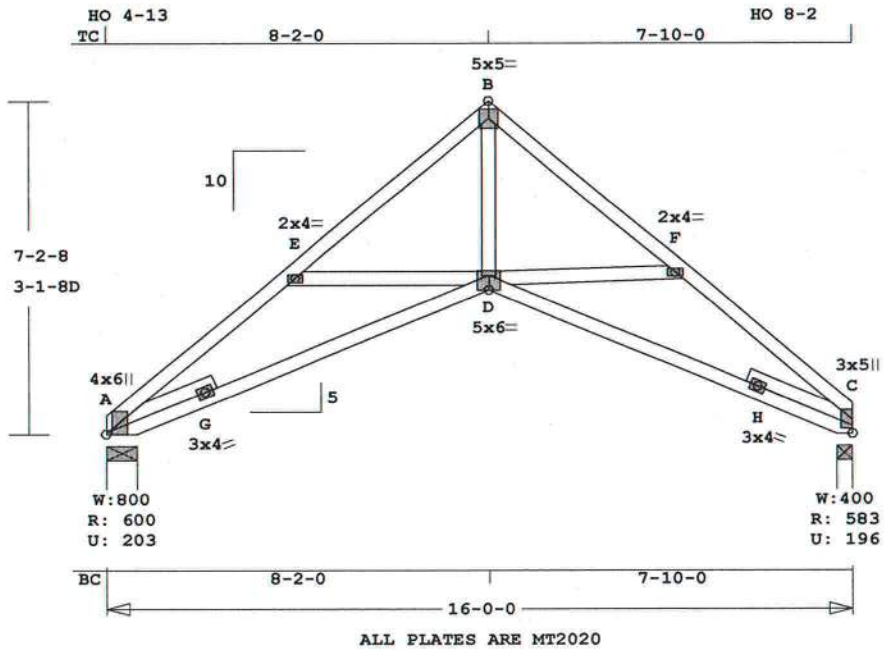

Scale: 0.250" = 1'

Robbins Engineering, Inc./Online Plus™ APPROX. TRUSS WEIGHT: 104.4 LBS

Online Plus -- Version 21.0.059
RUN DATE: 14-NOV-07

	CSI	-Size-	----Lumber----
TC	0.23	2x 4	SP-#2
BC	0.41	2x 4	SP-#2
WB	0.26	2x 4	SP-#3
SL	0.09	2x 4	SP-#3

Brace truss as follows:

	O.C.	From	To
TC	Cont.	0- 0- 0	16- 0- 0
BC	Cont.	0- 0- 0	16- 0- 0

psf-Ld	Dead	Live
TC	7.0	20.0
BC	10.0	0.0
TC+BC	17.0	20.0

Total 37.0 Spacing 24.0"
Lumber Duration Factor 1.25
Plate Duration Factor 1.25
TC Fb=1.15 Fc=1.10 Ft=1.10
BC Fb=1.10 Fc=1.10 Ft=1.10

Total Load Reactions (Lbs)

Jt	Down	Uplift	Horiz-
A	600	204 U	166 R
C	584	196 U	165 R

Jt	Brg Size	Required
A	8.0"	1.5"
C	4.0"	1.5"

Plus 9 Wind Load Case(s)
Plus 1 UBC LL Load Case(s)

Membr	CSI	P Lbs	Axl-CSI-Bnd	
----------Top Chords----------				
A -E	0.17	1147 C	0.05	0.12
E -B	0.14	845 C	0.02	0.12
B -F	0.13	841 C	0.00	0.13
F -C	0.23	1101 C	0.00	0.23
--------Bottom Chords---------				
A -G	0.22	658 T	0.11	0.11
G -D	0.26	950 T	0.15	0.11
D -H	0.41	892 T	0.14	0.27
----------Webs----------				
E -D	0.09	324 C		
D -B	0.26	833 T		
D -F	0.07	287 T		
----------Sliders----------				
A -G	0.09	359 T		
H -C	0.02	178 C		

TL Defl -0.14" in D -C L/999
LL Defl -0.07" in D -C L/999

Hz Disp	LL	DL	TL
Jt C	0.05"	0.03"	0.09"

Shear // Grain in D -C 0.16

Plates for each ply each face.
Plate - MT20 20 Ga, Gross Area
Plate - MT2H 20 Ga, Gross Area

Jt	Type	Plt Size	X	Y	JSI
A	MT20	4.0x 6.0	3.2	2.5	0.62
E	MT20	2.0x 4.0	Ctr	Ctr	0.38
B	MT20	5.0x 5.0	Ctr	Ctr	0.45
F	MT20	2.0x 4.0	Ctr	Ctr	0.38
C	MT20	3.0x 5.0	-1.5	1.0	0.82
G	MT20	3.0x 4.0	Ctr	Ctr	0.50
D	MT20	5.0x 6.0	Ctr	-1.3	0.52
H	MT20	3.0x 4.0	Ctr	Ctr	0.50

NOTES:
Trusses Manufactured by:
RIDGWAY ROOF TRUSS
Analysis Conforms To:
FBC2004
Design checked for 10 psf non-concurrent LL on BC.
Wind Loads - ANSI / ASCE 7-02
Truss is designed as
Components and Claddings*
for Exterior zone location.
Wind Speed: 110 mph
Mean Roof Height: 25-0
Exposure Category: B
Occupancy Factor : 1.00
Building Type: Enclosed
TC Dead Load: 4.0 psf
BC Dead Load: 6.0 psf
Max comp. force 1147 Lbs
Max tens. force 950 Lbs
Quality Control Factor 1.25
FABRICATOR NOTES:
1. Delegated Engineer (Truss Designer)
Gary Dounson, PE 35054
Gary Dounson & Associates, Inc.
2830 NW 41st Street Suite D
Gainesville, FL 32606
(352)375-8593
CA 5201

Job	Mark	Quan	Type	Span	P1-H1	Left OH	Right OH	*Engineering*
070791	*R15*	2	SCISSOR	150814	10	0	0	

Hornsby Shop, Roof, Magura

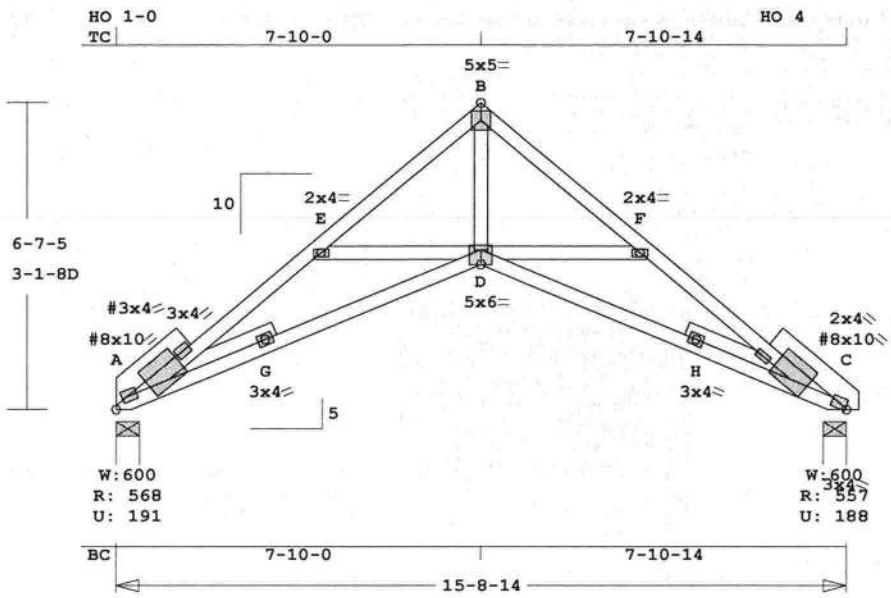

ALL PLATES ARE MT2020, # = PLATE SELECTED IN PLATE MONITOR

Scale: 0.250" = 1'

Robbins Engineering, Inc./Online Plus™ APPROX. TRUSS WEIGHT: 110.2 LBS

Online Plus -- Version 21.0.059
RUN DATE: 14-NOV-07

	CSI	-Size-	----Lumber----
TC	0.28	2x 4	SP-#2
BC	0.31	2x 4	SP-#2
WB	0.31	2x 4	SP-#3
SL	0.03	2x 4	SP-#3

Brace truss as follows:

	O.C.	From	To
TC	Cont.	0- 0- 0	15- 8-14
BC	Cont.	0- 0- 0	15- 8-14

psf-Ld	Dead	Live
TC	7.0	20.0
BC	10.0	0.0
TC+BC	17.0	20.0

Total 37.0 Spacing 24.0"
Lumber Duration Factor 1.25
Plate Duration Factor 1.25
TC Fb=1.15 Fc=1.10 Ft=1.10
BC Fb=1.10 Fc=1.10 Ft=1.10

Total Load Reactions (Lbs)

Jt	Down	Uplift	Horiz-
A	568	192 U	155 R
C	557	188 U	155 R

Jt	Brg Size	Required
A	6.0"	1.5"
C	6.0"	1.5"

Plus 9 Wind Load Case(s)
Plus 1 UBC LL Load Case(s)

Membr	CSI	P Lbs	Axl-CSI-Bnd	
----------Top Chords----------				
A -E	0.19	1235 C	0.00	0.19
E -B	0.12	903 C	0.00	0.12
B -F	0.14	905 C	0.00	0.14
F -C	0.28	1255 C	0.00	0.28
--------Bottom Chords---------				
A -G	0.24	1004 T	0.16	0.08
G -D	0.29	1077 T	0.18	0.11
D -H	0.31	1104 T	0.18	0.13
H -C	0.28	1063 T	0.17	0.11
----------Webs----------				
E -D	0.07	354 C		
D -B	0.31	969 T		
D -F	0.08	372 C		
----------Sliders----------				
A -G	0.03	130 T		
H -C	0.03	113 T		

TL Defl -0.14" in D -H L/999
LL Defl -0.06" in D -H L/999

Hz Disp	LL	DL	TL
Jt C	0.05"	0.05"	0.10"

Shear // Grain in F -H 0.15

Plates for each ply each face.
Plate - MT20 20 Ga, Gross Area
Plate - MT2H 20 Ga, Gross Area

Jt	Type	Plt Size	X	Y	JSI
A	MT20	8.0x10.0	3.8	4.1	0.80
E	MT20	2.0x 4.0	Ctr	Ctr	0.38
B	MT20	5.0x 5.0	Ctr	Ctr	0.44
F	MT20	2.0x 4.0	Ctr	Ctr	0.38
C#	MT20	8.0x10.0	-4.7	4.0	0.70
C#	MT20	2.0x 4.0	Ctr	Ctr	0.00
G	MT20	3.0x 4.0	Ctr	Ctr	0.50
D	MT20	5.0x 6.0	Ctr	-1.3	0.51
H	MT20	3.0x 4.0	Ctr	Ctr	0.50

= Plate Monitor used

NOTES:
Trusses Manufactured by:
RIDGWAY ROOF TRUSS

Analysis Conforms To:
FBC2004
Design checked for 10 psf non-concurrent LL on BC.
NOTE: USER MODIFIED PLATES
This design may have plates selected through a plate monitor.
Wind Loads - ANSI / ASCE 7-02
Truss is designed as Components and Claddings* for Exterior zone location.
Wind Speed: 110 mph
Mean Roof Height: 25-0
Exposure Category: B
Occupancy Factor : 1.00
Building Type: Enclosed
TC Dead Load: 4.0 psf
BC Dead Load: 6.0 psf
Max comp. force 1255 Lbs
Max tens. force 1104 Lbs
Quality Control Factor 1.25
FABRICATOR NOTES:

1. Delegated Engineer (Truss Designer)
   Gary Dounson, PE 35054
   Gary Dounson & Associates, Inc.
   2830 NW 41st Street Suite D
   Gainesville, FL 32606
   (352)375-8593
   CA 5201

BCSI-B1 SUMMARY SHEET 1 of 2

GENERAL NOTES

Trusses are not marked in any way to identify the frequency or location of temporary bracing. Follow the recommendations for handling, installing and temporary bracing of trusses. Refer to BCSI 1-03 Guide to Good Practice for Handling, Installing & Bracing of Metal Plate Connected Wood Trusses for more detailed information.

Truss Design Drawings may specify locations of permanent bracing on individual compression members. Refer to the BCSI-B3 Summary Sheet - Web Member Permanent Bracing/Web Reinforcement for more information. All other permanent bracing design is the responsibility of the Building Designer.

NOTAS GENERALES

Los trusses no están marcados de ningún modo que identifique la frecuencia o localización de los arriostres (bracing) temporales. Use las recomendaciones de manejo, instalación y arriostre temporal de los trusses. Vea el folleto BCSI 1-03 Guía de Buena Práctica para el Manejo, Instalación y Arriostre de los Trusses de Madera Connectados con Placas de Metalpara para mayor información.

Los dibujos de diseño de los trusses pueden especificar las localizaciones de los arriostres permanentes en los miembros individuales en compresión. Vea la hoja resúmen BCSI-B3 para los arriostres permanentes y refuerzos de los miembros secundarios (webs) para mayor información. El resto de arriostres permanentes son la responsabilidad del Diseñador del Edificio.

⚠ The consequences of improper handling, installing and bracing may be a collapse of the structure, or worse, serious personal injury or death.

El resultado de un manejo, instalación y arriostre inadecuados, puede ser la caída de la estructura o aun peor, muertos o heridos.

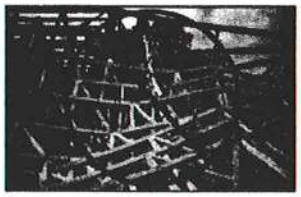

⚠ Banding and truss plates have sharp edges. Wear gloves when handling and safety glasses when cutting banding.

Empaques y placas de metal tienen bordes afilados. Use guantes y lentes protectores cuando corte los empaques.

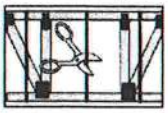

HANDLING — MANEJO

☑ Allow no more than 3" of deflection for every 10' of span.

No permita mas de 3 pulgadas de pandeo por cada 10 pies de tramo.

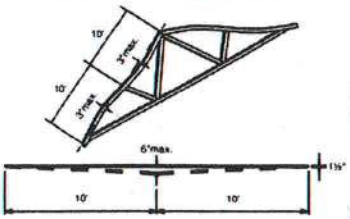

☑ Pick up vertical bundles at the top chord.

Levante de la cuerda superior los grupos verticales de trusses.

☑ Bundles stored on the ground for one week or more should be raised by blocking at 8' to 10' on center.

Los paquetes almacenados en la tierra por una semana o más deben ser elevados con bloques a cada 8 o 10 pies.

☑ For long term storage, cover bundles to prevent moisture gain but allow for ventilation.

Para almacen-amiento por mayor tiempo, cubra los paquetes para prevenir aumento de humedad pero permita ventilación.

⚠ Use special care in windy weather or near power lines and airports.

Utilice cuidado especial en días ventosos o cerca de cables eléctricos o de aeropuertos.

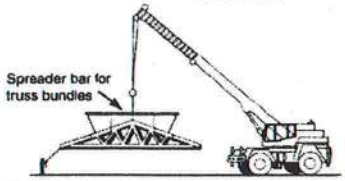

☑ Check banding prior to moving bundles.

Revise los empaques antes de mover los paquetes de trusses.

⚠ Avoid lateral bending. — Evite la flexión lateral.

⊘ Do not store unbraced bundles upright.

No almacene verticalmente los trusses sueltos.

⊘ Do not store on uneven ground.

No almacene en tierra desigual.

HAND ERECTION — LEVANTAMIENTO A MANO

☑ Trusses 20' or less, support at peak.

Levante del pico los trusses de 20 pies o menos.

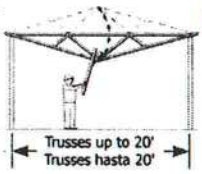

☑ Trusses 30' or less, support at quarter points.

Levante de los cuartos de tramo los trusses de 30 pies o menos.

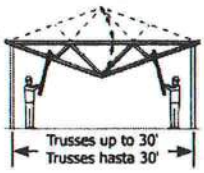

HOISTING — LEVANTAMIENTO

☑ Hold each truss in position with the erection equipment until temporary bracing is installed and truss is fastened to the bearing points.

Sostenga cada truss en posición con la grúa hasta que el arriostre temporal esté instalado y el truss asegurado en los soportes.

⊘ Do not lift trusses over 30' by the peak.

No levante del pico los trusses de más de 30 pies.

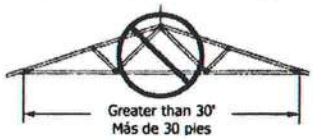

HOISTING RECOMMENDATIONS BY TRUSS SPAN

RECOMMENDACIONES DE LEVANTAMIENTO POR LONGITUD DEL TRUSS

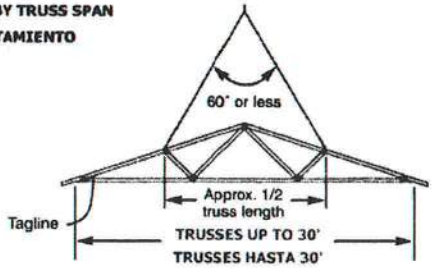

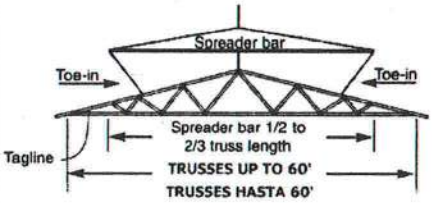

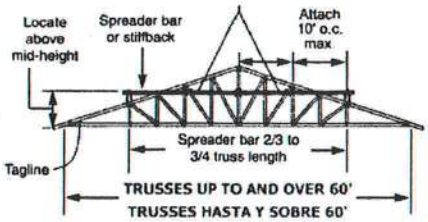

BRACING — ARRIOSTRE

⚠ Refer to BCSI-B2 Summary Sheet - Truss Installation and Temporary Bracing for more information.

Vea el resúmen BCSI-B2 - Instalación de Trusses y Arriostre Temporal para mayor información.

⊘ Do not walk on unbraced trusses.

No camine en trusses sueltos.

☑ Locate ground braces for first truss directly in line with all rows of top chord temporary lateral bracing.

Coloque los arriostres de tierra para el primer truss directamente en línea con cada una de las filas de arriostres laterales temporales de la cuerda superior.

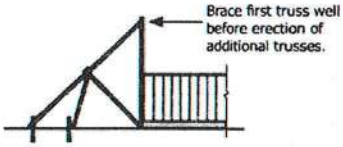

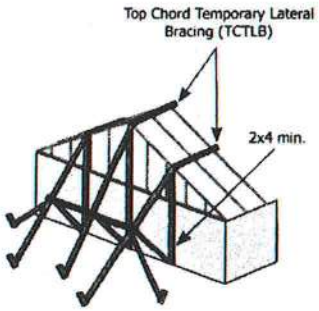

BCSI-B1 SUMMARY SHEET 2 of 2

BRACING FOR THREE PLANES OF ROOF
EL ARRIOSTRE EN TRES PLANOS DE TECHO

☑ This bracing method is for all trusses except 3x2 and 4x2 parallel chord trusses.
Este metodo de arriostre es para todo trusses excepto trusses de cuerdas paralelas 3x2 y 4x2

1) TOP CHORD — CUERDA SUPERIOR

Truss Span Longitud de Tramo	Top Chord Temporary Lateral Brace (TCTLB) Spacing Espaciamiento del Arriostre Temporal de la Cuerda Superior
Up to 30' Hasta 30 pies	10' o.c. max. 10 pies máximo
30' to 45' 30 a 45 pies	8' o.c. max. 8 pies máximo
45' to 60' 45 a 60 pies	6' o.c. max. 6 pies máximo
60' to 80'* 60 a 80 pies*	4' o.c. max. 4 pies máximo

*Consult a Professional Engineer for trusses longer than 60'.
*Consulte a un ingeniero para trusses de mas de 60 pies.

☑ See BCSI-B2 for TCTLB options.
Vea el BCSI-B2 para las opciones de TCTLB.

⚠ Refer to BCSI-B6 Summary Sheet - Gable End Frame Bracing.
Vea el resúmen BCSI-B6 - Arriostre del truss terminal de un techo a dos aguas.

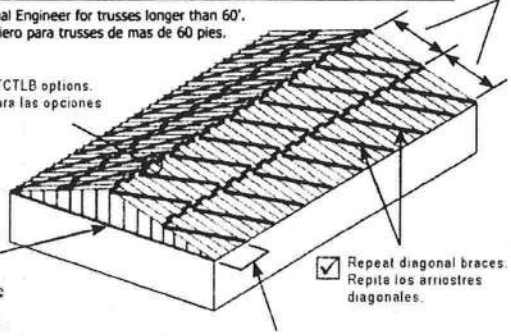

☑ Repeat diagonal braces.
Repita los arriostres diagonales.

☑ Set first five trusses with spacer pieces, then add diagonals. Repeat process on groups of four trusses until all trusses are set.

Instale los cinco primeros trusses con espaciadores, luego los arriostres diagonales. Repita este procedimiento en grupos de cuatro trusses hasta que todos los trusses esten instalados.

2) BOTTOM CHORD — CUERDA INFERIOR

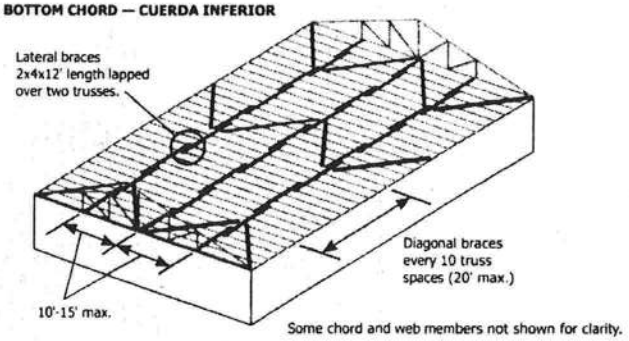

Some chord and web members not shown for clarity.

3) WEB MEMBER PLANE — PLANO DE LOS MIEMBROS SECUNDARIOS

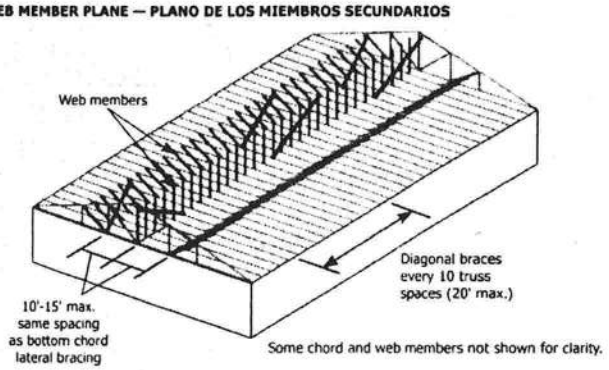

Some chord and web members not shown for clarity.

⚠ DIAGONAL BRACING IS VERY IMPORTANT
¡EL ARRIOSTRE DIAGONAL ES MUY IMPORTANTE! ⚠

BRACING FOR 3x2 AND 4x2 PARALLEL CHORD TRUSSES
EL ARRIOSTRE PARA TRUSSES DE CUERDAS PARALELAS 3x2 Y 4x2

⚠ Refer to BCSI-B7 Summary Sheet - Temporary and Permanent Bracing for Parallel Chord Trusses for more information.

Vea el resúmen BCSI-B7 - Arriostre temporal y permanente de trusses de cuerdas paralelas para mayor información.

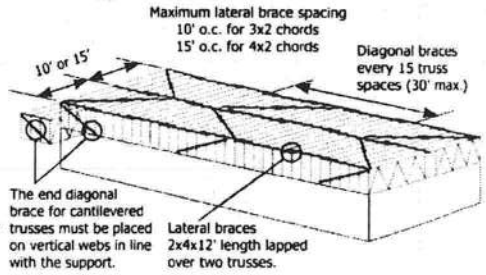

INSTALLING — INSTALACION

☑ Tolerances for Out-of_Plane. Tolerancias para Fuera-de-Plano.

Max. Bow	Truss Length
3/4"	12.5'
7/8"	14.6'
1"	16.7'
1-1/8"	18.8'
1-1/4"	20.8'
1-3/8"	22.9'
1-1/2"	25.0'
1-3/4"	29.2'
2"	≥33.3'

☑ Tolerances for Out-of-Plumb

Tolerances para Fuerta-de-Plomada.

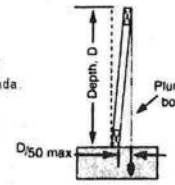

D/50	D (ft.)
1/4"	1'
1/2"	2'
3/4"	3'
1"	4'
1-1/4"	5'
1-1/2"	6'
1-3/4"	7'
2"	≥ 8'

CONSTRUCTION LOADING — CARGA DE CONSTRUCCION

⚠ Do not proceed with construction until all bracing is securely and properly in place.

No proceda con la construcción hasta que todos los arriostres estén colocados en forma apropiada y segura.

⊘ Do not exceed maximum stack heights. Refer to BCSI-B4 Summary Sheet - Construction Loading for more information.

No exceda las máximas alturas recomendadas. Vea el resúmen BCSI-B4 Carga de Construcción para mayor información.

Maximum Stack Height for Materials on Trusses

Material	Height (h)
Gypsum Board	12'
Plywood or OSB	16'
Asphalt Shingles	2 bundles
Concrete Block	8'
Clay Tile	3-4 tiles high

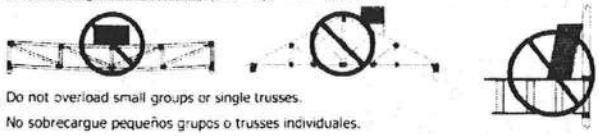

⊘ Do not overload small groups or single trusses.

No sobrecargue pequeños grupos o trusses individuales.

☑ Place loads over as many trusses as possible
Cologue las cargas sobre tantos trusses como sea posible.

☑ Position loads over load bearing walls.
Coloque las cargas sobre las paredes soportantes.

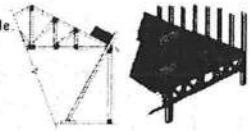

ALTERATIONS — ALTERACIONES

⚠ Refer to BCSI-B5 Summary Sheet - Truss Damage, Jobsite Modifications and Installation Errors.

Vea el resúmen BCSI-B5 Daños de trusses, Modificaciones en la Obra y Errores de Instalación.

⊘ Do not cut, alter, or drill any structural member of a truss unless specifically permitted by the Truss Design Drawing.

No corte, altere o perfore ningun miembro estructural de los trusses, a menos que esté especificamente permitido en el dibujo del diseño del truss.

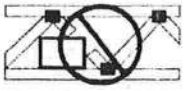

⚠ Trusses that have been overloaded during construction or altered without the Truss Manufacturer's prior approval may render the Truss Manufacturer's limited warranty null and void.

Trusses que se han sobrecargado durante la construcción o han sido alterados sin una autorización previa del Fabricante de Trusses, pueden reducir o eliminar la garantía del Fabricante de Trusses.

NOTE: The Truss Manufacturer and Truss Designer must rely on the fact that the Contractor and crane operator (if applicable) are capable to undertake the work they have agreed to do on a particular project. The Contractor should seek any required assistance regarding construction practices from a competent party. The methods and procedures outlined are intended to ensure that the overall construction techniques employed will put floor and roof trusses into place SAFELY. These recommendations for handling, installing and bracing wood trusses are based upon the collective experience of leading technical personnel in the wood truss industry, but must, due to the nature of responsibilities involved, be presented only as a GUIDE for use by a qualified Building Designer or Erection/Installation Contractor. It is not intended that these recommendations be interpreted as superior to any design specification (provided by either an Architect, Engineer, the Building Designer, the Erection/Installation Contractor or otherwise) for handling, installing and bracing wood trusses and it does not preclude the use of other equivalent methods for bracing and providing stability for the walls and columns as may be determined by the truss Erection/Installation Contractor. Thus, the Wood Truss Council of America and the Truss Plate Institute expressly disclaim any responsibility for damages arising from the use, application, or reliance on the recommendations and information contained herein.

WOOD TRUSS COUNCIL OF AMERICA
One WTCA Center • 6300 Enterprise Lane • Madison, WI 53719
608/274-4849 • www.woodtruss.com

TRUSS PLATE INSTITUTE
583 D'Onofrio Drive • Madison, WI 53719
608/833-5900 • www.tpinst.org

General detail for repair of broken webs that meet the following conditions.

* Web size and grade must be maximum 2x4, #3, standard, or stud grade of any species.
* Truss must be single ply.
* No more than one crack or break per web and no more than two broken or cracked webs per truss.

B = Maximum length of damaged area not to exceed 12".

M = Minimum length of scab at each end of break area to be 34".

S = Overall length of scab member (shaded) must be greater of:

S = 68" + B

S = 80% of original web length.

For all lumber, plates, web bracing, etc. refer to original drawing sealed by Robbins Engineering Inc.

1) Apply all nails so as to avoid damaging of lumber and loosening of plates at joints.
2) Attach 2x4 scab (shaded), minimum same size and grade as original web member, to one face of truss using 2 rows of 10d common nails 2" on center each row and staggered.

Truss manufacturer must be notified if field conditions do not match this general detail.

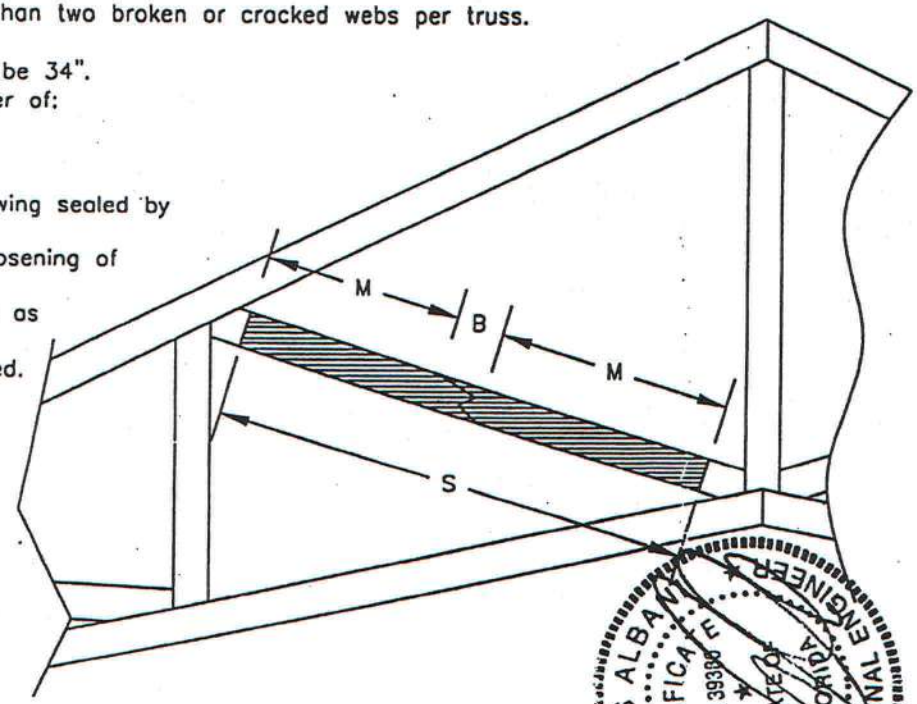

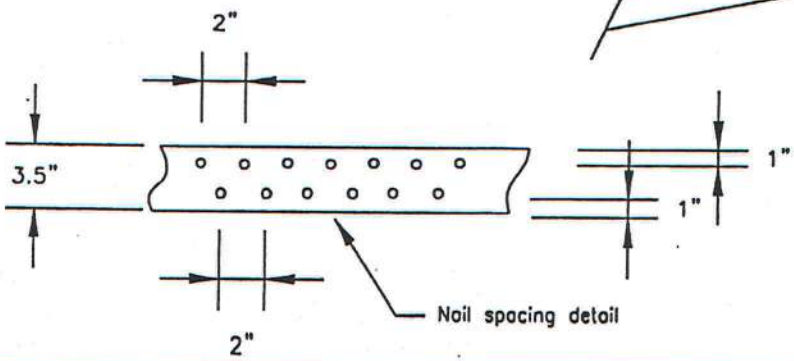

THOMAS ALBANESE CERTIFICATE No. 39380 STATE OF FLORIDA PROFESSIONAL ENGINEER

ROBBINS

Engineering Inc.

P.O.Box 280055, Tampa, FL 33682

ROBBINS LOCK connector plates (20 ga. galv. steel-ASTM A653 SS Grade 40) shall be applied on both faces of truss at each joint. Center the plates,unless shown otherwise by circles (o) or dimensions. Unless otherwise indicated by a "v", all plate in plates run parallel with the chords or horizontally at the peak and / or heel. No loose knots or waney in plate contact area. Splice only where shown. Overall spans assume 4" bearings at each end, unless indicated otherwise. Cutting and fabrications shall be performed on equipment which produces snug-fitting joints and plates. This design was prepared in accordance with "National Design Specifications for Stress-Grade lumber and its Fastenings" (AFPA), "Design Specifications for Light Metal Plate Connected Wood Trusses" (TPI), and HUD Design Criteria for Trussed Rafters.

Robbins Mfg. Co. bears no responsibility for the erection of trusses, field bracing or permanent truss bracing. Refer to HIB-91 as published by the Truss Plate Institute,583 D'Onofrio Drive,Suite 200, Madison, Wisconsin 53719. Persons erecting trusses are cautioned to seek professional advice concerning proper erection bracing to prevent toppling and "dominoing". Care should be taken to prevent damage during fabrication, storage, shipping and erection. Top and bottom chords shall be adequately braced in the absence of sheathing or rigid ceiling, respectively. It is the responsibility of others to ascertain that the design loads utilized on this drawing meet or exceed the actual dead loads imposed by the structure and the live loads imposed by the local building code or historical climatic records.

FURNISH A COPY OF THIS DESIGN TO ERECTION CONTRACTOR

IT IS THE RESPONSIBILITY OF THE BUILDING DESIGNER AND TRUSS FAB. TO REVIEW THIS DRWG. & VERIFY THAT DATA INCLUDING DIM. & LOADS CONFORM TO ARCH. PLAN/SPECS & FAB. TRUSS LAYOUTS.

Designed By: MG

Checked By: TAA

Date: 5/23/02

Dwg. No: GD-41

General detail for repair of broken chords and damaged or missing chord splices that meet the following conditions:

* Chord size must be maximum 2x6 and southern pine species.
* Scab must be the same size and grade as broken chord.
* Truss must be single ply.
* No more than two broken or cracked chords per truss.
* Perimeter of break area must be minimum of X distance from any heel or peak, and minimum of 6" away from any interior joint locations.

C = Maximum length of damaged area not to exceed 12".
S = Overall length of scab member (shaded) must be equal or greater than 2(X)+C.
X = Minimum length of scab member at each end of break area.
Refer to following table for minimum length of scab, and minimum number of nails at each end of break area and maximum axial force of broken member.
For all lumber, plates, web bracing, etc. refer to original drawing sealed by Robbins Engineering Inc.

1) Apply all nails so as to avoid damaging of lumber and loosening of plates at joints.
2) Use 2 rows of 10d common nails 3" on center each row and staggered into 2x4 members.
   Use 3 rows of 10d common nails 3" on center each row and staggered into 2x6 members.
   Use 6" spacing if scabs applied to each face of truss.
   Minimum end distance of 2" must be provided for all scab members.

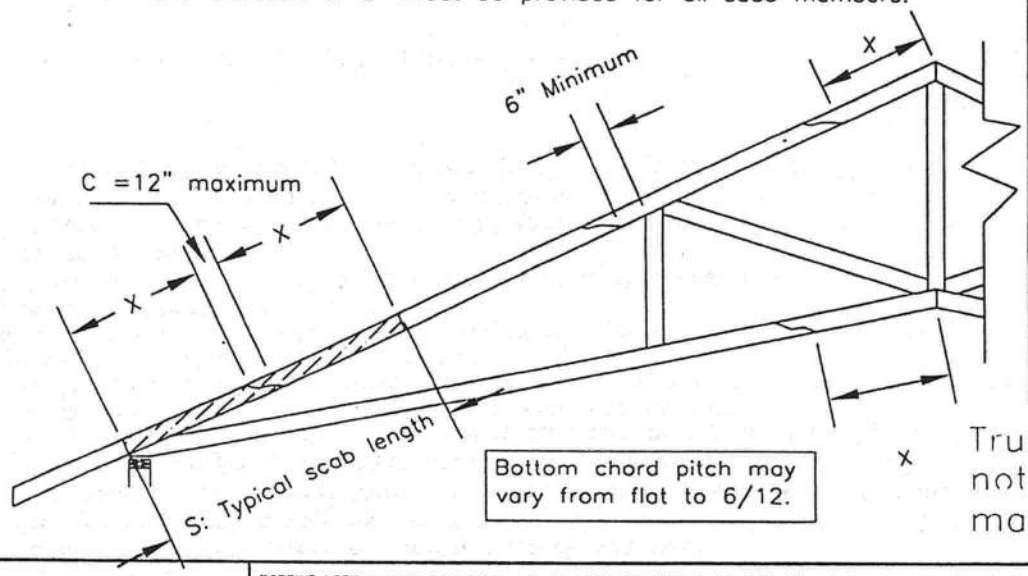

Bottom chord pitch may vary from flat to 6/12.

TOTAL NUMBER OF NAILS ON EACH SIDE OF BREAK		X (INCHES)	MAXIMUM FORCE (LBS.) AT 33% LOAD DURATION	
2X4 SYP	2X6 SYP		2X4 SYP	2X6 SYP
13	20	24"	1924	2886
17	26	30"	2501	3752
21	32	36"	3079	4618
25	38	42"	3656	5484
29	44	48"	4233	6349

Truss manufacturer must be notified if field conditions do not match this general detail.

THOMAS ALBANI CERTIFICATE No. 2938 STATE OF FLORIDA PROFESSIONAL ENGINEER

ROBBINS
Engineering Inc.
P.O.Box 280055, Tampa, FL 33682

ROBBINS LOCK connector plates (20 ga. galv. steel-ASTM A653 SS Grade 40) shall be applied on both faces of truss at each joint. Center the plates,unless shown otherwise by circles (o) or dimensions. Unless otherwise indicated by a "v", all slots in plates run parallel with the chords or horizontally at the peak and / or heel. No loose knots or wanes in plate contact area. Splice only where shown. Overall spans assume 4" bearings at each end, unless indicated otherwise. Cutting and fabrications shall be performed on equipment which produces snug-fitting joints and plates. This design was prepared in accordance with "National Design Specifications for Stress-Grade lumber and its Fastenings" (AFPA), "Design Specifications for Light Metal Plate Connected Wood Trusses" (TPI), and HUD Design Criteria for Trussed Rafters.

Robbins Mfg., Co. bears no responsibility for the erection of trusses, field bracing or permanent truss bracing. Refer to HIB-91 as published by the Truss Plate Institute,583 D'Onofrio Drive,Suite 200, Madison, Wisconsin 53719. Persons erecting trusses are cautioned to seek professional advice concerning proper erection bracing to prevent toppling and "dominoing". Care should be taken to prevent damage during fabrication, storage, shipping and erection. Top and bottom chords shall be adequately braced in the absence of sheathing or rigid ceiling, respectively. It is the responsibility of others to ascertain that the design loads utilized on this drawing meet or exceed the actual dead loads imposed by the structure and the live loads imposed by the local building code or historical climatic records.

FURNISH A COPY OF THIS DESIGN TO ERECTION CONTRACTOR
IT IS THE RESPONSIBILITY OF THE BUILDING DESIGNER AND TRUSS FAB. TO REVIEW THIS DRWG. & VERIFY THAT DATA INCLUDING DIM. & LOADS CONFORM TO ARCH. PLAN/SPECS & FAB. TRUSS LAYOUTS.

Designed By: MG
Checked By: TAA
Rev. Date: 12/01/03
Dwg. No: GD-62-33

General detail for repair of broken, damaged or cut chords of PC42 floor trusses that meet the following conditions.

* Chord size must be maximum 4x2 and southern pine species.
* Scab must be at minimum the same size and grade as broken chord. Wide face of scab must be attached to narrow face of chord member.
* Truss must be single ply.
* No more than two broken or cracked chords per truss.
* Perimeter of break area must be minimum of X distance from end of truss. and minimum of 4" away from any plates at panel points. All plates must be intact and fully embedded.

C = Maximum length of damaged area or cut section not to exceed 12".
S = Overall length of scab member must be equal or greater than 2(X)+C.
X = Minimum length of scab member at each end of break area.
Refer to following table for minimum length of scab, and minimum number of nails at each end of break area as maximum axial force of broken member.
For all lumber, plates, web bracing, etc. refer to original drawing sealed by Robbins Engineering Inc.

1) Apply all nails so as to avoid damaging of lumber and loosening of plates at joints.
2) Attach the scab with one row of 10d common nails at 3" on center into 4x2 chord members. Axial force and number of nails may be doubled or X distance divided by 2, if scabs applied to each face of truss at the same location. Minimum end distance of 3" must be provided for all members.

THOMAS ALBANI CERTIFICATE No. 39320 STATE OF FLORIDA PROFESSIONAL ENGINEER

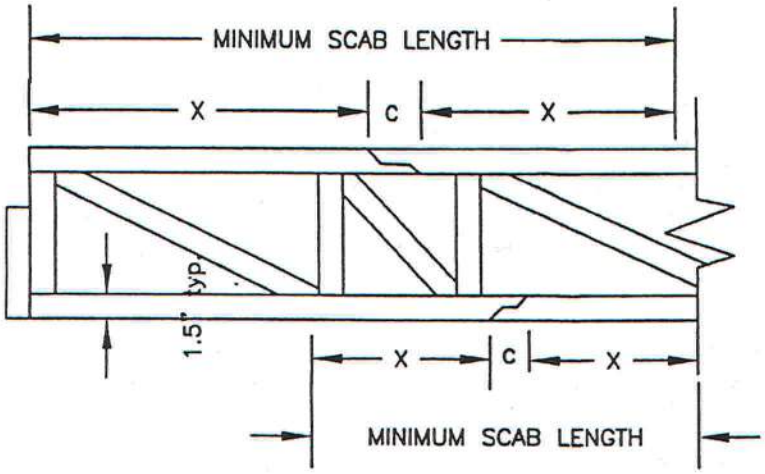

TOTAL NUMBER OF NAILS AT EACH END OF	X (INCHES)	MAXIMUM AXIAL FORCE IN CHORD MEMBER (LBS.)
3	16	384
6	24	768
8	30	1024
10	36	1280
12	42	1536
14	48	1792
16	54	2048
18	60	2304
20	66	2560
22	72	2816

Truss manufacturer must be notified if field conditions do not match this general detail.

DEC 10 2003

ROBBINS
Engineering Inc.
P.O.Box 280055, Tampa, FL 33682

ROBBINS LOCK connector plates (20 ga. galv. steel-ASTM A653 SS Grade 40) shall be applied on both faces of truss at each joint. Center the plates,unless shown otherwise by circles (o) or dimensions. Unless otherwise indicated by a "V", all slots in plates run parallel with the chords or horizontally at the peak and / or heel. No loose knots or voids in plate contact area. Splice only where shown. Overall spans assume 4" bearings at each end, unless indicated otherwise. Cutting and fabrications shall be performed on equipment which produces snug-fitting joints and plates. This design was prepared in accordance with "National Design Specifications for Stress-Grade lumber and its Fastenings" (AFPA), "Design Specifications for Light Metal Plate Connected Wood Trusses" (TPI), and HUD Design Criteria for Trussed Rafters.

Robbins Mfg., Co. bears no responsibility for the erection of trusses, field bracing or permanent truss bracing. Refer to HIB-91 as published by the Truss Plate Institute,583 D'Onofrio Drive,Suite 200, Madison, Wisconsin 53719. Persons erecting trusses are cautioned to seek professional advice concerning proper erection bracing to prevent toppling and "dominoing". Care should be taken to prevent damage during fabrication, storage, shipping and erection. Top and bottom chords shall be adequately braced in the absence of sheathing or rigid ceiling, respectively. It is the responsibility of others to ascertain that the design loads utilized on this drawing meet or exceed the actual dead loads imposed by the structure and the live loads imposed by the local building code or historical climatic records.

FURNISH A COPY OF THIS DESIGN TO ERECTION CONTRACTOR
IT IS THE RESPONSIBILITY OF THE BUILDING DESIGNER AND TRUSS FAB. TO REVIEW THIS DRWG. & VERIFY THAT DATA INCLUDING DIM. & LOADS CONFORM TO ARCH. PLAN/SPECS & FAB. TRUSS LAYOUTS.

Designed By: MG
Checked By: TAA
Rev. Date: 12/09/03
Dwg. No: GD-62-FL

PERMANENT WEB BRACING

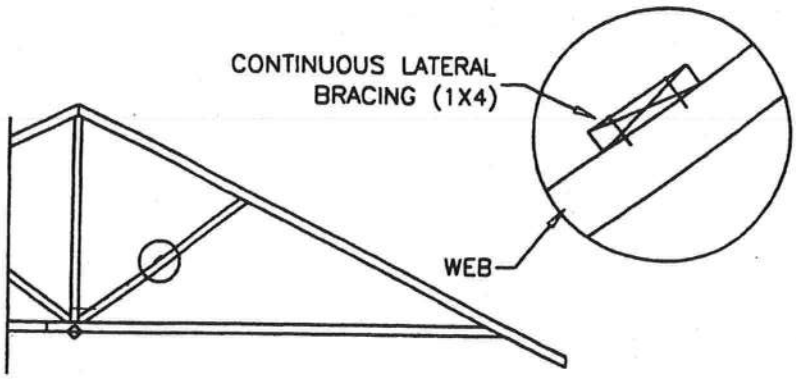

CONTINUOUS LATERAL BRACING

1x4 #3 HEM–FIR OR BETTER CONTINUOUS LATERAL BRACING TO BE EQUALLY SPACED. ATTACH WITH (2) 8d NAILS. BRACING MATERIAL TO BE SUPPLIED AND ATTACHED AT BOTH ENDS TO A SUITABLE SUPPORT BY ERECTION CONTRACTOR.

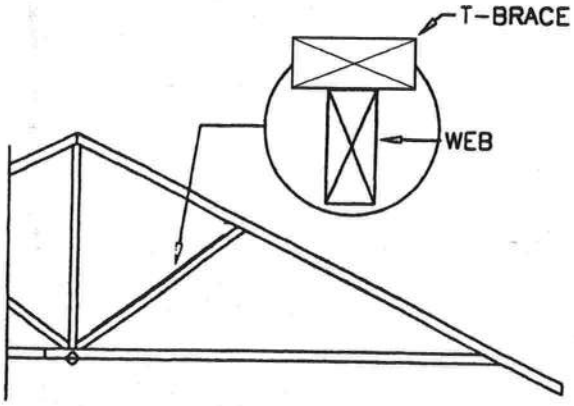

T-BRACE

THESE DETAILS APPLY TO 1.5" WIDE WOOD TRUSSES.

- USE A 2x4 T-BRACE IF THE TRUSS DESIGN SPECIFIES ONE LATERAL BRACE (MID POINT OF WEB).
- USE A 2x6 T-BRACE IF THE TRUSS DESIGN SPECIFIES TWO LATERAL BRACES (AT THE THIRD POINTS OF THE WEB).
- USE A CONTINUOUS PIECE FOR THE T-BRACE, OF THE SAME GRADE AS THE WEB AND COVERING AT LEAST 90% OF THE WEB LENGTH.
- CENTER THE T-BRACE ON THE WEB AND FASTEN WITH 10d COMMON NAILS SPACED 4" ON CENTER.

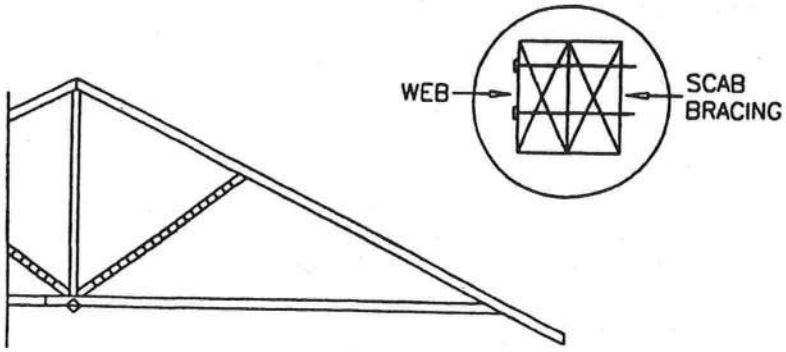

SCAB BRACE

SCAB BRACE SAME SIZE, GRADE, AND LENGTH AS WEB MEMBER. ATTACH WITH 10d NAILS @ 4" O.C. BRACING MATERIAL TO BE SUPPLIED BY ERECTION CONTRACTOR.