Columbia County Building Permit Application

For Office Use Only Application # 0711-59 Date Received 11/21 By JW Permit # 26473

Application Approved by - Zoning Official cfs Date 12/4/07 Plans Examiner OKJ Date 11-29-07

Flood Zone X Development Permit — Zoning PRD Land Use Plan Map Category A-3

Comments

☑ NOC ☐ EH ☐ Deed or PA ☑ Site Plan ☐ State Road Info ☐ Parent Parcel # ☐ Development Permi

Fax 386-752-4904

Name Authorized Person Signing Permit KIMMY EDGLEY Phone 386-752-0580

Address 590 SW ARLINGTON BLVD SUITE 113 LAKE CITY FL 32025

Owners Name OAKS OF LAKE CITY LLC Phone 386-755-3555

911 Address

Contractors Name EDGLEY CONSTRUCTION COMPANY Phone 386-752-0580

Address 590 SW ARLINGTON BLVD SUITE 113 LAKE CITY FL 32025

Fee Simple Owner Name & Address OAKS OF LAKE CITY LLC

Bonding Co. Name & Address N/A

Architect/Engineer Name & Address FREEMAN DESIGN GROUP 161 NW MADISON ST ST 102 LAKE CIT FL 3205

Mortgage Lenders Name & Address N/A

Circle the correct power company - FL Power & Light - Clay Elec. - Suwannee Valley Elec. - Progressive Energ

Property ID Number 18-5S-17-09280-000 Estimated Cost of Construction 115,000.00

Subdivision Name OAKS EQUESTRIAN CENTER Lot ____ Block ____ Unit ____ Phase ____

Driving Directions HWY 41S, TR ON TUSTENUGGEE, TR ON CUSTOM MADE CIRCLE, BEHIND BARN ON RIGHT

Type of Construction RESIDENTIAL HOME Number of Existing Dwellings on Property N/A

Total Acreage 640 Lot Size ____ Do you need a - Culvert Permit or Culvert Waiver or Have an Existing Dri

Actual Distance of Structure from Property Lines - Front 805' Side 808' Side 714' Rear 1222'

Total Building Height 15' 11/2" Number of Stories 1 Heated Floor Area 980 TOTAL 1385 Roof Pitch 6/12

Application is hereby made to obtain a permit to do work and installations as indicated. I certify that no work or installation has commenced prior to the issuance of a permit and that all work be performed to meet the standards of all laws regulating construction in this jurisdiction.

OWNERS AFFIDAVIT: I hereby certify that all the foregoing information is accurate and all work will be done in compliance with all applicable laws and regulating construction and zoning.

WARNING TO OWNER: YOUR FAILURE TO RECORD A NOTICE OF COMMENCMENT MAY RESULT IN YOU PAYING TWICE FOR IMPROVEMENTS TO YOUR PROPERTY. IF YOU INTEND TO OBTAIN FINANCING, CONSULT WITH YOUR LENDER OR ATTORNEY BEFORE RECORDING YOUR NOTICE OF COMMENCEMENT.

Kimmy Edgley

Owner Builder or Authorized Person by Notarized Letter

Contractor Signature

Contractors License Number RR282811326

Competency Card Number 5878

NOTARY STAMP/SEAL

STATE OF FLORIDA
COUNTY OF COLUMBIA

Sworn to (or affirmed) and subscribed before me this 20TH day of NOVEMBER 2007.

Personally known ✓ or Produced Identification ____

Notary Signature

NOTARY PUBLIC STATE OF FLORIDA

JAN CLARK
MY COMMISSION # DD 634946
EXPIRES: March 28, 2011
Bonded Thru Budget Notary Services

(Revised Sept. 200

Spoke to Kimmy 12/4/07

NOTICE OF COMMENCEMENT FORM
COLUMBIA COUNTY, FLORIDA

THE UNDERSIGNED hereby gives notice that improvement will be made to certain real property, and in accordance with Chapter 713, Florida Statutes, the following information is provided in this Notice of Commencement.

Tax Parcel ID Number 18-5S-17-09280-000

1. **Description of property: (legal description of the property and street address or 911 address)**
   OAKS OF LAKE CITY PHASE 1 AS RECORDED IN PLAT BOOK 9 PAGES 46-52.
   THE PARCEL IS SHOWN ON THE PLAT BOOK AS THE COMMONS. WEST 1/2 OF NE 1/4 of NE 1/4 SECTION 18, TOWNSHIP 5 SOUTH, RANGE 17 EAST AND LOCATED WITHIN THE COMMONS OF OAKS OF LAKE CITY PHASE 1

2. **General description of improvement:** EQUESTRIAN MANAGER'S RESIDENCE

3. **Owner Name & Address** OAKS OF LAKE CITY LLC, P.O. BOX 513 LAKE CITY FL 32056
   Interest in Property

4. **Name & Address of Fee Simple Owner (if other than owner):** N/A

5. **Contractor Name** EDGLEY CONSTRUCTION COMPANY **Phone Number** 386-752-0580
   Address 590 SW ARLINGTON BLVD SUITE 113 LAKE CITY FL 32025

6. **Surety Holders Name** N/A **Phone Number**
   Address
   Amount of Bond

Inst:200712026532 Date:12/3/2007 Time:11:28 AM
DC,P.DeWitt Cason,Columbia County Page 1 of 1

7. **Lender Name** N/A
   Address

8. **Persons within the State of Florida designated by the Owner upon whom notices or other documents may be served as provided by section 718.13 (1)(a) 7; Florida Statutes:**
   Name EDGLEY CONSTRUCTION CO. **Phone Number** 386-752-0580
   Address 590 SW ARLINGTON BLVD SUITE 113 LAKE CITY FL 32025

9. **In addition to himself/herself the owner designates** N/A **of** _____ **to receive a copy of the Lienor's Notice as provided in Section 713.13 (1) – (a) 7. Phone Number of the designee**

10. **Expiration date of the Notice of Commencement (the expiration date is 1 (one) year from the date of recording, (Unless a different date is specified)** 12-3-08

NOTICE AS PER CHAPTER 713, Florida Statutes:
The owner must sign the notice of commencement and no one else may be permitted to sign in his/her stead.

Bradley N Dicks
Signature of Owner

Sworn to (or affirmed) and subscribed before day of DEC. 3, 2007

NANCI NETTLES
MY COMMISSION EXPIRES December 26, 2009
#DD 486936
Bonded thru Notary Public Underwriters
NOTARY PUBLIC, STATE OF FLORIDA

NOTARY STAMP/SEAL

Nanci Nettles

Inst. Number: 200712013938 Book: 1122 Page: 2562 Date: 6/22/2007 Time: 4:17:00 PM

Rec. 27.00
Doc. .70

THIS INSTRUMENT WAS PREPARED BY:

TERRY McDAVID
POST OFFICE BOX 1328
LAKE CITY, FL 32056-1328

RETURN TO:

TERRY McDAVID
POST OFFICE BOX 1328
LAKE CITY, FL 32056-1328

File No. 07-217

Property Appraiser's
Parcel Identification Nos.
12-5S-16-03592-000
13-5S-16-03608-000
07-5S-17-09157-000
17-5S-17-09278-002
18-5S-17-09280-000

Inst 200712013938 Date 6/22/2007 Time 4:17 PM
Doc Stamp-Deed 0.70
DC,P DeWitt Cason, Columbia County Page 1 of 1

WARRANTY DEED

THIS INDENTURE, made this 22nd day of June 2007, BETWEEN SUBRANDY LIMITED PARTNERSHIP, a Florida Limited Partnership, whose post office address is Post Office Box 513, Lake City, Florida 32056, of the County of Columbia, State of Florida, grantor*, and OAKS OF LAKE CITY, LLC, a Florida Limited Liability Company, whose document number assigned by the Secretary of State of Florida is L07000060624* and whose post office address is Post Office Box 513, Lake City, Florida 32056, of the County of Columbia, State of Florida, grantee*.

WITNESSETH: that said grantor, for and in consideration of the sum of Ten Dollars ($10.00), and other good and valuable considerations to said grantor in hand paid by said grantee, the receipt whereof is hereby acknowledged, has granted, bargained and sold to the said grantee, and grantee's heirs and assigns forever, the following described land, situate, lying and being in Columbia County, Florida, to-wit:

AS DESCRIBED ON EXHIBIT "A" ATTACHED HERETO.

SUBJECT TO: Restrictions, easements and outstanding mineral rights of record, if any, and taxes for the current year.

*N.B.: THE PURPOSE OF INCLUDING THE DOCUMENT NUMBER OF THIS GRANTEE IS TO AVOID CONFUSION BETWEEN THIS GRANTEE AND ANY OTHER LIMITED LIABILITY COMPANY OF THE SAME OF SIMILAR NAME.

and said grantor does hereby fully warrant the title to said land, and will defend the same against the lawful claims of all persons whomsoever.

Inst. Number: 200712013938 Book: 1122 Page: 2563 Date: 6/22/2007 Time: 4:17:00 PM

*"Grantor" and "grantee" are used for singular or plural, as context requires.

IN WITNESS WHEREOF, grantor has hereunto set grantor's hand and seal the day and year first above written.

Signed, sealed and delivered in the presence of:

First Witness
DeEtte F. Brown
(Printed Name)

Second Witness
Myrtle Ann McElroy
(Printed Name)

SUBRANDY LIMITED PARTNERSHIP
a Florida Limited Partnership

By: Bradley N. Dicks
General Partner

STATE OF FLORIDA
COUNTY OF COLUMBIA

The foregoing instrument was acknowledged before me this ~~16th~~ 22nd day of June 2007, by BRADLEY N. DICKS, General Partner of SUBRANDY LIMITED PARTNERSHIP, a Florida Limited Partnership, on behalf of the partnership. He is personally known to me and did not take an oath.

Notary Public
My commission expires:

MYRTLE ANN MCELROY
MY COMMISSION # DD 604039
EXPIRES: February 12, 2011
Bonded Thru Notary Public Underwriters

Inst. Number: 200712013938 Book: 1122 Page: 2564 Date: 6/22/2007 Time: 4:17:00 PM

EXHIBIT "A"

TOWNSHIP 5 SOUTH, RANGE 16 EAST

SECTION 12: S ½ of SE ¼

SECTION 13: N ¾ of the E ½

TOGETHER WITH a right of way easement over and across the West sixty (60) feet of S ½ of SE ¼ of said Section 13.

TOWNSHIP 5 SOUTH, RANGE 17 EAST

SECTION 7: S ½ of SW ¼, and
SW ¼ of SE 1/4

SECTION 17: W ½ of W ½, lying West of highway;

LESS AND EXCEPT;
Commence at the Northeast corner of the NW ¼ of SE ¼ and run thence S 88°23'34"W, along the North line of said NW ¼ of SW ¼, 40.01 feet to the West right of way of CR 131; thence S 00°37'08" E, along said West right of way, 349.13 feet to the Point of Beginning, thence continue S 00°37'08" E, still along said West right of way, 880.72 feet to a point of curve, thence Southerly along said right of way along said curve concave to the West, having a radius of 2824.79, a central angle of 01°08'27", a chord bearing and distance of S 00°02'54"E, 56.25 feet, an arc length of 56.25 feet; thence N 70°47'42" W, 818.57 feet; thence N 00°37'08" W parallel with said West right of way, 639.36 feet; thence N 89°22'52" E, 770.62 feet to the Point of Beginning.

SECTION 18: ALL

Application for Onsite Sewage Disposal System Construction Permit. Part II Site Plan

Permit Application Number: 07-0887

ALL CHANGES MUST BE APPROVED BY THE COUNTY HEALTH UNIT

OAKS OF LAKE CITY LLC
CR 07-4167

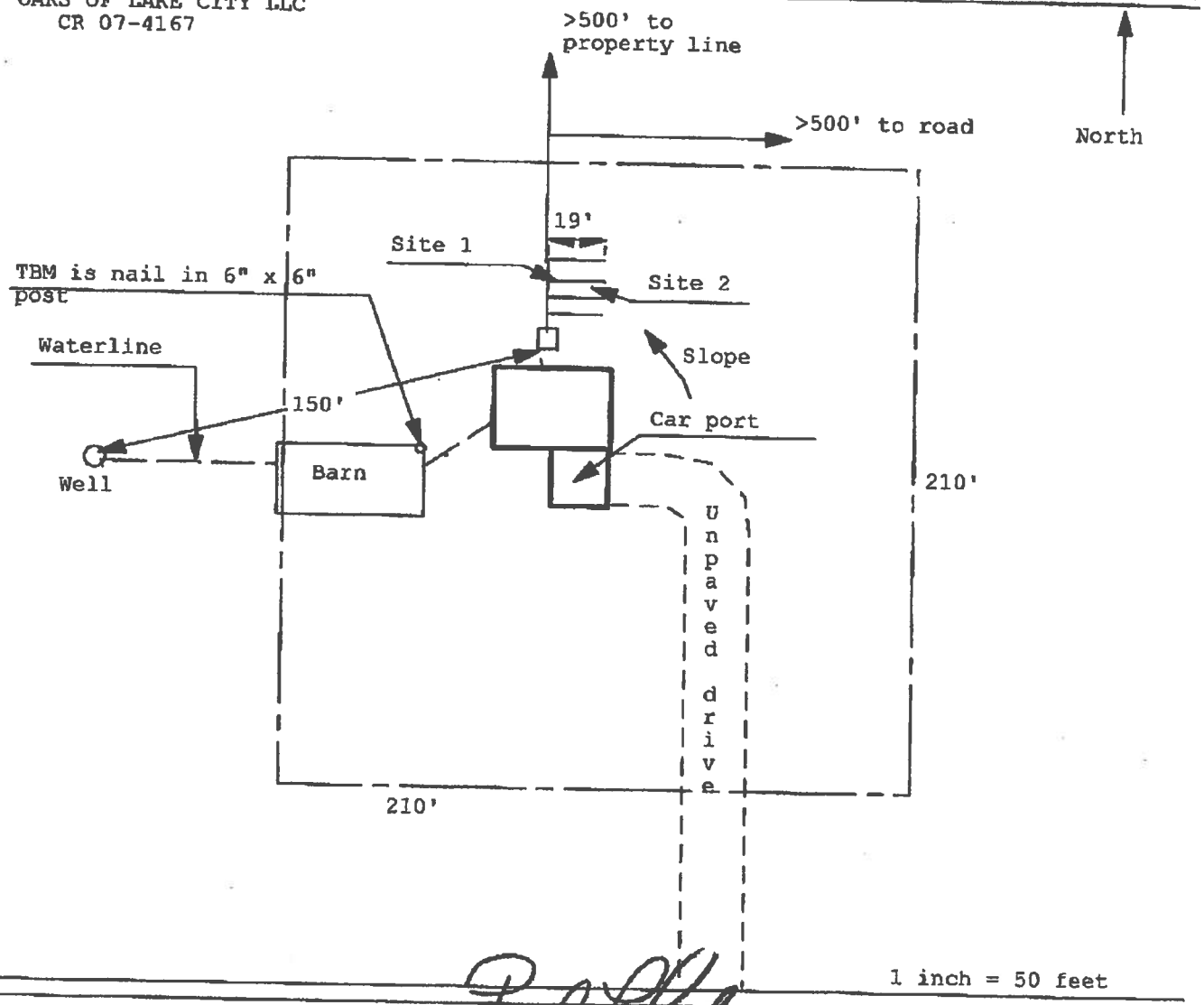

1 inch = 50 feet

Site Plan Submitted By Paul Floyd **Date** 11/12/07

Plan Approved ✓ **Not Approved** ____ **Date** 11/19/07

By Man a Zaach Columbia **CPHU**

Notes:

HALL'S PUMP & WELL SERVICE, INC.

SPECIALIZING IN 4"-6" WELLS

DONALD AND MARY HALL
OWNERS

PHONE (904) 752-1854
FAX (904) 755-7022
LAKE CITY, FLORIDA 32055
904 NW Main Blvd.

June 12, 2002

NOTICE TO ALL CONTRACTORS

Please be advised that due to the new building codes we will use a large capacity diaphram tank on all new wells. This will insure a minimum of one (1) minute draw down or one (1) minute refill. If a smaller diaphram tank is used then we will install a cycle stop valve which will produce the same results.

If you have any questions please feel free to call our office anytime.

Thank you,

Donald D. Hall
DDH/jk

FORM 600A-2004R

EnergyGauge® 4.5.2

FLORIDA ENERGY EFFICIENCY CODE FOR BUILDING CONSTRUCTION

Florida Department of Community Affairs

Residential Whole Building Performance Method A

Project Name:	**Equestrian Manager's Residence**	Builder:	
Address:		Permitting Office:	Columbia
City, State:	,	Permit Number:	26473
Owner:		Jurisdiction Number:	221000
Climate Zone:	**North**		

1. New construction or existing	New	
2. Single family or multi-family	Single family	
3. Number of units, if multi-family	1	
4. Number of Bedrooms	2	
5. Is this a worst case?	Yes	
6. Conditioned floor area (ft²)	980 ft²	
7. Glass type[1] and area: (Label reqd. by 13-104.4.5 if not default)		
a. U-factor: (or Single or Double DEFAULT)	Description Area 7a. (Dble Default) 180.0 ft²	
b. SHGC: (or Clear or Tint DEFAULT)	7b. (Tint) 180.0 ft²	
8. Floor types		
a. Slab-On-Grade Edge Insulation	R=0.0, 117.0(p) ft	
b. N/A		
c. N/A		
9. Wall types		
a. Frame, Wood, Exterior	R=13.0, 770.0 ft²	
b. N/A		
c. N/A		
d. N/A		
e. N/A		
10. Ceiling types		
a. Under Attic	R=30.0, 980.0 ft²	
b. N/A		
c. N/A		
11. Ducts		
a. Sup: Con. Ret: Con. AH: Interior	Sup. R=6.0, 26.0 ft	
b. N/A		

12. Cooling systems		
a. Central Unit/Split	Cap: 18.0 kBtu/hr SEER: 13.00	
b. N/A		
c. N/A		
13. Heating systems		
a. Electric Heat Pump/Package	Cap: 18.0 kBtu/hr HSPF: 8.50	
b. N/A		
c. N/A		
14. Hot water systems		
a. Electric Resistance	Cap: 20.0 gallons EF: 0.94	
b. N/A		
c. Conservation credits (HR-Heat recovery, Solar DHP-Dedicated heat pump)		
15. HVAC credits (CF-Ceiling fan, CV-Cross ventilation, HF-Whole house fan, PT-Programmable Thermostat, MZ-C-Multizone cooling, MZ-H-Multizone heating)	PT, CF,	

Glass/Floor Area: 0.18

Total as-built points: 13065

Total base points: 14340

PASS

I hereby certify that the plans and specifications covered by this calculation are in compliance with the Florida Energy Code.

PREPARED BY: Debbie Motes

DATE: 9/27/07

I hereby certify that this building, as designed, is in compliance with the Florida Energy Code.

OWNER/AGENT: _____

DATE: _____

Review of the plans and specifications covered by this calculation indicates compliance with the Florida Energy Code. Before construction is completed this building will be inspected for compliance with Section 553.908 Florida Statutes.

GREAT SEAL OF THE STATE OF FLORIDA · IN GOD WE TRUST

BUILDING OFFICIAL: _____

DATE: _____

1 Predominant glass type. For actual glass type and areas, see Summer & Winter Glass output on pages 2&4.

SUMMER CALCULATIONS

Residential Whole Building Performance Method A - Details

ADDRESS: , , , PERMIT #:

BASE

GLASS TYPES

.18 X	Conditioned Floor Area	X BSPM	= Points
.18	980.0	18.59	3279.0

WALL TYPES

	Area	X BSPM	= Points
Adjacent	0.0	0.00	0.0
Exterior	770.0	1.70	1309.0
Base Total:	**770.0**		**1309.0**

DOOR TYPES

	Area	X BSPM	= Points
Adjacent	0.0	0.00	0.0
Exterior	30.0	6.10	183.0
Base Total:	**30.0**		**183.0**

CEILING TYPES

	Area	X BSPM	= Points
Under Attic	980.0	1.73	1695.4
Base Total:	**980.0**		**1695.4**

FLOOR TYPES

	Area	X BSPM	= Points
Slab	117.0(p)	-37.0	-4329.0
Raised	0.0	0.00	0.0
Base Total:			**-4329.0**

INFILTRATION

Area	X BSPM	= Points
980.0	10.21	10005.8

AS-BUILT

Type/SC	Overhang Ornt	Len	Hgt	Area X	SPM X	SOF	= Points
1.Double, Tint	N	1.0	6.0	30.0	14.84	0.98	434.0
2.Double, Tint	S	6.0	6.0	30.0	28.73	0.52	448.0
3.Double, Tint	S	6.0	6.0	30.0	28.73	0.52	448.0
4.Double, Tint	E	1.0	6.0	30.0	33.89	0.97	985.0
5.Double, Tint	E	1.0	6.0	30.0	33.89	0.97	985.0
6.Double, Tint	W	1.0	6.0	30.0	30.93	0.97	900.0
As-Built Total:				**180.0**			**4200.0**

Type	R-Value	Area X	SPM	= Points
1. Frame, Wood, Exterior	13.0	770.0	1.50	1155.0
As-Built Total:		**770.0**		**1155.0**

Type	Area X	SPM	= Points
1.Exterior Insulated	30.0	4.10	123.0
As-Built Total:	**30.0**		**123.0**

Type	R-Value	Area X	SPM X SCM	= Points
1. Under Attic	30.0	980.0	1.73 X 1.00	1695.4
As-Built Total:		**980.0**		**1695.4**

Type	R-Value	Area X	SPM	= Points
1. Slab-On-Grade Edge Insulation	0.0	117.0(p	-41.20	-4820.4
As-Built Total:		**117.0**		**-4820.4**

Area X	SPM	= Points
980.0	10.21	10005.8

SUMMER CALCULATIONS

Residential Whole Building Performance Method A - Details

ADDRESS: , , ,	PERMIT #:

BASE			AS-BUILT						
Summer Base Points: 12143.2			**Summer As-Built Points:**						**12358.8**
Total Summer Points	X System Multiplier	= Cooling Points	Total Component (System - Points)	X Cap Ratio	X Duct Multiplier (DM x DSM x AHU)	X System Multiplier	X Credit Multiplier	= Cooling Points	
			(sys 1: Central Unit 18000btuh ,SEER/EFF(13.0) Ducts:Con(S),Con(R),Int(AH),R6.0(INS)						
			12359	1.00	(1.00 x 1.147 x 0.91)	0.260	0.902	3026.9	
12143.2	**0.3250**	**3946.5**	**12358.8**	**1.00**	**1.044**	**0.260**	**0.902**	**3026.9**	

WINTER CALCULATIONS

Residential Whole Building Performance Method A - Details

ADDRESS: , , , PERMIT #:

BASE				AS-BUILT							
GLASS TYPES .18 X Conditioned Floor Area	X BWPM	= Points		Type/SC	Overhang Ornt	Len	Hgt	Area X	WPM X	WOF	= Points
.18	980.0	20.17	3558.0	1.Double, Tint	N	1.0	6.0	30.0	25.37	1.00	761.0
				2.Double, Tint	S	6.0	6.0	30.0	15.87	2.73	1300.0
				3.Double, Tint	S	6.0	6.0	30.0	15.87	2.73	1300.0
				4.Double, Tint	E	1.0	6.0	30.0	20.51	1.02	624.0
				5.Double, Tint	E	1.0	6.0	30.0	20.51	1.02	624.0
				6.Double, Tint	W	1.0	6.0	30.0	22.15	1.01	669.0
				As-Built Total:				**180.0**			**5278.0**

WALL TYPES	Area X	BWPM =	Points	Type	R-Value	Area X	WPM =	Points
Adjacent	0.0	0.00	0.0	1. Frame, Wood, Exterior	13.0	770.0	3.40	2618.0
Exterior	770.0	3.70	2849.0					
Base Total:	**770.0**		**2849.0**	**As-Built Total:**		**770.0**		**2618.0**

DOOR TYPES	Area X	BWPM =	Points	Type	Area X	WPM =	Points
Adjacent	0.0	0.00	0.0	1.Exterior Insulated	30.0	8.40	252.0
Exterior	30.0	12.30	369.0				
Base Total:	**30.0**		**369.0**	**As-Built Total:**	**30.0**		**252.0**

CEILING TYPES	Area X	BWPM =	Points	Type	R-Value	Area X	WPM X WCM =	Points
Under Attic	980.0	2.05	2009.0	1. Under Attic	30.0	980.0	2.05 X 1.00	2009.0
Base Total:	**980.0**		**2009.0**	**As-Built Total:**		**980.0**		**2009.0**

FLOOR TYPES	Area X	BWPM =	Points	Type	R-Value	Area X	WPM =	Points
Slab	117.0(p)	8.9	1041.3	1. Slab-On-Grade Edge Insulation	0.0	117.0(p	18.80	2199.6
Raised	0.0	0.00	0.0					
Base Total:			**1041.3**	**As-Built Total:**		**117.0**		**2199.6**

INFILTRATION	Area X	BWPM =	Points	Area X	WPM =	Points
	980.0	-0.59	-578.2	980.0	-0.59	-578.2

WINTER CALCULATIONS

Residential Whole Building Performance Method A - Details

ADDRESS: , , ,	PERMIT #:

BASE				AS-BUILT							
Winter Base Points:			**9248.1**	**Winter As-Built Points:**							**11778.4**
Total Winter Points	X	System Multiplier	= Heating Points	Total Component (System - Points)	X	Cap Ratio	X Duct Multiplier (DM x DSM x AHU)	X System Multiplier	X Credit Multiplier	=	Heating Points
				(sys 1: Electric Heat Pump 18000 btuh ,EFF(8.5) Ducts:Con(S),Con(R),Int(AH),R6.0							
				11778.4		1.000	(1.000 x 1.169 x 0.93)	0.401	0.950		4880.3
9248.1		**0.5540**	**5123.4**	**11778.4**		**1.00**	**1.087**	**0.401**	**0.950**		**4880.3**

WATER HEATING & CODE COMPLIANCE STATUS

Residential Whole Building Performance Method A - Details

ADDRESS: , , , PERMIT #:

BASE				AS-BUILT							
WATER HEATING											
Number of Bedrooms	X	Multiplier	= Total	Tank Volume	EF	Number of Bedrooms	X	Tank Ratio	X Multiplier	X Credit Multiplier	= Total
2		2635.00	5270.0	20.0	0.94	2		1.00	2578.94	1.00	5157.9
				As-Built Total:							**5157.9**

CODE COMPLIANCE STATUS

BASE				AS-BUILT			
Cooling Points +	Heating Points +	Hot Water Points =	Total Points	Cooling Points +	Heating Points +	Hot Water Points =	Total Points
3947	**5123**	**5270**	**14340**	**3027**	**4880**	**5158**	**13065**

PASS

Code Compliance Checklist

Residential Whole Building Performance Method A - Details

ADDRESS: , , , PERMIT #:

6A-21 INFILTRATION REDUCTION COMPLIANCE CHECKLIST

COMPONENTS	SECTION	REQUIREMENTS FOR EACH PRACTICE	CHECK
Exterior Windows & Doors	606.1.ABC.1.1	Maximum:.3 cfm/sq.ft. window area; .5 cfm/sq.ft. door area.	
Exterior & Adjacent Walls	606.1.ABC.1.2.1	Caulk, gasket, weatherstrip or seal between: windows/doors & frames, surrounding wall; foundation & wall sole or sill plate; joints between exterior wall panels at corners; utility penetrations; between wall panels & top/bottom plates; between walls and floor. EXCEPTION: Frame walls where a continuous infiltration barrier is installed that extends from, and is sealed to, the foundation to the top plate.	
Floors	606.1.ABC.1.2.2	Penetrations/openings >1/8" sealed unless backed by truss or joint members. EXCEPTION: Frame floors where a continuous infiltration barrier is installed that is sealed to the perimeter, penetrations and seams.	
Ceilings	606.1.ABC.1.2.3	Between walls & ceilings; penetrations of ceiling plane of top floor; around shafts, chases, soffits, chimneys, cabinets sealed to continuous air barrier; gaps in gyp board & top plate; attic access. EXCEPTION: Frame ceilings where a continuous infiltration barrier is installed that is sealed at the perimeter, at penetrations and seams.	
Recessed Lighting Fixtures	606.1.ABC.1.2.4	Type IC rated with no penetrations, sealed; or Type IC or non-IC rated, installed inside a sealed box with 1/2" clearance & 3" from insulation; or Type IC rated with < 2.0 cfm from conditioned space, tested.	
Multi-story Houses	606.1.ABC.1.2.5	Air barrier on perimeter of floor cavity between floors.	
Additional Infiltration reqts	606.1.ABC.1.3	Exhaust fans vented to outdoors, dampers; combustion space heaters comply with NFPA, have combustion air.	

6A-22 OTHER PRESCRIPTIVE MEASURES (must be met or exceeded by all residences.)

COMPONENTS	SECTION	REQUIREMENTS	CHECK
Water Heaters	612.1	Comply with efficiency requirements in Table 612.1.ABC.3.2. Switch or clearly marked cir breaker (electric) or cutoff (gas) must be provided. External or built-in heat trap required.	
Swimming Pools & Spas	612.1	Spas & heated pools must have covers (except solar heated). Non-commercial pools must have a pump timer. Gas spa & pool heaters must have a minimum thermal efficiency of 78%.	
Shower heads	612.1	Water flow must be restricted to no more than 2.5 gallons per minute at 80 PSIG.	
Air Distribution Systems	610.1	All ducts, fittings, mechanical equipment and plenum chambers shall be mechanically attached, sealed, insulated, and installed in accordance with the criteria of Section 610. Ducts in unconditioned attics: R-6 min. insulation.	
HVAC Controls	607.1	Separate readily accessible manual or automatic thermostat for each system.	
Insulation	604.1, 602.1	Ceilings-Min. R-19. Common walls-Frame R-11 or CBS R-3 both sides. Common ceiling & floors R-11.	

ENERGY PERFORMANCE LEVEL (EPL) DISPLAY CARD

ESTIMATED ENERGY PERFORMANCE SCORE* = 86.4

The higher the score, the more efficient the home.

1. New construction or existing	New	
2. Single family or multi-family	Single family	
3. Number of units, if multi-family	1	
4. Number of Bedrooms	2	
5. Is this a worst case?	Yes	
6. Conditioned floor area (ft²)	980 ft²	
7. Glass type[1] and area: (Label reqd. by 13-104.4.5 if not default)		
a. U-factor: (or Single or Double DEFAULT)	Description Area 7a. (Dble Default) 180.0 ft²	
b. SHGC: (or Clear or Tint DEFAULT)	7b. (Tint) 180.0 ft²	
8. Floor types		
a. Slab-On-Grade Edge Insulation	R=0.0, 117.0(p) ft	
b. N/A		
c. N/A		
9. Wall types		
a. Frame, Wood, Exterior	R=13.0, 770.0 ft²	
b. N/A		
c. N/A		
d. N/A		
e. N/A		
10. Ceiling types		
a. Under Attic	R=30.0, 980.0 ft²	
b. N/A		
c. N/A		
11. Ducts		
a. Sup: Con. Ret: Con. AH: Interior	Sup. R=6.0, 26.0 ft	
b. N/A		
12. Cooling systems		
a. Central Unit/Split	Cap: 18.0 kBtu/hr SEER: 13.00	
b. N/A		
c. N/A		
13. Heating systems		
a. Electric Heat Pump/Package	Cap: 18.0 kBtu/hr HSPF: 8.50	
b. N/A		
c. N/A		
14. Hot water systems		
a. Electric Resistance	Cap: 20.0 gallons EF: 0.94	
b. N/A		
c. Conservation credits (HR-Heat recovery, Solar DHP-Dedicated heat pump)		
15. HVAC credits (CF-Ceiling fan, CV-Cross ventilation, HF-Whole house fan, PT-Programmable Thermostat, MZ-C-Multizone cooling, MZ-H-Multizone heating)	PT, CF,	

I certify that this home has complied with the Florida Energy Efficiency Code For Building Construction through the above energy saving features which will be installed (or exceeded) in this home before final inspection. Otherwise, a new EPL Display Card will be completed based on installed Code compliant features.

Builder Signature: _____ Date: _____

Address of New Home: _____ City/FL Zip: _____

**NOTE: The home's estimated energy performance score is only available through the FLA/RES computer program. This is not a Building Energy Rating. If your score is 80 or greater (or 86 for a US EPA/DOE EnergyStar™ designation), your home may qualify for energy efficiency mortgage (EEM) incentives if you obtain a Florida Energy Gauge Rating. Contact the Energy Gauge Hotline at 321/638-1492 or see the Energy Gauge web site at www.fsec.ucf.edu for information and a list of certified Raters. For information about Florida's Energy Efficiency Code For Building Construction, contact the Department of Community Affairs at 850/487-1824.*

1 Predominant glass type. For actual glass type and areas, see Summer & Winter Glass output on pages 2&4.

EnergyGauge® (Version: FLRCPB v4.5.2)

BUILDING INPUT SUMMARY REPORT

PROJECT

Title:	Equestrian Manager's Residen	**Family Type:**	Single	**Address Type:**	Street Address
Owner:	(blank)	**New/Existing:**	New	**Lot #:**	N/A
# of Units:	1	**Bedrooms:**	2	**Subdivision:**	N/A
Builder Name:	(blank)	**Conditioned Area:**	980	**Platbook:**	N/A
Climate:	North	**Total Stories:**	1	**Street:**	(blank)
Permit Office:	(blank)	**Worst Case:**	Yes	**County:**	(blank)
Jurisdiction #:	(blank)	**Rotate Angle:**	0	**City, St, Zip:**	, ,

FLOORS

#	Floor Type	R-Val	Area/Perimeter	Units
1	Slab-On-Grade Edge Insulation	0.0	117.0(p) ft	1

DOORS

#	Door Type	Orientation	Area	Units
1	Insulated	Exterior	15.0 ft²	2

CEILINGS

#	Ceiling Type	R-Val	Area	Base Area	Units
1	Under Attic	30.0	980.0 ft²	980.0 ft²	1

Credit Multipliers: None

COOLING

#	System Type	Efficiency	Capacity
1	Central Unit/Split	SEER: 13.00	18.0 kBtu/hr

Credit Multipliers: Ceil Fn, PT

WALLS

#	Wall Type	Location	R-Val	Area	Units
1	Frame - Wood	Exterior	13.0	770.0 ft²	1

HEATING

#	System Type	Efficiency	Capacity
1	Electric Heat Pump/Package	HSPF: 8.50	18.0 kBtu/hr

Credit Multipliers: PT

WINDOWS

#	Panes	Tint	Ornt	Area	OH Length	OH Hght	Units
1	Double	Tint	N	15.0 ft²	1.0 ft	6.0 ft	2
2	Double	Tint	S	15.0 ft²	6.0 ft	6.0 ft	2
3	Double	Tint	S	30.0 ft²	6.0 ft	6.0 ft	1
4	Double	Tint	E	15.0 ft²	1.0 ft	6.0 ft	2
5	Double	Tint	E	30.0 ft²	1.0 ft	6.0 ft	1
6	Double	Tint	W	15.0 ft²	1.0 ft	6.0 ft	2

DUCTS

#	Supply Location	Return Location	Air Handler Location	Supply R-Val	Supply Length
1	Cond.	Cond.	Interior	6.0	26.0 ft

Credit Multipliers: None

WATER

#	System Type	EF	Cap.	Conservation Type	Con. EF
1	Electric Resistance	0.94	20.0	None	0.00

REFR.

#	Use Default?	Annual Operating Cost	Electric Rate
1	Yes	N/A	N/A

MISC

Rater Name:	CodeOnlyPro	**Class #:**	3	**Pool Size:**	0
Rater Certification #:	CodeOnlyPro	**Duct Leakage Type:**	N/A	**Pump Size:**	0.00 hp
Area Under Fluorescent:	0.0	**Visible Duct Disconnects:**	N/A	**Dryer Type:**	Electric
Area Under Incandescent:	980.0	**Leak Free Duct System Proposed:**	No	**Stove Type:**	Electric
NOTE: Not all Rating info shown		**HRV/ERV System Present?:**	No	**Avg Ceil Hgt:**	

Residential System Sizing Calculation

Summary

Project Title:
Equestrian Manager's Residence

Code Only
Professional Version
Climate: North

9/27/2007

Location for weather data: Gainesville - Defaults: Latitude(29) Altitude(152 ft.) Temp Range(M)
Humidity data: Interior RH (50%) Outdoor wet bulb (77F) Humidity difference(54gr.)

Winter design temperature	33	F	Summer design temperature	92	F
Winter setpoint	70	F	Summer setpoint	75	F
Winter temperature difference	37	F	Summer temperature difference	17	F
Total heating load calculation	**16668**	**Btuh**	**Total cooling load calculation**	**12720**	**Btuh**
Submitted heating capacity	% of calc	Btuh	Submitted cooling capacity	% of calc	Btuh
Total (Electric Heat Pump)	108.0	18000	Sensible (SHR = 0.75)	114.8	13500
Heat Pump + Auxiliary(0.0kW)	108.0	18000	Latent	466.8	4500
			Total (Electric Heat Pump)	141.5	18000

WINTER CALCULATIONS

Winter Heating Load (for 980 sqft)

Load component			Load	
Window total	180	sqft	5794	Btuh
Wall total	770	sqft	2529	Btuh
Door total	30	sqft	389	Btuh
Ceiling total	980	sqft	1155	Btuh
Floor total	117	sqft	5108	Btuh
Infiltration	42	cfm	1694	Btuh
Duct loss			0	Btuh
Subtotal			**16668**	**Btuh**
Ventilation	0	cfm	0	Btuh
TOTAL HEAT LOSS			**16668**	**Btuh**

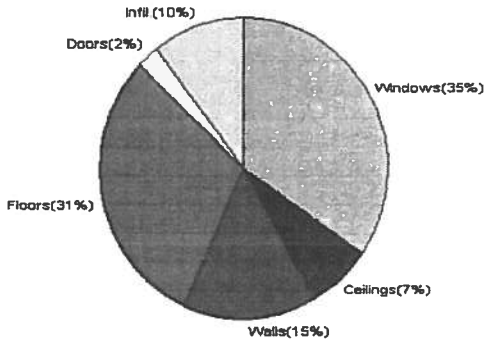

SUMMER CALCULATIONS

Summer Cooling Load (for 980 sqft)

Load component			Load	
Window total	180	sqft	5525	Btuh
Wall total	770	sqft	1606	Btuh
Door total	30	sqft	294	Btuh
Ceiling total	980	sqft	1311	Btuh
Floor total			0	Btuh
Infiltration	21	cfm	389	Btuh
Internal gain			2630	Btuh
Duct gain			0	Btuh
Sens. Ventilation	0	cfm	0	Btuh
Total sensible gain			**11755**	**Btuh**
Latent gain(ducts)			0	Btuh
Latent gain(infiltration)			764	Btuh
Latent gain(ventilation)			0	Btuh
Latent gain(internal/occupants/other)			200	Btuh
Total latent gain			**964**	**Btuh**
TOTAL HEAT GAIN			**12720**	**Btuh**

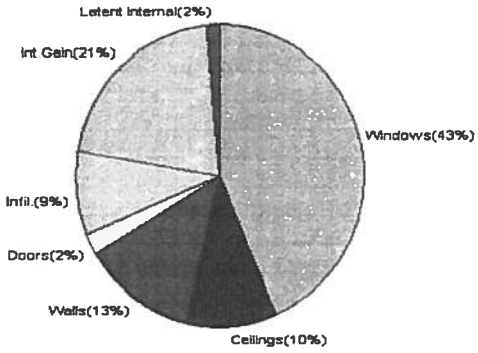

Version 8
For Florida residences only

EnergyGauge® System Sizing
PREPARED BY: Dulcie I Mobes
DATE: 9-27-07

System Sizing Calculations - Winter

Residential Load - Whole House Component Details

Project Title:
Equestrian Manager's Residence

Code Only
Professional Version
Climate: North

Reference City: Gainesville (Defaults) Winter Temperature Difference: 37.0 F

9/27/2007

This calculation is for Worst Case. The house has been rotated 225 degrees.

Component Loads for Whole House

Window	Panes/SHGC/Frame/U	Orientation	Area(sqft) X	HTM=	Load
1	2, Tint, Metal, 0.87	SW	30.0	32.2	966 Btuh
2	2, Tint, Metal, 0.87	NE	30.0	32.2	966 Btuh
3	2, Tint, Metal, 0.87	NE	30.0	32.2	966 Btuh
4	2, Tint, Metal, 0.87	NW	30.0	32.2	966 Btuh
5	2, Tint, Metal, 0.87	NW	30.0	32.2	966 Btuh
6	2, Tint, Metal, 0.87	SE	30.0	32.2	966 Btuh
	Window Total		180(sqft)		5794 Btuh
Walls	Type	R-Value	Area X	HTM=	Load
1	Frame - Wood - Ext(0.09)	13.0	770	3.3	2529 Btuh
	Wall Total		770		2529 Btuh
Doors	Type		Area X	HTM=	Load
1	Insulated - Exterior		30	12.9	388 Btuh
	Door Total		30		389Btuh
Ceilings	Type/Color/Surface	R-Value	Area X	HTM=	Load
1	Vented Attic/L/Meta	30.0	980	1.2	1155 Btuh
	Ceiling Total		980		1155Btuh
Floors	Type	R-Value	Size X	HTM=	Load
1	Slab On Grade	0	117.0 ft(p)	43.7	5108 Btuh
	Floor Total		117		5108 Btuh
			Envelope Subtotal:		14974 Btuh
Infiltration	Type	ACH X	Volume(cuft)	walls(sqft) CFM=	
	Natural	0.32	7840	770 41.8	1694 Btuh
Ductload				(DLM of 0.000)	0 Btuh
All Zones			**Sensible Subtotal All Zones**		**16668 Btuh**

WHOLE HOUSE TOTALS

	Subtotal Sensible	16668 Btuh
	Ventilation Sensible	0 Btuh
	Total Btuh Loss	16668 Btuh

Manual J Winter Calculations

Residential Load - Component Details (continued)

Project Title:
Equestrian Manager's Residence

Code Only
Professional Version
Climate: North

9/27/2007

EQUIPMENT		
1. Electric Heat Pump/Package	#	18000 Btuh

Key: Window types (SHGC - Shading coefficient of glass as SHGC numerical value or as clear or tint)
(Frame types - metal, wood or insulated metal)
(U - Window U-Factor or 'DEF' for default)
(HTM - ManualJ Heat Transfer Multiplier)
Key: Floor size (perimeter(p) for slab-on-grade or area for all other floor types)

Version 8
For Florida residences only

System Sizing Calculations - Winter

Residential Load - Room by Room Component Details

Project Title:
Equestrian Manager's Residence

Code Only
Professional Version
Climate: North

Reference City: Gainesville (Defaults) Winter Temperature Difference: 37.0 F

9/27/2007

This calculation is for Worst Case. The house has been rotated 225 degrees.

Component Loads for Zone #1: Main

Window	Panes/SHGC/Frame/U	Orientation	Area(sqft) X	HTM=	Load
1	2, Tint, Metal, 0.87	SW	30.0	32.2	966 Btuh
2	2, Tint, Metal, 0.87	NE	30.0	32.2	966 Btuh
3	2, Tint, Metal, 0.87	NE	30.0	32.2	966 Btuh
4	2, Tint, Metal, 0.87	NW	30.0	32.2	966 Btuh
5	2, Tint, Metal, 0.87	NW	30.0	32.2	966 Btuh
6	2, Tint, Metal, 0.87	SE	30.0	32.2	966 Btuh
	Window Total		180(sqft)		5794 Btuh
Walls	Type	R-Value	Area X	HTM=	Load
1	Frame - Wood - Ext(0.09)	13.0	770	3.3	2529 Btuh
	Wall Total		770		2529 Btuh
Doors	Type		Area X	HTM=	Load
1	Insulated - Exterior		30	12.9	388 Btuh
	Door Total		30		389Btuh
Ceilings	Type/Color/Surface	R-Value	Area X	HTM=	Load
1	Vented Attic/L/Meta	30.0	980	1.2	1155 Btuh
	Ceiling Total		980		1155Btuh
Floors	Type	R-Value	Size X	HTM=	Load
1	Slab On Grade	0	117.0 ft(p)	43.7	5108 Btuh
	Floor Total		117		5108 Btuh
			Zone Envelope Subtotal:		14974 Btuh
Infiltration	Type	ACH X	Volume(cuft)	walls(sqft) CFM=	
	Natural	0.32	7840	770 41.8	1694 Btuh
Ductload	Average sealed, Supply(R6.0-Cond.), Return(R6.0-Cond)(DLM of 0.000)				0 Btuh
Zone #1			**Sensible Zone Subtotal**		**16668 Btuh**

WHOLE HOUSE TOTALS

	Subtotal Sensible	16668 Btuh
	Ventilation Sensible	0 Btuh
	Total Btuh Loss	16668 Btuh

Manual J Winter Calculations

Residential Load - Component Details (continued)

Project Title:
Equestrian Manager's Residence

Code Only
Professional Version
Climate: North

9/27/2007

EQUIPMENT		
1. Electric Heat Pump/Package	#	18000 Btuh

Key: Window types (SHGC - Shading coefficient of glass as SHGC numerical value or as clear or tint)
(Frame types - metal, wood or insulated metal)
(U - Window U-Factor or 'DEF' for default)
(HTM - ManualJ Heat Transfer Multiplier)
Key: Floor size (perimeter(p) for slab-on-grade or area for all other floor types)

Version 8
For Florida residences only

System Sizing Calculations - Summer

Residential Load - Whole House Component Details

Project Title:
Equestrian Manager's Residence

Code Only
Professional Version
Climate: North

Reference City: Gainesville (Defaults) Summer Temperature Difference: 17.0 F 9/27/2007

This calculation is for Worst Case. The house has been rotated 225 degrees.

Component Loads for Whole House

Window	Type* Pn/SHGC/U/InSh/ExSh/IS	Ornt	Overhang Len	Overhang Hgt	Window Area(sqft) Gross	Shaded	Unshaded	HTM Shaded	HTM Unshaded	Load
1	2, Tint, 0.87, B-D, N,F	SW	1ft.	6ft.	30.0	4.1	25.9	16	33	912 Btuh
2	2, Tint, 0.87, B-D, N,F	NE	6ft.	6ft.	30.0	0.0	30.0	16	31	925 Btuh
3	2, Tint, 0.87, B-D, N,F	NE	6ft.	6ft.	30.0	0.0	30.0	16	31	925 Btuh
4	2, Tint, 0.87, B-D, N,F	NW	1ft.	6ft.	30.0	0.0	30.0	16	31	925 Btuh
5	2, Tint, 0.87, B-D, N,F	NW	1ft.	6ft.	30.0	0.0	30.0	16	31	925 Btuh
6	2, Tint, 0.87, B-D, N,F	SE	1ft.	6ft.	30.0	4.1	25.9	16	33	912 Btuh
	Window Total				180 (sqft)					5525 Btuh

Walls	Type	R-Value/U-Value	Area(sqft)	HTM	Load
1	Frame - Wood - Ext	13.0/0.09	770.0	2.1	1606 Btuh
	Wall Total		770 (sqft)		1606 Btuh
Doors	Type		Area (sqft)	HTM	Load
1	Insulated - Exterior		30.0	9.8	294 Btuh
	Door Total		30 (sqft)		294 Btuh
Ceilings	Type/Color/Surface	R-Value	Area(sqft)	HTM	Load
1	Vented Attic/Light/Metal	30.0	980.0	1.3	1311 Btuh
	Ceiling Total		980 (sqft)		1311 Btuh
Floors	Type	R-Value	Size	HTM	Load
1	Slab On Grade	0.0	117 (ft(p))	0.0	0 Btuh
	Floor Total		117.0 (sqft)		0 Btuh
			Envelope Subtotal:		8736 Btuh

Infiltration	Type	ACH	Volume(cuft)	wall area(sqft)	CFM=	Load
	SensibleNatural	0.16	7840	770	41.8	389 Btuh
Internal gain		Occupants	Btuh/occupant		Appliance	Load
		1	X 230	+	2400	2630 Btuh
			Sensible Envelope Load:			11755 Btuh
Duct load			(DGM of 0.000)			0 Btuh
			Sensible Load All Zones			**11755 Btuh**

Manual J Summer Calculations

Residential Load - Component Details (continued)

Project Title:
Equestrian Manager's Residence

Code Only
Professional Version
Climate: North

9/27/2007

WHOLE HOUSE TOTALS

Whole House Totals for Cooling	**Sensible Envelope Load All Zones**	**11755**	**Btuh**
	Sensible Duct Load	0	Btuh
	Total Sensible Zone Loads	**11755**	**Btuh**
	Sensible ventilation	0	Btuh
	Blower	0	Btuh
	Total sensible gain	**11755**	**Btuh**
	Latent infiltration gain (for 54 gr. humidity difference)	764	Btuh
	Latent ventilation gain	0	Btuh
	Latent duct gain	0	Btuh
	Latent occupant gain (1 people @ 200 Btuh per person)	200	Btuh
	Latent other gain	0	Btuh
	Latent total gain	**964**	**Btuh**
	TOTAL GAIN	**12720**	**Btuh**

EQUIPMENT

1. Central Unit/Split	#(Outside) #(Inside)	18000 Btuh

*Key: Window types (Pn - Number of panes of glass)
(SHGC - Shading coefficient of glass as SHGC numerical value or as clear or tint)
(U - Window U-Factor or 'DEF' for default)
(InSh - Interior shading device: none(N), Blinds(B), Draperies(D) or Roller Shades(R))
(ExSh - Exterior shading device: none(N) or numerical value)
(BS - Insect screen: none(N), Full(F) or Half(H))
(Ornt - compass orientation)

Version 8
For Florida residences only

System Sizing Calculations - Summer

Residential Load - Room by Room Component Details

Project Title:
Equestrian Manager's Residence

Code Only
Professional Version
Climate: North

Reference City: Gainesville (Defaults) Summer Temperature Difference: 17.0 F 9/27/2007

This calculation is for Worst Case. The house has been rotated 225 degrees.

Component Loads for Zone #1: Main

Window	Type* Pn/SHGC/U/InSh/ExSh/IS	Ornt	Overhang Len	Overhang Hgt	Window Area(sqft) Gross	Shaded	Unshaded	HTM Shaded	HTM Unshaded	Load
1	2, Tint, 0.87, B-D, N,F	SW	1ft.	6ft.	30.0	4.1	25.9	16	33	912 Btuh
2	2, Tint, 0.87, B-D, N,F	NE	6ft.	6ft.	30.0	0.0	30.0	16	31	925 Btuh
3	2, Tint, 0.87, B-D, N,F	NE	6ft.	6ft.	30.0	0.0	30.0	16	31	925 Btuh
4	2, Tint, 0.87, B-D, N,F	NW	1ft.	6ft.	30.0	0.0	30.0	16	31	925 Btuh
5	2, Tint, 0.87, B-D, N,F	NW	1ft.	6ft.	30.0	0.0	30.0	16	31	925 Btuh
6	2, Tint, 0.87, B-D, N,F	SE	1ft.	6ft.	30.0	4.1	25.9	16	33	912 Btuh
	Window Total				180 (sqft)					5525 Btuh

Walls	Type	R-Value/U-Value	Area(sqft)	HTM	Load
1	Frame - Wood - Ext	13.0/0.09	770.0	2.1	1606 Btuh
	Wall Total		770 (sqft)		1606 Btuh
Doors	Type		Area (sqft)	HTM	Load
1	Insulated - Exterior		30.0	9.8	294 Btuh
	Door Total		30 (sqft)		294 Btuh
Ceilings	Type/Color/Surface	R-Value	Area(sqft)	HTM	Load
1	Vented Attic/Light/Metal	30.0	980.0	1.3	1311 Btuh
	Ceiling Total		980 (sqft)		1311 Btuh
Floors	Type	R-Value	Size	HTM	Load
1	Slab On Grade	0.0	117 (ft(p))	0.0	0 Btuh
	Floor Total		117.0 (sqft)		0 Btuh
			Zone Envelope Subtotal:		8736 Btuh

Infiltration	Type	ACH	Volume(cuft)	wall area(sqft)	CFM=	Load
	SensibleNatural	0.16	7840	770	20.9	389 Btuh
Internal gain		Occupants	Btuh/occupant		Appliance	Load
		1	X 230	+	2400	2630 Btuh
			Sensible Envelope Load:			11755 Btuh
Duct load	Average sealed, Supply(R6.0-Cond.), Return(R6.0-Cond)				(DGM of 0.000)	0 Btuh
					Sensible Zone Load	**11755 Btuh**

Manual J Summer Calculations

Residential Load - Component Details (continued)

Project Title:
Equestrian Manager's Residence

Code Only
Professional Version
Climate: North

9/27/2007

WHOLE HOUSE TOTALS

Whole House Totals for Cooling	**Sensible Envelope Load All Zones**	**11755 Btuh**
	Sensible Duct Load	0 Btuh
	Total Sensible Zone Loads	**11755 Btuh**
	Sensible ventilation	0 Btuh
	Blower	0 Btuh
	Total sensible gain	**11755 Btuh**
	Latent infiltration gain (for 54 gr. humidity difference)	764 Btuh
	Latent ventilation gain	0 Btuh
	Latent duct gain	0 Btuh
	Latent occupant gain (1 people @ 200 Btuh per person)	200 Btuh
	Latent other gain	0 Btuh
	Latent total gain	**964 Btuh**
	TOTAL GAIN	**12720 Btuh**

EQUIPMENT

1. Central Unit/Split	#(Outside) #(Inside)	18000 Btuh

*Key: Window types (Pn - Number of panes of glass)
(SHGC - Shading coefficient of glass as SHGC numerical value or as clear or tint)
(U - Window U-Factor or 'DEF' for default)
(InSh - Interior shading device: none(N), Blinds(B), Draperies(D) or Roller Shades(R))
(ExSh - Exterior shading device: none(N) or numerical value)
(BS - Insect screen: none(N), Full(F) or Half(H))
(Ornt - compass orientation)

Version 8
For Florida residences only

New Construction Subterranean Termite Soil Treatment Record

OMB Approval No. 2502-0525

This form is completed by the licensed Pest Control Company.

Public reporting burden for this collection of information is estimated to average 15 minutes per response, including the time for reviewing instructions, searching existing data sources, gathering and maintaining the data needed, and completing and reviewing the collection of information. This information is mandatory and is required to obtain benefits. HUD may not collect this information, and you are not required to complete this form, unless it displays a currently valid OMB control number.
Section 24 CFR 200.926d(b)(3) requires that the sites for HUD insured structures must be free of termite hazards. This information collection requires the builder to certify that an authorized Pest Control company performed all required treatment for termites, and that the builder guarantees the treated area against infestation for one year. Builders, pest control companies, mortgage lenders, homebuyers, and HUD as a record of treatment for specific homes will use the information collected. The information is not considered confidential.

This report is submitted for informational purposes to the builder on proposed (new) construction cases when soil treatment for prevention of subterranean termite infestation is specified by the builder, architect, or required by the lender, architect, FHA, or VA.

All contracts for services are between the Pest Control Operator and builder, unless stated otherwise. #26473

Section 1: General Information (Treating Company Information)

Company Name: Aspen Pest Control, Inc.
Company Address: 321 N.W. Cole Terrace, Suite 107 City Lake City State FL Zip 32055
Company Business License No. JB102476 Company Phone No. 386-755-3611 • 352-494-5751
FHA/VA Case No. (if any)

Section 2: Builder Information

Company Name: Edgely Const Company Phone No.

Section 3: Property Information

Location of Structure(s) Treated (Street Address or Legal Description, City, State and Zip) 950 SW Arlington Blvd Lake City

Type of Construction (More than one box may be checked) ☐ Slab ☐ Basement ☐ Crawl ☐ Other
Approximate Depth of Footing: Outside 12 Inside 12 Type of Fill Dirt

Section 4: Treatment Information

Date(s) of Treatment(s) 12-17-07
Brand Name of Product(s) Used B-Cu
EPA Registration No. 53493-149
Approximate Final Mix Solution % .02
Approximate Size of Treatment Area: Sq. ft. 1395 Linear ft. 177 Linear ft. of Masonry Voids 177
Approximate Total Gallons of Solution Applied 29
Was treatment completed on exterior? ☐ Yes ☐ No
Service Agreement Available? ☐ Yes ☐ No
Note: Some state laws require service agreements to be issued. This form does not preempt state law.

Attachments (List)

Comments

Name of Applicator(s) Dave Brennan Certification No. (if required by State law)

The applicator has used a product in accordance with the product label and state requirements. All treatment materials and methods used comply with state and federal regulations.

Authorized Signature Date 12-17-07

Warning: HUD will prosecute false claims and statements. Conviction may result in criminal and/or civil penalties. (18 U.S.C. 1001, 1010. 1012; 31 U.S.C. 3729, 3802)

Recorded Text #2581 from CROWNMAX : 1 800 352 4011

CERTIFICATE OF

OCCUPANCY

COLUMBIA COUNTY, FLORIDA

Department of Building and Zoning Inspection

This Certificate of Occupancy is issued to the below named permit holder for the building and premises at the below named location, and certifies that the work has been completed in accordance with the Columbia County Building Code.

Parcel Number 18-5S-17-09280-000 **Building permit No.** 000026473

Use Classification SFD,CARETAKERS HOME **Fire:** 85.47

Permit Holder DOUG EDGLEY **Waste:** 117.25

Owner of Building OAKS OF LAKE CITY,LLC. **Total:** 202.72

Location: 245 SW THEODORE O'CONNOR CIRCLE, LAKE CITY, FL

Date: 03/18/2008

Building Inspector

POST IN A CONSPICUOUS PLACE
(Business Places Only)

(OAKS of LAKE CITY)

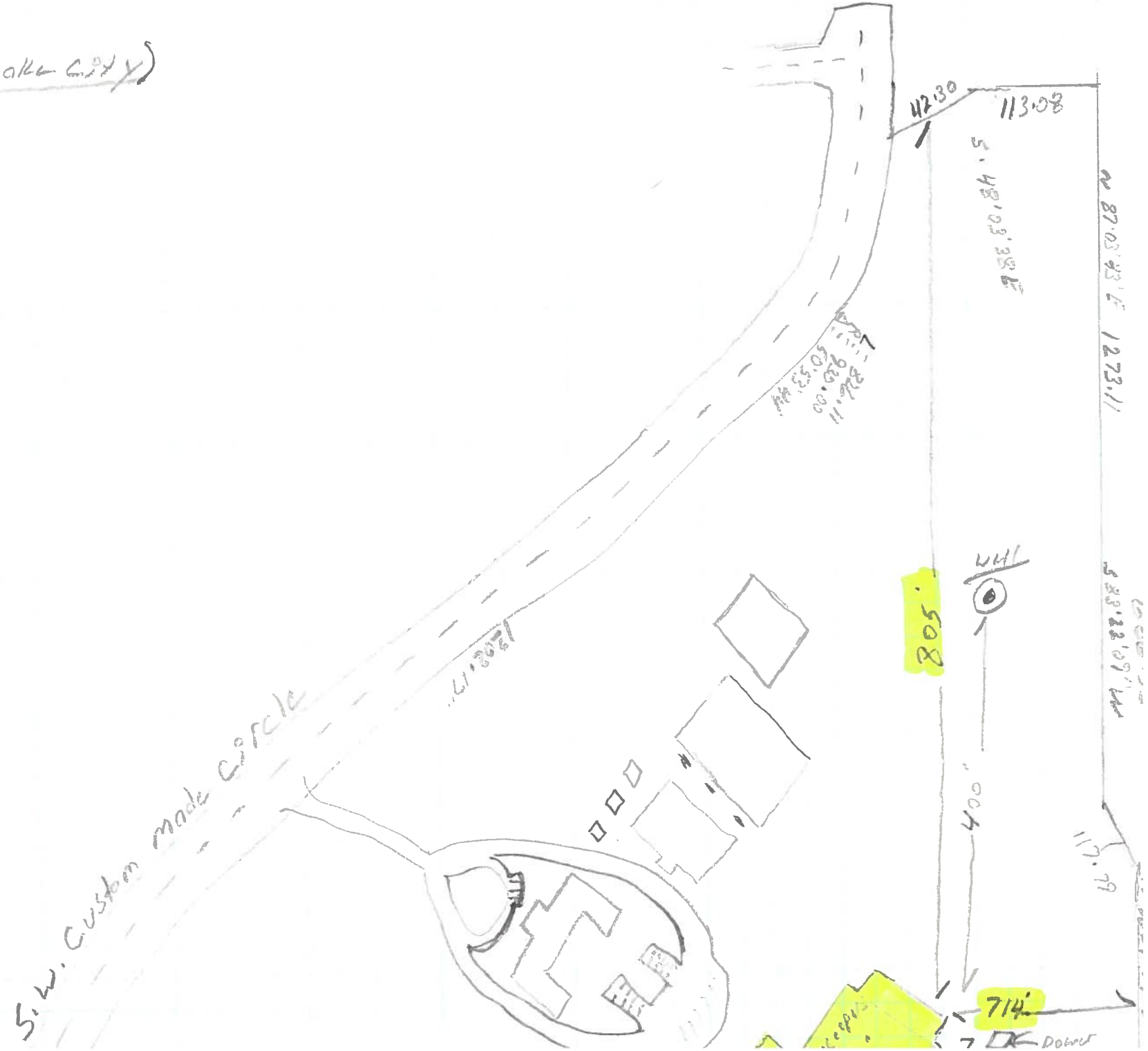

MIAMI-DADE

BUILDING CODE COMPLIANCE OFFICE (BCCO)
PRODUCT CONTROL DIVISION

MIAMI-DADE COUNTY, FLORIDA
METRO-DADE FLAGLER BUILDING
140 WEST FLAGLER STREET, SUITE 1603
MIAMI, FLORIDA 33130-1563
(305) 375-2901 FAX (305) 375-2908

NOTICE OF ACCEPTANCE (NOA)

MI Home Products, Inc.
650 West Market Street
Gratz, PA 17030

SCOPE:
This NOA is being issued under the applicable rules and regulations governing the use of construction materials. The documentation submitted has been reviewed by Miami-Dade County Product Control Division and accepted by the Board of Rules and Appeals (BORA) to be used in Miami Dade County and other areas where allowed by the Authority Having Jurisdiction (AHJ).

This NOA shall not be valid after the expiration date stated below. The Miami-Dade County Product Control Division (In Miami Dade County) and/or the AHJ (in areas other than Miami Dade County) reserve the right to have this product or material tested for quality assurance purposes. If this product or material fails to perform in the accepted manner, the manufacturer will incur the expense of such testing and the AHJ may immediately revoke, modify, or suspend the use of such product or material within their jurisdiction. BORA reserves the right to revoke this acceptance, if it is determined by Miami-Dade County Product Control Division that this product or material fails to meet the requirements of the applicable building code.

This product is approved as described herein, and has been designed to comply with the Florida Building Code, including the High Velocity Hurricane Zone.

DESCRIPTION: Series "BetterBilt D185SH/D3185SH" Aluminum Single Hung Window

APPROVAL DOCUMENT: Drawing No. **S-2422,** titled "Non-Impact Single Hung Window Rectangle Circle Top & Oriel", sheets 1 through 5 of 5, prepared by RW Building Consultants, inc, dated 10/27/03 with revision "2", dated 02/10/04, signed and sealed by Wendell Haney, P.E., bearing the Miami-Dade County Product Control Approval stamp with the Notice of Acceptance number and approval date by the Miami-Dade County Product Control Division.

MISSILE IMPACT RATING: None

LABELING: Each unit shall bear a permanent label with the manufacturer's name or logo, city, state and following statement: "Miami-Dade County Product Control Approved", unless otherwise noted herein.

RENEWAL of this NOA shall be considered after a renewal application has been filed and there has been no change in the applicable building code negatively affecting the performance of this product.

TERMINATION of this NOA will occur after the expiration date or if there has been a revision or change in the materials, use, and/or manufacture of the product or process. Misuse of this NOA as an endorsement of any product, for sales, advertising or any other purposes shall automatically terminate this NOA. Failure to comply with any section of this NOA shall be cause for termination and removal of NOA.

ADVERTISEMENT: The NOA number preceded by the words Miami-Dade County, Florida, and followed by the expiration date may be displayed in advertising literature. If any portion of the NOA is displayed, then it shall be done in its entirety.

INSPECTION: A copy of this entire NOA shall be provided to the user by the manufacturer or its distributors and shall be available for inspection at the job site at the request of the Building Official.
This NOA consists of this page 1 and evidence page E-1, as well as approval document mentioned above.
The submitted documentation was reviewed by **Theodore Berman, P.E.**

2/13/2003

PRODUCT CONTROL ACCEPTED

NOA No 03-1215.02
Expiration Date: March 04, 2009
Approval Date: March 04, 2004

MI Home Products, Inc.

NOTICE OF ACCEPTANCE: EVIDENCE SUBMITTED

A. DRAWINGS

1. Manufacturer's die drawings and sections.
2. Drawing No. **S-2422,** titled "Non-Impact Single Hung Window Rectangle Circle Top & Oriel", sheets 1 through 5 of 5, prepared by RW Building Consultants, inc, dated 10/27/03 with revision "2", dated 02/10/04, signed and sealed by Wendell Haney, P.E.

B. TESTS

1. Test reports on 1) Air Infiltration Test, per FBC, TAS 202-94
   2) Uniform Static Air Pressure Test, Loading per FBC, TAS 202-94
   3) Water Resistance Test, per FBC, TAS 202-94
   4) Forced Entry Test, per FBC 2411.3.2.1 and TAS 202-94

   along with marked-up drawings and installation diagram of an aluminum single hung window, prepared by Architectural Testing, Inc., Test Report No. **ATI 03056**, dated 11/11/03, signed by Joseph A. Reed, P.E.

C. CALCULATIONS

1. Anchor Calculations, ASTM-E1300-98, and structural analysis, prepared by R.W. Building Consultants, Inc., dated 12/11/03, signed and sealed by Lyndon F. Schmidt, P.E.
2. Revised Anchor Calculations, and structural analysis, prepared by R.W. Building Consultants, Inc., dated 02/10/04, signed and sealed by Lyndon F. Schmidt, P.E.

D. QUALITY ASSURANCE

1. Miami Dade Building Code Compliance Office (BCCO).

E. MATERIAL CERTIFICATIONS

1. None.

F. STATEMENTS

1. Statement letter of conformance and no financial interest, dated December 09, 2003, signed and sealed by Lyndon F. Schmidt, P.E.
2. Statement letter of no financial interest with the laboratory that performed the Test Report No. **ATI 03056**, dated November 08, 2003, signed by Stu White, Design Engineering Manager.

G. OTHER

1. Letter from the consultant stating that the product is in compliance with the Florida Building Code (FBC).

Theodore Berman, P.E.
Deputy Director, Product Control Division
NOA No 03-1215.02
Expiration Date: March 04, 2009
Approval Date: March 04, 2004

MI HOME PRODUCTS

650 WEST MARKET STREET • GRATZ, PA • 17030-0370

SERIES BETTERBILT D185SH/D3185SH ALUMINUM SINGLE HUNG WINDOW

GENERAL NOTES:

1. THIS PRODUCT IS DESIGNED TO COMPLY WITH THE "HVHZ" OF THE FLORIDA BUILDING CODE.
2. WOOD BUCKS MUST BE ANCHORED PROPERLY TO TRANSFER LOADS TO STRUCTURE AND TO BE REVIEWED BY BUILDING OFFICIAL.
3. PRODUCT ANCHORS SHALL BE AS LISTED AND SPACED AS SHOWN ON DETAILS. ANCHOR EMBEDMENT TO BASE MATERIAL SHALL BE BEYOND WALL DRESSING OR STUCCO.
4. FOR DESIGN PRESSURE RATING SEE TABLE THIS SHEET.
5. INSTALLATION OF THIS SYSTEM IN HVHZ AREA REQUIRES THE USE OF APPROVED SHUTTER/EXTERNAL PROTECTION DEVICE COMPLYING WITH HVHZ REQUIREMENTS; INSTALLATION OF THIS SYSTEM OUTSIDE OF HVHZ SHALL MEET THE APPLICABLE CODE REQUIREMENTS FOR WINDBORNE DEBRIS PROTECTION.
6. THIS PRODUCT MEETS WATER REQUIREMENTS FOR HIGH VELOCITY HURRICANE ZONES.

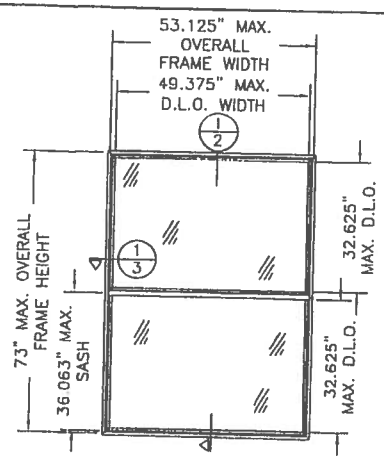

53" x 73" SINGLE HUNG WINDOW

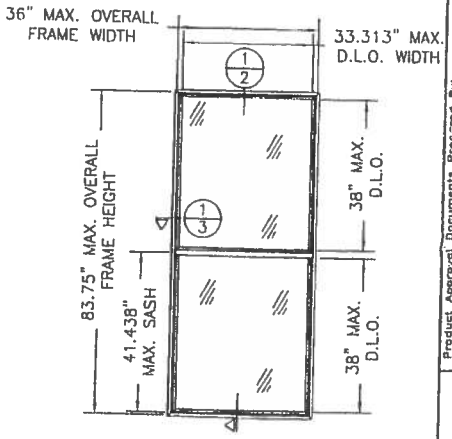

37" x 84" SINGLE HUNG WINDOW

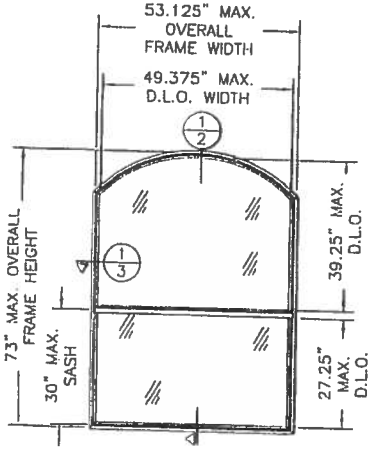

53" x 73" SINGLE HUNG WINDOW
CIRCLE TOP ORIEL

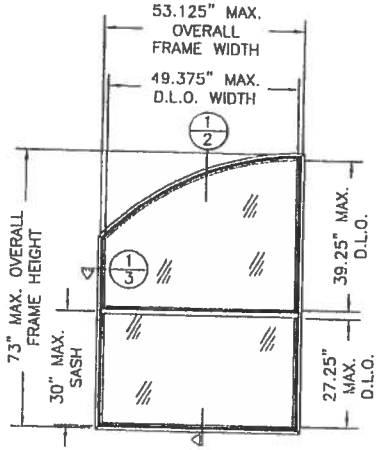

53" x 73" SINGLE HUNG WINDOW
HALF CIRCLE TOP ORIEL

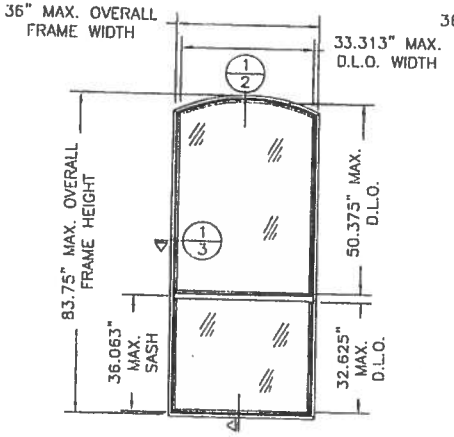

37" x 84" SINGLE HUNG WINDOW
CIRCLE TOP ORIEL

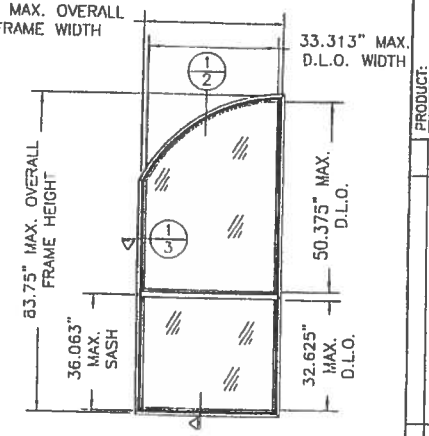

37" x 84" SINGLE HUNG WINDOW
HALF CIRCLE TOP ORIEL

TABLE OF CONTENTS

SHEET #	DESCRIPTION
1	GENERAL NOTES & TYPICAL ELEVATIONS
2	VERTICAL CROSS SECTIONS
3	HORIZONTAL CROSS SECTIONS & GLAZING DETAIL
4	ANCHORING LOCATIONS
5	COMPONENTS, BILL OF MATERIALS

DESIGN PRESSURE RATINGS (PSF)

GLASS	MAX. SIZE	DP POS.	DP NEG.
1/8" Temp.	OA 53" x 73"	+56.7	-69.3
1/8" Temp.	OA 37" x 84"	+56.7	-69.3
3/16" Ann.	OA 53" x 73"	+42.0	-42.0
3/16" Ann.	OA 37" x 84"	+56.7	-58.0

ALL ELEVATIONS ARE VIEWED FROM EXTERIOR

Approved as complying with the Florida Building Code
Date 02-10-04
NOA# 02-1215.02
Miami-Dade Product Control Division
By: Gerardo Gerner

Product Approval Documents Prepared By:
RW BUILDING CONSULTANTS, INC.
P.O. Box 230 Valrico FL 33595
Phone No.: 813.659.9197
Florida Board of Professional Engineers Certificate of Authorization No. 9813
Wendell Hess, P.E. NO. 54158
2/10/04

PRODUCT: NON-IMPACT SINGLE HUNG WINDOW RECTANGLE, CIRCLE TOP & ORIEL

PART OR ASSEMBLY: GENERAL NOTES & TYPICAL ELEVATIONS

NO.	DATE	REVISIONS	BY
2	2/10/04	CORRECT DP TABLE	RW
1	01/04	REVISED PER DADE LETTER	WH

DATE: 10/27/03
SCALE: N.T.S
DWG BY: TJH
CHK. BY: RW
DRAWING NO.: S-2422
SHEET 1 OF 5

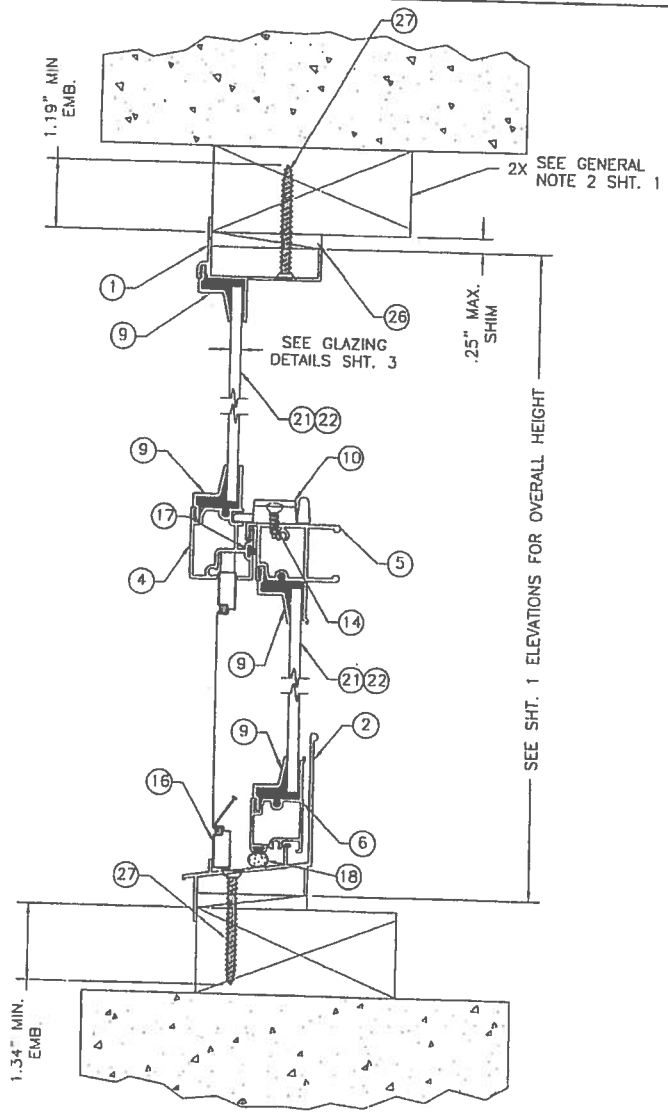

1/2 VERTICAL CROSS SECTION W/2X BUCK

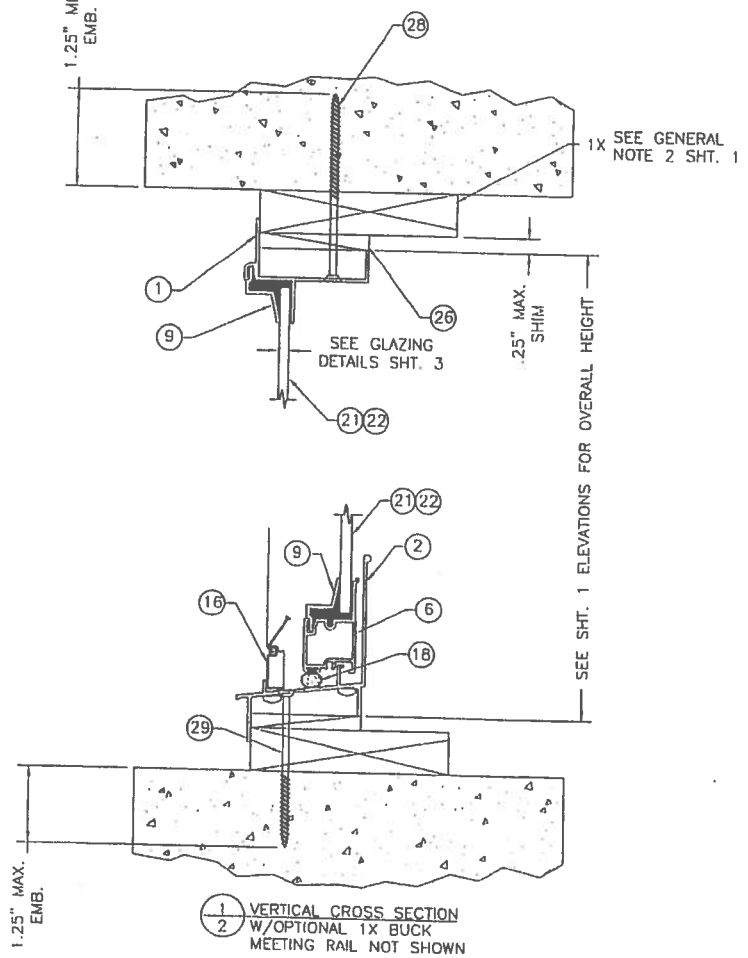

1/2 VERTICAL CROSS SECTION W/OPTIONAL 1X BUCK MEETING RAIL NOT SHOWN

Approved as complying with the Florida Building Code
Date 03/04/04
NOA# 03-1215.02
Miami-Dade Product Control
Division
By

Product Approval Documents Prepared By:
RW BUILDING CONSULTANTS, INC.
P.O. Box 230 Valrico FL 33595
Phone No.: 813.659.9197
Florida Board of Professional Engineers
Certificate of Authorization No. 9813
Wendell Hess, P.E. No. 54128
2/10/04

PRODUCT: NON-IMPACT SINGLE HUNG WINDOWS RECTANGLE, CIRCLE TOP & OREIAL

PART OR ASSEMBLY: VERTICAL CROSS SECTIONS

NO.	DATE	REVISIONS	BY
2	2/10/04	CORRECT DP TABLE	RW
1	01/04	REVISED PER DADE LETTER	WH

DATE: 10/27/03
SCALE: N.T.S.
DWG. BY: TJH
CHK. BY: RW
DRAWING NO.: S-2422
SHEET 2 OF 5

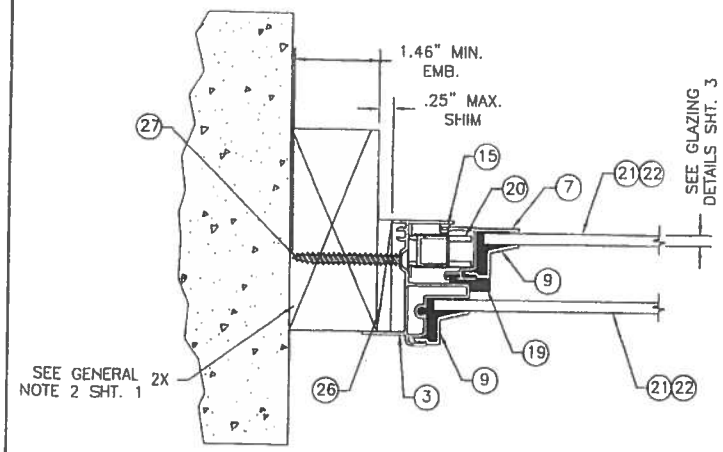

1/3 HORIZONTAL CROSS SECTION
W/2X BUCK

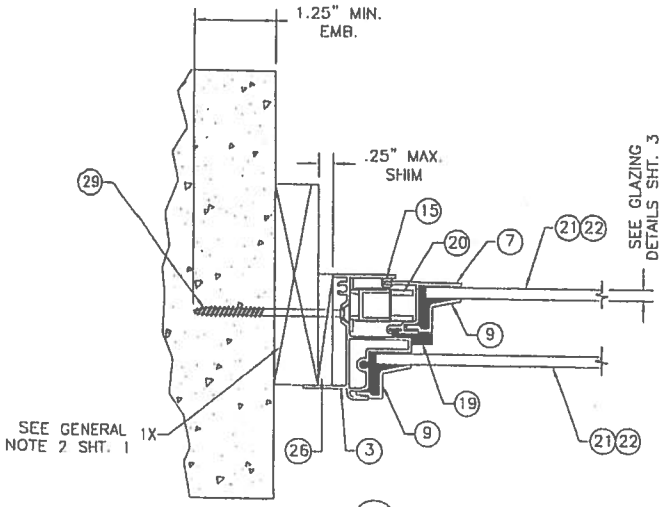

1/3 HORIZONTAL CROSS SECTION
W/1X BUCK

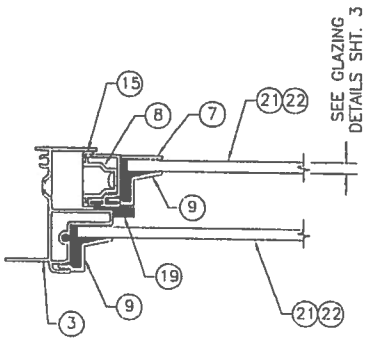

1/3 HORIZONTAL CROSS SECTION
SHOWING SASH CAM
MASONRY & BUCK NOT SHOWN

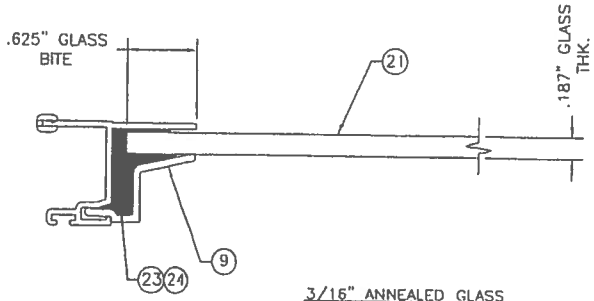

3/16" ANNEALED GLASS
GLAZING DETAIL
GLASS TYPE "A"

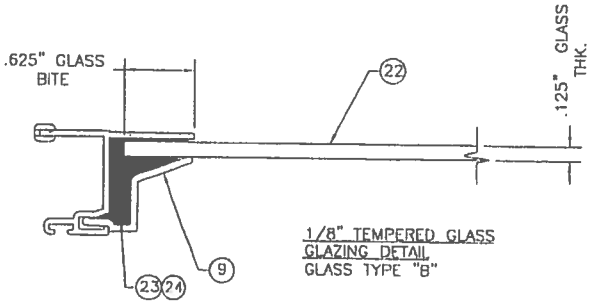

1/8" TEMPERED GLASS
GLAZING DETAIL
GLASS TYPE "B"

NOTES:

1. THE MAIN FRAME HEAD, SIDES AND SILL ARE CONNECTED TOGETHER AT EACH CORNER WITH (2) ITEM #11, A #8 x 3/4" PHILLIPS PAN HEAD SCREW. THE SCREWS RUN FROM THE HEAD DOWN INTO THE SIDES AND FROM THE SILL UP INTO THE SIDES.
2. THE FIXED MEETING RAIL IS SECURED TO THE SIDES WITH (2) EACH SIDE ITEM #12, A #8 x 1 1/4" PHILLIPS PAN HEAD SCREW.
3. THE SASH CORNERS ARE CONNECTED TOGETHER WITH (2) EACH CORNER ITEM #13, A #6 x 3/4" PHILLIPS PAN HEAD SCREW.

Approved as complying with the
Florida Building Code
Date 03/04/04
NOA# 02-1215.02
Miami-Dade Product Control
Division
By

Product Approval Documents Prepared By:

PRODUCT:

DATE
SCAL
DWG
CHK
DRAW
SHEE

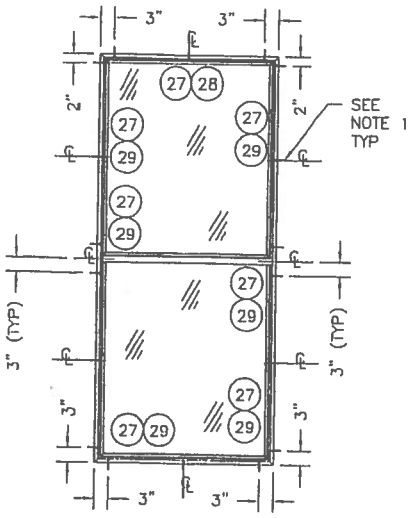

37" x 84" SINGLE HUNG WINDOW

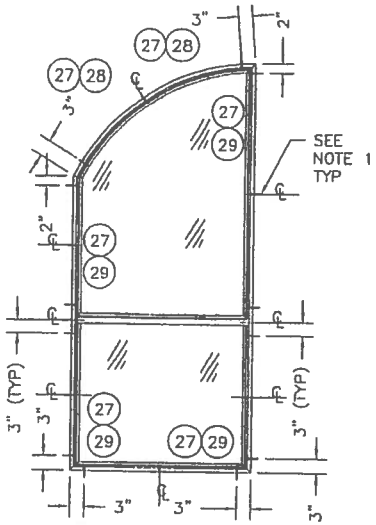

37" x 84" SINGLE HUNG WINDOW
HALF CIRCLE TOP ORIEL

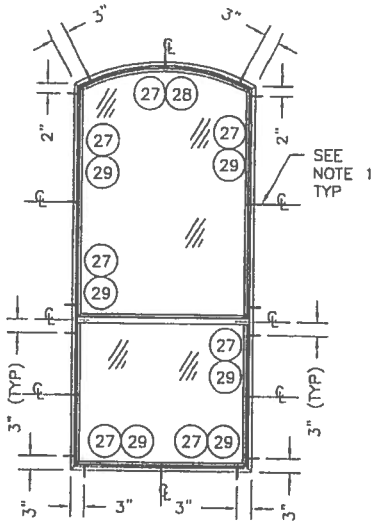

37" x 84" SINGLE HUNG WINDOW
CIRCLE TOP ORIEL

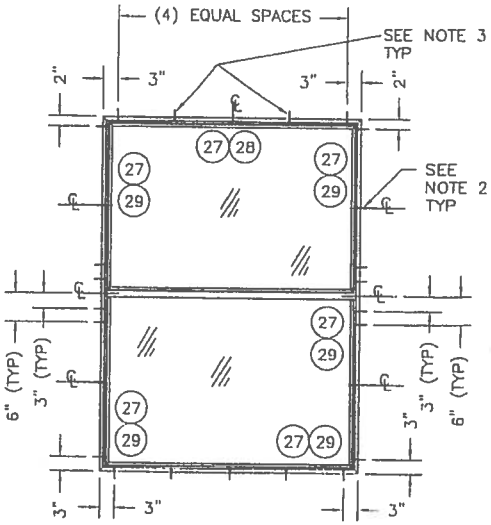

53" x 73" SINGLE HUNG WINDOW

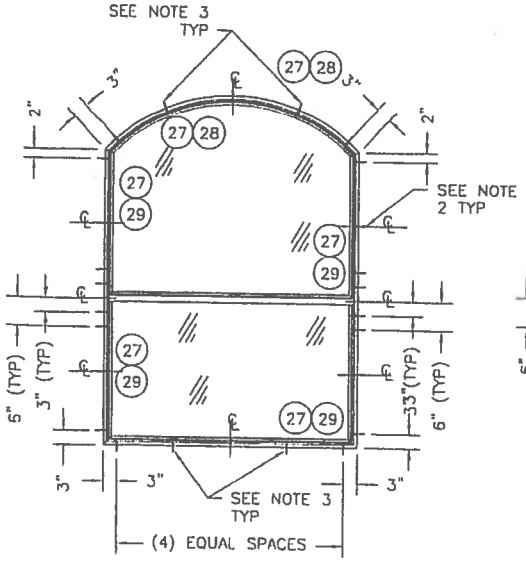

53" x 73" SINGLE HUNG WINDOW
CIRCLE TOP ORIEL

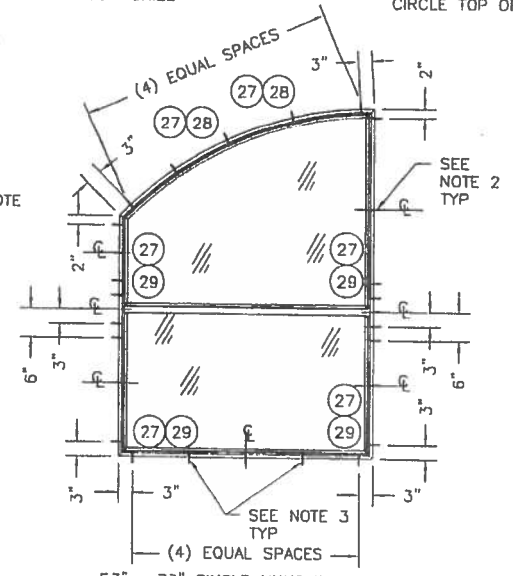

53" x 73" SINGLE HUNG WINDOW
HALF CIRCLE TOP ORIEL

NOTES:

1. FOR UNITS SMALLER THAN 30"x60" DO NOT INSTALL ANCHOR AT CENTER LOCATION.
2. FOR UNITS SMALLER THAN 53"x60" OR SMALLER THAN 30"x66" DO NOT INSTALL ANCHOR AT CENTER LOCATION.
3. FOR UNITS SMALLER THAN 36"x66" DO NOT INSTALL ANCHORS AT EITHER SIDE OF CENTER ANCHOR AT HEAD AND SILL JAMBS.

Approved as complying with the Florida Building Code
Date 05/04/04
NOA# 03-1121.02
Miami-Dade Product Control
Division
By

BILL OF MATERIALS		
ITEM	DESCRIPTION	MATERIAL
1	EXTRUDED ALUMINUM SINGLE HUNG 1/2" HEAD #CM-18501 BY MI METALS	ALUM.
2	EXTRUDED ALUMINUM SINGLE HUNG 1/2" SILL #CM-18502 BY MI METALS	ALUM.
3	EXTRUDED ALUMINUM SINGLE HUNG 1/2" JAMB #CM-18503 BY MI METALS	ALUM.
4	EXTRUDED ALUMINUM SINGLE HUNG FIXED MEETING RAIL #CM-18504 BY MI METALS	ALUM.
5	EXTRUDED ALUMINUM SINGLE HUNG SASH LOCK RAIL #CM-18505 BY MI METALS	ALUM.
6	EXTRUDED ALUMINUM SINGLE HUNG SASH BOTTOM RAIL #CM-18506 BY MI METALS	ALUM.
7	EXTRUDED ALUMINUM SINGLE HUNG SASH STILE #CM-18507 BY MI METALS	ALUM.
8	SASH CAM #I-185 BY BSI	–
9	GLAZING BEAD #V-185 BY MI PLASTICS	–
10	LOCK #30240-402 BY REFLECTOLITE	–
11	MAIN FRAME SCREW #8 x 3/4" PHHILLIPS PAN HEAD	STEEL
12	MEETING RAIL SCREW #8 x 1 1/4" PHILLIIPS PAN HEAD	STEEL
13	SASH SCREW #6 x 3/4" PHILLIPS PAN HEAD	STEEL
14	LOCK SCREW #8 x 5/8" PHILLIPS FLAT HEAD -PTD	STEEL
15	SASH GUIDE #80-02-8207 BY PLASTICS, AZ	–
16	WINDOW SCREEN	–
17	FIN WEATHERSTRIPPING .187" x .250" BY AMESBURY	–
18	BULB SEAL #32002 BY AMESBURY	–
19	DUST PLUG 5/8" x 7/8" x .25" BY AMESBURY	–
20	5/8" BLOCK & TACKLE 150 SERIES BY BSI	–
21	GLASS "A" SGL GLAZED 3/16" ANN. BY GUARDIAN	–
22	GLASS "B" SGL GLAZED 1/8" TEMP. BY GUARDIAN	–
23	BACKBEDDING #SM-2100 BY SCHNEE MOREHEAD	SILICONE
24	BACKBEDDING PURFECTGLAZE-H (HOTMELT)	–
25	GLASS SHIM 1/8" x 1/4" x 1" BY SECON	–
26	1/4" MAX SHIM	–
27	#12 X 2" PHILLIPS FLAT HEAD SHEET METAL SCREW	STEEL
28	3/16" x 3 1/4" ELCO TAPCON ANCHOR	STEEL
29	3/16 x 2 3/4" ELCO TAPCON ANCHOR	STEEL

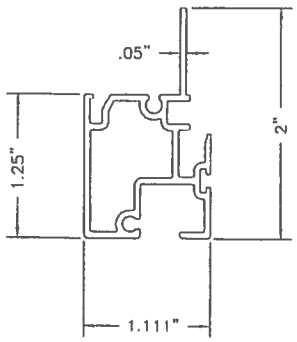

④ FIXED MEETING RAIL

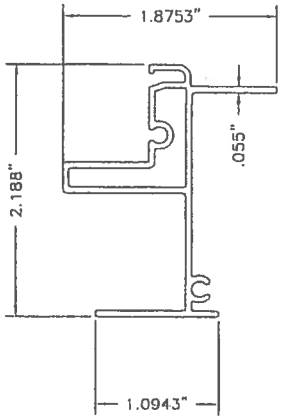

③ JAMB-FLANGE

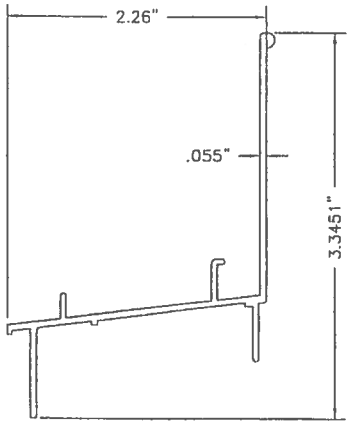

② SILL FIN

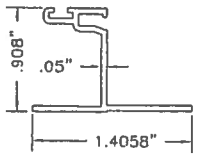

⑦ SASH STILE

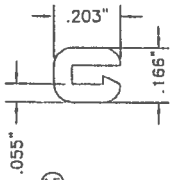

⑮ SASH GUIDE

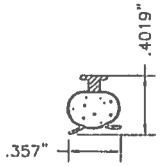

⑱ BULB SEAL

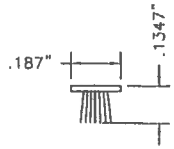

⑰ FIN WEATHERSTRIPPING

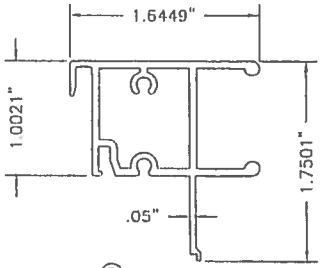

⑤ LOCK RAIL

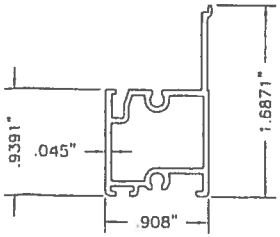

⑥ SASH BOTTOM RAIL

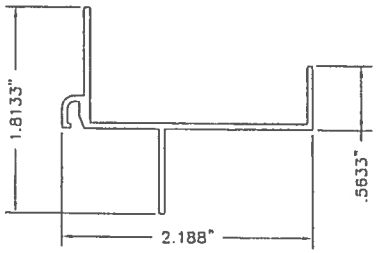

① HEAD FLANGE

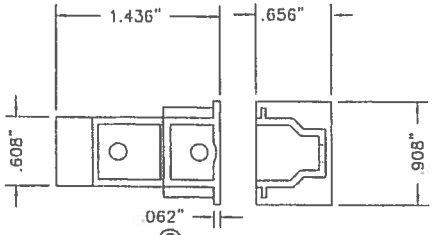

⑧ SASH CAM

Approved as complying with the Florida Building Code
Date 09/04/09
NOA# 03-1215.02
Miami Dade Product Control
Division
By

Product Approval Documents Prepared By:
RW BUILDING CONSULTANTS, INC.
P.O. Box 230 Valrico, FL. 33595
Phone No.: 813.659.9197

PRODUCT: NON-IMPACT SINGLE HUNG WINDOWS RECTANGLE, CIRCLE TOP & OREIAL

DATE: 10/
SCALE:
DWG. BY:
CHK. BY:
DRAWING NO
S-
SHEET 5

Summary Energy Code Results

Residential Whole Building Performance Method A

Project Title:
Equestrian Manager's Residence

Code Only
Professional Version
Climate: North

9/27/2007

Building Loads			
Base		As-Built	
Summer:	**12143 points**	Summer:	**12359 points**
Winter:	**9248 points**	Winter:	**11778 points**
Hot Water:	**4848 points**	Hot Water:	**4848 points**
Total:	**26240 points**	Total:	**28986 points**

Energy Use			
Base		As-Built	
Cooling:	**3947 points**	Cooling:	**3027 points**
Heating:	**5123 points**	Heating:	**4880 points**
Hot Water:	**5270 points**	Hot Water:	**5158 points**
Total:	**14340 points**	Total:	**13065 points**

PASS
e-Ratio: 0.91

EnergyGauge®(Version: FLRCPB v4.5)

MIAMI-DADE

BUILDING CODE COMPLIANCE OFFICE (BCCO)
PRODUCT CONTROL DIVISION

MIAMI-DADE COUNTY, FLORIDA
METRO-DADE FLAGLER BUILDING
140 WEST FLAGLER STREET, SUITE 1603
MIAMI, FLORIDA 33130-1563
(305) 375-2901 FAX (305) 375-2908

NOTICE OF ACCEPTANCE (NOA)

Therma-Tru Corporation
108 Mutzfeld Rd.
Butler, IN 46721

SCOPE:

This NOA is being issued under the applicable rules and regulations governing the use of construction materials. The documentation submitted has been reviewed by Miami-Dade County Product Control Division and accepted by the Board of Rules and Appeals (BORA) to be used in Miami Dade County and other areas where allowed by the Authority Having Jurisdiction (AHJ).

This NOA shall not be valid after the expiration date stated below. The Miami-Dade County Product Control Division (In Miami Dade County) and/or the AHJ (in areas other than Miami Dade County) reserve the right to have this product or material tested for quality assurance purposes. If this product or material fails to perform in the accepted manner, the manufacturer will incur the expense of such testing and the AHJ may immediately revoke, modify, or suspend the use of such product or material within their jurisdiction. BORA reserves the right to revoke this acceptance, if it is determined by Miami-Dade County Product Control Division that this product or material fails to meet the requirements of the applicable building code.

This product is approved as described herein, and has been designed to comply with the High Velocity Hurricane Zone of the Florida Building Code.

DESCRIPTION: Premium Series 6'8 Opaque Steel Door w & wo sidelites (OS)

APPROVAL DOCUMENT: Drawing No. S-2149, titled ""Premium Series" 6-8 Single & Double Out-swing Steel Door", sheets 1 through 8, prepared by RW Building Consultants, Inc., dated 3/28/02, bearing the Miami-Dade County Product Control Approval stamp with the Notice of Acceptance number and approval date by the Miami-Dade County Product Control Division.

MISSILE IMPACT RATING: Large and Small Missile Impact and Non-Impact

LABELING: Each unit shall bear a permanent label with the manufacturer's name or logo, city, state and following statement: "Miami-Dade County Product Control Approved", unless otherwise noted herein.

RENEWAL of this NOA shall be considered after a renewal application has been filed and there has been no change in the applicable building code negatively affecting the performance of this product.

TERMINATION of this NOA will occur after the expiration date or if there has been a revision or change in the materials, use, and/or manufacture of the product or process. Misuse of this NOA as an endorsement of any product, for sales, advertising or any other purposes shall automatically terminate this NOA. Failure to comply with any section of this NOA shall be cause for termination and removal of NOA.

ADVERTISEMENT: The NOA number preceded by the words Miami-Dade County, Florida, and followed by the expiration date may be displayed in advertising literature. If any portion of the NOA is displayed, then it shall be done in its entirety.

INSPECTION: A copy of this entire NOA shall be provided to the user by the manufacturer or its distributors and shall be available for inspection at the job site at the request of the Building Official.

The submitted documentation was reviewed by **Raul Rodriguez**

PRODUCT CONTROL ACCEPTED

THERMA-TRU®

"PREMIUM SERIES" OUTSWING 6-8 SINGLE AND DOUBLE W/& W/OUT SIDELITES. INSULATED STEEL DOOR WITH WOOD FRAMES.

GENERAL NOTES

1. THIS PRODUCT IS DESIGNED TO MEET THE SOUTH FLORIDA BUILDING CODE 1994 EDITION FOR MIAMI-DADE COUNTY.
2. WOOD BUCKS BY OTHERS, MUST BE ANCHORED PROPERLY TO TRANSFER LOADS TO THE STRUCTURE.
3. PRODUCT ANCHORS SHALL BE AS LISTED AND SPACED AS SHOWN ON DETAILS. ANCHOR EMBEDMENT TO BASE MATERIAL SHALL BE BEYOND WALL DRESSING OR STUCCO.
4. DESIGNED PRESSURE RATING SEE TABLE PAGE 1.
5. MIAMI-DADE APPROVED IMPACT RESISTANT SHUTERS ARE REQUIRED FORE SIDELITES ONLY.
6. SIDELIES ARE AN OPTION AND CAN BE USED IN A SINGLE OR DOUBLE CONFIGURATION.
7. LOW PROFILE OUTSWING BUMP THRESHOLD RATED FOR +55.0 PSF & -55.0 PSF ON WATER FOR SINGLEUNITS.

INSULATED STEEL DOOR
(Common to all frame conditions)

Door & Sidelite Panel Construction:

Face sheets: 24 GA.(0.022")minimum thickness, Galvanized steel A-525 commercial quality - AKDQ per ASTM 620 with yield strength Fy(min.)=38,438 psi

Core design: Polyurethane foam core, with1.9 lbs. density by BASF.

Door Panel Construction: Flush or embossed type. The vertical edges of the skin, rolled formed to provide a mechanical interlock with finger jointed pine stiles. Wood end rails are butt jointed and pressure filled with contact cement to the wood stiles at the corners.

Sidelite Panel Construction and Glazing: The vertical edges of the skin are rolled formed to provide a mechanical interlock with finger jointed pine stiles. Wood end rails are butt jointed to the wood stiles at the corners. The sidelite panels are sandwich glazed using a two piece lite frame.

Frame Construction: The frame is constructed from finger jointed Ponderosa Pine measuring 4.656" wide x 1.25" thick. The header is joined to the side jambs with (3) 16ga. 1/2" crown x 2" long staples at each side. The threshold is joined to the side jambs with (2) 16ga. 1/2" crown x 2.5" long staples at each side. The mullions are secured together in a sidelite application using #8 x 2 1/2" long PFH Wood Screws (6) screws per each mullion. The unit uses an Outswing Bumpface threshold, either Low Profile or High Water Dam.

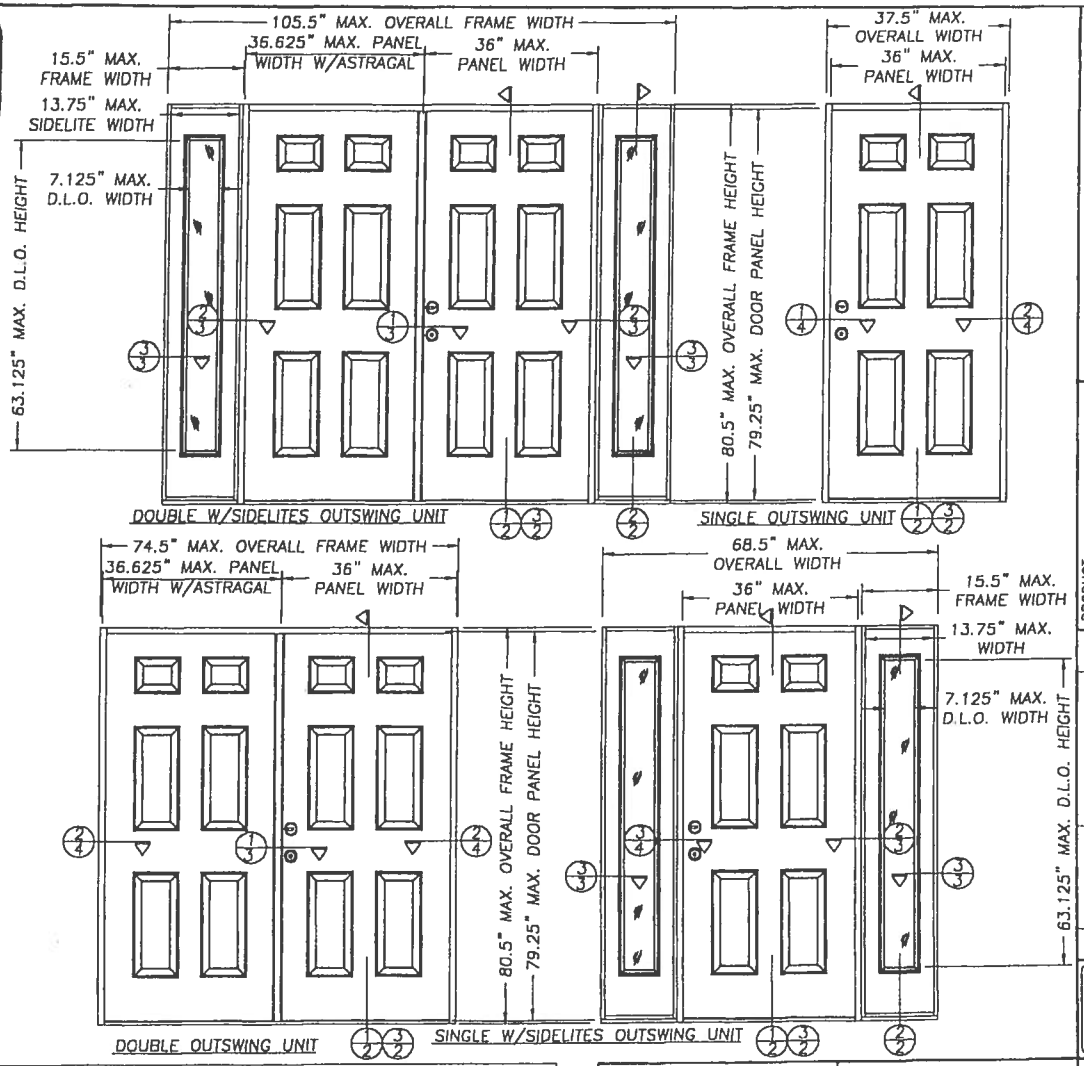

TABLE OF CONTENTS	
SHEET #	DESCRIPTION
1	TYPICAL ELEVATIONS & GENERAL NOTES
2	VERTICAL CROSS SECTIONS
3	HORIZONTAL CROSS SECTIONS
4	HORIZONTAL CROSS SECTIONS & NOTES
5	ANCHORING LOCATIONS & DETAILS
6	ANCHORING LOCATIONS & GLAZING DETAILS
7	UNIT COMPONENTS
8	BILL OF MATERIALS & UNIT COMPONENTS

DESIGN PRESSURE RATING		
UNIT TYPE	W/LOW PROFILE BUMP THRESHOLD	W/HIGH DAM BUMP THRESHOLD
SINGLE	+ 55.0 PSF - 67.0 PSF	+ 75.0 PSF - 75.0 PSF
DOUBLE	NOT APPROVED FOR WATER	+ 65.0 PSF - 65.0 PSF
SINGLE W/SIDELITES	+ 55.0 PSF - 67.0 PSF	+ 65.0 PSF - 65.0 PSF
DOUBLE W/SIDELITES	NOT APPROVED FOR WATER	+ 65.0 PSF - 65.0 PSF

Approved as complying with the Florida Building Code
Date June 20, 2002
NOA# 01-0828.04
Miami Dade Product Control Division
By

THERMA-TRU®
108 MUTZFELD Rd.
BUTLER, IN 46721
PH. (219) 868-5811

PRODUCT: "PREMIUM SERIES" 6-8 SINGLE & DOUBLE OUT-SWING STEEL DOOR

PART OR ASSEMBLY: TYPICAL ELEVATIONS & GENERAL NOTES

NO.	DATE	REVISIONS	BY
1	3/28/02	GENERAL REVISION	WLN

RW BUILDING CONSULTANTS, INC.
813.684.3831

DATE: 08/08/01
SCALE: N.T.S.
DWG. BY: TJH
CHK. BY: RW
DRAWING NO.: S-2149
SHEET 1 OF 8

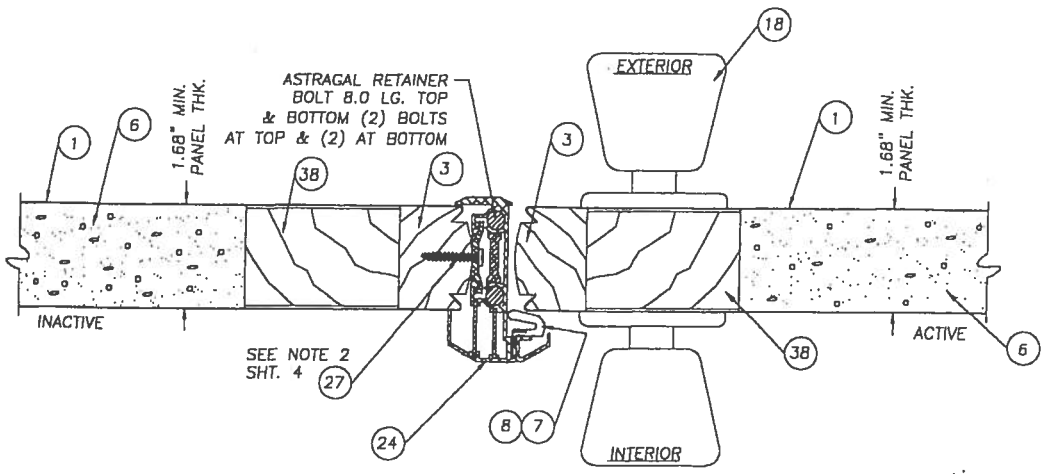

1/3 HORIZONTAL CROSS SECTION @ ASTRAGAL

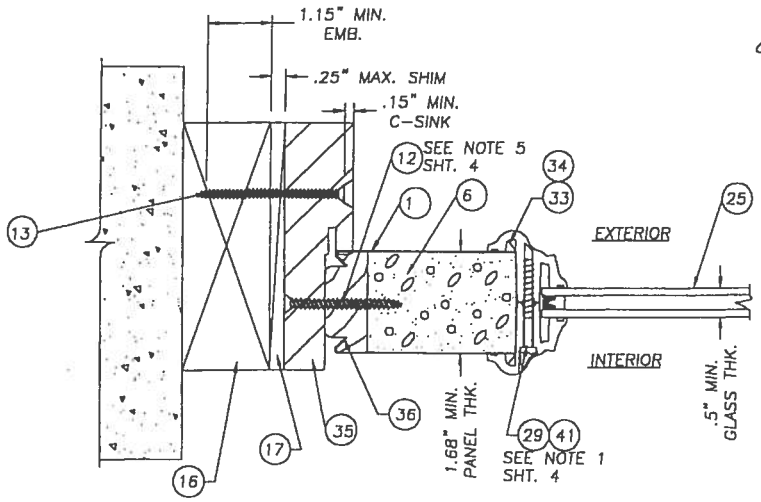

3/3 HORIZONTAL CROSS SECTION @ SIDELITE TO BUCK

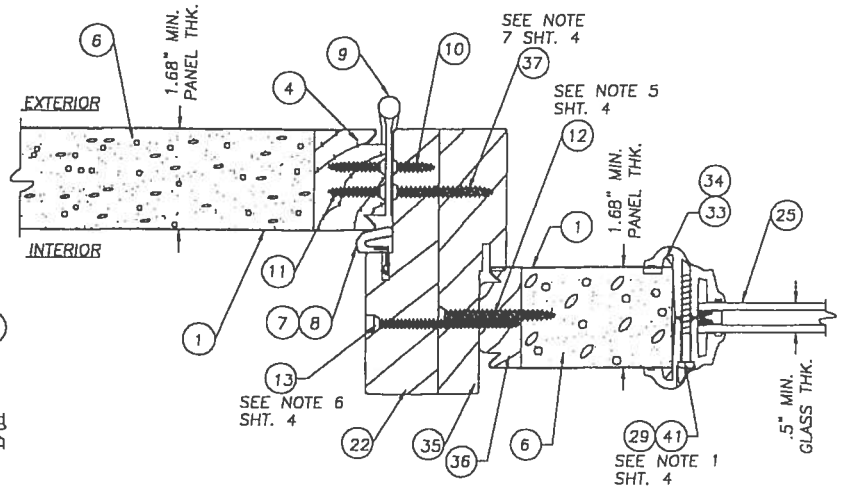

2/3 HORIZONTAL CROSS SECTION @ HINGE JAMB TO SIDELITE

Approved as complying with the Florida Building Code
Date June 20, 2002
NOA# 01-0528.06
Miami Dade Product Control Division
By

THERMA TRU®
108 MUTZFELD Rd.
BUTLER, IN 46721
PH. (219) 868-5811

PRODUCT: "PREMIUM SERIES" 6-8 SINGLE & DOUBLE OUT-SWING STEEL DOOR

PART OR ASSEMBLY: HORIZONTAL CROSS SECTIONS

NO.	DATE	GENERAL REVISION	WUN BY
1	3/28/02		

REVISIONS

RW BUILDING CONSULTANTS, INC. 813.684.3831

DATE: 08/08/01
SCALE: 1/2" = 1"
DWG. BY: TJH
CHK. BY: RW
DRAWING NO.: S-2149
SHEET 3 OF 8

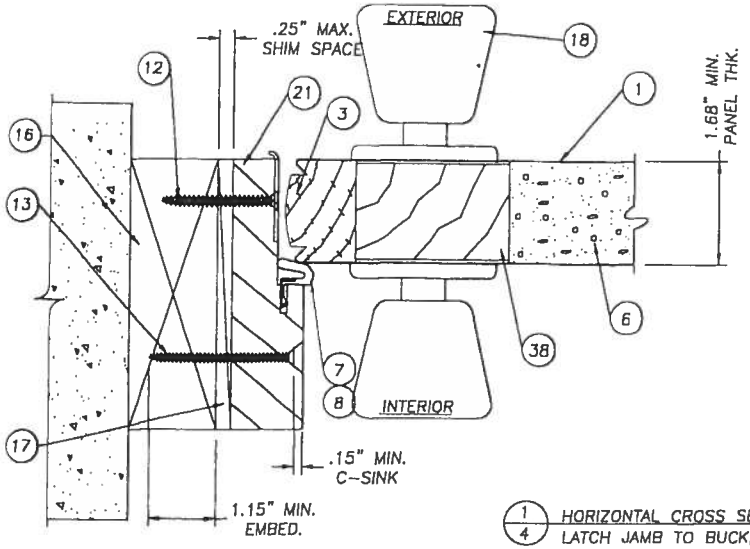

1/4 HORIZONTAL CROSS SECTION
LATCH JAMB TO BUCK,

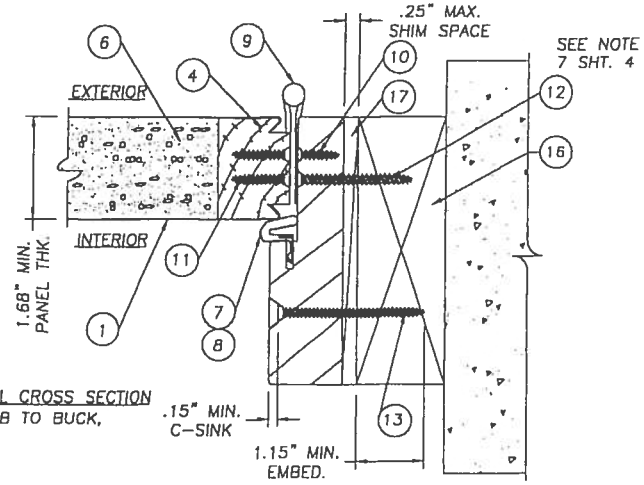

2/4 HORIZONTAL CROSS SECTION
HINGE JAMB TO BUCK,

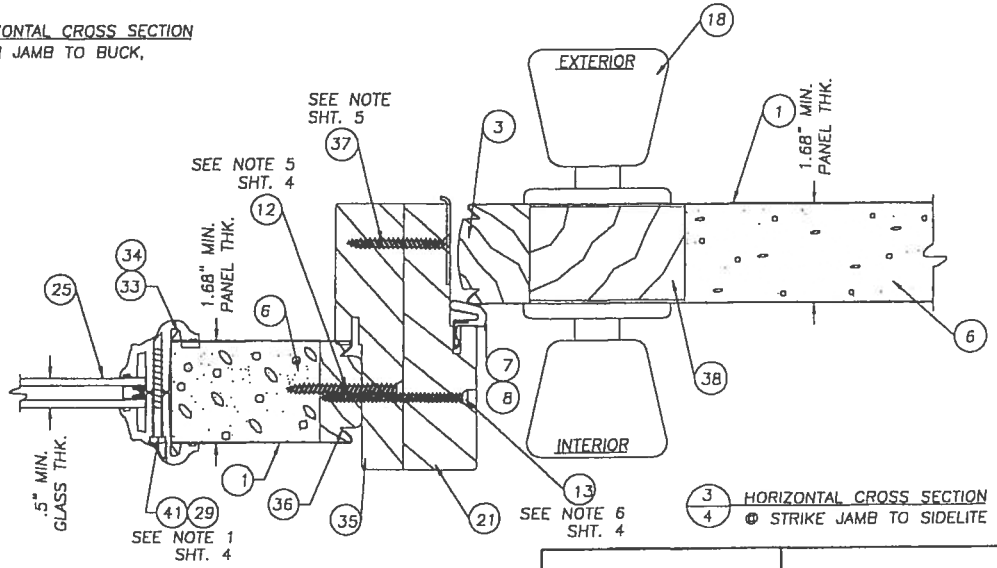

3/4 HORIZONTAL CROSS SECTION
@ STRIKE JAMB TO SIDELITE

NOTES:

1. SPACING FOR ITEM #29 & #41 (LITE FRAME SCREWS) IS AS FOLLOWS: FROM THE TOP DOWN ON SIDES; 3", 14.75", 26.5", 38.25", 50.5" & 62.25". THERE IS (1) SCREW BOTH TOP AND BOTTOM AT 4.25" IN FROM CORNER.
2. SPACING FOR ITEM #27 #8 x 1" PANHEAD SCREW ATTACHING THE ASTRAGAL TO THE INACTIVE DOOR IS AS FOLLOWS: FROM THE BOTTOM UP AND TOP DOWN 1", 3", 5", 26" AND (1) MORE 6" UP FROM THE STRIKE LOCATION.
3. THE HEAD JAMB IS ATTACHED TO THE SIDE JAMBS WITH (3) 16GA. x 1/2" CROWN x 2" STAPLES AT BOTH SIDE.
4. THE THRESHOLD IS ATTACHED TO THE SIDE JAMBS WITH (2) 16GA. x 1/2" CROWN x 2.5" STAPLES AT BOTH SIDE.
5. THE SIDELITE IS DIRECT SET INTO THE JAMB WITH ITEM #12 #10 x 2" PH.F.H. WOOD SCREW AT 6" DOWN FROM EACH CORNER AND A MAX. OF 12" O.C. ON THE SIDE JAMBS ONLY.
6. SPACING FOR ITEM #13, A #8 x 2 1/2" SCREW SECURING THE MULLIONS TOGETHER IS THE SAME AS THE PERIMETER ANCHORING SCREWS. 6" DOWN FROM THE TOP AND UP FROM THE BOTTOM WITH (4) MORE SPACED AT 13.7" O.C.
7. WHEN ATTACHING THE HINGE TO THE JAMB AND THE BUCK USE ITEM #12 A #10 x 2" SCREW. WHEN ATTACHING THE HINGE TO THE JAMB AND THE SIDELITE AT THE MULLION USE ITEM #37 A #10 x 1 3/4" SCREW.
8. ITEM #39, THE HIGH DAM THRESHOLD IS ONLY USED IN AN APPLICATION WHERE A HIGHER WATER PRESSURE MUST BE ACHIEVED.

Approved as complying with the Florida Building Code
Date June 10, 2002
NOA# 01-0426.06
Miami Dade Product Control Division
By

THERMATRU®
108 MUTZFELD Rd.
BUTLER, IN 46721
PH. (219) 868-5811

PRODUCT: "PREMIUM SERIES" 6-8 SINGLE & DOUBLE OUT-SWING STEEL DOOR

PART OR ASSEMBLY: HORIZONTAL CROSS SECTIONS & NOTES

NO.	DATE	REVISIONS	BY
1	3/28/02	GENERAL REVISION	WLN

RW BUILDING CONSULTANTS, INC.
813.684.3831

DATE. 08/08/01
SCALE. 1/2" = 1"
DWG. BY: TJH
CHK. BY: RW
DRAWING NO.: S 2149
SHEET 4 OF 8

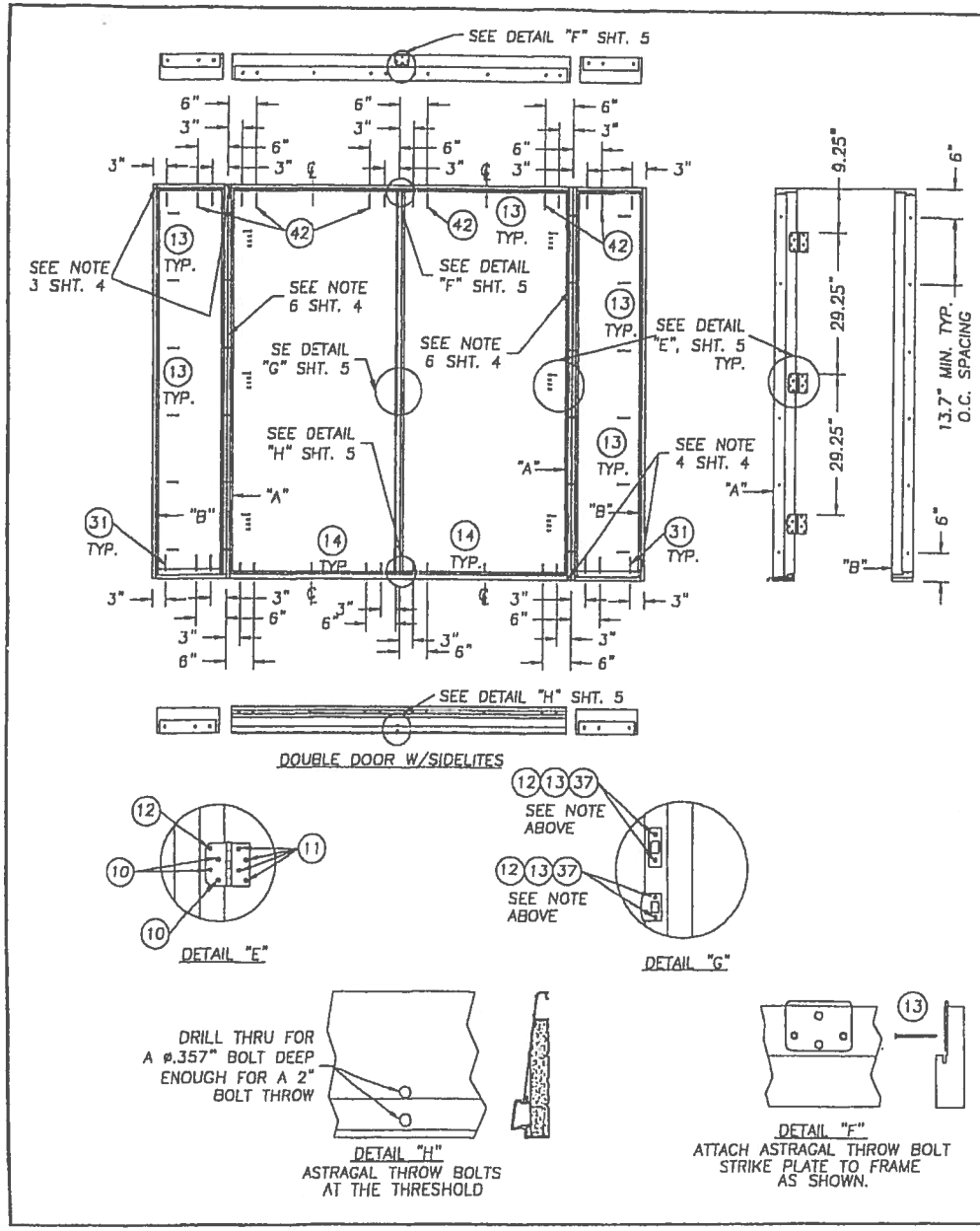

NOTE:
WHEN ATTACHING THE STRIKE & DEADBOLT PLATES TO THE STRIKE JAMB AND BUCK USE A #10 x 2" SCREW. WHEN ATTACHING THE STRIKE & DEADBOLT PLATES TO THE ASTRAGAL USE A #8 x 2 1/2' SCREW. WHEN ATTACHING THE STRIKE & DEADBOLT PLATES TO THE STRIKE JAMB AND SIDELITE JAMB USE A #10 x 1 3/4" SCREW.

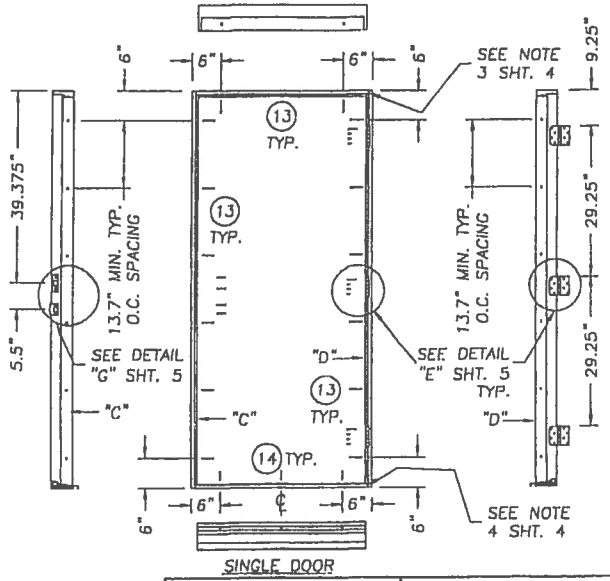

Approved as complying with the Florida Building Code
Date July 20, 2002
NOA# 01-0528.08
Miami Dade Product Control Division
By

THERMA TRU®
108 MUTZFELD Rd.
BUTLER, IN 46721
PH. (219) 868-5811

PRODUCT: "PREMIUM SERIES" 6-8 SINGLE & DOUBLE OUT-SWING STEEL DOOR

PART OR ASSEMBLY: ANCHORING LOCATIONS & DETAILS

NO.	DATE	GENERAL REVISION	WLN	BY
1	3/28/02			

REVISIONS

RW BUILDING CONSULTANTS, INC.
813.684.3831

DATE: 08/08/01
SCALE: N.T.S.
DWG. BY: TJH
CHK. BY: RW
DRAWING NO.: S-2149
SHEET 5 OF 8

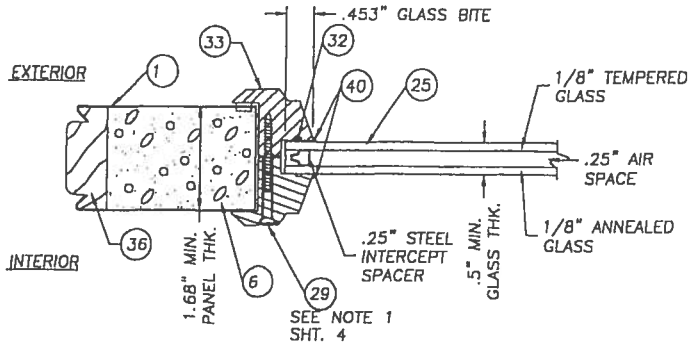

.5" INSULATED GLASS W/ PVC LITE FRAME GLAZING DETAIL

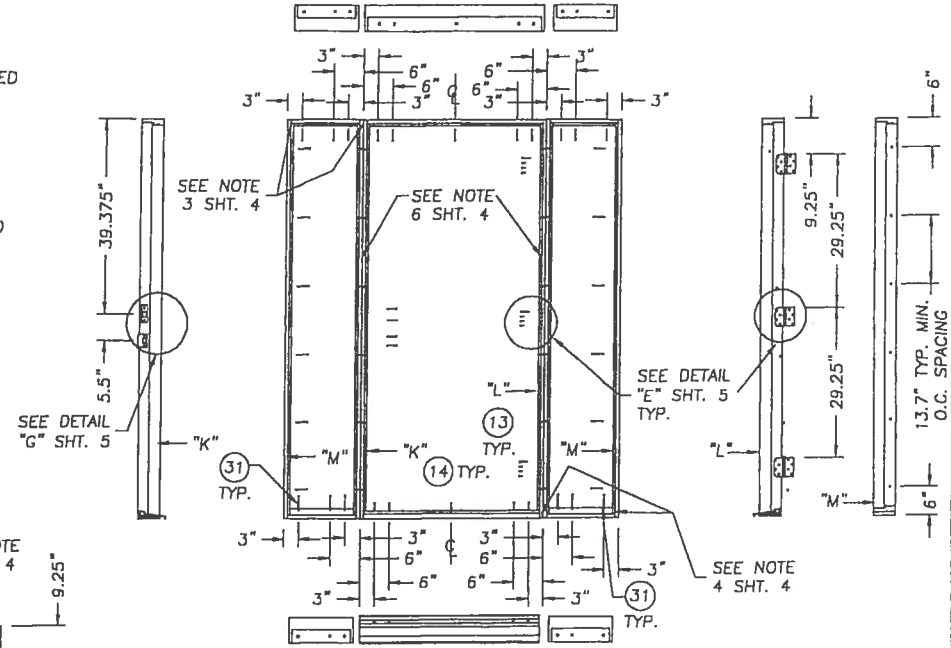

SINGLE DOOR W/SIDELITES

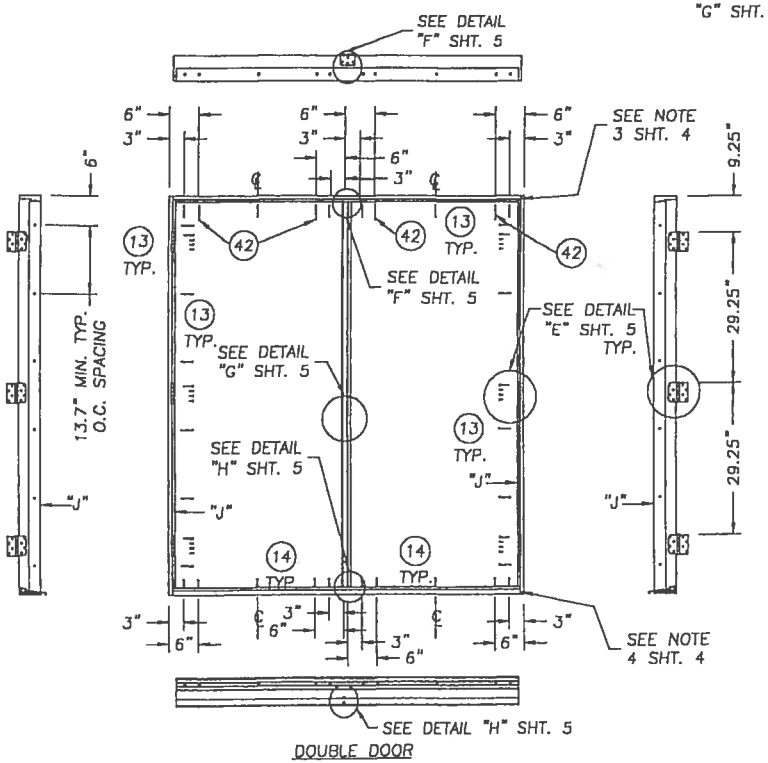

DOUBLE DOOR

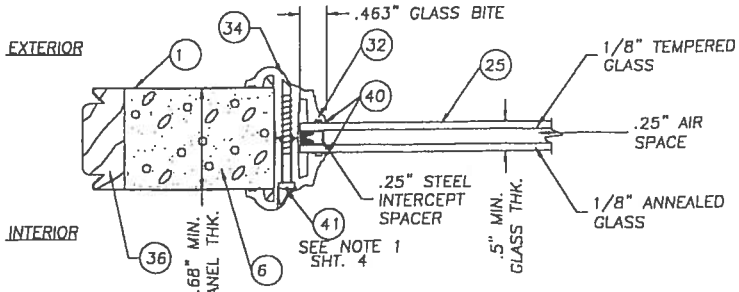

.5" INSULATED GLASS W/ BTS LITE FRAME GLAZING DETAIL

Approved as complying with the Florida Building Code
Date June 20, 2007
NOA# 01-0828.08
Miami Dade Product Control Division
By

THERMATRU®
108 MUTZFELD Rd.
BUTLER, IN 46721
PH. (219) 868-5811

PRODUCT: "PREMIUM SERIES" 6-8 SINGLE & DOUBLE OUT-SWING STEEL DOOR

PART OR ASSEMBLY: ANCHORING LOCATIONS & GLAZING DETAILS

NO.	DATE	REVISIONS	BY
1	3/28/02	GENERAL REVISION	WLN

RW BUILDING CONSULTANTS, INC
813.684.3831

DATE:	08/08/01
SCALE:	N.T.S.
DWG. BY:	TJH
CHK. BY:	RW
DRAWING NO.:	S-2149
SHEET	6 OF 8

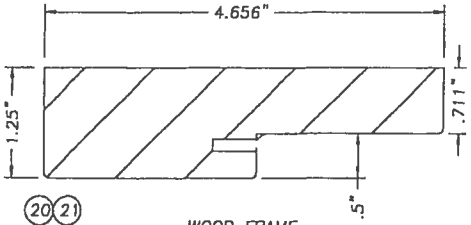

20 21 22 35

WOOD FRAME
FINGER JOINTED PONDEROSA PINE

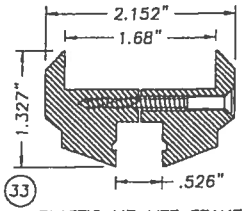

33

PLASTIC LIP LITE FRAME
EXTRUDED PVC

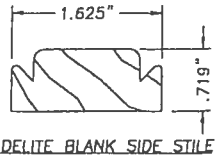

36

SIDELITE BLANK SIDE STILE
FINGER JOINTED PONDEROSA PINE

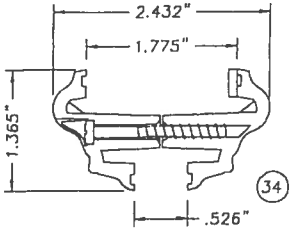

34

BTS PLASTIC LIP LITE FRAME
EXTRUDED BTS

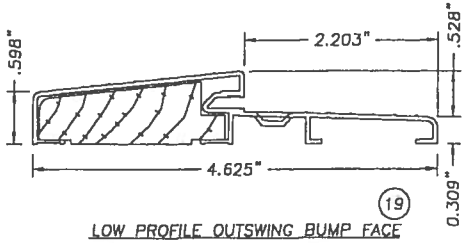

19

LOW PROFILE OUTSWING BUMP FACE
ALUMINUM/WOOD THRESHOLD
.050" WALL TYP.

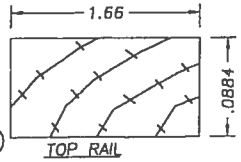

2

TOP RAIL
FINGER JOINTED PONDEROSA PINE

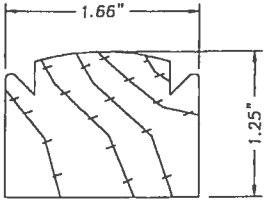

3

WOOD LATCH SIDE STILE

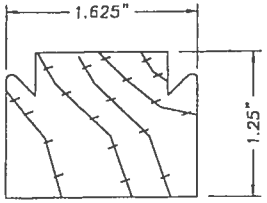

WOOD HINGE SIDE STILE 4

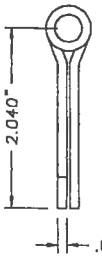

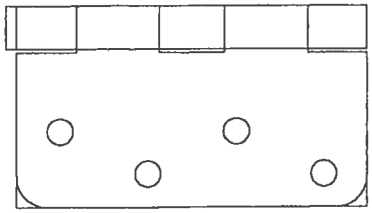

9

4 x 4 STEEL DOOR HINGE

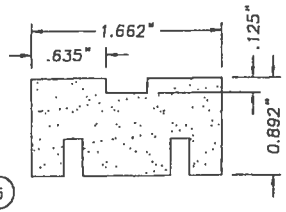

5

BOTTOM RAIL, WOOD COMPOSITE

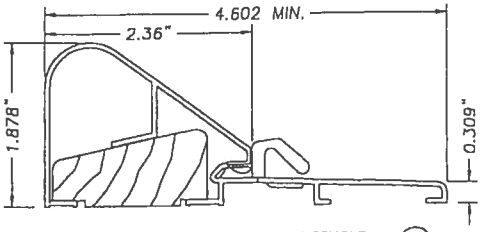

HIGH DAM THRESHOLD 39
MIN. WALL THK. = 0.050"
SEE NOTE 8 SHT. 4

NOTE
ALL DIMENSIONS ARE MINIMUM.
DIMENSIONS ARE THE LARGEST TESTED.

Approved as complying with the Florida Building Code
Date June 20, 2002
NOA# 01-0626.08
Miami Dade Product Control Division
By

THERMATRU®
108 MUTZFELD Rd.
BUTLER, IN 46721
PH. (219) 868-5811

PRODUCT: "PREMIUM SERIES" 6-8 SINGLE & DOUBLE OUT-SWING STEEL DOOR

PART OR ASSEMBLY: UNIT COMPONENTS

NO.	DATE	REVISIONS	BY
1	3/28/02	GENERAL REVISION	WLM

RW BUILDING CONSULTANTS, INC.
813.684.3831

DATE: 08/08/01
SCALE: N.T.S
DWG. BY: TJH
CHK. BY: RW
DRAWING NO.: S-2149
SHEET 7 OF 8

Item	DESCRIPTION	Material
1	DOOR SKIN; PREMIUM SERIES 24GA. (.022" MIN.)	STEEL
2	TOP RAIL (1.628" x .851" THERMA-TRU PONDEROSA PINE)	WOOD
3	LATCH STILE (THERMA-TRU, PONDEROSA PINE 1.66" x 1.253")	WOOD
4	HINGE STILE (THERMA-TRU, PONDEROSA PINE 1.625" x 1.25")	WOOD
5	BOTTOM RAIL (1.662" x 0.892" THERMA-TRU WOOD COMPOSITE)	WOOD COMPOSITE
6	POLYURETHANE FOAM (BASF, 1.9lbs. DENSITY)	FOAM
7	SHORT REACH COMPRESSION WEATHERSTRIP (THREMA-TRU)	FOAM
8	LONG REACH COMPRESSION WEATHERSTRIP (THREMA-TRU)	FOAM
9	4" x 4" HINGE .097" THK. (THERMA-TRU)	STEEL
10	#10 x 3/4" lg. PFH WOOD SCREW (Hinge to Frame)	STEEL
11	#10 x 1" LG. PFH WOOD SCREW	STEEL
12	#10 x 2" LG. PFH WOOD SCREW	STEEL
13	#8 x 2 1/2" LG. PFH WOOD SCREW	STEEL
14	3/16" TAPCON ANCHOR (ELCO, 1.75" MIN. LG.)	STEEL
15	NOTE USED	
16	2x WOOD BUCK	WOOD
17	MAX. 1/4" SHIM MATERIAL	WOOD
18	KWIKSET TITAN 700 SERIES PASSAGE LOCK	–
19	ONE PIECE BUMP FACE THRESHOLD LOW PROFILE (THERMA-TRU)	ALUM./WOOD
20	4.656" HEADER (THERMA-TRU, PONDEROSA PINE)	WOOD
21	4.656" STRIKE JAMB (THERMA-TRU, PONDEROSA PINE)	WOOD
22	4.656" HINGE JAMB (THERMA-TRU, PONDEROSA PINE)	WOOD
23	KWIKSET TITAN 700 SERIES DEADBOLT	–
24	ASTRAGAL WINDJAMBER II WR68T (.052" WALL)	ALUM.
25	GLAZING, 1/2" INSULATED TEMPERED GLASS	GLASS
26	3/4" THK. PRESSURE TREATED SIDELITE PAD	WOOD
27	#8 x 1" LG. PANHEAD SHEET METAL SCREW	STEEL
28	NOT USED	–
29	#6-18 x 1 3/4" PHILLIPS FLATHEAD SCREW (FOR ITEM #33)	STEEL
30	NOT USED	–
31	3/16" TAPCON ANCHOR (ELCO, 3.25" MIN. LG.)	STEEL
32	1/8 THK. CELLULAR GLAZING TAPE (STIK-II TAPE)	–
33	PLASTIC LIP LITE FRAME (PVC, THERMA-TRU)	PVC
34	PLASTIC LIP LITE FRAME (BTS, THERMA-TRU)	BTS
35	4.656" BLANK JAMB (THERMA-TRU, PONDEROSA PINE)	WOOD
36	SIDELITE SIDE STILE (THERMA-TRU, 1.625" x .719" PONDEROSA PINE)	WOOD
37	#10 x 1 3/4" LG. PFH WOOD SCREW	STEEL
38	LOCK BLOCK 2.625" x 10.375" x 1.625" THK.	WOOD
39	HIGH WATER DAM THRESHOLD (THERMA-TRU)	ALUM.
40	SILICONE CAULK	SILICONE
41	#8-10 x 1 1/2" PLASCREW (FOR ITEM #34)	STEEL
42	#10 x 3" LG. PFH WOOD SCREW	STEEL

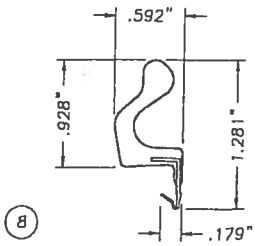

(8)

LONG REACH COMPRESSION WEATHERSTRIP
FOAM CELL CORE W/VINYL JACKET

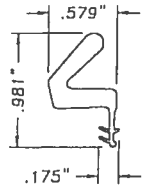

(7)

COMPRESSION WEATHERSTRIP
BY THERMA-TRU
FOAM CELL CORE W/VINYL JACKET

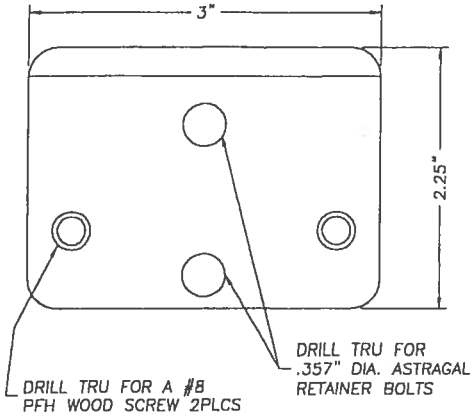

WINDJAMBER II WR68T STRIKE PLATE

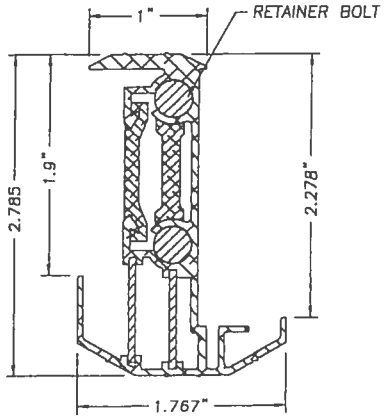

(24)

WINDJAMBER II WR68T
ASTRAGAL (ALUMINUM .052" WALL TYP.)

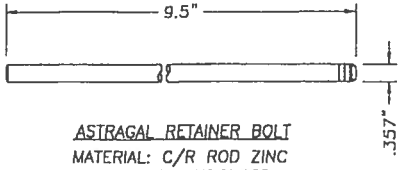

ASTRAGAL RETAINER BOLT
MATERIAL: C/R ROD ZINC
& YELLOW CHROMATE

Approved as complying with the Florida Building Code
Date June 20, 2002
NOA# 01-0828.03
Miami Dade Product Control Division
By

THERMA-TRU®
108 MUTZFELD Rd.
BUTLER, IN 46721
PH. (219) 868-5811

PRODUCT: "PREMIUM SERIES" 6-8 SINGLE & DOUBLE OUT-SWING STEEL DOOR

PART OR ASSEMBLY: BILL OF MATERIALS & UNIT COMPONENTS

NO.	DATE	REVISIONS	BY
1	3/28/02	GENERAL REVISION	WLN

RW BUILDING CONSULTANTS, INC.
813.684.3831

DATE: 08/08/01
SCALE: N.T.S.
DWG. BY: TJH
CHK. BY: RW
DRAWING NO.: S-2149
SHEET 8 OF 8

Doug Edgley

AAMA/NWWDA 101/I.S.2-97
TEST REPORT SUMMARY

Rendered to:

MI HOME PRODUCTS, INC.

SERIES/MODEL: 650 Fin
TYPE: Aluminum Single Hung Window

Title of Test	Results
Rating	H-R40 52 x 72
Overall Design Pressure	+45.0 psf -47.2 psf
Operating Force	11 lb max.
Air Infiltration	0.13 cfm/ft^2
Water Resistance	6.00 psf
Structural Test Pressure	+67.5 psf -70.8 psf
Deglazing	Passed
Forced Entry Resistance	Grade 10

Reference should be made to Report No. 01-41134.01 dated 03/26/02 for complete test specimen description and data.

For ARCHITECTURAL TESTING, INC.

Mark A. Hess

Mark A. Hess, Technician

MAH:nlb

Allen N. Reeves
1 APRIL 2002

ALLEN N. REEVES
CERTIFICATE NO. 15354
STATE OF FLORIDA
PROFESSIONAL ENGINEER

Architectural Testing

AAMA/NWWDA 101/I.S.2-97 TEST REPORT

Rendered to

MI HOME PRODUCTS, INC.
650 West Market Street
P.O. Box 370
Gratz, Pennsylvania 17030-0370

Report No: 01-41134.01
Test Date: 03/07/02
Report Date: 03/26/02
Expiration Date: 03/07/06

Project Summary: Architectural Testing, Inc. (ATI) was contracted by MI Home Products, Inc. to perform tests on Series/Model 650 Fin, aluminum single hung window at their facility located in Elizabethville, Pennsylvania. The samples tested successfully met the performance requirements for a H-R40 52 x 72 rating.

Test Specification: The test specimen was evaluated in accordance with AAMA/NWWDA 101/I.S.2-97, *Voluntary Specifications for Aluminum, Vinyl (PVC) and Wood Windows and Glass Doors.*

Test Specimen Description

Series/Model: 650 Fin

Type: Aluminum Single Hung Window

Overall Size: 4' 4-1/4" wide by 6' 0-3/8" high

Active Sash Size: 4' 1-3/4" wide by 3' 0-5/8" high

Daylight Opening Size: 3' 11-3/8" wide by 2' 9-1/2" high

Screen Size: 4' 0-1/4" wide by 2' 11-1/8" high

Finish: All aluminum was white.

Glazing Details: The active and fixed lites utilized 5/8" thick, sealed insulating glass constructed from two sheets of 1/8" thick, clear annealed glass and a metal reinforced butyl spacer system. The active sash was channel glazed utilizing a flexible vinyl wrap-around gasket. The fixed lite was interior glazed against double-sided adhesive foam tape and secured with PVC snap-in glazing beads.

130 Derry Court
York, PA 17402-9405
phone: 717.764.7700
fax: 717.764.4129
www.archtest.com

Allen M. Reuss
1 APRIL 2002

REEVES NO. 18354 STATE OF FLORIDA PROFESSIONAL ENGINEER

Test Specimen Description: (Continued)

Weatherstripping:

Description	Quantity	Location
0.230" high by 0.270" backed polypile with center fin	1 Row	Fixed meeting rail
0.250" high by 0.187" backed polypile with center fin	2 Rows	Active sash stiles
1/2" x 1/2" dust plug	4 Pieces	Active sash, top and bottom of stiles
1/4" foam-filled vinyl bulb seal	1 Row	Active sash, bottom rail

Frame Construction: The frame was constructed of extruded aluminum with coped, butted, and sealed corners fastened with two #8 x 1" screws through the head and sill into each jamb screw boss. End caps were utilized on the ends of the fixed meeting rail and secured with two 1-1/4" screws per cap. Meeting rail was secured to the frame utilizing two 1-1/4" screws.

Sash Construction: The sash was constructed of extruded aluminum with coped, butted, and sealed corners fastened with two #8 x 1-1/2" screws through the rails into each jamb screw boss.

Screen Construction: The screen was constructed from roll-formed aluminum with keyed corners. The fiberglass mesh was secured with a flexible spline.

Hardware:

Description	Quantity	Location
Metal cam lock with keeper		Midspan, active meeting rail with keeper adjacent on fixed meeting rail
Plastic tilt latch	2	Active sash, meeting rail ends
Metal tilt pin	2	Active sash, bottom rail ends
Balance assembly	2	One in each jamb
Screen plunger	2	4" from rail ends on top rail

Allen N. Reeves
1 APRIL 2002

ALLEN N. REEVES
CERTIFICATE NO. 19354
STATE OF FLORIDA
PROFESSIONAL ENGINEER

Test Specimen Description: (Continued)

Drainage: Sloped sill

Reinforcement: No reinforcement was utilized.

Installation: The test specimen was installed into a 2 x 8 #2 Spruce-Pine-Fir wood test buck with #8 x 1-5/8" drywall screws every 8" on center around the nail fin. Polyurethane was used as a sealant under the nail fin and around the exterior perimeter.

Test Results:

The results are tabulated as follows:

Paragraph	Title of Test - Test Method	Results	Allowed
2.2.1.6.1	Operating Force	11 lbs	30 lbs max
	Air Infiltration (ASTM E 283-91) @ 1.57 psf (25 mph)	0.13 cfm/ft^2	0.3 cfm/ft^2 max

Note #1: The tested specimen meets the performance levels specified in AAMA/NWWDA 101/I.S. 2-97 for air infiltration.

	Water Resistance (ASTM E 547-00) (with and without screen) WTP = 2.86 psf	No leakage	No leakage
2.1.4.1	Uniform Load Deflection (ASTM E 330-97) (Measurements reported were taken on the meeting rail) (Loads were held for 33 seconds)		
	@ 25.9 psf (positive)	0.42"*	0.26" max.
	@ 34.7 psf (negative)	0.43"*	0.26" max.

**Exceeds L/175 for deflection, but passes all other test requirements.*

2.1.4.2	Uniform Load Structural (ASTM E 330-97) (Measurements reported were taken on the meeting rail) (Loads were held for 10 seconds)		
	@ 38.9 psf (positive)	0.02"	0.18" max.
	@ 52.1 psf (negative)	0.02"	0.18" max.

Allen N. Reeves
1 APRIL 2002

ALLEN N. REEVES
CERTIFICATE
NO. 19[illegible]
STATE OF
FLORIDA
PROFESSIONAL ENGINEER

Test Specimen Description: (Continued)

Paragraph	Title of Test - Test Method	Results	Allowed
2.2.1.6.2	Deglazing Test (ASTM E 987)		
	In operating direction at 70 lbs		
	Meeting rail	0.12"/25%	0.50"/100%
	Bottom rail	0.12"/25%	0.50"/100%
	In remaining direction at 50 lbs		
	Left stile	0.06"/12%	0.50"/100%
	Right stile	0.06"/12%	0.50"/100%
	Forced Entry Resistance (ASTM F 588-97)		
	Type: A Grade: 10		
	Lock Manipulation Test	No entry	No entry
	Tests A1 through A5	No entry	No entry
	Test A7	No entry	No entry
	Lock Manipulation Test	No entry	No entry
Optional Performance			
4.3	Water Resistance (ASTM E 547-00) (with and without screen) WTP = 6.00 psf	No leakage	No leakage
	Uniform Load Deflection (ASTM E 330-97) (Measurements reported were taken on the meeting rail) (Loads were held for 33 seconds)		
	@ 45.0 psf (positive)	0.47"*	0.26" max.
	@ 47.2 psf (negative)	0.46"*	0.26" max.

**Exceeds L/175 for deflection, but passes all other test requirements.*

	Uniform Load Structural (ASTM E 330-97) (Measurements reported were taken on the meeting rail) (Loads were held for 10 seconds)		
	@ 67.5 psf (positive)	0.05"	0.18" max.
	@ 70.8 psf (negative)	0.05"	0.18" max.

Allen N. Reyes
1 APRIL 2002

ALLEN N. REYES
CERTIFICATE NO. 19334
STATE OF FLORIDA
PROFESSIONAL ENGINEER

Detailed drawings, representative samples of the test specimen, and a copy of this report will be retained by ATI for a period of four years. The above results were secured by using the designated test methods and they indicate compliance with the performance requirements of the above referenced specification. This report does not constitute certification of this product, which may only be granted by the certification program administrator.

For ARCHITECTURAL TESTING, INC:

Mark A. Hess
Technician

Allen N. Reeves, P.E.
Director - Engineering Services
1 APRIL 2002

MAH:nlb
01-41134.01

ALLEN N. REEVES
CERTIFICATE NO. 13664
STATE OF FLORIDA
PROFESSIONAL ENGINEER

X
Glazed Inswing Unit

WOOD-EDGE STEEL DOORS

APPROVED ARRANGEMENT:

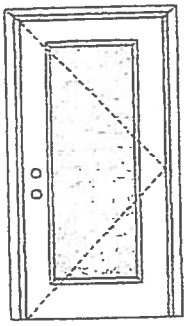

Warnock Hersey

Test Data Review Certificate #3026447A and COP/Test Report Validation Matrix #3026447A-001 provides additional information - available from the ITS/WH website (www.etlsemko.com), the Masonite website (www.masonite.com) or the Masonite technical center.

Note:
Units of other sizes are covered by this report as long as the panel used does not exceed 3'0" x 6'8".

Single Door
Maximum unit size = 3'0" x 6'8"

Design Pressure
+40.5/-40.5
Limited water unless special threshold design is used.

Large Missile Impact Resistance
Hurricane protective system (shutters) is REQUIRED.

Actual design pressure and impact resistant requirements for a specific building design and geographic location is determined by ASCE 7-national, state or local building codes specify the edition required.

MINIMUM ASSEMBLY DETAIL:

Compliance requires that minimum assembly details have been followed – see MAD-WL-MA0001-02 and MAD-WL-MA0041-02.

MINIMUM INSTALLATION DETAIL:

Compliance requires that minimum installation details have been followed – see MID-WL-MA0001-02.

APPROVED DOOR STYLES:

1/4 GLASS:

100 Series

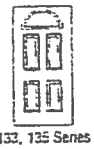
133, 135 Series

136 Series

680 Series

822 Series

1/2 GLASS:

105 Series*

106, 160 Series*

129 Series*

200 Series*

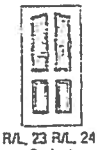
12 R/L, 23 R/L, 24 R/L Series*

107 Series*

108 Series

304 Series

*This glass kit may also be used in the following door styles: 5-panel; 5-panel with scroll; Eyebrow 5-panel; Eyebrow 5-panel with scroll.

XX
Opaque Inswing Unit

COP-WL-JH4102-02

WOOD-EDGE STEEL DOORS

CERTIFIED TEST REPORTS:

NCTL 210-1905-7, 8, 9, 10, 11, 12; NCTL 210-1861-4, 5, 6, 10, 11, 12;
NCTL 210-2185-1, 2, 3

Certifying Engineer and License Number: Barry D. Portney, P.E. / 16258.

Unit Tested in Accordance with Miami-Dade BCCO PA201, PA202 and PA203.

Evaluation report NCTL-210-2794-1

Door panels constructed from 26-gauge 0.017" thick steel skins. Both stiles constructed from wood Top end rails constructed of 0.041" steel. Bottom end rails constructed of 0.021" steel. Interior cavity of slab filled with rigid polyurethane foam core.

Frame constructed of wood with an extruded aluminum threshold.

PRODUCT COMPLIANCE LABELING:

TESTED IN ACCORDANCE WITH
MIAMI-DADE BCCO
PA201, PA202 & PA203

COMPANY NAME
CITY, STATE

To the best of my knowledge and ability the above side-hinged exterior door unit conforms to the requirements of the 2001 Florida Building Code, Chapter 17 (Structural Tests and Inspections).

Kurt L Balthazor

State of Florida, Professional Engineer
Kurt Balthazor, P.E. – License Number 56533

Wiscoch Honey

Test Data Review Certificate #3025447A and COP/Test Report Validation Matrix #3025447A-001 provides additional information - available from the ITS/WH website (www.atsamko.com), the Masonite website (www.masonite.com) or the Masonite technical centre.

Johnson EntrySystems

June 17, 2002
Our continuing program of product improvement makes specifications, design and product overall subject to change without notice.

PREMDOR Premium Quality Doors

Exclusively from Masonite
Masonite International Corporation

XX
Glazed Inswing Unit

COP-WL-JH4142-02

WOOD-EDGE STEEL DOORS

APPROVED ARRANGEMENT:

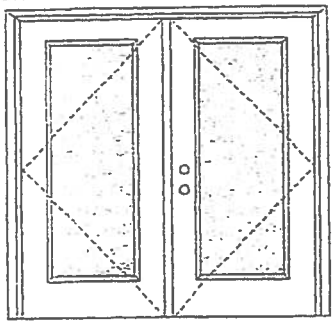

Warnock Hersey

Test Data Review Certificate #3025447A and COP/Test Report Validation Matrix #3025447A-001 provides additional information - available from the ITS/WH website (www.etlsemko.com), the Masonite website (www.masonite.com) or the Masonite technical center.

Note:
Units of other sizes are covered by this report as long as the panels used do not exceed 3'0" x 6'8".

Double Door
Maximum unit size = 6'0" x 6'8"

Design Pressure
+40.5/-40.5
Limited water unless special threshold design is used.

Large Missile Impact Resistance
Hurricane protective system (shutters) is REQUIRED.

Actual design pressure and impact resistant requirements for a specific building design and geographic location is determined by ASCE 7-national, state or local building codes specify the edition required.

MINIMUM ASSEMBLY DETAIL:

Compliance requires that minimum assembly details have been followed – see MAD-WL-MA0002-02 and MAD-WL-MA0041-02.

MINIMUM INSTALLATION DETAIL:

Compliance requires that minimum installation details have been followed – see MID-WL-MA0002-02.

APPROVED DOOR STYLES:

1/4 GLASS:

100 Series

133, 135 Series

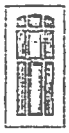
136 Series

660 Series

822 Series

1/2 GLASS:

105 Series*

106, 160 Series*

129 Series*

200 Series*

12 R/L, 23 R/L, 24 R/L Series*

107 Series*

108 Series

304 Series

*This glass kit may also be used in the following door styles: 5-panel; 5-panel with scroll; Eyebrow 5-panel; Eyebrow 5-panel with scroll.

Johnson

Exclusively from

WOOD-EDGE STEEL DOORS

APPROVED DOOR STYLES:

3/4 GLASS:

404 Series

410 Series

450 Series

FULL GLASS:

109 Series

114, 120, 122 Series

152 Series

149 Series

300 Series

CERTIFIED TEST REPORTS:

NCTL 210-1897-7, 8, 9, 10, 11, 12; NCTL 210-1861-4, 5, 6, 10, 11, 12; NCTL 210-2185-1, 2, 3

Certifying Engineer and License Number: Barry D. Portney, P.E. / 16258.

Unit Tested in Accordance with Miami-Dade BCCO PA202.

Evaluation report NCTL-210-2794-1

Door panels constructed from 26-gauge 0.017" thick steel skins. Both stiles constructed from wood. Top end rails constructed of 0.041" steel. Bottom end rails constructed of 0.021" steel. Interior cavity of slab filled with rigid polyurethane foam core. Slab glazed with insulated glass mounted in a rigid plastic lip lite surround.

Frame constructed of wood with an extruded aluminum threshold.

PRODUCT COMPLIANCE LABELING:

TESTED IN
ACCORDANCE WITH
MIAMI-DADE BCCO PA202

COMPANY NAME
CITY, STATE

To the best of my knowledge and ability the above side-hinged exterior door unit conforms to the requirements of the 2001 Florida Building Code, Chapter 17 (Structural Tests and Inspections).

Kurt L Balthazor

State of Florida, Professional Engineer
Kurt Balthazor, P.E. – License Number 56533

Warnock Hersey

Test Data Review Certificate #3026447A and COP/Test Report Validation Matrix #3026447A-001 provides additional information - available from the ITS/WH website (www.etscmko.com), the Masonite website (www.masonite.com) or the Masonite technical center.

Johnson™ EntrySystems

June 17, 2002

Our continuing program of product improvement makes specifications, design and product detail subject to change without notice.

PREMDOR Collection Premium Quality Doors

Exclusively from Masonite®
Masonite International Corporation

OXO
Glazed Inswing Unit

COP-WL-JH4144-02

WOOD-EDGE STEEL DOORS

APPROVED DOOR STYLES:

3/4 GLASS:

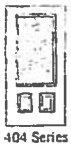
404 Series

410 Series

450 Series

FULL GLASS:

109 Series

114, 120, 122 Series

152 Series

149 Series

300 Series

APPROVED SIDELITE STYLES:

680 Series

129 Series

200 Series

12R, 12L, 23R, 23L, 24R, 24L Series

450 Series

152 Series

149 Series

109 Series

120, 122 Series

300 Series

CERTIFIED TEST REPORTS:

NCTL 210-1897-7, 8, 9, 10, 11, 12; NCTL 210-1861-4, 5, 6, 10, 11, 12; NCTL 210-2185-1, 2, 3

Certifying Engineer and License Number: Barry D. Portney, P.E. / 16258.

Unit Tested in Accordance with Miami-Dade BCCO PA202.

Evaluation report NCTL-210-2794-1

Door panels constructed from 26-gauge 0.017" thick steel skins. Both stiles constructed from wood. Top end rails constructed of 0.041" steel. Bottom end rails constructed of 0.021" steel. Interior cavity of slab filled with rigid polyurethane foam core. Slab and sidelite panels glazed with insulated glass mounted in a rigid plastic lip lite surround.

Frame constructed of wood with an extruded aluminum threshold.

PRODUCT COMPLIANCE LABELING:

TESTED IN
ACCORDANCE WITH
MIAMI-DADE BCCO PA202

COMPANY NAME
CITY, STATE

To the best of my knowledge and ability the above side-hinged exterior door unit conforms to the requirements of the 2001 Florida Building Code, Chapter 17 (Structural Tests and Inspections).

Kurt L Balthazor

State of Florida, Professional Engineer
Kurt Balthazor, P.E. – License Number 56533

Warnock Hersey

Test Data Review Certificate #3026447A and COP/Test Report Validation Matrix #3026447A-001 provides additional information - available from the ITS/WH website (www.etscamko.com), the Masonite website (www.masonite.com) or the Masonite technical center.

Johnson EntrySystems

June 17, 2002
Our continuing program of product improvement makes specifications, design and product detail subject to change without notice.

PREMDOR Collection Premium Quality Doors

Exclusively from Masonite®
Masonite International Corporation

OXXO
Glazed Inswing Unit

COP-WL-JH4145-02

WOOD-EDGE STEEL DOORS

APPROVED ARRANGEMENT:

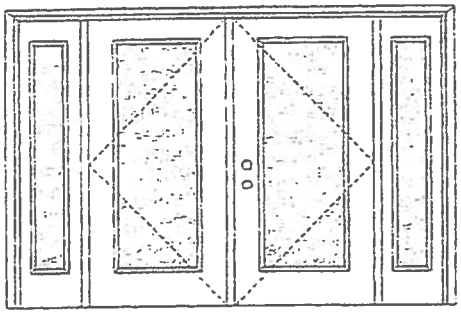

Warnock Hersey

Test Data Review Certificate #3028447A and COP/Test Report Validation Matrix #3028447A-001 provides additional information - available from the ITS/WH website (www.etlsemko.com), the Masonite website (www.masonite.com) or the Masonite technical center.

Note:
Units of other sizes are covered by this report as long as the panels used do not exceed 3'0" x 6'8".

Double Door with 2 Sidelites
Maximum unit size = 12'0" x 6'8"

Design Pressure
+40.5/-40.5
Limited water unless special threshold design is used.

Large Missile Impact Resistance
Hurricane protective system (shutters) is REQUIRED.

Actual design pressure and impact resistant requirements for a specific building design and geographic location is determined by ASCE 7-national, state or local building codes specify the edition required.

MINIMUM ASSEMBLY DETAIL:

Compliance requires that minimum assembly details have been followed – see MAD-WL-MA0005-02 or MAD-WL-MA0008-02 and MAD-WL-MA0041-02.

MINIMUM INSTALLATION DETAIL:

Compliance requires that minimum installation details have been followed – see MID-WL-MA0005-02.

APPROVED DOOR STYLES:

1/4 GLASS:

100 Series

133, 135 Series

136 Series

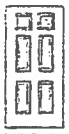
680 Series

822 Series

1/2 GLASS:

105 Series*

106, 160 Series*

129 Series*

200 Series*

12 R/L, 23 R/L, 24 R/L Series*

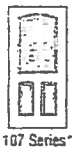
107 Series*

108 Series

304 Series

*This glass kit may also be used in the following door styles: 5-panel; 5-panel with scroll; Eyebrow 5-panel; Eyebrow 5-panel with scroll.

Johnson™

WOOD-EDGE STEEL DOORS

APPROVED DOOR STYLES:

3/4 GLASS:

404 Series

410 Series

450 Series

FULL GLASS:

109 Series

114, 120, 122 Series

152 Series

149 Series

300 Series

CERTIFIED TEST REPORTS:

NCTL 210-1897-7, 8, 9, 10, 11, 12; NCTL 210-1861-4, 5, 6, 10, 11, 12; NCTL 210-2185-1, 2, 3

Certifying Engineer and License Number: Barry D. Portney, P.E. / 16258.

Unit Tested in Accordance with Miami-Dade BCCO PA202.

Evaluation report NCTL-210-2794-1

Door panels constructed from 26-gauge 0.017" thick steel skins. Both stiles constructed from wood. Top end rails constructed of 0.041" steel. Bottom end rails constructed of 0.021" steel. Interior cavity of slab filled with rigid polyurethane foam core. Slab glazed with insulated glass mounted in a rigid plastic lip lite surround.

Frame constructed of wood with an extruded aluminum threshold.

PRODUCT COMPLIANCE LABELING:

TESTED IN
ACCORDANCE WITH
MIAMI-DADE BCCO PA202

COMPANY NAME
CITY, STATE

To the best of my knowledge and ability the above side-hinged exterior door unit conforms to the requirements of the 2001 Florida Building Code, Chapter 17 (Structural Tests and Inspections).

Kurt L Balthazor

State of Florida, Professional Engineer
Kurt Balthazor, P.E. – License Number 56533

Wemock Hersey

Test Data Review Certificate #3026447A and COP/Test Report Validation Matrix #3026447A-001 provides additional information - available from the ITS/WH website (www.etlsemko.com), the Masonite website (www.masonite.com) or the Masonite technical center.

Johnson EntrySystems

June 17, 2002

Our continuing program of product improvement makes specifications, design and product detail subject to change without notice.

PREMDOR Collection Premium Quality Doors

Exclusively from Masonite®
Masonite International Corporation

XX
Opaque Inswing Unit

COP-WL-JH4102-02

WOOD-EDGE STEEL DOORS

APPROVED ARRANGEMENT:

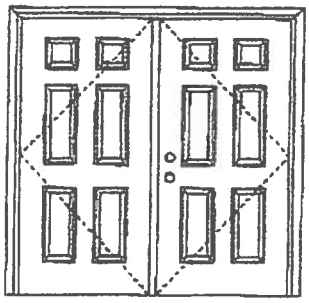

Test Data Review Certificate #30264147A and COP/Test Report Validation Matrix #30264147A-001 provides additional information - available from the ITS/WH website (www.itsinc-ks.com), the Masonite website (www.masonite.com) or the Masonite technical center.

Note:
Units of other sizes are covered by this report as long as the panels used do not exceed 3'0" x 6'8".

Double Door
Maximum unit size = 6'0" x 6'8"

Design Pressure
+45.0/-45.0
limited water unless special threshold design is used.

Large Missile Impact Resistance
Hurricane protective system (shutters) is NOT REQUIRED.

Actual design pressure and impact resistant requirements for a specific building design and geographic location is determined by ASCE 7-national, state or local building codes specify the edition required.

MINIMUM ASSEMBLY DETAIL:

Compliance requires that minimum assembly details have been followed – see MAD-WL-MA0002-02.

MINIMUM INSTALLATION DETAIL:

Compliance requires that minimum installation details have been followed – see MID-WL-MA0002-02.

APPROVED DOOR STYLES:

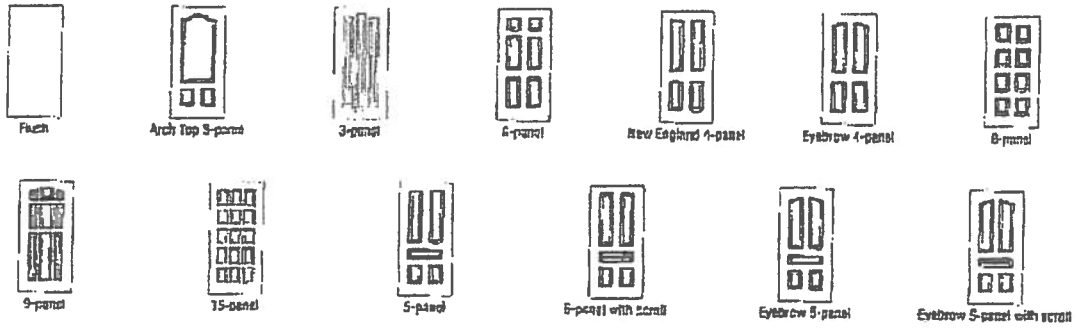

Johnson EntrySystems

June 17 2002
Our continuing program of product improvement makes specifications, dates and prices subject to change without notice.

PREMDOOR Collection Premium Quality Doors
Exclusively from Masonite®
Masonite International Corporation

W.B. Howland Truss Co.
P.O. Box 700
Live Oak, FL 32064
(386) 362-1235
(386) 362-7124 (fax)

ROOF PITCH:	4/12 & 6/12
CLG PITCH:	3/12
OVERHANG:	12" plumb cut
LOADING:	40 psf t.l./shingle
WIND LOAD:	110 mph/enclosed
EXT WALLS:	2x4 framing
DATE:	10-1-07

IMPORTANT DESIGN NOTES

GABLE END TRUSSES HAVE A DROPPED TOP CHORD FOR 2x4 OUTLOOKERS

Metal Roof
Code FL5109.3

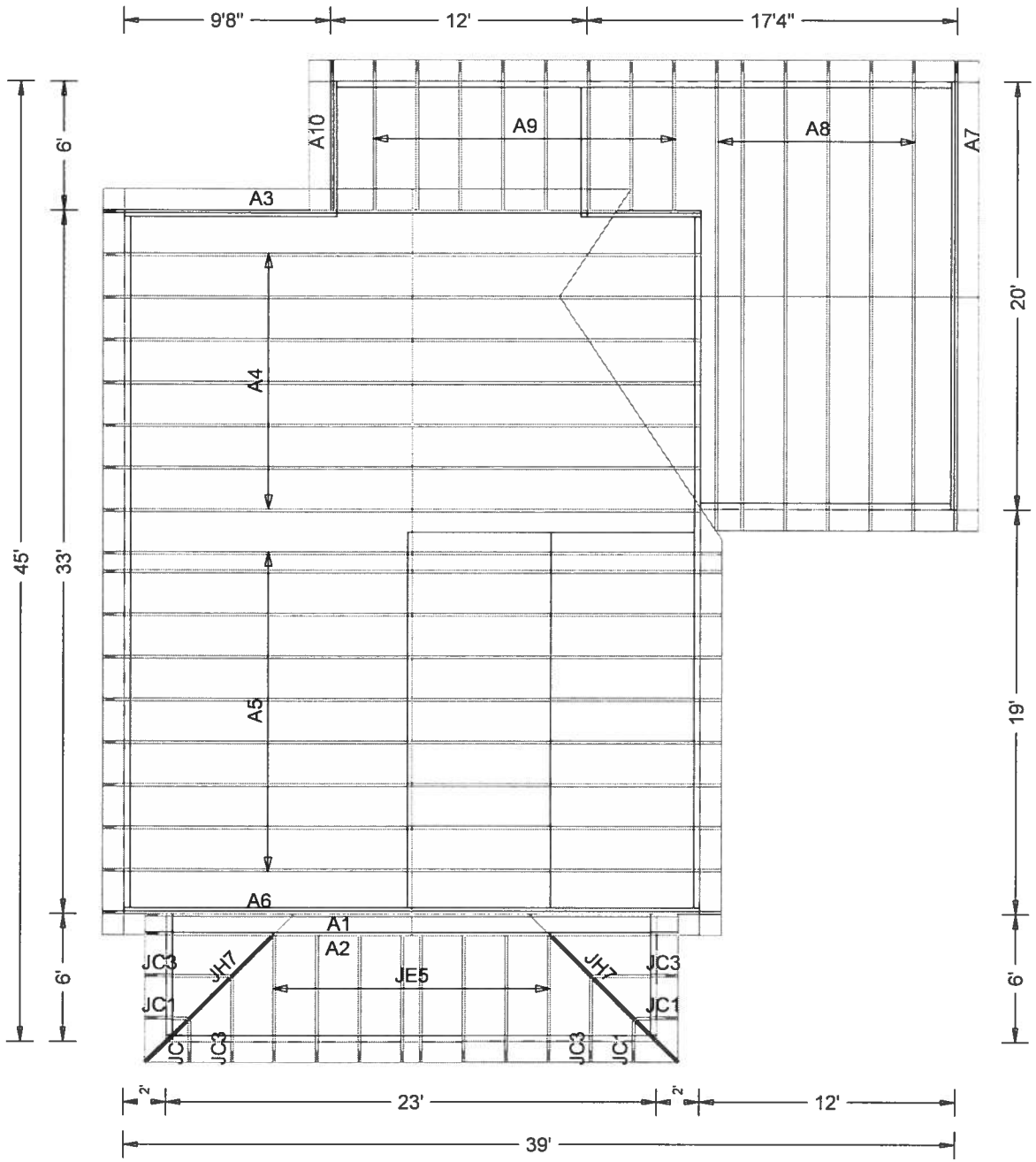

Job Name: Equestrian Manager's Res.
Customer: EDGELY CONSTRUCTION
Designer: Chris McCall

JOB NO:
4937

PAGE NO:
1 OF 1

ITW Building Components Group, Inc.

1950 Marley Drive Haines City, FL 33844
Florida Engineering Certificate of Authorization Number: 0 278
Florida Certificate of Product Approval # FL1999
 Document ID:1TB8215-Z0301160326

Truss Fabricator: W.B. Howland
Job Identification: 4937-/Equestrian Manager's Res. /EDGELY CONSTRUCTION -- LAKE CITY, FL
Truss Count: 14
Model Code: Florida Building Code 2004 and 2006 Supplement
Truss Criteria: ANSI/TPI-2002(STD)/FBC
Engineering Software: Alpine Software,Version 7.38.
Structural Engineer of Record: The identity of the structural EOR did not exist as of
Address: the seal date per section 61G15-31.003(5a) of the FAC
Minimum Design Loads: Roof - 40.0 PSF @ 1.25 Duration
Floor - N/A
Wind - 110 MPH ASCE 7-02 -Closed

Seal Date: 10/01/2007

-Truss Design Engineer-
James F. Collins Jr.
Florida License Number: 52212
1950 Marley Drive
Haines City, FL 33844

Notes:

1. Determination as to the suitability of these truss components for the structure is the responsibility of the building designer/engineer of record, as defined in ANSI/TPI 1
2. The drawing date shown on this index sheet must match the date shown on the individual truss component drawing.
3. As shown on attached drawings; the drawing number is preceded by: HCUSR215

Details: A11015EE-GBLLETIN-

#	Ref Description	Drawing#	Date
1	87141--A1	07274046	10/01/07
2	87142--A2	07274047	10/01/07
3	87143--A3	07274048	10/01/07
4	87144--A4	07274049	10/01/07
5	87145--A5	07274050	10/01/07
6	87146--A6	07274057	10/01/07
7	87147--A7	07274051	10/01/07
8	87148--A8	07274059	10/01/07
9	87149--A9	07274052	10/01/07
10	87150--A10	07274053	10/01/07
11	87151--JC1	07274054	10/01/07
12	87152--JC3	07274055	10/01/07
13	87153--JE5	07274056	10/01/07
14	87154--JH7	07274058	10/01/07

(4937 /Equestrian Manager's Res. /EDGELY CONSTRUCTION -- LAKE CITY, FL - A1)

Top chord 2x4 SP #2 N
Bot chord 2x4 SP #2 N
Webs 2x4 SP #2 N

Deflection meets L/240 live and L/180 total load.

The overall height of this truss excluding overhang is 2-3-7.

110 mph wind, 15.00 ft mean hgt, ASCE 7-02, CLOSED bldg, not located within 4.50 ft from roof edge, CAT II, EXP B, wind TC DL=5.0 psf, wind BC DL=5.0 psf. Iw=1.00 GCpi(+/-)=0.18

Wind reactions based on MWFRS pressures.

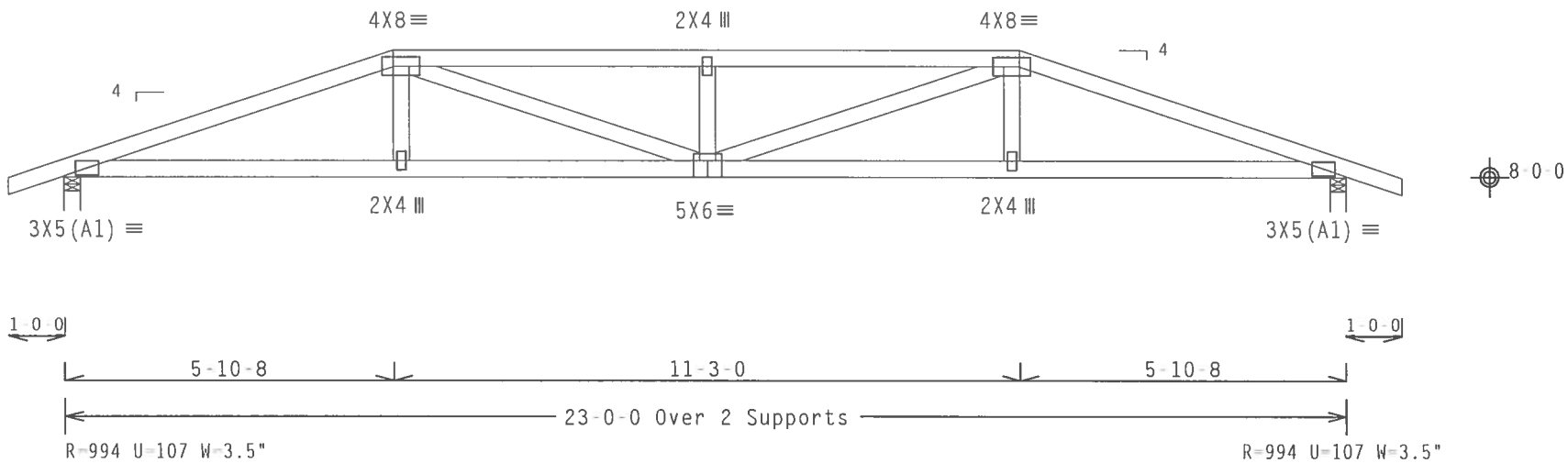

Design Crit: TPI-2002(STD)/FBC

PLT TYP. Wave Cq/RT=1.00(1.25)/0(0) 7.38.0810 QTY:1 FL/-/5/-/-/R/- Scale =.3125"/Ft.

ALPINE

ITW Building Components Group, Inc.
Haines City, FL 33844
FL Certificate of Authorization # 567

WARNING TRUSSES REQUIRE EXTREME CARE IN FABRICATION, HANDLING, SHIPPING, INSTALLING AND BRACING. REFER TO BCSI (BUILDING COMPONENT SAFETY INFORMATION), PUBLISHED BY TPI (TRUSS PLATE INSTITUTE, 218 NORTH LEE STREET, SUITE 312, ALEXANDRIA, VA, 22314) AND WTCA (WOOD TRUSS COUNCIL OF AMERICA, 6300 ENTERPRISE LANE, MADISON, WI 53719) FOR SAFETY PRACTICES PRIOR TO PERFORMING THESE FUNCTIONS. UNLESS OTHERWISE INDICATED TOP CHORD SHALL HAVE PROPERLY ATTACHED STRUCTURAL PANELS AND BOTTOM CHORD SHALL HAVE A PROPERLY ATTACHED RIGID CEILING.

IMPORTANTFURNISH A COPY OF THIS DESIGN TO THE INSTALLATION CONTRACTOR. ITW BCG, INC. SHALL NOT BE RESPONSIBLE FOR ANY DEVIATION FROM THIS DESIGN; ANY FAILURE TO BUILD THE TRUSS IN CONFORMANCE WITH TPI; OR FABRICATING, HANDLING, SHIPPING, INSTALLING & BRACING OF TRUSSES. DESIGN CONFORMS WITH APPLICABLE PROVISIONS OF NDS (NATIONAL DESIGN SPEC. BY AF&PA) AND TPI. ITW BCG CONNECTOR PLATES ARE MADE OF 20/18/16GA (W,H/SS/K) ASTM A653 GRADE 40/60 (W, K/H,SS) GALV. STEEL. APPLY PLATES TO EACH FACE OF TRUSS AND, UNLESS OTHERWISE LOCATED ON THIS DESIGN, POSITION PER DRAWINGS 160A-Z. ANY INSPECTION OF PLATES FOLLOWED BY (1) SHALL BE PER ANNEX A3 OF TPI1 2002 SEC.3. A SEAL ON THIS DRAWING INDICATES ACCEPTANCE OF PROFESSIONAL ENGINEERING RESPONSIBILITY SOLELY FOR THE TRUSS COMPONENT DESIGN SHOWN. THE SUITABILITY AND USE OF THIS COMPONENT FOR ANY BUILDING IS THE RESPONSIBILITY OF THE BUILDING DESIGNER PER ANSI/TPI 1 SEC. 2.

JAMES F. COLLINS, JR. LICENSE No. 52212 STATE OF FLORIDA PROFESSIONAL ENGINEER

Oct 01-07

TC LL	20.0 PSF	REF	R215-- 87141
TC DL	10.0 PSF	DATE	10/01/07
BC DL	10.0 PSF	DRW	HCUSR215 07274046
BC LL	0.0 PSF	HC-ENG	EC/DLJ *
TOT.LD.	40.0 PSF	SEQN-	201210
DUR.FAC.	1.25	FROM	CDM
SPACING	24.0"	JREF-	1TB8215_Z03

THIS DWG PREPARED FROM COMPUTER INPUT (LOADS & DIMENSIONS) SUBMITTED BY TRUSS MFR.

Top chord 2x4 SP #2 N :T2 2x6 SP #2 N:
Bot chord 2x6 SP #2 N :B2 2x6 SP #2 Dense:
Webs 2x4 SP #2 N

#1 hip supports 5-0-0 jacks with no webs.

Deflection meets L/240 live and L/180 total load.

110 mph wind, 15.00 ft mean hgt, ASCE 7-02, CLOSED bldg, Located anywhere in roof, CAT II, EXP B, wind TC DL=5.0 psf, wind BC DL=5.0 psf. Iw=1.00 GCpi(+/-)=0.18

Wind reactions based on MWFRS pressures.

The overall height of this truss excluding overhang is 1-11-15.

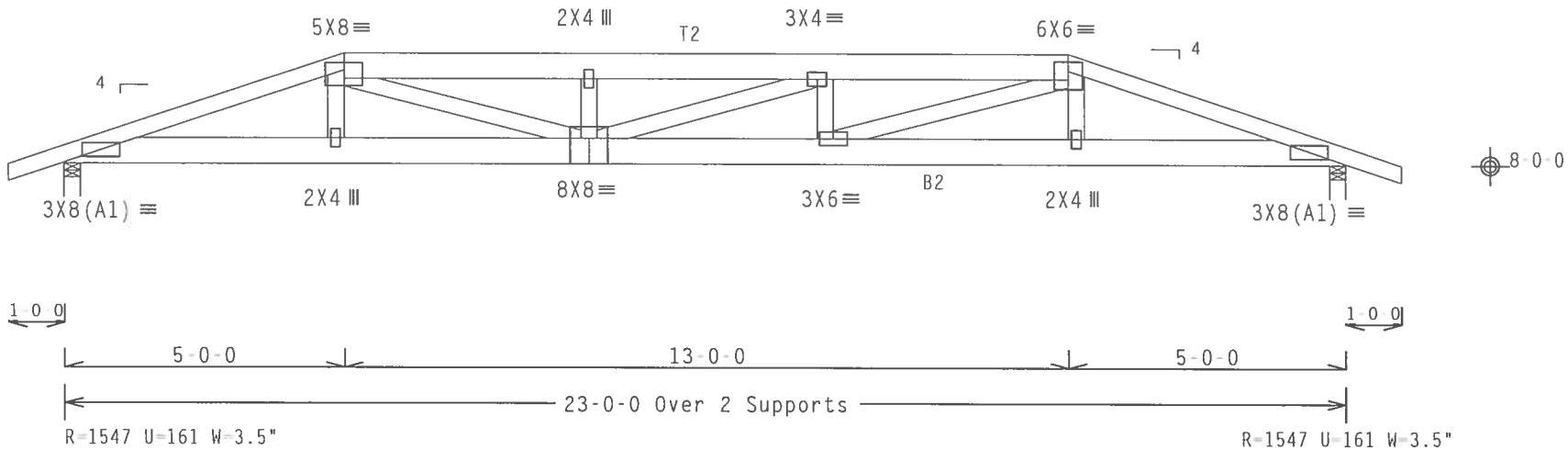

Design Crit: TPI-2002(STD)/FBC

PLT TYP. Wave Cq/RT=1.00(1.25)/0(0) 7.38.0810.03 QTY:1 FL/-/5/-/-/R/- Scale =.3125"/Ft.

ALPINE

ITW Building Components Group, Inc.
Haines City, FL 33844
FL Certificate of Authorization # 567

WARNING TRUSSES REQUIRE EXTREME CARE IN FABRICATION, HANDLING, SHIPPING, INSTALLING AND BRACING. REFER TO BCSI (BUILDING COMPONENT SAFETY INFORMATION), PUBLISHED BY TPI (TRUSS PLATE INSTITUTE, 218 NORTH LEE STREET, SUITE 312, ALEXANDRIA, VA, 22314) AND WTCA (WOOD TRUSS COUNCIL OF AMERICA, 6300 ENTERPRISE LANE, MADISON, WI 53719) FOR SAFETY PRACTICES PRIOR TO PERFORMING THESE FUNCTIONS. UNLESS OTHERWISE INDICATED TOP CHORD SHALL HAVE PROPERLY ATTACHED STRUCTURAL PANELS AND BOTTOM CHORD SHALL HAVE A PROPERLY ATTACHED RIGID CEILING.

IMPORTANTFURNISH A COPY OF THIS DESIGN TO THE INSTALLATION CONTRACTOR. ITW BCG, INC. SHALL NOT BE RESPONSIBLE FOR ANY DEVIATION FROM THIS DESIGN; ANY FAILURE TO BUILD THE TRUSS IN CONFORMANCE WITH TPI; OR FABRICATING, HANDLING, SHIPPING, INSTALLING & BRACING OF TRUSSES. DESIGN CONFORMS WITH APPLICABLE PROVISIONS OF NDS (NATIONAL DESIGN SPEC. BY AF&PA) AND TPI. ITW BCG CONNECTOR PLATES ARE MADE OF 20/18/16GA (W,H/SS/K) ASTM A653 GRADE 40/60 (W, K/H,SS) GALV. STEEL. APPLY PLATES TO EACH FACE OF TRUSS AND, UNLESS OTHERWISE LOCATED ON THIS DESIGN, POSITION PER DRAWINGS 160A-Z. ANY INSPECTION OF PLATES FOLLOWED BY (1) SHALL BE PER ANNEX A3 OF TPI1 2002 SEC.3. A SEAL ON THIS DRAWING INDICATES ACCEPTANCE OF PROFESSIONAL ENGINEERING RESPONSIBILITY SOLELY FOR THE TRUSS COMPONENT DESIGN SHOWN. THE SUITABILITY AND USE OF THIS COMPONENT FOR ANY BUILDING IS THE RESPONSIBILITY OF THE BUILDING DESIGNER PER ANSI/TPI 1 SEC. 2.

JAMES F. COLLINS JR. LICENSE No. 52212 STATE OF FLORIDA PROFESSIONAL ENGINEER

Oct 01

TC LL	20.0 PSF	REF	R215-- 87142
TC DL	10.0 PSF	DATE	10/01/07
BC DL	10.0 PSF	DRW	HCUSR215 07274047
BC LL	0.0 PSF	HC-ENG	EC/DLJ
TOT.LD.	40.0 PSF	SEQN-	201206
DUR.FAC.	1.25	FROM	CDM
SPACING	24.0"	JREF-	1TB8215_Z03

THIS DWG PREPARED FROM COMPUTER INPUT (LOADS & DIMENSIONS) SUBMITTED BY TRUSS MFR.

Top chord 2x4 SP #2 N
Bot chord 2x6 SP #2 N
Webs 2x4 SP #2 N

SPECIAL LOADS
(LUMBER DUR.FAC.=1.25 / PLATE DUR.FAC.=1.25)
TC - From 62 PLF at 0.88 to 62 PLF at 13.50
TC - From 62 PLF at 13.50 to 62 PLF at 26.13
BC - From 80 PLF at 0.00 to 80 PLF at 0.54
BC - From 20 PLF at 0.54 to 20 PLF at 26.46
BC - From 80 PLF at 26.46 to 80 PLF at 27.00
TC - 486 LB Conc. Load at 9.73
BC - 230 LB Conc. Load at 11.73, 13.73, 15.73, 17.73, 19.73 21.73, 23.80, 25.73

Wind reactions based on MWFRS pressures.

LOADING HAS BEEN CALCULATED BY THE TRUSS MANUFACTURER. IT IS THE RESPONSIBILITY OF THE BUILDING DESIGNER TO VERIFY AND APPROVE THE LOADING.

+ MEMBER TO BE LATERALLY BRACED FOR HORIZONTAL WIND LOADS. BRACING SYSTEM TO BE DESIGNED AND FURNISHED BY OTHERS.

(**) 1 plate(s) require special positioning. Refer to scaled plate plot details for special positioning requirements.

110 mph wind, 15.00 ft mean hgt, ASCE 7-02, CLOSED bldg, Located anywhere in roof, CAT II, EXP B, wind TC DL=5.0 psf, wind BC DL=5.0 psf. Iw=1.00 GCpi(+/-)=0.18

See DWGS A11015EE0207 & GBLLETIN0207 for more requirements.

Deflection meets L/240 live and L/180 total load.

The overall height of this truss excluding overhang is 6-9-4.

THE BUILDING DESIGNER IS RESPONSIBLE FOR THE DESIGN OF THE ROOF AND CEILING DIAPHRAGMS, GABLE END SHEAR WALLS, AND SUPPORTING SHEAR WALLS. SHEAR WALLS MUST PROVIDE CONTINUOUS LATERAL RESTRAINT TO THE GABLE END. ALL CONNECTIONS TO BE DESIGNED BY THE BUILDING DESIGNER.

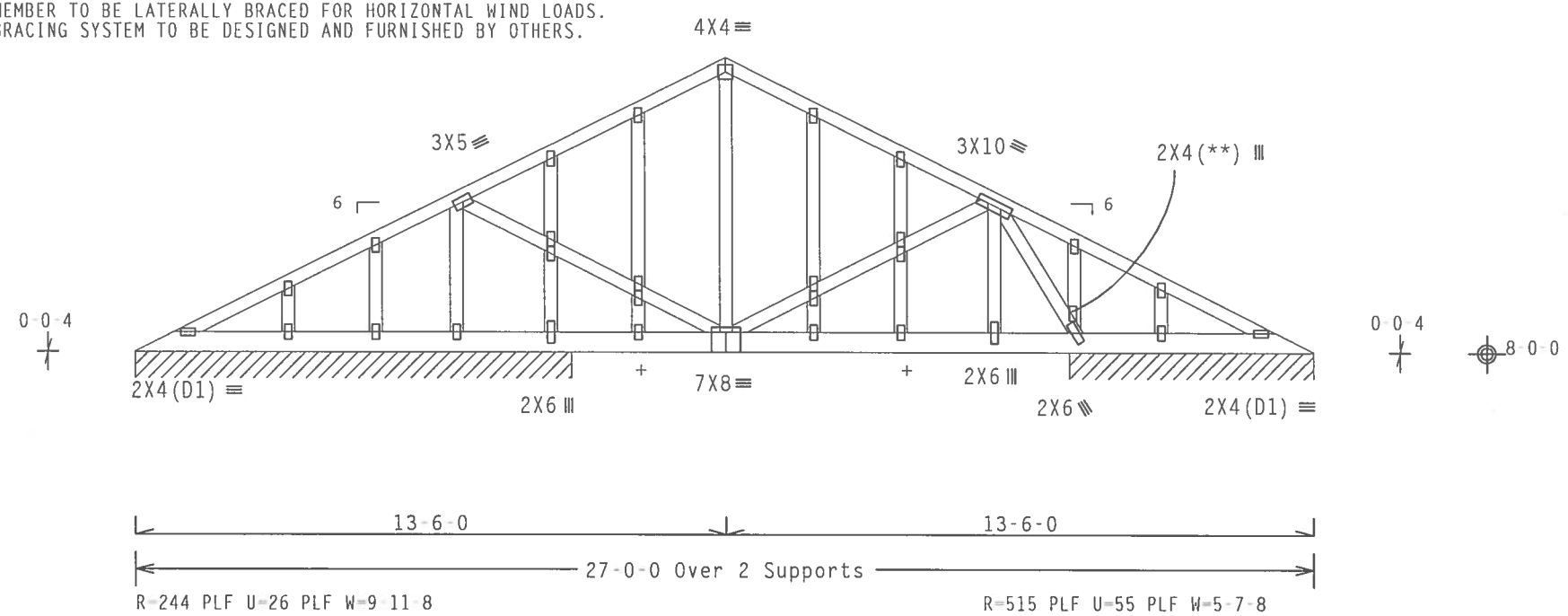

Note: All Plates Are 2X4 Except As Shown.

Design Crit: TPI-2002(STD)/FBC

PLT TYP. Wave Cq/RT=1.00(1.25)/0(0) 7.38.0810.03 QTY:1 FL/-/5/-/-/R/- Scale =.25"/Ft.

ALPINE
ITW Building Components Group, Inc.
Haines City, FL 33844
FL Certificate of Authorization # 567

WARNING TRUSSES REQUIRE EXTREME CARE IN FABRICATION, HANDLING, SHIPPING, INSTALLING AND BRACING. REFER TO BCSI (BUILDING COMPONENT SAFETY INFORMATION), PUBLISHED BY TPI (TRUSS PLATE INSTITUTE, 218 NORTH LEE STREET, SUITE 312, ALEXANDRIA, VA, 22314) AND WTCA (WOOD TRUSS COUNCIL OF AMERICA, 6300 ENTERPRISE LANE, MADISON, WI 53719) FOR SAFETY PRACTICES PRIOR TO PERFORMING THESE FUNCTIONS. UNLESS OTHERWISE INDICATED TOP CHORD SHALL HAVE PROPERLY ATTACHED STRUCTURAL PANELS AND BOTTOM CHORD SHALL HAVE A PROPERLY ATTACHED RIGID CEILING.

IMPORTANTFURNISH A COPY OF THIS DESIGN TO THE INSTALLATION CONTRACTOR. ITW BCG, INC. SHALL NOT BE RESPONSIBLE FOR ANY DEVIATION FROM THIS DESIGN; ANY FAILURE TO BUILD THE TRUSS IN CONFORMANCE WITH TPI; OR FABRICATING, HANDLING, SHIPPING, INSTALLING & BRACING OF TRUSSES. DESIGN CONFORMS WITH APPLICABLE PROVISIONS OF NDS (NATIONAL DESIGN SPEC. BY AF&PA) AND TPI. ITW BCG CONNECTOR PLATES ARE MADE OF 20/18/16GA (W,H/SS/K) ASTM A653 GRADE 40/60 (W, K/H,SS) GALV. STEEL. APPLY PLATES TO EACH FACE OF TRUSS AND, UNLESS OTHERWISE LOCATED ON THIS DESIGN, POSITION PER DRAWINGS 160A-Z. ANY INSPECTION OF PLATES FOLLOWED BY (1) SHALL BE PER ANNEX A3 OF TPI1-2002 SEC.3. A SEAL ON THIS DRAWING INDICATES ACCEPTANCE OF PROFESSIONAL ENGINEERING RESPONSIBILITY SOLELY FOR THE TRUSS COMPONENT DESIGN SHOWN. THE SUITABILITY AND USE OF THIS COMPONENT FOR ANY BUILDING IS THE RESPONSIBILITY OF THE BUILDING DESIGNER PER ANSI/TPI 1 SEC. 2.

JAMES F. COLLINS, JR. LICENSE No. 52212 STATE OF FLORIDA PROFESSIONAL ENGINEER
Oct

TC LL	20.0 PSF	REF	R215-- 87143
TC DL	10.0 PSF	DATE	10/01/07
BC DL	10.0 PSF	DRW	HCUSR215 07274048
BC LL	0.0 PSF	HC-ENG	EC/DLJ
TOT.LD.	40.0 PSF	SEQN-	201195
DUR.FAC.	1.25	FROM	CDM
SPACING	24.0"	JREF-	1TB8215_Z03

THIS DWG PREPARED FROM COMPUTER INPUT (LOADS & DIMENSIONS) SUBMITTED BY TRUSS MFR.

Top chord 2x4 SP #2 N
Bot chord 2x4 SP #2 N
Webs 2x4 SP #2 N

Deflection meets L/240 live and L/180 total load.

The overall height of this truss excluding overhang is 7-1-3.

110 mph wind, 15.00 ft mean hgt, ASCE 7-02, CLOSED bldg, not located within 4.50 ft from roof edge, CAT II, EXP B, wind TC DL=5.0 psf, wind BC DL=5.0 psf. Iw=1.00 GCpi(+/-)=0.18

Wind reactions based on MWFRS pressures.

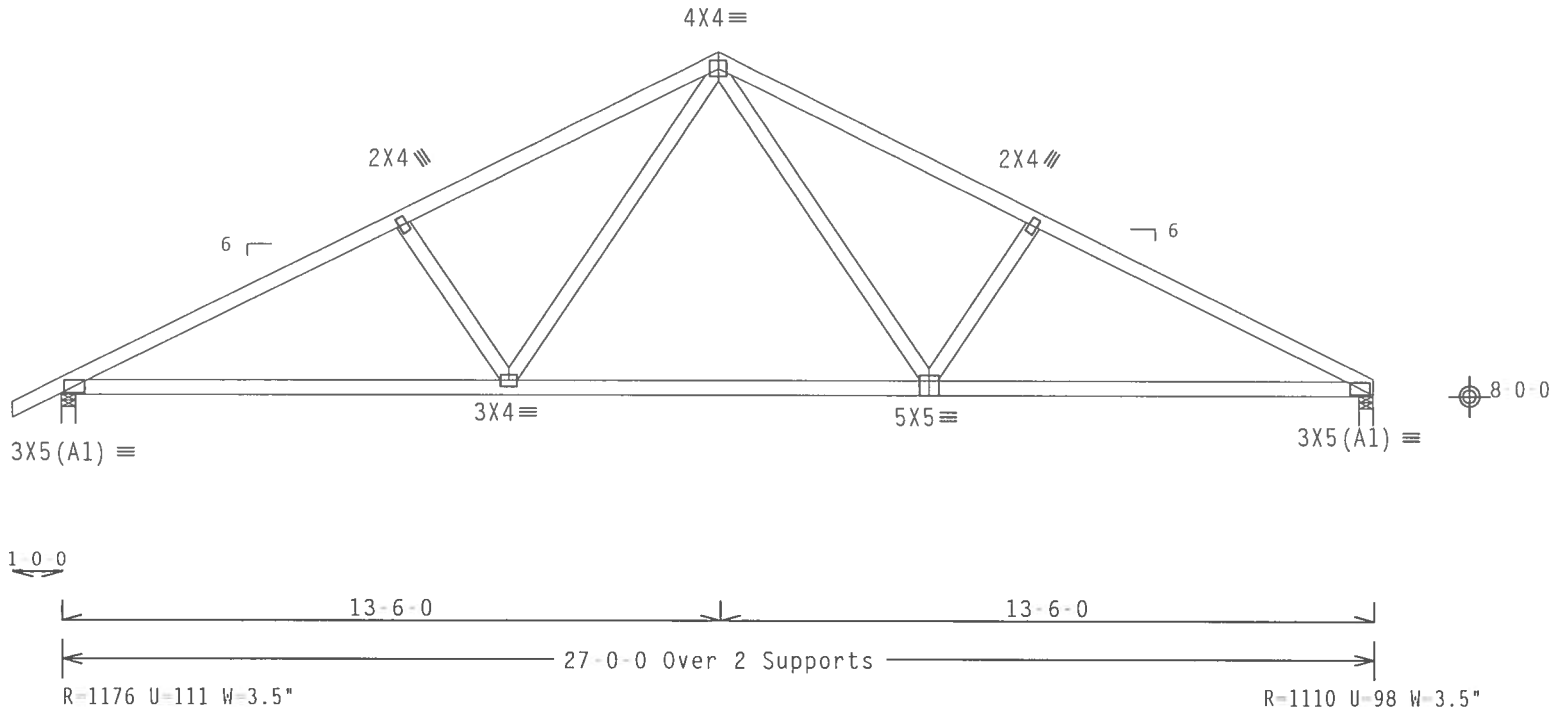

Design Crit: TPI-2002(STD)/FBC

PLT TYP. Wave | Cq/RT=1.00(1.25)/0(0) | 7.38.0810.03 | QTY:1 | FL/-/5/-/-/R/- | Scale =.25"/Ft.

ALPINE
ITW Building Components Group, Inc.
Haines City, FL 33844
FL Certificate of Authorization # 567

WARNING TRUSSES REQUIRE EXTREME CARE IN FABRICATION, HANDLING, SHIPPING, INSTALLING AND BRACING. REFER TO BCSI (BUILDING COMPONENT SAFETY INFORMATION), PUBLISHED BY TPI (TRUSS PLATE INSTITUTE, 218 NORTH LEE STREET, SUITE 312, ALEXANDRIA, VA, 22314) AND WTCA (WOOD TRUSS COUNCIL OF AMERICA, 6300 ENTERPRISE LANE, MADISON, WI 53719) FOR SAFETY PRACTICES PRIOR TO PERFORMING THESE FUNCTIONS. UNLESS OTHERWISE INDICATED TOP CHORD SHALL HAVE PROPERLY ATTACHED STRUCTURAL PANELS AND BOTTOM CHORD SHALL HAVE A PROPERLY ATTACHED RIGID CEILING.

IMPORTANTFURNISH A COPY OF THIS DESIGN TO THE INSTALLATION CONTRACTOR. ITW BCG, INC. SHALL NOT BE RESPONSIBLE FOR ANY DEVIATION FROM THIS DESIGN; ANY FAILURE TO BUILD THE TRUSS IN CONFORMANCE WITH TPI; OR FABRICATING, HANDLING, SHIPPING, INSTALLING & BRACING OF TRUSSES.
DESIGN CONFORMS WITH APPLICABLE PROVISIONS OF NDS (NATIONAL DESIGN SPEC. BY AF&PA) AND TPI. ITW BCG CONNECTOR PLATES ARE MADE OF 20/18/16GA (W,H/SS/K) ASTM A653 GRADE 40/60 (H, K/H,SS) GALV. STEEL. APPLY PLATES TO EACH FACE OF TRUSS AND, UNLESS OTHERWISE LOCATED ON THIS DESIGN, POSITION PER DRAWINGS 160A-Z. ANY INSPECTION OF PLATES FOLLOWED BY (1) SHALL BE PER ANNEX A3 OF TPI1-2002 SEC.3. A SEAL ON THIS DRAWING INDICATES ACCEPTANCE OF PROFESSIONAL ENGINEERING RESPONSIBILITY SOLELY FOR THE TRUSS COMPONENT DESIGN SHOWN. THE SUITABILITY AND USE OF THIS COMPONENT FOR ANY BUILDING IS THE RESPONSIBILITY OF THE BUILDING DESIGNER PER ANSI/TPI 1 SEC. 2.

JAMES F. COLLINS JR. LICENSE No. 52212 STATE OF FLORIDA PROFESSIONAL ENGINEER
Oct 01

TC LL	20.0 PSF	REF	R215-- 87144
TC DL	10.0 PSF	DATE	10/01/07
BC DL	10.0 PSF	DRW	HCUSR215 07274049
BC LL	0.0 PSF	HC-ENG	EC/DLJ *
TOT.LD.	40.0 PSF	SEQN-	201199
DUR.FAC.	1.25	FROM	CDM
SPACING	24.0"	JREF-	1TB8215_Z03

THIS DWG PREPARED FROM COMPUTER INPUT (LOADS & DIMENSIONS) SUBMITTED BY TRUSS MFR.

Top chord 2x4 SP #2 N
Bot chord 2x4 SP #2 N
Webs 2x4 SP #2 N

Deflection meets L/240 live and L/180 total load.

The overall height of this truss excluding overhang is 7-1-3.

110 mph wind, 15.00 ft mean hgt, ASCE 7-02, CLOSED bldg, not located within 4.50 ft from roof edge, CAT II, EXP B, wind TC DL=5.0 psf, wind BC DL=5.0 psf. Iw=1.00 GCpi(+/-)=0.18

Wind reactions based on MWFRS pressures.

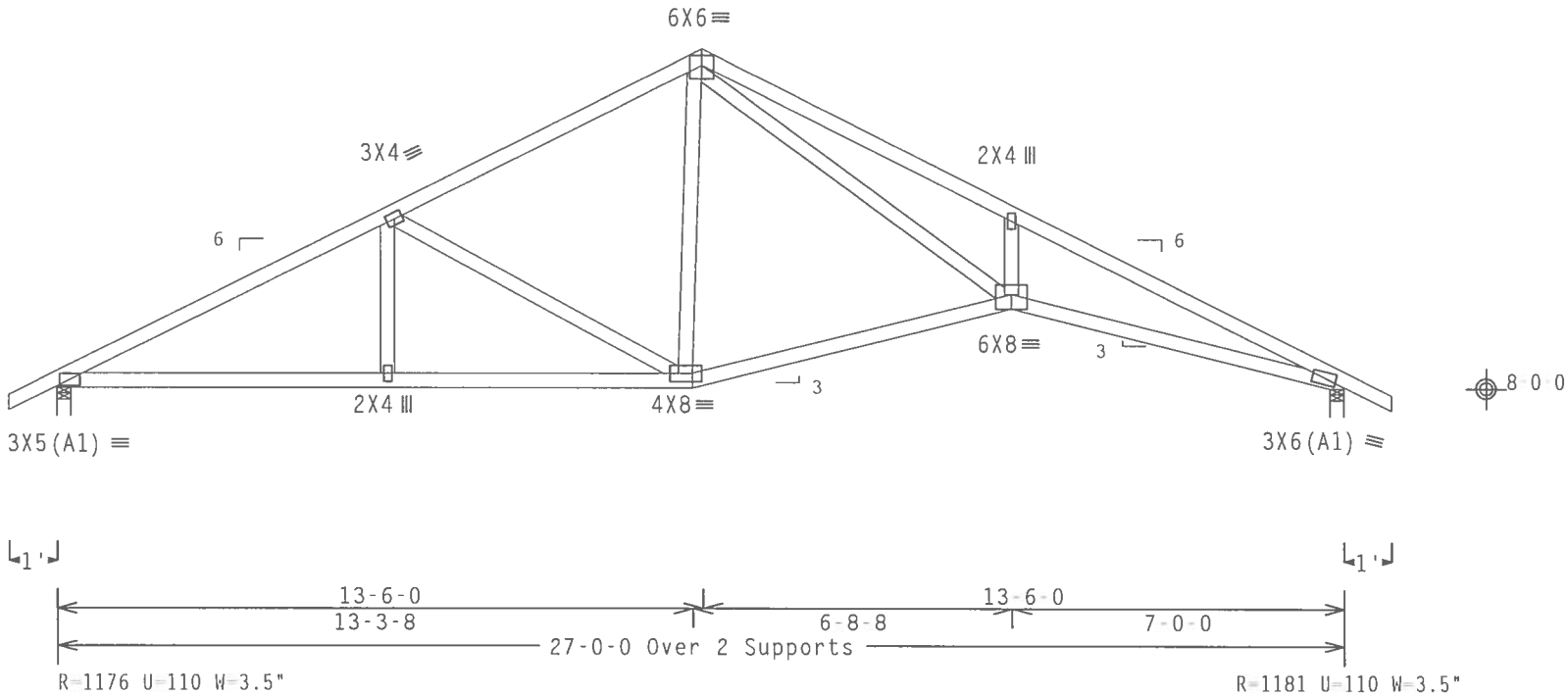

Design Crit: TPI-2002(STD)/FBC

PLT TYP. Wave — Cq/RT=1.00(1.25)/0(0) — 7.38.0810 — QTY:1 — FL/-/5/-/-/R/- — Scale =.25"/Ft.

ALPINE
ITW Building Components Group, Inc.
Haines City, FL 33844
FL Certificate of Authorization # 567

WARNING TRUSSES REQUIRE EXTREME CARE IN FABRICATION, HANDLING, SHIPPING, INSTALLING AND BRACING. REFER TO BCSI (BUILDING COMPONENT SAFETY INFORMATION), PUBLISHED BY TPI (TRUSS PLATE INSTITUTE, 218 NORTH LEE STREET, SUITE 312, ALEXANDRIA, VA, 22314) AND WTCA (WOOD TRUSS COUNCIL OF AMERICA, 6300 ENTERPRISE LANE, MADISON, WI 53719) FOR SAFETY PRACTICES PRIOR TO PERFORMING THESE FUNCTIONS. UNLESS OTHERWISE INDICATED TOP CHORD SHALL HAVE PROPERLY ATTACHED STRUCTURAL PANELS AND BOTTOM CHORD SHALL HAVE A PROPERLY ATTACHED RIGID CEILING.

IMPORTANTFURNISH A COPY OF THIS DESIGN TO THE INSTALLATION CONTRACTOR. ITW BCG, INC. SHALL NOT BE RESPONSIBLE FOR ANY DEVIATION FROM THIS DESIGN; ANY FAILURE TO BUILD THE TRUSS IN CONFORMANCE WITH TPI; OR FABRICATING, HANDLING, SHIPPING, INSTALLING & BRACING OF TRUSSES. DESIGN CONFORMS WITH APPLICABLE PROVISIONS OF NDS (NATIONAL DESIGN SPEC. BY AF&PA) AND TPI. ITW BCG CONNECTOR PLATES ARE MADE OF 20/18/16GA (W,H/SS/K) ASTM A653 GRADE 40/60 (W, K/H,SS) GALV. STEEL. APPLY PLATES TO EACH FACE OF TRUSS AND, UNLESS OTHERWISE LOCATED ON THIS DESIGN, POSITION PER DRAWINGS 160A Z. ANY INSPECTION OF PLATES FOLLOWED BY (1) SHALL BE PER ANNEX A3 OF TPI1 2002 SEC.3. A SEAL ON THIS DRAWING INDICATES ACCEPTANCE OF PROFESSIONAL ENGINEERING RESPONSIBILITY SOLELY FOR THE TRUSS COMPONENT DESIGN SHOWN. THE SUITABILITY AND USE OF THIS COMPONENT FOR ANY BUILDING IS THE RESPONSIBILITY OF THE BUILDING DESIGNER PER ANSI/TPI 1 SEC. 2.

JAMES F. COLLINS JR. LICENSE No. 52212 STATE OF FLORIDA PROFESSIONAL ENGINEER

Oct 01 07

TC LL	20.0 PSF	REF R215-- 87145
TC DL	10.0 PSF	DATE 10/01/07
BC DL	10.0 PSF	DRW HCUSR215 07274050
BC LL	0.0 PSF	HC-ENG EC/DLJ *
TOT.LD.	40.0 PSF	SEQN- 201202
DUR.FAC.	1.25	FROM CDM
SPACING	24.0"	JREF- 1TB8215_Z03

(4937 /Equestrian Manager's Res. /EDGELY CONSTRUCTION -- LAKE CITY, FL - A6)

Top chord 2x4 SP #2 N
Bot chord 2x4 SP #2 N
Webs 2x4 SP #2 N

Gable end supports 8" max rake overhang.

See DWGS A11015EE0207 & GBLLETIN0207 for more requirements.

Deflection meets L/240 live and L/180 total load.

The overall height of this truss excluding overhang is 6-9-4.

THE BUILDING DESIGNER IS RESPONSIBLE FOR THE DESIGN OF THE ROOF AND CEILING DIAPHRAGMS, GABLE END SHEAR WALLS, AND SUPPORTING SHEAR WALLS. SHEAR WALLS MUST PROVIDE CONTINUOUS LATERAL RESTRAINT TO THE GABLE END. ALL CONNECTIONS TO BE DESIGNED BY THE BUILDING DESIGNER.

(**) 1 plate(s) require special positioning. Refer to scaled plate plot details for special positioning requirements.

110 mph wind, 15.00 ft mean hgt, ASCE 7-02, CLOSED bldg, not located within 4.50 ft from roof edge, CAT II, EXP B, wind TC DL=5.0 psf, wind BC DL=5.0 psf. Iw=1.00 GCpi(+/-)=0.18

Wind reactions based on MWFRS pressures.

Shim all supports to solid bearing.

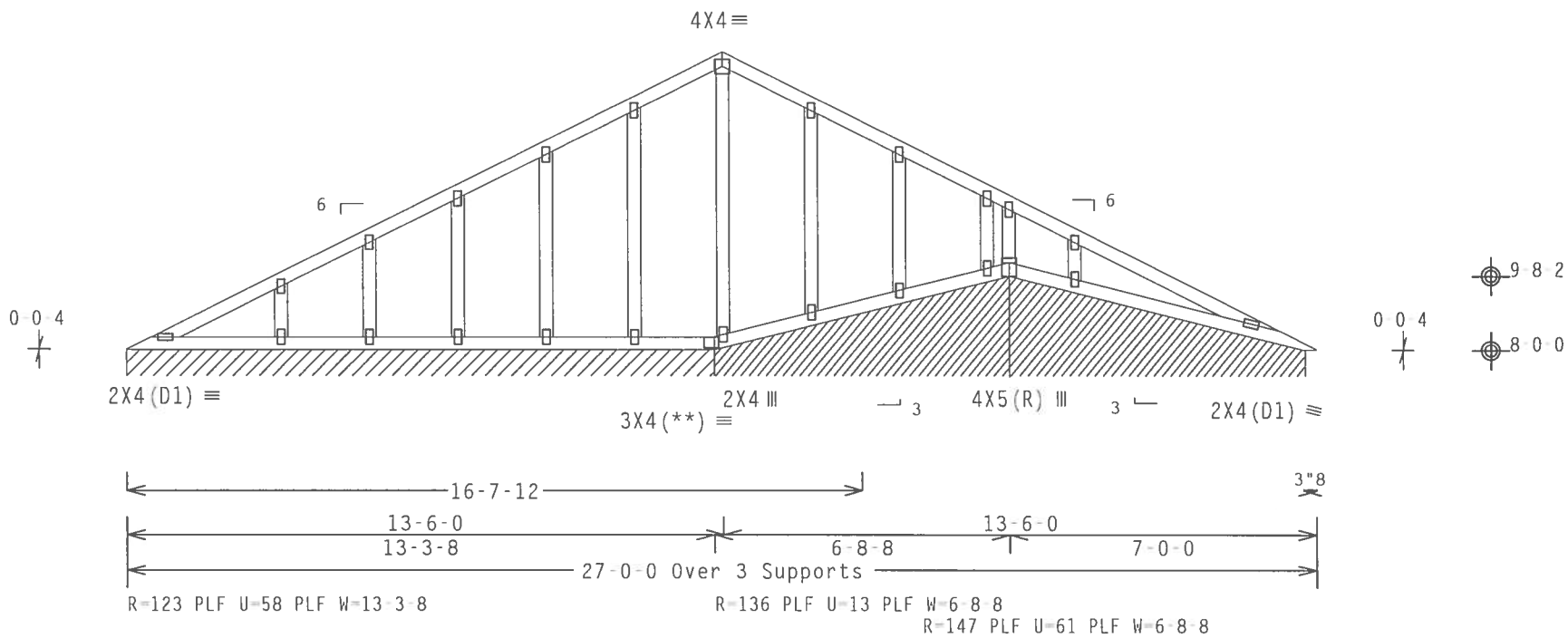

Note: All Plates Are 2X4 Except As Shown.

Design Crit: TPI-2002(STD)/FBC

PLT TYP. Wave Cq/RT=1.00(1.25)/0(0) 7.38.0810.03 QTY:1 FL/-/5/-/-/R/- Scale =.25"/Ft.

ALPINE

ITW Building Components Group, Inc.
Haines City, FL 33844
FL Certificate of Authorization # 567

WARNING TRUSSES REQUIRE EXTREME CARE IN FABRICATION, HANDLING, SHIPPING, INSTALLING AND BRACING. REFER TO BCSI (BUILDING COMPONENT SAFETY INFORMATION), PUBLISHED BY TPI (TRUSS PLATE INSTITUTE, 218 NORTH LEE STREET, SUITE 312, ALEXANDRIA, VA, 22314) AND WTCA (WOOD TRUSS COUNCIL OF AMERICA, 6300 ENTERPRISE LANE, MADISON, WI 53719) FOR SAFETY PRACTICES PRIOR TO PERFORMING THESE FUNCTIONS. UNLESS OTHERWISE INDICATED TOP CHORD SHALL HAVE PROPERLY ATTACHED STRUCTURAL PANELS AND BOTTOM CHORD SHALL HAVE A PROPERLY ATTACHED RIGID CEILING.

IMPORTANT FURNISH A COPY OF THIS DESIGN TO THE INSTALLATION CONTRACTOR. ITW BCG, INC. SHALL NOT BE RESPONSIBLE FOR ANY DEVIATION FROM THIS DESIGN; ANY FAILURE TO BUILD THE TRUSS IN CONFORMANCE WITH TPI; OR FABRICATING, HANDLING, SHIPPING, INSTALLING & BRACING OF TRUSSES. DESIGN CONFORMS WITH APPLICABLE PROVISIONS OF NDS (NATIONAL DESIGN SPEC. BY AF&PA) AND TPI. ITW BCG CONNECTOR PLATES ARE MADE OF 20/18/16GA (H,H/SS/K) ASTM A653 GRADE 40/60 (H, K/H,SS) GALV. STEEL. APPLY PLATES TO EACH FACE OF TRUSS AND, UNLESS OTHERWISE LOCATED ON THIS DESIGN, POSITION PER DRAWINGS 160A-Z. ANY INSPECTION OF PLATES FOLLOWED BY (1) SHALL BE PER ANNEX A3 OF TPI1-2002 SEC.3. A SEAL ON THIS DRAWING INDICATES ACCEPTANCE OF PROFESSIONAL ENGINEERING RESPONSIBILITY SOLELY FOR THE TRUSS COMPONENT DESIGN SHOWN. THE SUITABILITY AND USE OF THIS COMPONENT FOR ANY BUILDING IS THE RESPONSIBILITY OF THE BUILDING DESIGNER PER ANSI/TPI 1 SEC. 2.

JAMES F. COLLINS JR. LICENSE No. 52212 STATE OF FLORIDA PROFESSIONAL ENGINEER

Oct 01

TC LL	20.0 PSF	REF	R215-- 87146
TC DL	10.0 PSF	DATE	10/01/07
BC DL	10.0 PSF	DRW	HCUSR215 07274057
BC LL	0.0 PSF	HC-ENG	EC/DLJ
TOT.LD.	40.0 PSF	SEQN-	201217
DUR.FAC.	1.25	FROM	CDM
SPACING	24.0"	JREF-	1TB8215_Z03

THIS DWG PREPARED FROM COMPUTER INPUT (LOADS & DIMENSIONS) SUBMITTED BY TRUSS MFR.

Top chord 2x4 SP #2 N
Bot chord 2x4 SP #2 N
Webs 2x4 SP #2 N

Deflection meets L/240 live and L/180 total load.

THE BUILDING DESIGNER IS RESPONSIBLE FOR THE DESIGN OF THE ROOF AND CEILING DIAPHRAGMS, GABLE END SHEAR WALLS, AND SUPPORTING SHEAR WALLS. SHEAR WALLS MUST PROVIDE CONTINUOUS LATERAL RESTRAINT TO THE GABLE END. ALL CONNECTIONS TO BE DESIGNED BY THE BUILDING DESIGNER.

110 mph wind, 15.00 ft mean hgt, ASCE 7-02, CLOSED bldg, Located anywhere in roof, CAT II, EXP B, wind TC DL=5.0 psf, wind BC DL=5.0 psf. Iw=1.00 GCpi(+/-)=0.18

Wind reactions based on MWFRS pressures.

See DWGS A11015EE0207 & GBLLETIN0207 for more requirements.

The overall height of this truss excluding overhang is 3-4-4.

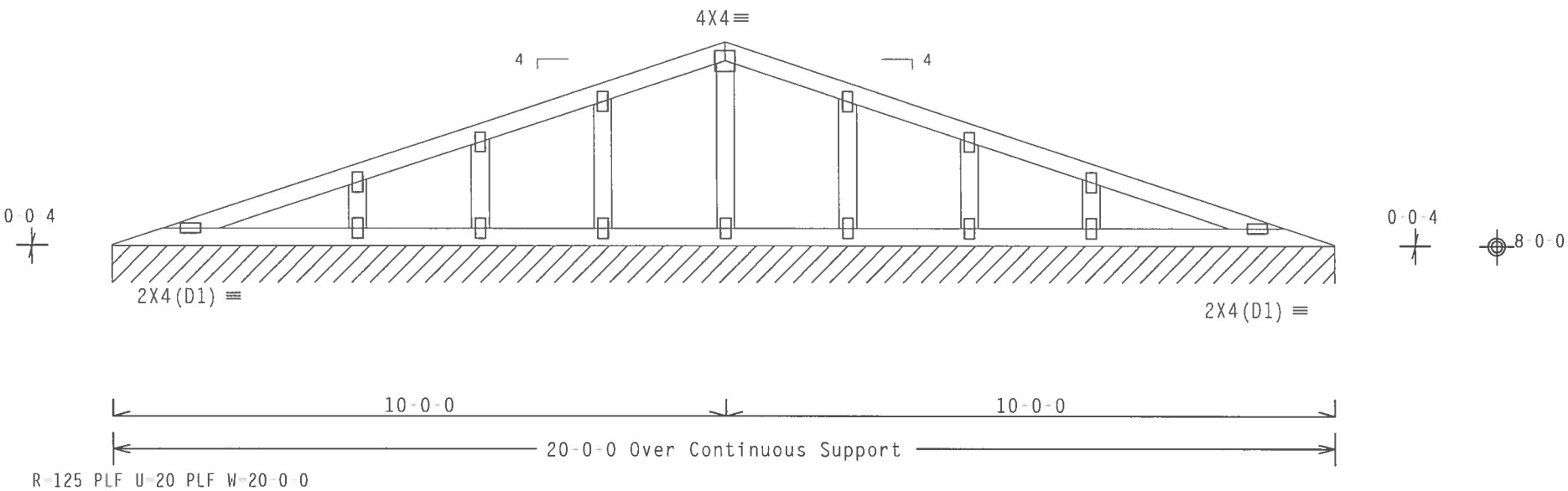

Note: All Plates Are 2X4 Except As Shown.

Design Crit: TPI-2002(STD)/FBC

PLT TYP. Wave Cq/RT=1.00(1.25)/0(0) 7.38.0810.03 QTY:1 FL/-/5/-/-/R/- Scale =.375"/Ft.

ALPINE

ITW Building Components Group, Inc.
Haines City, FL 33844
FL Certificate of Authorization # 567

WARNING TRUSSES REQUIRE EXTREME CARE IN FABRICATION, HANDLING, SHIPPING, INSTALLING AND BRACING. REFER TO BCSI (BUILDING COMPONENT SAFETY INFORMATION), PUBLISHED BY TPI (TRUSS PLATE INSTITUTE, 218 NORTH LEE STREET, SUITE 312, ALEXANDRIA, VA, 22314) AND WTCA (WOOD TRUSS COUNCIL OF AMERICA, 6300 ENTERPRISE LANE, MADISON, WI 53719) FOR SAFETY PRACTICES PRIOR TO PERFORMING THESE FUNCTIONS. UNLESS OTHERWISE INDICATED TOP CHORD SHALL HAVE PROPERLY ATTACHED STRUCTURAL PANELS AND BOTTOM CHORD SHALL HAVE A PROPERLY ATTACHED RIGID CEILING.

IMPORTANTFURNISH A COPY OF THIS DESIGN TO THE INSTALLATION CONTRACTOR. ITW BCG, INC. SHALL NOT BE RESPONSIBLE FOR ANY DEVIATION FROM THIS DESIGN; ANY FAILURE TO BUILD THE TRUSS IN CONFORMANCE WITH TPI; OR FABRICATING, HANDLING, SHIPPING, INSTALLING & BRACING OF TRUSSES. DESIGN CONFORMS WITH APPLICABLE PROVISIONS OF NDS (NATIONAL DESIGN SPEC. BY AF&PA) AND TPI. ITW BCG CONNECTOR PLATES ARE MADE OF 20/18/16GA (W,H/SS/K) ASTM A653 GRADE 40/60 (W, K/H,SS) GALV. STEEL. APPLY PLATES TO EACH FACE OF TRUSS AND, UNLESS OTHERWISE LOCATED ON THIS DESIGN, POSITION PER DRAWINGS 160A-Z. ANY INSPECTION OF PLATES FOLLOWED BY (1) SHALL BE PER ANNEX A3 OF TPI1-2002 SEC.3. A SEAL ON THIS DRAWING INDICATES ACCEPTANCE OF PROFESSIONAL ENGINEERING RESPONSIBILITY SOLELY FOR THE TRUSS COMPONENT DESIGN SHOWN. THE SUITABILITY AND USE OF THIS COMPONENT FOR ANY BUILDING IS THE RESPONSIBILITY OF THE BUILDING DESIGNER PER ANSI/TPI 1 SEC. 2.

JAMES F. COLLINS, JR. LICENSE No. 52212 STATE OF FLORIDA PROFESSIONAL ENGINEER

Oct 0

TC LL	20.0 PSF	REF	R215-- 87147
TC DL	10.0 PSF	DATE	10/01/07
BC DL	10.0 PSF	DRW	HCUSR215 07274051
BC LL	0.0 PSF	HC-ENG	EC/DLJ *
TOT.LD.	40.0 PSF	SEQN-	201168
DUR.FAC.	1.25	FROM	CDM
SPACING	24.0"	JREF-	1TB8215_Z03

THIS DWG PREPARED FROM COMPUTER INPUT (LOADS & DIMENSIONS) SUBMITTED BY TRUSS MFR.

Top chord 2x4 SP #2 N
Bot chord 2x4 SP #2 N
Webs 2x4 SP #2 N

Deflection meets L/240 live and L/180 total load.

The overall height of this truss excluding overhang is 3-7-15.

110 mph wind, 15.00 ft mean hgt, ASCE 7-02, CLOSED bldg, Located anywhere in roof, CAT II, EXP B, wind TC DL=5.0 psf, wind BC DL=5.0 psf. Iw=1.00 GCpi(+/-)=0.18

Wind reactions based on MWFRS pressures.

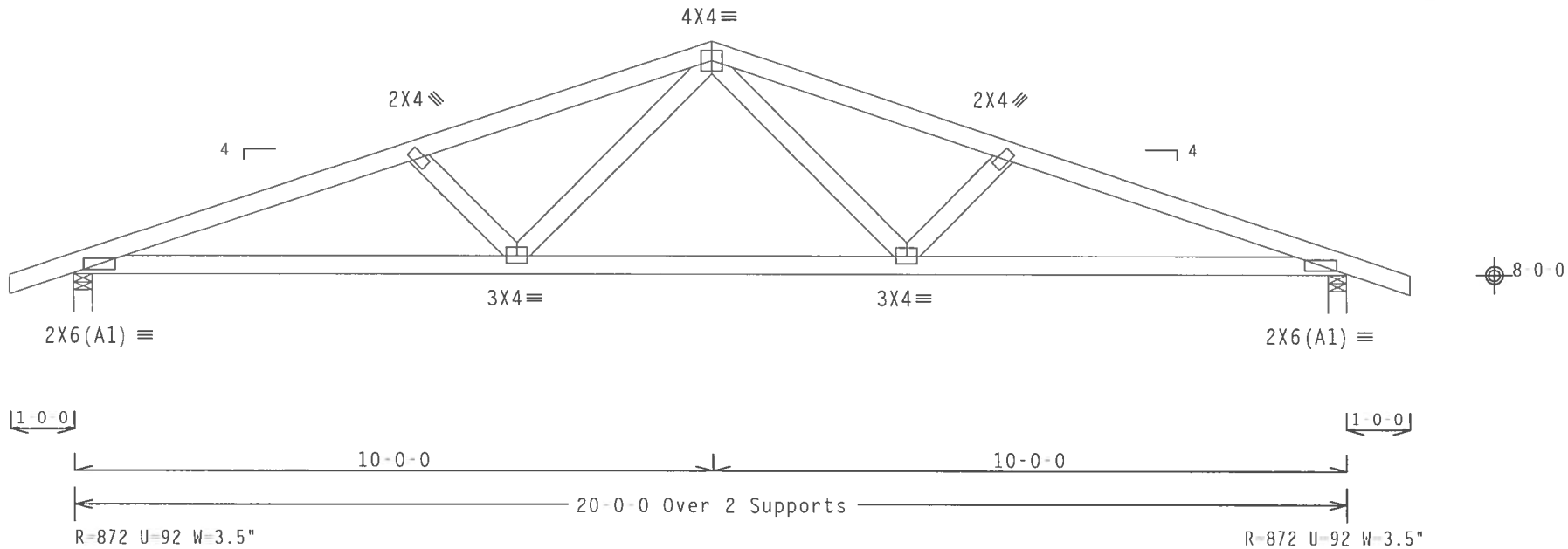

Design Crit: TPI-2002(STD)/FBC

PLT TYP. Wave Cq/RT=1.00(1.25)/0(0) 7.38.0810.0 QTY:1 FL/-/5/-/-/R/- Scale =.375"/Ft.

ALPINE
ITW Building Components Group, Inc.
Haines City, FL 33844
FL Certificate of Authorization # 567

WARNING TRUSSES REQUIRE EXTREME CARE IN FABRICATION, HANDLING, SHIPPING, INSTALLING AND BRACING. REFER TO BCSI (BUILDING COMPONENT SAFETY INFORMATION), PUBLISHED BY TPI (TRUSS PLATE INSTITUTE, 218 NORTH LEE STREET, SUITE 312, ALEXANDRIA, VA. 22314) AND WTCA (WOOD TRUSS COUNCIL OF AMERICA, 6300 ENTERPRISE LANE, MADISON, WI 53719) FOR SAFETY PRACTICES PRIOR TO PERFORMING THESE FUNCTIONS. UNLESS OTHERWISE INDICATED TOP CHORD SHALL HAVE PROPERLY ATTACHED STRUCTURAL PANELS AND BOTTOM CHORD SHALL HAVE A PROPERLY ATTACHED RIGID CEILING.

IMPORTANTFURNISH A COPY OF THIS DESIGN TO THE INSTALLATION CONTRACTOR. ITW BCG, INC. SHALL NOT BE RESPONSIBLE FOR ANY DEVIATION FROM THIS DESIGN; ANY FAILURE TO BUILD THE TRUSS IN CONFORMANCE WITH TPI; OR FABRICATING, HANDLING, SHIPPING, INSTALLING & BRACING OF TRUSSES. DESIGN CONFORMS WITH APPLICABLE PROVISIONS OF NDS (NATIONAL DESIGN SPEC. BY AF&PA) AND TPI. ITW BCG CONNECTOR PLATES ARE MADE OF 20/18/16GA (H,H/SS/K) ASTM A653 GRADE 40/60 (H, K/H,SS) GALV. STEEL. APPLY PLATES TO EACH FACE OF TRUSS AND, UNLESS OTHERWISE LOCATED ON THIS DESIGN, POSITION PER DRAWINGS 160A & ANY INSPECTION OF PLATES FOLLOWED BY (1) SHALL BE PER ANNEX A3 OF TPI1 2002 SEC 3. A SEAL ON THIS DRAWING INDICATES ACCEPTANCE OF PROFESSIONAL ENGINEERING RESPONSIBILITY SOLELY FOR THE TRUSS COMPONENT DESIGN SHOWN. THE SUITABILITY AND USE OF THIS COMPONENT FOR ANY BUILDING IS THE RESPONSIBILITY OF THE BUILDING DESIGNER PER ANSI/TPI 1 SEC. 2.

JAMES F. COLLINS JR. LICENSE No. 52212 STATE OF FLORIDA PROFESSIONAL ENGINEER
Oct 01 07

TC LL	20.0 PSF	REF	R215-- 87148
TC DL	10.0 PSF	DATE	10/01/07
BC DL	10.0 PSF	DRW	HCUSR215 07274059
BC LL	0.0 PSF	HC-ENG	EC/DLJ *
TOT.LD.	40.0 PSF	SEQN-	201171
DUR.FAC.	1.25	FROM	CDM
SPACING	24.0"	JREF-	1TB8215_Z03

THIS DWG PREPARED FROM COMPUTER INPUT (LOADS & DIMENSIONS) SUBMITTED BY TRUSS MFR.

Top chord 2x4 SP #2 N
Bot chord 2x4 SP #2 N
Webs 2x4 SP #2 N

Deflection meets L/240 live and L/180 total load.

The overall height of this truss excluding overhang is 2-3-15.

110 mph wind, 15.00 ft mean hgt, ASCE 7-02, CLOSED bldg, not located within 4.50 ft from roof edge, CAT II, EXP B, wind TC DL=5.0 psf, wind BC DL=5.0 psf. Iw=1.00 GCpi(+/-)=0.18

Wind reactions based on MWFRS pressures.

Right end vertical not exposed to wind pressure.

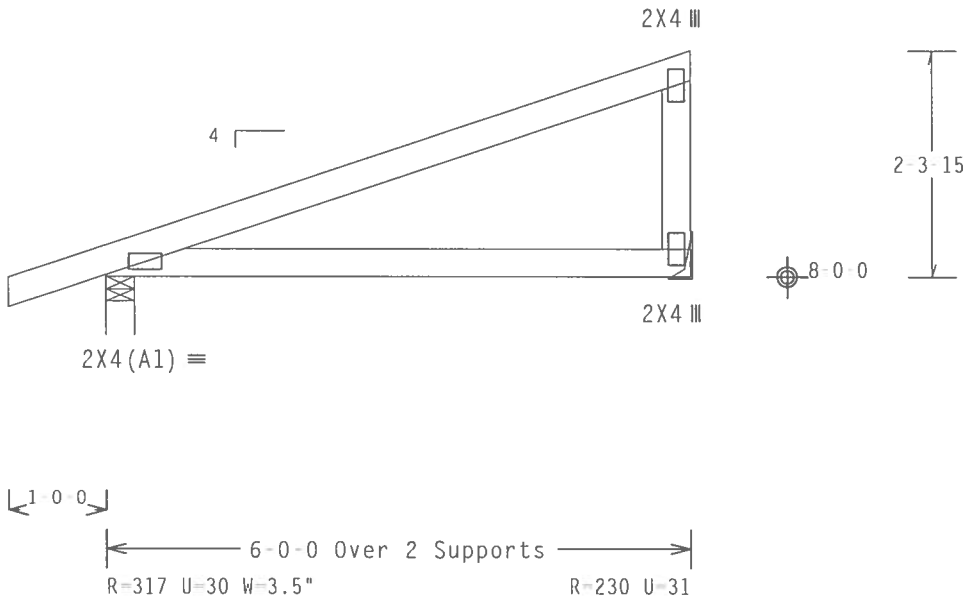

Design Crit: TPI-2002(STD)/FBC

PLT TYP. Wave Cq/RT=1.00(1.25)/0(0) 7.38.0810 QTY:1 FL/-/5/-/-/R/- Scale =.5"/Ft.

ALPINE
ITW Building Components Group, Inc.
Haines City, FL 33844
FL Certificate of Authorization # 567

WARNING TRUSSES REQUIRE EXTREME CARE IN FABRICATION, HANDLING, SHIPPING, INSTALLING AND BRACING. REFER TO BCSI (BUILDING COMPONENT SAFETY INFORMATION), PUBLISHED BY TPI (TRUSS PLATE INSTITUTE, 218 NORTH LEE STREET, SUITE 312, ALEXANDRIA, VA, 22314) AND WTCA (WOOD TRUSS COUNCIL OF AMERICA, 6300 ENTERPRISE LANE, MADISON, WI 53719) FOR SAFETY PRACTICES PRIOR TO PERFORMING THESE FUNCTIONS. UNLESS OTHERWISE INDICATED TOP CHORD SHALL HAVE PROPERLY ATTACHED STRUCTURAL PANELS AND BOTTOM CHORD SHALL HAVE A PROPERLY ATTACHED RIGID CEILING.

IMPORTANT FURNISH A COPY OF THIS DESIGN TO THE INSTALLATION CONTRACTOR. ITW BCG, INC. SHALL NOT BE RESPONSIBLE FOR ANY DEVIATION FROM THIS DESIGN; ANY FAILURE TO BUILD THE TRUSS IN CONFORMANCE WITH TPI; OR FABRICATING, HANDLING, SHIPPING, INSTALLING & BRACING OF TRUSSES.
DESIGN CONFORMS WITH APPLICABLE PROVISIONS OF NDS (NATIONAL DESIGN SPEC. BY AF&PA) AND TPI. ITW BCG CONNECTOR PLATES ARE MADE OF 20/18/16GA (W,H/SS/K) ASTM A653 GRADE 40/60 (H, K/H,SS) GALV. STEEL. APPLY PLATES TO EACH FACE OF TRUSS AND, UNLESS OTHERWISE LOCATED ON THIS DESIGN, POSITION PER DRAWINGS 160A Z. ANY INSPECTION OF PLATES FOLLOWED BY (1) SHALL BE PER ANNEX A3 OF TPI1 2002 SEC.3. A SEAL ON THIS DRAWING INDICATES ACCEPTANCE OF PROFESSIONAL ENGINEERING RESPONSIBILITY SOLELY FOR THE TRUSS COMPONENT DESIGN SHOWN. THE SUITABILITY AND USE OF THIS COMPONENT FOR ANY BUILDING IS THE RESPONSIBILITY OF THE BUILDING DESIGNER PER ANSI/TPI 1 SEC. 2.

JAMES F. COLLINS, JR. LICENSED No. 52212 STATE OF FLORIDA PROFESSIONAL ENGINEER

Oct

TC LL	20.0 PSF	REF	R215-- 87149
TC DL	10.0 PSF	DATE	10/01/07
BC DL	10.0 PSF	DRW	HCUSR215 07274052
BC LL	0.0 PSF	HC-ENG	EC/DLJ *
TOT.LD.	40.0 PSF	SEQN-	201183
DUR.FAC.	1.25	FROM	CDM
SPACING	24.0"	JREF-	1TB8215_Z03

THIS DWG PREPARED FROM COMPUTER INPUT (LOADS & DIMENSIONS) SUBMITTED BY TRUSS MFR.

Top chord 2x4 SP #2 N
Bot chord 2x4 SP #2 N
Webs 2x4 SP #2 N

See DWGS A11015EE0207 & GBLLETIN0207 for more requirements.

The overall height of this truss excluding overhang is 2-0-4.

THE BUILDING DESIGNER IS RESPONSIBLE FOR THE DESIGN OF THE ROOF AND CEILING DIAPHRAGMS, GABLE END SHEAR WALLS, AND SUPPORTING SHEAR WALLS. SHEAR WALLS MUST PROVIDE CONTINUOUS LATERAL RESTRAINT TO THE GABLE END. ALL CONNECTIONS TO BE DESIGNED BY THE BUILDING DESIGNER.

110 mph wind, 15.00 ft mean hgt, ASCE 7-02, CLOSED bldg, Located anywhere in roof, CAT II, EXP B, wind TC DL=5.0 psf, wind BC DL=5.0 psf. Iw=1.00 GCpi(+/-)=0.18

Wind reactions based on MWFRS pressures.

Right end vertical not exposed to wind pressure.

Deflection meets L/240 live and L/180 total load.

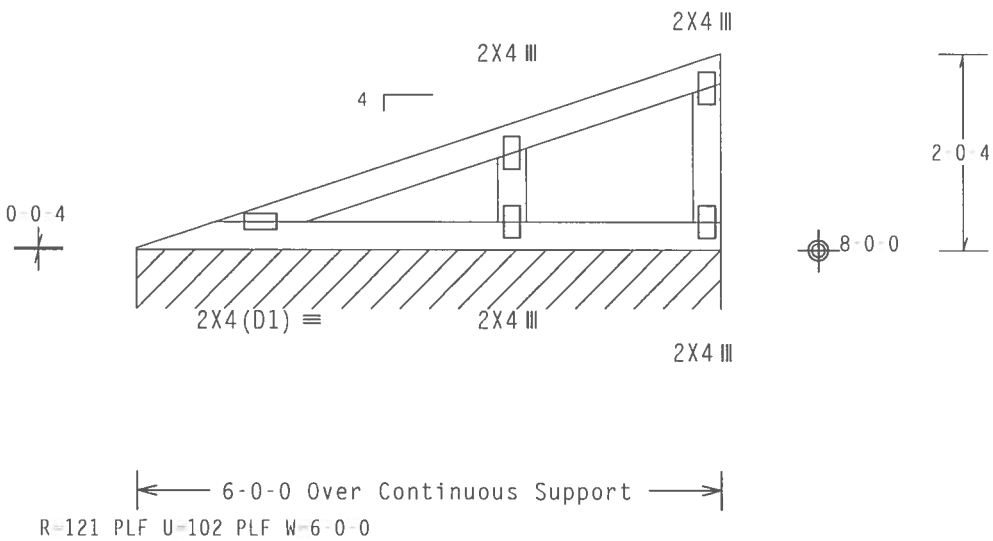

R=121 PLF U=102 PLF W=6-0-0

Design Crit: TPI-2002(STD)/FBC

PLT TYP. Wave Cq/RT=1.00(1.25)/0(0) 7.38.0810 QTY:1 FL/-/5/-/-/R/- Scale =.5"/Ft.

ALPINE
ITW Building Components Group, Inc.
Haines City, FL 33844
FL Certificate of Authorization # 567

WARNING TRUSSES REQUIRE EXTREME CARE IN FABRICATION, HANDLING, SHIPPING, INSTALLING AND BRACING. REFER TO BCSI (BUILDING COMPONENT SAFETY INFORMATION), PUBLISHED BY TPI (TRUSS PLATE INSTITUTE, 218 NORTH LEE STREET, SUITE 312, ALEXANDRIA, VA, 22314) AND WTCA (WOOD TRUSS COUNCIL OF AMERICA, 6300 ENTERPRISE LANE, MADISON, WI 53719) FOR SAFETY PRACTICES PRIOR TO PERFORMING THESE FUNCTIONS. UNLESS OTHERWISE INDICATED TOP CHORD SHALL HAVE PROPERLY ATTACHED STRUCTURAL PANELS AND BOTTOM CHORD SHALL HAVE A PROPERLY ATTACHED RIGID CEILING.

IMPORTANT FURNISH A COPY OF THIS DESIGN TO THE INSTALLATION CONTRACTOR. ITW BCG, INC. SHALL NOT BE RESPONSIBLE FOR ANY DEVIATION FROM THIS DESIGN; ANY FAILURE TO BUILD THE TRUSS IN CONFORMANCE WITH TPI; OR FABRICATING, HANDLING, SHIPPING, INSTALLING & BRACING OF TRUSSES. DESIGN CONFORMS WITH APPLICABLE PROVISIONS OF NDS (NATIONAL DESIGN SPEC. BY AF&PA) AND TPI. ITW BCG CONNECTOR PLATES ARE MADE OF 20/18/16GA (W,H/SS/K) ASTM A653 GRADE 40/60 (W, K/H,SS) GALV. STEEL. APPLY PLATES TO EACH FACE OF TRUSS AND, UNLESS OTHERWISE LOCATED ON THIS DESIGN, POSITION PER DRAWINGS 160A-Z. ANY INSPECTION OF PLATES FOLLOWED BY (1) SHALL BE PER ANNEX A3 OF TPI1 2002 SEC.3. A SEAL ON THIS DRAWING INDICATES ACCEPTANCE OF PROFESSIONAL ENGINEERING RESPONSIBILITY SOLELY FOR THE TRUSS COMPONENT DESIGN SHOWN. THE SUITABILITY AND USE OF THIS COMPONENT FOR ANY BUILDING IS THE RESPONSIBILITY OF THE BUILDING DESIGNER PER ANSI/TPI 1 SEC. 2.

JAMES F. COLLINS, JR. LICENSE No. 52212 STATE OF FLORIDA PROFESSIONAL ENGINEER
Oct 01 07

TC LL	20.0 PSF	REF	R215-- 87150
TC DL	10.0 PSF	DATE	10/01/07
BC DL	10.0 PSF	DRW	HCUSR215 07274053
BC LL	0.0 PSF	HC-ENG	EC/DLJ *
TOT.LD.	40.0 PSF	SEQN-	201186
DUR.FAC.	1.25	FROM	CDM
SPACING	24.0"	JREF-	1TB8215_Z03

THIS DWG PREPARED FROM COMPUTER INPUT (LOADS & DIMENSIONS) SUBMITTED BY TRUSS MFR.

Top chord 2x4 SP #2 N
Bot chord 2x4 SP #2 N

Deflection meets L/240 live and L/180 total load.

The overall height of this truss excluding overhang is 0-7-15.

110 mph wind, 15.00 ft mean hgt, ASCE 7-02, CLOSED bldg, Located anywhere in roof, CAT II, EXP B, wind TC DL=5.0 psf, wind BC DL=5.0 psf. Iw=1.00 GCpi(+/-)=0.18

Wind reactions based on MWFRS pressures.

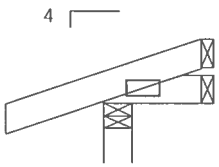

R=-12 U=14
R-0 U=6

2X4(A1) ≡

8-4-7
8-0-0

0-7-15

1-0-0

1-0-0 Over 3 Supports

R-155 U-38 W=3.5"

Design Crit: TPI-2002(STD)/FBC

PLT TYP. Wave Cq/RT=1.00(1.25)/0(0) 7.38.0810 QTY:1 FL/-/5/-/-/R/- Scale =.5"/Ft.

ALPINE
ITW Building Components Group, Inc.
Haines City, FL 33844
FL Certificate of Authorization # 567

WARNING TRUSSES REQUIRE EXTREME CARE IN FABRICATION, HANDLING, SHIPPING, INSTALLING AND BRACING. REFER TO BCSI (BUILDING COMPONENT SAFETY INFORMATION), PUBLISHED BY TPI (TRUSS PLATE INSTITUTE, 218 NORTH LEE STREET, SUITE 312, ALEXANDRIA, VA. 22314) AND WTCA (WOOD TRUSS COUNCIL OF AMERICA, 6300 ENTERPRISE LANE, MADISON, WI 53719) FOR SAFETY PRACTICES PRIOR TO PERFORMING THESE FUNCTIONS. UNLESS OTHERWISE INDICATED TOP CHORD SHALL HAVE PROPERLY ATTACHED STRUCTURAL PANELS AND BOTTOM CHORD SHALL HAVE A PROPERLY ATTACHED RIGID CEILING.

IMPORTANTFURNISH A COPY OF THIS DESIGN TO THE INSTALLATION CONTRACTOR. ITW BCG, INC. SHALL NOT BE RESPONSIBLE FOR ANY DEVIATION FROM THIS DESIGN; ANY FAILURE TO BUILD THE TRUSS IN CONFORMANCE WITH TPI; OR FABRICATING, HANDLING, SHIPPING, INSTALLING & BRACING OF TRUSSES.
DESIGN CONFORMS WITH APPLICABLE PROVISIONS OF NDS (NATIONAL DESIGN SPEC, BY AF&PA) AND TPI. ITW BCG CONNECTOR PLATES ARE MADE OF 20/18/16GA (W,H/SS/K) ASTM A653 GRADE 40/60 (W, K/H,SS) GALV. STEEL. APPLY PLATES TO EACH FACE OF TRUSS AND, UNLESS OTHERWISE LOCATED ON THIS DESIGN, POSITION PER DRAWINGS 160A Z. ANY INSPECTION OF PLATES FOLLOWED BY (1) SHALL BE PER ANNEX A3 OF TPI1-2002 SEC.3. A SEAL ON THIS DRAWING INDICATES ACCEPTANCE OF PROFESSIONAL ENGINEERING RESPONSIBILITY SOLELY FOR THE TRUSS COMPONENT DESIGN SHOWN. THE SUITABILITY AND USE OF THIS COMPONENT FOR ANY BUILDING IS THE RESPONSIBILITY OF THE BUILDING DESIGNER PER ANSI/TPI 1 SEC. 2.

JAMES R. COLLINS JR. LICENSE No. 52212 STATE OF FLORIDA PROFESSIONAL ENGINEER
Oct 01 '07

TC LL	20.0 PSF	REF	R215-- 87151
TC DL	10.0 PSF	DATE	10/01/07
BC DL	10.0 PSF	DRW	HCUSR215 07274054
BC LL	0.0 PSF	HC-ENG	EC/DLJ *
TOT.LD.	40.0 PSF	SEQN-	201223
DUR.FAC.	1.25	FROM	CDM
SPACING	24.0"	JREF-	1TB8215_Z03

(4937 /Equestrian Manager's Res. /EDGELY CONSTRUCTION -- LAKE CITY, FL - JC3)

Top chord 2x4 SP #2 N
Bot chord 2x4 SP #2 N

Deflection meets L/240 live and L/180 total load.

The overall height of this truss excluding overhang is 1-3-15.

110 mph wind, 15.00 ft mean hgt, ASCE 7-02, CLOSED bldg, Located anywhere in roof, CAT II, EXP B, wind TC DL=5.0 psf, wind BC DL=5.0 psf. Iw=1.00 GCpi(+/-)=0.18

Wind reactions based on MWFRS pressures.

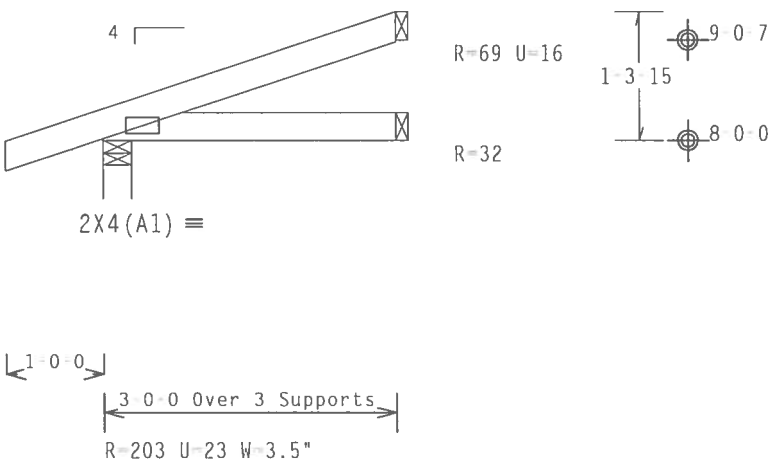

Design Crit: TPI-2002(STD)/FBC

PLT TYP. Wave Cq/RT=1.00(1.25)/0(0) 7.38.0810.09 QTY:1 FL/-/5/-/-/R/- Scale =.5"/Ft.

ALPINE
ITW Building Components Group, Inc.
Haines City, FL 33844
FL Certificate of Authorization # 567

WARNING TRUSSES REQUIRE EXTREME CARE IN FABRICATION, HANDLING, SHIPPING, INSTALLING AND BRACING. REFER TO BCSI (BUILDING COMPONENT SAFETY INFORMATION), PUBLISHED BY TPI (TRUSS PLATE INSTITUTE, 218 NORTH LEE STREET, SUITE 312, ALEXANDRIA, VA. 22314) AND WTCA (WOOD TRUSS COUNCIL OF AMERICA, 6300 ENTERPRISE LANE, MADISON, WI 53719) FOR SAFETY PRACTICES PRIOR TO PERFORMING THESE FUNCTIONS. UNLESS OTHERWISE INDICATED TOP CHORD SHALL HAVE PROPERLY ATTACHED STRUCTURAL PANELS AND BOTTOM CHORD SHALL HAVE A PROPERLY ATTACHED RIGID CEILING.

IMPORTANTFURNISH A COPY OF THIS DESIGN TO THE INSTALLATION CONTRACTOR. ITW BCG, INC, SHALL NOT BE RESPONSIBLE FOR ANY DEVIATION FROM THIS DESIGN, ANY FAILURE TO BUILD THE TRUSS IN CONFORMANCE WITH TPI; OR FABRICATING, HANDLING, SHIPPING, INSTALLING & BRACING OF TRUSSES. DESIGN CONFORMS WITH APPLICABLE PROVISIONS OF NDS (NATIONAL DESIGN SPEC, BY AF&PA) AND TPI. ITW BCG CONNECTOR PLATES ARE MADE OF 20/18/16GA (W,H/SS/K) ASTM A653 GRADE 40/60 (W, K/H,SS) GALV. STEEL. APPLY PLATES TO EACH FACE OF TRUSS AND, UNLESS OTHERWISE LOCATED ON THIS DESIGN, POSITION PER DRAWINGS 160A 7. ANY INSPECTION OF PLATES FOLLOWED BY (I) SHALL BE PER ANNEX A3 OF TPI1 2002 SEC 3. A SEAL ON THIS DRAWING INDICATES ACCEPTANCE OF PROFESSIONAL ENGINEERING RESPONSIBILITY SOLELY FOR THE TRUSS COMPONENT DESIGN SHOWN. THE SUITABILITY AND USE OF THIS COMPONENT FOR ANY BUILDING IS THE RESPONSIBILITY OF THE BUILDING DESIGNER PER ANSI/TPI 1 SEC. 2.

JAMES F. COLLINS, JR. LICENSE No. 52212 STATE OF FLORIDA PROFESSIONAL ENGINEER
Oct 01 07

TC LL	20.0 PSF	REF	R215-- 87152
TC DL	10.0 PSF	DATE	10/01/07
BC DL	10.0 PSF	DRW	HCUSR215 07274055
BC LL	0.0 PSF	HC-ENG	EC/DLJ *
TOT.LD.	40.0 PSF	SEQN-	201226
DUR.FAC.	1.25	FROM	CDM
SPACING	24.0"	JREF-	1TB8215_Z03

Top chord 2x4 SP #2 N
Bot chord 2x4 SP #2 N

Deflection meets L/240 live and L/180 total load.

The overall height of this truss excluding overhang is 1 11-15.

110 mph wind, 15.00 ft mean hgt, ASCE 7-02, CLOSED bldg, not located within 4.50 ft from roof edge, CAT II, EXP B, wind TC DL=5.0 psf, wind BC DL=5.0 psf. Iw=1.00 GCpi(+/-)=0.18

Wind reactions based on MWFRS pressures.

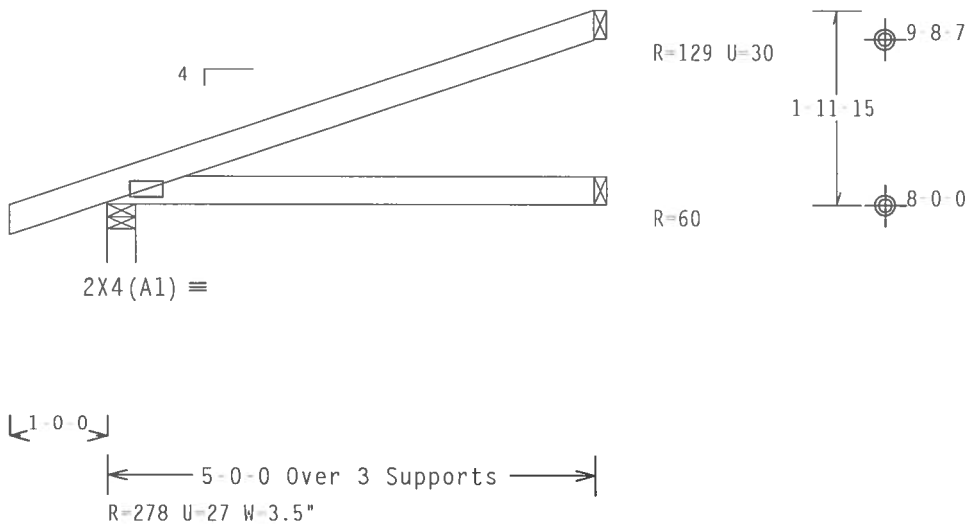

Design Crit: TPI-2002(STD)/FBC

PLT TYP. Wave Cq/RT=1.00(1.25)/0(0) 7.38.0810.09 QTY:1 FL/-/5/-/-/R/- Scale =.5"/Ft.

ALPINE
ITW Building Components Group, Inc.
Haines City, FL 33844
FL Certificate of Authorization # 567

WARNING TRUSSES REQUIRE EXTREME CARE IN FABRICATION, HANDLING, SHIPPING, INSTALLING AND BRACING. REFER TO BCSI (BUILDING COMPONENT SAFETY INFORMATION), PUBLISHED BY TPI (TRUSS PLATE INSTITUTE, 218 NORTH LEE STREET, SUITE 312, ALEXANDRIA, VA. 22314) AND WTCA (WOOD TRUSS COUNCIL OF AMERICA, 6300 ENTERPRISE LANE, MADISON, WI 53719) FOR SAFETY PRACTICES PRIOR TO PERFORMING THESE FUNCTIONS. UNLESS OTHERWISE INDICATED TOP CHORD SHALL HAVE PROPERLY ATTACHED STRUCTURAL PANELS AND BOTTOM CHORD SHALL HAVE A PROPERLY ATTACHED RIGID CEILING.

IMPORTANTFURNISH A COPY OF THIS DESIGN TO THE INSTALLATION CONTRACTOR. ITW BCG, INC. SHALL NOT BE RESPONSIBLE FOR ANY DEVIATION FROM THIS DESIGN; ANY FAILURE TO BUILD THE TRUSS IN CONFORMANCE WITH TPI; OR FABRICATING, HANDLING, SHIPPING, INSTALLING & BRACING OF TRUSSES. DESIGN CONFORMS WITH APPLICABLE PROVISIONS OF NDS (NATIONAL DESIGN SPEC. BY AF&PA) AND TPI. ITW BCG CONNECTOR PLATES ARE MADE OF 20/18/16GA (W,H/SS/K) ASTM A653 GRADE 40/60 (W, K/H,SS) GALV. STEEL. APPLY PLATES TO EACH FACE OF TRUSS AND, UNLESS OTHERWISE LOCATED ON THIS DESIGN, POSITION PER DRAWINGS 160A-Z. ANY INSPECTION OF PLATES FOLLOWED BY (1) SHALL BE PER ANNEX A3 OF TPI1-2002 SEC.3. A SEAL ON THIS DRAWING INDICATES ACCEPTANCE OF PROFESSIONAL ENGINEERING RESPONSIBILITY SOLELY FOR THE TRUSS COMPONENT DESIGN SHOWN. THE SUITABILITY AND USE OF THIS COMPONENT FOR ANY BUILDING IS THE RESPONSIBILITY OF THE BUILDING DESIGNER PER ANSI/TPI 1 SEC. 2.

JAMES F. COLLINS JR. LICENSE No. 52212 STATE OF FLORIDA PROFESSIONAL ENGINEER

Oct 01,2007

TC LL	20.0 PSF	REF R215-- 87153
TC DL	10.0 PSF	DATE 10/01/07
BC DL	10.0 PSF	DRW HCUSR215 07274056
BC LL	0.0 PSF	HC-ENG EC/DLJ *
TOT.LD.	40.0 PSF	SEQN- 201229
DUR.FAC.	1.25	FROM CDM
SPACING	24.0"	JREF- 1TB8215_Z03

THIS DWG PREPARED FROM COMPUTER INPUT (LOADS & DIMENSIONS) SUBMITTED BY TRUSS MFR.

Top chord 2x4 SP #2 N
Bot chord 2x4 SP #2 N

Hipjack supports 5-0-0 setback jacks with no webs.

Deflection meets L/240 live and L/180 total load.

110 mph wind, 15.00 ft mean hgt, ASCE 7-02, CLOSED bldg, Located anywhere in roof, CAT II, EXP B, wind TC DL=5.0 psf, wind BC DL=5.0 psf. Iw=1.00 GCpi(+/-)=0.18

Wind reactions based on MWFRS pressures.

The overall height of this truss excluding overhang is 1-11-12.

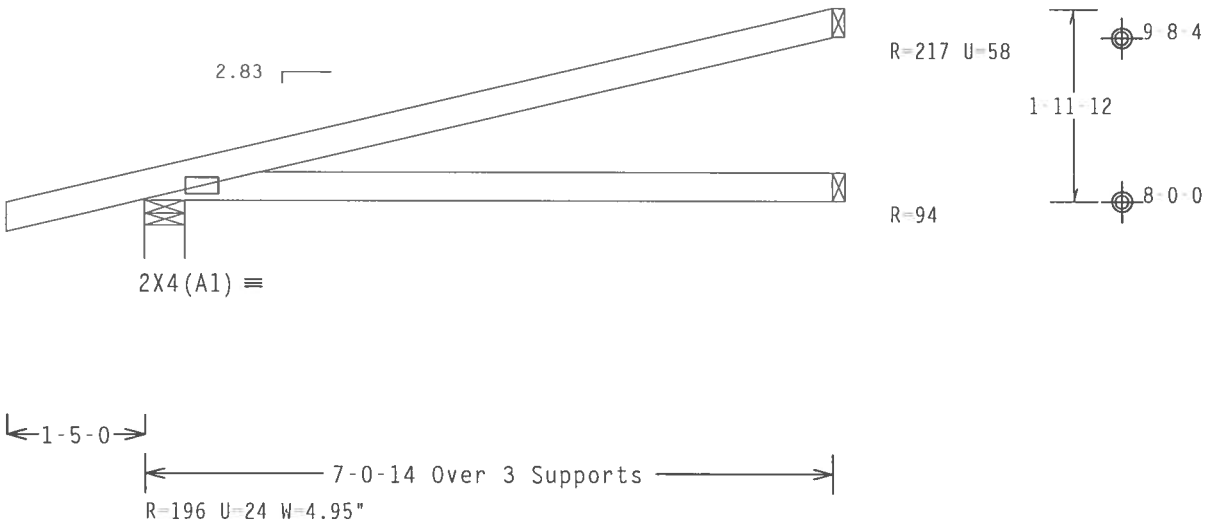

Design Crit: TPI-2002(STD)/FBC

PLT TYP. Wave Cq/RT=1.00(1.25)/0(0) 7.38.0810.00 QTY:1 FL/-/5/-/-/R/- Scale =.5"/Ft.

ALPINE
ITW Building Components Group, Inc.
Haines City, FL 33844
FL Certificate of Authorization # 567

WARNING TRUSSES REQUIRE EXTREME CARE IN FABRICATION, HANDLING, SHIPPING, INSTALLING AND BRACING. REFER TO BCSI (BUILDING COMPONENT SAFETY INFORMATION), PUBLISHED BY TPI (TRUSS PLATE INSTITUTE, 218 NORTH LEE STREET, SUITE 312, ALEXANDRIA, VA, 22314) AND WTCA (WOOD TRUSS COUNCIL OF AMERICA, 6300 ENTERPRISE LANE, MADISON, WI 53719) FOR SAFETY PRACTICES PRIOR TO PERFORMING THESE FUNCTIONS. UNLESS OTHERWISE INDICATED TOP CHORD SHALL HAVE PROPERLY ATTACHED STRUCTURAL PANELS AND BOTTOM CHORD SHALL HAVE A PROPERLY ATTACHED RIGID CEILING.

IMPORTANTFURNISH A COPY OF THIS DESIGN TO THE INSTALLATION CONTRACTOR. ITW BCG, INC. SHALL NOT BE RESPONSIBLE FOR ANY DEVIATION FROM THIS DESIGN; ANY FAILURE TO BUILD THE TRUSS IN CONFORMANCE WITH TPI; OR FABRICATING, HANDLING, SHIPPING, INSTALLING & BRACING OF TRUSSES. DESIGN CONFORMS WITH APPLICABLE PROVISIONS OF NDS (NATIONAL DESIGN SPEC. BY AF&PA) AND TPI. ITW BCG CONNECTOR PLATES ARE MADE OF 20/18/16GA (W,H/SS/K) ASTM A653 GRADE 40/60 (W, K/H,SS) GALV. STEEL. APPLY PLATES TO EACH FACE OF TRUSS AND, UNLESS OTHERWISE LOCATED ON THIS DESIGN, POSITION PER DRAWINGS 160A Z. ANY INSPECTION OF PLATES FOLLOWED BY (I) SHALL BE PER ANNEX A3 OF TPI1 2002 SEC.3. A SEAL ON THIS DRAWING INDICATES ACCEPTANCE OF PROFESSIONAL ENGINEERING RESPONSIBILITY SOLELY FOR THE TRUSS COMPONENT DESIGN SHOWN. THE SUITABILITY AND USE OF THIS COMPONENT FOR ANY BUILDING IS THE RESPONSIBILITY OF THE BUILDING DESIGNER PER ANSI/TPI 1 SEC. 2.

JAMES F. COLLINS LICENSE No. 52212 STATE OF FLORIDA PROFESSIONAL ENGINEER

Oct 01,2007

TC LL	20.0 PSF	REF	R215-- 87154
TC DL	10.0 PSF	DATE	10/01/07
BC DL	10.0 PSF	DRW	HCUSR215 07274058
BC LL	0.0 PSF	HC-ENG	EC/DLJ
TOT.LD.	40.0 PSF	SEQN-	201220
DUR.FAC.	1.25	FROM	CDM
SPACING	24.0"	JREF-	1TB8215_Z03

ASCE 7-02: 110 MPH WIND SPEED, 15' MEAN HEIGHT, ENCLOSED, I = 1.00, EXPOSURE C

MAX GABLE VERTICAL LENGTH

2X4 GABLE VERTICAL SPACING	SPECIES	BRACE GRADE	NO BRACES	(1) 1X4 "L" BRACE * GROUP A	(1) 1X4 "L" BRACE * GROUP B	(1) 2X4 "L" BRACE * GROUP A	(1) 2X4 "L" BRACE * GROUP B	(2) 2X4 "L" BRACE ** GROUP A	(2) 2X4 "L" BRACE ** GROUP B	(1) 2X6 "L" BRACE * GROUP A	(1) 2X6 "L" BRACE * GROUP B	(2) 2X6 "L" BRACE ** GROUP A	(2) 2X6 "L" BRACE ** GROUP B
24" O.C.	SPF HF	#1 / #2	3' 10"	6' 8"	6' 10"	7' 11"	8' 1"	9' 5"	9' 8"	12' 5"	12' 9"	14' 0"	14' 0"
		#3	3' 9"	6' 0"	6' 0"	7' 11"	7' 11"	9' 5"	9' 5"	12' 4"	12' 4"	14' 0"	14' 0"
		STUD	3' 9"	6' 0"	6' 0"	7' 11"	7' 11"	9' 5"	9' 5"	12' 3"	12' 3"	14' 0"	14' 0"
		STANDARD	3' 9"	5' 2"	5' 2"	6' 9"	6' 9"	9' 1"	9' 1"	10' 7"	10' 7"	14' 0"	14' 0"
	SP DFL	#1	4' 3"	6' 8"	7' 2"	7' 11"	8' 6"	9' 5"	10' 2"	12' 5"	13' 5"	14' 0"	14' 0"
		#2	4' 2"	6' 8"	7' 2"	7' 11"	8' 6"	9' 5"	10' 2"	12' 5"	13' 5"	14' 0"	14' 0"
		#3	4' 0"	6' 2"	6' 2"	7' 11"	8' 1"	9' 5"	9' 11"	12' 5"	12' 8"	14' 0"	14' 0"
		STUD	4' 0"	6' 1"	6' 1"	7' 11"	8' 0"	9' 5"	9' 11"	12' 5"	12' 6"	14' 0"	14' 0"
		STANDARD	3' 10"	5' 3"	5' 3"	6' 11"	6' 11"	9' 4"	9' 4"	10' 10"	10' 10"	14' 0"	14' 0"
16" O.C.	SPF HF	#1 / #2	4' 5"	7' 8"	7' 10"	9' 1"	9' 4"	10' 10"	11' 1"	14' 0"	14' 0"	14' 0"	14' 0"
		#3	4' 4"	7' 4"	7' 4"	9' 1"	9' 1"	10' 10"	10' 10"	14' 0"	14' 0"	14' 0"	14' 0"
		STUD	4' 4"	7' 4"	7' 4"	9' 1"	9' 1"	10' 10"	10' 10"	14' 0"	14' 0"	14' 0"	14' 0"
		STANDARD	4' 4"	6' 4"	6' 4"	8' 4"	8' 4"	10' 10"	10' 10"	12' 11"	12' 11"	14' 0"	14' 0"
	SP DFL	#1	4' 10"	7' 8"	8' 3"	9' 1"	9' 9"	10' 10"	11' 8"	14' 0"	14' 0"	14' 0"	14' 0"
		#2	4' 9"	7' 8"	8' 3"	9' 1"	9' 9"	10' 10"	11' 8"	14' 0"	14' 0"	14' 0"	14' 0"
		#3	4' 6"	7' 7"	7' 7"	9' 1"	9' 6"	10' 10"	11' 4"	14' 0"	14' 0"	14' 0"	14' 0"
		STUD	4' 6"	7' 6"	7' 6"	9' 1"	9' 6"	10' 10"	11' 4"	14' 0"	14' 0"	14' 0"	14' 0"
		STANDARD	4' 5"	6' 5"	6' 5"	8' 6"	8' 6"	10' 10"	11' 1"	13' 3"	13' 3"	14' 0"	14' 0"
12" O.C.	SPF HF	#1 / #2	4' 11"	8' 5"	8' 8"	10' 0"	10' 3"	11' 11"	12' 3"	14' 0"	14' 0"	14' 0"	14' 0"
		#3	4' 9"	8' 5"	8' 5"	10' 0"	10' 0"	11' 11"	11' 11"	14' 0"	14' 0"	14' 0"	14' 0"
		STUD	4' 9"	8' 5"	8' 5"	10' 0"	10' 0"	11' 11"	11' 11"	14' 0"	14' 0"	14' 0"	14' 0"
		STANDARD	4' 9"	7' 3"	7' 3"	9' 7"	9' 7"	11' 11"	11' 11"	14' 0"	14' 0"	14' 0"	14' 0"
	SP DFL	#1	5' 4"	8' 5"	9' 1"	10' 0"	10' 9"	11' 11"	12' 10"	14' 0"	14' 0"	14' 0"	14' 0"
		#2	5' 3"	8' 5"	9' 1"	10' 0"	10' 9"	11' 11"	12' 10"	14' 0"	14' 0"	14' 0"	14' 0"
		#3	5' 0"	8' 5"	8' 5"	10' 0"	10' 6"	11' 11"	12' 6"	14' 0"	14' 0"	14' 0"	14' 0"
		STUD	5' 0"	8' 5"	8' 7"	10' 0"	10' 6"	11' 11"	12' 6"	14' 0"	14' 0"	14' 0"	14' 0"
		STANDARD	4' 11"	7' 5"	7' 5"	9' 10"	9' 10"	11' 11"	12' 3"	14' 0"	14' 0"	14' 0"	14' 0"

BRACING GROUP SPECIES AND GRADES:

GROUP A:

SPRUCE-PINE-FIR: #1 / #2, STANDARD; #3, STUD

HEM-FIR: #2, STUD; #3, STANDARD

DOUGLAS FIR-LARCH: #3, STUD, STANDARD

SOUTHERN PINE: #3, STUD, STANDARD

GROUP B:

HEM-FIR: #1 & BTR, #1

SOUTHERN PINE: #1, #2

DOUGLAS FIR-LARCH: #1, #2

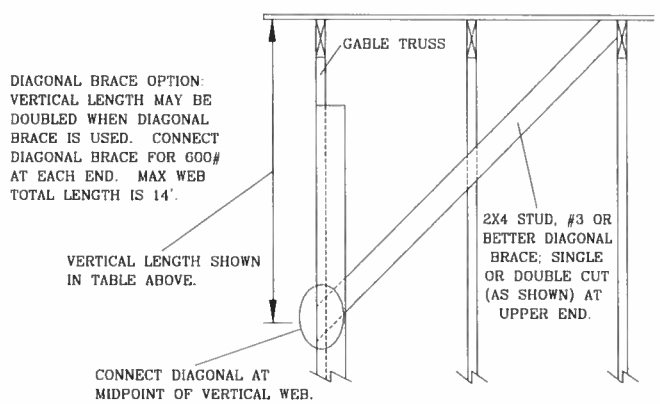

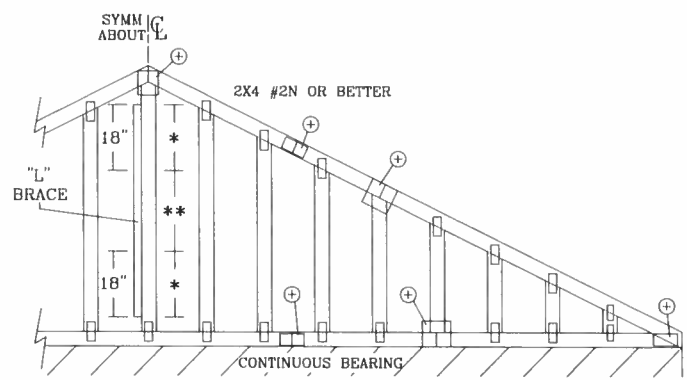

REFER TO CHART ABOVE FOR MAX GABLE VERTICAL LENGTH.

GABLE TRUSS DETAIL NOTES:

LIVE LOAD DEFLECTION CRITERIA IS L/240.

PROVIDE UPLIFT CONNECTIONS FOR 80 PLF OVER CONTINUOUS BEARING (5 PSF TC DEAD LOAD).

GABLE END SUPPORTS LOAD FROM 4' 0" OUTLOOKERS WITH 2' 0" OVERHANG, OR 12" PLYWOOD OVERHANG.

ATTACH EACH "L" BRACE WITH 10d NAILS.
* FOR (1) "L" BRACE: SPACE NAILS AT 2" O.C. IN 18" END ZONES AND 4" O.C. BETWEEN ZONES.
** FOR (2) "L" BRACES: SPACE NAILS AT 3" O.C. IN 18" END ZONES AND 6" O.C. BETWEEN ZONES.

"L" BRACING MUST BE A MINIMUM OF 80% OF WEB MEMBER LENGTH.

GABLE VERTICAL PLATE SIZES

VERTICAL LENGTH	NO SPLICE
LESS THAN 4' 0"	1X4 OR 2X3
GREATER THAN 4' 0", BUT LESS THAN 11' 6"	2X4
GREATER THAN 11' 6"	2.5X4

+ REFER TO COMMON TRUSS DESIGN FOR PEAK, SPLICE, AND HEEL PLATES.

ALPINE

ITW BUILDING COMPONENTS GROUP, INC.
POMPANO BEACH, FLORIDA

WARNING TRUSSES REQUIRE EXTREME CARE IN FABRICATING, HANDLING, SHIPPING, INSTALLING AND BRACING. REFER TO BCSI (BUILDING COMPONENT SAFETY INFORMATION), PUBLISHED BY TPI (TRUSS PLATE INSTITUTE, 218 NORTH LEE STR., SUITE 312, ALEXANDRIA, VA. 22314) AND WTCA (WOOD TRUSS COUNCIL OF AMERICA, 6300 ENTERPRISE LN, MADISON, WI 53719) FOR SAFETY PRACTICES PRIOR TO PERFORMING THESE FUNCTIONS. UNLESS OTHERWISE INDICATED, TOP CHORD SHALL HAVE PROPERLY ATTACHED STRUCTURAL PANELS AND BOTTOM CHORD SHALL HAVE A PROPERLY ATTACHED RIGID CEILING.

IMPORTANT FURNISH COPY OF THIS DESIGN TO INSTALLATION CONTRACTOR. ITW BCG, INC. SHALL NOT BE RESPONSIBLE FOR ANY DEVIATION FROM THIS DESIGN; ANY FAILURE TO BUILD THE TRUSS IN CONFORMANCE WITH TPI; OR FABRICATING, HANDLING, SHIPPING, INSTALLING & BRACING OF TRUSSES. DESIGN CONFORMS WITH APPLICABLE PROVISIONS OF NDS (NATIONAL DESIGN SPEC, BY AF&PA) AND TPI. ITW, BCG CONNECTOR PLATES ARE MADE OF 20/18/16GA (W,H/SS/K) ASTM A653 GRADE 40/60 (W,K,H,SS) GALV. STEEL. APPLY PLATES TO EACH FACE OF TRUSS AND, UNLESS OTHERWISE LOCATED ON THIS DESIGN, POSITION PER DRAWINGS 160A-Z. ANY INSPECTION OF PLATES FOLLOWED BY (I) SHALL BE PER ANNEX A3 OF TPI 1-2002 SEC. 3. A SEAL ON THIS DRAWING INDICATES ACCEPTANCE OF PROFESSIONAL ENGINEERING RESPONSIBILITY SOLELY FOR THE TRUSS COMPONENT DESIGN SHOWN. THE SUITABILITY AND USE OF THIS COMPONENT FOR ANY BUILDING IS THE RESPONSIBILITY OF THE BUILDING DESIGNER, PER ANSI/TPI 1 SEC. 2.

JAMES F. COLLINS, JR. LICENSE No. 52212 STATE OF FLORIDA PROFESSIONAL ENGINEER

OCT 01 '07

MAX. TOT. LD. 60 PSF

MAX. SPACING 24.0"

REF	ASCE7-02-GAB11015
DATE	2/23/07
DRWG	A11015EE0207
-ENG	

GABLE DETAIL
FOR LET-IN VERTICALS

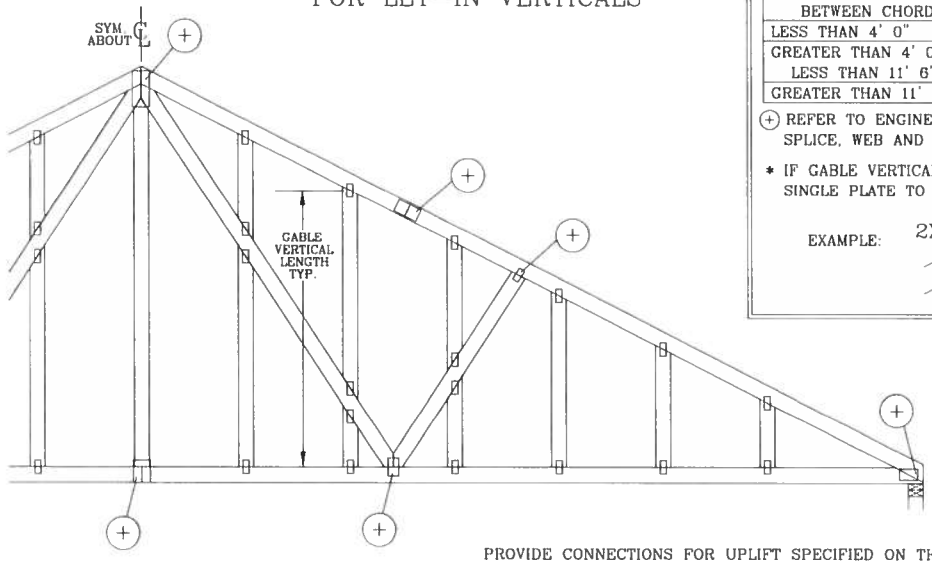

GABLE VERTICAL PLATE SIZES		
VERTICAL LENGTH BETWEEN CHORDS	PLATE SIZE	IF PLATES OVERLAP*
LESS THAN 4' 0"	1X4 OR 2X3	2X8
GREATER THAN 4' 0", BUT LESS THAN 11' 6"	2X4	2X8
GREATER THAN 11' 6"	2.5X4	2.5X8

(+) REFER TO ENGINEERED TRUSS DESIGN FOR PEAK, SPLICE, WEB AND HEEL PLATES.

* IF GABLE VERTICAL PLATES OVERLAP, USE A SINGLE PLATE TO SPAN THE WEB.

EXAMPLE:

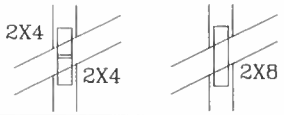

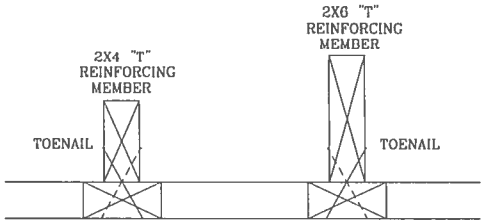

TO CONVERT FROM "L" TO "T" REINFORCING MEMBERS, MULTIPLY "T" FACTOR BY LENGTH (BASED ON GABLE VERTICAL SPECIES, GRADE AND SPACING) FOR (1) 2X4 "L" BRACE, GROUP A, OBTAINED FROM THE APPROPRIATE ALPINE GABLE DETAIL FOR ASCE OR SBCCI WIND LOAD.

MAXIMUM ALLOWABLE "T" REINFORCED GABLE VERTICAL LENGTH IS 14' FROM TOP TO BOTTOM CHORD.

WEB LENGTH INCREASE W/ "T" BRACE

WIND SPEED AND MRH	"T" REINF. MBR. SIZE	SBCCI	ASCE
110 MPH	2x4	10 %	10 %
15 FT	2x6	40 %	50 %
110 MPH	2x4	10 %	10 %
30 FT	2x6	50 %	50 %
100 MPH	2x4	10 %	10 %
15 FT	2x6	30 %	50 %
100 MPH	2x4	10 %	10 %
30 FT	2x6	40 %	40 %
90 MPH	2x4	20 %	10 %
15 FT	2x6	20 %	40 %
90 MPH	2x4	10 %	10 %
30 FT	2x6	30 %	50 %
80 MPH	2x4	10 %	20 %
15 FT	2x6	10 %	30 %
80 MPH	2x4	20 %	10 %
30 FT	2x6	20 %	40 %
70 MPH	2x4	0 %	20 %
15 FT	2x6	0 %	20 %
70 MPH	2x4	10 %	20 %
30 FT	2x6	10 %	30 %

EXAMPLE:
ASCE WIND SPEED = 100 MPH
MEAN ROOF HEIGHT = 30 FT
GABLE VERTICAL = 24" O.C. SP #3
"T" REINFORCING MEMBER SIZE = 2X4
"T" BRACE INCREASE (FROM ABOVE) = 10% = 1.10
(1) 2X4 "L" BRACE LENGTH = 6' 7"
MAXIMUM "T" REINFORCED GABLE VERTICAL LENGTH
1.10 x 6' 7" = 7' 3"

PROVIDE CONNECTIONS FOR UPLIFT SPECIFIED ON THE ENGINEERED TRUSS DESIGN.

ATTACH EACH "T" REINFORCING MEMBER WITH
HAND DRIVEN NAILS:
10d COMMON (0.148"X 3.",MIN) TOENAILS AT 4" O.C. PLUS
(4) 16d COMMON (0.162" X 3.5",MIN) TOENAILS IN TOP AND BOTTOM CHORD.
GUN DRIVEN NAILS:
8d COMMON (0.131"X 2.5",MIN) TOENAILS AT 4" O.C. PLUS
(4) TOENAILS IN TOP AND BOTTOM CHORD.

THIS DETAIL TO BE USED WITH THE APPROPRIATE ALPINE GABLE DETAIL FOR ASCE OR SBCCI WIND LOAD.
ASCE 7-93 GABLE DETAIL DRAWINGS
A11015EN0207, A10015EN0207, A09015EN0207, A08015EN0207, A07015EN0207, A11030EN0207, A10030EN0207, A09030EN0207, A08030EN0207, A07030EN0207
ASCE 7-98 GABLE DETAIL DRAWINGS
A13015EC0207, A12015EC0207, A11015EC0207, A10015EC0207, A08515EC0207, A13030EC0207, A12030EC0207, A11030EC0207, A10030EC0207, A08530EC0207
ASCE 7-02 GABLE DETAIL DRAWINGS
A13015EE0207, A12015EE0207, A11015EE0207, A10015EE0207, A08515EE0207, A13030EE0207, A12030EE0207, A11030EE0207, A10030EE0207, A08530EE0207
ASCE 7-05 GABLE DETAIL DRAWINGS
A13015E50207, A12015E50207, A11015E50207, A10015E50207, A08515E50207, A13030E50207, A12030E50207, A11030E50207, A10030E50207, A08530E50207

SEE APPROPRIATE ALPINE GABLE DETAIL (ASCE OR SBCCI WIND LOAD) FOR MAXIMUM UNREINFORCED GABLE VERTICAL LENGTH.

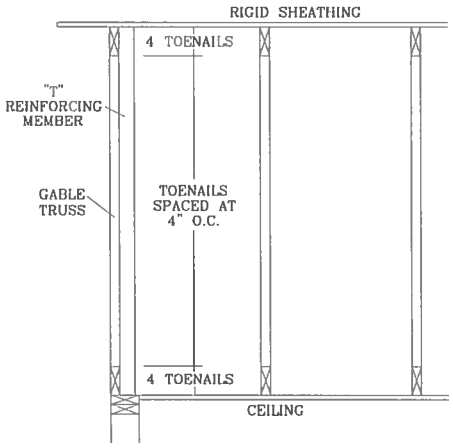

THIS DRAWING REPLACES DRAWINGS GAB98117 876,719 & HC26294035

ALPINE
ITW BUILDING COMPONENTS GROUP, INC.
POMPANO BEACH, FLORIDA

WARNING TRUSSES REQUIRE EXTREME CARE IN FABRICATING, HANDLING, SHIPPING, INSTALLING AND BRACING. REFER TO BCSI (BUILDING COMPONENT SAFETY INFORMATION), PUBLISHED BY TPI (TRUSS PLATE INSTITUTE, 218 NORTH LEE STR., SUITE 312, ALEXANDRIA, VA. 22314) AND WTCA (WOOD TRUSS COUNCIL OF AMERICA, 6300 ENTERPRISE LN, MADISON, WI 53719) FOR SAFETY PRACTICES PRIOR TO PERFORMING THESE FUNCTIONS. UNLESS OTHERWISE INDICATED, TOP CHORD SHALL HAVE PROPERLY ATTACHED STRUCTURAL PANELS AND BOTTOM CHORD SHALL HAVE A PROPERLY ATTACHED RIGID CEILING.

IMPORTANT FURNISH COPY OF THIS DESIGN TO INSTALLATION CONTRACTOR. ITW BCG, INC. SHALL NOT BE RESPONSIBLE FOR ANY DEVIATION FROM THIS DESIGN; ANY FAILURE TO BUILD THE TRUSS IN CONFORMANCE WITH TPI; OR FABRICATING, HANDLING, SHIPPING, INSTALLING & BRACING OF TRUSSES. DESIGN CONFORMS WITH APPLICABLE PROVISIONS OF NDS (NATIONAL DESIGN SPEC. BY AF&PA) AND TPI. ITW, BCG CONNECTOR PLATES ARE MADE OF 20/18/16GA (W,H/SS/K) ASTM A653 GRADE 40/60 (W,K/H,SS) GALV. STEEL. APPLY PLATES TO EACH FACE OF TRUSS AND, UNLESS OTHERWISE LOCATED ON THIS DESIGN, POSITION PER DRAWINGS 160A-Z. ANY INSPECTION OF PLATES FOLLOWED BY (1) SHALL BE PER ANNEX A3 OF TPI 1-2002 SEC. 3. A SEAL ON THIS DRAWING INDICATES ACCEPTANCE OF PROFESSIONAL ENGINEERING RESPONSIBILITY SOLELY FOR THE TRUSS COMPONENT DESIGN SHOWN. THE SUITABILITY AND USE OF THIS COMPONENT FOR ANY BUILDING IS THE RESPONSIBILITY OF THE BUILDING DESIGNER, PER ANSI/TPI 1 SEC. 2.

JAMES F. COLLINS, JR. LICENSE 01 N87 52212 STATE OF FLORIDA PROFESSIONAL ENGINEER

MAX TOT. LD. 60 PSF
DUR. FAC. ANY
MAX SPACING 24.0"

REF	LET-IN VERT
DATE	2/23/07
DRWG	GBLLETIN0207
-ENG	DLJ/KAR