Alpine Engineered Products, Inc.

1950 Marley Drive Haines City, FL 33844
Florida Engineering Certificate of Authorization Number: 567
Florida Certificate of Product Approval # FL1999
 Document ID:1SU7487-Z0327160248

Truss Fabricator: Anderson Truss Company
Job Identification: 6-036-PERRY / LOT 3 PHASE II STONEHANGE
Truss Count: 46
Model Code: Florida Building Code
Truss Criteria: ANSI/TPI-1995(STD)/FBC
Engineering Software: Alpine Software,Version 7.04.
Structural Engineer of Record:
Address:
Minimum Design Loads: Roof - 40.0 PSF @ 1.25 Duration
Floor - N/A
Wind - 110 MPH ASCE 7-98 -Closed

Seal Date: 01/27/2006

-Truss Design Engineer-
Arthur R. Fisher
Florida License Number: 59687
1950 Marley Drive
Haines City, FL 33844

Notes:

1. Determination as to the suitability of these truss components for the structure is the responsibility of the building designer/engineer of record, as defined in ANSI/TPI 1
2. The drawing date shown on this index sheet must match the date shown on the individual truss component drawing.
3. As shown on attached drawings; the drawing number is preceded by: HCUSR487

Details: BRCLBSUB-A11015EC-GBLLETIN-

#	Ref Description	Drawing#	Date
1	67109--A	06026027	01/26/06
2	67110--A1	06026028	01/26/06
3	67111--A2	06026029	01/26/06
4	67112--A3	06026026	01/26/06
5	67113--A4	06026002	01/26/06
6	67114--H17AM	06026015	01/26/06
7	67115--H7A	06026009	01/26/06
8	67116--H9A	06026008	01/26/06
9	67117--H11A	06026042	01/26/06
10	67118--H13A	06026020	01/26/06
11	67119--H7AM	06026030	01/26/06
12	67120--H9AM	06026036	01/26/06
13	67121--H11AM	06026037	01/26/06
14	67122--H13AM	06026038	01/26/06
15	67123--H15AM	06026019	01/26/06
16	67124--H15AT	06026025	01/26/06
17	67125--H17AT	06026024	01/26/06
18	67126--AT	06026021	01/26/06
19	67127--AT1	06026022	01/26/06
20	67128--BGE	06026001	01/26/06
21	67129--B	06026023	01/26/06
22	67130--BS	06026043	01/26/06
23	67131--B1	06026040	01/26/06
24	67132--B2	06026041	01/26/06
25	67133--B3	06026039	01/26/06
26	67134--B4	06026046	01/26/06
27	67135--CGE	06026012	01/26/06
28	67136--C	06026034	01/26/06
29	67137--C-1	06026044	01/26/06
30	67138--H7DT	06026010	01/26/06
31	67139--DT	06026045	01/26/06
32	67140--D	06026005	01/26/06
33	67141--D-1	06026014	01/26/06
34	67142--HJ7	06026031	01/26/06
35	67143--EJ7	06026035	01/26/06
36	67144--CJ5	06026032	01/26/06
37	67145--CJ3	06026033	01/26/06
38	67146--CJ1	06026007	01/26/06
39	67147--HJ7T	06026004	01/26/06
40	67148--EJ7T	06026018	01/26/06
41	67149--CJ5T	06026016	01/26/06
42	67150--CJ3T	06026006	01/26/06
43	67151--MGE	06026003	01/26/06
44	67152--M	06026011	01/26/06
45	67153--M1	06026013	01/26/06
46	67154--M2	06026017	01/26/06

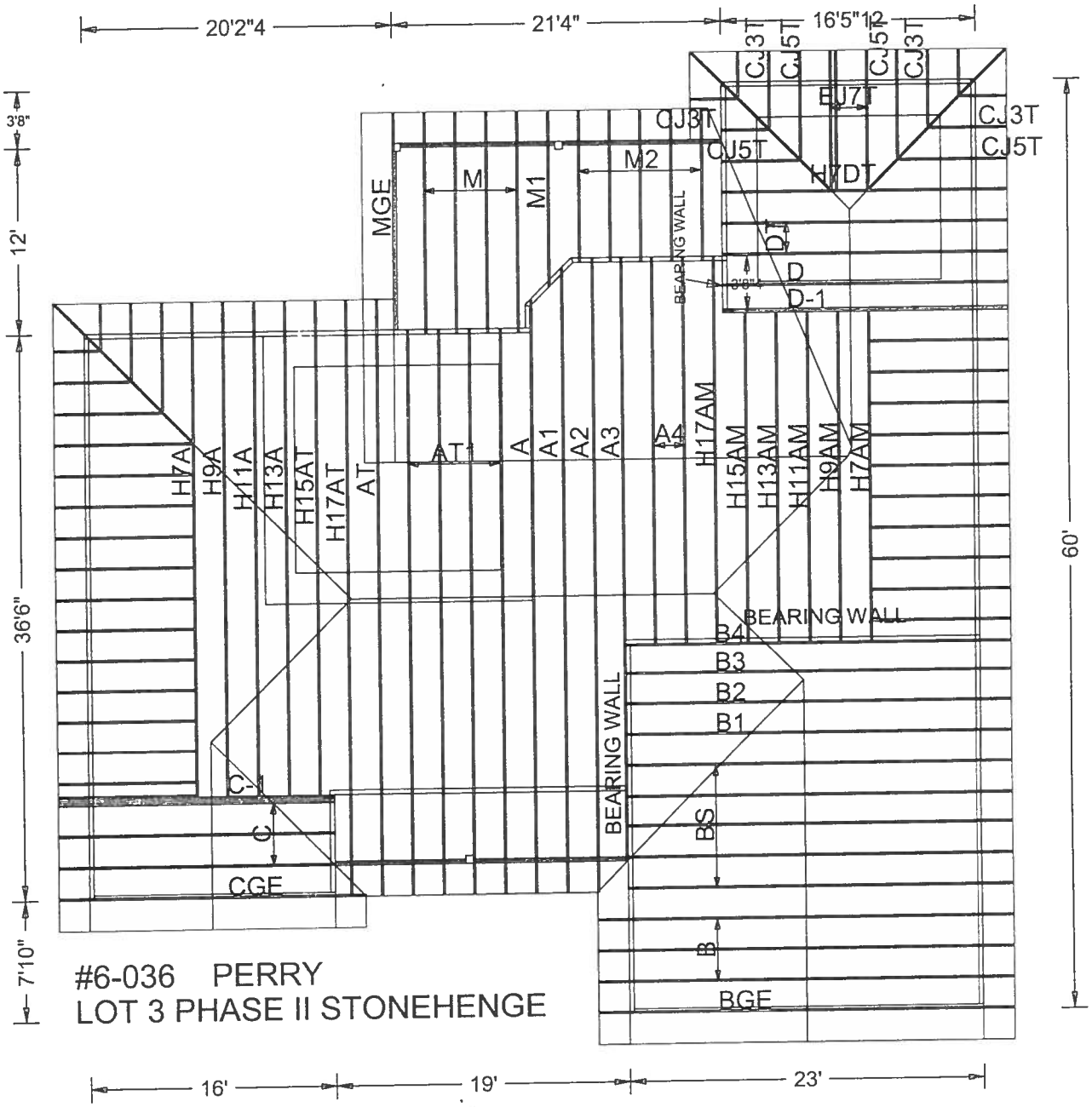

Roof Plane Sheathing Area = 3623 sq. ft
Gable Sheathing Area = 130 sq. ft
Total Sheathing Area = 3754 sq. ft
Fascia Material = 272 linear ft
Valley Flashing Material = 81 linear ft
Ridge Cap Material = 135 linear ft
Hip Ridge Material = 96 linear ft

152-2832
623-5541 Dave Morgan

Scale: 3/32" = 1'

JOB NO: 6-036	PAGE NO: 1 OF 1

(6-036 PERRY / LOT 3 PHASE II STONEHANGE - A)

Top chord 2x4 SP #2 Dense
Bot chord 2x4 SP #2 Dense
Webs 2x4 SP #3

Left end vertical not exposed to wind pressure.

Deflection meets L/360 live and L/240 total load.

NOTE: IN THE CALCULATION OF DEFLECTION AT CANTILEVER END, CREEP WAS NOT CONSIDERED.

110 mph wind, 12.16 ft mean hgt, ASCE 7-98, CLOSED bldg, not located within 4.50 ft from roof edge, CAT II, EXP B, wind TC DL=5.0 psf, wind BC DL=5.0 psf.

(A) Continuous lateral bracing equally spaced on member.

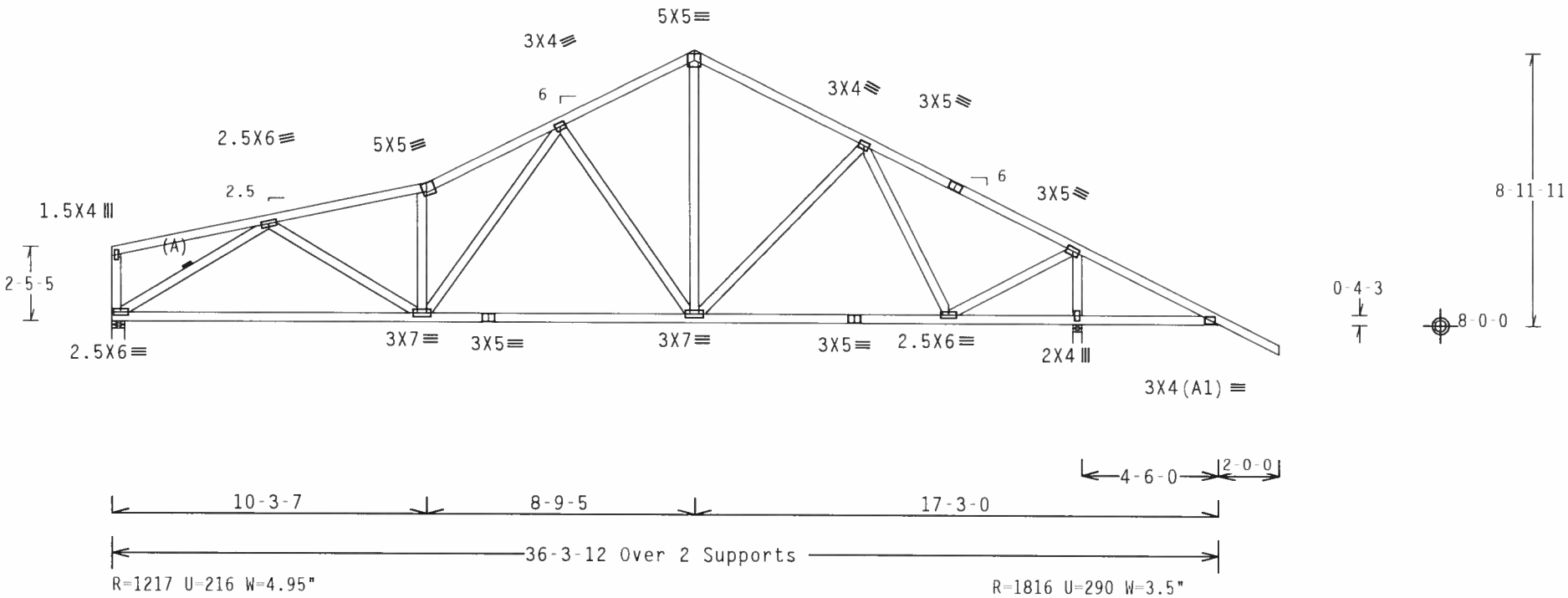

PLT TYP. Wave TPI | Design Crit: TPI-1995(STD)/FBC | 7.04.0 | QTY:1 | FL/-/4/-/-/R/- | Scale =.1875"/Ft.

ALPINE
Alpine Engineered Products, Inc.
1950 Marley Drive
Haines City, FL 33844
FL Certificate of Authorization # 567

WARNING TRUSSES REQUIRE EXTREME CARE IN FABRICATION, HANDLING, SHIPPING, INSTALLING AND BRACING. REFER TO BCSI 1-03 (BUILDING COMPONENT SAFETY INFORMATION), PUBLISHED BY TPI (TRUSS PLATE INSTITUTE, 583 D'ONOFRIO DR., SUITE 200, MADISON, WI 53719) AND WTCA (WOOD TRUSS COUNCIL OF AMERICA, 6300 ENTERPRISE LN, MADISON, WI 53719) FOR SAFETY PRACTICES PRIOR TO PERFORMING THESE FUNCTIONS. UNLESS OTHERWISE INDICATED, TOP CHORD SHALL HAVE PROPERLY ATTACHED STRUCTURAL PANELS AND BOTTOM CHORD SHALL HAVE A PROPERLY ATTACHED RIGID CEILING.

IMPORTANT FURNISH A COPY OF THIS DESIGN TO THE INSTALLATION CONTRACTOR. ALPINE ENGINEERED PRODUCTS, INC. SHALL NOT BE RESPONSIBLE FOR ANY DEVIATION FROM THIS DESIGN; ANY FAILURE TO BUILD THE TRUSS IN CONFORMANCE WITH TPI; OR FABRICATING, HANDLING, SHIPPING, INSTALLING & BRACING OF TRUSSES. DESIGN CONFORMS WITH APPLICABLE PROVISIONS OF NDS (NATIONAL DESIGN SPEC. BY AF&PA) AND TPI. ALPINE CONNECTOR PLATES ARE MADE OF 20/18/16GA (W,H/S/K) ASTM A653 GRADE 40/60 (W, K/H,S) GALV. STEEL. APPLY PLATES TO EACH FACE OF TRUSS AND, UNLESS OTHERWISE LOCATED ON THIS DESIGN, POSITION PER DRAWINGS 160A Z. ANY INSPECTION OF PLATES FOLLOWED BY (1) SHALL BE PER ANNEX A3 OF TPI1 2002 SEC.3. A SEAL ON THIS DRAWING INDICATES ACCEPTANCE OF PROFESSIONAL ENGINEERING RESPONSIBILITY SOLELY FOR THE TRUSS COMPONENT DESIGN SHOWN. THE SUITABILITY AND USE OF THIS COMPONENT FOR ANY BUILDING IS THE RESPONSIBILITY OF THE BUILDING DESIGNER PER ANSI/TPI 1 SEC. 2.

ARTHUR B. FISHER
LICENSE
No.59687
STATE OF FLORIDA
PROFESSIONAL ENGINEER
Jan 27, 06

TC LL	20.0 PSF	REF	R487-- 67109
TC DL	10.0 PSF	DATE	01/26/06
BC DL	10.0 PSF	DRW	HCUSR487 06026027
BC LL	0.0 PSF	HC-ENG	JB/AF *
TOT.LD.	40.0 PSF	SEQN-	27290
DUR.FAC.	1.25		
SPACING	24.0"	JREF-	1SU7487_Z03

(6 036 PERRY / LOT 3 PHASE II STONEHANGE A1)

Top chord 2x4 SP #2 Dense
Bot chord 2x4 SP #2 Dense
Webs 2x4 SP #3

Left end vertical not exposed to wind pressure.

110 mph wind, 12.16 ft mean hgt, ASCE 7-98, CLOSED bldg, not located within 4.50 ft from roof edge, CAT II, EXP B, wind TC DL=5.0 psf, wind BC DL=5.0 psf.

Deflection meets L/360 live and L/240 total load.

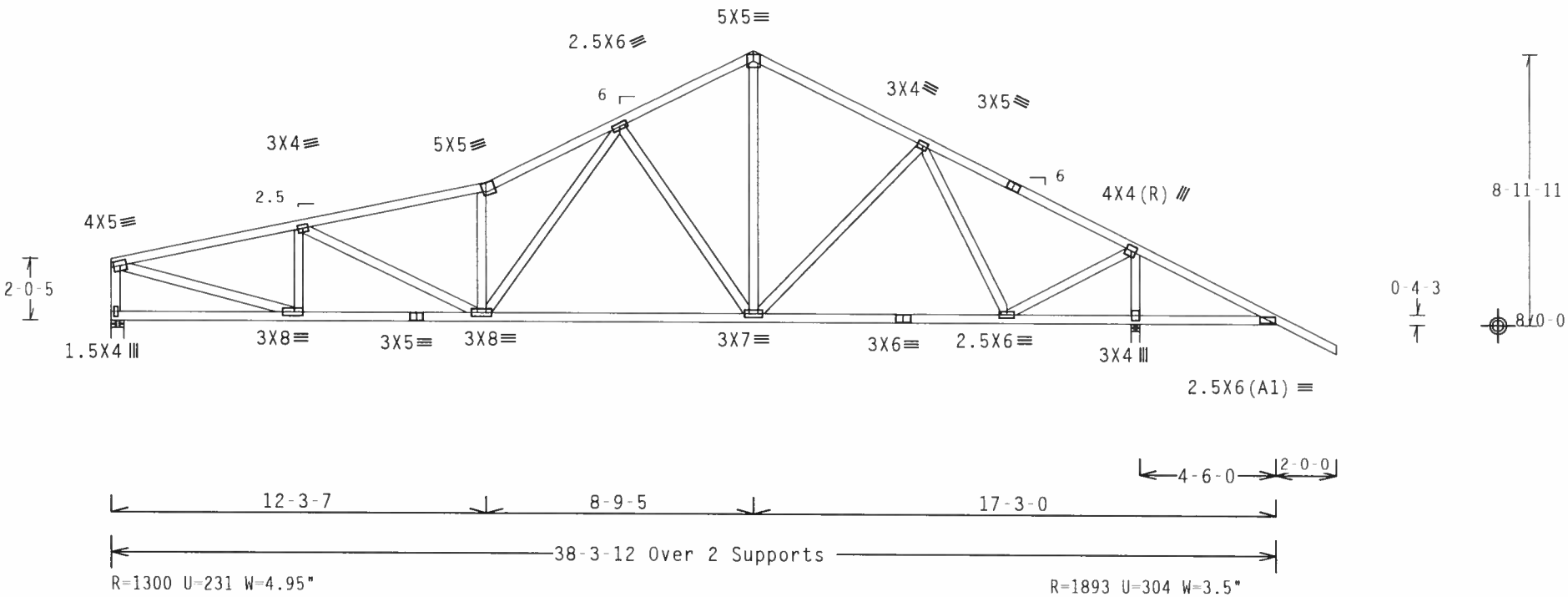

PLT TYP. Wave TPI Design Crit: TPI-1995(STD)/FBC 7.04.0[illegible] TY:1 FL/-/4/-/-/R/- Scale =.1875"/Ft.

ALPINE

Alpine Engineered Products, Inc.
1950 Marley Drive
Haines City, FL 33844
FL Certificate of Authorization # 567

WARNING TRUSSES REQUIRE EXTREME CARE IN FABRICATION, HANDLING, SHIPPING, INSTALLING AND BRACING. REFER TO BCSI 1 03 (BUILDING COMPONENT SAFETY INFORMATION), PUBLISHED BY TPI (TRUSS PLATE INSTITUTE, 583 D'ONOFRIO DR., SUITE 200, MADISON, WI 53719) AND WTCA (WOOD TRUSS COUNCIL OF AMERICA, 6300 ENTERPRISE LN, MADISON, WI 53719) FOR SAFETY PRACTICES PRIOR TO PERFORMING THESE FUNCTIONS. UNLESS OTHERWISE INDICATED, TOP CHORD SHALL HAVE PROPERLY ATTACHED STRUCTURAL PANELS AND BOTTOM CHORD SHALL HAVE A PROPERLY ATTACHED RIGID CEILING.

IMPORTANTFURNISH A COPY OF THIS DESIGN TO THE INSTALLATION CONTRACTOR. ALPINE ENGINEERED PRODUCTS, INC. SHALL NOT BE RESPONSIBLE FOR ANY DEVIATION FROM THIS DESIGN; ANY FAILURE TO BUILD THE TRUSS IN CONFORMANCE WITH TPI; OR FABRICATING, HANDLING, SHIPPING, INSTALLING & BRACING OF TRUSSES. DESIGN CONFORMS WITH APPLICABLE PROVISIONS OF NDS (NATIONAL DESIGN SPEC. BY AF&PA) AND TPI. ALPINE CONNECTOR PLATES ARE MADE OF 20/18/16GA (W,H/S/K) ASTM A653 GRADE 40/60 (W, K/H,S) GALV. STEEL. APPLY PLATES TO EACH FACE OF TRUSS AND, UNLESS OTHERWISE LOCATED ON THIS DESIGN, POSITION PER DRAWINGS 160A Z. ANY INSPECTION OF PLATES FOLLOWED BY (1) SHALL BE PER ANNEX A3 OF TPI1 2002 SEC.3. A SEAL ON THIS DRAWING INDICATES ACCEPTANCE OF PROFESSIONAL ENGINEERING RESPONSIBILITY SOLELY FOR THE TRUSS COMPONENT DESIGN SHOWN. THE SUITABILITY AND USE OF THIS COMPONENT FOR ANY BUILDING IS THE RESPONSIBILITY OF THE BUILDING DESIGNER PER ANSI/TPI 1 SEC. 2

ARTHUR R. FISHER LICENSE No. 59687 STATE OF FLORIDA PROFESSIONAL ENGINEER

Jan 2[illegible] '06

TC LL	20.0 PSF	REF	R487-- 67110
TC DL	10.0 PSF	DATE	01/26/06
BC DL	10.0 PSF	DRW	HCUSR487 06026028
BC LL	0.0 PSF	HC-ENG	JB/AF *
TOT.LD.	40.0 PSF	SEQN-	27291
DUR.FAC.	1.25		
SPACING	24.0"	JREF-	1SU7487_Z03

(6-036 PERRY / LOT 3 PHASE II STONEHANGE - A2)

Top chord 2x4 SP #2 Dense
Bot chord 2x4 SP #2 Dense
Webs 2x4 SP #3

(A) Continuous lateral bracing equally spaced on member.

110 mph wind, 12.16 ft mean hgt, ASCE 7-98, CLOSED bldg, not located within 4.50 ft from roof edge, CAT II, EXP B, wind TC DL=5.0 psf, wind BC DL=5.0 psf.

Deflection meets L/360 live and L/240 total load.

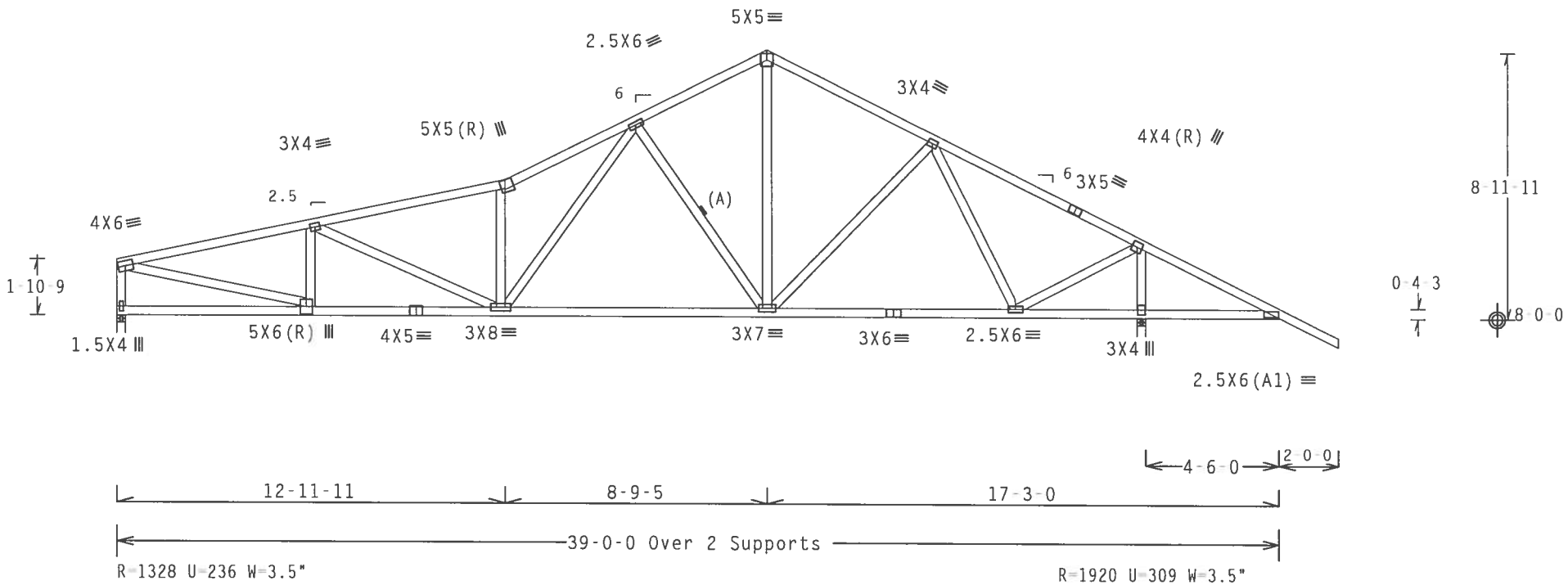

PLT TYP. Wave TPI Design Crit: TPI-1995(STD)/FBC 7.04.0 QTY:1 FL/-/4/-/-/R/- Scale =.1875"/Ft.

ALPINE
Alpine Engineered Products, Inc.
1950 Marley Drive
Haines City, FL 33844
FL Certificate of Authorization # 567

WARNING TRUSSES REQUIRE EXTREME CARE IN FABRICATION, HANDLING, SHIPPING, INSTALLING AND BRACING. REFER TO BCSI 1-03 (BUILDING COMPONENT SAFETY INFORMATION), PUBLISHED BY TPI (TRUSS PLATE INSTITUTE, 583 D'ONOFRIO DR., SUITE 200, MADISON, WI 53719) AND WTCA (WOOD TRUSS COUNCIL OF AMERICA, 6300 ENTERPRISE LN, MADISON, WI 53719) FOR SAFETY PRACTICES PRIOR TO PERFORMING THESE FUNCTIONS. UNLESS OTHERWISE INDICATED, TOP CHORD SHALL HAVE PROPERLY ATTACHED STRUCTURAL PANELS AND BOTTOM CHORD SHALL HAVE A PROPERLY ATTACHED RIGID CEILING.

IMPORTANTFURNISH A COPY OF THIS DESIGN TO THE INSTALLATION CONTRACTOR. ALPINE ENGINEERED PRODUCTS, INC. SHALL NOT BE RESPONSIBLE FOR ANY DEVIATION FROM THIS DESIGN; ANY FAILURE TO BUILD THE TRUSS IN CONFORMANCE WITH TPI; OR FABRICATING, HANDLING, SHIPPING, INSTALLING & BRACING OF TRUSSES. DESIGN CONFORMS WITH APPLICABLE PROVISIONS OF NDS (NATIONAL DESIGN SPEC. BY AF&PA) AND TPI. ALPINE CONNECTOR PLATES ARE MADE OF 20/18/16GA (W,H/S/K) ASTM A653 GRADE 40/60 (W, K/H,S) GALV. STEEL. APPLY PLATES TO EACH FACE OF TRUSS AND, UNLESS OTHERWISE LOCATED ON THIS DESIGN, POSITION PER DRAWINGS 160A Z. ANY INSPECTION OF PLATES FOLLOWED BY (1) SHALL BE PER ANNEX A3 OF TPI1 2002 SEC.3. A SEAL ON THIS DRAWING INDICATES ACCEPTANCE OF PROFESSIONAL ENGINEERING RESPONSIBILITY SOLELY FOR THE TRUSS COMPONENT DESIGN SHOWN. THE SUITABILITY AND USE OF THIS COMPONENT FOR ANY BUILDING IS THE RESPONSIBILITY OF THE BUILDING DESIGNER PER ANSI/TPI 1 SEC. 2.

ARTHUR R. FISHER LICENSE No. 39687 STATE OF FLORIDA PROFESSIONAL ENGINEER
Jan 27 '06

TC LL	20.0 PSF	REF	R487-- 67111
TC DL	10.0 PSF	DATE	01/26/06
BC DL	10.0 PSF	DRW	HCUSR487 06026029
BC LL	0.0 PSF	HC-ENG	JB/AF *
TOT.LD.	40.0 PSF	SEQN-	27292
DUR.FAC.	1.25		
SPACING	24.0"	JREF-	1SU7487_Z03

(0-036 PERRY / LOT 3 PHASE II STONEHANGE A3)

Top chord 2x4 SP #2 Dense
Bot chord 2x4 SP #2 Dense
Webs 2x4 SP #3

(A) Continuous lateral bracing equally spaced on member.

110 mph wind, 12.66 ft mean hgt, ASCE 7-98, CLOSED bldg, not located within 4.50 ft from roof edge, CAT II, EXP B, wind TC DL=5.0 psf, wind BC DL=5.0 psf.

Deflection meets L/360 live and L/240 total load.

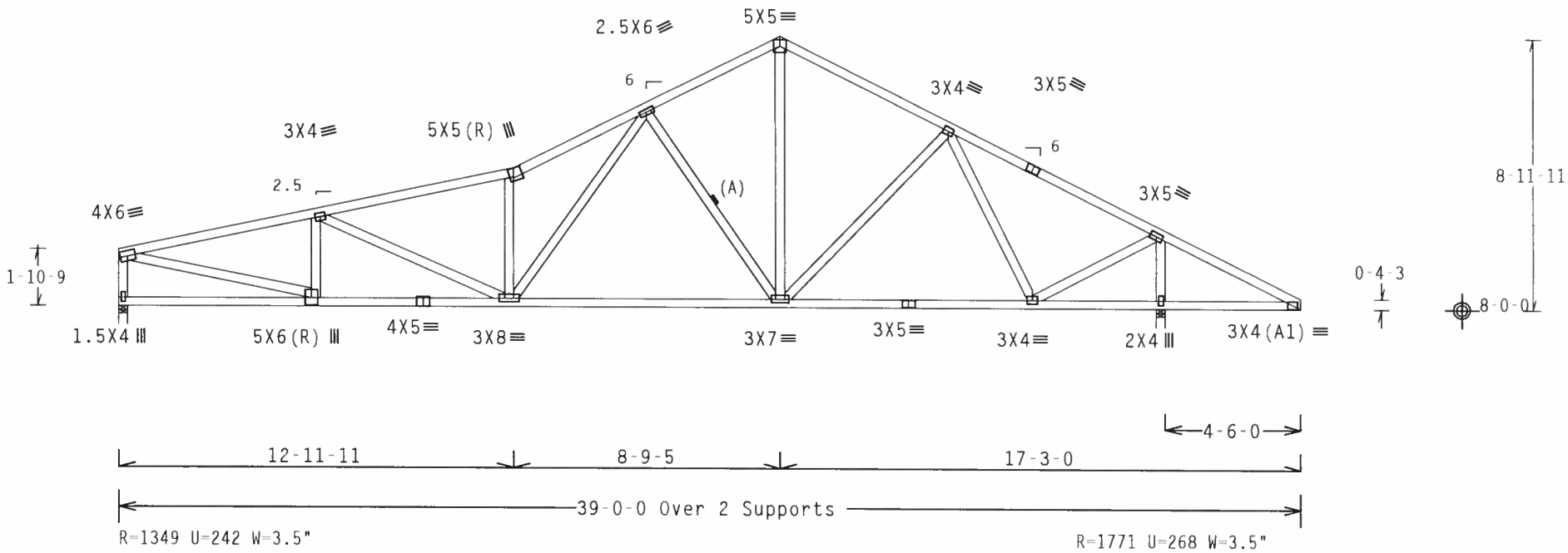

PLT TYP. Wave TPI | Design Crit: TPI-1995(STD)/FBC | 7.04.0 | QTY:1 | FL/-/4/-/-/R/- | Scale =.1875"/Ft.

ALPINE
Alpine Engineered Products, Inc.
1950 Marley Drive
Haines City, FL 33844
FL Certificate of Authorization # 567

WARNING TRUSSES REQUIRE EXTREME CARE IN FABRICATION, HANDLING, SHIPPING, INSTALLING AND BRACING. REFER TO BCSI 1-03 (BUILDING COMPONENT SAFETY INFORMATION), PUBLISHED BY TPI (TRUSS PLATE INSTITUTE, 583 D'ONOFRIO DR., SUITE 200, MADISON, WI 53719) AND WTCA (WOOD TRUSS COUNCIL OF AMERICA, 6300 ENTERPRISE LN, MADISON, WI 53719) FOR SAFETY PRACTICES PRIOR TO PERFORMING THESE FUNCTIONS. UNLESS OTHERWISE INDICATED, TOP CHORD SHALL HAVE PROPERLY ATTACHED STRUCTURAL PANELS AND BOTTOM CHORD SHALL HAVE A PROPERLY ATTACHED RIGID CEILING.

IMPORTANTFURNISH A COPY OF THIS DESIGN TO THE INSTALLATION CONTRACTOR. ALPINE ENGINEERED PRODUCTS, INC. SHALL NOT BE RESPONSIBLE FOR ANY DEVIATION FROM THIS DESIGN; ANY FAILURE TO BUILD THE TRUSS IN CONFORMANCE WITH TPI; OR FABRICATING, HANDLING, SHIPPING, INSTALLING & BRACING OF TRUSSES. DESIGN CONFORMS WITH APPLICABLE PROVISIONS OF NDS (NATIONAL DESIGN SPEC. BY AF&PA) AND TPI. ALPINE CONNECTOR PLATES ARE MADE OF 20/18/16GA (W,H/S/K) ASTM A653 GRADE 40/60 (W, K/H,S) GALV. STEEL. APPLY PLATES TO EACH FACE OF TRUSS AND, UNLESS OTHERWISE LOCATED ON THIS DESIGN, POSITION PER DRAWINGS 160A-Z. ANY INSPECTION OF PLATES FOLLOWED BY (I) SHALL BE PER ANNEX A3 OF TPI1 2002 SEC.3. A SEAL ON THIS DRAWING INDICATES ACCEPTANCE OF PROFESSIONAL ENGINEERING RESPONSIBILITY SOLELY FOR THE TRUSS COMPONENT DESIGN SHOWN. THE SUITABILITY AND USE OF THIS COMPONENT FOR ANY BUILDING IS THE RESPONSIBILITY OF THE BUILDING DESIGNER PER ANSI/TPI 1 SEC. 2.

ARTHUR R. FISHER LICENSE No. 59687 STATE OF FLORIDA PROFESSIONAL ENGINEER
Jan 27 '06

TC LL	20.0 PSF	REF	R487-- 67112
TC DL	10.0 PSF	DATE	01/26/06
BC DL	10.0 PSF	DRW	HCUSR487 06026026
BC LL	0.0 PSF	HC-ENG	JB/AF *
TOT.LD.	40.0 PSF	SEQN-	27289
DUR.FAC.	1.25		
SPACING	24.0"	JREF-	1SU7487_Z03

(6 036 PERRY / LOT 3 PHASE II STONEHANGE A4)

Top chord 2x4 SP #2 Dense
Bot chord 2x4 SP #2 Dense
Webs 2x4 SP #3

Deflection meets L/360 live and L/240 total load.

110 mph wind, 13.43 ft mean hgt, ASCE 7-98, CLOSED bldg, not located within 4.50 ft from roof edge, CAT II, EXP B, wind TC DL=5.0 psf, wind BC DL=5.0 psf.

Right end vertical not exposed to wind pressure.

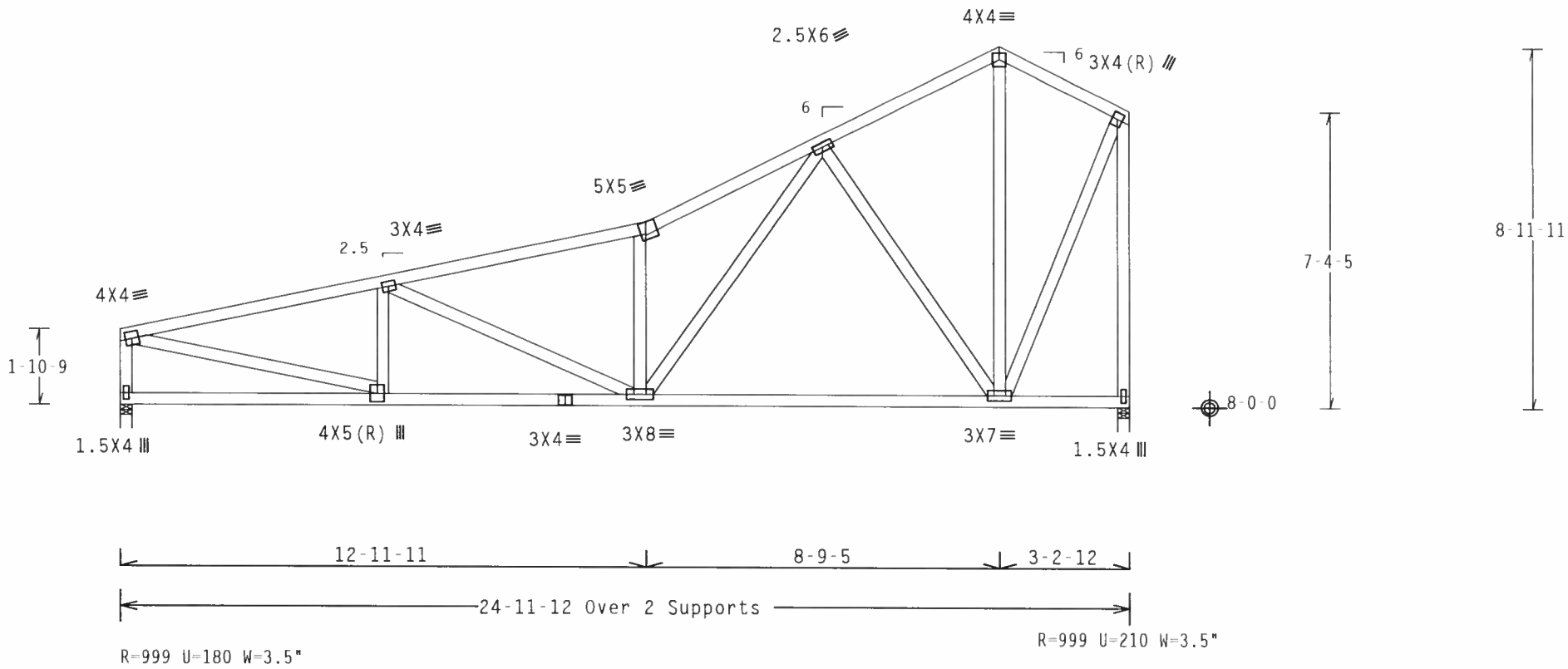

PLT TYP. Wave TPI Design Crit: TPI-1995(STD)/FBC 7.04.08 QTY:2 FL/-/4/-/-/R/- Scale =.25"/Ft.

ALPINE
Alpine Engineered Products, Inc.
1950 Marley Drive
Haines City, FL 33844
FL Certificate of Authorization # 567

WARNING TRUSSES REQUIRE EXTREME CARE IN FABRICATION, HANDLING, SHIPPING, INSTALLING AND BRACING. REFER TO BCSI 1 03 (BUILDING COMPONENT SAFETY INFORMATION), PUBLISHED BY TPI (TRUSS PLATE INSTITUTE, 583 D'ONOFRIO DR., SUITE 200, MADISON, WI 53719) AND WTCA (WOOD TRUSS COUNCIL OF AMERICA, 6300 ENTERPRISE LN. MADISON, WI 53719) FOR SAFETY PRACTICES PRIOR TO PERFORMING THESE FUNCTIONS. UNLESS OTHERWISE INDICATED, TOP CHORD SHALL HAVE PROPERLY ATTACHED STRUCTURAL PANELS AND BOTTOM CHORD SHALL HAVE A PROPERLY ATTACHED RIGID CEILING.

IMPORTANTFURNISH A COPY OF THIS DESIGN TO THE INSTALLATION CONTRACTOR. ALPINE ENGINEERED PRODUCTS, INC. SHALL NOT BE RESPONSIBLE FOR ANY DEVIATION FROM THIS DESIGN; ANY FAILURE TO BUILD THE TRUSS IN CONFORMANCE WITH TPI; OR FABRICATING, HANDLING, SHIPPING, INSTALLING & BRACING OF TRUSSES. DESIGN CONFORMS WITH APPLICABLE PROVISIONS OF NDS (NATIONAL DESIGN SPEC. BY AF&PA) AND TPI. ALPINE CONNECTOR PLATES ARE MADE OF 20/18/16GA (W,H/S/K) ASTM A653 GRADE 40/60 (W, K/H,S) GALV. STEEL APPLY PLATES TO EACH FACE OF TRUSS AND, UNLESS OTHERWISE LOCATED ON THIS DESIGN, POSITION PER DRAWINGS 160A Z. ANY INSPECTION OF PLATES FOLLOWED BY (1) SHALL BE PER ANNEX A3 OF TPI1 2002 SEC 3. A SEAL ON THIS DRAWING INDICATES ACCEPTANCE OF PROFESSIONAL ENGINEERING RESPONSIBILITY SOLELY FOR THE TRUSS COMPONENT DESIGN SHOWN. THE SUITABILITY AND USE OF THIS COMPONENT FOR ANY BUILDING IS THE RESPONSIBILITY OF THE BUILDING DESIGNER PER ANSI/TPI 1 SEC 2.

ARTHUR R. FISHER LICENSE No.59687 STATE OF FLORIDA PROFESSIONAL ENGINEER
Jan 27 '06

TC LL	20.0 PSF	REF	R487-- 67113
TC DL	10.0 PSF	DATE	01/26/06
BC DL	10.0 PSF	DRW	HCUSR487 06026002
BC LL	0.0 PSF	HC-ENG	JB/AF *
TOT.LD.	40.0 PSF	SEQN-	27267
DUR.FAC.	1.25		
SPACING	24.0"	JREF	1SU7487 Z03

(6 036 PERRY / LOT 3 PHASE II STONEHANGE HI/AM)

Top chord 2x4 SP #2 Dense
Bot chord 2x4 SP #2 Dense
Webs 2x4 SP #3

Deflection meets L/360 live and L/240 total load.

110 mph wind, 13.36 ft mean hgt, ASCE 7-98, CLOSED bldg, not located within 4.50 ft from roof edge, CAT II, EXP B, wind TC DL=5.0 psf, wind BC DL=5.0 psf.

Right end vertical not exposed to wind pressure.

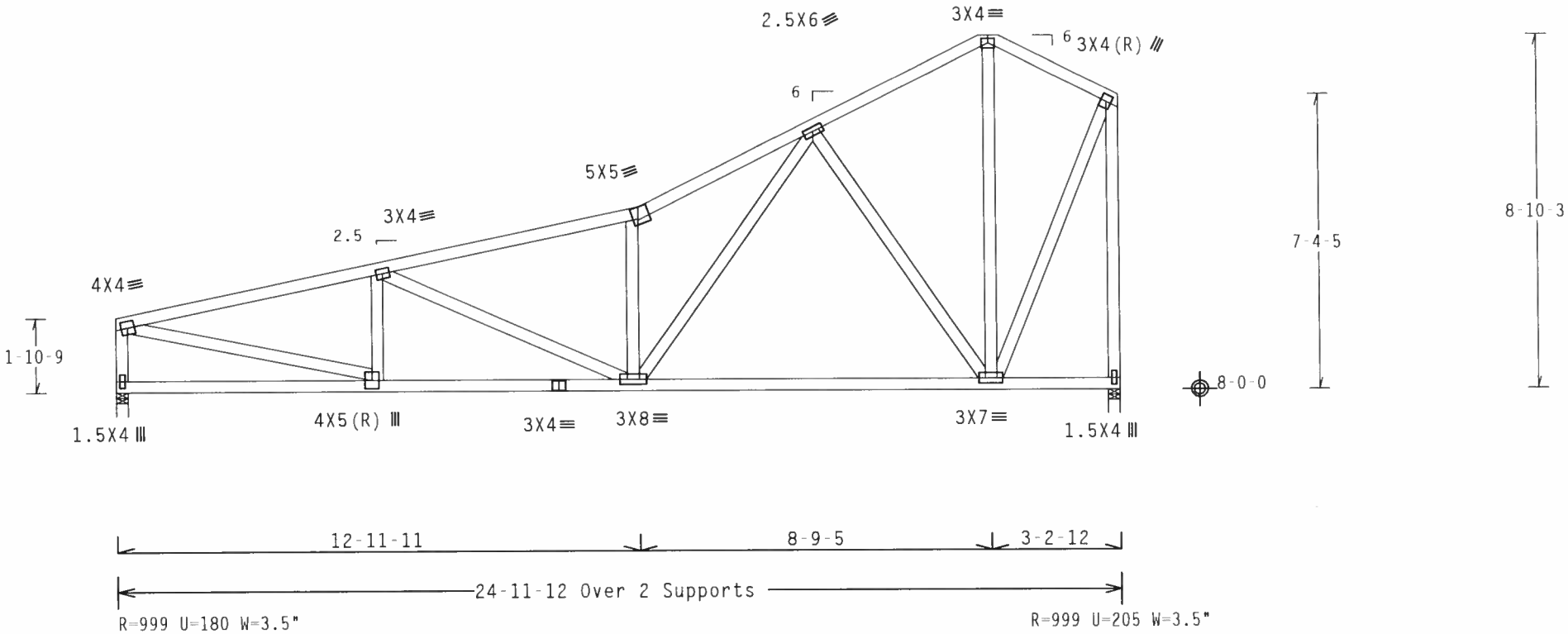

PLT TYP. Wave TPI Design Crit: TPI-1995(STD)/FBC 7.04.0[illegible] QTY:1 FL/-/4/-/-/R/- Scale =.25"/Ft.

ALPINE
Alpine Engineered Products, Inc.
1950 Marley Drive
Haines City, FL 33844
FL Certificate of Authorization # 567

WARNING TRUSSES REQUIRE EXTREME CARE IN FABRICATION, HANDLING, SHIPPING, INSTALLING AND BRACING. REFER TO BCSI 1-03 (BUILDING COMPONENT SAFETY INFORMATION), PUBLISHED BY TPI (TRUSS PLATE INSTITUTE, 583 D'ONOFRIO DR., SUITE 200, MADISON, WI 53719) AND WTCA (WOOD TRUSS COUNCIL OF AMERICA, 6300 ENTERPRISE LN, MADISON, WI 53719) FOR SAFETY PRACTICES PRIOR TO PERFORMING THESE FUNCTIONS. UNLESS OTHERWISE INDICATED, TOP CHORD SHALL HAVE PROPERLY ATTACHED STRUCTURAL PANELS AND BOTTOM CHORD SHALL HAVE A PROPERLY ATTACHED RIGID CEILING.

IMPORTANT FURNISH A COPY OF THIS DESIGN TO THE INSTALLATION CONTRACTOR. ALPINE ENGINEERED PRODUCTS, INC. SHALL NOT BE RESPONSIBLE FOR ANY DEVIATION FROM THIS DESIGN; ANY FAILURE TO BUILD THE TRUSS IN CONFORMANCE WITH TPI; OR FABRICATING, HANDLING, SHIPPING, INSTALLING & BRACING OF TRUSSES. DESIGN CONFORMS WITH APPLICABLE PROVISIONS OF NDS (NATIONAL DESIGN SPEC. BY AF&PA) AND TPI. ALPINE CONNECTOR PLATES ARE MADE OF 20/18/16GA (W,H/S/K) ASTM A653 GRADE 40/60 (W, K/H,S) GALV. STEEL. APPLY PLATES TO EACH FACE OF TRUSS AND, UNLESS OTHERWISE LOCATED ON THIS DESIGN, POSITION PER DRAWINGS 160A Z. ANY INSPECTION OF PLATES FOLLOWED BY (1) SHALL BE PER ANNEX A3 OF TPI1 2002 SEC.3. A SEAL ON THIS DRAWING INDICATES ACCEPTANCE OF PROFESSIONAL ENGINEERING RESPONSIBILITY SOLELY FOR THE TRUSS COMPONENT DESIGN SHOWN. THE SUITABILITY AND USE OF THIS COMPONENT FOR ANY BUILDING IS THE RESPONSIBILITY OF THE BUILDING DESIGNER PER ANSI/TPI 1 SEC. 2.

ARTHUR R. FISHER LICENSE No.59687 STATE OF FLORIDA PROFESSIONAL ENGINEER
Jan 27 '06

TC LL	20.0 PSF	REF	R487-- 67114
TC DL	10.0 PSF	DATE	01/26/06
BC DL	10.0 PSF	DRW	HCUSR487 06026015
BC LL	0.0 PSF	HC-ENG	JB/AF *
TOT.LD.	40.0 PSF	SEQN-	27279
DUR.FAC.	1.25		
SPACING	24.0"	JREF-	1SU7487_Z03

(6-036 PERRY / LOT 3 PHASE II STONEHANGE - M/A)

Top chord 2x6 SP #2 :T1 2x4 SP #2 Dense:
Bot chord 2x6 SP #2
Webs 2x4 SP #3 :W9 2x4 SP #2 Dense:

Deflection meets L/360 live and L/240 total load.

110 mph wind, 15.00 ft mean hgt, ASCE 7-98, CLOSED bldg, Located anywhere in roof, CAT II, EXP B, wind TC DL=5.0 psf, wind BC DL=5.0 psf.

Right end vertical not exposed to wind pressure.

#1 hip supports 7-0-0 jacks with no webs.

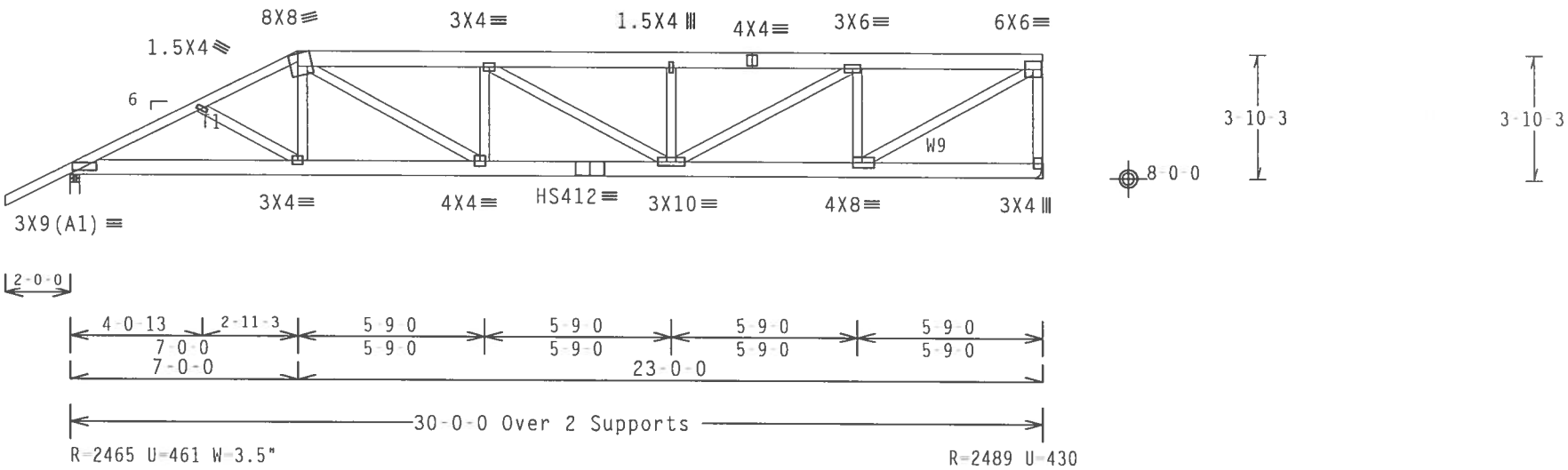

PLT TYP. 20 Gauge HS,Wave TPI Design Crit: TPI-1995(STD)/FBC 7.04.08 QTY:1 FL/-/4/-/-/R/- Scale =.1875"/Ft.

ALPINE
Alpine Engineered Products, Inc.
1950 Marley Drive
Haines City, FL 33844
FL Certificate of Authorization # 567

WARNING TRUSSES REQUIRE EXTREME CARE IN FABRICATION, HANDLING, SHIPPING, INSTALLING AND BRACING. REFER TO BCSI 1-03 (BUILDING COMPONENT SAFETY INFORMATION), PUBLISHED BY TPI (TRUSS PLATE INSTITUTE, 583 D'ONOFRIO DR., SUITE 200, MADISON, WI 53719) AND WTCA (WOOD TRUSS COUNCIL OF AMERICA, 6300 ENTERPRISE LN, MADISON, WI 53719) FOR SAFETY PRACTICES PRIOR TO PERFORMING THESE FUNCTIONS. UNLESS OTHERWISE INDICATED, TOP CHORD SHALL HAVE PROPERLY ATTACHED STRUCTURAL PANELS AND BOTTOM CHORD SHALL HAVE A PROPERLY ATTACHED RIGID CEILING.

IMPORTANTFURNISH A COPY OF THIS DESIGN TO THE INSTALLATION CONTRACTOR. ALPINE ENGINEERED PRODUCTS, INC. SHALL NOT BE RESPONSIBLE FOR ANY DEVIATION FROM THIS DESIGN; ANY FAILURE TO BUILD THE TRUSS IN CONFORMANCE WITH TPI; OR FABRICATING, HANDLING, SHIPPING, INSTALLING & BRACING OF TRUSSES. DESIGN CONFORMS WITH APPLICABLE PROVISIONS OF NDS (NATIONAL DESIGN SPEC. BY AFAPA) AND TPI. ALPINE CONNECTOR PLATES ARE MADE OF 20/18/16GA (W,H/S/K) ASTM A653 GRADE 40/60 (W, K/H,S) GALV. STEEL. APPLY PLATES TO EACH FACE OF TRUSS AND, UNLESS OTHERWISE LOCATED ON THIS DESIGN, POSITION PER DRAWINGS 160A Z. ANY INSPECTION OF PLATES FOLLOWED BY (1) SHALL BE PER ANNEX A3 OF TPI1-2002 SEC.3. A SEAL ON THIS DRAWING INDICATES ACCEPTANCE OF PROFESSIONAL ENGINEERING RESPONSIBILITY SOLELY FOR THE TRUSS COMPONENT DESIGN SHOWN. THE SUITABILITY AND USE OF THIS COMPONENT FOR ANY BUILDING IS THE RESPONSIBILITY OF THE BUILDING DESIGNER PER ANSI/TPI 1 SEC. 2.

ARTHUR R. FISHER
LICENSE
No.59687
STATE OF FLORIDA
PROFESSIONAL ENGINEER
Jan 27, 2006

TC LL	20.0 PSF	REF	R487-- 67115
TC DL	10.0 PSF	DATE	01/26/06
BC DL	10.0 PSF	DRW	HCUSR487 06026009
BC LL	0.0 PSF	HC-ENG	DF/AF
TOT.LD.	40.0 PSF	SEQN-	4949
DUR.FAC.	1.25		
SPACING	24.0"	JREF-	1SU7487_Z03

Top chord 2x4 SP #2 Dense
Bot chord 2x4 SP #2 Dense
Webs 2x4 SP #3

H = recommended connection based on manufacturer tested capacities and calculations. Conditions may exist that require different connections than indicated. Refer to manufacturer publication for additional information.

110 mph wind, 10.10 ft mean hgt, ASCE 7-98, CLOSED bldg, not located within 4.50 ft from roof edge, CAT II, EXP B, wind TC DL=5.0 psf, wind BC DL=5.0 psf.

Right end vertical not exposed to wind pressure.

Deflection meets L/360 live and L/240 total load.

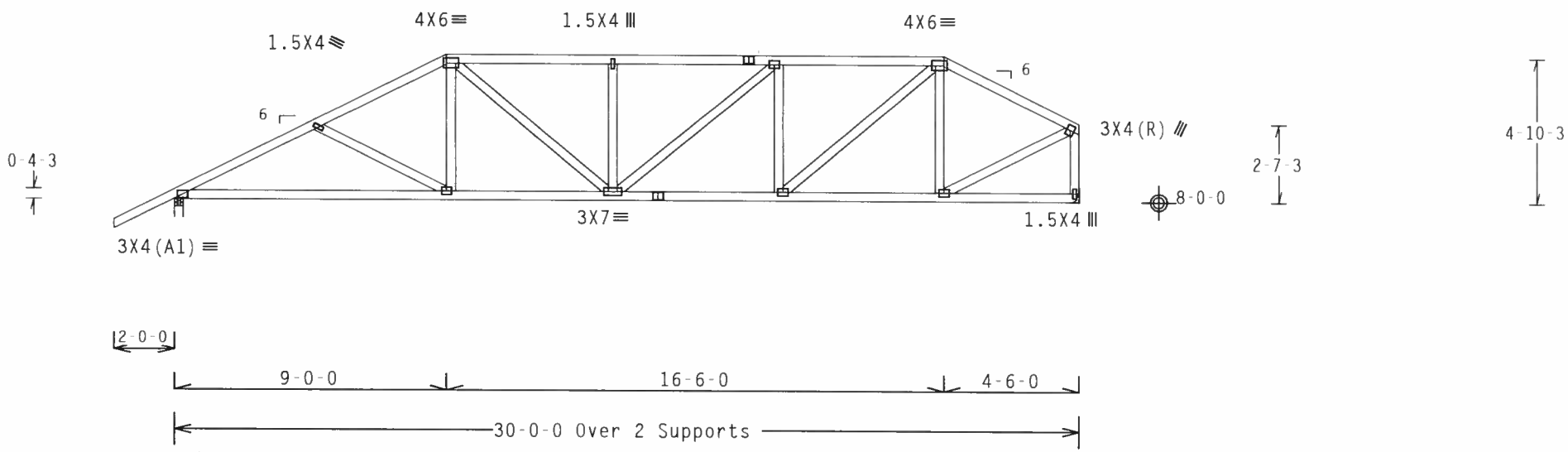

Note: All Plates Are 3X4 Except As Shown.

PLT TYP. Wave TPI Design Crit: TPI-1995(STD)/FBC 7.04.08 QTY:1 FL/-/4/-/-/R/- Scale =.1875"/Ft.

ALPINE
Alpine Engineered Products, Inc.
1950 Marley Drive
Haines City, FL 33844
FL Certificate of Authorization # 567

WARNING TRUSSES REQUIRE EXTREME CARE IN FABRICATION, HANDLING, SHIPPING, INSTALLING AND BRACING. REFER TO BCSI 1-03 (BUILDING COMPONENT SAFETY INFORMATION), PUBLISHED BY TPI (TRUSS PLATE INSTITUTE, 583 D'ONOFRIO DR., SUITE 200, MADISON, WI 53719) AND WTCA (WOOD TRUSS COUNCIL OF AMERICA, 6300 ENTERPRISE LN. MADISON, WI 53719) FOR SAFETY PRACTICES PRIOR TO PERFORMING THESE FUNCTIONS. UNLESS OTHERWISE INDICATED, TOP CHORD SHALL HAVE PROPERLY ATTACHED STRUCTURAL PANELS AND BOTTOM CHORD SHALL HAVE A PROPERLY ATTACHED RIGID CEILING.

IMPORTANT FURNISH A COPY OF THIS DESIGN TO THE INSTALLATION CONTRACTOR. ALPINE ENGINEERED PRODUCTS, INC. SHALL NOT BE RESPONSIBLE FOR ANY DEVIATION FROM THIS DESIGN; ANY FAILURE TO BUILD THE TRUSS IN CONFORMANCE WITH TPI; OR FABRICATING, HANDLING, SHIPPING, INSTALLING & BRACING OF TRUSSES. DESIGN CONFORMS WITH APPLICABLE PROVISIONS OF NDS (NATIONAL DESIGN SPEC. BY AF&PA) AND TPI. ALPINE CONNECTOR PLATES ARE MADE OF 20/18/16GA (W,H/S/K) ASTM A653 GRADE 40/60 (W, K/H,S) GALV. STEEL. APPLY PLATES TO EACH FACE OF TRUSS AND, UNLESS OTHERWISE LOCATED ON THIS DESIGN, POSITION PER DRAWINGS 160A Z. ANY INSPECTION OF PLATES FOLLOWED BY (1) SHALL BE PER ANNEX A3 OF TPI1 2002 SEC.3. A SEAL ON THIS DRAWING INDICATES ACCEPTANCE OF PROFESSIONAL ENGINEERING RESPONSIBILITY SOLELY FOR THE TRUSS COMPONENT DESIGN SHOWN. THE SUITABILITY AND USE OF THIS COMPONENT FOR ANY BUILDING IS THE RESPONSIBILITY OF THE BUILDING DESIGNER PER ANSI/TPI 1 SEC. 2

ARTHUR R. FISHER
LICENSE
No.59687
STATE OF
FLORIDA
PROFESSIONAL ENGINEER
Jan 27 '06

TC LL	20.0 PSF	REF	R487-- 67116
TC DL	10.0 PSF	DATE	01/26/06
BC DL	10.0 PSF	DRW	HCUSR487 06026008
BC LL	0.0 PSF	HC-ENG	JB/AF
TOT.LD.	40.0 PSF	SEQN-	27273
DUR.FAC.	1.25		
SPACING	24.0"	JREF-	1SU7487_Z03

(6-036 PERRY / LOT 3 PHASE II STONEHANGE - H11A)

Top chord 2x4 SP #2 Dense
Bot chord 2x4 SP #2 Dense
Webs 2x4 SP #3

H = recommended connection based on manufacturer tested capacities and calculations. Conditions may exist that require different connections than indicated. Refer to manufacturer publication for additional information.

110 mph wind, 10.60 ft mean hgt, ASCE 7-98, CLOSED bldg, not located within 4.50 ft from roof edge, CAT II, EXP B, wind TC DL=5.0 psf, wind BC DL=5.0 psf.

Right end vertical not exposed to wind pressure.

Deflection meets L/360 live and L/240 total load.

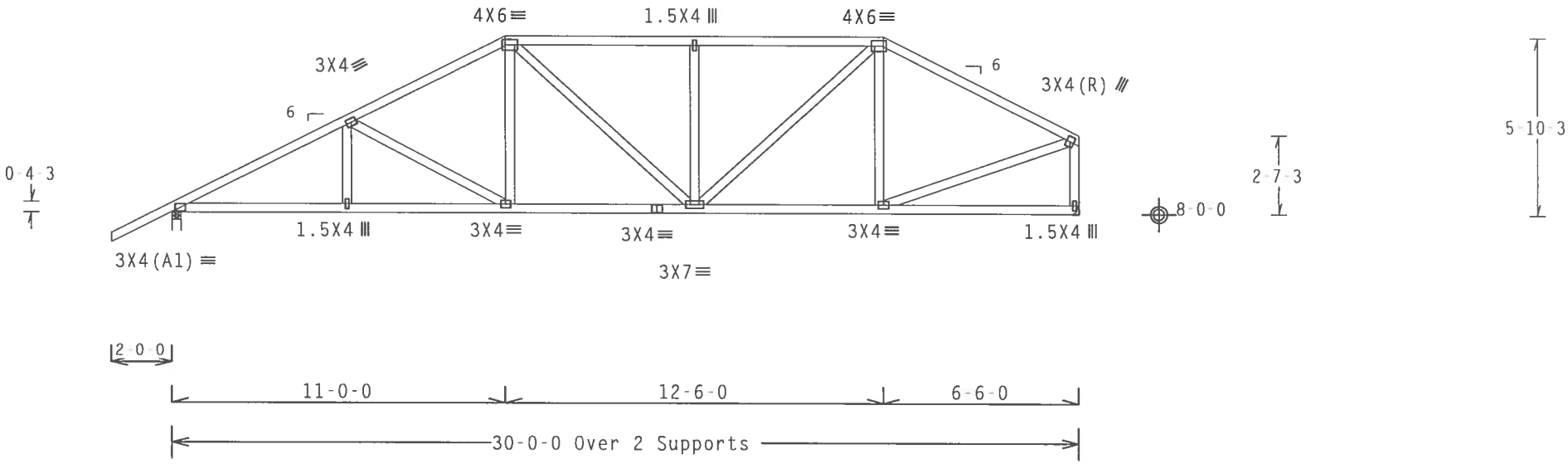

R=1345 U=243 W=3.5"

R=1183 U=210 H=Simpson HUS26
w/ (6) 10d Common, 0.148"x3.0" nails in Truss
(14) 10d Common, 0.148"x3.0" nails in Girder
Brace: (1)2X6 min. So.Pine

PLT TYP. Wave TPI Design Crit: TPI-1995(STD)/FBC 7.04.0[illegible]16 QTY:1 FL/-/4/-/-/R/- Scale =.1875"/Ft.

ALPINE
Alpine Engineered Products, Inc.
1950 Marley Drive
Haines City, FL 33844
FL Certificate of Authorization # 567

WARNING TRUSSES REQUIRE EXTREME CARE IN FABRICATION, HANDLING, SHIPPING, INSTALLING AND BRACING. REFER TO BCSI 1-03 (BUILDING COMPONENT SAFETY INFORMATION), PUBLISHED BY TPI (TRUSS PLATE INSTITUTE, 583 D'ONOFRIO DR., SUITE 200, MADISON, WI 53719) AND WTCA (WOOD TRUSS COUNCIL OF AMERICA, 6300 ENTERPRISE LN, MADISON, WI 53719) FOR SAFETY PRACTICES PRIOR TO PERFORMING THESE FUNCTIONS. UNLESS OTHERWISE INDICATED, TOP CHORD SHALL HAVE PROPERLY ATTACHED STRUCTURAL PANELS AND BOTTOM CHORD SHALL HAVE A PROPERLY ATTACHED RIGID CEILING.

IMPORTANTFURNISH A COPY OF THIS DESIGN TO THE INSTALLATION CONTRACTOR. ALPINE ENGINEERED PRODUCTS, INC. SHALL NOT BE RESPONSIBLE FOR ANY DEVIATION FROM THIS DESIGN; ANY FAILURE TO BUILD THE TRUSS IN CONFORMANCE WITH TPI; OR FABRICATING, HANDLING, SHIPPING, INSTALLING & BRACING OF TRUSSES. DESIGN CONFORMS WITH APPLICABLE PROVISIONS OF NDS (NATIONAL DESIGN SPEC. BY AF&PA) AND TPI. ALPINE CONNECTOR PLATES ARE MADE OF 20/18/16GA (W,H/S/K) ASTM A653 GRADE 40/60 (W, K/H,S) GALV. STEEL. APPLY PLATES TO EACH FACE OF TRUSS AND, UNLESS OTHERWISE LOCATED ON THIS DESIGN, POSITION PER DRAWINGS 160A Z. ANY INSPECTION OF PLATES FOLLOWED BY (1) SHALL BE PER ANNEX A3 OF TPI1 2002 SEC.3. A SEAL ON THIS DRAWING INDICATES ACCEPTANCE OF PROFESSIONAL ENGINEERING RESPONSIBILITY SOLELY FOR THE TRUSS COMPONENT DESIGN SHOWN. THE SUITABILITY AND USE OF THIS COMPONENT FOR ANY BUILDING IS THE RESPONSIBILITY OF THE BUILDING DESIGNER PER ANSI/TPI 1 SEC. 2.

ARTHUR B. FISHER
LICENSE
No.59687
STATE OF FLORIDA
PROFESSIONAL ENGINEER

Jan 27 '06

TC LL	20.0 PSF	REF	R487-- 67117
TC DL	10.0 PSF	DATE	01/26/06
BC DL	10.0 PSF	DRW	HCUSR487 06026042
BC LL	0.0 PSF	HC-ENG	JB/AF
TOT.LD.	40.0 PSF	SEQN-	27262
DUR.FAC.	1.25		
SPACING	24.0"	JREF-	1SU7487_Z03

(6-036 PERRY / LOT 3 PHASE II STONEHANGE - H13A)

Top chord 2x4 SP #2 Dense
Bot chord 2x4 SP #2 Dense
Webs 2x4 SP #3

H = recommended connection based on manufacturer tested capacities and calculations. Conditions may exist that require different connections than indicated. Refer to manufacturer publication for additional information.

110 mph wind, 11.10 ft mean hgt, ASCE 7-98, CLOSED bldg, not located within 4.50 ft from roof edge, CAT II, EXP B, wind TC DL=5.0 psf, wind BC DL=5.0 psf.

Right end vertical not exposed to wind pressure.

Deflection meets L/360 live and L/240 total load.

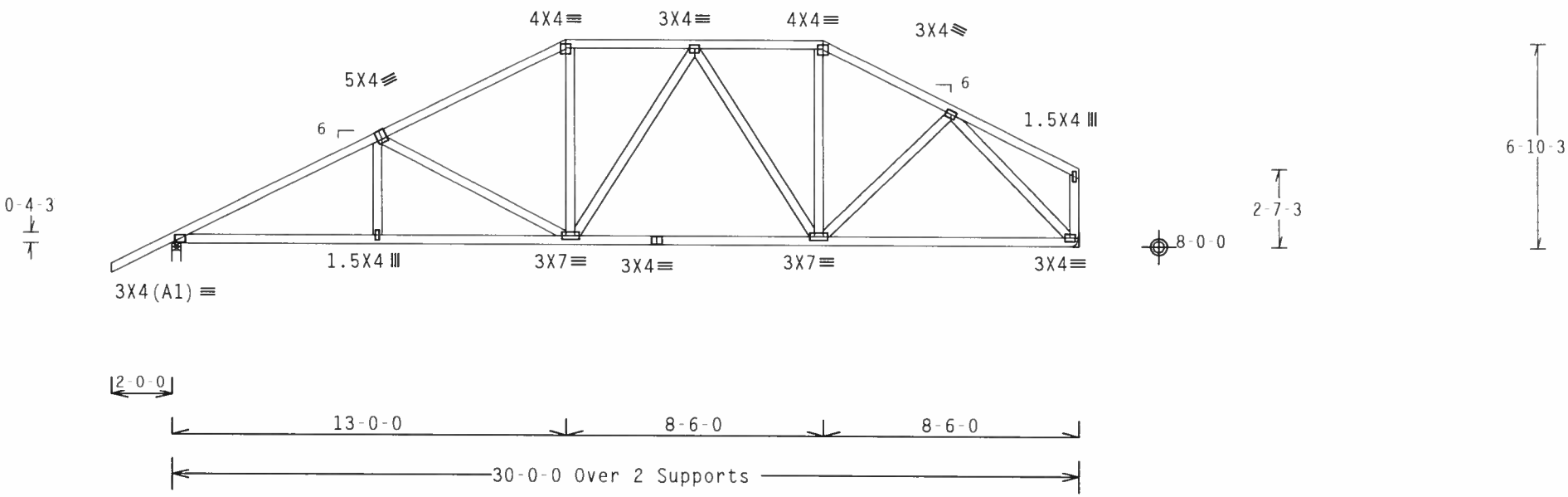

R=1345 U=241 W=3.5"

R=1183 U=207 H=Simpson HUS26
w/ (6) 10d Common, 0.148"x3.0" nails in Truss
w/ (14) 10d Common, 0.148"x3.0" nails in Girder
Girder is (1)2X6 min. So.Pine

PLT TYP. Wave TPI Design Crit: TPI-1995(STD)/FBC 7.04.0[illegible] QTY:1 FL/-/4/-/-/R/- Scale =.1875"/Ft.

ALPINE
Alpine Engineered Products, Inc.
1950 Marley Drive
Haines City, FL 33844
FL Certificate of Authorization # 567

WARNING TRUSSES REQUIRE EXTREME CARE IN FABRICATION, HANDLING, SHIPPING, INSTALLING AND BRACING. REFER TO BCSI 1-03 (BUILDING COMPONENT SAFETY INFORMATION), PUBLISHED BY TPI (TRUSS PLATE INSTITUTE, 583 D'ONOFRIO DR., SUITE 200, MADISON, WI 53719) AND WTCA (WOOD TRUSS COUNCIL OF AMERICA, 6300 ENTERPRISE LN, MADISON, WI 53719) FOR SAFETY PRACTICES PRIOR TO PERFORMING THESE FUNCTIONS. UNLESS OTHERWISE INDICATED, TOP CHORD SHALL HAVE PROPERLY ATTACHED STRUCTURAL PANELS AND BOTTOM CHORD SHALL HAVE A PROPERLY ATTACHED RIGID CEILING.

IMPORTANT FURNISH A COPY OF THIS DESIGN TO THE INSTALLATION CONTRACTOR. ALPINE ENGINEERED PRODUCTS, INC. SHALL NOT BE RESPONSIBLE FOR ANY DEVIATION FROM THIS DESIGN; ANY FAILURE TO BUILD THE TRUSS IN CONFORMANCE WITH TPI; OR FABRICATING, HANDLING, SHIPPING, INSTALLING & BRACING OF TRUSSES. DESIGN CONFORMS WITH APPLICABLE PROVISIONS OF NDS (NATIONAL DESIGN SPEC, BY AF&PA) AND TPI. ALPINE CONNECTOR PLATES ARE MADE OF 20/18/16GA (W,H/S/K) ASTM A653 GRADE 40/60 (W, K/H,S) GALV. STEEL. APPLY PLATES TO EACH FACE OF TRUSS AND, UNLESS OTHERWISE LOCATED ON THIS DESIGN, POSITION PER DRAWINGS 160A-Z. ANY INSPECTION OF PLATES FOLLOWED BY (1) SHALL BE PER ANNEX A3 OF TPI1-2002 SEC.3. A SEAL ON THIS DRAWING INDICATES ACCEPTANCE OF PROFESSIONAL ENGINEERING RESPONSIBILITY SOLELY FOR THE TRUSS COMPONENT DESIGN SHOWN. THE SUITABILITY AND USE OF THIS COMPONENT FOR ANY BUILDING IS THE RESPONSIBILITY OF THE BUILDING DESIGNER PER ANSI/TPI 1 SEC. 2.

ARTHUR B. FISHER
LICENSE
No.59687
STATE OF FLORIDA
PROFESSIONAL ENGINEER
Jan 27 '06

TC LL	20.0 PSF	REF	R487-- 67118
TC DL	10.0 PSF	DATE	01/26/06
BC DL	10.0 PSF	DRW	HCUSR487 06026020
BC LL	0.0 PSF	HC-ENG	JB/AF
TOT.LD.	40.0 PSF	SEQN-	27284
DUR.FAC.	1.25		
SPACING	24.0"	JREF-	1SU7487_Z03

(6-036 PERRY / LOT 3 PHASE II STONEHANGE H/AM)

Top chord 2x6 SP #2
Bot chord 2x6 SP #2
Webs 2x4 SP #3 :W2, W6 2x4 SP #2 Dense:

110 mph wind, 15.00 ft mean hgt, ASCE 7-98, CLOSED bldg, not located within 4.50 ft from roof edge, CAT II, EXP B, wind TC DL=5.0 psf, wind BC DL=5.0 psf.

End verticals not exposed to wind pressure.

(A) Continuous lateral bracing equally spaced on member.

Deflection meets L/360 live and L/240 total load.

Truss must be installed as shown with top chord up.

SPECIAL LOADS
------(LUMBER DUR.FAC.=1.25 / PLATE DUR.FAC.=1.25)
TC - From 60 PLF at 0.00 to 60 PLF at 21.29
BC - From 20 PLF at 0.00 to 20 PLF at 21.29
TC - 173 LB Conc. Load at 1.94, 3.94, 5.94, 7.94, 9.94 11.94, 13.94, 15.94, 17.94, 19.94
BC - 70 LB Conc. Load at 1.94, 3.94, 5.94, 7.94, 9.94 11.94, 13.94, 15.94, 17.94, 19.94

H = recommended connection based on manufacturer tested capacities and calculations. Conditions may exist that require different connections than indicated. Refer to manufacturer publication for additional information.

The TC of this truss shall be braced with attached spans at 24" OC in lieu of structural sheathing.

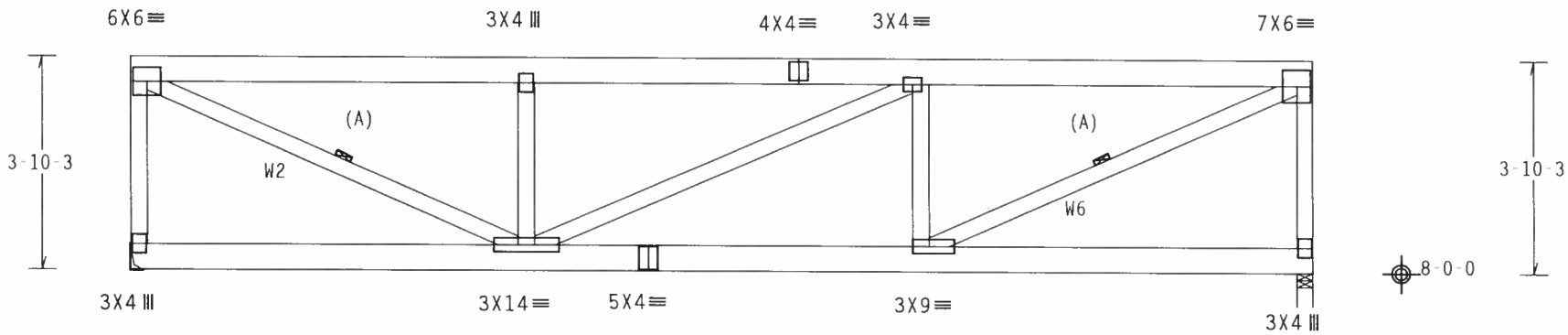

21-3-8 Over 2 Supports

R=2034 U=746 H=Simpson HUS26
w/ (6) 10d Common, 0.148"x3.0" nails in Truss
w/ (14) 10d Common, 0.148"x3.0" nails in Girder
Girder is (1)2X6 min. So.Pine

R=2101 U=776 W=3.5"

PLT TYP. Wave TPI Design Crit: TPI-1995(STD)/FBC 7.04.0[illegible] TY:1 FL/-/4/-/-/R/- Scale =.3125"/Ft.

ALPINE
Alpine Engineered Products, Inc.
1950 Marley Drive
Haines City, FL 33844
FL Certificate of Authorization # 567

WARNING TRUSSES REQUIRE EXTREME CARE IN FABRICATION, HANDLING, SHIPPING, INSTALLING AND BRACING. REFER TO BCSI 1-03 (BUILDING COMPONENT SAFETY INFORMATION), PUBLISHED BY TPI (TRUSS PLATE INSTITUTE, 583 D'ONOFRIO DR., SUITE 200, MADISON, WI 53719) AND WTCA (WOOD TRUSS COUNCIL OF AMERICA, 6300 ENTERPRISE LN, MADISON, WI 53719) FOR SAFETY PRACTICES PRIOR TO PERFORMING THESE FUNCTIONS. UNLESS OTHERWISE INDICATED, TOP CHORD SHALL HAVE PROPERLY ATTACHED STRUCTURAL PANELS AND BOTTOM CHORD SHALL HAVE A PROPERLY ATTACHED RIGID CEILING.

IMPORTANTFURNISH A COPY OF THIS DESIGN TO THE INSTALLATION CONTRACTOR. ALPINE ENGINEERED PRODUCTS, INC. SHALL NOT BE RESPONSIBLE FOR ANY DEVIATION FROM THIS DESIGN; ANY FAILURE TO BUILD THE TRUSS IN CONFORMANCE WITH TPI; OR FABRICATING, HANDLING, SHIPPING, INSTALLING & BRACING OF TRUSSES. DESIGN CONFORMS WITH APPLICABLE PROVISIONS OF NDS (NATIONAL DESIGN SPEC. BY AF&PA) AND TPI. ALPINE CONNECTOR PLATES ARE MADE OF 20/18/16GA (W,H/S/K) ASTM A653 GRADE 40/60 (W, K/H,S) GALV. STEEL. APPLY PLATES TO EACH FACE OF TRUSS AND, UNLESS OTHERWISE LOCATED ON THIS DESIGN, POSITION PER DRAWINGS 160A-Z. ANY INSPECTION OF PLATES FOLLOWED BY (1) SHALL BE PER ANNEX A3 OF TPI1-2002 SEC.3. A SEAL ON THIS DRAWING INDICATES ACCEPTANCE OF PROFESSIONAL ENGINEERING RESPONSIBILITY SOLELY FOR THE TRUSS COMPONENT DESIGN SHOWN. THE SUITABILITY AND USE OF THIS COMPONENT FOR ANY BUILDING IS THE RESPONSIBILITY OF THE BUILDING DESIGNER PER ANSI/TPI 1 SEC. 2.

ARTHUR R. FISHER
LICENSE
No. 59687
STATE OF FLORIDA
PROFESSIONAL ENGINEER
Jan 27 '06

TC LL	20.0 PSF	REF R487-- 67119
TC DL	10.0 PSF	DATE 01/26/06
BC DL	10.0 PSF	DRW HCUSR487 06026030
BC LL	0.0 PSF	HC-ENG JB/AF
TOT.LD.	40.0 PSF	SEQN- 27293
DUR.FAC.	1.25	
SPACING	24.0"	JREF- 1SU7487_Z03

(6-036 PERRY / LOT 3 PHASE II STONEHANGE - H9AM)

Top chord 2x4 SP #2 Dense :T2 2x6 SP #2:
Bot chord 2x4 SP #2 Dense
Webs 2x4 SP #3

End verticals not exposed to wind pressure.

Deflection meets L/360 live and L/240 total load.

110 mph wind, 11.75 ft mean hgt, ASCE 7-98, CLOSED bldg, not located within 4.50 ft from roof edge, CAT II, EXP B, wind TC DL=5.0 psf, wind BC DL=5.0 psf.

H = recommended connection based on manufacturer tested capacities and calculations. Conditions may exist that require different connections than indicated. Refer to manufacturer publication for additional information.

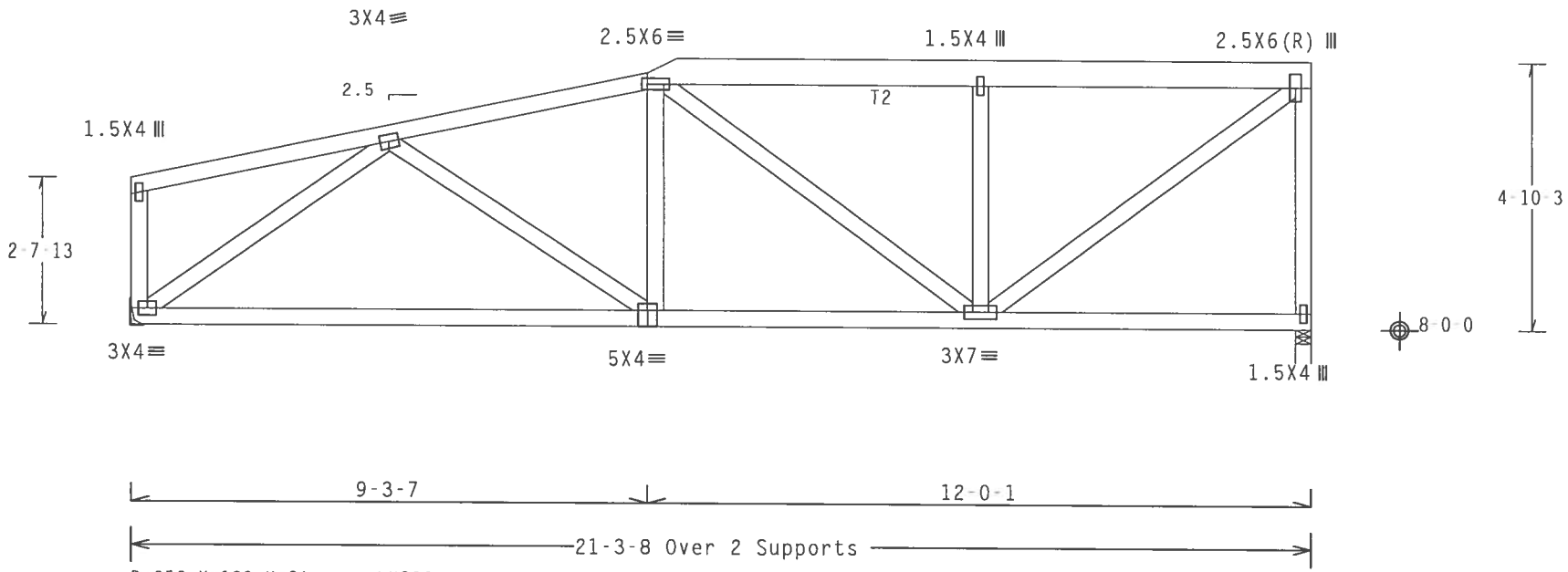

R=852 U=180 H=Simpson LUS26
w/ (4) 10d Common, 0.148"x3.0" nails in Truss
w/ (4) 10d Common, 0.148"x3.0" nails in Girder
Girder is (1)2X6 min. So.Pine

R=852 U=180 W=3.5"

PLT TYP. Wave TPI | Design Crit: TPI-1995(STD)/FBC | 7.04.0 | QTY:1 | FL/-/4/-/-/R/- | Scale =.3125"/Ft.

ALPINE
Alpine Engineered Products, Inc.
1950 Marley Drive
Haines City, FL 33844
FL Certificate of Authorization # 567

WARNING TRUSSES REQUIRE EXTREME CARE IN FABRICATION, HANDLING, SHIPPING, INSTALLING AND BRACING. REFER TO BCSI 1-03 (BUILDING COMPONENT SAFETY INFORMATION), PUBLISHED BY TPI (TRUSS PLATE INSTITUTE, 583 D'ONOFRIO DR., SUITE 200, MADISON, WI 53719) AND WTCA (WOOD TRUSS COUNCIL OF AMERICA, 6300 ENTERPRISE LN, MADISON, WI 53719) FOR SAFETY PRACTICES PRIOR TO PERFORMING THESE FUNCTIONS. UNLESS OTHERWISE INDICATED, TOP CHORD SHALL HAVE PROPERLY ATTACHED STRUCTURAL PANELS AND BOTTOM CHORD SHALL HAVE A PROPERLY ATTACHED RIGID CEILING.

IMPORTANT FURNISH A COPY OF THIS DESIGN TO THE INSTALLATION CONTRACTOR. ALPINE ENGINEERED PRODUCTS, INC. SHALL NOT BE RESPONSIBLE FOR ANY DEVIATION FROM THIS DESIGN; ANY FAILURE TO BUILD THE TRUSS IN CONFORMANCE WITH TPI; OR FABRICATING, HANDLING, SHIPPING, INSTALLING & BRACING OF TRUSSES. DESIGN CONFORMS WITH APPLICABLE PROVISIONS OF NDS (NATIONAL DESIGN SPEC. BY AF&PA) AND TPI. ALPINE CONNECTOR PLATES ARE MADE OF 20/18/16GA (W,H/S/K) ASTM A653 GRADE 40/60 (W, K/H,S) GALV. STEEL. APPLY PLATES TO EACH FACE OF TRUSS AND, UNLESS OTHERWISE LOCATED ON THIS DESIGN, POSITION PER DRAWINGS 160A Z. ANY INSPECTION OF PLATES FOLLOWED BY (1) SHALL BE PER ANNEX A3 OF TPI1 2002 SEC.3. A SEAL ON THIS DRAWING INDICATES ACCEPTANCE OF PROFESSIONAL ENGINEERING RESPONSIBILITY SOLELY FOR THE TRUSS COMPONENT DESIGN SHOWN. THE SUITABILITY AND USE OF THIS COMPONENT FOR ANY BUILDING IS THE RESPONSIBILITY OF THE BUILDING DESIGNER PER ANSI/TPI 1 SEC. 2.

ARTHUR R. FISHER
LICENSE
No. 59687
STATE OF FLORIDA
PROFESSIONAL ENGINEER
Jan 27 '06

TC LL	20.0 PSF	REF	R487-- 67120
TC DL	10.0 PSF	DATE	01/26/06
BC DL	10.0 PSF	DRW	HCUSR487 06026036
BC LL	0.0 PSF	HC-ENG	JB/AF
TOT.LD.	40.0 PSF	SEQN-	27298
DUR.FAC.	1.25		
SPACING	24.0"	JREF-	1SU7487_Z03

(6 036 PERRY / LOT 3 PHASE II STONEHANGE HILLAM)

Top chord 2x4 SP #2 Dense
Bot chord 2x4 SP #2 Dense
Webs 2x4 SP #3

End verticals not exposed to wind pressure.

Deflection meets L/360 live and L/240 total load.

110 mph wind, 12.25 ft mean hgt, ASCE 7-98, CLOSED bldg, not located within 4.50 ft from roof edge, CAT II, EXP B, wind TC DL=5.0 psf, wind BC DL=5.0 psf.

H = recommended connection based on manufacturer tested capacities and calculations. Conditions may exist that require different connections than indicated. Refer to manufacturer publication for additional information.

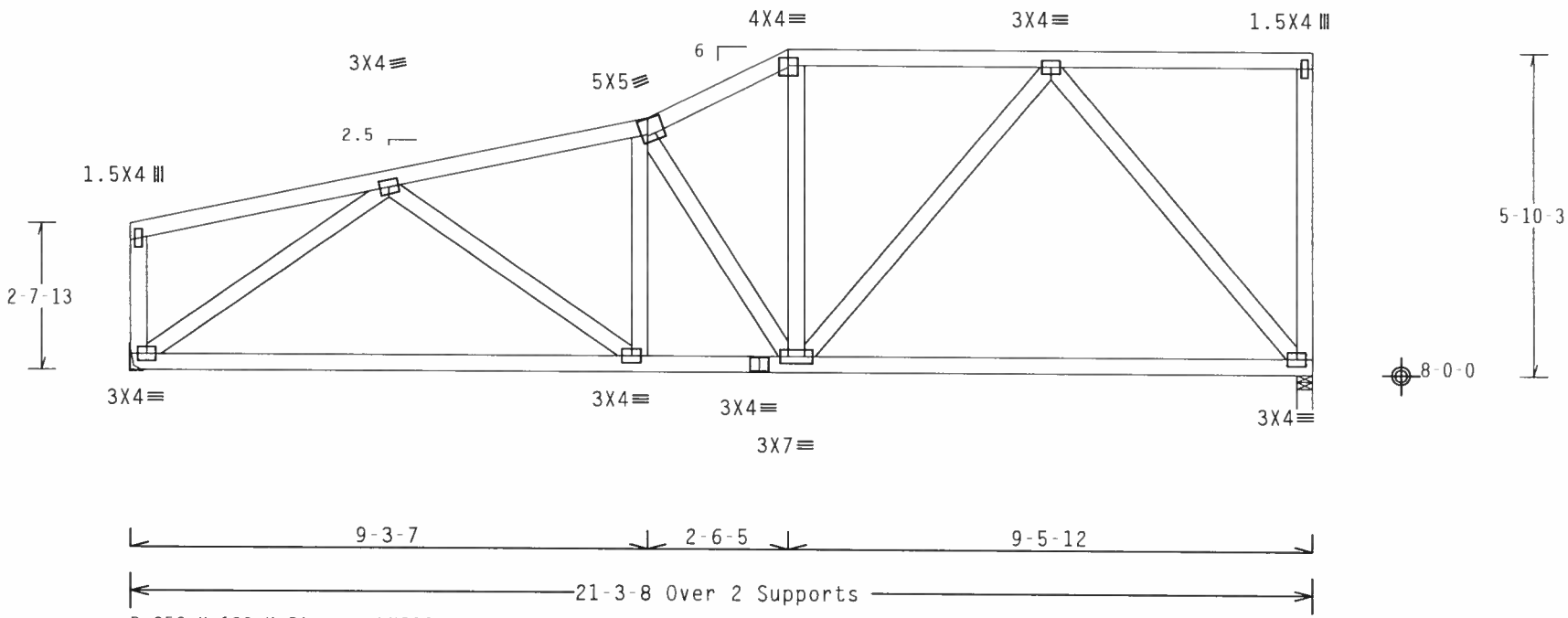

R=852 U=180 H=Simpson LUS26
w/ (4) 10d Common, 0.148"x3.0" nails in Truss
w/ (4) 10d Common, 0.148"x3.0" nails in Girder
Girder is (1)2X6 min. So.Pine

R=852 U=193 W=3.5"

PLT TYP. Wave TPI Design Crit: TPI-1995(STD)/FBC 7.04.0 [illegible] QTY:1 FL/-/4/-/-/R/- Scale =.3125"/Ft.

ALPINE
Alpine Engineered Products, Inc.
1950 Marley Drive
Haines City, FL 33844
FL Certificate of Authorization # 567

WARNING TRUSSES REQUIRE EXTREME CARE IN FABRICATION, HANDLING, SHIPPING, INSTALLING AND BRACING. REFER TO BCSI 1-03 (BUILDING COMPONENT SAFETY INFORMATION), PUBLISHED BY TPI (TRUSS PLATE INSTITUTE, 583 D'ONOFRIO DR., SUITE 200, MADISON, WI 53719) AND WTCA (WOOD TRUSS COUNCIL OF AMERICA, 6300 ENTERPRISE LN, MADISON, WI 53719) FOR SAFETY PRACTICES PRIOR TO PERFORMING THESE FUNCTIONS. UNLESS OTHERWISE INDICATED, TOP CHORD SHALL HAVE PROPERLY ATTACHED STRUCTURAL PANELS AND BOTTOM CHORD SHALL HAVE A PROPERLY ATTACHED RIGID CEILING.

IMPORTANT FURNISH A COPY OF THIS DESIGN TO THE INSTALLATION CONTRACTOR. ALPINE ENGINEERED PRODUCTS, INC. SHALL NOT BE RESPONSIBLE FOR ANY DEVIATION FROM THIS DESIGN; ANY FAILURE TO BUILD THE TRUSS IN CONFORMANCE WITH TPI; OR FABRICATING, HANDLING, SHIPPING, INSTALLING & BRACING OF TRUSSES. DESIGN CONFORMS WITH APPLICABLE PROVISIONS OF NDS (NATIONAL DESIGN SPEC, BY AF&PA) AND TPI. ALPINE CONNECTOR PLATES ARE MADE OF 20/18/16GA (W,H/S/K) ASTM A653 GRADE 40/60 (W, K/H,S) GALV. STEEL. APPLY PLATES TO EACH FACE OF TRUSS AND, UNLESS OTHERWISE LOCATED ON THIS DESIGN, POSITION PER DRAWINGS 160A-Z. ANY INSPECTION OF PLATES FOLLOWED BY (1) SHALL BE PER ANNEX A3 OF TPI1 2002 SEC.3. A SEAL ON THIS DRAWING INDICATES ACCEPTANCE OF PROFESSIONAL ENGINEERING RESPONSIBILITY SOLELY FOR THE TRUSS COMPONENT DESIGN SHOWN. THE SUITABILITY AND USE OF THIS COMPONENT FOR ANY BUILDING IS THE RESPONSIBILITY OF THE BUILDING DESIGNER PER ANSI/TPI 1 SEC. 2.

ARTHUR R. FISHER
LICENSE
No. 59687
STATE OF FLORIDA
PROFESSIONAL ENGINEER

Jan 27 '06

TC LL	20.0 PSF	REF R487-- 67121
TC DL	10.0 PSF	DATE 01/26/06
BC DL	10.0 PSF	DRW HCUSR487 06026037
BC LL	0.0 PSF	HC-ENG JB/AF
TOT.LD.	40.0 PSF	SEQN- 27299
DUR.FAC.	1.25	
SPACING	24.0"	JREF- 1SU7487_Z03

(6 036 PERRY / LOT 3 PHASE II STONEHANGE H13AM)

Top chord 2x4 SP #2 Dense
Bot chord 2x4 SP #2 Dense
Webs 2x4 SP #3

End verticals not exposed to wind pressure.

Deflection meets L/360 live and L/240 total load.

110 mph wind, 12.75 ft mean hgt, ASCE 7-98, CLOSED bldg, not located within 4.50 ft from roof edge, CAT II, EXP B, wind TC DL=5.0 psf, wind BC DL=5.0 psf.

H = recommended connection based on manufacturer tested capacities and calculations. Conditions may exist that require different connections than indicated. Refer to manufacturer publication for additional information.

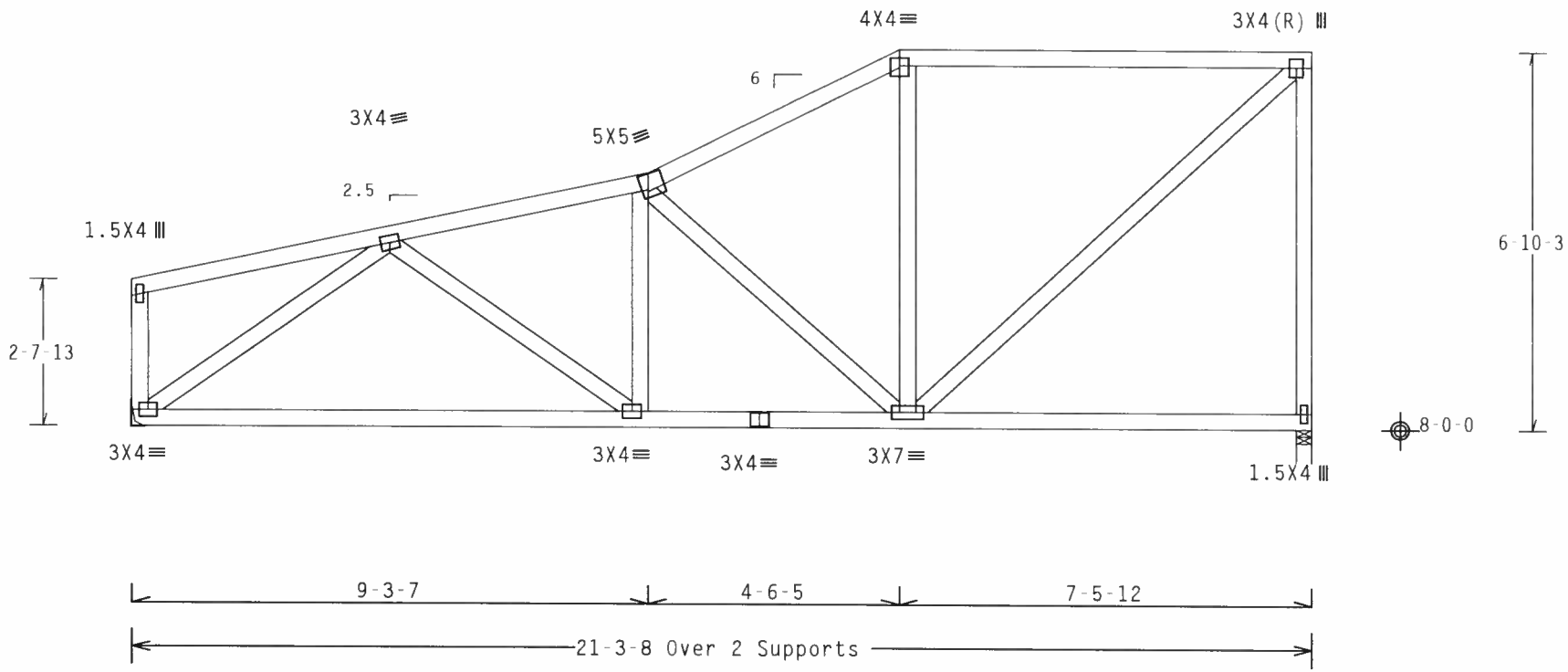

R=852 U=180 H=Simpson LUS26
w/ (4) 10d Common, 0.148"x3.0" nails in Truss
w/ (4) 10d Common, 0.148"x3.0" nails in Girder
Girder is (1)2X6 min. So.Pine

R=852 U=207 W=3.5"

PLT TYP. Wave TPI Design Crit: TPI-1995(STD)/FBC 7.04.0[illegible] QTY:1 FL/-/4/-/-/R/- Scale =.3125"/Ft.

ALPINE
Alpine Engineered Products, Inc.
1950 Marley Drive
Haines City, FL 33844
FL Certificate of Authorization # 567

WARNING TRUSSES REQUIRE EXTREME CARE IN FABRICATION, HANDLING, SHIPPING, INSTALLING AND BRACING. REFER TO BCSI 1-03 (BUILDING COMPONENT SAFETY INFORMATION), PUBLISHED BY TPI (TRUSS PLATE INSTITUTE, 583 D'ONOFRIO DR., SUITE 200, MADISON, WI 53719) AND WTCA (WOOD TRUSS COUNCIL OF AMERICA, 6300 ENTERPRISE LN, MADISON, WI 53719) FOR SAFETY PRACTICES PRIOR TO PERFORMING THESE FUNCTIONS. UNLESS OTHERWISE INDICATED, TOP CHORD SHALL HAVE PROPERLY ATTACHED STRUCTURAL PANELS AND BOTTOM CHORD SHALL HAVE A PROPERLY ATTACHED RIGID CEILING.

IMPORTANTFURNISH A COPY OF THIS DESIGN TO THE INSTALLATION CONTRACTOR. ALPINE ENGINEERED PRODUCTS, INC. SHALL NOT BE RESPONSIBLE FOR ANY DEVIATION FROM THIS DESIGN; ANY FAILURE TO BUILD THE TRUSS IN CONFORMANCE WITH TPI; OR FABRICATING, HANDLING, SHIPPING, INSTALLING & BRACING OF TRUSSES. DESIGN CONFORMS WITH APPLICABLE PROVISIONS OF NDS (NATIONAL DESIGN SPEC. BY AF&PA) AND TPI. ALPINE CONNECTOR PLATES ARE MADE OF 20/18/16GA (W,H/S/K) ASTM A653 GRADE 40/60 (W, K/H,S) GALV. STEEL. APPLY PLATES TO EACH FACE OF TRUSS AND, UNLESS OTHERWISE LOCATED ON THIS DESIGN, POSITION PER DRAWINGS 160A-Z. ANY INSPECTION OF PLATES FOLLOWED BY (I) SHALL BE PER ANNEX A3 OF TPI1-2002 SEC.3. A SEAL ON THIS DRAWING INDICATES ACCEPTANCE OF PROFESSIONAL ENGINEERING RESPONSIBILITY SOLELY FOR THE TRUSS COMPONENT DESIGN SHOWN. THE SUITABILITY AND USE OF THIS COMPONENT FOR ANY BUILDING IS THE RESPONSIBILITY OF THE BUILDING DESIGNER PER ANSI/TPI 1 SEC. 2.

ARTHUR R. FISHER LICENSE No. 59687 STATE OF FLORIDA PROFESSIONAL ENGINEER
Jan 27 '06

TC LL	20.0 PSF	REF	R487-- 67122
TC DL	10.0 PSF	DATE	01/26/06
BC DL	10.0 PSF	DRW	HCUSR487 06026038
BC LL	0.0 PSF	HC-ENG	JB/AF
TOT.LD.	40.0 PSF	SEQN-	27300
DUR.FAC.	1.25		
SPACING	24.0"	JREF-	1SU7487_Z03

(6-036 PERRY / LOT 3 PHASE II STONEHANGE H15AM)

Top chord 2x4 SP #2 Dense
Bot chord 2x4 SP #2 Dense
Webs 2x4 SP #3

End verticals not exposed to wind pressure.

Deflection meets L/360 live and L/240 total load.

110 mph wind, 13.25 ft mean hgt, ASCE 7-98, CLOSED bldg, not located within 4.50 ft from roof edge, CAT II, EXP B, wind TC DL=5.0 psf, wind BC DL=5.0 psf.

H = recommended connection based on manufacturer tested capacities and calculations. Conditions may exist that require different connections than indicated. Refer to manufacturer publication for additional information.

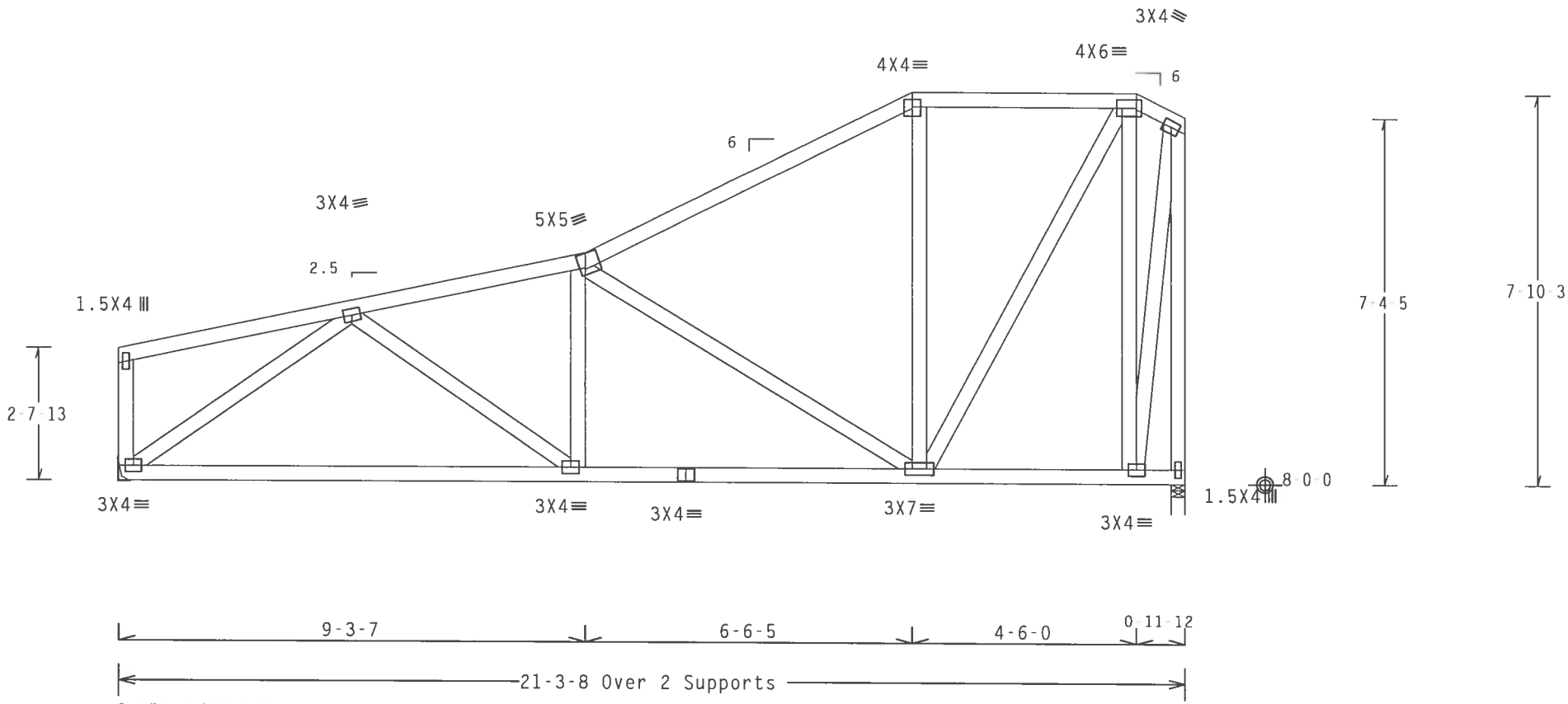

R=852 U=180 H=Simpson LUS26
w/ (4) 10d Common, 0.148"x3.0" nails in Truss
w/ (4) 10d Common, 0.148"x3.0" nails in Girder
Girder is (1)2X6 min. So.Pine

R=852 U=214 W=3.5"

PLT TYP. Wave TPI Design Crit: TPI-1995(STD)/FBC 7.04.08 QTY:1 FL/-/4/-/-/R/- Scale =.3125"/Ft.

ALPINE
Alpine Engineered Products, Inc.
1950 Marley Drive
Haines City, FL 33844
FL Certificate of Authorization # 567

WARNING TRUSSES REQUIRE EXTREME CARE IN FABRICATION, HANDLING, SHIPPING, INSTALLING AND BRACING. REFER TO BCSI 1-03 (BUILDING COMPONENT SAFETY INFORMATION), PUBLISHED BY TPI (TRUSS PLATE INSTITUTE, 583 D'ONOFRIO DR., SUITE 200, MADISON, WI 53719) AND WTCA (WOOD TRUSS COUNCIL OF AMERICA, 6300 ENTERPRISE LN, MADISON, WI 53719) FOR SAFETY PRACTICES PRIOR TO PERFORMING THESE FUNCTIONS. UNLESS OTHERWISE INDICATED, TOP CHORD SHALL HAVE PROPERLY ATTACHED STRUCTURAL PANELS AND BOTTOM CHORD SHALL HAVE A PROPERLY ATTACHED RIGID CEILING.

IMPORTANTFURNISH A COPY OF THIS DESIGN TO THE INSTALLATION CONTRACTOR. ALPINE ENGINEERED PRODUCTS, INC. SHALL NOT BE RESPONSIBLE FOR ANY DEVIATION FROM THIS DESIGN; ANY FAILURE TO BUILD THE TRUSS IN CONFORMANCE WITH TPI; OR FABRICATING, HANDLING, SHIPPING, INSTALLING & BRACING OF TRUSSES. DESIGN CONFORMS WITH APPLICABLE PROVISIONS OF NDS (NATIONAL DESIGN SPEC. BY AF&PA) AND TPI. ALPINE CONNECTOR PLATES ARE MADE OF 20/18/16GA (W,H/S/K) ASTM A653 GRADE 40/60 (W, K/H,S) GALV. STEEL. APPLY PLATES TO EACH FACE OF TRUSS AND, UNLESS OTHERWISE LOCATED ON THIS DESIGN, POSITION PER DRAWINGS 160A-Z. ANY INSPECTION OF PLATES FOLLOWED BY (1) SHALL BE PER ANNEX A3 OF TPI1-2002 SEC.3. A SEAL ON THIS DRAWING INDICATES ACCEPTANCE OF PROFESSIONAL ENGINEERING RESPONSIBILITY SOLELY FOR THE TRUSS COMPONENT DESIGN SHOWN. THE SUITABILITY AND USE OF THIS COMPONENT FOR ANY BUILDING IS THE RESPONSIBILITY OF THE BUILDING DESIGNER PER ANSI/TPI 1 SEC. 2.

ARTHUR R. FISHER
LICENSE
No. 59687
STATE OF FLORIDA
PROFESSIONAL ENGINEER
Jan 2 '06

TC LL	20.0 PSF	REF R487-- 67123
TC DL	10.0 PSF	DATE 01/26/06
BC DL	10.0 PSF	DRW HCUSR487 06026019
BC LL	0.0 PSF	HC-ENG JB/AF
TOT.LD.	40.0 PSF	SEQN- 27283
DUR.FAC.	1.25	
SPACING	24.0"	JREF- 1SU7487 Z03

(6 036 PERRY / LOT 3 PHASE II STONEHANGE - HISAT)

Top chord 2x4 SP #2 Dense
Bot chord 2x4 SP #2 Dense
Webs 2x4 SP #3

H = recommended connection based on manufacturer tested capacities and calculations. Conditions may exist that require different connections than indicated. Refer to manufacturer publication for additional information.

Deflection meets L/360 live and L/240 total load.

110 mph wind, 11.60 ft mean hgt, ASCE 7-98, CLOSED bldg, not located within 4.50 ft from roof edge, CAT II, EXP B, wind TC DL=5.0 psf, wind BC DL=5.0 psf.

Right end vertical not exposed to wind pressure.

(A) 1x4 SP #3 or better "T" brace. 80% length of web member. Attach with 8d Box or Gun (0.113"x2.5",min.)nails @ 6" OC.

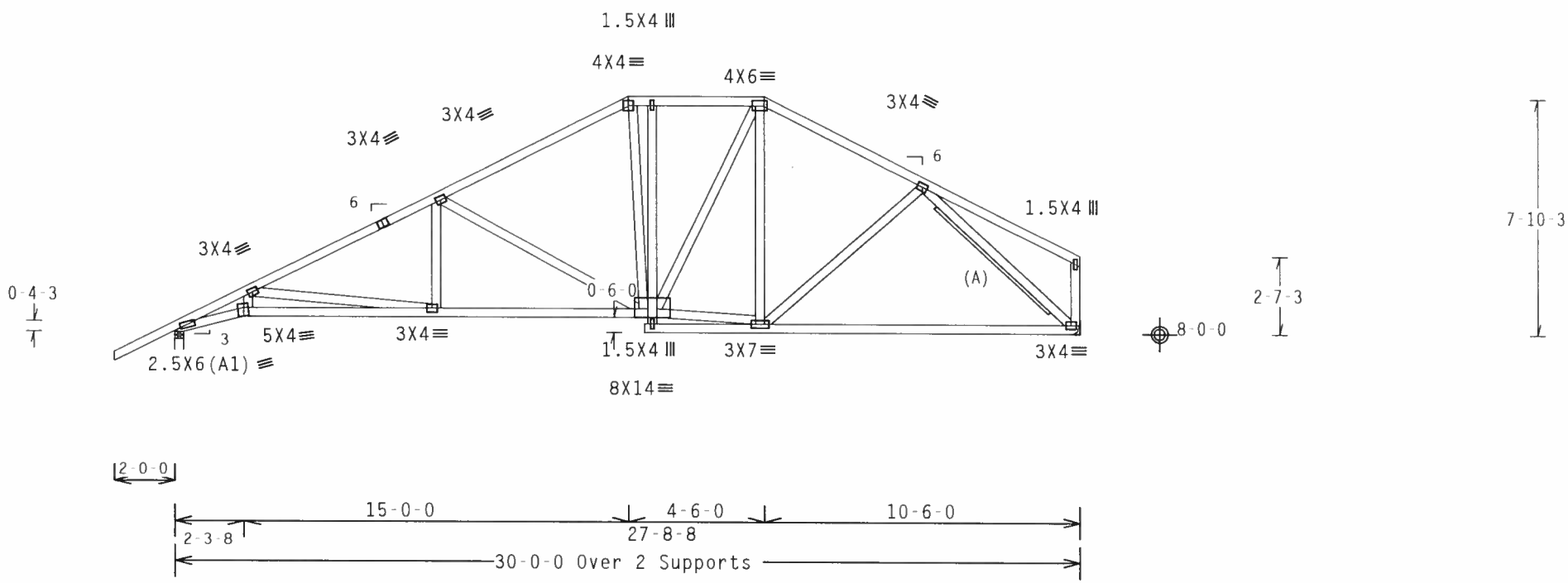

R=1341 U=241 W=3.5"

R=1183 U=204 H=Simpson HUS26
w/ (6) 10d Common, 0.148"x3.0" nails in Truss
w/ (14) 10d Common, 0.148"x3.0" nails in Girder
Girder is (1)2X6 min. So.Pine

PLT TYP. Wave TPI Design Crit: TPI-1995(STD)/FBC 7.04.0[illegible] QTY:1 FL/-/4/-/-/R/- Scale =.1875"/Ft.

ALPINE
Alpine Engineered Products, Inc.
1950 Marley Drive
Haines City, FL 33844
FL Certificate of Authorization # 567

WARNING TRUSSES REQUIRE EXTREME CARE IN FABRICATION, HANDLING, SHIPPING, INSTALLING AND BRACING. REFER TO BCSI 1-03 (BUILDING COMPONENT SAFETY INFORMATION), PUBLISHED BY TPI (TRUSS PLATE INSTITUTE, 583 D'ONOFRIO DR., SUITE 200, MADISON, WI 53719) AND WTCA (WOOD TRUSS COUNCIL OF AMERICA, 6300 ENTERPRISE LN, MADISON, WI 53719) FOR SAFETY PRACTICES PRIOR TO PERFORMING THESE FUNCTIONS. UNLESS OTHERWISE INDICATED, TOP CHORD SHALL HAVE PROPERLY ATTACHED STRUCTURAL PANELS AND BOTTOM CHORD SHALL HAVE A PROPERLY ATTACHED RIGID CEILING.

IMPORTANTFURNISH A COPY OF THIS DESIGN TO THE INSTALLATION CONTRACTOR. ALPINE ENGINEERED PRODUCTS, INC. SHALL NOT BE RESPONSIBLE FOR ANY DEVIATION FROM THIS DESIGN; ANY FAILURE TO BUILD THE TRUSS IN CONFORMANCE WITH TPI; OR FABRICATING, HANDLING, SHIPPING, INSTALLING & BRACING OF TRUSSES. DESIGN CONFORMS WITH APPLICABLE PROVISIONS OF NDS (NATIONAL DESIGN SPEC. BY AF&PA) AND TPI. ALPINE CONNECTOR PLATES ARE MADE OF 20/18/16GA (W.H/S/K) ASTM A653 GRADE 40/60 (W. K/H.S) GALV. STEEL. APPLY PLATES TO EACH FACE OF TRUSS AND, UNLESS OTHERWISE LOCATED ON THIS DESIGN, POSITION PER DRAWINGS 160A-Z. ANY INSPECTION OF PLATES FOLLOWED BY (I) SHALL BE PER ANNEX A3 OF TPI1-2002 SEC.3. A SEAL ON THIS DRAWING INDICATES ACCEPTANCE OF PROFESSIONAL ENGINEERING RESPONSIBILITY SOLELY FOR THE TRUSS COMPONENT DESIGN SHOWN. THE SUITABILITY AND USE OF THIS COMPONENT FOR ANY BUILDING IS THE RESPONSIBILITY OF THE BUILDING DESIGNER PER ANSI/TPI 1 SEC. 2.

ARTHUR R. FISHER LICENSE No. 59687 STATE OF FLORIDA PROFESSIONAL ENGINEER
Jan 2[illegible] '06

TC LL	20.0 PSF	REF	R487-- 67124
TC DL	10.0 PSF	DATE	01/26/06
BC DL	10.0 PSF	DRW	HCUSR487 06026025
BC LL	0.0 PSF	HC-ENG	JB/AF
TOT.LD.	40.0 PSF	SEQN-	27288
DUR.FAC.	1.25		
SPACING	24.0"	JREF-	1SU7487_Z03

(6 036 PERRY / LOT 3 PHASE II STONEHANGE H1/AT)

Top chord 2x4 SP #2 Dense
Bot chord 2x4 SP #2 Dense
Webs 2x4 SP #3

(A) Continuous lateral bracing equally spaced on member.

110 mph wind, 12.10 ft mean hgt, ASCE 7-98, CLOSED bldg, not located within 4.50 ft from roof edge, CAT II, EXP B, wind TC DL=5.0 psf, wind BC DL=5.0 psf.

Deflection meets L/360 live and L/240 total load.

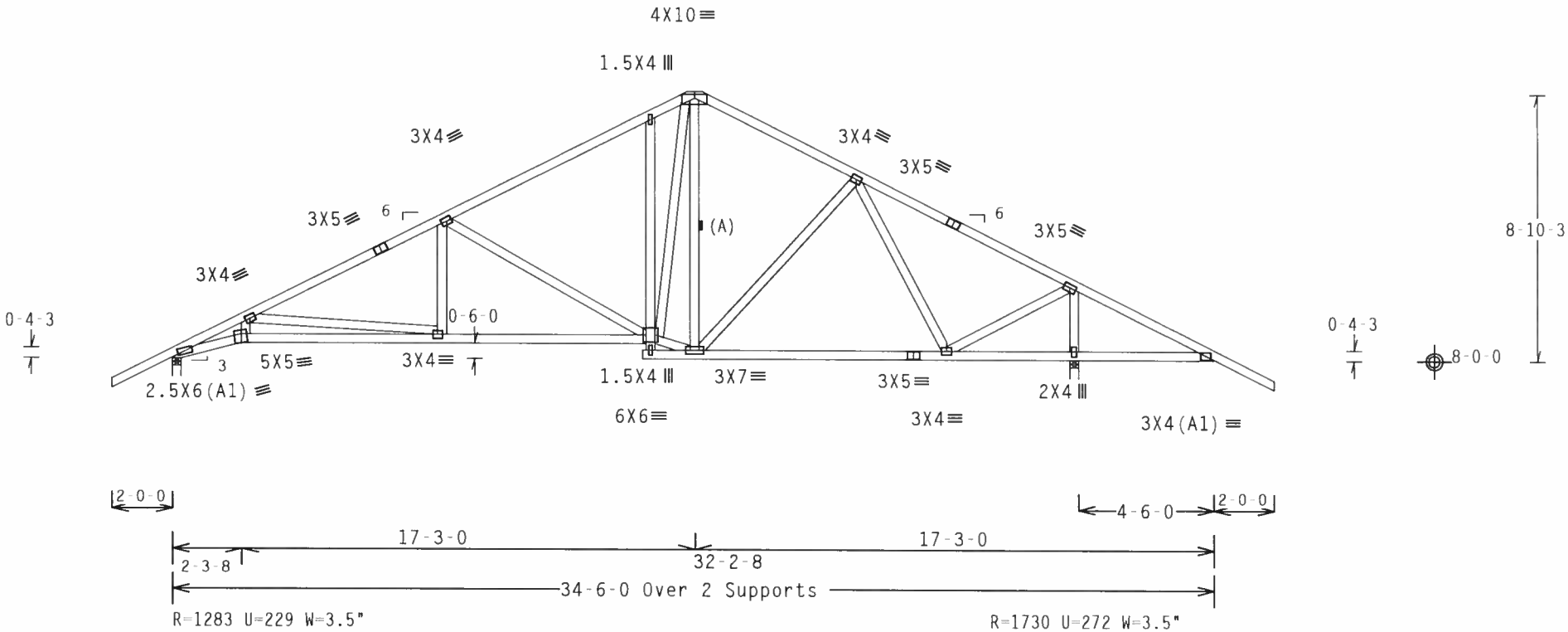

PLT TYP. Wave TPI | Design Crit: TPI-1995(STD)/FBC | 7.04.0 | QTY:1 | FL/-/4/-/-/R/- | Scale =.1875"/Ft.

ALPINE

Alpine Engineered Products, Inc.
1950 Marley Drive
Haines City, FL 33844
FL Certificate of Authorization # 567

WARNING TRUSSES REQUIRE EXTREME CARE IN FABRICATION, HANDLING, SHIPPING, INSTALLING AND BRACING. REFER TO BCSI 1-03 (BUILDING COMPONENT SAFETY INFORMATION), PUBLISHED BY TPI (TRUSS PLATE INSTITUTE, 583 D'ONOFRIO DR., SUITE 200, MADISON, WI 53719) AND WTCA (WOOD TRUSS COUNCIL OF AMERICA, 6300 ENTERPRISE LN, MADISON, WI 53719) FOR SAFETY PRACTICES PRIOR TO PERFORMING THESE FUNCTIONS. UNLESS OTHERWISE INDICATED, TOP CHORD SHALL HAVE PROPERLY ATTACHED STRUCTURAL PANELS AND BOTTOM CHORD SHALL HAVE A PROPERLY ATTACHED RIGID CEILING.

IMPORTANTFURNISH A COPY OF THIS DESIGN TO THE INSTALLATION CONTRACTOR. ALPINE ENGINEERED PRODUCTS, INC. SHALL NOT BE RESPONSIBLE FOR ANY DEVIATION FROM THIS DESIGN; ANY FAILURE TO BUILD THE TRUSS IN CONFORMANCE WITH TPI; OR FABRICATING, HANDLING, SHIPPING, INSTALLING & BRACING OF TRUSSES DESIGN CONFORMS WITH APPLICABLE PROVISIONS OF NDS (NATIONAL DESIGN SPEC. BY AF&PA) AND TPI. ALPINE CONNECTOR PLATES ARE MADE OF 20/18/16GA (W,H/S/K) ASTM A653 GRADE 40/60 (W, K/H,S) GALV. STEEL. APPLY PLATES TO EACH FACE OF TRUSS AND, UNLESS OTHERWISE LOCATED ON THIS DESIGN, POSITION PER DRAWINGS 160A Z. ANY INSPECTION OF PLATES FOLLOWED BY (I) SHALL BE PER ANNEX A3 OF TPI1 2002 SEC 3. A SEAL ON THIS DRAWING INDICATES ACCEPTANCE OF PROFESSIONAL ENGINEERING RESPONSIBILITY SOLELY FOR THE TRUSS COMPONENT DESIGN SHOWN. THE SUITABILITY AND USE OF THIS COMPONENT FOR ANY BUILDING IS THE RESPONSIBILITY OF THE BUILDING DESIGNER PER ANSI/TPI 1 SEC 2.

ARTHUR R. FISHER
LICENSE
No. 59687
STATE OF FLORIDA
PROFESSIONAL ENGINEER

Jan 27 '06

TC LL	20.0 PSF	REF	R487-- 67125
TC DL	10.0 PSF	DATE	01/26/06
BC DL	10.0 PSF	DRW	HCUSR487 06026024
BC LL	0.0 PSF	HC-ENG	JB/AF *
TOT.LD.	40.0 PSF	SEQN-	27287
DUR.FAC.	1.25		
SPACING	24.0"	JREF	1SU7487 Z03

(6-036 PERRY / LOT 3 PHASE II STONEHANGE A1)

Top chord 2x4 SP #2 Dense
Bot chord 2x4 SP #2 Dense
Webs 2x4 SP #3

(A) Continuous lateral bracing equally spaced on member.

110 mph wind, 12.16 ft mean hgt, ASCE 7-98, CLOSED bldg, not located within 4.50 ft from roof edge, CAT II, EXP B, wind TC DL=5.0 psf, wind BC DL=5.0 psf.

Deflection meets L/360 live and L/240 total load.

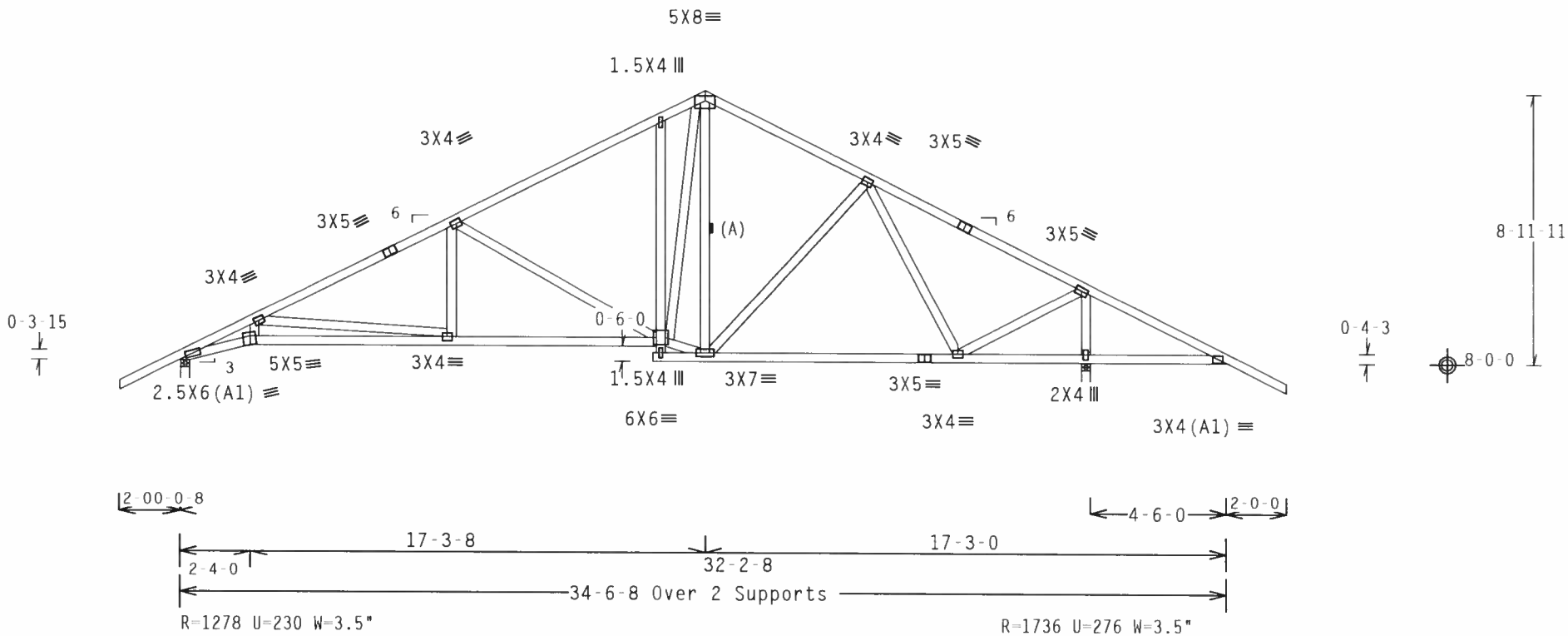

PLT TYP. Wave TPI Design Crit: TPI-1995(STD)/FBC 7.04.0 QTY:1 FL/-/4/-/-/R/- Scale =.1875"/Ft.

ALPINE
Alpine Engineered Products, Inc.
1950 Marley Drive
Haines City, FL 33844
FL Certificate of Authorization # 567

WARNING TRUSSES REQUIRE EXTREME CARE IN FABRICATION, HANDLING, SHIPPING, INSTALLING AND BRACING. REFER TO BCSI 1-03 (BUILDING COMPONENT SAFETY INFORMATION), PUBLISHED BY TPI (TRUSS PLATE INSTITUTE, 583 D'ONOFRIO DR., SUITE 200, MADISON, WI 53719) AND WTCA (WOOD TRUSS COUNCIL OF AMERICA, 6300 ENTERPRISE LN, MADISON, WI 53719) FOR SAFETY PRACTICES PRIOR TO PERFORMING THESE FUNCTIONS. UNLESS OTHERWISE INDICATED, TOP CHORD SHALL HAVE PROPERLY ATTACHED STRUCTURAL PANELS AND BOTTOM CHORD SHALL HAVE A PROPERLY ATTACHED RIGID CEILING.

IMPORTANTFURNISH A COPY OF THIS DESIGN TO THE INSTALLATION CONTRACTOR. ALPINE ENGINEERED PRODUCTS, INC. SHALL NOT BE RESPONSIBLE FOR ANY DEVIATION FROM THIS DESIGN; ANY FAILURE TO BUILD THE TRUSS IN CONFORMANCE WITH TPI; OR FABRICATING, HANDLING, SHIPPING, INSTALLING & BRACING OF TRUSSES. DESIGN CONFORMS WITH APPLICABLE PROVISIONS OF NDS (NATIONAL DESIGN SPEC, BY AF&PA) AND TPI. ALPINE CONNECTOR PLATES ARE MADE OF 20/18/16GA (W,H/S/K) ASTM A653 GRADE 40/60 (W, K/H,S) GALV. STEEL. APPLY PLATES TO EACH FACE OF TRUSS AND, UNLESS OTHERWISE LOCATED ON THIS DESIGN, POSITION PER DRAWINGS 160A-Z. ANY INSPECTION OF PLATES FOLLOWED BY (I) SHALL BE PER ANNEX A3 OF TPI1-2002 SEC.3. A SEAL ON THIS DRAWING INDICATES ACCEPTANCE OF PROFESSIONAL ENGINEERING RESPONSIBILITY SOLELY FOR THE TRUSS COMPONENT DESIGN SHOWN. THE SUITABILITY AND USE OF THIS COMPONENT FOR ANY BUILDING IS THE RESPONSIBILITY OF THE BUILDING DESIGNER PER ANSI/TPI 1 SEC. 2.

ARTHUR R. FISHER
LICENSE
No. 59687
STATE OF FLORIDA
PROFESSIONAL ENGINEER
Jan 27 '06

TC LL	20.0 PSF	REF	R487-- 67126
TC DL	10.0 PSF	DATE	01/26/06
BC DL	10.0 PSF	DRW	HCUSR487 06026021
BC LL	0.0 PSF	HC-ENG	JB/AF *
TOT.LD.	40.0 PSF	SEQN-	27285
DUR.FAC.	1.25		
SPACING	24.0"	JREF	1SU7487 Z03

(6 036 PERRY / LOT 3 PHASE II STONEHANGE ATT)

Top chord 2x4 SP #2 Dense
Bot chord 2x4 SP #2 Dense
Webs 2x4 SP #3

Left end vertical not exposed to wind pressure.

Deflection meets L/360 live and L/240 total load.

110 mph wind, 12.16 ft mean hgt, ASCE 7-98, CLOSED bldg, not located within 4.50 ft from roof edge, CAT II, EXP B, wind TC DL=5.0 psf, wind BC DL=5.0 psf.

(A) Continuous lateral bracing equally spaced on member.

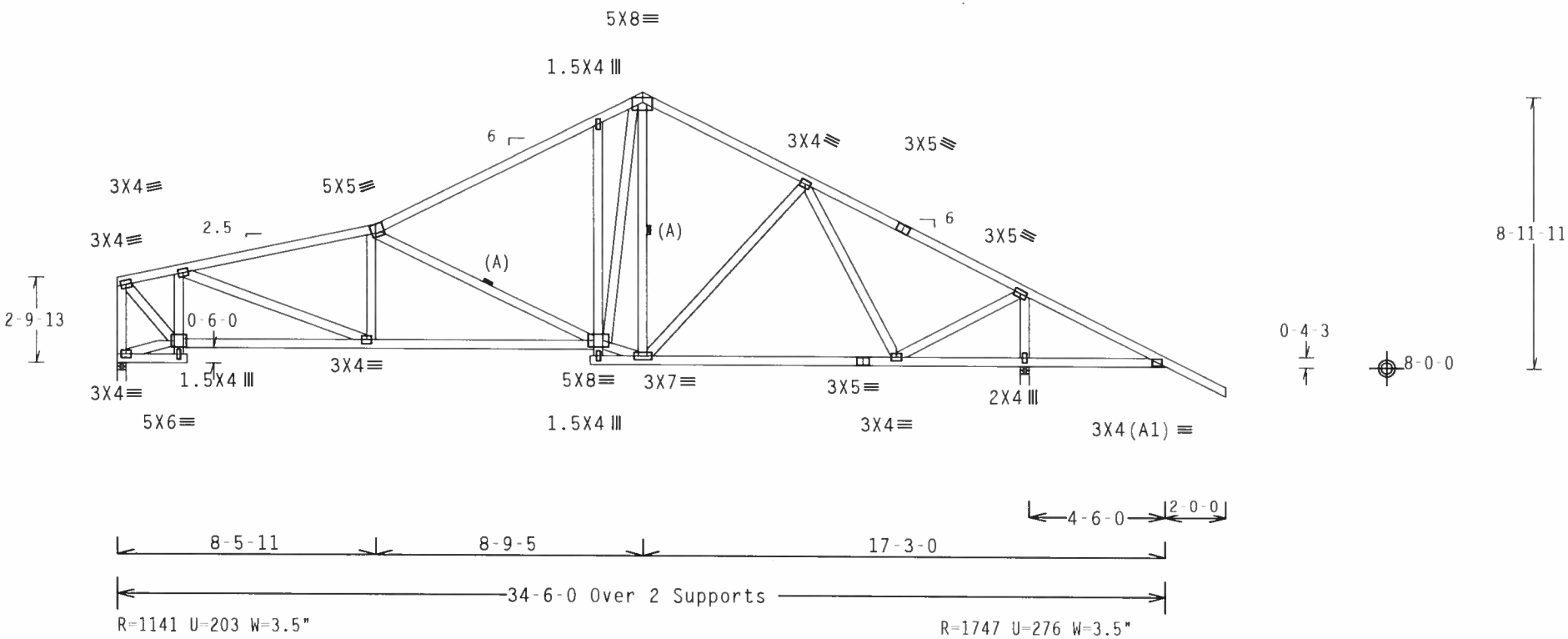

PLT TYP. Wave TPI | Design Crit: TPI-1995(STD)/FBC | 7.04.0 | QTY:4 | FL/-/4/-/-/R/- | Scale =.1875"/Ft.

ALPINE
Alpine Engineered Products, Inc.
1950 Marley Drive
Haines City, FL 33844
FL Certificate of Authorization # 567

WARNING TRUSSES REQUIRE EXTREME CARE IN FABRICATION, HANDLING, SHIPPING, INSTALLING AND BRACING. REFER TO BCSI 1-03 (BUILDING COMPONENT SAFETY INFORMATION), PUBLISHED BY TPI (TRUSS PLATE INSTITUTE, 583 D'ONOFRIO DR., SUITE 200, MADISON, WI 53719) AND WTCA (WOOD TRUSS COUNCIL OF AMERICA, 6300 ENTERPRISE LN, MADISON, WI 53719) FOR SAFETY PRACTICES PRIOR TO PERFORMING THESE FUNCTIONS. UNLESS OTHERWISE INDICATED, TOP CHORD SHALL HAVE PROPERLY ATTACHED STRUCTURAL PANELS AND BOTTOM CHORD SHALL HAVE A PROPERLY ATTACHED RIGID CEILING.

IMPORTANT FURNISH A COPY OF THIS DESIGN TO THE INSTALLATION CONTRACTOR. ALPINE ENGINEERED PRODUCTS, INC. SHALL NOT BE RESPONSIBLE FOR ANY DEVIATION FROM THIS DESIGN; ANY FAILURE TO BUILD THE TRUSS IN CONFORMANCE WITH TPI; OR FABRICATING, HANDLING, SHIPPING, INSTALLING & BRACING OF TRUSSES DESIGN CONFORMS WITH APPLICABLE PROVISIONS OF NDS (NATIONAL DESIGN SPEC. BY AF&PA) AND TPI. ALPINE CONNECTOR PLATES ARE MADE OF 20/18/16GA (W,H/S/K) ASTM A653 GRADE 40/60 (W, K/H,S) GALV. STEEL. APPLY PLATES TO EACH FACE OF TRUSS AND, UNLESS OTHERWISE LOCATED ON THIS DESIGN, POSITION PER DRAWINGS 160A Z. ANY INSPECTION OF PLATES FOLLOWED BY (1) SHALL BE PER ANNEX A3 OF TPI1 2002 SEC.3. A SEAL ON THIS DRAWING INDICATES ACCEPTANCE OF PROFESSIONAL ENGINEERING RESPONSIBILITY SOLELY FOR THE TRUSS COMPONENT DESIGN SHOWN. THE SUITABILITY AND USE OF THIS COMPONENT FOR ANY BUILDING IS THE RESPONSIBILITY OF THE BUILDING DESIGNER PER ANSI TPI 1 SEC. 2.

ARTHUR R. FISHER LICENSE No.59687 STATE OF FLORIDA PROFESSIONAL ENGINEER

Jan 27 '06

TC LL	20.0 PSF	REF	R487-- 67127
TC DL	10.0 PSF	DATE	01/26/06
BC DL	10.0 PSF	DRW	HCUSR487 06026022
BC LL	0.0 PSF	HC-ENG	JB/AF *
TOT.LD.	40.0 PSF	SEQN-	27286
DUR.FAC.	1.25		
SPACING	24.0"	JREF	1SU7487 Z03

(6-036-PERRY / LOT 3 PHASE II STONEHANGE BGE)

Top chord 2x4 SP #2 Dense
Bot chord 2x4 SP #2 Dense
Webs 2x4 SP #3

SPECIAL LOADS
(LUMBER DUR.FAC.=1.25 / PLATE DUR.FAC.=1.25)

TC	From	82 PLF	at	2.00	to	82 PLF	at 25.00
BC	From	4 PLF	at	2.00	to	4 PLF	at 0.00
BC	From	20 PLF	at	0.00	to	20 PLF	at 23.00
BC	From	4 PLF	at	23.00	to	4 PLF	at 25.00

(**) Plate relocated as shown.

110 mph wind, 10.56 ft mean hgt, ASCE 7-98, CLOSED bldg, Located anywhere in roof, CAT II, EXP B, wind TC DL=5.0 psf, wind BC DL=5.0 psf.

See DWGS A11015EC1103 & GBLLETIN0405 for more requirements.

Deflection meets L/360 live and L/240 total load.

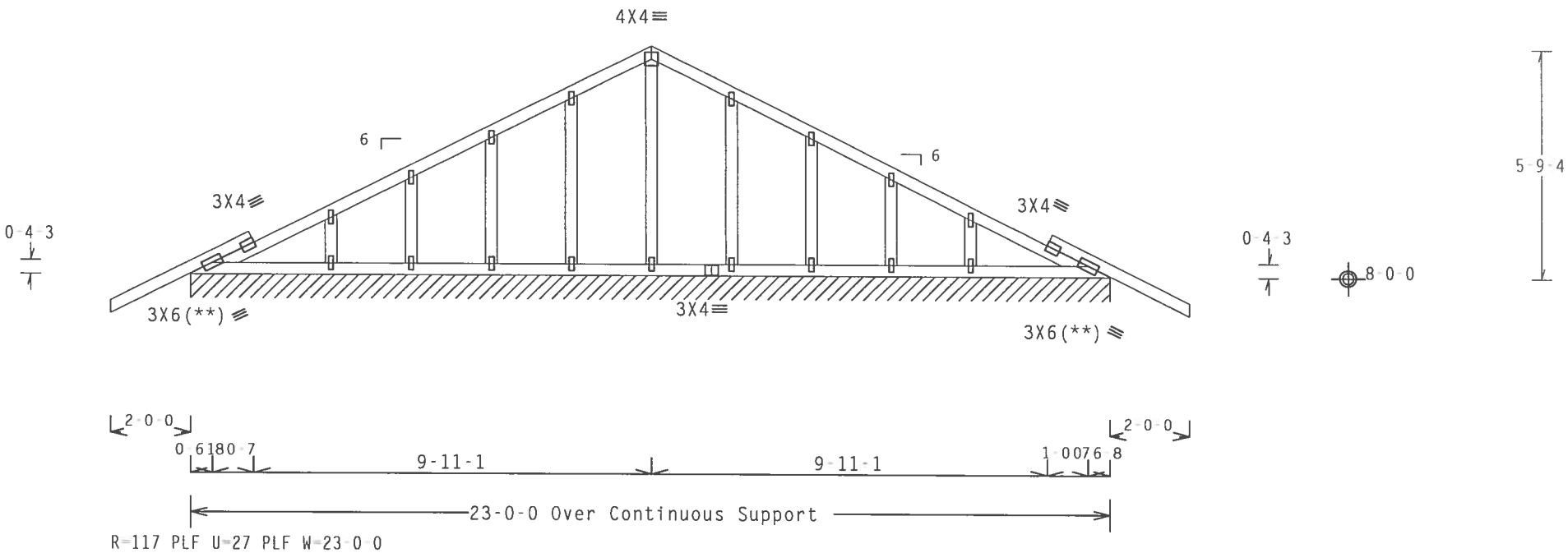

Note: All Plates Are 1.5X4 Except As Shown.

PLT TYP. Wave TPI Design Crit: TPI-1995(STD)/FBC 7.04.0[illegible] QTY:1 FL/-/4/-/-/R/- Scale =.25"/Ft.

ALPINE
Alpine Engineered Products, Inc.
1950 Marley Drive
Haines City, FL 33844
FL Certificate of Authorization # 567

WARNING TRUSSES REQUIRE EXTREME CARE IN FABRICATION, HANDLING, SHIPPING, INSTALLING AND BRACING. REFER TO BCSI 1-03 (BUILDING COMPONENT SAFETY INFORMATION), PUBLISHED BY TPI (TRUSS PLATE INSTITUTE, 583 D'ONOFRIO DR., SUITE 200, MADISON, WI 53719) AND WTCA (WOOD TRUSS COUNCIL OF AMERICA, 6300 ENTERPRISE LN, MADISON, WI 53719) FOR SAFETY PRACTICES PRIOR TO PERFORMING THESE FUNCTIONS. UNLESS OTHERWISE INDICATED, TOP CHORD SHALL HAVE PROPERLY ATTACHED STRUCTURAL PANELS AND BOTTOM CHORD SHALL HAVE A PROPERLY ATTACHED RIGID CEILING.

IMPORTANTFURNISH A COPY OF THIS DESIGN TO THE INSTALLATION CONTRACTOR. ALPINE ENGINEERED PRODUCTS, INC. SHALL NOT BE RESPONSIBLE FOR ANY DEVIATION FROM THIS DESIGN; ANY FAILURE TO BUILD THE TRUSS IN CONFORMANCE WITH TPI; OR FABRICATING, HANDLING, SHIPPING, INSTALLING & BRACING OF TRUSSES. DESIGN CONFORMS WITH APPLICABLE PROVISIONS OF NDS (NATIONAL DESIGN SPEC. BY AF&PA) AND TPI. ALPINE CONNECTOR PLATES ARE MADE OF 20/18/16GA (W,H/S/K) ASTM A653 GRADE 40/60 (W, K/H,S) GALV. STEEL. APPLY PLATES TO EACH FACE OF TRUSS AND, UNLESS OTHERWISE LOCATED ON THIS DESIGN, POSITION PER DRAWINGS 160A Z. ANY INSPECTION OF PLATES FOLLOWED BY (1) SHALL BE PER ANNEX A3 OF TPI1 2002 SEC.3. A SEAL ON THIS DRAWING INDICATES ACCEPTANCE OF PROFESSIONAL ENGINEERING RESPONSIBILITY SOLELY FOR THE TRUSS COMPONENT DESIGN SHOWN. THE SUITABILITY AND USE OF THIS COMPONENT FOR ANY BUILDING IS THE RESPONSIBILITY OF THE BUILDING DESIGNER PER ANSI/TPI 1 SEC. 2.

ARTHUR R. FISHER LICENSE No. 59687 STATE OF FLORIDA PROFESSIONAL ENGINEER
Jan 27 '06

TC LL	20.0 PSF	REF R487-- 67128
TC DL	10.0 PSF	DATE 01/26/06
BC DL	10.0 PSF	DRW HCUSR487 06026001
BC LL	0.0 PSF	HC-ENG JB/AF
TOT.LD.	40.0 PSF	SEQN- 27319
DUR.FAC.	1.25	
SPACING	24.0"	JREF- 1SU7487_Z03

(6 036-PERRY / LOT 3 PHASE II STONEHANGE - B)

Top chord 2x4 SP #2 Dense
Bot chord 2x4 SP #2 Dense
Webs 2x4 SP #3

Deflection meets L/360 live and L/240 total load.

110 mph wind, 10.72 ft mean hgt, ASCE 7-98, CLOSED bldg, Located anywhere in roof, CAT II, EXP B, wind TC DL=5.0 psf, wind BC DL=5.0 psf.

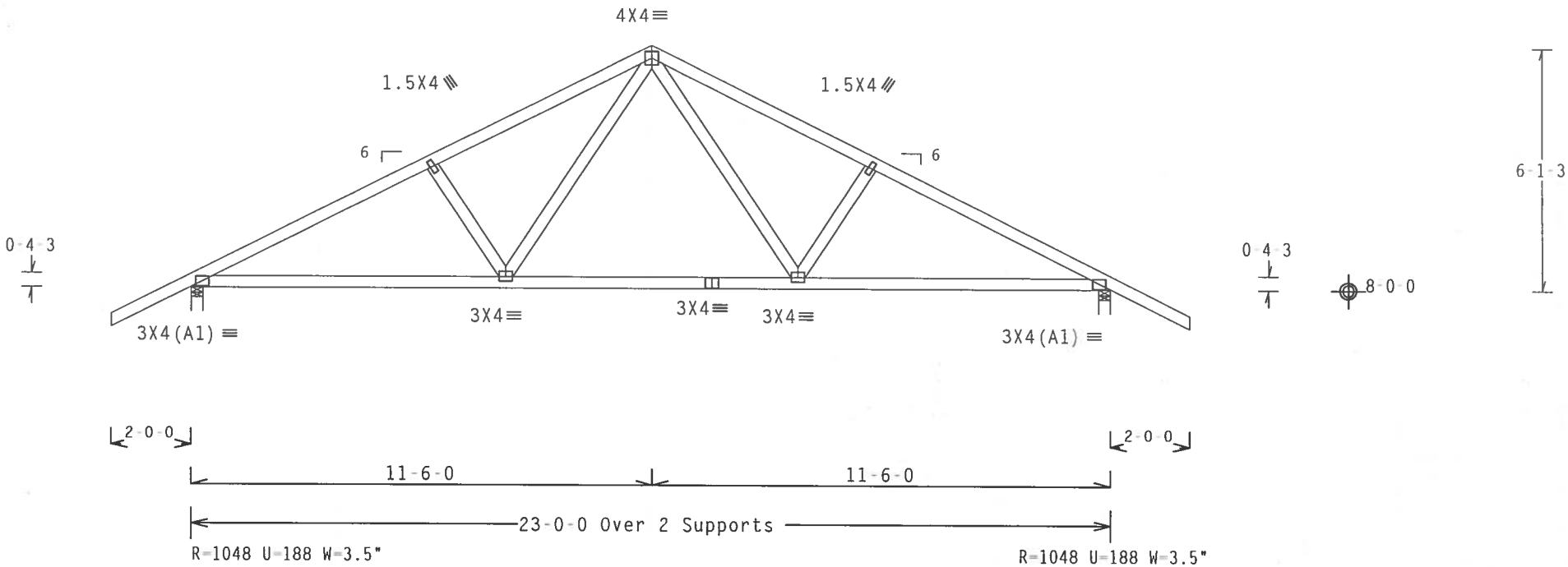

PLT TYP. Wave TPI Design Crit: TPI-1995(STD)/FBC 7.04.08 QTY:3 FL/-/4/-/-/R/- Scale =.25"/Ft.

ALPINE
Alpine Engineered Products, Inc.
1950 Marley Drive
Haines City, FL 33844
FL Certificate of Authorization # 567

WARNING TRUSSES REQUIRE EXTREME CARE IN FABRICATION, HANDLING, SHIPPING, INSTALLING AND BRACING. REFER TO BCSI 1-03 (BUILDING COMPONENT SAFETY INFORMATION), PUBLISHED BY TPI (TRUSS PLATE INSTITUTE, 583 D'ONOFRIO DR., SUITE 200, MADISON, WI 53719) AND WTCA (WOOD TRUSS COUNCIL OF AMERICA, 6300 ENTERPRISE LN, MADISON, WI 53719) FOR SAFETY PRACTICES PRIOR TO PERFORMING THESE FUNCTIONS. UNLESS OTHERWISE INDICATED, TOP CHORD SHALL HAVE PROPERLY ATTACHED STRUCTURAL PANELS AND BOTTOM CHORD SHALL HAVE A PROPERLY ATTACHED RIGID CEILING.

IMPORTANTFURNISH A COPY OF THIS DESIGN TO THE INSTALLATION CONTRACTOR. ALPINE ENGINEERED PRODUCTS, INC. SHALL NOT BE RESPONSIBLE FOR ANY DEVIATION FROM THIS DESIGN; ANY FAILURE TO BUILD THE TRUSS IN CONFORMANCE WITH TPI; OR FABRICATING, HANDLING, SHIPPING, INSTALLING & BRACING OF TRUSSES. DESIGN CONFORMS WITH APPLICABLE PROVISIONS OF NDS (NATIONAL DESIGN SPEC. BY AF&PA) AND TPI. ALPINE CONNECTOR PLATES ARE MADE OF 20/18/16GA (W,H/S/K) ASTM A653 GRADE 40/60 (W, K/H,S) GALV. STEEL. APPLY PLATES TO EACH FACE OF TRUSS AND, UNLESS OTHERWISE LOCATED ON THIS DESIGN, POSITION PER DRAWINGS 160A-Z. ANY INSPECTION OF PLATES FOLLOWED BY (1) SHALL BE PER ANNEX A3 OF TPI1-2002 SEC.3. A SEAL ON THIS DRAWING INDICATES ACCEPTANCE OF PROFESSIONAL ENGINEERING RESPONSIBILITY SOLELY FOR THE TRUSS COMPONENT DESIGN SHOWN. THE SUITABILITY AND USE OF THIS COMPONENT FOR ANY BUILDING IS THE RESPONSIBILITY OF THE BUILDING DESIGNER PER ANSI/TPI 1 SEC. 2.

ARTHUR R. FISHER
LICENSE
No. 69687
STATE OF FLORIDA
PROFESSIONAL ENGINEER
Jan 27, 2006

TC LL	20.0 PSF	REF	R487-- 67129
TC DL	10.0 PSF	DATE	01/26/06
BC DL	10.0 PSF	DRW	HCUSR487 06026023
BC LL	0.0 PSF	HC-ENG	JB/AF *
TOT.LD.	40.0 PSF	SEQN-	27260
DUR.FAC.	1.25		
SPACING	24.0"	JREF-	1SU7487_Z03

(6-036 PERRY / LOT 3 PHASE II STONEHANGE - BS)

Top chord 2x4 SP #2 Dense
Bot chord 2x4 SP #2 Dense
Webs 2x4 SP #3

Deflection meets L/360 live and L/240 total load.

110 mph wind, 10.72 ft mean hgt, ASCE 7-98, CLOSED bldg, not located within 4.50 ft from roof edge, CAT II, EXP B, wind TC DL=5.0 psf, wind BC DL=5.0 psf.

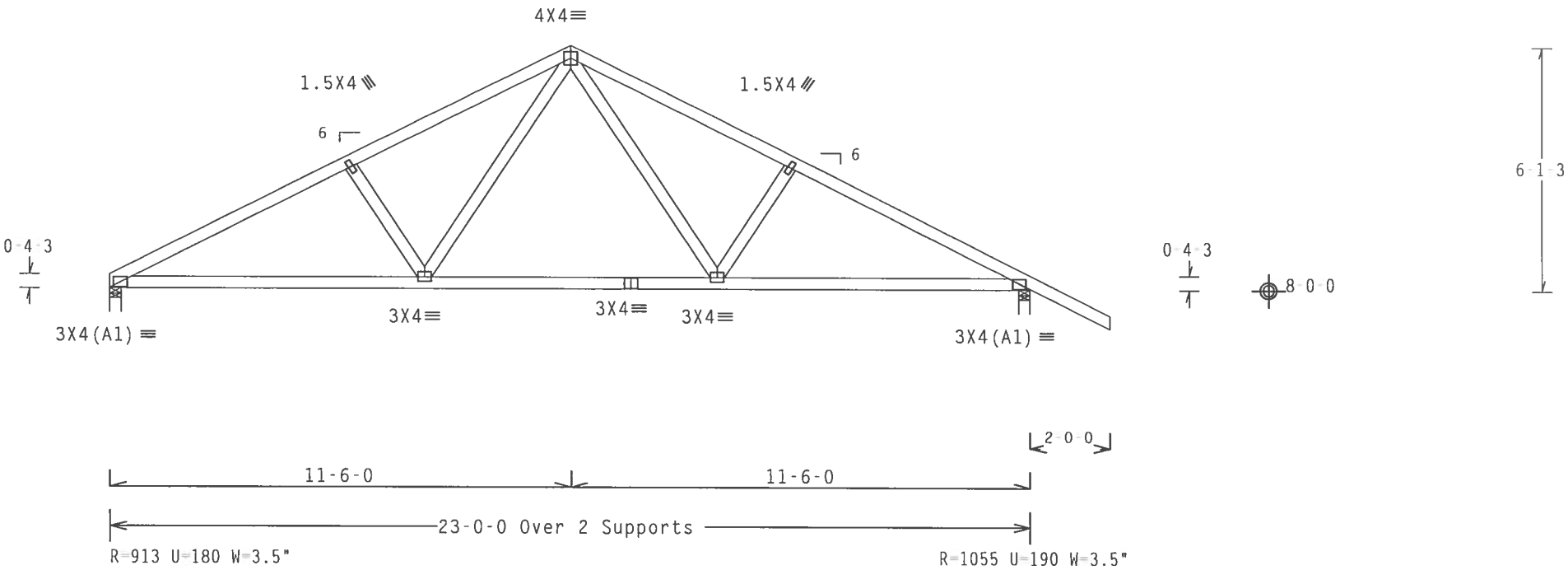

PLT TYP. Wave TPI Design Crit: TPI-1995(STD)/FBC 7.04.08 QTY:5 FL/-/4/-/-/R/- Scale =.25"/Ft.

ALPINE
Alpine Engineered Products, Inc.
1950 Marley Drive
Haines City, FL 33844
FL Certificate of Authorization # 567

WARNING TRUSSES REQUIRE EXTREME CARE IN FABRICATION, HANDLING, SHIPPING, INSTALLING AND BRACING. REFER TO BCSI 1-03 (BUILDING COMPONENT SAFETY INFORMATION), PUBLISHED BY TPI (TRUSS PLATE INSTITUTE, 583 D'ONOFRIO DR., SUITE 200, MADISON, WI 53719) AND WTCA (WOOD TRUSS COUNCIL OF AMERICA, 6300 ENTERPRISE LN, MADISON, WI 53719) FOR SAFETY PRACTICES PRIOR TO PERFORMING THESE FUNCTIONS. UNLESS OTHERWISE INDICATED, TOP CHORD SHALL HAVE PROPERLY ATTACHED STRUCTURAL PANELS AND BOTTOM CHORD SHALL HAVE A PROPERLY ATTACHED RIGID CEILING.

IMPORTANT FURNISH A COPY OF THIS DESIGN TO THE INSTALLATION CONTRACTOR. ALPINE ENGINEERED PRODUCTS, INC. SHALL NOT BE RESPONSIBLE FOR ANY DEVIATION FROM THIS DESIGN; ANY FAILURE TO BUILD THE TRUSS IN CONFORMANCE WITH TPI; OR FABRICATING, HANDLING, SHIPPING, INSTALLING & BRACING OF TRUSSES. DESIGN CONFORMS WITH APPLICABLE PROVISIONS OF NDS (NATIONAL DESIGN SPEC, BY AF&PA) AND TPI. ALPINE CONNECTOR PLATES ARE MADE OF 20/18/16GA (W,H/S/K) ASTM A653 GRADE 40/60 (W, K/H,S) GALV. STEEL. APPLY PLATES TO EACH FACE OF TRUSS AND, UNLESS OTHERWISE LOCATED ON THIS DESIGN, POSITION PER DRAWINGS 160A Z. ANY INSPECTION OF PLATES FOLLOWED BY (1) SHALL BE PER ANNEX A3 OF TPI1-2002 SEC.3. A SEAL ON THIS DRAWING INDICATES ACCEPTANCE OF PROFESSIONAL ENGINEERING RESPONSIBILITY SOLELY FOR THE TRUSS COMPONENT DESIGN SHOWN. THE SUITABILITY AND USE OF THIS COMPONENT FOR ANY BUILDING IS THE RESPONSIBILITY OF THE BUILDING DESIGNER PER ANSI/TPI 1 SEC. 2.

ARTHUR R. FISHER LICENSE No. 59687 STATE OF FLORIDA PROFESSIONAL ENGINEER
Jan 27 '06

TC LL	20.0 PSF	REF	R487-- 67130
TC DL	10.0 PSF	DATE	01/26/06
BC DL	10.0 PSF	DRW	HCUSR487 06026043
BC LL	0.0 PSF	HC-ENG	JB/AF *
TOT.LD.	40.0 PSF	SEQN-	27263
DUR.FAC.	1.25		
SPACING	24.0"	JREF-	1SU7487_Z03

(6-036-PERRY / LOT 3 PHASE II STONEHANGE B1)

Top chord 2x4 SP #2 Dense
Bot chord 2x4 SP #2 Dense
Webs 2x4 SP #3

Left end vertical not exposed to wind pressure.

110 mph wind, 10.72 ft mean hgt, ASCE 7-98, CLOSED bldg, not located within 4.50 ft from roof edge, CAT II, EXP B, wind TC DL=5.0 psf, wind BC DL=5.0 psf.

Deflection meets L/360 live and L/240 total load.

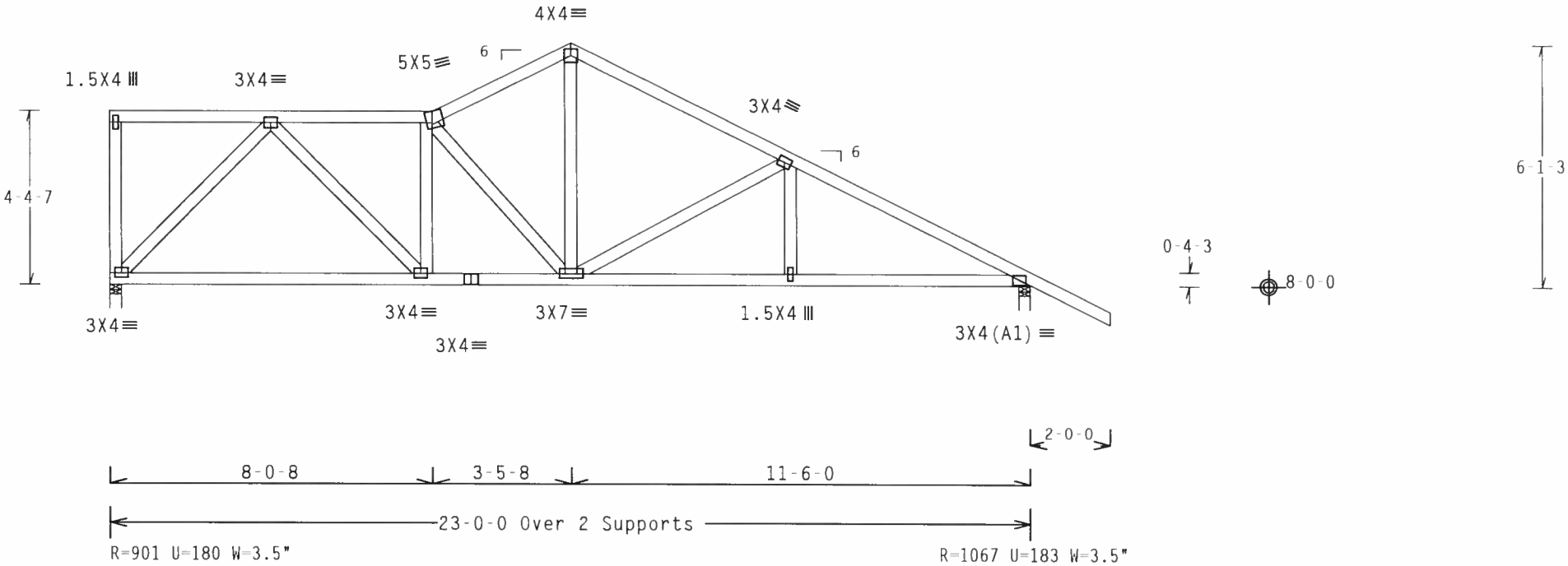

PLT TYP. Wave TPI Design Crit: TPI-1995(STD)/FBC 7.04.0 TY:1 FL/-/4/-/-/R/- Scale =.25"/Ft.

ALPINE
Alpine Engineered Products, Inc.
1950 Marley Drive
Haines City, FL 33844
FL Certificate of Authorization # 567

WARNING TRUSSES REQUIRE EXTREME CARE IN FABRICATION, HANDLING, SHIPPING, INSTALLING AND BRACING. REFER TO BCSI 1-03 (BUILDING COMPONENT SAFETY INFORMATION), PUBLISHED BY TPI (TRUSS PLATE INSTITUTE, 583 D'ONOFRIO DR., SUITE 200, MADISON, WI 53719) AND WTCA (WOOD TRUSS COUNCIL OF AMERICA, 6300 ENTERPRISE LN, MADISON, WI 53719) FOR SAFETY PRACTICES PRIOR TO PERFORMING THESE FUNCTIONS. UNLESS OTHERWISE INDICATED, TOP CHORD SHALL HAVE PROPERLY ATTACHED STRUCTURAL PANELS AND BOTTOM CHORD SHALL HAVE A PROPERLY ATTACHED RIGID CEILING.

IMPORTANT FURNISH A COPY OF THIS DESIGN TO THE INSTALLATION CONTRACTOR. ALPINE ENGINEERED PRODUCTS, INC. SHALL NOT BE RESPONSIBLE FOR ANY DEVIATION FROM THIS DESIGN; ANY FAILURE TO BUILD THE TRUSS IN CONFORMANCE WITH TPI; OR FABRICATING, HANDLING, SHIPPING, INSTALLING & BRACING OF TRUSSES. DESIGN CONFORMS WITH APPLICABLE PROVISIONS OF NDS (NATIONAL DESIGN SPEC. BY AF&PA) AND TPI. ALPINE CONNECTOR PLATES ARE MADE OF 20/18/16GA (W,H/S/K) ASTM A653 GRADE 40/60 (W, K/H,S) GALV. STEEL. APPLY PLATES TO EACH FACE OF TRUSS AND, UNLESS OTHERWISE LOCATED ON THIS DESIGN, POSITION PER DRAWINGS 160A-Z. ANY INSPECTION OF PLATES FOLLOWED BY (I) SHALL BE PER ANNEX A3 OF TPI1-2002 SEC.3. A SEAL ON THIS DRAWING INDICATES ACCEPTANCE OF PROFESSIONAL ENGINEERING RESPONSIBILITY SOLELY FOR THE TRUSS COMPONENT DESIGN SHOWN. THE SUITABILITY AND USE OF THIS COMPONENT FOR ANY BUILDING IS THE RESPONSIBILITY OF THE BUILDING DESIGNER PER ANSI/TPI 1 SEC. 2.

ARTHUR R. FISHER LICENSE No.59687 STATE OF FLORIDA PROFESSIONAL ENGINEER
Jan 27 '06

TC LL	20.0 PSF	REF	R487-- 67131
TC DL	10.0 PSF	DATE	01/26/06
BC DL	10.0 PSF	DRW	HCUSR487 06026040
BC LL	0.0 PSF	HC-ENG	JB/AF *
TOT.LD.	40.0 PSF	SEQN-	27302
DUR.FAC.	1.25		
SPACING	24.0"	JREF-	1SU7487_Z03

(6-036 PERRY / LOT 3 PHASE II STONEHANGE B2)

Top chord 2x4 SP #2 Dense
Bot chord 2x4 SP #2 Dense
Webs 2x4 SP #3

Left end vertical not exposed to wind pressure.

110 mph wind, 10.72 ft mean hgt, ASCE 7-98, CLOSED bldg, not located within 4.50 ft from roof edge, CAT II, EXP B, wind TC DL=5.0 psf, wind BC DL=5.0 psf.

Deflection meets L/360 live and L/240 total load.

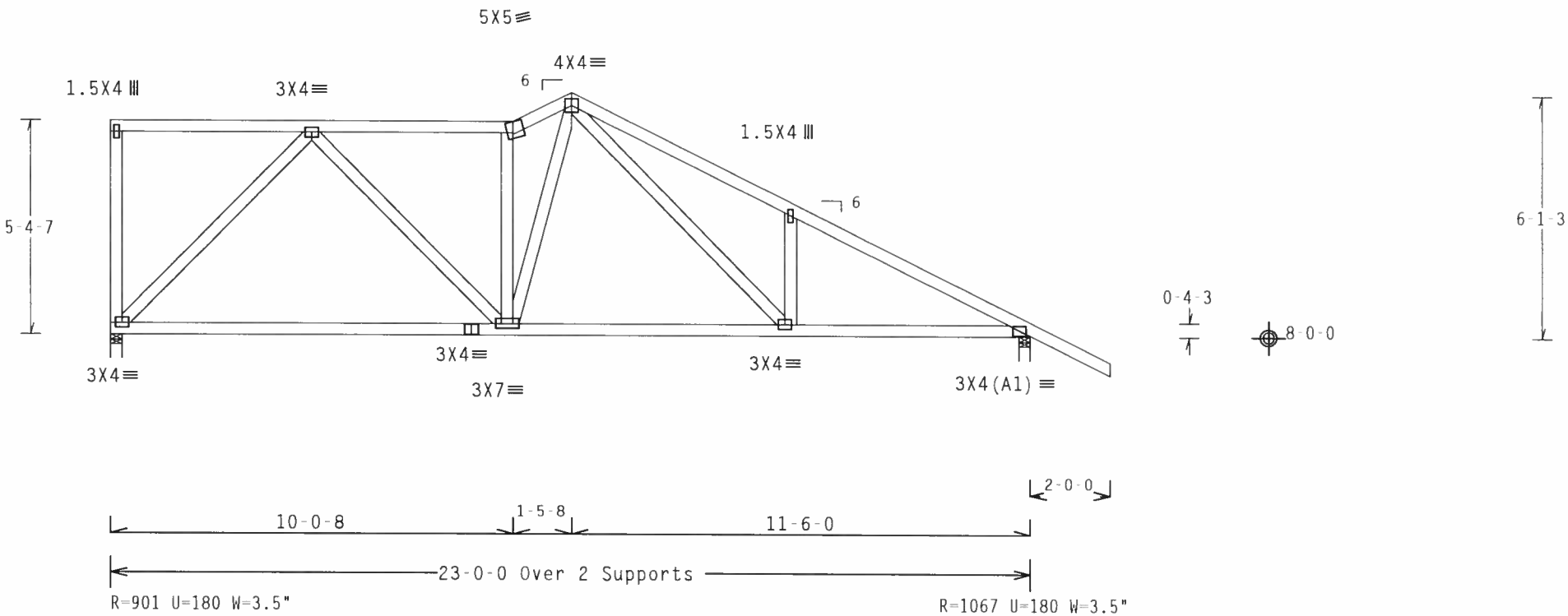

PLT TYP. Wave TPI | Design Crit: TPI-1995(STD)/FBC | 7.04.0 | QTY:1 | FL/-/4/-/-/R/- | Scale =.25"/Ft.

ALPINE
Alpine Engineered Products, Inc.
1950 Marley Drive
Haines City, FL 33844
FL Certificate of Authorization # 567

WARNING TRUSSES REQUIRE EXTREME CARE IN FABRICATION, HANDLING, SHIPPING, INSTALLING AND BRACING. REFER TO BCSI 1-03 (BUILDING COMPONENT SAFETY INFORMATION), PUBLISHED BY TPI (TRUSS PLATE INSTITUTE, 583 D'ONOFRIO DR., SUITE 200, MADISON, WI 53719) AND WTCA (WOOD TRUSS COUNCIL OF AMERICA, 6300 ENTERPRISE LN, MADISON, WI 53719) FOR SAFETY PRACTICES PRIOR TO PERFORMING THESE FUNCTIONS. UNLESS OTHERWISE INDICATED, TOP CHORD SHALL HAVE PROPERLY ATTACHED STRUCTURAL PANELS AND BOTTOM CHORD SHALL HAVE A PROPERLY ATTACHED RIGID CEILING.

IMPORTANTFURNISH A COPY OF THIS DESIGN TO THE INSTALLATION CONTRACTOR. ALPINE ENGINEERED PRODUCTS, INC. SHALL NOT BE RESPONSIBLE FOR ANY DEVIATION FROM THIS DESIGN; ANY FAILURE TO BUILD THE TRUSS IN CONFORMANCE WITH TPI; OR FABRICATING, HANDLING, SHIPPING, INSTALLING & BRACING OF TRUSSES. DESIGN CONFORMS WITH APPLICABLE PROVISIONS OF NDS (NATIONAL DESIGN SPEC. BY AF&PA) AND TPI. ALPINE CONNECTOR PLATES ARE MADE OF 20/18/16GA (W,H/S/K) ASTM A653 GRADE 40/60 (W, K/H,S) GALV. STEEL. APPLY PLATES TO EACH FACE OF TRUSS AND, UNLESS OTHERWISE LOCATED ON THIS DESIGN, POSITION PER DRAWINGS 160A-Z. ANY INSPECTION OF PLATES FOLLOWED BY (I) SHALL BE PER ANNEX A3 OF TPI1 2002 SEC.3. A SEAL ON THIS DRAWING INDICATES ACCEPTANCE OF PROFESSIONAL ENGINEERING RESPONSIBILITY SOLELY FOR THE TRUSS COMPONENT DESIGN SHOWN. THE SUITABILITY AND USE OF THIS COMPONENT FOR ANY BUILDING IS THE RESPONSIBILITY OF THE BUILDING DESIGNER PER ANSI/TPI 1 SEC. 2.

ARTHUR R. FISHER LICENSE No. 59687 STATE OF FLORIDA PROFESSIONAL ENGINEER

Jan 27, '06

TC LL	20.0 PSF	REF	R487-- 67132
TC DL	10.0 PSF	DATE	01/26/06
BC DL	10.0 PSF	DRW	HCUSR487 06026041
BC LL	0.0 PSF	HC-ENG	JB/AF *
TOT.LD.	40.0 PSF	SEQN-	27303
DUR.FAC.	1.25		
SPACING	24.0"	JREF-	1SU7487_Z03

(6 036 PERRY / LOT 3 PHASE II STONEHANGE B3)

Top chord 2x4 SP #2 Dense
Bot chord 2x4 SP #2 Dense
Webs 2x4 SP #3

Left end vertical not exposed to wind pressure.

110 mph wind, 10.86 ft mean hgt, ASCE 7-98, CLOSED bldg, not located within 4.50 ft from roof edge, CAT II, EXP B, wind TC DL=5.0 psf, wind BC DL=5.0 psf.

Deflection meets L/360 live and L/240 total load.

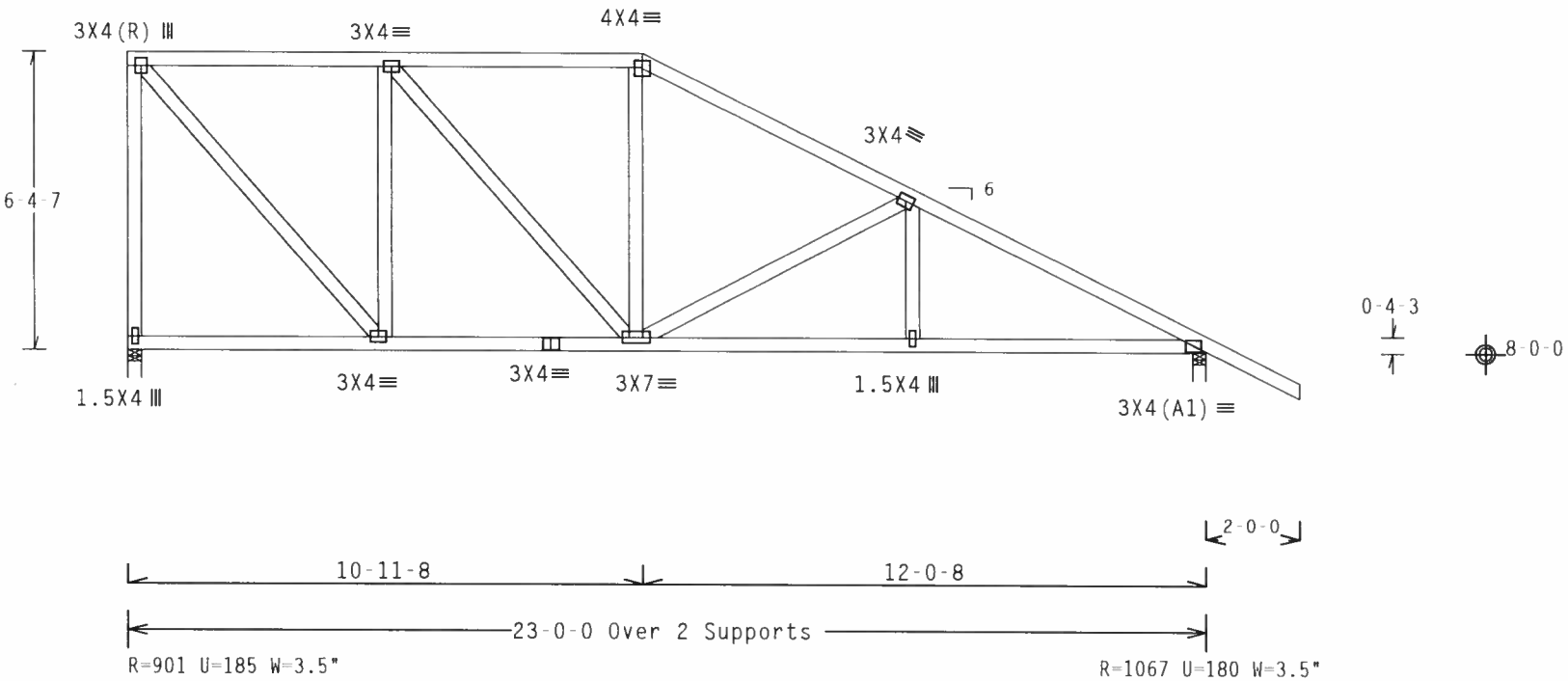

PLT TYP. Wave TPI Design Crit: TPI-1995(STD)/FBC 7.04.08 [illegible] QTY:1 FL/-/4/-/-/R/- Scale =.25"/Ft.

ALPINE
Alpine Engineered Products, Inc.
1950 Marley Drive
Haines City, FL 33844
FL Certificate of Authorization # 567

WARNING TRUSSES REQUIRE EXTREME CARE IN FABRICATION, HANDLING, SHIPPING, INSTALLING AND BRACING. REFER TO BCSI 1-03 (BUILDING COMPONENT SAFETY INFORMATION), PUBLISHED BY TPI (TRUSS PLATE INSTITUTE, 583 D'ONOFRIO DR., SUITE 200, MADISON, WI 53719) AND WTCA (WOOD TRUSS COUNCIL OF AMERICA, 6300 ENTERPRISE LN, MADISON, WI 53719) FOR SAFETY PRACTICES PRIOR TO PERFORMING THESE FUNCTIONS. UNLESS OTHERWISE INDICATED, TOP CHORD SHALL HAVE PROPERLY ATTACHED STRUCTURAL PANELS AND BOTTOM CHORD SHALL HAVE A PROPERLY ATTACHED RIGID CEILING.

IMPORTANTFURNISH A COPY OF THIS DESIGN TO THE INSTALLATION CONTRACTOR. ALPINE ENGINEERED PRODUCTS, INC. SHALL NOT BE RESPONSIBLE FOR ANY DEVIATION FROM THIS DESIGN; ANY FAILURE TO BUILD THE TRUSS IN CONFORMANCE WITH TPI; OR FABRICATING, HANDLING, SHIPPING, INSTALLING & BRACING OF TRUSSES. DESIGN CONFORMS WITH APPLICABLE PROVISIONS OF NDS (NATIONAL DESIGN SPEC. BY AF&PA) AND TPI. ALPINE CONNECTOR PLATES ARE MADE OF 20/18/16GA (W,H/S/K) ASTM A653 GRADE 40/60 (W, K/H,S) GALV STEEL. APPLY PLATES TO EACH FACE OF TRUSS AND, UNLESS OTHERWISE LOCATED ON THIS DESIGN, POSITION PER DRAWINGS 160A Z. ANY INSPECTION OF PLATES FOLLOWED BY (I) SHALL BE PER ANNEX A3 OF TPI1 2002 SEC.3. A SEAL ON THIS DRAWING INDICATES ACCEPTANCE OF PROFESSIONAL ENGINEERING RESPONSIBILITY SOLELY FOR THE TRUSS COMPONENT DESIGN SHOWN. THE SUITABILITY AND USE OF THIS COMPONENT FOR ANY BUILDING IS THE RESPONSIBILITY OF THE BUILDING DESIGNER PER ANSI/TPI 1 SEC. 2.

ARTHUR R. FISHER
LICENSE
No.59687
STATE OF FLORIDA
PROFESSIONAL ENGINEER
Jan 27 '06

TC LL	20.0 PSF	REF	R487-- 67133
TC DL	10.0 PSF	DATE	01/26/06
BC DL	10.0 PSF	DRW	HCUSR487 06026039
BC LL	0.0 PSF	HC-ENG	JB/AF *
TOT.LD.	40.0 PSF	SEQN-	27301
DUR.FAC.	1.25		
SPACING	24.0"	JREF-	1SU7487_Z03

Top chord 2x4 SP #2 Dense
Bot chord 2x4 SP #2 Dense
Webs 2x4 SP #3

Left end vertical not exposed to wind pressure.

Deflection meets L/360 live and L/240 total load.

110 mph wind, 11.32 ft mean hgt, ASCE 7-98, CLOSED bldg, not located within 4.50 ft from roof edge, CAT II, EXP B, wind TC DL=5.0 psf, wind BC DL=5.0 psf.

(A) Continuous lateral bracing equally spaced on member.

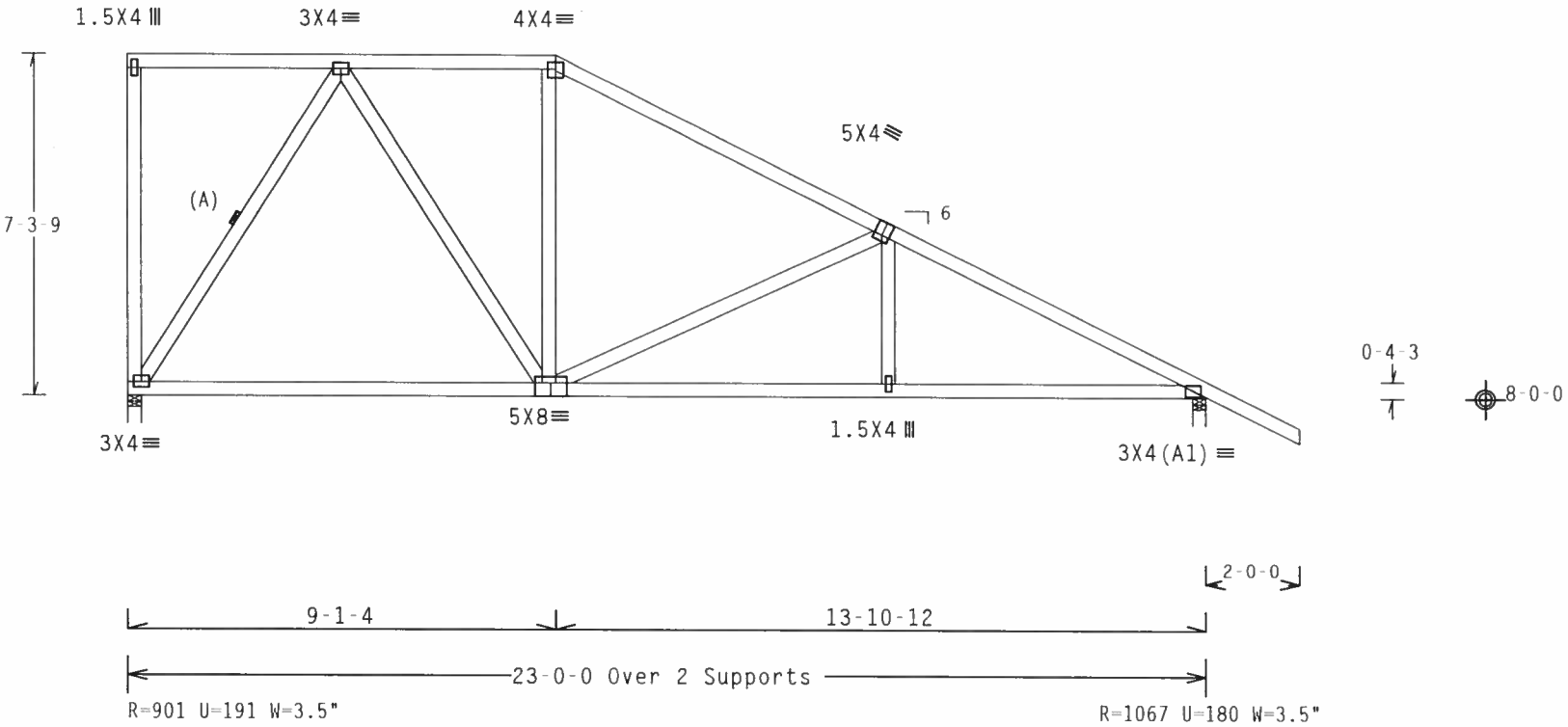

PLT TYP. Wave TPI Design Crit: TPI-1995(STD)/FBC 7.04.0 QTY:1 FL/-/4/-/-/R/- Scale =.25"/Ft.

ALPINE
Alpine Engineered Products, Inc.
1950 Marley Drive
Haines City, FL 33844
FL Certificate of Authorization # 567

WARNING TRUSSES REQUIRE EXTREME CARE IN FABRICATION, HANDLING, SHIPPING, INSTALLING AND BRACING. REFER TO BCSI 1-03 (BUILDING COMPONENT SAFETY INFORMATION), PUBLISHED BY TPI (TRUSS PLATE INSTITUTE, 583 D'ONOFRIO DR., SUITE 200, MADISON, WI 53719) AND WTCA (WOOD TRUSS COUNCIL OF AMERICA, 6300 ENTERPRISE LN, MADISON, WI 53719) FOR SAFETY PRACTICES PRIOR TO PERFORMING THESE FUNCTIONS. UNLESS OTHERWISE INDICATED, TOP CHORD SHALL HAVE PROPERLY ATTACHED STRUCTURAL PANELS AND BOTTOM CHORD SHALL HAVE A PROPERLY ATTACHED RIGID CEILING.

IMPORTANTFURNISH A COPY OF THIS DESIGN TO THE INSTALLATION CONTRACTOR. ALPINE ENGINEERED PRODUCTS, INC. SHALL NOT BE RESPONSIBLE FOR ANY DEVIATION FROM THIS DESIGN; ANY FAILURE TO BUILD THE TRUSS IN CONFORMANCE WITH TPI; OR FABRICATING, HANDLING, SHIPPING, INSTALLING & BRACING OF TRUSSES. DESIGN CONFORMS WITH APPLICABLE PROVISIONS OF NDS (NATIONAL DESIGN SPEC. BY AF&PA) AND TPI. ALPINE CONNECTOR PLATES ARE MADE OF 20/18/16GA (W,H/S/K) ASTM A653 GRADE 40/60 (W, K/H,S) GALV. STEEL. APPLY PLATES TO EACH FACE OF TRUSS AND, UNLESS OTHERWISE LOCATED ON THIS DESIGN, POSITION PER DRAWINGS 160A Z. ANY INSPECTION OF PLATES FOLLOWED BY (1) SHALL BE PER ANNEX A3 OF TPI1 2002 SEC.3. A SEAL ON THIS DRAWING INDICATES ACCEPTANCE OF PROFESSIONAL ENGINEERING RESPONSIBILITY SOLELY FOR THE TRUSS COMPONENT DESIGN SHOWN. THE SUITABILITY AND USE OF THIS COMPONENT FOR ANY BUILDING IS THE RESPONSIBILITY OF THE BUILDING DESIGNER PER ANSI/TPI 1 SEC. 2.

ARTHUR R. FISHER LICENSE No.59687 STATE OF FLORIDA PROFESSIONAL ENGINEER

Jan 27 '06

TC LL	20.0 PSF	REF	R487-- 67134
TC DL	10.0 PSF	DATE	01/26/06
BC DL	10.0 PSF	DRW	HCUSR487 06026046
BC LL	0.0 PSF	HC-ENG	JB/AF *
TOT.LD.	40.0 PSF	SEQN-	27266
DUR.FAC.	1.25		
SPACING	24.0"	JREF-	1SU7487_Z03

(6 036 PERRY / LOT 3 PHASE II STONEHANGE CGE)

Top chord 2x4 SP #2 Dense
Bot chord 2x4 SP #2 Dense
Webs 2x4 SP #3

SPECIAL LOADS
------(LUMBER DUR.FAC.=1.25 / PLATE DUR.FAC.=1.25)

TC - From	82 PLF	at -2.00	to	82 PLF	at 18.00
BC - From	4 PLF	at -2.00	to	4 PLF	at 0.00
BC - From	20 PLF	at 0.00	to	20 PLF	at 16.00
BC - From	4 PLF	at 16.00	to	4 PLF	at 18.00

(**) Plate relocated as shown.

110 mph wind, 9.68 ft mean hgt, ASCE 7-98, CLOSED bldg, Located anywhere in roof, CAT II, EXP B, wind TC DL=5.0 psf, wind BC DL=5.0 psf.

See DWGS A11015EC1103 & GBLLETIN0405 for more requirements.

Deflection meets L/360 live and L/240 total load.

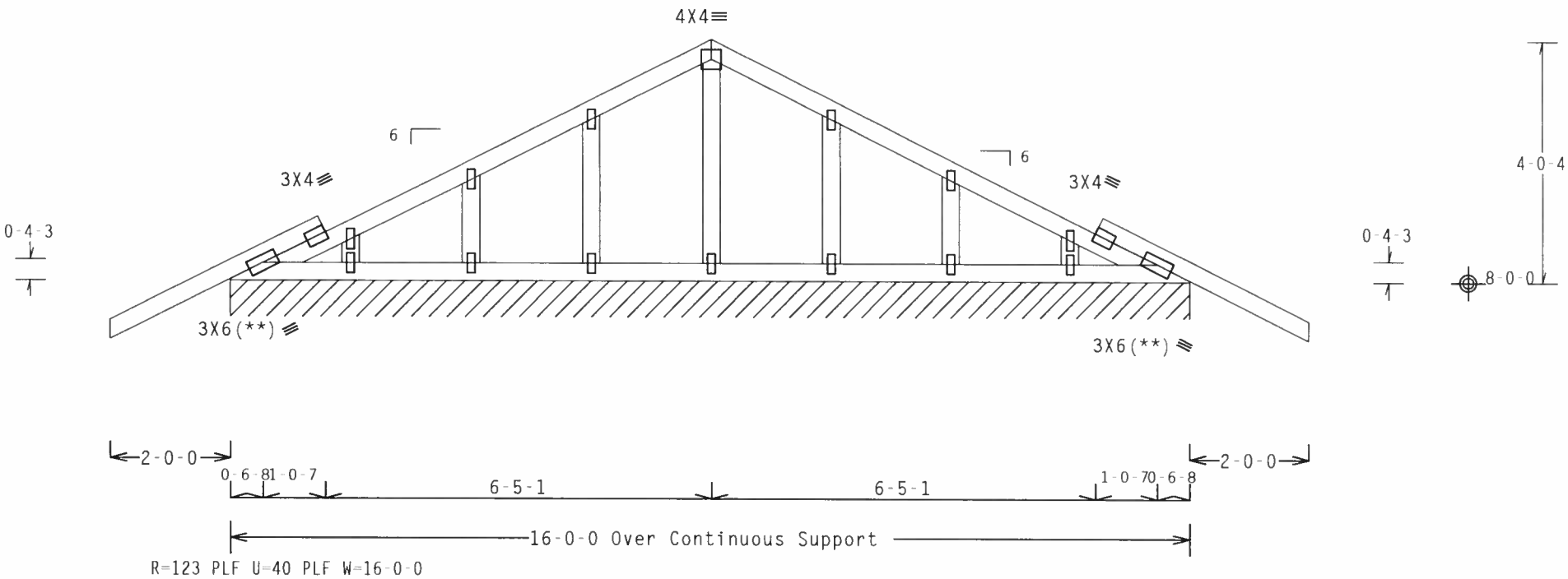

Note: All Plates Are 1.5X4 Except As Shown.

PLT TYP. Wave TPI Design Crit: TPI-1995(STD)/FBC 7.04.08 QTY:1 FL/-/4/-/-/R/- Scale =.375"/Ft.

ALPINE
Alpine Engineered Products, Inc.
1950 Marley Drive
Haines City, FL 33844
FL Certificate of Authorization # 567

WARNING TRUSSES REQUIRE EXTREME CARE IN FABRICATION, HANDLING, SHIPPING, INSTALLING AND BRACING. REFER TO BCSI 1-03 (BUILDING COMPONENT SAFETY INFORMATION), PUBLISHED BY TPI (TRUSS PLATE INSTITUTE, 583 D'ONOFRIO DR., SUITE 200, MADISON, WI 53719) AND WTCA (WOOD TRUSS COUNCIL OF AMERICA, 6300 ENTERPRISE LN, MADISON, WI 53719) FOR SAFETY PRACTICES PRIOR TO PERFORMING THESE FUNCTIONS. UNLESS OTHERWISE INDICATED, TOP CHORD SHALL HAVE PROPERLY ATTACHED STRUCTURAL PANELS AND BOTTOM CHORD SHALL HAVE A PROPERLY ATTACHED RIGID CEILING.

IMPORTANTFURNISH A COPY OF THIS DESIGN TO THE INSTALLATION CONTRACTOR. ALPINE ENGINEERED PRODUCTS, INC. SHALL NOT BE RESPONSIBLE FOR ANY DEVIATION FROM THIS DESIGN; ANY FAILURE TO BUILD THE TRUSS IN CONFORMANCE WITH TPI; OR FABRICATING, HANDLING, SHIPPING, INSTALLING & BRACING OF TRUSSES. DESIGN CONFORMS WITH APPLICABLE PROVISIONS OF NDS (NATIONAL DESIGN SPEC. BY AF&PA) AND TPI. ALPINE CONNECTOR PLATES ARE MADE OF 20/18/16GA (W,H/S/K) ASTM A653 GRADE 40/60 (W, K/H,S) GALV. STEEL. APPLY PLATES TO EACH FACE OF TRUSS AND, UNLESS OTHERWISE LOCATED ON THIS DESIGN, POSITION PER DRAWINGS 160A Z. ANY INSPECTION OF PLATES FOLLOWED BY (1) SHALL BE PER ANNEX A3 OF TPI1 2002 SEC.3. A SEAL ON THIS DRAWING INDICATES ACCEPTANCE OF PROFESSIONAL ENGINEERING RESPONSIBILITY SOLELY FOR THE TRUSS COMPONENT DESIGN SHOWN. THE SUITABILITY AND USE OF THIS COMPONENT FOR ANY BUILDING IS THE RESPONSIBILITY OF THE BUILDING DESIGNER PER ANSI/TPI 1 SEC. 2.

ARTHUR R. FISHER LICENSE No. 59687 STATE OF FLORIDA PROFESSIONAL ENGINEER
Jan 27 '06

TC LL	20.0 PSF	REF	R487-- 67135
TC DL	10.0 PSF	DATE	01/26/06
BC DL	10.0 PSF	DRW	HCUSR487 06026012
BC LL	0.0 PSF	HC-ENG	JB/AF
TOT.LD.	40.0 PSF	SEQN-	27313
DUR.FAC.	1.25		
SPACING	24.0"	JREF-	1SU7487_Z03

(6-036-PERRY / LOT 3 PHASE II STONEHANGE - C)

Top chord 2x4 SP #2 Dense
Bot chord 2x4 SP #2 Dense
Webs 2x4 SP #3

Deflection meets L/360 live and L/240 total load.

110 mph wind, 9.85 ft mean hgt, ASCE 7-98, CLOSED bldg, Located anywhere in roof, CAT II, EXP B, wind TC DL=5.0 psf, wind BC DL=5.0 psf.

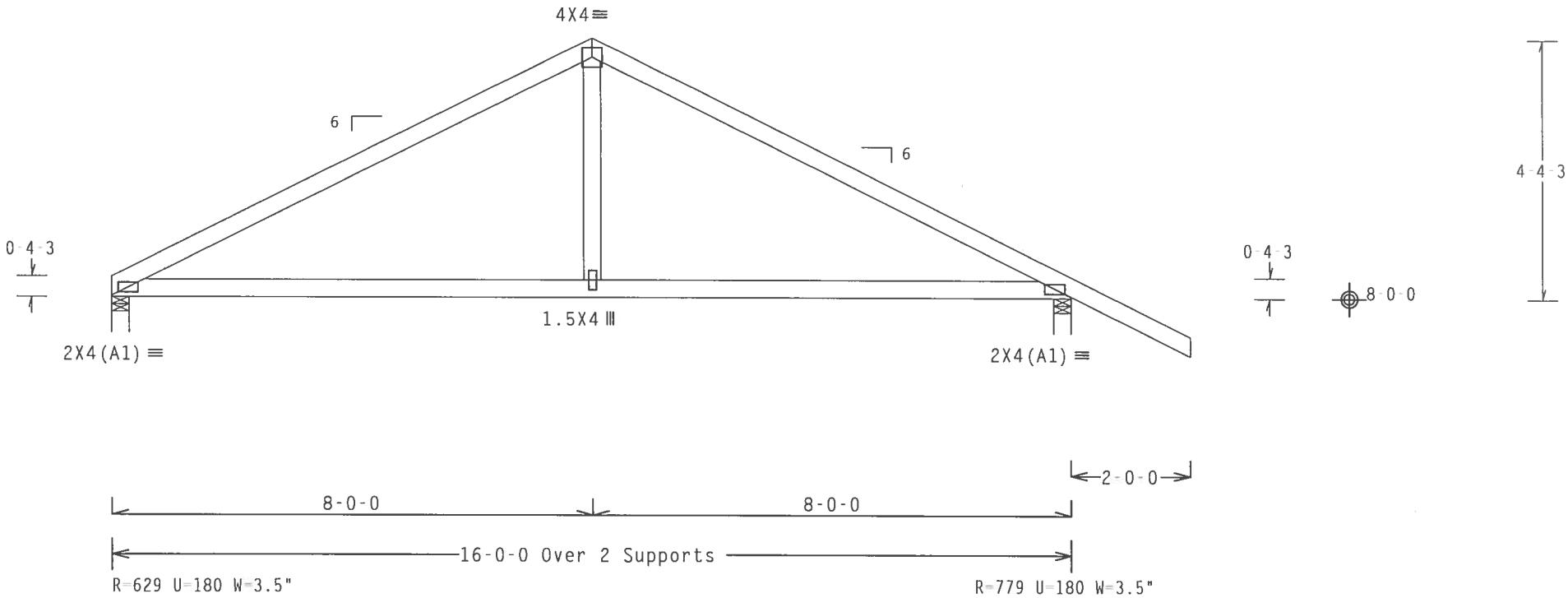

PLT TYP. Wave TPI Design Crit: TPI-1995(STD)/FBC 7.04.0[illegible] QTY:3 FL/-/4/-/-/R/- Scale =.375"/Ft.

ALPINE
Alpine Engineered Products, Inc.
1950 Marley Drive
Haines City, FL 33844
FL Certificate of Authorization # 567

WARNING TRUSSES REQUIRE EXTREME CARE IN FABRICATION, HANDLING, SHIPPING, INSTALLING AND BRACING. REFER TO BCSI 1-03 (BUILDING COMPONENT SAFETY INFORMATION), PUBLISHED BY TPI (TRUSS PLATE INSTITUTE, 583 D'ONOFRIO DR., SUITE 200, MADISON, WI 53719) AND WTCA (WOOD TRUSS COUNCIL OF AMERICA, 6300 ENTERPRISE LN, MADISON, WI 53719) FOR SAFETY PRACTICES PRIOR TO PERFORMING THESE FUNCTIONS. UNLESS OTHERWISE INDICATED, TOP CHORD SHALL HAVE PROPERLY ATTACHED STRUCTURAL PANELS AND BOTTOM CHORD SHALL HAVE A PROPERLY ATTACHED RIGID CEILING.

IMPORTANTFURNISH A COPY OF THIS DESIGN TO THE INSTALLATION CONTRACTOR. ALPINE ENGINEERED PRODUCTS, INC. SHALL NOT BE RESPONSIBLE FOR ANY DEVIATION FROM THIS DESIGN; ANY FAILURE TO BUILD THE TRUSS IN CONFORMANCE WITH TPI; OR FABRICATING, HANDLING, SHIPPING, INSTALLING & BRACING OF TRUSSES. DESIGN CONFORMS WITH APPLICABLE PROVISIONS OF NDS (NATIONAL DESIGN SPEC. BY AFAPA) AND TPI. ALPINE CONNECTOR PLATES ARE MADE OF 20/18/16GA (W,H/S/K) ASTM A653 GRADE 40/60 (W, K/H,S) GALV. STEEL. APPLY PLATES TO EACH FACE OF TRUSS AND, UNLESS OTHERWISE LOCATED ON THIS DESIGN, POSITION PER DRAWINGS 160A-Z. ANY INSPECTION OF PLATES FOLLOWED BY (I) SHALL BE PER ANNEX A3 OF TPI1-2002 SEC.3. A SEAL ON THIS DRAWING INDICATES ACCEPTANCE OF PROFESSIONAL ENGINEERING RESPONSIBILITY SOLELY FOR THE TRUSS COMPONENT DESIGN SHOWN. THE SUITABILITY AND USE OF THIS COMPONENT FOR ANY BUILDING IS THE RESPONSIBILITY OF THE BUILDING DESIGNER PER ANSI/TPI 1 SEC. 2.

ARTHUR R. FISHER LICENSE No.59687 STATE OF FLORIDA PROFESSIONAL ENGINEER

Jan 27 '06

TC LL	20.0 PSF	REF	R487-- 67136
TC DL	10.0 PSF	DATE	01/26/06
BC DL	10.0 PSF	DRW	HCUSR487 06026034
BC LL	0.0 PSF	HC-ENG	JB/AF *
TOT.LD.	40.0 PSF	SEQN-	27261
DUR.FAC.	1.25		
SPACING	24.0"	JREF-	1SU7487_Z03

(6-036 PERRY / LOT 3 PHASE II STONEHANGE C 1)

Top chord 2x4 SP #2 Dense
Bot chord 2x6 SP #1 Dense
Webs 2x4 SP #3

SPECIAL LOADS
------(LUMBER DUR.FAC.=1.25 / PLATE DUR.FAC.=1.25)
TC - From 60 PLF at 0.00 to 60 PLF at 18.00
BC - From 20 PLF at 0.00 to 20 PLF at 16.00
BC - From 4 PLF at 16.00 to 4 PLF at 18.00
BC - 1182 LB Conc. Load at 0.94, 2.94, 4.94, 6.94
BC - 2489 LB Conc. Load at 8.94

Deflection meets L/360 live and L/240 total load.

2 COMPLETE TRUSSES REQUIRED

Nailing Schedule: (12d_Box_or_Gun_(0.128"x3.25",_min.)_nails)
Top Chord: 1 Row @12.00" o.c.
Bot Chord: 1 Row @ 3.25" o.c.
Webs : 1 Row @ 4" o.c.
Use equal spacing between rows and stagger nails in each row to avoid splitting.

110 mph wind, 15.00 ft mean hgt, ASCE 7-98, CLOSED bldg, Located anywhere in roof, CAT II, EXP B, wind TC DL=5.0 psf, wind BC DL=5.0 psf.

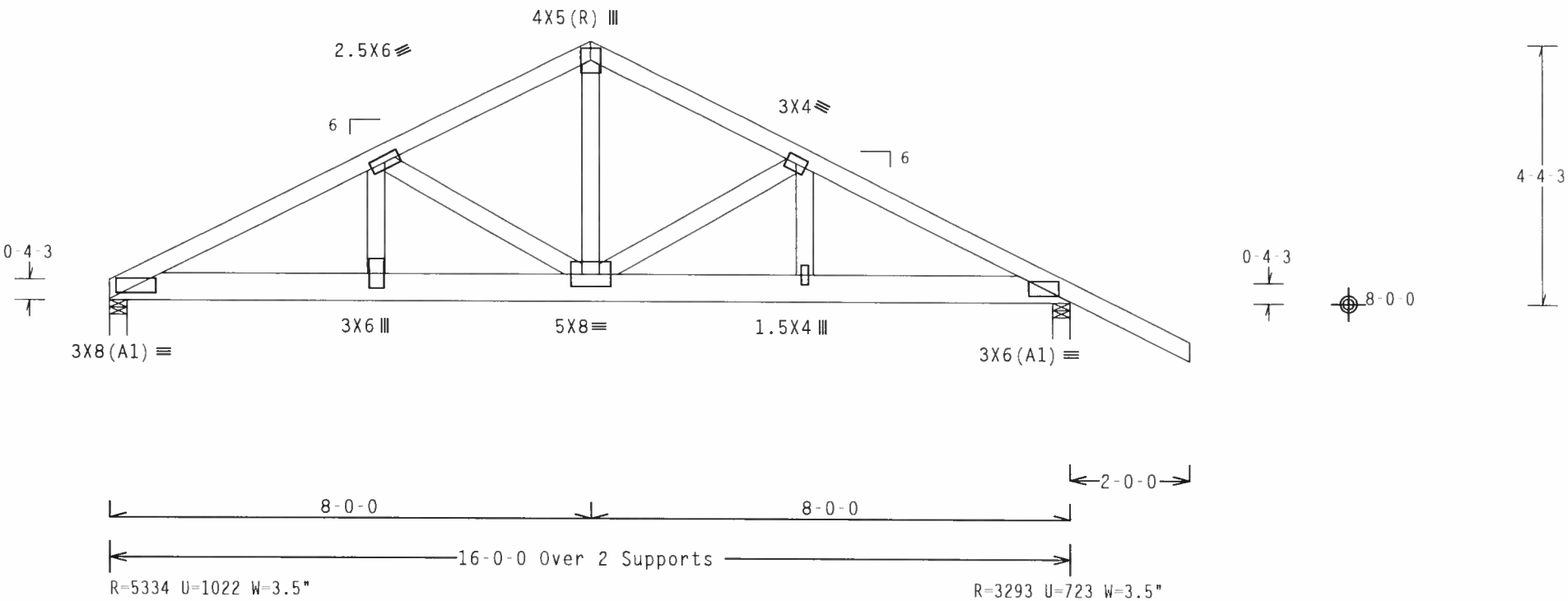

PLT TYP. Wave TPI Design Crit: TPI-1995(STD)/FBC 7.04.0306 QTY:1 FL/-/4/-/-/R/- Scale =.375"/Ft.

ALPINE
Alpine Engineered Products, Inc.
1950 Marley Drive
Haines City, FL 33844
FL Certificate of Authorization # 567

WARNING TRUSSES REQUIRE EXTREME CARE IN FABRICATION, HANDLING, SHIPPING, INSTALLING AND BRACING. REFER TO BCSI 1-03 (BUILDING COMPONENT SAFETY INFORMATION), PUBLISHED BY TPI (TRUSS PLATE INSTITUTE, 583 D'ONOFRIO DR., SUITE 200, MADISON, WI 53719) AND WTCA (WOOD TRUSS COUNCIL OF AMERICA, 6300 ENTERPRISE LN, MADISON, WI 53719) FOR SAFETY PRACTICES PRIOR TO PERFORMING THESE FUNCTIONS. UNLESS OTHERWISE INDICATED, TOP CHORD SHALL HAVE PROPERLY ATTACHED STRUCTURAL PANELS AND BOTTOM CHORD SHALL HAVE A PROPERLY ATTACHED RIGID CEILING.

IMPORTANTFURNISH A COPY OF THIS DESIGN TO THE INSTALLATION CONTRACTOR. ALPINE ENGINEERED PRODUCTS, INC. SHALL NOT BE RESPONSIBLE FOR ANY DEVIATION FROM THIS DESIGN; ANY FAILURE TO BUILD THE TRUSS IN CONFORMANCE WITH TPI; OR FABRICATING, HANDLING, SHIPPING, INSTALLING & BRACING OF TRUSSES. DESIGN CONFORMS WITH APPLICABLE PROVISIONS OF NDS (NATIONAL DESIGN SPEC. BY AF&PA) AND TPI. ALPINE CONNECTOR PLATES ARE MADE OF 20/18/16GA (W,H/S/K) ASTM A653 GRADE 40/60 (W, K/H,S) GALV. STEEL. APPLY PLATES TO EACH FACE OF TRUSS AND, UNLESS OTHERWISE LOCATED ON THIS DESIGN, POSITION PER DRAWINGS 160A-Z. ANY INSPECTION OF PLATES FOLLOWED BY (1) SHALL BE PER ANNEX A3 OF TPI1-2002 SEC.3. A SEAL ON THIS DRAWING INDICATES ACCEPTANCE OF PROFESSIONAL ENGINEERING RESPONSIBILITY SOLELY FOR THE TRUSS COMPONENT DESIGN SHOWN. THE SUITABILITY AND USE OF THIS COMPONENT FOR ANY BUILDING IS THE RESPONSIBILITY OF THE BUILDING DESIGNER PER ANSI/TPI 1 SEC. 2.

ARTHUR R. FISHER LICENSE No.59687 STATE OF FLORIDA PROFESSIONAL ENGINEER
Jan 27 '06

TC LL	20.0 PSF	REF	R487-- 67137
TC DL	10.0 PSF	DATE	01/26/06
BC DL	10.0 PSF	DRW	HCUSR487 06026044
BC LL	0.0 PSF	HC-ENG	JB/AF
TOT.LD.	40.0 PSF	SEQN-	27264
DUR.FAC.	1.25		
SPACING	24.0"	JREF-	1SU7487_Z03

(6-036 PERRY / LOT 3 PHASE II STONEHANGE H/DT)

Top chord 2x4 SP #2 Dense
Bot chord 2x4 SP #2 Dense
Webs 2x4 SP #3 :W1, W7 2x10 SP SS:

110 mph wind, 15.00 ft mean hgt, ASCE 7-98, CLOSED bldg, Located anywhere in roof, CAT II, EXP B, wind TC DL=5.0 psf, wind BC DL=5.0 psf.

SPECIAL LOADS
------(LUMBER DUR.FAC.=1.25 / PLATE DUR.FAC.=1.25)

TC	From	60 PLF	at	0.00	to	60 PLF	at 18.48
BC	From	20 PLF	at	0.00	to	20 PLF	at 16.48
BC	From	4 PLF	at	16.48	to	4 PLF	at 18.48
TC		131 LB Conc. Load	at	7.06,		7.42,	9.42
BC		520 LB Conc. Load	at	7.00,		9.48	
BC		112 LB Conc. Load	at	7.42			

#1 hip supports 7-0-0 jacks with no webs.

Deflection meets L/360 live and L/240 total load.

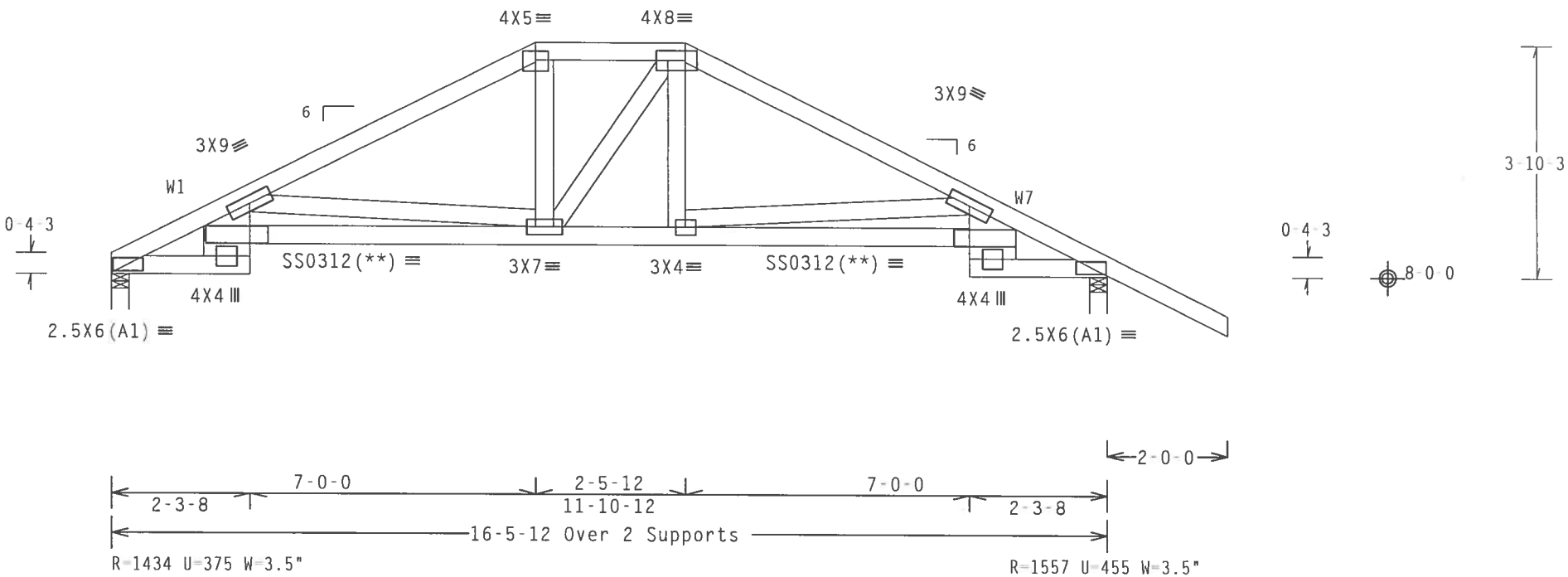

PLT TYP. 18 Gauge HS,Wave TPI Design Crit: TPI-1995(STD)/FBC 7.04.0806 LC QTY:1 FL/-/4/-/-/R/- Scale =.375"/Ft.

ALPINE
Alpine Engineered Products, Inc.
1950 Marley Drive
Haines City, FL 33844
FL Certificate of Authorization # 567

WARNING TRUSSES REQUIRE EXTREME CARE IN FABRICATION, HANDLING, SHIPPING, INSTALLING AND BRACING. REFER TO BCSI 1-03 (BUILDING COMPONENT SAFETY INFORMATION), PUBLISHED BY TPI (TRUSS PLATE INSTITUTE, 583 D'ONOFRIO DR., SUITE 200, MADISON, WI 53719) AND WTCA (WOOD TRUSS COUNCIL OF AMERICA, 6300 ENTERPRISE LN, MADISON, WI 53719) FOR SAFETY PRACTICES PRIOR TO PERFORMING THESE FUNCTIONS. UNLESS OTHERWISE INDICATED, TOP CHORD SHALL HAVE PROPERLY ATTACHED STRUCTURAL PANELS AND BOTTOM CHORD SHALL HAVE A PROPERLY ATTACHED RIGID CEILING.

IMPORTANTFURNISH A COPY OF THIS DESIGN TO THE INSTALLATION CONTRACTOR. ALPINE ENGINEERED PRODUCTS, INC. SHALL NOT BE RESPONSIBLE FOR ANY DEVIATION FROM THIS DESIGN; ANY FAILURE TO BUILD THE TRUSS IN CONFORMANCE WITH TPI; OR FABRICATING, HANDLING, SHIPPING, INSTALLING & BRACING OF TRUSSES. DESIGN CONFORMS WITH APPLICABLE PROVISIONS OF NDS (NATIONAL DESIGN SPEC. BY AF&PA) AND TPI. ALPINE CONNECTOR PLATES ARE MADE OF 20/18/16GA (W,H/S/K) ASTM A653 GRADE 40/60 (W, K/H,S) GALV. STEEL. APPLY PLATES TO EACH FACE OF TRUSS AND, UNLESS OTHERWISE LOCATED ON THIS DESIGN, POSITION PER DRAWINGS 160A Z. ANY INSPECTION OF PLATES FOLLOWED BY (1) SHALL BE PER ANNEX A3 OF TPI1-2002 SEC 3. A SEAL ON THIS DRAWING INDICATES ACCEPTANCE OF PROFESSIONAL ENGINEERING RESPONSIBILITY SOLELY FOR THE TRUSS COMPONENT DESIGN SHOWN. THE SUITABILITY AND USE OF THIS COMPONENT FOR ANY BUILDING IS THE RESPONSIBILITY OF THE BUILDING DESIGNER PER ANSI/TPI 1 SEC. 2.

ARTHUR R. FISHER
LICENSE
No.59687
STATE OF FLORIDA
PROFESSIONAL ENGINEER
Jan 27 '06

TC LL	20.0 PSF	REF	R487-- 67138
TC DL	10.0 PSF	DATE	01/26/06
BC DL	10.0 PSF	DRW	HCUSR487 06026010
BC LL	0.0 PSF	HC-ENG	JB/AF
TOT.LD.	40.0 PSF	SEQN-	27325
DUR.FAC.	1.25		
SPACING	24.0"	JREF-	1SU7487_Z03

(6-036 PERRY / LOT 3 PHASE II STONEHANGE - DT)

Top chord 2x4 SP #2 Dense
Bot chord 2x4 SP #2 Dense
Webs 2x4 SP #3 :W1, W5 2x6 SP #2:

Deflection meets L/360 live and L/240 total load.

110 mph wind, 9.91 ft mean hgt, ASCE 7-98, CLOSED bldg, not located within 4.50 ft from roof edge, CAT II, EXP B, wind TC DL=5.0 psf, wind BC DL=5.0 psf.

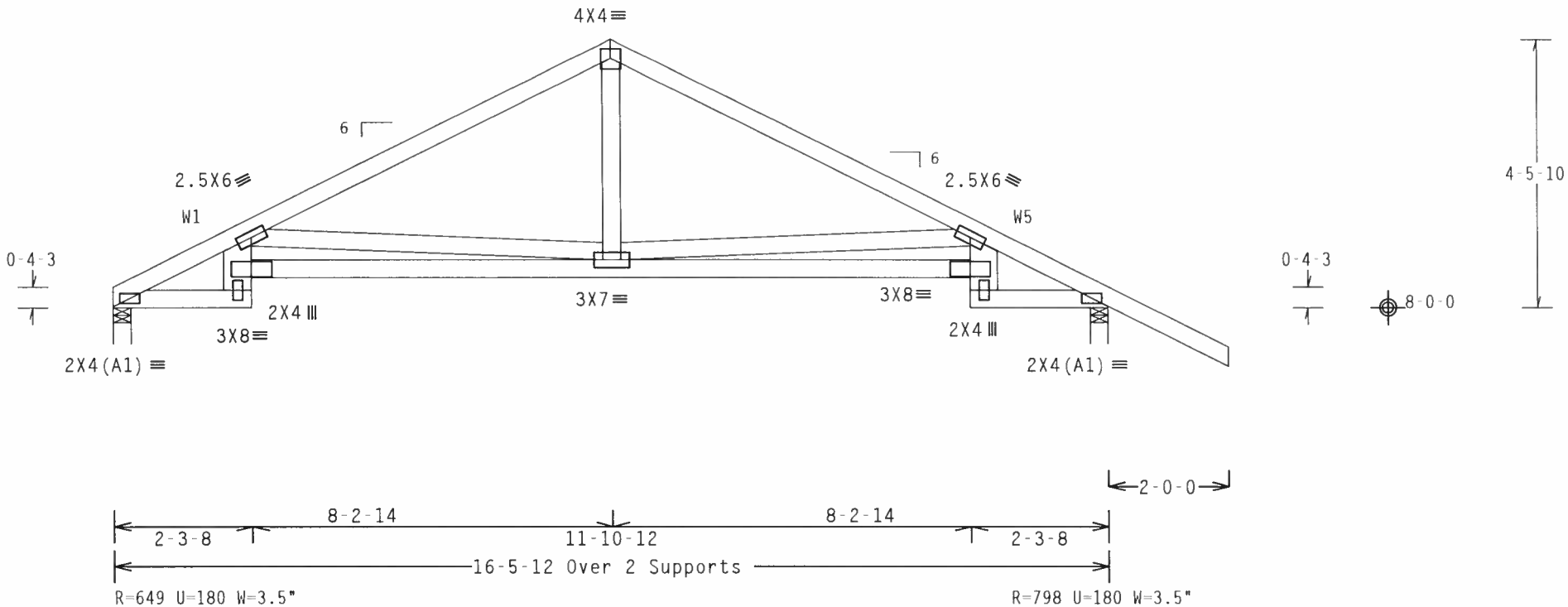

PLT TYP. Wave TPI Design Crit: TPI-1995(STD)/FBC 7.04.0[illegible] TY:2 FL/-/4/-/-/R/- Scale =.375"/Ft.

ALPINE
Alpine Engineered Products, Inc.
1950 Marley Drive
Haines City, FL 33844
FL Certificate of Authorization # 567

WARNING TRUSSES REQUIRE EXTREME CARE IN FABRICATION, HANDLING, SHIPPING, INSTALLING AND BRACING. REFER TO BCSI 1-03 (BUILDING COMPONENT SAFETY INFORMATION), PUBLISHED BY TPI (TRUSS PLATE INSTITUTE, 583 D'ONOFRIO DR., SUITE 200, MADISON, WI 53719) AND WTCA (WOOD TRUSS COUNCIL OF AMERICA, 6300 ENTERPRISE LN, MADISON, WI 53719) FOR SAFETY PRACTICES PRIOR TO PERFORMING THESE FUNCTIONS. UNLESS OTHERWISE INDICATED, TOP CHORD SHALL HAVE PROPERLY ATTACHED STRUCTURAL PANELS AND BOTTOM CHORD SHALL HAVE A PROPERLY ATTACHED RIGID CEILING.

IMPORTANT FURNISH A COPY OF THIS DESIGN TO THE INSTALLATION CONTRACTOR. ALPINE ENGINEERED PRODUCTS, INC. SHALL NOT BE RESPONSIBLE FOR ANY DEVIATION FROM THIS DESIGN; ANY FAILURE TO BUILD THE TRUSS IN CONFORMANCE WITH TPI; OR FABRICATING, HANDLING, SHIPPING, INSTALLING & BRACING OF TRUSSES. DESIGN CONFORMS WITH APPLICABLE PROVISIONS OF NDS (NATIONAL DESIGN SPEC. BY AF&PA) AND TPI. ALPINE CONNECTOR PLATES ARE MADE OF 20/18/16GA (W,H/S/K) ASTM A653 GRADE 40/60 (W, K/H,S) GALV. STEEL. APPLY PLATES TO EACH FACE OF TRUSS AND, UNLESS OTHERWISE LOCATED ON THIS DESIGN, POSITION PER DRAWINGS 160A-Z. ANY INSPECTION OF PLATES FOLLOWED BY (1) SHALL BE PER ANNEX A3 OF TPI1-2002 SEC.3. A SEAL ON THIS DRAWING INDICATES ACCEPTANCE OF PROFESSIONAL ENGINEERING RESPONSIBILITY SOLELY FOR THE TRUSS COMPONENT DESIGN SHOWN. THE SUITABILITY AND USE OF THIS COMPONENT FOR ANY BUILDING IS THE RESPONSIBILITY OF THE BUILDING DESIGNER PER ANSI/TPI 1 SEC. 2.

ARTHUR R. FISHER LICENSE No. 59687 STATE OF FLORIDA PROFESSIONAL ENGINEER
Jan 27 '06

TC LL	20.0 PSF	REF	R487-- 67139
TC DL	10.0 PSF	DATE	01/26/06
BC DL	10.0 PSF	DRW	HCUSR487 06026045
BC LL	0.0 PSF	HC-ENG	JB/AF
TOT.LD.	40.0 PSF	SEQN-	27265
DUR.FAC.	1.25		
SPACING	24.0"	JREF-	1SU7487_Z03

(6-036-PERRY / LOT 3 PHASE II STONEHANGE - D)

Top chord 2x4 SP #2 Dense
Bot chord 2x4 SP #2 Dense
Webs 2x4 SP #3

Deflection meets L/360 live and L/240 total load.

110 mph wind, 9.91 ft mean hgt, ASCE 7-98, CLOSED bldg, not located within 4.50 ft from roof edge, CAT II, EXP B, wind TC DL=5.0 psf, wind BC DL=5.0 psf.

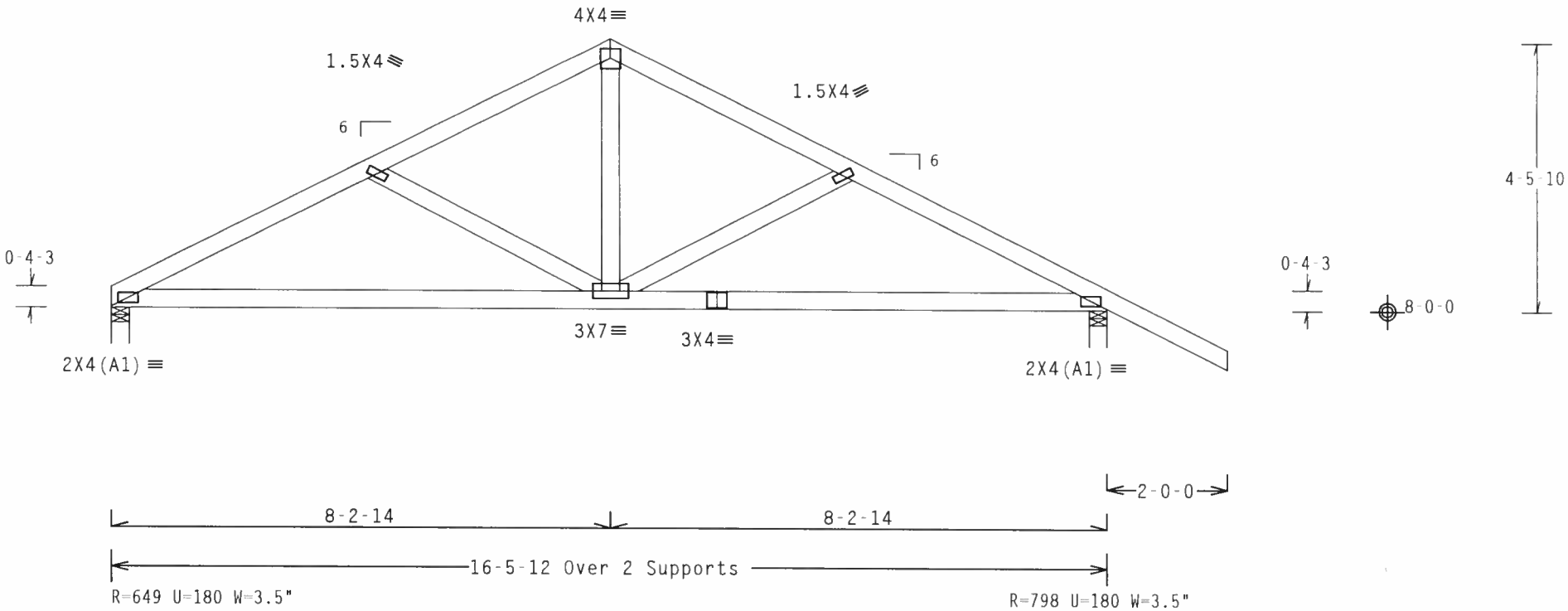

PLT TYP. Wave TPI | Design Crit: TPI-1995(STD)/FBC | 7.04.0 | QTY:1 | FL/-/4/-/-/R/- | Scale =.375"/Ft.

ALPINE
Alpine Engineered Products, Inc.
1950 Marley Drive
Haines City, FL 33844
FL Certificate of Authorization # 567

WARNING TRUSSES REQUIRE EXTREME CARE IN FABRICATION, HANDLING, SHIPPING, INSTALLING AND BRACING. REFER TO BCSI 1-03 (BUILDING COMPONENT SAFETY INFORMATION), PUBLISHED BY TPI (TRUSS PLATE INSTITUTE, 583 D'ONOFRIO DR., SUITE 200, MADISON, WI 53719) AND WTCA (WOOD TRUSS COUNCIL OF AMERICA, 6300 ENTERPRISE LN, MADISON, WI 53719) FOR SAFETY PRACTICES PRIOR TO PERFORMING THESE FUNCTIONS. UNLESS OTHERWISE INDICATED, TOP CHORD SHALL HAVE PROPERLY ATTACHED STRUCTURAL PANELS AND BOTTOM CHORD SHALL HAVE A PROPERLY ATTACHED RIGID CEILING.

IMPORTANTFURNISH A COPY OF THIS DESIGN TO THE INSTALLATION CONTRACTOR. ALPINE ENGINEERED PRODUCTS, INC. SHALL NOT BE RESPONSIBLE FOR ANY DEVIATION FROM THIS DESIGN; ANY FAILURE TO BUILD THE TRUSS IN CONFORMANCE WITH TPI; OR FABRICATING, HANDLING, SHIPPING, INSTALLING & BRACING OF TRUSSES. DESIGN CONFORMS WITH APPLICABLE PROVISIONS OF NDS (NATIONAL DESIGN SPEC, BY AF&PA) AND TPI. ALPINE CONNECTOR PLATES ARE MADE OF 20/18/16GA (W,H/S/K) ASTM A653 GRADE 40/60 (W, K/H,S) GALV. STEEL. APPLY PLATES TO EACH FACE OF TRUSS AND, UNLESS OTHERWISE LOCATED ON THIS DESIGN, POSITION PER DRAWINGS 160A-Z. ANY INSPECTION OF PLATES FOLLOWED BY (1) SHALL BE PER ANNEX A3 OF TPI1-2002 SEC.3. A SEAL ON THIS DRAWING INDICATES ACCEPTANCE OF PROFESSIONAL ENGINEERING RESPONSIBILITY SOLELY FOR THE TRUSS COMPONENT DESIGN SHOWN. THE SUITABILITY AND USE OF THIS COMPONENT FOR ANY BUILDING IS THE RESPONSIBILITY OF THE BUILDING DESIGNER PER ANSI/TPI 1 SEC. 2.

ARTHUR R. FISHER LICENSE No.59687 STATE OF FLORIDA PROFESSIONAL ENGINEER
Jan 27 '06

TC LL	20.0 PSF	REF	R487-- 67140
TC DL	10.0 PSF	DATE	01/26/06
BC DL	10.0 PSF	DRW	HCUSR487 06026005
BC LL	0.0 PSF	HC-ENG	JB/AF *
TOT.LD.	40.0 PSF	SEQN-	27270
DUR.FAC.	1.25		
SPACING	24.0"	JREF-	1SU7487_Z03

(6-036 PERRY / LOT 3 PHASE II STONEHANGE - D-1)

Top chord 2x4 SP #2 Dense
Bot chord 2x6 SP #1 Dense :B2 2x6 SP #2:
Webs 2x4 SP #3

SPECIAL LOADS
------(LUMBER DUR.FAC.=1.25 / PLATE DUR.FAC.=1.25)
TC - From 60 PLF at 0.00 to 60 PLF at 18.48
BC - From 20 PLF at 0.00 to 20 PLF at 16.48
BC - From 4 PLF at 16.48 to 4 PLF at 18.48
BC - 1232 LB Conc. Load at 1.42, 3.42, 5.42, 7.42
BC - 3038 LB Conc. Load at 9.42

Deflection meets L/360 live and L/240 total load.

2 COMPLETE TRUSSES REQUIRED

Nailing Schedule: (12d Box or Gun (0.128"x3.25", min.) nails)
Top Chord: 1 Row @12.00" o.c.
Bot Chord: 2 Rows @ 6.00" o.c. (Each Row)
Webs : 1 Row @ 4" o.c.
Use equal spacing between rows and stagger nails in each row to avoid splitting.

110 mph wind, 15.00 ft mean hgt, ASCE 7-98, CLOSED bldg, Located anywhere in roof, CAT II, EXP B, wind TC DL=5.0 psf, wind BC DL=5.0 psf.

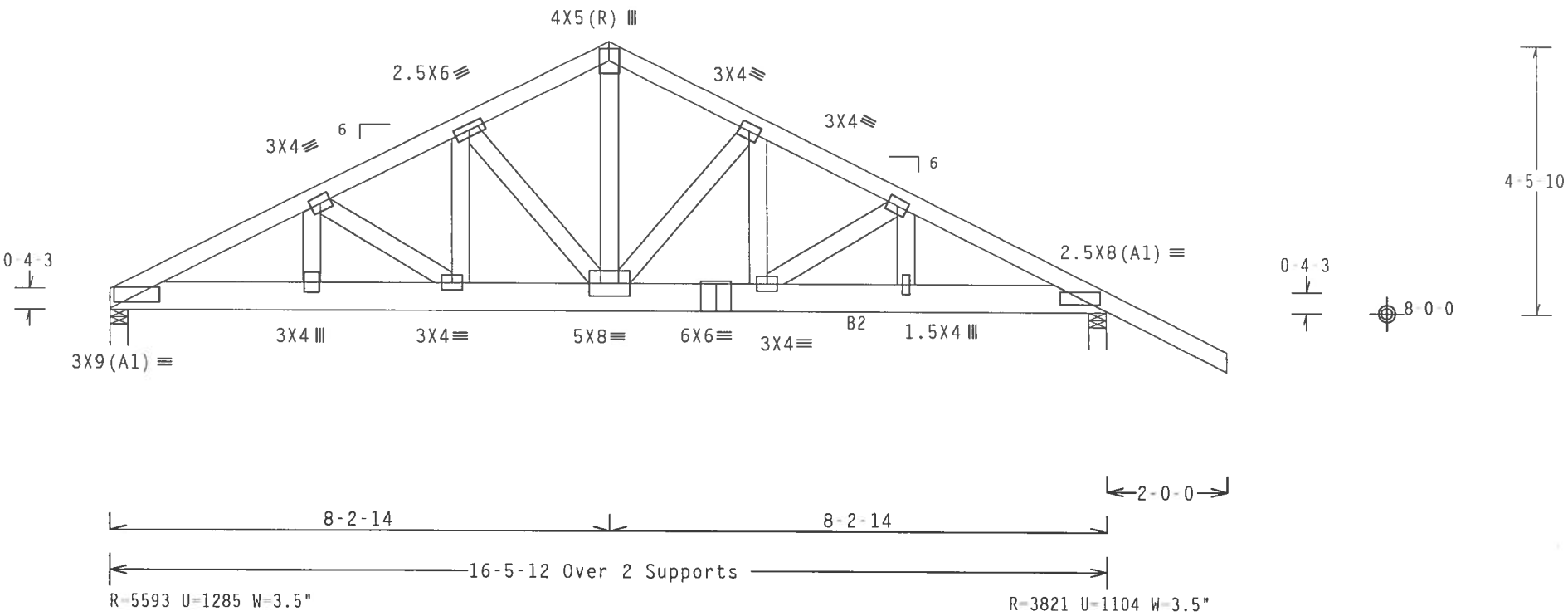

PLT TYP. Wave TPI Design Crit: TPI-1995(STD)/FBC 7.04.08 QTY:1 FL/-/4/-/-/R/- Scale =.375"/Ft.

ALPINE
Alpine Engineered Products, Inc.
1950 Marley Drive
Haines City, FL 33844
FL Certificate of Authorization # 567

WARNING TRUSSES REQUIRE EXTREME CARE IN FABRICATION, HANDLING, SHIPPING, INSTALLING AND BRACING. REFER TO BCSI 1-03 (BUILDING COMPONENT SAFETY INFORMATION), PUBLISHED BY TPI (TRUSS PLATE INSTITUTE, 583 D'ONOFRIO DR., SUITE 200, MADISON, WI 53719) AND WTCA (WOOD TRUSS COUNCIL OF AMERICA, 6300 ENTERPRISE LN, MADISON, WI 53719) FOR SAFETY PRACTICES PRIOR TO PERFORMING THESE FUNCTIONS. UNLESS OTHERWISE INDICATED, TOP CHORD SHALL HAVE PROPERLY ATTACHED STRUCTURAL PANELS AND BOTTOM CHORD SHALL HAVE A PROPERLY ATTACHED RIGID CEILING.

IMPORTANTFURNISH A COPY OF THIS DESIGN TO THE INSTALLATION CONTRACTOR. ALPINE ENGINEERED PRODUCTS, INC. SHALL NOT BE RESPONSIBLE FOR ANY DEVIATION FROM THIS DESIGN; ANY FAILURE TO BUILD THE TRUSS IN CONFORMANCE WITH TPI; OR FABRICATING, HANDLING, SHIPPING, INSTALLING & BRACING OF TRUSSES. DESIGN CONFORMS WITH APPLICABLE PROVISIONS OF NDS (NATIONAL DESIGN SPEC. BY AF&PA) AND TPI. ALPINE CONNECTOR PLATES ARE MADE OF 20/18/16GA (W,H/S/K) ASTM A653 GRADE 40/60 (W, K/H,S) GALV. STEEL. APPLY PLATES TO EACH FACE OF TRUSS AND, UNLESS OTHERWISE LOCATED ON THIS DESIGN, POSITION PER DRAWINGS 160A-Z. ANY INSPECTION OF PLATES FOLLOWED BY (I) SHALL BE PER ANNEX A3 OF TPI1-2002 SEC.3. A SEAL ON THIS DRAWING INDICATES ACCEPTANCE OF PROFESSIONAL ENGINEERING RESPONSIBILITY SOLELY FOR THE TRUSS COMPONENT DESIGN SHOWN. THE SUITABILITY AND USE OF THIS COMPONENT FOR ANY BUILDING IS THE RESPONSIBILITY OF THE BUILDING DESIGNER PER ANSI/TPI 1 SEC. 2.

ARTHUR R. FISHER LICENSE No. 59687 STATE OF FLORIDA PROFESSIONAL ENGINEER
Jan 27 '06

TC LL	20.0 PSF	REF	R487-- 67141
TC DL	10.0 PSF	DATE	01/26/06
BC DL	10.0 PSF	DRW	HCUSR487 06026014
BC LL	0.0 PSF	HC-ENG	JB/AF
TOT.LD.	40.0 PSF	SEQN-	27278
DUR.FAC.	1.25		
SPACING	24.0"	JREF-	1SU7487_Z03

(6 036 PERRY / LOT 3 PHASE II STONEHANGE H07)

Top chord 2x4 SP #2 Dense
Bot chord 2x4 SP #2 Dense
Webs 2x4 SP #3

Hipjack supports 7-0-0 setback jacks with no webs.

Provide (2) 16d common nails(0.162"x3.5"), toe nailed at Top chord.
Provide (3) 16d common nails(0.162"x3.5"), toe nailed at Bot chord.

110 mph wind, 15.00 ft mean hgt, ASCE 7-98, CLOSED bldg, Located anywhere in roof, CAT II, EXP B, wind TC DL=5.0 psf, wind BC DL=5.0 psf.

Deflection meets L/360 live and L/240 total load.

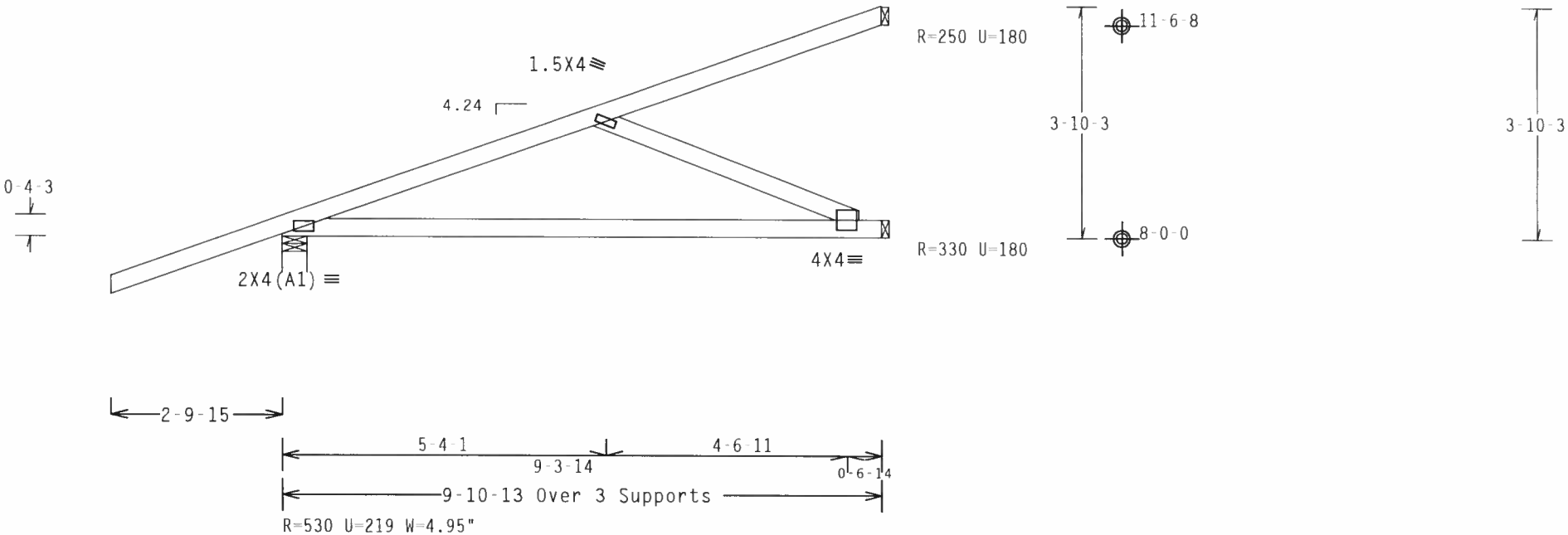

PLT TYP. Wave TPI Design Crit: TPI-1995(STD)/FBC 7.04.0[illegible] QTY:1 FL/-/4/-/-/R/- Scale =.375"/Ft.

ALPINE
Alpine Engineered Products, Inc.
1950 Marley Drive
Haines City, FL 33844
FL Certificate of Authorization # 567

WARNING TRUSSES REQUIRE EXTREME CARE IN FABRICATION, HANDLING, SHIPPING, INSTALLING AND BRACING. REFER TO BCSI 1-03 (BUILDING COMPONENT SAFETY INFORMATION), PUBLISHED BY TPI (TRUSS PLATE INSTITUTE, 583 D'ONOFRIO DR., SUITE 200, MADISON, WI 53719) AND WTCA (WOOD TRUSS COUNCIL OF AMERICA, 6300 ENTERPRISE LN, MADISON, WI 53719) FOR SAFETY PRACTICES PRIOR TO PERFORMING THESE FUNCTIONS. UNLESS OTHERWISE INDICATED, TOP CHORD SHALL HAVE PROPERLY ATTACHED STRUCTURAL PANELS AND BOTTOM CHORD SHALL HAVE A PROPERLY ATTACHED RIGID CEILING.

IMPORTANTFURNISH A COPY OF THIS DESIGN TO THE INSTALLATION CONTRACTOR. ALPINE ENGINEERED PRODUCTS, INC. SHALL NOT BE RESPONSIBLE FOR ANY DEVIATION FROM THIS DESIGN; ANY FAILURE TO BUILD THE TRUSS IN CONFORMANCE WITH TPI; OR FABRICATING, HANDLING, SHIPPING, INSTALLING & BRACING OF TRUSSES. DESIGN CONFORMS WITH APPLICABLE PROVISIONS OF NDS (NATIONAL DESIGN SPEC. BY AF&PA) AND TPI. ALPINE CONNECTOR PLATES ARE MADE OF 20/18/16GA (W,H/S/K) ASTM A653 GRADE 40/60 (W, K/H,S) GALV. STEEL. APPLY PLATES TO EACH FACE OF TRUSS AND, UNLESS OTHERWISE LOCATED ON THIS DESIGN, POSITION PER DRAWINGS 160A-Z. ANY INSPECTION OF PLATES FOLLOWED BY (1) SHALL BE PER ANNEX A3 OF TPI1-2002 SEC.3. A SEAL ON THIS DRAWING INDICATES ACCEPTANCE OF PROFESSIONAL ENGINEERING RESPONSIBILITY SOLELY FOR THE TRUSS COMPONENT DESIGN SHOWN. THE SUITABILITY AND USE OF THIS COMPONENT FOR ANY BUILDING IS THE RESPONSIBILITY OF THE BUILDING DESIGNER PER ANSI/TPI 1 SEC. 2.

ARTHUR R. FISHER LICENSE No. 59687 STATE OF FLORIDA PROFESSIONAL ENGINEER
Jan 27 '06

TC LL	20.0 PSF	REF R487-- 67142
TC DL	10.0 PSF	DATE 01/26/06
BC DL	10.0 PSF	DRW HCUSR487 06026031
BC LL	0.0 PSF	HC-ENG DF/AF
TOT.LD.	40.0 PSF	SEQN- 4941
DUR.FAC.	1.25	
SPACING	24.0"	JREF- 1SU7487_Z03

(6-036 PERRY / LOT 3 PHASE II STONEHANGE ED7)

Top chord 2x4 SP #2 Dense
Bot chord 2x4 SP #2 Dense

Deflection meets L/360 live and L/240 total load.

110 mph wind, 9.60 ft mean hgt, ASCE 7-98, CLOSED bldg, not located within 4.50 ft from roof edge, CAT II, EXP B, wind TC DL=5.0 psf, wind BC DL=5.0 psf.

Provide (2) 16d common nails(0.162"x3.5"), toe nailed at Top chord.
Provide (2) 16d common nails(0.162"x3.5"), toe nailed at Bot chord.

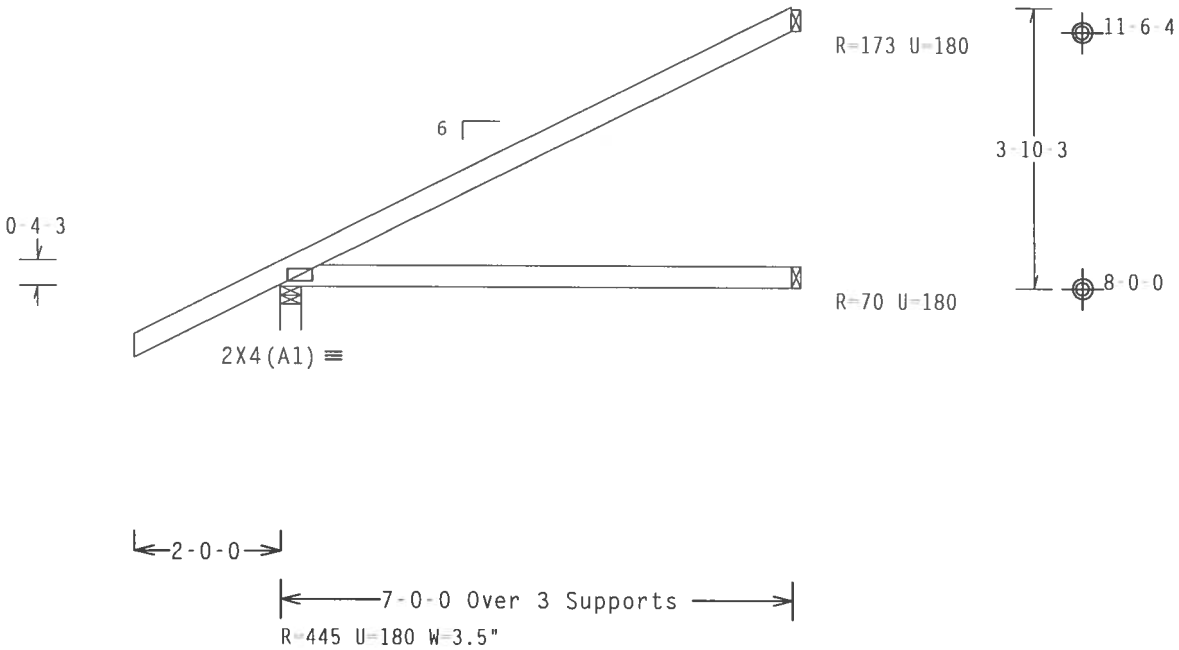

PLT TYP. Wave TPI Design Crit: TPI-1995(STD)/FBC 7.04.08 QTY:23 FL/-/4/-/-/R/- Scale =.375"/Ft.

ALPINE
Alpine Engineered Products, Inc.
1950 Marley Drive
Haines City, FL 33844
FL Certificate of Authorization # 567

WARNING TRUSSES REQUIRE EXTREME CARE IN FABRICATION, HANDLING, SHIPPING, INSTALLING AND BRACING. REFER TO BCSI 1-03 (BUILDING COMPONENT SAFETY INFORMATION), PUBLISHED BY TPI (TRUSS PLATE INSTITUTE, 583 D'ONOFRIO DR., SUITE 200, MADISON, WI 53719) AND WTCA (WOOD TRUSS COUNCIL OF AMERICA, 6300 ENTERPRISE LN, MADISON, WI 53719) FOR SAFETY PRACTICES PRIOR TO PERFORMING THESE FUNCTIONS. UNLESS OTHERWISE INDICATED, TOP CHORD SHALL HAVE PROPERLY ATTACHED STRUCTURAL PANELS AND BOTTOM CHORD SHALL HAVE A PROPERLY ATTACHED RIGID CEILING.

IMPORTANT FURNISH A COPY OF THIS DESIGN TO THE INSTALLATION CONTRACTOR. ALPINE ENGINEERED PRODUCTS, INC. SHALL NOT BE RESPONSIBLE FOR ANY DEVIATION FROM THIS DESIGN; ANY FAILURE TO BUILD THE TRUSS IN CONFORMANCE WITH TPI; OR FABRICATING, HANDLING, SHIPPING, INSTALLING & BRACING OF TRUSSES. DESIGN CONFORMS WITH APPLICABLE PROVISIONS OF NDS (NATIONAL DESIGN SPEC, BY AF&PA) AND TPI. ALPINE CONNECTOR PLATES ARE MADE OF 20/18/16GA (W,H/S/K) ASTM A653 GRADE 40/60 (W, K/H,S) GALV. STEEL. APPLY PLATES TO EACH FACE OF TRUSS AND, UNLESS OTHERWISE LOCATED ON THIS DESIGN, POSITION PER DRAWINGS 160A-Z. ANY INSPECTION OF PLATES FOLLOWED BY (1) SHALL BE PER ANNEX A3 OF TPI1-2002 SEC.3. A SEAL ON THIS DRAWING INDICATES ACCEPTANCE OF PROFESSIONAL ENGINEERING RESPONSIBILITY SOLELY FOR THE TRUSS COMPONENT DESIGN SHOWN. THE SUITABILITY AND USE OF THIS COMPONENT FOR ANY BUILDING IS THE RESPONSIBILITY OF THE BUILDING DESIGNER PER ANSI/TPI 1 SEC. 2.

ARTHUR R. FISHER
LICENSE
No. 59687
STATE OF FLORIDA
PROFESSIONAL ENGINEER
JA '06

TC LL	20.0 PSF	REF	R487-- 67143
TC DL	10.0 PSF	DATE	01/26/06
BC DL	10.0 PSF	DRW	HCUSR487 06026035
BC LL	0.0 PSF	HC-ENG	JB/AF
TOT.LD.	40.0 PSF	SEQN-	27297
DUR.FAC.	1.25		
SPACING	24.0"	JREF-	1SU7487_Z03

Top chord 2x4 SP #2 Dense
Bot chord 2x4 SP #2 Dense

Deflection meets L/360 live and L/240 total load.

110 mph wind, 9.10 ft mean hgt, ASCE 7-98, CLOSED bldg, not located within 4.50 ft from roof edge, CAT II, EXP B, wind TC DL=5.0 psf, wind BC DL=5.0 psf.

Provide (2) 16d common nails(0.162"x3.5"), toe nailed at Top chord.
Provide (2) 16d common nails(0.162"x3.5"), toe nailed at Bot chord.

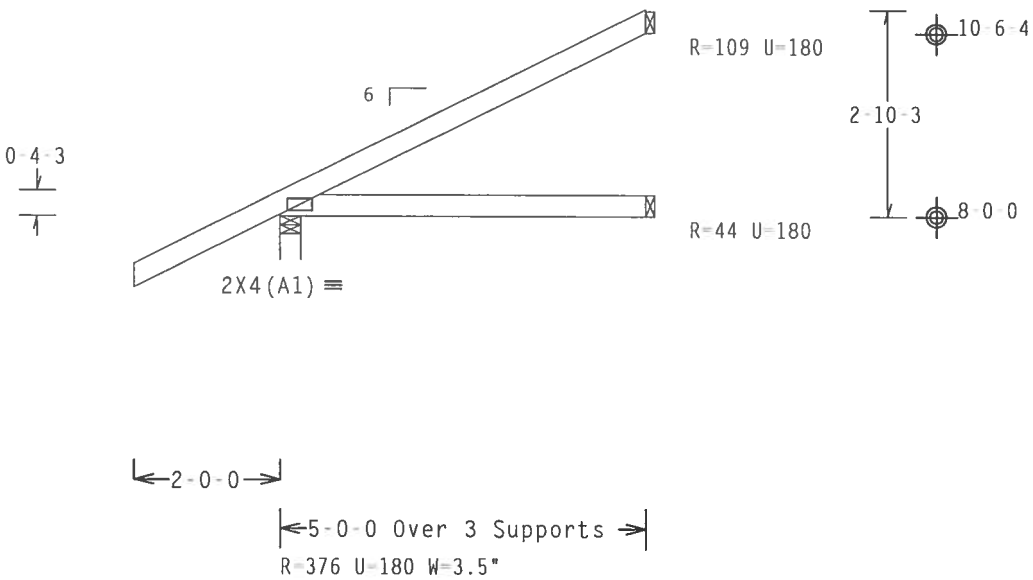

PLT TYP. Wave TPI Design Crit: TPI-1995(STD)/FBC 7.04.08 QTY:2 FL/-/4/-/-/R/- Scale =.375"/Ft.

ALPINE
Alpine Engineered Products, Inc.
1950 Marley Drive
Haines City, FL 33844
FL Certificate of Authorization # 567

WARNING TRUSSES REQUIRE EXTREME CARE IN FABRICATION, HANDLING, SHIPPING, INSTALLING AND BRACING. REFER TO BCSI 1-03 (BUILDING COMPONENT SAFETY INFORMATION), PUBLISHED BY TPI (TRUSS PLATE INSTITUTE, 583 D'ONOFRIO DR., SUITE 200, MADISON, WI 53719) AND WTCA (WOOD TRUSS COUNCIL OF AMERICA, 6300 ENTERPRISE LN, MADISON, WI 53719) FOR SAFETY PRACTICES PRIOR TO PERFORMING THESE FUNCTIONS. UNLESS OTHERWISE INDICATED, TOP CHORD SHALL HAVE PROPERLY ATTACHED STRUCTURAL PANELS AND BOTTOM CHORD SHALL HAVE A PROPERLY ATTACHED RIGID CEILING.

IMPORTANT FURNISH A COPY OF THIS DESIGN TO THE INSTALLATION CONTRACTOR. ALPINE ENGINEERED PRODUCTS, INC. SHALL NOT BE RESPONSIBLE FOR ANY DEVIATION FROM THIS DESIGN; ANY FAILURE TO BUILD THE TRUSS IN CONFORMANCE WITH TPI; OR FABRICATING, HANDLING, SHIPPING, INSTALLING & BRACING OF TRUSSES. DESIGN CONFORMS WITH APPLICABLE PROVISIONS OF NDS (NATIONAL DESIGN SPEC. BY AF&PA) AND TPI. ALPINE CONNECTOR PLATES ARE MADE OF 20/18/16GA (W,H/S/K) ASTM A653 GRADE 40/60 (W, K/H,S) GALV. STEEL. APPLY PLATES TO EACH FACE OF TRUSS AND, UNLESS OTHERWISE LOCATED ON THIS DESIGN, POSITION PER DRAWINGS 160A-Z. ANY INSPECTION OF PLATES FOLLOWED BY (1) SHALL BE PER ANNEX A3 OF TPI1-2002 SEC.3. A SEAL ON THIS DRAWING INDICATES ACCEPTANCE OF PROFESSIONAL ENGINEERING RESPONSIBILITY SOLELY FOR THE TRUSS COMPONENT DESIGN SHOWN. THE SUITABILITY AND USE OF THIS COMPONENT FOR ANY BUILDING IS THE RESPONSIBILITY OF THE BUILDING DESIGNER PER ANSI/TPI 1 SEC. 2.

ARTHUR B. FISHER
LICENSE
No.59687
STATE OF FLORIDA
PROFESSIONAL ENGINEER
Jan 27 '06

TC LL	20.0 PSF	REF R487-- 67144
TC DL	10.0 PSF	DATE 01/26/06
BC DL	10.0 PSF	DRW HCUSR487 06026032
BC LL	0.0 PSF	HC-ENG JB/AF
TOT.LD.	40.0 PSF	SEQN- 27295
DUR.FAC.	1.25	
SPACING	24.0"	JREF- 1SU7487_Z03

(6-036 PERRY / LOT 3 PHASE II STONEHANGE - C03)

Top chord 2x4 SP #2 Dense
Bot chord 2x4 SP #2 Dense

Deflection meets L/360 live and L/240 total load.

110 mph wind, 8.60 ft mean hgt, ASCE 7-98, CLOSED bldg, Located anywhere in roof, CAT II, EXP B, wind TC DL=5.0 psf, wind BC DL=5.0 psf.

Provide (2) 16d common nails(0.162"x3.5"), toe nailed at Top chord.
Provide (2) 16d common nails(0.162"x3.5"), toe nailed at Bot chord.

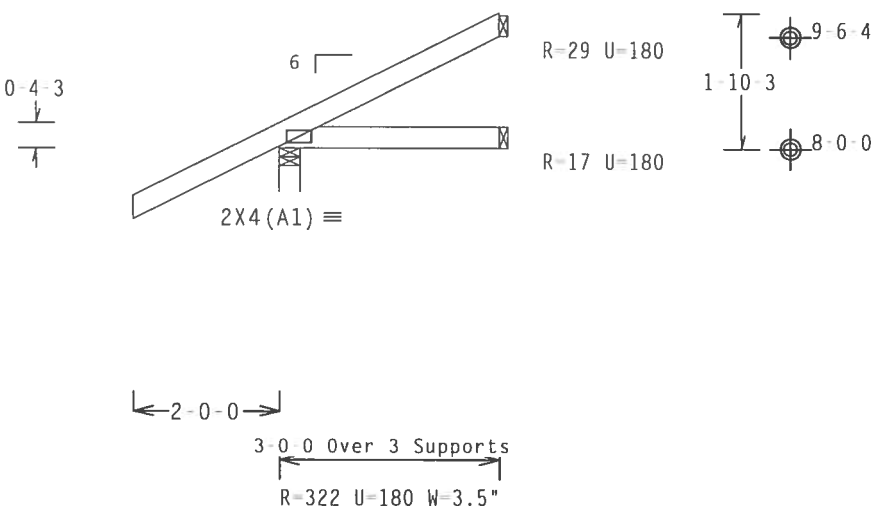

PLT TYP. Wave TPI Design Crit: TPI-1995(STD)/FBC 7.04.0[illegible] QTY:2 FL/-/4/-/-/R/- Scale =.375"/Ft.

ALPINE
Alpine Engineered Products, Inc.
1950 Marley Drive
Haines City, FL 33844
FL Certificate of Authorization # 567

WARNING TRUSSES REQUIRE EXTREME CARE IN FABRICATION, HANDLING, SHIPPING, INSTALLING AND BRACING. REFER TO BCSI 1-03 (BUILDING COMPONENT SAFETY INFORMATION), PUBLISHED BY TPI (TRUSS PLATE INSTITUTE, 583 D'ONOFRIO DR., SUITE 200, MADISON, WI 53719) AND WTCA (WOOD TRUSS COUNCIL OF AMERICA, 6300 ENTERPRISE LN, MADISON, WI 53719) FOR SAFETY PRACTICES PRIOR TO PERFORMING THESE FUNCTIONS. UNLESS OTHERWISE INDICATED, TOP CHORD SHALL HAVE PROPERLY ATTACHED STRUCTURAL PANELS AND BOTTOM CHORD SHALL HAVE A PROPERLY ATTACHED RIGID CEILING.

IMPORTANTFURNISH A COPY OF THIS DESIGN TO THE INSTALLATION CONTRACTOR. ALPINE ENGINEERED PRODUCTS, INC. SHALL NOT BE RESPONSIBLE FOR ANY DEVIATION FROM THIS DESIGN; ANY FAILURE TO BUILD THE TRUSS IN CONFORMANCE WITH TPI; OR FABRICATING, HANDLING, SHIPPING, INSTALLING & BRACING OF TRUSSES. DESIGN CONFORMS WITH APPLICABLE PROVISIONS OF NDS (NATIONAL DESIGN SPEC, BY AF&PA) AND TPI. ALPINE CONNECTOR PLATES ARE MADE OF 20/18/16GA (W,H/S/K) ASTM A653 GRADE 40/60 (W, K/H,S) GALV. STEEL. APPLY PLATES TO EACH FACE OF TRUSS AND, UNLESS OTHERWISE LOCATED ON THIS DESIGN, POSITION PER DRAWINGS 160A-Z. ANY INSPECTION OF PLATES FOLLOWED BY (I) SHALL BE PER ANNEX A3 OF TPI1-2002 SEC.3. A SEAL ON THIS DRAWING INDICATES ACCEPTANCE OF PROFESSIONAL ENGINEERING RESPONSIBILITY SOLELY FOR THE TRUSS COMPONENT DESIGN SHOWN. THE SUITABILITY AND USE OF THIS COMPONENT FOR ANY BUILDING IS THE RESPONSIBILITY OF THE BUILDING DESIGNER PER ANSI/TPI 1 SEC. 2.

ARTHUR R. FISHER
LICENSE
No. 59687
STATE OF FLORIDA
PROFESSIONAL ENGINEER
Jan 27 '06

TC LL	20.0 PSF	REF	R487-- 67145
TC DL	10.0 PSF	DATE	01/26/06
BC DL	10.0 PSF	DRW	HCUSR487 06026033
BC LL	0.0 PSF	HC-ENG	JB/AF *
TOT.LD.	40.0 PSF	SEQN-	27296
DUR.FAC.	1.25		
SPACING	24.0"	JREF-	1SU7487_Z03

(6 036 PERRY / LOT 3 PHASE II STONEHANGE - LOT)

Top chord 2x4 SP #2 Dense
Bot chord 2x4 SP #2 Dense

110 mph wind, 8.10 ft mean hgt, ASCE 7-98, CLOSED bldg, Located anywhere in roof, CAT II, EXP B, wind TC DL=5.0 psf, wind BC DL=5.0 psf.

Deflection meets L/360 live and L/240 total load.

Provide (2) 16d common nails(0.162"x3.5"), toe nailed at Top chord.
Provide (2) 16d common nails(0.162"x3.5"), toe nailed at Bot chord.

* PROVIDE CONNECTION FOR 191# UP OR DOWN AT A 1.25 DURATION FACTOR.

R=-191 U= *

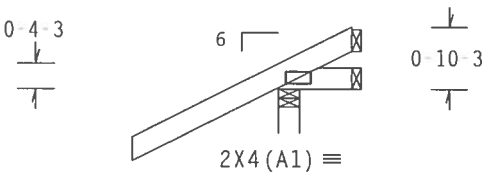

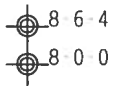

R=-19 U=180

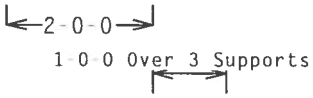

R=418 U=180 W=3.5"

PLT TYP. Wave TPI Design Crit: TPI-1995(STD)/FBC 7.04.08 [illegible] QTY:6 FL/-/4/-/-/R/- Scale =.375"/Ft.

ALPINE
Alpine Engineered Products, Inc.
1950 Marley Drive
Haines City, FL 33844
FL Certificate of Authorization # 567

WARNING TRUSSES REQUIRE EXTREME CARE IN FABRICATION, HANDLING, SHIPPING, INSTALLING AND BRACING. REFER TO BCSI 1-03 (BUILDING COMPONENT SAFETY INFORMATION), PUBLISHED BY TPI (TRUSS PLATE INSTITUTE, 583 D'ONOFRIO DR., SUITE 200, MADISON, WI 53719) AND WTCA (WOOD TRUSS COUNCIL OF AMERICA, 6300 ENTERPRISE LN, MADISON, WI 53719) FOR SAFETY PRACTICES PRIOR TO PERFORMING THESE FUNCTIONS. UNLESS OTHERWISE INDICATED, TOP CHORD SHALL HAVE PROPERLY ATTACHED STRUCTURAL PANELS AND BOTTOM CHORD SHALL HAVE A PROPERLY ATTACHED RIGID CEILING.

IMPORTANT FURNISH A COPY OF THIS DESIGN TO THE INSTALLATION CONTRACTOR. ALPINE ENGINEERED PRODUCTS, INC. SHALL NOT BE RESPONSIBLE FOR ANY DEVIATION FROM THIS DESIGN; ANY FAILURE TO BUILD THE TRUSS IN CONFORMANCE WITH TPI; OR FABRICATING, HANDLING, SHIPPING, INSTALLING & BRACING OF TRUSSES. DESIGN CONFORMS WITH APPLICABLE PROVISIONS OF NDS (NATIONAL DESIGN SPEC. BY AF&PA) AND TPI. ALPINE CONNECTOR PLATES ARE MADE OF 20/18/16GA (W,H/S/K) ASTM A653 GRADE 40/60 (W, K/H,S) GALV. STEEL. APPLY PLATES TO EACH FACE OF TRUSS AND, UNLESS OTHERWISE LOCATED ON THIS DESIGN, POSITION PER DRAWINGS 160A-Z. ANY INSPECTION OF PLATES FOLLOWED BY (1) SHALL BE PER ANNEX A3 OF TPI1-2002 SEC.3. A SEAL ON THIS DRAWING INDICATES ACCEPTANCE OF PROFESSIONAL ENGINEERING RESPONSIBILITY SOLELY FOR THE TRUSS COMPONENT DESIGN SHOWN. THE SUITABILITY AND USE OF THIS COMPONENT FOR ANY BUILDING IS THE RESPONSIBILITY OF THE BUILDING DESIGNER PER ANSI/TPI 1 SEC. 2.

ARTHUR R. FISHER LICENSE No.59687 STATE OF FLORIDA PROFESSIONAL ENGINEER
Jan [illegible] '06

TC LL	20.0 PSF	REF	R487-- 67146
TC DL	10.0 PSF	DATE	01/26/06
BC DL	10.0 PSF	DRW	HCUSR487 06026007
BC LL	0.0 PSF	HC-ENG	JB/AF
TOT.LD.	40.0 PSF	SEQN-	27272
DUR.FAC.	1.25		
SPACING	24.0"	JREF-	1SU7487_Z03

(6 036 PERRY / LOT 3 PHASE II STONEHANGE HOMT)

Top chord 2x4 SP #2 Dense
Bot chord 2x4 SP #2 Dense
Webs 2x4 SP #3 :W1 2x4 SP #2 Dense:

Hipjack supports 7-0-0 setback jacks with no webs.

Provide (2) 16d common nails(0.162"x3.5"), toe nailed at Top chord.
Provide (3) 16d common nails(0.162"x3.5"), toe nailed at Bot chord.

110 mph wind, 15.00 ft mean hgt, ASCE 7-98, CLOSED bldg, Located anywhere in roof, CAT II, EXP B, wind TC DL=5.0 psf, wind BC DL=5.0 psf.

Deflection meets L/360 live and L/240 total load.

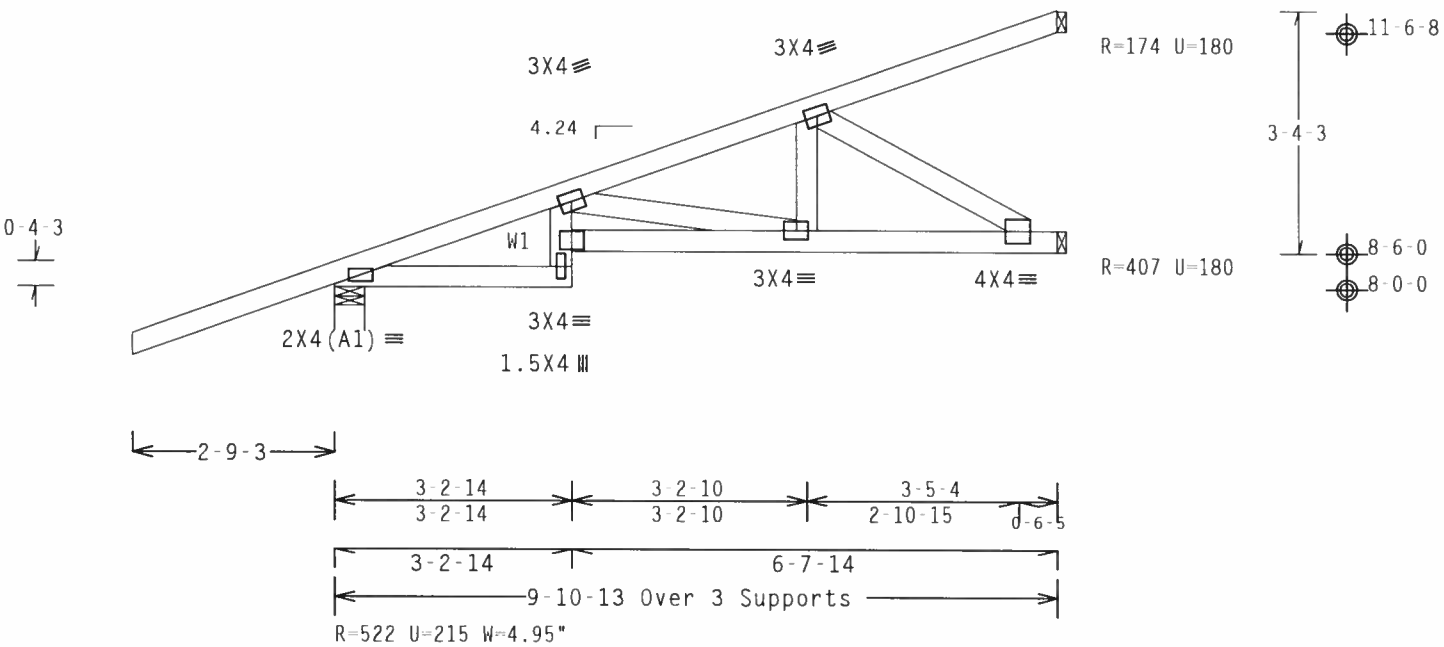

PLT TYP. Wave TPI Design Crit: TPI-1995(STD)/FBC 7.04.08 QTY:2 FL/-/4/-/-/R/- Scale =.375"/Ft.

ALPINE
Alpine Engineered Products, Inc.
1950 Marley Drive
Haines City, FL 33844
FL Certificate of Authorization # 567

WARNING TRUSSES REQUIRE EXTREME CARE IN FABRICATION, HANDLING, SHIPPING, INSTALLING AND BRACING. REFER TO BCSI 1-03 (BUILDING COMPONENT SAFETY INFORMATION), PUBLISHED BY TPI (TRUSS PLATE INSTITUTE, 583 D'ONOFRIO DR., SUITE 200, MADISON, WI 53719) AND WTCA (WOOD TRUSS COUNCIL OF AMERICA, 6300 ENTERPRISE LN, MADISON, WI 53719) FOR SAFETY PRACTICES PRIOR TO PERFORMING THESE FUNCTIONS. UNLESS OTHERWISE INDICATED, TOP CHORD SHALL HAVE PROPERLY ATTACHED STRUCTURAL PANELS AND BOTTOM CHORD SHALL HAVE A PROPERLY ATTACHED RIGID CEILING.

IMPORTANTFURNISH A COPY OF THIS DESIGN TO THE INSTALLATION CONTRACTOR. ALPINE ENGINEERED PRODUCTS, INC. SHALL NOT BE RESPONSIBLE FOR ANY DEVIATION FROM THIS DESIGN; ANY FAILURE TO BUILD THE TRUSS IN CONFORMANCE WITH TPI; OR FABRICATING, HANDLING, SHIPPING, INSTALLING & BRACING OF TRUSSES. DESIGN CONFORMS WITH APPLICABLE PROVISIONS OF NDS (NATIONAL DESIGN SPEC. BY AF&PA) AND TPI. ALPINE CONNECTOR PLATES ARE MADE OF 20/18/16GA (W,H/S/K) ASTM A653 GRADE 40/60 (W, K/H,S) GALV. STEEL. APPLY PLATES TO EACH FACE OF TRUSS AND, UNLESS OTHERWISE LOCATED ON THIS DESIGN, POSITION PER DRAWINGS 160A-Z. ANY INSPECTION OF PLATES FOLLOWED BY (1) SHALL BE PER ANNEX A3 OF TPI1-2002 SEC.3. A SEAL ON THIS DRAWING INDICATES ACCEPTANCE OF PROFESSIONAL ENGINEERING RESPONSIBILITY SOLELY FOR THE TRUSS COMPONENT DESIGN SHOWN. THE SUITABILITY AND USE OF THIS COMPONENT FOR ANY BUILDING IS THE RESPONSIBILITY OF THE BUILDING DESIGNER PER ANSI/TPI 1 SEC. 2.

ARTHUR R. FISHER
LICENSE
No. 59687
STATE OF FLORIDA
PROFESSIONAL ENGINEER
Jan 26 '06

TC LL	20.0 PSF	REF	R487-- 67147
TC DL	10.0 PSF	DATE	01/26/06
BC DL	10.0 PSF	DRW	HCUSR487 06026004
BC LL	0.0 PSF	HC-ENG	DF/AF
TOT.LD.	40.0 PSF	SEQN-	4902
DUR.FAC.	1.25		
SPACING	24.0"	JREF-	1SU7487_Z03

(6-036 PERRY / LOT 3 PHASE II STONEHANGE EAST)

Top chord 2x4 SP #2 Dense
Bot chord 2x4 SP #2 Dense
Webs 2x4 SP #3

Deflection meets L/360 live and L/240 total load.

110 mph wind, 9.60 ft mean hgt, ASCE 7-98, CLOSED bldg, not located within 4.50 ft from roof edge, CAT II, EXP B, wind TC DL=5.0 psf, wind BC DL=5.0 psf.

Provide (2) 16d common nails(0.162"x3.5"), toe nailed at Top chord.
Provide (2) 16d common nails(0.162"x3.5"), toe nailed at Bot chord.

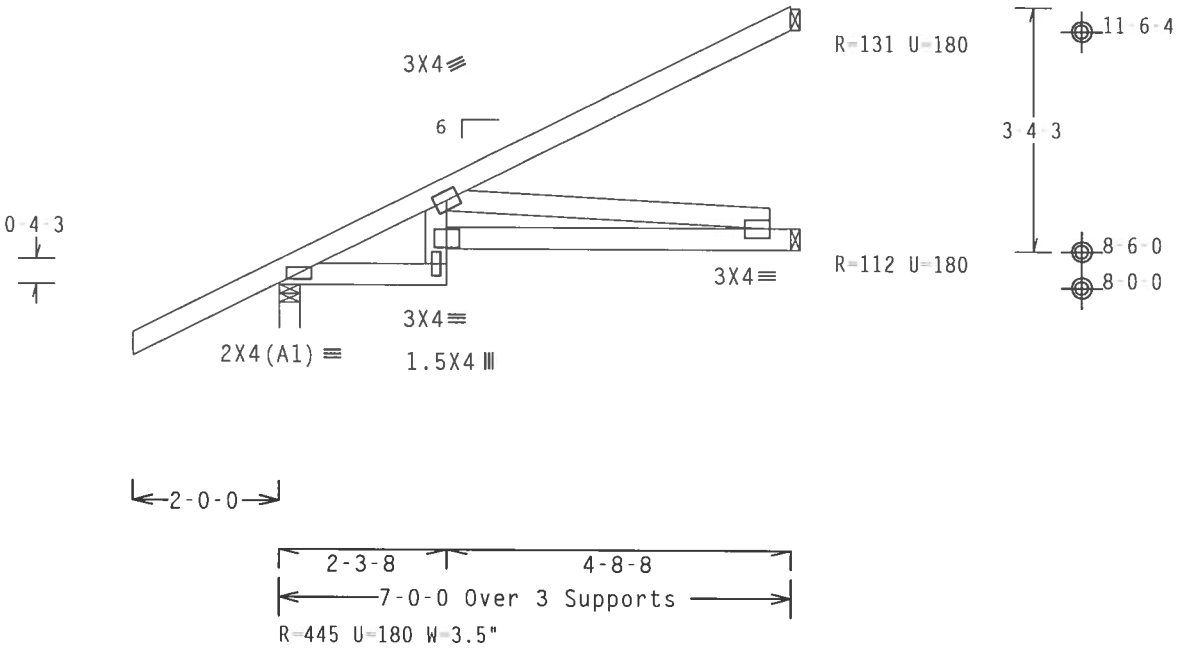

PLT TYP. Wave TPI Design Crit: TPI-1995(STD)/FBC 7.04.0305 QTY:3 FL/-/4/-/-/R/- Scale =.375"/Ft.

ALPINE
Alpine Engineered Products, Inc.
1950 Marley Drive
Haines City, FL 33844
FL Certificate of Authorization # 567

WARNING TRUSSES REQUIRE EXTREME CARE IN FABRICATION, HANDLING, SHIPPING, INSTALLING AND BRACING. REFER TO BCSI 1-03 (BUILDING COMPONENT SAFETY INFORMATION), PUBLISHED BY TPI (TRUSS PLATE INSTITUTE, 583 D'ONOFRIO DR., SUITE 200, MADISON, WI 53719) AND WTCA (WOOD TRUSS COUNCIL OF AMERICA, 6300 ENTERPRISE LN, MADISON, WI 53719) FOR SAFETY PRACTICES PRIOR TO PERFORMING THESE FUNCTIONS. UNLESS OTHERWISE INDICATED, TOP CHORD SHALL HAVE PROPERLY ATTACHED STRUCTURAL PANELS AND BOTTOM CHORD SHALL HAVE A PROPERLY ATTACHED RIGID CEILING.

IMPORTANTFURNISH A COPY OF THIS DESIGN TO THE INSTALLATION CONTRACTOR. ALPINE ENGINEERED PRODUCTS, INC. SHALL NOT BE RESPONSIBLE FOR ANY DEVIATION FROM THIS DESIGN; ANY FAILURE TO BUILD THE TRUSS IN CONFORMANCE WITH TPI; OR FABRICATING, HANDLING, SHIPPING, INSTALLING & BRACING OF TRUSSES. DESIGN CONFORMS WITH APPLICABLE PROVISIONS OF NDS (NATIONAL DESIGN SPEC. BY AF&PA) AND TPI. ALPINE CONNECTOR PLATES ARE MADE OF 20/18/16GA (H,H/S/K) ASTM A653 GRADE 40/60 (H, K/H,S) GALV. STEEL. APPLY PLATES TO EACH FACE OF TRUSS AND, UNLESS OTHERWISE LOCATED ON THIS DESIGN, POSITION PER DRAWINGS 160A-Z. ANY INSPECTION OF PLATES FOLLOWED BY (1) SHALL BE PER ANNEX A3 OF TPII-2002 SEC.3. A SEAL ON THIS DRAWING INDICATES ACCEPTANCE OF PROFESSIONAL ENGINEERING RESPONSIBILITY SOLELY FOR THE TRUSS COMPONENT DESIGN SHOWN. THE SUITABILITY AND USE OF THIS COMPONENT FOR ANY BUILDING IS THE RESPONSIBILITY OF THE BUILDING DESIGNER PER ANSI/TPI 1 SEC. 2.

ARTHUR R. FISHER LICENSE No.59687 STATE OF FLORIDA PROFESSIONAL ENGINEER
Jan 27 '06

TC LL	20.0 PSF	REF	R487-- 67148
TC DL	10.0 PSF	DATE	01/26/06
BC DL	10.0 PSF	DRW	HCUSR487 06026018
BC LL	0.0 PSF	HC-ENG	JB/AF *
TOT.LD.	40.0 PSF	SEQN-	27282
DUR.FAC.	1.25		
SPACING	24.0"	JREF-	1SU7487_Z03

Top chord 2x4 SP #2 Dense
Bot chord 2x4 SP #2 Dense
Webs 2x4 SP #3

Deflection meets L/360 live and L/240 total load.

110 mph wind, 9.10 ft mean hgt, ASCE 7-98, CLOSED bldg, not located within 4.50 ft from roof edge, CAT II, EXP B, wind TC DL=5.0 psf, wind BC DL=5.0 psf.

Provide (2) 16d common nails(0.162"x3.5"), toe nailed at Top chord.
Provide (2) 16d common nails(0.162"x3.5"), toe nailed at Bot chord.

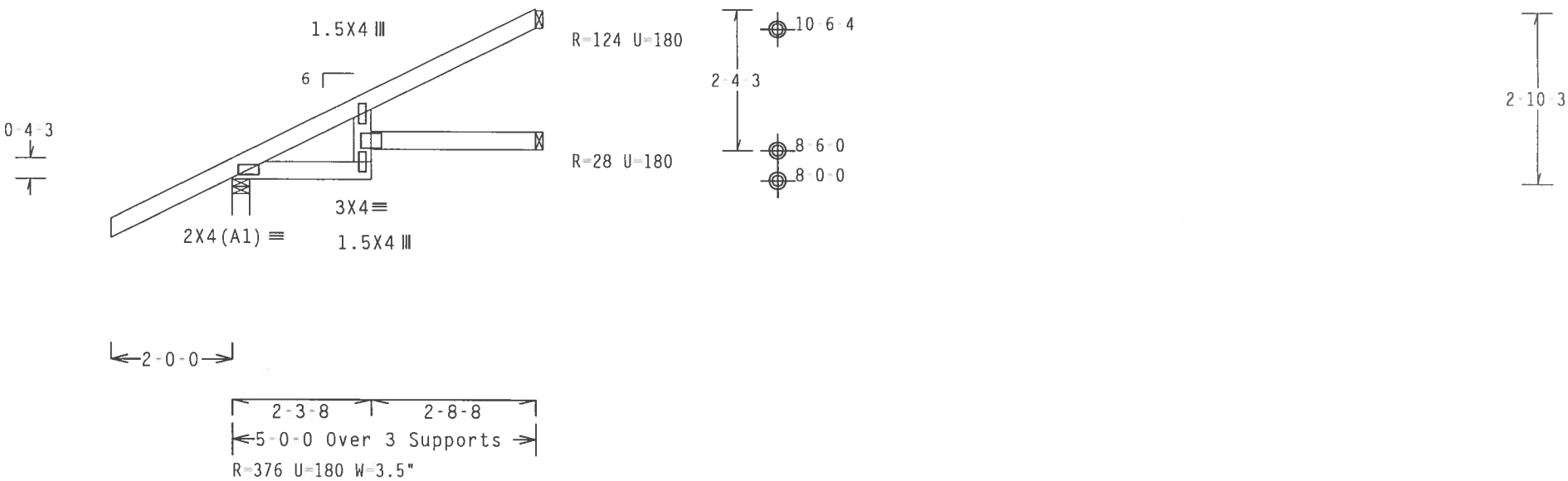

PLT TYP. Wave TPI Design Crit: TPI-1995(STD)/FBC 7.04.0[illegible] QTY:4 FL/-/4/-/-/R/- Scale =.375"/Ft.

ALPINE
Alpine Engineered Products, Inc.
1950 Marley Drive
Haines City, FL 33844
FL Certificate of Authorization # 567

WARNING TRUSSES REQUIRE EXTREME CARE IN FABRICATION, HANDLING, SHIPPING, INSTALLING AND BRACING. REFER TO BCSI 1-03 (BUILDING COMPONENT SAFETY INFORMATION), PUBLISHED BY TPI (TRUSS PLATE INSTITUTE, 583 D'ONOFRIO DR., SUITE 200, MADISON, WI 53719) AND WTCA (WOOD TRUSS COUNCIL OF AMERICA, 6300 ENTERPRISE LN, MADISON, WI 53719) FOR SAFETY PRACTICES PRIOR TO PERFORMING THESE FUNCTIONS. UNLESS OTHERWISE INDICATED, TOP CHORD SHALL HAVE PROPERLY ATTACHED STRUCTURAL PANELS AND BOTTOM CHORD SHALL HAVE A PROPERLY ATTACHED RIGID CEILING.

IMPORTANT FURNISH A COPY OF THIS DESIGN TO THE INSTALLATION CONTRACTOR. ALPINE ENGINEERED PRODUCTS, INC. SHALL NOT BE RESPONSIBLE FOR ANY DEVIATION FROM THIS DESIGN; ANY FAILURE TO BUILD THE TRUSS IN CONFORMANCE WITH TPI; OR FABRICATING, HANDLING, SHIPPING, INSTALLING & BRACING OF TRUSSES. DESIGN CONFORMS WITH APPLICABLE PROVISIONS OF NDS (NATIONAL DESIGN SPEC. BY AF&PA) AND TPI. ALPINE CONNECTOR PLATES ARE MADE OF 20/18/16GA (W,H/S/K) ASTM A653 GRADE 40/60 (W, K/H,S) GALV. STEEL. APPLY PLATES TO EACH FACE OF TRUSS AND, UNLESS OTHERWISE LOCATED ON THIS DESIGN, POSITION PER DRAWINGS 160A Z. ANY INSPECTION OF PLATES FOLLOWED BY (1) SHALL BE PER ANNEX A3 OF TPI1-2002 SEC.3. A SEAL ON THIS DRAWING INDICATES ACCEPTANCE OF PROFESSIONAL ENGINEERING RESPONSIBILITY SOLELY FOR THE TRUSS COMPONENT DESIGN SHOWN. THE SUITABILITY AND USE OF THIS COMPONENT FOR ANY BUILDING IS THE RESPONSIBILITY OF THE BUILDING DESIGNER PER ANSI/TPI 1 SEC. 2.

ARTHUR R. FISHER LICENSE No.59687 STATE OF FLORIDA PROFESSIONAL ENGINEER
Jan 2[illegible] '06

TC LL	20.0 PSF	REF R487-- 67149
TC DL	10.0 PSF	DATE 01/26/06
BC DL	10.0 PSF	DRW HCUSR487 06026016
BC LL	0.0 PSF	HC-ENG JB/AF *
TOT.LD.	40.0 PSF	SEQN- 27280
DUR.FAC.	1.25	
SPACING	24.0"	JREF- 1SU7487_Z03

(6 036 PERRY / LOT 3 PHASE II STONEHANGE COST)

Top chord 2x4 SP #2 Dense
Bot chord 2x4 SP #2 Dense
Webs 2x4 SP #3

Deflection meets L/360 live and L/240 total load.

110 mph wind, 8.60 ft mean hgt, ASCE 7-98, CLOSED bldg, Located anywhere in roof, CAT II, EXP B, wind TC DL=5.0 psf, wind BC DL=5.0 psf.

Provide (2) 16d common nails(0.162"x3.5"), toe nailed at Top chord.
Provide (2) 16d common nails(0.162"x3.5"), toe nailed at Bot chord.

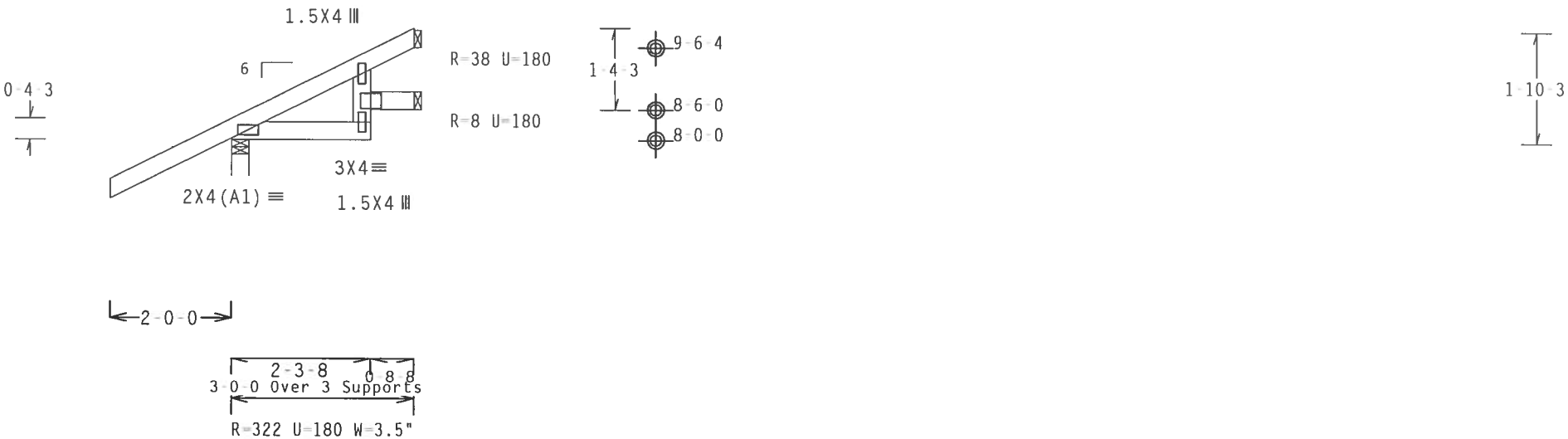

PLT TYP. Wave TPI Design Crit: TPI-1995(STD)/FBC 7.04.08 QTY:4 FL/-/4/-/-/R/- Scale =.375"/Ft.

ALPINE
Alpine Engineered Products, Inc.
1950 Marley Drive
Haines City, FL 33844
FL Certificate of Authorization # 567

WARNING TRUSSES REQUIRE EXTREME CARE IN FABRICATION, HANDLING, SHIPPING, INSTALLING AND BRACING. REFER TO BCSI 1-03 (BUILDING COMPONENT SAFETY INFORMATION), PUBLISHED BY TPI (TRUSS PLATE INSTITUTE, 583 D'ONOFRIO DR., SUITE 200, MADISON, WI 53719) AND WTCA (WOOD TRUSS COUNCIL OF AMERICA, 6300 ENTERPRISE LN, MADISON, WI 53719) FOR SAFETY PRACTICES PRIOR TO PERFORMING THESE FUNCTIONS. UNLESS OTHERWISE INDICATED, TOP CHORD SHALL HAVE PROPERLY ATTACHED STRUCTURAL PANELS AND BOTTOM CHORD SHALL HAVE A PROPERLY ATTACHED RIGID CEILING.

IMPORTANT FURNISH A COPY OF THIS DESIGN TO THE INSTALLATION CONTRACTOR. ALPINE ENGINEERED PRODUCTS, INC. SHALL NOT BE RESPONSIBLE FOR ANY DEVIATION FROM THIS DESIGN; ANY FAILURE TO BUILD THE TRUSS IN CONFORMANCE WITH TPI; OR FABRICATING, HANDLING, SHIPPING, INSTALLING & BRACING OF TRUSSES. DESIGN CONFORMS WITH APPLICABLE PROVISIONS OF NDS (NATIONAL DESIGN SPEC. BY AF&PA) AND TPI. ALPINE CONNECTOR PLATES ARE MADE OF 20/18/16GA (W,H/S/K) ASTM A653 GRADE 40/60 (W, K/H,S) GALV. STEEL. APPLY PLATES TO EACH FACE OF TRUSS AND, UNLESS OTHERWISE LOCATED ON THIS DESIGN, POSITION PER DRAWINGS 160A-Z. ANY INSPECTION OF PLATES FOLLOWED BY (1) SHALL BE PER ANNEX A3 OF TPI1-2002 SEC.3. A SEAL ON THIS DRAWING INDICATES ACCEPTANCE OF PROFESSIONAL ENGINEERING RESPONSIBILITY SOLELY FOR THE TRUSS COMPONENT DESIGN SHOWN. THE SUITABILITY AND USE OF THIS COMPONENT FOR ANY BUILDING IS THE RESPONSIBILITY OF THE BUILDING DESIGNER PER ANSI/TPI 1 SEC. 2.

ARTHUR R. FISHER LICENSE No.59687 STATE OF FLORIDA PROFESSIONAL ENGINEER
Jan 27, '06

TC LL	20.0 PSF	REF	R487-- 67150
TC DL	10.0 PSF	DATE	01/26/06
BC DL	10.0 PSF	DRW	HCUSR487 06026006
BC LL	0.0 PSF	HC-ENG	JB/AF *
TOT.LD.	40.0 PSF	SEQN-	27271
DUR.FAC.	1.25		
SPACING	24.0"	JREF-	1SU7487_Z03

(6-036 PERRY / LOT 3 PHASE II STONEHANGE - MGE)

Top chord 2x4 SP #2 Dense
Bot chord 2x4 SP #2 Dense
Webs 2x4 SP #3

See DWGS A11015EC1103 & GBLLETIN0405 for more requirements.

Deflection meets L/360 live and L/240 total load.

110 mph wind, 9.21 ft mean hgt, ASCE 7-98, CLOSED bldg, Located anywhere in roof, CAT II, EXP B, wind TC DL=5.0 psf, wind BC DL=5.0 psf.

Right end vertical not exposed to wind pressure.

(**) Plate relocated as shown.

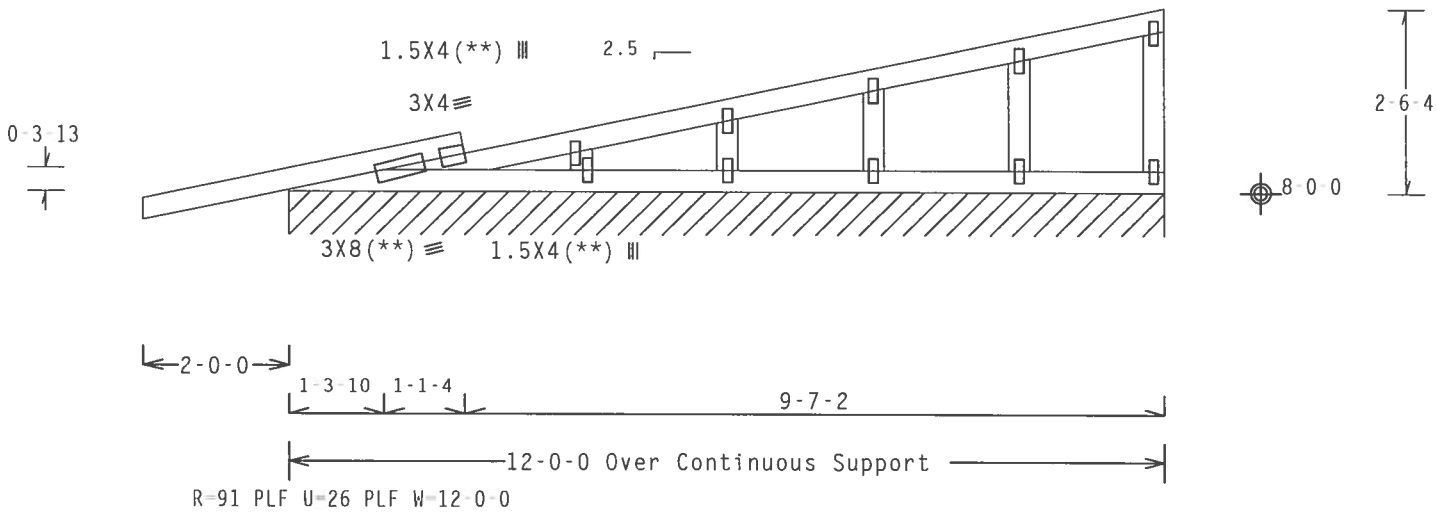

Note: All Plates Are 1.5X4 Except As Shown.

PLT TYP. Wave TPI Design Crit: TPI-1995(STD)/FBC 7.04.0[illegible] QTY:1 FL/-/4/-/-/R/- Scale =.375"/Ft.

ALPINE
Alpine Engineered Products, Inc.
1950 Marley Drive
Haines City, FL 33844
FL Certificate of Authorization # 567

WARNING TRUSSES REQUIRE EXTREME CARE IN FABRICATION, HANDLING, SHIPPING, INSTALLING AND BRACING. REFER TO BCSI 1-03 (BUILDING COMPONENT SAFETY INFORMATION), PUBLISHED BY TPI (TRUSS PLATE INSTITUTE, 583 D'ONOFRIO DR., SUITE 200, MADISON, WI 53719) AND WTCA (WOOD TRUSS COUNCIL OF AMERICA, 6300 ENTERPRISE LN, MADISON, WI 53719) FOR SAFETY PRACTICES PRIOR TO PERFORMING THESE FUNCTIONS. UNLESS OTHERWISE INDICATED, TOP CHORD SHALL HAVE PROPERLY ATTACHED STRUCTURAL PANELS AND BOTTOM CHORD SHALL HAVE A PROPERLY ATTACHED RIGID CEILING.

IMPORTANT FURNISH A COPY OF THIS DESIGN TO THE INSTALLATION CONTRACTOR. ALPINE ENGINEERED PRODUCTS, INC. SHALL NOT BE RESPONSIBLE FOR ANY DEVIATION FROM THIS DESIGN; ANY FAILURE TO BUILD THE TRUSS IN CONFORMANCE WITH TPI; OR FABRICATING, HANDLING, SHIPPING, INSTALLING & BRACING OF TRUSSES. DESIGN CONFORMS WITH APPLICABLE PROVISIONS OF NDS (NATIONAL DESIGN SPEC. BY AF&PA) AND TPI. ALPINE CONNECTOR PLATES ARE MADE OF 20/18/16GA (W,H/S/K) ASTM A653 GRADE 40/60 (W, K/H,S) GALV. STEEL. APPLY PLATES TO EACH FACE OF TRUSS AND, UNLESS OTHERWISE LOCATED ON THIS DESIGN, POSITION PER DRAWINGS 160A Z. ANY INSPECTION OF PLATES FOLLOWED BY (1) SHALL BE PER ANNEX A3 OF TPI1-2002 SEC.3. A SEAL ON THIS DRAWING INDICATES ACCEPTANCE OF PROFESSIONAL ENGINEERING RESPONSIBILITY SOLELY FOR THE TRUSS COMPONENT DESIGN SHOWN. THE SUITABILITY AND USE OF THIS COMPONENT FOR ANY BUILDING IS THE RESPONSIBILITY OF THE BUILDING DESIGNER PER ANSI/TPI 1 SEC. 2.

ARTHUR R. FISHER LICENSE No.59687 STATE OF FLORIDA PROFESSIONAL ENGINEER

Jan 27 '06

TC LL	20.0 PSF	REF R487-- 67151
TC DL	10.0 PSF	DATE 01/26/06
BC DL	10.0 PSF	DRW HCUSR487 06026003
BC LL	0.0 PSF	HC-ENG JB/AF
TOT.LD.	40.0 PSF	SEQN- 27332
DUR.FAC.	1.25	
SPACING	24.0"	JREF- 1SU7487_Z03

(6 036 PERRY / LOT 3 PHASE II STONEHANGE M)

Top chord 2x4 SP #2 Dense
Bot chord 2x4 SP #2 Dense
Webs 2x4 SP #3

Deflection meets L/360 live and L/240 total load.

110 mph wind, 9.39 ft mean hgt, ASCE 7-98, CLOSED bldg, Located anywhere in roof, CAT II, EXP B, wind TC DL=5.0 psf, wind BC DL=5.0 psf.

Right end vertical not exposed to wind pressure.

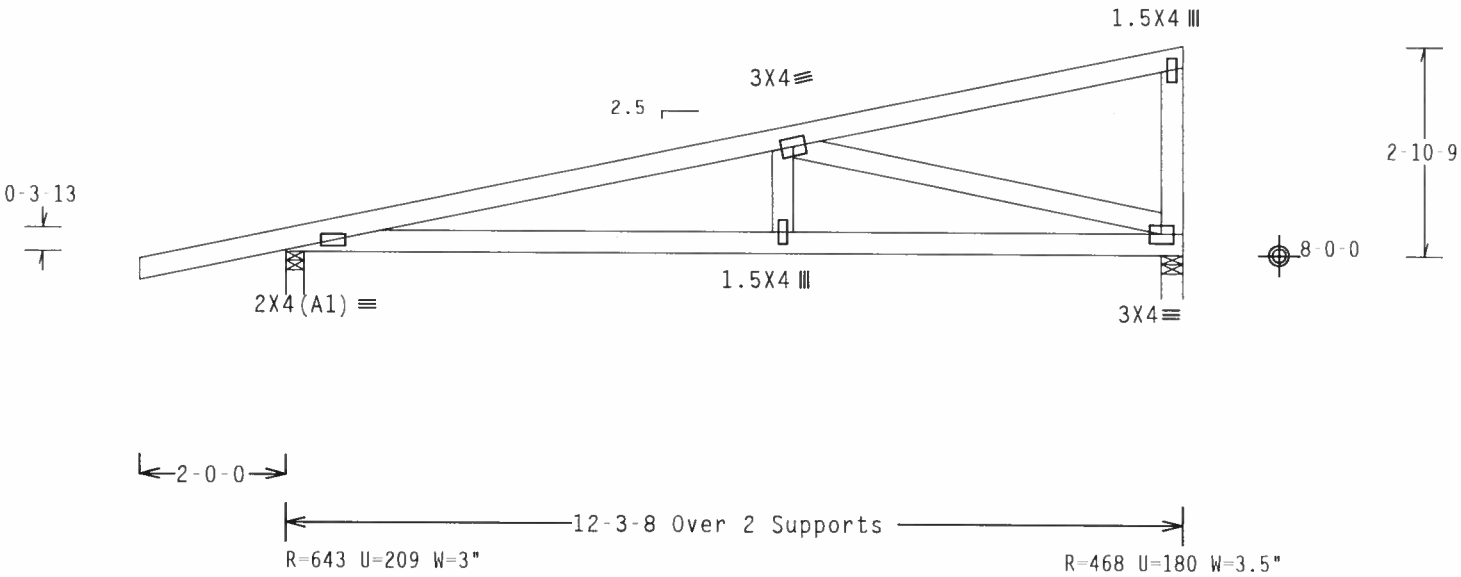

PLT TYP. Wave TPI Design Crit: TPI-1995(STD)/FBC 7.04.0[illegible] QTY:4 FL/-/4/-/-/R/- Scale =.375"/Ft.

ALPINE
Alpine Engineered Products, Inc.
1950 Marley Drive
Haines City, FL 33844
FL Certificate of Authorization # 567

WARNING TRUSSES REQUIRE EXTREME CARE IN FABRICATION, HANDLING, SHIPPING, INSTALLING AND BRACING. REFER TO BCSI 1-03 (BUILDING COMPONENT SAFETY INFORMATION), PUBLISHED BY TPI (TRUSS PLATE INSTITUTE, 583 D'ONOFRIO DR., SUITE 200, MADISON, WI 53719) AND WTCA (WOOD TRUSS COUNCIL OF AMERICA, 6300 ENTERPRISE LN, MADISON, WI 53719) FOR SAFETY PRACTICES PRIOR TO PERFORMING THESE FUNCTIONS. UNLESS OTHERWISE INDICATED, TOP CHORD SHALL HAVE PROPERLY ATTACHED STRUCTURAL PANELS AND BOTTOM CHORD SHALL HAVE A PROPERLY ATTACHED RIGID CEILING.

IMPORTANTFURNISH A COPY OF THIS DESIGN TO THE INSTALLATION CONTRACTOR. ALPINE ENGINEERED PRODUCTS, INC. SHALL NOT BE RESPONSIBLE FOR ANY DEVIATION FROM THIS DESIGN; ANY FAILURE TO BUILD THE TRUSS IN CONFORMANCE WITH TPI; OR FABRICATING, HANDLING, SHIPPING, INSTALLING & BRACING OF TRUSSES. DESIGN CONFORMS WITH APPLICABLE PROVISIONS OF NDS (NATIONAL DESIGN SPEC. BY AFAPA) AND TPI. ALPINE CONNECTOR PLATES ARE MADE OF 20/18/16GA (W,H/S/K) ASTM A653 GRADE 40/60 (W, K/H,S) GALV. STEEL. APPLY PLATES TO EACH FACE OF TRUSS AND, UNLESS OTHERWISE LOCATED ON THIS DESIGN, POSITION PER DRAWINGS 160A-Z. ANY INSPECTION OF PLATES FOLLOWED BY (1) SHALL BE PER ANNEX A3 OF TPI1-2002 SEC.3. A SEAL ON THIS DRAWING INDICATES ACCEPTANCE OF PROFESSIONAL ENGINEERING RESPONSIBILITY SOLELY FOR THE TRUSS COMPONENT DESIGN SHOWN. THE SUITABILITY AND USE OF THIS COMPONENT FOR ANY BUILDING IS THE RESPONSIBILITY OF THE BUILDING DESIGNER PER ANSI/TPI 1 SEC. 2.

ARTHUR B. FISHER LICENSE No.59687 STATE OF FLORIDA PROFESSIONAL ENGINEER
Jan 27 '06

TC LL	20.0 PSF	REF	R487-- 67152
TC DL	10.0 PSF	DATE	01/26/06
BC DL	10.0 PSF	DRW	HCUSR487 06026011
BC LL	0.0 PSF	HC-ENG	JB/AF *
TOT.LD.	40.0 PSF	SEQN-	27276
DUR.FAC.	1.25		
SPACING	24.0"	JREF	1SU7487 Z03

Top chord 2x4 SP #2 Dense
Bot chord 2x4 SP #2 Dense
Webs 2x4 SP #3

Deflection meets L/360 live and L/240 total load.

110 mph wind, 9.08 ft mean hgt, ASCE 7-98, CLOSED bldg, not located within 4.50 ft from roof edge, CAT II, EXP B, wind TC DL=5.0 psf, wind BC DL=5.0 psf.

Right end vertical not exposed to wind pressure.

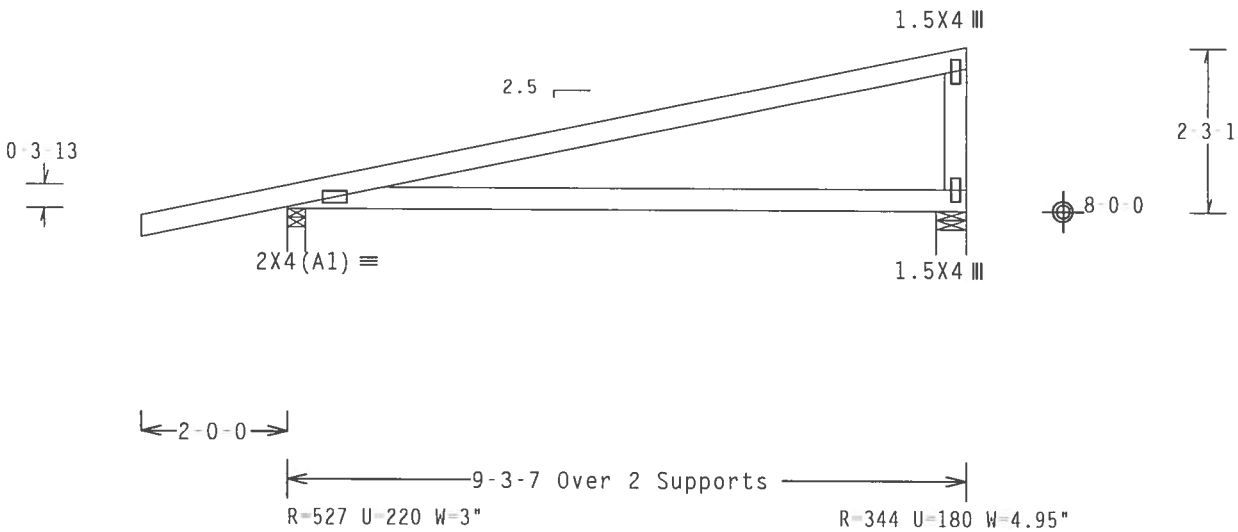

PLT TYP. Wave TPI Design Crit: TPI-1995(STD)/FBC 7.04.0[illegible] TY:1 FL/-/4/-/-/R/- Scale =.375"/Ft.

ALPINE
Alpine Engineered Products, Inc.
1950 Marley Drive
Haines City, FL 33844
FL Certificate of Authorization # 567

WARNING TRUSSES REQUIRE EXTREME CARE IN FABRICATION, HANDLING, SHIPPING, INSTALLING AND BRACING. REFER TO BCSI 1-03 (BUILDING COMPONENT SAFETY INFORMATION), PUBLISHED BY TPI (TRUSS PLATE INSTITUTE, 583 D'ONOFRIO DR., SUITE 200, MADISON, WI 53719) AND WTCA (WOOD TRUSS COUNCIL OF AMERICA, 6300 ENTERPRISE LN, MADISON, WI 53719) FOR SAFETY PRACTICES PRIOR TO PERFORMING THESE FUNCTIONS. UNLESS OTHERWISE INDICATED, TOP CHORD SHALL HAVE PROPERLY ATTACHED STRUCTURAL PANELS AND BOTTOM CHORD SHALL HAVE A PROPERLY ATTACHED RIGID CEILING.

IMPORTANT FURNISH A COPY OF THIS DESIGN TO THE INSTALLATION CONTRACTOR. ALPINE ENGINEERED PRODUCTS, INC. SHALL NOT BE RESPONSIBLE FOR ANY DEVIATION FROM THIS DESIGN; ANY FAILURE TO BUILD THE TRUSS IN CONFORMANCE WITH TPI; OR FABRICATING, HANDLING, SHIPPING, INSTALLING & BRACING OF TRUSSES. DESIGN CONFORMS WITH APPLICABLE PROVISIONS OF NDS (NATIONAL DESIGN SPEC. BY AF&PA) AND TPI. ALPINE CONNECTOR PLATES ARE MADE OF 20/18/16GA (W,H/S/K) ASTM A653 GRADE 40/60 (W, K/H,S) GALV. STEEL. APPLY PLATES TO EACH FACE OF TRUSS AND, UNLESS OTHERWISE LOCATED ON THIS DESIGN, POSITION PER DRAWINGS 160A Z. ANY INSPECTION OF PLATES FOLLOWED BY (1) SHALL BE PER ANNEX A3 OF TPI1-2002 SEC.3. A SEAL ON THIS DRAWING INDICATES ACCEPTANCE OF PROFESSIONAL ENGINEERING RESPONSIBILITY SOLELY FOR THE TRUSS COMPONENT DESIGN SHOWN. THE SUITABILITY AND USE OF THIS COMPONENT FOR ANY BUILDING IS THE RESPONSIBILITY OF THE BUILDING DESIGNER PER ANSI/TPI 1 SEC. 2.

ARTHUR R. FISHER LICENSE No. 59687 STATE OF FLORIDA PROFESSIONAL ENGINEER
Jan 27 '06

TC LL	20.0 PSF	REF	R487-- 67153
TC DL	10.0 PSF	DATE	01/26/06
BC DL	10.0 PSF	DRW	HCUSR487 06026013
BC LL	0.0 PSF	HC-ENG	JB/AF *
TOT.LD.	40.0 PSF	SEQN-	27277
DUR.FAC.	1.25		
SPACING	24.0"	JREF-	1SU7487_Z03

Top chord 2x4 SP #2 Dense
Bot chord 2x4 SP #2 Dense
Webs 2x4 SP #3

Deflection meets L/360 live and L/240 total load.

110 mph wind, 8.92 ft mean hgt, ASCE 7-98, CLOSED bldg, not located within 4.50 ft from roof edge, CAT II, EXP B, wind TC DL=5.0 psf, wind BC DL=5.0 psf.

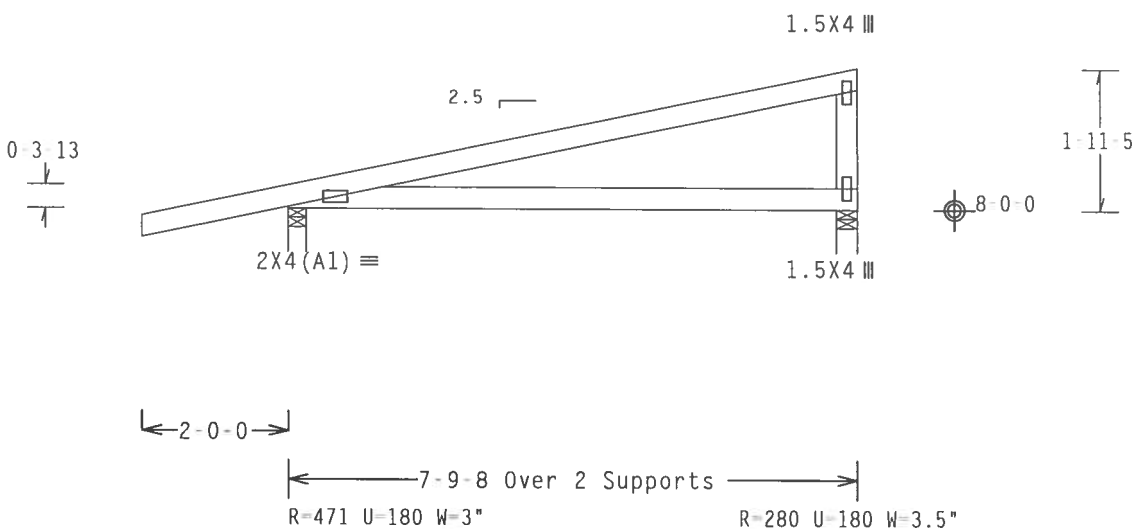

PLT TYP. Wave TPI Design Crit: TPI-1995(STD)/FBC 7.04.0[illegible] QTY:5 FL/-/4/-/-/R/- Scale =.375"/Ft.

ALPINE
Alpine Engineered Products, Inc.
1950 Marley Drive
Haines City, FL 33844
FL Certificate of Authorization # 567

WARNING TRUSSES REQUIRE EXTREME CARE IN FABRICATION, HANDLING, SHIPPING, INSTALLING AND BRACING. REFER TO BCSI 1-03 (BUILDING COMPONENT SAFETY INFORMATION), PUBLISHED BY TPI (TRUSS PLATE INSTITUTE, 583 D'ONOFRIO DR., SUITE 200, MADISON, WI 53719) AND WTCA (WOOD TRUSS COUNCIL OF AMERICA, 6300 ENTERPRISE LN, MADISON, WI 53719) FOR SAFETY PRACTICES PRIOR TO PERFORMING THESE FUNCTIONS. UNLESS OTHERWISE INDICATED, TOP CHORD SHALL HAVE PROPERLY ATTACHED STRUCTURAL PANELS AND BOTTOM CHORD SHALL HAVE A PROPERLY ATTACHED RIGID CEILING.

IMPORTANTFURNISH A COPY OF THIS DESIGN TO THE INSTALLATION CONTRACTOR. ALPINE ENGINEERED PRODUCTS, INC. SHALL NOT BE RESPONSIBLE FOR ANY DEVIATION FROM THIS DESIGN; ANY FAILURE TO BUILD THE TRUSS IN CONFORMANCE WITH TPI; OR FABRICATING, HANDLING, SHIPPING, INSTALLING & BRACING OF TRUSSES. DESIGN CONFORMS WITH APPLICABLE PROVISIONS OF NDS (NATIONAL DESIGN SPEC. BY AF&PA) AND TPI. ALPINE CONNECTOR PLATES ARE MADE OF 20/18/16GA (W,H/S/K) ASTM A653 GRADE 40/60 (W, K/H,S) GALV. STEEL. APPLY PLATES TO EACH FACE OF TRUSS AND, UNLESS OTHERWISE LOCATED ON THIS DESIGN, POSITION PER DRAWINGS 160A Z. ANY INSPECTION OF PLATES FOLLOWED BY (I) SHALL BE PER ANNEX A3 OF TPI1 2002 SEC.3. A SEAL ON THIS DRAWING INDICATES ACCEPTANCE OF PROFESSIONAL ENGINEERING RESPONSIBILITY SOLELY FOR THE TRUSS COMPONENT DESIGN SHOWN. THE SUITABILITY AND USE OF THIS COMPONENT FOR ANY BUILDING IS THE RESPONSIBILITY OF THE BUILDING DESIGNER PER ANSI/TPI 1 SEC. 2.

ARTHUR R. FISHER LICENSE No. 59687 STATE OF FLORIDA PROFESSIONAL ENGINEER
Jan 27 '06

TC LL	20.0 PSF	REF	R487-- 67154
TC DL	10.0 PSF	DATE	01/26/06
BC DL	10.0 PSF	DRW	HCUSR487 06026017
BC LL	0.0 PSF	HC-ENG	JB/AF *
TOT.LD.	40.0 PSF	SEQN-	27281
DUR.FAC.	1.25		
SPACING	24.0"	JREF-	1SU7487_Z03

CLB WEB BRACE SUBSTITUTION

THIS DETAIL IS TO BE USED WHEN CONTINUOUS LATERAL BRACING (CLB) IS SPECIFIED ON AN ALPINE TRUSS DESIGN BUT AN ALTERNATIVE WEB BRACING METHOD IS DESIRED.

NOTES:

THIS DETAIL IS ONLY APPLICABLE FOR CHANGING THE SPECIFIED CLB SHOWN ON SINGLE PLY SEALED DESIGNS TO T-BRACING OR SCAB BRACING.

ALTERNATIVE BRACING SPECIFIED IN CHART BELOW MAY BE CONSERVATIVE. FOR MINIMUM ALTERNATIVE BRACING, RE-RUN DESIGN WITH APPROPRIATE BRACING.

WEB MEMBER SIZE	SPECIFIED CLB BRACING	ALTERNATIVE BRACING T OR L-BRACE	ALTERNATIVE BRACING SCAB BRACE
2X3 OR 2X4	1 ROW	2X4	1-2X4
2X3 OR 2X4	2 ROWS	2X6	2-2X4
2X6	1 ROW	2X4	1-2X6
2X6	2 ROWS	2X6	2-2X4(*)
2X8	1 ROW	2X6	1-2X8
2X8	2 ROWS	2X6	2-2X6(*)

T-BRACE, L-BRACE AND SCAB BRACE TO BE SAME SPECIES AND GRADE OR BETTER THAN WEB MEMBER UNLESS SPECIFIED OTHERWISE ON ENGINEER'S SEALED DESIGN.

(*) CENTER SCAB ON WIDE FACE OF WEB. APPLY (1) SCAB TO EACH FACE OF WEB.

T-BRACING OR L-BRACING:

APPLY TO EITHER SIDE OF WEB NARROW FACE

ATTACH WITH 16d NAILS AT 6" O.C.

BRACE IS A MINIMUM 80% OF WEB MEMBER LENGTH

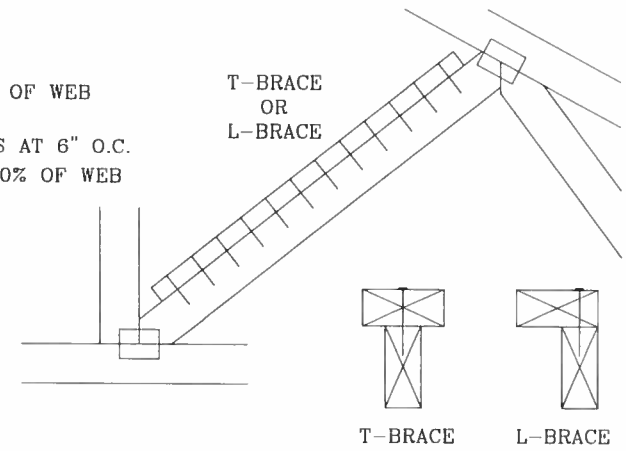

SCAB BRACING:

APPLY SCAB(S) TO WIDE FACE OF WEB.

NO MORE THAN (1) SCAB PER FACE.

ATTACH WITH 10d OR .128"x3" GUN NAILS AT 6" O.C. BRACE IS A MINIMUM 80% OF WEB MEMBER LENGTH

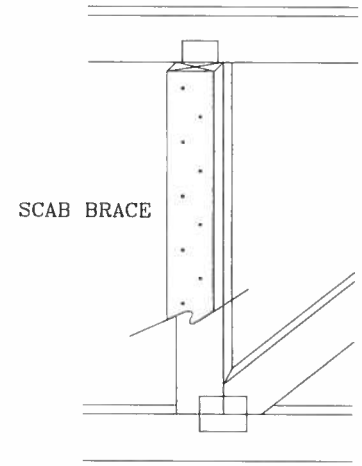

THIS DRAWING REPLACES DRAWING 579,640

ALPINE

ALPINE ENGINEERED PRODUCTS, INC.
POMPANO BEACH, FLORIDA

WARNING TRUSSES REQUIRE EXTREME CARE IN FABRICATING, HANDLING, SHIPPING, INSTALLING AND BRACING. REFER TO BCSI 1-03 (BUILDING COMPONENT SAFETY INFORMATION), PUBLISHED BY TPI (TRUSS PLATE INSTITUTE, 583 D'ONOFRIO DR., SUITE 200, MADISON, WI. 53719) AND WTCA (WOOD TRUSS COUNCIL OF AMERICA, 6300 ENTERPRISE LN, MADISON, WI 53719) FOR SAFETY PRACTICES PRIOR TO PERFORMING THESE FUNCTIONS. UNLESS OTHERWISE INDICATED, TOP CHORD SHALL HAVE PROPERLY ATTACHED STRUCTURAL PANELS AND BOTTOM CHORD SHALL HAVE A PROPERLY ATTACHED RIGID CEILING.

IMPORTANT FURNISH COPY OF THIS DESIGN TO INSTALLATION CONTRACTOR. ALPINE ENGINEERED PRODUCTS, INC., SHALL NOT BE RESPONSIBLE FOR ANY DEVIATION FROM THIS DESIGN; ANY FAILURE TO BUILD THE TRUSS IN CONFORMANCE WITH TPI; OR FABRICATING, HANDLING, SHIPPING, INSTALLING & BRACING OF TRUSSES. DESIGN CONFORMS WITH APPLICABLE PROVISIONS OF NDS (NATIONAL DESIGN SPEC, BY AF&PA) AND TPI. ALPINE CONNECTOR PLATES ARE MADE OF 20/18/16GA (W,H/S/K) ASTM A653 GRADE 40/60 (W,K/H,S) GALV. STEEL. APPLY PLATES TO EACH FACE OF TRUSS AND, UNLESS OTHERWISE LOCATED ON THIS DESIGN, POSITION PER DRAWINGS 160A-Z. ANY INSPECTION OF PLATES FOLLOWED BY (1) SHALL BE PER ANNEX A3 OF TPI 1-2002 SEC. 3. A SEAL ON THIS DRAWING INDICATES ACCEPTANCE OF PROFESSIONAL ENGINEERING RESPONSIBILITY SOLELY FOR THE TRUSS COMPONENT DESIGN SHOWN. THE SUITABILITY AND USE OF THIS COMPONENT FOR ANY BUILDING IS THE RESPONSIBILITY OF THE BUILDING DESIGNER, PER ANSI/TPI 1 SEC. 2.

ARTHUR R. FISHER
LICENSE
No. 59687
STATE OF FLORIDA
PROFESSIONAL ENGINEER

TC LL	PSF	REF	CLB SUBST.
TC DL	PSF	DATE	11/26/03
BC DL	PSF	DRWG	BRCLBSUB1103
BC LL	PSF	-ENG	MLH/KAR
TOT. LD.	PSF		
DUR. FAC.			
SPACING			

ASCE 7-98: 110 MPH WIND SPEED, 15' MEAN HEIGHT, ENCLOSED, I = 1.00, EXPOSURE C

MAX GABLE VERTICAL LENGTH

2X4 GABLE VERTICAL SPACING	SPECIES	BRACE GRADE	NO BRACES	(1) 1X4 "L" BRACE * GROUP A	(1) 1X4 "L" BRACE * GROUP B	(1) 2X4 "L" BRACE * GROUP A	(1) 2X4 "L" BRACE * GROUP B	(2) 2X4 "L" BRACE ** GROUP A	(2) 2X4 "L" BRACE ** GROUP B	(1) 2X6 "L" BRACE * GROUP A	(1) 2X6 "L" BRACE * GROUP B	(2) 2X6 "L" BRACE ** GROUP A	(2) 2X6 "L" BRACE ** GROUP B
24" O.C.	SPF HF	#1 / #2	3' 10"	6' 8"	6' 10"	7' 11"	8' 1"	9' 5"	9' 8"	12' 5"	12' 9"	14' 0"	14' 0"
		#3	3' 9"	6' 0"	6' 0"	7' 11"	7' 11"	9' 5"	9' 5"	12' 4"	12' 4"	14' 0"	14' 0"
		STUD	3' 9"	6' 0"	6' 0"	7' 11"	7' 11"	9' 5"	9' 5"	12' 3"	12' 3"	14' 0"	14' 0"
		STANDARD	3' 9"	5' 2"	5' 2"	6' 9"	6' 9"	9' 1"	9' 1"	10' 7"	10' 7"	14' 0"	14' 0"
	SP DFL	#1	4' 3"	6' 8"	7' 2"	7' 11"	8' 6"	9' 5"	10' 2"	12' 5"	13' 5"	14' 0"	14' 0"
		#2	4' 2"	6' 8"	7' 2"	7' 11"	8' 6"	9' 5"	10' 2"	12' 5"	13' 5"	14' 0"	14' 0"
		#3	4' 0"	6' 2"	6' 2"	7' 11"	8' 1"	9' 5"	9' 11"	12' 5"	12' 8"	14' 0"	14' 0"
		STUD	4' 0"	6' 1"	6' 1"	7' 11"	8' 0"	9' 5"	9' 11"	12' 5"	12' 6"	14' 0"	14' 0"
		STANDARD	3' 10"	5' 3"	5' 3"	6' 11"	6' 11"	9' 4"	9' 4"	10' 10"	10' 10"	14' 0"	14' 0"
16" O.C.	SPF HF	#1 / #2	4' 5"	7' 8"	7' 10"	9' 1"	9' 4"	10' 10"	11' 1"	14' 0"	14' 0"	14' 0"	14' 0"
		#3	4' 4"	7' 4"	7' 4"	9' 1"	9' 1"	10' 10"	10' 10"	14' 0"	14' 0"	14' 0"	14' 0"
		STUD	4' 4"	7' 4"	7' 4"	9' 1"	9' 1"	10' 10"	10' 10"	14' 0"	14' 0"	14' 0"	14' 0"
		STANDARD	4' 4"	6' 4"	6' 4"	8' 4"	8' 4"	10' 10"	10' 10"	12' 11"	12' 11"	14' 0"	14' 0"
	SP DFL	#1	4' 10"	7' 8"	8' 3"	9' 1"	9' 9"	10' 10"	11' 8"	14' 0"	14' 0"	14' 0"	14' 0"
		#2	4' 9"	7' 8"	8' 3"	9' 1"	9' 9"	10' 10"	11' 8"	14' 0"	14' 0"	14' 0"	14' 0"
		#3	4' 6"	7' 7"	7' 7"	9' 1"	9' 6"	10' 10"	11' 4"	14' 0"	14' 0"	14' 0"	14' 0"
		STUD	4' 6"	7' 6"	7' 6"	9' 1"	9' 6"	10' 10"	11' 4"	14' 0"	14' 0"	14' 0"	14' 0"
		STANDARD	4' 5"	6' 5"	6' 5"	8' 6"	8' 6"	10' 10"	11' 1"	13' 3"	13' 3"	14' 0"	14' 0"
12" O.C.	SPF HF	#1 / #2	4' 11"	8' 5"	8' 8"	10' 0"	10' 3"	11' 11"	12' 3"	14' 0"	14' 0"	14' 0"	14' 0"
		#3	4' 9"	8' 5"	8' 5"	10' 0"	10' 0"	11' 11"	11' 11"	14' 0"	14' 0"	14' 0"	14' 0"
		STUD	4' 9"	8' 5"	8' 5"	10' 0"	10' 0"	11' 11"	11' 11"	14' 0"	14' 0"	14' 0"	14' 0"
		STANDARD	4' 9"	7' 3"	7' 3"	9' 7"	9' 7"	11' 11"	11' 11"	14' 0"	14' 0"	14' 0"	14' 0"
	SP DFL	#1	5' 4"	8' 5"	9' 1"	10' 0"	10' 9"	11' 11"	12' 10"	14' 0"	14' 0"	14' 0"	14' 0"
		#2	5' 3"	8' 5"	9' 1"	10' 0"	10' 9"	11' 11"	12' 10"	14' 0"	14' 0"	14' 0"	14' 0"
		#3	5' 0"	8' 5"	8' 5"	10' 0"	10' 6"	11' 11"	12' 6"	14' 0"	14' 0"	14' 0"	14' 0"
		STUD	5' 0"	8' 5"	8' 7"	10' 0"	10' 6"	11' 11"	12' 6"	14' 0"	14' 0"	14' 0"	14' 0"
		STANDARD	4' 11"	7' 5"	7' 5"	9' 10"	9' 10"	11' 11"	12' 3"	14' 0"	14' 0"	14' 0"	14' 0"

BRACING GROUP SPECIES AND GRADES:

GROUP A:

SPRUCE-PINE-FIR

#1 / #2	STANDARD
#3	STUD

HEM-FIR

#2	STUD
#3	STANDARD

DOUGLAS FIR-LARCH

#3
STUD
STANDARD

SOUTHERN PINE

#3
STUD
STANDARD

GROUP B:

HEM-FIR

#1 & BTR
#1

SOUTHERN PINE

#1
#2

DOUGLAS FIR-LARCH

#1
#2

GABLE TRUSS DETAIL NOTES:

LIVE LOAD DEFLECTION CRITERIA IS L/240.

PROVIDE UPLIFT CONNECTIONS FOR 80 PLF OVER CONTINUOUS BEARING (5 PSF TC DEAD LOAD).

GABLE END SUPPORTS LOAD FROM 4' 0" OUTLOOKERS WITH 2' 0" OVERHANG, OR 12" PLYWOOD OVERHANG.

ATTACH EACH "L" BRACE WITH 10d NAILS.

* FOR (1) "L" BRACE: SPACE NAILS AT 2" O.C. IN 18" END ZONES AND 4" O.C. BETWEEN ZONES.

** FOR (2) "L" BRACES: SPACE NAILS AT 3" O.C. IN 18" END ZONES AND 6" O.C. BETWEEN ZONES.

"L" BRACING MUST BE A MINIMUM OF 80% OF WEB MEMBER LENGTH.

GABLE VERTICAL PLATE SIZES

VERTICAL LENGTH	NO SPLICE
LESS THAN 4' 0"	1X4 OR 2X3
GREATER THAN 4' 0", BUT LESS THAN 11' 6"	2X4
GREATER THAN 11' 6"	2.5X4

\+ REFER TO COMMON TRUSS DESIGN FOR PEAK, SPLICE, AND HEEL PLATES.

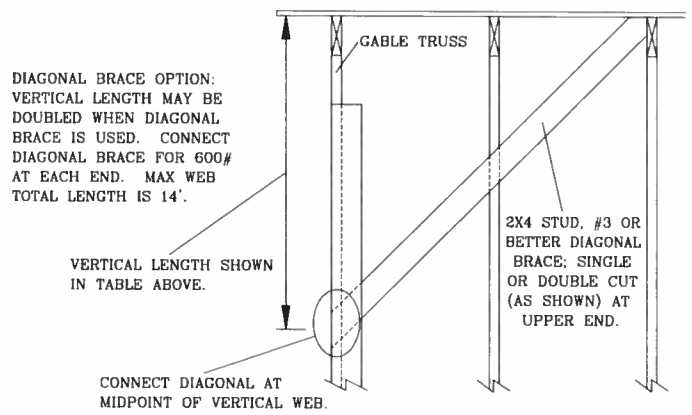

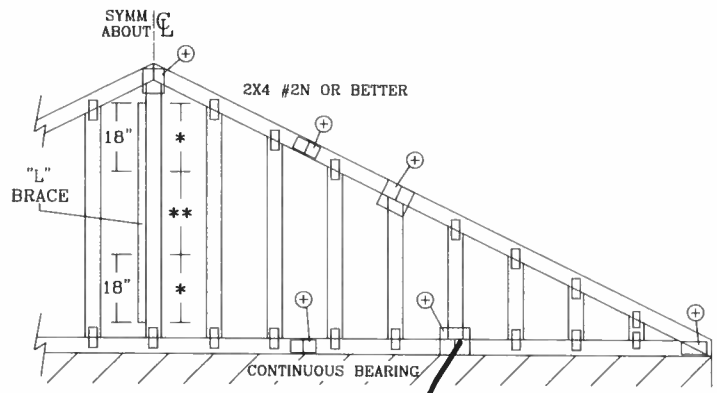

REFER TO CHART ABOVE FOR MAX GABLE VERTICAL LENGTH.

ALPINE

ALPINE ENGINEERED PRODUCTS, INC.
POMPANO BEACH, FLORIDA

WARNING TRUSSES REQUIRE EXTREME CARE IN FABRICATING, HANDLING, SHIPPING, INSTALLING AND BRACING. REFER TO BCSI 1-03 (BUILDING COMPONENT SAFETY INFORMATION), PUBLISHED BY TPI (TRUSS PLATE INSTITUTE, 583 D'ONOFRIO DR., SUITE 200, MADISON, WI. 53719) AND WTCA (WOOD TRUSS COUNCIL OF AMERICA, 6300 ENTERPRISE LN, MADISON, WI 53719) FOR SAFETY PRACTICES PRIOR TO PERFORMING THESE FUNCTIONS. UNLESS OTHERWISE INDICATED, TOP CHORD SHALL HAVE PROPERLY ATTACHED STRUCTURAL PANELS AND BOTTOM CHORD SHALL HAVE A PROPERLY ATTACHED RIGID CEILING.

IMPORTANT FURNISH COPY OF THIS DESIGN TO INSTALLATION CONTRACTOR. ALPINE ENGINEERED PRODUCTS, INC., SHALL NOT BE RESPONSIBLE FOR ANY DEVIATION FROM THIS DESIGN; ANY FAILURE TO BUILD THE TRUSS IN CONFORMANCE WITH TPI; OR FABRICATING, HANDLING, SHIPPING, INSTALLING & BRACING OF TRUSSES. DESIGN CONFORMS WITH APPLICABLE PROVISIONS OF NDS (NATIONAL DESIGN SPEC. BY AF&PA) AND TPI. ALPINE CONNECTOR PLATES ARE MADE OF 20/18/16GA (W,H/S/K) ASTM A653 GRADE 40/60 (W,K/H,S) GALV. STEEL. APPLY PLATES TO EACH FACE OF TRUSS AND, UNLESS OTHERWISE LOCATED ON THIS DESIGN, POSITION PER DRAWINGS 160A-Z. ANY INSPECTION OF PLATES FOLLOWED BY (I) SHALL BE PER ANNEX A3 OF TPI 1-2002 SEC. 3. A SEAL ON THIS DRAWING INDICATES ACCEPTANCE OF PROFESSIONAL ENGINEERING RESPONSIBILITY SOLELY FOR THE TRUSS COMPONENT DESIGN SHOWN. THE SUITABILITY AND USE OF THIS COMPONENT FOR ANY BUILDING IS THE RESPONSIBILITY OF THE BUILDING DESIGNER, PER ANSI/TPI 1 SEC. 2.

ARTHUR R. FISHER LICENSE No. 59687 STATE OF FLORIDA PROFESSIONAL ENGINEER

Jan 2004

MAX. TOT. LD. 60 PSF

MAX. SPACING 24.0"

REF	ASCE7-98-GAB11015
DATE	11/26/03
DRWG	A11015EC1103
-ENG	

GABLE DETAIL
FOR LET-IN VERTICALS

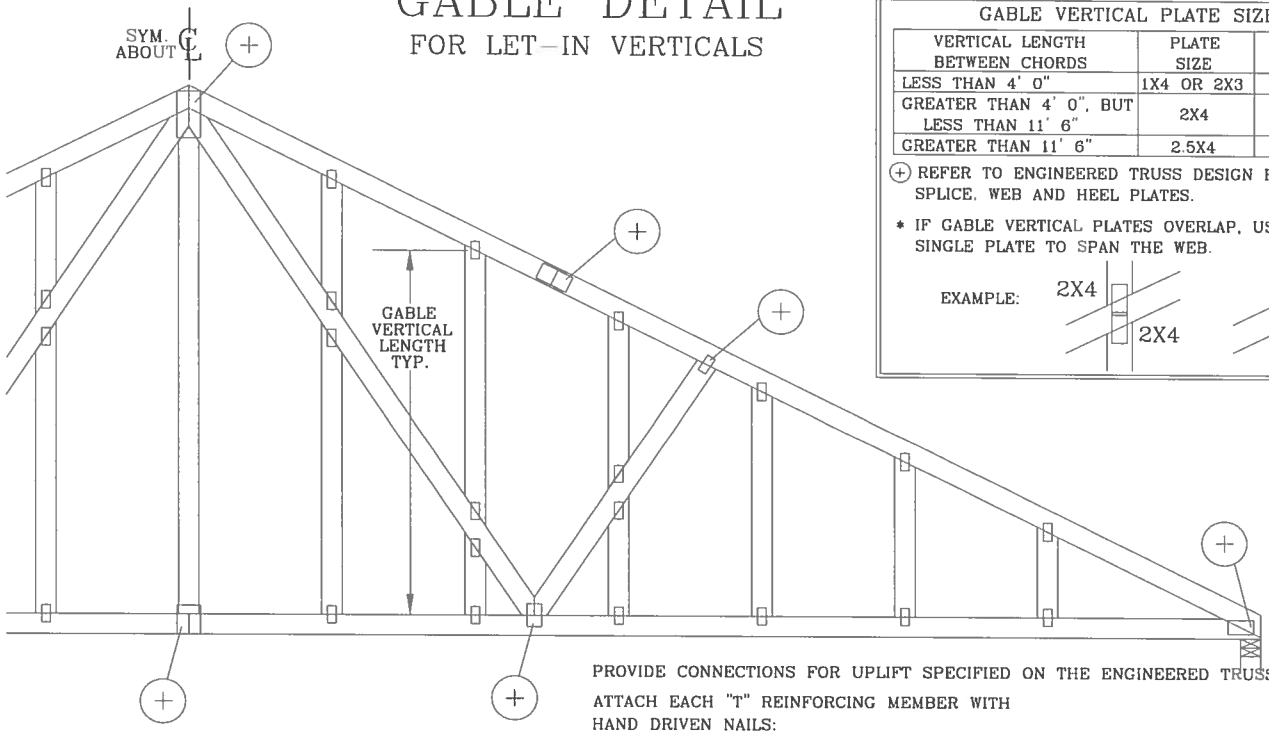

GABLE VERTICAL PLATE SIZES

VERTICAL LENGTH BETWEEN CHORDS	PLATE SIZE	IF PLATES OVERLAP*
LESS THAN 4' 0"	1X4 OR 2X3	2X8
GREATER THAN 4' 0", BUT LESS THAN 11' 6"	2X4	2X8
GREATER THAN 11' 6"	2.5X4	2.5X8

⊕ REFER TO ENGINEERED TRUSS DESIGN FOR PEAK, SPLICE, WEB AND HEEL PLATES.

* IF GABLE VERTICAL PLATES OVERLAP, USE A SINGLE PLATE TO SPAN THE WEB.

EXAMPLE:

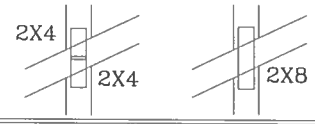

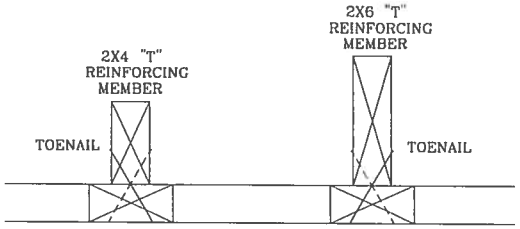

TO CONVERT FROM "L" TO "T" REINFORCING MEMBERS, MULTIPLY "T" FACTOR BY LENGTH (BASED ON GABLE VERTICAL SPECIES, GRADE AND SPACING) FOR (1) 2X4 "L" BRACE, GROUP A, OBTAINED FROM THE APPROPRIATE ALPINE GABLE DETAIL FOR ASCE OR SBCCI WIND LOAD.

MAXIMUM ALLOWABLE "T" REINFORCED GABLE VERTICAL LENGTH IS 14' FROM TOP TO BOTTOM CHORD.

WEB LENGTH INCREASE W/ "T" BRACE

WIND SPEED AND MRH	"T" REINF. MBR. SIZE	SBCCI	ASCE
110 MPH	2x4	10 %	10 %
15 FT	2x6	40 %	50 %
110 MPH	2x4	10 %	10 %
30 FT	2x6	50 %	50 %
100 MPH	2x4	10 %	10 %
15 FT	2x6	30 %	50 %
100 MPH	2x4	10 %	10 %
30 FT	2x6	40 %	40 %
90 MPH	2x4	20 %	10 %
15 FT	2x6	20 %	40 %
90 MPH	2x4	10 %	10 %
30 FT	2x6	30 %	50 %
80 MPH	2x4	10 %	20 %
15 FT	2x6	10 %	30 %
80 MPH	2x4	20 %	10 %
30 FT	2x6	20 %	40 %
70 MPH	2x4	0 %	20 %
15 FT	2x6	0 %	20 %
70 MPH	2x4	10 %	20 %
30 FT	2x6	10 %	30 %

EXAMPLE:
ASCE WIND SPEED = 100 MPH
MEAN ROOF HEIGHT = 30 FT
GABLE VERTICAL = 24" O.C. SP #3
"T" REINFORCING MEMBER SIZE = 2X4
"T" BRACE INCREASE (FROM ABOVE) = 10% = 1.10
(1) 2X4 "L" BRACE LENGTH = 6' 7"
MAXIMUM "T" REINFORCED GABLE VERTICAL LENGTH
1.10 x 6' 7" = 7' 3"

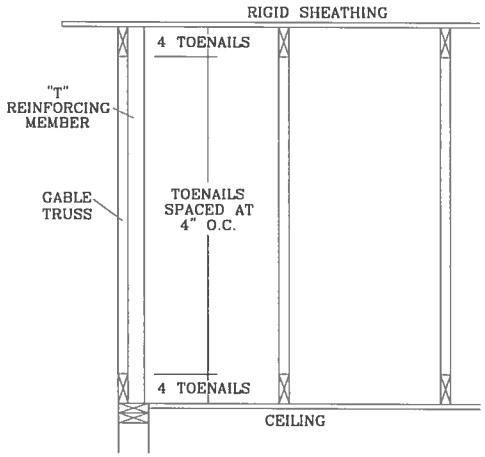

PROVIDE CONNECTIONS FOR UPLIFT SPECIFIED ON THE ENGINEERED TRUSS DESIGN.

ATTACH EACH "T" REINFORCING MEMBER WITH
HAND DRIVEN NAILS:
10d COMMON (0.148"X 3.",MIN) TOENAILS AT 4" O.C. PLUS
(4) 16d COMMON (0.162" X 3.5",MIN) TOENAILS IN TOP AND BOTTOM CHORD.

GUN DRIVEN NAILS:
8d COMMON (0.131"X 2.5",MIN) TOENAILS AT 4" O.C. PLUS
(4) TOENAILS IN TOP AND BOTTOM CHORD.

THIS DETAIL TO BE USED WITH THE APPROPRIATE ALPINE GABLE DETAIL FOR ASCE OR SBCCI WIND LOAD.
ASCE 7-93 GABLE DETAIL DRAWINGS
A11015EN1103, A10015EN1103, A09015EN1103, A08015EN1103, A07015EN1103
A11030EN1103, A10030EN1103, A09030EN1103, A08030EN1103, A07030EN1103
ASCE 7-98 GABLE DETAIL DRAWINGS
A13015EC1103, A12015EC1103, A11015EC1103, A10015EC1103, A08515EC1103
A13030EC1103, A12030EC1103, A11030EC1103, A10030EC1103, A08530EC1103
ASCE 7-02 GABLE DETAIL DRAWINGS
A13015EE0405, A12015EE0405, A11015EE0405, A10015EE0405, A08515EE0405,
A13030EE0405, A12030EE0405, A11030EE0405, A10030EE0405, A08530EE0405

SEE APPROPRIATE ALPINE GABLE DETAIL (ASCE OR SBCCI WIND LOAD) FOR MAXIMUM UNREINFORCED GABLE VERTICAL LENGTH.

THIS DRAWING REPLACES DRAWINGS GAB98117 876,719 & HC26294035

ALPINE
ALPINE ENGINEERED PRODUCTS, INC.
POMPANO BEACH, FLORIDA

WARNING TRUSSES REQUIRE EXTREME CARE IN FABRICATING, HANDLING, SHIPPING, INSTALLING AND BRACING. REFER TO BCSI 1-03 (BUILDING COMPONENT SAFETY INFORMATION), PUBLISHED BY TPI (TRUSS PLATE INSTITUTE, 583 D'ONOFRIO DR, SUITE 200, MADISON, WI 53719) AND WTCA (WOOD TRUSS COUNCIL OF AMERICA, 6300 ENTERPRISE LN, MADISON, WI 53719) FOR SAFETY PRACTICES PRIOR TO PERFORMING THESE FUNCTIONS. UNLESS OTHERWISE INDICATED, TOP CHORD SHALL HAVE PROPERLY ATTACHED STRUCTURAL PANELS AND BOTTOM CHORD SHALL HAVE A PROPERLY ATTACHED RIGID CEILING.

IMPORTANT FURNISH COPY OF THIS DESIGN TO INSTALLATION CONTRACTOR. ALPINE ENGINEERED PRODUCTS, INC., SHALL NOT BE RESPONSIBLE FOR ANY DEVIATION FROM THIS DESIGN; ANY FAILURE TO BUILD THE TRUSS IN CONFORMANCE WITH TPI; OR FABRICATING, HANDLING, SHIPPING, INSTALLING & BRACING OF TRUSSES. DESIGN CONFORMS WITH APPLICABLE PROVISIONS OF NDS (NATIONAL DESIGN SPEC, BY AF&PA) AND TPI. ALPINE CONNECTOR PLATES ARE MADE OF 20/18/16GA (W,H/S/K) ASTM A653 GRADE 40/60 (W,K/H,S) GALV. STEEL. APPLY PLATES TO EACH FACE OF TRUSS AND, UNLESS OTHERWISE LOCATED ON THIS DESIGN, POSITION PER DRAWINGS 160A-Z. ANY INSPECTION OF PLATES FOLLOWED BY (I) SHALL BE PER ANNEX A3 OF TPI 1-2002 SEC. 3. A SEAL ON THIS DRAWING INDICATES ACCEPTANCE OF PROFESSIONAL ENGINEERING RESPONSIBILITY SOLELY FOR THE TRUSS COMPONENT DESIGN SHOWN. THE SUITABILITY AND USE OF THIS COMPONENT FOR ANY BUILDING IS THE RESPONSIBILITY OF THE BUILDING DESIGNER, PER ANSI/TPI 1 SEC 2

ARTHUR R. FISHER LICENSE No. 59687 STATE OF FLORIDA PROFESSIONAL ENGINEER

Jan 06

MAX TOT. LD. 60 PSF
DUR. FAC. ANY
MAX SPACING 24.0"

REF	LET-IN VERT
DATE	04/14/05
DRWG	GBLLETIN0405
-ENG	DLJ/KAR