DATE 10/18/2005

Columbia County Building Permit

This Permit Expires One Year From the Date of Issue

PERMIT
000023728

APPLICANT DENNIS ONEIL PHONE 386-454-2476

ADDRESS PO BOX 1633 HIGH SPRINGS FL 32643

OWNER JOHN FITZGERALD PHONE

ADDRESS 380 BLUFF DRIVE FORT WHITE FL 32038

CONTRACTOR DENNIS ONEIL/ONEIL CONSTRUCT PHONE 386-454-2476

LOCATION OF PROPERTY 47 S, R ON HOLLINGSWORTH DR, R ON BLUFF DR, 3/10 OF A MILE ON L, OR 5TH ON L PAST LONGHORN TERR

TYPE DEVELOPMENT SFD,UTILITY ESTIMATED COST OF CONSTRUCTION 98550.00

HEATED FLOOR AREA 1971.00 TOTAL AREA 1971.00 HEIGHT 31.00 STORIES 2

FOUNDATION CONCRETE WALLS FRAMED ROOF PITCH 10/12 FLOOR SLAB

LAND USE & ZONING ESA-2 MAX. HEIGHT 35

Minimum Set Back Requirments: STREET-FRONT 30.00 REAR 25.00 SIDE 25.00

NO. EX.D.U. 1 FLOOD ZONE AE DEVELOPMENT PERMIT NO. 05-014

PARCEL ID 18-7S-16-04236-012 SUBDIVISION CEDAR SPRINGS SHORES

LOT 32 BLOCK PHASE UNIT 1 TOTAL ACRES 1.00

Culvert Permit No.	Culvert Waiver	Contractor's License Number	Applicant/Owner/Contractor	
		CGC061581	Dennis Oneil	
EXISTING	05-0393-E	BK	JH	N
Driveway Connection	Septic Tank Number	LU & Zoning checked by	Approved for Issuance	New Resident

COMMENTS: ELEVATION CERTIFICATION REQUIRED BEFORE POWER SHOWNG MFE @ 38 FT
ONE FOOT RISE ON FILE, NOC ON FILE
SFD IS TO REPLACE EXISTING MH ON THE PROPERTY Check # or Cash 17857

FOR BUILDING & ZONING DEPARTMENT ONLY

Temporary Power _____ date/app. by Foundation _____ date/app. by Monolithic _____ date/app. by (footer/Slab)

Under slab rough-in plumbing _____ date/app. by Slab _____ date/app. by Sheathing/Nailing _____ date/app. by

Framing _____ date/app. by Rough-in plumbing above slab and below wood floor _____ date/app. by

Electrical rough-in _____ date/app. by Heat & Air Duct _____ date/app. by Peri. beam (Lintel) _____ date/app. by

Permanent power _____ date/app. by C.O. Final _____ date/app. by Culvert _____ date/app. by

M/H tie downs, blocking, electricity and plumbing _____ date/app. by Pool _____ date/app. by

Reconnection _____ date/app. by Pump pole _____ date/app. by Utility Pole _____ date/app. by

M/H Pole _____ date/app. by Travel Trailer _____ date/app. by Re-roof _____ date/app. by

BUILDING PERMIT FEE $ 495.00 CERTIFICATION FEE $ 9.86 SURCHARGE FEE $ 9.86

MISC. FEES $ .00 ZONING CERT. FEE $ 50.00 FIRE FEE $ .00 WASTE FEE $

FLOOD DEVELOPMENT FEE $ 50.00 FLOOD ZONE FEE $ 25.00 CULVERT FEE $ **TOTAL FEE** 639.72

INSPECTORS OFFICE _____ CLERKS OFFICE CH

NOTICE: IN ADDITION TO THE REQUIREMENTS OF THIS PERMIT, THERE MAY BE ADDITIONAL RESTRICTIONS APPLICABLE TO THIS PROPERTY THAT MAY BE FOUND IN THE PUBLIC RECORDS OF THIS COUNTY. AND THERE MAY BE ADDITIONAL PERMITS REQUIRED FROM OTHER GOVERNMENTAL ENTITIES SUCH AS WATER MANAGEMENT DISTRICTS, STATE AGENCIES, OR FEDERAL AGENCIES.

"WARNING TO OWNER: YOUR FAILURE TO RECORD A NOTICE OF COMMENCEMENT MAY RESULT IN YOUR PAYING TWICE FOR IMPROVEMENTS TO YOUR PROPERTY. IF YOU INTEND TO OBTAIN FINANCING, CONSULT WITH YOUR LENDER OR AN ATTORNEY BEFORE RECORDING YOUR NOTICE OF COMMENCEMENT."

This Permit Must Be Prominently Posted on Premises During Construction

PLEASE NOTIFY THE COLUMBIA COUNTY BUILDING DEPARTMENT AT LEAST 24 HOURS IN ADVANCE OF EACH INSPECTION, IN ORDER THAT IT MAY BE MADE WITHOUT DELAY OR INCONVIENCE, PHONE 758-1008. THIS PERMIT IS NOT VALID UNLESS THE WORK AUTHORIZED BY IT IS COMMENCED WITHIN 6 MONTHS AFTER ISSUANCE.

The Issuance of this Permit Does Not Waive Compliance by Permittee with Deed Restrictions.

U.S. DEPARTMENT OF HOMELAND SECURITY
Federal Emergency Management Agency
National Flood Insurance Program

ELEVATION CERTIFICATE

Important: Read the instructions on pages 1-8.

OMB No. 1660-0008
Expires February 28, 2009

23728

SECTION A - PROPERTY INFORMATION

For Insurance Company Use:
Policy Number
Company NAIC Number

A1. Building Owner's Name JOHN AND DIANE FITZGERALD

A2. Building Street Address (including Apt., Unit, Suite, and/or Bldg. No.) or P.O. Route and Box No.
380 SW BLUFF DRIVE

City FT. WHITE State FL ZIP Code 32038

A3. Property Description (Lot and Block Numbers, Tax Parcel Number, Legal Description, etc.)
LOT 32 CEDAR SPRINGS SHORES - UNIT 1

A4. Building Use (e.g., Residential, Non-Residential, Addition, Accessory, etc.) RESIDENTIAL

A5. Latitude/Longitude: Lat. N 89D52'23.2" Long. W 82D44'45.5" Horizontal Datum: ☐ NAD 1927 ☒ NAD 1983

A6. Attach at least 2 photographs of the building if the Certificate is being used to obtain flood insurance.

A7. Building Diagram Number _____

A8. For a building with a crawl space or enclosure(s), provide
a) Square footage of crawl space or enclosure(s) NA sq ft
b) No. of permanent flood openings in the crawl space or enclosure(s) walls within 1.0 foot above adjacent grade NA
c) Total net area of flood openings in A8.b NA sq in

A9. For a building with an attached garage, provide:
a) Square footage of attached garage NA sq ft
b) No. of permanent flood openings in the attached garage walls within 1.0 foot above adjacent grade NA
c) Total net area of flood openings in A9.b NA sq in

SECTION B - FLOOD INSURANCE RATE MAP (FIRM) INFORMATION

B1. NFIP Community Name & Community Number	B2. County Name	B3. State
COLUMBIA COUNTY, FL. 120070	COLUMBIA	FL

B4. Map/Panel Number	B5. Suffix	B6. FIRM Index Date	B7. FIRM Panel Effective/Revised Date	B8. Flood Zone(s)	B9. Base Flood Elevation(s) (Zone AO, use base flood depth)
120070 0255	B	1/6/88	1/6/88	AE	36

B10. Indicate the source of the Base Flood Elevation (BFE) data or base flood depth entered in Item B9.
☐ FIS Profile ☒ FIRM ☐ Community Determined ☐ Other (Describe) _____

B11. Indicate elevation datum used for BFE in Item B9: ☒ NGVD 1929 ☐ NAVD 1988 ☐ Other (Describe) _____

B12. Is the building located in a Coastal Barrier Resources System (CBRS) area or Otherwise Protected Area (OPA)? ☐Yes ☒No
Designation Date _____ ☐ CBRS ☐ OPA

SECTION C - BUILDING ELEVATION INFORMATION (SURVEY REQUIRED)

C1. Building elevations are based on: ☐ Construction Drawings* ☒ Building Under Construction* ☐ Finished Construction
*A new Elevation Certificate will be required when construction of the building is complete.

C2. Elevations – Zones A1-A30, AE, AH, A (with BFE), VE, V1-V30, V (with BFE), AR, AR/A, AR/AE, AR/A1-A30, AR/AH, AR/AO. Complete Items C2.a-g below according to the building diagram specified in Item A7.
Benchmark Utilized LOCAL BM Vertical Datum NGVD 29
Conversion/Comments NA

		Check the measurement used.
a) Top of bottom floor (including basement, crawl space, or enclosure floor)	39.0	☒ feet ☐ meters (Puerto Rico only)
b) Top of the next higher floor	49.2	☒ feet ☐ meters (Puerto Rico only)
c) Bottom of the lowest horizontal structural member (V Zones only)	NA	☐ feet ☐ meters (Puerto Rico only)
d) Attached garage (top of slab)	NA	☐ feet ☐ meters (Puerto Rico only)
e) Lowest elevation of machinery or equipment servicing the building (Describe type of equipment in Comments)	38.5	☒ feet ☐ meters (Puerto Rico only)
f) Lowest adjacent (finished) grade (LAG)	32.0	☐ feet ☐ meters (Puerto Rico only)
g) Highest adjacent (finished) grade (HAG)	35.0	☐ feet ☐ meters (Puerto Rico only)

SECTION D - SURVEYOR, ENGINEER, OR ARCHITECT CERTIFICATION

This certification is to be signed and sealed by a land surveyor, engineer, or architect authorized by law to certify elevation information. *I certify that the information on this Certificate represents my best efforts to interpret the data available. I understand that any false statement may be punishable by fine or imprisonment under 18 U.S. Code, Section 1001.*

☐ Check here if comments are provided on back of form.

Certifier's Name MARK D. DUREN License Number LS 4708

Title SURVEYOR AND MAPPER Company Name MARK D. DUREN, PSM

Address 1604 SW SISTERS WELCOME ROAD City LAKE CITY State FL ZIP Code 32025

Signature Date 6/27/06 Telephone 386-758-9831

LS 4708
PREVIOUSLY ISSUED
6/27/06
8/26/2009
ELCERT. 05981R.
8-25-09, DOT

FEMA Form 81-31, February 2006 See reverse side for continuation. Replaces all previous editions

Building Photographs

See Instructions for Item A6.

Building Street Address (including Apt., Unit, Suite, and/or Bldg. No.) or P.O. Route and Box No. 380 SW BLUFF DRIVE	For Insurance Company Use: Policy Number
City FT. WHITE State FL ZIP Code 32038	Company NAIC Number

If using the Elevation Certificate to obtain NFIP flood insurance, affix at least two building photographs below according to the instructions for Item A6. Identify all photographs with: date taken; "Front View" and "Rear View"; and, if required, "Right Side View" and "Left Side View." If submitting more photographs than will fit on this page, use the Continuation Page, following.

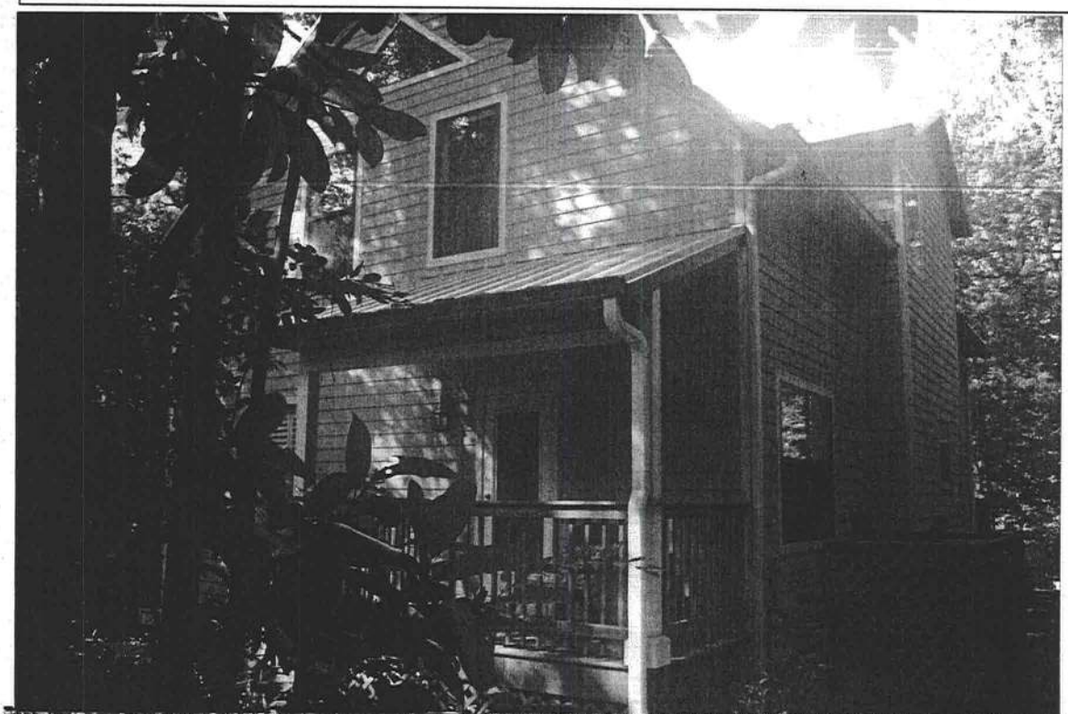

Front and Side View Taken 8/21/09

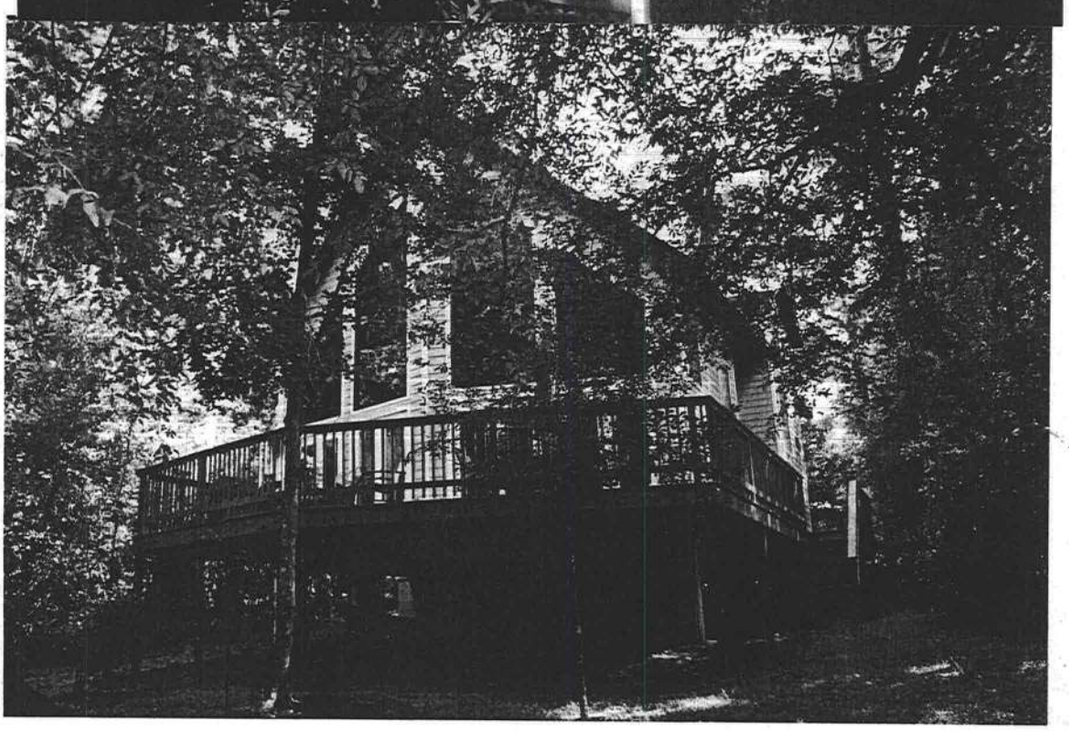

Rear and Side View Taken 8/21/09

FEDERAL EMERGENCY MANAGEMENT AGENCY
NATIONAL FLOOD INSURANCE PROGRAM

O.M.B. No. 3067-0077
Expires December 31, 2005

ELEVATION CERTIFICATE

Important: Read the instructions on pages 1 - 7.

SECTION A - PROPERTY OWNER INFORMATION

For Insurance Company Use:
Policy Number
Company NAIC Number

BUILDING OWNER'S NAME
JOHN AND DIANE FITZGERALD

BUILDING STREET ADDRESS (Including Apt., Unit, Suite, and/or Bldg. No.) OR P.O. ROUTE AND BOX NO.
380 SW BLUFF DRIVE

CITY	STATE	ZIP CODE
FT. WHITE	FL	32038

PROPERTY DESCRIPTION (Lot and Block Numbers, Tax Parcel Number, Legal Description, etc.)
LOT 32 CEDAR SPRINGS SHORES - UNIT 1

BUILDING USE (e.g., Residential, Non-residential, Addition, Accessory, etc. Use a Comments area, if necessary.)
RESIDENTIAL

LATITUDE/LONGITUDE (OPTIONAL) (##° - ##' - ##.##" or ##.#####°)
HORIZONTAL DATUM: ☐ NAD 1927 ☐ NAD 1983
SOURCE: ☐ GPS (Type):____ ☐ USGS Quad Map ☐ Other: ____

SECTION B - FLOOD INSURANCE RATE MAP (FIRM) INFORMATION

B1. NFIP COMMUNITY NAME & COMMUNITY NUMBER	B2. COUNTY NAME	B3. STATE
COLUMBIA COUNTY, FL. 120070	COLUMBIA	FL

B4. MAP AND PANEL NUMBER	B5. SUFFIX	B6. FIRM INDEX DATE	B7. FIRM PANEL EFFECTIVE/REVISED DATE	B8. FLOOD ZONE(S)	B9. BASE FLOOD ELEVATION(S) (Zone AO, use depth of flooding)
120070 0255	B	1/6/88	1/6/88	AE	36

B10. Indicate the source of the Base Flood Elevation (BFE) data or base flood depth entered in B9.
☐ FIS Profile ☒ FIRM ☐ Community Determined ☐ Other (Describe): ____

B11. Indicate the elevation datum used for the BFE in B9: ☒ NGVD 1929 ☐ NAVD 1988 ☐ Other (Describe): ____

B12. Is the building located in a Coastal Barrier Resources System (CBRS) area or Otherwise Protected Area (OPA)? ☐ Yes ☒ No Designation Date____

SECTION C - BUILDING ELEVATION INFORMATION (SURVEY REQUIRED)

C1. Building elevations are based on: ☐ Construction Drawings* ☐ Building Under Construction* ☒ Finished Construction
*A new Elevation Certificate will be required when construction of the building is complete.

C2. Building Diagram Number 1 (Select the building diagram most similar to the building for which this certificate is being completed - see pages 6 and 7. If no diagram accurately represents the building, provide a sketch or photograph.)

C3. Elevations – Zones A1-A30, AE, AH, A (with BFE), VE, V1-V30, V (with BFE), AR, AR/A, AR/AE, AR/A1-A30, AR/AH, AR/AO
Complete Items C3.-a-i below according to the building diagram specified in Item C2. State the datum used. If the datum is different from the datum used for the BFE in Section B, convert the datum to that used for the BFE. Show field measurements and datum conversion calculation. Use the space provided or the Comments area of Section D or Section G, as appropriate, to document the datum conversion.

Datum NA Conversion/Comments ____

Elevation reference mark used LOCAL BM Does the elevation reference mark used appear on the FIRM? ☐ Yes ☒ No

- ☐ a) Top of bottom floor (including basement or enclosure) 39. 0 ft.(m)
- ☐ b) Top of next higher floor 49 . 2 ft.(m)
- ☐ c) Bottom of lowest horizontal structural member (V zones only) NA . __ ft.(m)
- ☐ d) Attached garage (top of slab) NA. __ ft.(m)
- ☐ e) Lowest elevation of machinery and/or equipment servicing the building (Describe in a Comments area) NA . __ ft.(m)
- ☐ f) Lowest adjacent (finished) grade (LAG) 32 . 0 ft.(m)
- ☐ g) Highest adjacent (finished) grade (HAG) 35. 0 ft.(m)
- ☐ h) No. of permanent openings (flood vents) within 1 ft. above adjacent grade NA
- ☐ i) Total area of all permanent openings (flood vents) in C3.h NA sq. in. (sq. cm)

License Number, Embossed Seal, Signature, and Date
LS 4708
6/27/06

SECTION D - SURVEYOR, ENGINEER, OR ARCHITECT CERTIFICATION

This certification is to be signed and sealed by a land surveyor, engineer, or architect authorized by law to certify elevation information.
I certify that the information in Sections A, B, and C on this certificate represents my best efforts to interpret the data available.
I understand that any false statement may be punishable by fine or imprisonment under 18 U.S. Code, Section 1001.

CERTIFIER'S NAME MARK D. DUREN LICENSE NUMBER LS 4708

TITLE SURVEYOR AND MAPPER COMPANY NAME MARK D. DUREN, PSM

ADDRESS	CITY	STATE	ZIP CODE
1604 SW SISTERS WELCOME ROAD	LAKE CITY	FL	32025

SIGNATURE	DATE	TELEPHONE
	6/27/065	386-758-9831

FEDERAL EMERGENCY MANAGEMENT AGENCY
NATIONAL FLOOD INSURANCE PROGRAM

ELEVATION CERTIFICATE

O.M.B. No. 3067-0077
Expires December 31, 2005

Important: Read the instructions on pages 1 - 7.

SECTION A - PROPERTY OWNER INFORMATION

For Insurance Company Use:
Policy Number
Company NAIC Number

BUILDING OWNER'S NAME
JOHN AND DIANE FITZGERALD

BUILDING STREET ADDRESS (Including Apt., Unit, Suite, and/or Bldg. No.) OR P.O. ROUTE AND BOX NO.
380 SW BLUFF DRIVE

CITY	STATE	ZIP CODE
FT. WHITE	FL	32038

PROPERTY DESCRIPTION (Lot and Block Numbers, Tax Parcel Number, Legal Description, etc.)
LOT 32 CEDAR SPRINGS SHORES - UNIT 1

BUILDING USE (e.g., Residential, Non-residential, Addition, Accessory, etc. Use a Comments area, if necessary.)
RESIDENTIAL

LATITUDE/LONGITUDE (OPTIONAL) (##° - ##' - ##.##" or ##.#####°)
HORIZONTAL DATUM: ☐ NAD 1927 ☐ NAD 1983
SOURCE: ☐ GPS (Type):____ ☐ USGS Quad Map ☐ Other: ____

SECTION B - FLOOD INSURANCE RATE MAP (FIRM) INFORMATION

B1. NFIP COMMUNITY NAME & COMMUNITY NUMBER	B2. COUNTY NAME	B3. STATE
COLUMBIA COUNTY, FL 120070	COLUMBIA	FL

B4. MAP AND PANEL NUMBER	B5. SUFFIX	B6. FIRM INDEX DATE	B7. FIRM PANEL EFFECTIVE/REVISED DATE	B8. FLOOD ZONE(S)	B9. BASE FLOOD ELEVATION(S) (Zone AO, use depth of flooding)
120070 0255	B	1/6/88	1/6/88	AE	36

B10. Indicate the source of the Base Flood Elevation (BFE) data or base flood depth entered in B9.
☐ FIS Profile ☒ FIRM ☐ Community Determined ☐ Other (Describe): ____

B11. Indicate the elevation datum used for the BFE in B9: ☒ NGVD 1929 ☐ NAVD 1988 ☐ Other (Describe): ____

B12. Is the building located in a Coastal Barrier Resources System (CBRS) area or Otherwise Protected Area (OPA)? ☐ Yes ☒ No Designation Date____

SECTION C - BUILDING ELEVATION INFORMATION (SURVEY REQUIRED)

C1. Building elevations are based on: ☐ Construction Drawings* ☒ Building Under Construction* ☐ Finished Construction
*A new Elevation Certificate will be required when construction of the building is complete.

C2. Building Diagram Number 1 (Select the building diagram most similar to the building for which this certificate is being completed - see pages 6 and 7. If no diagram accurately represents the building, provide a sketch or photograph.)

C3. Elevations – Zones A1-A30, AE, AH, A (with BFE), VE, V1-V30, V (with BFE), AR, AR/A, AR/AE, AR/A1-A30, AR/AH, AR/AO
Complete Items C3.-a-i below according to the building diagram specified in Item C2. State the datum used. If the datum is different from the datum used for the BFE in Section B, convert the datum to that used for the BFE. Show field measurements and datum conversion calculation. Use the space provided or the Comments area of Section D or Section G, as appropriate, to document the datum conversion.
Datum NA Conversion/Comments ____
Elevation reference mark used LOCAL BM Does the elevation reference mark used appear on the FIRM? ☐ Yes ☒ No

- ☐ a) Top of bottom floor (including basement or enclosure) 39. 0 ft.(m)
- ☐ b) Top of next higher floor 49. 2 ft.(m)
- ☐ c) Bottom of lowest horizontal structural member (V zones only) NA. __ft.(m)
- ☐ d) Attached garage (top of slab) NA. __ft.(m)
- ☐ e) Lowest elevation of machinery and/or equipment servicing the building (Describe in a Comments area) NA. __ft.(m)
- ☐ f) Lowest adjacent (finished) grade (LAG) 32. 0 ft.(m)
- ☐ g) Highest adjacent (finished) grade (HAG) 35. 0 ft.(m)
- ☐ h) No. of permanent openings (flood vents) within 1 ft. above adjacent grade NA
- ☐ i) Total area of all permanent openings (flood vents) in C3.h NA sq. in. (sq. cm)

License Number, Embossed Seal, Signature, and Date
LS 4708
12/30/05

SECTION D - SURVEYOR, ENGINEER, OR ARCHITECT CERTIFICATION

This certification is to be signed and sealed by a land surveyor, engineer, or architect authorized by law to certify elevation information.
I certify that the information in Sections A, B, and C on this certificate represents my best efforts to interpret the data available.
I understand that any false statement may be punishable by fine or imprisonment under 18 U.S. Code, Section 1001.

CERTIFIER'S NAME MARK D. DUREN LICENSE NUMBER LS 4708

TITLE SURVEYOR AND MAPPER COMPANY NAME MARK D. DUREN, PSM

ADDRESS	CITY	STATE	ZIP CODE
1604 SW SISTERS WELCOME ROAD	LAKE CITY	FL	32025

SIGNATURE ____ DATE 12/30/05 TELEPHONE 386-758-9831

See reverse side for continuation.

-23728-

IMPORTANT: In these spaces, copy the corresponding information from Section A.			For Insurance Company Use:
BUILDING STREET ADDRESS (Including Apt., Unit, Suite, and/or Bldg. No.) OR P.O. ROUTE AND BOX NO. 360 SW BLUFF DRIVE			Policy Number
CITY FT. WHITE	STATE FL	ZIP CODE 32038	Company NAIC Number

SECTION D - SURVEYOR, ENGINEER, OR ARCHITECT CERTIFICATION (CONTINUED)

Copy both sides of this Elevation Certificate for (1) community official, (2) insurance agent/company, and (3) building owner.

COMMENTS
SPLIT LEVEL FRAME DWELLING UNDERCONSTRUCTION.

☐ Check here if attachments

SECTION E - BUILDING ELEVATION INFORMATION (SURVEY NOT REQUIRED) FOR ZONE AO AND ZONE A (WITHOUT BFE)

For Zone AO and Zone A (without BFE), complete Items E1 through E4. If the Elevation Certificate is intended for use as supporting information for a LOMA or LOMR-F, Section C must be completed.

E1. Building Diagram Number _(Select the building diagram most similar to the building for which this certificate is being completed – see pages 6 and 7. If no diagram accurately represents the building, provide a sketch or photograph.)

E2. The top of the bottom floor (including basement or enclosure) of the building is __ ft.(m) __in.(cm) ☐ above or ☐ below (check one) the highest adjacent grade. (Use natural grade, if available).

E3. For Building Diagrams 6-8 with openings (see page 7), the next higher floor or elevated floor (elevation b) of the building is __ ft.(m) __in.(cm) above the highest adjacent grade. Complete items C3.h and C3.i on front of form.

E4. The top of the platform of machinery and/or equipment servicing the building is __ ft.(m) __in.(cm) ☐ above or ☐ below (check one) the highest adjacent grade. (Use natural grade, if available).

E5. For Zone AO only: If no flood depth number is available, is the top of the bottom floor elevated in accordance with the community's floodplain management ordinance?
☐ Yes ☐ No ☐ Unknown. The local official must certify this information in Section G.

SECTION F - PROPERTY OWNER (OR OWNER'S REPRESENTATIVE) CERTIFICATION

The property owner or owner's authorized representative who completes Sections A, B, C (Items C3.h and C3.i only), and E for Zone A (without a FEMA-issued or community-issued BFE) or Zone AO must sign here. *The statements in Sections A, B, C, and E are correct to the best of my knowledge.*

PROPERTY OWNER'S OR OWNER'S AUTHORIZED REPRESENTATIVE'S NAME MARK D. DUREN			
ADDRESS 1604 SW SISTERS WELCOME ROAD	CITY LAKE CITY	STATE FL	ZIP CODE 32025
SIGNATURE	DATE	TELEPHONE 386-758-9831	

COMMENTS

☐ Check here if attachments

SECTION G - COMMUNITY INFORMATION (OPTIONAL)

The local official who is authorized by law or ordinance to administer the community's floodplain management ordinance can complete Sections A, B, C (or E), and G of this Elevation Certificate. Complete the applicable item(s) and sign below.

G1. ☐ The information in Section C was taken from other documentation that has been signed and embossed by a licensed surveyor, engineer, or architect who is authorized by state or local law to certify elevation information. (Indicate the source and date of the elevation data in the Comments area below.)

G2. ☐ A community official completed Section E for a building located in Zone A (without a FEMA-issued or community-issued BFE) or Zone AO.

G3. ☐ The following information (Items G4-G9) is provided for community floodplain management purposes.

G4. PERMIT NUMBER	G5. DATE PERMIT ISSUED	G6. DATE CERTIFICATE OF COMPLIANCE/OCCUPANCY ISSUED

G7. This permit has been issued for: ☐ New Construction ☐ Substantial Improvement

G8. Elevation of as-built lowest floor (including basement) of the building is: ____.__ft.(m) Datum: ____

G9. BFE or (in Zone AO) depth of flooding at the building site is: ____.__ ft.(m) Datum: ____

LOCAL OFFICIAL'S NAME	TITLE
COMMUNITY NAME	TELEPHONE
SIGNATURE	DATE

COMMENTS

☐ Check here if attachments

Donald Alan Yanskey
ARCHITECT
2421 NW 49th Avenue • Gainesville, Florida 32605 • PH (352) 371-4064 • FAX (352) 371-4064

Windload Calculations Summary
For
A New Residence for The Fitzgeralds
Columbia County, Florida

CRITERIA:

Code Reference:	Florida Building Code 2001
Location:	Columbia County, Florida
Basic Wind Speed:	110 MPH
Mean Roof Height:	Less than 30'-0"
Wind Importance Factor:	1.0
Building Exposure Factor:	Exposure B
Building Enclosure:	Building is Enclosed
Internal Pressure Coefficient:	1.0
Component & Cladding Design Wind Pressure:	29.1 PSF
Roof Overhang Design Wind Pressure:	42.4 PSF

BUILDING DATA:

One Story Profile with Partial 2nd Floor:	12'-0"
HIP Roof Pitch:	10 / 12 & 6 / 12
Hip Roof Overhang:	1'-4" (Maximum)

FOOTINGS & PIERS:

Concrete Footings along the perimeter of the residence shall be 24" wide x 18" deep with 3 - #5 continuous with #5 transverse at 2'-0" O.C., also add 3 - #5 top x (.667 x clear span between piers with #5 transverse at 2'-0" O.C.). Concrete Footings along the center of the residence shall be 24" wide x 12" deep with 3 - #5 continuous with #5 transverse at 2'-0" O.C. Concrete for footings and slab shall be minimum 3000 PSI. Provide 16" x 16" C.M.U. piers with 4 - #5 vertical and concrete filled.

ANCHOR STRAP EMBEDS @ PIERS:

Provide 1 – Simpson STHD14 strap tie holddown at each pier to floor beam connection.

Donald Alan Yanskey, Architect
05/09/05
FL AR 0011010

WALL STUDS:

12'-0" High Exterior Walls – use 2 x 4 Spruce-Pine-Fir Number 2 at 1'-0" O.C. at exterior walls exposed to wind.

SHEARWALL SHEATHING:

Use 7/16" thick OSB sheathing minimum with 8d Common Nails at 3" O.C. along sheet edges and 12" O.C. in sheet field for both Exterior Transverse and Longitudinal Shearwalls (OK for 590 pounds per lineal foot) – see Drawings for exterior shearwall locations.

See Drawings for locations of Interior Shearwalls, use Simpson CS16 Coil Strap in "X" pattern with Simpson N8 Nails – see Drawings for locations.

TOTAL INTERIOR & EXTERIOR TRANSVERSE SHEARWALLS = 63'-8"
TOTAL INTERIOR & EXTERIOR LONGITUDINAL SHEARWALLS = 48'-2"

INTERIOR TRANSVERSE SHEARWALLS:

4'-0" Long: Use 20 – Simpson N8 Nails into each leg of "X" into studs.(1 req.)
6'-0" Long: Use 30 – Simpson N8 Nails into each leg of "X" into studs.(2 req.)
6'-4" Long: Use 32 – Simpson N8 Nails into each leg of "X" into studs.(1 req.)
8'-2" Long: Use 40 – Simpson N8 Nails into each leg of "X" into studs.(2 req.)
8'-4" Long: Use 42 – Simpson N8 Nails into each leg of "X" into studs.(1 req.)

INTERIOR LONGITUDINAL SHEARWALLS:

4'-6" Long: Use 24 – Simpson N8 Nails into each leg of "X" into studs.(1 req.)
4'-10" Long: Use 26 – Simpson N8 Nails into each leg of "X" into studs.(1 req.)
6'-0" Long: Use 30 – Simpson N8 Nails into each leg of "X" into studs.(1 req.)
6'-6" Long: Use 34 – Simpson N8 Nails into each leg of "X" into studs.(1 req.)

RAFTER HURRICANE ANCHORS:

Provide 1 – Simpson H10 Hurricane Anchor at each rafter bearing location.

ROOF SHEATHING:

Use 7/16" thick OSB sheathing minimum with 8d Common Nails at 3" O.C. along sheet edges and 12" O.C. in sheet field. No intermediate blocking is required between trusses.

Donald Alan Yanskey, Architect
05/09/05
FL AR 0011010

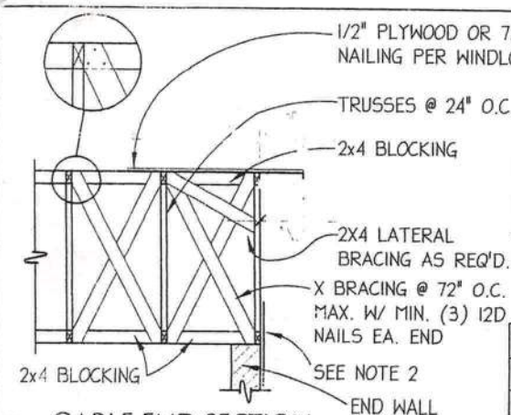

GABLE END SECTION

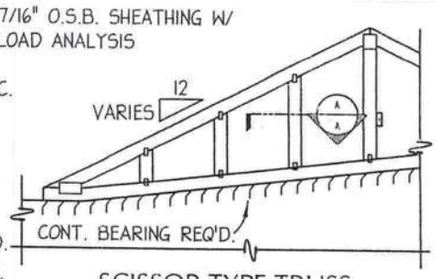

SCISSOR TYPE TRUSS

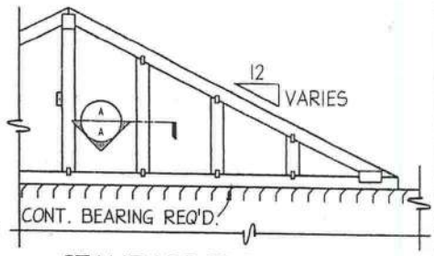

STANDARD TYPE TRUSS

MINIMUM GRADE OF LUMBER
TOP CHORD - 2X4 NO. 2 19 SP
BOTT. CHORD - 2X4 NO. 2 19 SP
WEBS - 2X4 NO 3 19 SP

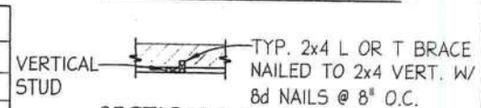

SECTION A-A

MAXIMUM VERTICAL STUDS HEIGHT			
SPACING OF VERTICALS	WITHOUT BRACE	WITH LATERAL BRACE	WITH L OR T BRACE
12" O.C.	5'-7"	14'-3"	10'-5"
16" O.C.	5'-1"	12'-5"	9'-6"
24" O.C.	4'-5"	10'-2"	8'-0"

LOADING (P.S.F.)		
LOAD TYPE	LIVE	DEAD
TOP	20	7
BOTTOM	0	10
SPACING 24" O.C.		

STR. INCR.: 33%
REP. STRESS: YES
TPI-95 CRIT.
SSBC-97

LATERAL BRACING NAILING SCHEDULES	
VERTICAL HEIGHT	# NAILS AT END
UP TO 7'-0"	2 - 16D
7'-0" TO 8'-8"	3 - 16D
OVER 8'-8"	4 - 16D

NOTES:

1. VERT. HAS BEEN CHECKED FOR 110 M.P.H. WIND LOAD, 25'-0" MEAN WALL HEIGHT.
2. CONNECTION BETWEEN BOTTOM CHORD OF GABLE END MUST BE MADE BY INSTALLING SIMPSON ST22 STRAPS OR EQUIV., PLACE STRAP ON EVERY OTHER VERT., OR 48" O.C. USING 10d NAILS ON STRAP.
3. REFER TO MANUF. NAILING RECOMMENDATIONS FOR ALL STRAPPING & HARDWARE
4. NAIL BLOCKING TO TRUSS W/ (2) 16d EA. END. NAIL X-BRACING TO BLOCKING W/ (3) 16d EA. END

STANDARD GABLE END DETAIL

NOT TO SCALE (NON BALLOON FRAMED GABLE END, 2x4 #2 GRADE MARKED LUMBER MIN.)

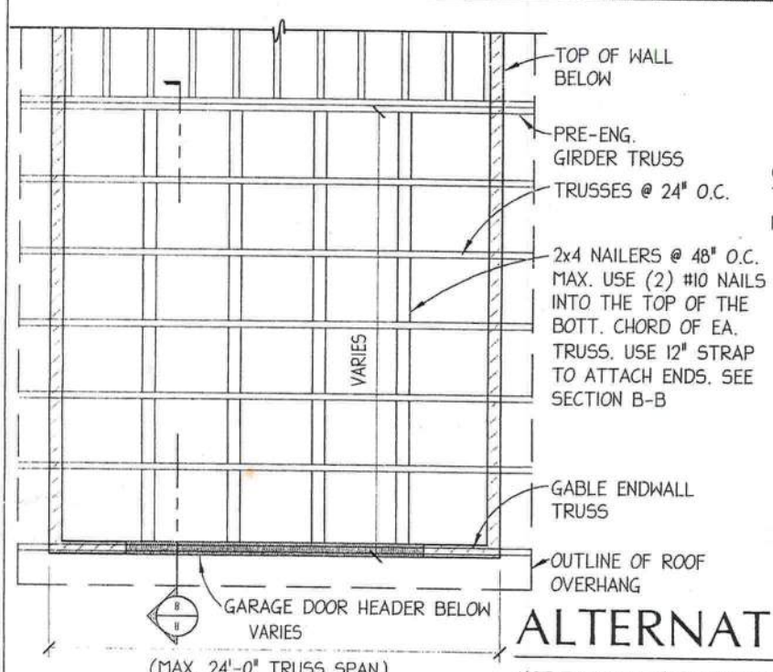

(MAX. 24'-0" TRUSS SPAN)

PLAN VIEW

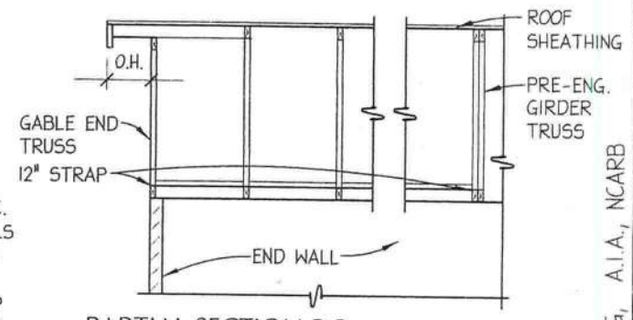

PARTIAL SECTION B-B

NOTE:

INSTALL AND ERECT ALL TRUSS MEMBERS IN STRICT CONFORMANCE WOTH THE PRE-ENGINEERED ROOF TRUSS MANUFACTURERS ERECTION SHEET ACCOMPANYING THE TRUSS PACKAGE. IF NOT AVAILABLE, IT IS THE CONTRACTOR'S RESPONSIBILITY TO CONTACT THE SUPPLIER TO OBTAIN ERECTION & BRACING SHEET.

ALTERNATE GABLE END DETAIL

NOT TO SCALE (NON BALLOON FRAMED GABLE END - UPLIFT ONLY, 2x4 #2 GRADE MARKED LUMBER MIN.)

SUHLP

DN001378
3/9/05

P:\Active Projects\Details\GABLE END.DWG 10/23/02 16:19

From: The Columbia County Building Department
Plans Review
135 NE Hernando Av.
P. O Box 1529
Lake City Florida, 32056-1529

Reference to: Build permit application Number: **0509-55 O'Neil Construction**
Owner John Fitzgerald Lot 32 of Cedar Springs Shores

On the date of September 20, 2005 application 0509-55 and plans for construction of a single family dwelling were reviewed and the following information or alteration to the plans will be required to continue processing this application. If you should have any question please contact the above address, or contact phone number (386) 758-1163 or fax any information to (386) 754-7088.

Please include application number 0509-55 when making reference to this application.

1. Please submit a recorded notice of commencement with this department prior to requesting any inspections on this dwelling.

OK 10-12 2. The square footage summary on the plans states the total square footage under roof will be Fix Application 1971 sq.ft. The building permit application (0509-55) heated floor area states the square footage to be 1850 and the Florida Energy Efficiency Code for Building Construction (form 600A-2001) A.C. MAN Allowed for 2nd Story greater Letter Attach line six conditioned floor area square footage states 2572 sq.ft. Please correct this discrepancy.

OK 10-12 3. Show on the elevation plan the distance of the chimney from the nearest roof line. MARK on Right Elevation

4. Show on the elevation plan the total height of the structure from the established grade to the ridge of the roof. MARK on Elevation Sheet

OK 10-12 5. The depiction of the stairwell shows the stair treads to be 9 ½" please show compliance with the FBC on stairs within a dwelling. Every tread less than 10 inches (254 mm) wide shall have a nosing, or effective projection, of approximately 1 inch (25.4 mm) over the level immediately below that tread. Noted on PLAN

OK 10-12 6. Application (0509-55) requests the construction of a dwelling in an AE flood zone. The finished floor elevation of 43 feet 3 inches is to be established, show the stair/or stairs that will provide egress to the dwelling. ON PLAN

OK 10-12 7. Within the dwelling show a detail design of the guardrail system to comply with sections 1015 of the 2001 FBC. NOTED on PLAN

8. Please submit a foundation drawing to scale using the design by Mr. Donald Alan Yanskey Architect show the pier spacing. ON Sheet 3 of 4

OK 10-12 9. Show the method of compliance with sections 2405.3 of the 2001 FBC wind loads requirements for fixed glass areas. glass spec's to Be Supplied By Window Manufatu @ time of FRAMing

OK 10-12 10. Application (0509-55) requests the construction of a dwelling in an AE flood zone, therefore a subsurface investigation of the soils will be required to done by a geotechnical testing company to determine the soils supporting stability. This soil investigation shall be done to a depth of not less than eight feet below the natural grade. Attached

OK 10-12 11. On sheet 3 of 4 the typical wall 2 story drawing shows 7/8" Hardi Board as the exterior wall covering. Please show compliance with Mr. Donald Alan Yanskey shearwall design by showing shearwall sheeting to be 7/16" OSB along with the nailing requirements. MARK ON PLAN

OK 10-12 12. Show a drawing design of the gable end showing balloon framing detail or gable truss and wall hinge bracing detail. Attached

13. Show a drawing design that details the attachment system, that continuous tie structure from the foundation to the roof truss system. ON Wall Section

OK 10-12 14. Show on the plans the method to be used for fireblocking and draft stopping requirements. In concealed spaces of stud walls and partitions, including furred spaces and parallel rows of studs

or staggered studs; as follows: Vertically at the ceiling and all floor levels and horizontally at intervals not exceeding 10 feet (3048 mm).

OK 14. Indicate where pressure treated wood will be placed on the structure.

OK 15. Show the floor framing system for the first and second floor area along with any exterior deck area, stair walkway and balconies include the following design information.

A. Floor truss package including layout and details, signed and sealed by Florida Registered Professional Engineer

B. Floor joist size and spacing

C. Girder size and spacing

D. Attachment of joist to girder

E. Live and dead loading capacity per square foot floor design.

OK 16. Show a three way electrical switch system locating one switch at the bottom and top landing of the stairs. ON PLAN

OK 17. Please insert a note on the electrical plans to require: When more than one smoke alarm is required to be installed within an individual dwelling unit the alarm devices shall be interconnected in such a manner that the actuation of one alarm will activate all of the alarms in the individual unit. The alarm shall be clearly audible in all bedrooms over background noise levels with all intervening doors closed. ON PLAN

OK 18. Please insert a note on the electrical plans to require: all bedrooms circuits to have arc fault circuits (AFCI) protection. ON PLAN

Thank you,

Joe Haltiwanger
Plan Examiner

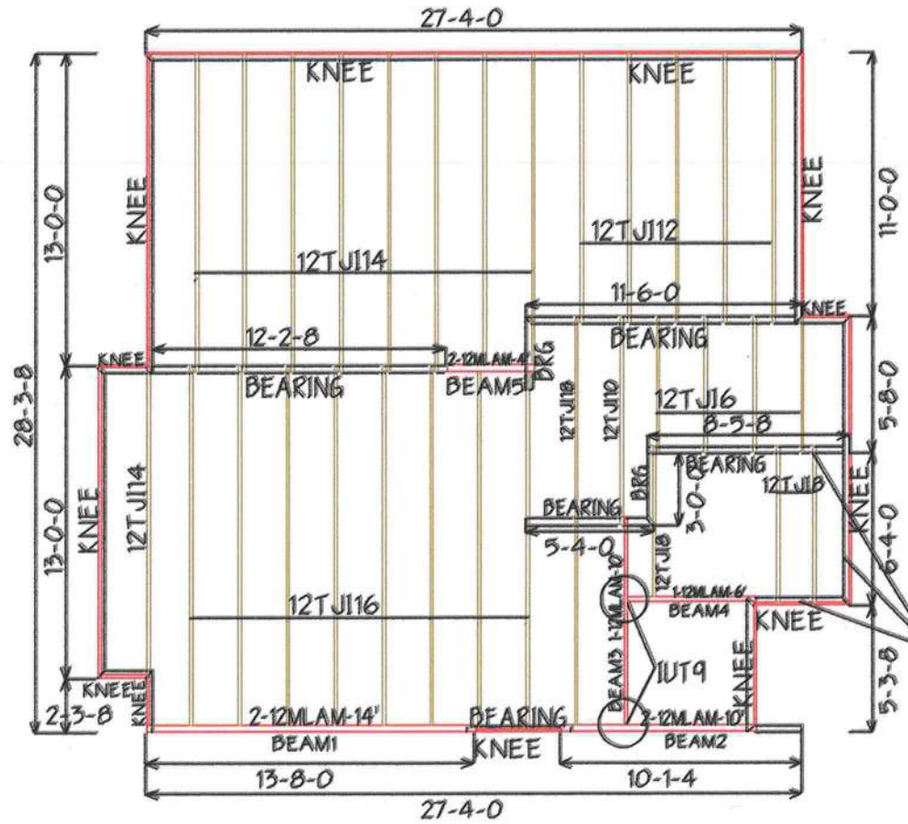

BEAM SCHEDULE

BEAM 1 = 2-12MLAM-14'
BEAM 2 = 2-12MLAM-10'
BEAM 3 = 1-12MLAM-10'
BEAM 4 = 1-12MLAM-6'
BEAM 5 = 2-12MLAM-4'
KNEE = 6-12TS-16'
12TJ116 = 8-12TJI360-16'
12TJ114 = 9-12TJI360-14'
12TJ118 = 1-12TJI360-18'
12TJ112 = 5-12TJI360-12'
12TJ110 = 1-12TJI360-10'
12TJ18 = 3-12TJI360-8'
12TJ16 = 4-12TJI360-6'

ADJUST LANDING HEIGHT IN FIELD AS NECESSARY FOR STAIRS

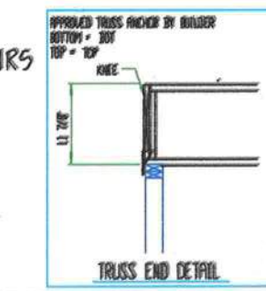

BEARING HEIGHT SCHEDULE

91 1/2" PLATE

BEAM

HANGER SCHEDULE
12 - ITT35/11.88
2 - IUT9

NOTES:

SHOP DRAWING APPROVAL

Builders FirstSource
Burnett
Jacksonville
Lake City
Sanford

O'NEIL CONSTRUCTION
FITGERALD RES.
FLOOR SYSTEM
NTS
4-18-05
J.DORRIS
L10917F

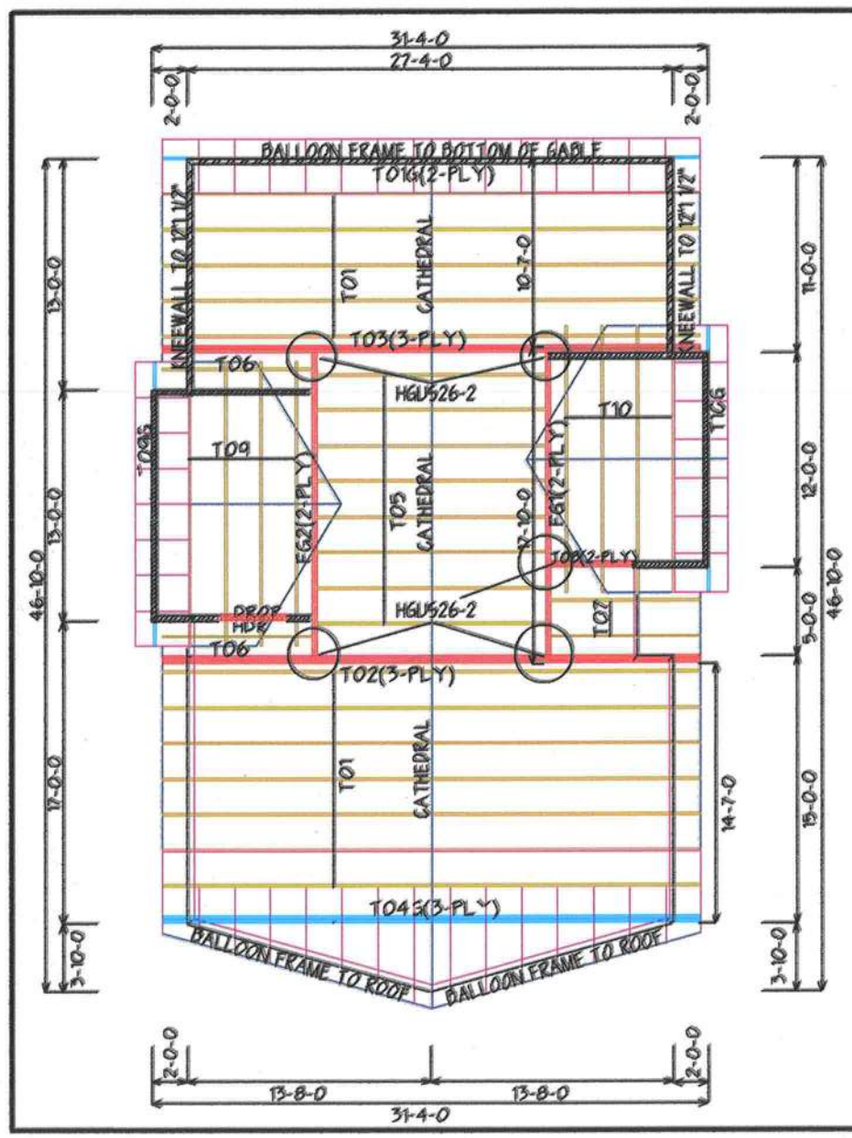

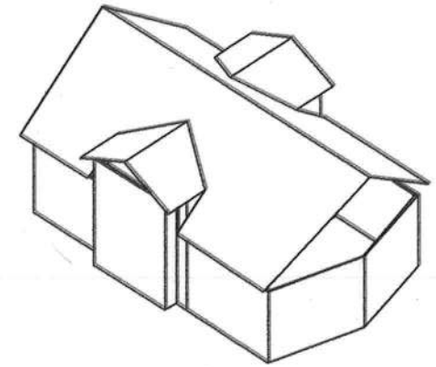

END DETAIL
PARALLEL CHORD TRUSS

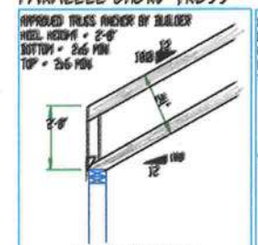

TRUSS END DETAIL

END DETAIL
ROOF ABOVE

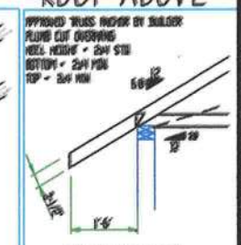

TRUSS END DETAIL

BEARING HEIGHT SCHEDULE

- 12'1 1/2" PLATE
- 13'3 5/8" PLATE
- KNEEWALL OVER UP TO 12'1 1/2" PLATE
- HEADER

HANGER SCHEDULE

16 - HUS26
5 - HGUS26-2

NOTES:

SHOP DRAWING APPROVAL

Builders FirstSource
Duval
Jacksonville
Lake City
Sanford

O'NEIL CONSTRUCTION
FITZGERALD RES
CUSTOM
4-18-03 B.DORRIS
NTS
L110917

Project Information for: L110917
Builder: O'NEIL CONSTRUCTION
Lot: N/A
Subdivision: 380 SW BLUFF DR.
County or City: COLUMBIA COUNTY
Truss Page Count: 15

Date: 4/22/2005
Start Number: 003

Truss Design Load Information (UNO) Design Program: MiTek 5.2 / 6.2

Gravity		**Wind**		**Building Code:**	FBC2001
Roof (psf):	42	Wind Standard:	ASCE 7-98		
Floor (psf):	55	Wind Speed (mph):	120		

Note: See individual truss drawings for special loading conditions

Building Designer, responsible for Structural Engineering: (See attached)
O'NEIL CONSTRUCTION OF HIGH SPRING INC. QB 0010656
Address: 110 NE 1ST AVENUE
HIGH SPRINGS, FL. 32643
Designer: 63

Truss Design Engineer: Thomas, E. Miller, P.E., 56877 - Byron K. Anderson, PE FL 60987
Company: Structural Engineering and Inspections, Inc. EB 9196
Address 16105 N. Florida Ave, Ste B, Lutz, FL 33549

Notes:
1. Truss Design Engineer is responsible for the individual trusses as components only.
2. Determination as to the suitability and use of these truss components for the structure is the responsibility of the Building Designer of Record, as defined in ANSI/TPI 1-1995 Section 2.2
3. The seal date shown on the individual truss component drawings must match the seal date on this index sheet.

#	Truss ID	Dwg. #	Seal Date	#	Truss ID	Dwg. #	Seal Date
1	FG1	042205003	4/22/2005				
2	FG2	042205004	4/22/2005				
3	T01	042205005	4/22/2005				
4	T01G	042205006	4/22/2005				
5	T02	042205007	4/22/2005				
6	T03	042205008	4/22/2005				
7	T04G	042205009	4/22/2005				
8	T05	042205010	4/22/2005				
9	T06	042205011	4/22/2005				
10	T07	042205012	4/22/2005				
11	T08	042205013	4/22/2005				
12	T09	042205014	4/22/2005				
13	T09G	042205015	4/22/2005				
14	T10	042205016	4/22/2005				
15	T10G	042205017	4/22/2005				

APR 22 2005

Dwg.#042205002

Licensee Details

Licensee Information

Name:	**O'NEIL CONSTRUCTION OF HIGH SPRING INC (Primary Name)**
Main Address:	**P O BOX 1633 HIGH SPRINGS, Florida 32655**
Lic. Location:	**110 NE 1ST AVENUE HIGH SPRINGS, FL 32643 Alachua**

License Information

License Type:	**Construction Qualified Business**
Rank:	**Qualified Org**
License Number:	**QB0010656**
Status:	**Current, Active**
Licensure Date:	**12/30/1998**
Expires:	**08/31/2005**

View Related License Information
View License Complaint

New Search

APRIL 22, 2005 TRUSS DESIGN ENGINEER:
THOMAS E. MILLER PE 55877 BYRONK ANDERSON PE 60987
STRUCTURAL ENGINEERING AND INSPECTIONS, INC. EB 9196
16105 N. FLORIDA AVE. STE B, LUTZ, FL 33549

Job	Truss	Truss Type	Qty	Ply	FITZGERALD RESIDENCE ONEIL CONST
L110917	FG1	SPECIAL	1	2	Job Reference (optional) Dwg.#042205003

Builders FirstSource, Lake City, Fl 32055

6.200 s Dec 15 2004 MiTek Industries, Inc. Wed Apr 20 12:58:50 2005 Page 1

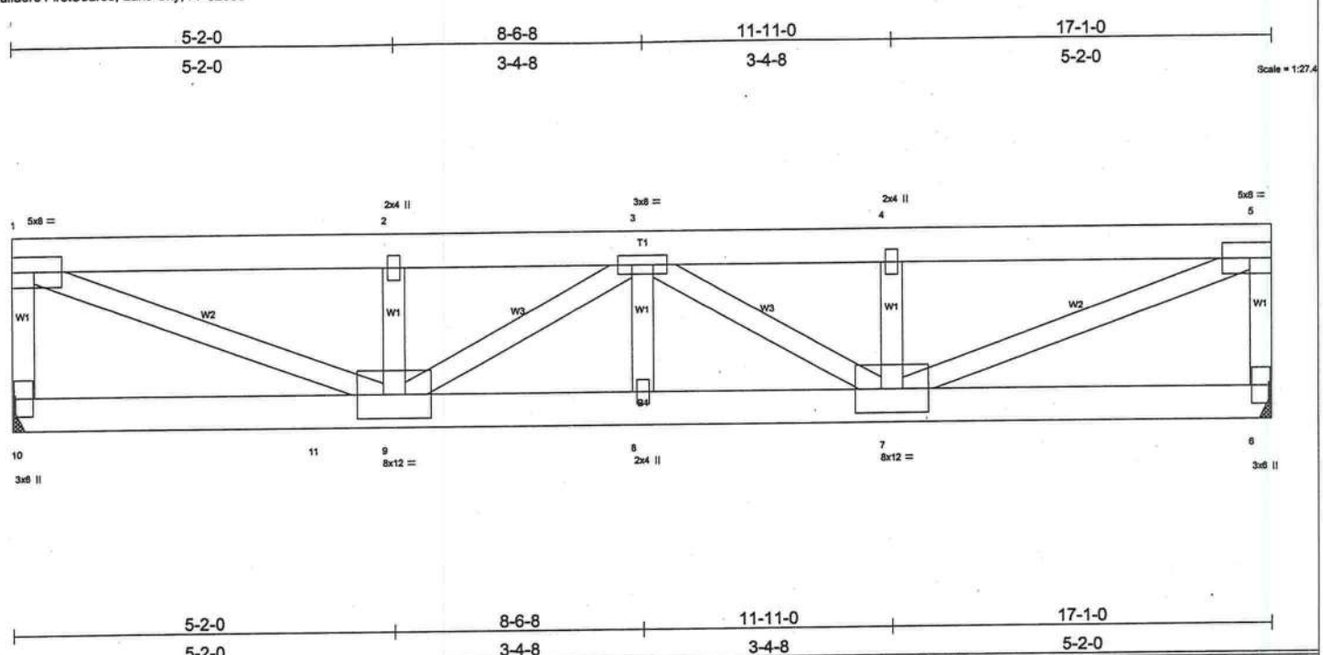

LOADING (psf)		SPACING	2-0-0	CSI		DEFL	in	(loc)	l/defl	L/d	PLATES	GRIP
TCLL	20.0	Plates Increase	1.25	TC	0.94	Vert(LL)	-0.10	8	>999	240	MT20	244/190
TCDL	7.0	Lumber Increase	1.25	BC	0.39	Vert(TL)	-0.14	8	>999	180		
BCLL	10.0	Rep Stress Incr	NO	WB	0.88	Horz(TL)	0.02	6	n/a	n/a		
BCDL	5.0	Code FBC2001/ANSI95		(Matrix)							Weight: 237 lb	

LUMBER
TOP CHORD 2 X 6 SYP No.1D
BOT CHORD 2 X 6 SYP No.1D
WEBS 2 X 4 SYP No.3

BRACING
TOP CHORD Sheathed or 6-0-0 oc purlins, except end verticals.
BOT CHORD Rigid ceiling directly applied or 10-0-0 oc bracing.

REACTIONS (lb/size) 10=3278/Mechanical, 6=2832/Mechanical
Max Horz 10=-95(load case 2)
Max Uplift10=-1244(load case 2), 6=-1076(load case 3)

FORCES (lb) - Maximum Compression/Maximum Tension
TOP CHORD 1-10=-2455/969, 1-2=-5401/2064, 2-3=-5401/2064, 3-4=-4723/1808, 4-5=-4723/1808, 5-6=-2159/857
BOT CHORD 10-11=-214/388, 9-11=-214/388, 8-9=-2257/5859, 7-8=-2257/5859, 6-7=-145/328
WEBS 1-9=-2078/5472, 2-9=-20/96, 3-9=-546/222, 3-8=-235/719, 3-7=-1355/525, 4-7=-69/115, 5-7=-1825/4797

NOTES
1) 2-ply truss to be connected together with 0.131"x3" Nails as follows:
Top chords connected as follows: 2 X 4 - 1 row at 0-9-0 oc, 2 X 6 - 2 rows at 0-9-0 oc.
Bottom chords connected as follows: 2 X 6 - 2 rows at 0-9-0 oc.
Webs connected as follows: 2 X 4 - 1 row at 0-9-0 oc.
2) All loads are considered equally applied to all plies, except if noted as front (F) or back (B) face in the LOAD CASE(S) section. Ply to ply connections have been provided to distribute only loads noted as (F) or (B), unless otherwise indicated.
3) Wind: ASCE 7-98; 110mph (3-second gust); h=20ft; TCDL=4.2psf; BCDL=3.0psf; Category II; Exp B; enclosed; MWFRS gable end zone; end vertical left and right exposed; Lumber DOL=1.60 plate grip DOL=1.60.
4) Provide adequate drainage to prevent water ponding.
5) Refer to girder(s) for truss to truss connections.
6) Provide mechanical connection (by others) of truss to bearing plate capable of withstanding 1244 lb uplift at joint 10 and 1076 lb uplift at joint 6.
7) Girder carries tie-in span(s): 4-11-0 from 0-0-0 to 4-2-0; 12-11-0 from 0-0-0 to 17-1-0
8) Hanger(s) or other connection device(s) shall be provided sufficient to support concentrated load(s) 684 lb down and 258 lb up at 5-2-0 on bottom chord. The design/selection of such connection device(s) is the responsibility of others.

LOAD CASE(S) Standard
1) Regular: Lumber Increase=1.25, Plate Increase=1.25
Uniform Loads (plf)
Vert: 1-5=-54, 10-11=-312(F=-56, B=-226), 6-11=-256(B=-226)
Concentrated Loads (lb)
Vert: 9=-684(F)

APRIL 22, 2005 TRUSS DESIGN ENGINEER:
THOMAS E. MILLER PE 56877, BYRON K. ANDERSON PE 60987
STRUCTURAL ENGINEERING AND INSPECTIONS, INC. EB 9196
16105 N. FLORIDA AVE. STE B, LUTZ, FL 33549

Job	Truss	Truss Type	Qty	Ply	FITZGERALD RESIDENCE ONEIL CONST
L110917	FG2	SPECIAL	1	2	Job Reference (optional) Dwg.#042205004

Builders FirstSource, Lake City, Fl 32055

6.200 s Dec 15 2004 MiTek Industries, Inc. Wed Apr 20 12:58:51 2005 Page 1

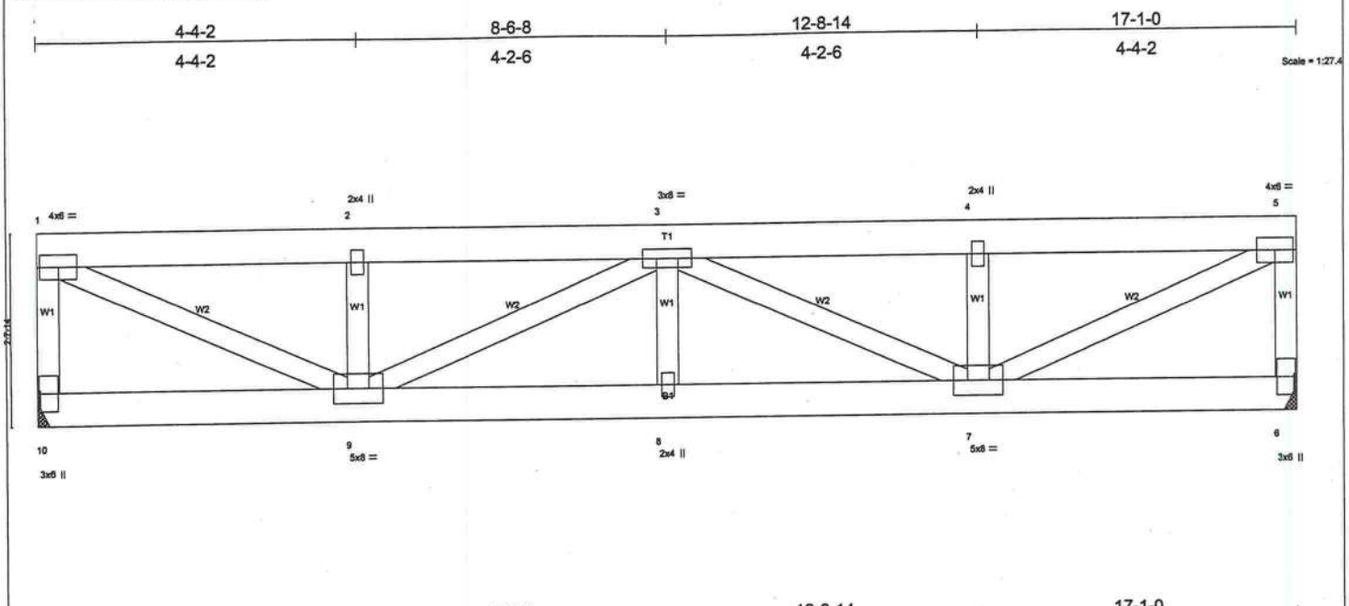

LOADING (psf)		SPACING	2-0-0	CSI		DEFL	in	(loc)	l/defl	L/d	PLATES	GRIP
TCLL	20.0	Plates Increase	1.25	TC	0.53	Vert(LL)	-0.08	8	>999	240	MT20	244/190
TCDL	7.0	Lumber Increase	1.25	BC	0.34	Vert(TL)	-0.11	8	>999	180		
BCLL	10.0	Rep Stress Incr	NO	WB	0.65	Horz(TL)	0.02	6	n/a	n/a		
BCDL	5.0	Code FBC2001/ANSI95		(Matrix)							Weight: 236 lb	

LUMBER
TOP CHORD 2 X 6 SYP No.1D
BOT CHORD 2 X 6 SYP No.1D
WEBS 2 X 4 SYP No.3

BRACING
TOP CHORD Sheathed or 6-0-0 oc purlins, except end verticals.
BOT CHORD Rigid ceiling directly applied or 10-0-0 oc bracing.

REACTIONS (lb/size) 10=2601/Mechanical, 6=2601/Mechanical
Max Horz 10=95(load case 3)
Max Uplift10=-988(load case 2), 6=-988(load case 3)

FORCES (lb) - Maximum Compression/Maximum Tension
TOP CHORD 1-10=-2062/812, 1-2=-3804/1461, 2-3=-3804/1461, 3-4=-3804/1461, 4-5=-3804/1461, 5-6=-2062/813
BOT CHORD 9-10=-151/220, 8-9=-1951/5050, 7-8=-1951/5050, 6-7=-104/220
WEBS 1-9=-1537/4044, 2-9=-138/133, 3-9=-1406/549, 3-8=-329/1048, 3-7=-1406/546, 4-7=-138/135, 5-7=-1539/4044

NOTES
1) 2-ply truss to be connected together with 0.131"x3" Nails as follows:
Top chords connected as follows: 2 X 4 - 1 row at 0-9-0 oc, 2 X 6 - 2 rows at 0-9-0 oc.
Bottom chords connected as follows: 2 X 6 - 2 rows at 0-9-0 oc.
Webs connected as follows: 2 X 4 - 1 row at 0-9-0 oc.
2) All loads are considered equally applied to all plies, except if noted as front (F) or back (B) face in the LOAD CASE(S) section. Ply to ply connections have been provided to distribute only loads noted as (F) or (B), unless otherwise indicated.
3) Wind: ASCE 7-98; 110mph (3-second gust); h=20ft; TCDL=4.2psf; BCDL=3.0psf; Category II; Exp B; enclosed; MWFRS gable end zone; end vertical left and right exposed; Lumber DOL=1.60 plate grip DOL=1.60.
4) Provide adequate drainage to prevent water ponding.
5) Refer to girder(s) for truss to truss connections.
6) Provide mechanical connection (by others) of truss to bearing plate capable of withstanding 988 lb uplift at joint 10 and 988 lb uplift at joint 6.
7) Girder carries tie-in span(s): 12-11-0 from 0-0-0 to 17-1-0

LOAD CASE(S) Standard
1) Regular: Lumber Increase=1.25, Plate Increase=1.25
Uniform Loads (plf)
Vert: 1-5=-54, 6-10=-256(F=-226)

APRIL 22, 2005 TRUSS DESIGN ENGINEER:
THOMAS E. MILLER PE 56877, BYRON K. ANDERSON PE 60987
STRUCTURAL ENGINEERING AND INSPECTIONS, INC. EB 9196
16105 N. FLORIDA AVE. STE B, LUTZ, FL 33549

Job	Truss	Truss Type	Qty	Ply	FITZGERALD RESIDENCE ONEIL CONST
L110917	T01	SCISSORS	12	1	Job Reference (optional) Dwg.#042205005

Builders FirstSource, Lake City, Fl 32055 — 6.200 s Dec 15 2004 MiTek Industries, Inc. Wed Apr 20 12:58:52 2005 Page 1

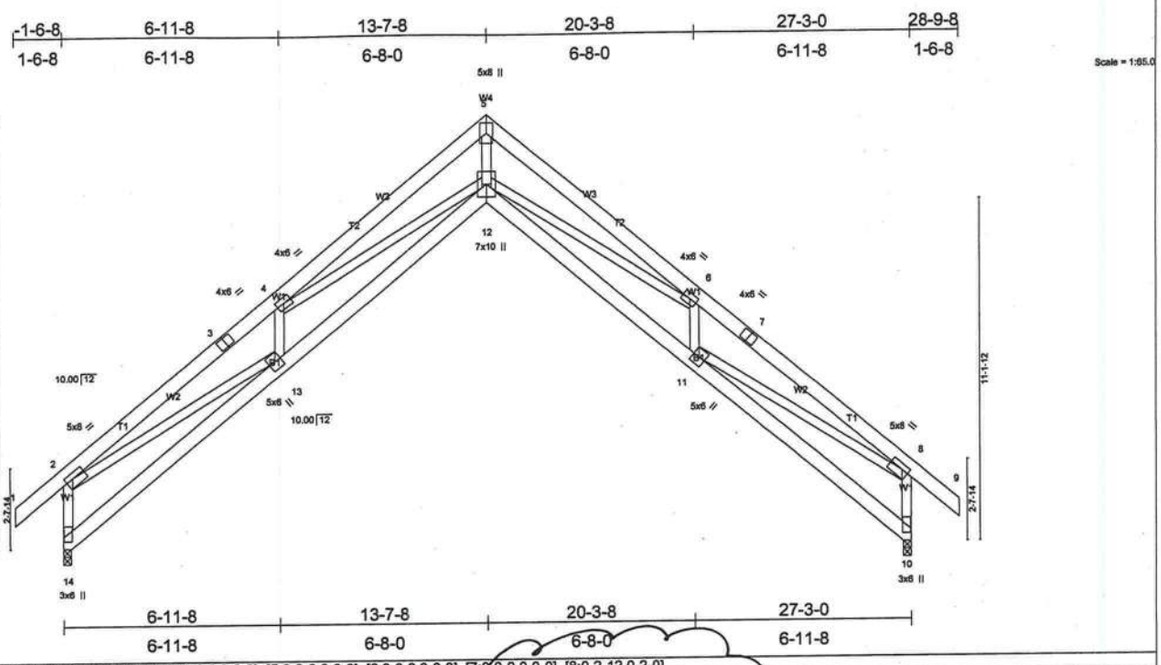

Plate Offsets (X,Y): [2:0-2-12,0-2-0], [3:0-0-0,0-0-0], [4:0-0-0,0-0-0], [5:0-0-0,0-0-0], [6:0-0-0,0-0-0], [7:0-0-0,0-0-0], [8:0-2-12,0-2-0]

LOADING (psf)		SPACING 2-0-0		CSI		DEFL	in	(loc)	l/defl	L/d	PLATES	GRIP
TCLL	20.0	Plates Increase	1.25	TC	0.61	Vert(LL)	-0.47	12	>695	240	MT20	244/190
TCDL	7.0	Lumber Increase	1.25	BC	0.46	Vert(TL)	-0.65	12	>496	180		
BCLL	10.0	Rep Stress Incr	YES	WB	0.91	Horz(TL)	1.15	10	n/a	n/a		
BCDL	5.0	Code FBC2001/ANSI95		(Matrix)							Weight: 238 lb	

LUMBER
TOP CHORD 2 X 6 SYP No.1D
BOT CHORD 2 X 6 SYP No.1D
WEBS 2 X 4 SYP No.3 *Except*
W4 2 X 4 SYP No.2D

BRACING
TOP CHORD Sheathed or 3-10-7 oc purlins, except end verticals.
BOT CHORD Rigid ceiling directly applied or 10-0-0 oc bracing. Except:
6-11-9 oc bracing: 12-13.

REACTIONS (lb/size) 14=1223/0-3-0, 10=1223/0-3-0
Max Horz 14=-512(load case 3)
Max Uplift14=-388(load case 5), 10=-388(load case 6)

FORCES (lb) - Maximum Compression/Maximum Tension
TOP CHORD 2-14=-1224/646, 1-2=0/58, 2-3=-3444/1070, 3-4=-3268/1089, 4-5=-4459/987, 5-6=-4459/1089, 6-7=-3268/660, 7-8=-3444/642, 8-9=0/58, 8-10=-1224/490
BOT CHORD 13-14=-678/706, 12-13=-1450/3351, 11-12=-455/3351, 10-11=-19/235
WEBS 2-13=-653/2672, 4-13=-604/249, 4-12=0/1039, 5-12=-1280/5197, 6-12=-756/1512, 6-11=-604/170, 8-11=-360/2672

NOTES
1) Unbalanced roof live loads have been considered for this design.
2) Wind: ASCE 7-98; 110mph (3-second gust); h=20ft; TCDL=4.2psf; BCDL=3.0psf; Category II; Exp B; enclosed; MWFRS gable end zone and C-C Exterior(2) zone; end vertical left and right exposed; Lumber DOL=1.60 plate grip DOL=1.60. This truss is designed for C-C for members and forces, and for MWFRS for reactions specified.
3) Special provisions shall be made by the building designer to allow for 0.82in of horizontal movement due to live load and 1.15in due to total load.
4) Bearing at joint(s) 14, 10 considers parallel to grain value using ANSI/TPI 1 angle to grain formula. Building designer should verify capacity of bearing surface.
5) Provide mechanical connection (by others) of truss to bearing plate capable of withstanding 388 lb uplift at joint 14 and 388 lb uplift at joint 10.

LOAD CASE(S) Standard

APRIL 22, 2005 TRUSS DESIGN ENGINEER:
THOMAS E. MILLER PE 56877, BYRON K. ANDERSON PE 60987
STRUCTURAL ENGINEERING AND INSPECTIONS, INC. EB 9196
16105 N. FLORIDA AVE. STE B, LUTZ, FL 33549

Job	Truss	Truss Type	Qty	Ply	FITZGERALD RESIDENCE ONEIL CONST
L110917	T01G	GABLE	1	2	Job Reference (optional) Dwg.#042205006

Builders FirstSource, Lake City, Fl 32055

6.200 s Dec 15 2004 MiTek Industries, Inc. Wed Apr 20 12:58:52 2005 Page 1

-1-6-8	5-7-8	9-7-8	13-7-8	17-7-8	21-7-8	27-3-0	28-9-8
1-6-8	5-7-8	4-0-0	4-0-0	4-0-0	4-0-0	5-7-8	1-6-8

Scale = 1:63.2

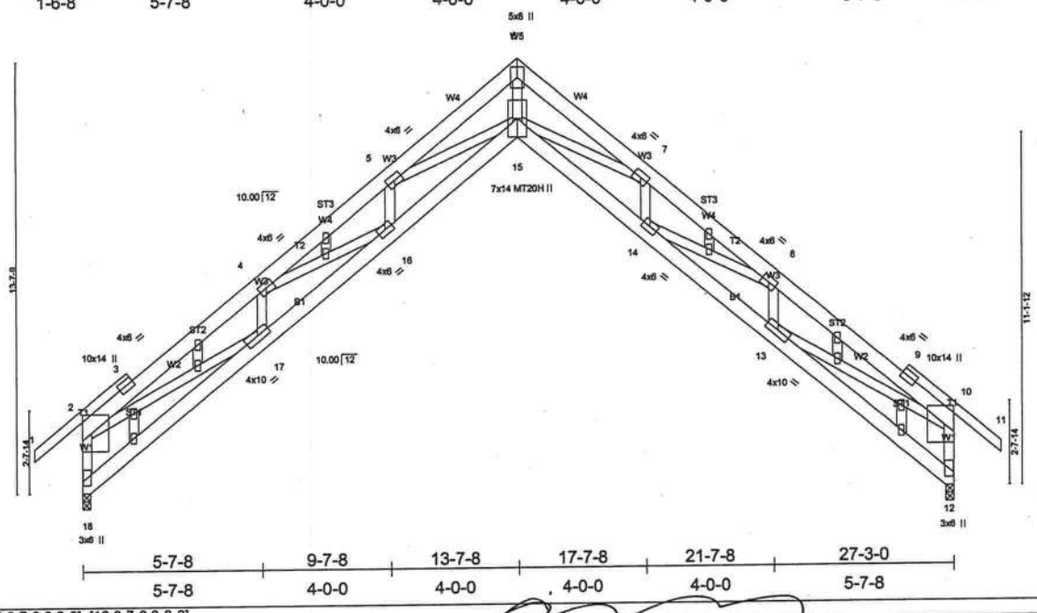

5-7-8	9-7-8	13-7-8	17-7-8	21-7-8	27-3-0
5-7-8	4-0-0	4-0-0	4-0-0	4-0-0	5-7-8

Plate Offsets (X,Y): [2:0-7-0,0-3-8], [10:0-7-0,0-3-8]

LOADING (psf)		SPACING	2-0-0	CSI		DEFL	in	(loc)	l/defl	L/d	PLATES	GRIP
TCLL	20.0	Plates Increase	1.25	TC	0.36	Vert(LL)	-0.31	15	>999	240	MT20	244/190
TCDL	7.0	Lumber Increase	1.25	BC	0.37	Vert(TL)	-0.44	15	>735	180	MT20H	187/143
BCLL	10.0	Rep Stress Incr	NO	WB	0.60	Horz(TL)	0.78	12	n/a	n/a		
BCDL	5.0	Code FBC2001/ANSI95		(Matrix)							Weight: 495 lb	

LUMBER
TOP CHORD 2 X 4 SYP No.2D *Except*
T2 2 X 6 SYP No.1D, T2 2 X 6 SYP No.1D
BOT CHORD 2 X 6 SYP No.1D
WEBS 2 X 4 SYP No.3 *Except*
W1 2 X 4 SYP No.2D, W1 2 X 4 SYP No.2D, W5 2 X 4 SYP No.2D
OTHERS 2 X 4 SYP No.3

BRACING
TOP CHORD Sheathed or 6-0-0 oc purlins, except end verticals.
BOT CHORD Rigid ceiling directly applied or 10-0-0 oc bracing.

REACTIONS (lb/size) 18=1372/0-3-0, 12=1372/0-3-0
Max Horz 18=-497(load case 3)
Max Uplift18=-447(load case 5), 12=-447(load case 6)

FORCES (lb) - Maximum Compression/Maximum Tension
TOP CHORD 2-18=-1456/716, 1-2=0/61, 2-3=-3721/1272, 3-4=-3694/1299, 4-5=-5314/1494, 5-6=-5664/1322, 6-7=-5664/1390, 7-8=-5314/1051, 8-9=-3694/836, 9-10=-3722/816, 10-11=0/61, 10-12=-1456/556
BOT CHORD 17-18=-703/727, 16-17=-1595/3750, 15-16=-1765/5195, 14-15=-803/5195, 13-14=-688/3750, 12-13=-50/376
WEBS 2-17=-780/2784, 4-17=-983/357, 4-16=-156/1225, 5-16=-327/63, 5-15=0/799, 6-15=-1692/6881, 7-15=-540/1055, 7-14=-327/173, 8-14=-399/1225, 8-13=-983/249, 10-13=-522/2784

NOTES
1) 2-ply truss to be connected together with 0.131"x3" Nails as follows:
Top chords connected as follows: 2 X 4 - 1 row at 0-9-0 oc, 2 X 6 - 2 rows at 0-9-0 oc.
Bottom chords connected as follows: 2 X 6 - 2 rows at 0-9-0 oc.
Webs connected as follows: 2 X 4 - 1 row at 0-9-0 oc.
2) All loads are considered equally applied to all plies, except if noted as front (F) or back (B) face in the LOAD CASE(S) section. Ply to ply connections have been provided to distribute only loads noted as (F) or (B), unless otherwise indicated.
3) Unbalanced roof live loads have been considered for this design.
4) Wind: ASCE 7-98; 110mph (3-second gust); h=20ft; TCDL=4.2psf; BCDL=3.0psf; Category II; Exp B; enclosed; MWFRS gable end zone and C-C Exterior(2) zone; end vertical left and right exposed; Lumber DOL=1.60 plate grip DOL=1.60. This truss is designed for C-C for members and forces, and for MWFRS for reactions specified.
5) Truss designed for wind loads in the plane of the truss only. For studs exposed to wind (normal to the face), see MiTek "Standard Gable End Detail"
6) All plates are MT20 plates unless otherwise indicated.
7) All plates are 2x4 MT20 unless otherwise indicated.
8) Gable studs spaced at 2-0-0 oc.
9) Bearing at joint(s) 18, 12 considers parallel to grain value using ANSI/TPI 1 angle to grain formula. Building designer should verify capacity of bearing surface.
10) Provide mechanical connection (by others) of truss to bearing plate capable of withstanding 447 lb uplift at joint 18 and 447 lb uplift at joint 12.

LOAD CASE(S) Standard
1) Regular: Lumber Increase=1.25, Plate Increase=1.25
Uniform Loads (plf)
Vert: 1-2=-64(F=-10), 2-6=-64(F=-10), 6-10=-64(F=-10), 10-11=-64(F=-10), 15-18=-30, 12-15=-30

APRIL 22, 2005 TRUSS DESIGN ENGINEER:
THOMAS E. MILLER PE 56877, BYRON K. ANDERSON PE 60987
STRUCTURAL ENGINEERING AND INSPECTIONS, INC. EB 9196
16105 N. FLORIDA AVE. STE B, LUTZ, FL 33549

Job	Truss	Truss Type	Qty	Ply	FITZGERALD RESIDENCE ONEIL CONST
L110917	T02	SCISSORS	1	3	Job Reference (optional) Dwg.#042205007

Builders FirstSource, Lake City, Fl 32055

6.200 s Dec 15 2004 MiTek Industries, Inc. Wed Apr 20 12:58:53 2005 Page 1

1-6-8	3-8-2	7-0-12	10-4-2	13-7-8	16-10-14	20-2-4	23-6-14	27-3-0	28-9-8
1-6-8	3-8-2	3-4-10	3-3-6	3-3-6	3-3-6	3-3-6	3-4-10	3-8-2	1-6-8

Scale = 1:67.2

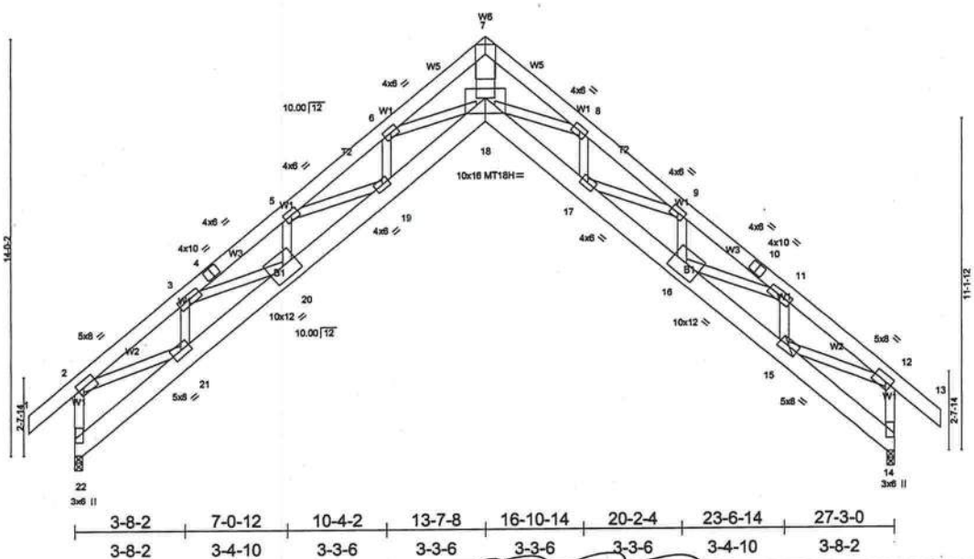

3-8-2	7-0-12	10-4-2	13-7-8	16-10-14	20-2-4	23-6-14	27-3-0
3-8-2	3-4-10	3-3-6	3-3-6	3-3-6	3-3-6	3-4-10	3-8-2

Plate Offsets (X,Y): [2:0-2-8,0-2-8], [3:0-0-0,0-0-0], [4:0-0-0,0-0-0], [5:0-0-0,0-0-0], [6:0-0-0,0-0-0], [8:0-0-0,0-0-0], [9:0-0-0,0-0-0], [10:0-0-0,0-0-0], [11:0-0-0,0-0-0], [12:0-2-8,0-2-8], [18:0-8-0,0-6-4]

LOADING (psf)		SPACING	2-0-0	CSI		DEFL	in	(loc)	l/defl	L/d	PLATES	GRIP
TCLL	20.0	Plates Increase	1.25	TC	0.23	Vert(LL)	-0.41	18	>783	240	MT20	244/190
TCDL	7.0	Lumber Increase	1.25	BC	0.37	Vert(TL)	-0.58	18	>560	180	MT18H	244/190
BCLL	10.0	Rep Stress Incr	NO	WB	0.60	Horz(TL)	1.04	14	n/a	n/a		
BCDL	5.0	Code FBC2001/ANSI95		(Matrix)							Weight: 810 lb	

LUMBER
TOP CHORD 2 X 6 SYP No.1D
BOT CHORD 2 X 8 SYP 2400F 2.0E
WEBS 2 X 4 SYP No.3 *Except*
W2 2 X 4 SYP No.2D, W6 2 X 8 SYP No.1D, W2 2 X 4 SYP No.2D

BRACING
TOP CHORD Sheathed or 6-0-0 oc purlins, except end verticals.
BOT CHORD Rigid ceiling directly applied or 10-0-0 oc bracing, Except:
6-0-0 oc bracing: 21-22,14-15.

REACTIONS (lb/size) 22=3997/0-3-0, 14=4326/0-3-0
Max Horz 22=-506(load case 2)
Max Uplift22=-1437(load case 4), 14=-1561(load case 5)

FORCES (lb) - Maximum Compression/Maximum Tension
TOP CHORD 2-22=-3862/1612, 1-2=0/58, 2-3=-7796/2960, 3-4=-14252/5206, 4-5=-14179/5218, 5-6=-15677/5358, 6-7=-15618/4844, 7-8=-15617/4874, 8-9=-16331/5304, 9-10=-15434/5274, 10-11=-15512/5262, 11-12=-8478/2889, 12-13=0/58, 12-14=-4186/1504
BOT CHORD 21-22=-603/639, 20-21=-2939/7471, 19-20=-5167/14283, 18-19=-5063/15409, 17-18=-4901/16086, 16-17=-5053/15569, 15-16=-2619/8118, 14-15=-69/81
WEBS 2-21=-2127/6021, 3-21=-3282/1221, 3-20=-1682/5172, 5-20=-874/232, 5-19=-160/1147, 6-19=-213/1, 6-18=-181/521, 7-18=-6090/19686, 8-18=-705/995, 8-17=-420/324, 9-17=-293/678, 9-16=-557/129, 11-16=-1829/5630, 11-15=-3563/1220, 12-15=-2152/6554

NOTES
1) 3-ply truss to be connected together with 0.131"x3" Nails as follows:
Top chords connected as follows: 2 X 4 - 1 row at 0-9-0 oc, 2 X 6 - 2 rows at 0-9-0 oc.
Bottom chords connected as follows: 2 X 8 - 3 rows at 0-4-0 oc.
Webs connected as follows: 2 X 4 - 1 row at 0-9-0 oc, Except member 5-20 2 X 4 - 1 row at 0-5-0 oc, 2 X 8 - 2 rows at 0-9-0 oc.
2) All loads are considered equally applied to all plies, except if noted as front (F) or back (B) face in the LOAD CASE(S) section. Ply to ply connections have been provided to distribute only loads noted as (F) or (B), unless otherwise indicated.
3) Unbalanced roof live loads have been considered for this design.
4) Wind: ASCE 7-98; 110mph (3-second gust); h=20ft; TCDL=4.2psf; BCDL=3.0psf; Category II; Exp B; enclosed; MWFRS gable end zone; end vertical left and right exposed; Lumber DOL=1.60 plate grip DOL=1.60.
5) All plates are MT20 plates unless otherwise indicated.
6) Bearing at joint(s) 22, 14 considers parallel to grain value using ANSI/TPI 1 angle to grain formula. Building designer should verify capacity of bearing surface.
7) Provide mechanical connection (by others) of truss to bearing plate capable of withstanding 1437 lb uplift at joint 22 and 1561 lb uplift at joint 14.
8) Hanger(s) or other connection device(s) shall be provided sufficient to support concentrated load(s) 2601 lb down and 982 lb up at 7-0-12, and 3278 lb down and 1238 lb up at 20-2-4 on bottom chord. The design/selection of such connection device(s) is the responsibility of others.

LOAD CASE(S) Standard
1) Regular: Lumber Increase=1.25, Plate Increase=1.25
Uniform Loads (plf)
Vert: 1-2=-54, 2-7=-54, 7-12=-54, 12-13=-54, 18-22=-30, 14-18=-30
Concentrated Loads (lb)
Vert: 20=-2601(F) 16=-3278(F)

APRIL 22, 2005 TRUSS DESIGN ENGINEER:
THOMAS E. MILLER PE 56877, BYRON K. ANDERSON PE 60987
STRUCTURAL ENGINEERING AND INSPECTIONS, INC. EB 9196
16105 N. FLORIDA AVE. STE B, LUTZ, FL 33549

Job	Truss	Truss Type	Qty	Ply	FITZGERALD RESIDENCE ONEIL CONST
L110917	T03	SCISSORS	1	3	Job Reference (optional) Dwg.#042205008

Builders FirstSource, Lake City, Fl 32055

6.200 s Dec 15 2004 MiTek Industries, Inc. Wed Apr 20 12:58:54 2005 Page 1

1-6-8	3-8-2	7-0-12	10-4-2	13-7-8	16-10-14	20-2-4	23-6-14	27-3-0	28-9-8
1-6-8	3-8-2	3-4-10	3-3-6	3-3-6	3-3-6	3-3-6	3-4-10	3-8-2	1-6-8

Scale = 1:67.2

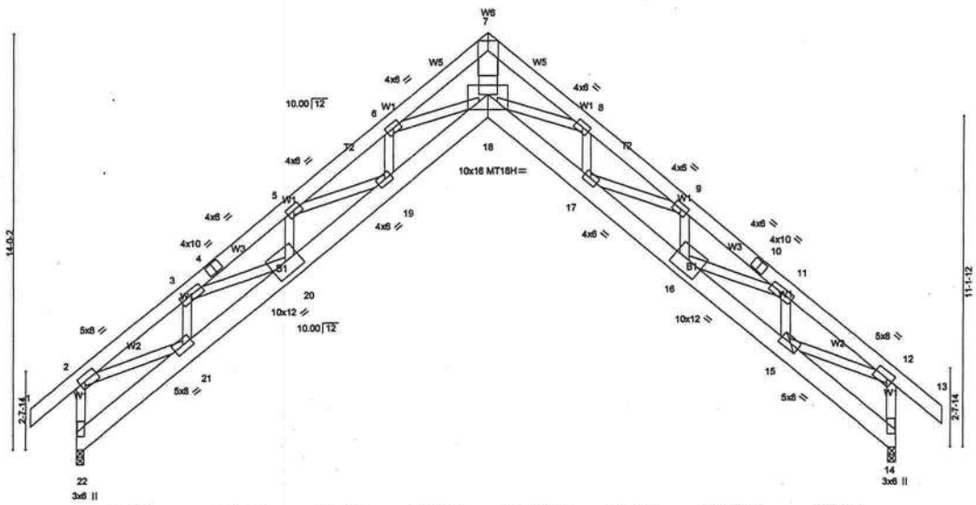

3-8-2	7-0-12	10-4-2	13-7-8	16-10-14	20-2-4	23-6-14	27-3-0
3-8-2	3-4-10	3-3-6	3-3-6	3-3-6	3-3-6	3-4-10	3-8-2

Plate Offsets (X,Y): [2:0-2-8,0-2-8], [3:0-0-0,0-0-0], [4:0-0-0,0-0-0], [5:0-0-0,0-0-0], [6:0-0-0,0-0-0], [8:0-0-0,0-0-0], [9:0-0-0,0-0-0], [10:0-0-0,0-0-0], [11:0-0-0,0-0-0], [12:0-2-8,0-2-8], [18:0-8-0,0-6-4]

LOADING (psf)		SPACING	2-0-0	CSI		DEFL	in	(loc)	l/defl	L/d	PLATES	GRIP
TCLL	20.0	Plates Increase	1.25	TC	0.21	Vert(LL)	-0.39	18	>831	240	MT20	244/190
TCDL	7.0	Lumber Increase	1.25	BC	0.35	Vert(TL)	-0.54	18	>593	180	MT18H	244/190
BCLL	10.0	Rep Stress Incr	NO	WB	0.55	Horz(TL)	0.98	14	n/a	n/a		
BCDL	5.0	Code FBC2001/ANSI95		(Matrix)							Weight: 810 lb	

LUMBER
TOP CHORD 2 X 6 SYP No.1D
BOT CHORD 2 X 8 SYP 2400F 2.0E
WEBS 2 X 4 SYP No.3 *Except*
W2 2 X 4 SYP No.2D, W6 2 X 8 SYP No.1D, W2 2 X 4 SYP No.2D

BRACING
TOP CHORD Sheathed or 6-0-0 oc purlins, except end verticals.
BOT CHORD Rigid ceiling directly applied or 10-0-0 oc bracing, Except:
6-0-0 oc bracing: 21-22,14-15.

REACTIONS (lb/size) 22=3882/0-3-0, 14=3994/0-3-0
Max Horz 22=-506(load case 2)
Max Uplift22=-1394(load case 4), 14=-1436(load case 5)

FORCES (lb) - Maximum Compression/Maximum Tension
TOP CHORD 2-22=-3750/1570, 1-2=0/58, 2-3=-7560/2871, 3-4=-13794/5033, 4-5=-13721/5045, 5-6=-14995/5101, 6-7=-14756/4519, 7-8=-14756/4550, 8-9=-15218/4884, 9-10=-14149/4788, 10-11=-14223/4776, 11-12=-7793/2630, 12-13=0/58, 12-14=-3861/1382
BOT CHORD 21-22=-603/639, 20-21=-2853/7243, 19-20=-4995/13828, 18-19=-4813/14747, 17-18=-4483/14978, 16-17=-4561/14267, 15-16=-2372/7464, 14-15=-67/81
WEBS 2-21=-2057/5838, 3-21=-3176/1181, 3-20=-1615/4994, 5-20=-760/200, 5-19=-111/972, 6-19=-245/87, 6-18=-326/576, 7-18=-5675/18587, 8-18=-505/919, 8-17=-372/198, 9-17=-330/812, 9-16=-652/155, 11-16=-1648/5150, 11-15=-3272/1111, 12-15=-1950/6019

NOTES
1) 3-ply truss to be connected together with 0.131"x3" Nails as follows:
Top chords connected as follows: 2 X 4 - 1 row at 0-9-0 oc, 2 X 6 - 2 rows at 0-9-0 oc.
Bottom chords connected as follows: 2 X 8 - 2 rows at 0-4-0 oc.
Webs connected as follows: 2 X 4 - 1 row at 0-9-0 oc, Except member 5-20 2 X 4 - 1 row at 0-5-0 oc, member 9-16 2 X 4 - 2 rows at 0-5-0 oc, 2 X 8 - 2 rows at 0-9-0 oc.
2) All loads are considered equally applied to all plies, except if noted as front (F) or back (B) face in the LOAD CASE(S) section. Ply to ply connections have been provided to distribute only loads noted as (F) or (B), unless otherwise indicated.
3) Unbalanced roof live loads have been considered for this design.
4) Wind: ASCE 7-98; 110mph (3-second gust); h=20ft; TCDL=4.2psf; BCDL=3.0psf; Category II; Exp B; enclosed; MWFRS gable end zone; end vertical left and right exposed; Lumber DOL=1.60 plate grip DOL=1.60.
5) All plates are MT20 plates unless otherwise indicated.
6) Bearing at joint(s) 22, 14 considers parallel to grain value using ANSI/TPI 1 angle to grain formula. Building designer should verify capacity of bearing surface.
7) Provide mechanical connection (by others) of truss to bearing plate capable of withstanding 1394 lb uplift at joint 22 and 1436 lb uplift at joint 14.
8) Hanger(s) or other connection device(s) shall be provided sufficient to support concentrated load(s) 2601 lb down and 982 lb up at 7-0-12, and 2832 lb down and 1069 lb up at 20-2-4 on bottom chord. The design/selection of such connection device(s) is the responsibility of others.

LOAD CASE(S) Standard
1) Regular: Lumber Increase=1.25, Plate Increase=1.25
Uniform Loads (plf)
Vert: 1-2=-54, 2-7=-54, 7-12=-54, 12-13=-54, 18-22=-30, 14-18=-30
Concentrated Loads (lb)
Vert: 20=-2601(F) 16=-2832(F)

APRIL 22, 2005 TRUSS DESIGN ENGINEER:
THOMAS E. MILLER PE 56877, BYRON K. ANDERSON PE 60987
STRUCTURAL ENGINEERING AND INSPECTIONS, INC. EB 9196
16105 N. FLORIDA AVE. STE B, LUTZ, FL 33549

Job	Truss	Truss Type	Qty	Ply	FITZGERALD RESIDENCE ONEIL CONST
L110917	T04G	GABLE	1	3	Job Reference (optional) Dwg.#042205009

Builders FirstSource, Lake City, Fl 32055 — 6.200 s Dec 15 2004 MiTek Industries, Inc. Wed Apr 20 12:58:55 2005 Page 1

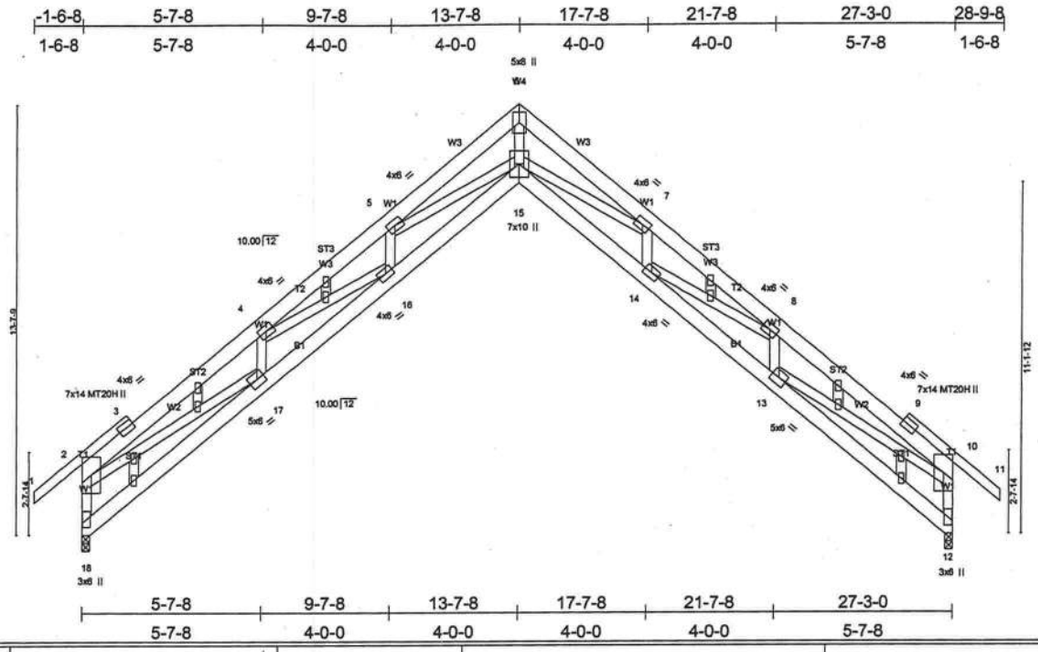

LOADING (psf)		SPACING	2-0-0	CSI		DEFL	in	(loc)	l/defl	L/d	PLATES	GRIP
TCLL	20.0	Plates Increase	1.25	TC	0.60	Vert(LL)	-0.34	15	>944	240	MT20	244/190
TCDL	7.0	Lumber Increase	1.25	BC	0.39	Vert(TL)	-0.48	15	>674	180	MT20H	187/143
BCLL	10.0	Rep Stress Incr	YES	WB	0.65	Horz(TL)	0.85	12	n/a	n/a		
BCDL	5.0	Code FBC2001/ANSI95		(Matrix)							Weight: 746 lb	

LUMBER
TOP CHORD 2 X 6 SYP No.1D *Except*
T1 2 X 4 SYP No.2D, T1 2 X 4 SYP No.2D
BOT CHORD 2 X 6 SYP No.1D
WEBS 2 X 4 SYP No.3 *Except*
W4 2 X 4 SYP No.2D
OTHERS 2 X 4 SYP No.3

BRACING
TOP CHORD Sheathed or 6-0-0 oc purlins, except end verticals.
BOT CHORD Rigid ceiling directly applied or 10-0-0 oc bracing.

REACTIONS (lb/size) 18=2280/0-3-0, 12=2280/0-3-0
Max Horz 18=-492(load case 3)
Max Uplift18=-784(load case 5), 12=-784(load case 6)

FORCES (lb) - Maximum Compression/Maximum Tension
TOP CHORD 2-18=-2281/1016, 1-2=-14/99, 2-3=-6154/2186, 3-4=-5995/2168, 4-5=-8713/2749, 5-6=-9281/2312, 6-7=-9281/2382, 7-8=-8713/2338, 8-9=-5995/1710, 9-10=-6154/1731, 10-11=-14/99, 10-12=-2281/845
BOT CHORD 17-18=-681/657, 16-17=-2274/6061, 15-16=-2673/8480, 14-15=-1994/8480, 13-14=-1580/6061, 12-13=-57/342
WEBS 2-17=-1546/4766, 4-17=-1632/619, 4-16=-383/2055, 5-16=-630/146, 5-15=0/701, 6-15=-2881/11179, 7-15=-597/983, 7-14=-630/254, 8-14=-625/2055, 8-13=-1632/509, 10-13=-1261/4766

NOTES
1) 3-ply truss to be connected together with 0.131"x3" Nails as follows:
Top chords connected as follows: 2 X 4 - 1 row at 0-9-0 oc, 2 X 6 - 2 rows at 0-9-0 oc.
Bottom chords connected as follows: 2 X 6 - 2 rows at 0-9-0 oc.
Webs connected as follows: 2 X 4 - 1 row at 0-9-0 oc.
2) All loads are considered equally applied to all plies, except if noted as front (F) or back (B) face in the LOAD CASE(S) section. Ply to ply connections have been provided to distribute only loads noted as (F) or (B), unless otherwise indicated.
3) Unbalanced roof live loads have been considered for this design.
4) Wind: ASCE 7-98; 110mph (3-second gust); h=20ft; TCDL=4.2psf; BCDL=3.0psf; Category II; Exp B; enclosed; MWFRS gable end zone and C-C Exterior(2) zone; end vertical left and right exposed; Lumber DOL=1.60 plate grip DOL=1.60. This truss is designed for C-C for members and forces, and for MWFRS for reactions specified.
5) Truss designed for wind loads in the plane of the truss only. For studs exposed to wind (normal to the face), see MiTek "Standard Gable End Detail"
6) All plates are MT20 plates unless otherwise indicated.
7) All plates are 2x4 MT20 unless otherwise indicated.
8) Gable studs spaced at 2-0-0 oc.
9) Bearing at joint(s) 18, 12 considers parallel to grain value using ANSI/TPI 1 angle to grain formula. Building designer should verify capacity of bearing surface.
10) Provide mechanical connection (by others) of truss to bearing plate capable of withstanding 784 lb uplift at joint 18 and 784 lb uplift at joint 12.

LOAD CASE(S) Standard
1) Regular: Lumber Increase=1.25, Plate Increase=1.25
Uniform Loads (plf)
Vert: 1-2=-124(F=-70), 2-6=-124(F=-70), 6-10=-124(F=-70), 10-11=-124(F=-70), 15-18=-30, 12-15=-30

APRIL 22, 2005 TRUSS DESIGN ENGINEER:
THOMAS E. MILLER PE 56877, BYRON K. ANDERSON PE 60987
STRUCTURAL ENGINEERING AND INSPECTIONS, INC. EB 9196
16105 N. FLORIDA AVE. STE B, LUTZ, FL 33549

Job	Truss	Truss Type	Qty	Ply	FITZGERALD RESIDENCE ONEIL CONST
L110917	T05	SPECIAL	8	1	Job Reference (optional) Dwg.#042205010

Builders FirstSource, Lake City, Fl 32055

6.200 s Dec 15 2004 MiTek Industries, Inc. Wed Apr 20 12:58:55 2005 Page 1

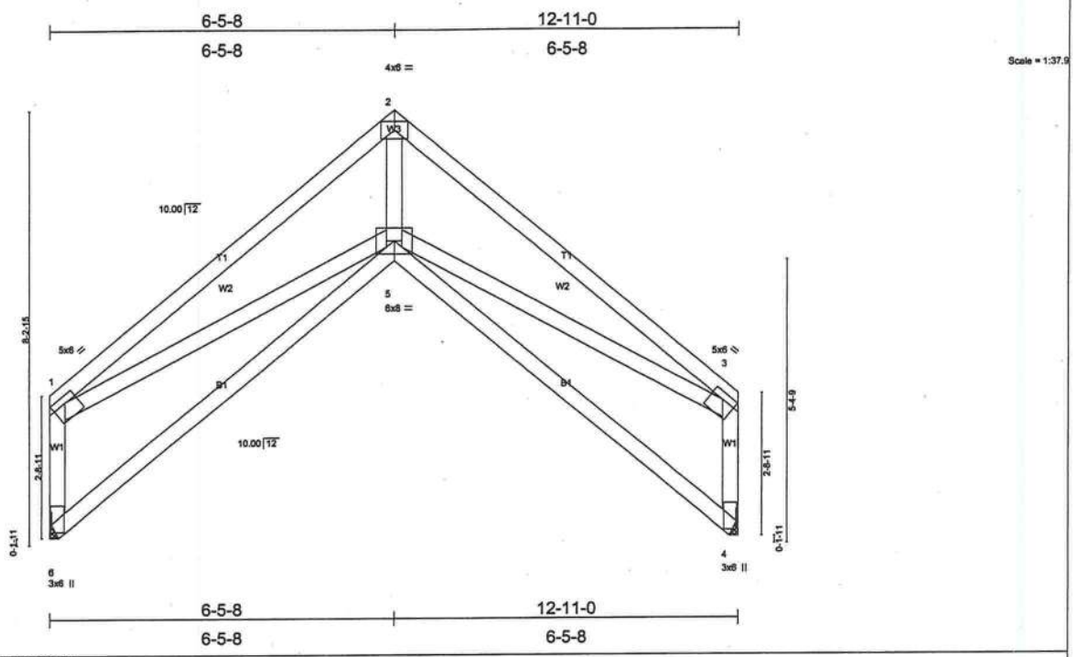

Plate Offsets (X,Y): [1:0-2-12,0-1-8], [3:0-2-12,0-1-8]

LOADING (psf)		SPACING	2-0-0	CSI		DEFL	in	(loc)	l/defl	L/d	PLATES	GRIP
TCLL	20.0	Plates Increase	1.25	TC	0.56	Vert(LL)	-0.06	5-6	>999	240	MT20	244/190
TCDL	7.0	Lumber Increase	1.25	BC	0.13	Vert(TL)	-0.08	5-6	>999	180		
BCLL	10.0	Rep Stress Incr	YES	WB	0.38	Horz(TL)	0.12	4	n/a	n/a		
BCDL	5.0	Code FBC2001/ANSI95		(Matrix)							Weight: 82 lb	

LUMBER
TOP CHORD 2 X 4 SYP No.2D
BOT CHORD 2 X 4 SYP No.2D
WEBS 2 X 4 SYP No.3

BRACING
TOP CHORD Sheathed or 5-11-12 oc purlins, except end verticals.
BOT CHORD Rigid ceiling directly applied or 9-9-13 oc bracing.

REACTIONS (lb/size) 6=530/Mechanical, 4=530/Mechanical
Max Horz 6=-309(load case 3)
Max Uplift6=-148(load case 6), 4=-148(load case 5)

FORCES (lb) - Maximum Compression/Maximum Tension
TOP CHORD 1-6=-515/265, 1-2=-1116/322, 2-3=-1116/415, 3-4=-515/220
BOT CHORD 5-6=-438/433, 4-5=-64/203
WEBS 1-5=-56/737, 2-5=-417/942, 3-5=-427/737

NOTES
1) Unbalanced roof live loads have been considered for this design.
2) Wind: ASCE 7-98; 110mph (3-second gust); h=20ft; TCDL=4.2psf; BCDL=3.0psf; Category II; Exp B; enclosed; MWFRS gable end zone and C-C Exterior(2) zone; end vertical left and right exposed; Lumber DOL=1.60 plate grip DOL=1.60. This truss is designed for C-C for members and forces, and for MWFRS for reactions specified.
3) Refer to girder(s) for truss to truss connections.
4) Provide mechanical connection (by others) of truss to bearing plate capable of withstanding 148 lb uplift at joint 6 and 148 lb uplift at joint 4.

LOAD CASE(S) Standard

APRIL 22, 2005 TRUSS DESIGN ENGINEER:
THOMAS E. MILLER PE 56877, BYRON K. ANDERSON PE 60987
STRUCTURAL ENGINEERING AND INSPECTIONS, INC. EB 9196
16105 N. FLORIDA AVE. STE B, LUTZ, FL 33549

Job	Truss	Truss Type	Qty	Ply	FITZGERALD RESIDENCE ONEIL CONST
L110917	T06	MONO SCISSOR	2	1	Job Reference (optional) Dwg.#042205011

Builders FirstSource, Lake City, Fl 32055

6.200 s Dec 15 2004 MiTek Industries, Inc. Wed Apr 20 12:58:56 2005 Page 1

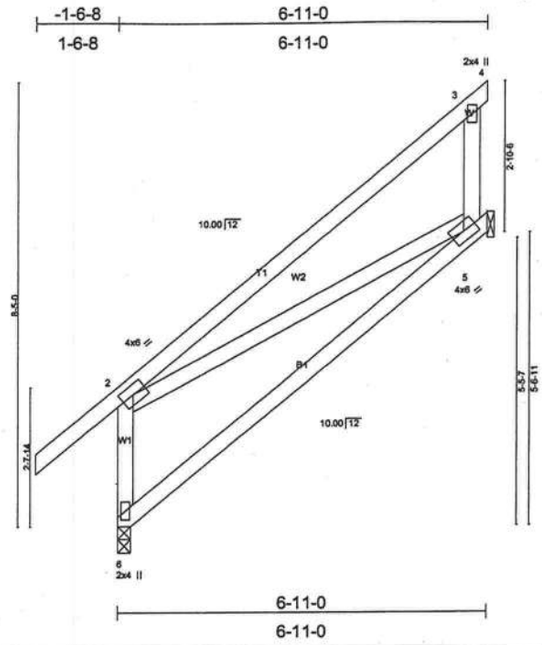

Plate Offsets (X,Y): [2:0-2-14,0-2-0]

LOADING (psf)		SPACING	2-0-0	CSI		DEFL	in	(loc)	l/defl	L/d	PLATES	GRIP
TCLL	20.0	Plates Increase	1.25	TC	0.41	Vert(LL)	-0.11	5-6	>686	240	MT20	244/190
TCDL	7.0	Lumber Increase	1.25	BC	0.25	Vert(TL)	-0.17	5-6	>457	180		
BCLL	10.0	Rep Stress Incr	YES	WB	0.12	Horz(TL)	-0.01	5	n/a	n/a		
BCDL	5.0	Code FBC2001/ANSI95		(Matrix)							Weight: 48 lb	

LUMBER
TOP CHORD 2 X 4 SYP No.2D
BOT CHORD 2 X 4 SYP No.2D
WEBS 2 X 4 SYP No.3

BRACING
TOP CHORD Sheathed or 6-0-0 oc purlins, except end verticals.
BOT CHORD Rigid ceiling directly applied or 8-7-5 oc bracing.

REACTIONS (lb/size) 6=375/0-3-0, 5=264/Mechanical
Max Horz 6=410(load case 5)
Max Uplift5=-347(load case 5)

FORCES (lb) - Maximum Compression/Maximum Tension
TOP CHORD 2-6=-278/346, 1-2=0/58, 2-3=-178/82, 3-4=-3/0
BOT CHORD 5-6=-564/50
WEBS 3-5=-167/221, 2-5=-29/467

NOTES
1) Wind: ASCE 7-98; 110mph (3-second gust); h=20ft; TCDL=4.2psf; BCDL=3.0psf; Category II; Exp B; enclosed; MWFRS gable end zone and C-C Exterior(2) zone; end vertical left exposed; Lumber DOL=1.60 plate grip DOL=1.60. This truss is designed for C-C for members and forces, and for MWFRS for reactions specified.
2) Refer to girder(s) for truss to truss connections.
3) Bearing at joint(s) 6 considers parallel to grain value using ANSI/TPI 1 angle to grain formula. Building designer should verify capacity of bearing surface.
4) Provide mechanical connection (by others) of truss to bearing plate capable of withstanding 347 lb uplift at joint 5.

LOAD CASE(S) Standard

APRIL 22, 2005 TRUSS DESIGN ENGINEER:
THOMAS E. MILLER PE 56877, BYRON K. ANDERSON PE 60987
STRUCTURAL ENGINEERING AND INSPECTIONS, INC. EB 9196
16105 N. FLORIDA AVE. STE B, LUTZ, FL 33549

Job	Truss	Truss Type	Qty	Ply	FITZGERALD RESIDENCE ONEIL CONST
L110917	T07	SPECIAL	2	1	Job Reference (optional) Dwg.#042205012

Builders FirstSource, Lake City, Fl 32055 — 6.200 s Dec 15 2004 MiTek Industries, Inc. Wed Apr 20 12:58:57 2005 Page 1

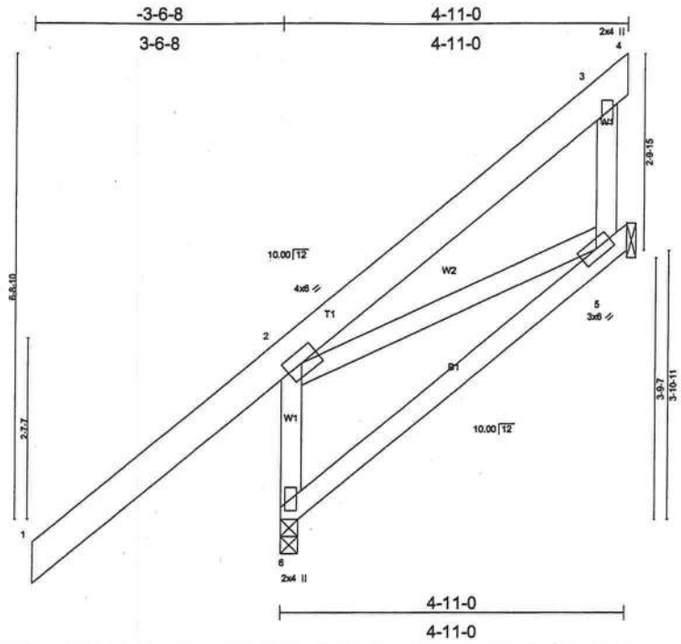

Plate Offsets (X,Y): [2:0-2-14,0-2-0]

LOADING (psf)		SPACING 2-0-0		CSI		DEFL	in	(loc)	l/defl	L/d	PLATES	GRIP
TCLL	20.0	Plates Increase	1.25	TC	0.39	Vert(LL)	-0.03	5-6	>999	240	MT20	244/190
TCDL	7.0	Lumber Increase	1.25	BC	0.12	Vert(TL)	-0.04	5-6	>999	180		
BCLL	10.0	Rep Stress Incr	YES	WB	0.12	Horz(TL)	-0.01	5	n/a	n/a		
BCDL	5.0	Code FBC2001/ANSI95		(Matrix)							Weight: 50 lb	

LUMBER
TOP CHORD 2 X 6 SYP No.1D
BOT CHORD 2 X 4 SYP No.2D
WEBS 2 X 4 SYP No.3

BRACING
TOP CHORD Sheathed or 4-11-0 oc purlins, except end verticals.
BOT CHORD Rigid ceiling directly applied or 6-0-0 oc bracing.

REACTIONS (lb/size) 6=469/0-3-0, 5=110/Mechanical
Max Horz 6=437(load case 5)
Max Uplift6=-138(load case 5), 5=-221(load case 5)

FORCES (lb) - Maximum Compression/Maximum Tension
TOP CHORD 2-6=-402/581, 1-2=0/127, 2-3=-130/44, 3-4=-3/0, 3-5=-75/51
BOT CHORD 5-6=-621/34
WEBS 2-5=0/494

NOTES
1) Wind: ASCE 7-98; 110mph (3-second gust); h=20ft; TCDL=4.2psf; BCDL=3.0psf; Category II; Exp B; enclosed; MWFRS gable end zone and C-C Exterior(2) zone; end vertical left exposed; Lumber DOL=1.60 plate grip DOL=1.60. This truss is designed for C-C for members and forces, and for MWFRS for reactions specified.
2) Refer to girder(s) for truss to truss connections.
3) Bearing at joint(s) 6 considers parallel to grain value using ANSI/TPI 1 angle to grain formula. Building designer should verify capacity of bearing surface.
4) Provide mechanical connection (by others) of truss to bearing plate capable of withstanding 138 lb uplift at joint 6 and 221 lb uplift at joint 5.

LOAD CASE(S) Standard

APRIL 22, 2005 TRUSS DESIGN ENGINEER:
THOMAS E. MILLER PE 56877, BYRON K. ANDERSON PE 60987
STRUCTURAL ENGINEERING AND INSPECTIONS, INC. EB 9196
16105 N. FLORIDA AVE. STE B, LUTZ, FL 33549

Job	Truss	Truss Type	Qty	Ply	FITZGERALD RESIDENCE ONEIL CONST
L110917	T08	SPECIAL	1	2	Job Reference (optional) Dwg.#042205013

Builders FirstSource, Lake City, Fl 32055 — 6.200 s Dec 15 2004 MiTek Industries, Inc. Wed Apr 20 12:58:57 2005 Page 1

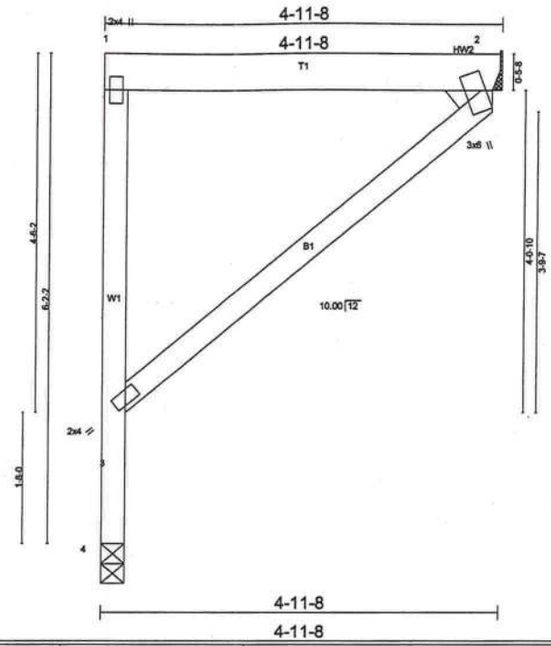

LOADING (psf)		SPACING 2-0-0	CSI		DEFL	in	(loc)	l/defl	L/d	PLATES	GRIP
TCLL	20.0	Plates Increase 1.25	TC	0.41	Vert(LL)	0.01	2-3	>999	240	MT20	244/190
TCDL	7.0	Lumber Increase 1.25	BC	0.12	Vert(TL)	-0.02	2-3	>999	180		
BCLL	10.0	Rep Stress Incr NO	WB	0.00	Horz(TL)	0.07	2	n/a	n/a		
BCDL	5.0	Code FBC2001/ANSI95	(Matrix)							Weight: 59 lb	

LUMBER
TOP CHORD 2 X 6 SYP No.1D
BOT CHORD 2 X 4 SYP No.2D
WEBS 2 X 4 SYP No.3
WEDGE
Right: 2 X 4 SYP No.3

BRACING
TOP CHORD Sheathed or 4-11-8 oc purlins, except end verticals.
BOT CHORD Rigid ceiling directly applied or 10-0-0 oc bracing.

REACTIONS (lb/size) 4=666/0-3-8, 2=666/Mechanical
Max Horz 4=-161(load case 2)
Max Uplift4=-339(load case 2), 2=-274(load case 3)

FORCES (lb) - Maximum Compression/Maximum Tension
TOP CHORD 3-4=-666/339, 1-3=-610/279, 1-2=-103/86
BOT CHORD 2-3=-127/206

NOTES
1) 2-ply truss to be connected together with 0.131"x3" Nails as follows:
Top chords connected as follows: 2 X 4 - 1 row at 0-9-0 oc, 2 X 6 - 2 rows at 0-9-0 oc.
Bottom chords connected as follows: 2 X 4 - 1 row at 0-9-0 oc.
2) All loads are considered equally applied to all plies, except if noted as front (F) or back (B) face in the LOAD CASE(S) section. Ply to ply connections have been provided to distribute only loads noted as (F) or (B), unless otherwise indicated.
3) Wind: ASCE 7-98; 110mph (3-second gust); h=20ft; TCDL=4.2psf; BCDL=3.0psf; Category II; Exp B; enclosed; MWFRS gable end zone; end vertical left exposed; Lumber DOL=1.60 plate grip DOL=1.60.
4) Provide adequate drainage to prevent water ponding.
5) Refer to girder(s) for truss to truss connections.
6) Bearing at joint(s) 4 considers parallel to grain value using ANSI/TPI 1 angle to grain formula. Building designer should verify capacity of bearing surface.
7) Provide mechanical connection (by others) of truss to bearing plate capable of withstanding 339 lb uplift at joint 4 and 274 lb uplift at joint 2.
8) Girder carries tie-in span(s): 12-0-0 from 0-0-0 to 4-11-8
9) Gap between inside of top chord bearing and first diagonal or vertical web shall not exceed 0.500in.

LOAD CASE(S) Standard
1) Regular: Lumber Increase=1.25, Plate Increase=1.25
Uniform Loads (plf)
Vert: 1-2=-258, 2-3=-30

APRIL 22, 2005 TRUSS DESIGN ENGINEER:
THOMAS E. MILLER PE 56877, BYRON K. ANDERSON PE 60987
STRUCTURAL ENGINEERING AND INSPECTIONS, INC. EB 9196
16105 N. FLORIDA AVE. STE B, LUTZ, FL 33549

Job	Truss	Truss Type	Qty	Ply	FITZGERALD RESIDENCE ONEIL CONST
L110917	T09	COMMON	4	1	Job Reference (optional) Dwg.#042205014

Builders FirstSource, Lake City, Fl 32055 — 6.200 s Dec 15 2004 MiTek Industries, Inc. Wed Apr 20 12:58:58 2005 Page 1

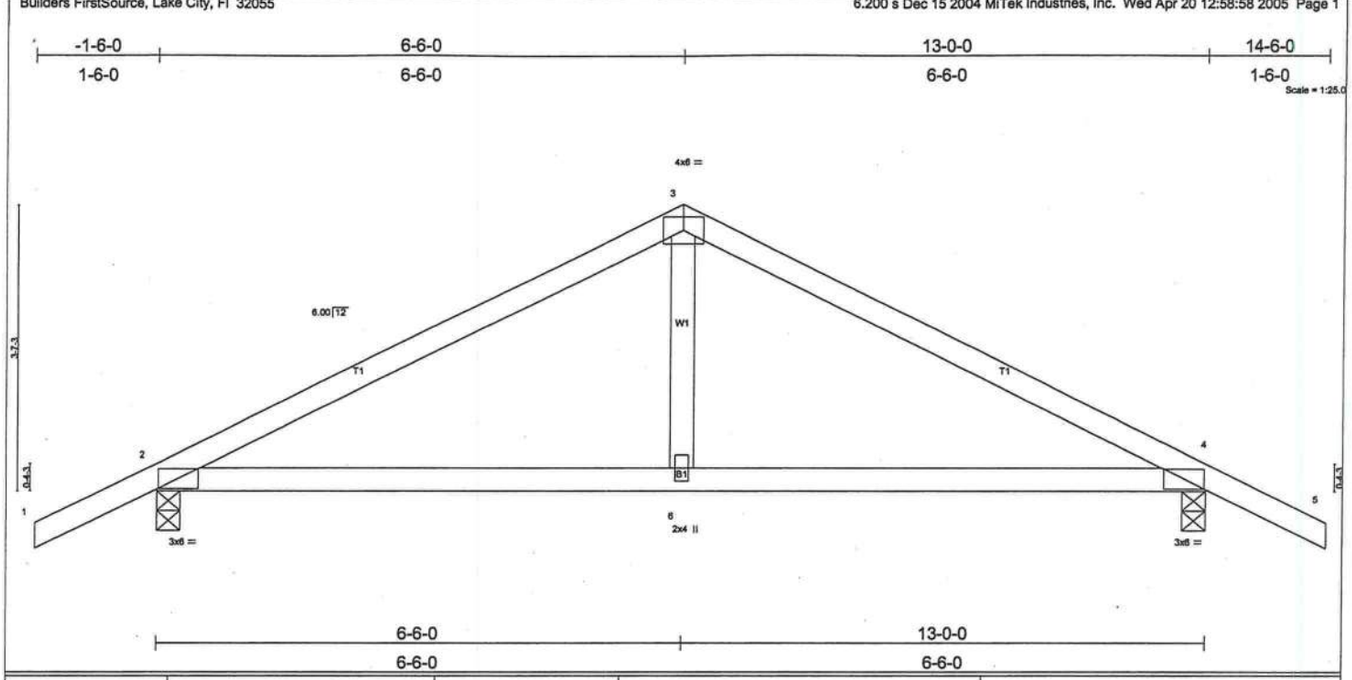

LOADING (psf)		SPACING 2-0-0	CSI		DEFL in (loc) l/defl L/d		PLATES GRIP
TCLL	20.0	Plates Increase 1.25	TC	0.30	Vert(LL) -0.06 4-6 >999 240		MT20 244/190
TCDL	7.0	Lumber Increase 1.25	BC	0.34	Vert(TL) -0.08 4-6 >999 180		
BCLL	10.0	Rep Stress Incr YES	WB	0.08	Horz(TL) 0.01 4 n/a n/a		
BCDL	5.0	Code FBC2001/ANSI95	(Matrix)				Weight: 51 lb

LUMBER
TOP CHORD 2 X 4 SYP No.2D
BOT CHORD 2 X 4 SYP No.2D
WEBS 2 X 4 SYP No.3

BRACING
TOP CHORD Sheathed or 6-0-0 oc purlins.
BOT CHORD Rigid ceiling directly applied or 10-0-0 oc bracing.

REACTIONS (lb/size) 2=623/0-3-8, 4=623/0-3-8
Max Horz 2=97(load case 5)
Max Uplift2=-260(load case 5), 4=-260(load case 6)

FORCES (lb) - Maximum Compression/Maximum Tension
TOP CHORD 1-2=0/35, 2-3=-751/408, 3-4=-751/408, 4-5=0/35
BOT CHORD 2-6=-192/606, 4-6=-192/606
WEBS 3-6=0/239

NOTES
1) Unbalanced roof live loads have been considered for this design.
2) Wind: ASCE 7-98; 110mph (3-second gust); h=20ft; TCDL=4.2psf; BCDL=3.0psf; Category II; Exp B; enclosed; MWFRS gable end zone and C-C Exterior(2) zone; Lumber DOL=1.60 plate grip DOL=1.60. This truss is designed for C-C for members and forces, and for MWFRS for reactions specified.
3) Provide mechanical connection (by others) of truss to bearing plate capable of withstanding 260 lb uplift at joint 2 and 260 lb uplift at joint 4.

LOAD CASE(S) Standard

APRIL 22, 2005 TRUSS DESIGN ENGINEER:
THOMAS E. MILLER PE 56877, BYRON K. ANDERSON PE 60987
STRUCTURAL ENGINEERING AND INSPECTIONS, INC. EB 9196
16105 N. FLORIDA AVE. STE B, LUTZ, FL 33549

Job	Truss	Truss Type	Qty	Ply	FITZGERALD RESIDENCE ONEIL CONST
L110917	T09G	GABLE	1	1	Job Reference (optional) Dwg.#042205015

Builders FirstSource, Lake City, Fl 32055 — 6.200 s Dec 15 2004 MiTek Industries, Inc. Wed Apr 20 12:58:58 2005 Page 1

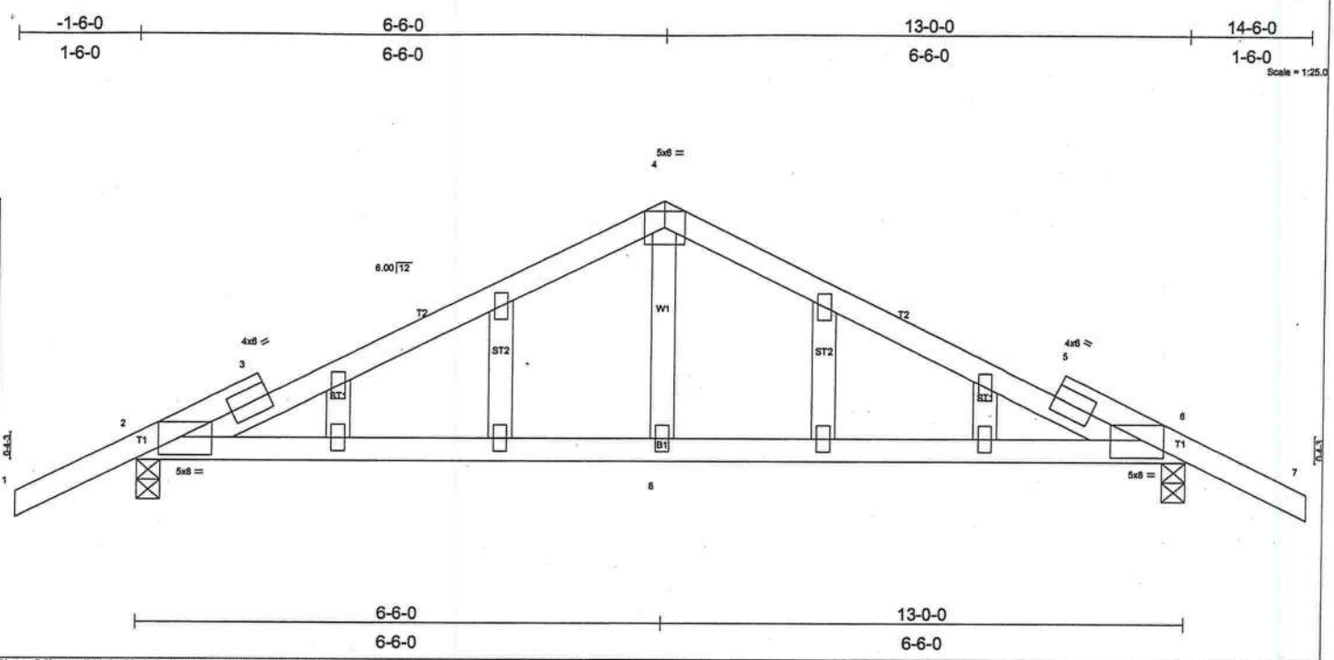

Plate Offsets (X,Y): [2:0-3-4,0-2-12], [6:0-3-4,0-2-12]

LOADING (psf)		SPACING	2-0-0	CSI		DEFL	in	(loc)	l/defl	L/d	PLATES	GRIP
TCLL	20.0	Plates Increase	1.25	TC	0.41	Vert(LL)	-0.08	2-8	>999	240	MT20	244/190
TCDL	7.0	Lumber Increase	1.25	BC	0.43	Vert(TL)	-0.11	2-8	>999	180		
BCLL	10.0	Rep Stress Incr	NO	WB	0.08	Horz(TL)	0.01	6	n/a	n/a		
BCDL	5.0	Code FBC2001/ANSI95		(Matrix)							Weight: 61 lb	

LUMBER
TOP CHORD 2 X 4 SYP No.2D
BOT CHORD 2 X 4 SYP No.2D
WEBS 2 X 4 SYP No.3
OTHERS 2 X 4 SYP No.3

BRACING
TOP CHORD Sheathed or 6-0-0 oc purlins.
BOT CHORD Rigid ceiling directly applied or 10-0-0 oc bracing.

REACTIONS (lb/size) 2=703/0-3-8, 6=703/0-3-8
Max Horz 2=-91(load case 6)
Max Uplift2=-291(load case 5), 6=-291(load case 6)

FORCES (lb) - Maximum Compression/Maximum Tension
TOP CHORD 1-2=0/42, 2-3=-904/467, 3-4=-858/488, 4-5=-858/488, 5-6=-904/467, 6-7=0/42
BOT CHORD 2-8=-293/767, 6-8=-293/767
WEBS 4-8=-11/261

NOTES
1) Unbalanced roof live loads have been considered for this design.
2) Wind: ASCE 7-98; 110mph (3-second gust); h=20ft; TCDL=4.2psf; BCDL=3.0psf; Category II; Exp B; enclosed; MWFRS gable end zone and C-C Exterior(2) zone; Lumber DOL=1.60 plate grip DOL=1.60. This truss is designed for C-C for members and forces, and for MWFRS for reactions specified.
3) Truss designed for wind loads in the plane of the truss only. For studs exposed to wind (normal to the face), see MiTek "Standard Gable End Detail"
4) All plates are 2x4 MT20 unless otherwise indicated.
5) Gable studs spaced at 2-0-0 oc.
6) Provide mechanical connection (by others) of truss to bearing plate capable of withstanding 291 lb uplift at joint 2 and 291 lb uplift at joint 6.
7) In the LOAD CASE(S) section, loads applied to the face of the truss are noted as front (F) or back (B).

LOAD CASE(S) Standard
1) Regular: Lumber Increase=1.25, Plate Increase=1.25
Uniform Loads (plf)
Vert: 1-4=-64(F=-10), 4-7=-64(F=-10), 2-6=-30

APRIL 22, 2005 TRUSS DESIGN ENGINEER:
THOMAS E. MILLER PE 56877, BYRON K. ANDERSON PE 60987
STRUCTURAL ENGINEERING AND INSPECTIONS, INC. EB 9196
16105 N. FLORIDA AVE. STE B, LUTZ, FL 33549

Job	Truss	Truss Type	Qty	Ply	FITZGERALD RESIDENCE ONEIL CONST
L110917	T10	COMMON	4	1	Job Reference (optional) Dwg.#042205016

Builders FirstSource, Lake City, Fl 32055 — 6.200 s Dec 15 2004 MiTek Industries, Inc. Wed Apr 20 12:58:59 2005 Page 1

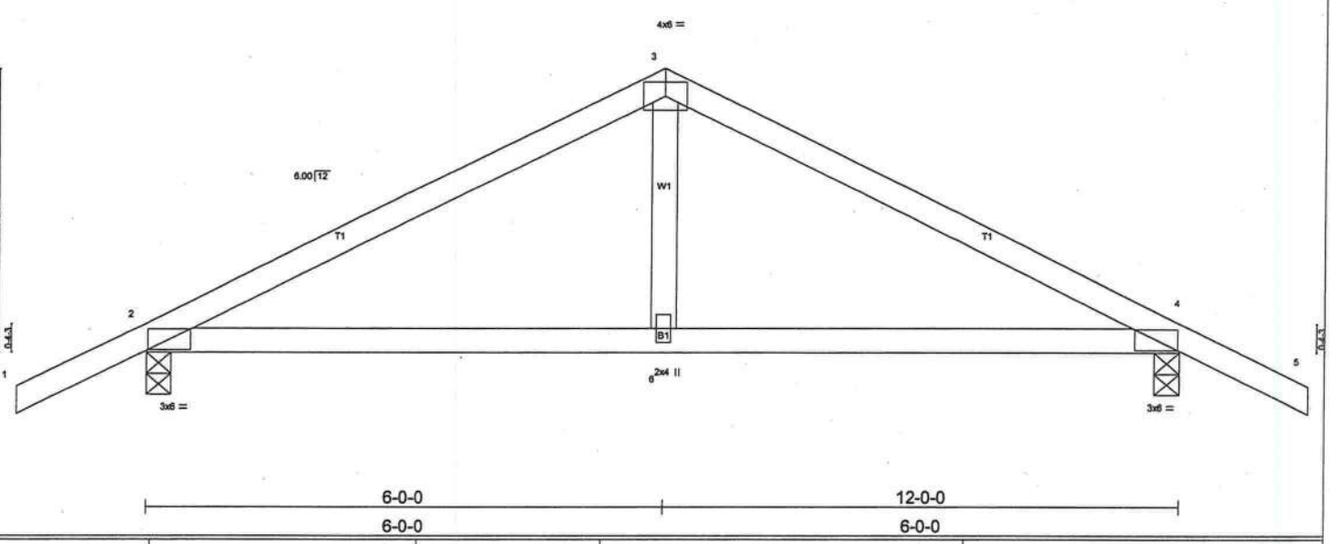

LOADING (psf)		SPACING 2-0-0		CSI		DEFL in (loc) l/defl L/d		PLATES GRIP
TCLL	20.0	Plates Increase	1.25	TC	0.26	Vert(LL) -0.04 4-6 >999 240		MT20 244/190
TCDL	7.0	Lumber Increase	1.25	BC	0.29	Vert(TL) -0.06 4-6 >999 180		
BCLL	10.0	Rep Stress Incr	YES	WB	0.07	Horz(TL) 0.01 4 n/a n/a		
BCDL	5.0	Code FBC2001/ANSI95		(Matrix)				Weight: 47 lb

LUMBER
TOP CHORD 2 X 4 SYP No.2D
BOT CHORD 2 X 4 SYP No.2D
WEBS 2 X 4 SYP No.3

BRACING
TOP CHORD Sheathed or 6-0-0 oc purlins.
BOT CHORD Rigid ceiling directly applied or 10-0-0 oc bracing.

REACTIONS (lb/size) 2=581/0-3-8, 4=581/0-3-8
Max Horz 2=-93(load case 6)
Max Uplift2=-247(load case 5), 4=-247(load case 6)

FORCES (lb) - Maximum Compression/Maximum Tension
TOP CHORD 1-2=0/35, 2-3=-684/380, 3-4=-684/380, 4-5=0/35
BOT CHORD 2-6=-172/550, 4-6=-172/550
WEBS 3-6=0/217

NOTES
1) Unbalanced roof live loads have been considered for this design.
2) Wind: ASCE 7-98; 110mph (3-second gust); h=20ft; TCDL=4.2psf; BCDL=3.0psf; Category II; Exp B; enclosed; MWFRS gable end zone and C-C Exterior(2) zone; Lumber DOL=1.60 plate grip DOL=1.60. This truss is designed for C-C for members and forces, and for MWFRS for reactions specified.
3) Provide mechanical connection (by others) of truss to bearing plate capable of withstanding 247 lb uplift at joint 2 and 247 lb uplift at joint 4.

LOAD CASE(S) Standard

APRIL 22, 2005 TRUSS DESIGN ENGINEER:
THOMAS E. MILLER PE 56877, BYRON K. ANDERSON PE 60987
STRUCTURAL ENGINEERING AND INSPECTIONS, INC. EB 9196
16105 N. FLORIDA AVE. STE B, LUTZ, FL 33549

	Truss	Truss Type	Qty	Ply	FITZGERALD RESIDENCE ONEIL CONST
L110917	T10G	GABLE	1	1	Job Reference (optional) Dwg.#042205017

Builders FirstSource, Lake City, Fl 32055 — 6.200 s Dec 15 2004 MiTek Industries, Inc. Wed Apr 20 12:58:59 2005 Page 1

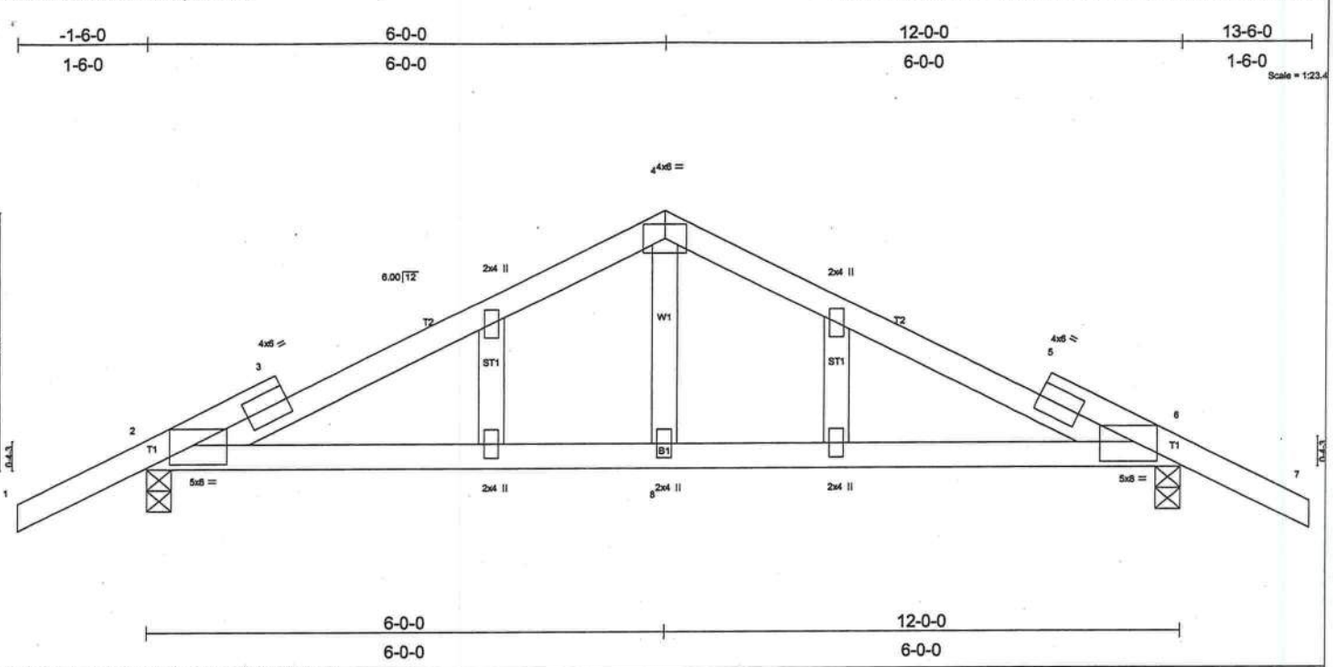

Plate Offsets (X,Y): [2:0-3-4,0-2-12], [6:0-3-4,0-2-12]

LOADING (psf)		SPACING	2-0-0	CSI		DEFL	in	(loc)	l/defl	L/d	PLATES	GRIP
TCLL	20.0	Plates Increase	1.25	TC	0.35	Vert(LL)	-0.06	6-8	>999	240	MT20	244/190
TCDL	7.0	Lumber Increase	1.25	BC	0.36	Vert(TL)	-0.08	6-8	>999	180		
BCLL	10.0	Rep Stress Incr	NO	WB	0.08	Horz(TL)	0.01	6	n/a	n/a		
BCDL	5.0	Code FBC2001/ANSI95		(Matrix)							Weight: 54 lb	

LUMBER
TOP CHORD 2 X 4 SYP No.2D
BOT CHORD 2 X 4 SYP No.2D
WEBS 2 X 4 SYP No.3
OTHERS 2 X 4 SYP No.3

BRACING
TOP CHORD Sheathed or 6-0-0 oc purlins.
BOT CHORD Rigid ceiling directly applied or 10-0-0 oc bracing.

REACTIONS (lb/size) 2=656/0-3-8, 6=656/0-3-8
Max Horz 2=-86(load case 6)
Max Uplift2=-277(load case 5), 6=-277(load case 6)

FORCES (lb) - Maximum Compression/Maximum Tension
TOP CHORD 1-2=0/42, 2-3=-829/440, 3-4=-787/458, 4-5=-787/458, 5-6=-829/440, 6-7=0/42
BOT CHORD 2-8=-272/704, 6-8=-272/704
WEBS 4-8=-7/236

NOTES
1) Unbalanced roof live loads have been considered for this design.
2) Wind: ASCE 7-98; 110mph (3-second gust); h=20ft; TCDL=4.2psf; BCDL=3.0psf; Category II; Exp B; enclosed; MWFRS gable end zone and C-C Exterior(2) zone; Lumber DOL=1.60 plate grip DOL=1.60. This truss is designed for C-C for members and forces, and for MWFRS for reactions specified.
3) Truss designed for wind loads in the plane of the truss only. For studs exposed to wind (normal to the face), see MiTek "Standard Gable End Detail"
4) Gable studs spaced at 2-0-0 oc.
5) Provide mechanical connection (by others) of truss to bearing plate capable of withstanding 277 lb uplift at joint 2 and 277 lb uplift at joint 6.
6) In the LOAD CASE(S) section, loads applied to the face of the truss are noted as front (F) or back (B).

LOAD CASE(S) Standard
1) Regular: Lumber Increase=1.25, Plate Increase=1.25
Uniform Loads (plf)
Vert: 1-4=-64(F=-10), 4-7=-64(F=-10), 2-6=-30

APRIL 22, 2005 TRUSS DESIGN ENGINEER:
THOMAS E. MILLER PE 56877, BYRON K. ANDERSON PE 60987
STRUCTURAL ENGINEERING AND INSPECTIONS, INC. EB 9196
16105 N. FLORIDA AVE. STE B, LUTZ, FL 33549

LARRY RESMONDO A/C
P.O. BOX 1857
HIGH SPRINGS, FL. 32655
STATE CLASS "A" LIC. # CACO 56977
PHONE # (386)454-4433
FAX # (386)454-8843

September 29, 2005

Re: Fitzgerald Residence

To Whom It May Concern:

In order to calculate the space for the open area above the great room, we must put it in as floor space, or our program will not consider it conditioned space. If you have any further questions, please call Larry.

Respectfully,

Shawna Kozan

Shawna Kozan
Office Manager

GEO-TECH, INC.

ENGINEERING CONSULTANTS IN GEOTECHNICAL • ENVIRONMENTAL • CONSTRUCTION MATERIALS TESTING

October 5, 2005
Project No. 051583.13G

O'Neil Construction
P.O. Box 1633
High Springs, FL 32655

Attention: Mr. Dennis O'Neil

Project: Proposed Fitzgerald Residence
Fort White, FL
Preliminary Site Exploration

Dear Mr. Oneil:

As requested, Geo-Technologies, Inc. (Geo-Tech) has completed a preliminary geotechnical engineering evaluation at the project site. The purpose of the borings was to identify the shallow subsurface soils within the proposed building site and briefly comment on the suitability of the shallow soils for a conventional foundation system.

On October 3, 2005, Geo-Tech performed four (4) auger borings at the site to a depth of approximately eight (8) feet below the existing site grade in the proposed building area. The building area was staked by you. Representative samples were obtained from the borings and returned to our laboratory for visual classification. General soil stratification is based on a visual review of recovered soil samples and interpretation of field boring logs by a geotechnical engineer.

Subsurface Conditions

As interpreted from the auger borings the soils at the site generally consisted of a surface layer of fine approximately four (4) to six (6) feet thick underlain by slightly clayey sand, clayey sand and slightly sandy clay to the depth augered. The free groundwater level was not found at our boring locations to the depth augered. In Geo-Tech's opinion, groundwater levels are not expected to influence near surface construction at this site, a graphic presentation of the borings is presented on the attached sheets. The interface between soil layers is typically more gradual than suggested by the horizontal lines on the soil profiles.

Preliminary Evaluation and Recommendations

Based on the information found at our boring locations, it is Geo-Tech's opinion that the clayey soils are at a depth that should not affect the foundation system for this project (dependent upon final site grade). Should you encounter these clayey soils at shallower depths during the earthwork phase of construction, a minimum separation of two (2) feet from the bottom of the slab and foundation should be maintained (see Figure 1). If undercutting, the depth of the

4000 SW 35TH TERRACE, SUITE C • GAINESVILLE, FLORIDA 32608 • PHONE: (352) 372-1274 • FAX: (352) 372-2721

undercut excavation should be controlled so that a "bathtub effect" that will trap water is not created. The bottom of the undercut should be graded to drain to a positive gravity outfall. If it is not feasible to have a positive gravity outfall, an underdrain should be placed in the bottom of the excavation to drain stormwater that may accumulate in the excavation. Backfill soils should consist of clean sand soils compacted in twelve (12) inch loose lifts. Generally sand with between three (3) and twelve (12) percent fines passing a no. 200 sieve is used for this purpose. The upper sand soils found on site should meet these requirements and can be used if kept separate from the clay soils during the earthwork phase of construction. The structural fill soils should be compacted to a minimum of 95 percent of the maximum dry density per the modified proctor determination. We wish to emphasize that the excavation and replacement of the underlying clay soils from beneath the building is not a guarantee that the deeper clays will not cause foundation movements. However the risk is reduced significantly.

Proof-Rolling

Proof-rolling of the cleared surface is recommended to: (1) locate any soft areas or unsuitable surface or near surface soils, (2) increase the density of the near surface soils, and (3) prepare the existing surface for the addition of fill soils (if required). Proof-rolling of the building areas should consist of a least ten (10) passes of a self-propelled static compactor. Each pass of the compactor should overlap the preceding pass by thirty (30) percent to insure complete coverage. If deemed necessary, in areas that continues to "yield", remove all deleterious material and replace with a clean, compacted sand backfill. **The proof-rolling should occur after cutting and before filling. Vibratory compaction equipment should not be used within one-hundred (100) feet of neighboring structures.**

Closure

The preliminary recommendations and conclusions presented in this report are based on the limited data obtained from the shallow soil borings. Deeper soil profiles were not requested for this project. Variations in soils may be presented adjacent to or between the borings which were not apparent in the boring logs presented. If variations are found during construction of the project, it will be necessary to review the preliminary recommendations found in this report.

Geo-Tech trusts this report is sufficient to meet your immediate needs. Should you have any questions concerning this report or if we may be of further assistance, please do not hesitate to contact the undersigned.

Sincerely,

Donald "Bubba" Youngblood
Branch Manager

David A. Cappa, P.E.
Florida Registration No. 58334

DY/DC:kw

Log of Borehole: A-1

Project: FITZGERALD RESIDENCE, FORT WHITE, FL
Project No: 051583.13G
Boring Location: N.W. CORNER AREA OF PROPOSED RESIDENCE
Engineer: NJH/DAC
Client: O'NEIL CONSTRUCTION
Enclosure: NONE

GEO-TECH, Inc.
Engineering Consultants
4000 SW 35th Terr., Suite C
Gainesville, Florida 32608

SUBSURFACE PROFILE				SAMPLE	
Depth	Symbol	Description	Depth/Elev.	Number	Remarks
0		Ground Surface	0.0		
1		***FINE SAND*** GRAY AND LIGHT BROWN FINE SAND (SP)			
2				1	
3					
4			4.0		
5		***SLIGHTLY CLAYEY SAND*** DARK BROWN SLIGHTLY CLAYEY SAND (SP-SC)			
6				2	
7					
8			8.0		
		End of Borehole			
9					

Depth to Ground Water: NOT FOUND
Drill Date: OCTOBER 3, 2005

Drilled By: MC
Drill Method: ASTM D-4700

Remarks: (SP) UNIFIED SOIL GROUP CLASSIFICATION SYMBOL AS DETERMINED BY VISUAL REVIEW

Log of Borehole: A-2

Project: FITZGERALD RESIDENCE, FORT WHITE, FL
Boring Location: N.E. CORNER AREA OF PROPOSED RESIDENCE
Client: O'NEIL CONSTRUCTION

Project No: 051583.13G
Engineer: NJH/DAC
Enclosure: NONE

GEO-TECH, Inc.
Engineering Consultants
4000 SW 35th Terr., Suite C
Gainesville, Florida 32608

SUBSURFACE PROFILE				SAMPLE	
Depth	Symbol	Description	Depth/Elev.	Number	Remarks
0		Ground Surface	0.0		
1		***FINE SAND*** GRAY AND LIGHT BROWN FINE SAND (SP)			
2				1	
3					
4			4.0		
5		***CLAYEY SAND*** LIGHT BROWN AND ORANGE CLAYEY SAND (SC)			
6				2	
7					
8			8.0		
		End of Borehole			
9					

Depth to Ground Water: NOT FOUND
Drill Date: OCTOBER 3, 2005

Drilled By: MC
Drill Method: ASTM D-4700

Remarks: (SP) UNIFIED SOIL GROUP CLASSIFICATION SYMBOL AS DETERMINED BY VISUAL REVIEW

Log of Borehole: A-3

Project: FITZGERALD RESIDENCE, FORT WHITE, FL
Boring Location: S.E. CORNER AREA OF PROPOSED RESIDENCE
Client: O'NEIL CONSTRUCTION

Project No: 051583.13G
Engineer: NJH/DAC
Enclosure: NONE

GEO-TECH, Inc.
Engineering Consultants
4000 SW 35th Terr., Suite C
Gainesville, Florida 32608

SUBSURFACE PROFILE				SAMPLE	
Depth	Symbol	Description	Depth/Elev.	Number	Remarks
0		Ground Surface	0.0		
1, 2, 3		***FINE SAND*** GRAY AND LIGHT BROWN FINE SAND (SP)	4.0	1	
4		***SLIGHTLY CLAYEY SAND*** DARK BROWN SLIGHTLY CLAYEY SAND (SP-SC)	5.0	2	
5, 6, 7		***SLIGHTLY SANDY CLAY*** GRAY AND BROWN SLIGHTLY SANDY CLAY (CH)	8.0	3	
8		End of Borehole			
9					

Depth to Ground Water: NOT FOUND
Drill Date: OCTOBER 3, 2005

Drilled By: MC
Drill Method: ASTM D-4700

Remarks: (SP) UNIFIED SOIL GROUP CLASSIFICATION SYMBOL AS DETERMINED BY VISUAL REVIEW

Log of Borehole: A-4

Project: FITZGERALD RESIDENCE, FORT WHITE, FL
Boring Location: S.W. CORNER AREA OF PROPOSED RESIDENCE
Client: O'NEIL CONSTRUCTION

Project No:
Engineer: NJH/DAC
Enclosure: NONE

GEO-TECH, Inc.
Engineering Consultants
4000 SW 35th Terr., Suite C
Gainesville, Florida 32608

SUBSURFACE PROFILE				SAMPLE	
Depth	Symbol	Description	Depth/Elev.	Number	Remarks
0		Ground Surface	0.0		
1		***FINE SAND*** GRAY AND LIGHT BROWN FINE SAND (SP)			
2					
3				1	
4					
5					
6			6.0		
7		***CLAYEY SAND*** BROWN AND ORANGE CLAYEY SAND (SC)		2	
8			8.0		
9		End of Borehole			

Depth to Ground Water: NOT FOUND
Drill Date: OCTOBER 3, 2005

Drilled By: MC
Drill Method: ASTM D-4700

Remarks: (SP) UNIFIED SOIL GROUP CLASSIFICATION SYMBOL AS DETERMINED BY VISUAL REVIEW

Soil Profile : 4 OF 4

PERMIT # 0509-55

PARCEL # 04236-012

NOTICE OF COMMENCEMENT

STATE OF: FLORIDA COUNTY OF: ALACHUA CITY OF: _____

THE UNDERSIGNED hereby gives notice that improvement(s) will be made to certa real property, and in accordance with Chapter 713, Florida Statutes, th following information is provided in this Notice of Commencement.

DESCRIPTION OF PROPERTY:

LOT: 32 BLOCK: _____ SECTION: 18 TOWNSHIP: 7S RANGE: 16

SUBDIVISION: Cedar Springs Shores PLATBOOK: _____ MAP PAGE #: _____

STREET ADDRESS: 380 SW BLUFF DRIVE

GENERAL DESCRIPTION OF IMPROVEMENT:

TO CONSTRUCT: SFR

OWNER INFORMATION:

OWNER(S) NAME: JOHN FitzgeraLD
ADDRESS: 4613 ESPARANZA AVE PHONE NO.: 386 454 2476
CITY: TAMPA STATE: FL. ZIP CODE: 33611
INTEREST IN THE PROPERTY: OWNER
FEE SIMPLE TITLEHOLDER NAME: SAME
FEE SIMPLE TITLEHOLDER ADDRESS SAME
(if other than owner)

CONTRACTOR NAME: ONeil CONSTRUCTION
ADDRESS: P.O. BOX 1633 PHONE NO.: 386 454 2476
CITY: HIGH SPRINGS STATE: FL. ZIP CODE: 32655

BONDING COMPANY: N/A
ADDRESS: —
CITY: —

Inst:2005025911 Date:10/18/2005 Time:15:08
S MK DC,P.DeWitt Cason,Columbia County B:1062 P:421

LENDER NAME: NONE
ADDRESS: —
CITY: — STATE: — ZIP CODE: —

Persons within the State of Florida designated by Owner upon whom notices or other documents may be served as provided by Section 713.13(1)(a)7., Florida Statutes:
NAME: JOHN FitzgeraLD ADDRESS: 4613 Esparanza Ave. Tampa, Fl. 33611
In addition to himself, Owner designates Dennis ONeil of ONeil CONSTRUCTION to receive a copy of the Lienor's Notice as provided in Section 713.13(1)(b), Florida Statutes.

Expiration date is 1 year from date of recording unless a different date is specified.

SIGNATURE OF OWNER: _____

Sworn to and subscribed before me this 3 day of October A.D. 2005

Notary Public David Lindsey
Signature

My Commission Expires:

DAVID LINDSEY
MY COMMISSION # DD 268955
EXPIRES: November 19, 2007
Bonded Thru Notary Public Underwriters

DP 05-014

Columbia County Building Permit Application

Revised 9-23-04

For Office Use Only Application # 0509-55 Date Received 9-16-05 By ____ Permit # 23728

Application Approved by - Zoning Official BLK Date 14.10.05 Plans Examiner DK JTH Date 10-12-05

Flood Zone AE Development Permit YES Zoning ESA-2 Land Use Plan Map Category ESA

Comments Attached OP is for existing MH. Need one for new Residence. ~~FAX Elevation Cert~~ Existing MH to be removed ~~Early~~ before CO is issued. Need Elevation Certification before final power showing MFE is 38 Ft

Applicants Name Dennis Oneil ONEIL CONSTRUCTION Phone 386 454 2476 FAX 454-4244

Address P.O. Box 1633 HIGH Springs, Fl.

Owners Name John Fitzgerald Phone

911 Address 380 Bluff Drive Ft. White FL 32038

Contractors Name ONEIL Construction Phone

Address P.O. Box 1633 / 235 NE 2ND St. HiGH Springs Fl.

Fee Simple Owner Name & Address John Fitzgerald 4613 Esparanza Av Tampa Fl. 33611

Bonding Co. Name & Address NONE

Architect/Engineer Name & Address Donald Yanskey 2421 NW 49th Ave, Gainesville Fl. 32605

Mortgage Lenders Name & Address N/A

Circle the correct power company - FL Power & Light - Clay Elec. - Suwannee Valley Elec. - Progressive Energy

Property ID Number 18-7S-16-04236-012 Estimated Cost of Construction 150,000

Subdivision Name Cedar Springs Shores Lot 32 Block ____ Unit 1 Phase ____

Driving Directions From 47 and 138 in Ft. White t-L on Hollingsworth St Go 3/10 mile to Jobo on L

Type of Construction FRAME / SFR Number of Existing Dwellings on Property ____

Total Acreage 1 AC Lot Size ____ Do you need a - Culvert Permit or Culvert Waiver or Have an Existing Drive

Actual Distance of Structure from Property Lines - Front 20' Side 20' 36' Side 36' Rear 15' 180'

Total Building Height 31' Number of Stories 2 197' Heated Floor Area 1971 Roof Pitch ____

1 FT FLOOR 1286 SECOND FL 685 TOTAL 1971

Application is hereby made to obtain a permit to do work and installations as indicated. I certify that no work or installation has commenced prior to the issuance of a permit and that all work be performed to meet the standards of all laws regulating construction in this jurisdiction.

OWNERS AFFIDAVIT: I hereby certify that all the foregoing information is accurate and all work will be done in compliance with all applicable laws and regulating construction and zoning.

WARNING TO OWNER: YOUR FAILURE TO RECORD A NOTICE OF COMMENCMENT MAY RESULT IN YOU PAYING TWICE FOR IMPROVEMENTS TO YOUR PROPERTY. IF YOU INTEND TO OBTAIN FINANCING, CONSULT WITH YOUR LENDER OR ATTORNEY BEFORE RECORDING YOUR NOTICE OF COMMENCEMENT.

Owner Builder or Agent (Including Contractor)

Dennis Oneil

Contractor Signature

Contractors License Number CGC061581

Competency Card Number

NOTARY STAMP/SEAL

STATE OF FLORIDA
COUNTY OF COLUMBIA

DAPHNE ALESE BROWN
Notary Public, State of Florida
My comm. exp. Feb. 18, 2006
Comm. No. DD 085153

Sworn to (or affirmed) and subscribed before me this 16th day of September 20 05.

Personally known ✓ or Produced Identification ____

Daphne Alese Brown

Notary Signature

SUWANNEE RIVER WATER MANAGEMENT DISTRICT
9225 CR 49
LIVE OAK, FLORIDA 32060
TELEPHONE: (386) 362-1001
TELEPHONE: 800-226-1066
FAX (386) 362-1056

GENERAL PERMIT

PERMITTEE:
JOHN AND DIANE FITZGERALD
461E ESPERANZA AVENUE
TAMPA, FL 33611

PERMIT NUMBER: ERP05-0315
DATE ISSUED: 09/12/2005
DATE EXPIRES: 09/12/2008
COUNTY: COLUMBIA
TRS: S18/T7S/R16E

PROJECT: FITZGERALD WOD RESIDENCE

Approved entity to whom operation and maintenance may be transferred pursuant to rule 40B-4.1130, Florida Administrative Code (F.A.C.):

JOHN AND DIANE FITZGERALD
461E ESPERANZA AVENUE
TAMPA, FL 33611

Based on information provided, the Suwannee River Water Management District's (District) rules have been adhered to and an environmental resource general permit is in effect for the permitted activity description below:

Construction of a 27'x43' residential structure on Lot 32 of Cedar Springs Shores, Unit One in Columbia County. The structure shall be elevated such that the lowest structural member of the first floor is at least one foot above the one hundred year flood elevation for this specific site. The area below the first floor shall remain open and unobstructed except for piles and stairways. The entire structure shall be located outside the 75-foot setback from the top of the normally recognized river bank. All work will be completed pursuant to District Rule 40B-4.3030 Florida Administrative Code and in a manner consistent with the application package submitted by Diane Fitzgerald on 8/18/05.

It is your responsibility to ensure that adverse off-site impacts do not occur either during or after construction. Any additional construction or alterations not authorized by this permit may result in flood control or water quality problems both on and off site and will be a violation of District rule.

You or any other substantially affected persons are entitled to request an administrative hearing

Columbia County Property Appraiser

DB Last Updated: 3/3/2005

2005 Proposed Values

Parcel: 18-7S-16-04236-012

Tax Record | Property Card | Interactive GIS Map | Print

Owner & Property Info

<< Prev Search Result: 3 of 5 Next >>

Owner's Name	FITZGERALD JOHN M & DIANE M
Site Address	BLUFF
Mailing Address	4613 ESPERANZA AVE TAMPA, FL 33611
Brief Legal	LOT 32 CEDAR SPRING SHORES UNIT 1. ORB 818-1255, DC T G ALLDAY JR 1012-2696,

Use Desc. (code)	MOBILE HOM (000200)
Neighborhood	18716.01
Tax District	3
UD Codes	MKTA02
Market Area	02
Total Land Area	0.000 ACRES

Property & Assessment Values

Mkt Land Value	cnt: (2)	$53,000.00
Ag Land Value	cnt: (0)	$0.00
Building Value	cnt: (1)	$16,421.00
XFOB Value	cnt: (1)	$3,564.00
Total Appraised Value		$72,985.00

Just Value	$72,985.00
Class Value	$0.00
Assessed Value	$72,985.00
Exempt Value	$0.00
Total Taxable Value	$72,985.00

Sales History

Sale Date	Book/Page	Inst. Type	Sale Vimp	Sale Qual	Sale RCode	Sale Price
4/6/2004	1012/2703	WD	I	Q		$87,000.00
4/6/2004	1012/2697	QC	V	U	01	$100.00
9/9/1995	818/1255	QC	V	U	01	$0.00

Building Characteristics

Bldg Item	Bldg Desc	Year Blt	Ext. Walls	Heated S.F.	Actual S.F.	Bldg Value
1	SFR MANUF (000200)	1993	Average (05)	728	728	$16,421.00
	Note: All S.F. calculations are based on exterior building dimensions.					

Extra Features & Out Buildings

Code	Desc	Year Blt	Value	Units	Dims	Condition (% Good)
0040	BARN,POLE	1993	$3,564.00	792.000	22 x 36 x 0	(.00)

Land Breakdown

Lnd Code	Desc	Units	Adjustments	Eff Rate	Lnd Value
000132	SFR RIVER (MKT)	100.000 FF - (.000AC)	1.00/1.00/1.50/1.00	$510.00	$51,000.00
009945	WELL/SEPT (MKT)	1.000 UT - (.000AC)	1.00/1.00/1.00/1.00	$2,000.00	$2,000.00

Columbia County Property Appraiser DB Last Updated: 3/3/2005

<< Prev 3 of 5 Next >>

STATE OF FLORIDA
DEPARTMENT OF HEALTH

APPLICATION FOR ONSITE SEWAGE DISPOSAL SYSTEM CONSTRUCTION PERMIT

Permit Application Number 05-0393E

PART II - SITE PLAN

Scale: Each block represents 5 feet and 1 inch = 50 feet.

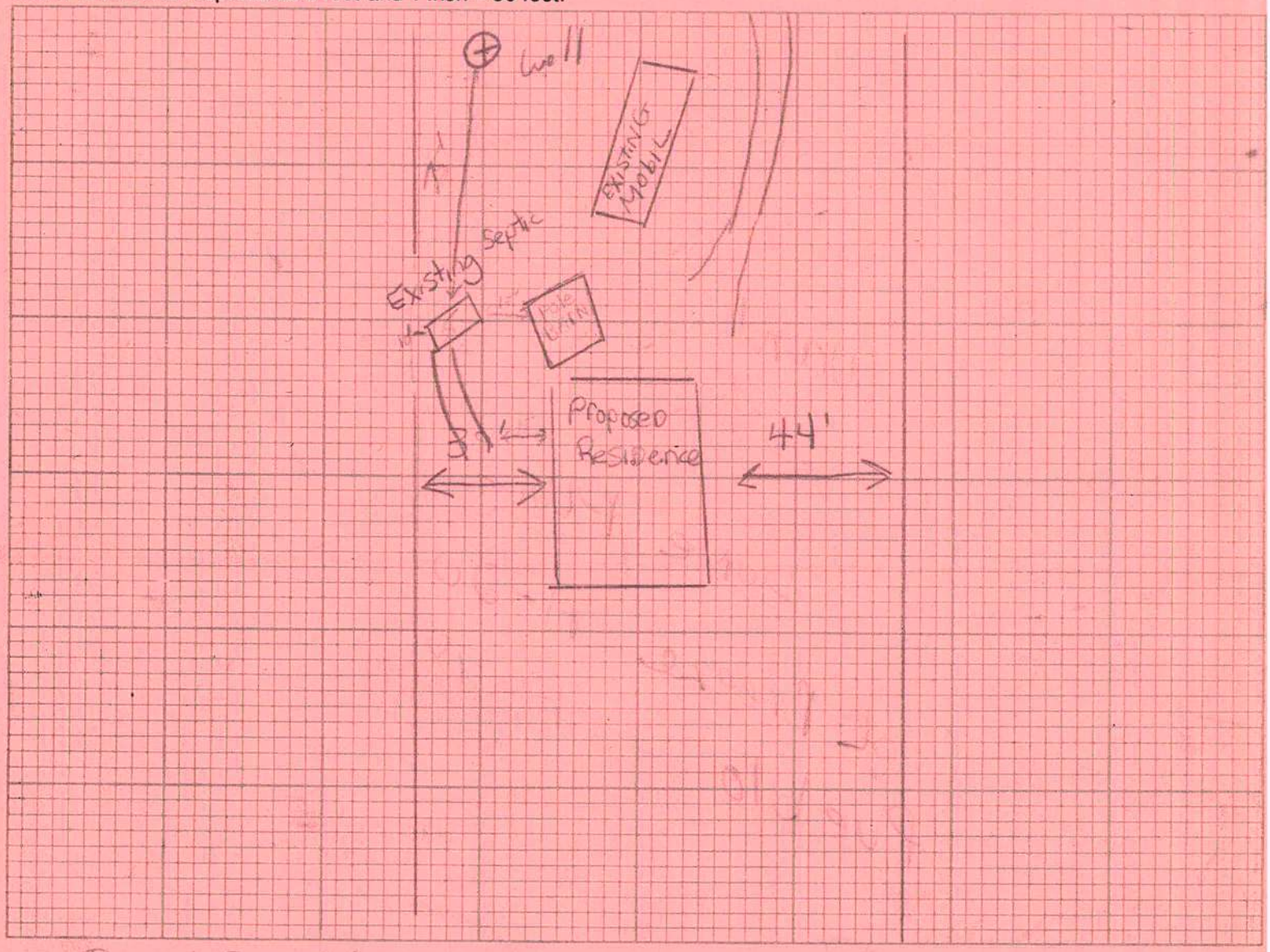

Notes: Parcel Size 1 AC

Site Plan submitted by: X O'Neil Construction (Signature) X Contractor (Title)

Plan Approved ✓ Not Approved _____ Date 4-13-05

By _____ County Health Department

ALL CHANGES MUST BE APPROVED BY THE COUNTY HEALTH DEPARTMENT

DH 4015, 10/96 (Replaces HRS-H Form 4015 which may be used)
(Stock Number: 5744-002-4015-6)

FEDERAL EMERGENCY MANAGEMENT AGENCY
NATIONAL FLOOD INSURANCE PROGRAM

ELEVATION CERTIFICATE

O.M.B. No. 3067-0077
Expires July 31, 2002

Important: Read the instructions on pages 1 - 7.

SECTION A - PROPERTY OWNER INFORMATION

For Insurance Company Use:
Policy Number
Company NAIC Number

BUILDING OWNER'S NAME: DIANE AND JOHN FITZGERALD

BUILDING STREET ADDRESS (Including Apt., Unit, Suite, and/or Bldg. No.) OR P.O. ROUTE AND BOX NO.: 380 SW BLUFF DRIVE

CITY: FT. WHITE STATE: FL ZIP CODE:

PROPERTY DESCRIPTION (Lot and Block Numbers, Tax Parcel Number, Legal Description, etc.): LOT 32 CEDAR SPRINGS SHORES UNIT 1

BUILDING USE (e.g., Residential, Non-residential, Addition, Accessory, etc. Use Comments section if necessary.): Residential

LATITUDE/LONGITUDE (OPTIONAL) (##° - ## - ##.## or ##.#####°) HORIZONTAL DATUM: [ ] NAD 1927 [ ] NAD 1983 SOURCE: [ ] GPS (Type): [ ] USGS Quad Map [ ] Other:

SECTION B - FLOOD INSURANCE RATE MAP (FIRM) INFORMATION

B1. NFIP COMMUNITY NAME & COMMUNITY NUMBER	B2. COUNTY NAME	B3. STATE
COLUMBIA COUNTY, FL, 120070	COLUMBIA	FLA

B4. MAP AND PANEL NUMBER	B5. SUFFIX	B6. FIRM INDEX DATE	B7. FIRM PANEL EFFECTIVE/REVISED DATE	B8. FLOOD ZONE(S)	B9. BASE FLOOD ELEVATION(S) (Zone AO, use depth of flooding)
120070 0255	B	JAN. 6, 1988	JAN. 6, 1988	AE	36.0 Feet

B10. Indicate the source of the Base Flood Elevation (BFE) data or base flood depth entered in B9.
[ ] FIS Profile [✓] FIRM [ ] Community Determined [ ] Other (Describe): N/A

B11. Indicate the elevation datum used for the BFE in B9: [✓] NGVD 1929 [ ] NAVD 1988 [ ] Other (Describe): N/A

B12. Is the building located in a Coastal Barrier Resources System (CBRS) area or Otherwise Protected Area (OPA)? [ ] Yes [✓] No
Designation Date: N/A

SECTION C - BUILDING ELEVATION INFORMATION (SURVEY REQUIRED)

C1. Building elevations are based on: [ ] Construction Drawings* [ ] Building Under Construction* [✓] Finished Construction
*A new Elevation Certificate will be required when construction of the building is complete.

C2. Building Diagram Number 5 (Select the building diagram most similar to the building for which this certificate is being completed - see pages 6 and 7. If no diagram accurately represents the building, provide a sketch or photograph.)

C3. Elevations – Zones A1-A30, AE, AH, A (with BFE), VE, V1-V30, V (with BFE), AR, AR/A, AR/AE, AR/A1-A30, AR/AH, AR/AO
Complete Items C3a-i below according to the building diagram specified in Item C2. State the datum used. If the datum is different from the datum used for the BFE in Section B, convert the datum to that used for the BFE. Show field measurements and datum conversion calculation. Use the space provided or the Comments area of Section D or Section G, as appropriate, to document the datum conversion.
Datum N/A Conversion/Comments N/A
Elevation reference mark used LOCAL BM Does the elevation reference mark used appear on the FIRM? [ ] Yes [✓] No

☐ a) Top of bottom floor (including basement or enclosure)	43 . 3	ft.(m)
☐ b) Top of next higher floor	N/A .	ft.(m)
☐ c) Bottom of lowest horizontal structural member (V zones only)	N/A .	ft.(m)
☐ d) Attached garage (top of slab)	N/A .	ft.(m)
☐ e) Lowest elevation of machinery and/or equipment servicing the building	N/A .	ft.(m)
☐ f) Lowest adjacent grade (LAG)	39 . 2	ft.(m)
☐ g) Highest adjacent grade (HAG)	41 . 1	ft.(m)
☐ h) No. of permanent openings (flood vents) within 1 ft. above adjacent grade	N/A	
☐ i) Total area of all permanent openings (flood vents) in C3h	N/A	sq. in. (sq. cm)

License Number, Embossed Seal, Signature, and Date
LS 4708
7/19/04

SECTION D - SURVEYOR, ENGINEER, OR ARCHITECT CERTIFICATION

This certification is to be signed and sealed by a land surveyor, engineer, or architect authorized by law to certify elevation information.
I certify that the information in Sections A, B, and C on this certificate represents my best efforts to interpret the data available.
I understand that any false statement may be punishable by fine or imprisonment under 18 U.S. Code, Section 1001.

CERTIFIER'S NAME: MARK D. DUNEN LICENSE NUMBER: LS 4708
TITLE: SURVEYOR AND MAPPER COMPANY NAME: MARK D. DUNEN, PSM
ADDRESS: 1604 SW SISTERS WELCOME ROAD CITY: LAKE CITY STATE: FL ZIP CODE: 32025
SIGNATURE: DATE: 7/19/04 TELEPHONE: 386-758-9831

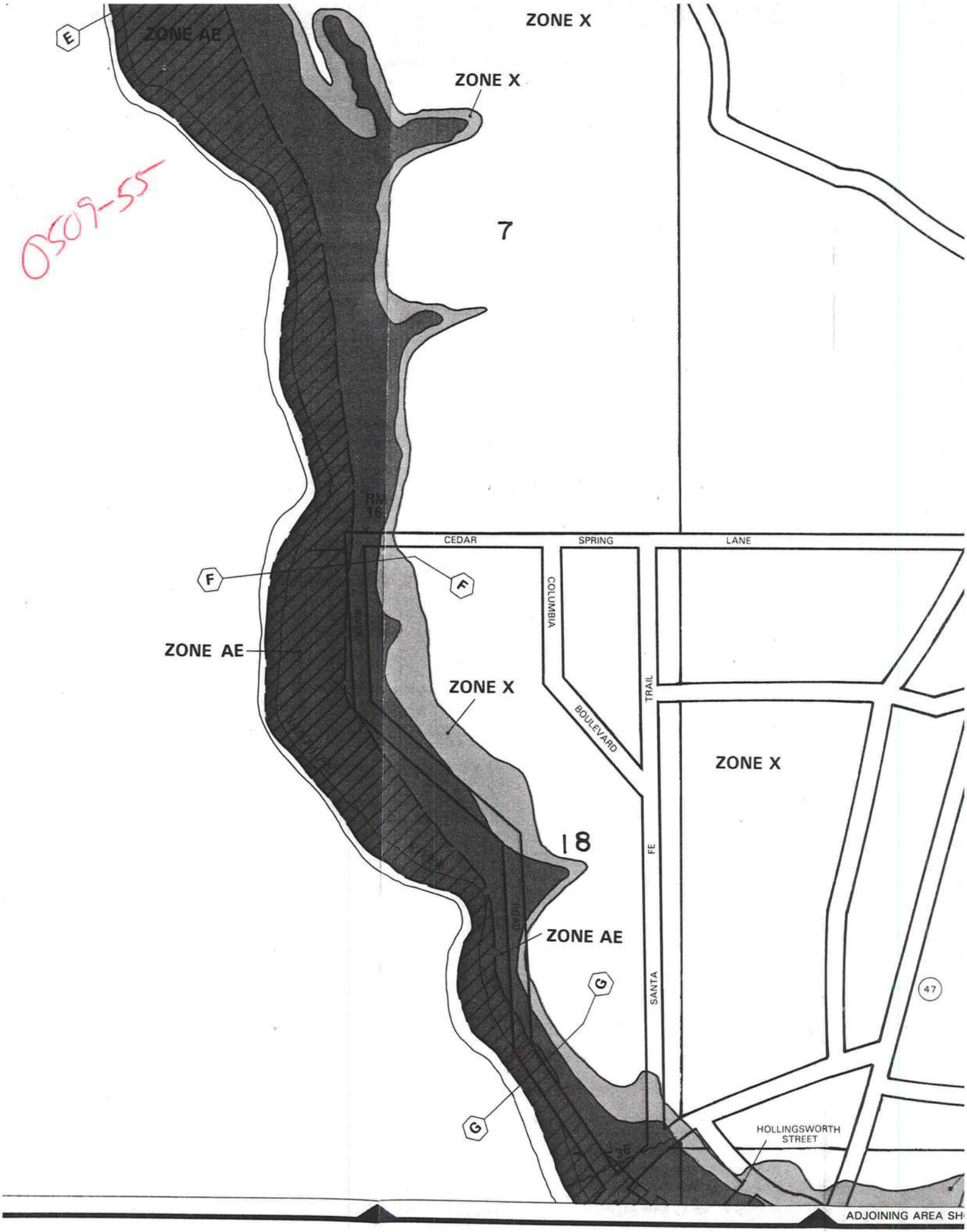
ZONE X
ZONE AE
E
ZONE X
0509-55
7
RM 16
CEDAR
SPRING
LANE
F
F
COLUMBIA
BOULEVARD
TRAIL
ZONE AE
ZONE X
ZONE X
18
FE
ZONE AE
SANTA
G
G
47
HOLLINGSWORTH STREET
36
ADJOINING AREA SH

FORM 600A-2001 EnergyGauge® 3.4

FLORIDA ENERGY EFFICIENCY CODE FOR BUILDING CONSTRUCTION

Florida Department of Community Affairs

Residential Whole Building Performance Method A

Project Name:	**FITZGERALD RESIDENCE**	Builder:	**O'NEIL CONSTRUCTION**
Address:		Permitting Office:	**COLUMBIA COUNTY**
City, State:	,	Permit Number:	23728
Owner:	**FITZGERALD**	Jurisdiction Number:	221000
Climate Zone:	**North**		

1. New construction or existing		New	
2. Single family or multi-family		Single family	
3. Number of units, if multi-family		1	
4. Number of Bedrooms		3	
5. Is this a worst case?		No	
6. Conditioned floor area (ft²)		2572 ft²	
7. Glass area & type	Single Pane	Double Pane	
a. Clear glass, default U-factor	0.0 ft²	483.0 ft²	
b. Default tint, default U-factor	0.0 ft²	0.0 ft²	
c. Labeled U-factor or SHGC	0.0 ft²	0.0 ft²	
8. Floor types			
a. Slab-On-Grade Edge Insulation		R=0.0, 153.3(p) ft	
b. Slab-On-Grade Edge Insulation		R=8.0, 153.0(p) ft	
c. N/A			
9. Wall types			
a. Frame, Wood, Exterior		R=13.2, 2102.1 ft²	
b. N/A			
c. N/A			
d. N/A			
e. N/A			
10. Ceiling types			
a. Under Attic		R=19.0, 1285.7 ft²	
b. Under Attic		R=30.0, 1286.0 ft²	
c. N/A			
11. Ducts			
a. Sup: Unc. Ret: Unc. AH: Interior		Sup. R=6.0, 34.0 ft	
b. Sup: Unc. Ret: Unc. AH: Attic		Sup. R=6.0, 34.0 ft	

12. Cooling systems		
a. Central Unit	Cap: 42.0 kBtu/hr	
	SEER: 12.00	
b. Central Unit	Cap: 42.0 kBtu/hr	
	SEER: 12.00	
c. N/A		
13. Heating systems		
a. PTHP	Cap: 42.0 kBtu/hr	
	COP: 3.40	
b. PTHP	Cap: 42.0 kBtu/hr	
	COP: 3.40	
c. N/A		
14. Hot water systems		
a. Electric Resistance	Cap: 40.0 gallons	
	EF: 0.90	
b. N/A		
c. Conservation credits (HR-Heat recovery, Solar DHP-Dedicated heat pump)		
15. HVAC credits (CF-Ceiling fan, CV-Cross ventilation, HF-Whole house fan, PT-Programmable Thermostat, MZ-C-Multizone cooling, MZ-H-Multizone heating)		

Glass/Floor Area: 0.19

Total as-built points: 30904
Total base points: 34849

PASS

I hereby certify that the plans and specifications covered by this calculation are in compliance with the Florida Energy Code.

PREPARED BY: Larry Ressmondo A/C

DATE: April 12, 2005

I hereby certify that this building, as designed, is in compliance with the Florida Energy Code.

OWNER/AGENT: O'Neil Construction

DATE: 9/16/05

Review of the plans and specifications covered by this calculation indicates compliance with the Florida Energy Code. Before construction is completed this building will be inspected for compliance with Section 553.908 Florida Statutes.

GREAT SEAL OF THE STATE OF FLORIDA — IN GOD WE TRUST

BUILDING OFFICIAL: _____

DATE: _____

SUMMER CALCULATIONS

Residential Whole Building Performance Method A - Details

ADDRESS: , , , PERMIT #:

BASE

GLASS TYPES

.18 X	Conditioned Floor Area	X BSPM	= Points
.18	2572.0	20.04	9277.7

WALL TYPES	Area	X BSPM	= Points
Adjacent	0.0	0.00	0.0
Exterior	2102.1	1.70	3573.6
Base Total:	**2102.1**		**3573.6**

DOOR TYPES	Area	X BSPM	= Points
Adjacent	0.0	0.00	0.0
Exterior	21.0	6.10	128.1
Base Total:	**21.0**		**128.1**

CEILING TYPES	Area	X BSPM	= Points
Under Attic	2571.7	1.73	4449.0
Base Total:	**2571.7**		**4449.0**

FLOOR TYPES	Area	X BSPM	= Points
Slab	306.3(p)	-37.0	-11333.1
Raised	0.0	0.00	0.0
Base Total:			**-11333.1**

INFILTRATION	Area	X BSPM	= Points
	2572.0	10.21	26260.1

AS-BUILT

Type/SC	Overhang Ornt	Len	Hgt	Area	X SPM	X SOF	= Points
Double, Clear	E	1.3	6.0	60.0	42.06	0.93	2357.8
Double, Clear	W	1.3	6.0	60.0	38.52	0.93	2160.8
Double, Clear	S	2.0	7.9	138.0	35.87	0.86	4237.7
Double, Clear	E	4.0	8.0	10.5	42.06	0.73	320.4
Double, Clear	W	1.3	4.0	9.0	38.52	0.85	295.4
Double, Clear	E	1.3	4.5	14.0	42.06	0.87	515.0
Double, Clear	N	1.3	6.0	30.0	19.20	0.95	548.6
Double, Clear	S	1.3	8.0	66.0	35.87	0.94	2227.4
Double, Clear	S	1.3	5.0	28.0	35.87	0.83	838.3
Double, Clear	N	1.3	6.5	49.5	19.20	0.96	913.9
Double, Clear	W	1.3	4.0	18.0	38.52	0.85	590.8
As-Built Total:				**483.0**			**15006.1**

Type	R-Value	Area	X SPM	= Points
Frame, Wood, Exterior	13.2	2102.1	1.48	3111.1
As-Built Total:		**2102.1**		**3111.1**

Type	Area	X SPM	= Points
Exterior Wood	21.0	6.10	128.1
As-Built Total:	**21.0**		**128.1**

Type	R-Value	Area	X SPM X SCM	= Points
Under Attic	19.0	1285.7	2.34 X 1.00	3008.5
Under Attic	30.0	1286.0	1.73 X 1.00	2224.8
As-Built Total:		**2571.7**		**5233.3**

Type	R-Value	Area	X SPM	= Points
Slab-On-Grade Edge Insulation	0.0	153.3(p	-41.20	-6316.0
Slab-On-Grade Edge Insulation	8.0	153.0(p	-35.70	-5462.1
As-Built Total:		**306.3**		**-11778.1**

Area	X SPM	= Points
2572.0	10.21	26260.1

SUMMER CALCULATIONS

Residential Whole Building Performance Method A - Details

ADDRESS: , , ,	PERMIT #:

BASE				AS-BUILT							
Summer Base Points:			**32355.4**	**Summer As-Built Points:**							**37960.7**
Total Summer Points	X System Multiplier	=	Cooling Points	Total Component	X Cap Ratio	X Duct Multiplier (DM x DSM x AHU)	X System Multiplier	X Credit Multiplier	= Cooling Points		
				37960.7	0.500	(1.090 x 1.147 x 0.91)	0.284	1.000	6816.6		
				37960.7	0.500	(1.090 x 1.147 x 1.11)	0.284	1.000	6816.6		
32355.4	**0.4266**		**13802.8**	**37960.7**	**1.00**	**1.263**	**0.284**	**1.000**	**13633.3**		

WINTER CALCULATIONS

Residential Whole Building Performance Method A - Details

ADDRESS: , , , PERMIT #:

BASE

GLASS TYPES .18 X Conditioned Floor Area	X BWPM	= Points
.18 2572.0	12.74	5898.1

WALL TYPES	Area	X BWPM	= Points
Adjacent	0.0	0.00	0.0
Exterior	2102.1	3.70	7777.8
Base Total:	**2102.1**		**7777.8**

DOOR TYPES	Area	X BWPM	= Points
Adjacent	0.0	0.00	0.0
Exterior	21.0	12.30	258.3
Base Total:	**21.0**		**258.3**

CEILING TYPES	Area	X BWPM	= Points
Under Attic	2571.7	2.05	5272.0
Base Total:	**2571.7**		**5272.0**

FLOOR TYPES	Area	X BWPM	= Points
Slab	306.3(p)	8.9	2726.1
Raised	0.0	0.00	0.0
Base Total:			**2726.1**

INFILTRATION	Area	X BWPM	= Points
	2572.0	-0.59	-1517.5

AS-BUILT

Type/SC	Overhang Ornt	Len	Hgt	Area	X WPM	X WOF	= Points
Double, Clear	E	1.3	6.0	60.0	18.79	1.03	1159.1
Double, Clear	W	1.3	6.0	60.0	20.73	1.02	1265.5
Double, Clear	S	2.0	7.9	138.0	13.30	1.12	2050.8
Double, Clear	E	4.0	8.0	10.5	18.79	1.12	221.0
Double, Clear	W	1.3	4.0	9.0	20.73	1.04	194.4
Double, Clear	E	1.3	4.5	14.0	18.79	1.05	276.3
Double, Clear	N	1.3	6.0	30.0	24.58	1.00	738.6
Double, Clear	S	1.3	8.0	66.0	13.30	1.03	900.0
Double, Clear	S	1.3	5.0	28.0	13.30	1.14	425.2
Double, Clear	N	1.3	6.5	49.5	24.58	1.00	1218.0
Double, Clear	W	1.3	4.0	18.0	20.73	1.04	388.7
As-Built Total:				**483.0**			**8837.6**

Type	R-Value	Area	X WPM	= Points
Frame, Wood, Exterior	13.2	2102.1	3.36	7063.1
As-Built Total:		**2102.1**		**7063.1**

Type	Area	X WPM	= Points
Exterior Wood	21.0	12.30	258.3
As-Built Total:	**21.0**		**258.3**

Type	R-Value	Area	X WPM X WCM	= Points
Under Attic	19.0	1285.7	2.70 X 1.00	3471.4
Under Attic	30.0	1286.0	2.05 X 1.00	2636.3
As-Built Total:		**2571.7**		**6107.7**

Type	R-Value	Area	X WPM	= Points
Slab-On-Grade Edge Insulation	0.0	153.3(p	18.80	2882.0
Slab-On-Grade Edge Insulation	8.0	153.0(p	7.00	1071.0
As-Built Total:		**306.3**		**3953.0**

Area	X WPM	= Points
2572.0	-0.59	-1517.5

WINTER CALCULATIONS

Residential Whole Building Performance Method A - Details

ADDRESS: , , ,	PERMIT #:

BASE				AS-BUILT							
Winter Base Points:			**20414.8**	**Winter As-Built Points:**							**24702.2**
Total Winter Points	X System Multiplier	=	Heating Points	Total Component	X Cap Ratio	X Duct Multiplier (DM x DSM x AHU)	X System Multiplier	X Credit Multiplier	= Heating Points		
				24702.2	0.500	(1.069 x 1.169 x 0.93)	0.294	1.000	4607.7		
				24702.2	0.500	(1.069 x 1.169 x 1.10)	0.294	1.000	4607.7		
20414.8	**0.6274**		**12808.2**	**24702.2**	**1.00**	**1.268**	**0.294**	**1.000**	**9215.4**		

WATER HEATING & CODE COMPLIANCE STATUS

Residential Whole Building Performance Method A - Details

ADDRESS: , , , PERMIT #:

BASE					AS-BUILT							
WATER HEATING												
Number of Bedrooms	X	Multiplier	=	Total	Tank Volume	EF	Number of Bedrooms	X	Tank Ratio	X Multiplier	X Credit Multiplier	= Total
3		2746.00		8238.0	40.0	0.90	3		1.00	2684.98	1.00	8054.9
					As-Built Total:							**8054.9**

CODE COMPLIANCE STATUS

BASE				AS-BUILT			
Cooling Points +	Heating Points +	Hot Water Points =	Total Points	Cooling Points +	Heating Points +	Hot Water Points =	Total Points
13803	**12808**	**8238**	**34849**	**13633**	**9215**	**8055**	**30904**

PASS

Code Compliance Checklist

Residential Whole Building Performance Method A - Details

ADDRESS: , , , PERMIT #:

6A-21 INFILTRATION REDUCTION COMPLIANCE CHECKLIST

COMPONENTS	SECTION	REQUIREMENTS FOR EACH PRACTICE	CHECK
Exterior Windows & Doors	606.1.ABC.1.1	Maximum:.3 cfm/sq.ft. window area; .5 cfm/sq.ft. door area.	
Exterior & Adjacent Walls	606.1.ABC.1.2.1	Caulk, gasket, weatherstrip or seal between: windows/doors & frames, surrounding wall; foundation & wall sole or sill plate; joints between exterior wall panels at corners; utility penetrations; between wall panels & top/bottom plates; between walls and floor. EXCEPTION: Frame walls where a continuous infiltration barrier is installed that extends from, and is sealed to, the foundation to the top plate.	
Floors	606.1.ABC.1.2.2	Penetrations/openings >1/8" sealed unless backed by truss or joint members. EXCEPTION: Frame floors where a continuous infiltration barrier is installed that is sealed to the perimeter, penetrations and seams.	
Ceilings	606.1.ABC.1.2.3	Between walls & ceilings; penetrations of ceiling plane of top floor; around shafts, chases, soffits, chimneys, cabinets sealed to continuous air barrier; gaps in gyp board & top plate; attic access. EXCEPTION: Frame ceilings where a continuous infiltration barrier is installed that is sealed at the perimeter, at penetrations and seams.	
Recessed Lighting Fixtures	606.1.ABC.1.2.4	Type IC rated with no penetrations, sealed; or Type IC or non-IC rated, installed inside a sealed box with 1/2" clearance & 3" from insulation; or Type IC rated with < 2.0 cfm from conditioned space, tested.	
Multi-story Houses	606.1.ABC.1.2.5	Air barrier on perimeter of floor cavity between floors.	
Additional Infiltration reqts	606.1.ABC.1.3	Exhaust fans vented to outdoors, dampers; combustion space heaters comply with NFPA, have combustion air.	

6A-22 OTHER PRESCRIPTIVE MEASURES (must be met or exceeded by all residences.)

COMPONENTS	SECTION	REQUIREMENTS	CHECK
Water Heaters	612.1	Comply with efficiency requirements in Table 6-12. Switch or clearly marked circuit breaker (electric) or cutoff (gas) must be provided. External or built-in heat trap required.	
Swimming Pools & Spas	612.1	Spas & heated pools must have covers (except solar heated). Non-commercial pools must have a pump timer. Gas spa & pool heaters must have a minimum thermal efficiency of 78%.	
Shower heads	612.1	Water flow must be restricted to no more than 2.5 gallons per minute at 80 PSIG.	
Air Distribution Systems	610.1	All ducts, fittings, mechanical equipment and plenum chambers shall be mechanically attached, sealed, insulated, and installed in accordance with the criteria of Section 610. Ducts in unconditioned attics: R-6 min. insulation.	
HVAC Controls	607.1	Separate readily accessible manual or automatic thermostat for each system.	
Insulation	604.1, 602.1	Ceilings-Min. R-19. Common walls-Frame R-11 or CBS R-3 both sides. Common ceiling & floors R-11.	

ENERGY PERFORMANCE LEVEL (EPL) DISPLAY CARD

ESTIMATED ENERGY PERFORMANCE SCORE* = 84.6

The higher the score, the more efficient the home.

FITZGERALD, , , ,

1. New construction or existing		New	
2. Single family or multi-family		Single family	
3. Number of units, if multi-family		1	
4. Number of Bedrooms		3	
5. Is this a worst case?		No	
6. Conditioned floor area (ft²)		2572 ft²	
7. Glass area & type	Single Pane	Double Pane	
a. Clear glass, default U-factor	0.0 ft²	483.0 ft²	
b. Default tint, default U-factor	0.0 ft²	0.0 ft²	
c. Labeled U-factor or SHGC	0.0 ft²	0.0 ft²	
8. Floor types			
a. Slab-On-Grade Edge Insulation		R=0.0, 153.3(p) ft	
b. Slab-On-Grade Edge Insulation		R=8.0, 153.0(p) ft	
c. N/A			
9. Wall types			
a. Frame, Wood, Exterior		R=13.2, 2102.1 ft²	
b. N/A			
c. N/A			
d. N/A			
e. N/A			
10. Ceiling types			
a. Under Attic		R=19.0, 1285.7 ft²	
b. Under Attic		R=30.0, 1286.0 ft²	
c. N/A			
11. Ducts			
a. Sup: Unc. Ret: Unc. AH: Interior		Sup. R=6.0, 34.0 ft	
b. Sup: Unc. Ret: Unc. AH: Attic		Sup. R=6.0, 34.0 ft	

12. Cooling systems		
a. Central Unit	Cap: 42.0 kBtu/hr	
	SEER: 12.00	
b. Central Unit	Cap: 42.0 kBtu/hr	
	SEER: 12.00	
c. N/A		
13. Heating systems		
a. PTHP	Cap: 42.0 kBtu/hr	
	COP: 3.40	
b. PTHP	Cap: 42.0 kBtu/hr	
	COP: 3.40	
c. N/A		
14. Hot water systems		
a. Electric Resistance	Cap: 40.0 gallons	
	EF: 0.90	
b. N/A		
c. Conservation credits (HR-Heat recovery, Solar DHP-Dedicated heat pump)		
15. HVAC credits (CF-Ceiling fan, CV-Cross ventilation, HF-Whole house fan, PT-Programmable Thermostat, MZ-C-Multizone cooling, MZ-H-Multizone heating)		

I certify that this home has complied with the Florida Energy Efficiency Code For Building Construction through the above energy saving features which will be installed (or exceeded) in this home before final inspection. Otherwise, a new EPL Display Card will be completed based on installed Code compliant features.

Builder Signature: _____ Date: 9/16/05

Address of New Home: _____ City/FL Zip: _____

**NOTE: The home's estimated energy performance score is only available through the FLA/RES computer program. This is not a Building Energy Rating. If your score is 80 or greater (or 86 for a US EPA/DOE EnergyStar™ designation), your home may qualify for energy efficiency mortgage (EEM) incentives if you obtain a Florida Energy Gauge Rating. Contact the Energy Gauge Hotline at 321/638-1492 or see the Energy Gauge web site at www.fsec.ucf.edu for information and a list of certified Raters. For information about Florida's Energy Efficiency Code For Building Construction, contact the Department of Community Affairs at 850/487-1824.*

EnergyGauge® (Version: FLRCPB v3.4)

Columbia County Building Department
Flood Development Permit

Development Permit
F 023- 05-014

DATE 10/18/2005 BUILDING PERMIT NUMBER 000023728

APPLICANT DENNIS ONEIL PHONE 386-454-2476

ADDRESS PO BOX 1633 HIGH SPRINGS FL 32643

OWNER JOHN FITZGERALD PHONE

ADDRESS 380 BLUFF DRIVE FORT WHITE FL 32038

CONTRACTOR DENNIS ONEIL/ONEIL CONSTRUCT PHONE 386-454-2476

ADDRESS FL

SUBDIVISION CEDAR SPRINGS SHORES Lot 32 Block Unit Phase

TYPE OF DEVELOPMENT SFD,UTILITY PARCEL ID NO. 18-7S-16-04236-012

FLOOD ZONE AE BY BK 1-6-88 FIRM COMMUNITY #. 120070 - PANEL #. 255-B

FIRM 100 YEAR ELEVATION 37' PLAN INCLUDED YES or NO

REQUIRED LOWEST HABITABLE FLOOR ELEVATION 38'

IN THE REGULATORY FLOODWAY YES or NO RIVER Santa fe

SURVEYOR / ENGINEER NAME Bailey, Bishop's Lane LICENSE NUMBER 43358

Only needed 1 ft Rise but brought in 0 Rise.

____ ONE FOOT RISE CERTIFICATION INCLUDED

✓ ZERO RISE CERTIFICATION INCLUDED not in floodway

____ SRWMD PERMIT NUMBER
(INCLUDING THE ONE FOOT RISE CERTIFICATION)

DATE THE FINISHED FLOOR ELEVATION CERTIFICATE WAS PROVIDED

INSPECTED DATE BY

COMMENTS

135 NE Hernando Ave., Suite B-21
Lake City, Florida 32055
Phone: 386-758-1008
Fax: 386-758-2160

PERMIT EXPIRES ONE YEAR FROM THE DATE OF ISSUANCE

BAILEY BISHOP & LANE, INC.

Engineers *Surveyors* *Planners*

PROPERTY DESCRIPTION: ***Lot 32, Cedar Springs Shores***

OWNER: ***Fitzgerald***

BASE FLOOD ELEVATION (WITHOUT FLOODWAY): ***36.0***

BASE FLOOD ELEVATION (WITH FLOODWAY): ***37.0***

COMMUNITY-PANEL NUMBER: ***120070 0255 B***

PROJECT REQUIREMENTS: Minimum Finish Floor Elevation ***38.0***
Minimum Flooring Support (i.e. Girders, Joists) Elevation ***37.0***
All footers to be below grade.

I hereby certify that construction of the proposed residence will not increase flood elevations of the Santa Fe River at the project location.

Gregory C. Bailey, P.E.
Date: June 13, 2005

P. O. Box 3717 Lake City, FL 32056-3717 Ph. (386) 752-5640 FAX (386) 755-7771

P. O. Box 814 Port St. Joe, FL 32457 Ph. (850) 227-9449 FAX (850) 227-9650

HEC-RAS Version 1.2 April 1996
U.S. Army Corp of Engineers
Hydrologic Engineering Center
609 Second Street, Suite D
Davis, California 95616-4687
(916) 756-1104

```
X     X  XXXXXX    XXXX        XXXX       XX      XXXX
X     X  X        X    X      X   X     X  X    X
X     X  X        X           X   X    X    X   X
XXXXXXX  XXXX     X       XXX XXXX     XXXXXX    XXXX
X     X  X        X           X  X     X    X        X
X     X  X        X    X      X   X    X    X        X
X     X  XXXXXX    XXXX       X    X   X    X   XXXXX
```

****

PROJECT DATA
Project Title: Santa Fe River - Oneal
Project File : oneal.prj
Run Date and Time: 6/13/2005 3:47:38 PM

Project in English units

****

PLAN DATA

Plan Title: O'neal Residence Existing
Plan File : p:\haestad\hec\ras\oneal.p03

Geometry Title: O'neal Residence Existing
Geometry File : p:\haestad\hec\ras\oneal.p03

Flow Title : O'neal Residence Existing
Flow File : p:\haestad\hec\ras\oneal.p03

Plan Summary Information:

Number of:	Cross Sections =	144	Mulitple Openings =	0
	Culverts =	0	Inline Weirs =	0
	Bridges =	17		

Computational Information

Water surface calculation tolerance =	.01
Critical depth calculaton tolerance =	.01
Maximum number of interations =	20
Maximum difference tolerance =	.3
Flow tolerance factor =	.001

Computational Flow Regime: Subcritical Flow

Encroachment Data: None

Flow Distribution Locations: None

****

FLOW DATA

Flow Title: 10,50,100, & 500 Year
Flow File : y:\draina~1\hecdat~1\oneal.f01

Flow Data (cfs)

Reach	Riv Sta	PF#1	PF#2	PF#3	PF#4
1	79.85	90	275	374	686
1	73.36	1344	2310	2965	4380
1	67.11	2690	3881	4665	6830
1	57.21	3103	6404	8767	12834
1	49.61	12824	20748	25162	36500
1	44.02	12268	19399	23767	35515
1	39.81	17113	26905	32800	46533
1	37.25	16995	26655	32569	46251
1	33.85	12746	19991	24427	34688
1	28.94	12109	18991	23206	32954
1	27.79	9705	16793	20910	32030
1	25.19	9264	15766	19587	29700
1	19.62	9192	13791	16717	22200
1	15.66	8457	13409	16359	22200

Boundary Conditions

Reach	Profile	Upstream	Downstream
1	1		Known WS = 29.38
1	2		Known WS = 31.25
1	3		Known WS = 32.27
1	4		Known WS = 35.23

****

GEOMETRY DATA

Geometry Title: O'neal Residence Existing
Geometry File : y:\draina~1\hecdat~1\oneal.g02

CROSS SECTION INPUT Reach: 1 River Station: 18.49
Description: 18.49

Station Elevation Data, num = 50

Sta.	Elev.	Sta.	Elev.	Sta.	Elev.	Sta.	Elev.	Sta.	Elev.
10000	45.7	10062	44.5	10104	44.1	10121	42.6	10123	42
10125	42	10131	42.6	10162	42.5	10171	40.9	10175	40.9
10184	41.2	10245	40.4	10373	36.4	10382	35	10423	32.4
10556	29.2	10718	27.7	10838	28	10925	28	10946	29.2
10990	29.8	11017	29.8	11021	24.2	11075	21.44	11100	8.89
11125	20.2	11153	24.3	11191	25.3	11306	26	11632	26.5
11916	27.9	12175	30.5	12480	31.9	12732	33.5	12962	33.9

13000	35.2	13092	35.6	13165	34.8	13215	34.5	13269	35
13321	36.6	13380	39.4	13399	39.9	13441	40.7	13484	41
13535	42.3	13586	43.9	13671	45.7	13746	46.5	13841	48

Manning's n Values, num = 3

Sta.	Value	Sta.	Value	Sta.	Value
10000	.2	11021	.035	11153	.2

Bank Sta: Left	Right	Lengths: Left	Channel	Right	Coeff Contr.	Expan.
11021	11153	3000	3750	2400	.1	.3

CROSS SECTION INPUT Reach: 1 River Station: 17.78
Description: 17.78

Station Elevation Data, num = 52

Sta.	Elev.	Sta.	Elev.	Sta.	Elev.	Sta.	Elev.	Sta.	Elev.
10000	41	10113	38.4	10203	36.6	10254	36.5	10295	34.9
10305	35	10419	34.2	10565	33.5	10686	33.9	10745	36.2
10772	36.6	10807	32.6	10811	32.6	10842	35.9	10896	33.7
11005	34.2	11028	33	11041	33.5	11069	33.5	11080	33.5
11134	33.5	11349	31.9	11566	32.2	11682	29.7	11732	26.7
11760	25.5	11780	22.9	11800	18.69	11850	15.15	11900	17.19
11949	22.9	11959	22.8	12003	26.6	12112	28.2	12221	29
12310	25.7	12441	21.8	12607	23.4	12697	21.1	12731	25.5
12813	24.5	12924	24.8	13041	23.6	13128	24.4	13219	24.5
13310	29.6	13415	31.6	13559	33.3	13692	34.3	13866	33.4
14015	38.6	14119	41.5						

Manning's n Values, num = 3

Sta.	Value	Sta.	Value	Sta.	Value
10000	.28	11760	.045	12003	.28

Bank Sta: Left	Right	Lengths: Left	Channel	Right	Coeff Contr.	Expan.
11760	12003	2000	2650	3500	.1	.3

CROSS SECTION INPUT Reach: 1 River Station: 17.28
Description: 17.28

Station Elevation Data, num = 44

Sta.	Elev.	Sta.	Elev.	Sta.	Elev.	Sta.	Elev.	Sta.	Elev.
10000	40	10198	39.1	10394	34.9	10555	31.2	10627	25.9
10700	22.6	10783	22.3	10889	23.3	10946	24.3	11046	23.8
11163	21.5	11175	19.2	11200	16.56	11250	13.26	11300	15.71
11376	19.2	11398	21.3	11531	21.3	11634	21.4	11697	24.3
11825	24.6	11973	26	12080	26.7	12143	27.2	12197	27.4
12211	26.6	12264	28.9	12310	32.5	12371	34.1	12451	34
12574	33.7	12636	33.9	12703	33.3	12755	32.5	12825	31.6
12859	32.6	12968	32.8	13028	32.6	13192	32.3	13348	33.1
13491	35.2	13619	36.7	13725	37.4	13951	40		

Manning's n Values, num = 3

Sta.	Value	Sta.	Value	Sta.	Value
10000	.28	11163	.045	11398	.28

Bank Sta: Left	Right	Lengths: Left	Channel	Right	Coeff Contr.	Expan.
11163	11398	4300	3960	3400	.1	.3

CROSS SECTION INPUT Reach: 1 River Station: 16.53
Description: 16.53

Station Elevation Data, num = 51

Sta.	Elev.	Sta.	Elev.	Sta.	Elev.	Sta.	Elev.	Sta.	Elev.
10000	41	10199	39	10243	39.2	10349	37.7	10420	37.2
10510	36.9	10593	36.5	10663	38	10767	38.6	10856	38.7
10895	38.4	10966	37.8	11109	35	11195	32.4	11267	32
11425	29.1	11631	28.6	11718	28	11831	22.6	11955	20.6
12146	20.4	12223	20.3	12330	19.4	12337	19.2	12350	18.24
12390	19.2	12401	20.5	12465	20.5	12475	19.2	12500	15.24
12550	13.6	12600	15.66	12649	19.2	12657	19.8	12675	21.5
12717	21.5	12773	20.4	12853	21.5	12951	23.9	13073	24.5
13155	23	13235	24.9	13347	27.2	13431	28.6	13750	30
14354	34	14516	34.7	14738	34.3	14821	33.6	14895	32.5
14930	41								

Manning's n Values, num = 3

Sta.	Value	Sta.	Value	Sta.	Value
10000	.28	12465	.045	12657	.28

Bank Sta: Left	Right	Lengths: Left	Channel	Right	Coeff Contr.	Expan.
12465	12657	3400	4120	3350	.1	.3

CROSS SECTION INPUT Reach: 1 River Station: 15.75
Description: 15.75

Station Elevation Data, num = 74

Sta.	Elev.	Sta.	Elev.	Sta.	Elev.	Sta.	Elev.	Sta.	Elev.
10000	40	10079	39.2	10161	39.4	10206	40.4	10263	40.2
10337	39.9	10412	39.5	10484	39.1	10541	38.7	10593	39.1
10658	38.9	10732	38	10806	37.6	10876	37.3	10974	38.7
11028	38.6	11097	36.2	11218	31.4	11312	32.8	11372	33.2
11459	32.4	11565	31.6	11614	32.5	11682	33.1	11761	32.2
11837	31.6	11911	32.5	12002	34.2	12191	37	12330	37.6
12490	37	12668	36.3	12754	34.7	12829	33.4	12935	33.4
13049	32.8	13183	32.1	13324	31.2	13417	31	13545	31.5
13688	31.1	13862	28	14128	24.5	14438	24.5	14660	24.5
14830	24.1	14878	25.6	15002	20.5	15056	17.2	15100	13.51
15150	11.9	15200	13.31	15231	17.2	15255	26.7	15341	27
15517	25.1	15722	25.1	15899	26.8	16065	31	16252	37.8
16421	36.2	16474	35.4	16553	33.6	16580	35.7	16612	34.1
16640	34.9	16730	35.9	16802	37.1	16868	37.7	16903	37.9
16935	37	17012	37.5	17112	39.1	17205	40		

Manning's n Values, num = 3

Sta.	Value	Sta.	Value	Sta.	Value
10000	.28	14878	.045	15255	.28

Bank Sta: Left	Right	Lengths: Left	Channel	Right	Coeff Contr.	Expan.
14878	15255	175	175	175	.1	.3

CROSS SECTION INPUT Reach: 1 River Station: 15.72
Description: 15.72

Station Elevation Data, num = 74

Sta.	Elev.	Sta.	Elev.	Sta.	Elev.	Sta.	Elev.	Sta.	Elev.

10000	40	10079	39.2	10161	39.4	10206	40.4	10263	40.2
10337	39.9	10412	39.5	10484	39.1	10541	38.7	10593	39.1
10658	38.9	10732	38	10806	37.6	10876	37.3	10974	38.7
11028	38.6	11097	36.2	11218	31.4	11312	32.8	11372	33.2
11459	32.4	11565	31.6	11614	32.5	11682	33.1	11761	32.2
11837	31.6	11911	32.5	12002	34.2	12191	37	12330	37.6
12490	37	12668	36.3	12754	34.7	12829	33.4	12935	33.4
13049	32.8	13183	32.1	13324	31.2	13417	31	13545	31.5
13688	31.1	13862	28	14128	24.5	14438	24.5	14660	24.5
14830	24.1	14878	25.6	15002	20.5	15056	17.2	15100	13.51
15150	11.9	15200	13.31	15231	17.2	15255	26.7	15341	27
15517	25.1	15722	25.1	15899	26.8	16065	31	16252	37.8
16421	36.2	16474	35.4	16553	33.6	16580	35.7	16612	34.1
16640	34.9	16730	35.9	16802	37.1	16868	37.7	16903	37.9
16935	37	17012	37.5	17112	39.1	17205	40		

Manning's n Values, num = 3

Sta.	Value	Sta.	Value	Sta.	Value
10000	.28	14878	.045	15255	.28

Bank Sta: Left	Right	Lengths: Left	Channel	Right	Coeff Contr.	Expan.
14878	15255	50	50	50	.3	.5

CROSS SECTION INPUT Reach: 1 River Station: 15.71
Description: 15.71

Station Elevation Data, num = 63

Sta.	Elev.	Sta.	Elev.	Sta.	Elev.	Sta.	Elev.	Sta.	Elev.
10000	40	10190	39	10363	38	10556	36.4	10697	34.7
10877	34.8	11024	34.6	11210	34.7	11313	34.7	11479	35.2
11635	36.1	11824	37.5	12029	37.9	12157	37.9	12257	37.6
12351	37.2	12494	36.5	12645	35.5	12770	35	12934	34
13056	34.4	13161	34.2	13256	34.3	13402	33.9	13524	33.9
13649	33.9	13750	33.9	13926	34	14097	34.2	14248	34.2
14423	34.4	14522	35.9	14678	37.6	14820	38.3	14823	34.6
14843	20.1	14924	9.5	14924	37.5	14930	37.5	14930	9.5
14937	9.4	14987	10.2	14992	13.9	14992	38.4	14996	38.4
14996	13.9	15052	18.4	15060	21.4	15060	37.44	15066	37.44
15066	21.4	15135	37.44	15140	38.1	15312	37	15455	34.4
15754	34	15920	33.8	16103	34.2	16250	35.1	16405	36
16573	37.5	16736	38.9	16882	40				

Manning's n Values, num = 3

Sta.	Value	Sta.	Value	Sta.	Value
10000	.28	14820	.045	15140	.28

Bank Sta: Left	Right	Lengths: Left	Channel	Right	Coeff Contr.	Expan.
14820	15140	25	25	25	.3	.5

BRIDGE INPUT Reach: 1 River Station: 15.705
Description: SR-47 Bridge
Distance from Upstream XS = 0
Deck/Roadway Width = 25
Weir Coefficient = 2.6
Bridge Deck/Roadway Skew =
Upstream Deck/Roadway Coordinates, num = 8

Sta.	Hi Cord	Lo Cord	Sta.	Hi Cord	Lo Cord	Sta.	Hi Cord	Lo Cord

```
**********************************************************************
   14820    38.3    38.3   14823   39.15    37.5   14924   39.15    37.5
   14992    40.1    38.4   15052    40.1    38.4   15066    39.1   37.44
   15135   39.11   37.44   15140    38.1    38.1
Downstream Deck/Roadway Coordinates,  num = 8
    Sta. Hi Cord Lo Cord    Sta. Hi Cord Lo Cord    Sta. Hi Cord Lo Cord
**********************************************************************
   14820    38.3    38.3   14823   39.15    37.5   14924   39.15    37.5
   14992    40.1    38.4   15052    40.1    38.4   15066    39.1   37.44
   15135   39.11   37.44   15140    38.1    38.1
Elevation at which weir flow begins          =
Maximum allowable submergence for weir flow =      .95
Submergence criteria :Broad Crested

Number of Bridge Coefficient Sets =  1

Low Flow Methods
       Energy
       Momentum                Cd   =        0
       Yarnell                 KVal =
       W.S. Pro Method         CVal =
Selected Low Flow Methods = Energy

High Flow Method
       Energy Only

Additional Bridge Parameters
       Add Friction component to Momentum
       Do not add Weight component to Momentum
       Class B flow critical depth computations use critical depth
           inside the bridge at the downstream end
       Criteria to check for pressure flow = Upstream water surface

CROSS SECTION INPUT    Reach: 1              River Station: 15.7
Description:  15.7

Station Elevation Data,  num = 63
    Sta.   Elev.    Sta.   Elev.    Sta.   Elev.    Sta.   Elev.    Sta.   Elev.
   10000      40   10190      39   10363      38   10556    36.4   10697    34.7
   10877    34.8   11024    34.6   11210    34.7   11313    34.7   11479    35.2
   11635    36.1   11824    37.5   12029    37.9   12157    37.9   12257    37.6
   12351    37.2   12494    36.5   12645    35.5   12770      35   12934      34
   13056    34.4   13161    34.2   13256    34.3   13402    33.9   13524    33.9
   13649    33.9   13750    33.9   13926      34   14097    34.2   14248    34.2
   14423    34.4   14522    35.9   14678    37.6   14820    38.3   14823    34.6
   14843    20.1   14924     9.5   14924    37.5   14930    37.5   14930     9.5
   14937     9.4   14987    10.2   14992    13.9   14992    38.4   14996    38.4
   14996    13.9   15052    18.4   15060    21.4   15060   37.44   15066   37.44
   15066    21.4   15135   37.44   15140    38.1   15312      37   15455    34.4
   15754      34   15920    33.8   16103    34.2   16250    35.1   16405      36
   16573    37.5   16736    38.9   16882      40

Manning's n Values,  num = 3
    Sta.   Value    Sta.   Value    Sta.   Value
   10000     .28   14820    .045   15140     .28

Bank Sta: Left   Right    Lengths: Left Channel   Right    Coeff Contr.   Expan.
```

14820	15140	200	200	200	.3	.5

CROSS SECTION INPUT Reach: 1 River Station: 15.66
Description: 15.66

Station Elevation Data, num = 92

Sta.	Elev.	Sta.	Elev.	Sta.	Elev.	Sta.	Elev.	Sta.	Elev.
10000	40	10065	39.6	10193	39.5	10195	37.5	10222	38.9
10232	39.3	10243	38.9	10253	37.3	10274	39.3	10363	38.8
10432	39.7	10490	39.9	10524	39.9	10601	39.7	10659	38.4
10755	37.1	10844	36.3	10987	35.5	11080	34.8	11186	33.8
11296	31.3	11395	32.6	11468	34	11610	36.6	11677	37.9
11769	39	11832	38.5	11914	38	12064	38	12177	38.6
12291	38.9	12353	39.2	12453	38.4	12568	36.3	12638	34.6
12760	30.3	12848	30.3	12903	30.2	13021	31.6	13076	32.9
13172	32.8	13264	32.1	13337	30.7	13424	29.6	13545	29.2
13667	28.1	13773	28.1	13868	28.4	13986	30	14100	31.7
14124	31.7	14224	32.5	14358	29.6	14424	28.6	14504	27.4
14624	27	14663	27.5	14701	28.2	14805	25.7	14841	24.6
14934	26.5	14999	27.2	15071	26.6	15111	25.2	15145	17.3
15200	13.2	15250	10.22	15300	13.52	15343	17.3	15361	17.5
15467	17.9	15513	20.2	15629	25.2	15849	25.2	16088	27.4
16293	29	16439	32.3	16623	35.1	16814	39.2	16857	39.2
16904	40.3	16927	37.1	16955	37.1	16968	35.8	16988	35.4
16998	36.5	17053	37.9	17121	39	17147	38.1	17162	38.1
17179	40.2	17212	41.3						

Manning's n Values, num = 3

Sta.	Value	Sta.	Value	Sta.	Value
10000	.28	15145	.045	15361	.28

Bank Sta: Left	Right	Lengths: Left	Channel	Right	Coeff Contr.	Expan.
15145	15361	3000	2640	2100	.1	.3

CROSS SECTION INPUT Reach: 1 River Station: 15.18
Description: O'neal Residence

Station Elevation Data, num = 31

Sta.	Elev.	Sta.	Elev.	Sta.	Elev.	Sta.	Elev.	Sta.	Elev.
10000	39.5	10238	33.3	10462	31.8	10619	27.4	10703	25.7
10883	26.4	10963	26.8	10976	26.3	10994	26.3	11039	25.4
11178	26	11416	23.9	11547	24.1	11589	21.4	11632	23.9
11777	25.3	11863	23.3	12004	22.7	12118	24.8	12147	17.1
12200	10.2	12250	6.52	12280	10.82	12305	17.1	12318	18.1
12361	24.5	12489	27.6	12702	38.1	12726	38.9	12811	39.2
12915	40								

Manning's n Values, num = 3

Sta.	Value	Sta.	Value	Sta.	Value
10000	.28	12118	.045	12361	.28

Bank Sta: Left	Right	Lengths: Left	Channel	Right	Coeff Contr.	Expan.
12118	12361	400	400	400	.1	.3

CROSS SECTION INPUT Reach: 1 River Station: 15.08
Description: Section G (Columbia)

Station Elevation Data, num = 31

Sta.	Elev.	Sta.	Elev.	Sta.	Elev.	Sta.	Elev.	Sta.	Elev.
10000	39.5	10238	33.3	10462	31.8	10619	27.4	10703	25.7
10883	26.4	10963	26.8	10976	26.3	10994	26.3	11039	25.4
11178	26	11416	23.9	11547	24.1	11589	21.4	11632	23.9
11777	25.3	11863	23.3	12004	22.7	12118	24.8	12147	17.1
12200	10.2	12250	6.52	12280	10.82	12305	17.1	12318	18.1
12361	24.5	12489	27.6	12702	38.1	12726	38.9	12811	39.2
12915	40								

Manning's n Values, num = 3

Sta.	Value	Sta.	Value	Sta.	Value
10000	.28	12118	.045	12361	.28

Bank Sta: Left	Right	Lengths: Left	Channel	Right	Coeff Contr.	Expan.
12118	12361	5700	5280	4000	.1	.3

CROSS SECTION INPUT Reach: 1 River Station: 14.08
Description: Section F (Columbia)

Station Elevation Data, num = 38

Sta.	Elev.	Sta.	Elev.	Sta.	Elev.	Sta.	Elev.	Sta.	Elev.
10000	40	10089	37.9	10283	35.7	10472	32.3	10610	31.9
10770	33.9	11030	34	11183	30	11374	26	11475	21.9
11508	20.5	11699	20.7	11981	21.5	12090	23.1	12353	25.3
12443	20.4	12471	16	12500	12.8	12550	10.6	12575	10.5
12600	13.7	12624	16	12650	19.7	12734	23.6	12782	23.6
12838	16.6	12878	23.6	12930	24.6	12985	24.2	13064	30.9
13172	33.4	13298	34.5	13507	36.4	13550	36.6	13572	35.4
13612	37	13835	39.2	13910	40				

Manning's n Values, num = 3

Sta.	Value	Sta.	Value	Sta.	Value
10000	.28	12443	.045	12650	.28

Bank Sta: Left	Right	Lengths: Left	Channel	Right	Coeff Contr.	Expan.
12443	12650	4700	5540	5500	.1	.3

CROSS SECTION INPUT Reach: 1 River Station: 13.03
Description: Section E (Columbia)

Station Elevation Data, num = 31

Sta.	Elev.	Sta.	Elev.	Sta.	Elev.	Sta.	Elev.	Sta.	Elev.
10000	40	10118	38.4	10251	39	10333	39.3	10366	38.1
10479	34	10562	31.5	10858	29.9	11233	29.5	11574	30.7
11746	27.4	11961	26.8	12415	32.3	12535	30.4	12667	23.3
12868	19.7	12920	13.3	12950	8.5	12975	-5.45	13025	7.45
13085	13.3	13185	16.6	13381	16.9	13544	19.1	13733	18.5
13810	20	13901	22.2	14050	22.8	14187	24.2	14265	24.9
14369	40								

Manning's n Values, num = 3

Sta.	Value	Sta.	Value	Sta.	Value
10000	.28	12920	.045	13085	.28

Bank Sta: Left	Right	Lengths: Left	Channel	Right	Coeff Contr.	Expan.
12920	13085	6100	9130	5400	.1	.3

CROSS SECTION INPUT Reach: 1 River Station: 11.3
Description: Section D (Columbia)

Station Elevation Data, num = 28

Sta.	Elev.	Sta.	Elev.	Sta.	Elev.	Sta.	Elev.	Sta.	Elev.
10000	40	10116	35.9	10270	31.3	10433	35.8	10605	38.9
10755	40.5	10968	34.9	11118	28.7	11379	22.9	11645	26.4
11856	20	11938	18.2	12080	14.2	12100	10.6	12200	7.1
12250	7	12300	9.9	12345	14.2	12376	20.2	12427	20.7
12548	19.5	12597	17.3	12861	16.2	13001	17	13088	20.1
13173	30.2	13249	40	13294	41.7				

Manning's n Values, num = 3

Sta.	Value	Sta.	Value	Sta.	Value
10000	.28	12080	.045	12345	.28

Bank Sta: Left	Right	Lengths: Left	Channel	Right	Coeff Contr.	Expan.
12080	12345	5900	6550	4400	.1	.3

CROSS SECTION INPUT Reach: 1 River Station: 10.06
Description: Section C (Columbia)

Station Elevation Data, num = 36

Sta.	Elev.	Sta.	Elev.	Sta.	Elev.	Sta.	Elev.	Sta.	Elev.
10000	38	10243	31.2	10362	28.3	10472	26.4	10548	24.3
10608	12.7	10650	11.31	10689	12.7	10751	16.5	10828	19.7
10926	20.9	10972	19.3	10989	12.7	11000	4.31	11050	1.81
11100	4.8	11133	12.7	11175	16.3	11255	27.9	11288	31.5
11415	30.7	11478	29.3	11498	27.8	11570	28.5	11646	28.6
11859	30.4	12154	31.3	12428	32	12570	35	12697	36.8
12751	35.7	12769	37.3	12846	38.4	13166	35.8	13344	33.1
13443	38								

Manning's n Values, num = 3

Sta.	Value	Sta.	Value	Sta.	Value
10000	.28	10972	.045	11175	.28

Bank Sta: Left	Right	Lengths: Left	Channel	Right	Coeff Contr.	Expan.
10972	11175	5500	8600	6200	.1	.3

CROSS SECTION INPUT Reach: 1 River Station: 8.43
Description: Section B (Columbia)

Station Elevation Data, num = 74

Sta.	Elev.	Sta.	Elev.	Sta.	Elev.	Sta.	Elev.	Sta.	Elev.
10000	38	10181	36.2	10431	36	10664	36	10849	33.8
11010	33.9	11014	32.7	11041	32.7	11046	33.2	11193	34
11328	32.2	11429	31.3	11538	31.1	11623	31.1	11707	30.3
11781	31.5	11819	32.7	11835	33.2	11855	32.2	11863	31.9
11891	31.8	12019	31	12206	30.8	12304	29	12359	28.2
12362	26.9	12369	27.1	12375	27	12378	27.3	12415	26
12472	25	12515	23.4	12537	21.1	12559	17.4	12579	14.2
12592	12.1	12610	10.73	12638	12.1	12647	15.7	12677	15.7
12702	15.8	12710	15.8	12714	15.2	12720	12.1	12730	4.67
12800	-1	12830	2.77	12884	12.1	12896	18.6	12942	17.7
13004	17.7	13180	17.6	13277	24.7	13305	28.3	13322	27.3

13330	26.4	13333	25.3	13335	26.5	13355	27.7	13541	29
13705	26.7	13891	27	14100	27.3	14310	27.6	14510	28.4
14856	30.2	15078	31.3	15386	30.2	15582	30.7	15779	31.2
16054	30.7	16257	30.3	16376	31.3	16639	38		

Manning's n Values, num = 3

Sta.	Value	Sta.	Value	Sta.	Value
10000	.28	12714	.045	12896	.28

Bank Sta: Left	Right	Lengths: Left	Channel	Right	Coeff Contr.	Expan.
12714	12896	2600	4170	4600	.1	.3

CROSS SECTION INPUT Reach: 1 River Station: 7.64
Description: 7.64

Station Elevation Data, num = 59

Sta.	Elev.	Sta.	Elev.	Sta.	Elev.	Sta.	Elev.	Sta.	Elev.
10000	38	10083	34.9	10106	34.9	10112	34.3	10114	33.4
10127	33.4	10130	34.9	10135	34.7	10139	33.8	10207	34.6
10267	34.5	10282	34.1	10310	34.2	10329	34.3	10394	33.7
10561	33.6	10875	33.4	11000	31.9	11330	31.9	11668	31.1
11785	31.1	11999	30.3	12182	30.3	12527	16.4	12750	16.4
12958	18.4	13084	18.4	13100	12.3	13166	2.75	13236	10.05
13252	12.4	13266	15.6	13305	16.6	13336	17.7	13359	20.7
13380	23.3	13414	24.6	13458	25	13472	24.8	13481	24.4
13497	24.6	13511	24	13516	23	13521	23.6	13542	24.5
13630	22.3	13858	23	14088	22.8	14397	29.2	14848	31.3
15206	31.9	15230	31.6	15240	31.6	15294	32	15347	33.1
15390	33.2	15405	33.2	15461	33.5	15720	38		

Manning's n Values, num = 3

Sta.	Value	Sta.	Value	Sta.	Value
10000	.28	13084	.045	13266	.28

Bank Sta: Left	Right	Lengths: Left	Channel	Right	Coeff Contr.	Expan.
13084	13266	4950	6230	4900	.1	.3

CROSS SECTION INPUT Reach: 1 River Station: 6.46
Description: 6.46

Station Elevation Data, num = 99

Sta.	Elev.	Sta.	Elev.	Sta.	Elev.	Sta.	Elev.	Sta.	Elev.
10000	40.3	10049	40.2	10052	39.9	10063	39.8	10080	39.9
10108	40	10130	39.9	10167	39.6	10232	38.7	10302	35.9
10379	35	10422	35.1	10496	35.3	10544	38.1	10588	38
10627	37.6	10659	35.4	10671	34.4	10678	34.4	10708	36.1
10744	37.6	10824	37.9	10848	37.2	10877	36.8	10940	36.9
11029	36.7	11120	37.2	11217	36.6	11346	36.1	11451	36.7
11572	37.2	11660	37.8	11807	38.8	11835	38.7	11879	37.9
11910	37.7	11983	37.5	12048	37.3	12139	36.1	12228	34.7
12480	33.4	12675	33.1	12704	33	12836	33.2	12943	33.1
12970	32.3	12980	32.2	12989	33.1	12995	33.1	13007	31.3
13133	31.3	13215	30.7	13321	28.7	13410	25.1	13477	20.7
13596	19.8	13692	16.2	14143	15.9	14263	15	14360	14
14497	14	14538	14	14544	11.2	14619	2.53	14744	11
14754	12.8	14794	13.9	14825	15.3	14866	19.6	14895	22.1
14928	21.9	14956	21.1	15044	21.1	15205	24.2	15252	28

15276	26.3	15286	26.4	15296	27.5	15306	27.5	15318	27.1
15322	27.1	15372	28.7	15456	29.1	15659	28.3	15733	27.4
15791	27.4	15860	27.1	15924	27.9	15989	29.2	16077	32.5
16172	34.9	16285	36.4	16497	34.1	16615	32	16704	33.8
16828	35.7	16934	38.3	17048	40.4	17123	40.9		

Manning's n Values, num = 3

Sta.	Value	Sta.	Value	Sta.	Value
10000	.28	14538	.045	14754	.28

Bank Sta: Left	Right	Lengths: Left	Channel	Right	Coeff Contr.	Expan.
14538	14754	8200	9150	9900	.1	.3

CROSS SECTION INPUT Reach: 1 River Station: 4.73
Description: 4.73

Station Elevation Data, num = 53

Sta.	Elev.	Sta.	Elev.	Sta.	Elev.	Sta.	Elev.	Sta.	Elev.
10000	40.7	10052	38.2	10114	37.6	10172	35.6	10232	34.5
10299	33.4	10368	33.5	10431	32.3	10482	31.9	10540	31.7
10604	31.3	10668	30.5	10720	29.3	10771	24.8	10833	21.2
10901	19.7	10969	19.3	11043	18.7	11139	18	11214	15.9
11283	12.2	11367	12.1	11388	13.9	11436	14.8	11473	14.7
11482	11.7	11492	9.65	11552	1.55	11615	9.65	11646	11.7
11675	21.2	11707	21.6	11753	19.1	11813	19.1	11860	19.2
11907	19.2	11997	15.7	12084	15.9	12157	19.1	12265	22.8
12358	26	12453	28.4	12522	28.7	12587	29.7	12677	32.3
12814	34.3	12931	34.3	13040	34.7	13176	33.8	13309	33.5
13457	35.9	13559	37.1	13654	40.2				

Manning's n Values, num = 3

Sta.	Value	Sta.	Value	Sta.	Value
10000	.28	11473	.045	11646	.28

Bank Sta: Left	Right	Lengths: Left	Channel	Right	Coeff Contr.	Expan.
11473	11646	5600	5960	4400	.1	.3

CROSS SECTION INPUT Reach: 1 River Station: 3.6
Description: 3.6

Station Elevation Data, num = 50

Sta.	Elev.	Sta.	Elev.	Sta.	Elev.	Sta.	Elev.	Sta.	Elev.
10000	36	10093	33.1	10172	31.3	10218	30.6	10254	31.1
10289	31.3	10322	30.1	10366	29.7	10407	28.7	10447	26.3
10486	22.7	10522	19.5	10552	17.3	10579	16.1	10614	15
10640	14.1	10656	11.7	10665	9.35	10770	.75	10831	9.35
11136	11.7	11154	16.9	11198	15.3	11261	13.1	11328	13.2
11382	13.5	11435	14.8	11496	14.8	11548	18.2	11622	19.7
11718	20.5	11791	19.4	11880	22	11967	20.8	12069	20.4
12169	20.4	12264	20.4	12323	23.5	12354	25.4	12403	26.1
12438	26.6	12476	28.3	12576	32.2	12640	33.7	12711	33.6
12793	33	12887	33.7	12942	33.7	13025	34.7	13115	36.4

Manning's n Values, num = 3

Sta.	Value	Sta.	Value	Sta.	Value
10000	.28	10656	.045	10831	.28

Bank Sta: Left	Right	Lengths: Left	Channel	Right	Coeff Contr.	Expan.
10656	10831	3750	3800	3800	.1	.3

CROSS SECTION INPUT Reach: 1 River Station: 2.88
Description: 2.88

Station Elevation Data, num = 49

Sta.	Elev.	Sta.	Elev.	Sta.	Elev.	Sta.	Elev.	Sta.	Elev.
10000	36.5	10037	33.8	10101	32.1	10140	32	10197	31.1
10263	30.3	10334	29.4	10408	29.4	10486	30	10558	29.2
10623	27.6	10700	26	10788	23.4	10912	20.5	10972	18.5
11070	18.2	11222	18.2	11307	19.1	11353	19	11487	21.7
11592	23.2	11703	25.4	11775	20.6	11857	19	11970	16
12074	15.9	12170	15.9	12197	11.6	12210	9.19	12274	.89
12294	.2	12344	3.99	12363	9.19	12377	11.6	12427	13.3
12527	14.2	12649	13.8	12722	16.6	12818	20.9	12924	20
13036	21.2	13134	22.6	13291	27.4	13464	30	13657	31.8
13741	32.8	13810	34	13846	34.8	13877	36.5		

Manning's n Values, num = 3

Sta.	Value	Sta.	Value	Sta.	Value
10000	.28	12170	.045	12377	.28

Bank Sta: Left	Right	Lengths: Left	Channel	Right	Coeff Contr.	Expan.
12170	12377	2000	2006	1900	.1	.3

CROSS SECTION INPUT Reach: 1 River Station: 2.5
Description: 2.5

Station Elevation Data, num = 67

Sta.	Elev.	Sta.	Elev.	Sta.	Elev.	Sta.	Elev.	Sta.	Elev.
10000	35.9	10066	29.4	10127	30.4	10193	31	10262	30.9
10336	33.3	10413	33.8	10480	32.6	10545	31.9	10617	31.7
10674	31.6	10764	30.8	10839	30.1	10922	29.1	10999	27.6
11098	28.8	11175	30.1	11222	30.1	11294	30.2	11335	27.8
11375	25.6	11416	24.3	11438	23.9	11487	23.4	11562	23.3
11643	22.5	11663	24.8	11697	23.6	11730	21.7	11769	20.5
11860	18.3	11963	18	12060	18.5	12145	18.5	12224	17.7
12295	17.9	12373	18.9	12448	19	12488	16.8	12547	16.4
12575	18.3	12599	18.9	12612	16.5	12632	9.42	12757	-2.58
12792	16.5	12860	16.6	13039	16.6	13214	17.3	13250	19.1
13298	22	13375	23.7	13470	25.1	13557	26.5	13667	29.2
13747	28.9	13846	28.5	13920	27.4	13999	28.4	14088	29.3
14173	31.7	14275	33	14339	33.1	14371	33.8	14417	34.5
14452	34.5	14491	35.6						

Manning's n Values, num = 3

Sta.	Value	Sta.	Value	Sta.	Value
10000	.28	12612	.045	12792	.28

Bank Sta: Left	Right	Lengths: Left	Channel	Right	Coeff Contr.	Expan.
12612	12792	205	205	205	.1	.3

CROSS SECTION INPUT Reach: 1 River Station: 2.46
Description: 2.46

Station Elevation Data, num = 67

Sta.	Elev.	Sta.	Elev.	Sta.	Elev.	Sta.	Elev.	Sta.	Elev.
10000	35.9	10066	29.4	10127	30.4	10193	31	10262	30.9
10336	33.3	10413	33.8	10480	32.6	10545	31.9	10617	31.7
10674	31.6	10764	30.8	10839	30.1	10922	29.1	10999	27.6
11098	28.8	11175	30.1	11222	30.1	11294	30.2	11335	27.8
11375	25.6	11416	24.3	11438	23.9	11487	23.4	11562	23.3
11643	22.5	11663	24.8	11697	23.6	11730	21.7	11769	20.5
11860	18.3	11963	18	12060	18.5	12145	18.5	12224	17.7
12295	17.9	12373	18.9	12448	19	12488	16.8	12547	16.4
12575	18.3	12599	18.9	12612	16.5	12632	9.42	12757	-2.58
12792	16.5	12860	16.6	13039	16.6	13214	17.3	13250	19.1
13298	22	13375	23.7	13470	25.1	13557	26.5	13667	29.2
13747	28.9	13846	28.5	13920	27.4	13999	28.4	14088	29.3
14173	31.7	14275	33	14339	33.1	14371	33.8	14417	34.5
14452	34.5	14491	35.6						

Manning's n Values, num = 3

Sta.	Value	Sta.	Value	Sta.	Value
10000	.28	12612	.045	12792	.28

Bank Sta: Left	Right	Lengths: Left	Channel	Right	Coeff Contr.	Expan.
12612	12792	70	70	70	.3	.5

CROSS SECTION INPUT Reach: 1 River Station: 2.45
Description: 2.45

Station Elevation Data, num = 66

Sta.	Elev.	Sta.	Elev.	Sta.	Elev.	Sta.	Elev.	Sta.	Elev.
10000	35.7	10095	32.5	10168	32.5	10264	32.5	10374	32.6
10455	32.6	10550	32.7	10659	32.7	10782	32.8	10926	32.9
11074	33	11156	33.1	11226	33	11310	33	11389	32.9
11459	32.9	11550	33.1	11576	15.44	11670	13.63	11670	31.33
11675	31.3	11675	13.12	11680	13.12	11698	9.58	11700	7.33
11700	31.3	11705	31.33	11705	7.33	11765	-2.6	11765	29.89
11771	29.9	11771	-6.51	11773	-7.5	11854	6.53	11860	9.54
11870	11.3	11870	31.33	11875	31.33	11875	11.35	11885	14.33
11885	31.3	11890	31.33	11890	15.33	12000	33.3	12044	33.4
12150	33.4	12217	33.5	12320	33.5	12398	33.5	12468	33.4
12558	33.3	12680	33.2	12792	33.2	12911	33.3	13016	33.3
13092	33.3	13195	33.4	13291	33.4	13435	33.3	13583	33.4
13725	33.3	13878	33.3	14023	33.4	14157	33.7	14217	34.1
14356	35.9								

Manning's n Values, num = 3

Sta.	Value	Sta.	Value	Sta.	Value
10000	.28	11550	.045	12000	.28

Bank Sta: Left	Right	Lengths: Left	Channel	Right	Coeff Contr.	Expan.
11550	12000	25	25	25	.3	.5

BRIDGE INPUT Reach: 1 River Station: 2.445
Description: US-129 Bridge
Distance from Upstream XS = 0
Deck/Roadway Width = 25
Weir Coefficient = 2.6
Bridge Deck/Roadway Skew =
Upstream Deck/Roadway Coordinates, num = 8

Sta.	Hi Cord	Lo Cord	Sta.	Hi Cord	Lo Cord	Sta.	Hi Cord	Lo Cord
11550	33.1	33.1	11675	33.1	31.3	11705	33.1	31.3
11765	33.1	29.9	11860	33.1	29.9	11870	33.1	31.3
11890	33.1	31.3	12000	33.3	33.3			

Downstream Deck/Roadway Coordinates, num = 8

Sta.	Hi Cord	Lo Cord	Sta.	Hi Cord	Lo Cord	Sta.	Hi Cord	Lo Cord
11550	33.1	33.1	11675	33.1	31.3	11705	33.1	31.3
11765	33.1	29.9	11860	33.1	29.9	11870	33.1	31.3
11890	33.1	31.3	12000	33.3	33.3			

Elevation at which weir flow begins =
Maximum allowable submergence for weir flow = .95
Submergence criteria :Broad Crested

Number of Bridge Coefficient Sets = 1

Low Flow Methods
Energy
Momentum Cd = 0
Yarnell KVal =
W.S. Pro Method CVal =
Selected Low Flow Methods = Energy

High Flow Method
Energy Only

Additional Bridge Parameters
Add Friction component to Momentum
Do not add Weight component to Momentum
Class B flow critical depth computations use critical depth inside the bridge at the downstream end
Criteria to check for pressure flow = Upstream water surface

CROSS SECTION INPUT Reach: 1 River Station: 2.44
Description: 2.44

Station Elevation Data, num = 66

Sta.	Elev.	Sta.	Elev.	Sta.	Elev.	Sta.	Elev.	Sta.	Elev.
10000	35.7	10095	32.5	10168	32.5	10264	32.5	10374	32.6
10455	32.6	10550	32.7	10659	32.7	10782	32.8	10926	32.9
11074	33	11156	33.1	11226	33	11310	33	11389	32.9
11459	32.9	11550	33.1	11576	15.44	11670	13.63	11670	31.33
11675	31.3	11675	13.12	11680	13.12	11698	9.58	11700	7.33
11700	31.3	11705	31.33	11705	7.33	11765	-2.6	11765	29.89
11771	29.9	11771	-6.51	11773	-7.5	11854	6.53	11860	9.54
11870	11.3	11870	31.33	11875	31.33	11875	11.35	11885	14.33
11885	31.3	11890	31.33	11890	15.33	12000	33.3	12044	33.4
12150	33.4	12217	33.5	12320	33.5	12398	33.5	12468	33.4
12558	33.3	12680	33.2	12792	33.2	12911	33.3	13016	33.3
13092	33.3	13195	33.4	13291	33.4	13435	33.3	13583	33.4
13725	33.3	13878	33.3	14023	33.4	14157	33.7	14217	34.1
14356	35.9								

Manning's n Values, num = 3

Sta.	Value	Sta.	Value	Sta.	Value
10000	.28	11550	.045	12000	.28

Bank Sta: Left	Right	Lengths: Left	Channel	Right	Coeff Contr.	Expan.
11550	12000	275	275	275	.3	.5

CROSS SECTION INPUT Reach: 1 River Station: 2.39
Description: 2.39

Station Elevation Data, num = 41

Sta.	Elev.	Sta.	Elev.	Sta.	Elev.	Sta.	Elev.	Sta.	Elev.
10000	35.5	10081	30.3	10178	27	10304	28.9	10401	27.9
10484	27.4	10594	24	10711	26.6	10793	24.5	10868	26.2
10947	25.1	11042	21.4	11135	18.7	11207	19.1	11374	17.3
11447	14.9	11866	16.7	11896	17.3	11922	18.6	11933	16.4
11946	13.4	11956	8.79	12041	-5.21	12111	8.79	12123	16.4
12156	16.6	12192	16.2	12267	16.4	12325	16.4	12371	16.2
12394	16.3	12434	21.5	12470	25.2	12488	25.8	12522	26.4
12569	26.9	12610	27.7	12671	28.5	12742	29.2	12814	30.2
12862	35.5								

Manning's n Values, num = 3

Sta.	Value	Sta.	Value	Sta.	Value
10000	.28	11933	.045	12123	.28

Bank Sta: Left	Right	Lengths: Left	Channel	Right	Coeff Contr.	Expan.
11933	12123	3000	4118	4300	.1	.3

CROSS SECTION INPUT Reach: 1 River Station: 1.61
Description: 1.61

Station Elevation Data, num = 30

Sta.	Elev.	Sta.	Elev.	Sta.	Elev.	Sta.	Elev.	Sta.	Elev.
10000	35.5	10071	29.6	10159	29.6	10250	27.4	10331	23.7
10382	20.9	10451	18.9	10520	18.1	10585	16.7	10640	17.9
10697	19.3	10762	19.4	10820	19.1	10867	18.2	10931	19.1
10979	20.9	11119	16.2	11147	9.24	11222	-3.46	11282	-10.46
11317	9.2	11389	16.2	11507	19.1	11561	20.1	11607	25.4
11666	27.9	11731	30.9	11783	32.1	11846	31.8	11894	35.59

Manning's n Values, num = 3

Sta.	Value	Sta.	Value	Sta.	Value
10000	.28	11119	.045	11389	.28

Bank Sta: Left	Right	Lengths: Left	Channel	Right	Coeff Contr.	Expan.
11119	11389	0	0	0	.1	.3

****

SUMMARY OF MANNING'S N VALUES

Reach	River Sta.	n1	n2	n3	n4	n5
*1	79.85	.42*	.089*	.42*	*	*
*1	79.1	.42*	.089*	.42*	99*	*
*1	78.16	.42*	.089*	.42*	99*	*
*1	76.67	.42*	.089*	.42*	99*	*
*1	75.55	99*	.42*	.089*	.42*	99*

*1	*	75.15	*	99*	.42*	.089*	.42*	99*
*1	*	75	*	99*	.42*	.089*	.42*	99*
*1	*	74.98	*	.42*	.089*	.42*	*	*
*1	*	74.9750	*	Bridge*	*	*	*	*
*1	*	74.97	*	.42*	.089*	.42*	*	*
*1	*	74.92	*	99*	.42*	.089*	.42*	99*
*1	*	74.35	*	99*	.42*	.089*	.42*	99*
*1	*	74.3	*	99*	.42*	.089*	.42*	99*
*1	*	74.28	*	.42*	.089*	.42*	*	*
*1	*	74.2749	*	Bridge*	*	*	*	*
*1	*	74.27	*	.42*	.089*	.42*	*	*
*1	*	74.23	*	99*	.42*	.089*	.42*	99*
*1	*	74.04	*	99*	.42*	.089*	.42*	99*
*1	*	73.94	*	99*	.42*	.089*	.42*	99*
*1	*	73.36	*	.42*	.089*	.42*	*	*
*1	*	73.32	*	.42*	.089*	.42*	*	*
*1	*	73.31	*	.42*	.089*	.42*	*	*
*1	*	73.305	*	Bridge*	*	*	*	*
*1	*	73.3	*	.42*	.089*	.42*	*	*
*1	*	73.27	*	.42*	.089*	.42*	*	*
*1	*	72.59	*	.42*	.089*	.42*	*	*
*1	*	71.46	*	.42*	.089*	.42*	*	*
*1	*	70.18	*	.42*	.089*	.42*	*	*
*1	*	69.45	*	.42*	.089*	.42*	*	*
*1	*	69.38	*	.42*	.089*	.42*	*	*
*1	*	69.375	*	Bridge*	*	*	*	*
*1	*	69.37	*	.42*	.089*	.42*	*	*
*1	*	69.22	*	.42*	.089*	.42*	*	*
*1	*	68.72	*	.42*	.089*	.42*	*	*
*1	*	67.83	*	.42*	.089*	.42*	*	*
*1	*	67.11	*	.42*	.089*	.42*	*	*
*1	*	65.99	*	.42*	.089*	.42*	*	*
*1	*	65.97	*	.42*	.089*	.42*	*	*
*1	*	65.965	*	Bridge*	*	*	*	*
*1	*	65.96	*	.42*	.089*	.42*	*	*
*1	*	65.89	*	.42*	.089*	.42*	*	*
*1	*	65.86	*	.42*	.089*	.42*	*	*
*1	*	64.57	*	.42*	.089*	.42*	*	*
*1	*	63.6	*	.42*	.089*	.42*	*	*
*1	*	62.24	*	.42*	.089*	.42*	*	*
*1	*	61.02	*	.42*	.089*	.42*	*	*
*1	*	59.68	*	.42*	.089*	.42*	*	*
*1	*	59.66	*	.42*	.089*	.42*	*	*
*1	*	59.655	*	Bridge*	*	*	*	*
*1	*	59.65	*	.42*	.089*	.42*	*	*
*1	*	59.57	*	.42*	.089*	.42*	*	*
*1	*	59.26	*	.42*	.089*	.42*	*	*
*1	*	58.81	*	.42*	.089*	.42*	*	*
*1	*	58.79	*	.42*	.089*	.42*	*	*
*1	*	58.785	*	Bridge*	*	*	*	*
*1	*	58.78	*	.42*	.089*	.42*	*	*
*1	*	58.7	*	.42*	.089*	.42*	*	*
*1	*	58.15	*	.42*	.089*	.42*	*	*
*1	*	57.21	*	.42*	.089*	.42*	*	*
*1	*	56.22	*	.4*	.06*	.4*	*	*
*1	*	55.99	*	.4*	.06*	.4*	*	*
*1	*	55.96	*	.4*	.06*	.4*	*	*

*1	*	55.955	*	Bridge*	*	*	*	*
*1	*	55.95	*	.4*	.06*	.4*	*	*
*1	*	55.83	*	.4*	.06*	.4*	*	*
*1	*	54.27	*	.4*	.06*	.4*	*	*
*1	*	53.44	*	.4*	.06*	.4*	*	*
*1	*	51.87	*	.4*	.06*	.4*	*	*
*1	*	49.61	*	.31*	.059*	.31*	*	*
*1	*	49.48	*	.31*	.059*	.31*	*	*
*1	*	49.46	*	.31*	.059*	.31*	*	*
*1	*	49.455	*	Bridge*	*	*	*	*
*1	*	49.45	*	.31*	.059*	.31*	*	*
*1	*	49.38	*	.31*	.059*	.31*	*	*
*1	*	49.31	*	.31*	.059*	.31*	*	*
*1	*	49.29	*	.31*	.059*	.31*	*	*
*1	*	49.285	*	Bridge*	*	*	*	*
*1	*	49.28	*	.31*	.059*	.31*	*	*
*1	*	49.19	*	.31*	.059*	.31*	*	*
*1	*	48.04	*	.31*	.059*	.31*	*	*
*1	*	46.59	*	.31*	.059*	.31*	*	*
*1	*	45.48	*	.31*	.059*	.31*	*	*
*1	*	44.02	*	.31*	.059*	.31*	*	*
*1	*	42.54	*	.31*	.059*	.31*	*	*
*1	*	41.67	*	.31*	.059*	.31*	*	*
*1	*	41.63	*	.31*	.059*	.31*	*	*
*1	*	41.62	*	.31*	.059*	.31*	*	*
*1	*	41.615	*	Bridge*	*	*	*	*
*1	*	41.61	*	.31*	.059*	.31*	*	*
*1	*	41.56	*	.31*	.059*	.31*	*	*
*1	*	40.91	*	.31*	.059*	.31*	*	*
*1	*	39.81	*	.2*	.035*	.2*	*	*
*1	*	39.02	*	.2*	.035*	.2*	*	*
*1	*	37.98	*	.2*	.035*	.2*	*	*
*1	*	37.25	*	.2*	.035*	.2*	*	*
*1	*	37.19	*	.2*	.035*	.2*	*	*
*1	*	37.17	*	.2*	.035*	.2*	*	*
*1	*	37.165	*	Bridge*	*	*	*	*
*1	*	37.16	*	.2*	.035*	.2*	*	*
*1	*	37.07	*	.2*	.035*	.2*	*	*
*1	*	35.58	*	.2*	.035*	.2*	*	*
*1	*	35.57	*	.2*	.035*	.2*	*	*
*1	*	33.85	*	.2*	.1*	.2*	*	*
*1	*	33.09	*	.2*	.1*	.2*	*	*
*1	*	32.18	*	.2*	.1*	.2*	*	*
*1	*	30.42	*	.2*	.1*	.2*	*	*
*1	*	28.94	*	.2*	.035*	.2*	*	*
*1	*	27.82	*	.2*	.035*	.2*	*	*
*1	*	27.79	*	.2*	.035*	.2*	*	*
*1	*	27.77	*	.2*	.035*	.2*	*	*
*1	*	27.765	*	Bridge*	*	*	*	*
*1	*	27.76	*	.2*	.035*	.2*	*	*
*1	*	27.68	*	.2*	.035*	.2*	*	*
*1	*	26.52	*	.2*	.035*	.2*	*	*
*1	*	25.19	*	.2*	.035*	.2*	*	*
*1	*	24.54	*	.2*	.035*	.2*	*	*
*1	*	24.52	*	.2*	.035*	.2*	*	*
*1	*	24.51	*	.2*	.035*	.2*	*	*
*1	*	24.505	*	Bridge*	*	*	*	*

*1	*	24.5	*	.2*	.035*	.2*	*	*
*1	*	24.49	*	.2*	.035*	.2*	*	*
*1	*	24.48	*	.2*	.035*	.2*	*	*
*1	*	24.475	*	Bridge*	*	*	*	*
*1	*	24.47	*	.2*	.035*	.2*	*	*
*1	*	24.44	*	.2*	.035*	.2*	*	*
*1	*	24.15	*	.2*	.035*	.2*	*	*
*1	*	23.82	*	.2*	.035*	.2*	*	*
*1	*	23.14	*	.2*	.035*	.2*	*	*
*1	*	22.24	*	.2*	.035*	.2*	*	*
*1	*	21.59	*	.2*	.035*	.2*	*	*
*1	*	20.44	*	.2*	.035*	.2*	*	*
*1	*	19.62	*	.2*	.035*	.2*	*	*
*1	*	18.49	*	.2*	.035*	.2*	*	*
*1	*	17.78	*	.28*	.045*	.28*	*	*
*1	*	17.28	*	.28*	.045*	.28*	*	*
*1	*	16.53	*	.28*	.045*	.28*	*	*
*1	*	15.75	*	.28*	.045*	.28*	*	*
*1	*	15.72	*	.28*	.045*	.28*	*	*
*1	*	15.71	*	.28*	.045*	.28*	*	*
*1	*	15.705	*	Bridge*	*	*	*	*
*1	*	15.7	*	.28*	.045*	.28*	*	*
*1	*	15.66	*	.28*	.045*	.28*	*	*
*1	*	15.18	*	.28*	.045*	.28*	*	*
*1	*	15.08	*	.28*	.045*	.28*	*	*
*1	*	14.08	*	.28*	.045*	.28*	*	*
*1	*	13.03	*	.28*	.045*	.28*	*	*
*1	*	11.3	*	.28*	.045*	.28*	*	*
*1	*	10.06	*	.28*	.045*	.28*	*	*
*1	*	8.43	*	.28*	.045*	.28*	*	*
*1	*	7.64	*	.28*	.045*	.28*	*	*
*1	*	6.46	*	.28*	.045*	.28*	*	*
*1	*	4.73	*	.28*	.045*	.28*	*	*
*1	*	3.6	*	.28*	.045*	.28*	*	*
*1	*	2.88	*	.28*	.045*	.28*	*	*
*1	*	2.5	*	.28*	.045*	.28*	*	*
*1	*	2.46	*	.28*	.045*	.28*	*	*
*1	*	2.45	*	.28*	.045*	.28*	*	*
*1	*	2.445	*	Bridge*	*	*	*	*
*1	*	2.44	*	.28*	.045*	.28*	*	*
*1	*	2.39	*	.28*	.045*	.28*	*	*
*1	*	1.61	*	.28*	.045*	.28*	*	*

SUMMARY OF REACH LENGTHS

*	Reach	*	River Sta.	*	Left	*	Channel*	Right *
*1		*	79.85	*	4150*		3960*	3900*
*1		*	79.1	*	4800*		4963*	5500*
*1		*	78.16	*	7300*		7867*	8200*
*1		*	76.67	*	4500*		5914*	7000*
*1		*	75.55	*	1950*		2080*	2250*
*1		*	75.15	*	692*		792*	840*
*1		*	75	*	125*		125*	125*

*1	*	74.98	*	32*	32*	32*
*1	*	74.9750	*	Bridge*	*	*
*1	*	74.97	*	300*	250*	250*
*1	*	74.92	*	3350*	3009*	2450*
*1	*	74.35	*	265*	265*	265*
*1	*	74.3	*	136*	136*	136*
*1	*	74.28	*	13.5*	13.5*	13.5*
*1	*	74.2749	*	Bridge*	*	*
*1	*	74.27	*	200*	200*	200*
*1	*	74.23	*	1000*	1000*	1000*
*1	*	74.04	*	550*	528*	525*
*1	*	73.94	*	2062*	3062*	2000*
*1	*	73.36	*	211*	211*	211*
*1	*	73.32	*	50*	50*	50*
*1	*	73.31	*	75*	75*	75*
*1	*	73.305	*	Bridge*	*	*
*1	*	73.3	*	150*	150*	150*
*1	*	73.27	*	3300*	3590*	3550*
*1	*	72.59	*	5850*	5966*	5650*
*1	*	71.46	*	6350*	6758*	6700*
*1	*	70.18	*	3400*	3854*	3200*
*1	*	69.45	*	370*	370*	370*
*1	*	69.38	*	30*	30*	30*
*1	*	69.375	*	Bridge*	*	*
*1	*	69.37	*	792*	792*	792*
*1	*	69.22	*	2000*	2640*	2200*
*1	*	68.72	*	4150*	4699*	4300*
*1	*	67.83	*	3600*	3802*	3550*
*1	*	67.11	*	4500*	5914*	4800*
*1	*	65.99	*	130*	130*	130*
*1	*	65.97	*	25*	25*	25*
*1	*	65.965	*	Bridge*	*	*
*1	*	65.96	*	370*	370*	370*
*1	*	65.89	*	100*	158*	90*
*1	*	65.86	*	5500*	6811*	4600*
*1	*	64.57	*	4400*	5122*	3900*
*1	*	63.6	*	5500*	7180*	5900*
*1	*	62.24	*	5400*	6442*	5000*
*1	*	61.02	*	6000*	7075*	6700*
*1	*	59.68	*	100*	100*	100*
*1	*	59.66	*	50*	50*	50*
*1	*	59.655	*	Bridge*	*	*
*1	*	59.65	*	400*	400*	400*
*1	*	59.57	*	1500*	1637*	1400*
*1	*	59.26	*	2100*	2376*	2000*
*1	*	58.81	*	106*	106*	106*
*1	*	58.79	*	50*	50*	50*
*1	*	58.785	*	Bridge*	*	*
*1	*	58.78	*	422*	422*	422*
*1	*	58.7	*	2500*	2904*	2600*
*1	*	58.15	*	4100*	4963*	4200*
*1	*	57.21	*	3600*	5227*	3550*
*1	*	56.22	*	800*	1214*	890*
*1	*	55.99	*	100*	150*	110*
*1	*	55.96	*	50*	50*	50*
*1	*	55.955	*	Bridge*	*	*
*1	*	55.95	*	650*	634*	600*

*1	*	55.83	*	5800*	8237*	4600*
*1	*	54.27	*	2900*	4382*	2700*
*1	*	53.44	*	5900*	8290*	6200*
*1	*	51.87	*	6000*	11933*	7100*
*1	*	49.61	*	725*	745*	525*
*1	*	49.48	*	100*	100*	100*
*1	*	49.46	*	25*	25*	25*
*1	*	49.455	*	Bridge*	*	*
*1	*	49.45	*	250*	350*	450*
*1	*	49.38	*	325*	375*	425*
*1	*	49.31	*	100*	100*	100*
*1	*	49.29	*	25*	25*	25*
*1	*	49.285	*	Bridge*	*	*
*1	*	49.28	*	500*	450*	350*
*1	*	49.19	*	4450*	6072*	4250*
*1	*	48.04	*	5800*	7656*	6200*
*1	*	46.59	*	4200*	5861*	4550*
*1	*	45.48	*	5150*	7709*	5100*
*1	*	44.02	*	5300*	7814*	5600*
*1	*	42.54	*	3400*	4594*	3400*
*1	*	41.67	*	200*	242*	200*
*1	*	41.63	*	50*	50*	50*
*1	*	41.62	*	25*	25*	25*
*1	*	41.615	*	Bridge*	*	*
*1	*	41.61	*	250*	264*	250*
*1	*	41.56	*	3250*	3432*	3000*
*1	*	40.91	*	3500*	5808*	5000*
*1	*	39.81	*	3900*	4171*	3500*
*1	*	39.02	*	5600*	5491*	4200*
*1	*	37.98	*	3175*	3854*	3900*
*1	*	37.25	*	300*	300*	300*
*1	*	37.19	*	105*	105*	105*
*1	*	37.17	*	70*	70*	70*
*1	*	37.165	*	Bridge*	*	*
*1	*	37.16	*	450*	475*	450*
*1	*	37.07	*	4700*	7867*	5400*
*1	*	35.58	*	20*	20*	20*
*1	*	35.57	*	6500*	9134*	7700*
*1	*	33.85	*	4000*	4013*	3200*
*1	*	33.09	*	3700*	4805*	4700*
*1	*	32.18	*	5500*	9293*	3000*
*1	*	30.42	*	6000*	7814*	5800*
*1	*	28.94	*	5300*	5914*	3900*
*1	*	27.82	*	186*	186*	186*
*1	*	27.79	*	106*	106*	106*
*1	*	27.77	*	25*	25*	25*
*1	*	27.765	*	Bridge*	*	*
*1	*	27.76	*	325*	325*	325*
*1	*	27.68	*	4000*	6125*	5500*
*1	*	26.52	*	5800*	7022*	2730*
*1	*	25.19	*	1700*	3432*	3500*
*1	*	24.54	*	145*	145*	145*
*1	*	24.52	*	25*	25*	25*
*1	*	24.51	*	30*	30*	30*
*1	*	24.505	*	Bridge*	*	*
*1	*	24.5	*	90*	90*	90*
*1	*	24.49	*	40*	40*	40*

*1	* 24.48	* 20*	20*	20*
*1	* 24.475	* Bridge*	*	*
*1	* 24.47	* 150*	150*	150*
*1	* 24.44	* 1100*	1531*	1700*
*1	* 24.15	* 1900*	1742*	1500*
*1	* 23.82	* 4700*	3600*	2300*
*1	* 23.14	* 4900*	4752*	3400*
*1	* 22.24	* 2900*	3432*	4000*
*1	* 21.59	* 5600*	6072*	5900*
*1	* 20.44	* 4400*	4330*	3500*
*1	* 19.62	* 4900*	5970*	4950*
*1	* 18.49	* 3000*	3750*	2400*
*1	* 17.78	* 2000*	2650*	3500*
*1	* 17.28	* 4300*	3960*	3400*
*1	* 16.53	* 3400*	4120*	3350*
*1	* 15.75	* 175*	175*	175*
*1	* 15.72	* 50*	50*	50*
*1	* 15.71	* 25*	25*	25*
*1	* 15.705	* Bridge*	*	*
*1	* 15.7	* 200*	200*	200*
*1	* 15.66	* 3000*	2640*	2100*
*1	* 15.18	* 400*	400*	400*
*1	* 15.08	* 5700*	5280*	4000*
*1	* 14.08	* 4700*	5540*	5500*
*1	* 13.03	* 6100*	9130*	5400*
*1	* 11.3	* 5900*	6550*	4400*
*1	* 10.06	* 5500*	8600*	6200*
*1	* 8.43	* 2600*	4170*	4600*
*1	* 7.64	* 4950*	6230*	4900*
*1	* 6.46	* 8200*	9150*	9900*
*1	* 4.73	* 5600*	5960*	4400*
*1	* 3.6	* 3750*	3800*	3800*
*1	* 2.88	* 2000*	2006*	1900*
*1	* 2.5	* 205*	205*	205*
*1	* 2.46	* 70*	70*	70*
*1	* 2.45	* 25*	25*	25*
*1	* 2.445	* Bridge*	*	*
*1	* 2.44	* 275*	275*	275*
*1	* 2.39	* 3000*	4118*	4300*
*1	* 1.61	* 0*	0*	0*

SUMMARY OF CONTRACTION AND EXPANSION COEFFICIENTS

Reach	River Sta.	Contr.	Expan.
*1	* 79.85	* .1*	.3*
*1	* 79.1	* .1*	.3*
*1	* 78.16	* .1*	.3*
*1	* 76.67	* .1*	.3*
*1	* 75.55	* .1*	.3*
*1	* 75.15	* .1*	.3*
*1	* 75	* .1*	.3*
*1	* 74.98	* .3*	.5*

*1	*	74.9750	*	Bridge*	*
*1	*	74.97	*	.3*	.5*
*1	*	74.92	*	.1*	.3*
*1	*	74.35	*	.1*	.3*
*1	*	74.3	*	.1*	.3*
*1	*	74.28	*	.3*	.5*
*1	*	74.2749	*	Bridge*	*
*1	*	74.27	*	.3*	.5*
*1	*	74.23	*	.1*	.3*
*1	*	74.04	*	.1*	.3*
*1	*	73.94	*	.1*	.3*
*1	*	73.36	*	.1*	.3*
*1	*	73.32	*	.1*	.3*
*1	*	73.31	*	.3*	.5*
*1	*	73.305	*	Bridge*	*
*1	*	73.3	*	.3*	.5*
*1	*	73.27	*	.1*	.3*
*1	*	72.59	*	.1*	.3*
*1	*	71.46	*	.1*	.3*
*1	*	70.18	*	.1*	.3*
*1	*	69.45	*	.1*	.3*
*1	*	69.38	*	.3*	.5*
*1	*	69.375	*	Bridge*	*
*1	*	69.37	*	.3*	.5*
*1	*	69.22	*	.1*	.3*
*1	*	68.72	*	.1*	.3*
*1	*	67.83	*	.1*	.3*
*1	*	67.11	*	.1*	.3*
*1	*	65.99	*	.1*	.3*
*1	*	65.97	*	.3*	.5*
*1	*	65.965	*	Bridge*	*
*1	*	65.96	*	.3*	.5*
*1	*	65.89	*	.1*	.3*
*1	*	65.86	*	.1*	.3*
*1	*	64.57	*	.1*	.3*
*1	*	63.6	*	.1*	.3*
*1	*	62.24	*	.1*	.3*
*1	*	61.02	*	.1*	.3*
*1	*	59.68	*	.1*	.3*
*1	*	59.66	*	.3*	.5*
*1	*	59.655	*	Bridge*	*
*1	*	59.65	*	.3*	.5*
*1	*	59.57	*	.1*	.3*
*1	*	59.26	*	.1*	.3*
*1	*	58.81	*	.1*	.3*
*1	*	58.79	*	.3*	.5*
*1	*	58.785	*	Bridge*	*
*1	*	58.78	*	.3*	.5*
*1	*	58.7	*	.1*	.3*
*1	*	58.15	*	.1*	.3*
*1	*	57.21	*	.1*	.3*
*1	*	56.22	*	.1*	.3*
*1	*	55.99	*	.1*	.3*
*1	*	55.96	*	.3*	.5*
*1	*	55.955	*	Bridge*	*
*1	*	55.95	*	.3*	.5*
*1	*	55.83	*	.1*	.3*

*1	*	54.27	*	.1*	.3*
*1	*	53.44	*	.1*	.3*
*1	*	51.87	*	.1*	.3*
*1	*	49.61	*	.1*	.3*
*1	*	49.48	*	.1*	.3*
*1	*	49.46	*	.3*	.5*
*1	*	49.455	*	Bridge*	*
*1	*	49.45	*	.3*	.5*
*1	*	49.38	*	.1*	.3*
*1	*	49.31	*	.1*	.3*
*1	*	49.29	*	.3*	.5*
*1	*	49.285	*	Bridge*	*
*1	*	49.28	*	.3*	.5*
*1	*	49.19	*	.1*	.3*
*1	*	48.04	*	.1*	.3*
*1	*	46.59	*	.1*	.3*
*1	*	45.48	*	.1*	.3*
*1	*	44.02	*	.1*	.3*
*1	*	42.54	*	.1*	.3*
*1	*	41.67	*	.1*	.3*
*1	*	41.63	*	.1*	.3*
*1	*	41.62	*	.3*	.5*
*1	*	41.615	*	Bridge*	*
*1	*	41.61	*	.3*	.5*
*1	*	41.56	*	.1*	.3*
*1	*	40.91	*	.1*	.3*
*1	*	39.81	*	.1*	.3*
*1	*	39.02	*	.1*	.3*
*1	*	37.98	*	.1*	.3*
*1	*	37.25	*	.1*	.3*
*1	*	37.19	*	.1*	.3*
*1	*	37.17	*	.3*	.5*
*1	*	37.165	*	Bridge*	*
*1	*	37.16	*	.3*	.5*
*1	*	37.07	*	.1*	.3*
*1	*	35.58	*	.1*	.3*
*1	*	35.57	*	.1*	.3*
*1	*	33.85	*	.1*	.3*
*1	*	33.09	*	.1*	.3*
*1	*	32.18	*	.1*	.3*
*1	*	30.42	*	.1*	.3*
*1	*	28.94	*	.1*	.3*
*1	*	27.82	*	.1*	.3*
*1	*	27.79	*	.1*	.3*
*1	*	27.77	*	.3*	.5*
*1	*	27.765	*	Bridge*	*
*1	*	27.76	*	.3*	.5*
*1	*	27.68	*	.1*	.3*
*1	*	26.52	*	.1*	.3*
*1	*	25.19	*	.1*	.3*
*1	*	24.54	*	.1*	.3*
*1	*	24.52	*	.3*	.5*
*1	*	24.51	*	.3*	.5*
*1	*	24.505	*	Bridge*	*
*1	*	24.5	*	.3*	.5*
*1	*	24.49	*	.3*	.5*
*1	*	24.48	*	.3*	.5*

```
*1          *    24.475  *  Bridge*        *
*1          *    24.47   *      .3*      .5*
*1          *    24.44   *      .1*      .3*
*1          *    24.15   *      .1*      .3*
*1          *    23.82   *      .1*      .3*
*1          *    23.14   *      .1*      .3*
*1          *    22.24   *      .1*      .3*
*1          *    21.59   *      .1*      .3*
*1          *    20.44   *      .1*      .3*
*1          *    19.62   *      .1*      .3*
*1          *    18.49   *      .1*      .3*
*1          *    17.78   *      .1*      .3*
*1          *    17.28   *      .1*      .3*
*1          *    16.53   *      .1*      .3*
*1          *    15.75   *      .1*      .3*
*1          *    15.72   *      .3*      .5*
*1          *    15.71   *      .3*      .5*
*1          *    15.705  *  Bridge*        *
*1          *    15.7    *      .3*      .5*
*1          *    15.66   *      .1*      .3*
*1          *    15.18   *      .1*      .3*
*1          *    15.08   *      .1*      .3*
*1          *    14.08   *      .1*      .3*
*1          *    13.03   *      .1*      .3*
*1          *    11.3    *      .1*      .3*
*1          *    10.06   *      .1*      .3*
*1          *    8.43    *      .1*      .3*
*1          *    7.64    *      .1*      .3*
*1          *    6.46    *      .1*      .3*
*1          *    4.73    *      .1*      .3*
*1          *    3.6     *      .1*      .3*
*1          *    2.88    *      .1*      .3*
*1          *    2.5     *      .1*      .3*
*1          *    2.46    *      .3*      .5*
*1          *    2.45    *      .3*      .5*
*1          *    2.445   *  Bridge*        *
*1          *    2.44    *      .3*      .5*
*1          *    2.39    *      .1*      .3*
*1          *    1.61    *      .1*      .3*
*******************************************
```

Profile Output Table - Standard Table 1

River Sta.	Q Total (cfs)	Min Ch El (ft)	W.S. Elev (ft)	Crit W.S. (ft)	E.G. Elev (ft)	E.G. Slope (ft/ft)	Vel Chnl (ft/s)	Flow Area (sq ft)	Top Width (ft)	Froude # Chl
79.85	374.00	127.50	143.90		143.90	0.000000	0.01	34645.11	4225.53	0.00
79.1	374.00	137.00	143.90		143.90	0.000009	0.14	23620.46	11459.12	0.01
78.16	374.00	138.50	143.81		143.81	0.000034	0.22	27308.99	16601.50	0.02
76.67	374.00	138.00	143.01		143.02	0.001060	1.06	6954.20	14140.53	0.11
75.55	374.00	137.10	141.07		141.07	0.000145	0.42	3224.29	2818.42	0.04
75.15	374.00	133.70	140.82		140.82	0.000096	0.44	1498.35	768.87	0.04
75	374.00	133.70	140.74		140.74	0.000103	0.45	1438.09	751.55	0.04
74.98	374.00	132.30	140.61	137.46	140.70	0.005266	2.36	158.76	54.15	0.24
74.9750	Bridge									
74.97	374.00	132.30	140.60	137.47	140.68	0.005329	2.37	158.02	54.00	0.24
74.92	374.00	133.50	139.67		139.70	0.002737	2.21	1821.65	3462.85	0.19
74.35	374.00	133.40	139.34		139.34	0.000037	0.26	7141.12	5629.45	0.02
74.3	374.00	132.90	139.33		139.33	0.000017	0.21	7582.52	4383.03	0.02
74.28	374.00	133.50	139.28	137.25	139.32	0.004747	1.71	218.27	118.16	0.22
74.2749	Bridge									
74.27	374.00	133.50	139.27	137.27	139.31	0.004798	1.72	217.33	117.83	0.22
74.23	374.00	132.90	139.28		139.28	0.000017	0.20	9444.35	5726.27	0.02
74.04	374.00	132.90	139.26		139.26	0.000017	0.20	9348.96	5713.29	0.02
73.94	374.00	132.90	139.25		139.26	0.000012	0.17	16431.25	5485.41	0.01
73.36	2965.00	129.50	138.96		138.96	0.000241	0.89	15375.45	4308.48	0.06
73.32	2965.00	129.50	138.90		138.91	0.000251	0.91	15151.96	4284.41	0.06
73.31	2965.00	127.30	138.74	134.55	138.86	0.004566	2.81	1054.91	242.88	0.24
73.305	Bridge									
73.3	2965.00	127.30	137.84		138.03	0.008150	3.50	847.38	218.10	0.31
73.27	2965.00	124.10	137.71		137.71	0.000621	1.62	12137.10	3575.44	0.09
72.59	2965.00	119.10	132.24		132.48	0.007733	5.39	2729.94	1084.44	0.33
71.46	2965.00	114.40	127.19		127.20	0.000322	1.40	9414.06	2254.84	0.08
70.18	2965.00	110.70	124.63		124.65	0.000469	1.82	7341.63	1493.08	0.09
69.45	2965.00	108.70	121.51		121.59	0.002043	3.16	3564.86	959.02	0.19
69.38	2965.00	106.00	119.42	115.15	119.92	0.015510	5.71	519.68	81.24	0.39
69.375	Bridge									
69.37	2965.00	106.00	118.29		119.01	0.024153	6.81	435.67	71.28	0.49
69.22	2965.00	104.00	116.68		116.72	0.000874	2.61	5471.52	1114.14	0.13
68.72	2965.00	100.00	113.94		114.05	0.001501	3.55	3344.73	709.37	0.17
67.83	2965.00	96.40	111.38		111.40	0.000315	1.71	9622.53	1764.16	0.08
67.11	4665.00	93.70	109.53		109.58	0.000700	2.67	8124.97	1344.26	0.12
65.99	4665.00	88.00	107.13		107.16	0.000335	2.12	12308.94	1895.52	0.09
65.97	4665.00	88.00	106.87	99.37	107.03	0.007169	3.97	4465.26	2000.00	0.21
65.965	Bridge									
65.96	4665.00	88.00	105.81		106.25	0.017557	5.83	2300.47	1712.82	0.32
65.89	4665.00	88.00	105.33		105.38	0.000649	2.76	9098.26	1660.05	0.12
65.86	4665.00	88.00	105.24		105.30	0.000671	2.80	8958.20	1648.77	0.12
64.57	4665.00	86.00	99.76		99.87	0.001220	3.18	5726.40	1742.95	0.16
63.6	4665.00	83.50	93.77		93.79	0.001407	2.75	10863.24	3370.73	0.16
62.24	4665.00	80.50	91.11		91.11	0.000220	1.13	23633.80	3687.71	0.06
61.02	4665.00	75.30	90.55		90.55	0.000064	0.77	34915.96	4236.90	0.04

59.68	4665.00	71.10	89.93		89.94	0.000144	1.35	16980.18	2124.20	0.06
59.66	4665.00	72.60	89.79	79.19	89.89	0.001632	2.55	1829.29	160.05	0.13
59.655	Bridge									
59.65	4665.00	72.60	89.67		89.78	0.001677	2.58	1810.21	159.44	0.13
59.57	4665.00	71.10	89.57		89.58	0.000160	1.40	16230.91	2064.93	0.06
59.26	4665.00	71.10	89.32		89.33	0.000172	1.44	15726.89	2010.50	0.06
58.81	4665.00	66.80	89.04		89.04	0.000113	1.33	20154.34	2062.70	0.05
58.79	4665.00	69.00	88.92	77.24	89.01	0.001433	2.34	2821.82	1835.36	0.12
58.785	Bridge									
58.78	4665.00	69.00	88.26		88.36	0.001790	2.52	2069.36	511.01	0.13
58.7	4665.00	66.80	88.16		88.17	0.000143	1.45	18376.84	1995.15	0.06
58.15	4665.00	66.80	87.76		87.77	0.000160	1.52	17583.82	1979.40	0.06
57.21	8767.00	63.10	85.28		85.42	0.001653	4.83	9134.80	1111.85	0.19
56.22	8767.00	59.30	82.62		82.70	0.000313	2.80	12523.28	1464.01	0.12
55.99	8767.00	59.30	82.25		82.34	0.000346	2.89	11988.65	1453.10	0.13
55.96	8767.00	58.20	82.14	69.95	82.26	0.001208	3.15	8469.92	1933.91	0.15
55.955	Bridge									
55.95	8767.00	58.20	82.05		82.16	0.001253	3.19	8279.91	1916.11	0.15
55.83	8767.00	57.90	81.83		81.87	0.000201	2.36	22632.54	2781.65	0.10
54.27	8767.00	54.80	80.43		80.47	0.000242	2.55	23054.30	2588.40	0.10
53.44	8767.00	53.10	79.86		79.89	0.000124	2.15	23858.06	2161.29	0.08
51.87	8767.00	49.80	79.21		79.22	0.000083	1.88	39936.87	3430.91	0.06
49.61	25162.00	45.20	77.48		77.58	0.000279	3.76	33090.30	3576.46	0.13
49.48	25162.00	44.50	77.40		77.44	0.000130	2.55	45826.99	3532.12	0.09
49.46	25162.00	45.00	77.38	59.47	77.43	0.000246	2.03	48577.69	10000.00	0.08
49.455	Bridge									
49.45	25162.00	45.00	77.35		77.40	0.000248	2.04	48278.62	10000.00	0.08
49.38	25162.00	44.50	77.29		77.33	0.000132	2.57	45432.90	3504.73	0.09
49.31	25162.00	44.50	77.24		77.28	0.000134	2.58	45250.66	3491.98	0.09
49.29	25162.00	44.10	77.18	55.99	77.26	0.000251	2.41	25233.28	4576.44	0.09
49.285	Bridge									
49.28	25162.00	44.10	72.59		72.77	0.000650	3.43	8581.24	1653.60	0.14
49.19	25162.00	44.00	72.50		72.57	0.000209	2.96	34178.27	3152.68	0.11
48.04	25162.00	43.50	70.90		70.99	0.000521	4.42	28399.37	2259.43	0.17
46.59	25162.00	42.90	67.99		68.12	0.000354	3.61	27884.81	3679.43	0.14
45.48	25162.00	42.00	66.19		66.28	0.000357	3.57	28986.73	2021.35	0.14
44.02	23767.00	40.00	63.03		63.13	0.000857	5.12	25468.27	2259.89	0.21
42.54	23767.00	39.10	60.86		60.87	0.000212	2.35	56207.97	5197.38	0.10
41.67	23767.00	36.00	60.01		60.05	0.000239	2.83	46842.57	4401.16	0.11
41.63	23767.00	36.00	59.96		59.99	0.000242	2.84	46616.92	4394.73	0.11
41.62	23767.00	36.00	59.58	47.10	59.94	0.001548	4.79	4965.96	300.82	0.21
41.615	Bridge									
41.61	23767.00	36.00	59.54		59.90	0.001558	4.80	4953.59	300.66	0.21
41.56	23767.00	36.00	59.60		59.62	0.000198	2.53	56472.67	5020.04	0.10
40.91	23767.00	35.00	58.58		58.68	0.000456	4.12	27362.90	2027.82	0.16
39.81	32800.00	31.50	57.75		57.87	0.000097	3.39	31570.98	2270.23	0.12
39.02	32800.00	31.00	56.44		57.09	0.000448	7.10	10996.06	911.41	0.26
37.98	32800.00	30.70	55.92		55.99	0.000097	3.02	45437.23	3923.02	0.12
37.25	32569.00	31.60	55.60		55.67	0.000075	2.79	46527.21	3553.86	0.11
37.19	32569.00	31.60	55.58		55.65	0.000075	2.79	46446.32	3553.48	0.11
37.17	32569.00	31.00	55.14	41.89	55.59	0.000477	5.39	6047.50	332.49	0.22

37.165	Bridge									
37.16	32569.00	31.00	55.11		55.56	0.000480	5.40	6035.61	332.36	0.22
37.07	32569.00	31.60	55.24		55.29	0.000066	2.60	56649.09	4394.34	0.10
35.58	32569.00	30.50	54.63		54.73	0.000116	3.14	46809.27	6132.65	0.13
35.57	32569.00	30.50	54.63		54.72	0.000116	3.14	46795.09	6131.52	0.13
33.85	24427.00	39.90	53.77		53.77	0.000115	0.90	52077.06	5401.42	0.04
33.09	24427.00	31.00	53.22		53.23	0.000187	1.40	38095.45	3579.37	0.06
32.18	24427.00	30.50	52.33		52.34	0.000236	1.63	34343.79	3201.63	0.07
30.42	24427.00	33.00	50.89		50.90	0.000241	1.37	40179.97	4970.32	0.06
28.94	23206.00	27.40	49.34		49.47	0.000192	3.96	28710.78	3713.85	0.16
27.82	23206.00	27.40	48.78		48.84	0.000084	2.77	38682.34	4258.17	0.11
27.79	20910.00	27.40	48.77		48.82	0.000068	2.49	38658.16	4257.75	0.10
27.77	20910.00	26.20	48.34	36.18	48.77	0.000553	5.26	5067.33	2265.96	0.23
27.765	Bridge									
27.76	20910.00	26.20	48.00		48.45	0.000594	5.39	4452.27	1479.44	0.23
27.68	20910.00	28.30	48.14		48.20	0.000079	2.64	32579.24	3629.48	0.11
26.52	20910.00	23.20	47.57		47.67	0.000123	3.54	28314.73	3331.85	0.14
25.19	19587.00	25.43	46.77		46.89	0.000124	3.26	17350.41	1999.77	0.13
24.54	19587.00	16.26	46.42		46.53	0.000090	2.93	14634.73	1578.14	0.12
24.52	19587.00	16.26	46.40		46.52	0.000090	2.94	14613.91	1577.79	0.12
24.51	19587.00	16.30	45.93	33.01	46.41	0.000637	5.56	3563.24	497.41	0.24
24.505	Bridge									
24.5	19587.00	16.30	45.50		46.00	0.000689	5.71	3428.69	215.22	0.25
24.49	19587.00	16.26	45.66		45.80	0.000105	3.09	13455.34	1558.59	0.12
24.48	19587.00	22.60	44.41	35.95	45.50	0.002186	8.37	2339.44	159.46	0.39
24.475	Bridge									
24.47	19587.00	22.60	44.34		45.44	0.002208	8.41	2328.63	159.06	0.39
24.44	19587.00	16.30	44.62		44.96	0.000342	5.41	12005.65	1511.21	0.22
24.15	19587.00	22.45	43.82		44.35	0.000437	6.03	5673.19	606.97	0.25
23.82	19587.00	17.36	43.41		43.69	0.000260	4.83	11165.50	1192.13	0.20
23.14	19587.00	17.29	41.99		42.42	0.000521	6.14	11023.48	2009.61	0.26
22.24	19587.00	21.10	40.61		40.84	0.000232	4.05	9335.18	1203.57	0.18
21.59	19587.00	15.87	39.60		39.90	0.000313	5.07	10809.44	1271.73	0.21
20.44	19587.00	16.14	38.57		38.69	0.000132	3.42	20549.75	2111.34	0.14
19.62	16717.00	17.74	38.19		38.26	0.000070	2.48	21853.79	2282.46	0.10
18.49	16717.00	8.89	37.60		37.70	0.000160	3.57	23413.81	3007.22	0.15
17.78	16717.00	15.15	37.18		37.23	0.000124	2.44	28970.60	3800.10	0.10
17.28	16717.00	13.26	36.89		36.94	0.000089	2.30	28938.33	3345.95	0.09
16.53	16717.00	13.60	36.55		36.60	0.000085	2.28	35559.61	3895.74	0.09
15.75	16717.00	11.90	36.29		36.33	0.000058	1.73	35686.79	4933.62	0.07
15.72	16717.00	11.90	36.28		36.32	0.000058	1.73	35636.36	4930.11	0.07
15.71	16717.00	9.40	36.15	19.66	36.28	0.000296	3.02	11809.36	4415.77	0.13
15.705	Bridge									
15.7	16717.00	9.40	36.14		36.27	0.000297	3.02	11776.63	4411.08	0.13
15.66	16359.00	10.22	36.16		36.21	0.000071	2.21	35340.01	4844.67	0.08
15.18	16359.00	6.52	35.95		36.00	0.000079	2.26	25761.20	2521.91	0.09
15.08	16359.00	6.52	35.91		35.97	0.000080	2.26	25680.35	2520.03	0.09
14.08	16359.00	10.50	35.47		35.53	0.000088	2.38	27647.80	3111.94	0.09
13.03	16359.00	-5.45	35.15		35.19	0.000047	2.07	39322.95	3888.19	0.07
11.3	16359.00	7.00	34.83		34.86	0.000036	1.71	32640.31	2485.38	0.06
10.06	16359.00	1.81	34.49		34.56	0.000069	2.40	21015.61	2539.86	0.08

8.43	16359.00	-1.00	34.02		34.08	0.000053	2.23	34241.57	5652.46	0.07
7.64	16359.00	2.75	33.79		33.84	0.000063	2.23	35082.47	5108.93	0.08
6.46	16359.00	2.53	33.52		33.56	0.000039	1.82	37273.10	3822.68	0.06
4.73	16359.00	1.55	33.04		33.10	0.000067	2.35	27472.24	2335.94	0.08
3.6	16359.00	0.75	32.75		32.79	0.000047	2.04	33685.95	2490.91	0.07
2.88	16359.00	0.20	32.59		32.62	0.000039	1.84	39572.85	3640.80	0.06
2.5	16359.00	-2.58	32.49		32.53	0.000053	2.12	35456.80	4020.53	0.07
2.46	16359.00	-2.58	32.48		32.52	0.000053	2.12	35413.20	4018.22	0.07
2.45	16359.00	-7.50	32.45	8.05	32.51	0.000119	1.93	8472.71	443.87	0.08
2.445	Bridge									
2.44	16359.00	-7.50	32.44		32.50	0.000119	1.93	8467.26	443.77	0.08
2.39	16359.00	-5.21	32.43		32.47	0.000047	2.07	31703.86	2786.33	0.07
1.61	16359.00	-10.46	32.27	4.11	32.31	0.000036	1.80	22755.23	1813.08	0.06

HEC-RAS Version 1.2 April 1996
U.S. Army Corp of Engineers
Hydrologic Engineering Center
609 Second Street, Suite D
Davis, California 95616-4687
(916) 756-1104

```
X     X  XXXXXX    XXXX        XXXX       XX      XXXX
X     X  X        X    X      X   X     X  X    X
X     X  X        X           X   X    X    X   X
XXXXXXX  XXXX     X       XXX XXXX     XXXXXX    XXXX
X     X  X        X           X  X     X    X        X
X     X  X        X    X      X   X    X    X        X
X     X  XXXXXX    XXXX       X    X   X    X   XXXXX
```

****

PROJECT DATA
Project Title: Santa Fe River - Oneal
Project File : oneal.prj
Run Date and Time: 6/13/2005 4:05:00 PM

Project in English units

****

PLAN DATA

Plan Title: O'neal Residence Proposed
Plan File : p:\haestad\hec\ras\oneal.p04

Geometry Title: O'neal Residence Proposed
Geometry File : p:\haestad\hec\ras\oneal.p04

Flow Title : O'neal Residence Proposed
Flow File : p:\haestad\hec\ras\oneal.p04

Plan Summary Information:

Number of:	Cross Sections	= 144	Mulitple Openings	=	0
	Culverts	= 0	Inline Weirs	=	0
	Bridges	= 17			

Computational Information

Water surface calculation tolerance	=	.01
Critical depth calculaton tolerance	=	.01
Maximum number of interations	=	20
Maximum difference tolerance	=	.3
Flow tolerance factor	=	.001

Computational Flow Regime: Subcritical Flow

Encroachment Data: None

Flow Distribution Locations: None

****

FLOW DATA

Flow Title: 10,50,100, & 500 Year
Flow File : y:\draina~1\hecdat~1\oneal.f01

Flow Data (cfs)

Reach	Riv Sta	PF#1	PF#2	PF#3	PF#4
1	79.85	90	275	374	686
1	73.36	1344	2310	2965	4380
1	67.11	2690	3881	4665	6830
1	57.21	3103	6404	8767	12834
1	49.61	12824	20748	25162	36500
1	44.02	12268	19399	23767	35515
1	39.81	17113	26905	32800	46533
1	37.25	16995	26655	32569	46251
1	33.85	12746	19991	24427	34688
1	28.94	12109	18991	23206	32954
1	27.79	9705	16793	20910	32030
1	25.19	9264	15766	19587	29700
1	19.62	9192	13791	16717	22200
1	15.66	8457	13409	16359	22200

Boundary Conditions

Reach	Profile	Upstream	Downstream
1	1		Known WS = 29.38
1	2		Known WS = 31.25
1	3		Known WS = 32.27
1	4		Known WS = 35.23

****

GEOMETRY DATA

Geometry Title: O'neal Residence Proposed
Geometry File : p:\haestad\hec\ras\oneal.g03

CROSS SECTION INPUT Reach: 1 River Station: 20.44
Description: 20.44

Station Elevation Data, num = 78

Sta.	Elev.	Sta.	Elev.	Sta.	Elev.	Sta.	Elev.	Sta.	Elev.
10000	50	10037	48.2	10086	47.7	10132	47.2	10194	46.8
10241	46	10274	45.2	10295	43.8	10320	42.3	10351	40.7
10399	37.9	10446	34.1	10493	29.8	10533	27.6	10579	26.8
10627	26.8	10670	26.2	10717	25.6	10775	26	10865	27.2
10941	26.1	11018	24.8	11099	23.9	11186	23.8	11268	26.6
11319	27.6	11379	26	11440	27.7	11485	27.4	11512	26.7
11520	21.2	11550	19.17	11600	16.14	11630	18.97	11681	21.2
11705	27.3	11774	27.5	11854	28.7	11936	31.4	12026	41.9

12239	41.3	12298	38.4	12364	38.2	12432	37.3	12530	33.7
12624	33.3	12710	36.2	12855	40.2	12953	40.7	13093	40.7
13144	42.2	13176	43.2	13226	44.6	13269	44.8	13306	45.5
13331	45.9	13366	46.6	13402	46.8	13441	46.8	13472	46.6
13507	46.7	13544	46.6	13569	46.8	13583	46.9	13591	46.9
13595	46.2	13598	46.2	13606	47.6	13621	47.5	13646	47.4
13670	47.5	13698	47.4	13754	47.8	13802	48.2	13845	49.1
13882	49.8	13923	50.6	13934	50.7				

Manning's n Values, num = 3

Sta.	Value	Sta.	Value	Sta.	Value
10000	.2	11512	.035	11705	.2

Bank Sta: Left	Right	Lengths: Left	Channel	Right	Coeff Contr.	Expan.
11512	11705	4400	4330	3500	.1	.3

CROSS SECTION INPUT Reach: 1 River Station: 19.62
Description: 19.62

Station Elevation Data, num = 73

Sta.	Elev.	Sta.	Elev.	Sta.	Elev.	Sta.	Elev.	Sta.	Elev.
10000	44.2	10059	44.7	10133	46	10205	46	10292	44.4
10409	43.1	10462	42	10586	40.4	10604	41	10659	36.6
10697	35	10743	32.6	10865	28.6	10929	26.3	11011	27
11046	25.4	11099	25.7	11142	25.6	11233	25	11311	25.2
11396	24.7	11477	24.4	11562	25	11615	24.6	11623	21.4
11650	18.6	11725	17.74	11800	20.04	11839	21.4	11864	24.3
11930	25	12044	26	12186	28.9	12516	35.2	12730	37.1
12918	38.1	12985	39.9	13065	41.1	13122	40.1	13164	40.5
13246	41.1	13251	41.3	13253	40.6	13254	40.6	13257	41.5
13258	41.5	13260	41	13285	40.7	13312	41.2	13319	40.6
13321	40.5	13332	40.9	13372	40.8	13421	41.1	13490	41.6
13572	41.2	13632	41.1	13709	41.9	13782	42.7	13863	43
13938	42.4	13970	40.9	13975	40.9	14003	41.7	14074	41.4
14142	41.4	14222	40.6	14270	41.7	14330	42.7	14429	44
14505	45	14571	46.2	14633	48				

Manning's n Values, num = 3

Sta.	Value	Sta.	Value	Sta.	Value
10000	.2	11615	.035	11864	.2

Bank Sta: Left	Right	Lengths: Left	Channel	Right	Coeff Contr.	Expan.
11615	11864	4900	5970	4950	.1	.3

CROSS SECTION INPUT Reach: 1 River Station: 18.49
Description: 18.49

Station Elevation Data, num = 50

Sta.	Elev.	Sta.	Elev.	Sta.	Elev.	Sta.	Elev.	Sta.	Elev.
10000	45.7	10062	44.5	10104	44.1	10121	42.6	10123	42
10125	42	10131	42.6	10162	42.5	10171	40.9	10175	40.9
10184	41.2	10245	40.4	10373	36.4	10382	35	10423	32.4
10556	29.2	10718	27.7	10838	28	10925	28	10946	29.2
10990	29.8	11017	29.8	11021	24.2	11075	21.44	11100	8.89
11125	20.2	11153	24.3	11191	25.3	11306	26	11632	26.5
11916	27.9	12175	30.5	12480	31.9	12732	33.5	12962	33.9
13000	35.2	13092	35.6	13165	34.8	13215	34.5	13269	35

13321	36.6	13380	39.4	13399	39.9	13441	40.7	13484	41
13535	42.3	13586	43.9	13671	45.7	13746	46.5	13841	48

Manning's n Values, num = 3

Sta.	Value	Sta.	Value	Sta.	Value
10000	.2	11021	.035	11153	.2

Bank Sta: Left	Right	Lengths: Left	Channel	Right	Coeff Contr.	Expan.
11021	11153	3000	3750	2400	.1	.3

CROSS SECTION INPUT Reach: 1 River Station: 17.78
Description: 17.78

Station Elevation Data, num = 52

Sta.	Elev.	Sta.	Elev.	Sta.	Elev.	Sta.	Elev.	Sta.	Elev.
10000	41	10113	38.4	10203	36.6	10254	36.5	10295	34.9
10305	35	10419	34.2	10565	33.5	10686	33.9	10745	36.2
10772	36.6	10807	32.6	10811	32.6	10842	35.9	10896	33.7
11005	34.2	11028	33	11041	33.5	11069	33.5	11080	33.5
11134	33.5	11349	31.9	11566	32.2	11682	29.7	11732	26.7
11760	25.5	11780	22.9	11800	18.69	11850	15.15	11900	17.19
11949	22.9	11959	22.8	12003	26.6	12112	28.2	12221	29
12310	25.7	12441	21.8	12607	23.4	12697	21.1	12731	25.5
12813	24.5	12924	24.8	13041	23.6	13128	24.4	13219	24.5
13310	29.6	13415	31.6	13559	33.3	13692	34.3	13866	33.4
14015	38.6	14119	41.5						

Manning's n Values, num = 3

Sta.	Value	Sta.	Value	Sta.	Value
10000	.28	11760	.045	12003	.28

Bank Sta: Left	Right	Lengths: Left	Channel	Right	Coeff Contr.	Expan.
11760	12003	2000	2650	3500	.1	.3

CROSS SECTION INPUT Reach: 1 River Station: 17.28
Description: 17.28

Station Elevation Data, num = 44

Sta.	Elev.	Sta.	Elev.	Sta.	Elev.	Sta.	Elev.	Sta.	Elev.
10000	40	10198	39.1	10394	34.9	10555	31.2	10627	25.9
10700	22.6	10783	22.3	10889	23.3	10946	24.3	11046	23.8
11163	21.5	11175	19.2	11200	16.56	11250	13.26	11300	15.71
11376	19.2	11398	21.3	11531	21.3	11634	21.4	11697	24.3
11825	24.6	11973	26	12080	26.7	12143	27.2	12197	27.4
12211	26.6	12264	28.9	12310	32.5	12371	34.1	12451	34
12574	33.7	12636	33.9	12703	33.3	12755	32.5	12825	31.6
12859	32.6	12968	32.8	13028	32.6	13192	32.3	13348	33.1
13491	35.2	13619	36.7	13725	37.4	13951	40		

Manning's n Values, num = 3

Sta.	Value	Sta.	Value	Sta.	Value
10000	.28	11163	.045	11398	.28

Bank Sta: Left	Right	Lengths: Left	Channel	Right	Coeff Contr.	Expan.
11163	11398	4300	3960	3400	.1	.3

CROSS SECTION INPUT Reach: 1 River Station: 16.53

Description: 16.53

Station Elevation Data, num = 51

Sta.	Elev.	Sta.	Elev.	Sta.	Elev.	Sta.	Elev.	Sta.	Elev.
10000	41	10199	39	10243	39.2	10349	37.7	10420	37.2
10510	36.9	10593	36.5	10663	38	10767	38.6	10856	38.7
10895	38.4	10966	37.8	11109	35	11195	32.4	11267	32
11425	29.1	11631	28.6	11718	28	11831	22.6	11955	20.6
12146	20.4	12223	20.3	12330	19.4	12337	19.2	12350	18.24
12390	19.2	12401	20.5	12465	20.5	12475	19.2	12500	15.24
12550	13.6	12600	15.66	12649	19.2	12657	19.8	12675	21.5
12717	21.5	12773	20.4	12853	21.5	12951	23.9	13073	24.5
13155	23	13235	24.9	13347	27.2	13431	28.6	13750	30
14354	34	14516	34.7	14738	34.3	14821	33.6	14895	32.5
14930	41								

Manning's n Values, num = 3

Sta.	Value	Sta.	Value	Sta.	Value
10000	.28	12465	.045	12657	.28

Bank Sta: Left	Right	Lengths: Left	Channel	Right	Coeff Contr.	Expan.
12465	12657	3400	4120	3350	.1	.3

CROSS SECTION INPUT Reach: 1 River Station: 15.75
Description: 15.75

Station Elevation Data, num = 74

Sta.	Elev.	Sta.	Elev.	Sta.	Elev.	Sta.	Elev.	Sta.	Elev.
10000	40	10079	39.2	10161	39.4	10206	40.4	10263	40.2
10337	39.9	10412	39.5	10484	39.1	10541	38.7	10593	39.1
10658	38.9	10732	38	10806	37.6	10876	37.3	10974	38.7
11028	38.6	11097	36.2	11218	31.4	11312	32.8	11372	33.2
11459	32.4	11565	31.6	11614	32.5	11682	33.1	11761	32.2
11837	31.6	11911	32.5	12002	34.2	12191	37	12330	37.6
12490	37	12668	36.3	12754	34.7	12829	33.4	12935	33.4
13049	32.8	13183	32.1	13324	31.2	13417	31	13545	31.5
13688	31.1	13862	28	14128	24.5	14438	24.5	14660	24.5
14830	24.1	14878	25.6	15002	20.5	15056	17.2	15100	13.51
15150	11.9	15200	13.31	15231	17.2	15255	26.7	15341	27
15517	25.1	15722	25.1	15899	26.8	16065	31	16252	37.8
16421	36.2	16474	35.4	16553	33.6	16580	35.7	16612	34.1
16640	34.9	16730	35.9	16802	37.1	16868	37.7	16903	37.9
16935	37	17012	37.5	17112	39.1	17205	40		

Manning's n Values, num = 3

Sta.	Value	Sta.	Value	Sta.	Value
10000	.28	14878	.045	15255	.28

Bank Sta: Left	Right	Lengths: Left	Channel	Right	Coeff Contr.	Expan.
14878	15255	175	175	175	.1	.3

CROSS SECTION INPUT Reach: 1 River Station: 15.72
Description: 15.72

Station Elevation Data, num = 74

Sta.	Elev.	Sta.	Elev.	Sta.	Elev.	Sta.	Elev.	Sta.	Elev.
10000	40	10079	39.2	10161	39.4	10206	40.4	10263	40.2

10337	39.9	10412	39.5	10484	39.1	10541	38.7	10593	39.1
10658	38.9	10732	38	10806	37.6	10876	37.3	10974	38.7
11028	38.6	11097	36.2	11218	31.4	11312	32.8	11372	33.2
11459	32.4	11565	31.6	11614	32.5	11682	33.1	11761	32.2
11837	31.6	11911	32.5	12002	34.2	12191	37	12330	37.6
12490	37	12668	36.3	12754	34.7	12829	33.4	12935	33.4
13049	32.8	13183	32.1	13324	31.2	13417	31	13545	31.5
13688	31.1	13862	28	14128	24.5	14438	24.5	14660	24.5
14830	24.1	14878	25.6	15002	20.5	15056	17.2	15100	13.51
15150	11.9	15200	13.31	15231	17.2	15255	26.7	15341	27
15517	25.1	15722	25.1	15899	26.8	16065	31	16252	37.8
16421	36.2	16474	35.4	16553	33.6	16580	35.7	16612	34.1
16640	34.9	16730	35.9	16802	37.1	16868	37.7	16903	37.9
16935	37	17012	37.5	17112	39.1	17205	40		

Manning's n Values, num = 3

Sta.	Value	Sta.	Value	Sta.	Value
10000	.28	14878	.045	15255	.28

Bank Sta: Left	Right	Lengths: Left	Channel	Right	Coeff Contr.	Expan.
14878	15255	50	50	50	.3	.5

CROSS SECTION INPUT Reach: 1 River Station: 15.71
Description: 15.71

Station Elevation Data, num = 63

Sta.	Elev.	Sta.	Elev.	Sta.	Elev.	Sta.	Elev.	Sta.	Elev.
10000	40	10190	39	10363	38	10556	36.4	10697	34.7
10877	34.8	11024	34.6	11210	34.7	11313	34.7	11479	35.2
11635	36.1	11824	37.5	12029	37.9	12157	37.9	12257	37.6
12351	37.2	12494	36.5	12645	35.5	12770	35	12934	34
13056	34.4	13161	34.2	13256	34.3	13402	33.9	13524	33.9
13649	33.9	13750	33.9	13926	34	14097	34.2	14248	34.2
14423	34.4	14522	35.9	14678	37.6	14820	38.3	14823	34.6
14843	20.1	14924	9.5	14924	37.5	14930	37.5	14930	9.5
14937	9.4	14987	10.2	14992	13.9	14992	38.4	14996	38.4
14996	13.9	15052	18.4	15060	21.4	15060	37.44	15066	37.44
15066	21.4	15135	37.44	15140	38.1	15312	37	15455	34.4
15754	34	15920	33.8	16103	34.2	16250	35.1	16405	36
16573	37.5	16736	38.9	16882	40				

Manning's n Values, num = 3

Sta.	Value	Sta.	Value	Sta.	Value
10000	.28	14820	.045	15140	.28

Bank Sta: Left	Right	Lengths: Left	Channel	Right	Coeff Contr.	Expan.
14820	15140	25	25	25	.3	.5

BRIDGE INPUT Reach: 1 River Station: 15.705
Description: SR-47 Bridge
Distance from Upstream XS = 0
Deck/Roadway Width = 25
Weir Coefficient = 2.6
Bridge Deck/Roadway Skew =
Upstream Deck/Roadway Coordinates, num = 8

Sta.	Hi Cord	Lo Cord	Sta.	Hi Cord	Lo Cord	Sta.	Hi Cord	Lo Cord

****

14820	38.3	38.3	14823	39.15	37.5	14924	39.15	37.5
14992	40.1	38.4	15052	40.1	38.4	15066	39.1	37.44
15135	39.11	37.44	15140	38.1	38.1			

Downstream Deck/Roadway Coordinates, num = 8

Sta.	Hi Cord	Lo Cord	Sta.	Hi Cord	Lo Cord	Sta.	Hi Cord	Lo Cord
14820	38.3	38.3	14823	39.15	37.5	14924	39.15	37.5
14992	40.1	38.4	15052	40.1	38.4	15066	39.1	37.44
15135	39.11	37.44	15140	38.1	38.1			

Elevation at which weir flow begins =
Maximum allowable submergence for weir flow = .95
Submergence criteria :Broad Crested

Number of Bridge Coefficient Sets = 1

Low Flow Methods
Energy
Momentum Cd = 0
Yarnell KVal =
W.S. Pro Method CVal =
Selected Low Flow Methods = Energy

High Flow Method
Energy Only

Additional Bridge Parameters
Add Friction component to Momentum
Do not add Weight component to Momentum
Class B flow critical depth computations use critical depth inside the bridge at the downstream end
Criteria to check for pressure flow = Upstream water surface

CROSS SECTION INPUT Reach: 1 River Station: 15.7
Description: 15.7

Station Elevation Data, num = 63

Sta.	Elev.	Sta.	Elev.	Sta.	Elev.	Sta.	Elev.	Sta.	Elev.
10000	40	10190	39	10363	38	10556	36.4	10697	34.7
10877	34.8	11024	34.6	11210	34.7	11313	34.7	11479	35.2
11635	36.1	11824	37.5	12029	37.9	12157	37.9	12257	37.6
12351	37.2	12494	36.5	12645	35.5	12770	35	12934	34
13056	34.4	13161	34.2	13256	34.3	13402	33.9	13524	33.9
13649	33.9	13750	33.9	13926	34	14097	34.2	14248	34.2
14423	34.4	14522	35.9	14678	37.6	14820	38.3	14823	34.6
14843	20.1	14924	9.5	14924	37.5	14930	37.5	14930	9.5
14937	9.4	14987	10.2	14992	13.9	14992	38.4	14996	38.4
14996	13.9	15052	18.4	15060	21.4	15060	37.44	15066	37.44
15066	21.4	15135	37.44	15140	38.1	15312	37	15455	34.4
15754	34	15920	33.8	16103	34.2	16250	35.1	16405	36
16573	37.5	16736	38.9	16882	40				

Manning's n Values, num = 3

Sta.	Value	Sta.	Value	Sta.	Value
10000	.28	14820	.045	15140	.28

Bank Sta: Left	Right	Lengths: Left	Channel	Right	Coeff Contr.	Expan.
14820	15140	200	200	200	.3	.5

CROSS SECTION INPUT Reach: 1 River Station: 15.66
Description: 15.66

Station Elevation Data, num = 92

Sta.	Elev.	Sta.	Elev.	Sta.	Elev.	Sta.	Elev.	Sta.	Elev.
10000	40	10065	39.6	10193	39.5	10195	37.5	10222	38.9
10232	39.3	10243	38.9	10253	37.3	10274	39.3	10363	38.8
10432	39.7	10490	39.9	10524	39.9	10601	39.7	10659	38.4
10755	37.1	10844	36.3	10987	35.5	11080	34.8	11186	33.8
11296	31.3	11395	32.6	11468	34	11610	36.6	11677	37.9
11769	39	11832	38.5	11914	38	12064	38	12177	38.6
12291	38.9	12353	39.2	12453	38.4	12568	36.3	12638	34.6
12760	30.3	12848	30.3	12903	30.2	13021	31.6	13076	32.9
13172	32.8	13264	32.1	13337	30.7	13424	29.6	13545	29.2
13667	28.1	13773	28.1	13868	28.4	13986	30	14100	31.7
14124	31.7	14224	32.5	14358	29.6	14424	28.6	14504	27.4
14624	27	14663	27.5	14701	28.2	14805	25.7	14841	24.6
14934	26.5	14999	27.2	15071	26.6	15111	25.2	15145	17.3
15200	13.2	15250	10.22	15300	13.52	15343	17.3	15361	17.5
15467	17.9	15513	20.2	15629	25.2	15849	25.2	16088	27.4
16293	29	16439	32.3	16623	35.1	16814	39.2	16857	39.2
16904	40.3	16927	37.1	16955	37.1	16968	35.8	16988	35.4
16998	36.5	17053	37.9	17121	39	17147	38.1	17162	38.1
17179	40.2	17212	41.3						

Manning's n Values, num = 3

Sta.	Value	Sta.	Value	Sta.	Value
10000	.28	15145	.045	15361	.28

Bank Sta: Left	Right	Lengths: Left	Channel	Right	Coeff Contr.	Expan.
15145	15361	3000	2640	2100	.1	.3

CROSS SECTION INPUT Reach: 1 River Station: 15.18
Description: O'neal Residence

Station Elevation Data, num = 35

Sta.	Elev.	Sta.	Elev.	Sta.	Elev.	Sta.	Elev.	Sta.	Elev.
10000	39.5	10238	33.3	10462	31.8	10619	27.4	10703	25.7
10883	26.4	10963	26.8	10976	26.3	10994	26.3	11039	25.4
11178	26	11416	23.9	11547	24.1	11589	21.4	11632	23.9
11777	25.3	11863	23.3	12004	22.7	12118	24.8	12147	17.1
12200	10.2	12250	6.52	12280	10.82	12305	17.1	12318	18.1
12361	24.5	12489	27.6	12561	33.1	12562	37	12608	37
12609	34.5	12702	38.1	12726	38.9	12811	39.2	12915	40

Manning's n Values, num = 3

Sta.	Value	Sta.	Value	Sta.	Value
10000	.28	12118	.045	12361	.28

Bank Sta: Left	Right	Lengths: Left	Channel	Right	Coeff Contr.	Expan.
12118	12361	400	400	400	.1	.3

CROSS SECTION INPUT Reach: 1 River Station: 15.08
Description: Section G (Columbia)

Station Elevation Data, num = 31

Sta.	Elev.	Sta.	Elev.	Sta.	Elev.	Sta.	Elev.	Sta.	Elev.
10000	39.5	10238	33.3	10462	31.8	10619	27.4	10703	25.7
10883	26.4	10963	26.8	10976	26.3	10994	26.3	11039	25.4
11178	26	11416	23.9	11547	24.1	11589	21.4	11632	23.9
11777	25.3	11863	23.3	12004	22.7	12118	24.8	12147	17.1
12200	10.2	12250	6.52	12280	10.82	12305	17.1	12318	18.1
12361	24.5	12489	27.6	12702	38.1	12726	38.9	12811	39.2
12915	40								

Manning's n Values, num = 3

Sta.	Value	Sta.	Value	Sta.	Value
10000	.28	12118	.045	12361	.28

Bank Sta: Left	Right	Lengths: Left	Channel	Right	Coeff Contr.	Expan.
12118	12361	5700	5280	4000	.1	.3

CROSS SECTION INPUT Reach: 1 River Station: 14.08
Description: Section F (Columbia)

Station Elevation Data, num = 38

Sta.	Elev.	Sta.	Elev.	Sta.	Elev.	Sta.	Elev.	Sta.	Elev.
10000	40	10089	37.9	10283	35.7	10472	32.3	10610	31.9
10770	33.9	11030	34	11183	30	11374	26	11475	21.9
11508	20.5	11699	20.7	11981	21.5	12090	23.1	12353	25.3
12443	20.4	12471	16	12500	12.8	12550	10.6	12575	10.5
12600	13.7	12624	16	12650	19.7	12734	23.6	12782	23.6
12838	16.6	12878	23.6	12930	24.6	12985	24.2	13064	30.9
13172	33.4	13298	34.5	13507	36.4	13550	36.6	13572	35.4
13612	37	13835	39.2	13910	40				

Manning's n Values, num = 3

Sta.	Value	Sta.	Value	Sta.	Value
10000	.28	12443	.045	12650	.28

Bank Sta: Left	Right	Lengths: Left	Channel	Right	Coeff Contr.	Expan.
12443	12650	4700	5540	5500	.1	.3

CROSS SECTION INPUT Reach: 1 River Station: 13.03
Description: Section E (Columbia)

Station Elevation Data, num = 31

Sta.	Elev.	Sta.	Elev.	Sta.	Elev.	Sta.	Elev.	Sta.	Elev.
10000	40	10118	38.4	10251	39	10333	39.3	10366	38.1
10479	34	10562	31.5	10858	29.9	11233	29.5	11574	30.7
11746	27.4	11961	26.8	12415	32.3	12535	30.4	12667	23.3
12868	19.7	12920	13.3	12950	8.5	12975	-5.45	13025	7.45
13085	13.3	13185	16.6	13381	16.9	13544	19.1	13733	18.5
13810	20	13901	22.2	14050	22.8	14187	24.2	14265	24.9
14369	40								

Manning's n Values, num = 3

Sta.	Value	Sta.	Value	Sta.	Value
10000	.28	12920	.045	13085	.28

Bank Sta: Left	Right	Lengths: Left	Channel	Right	Coeff Contr.	Expan.
12920	13085	6100	9130	5400	.1	.3

CROSS SECTION INPUT Reach: 1 River Station: 11.3
Description: Section D (Columbia)

Station Elevation Data, num = 28

Sta.	Elev.	Sta.	Elev.	Sta.	Elev.	Sta.	Elev.	Sta.	Elev.
10000	40	10116	35.9	10270	31.3	10433	35.8	10605	38.9
10755	40.5	10968	34.9	11118	28.7	11379	22.9	11645	26.4
11856	20	11938	18.2	12080	14.2	12100	10.6	12200	7.1
12250	7	12300	9.9	12345	14.2	12376	20.2	12427	20.7
12548	19.5	12597	17.3	12861	16.2	13001	17	13088	20.1
13173	30.2	13249	40	13294	41.7				

Manning's n Values, num = 3

Sta.	Value	Sta.	Value	Sta.	Value
10000	.28	12080	.045	12345	.28

Bank Sta: Left	Right	Lengths: Left	Channel	Right	Coeff Contr.	Expan.
12080	12345	5900	6550	4400	.1	.3

CROSS SECTION INPUT Reach: 1 River Station: 10.06
Description: Section C (Columbia)

Station Elevation Data, num = 36

Sta.	Elev.	Sta.	Elev.	Sta.	Elev.	Sta.	Elev.	Sta.	Elev.
10000	38	10243	31.2	10362	28.3	10472	26.4	10548	24.3
10608	12.7	10650	11.31	10689	12.7	10751	16.5	10828	19.7
10926	20.9	10972	19.3	10989	12.7	11000	4.31	11050	1.81
11100	4.8	11133	12.7	11175	16.3	11255	27.9	11288	31.5
11415	30.7	11478	29.3	11498	27.8	11570	28.5	11646	28.6
11859	30.4	12154	31.3	12428	32	12570	35	12697	36.8
12751	35.7	12769	37.3	12846	38.4	13166	35.8	13344	33.1
13443	38								

Manning's n Values, num = 3

Sta.	Value	Sta.	Value	Sta.	Value
10000	.28	10972	.045	11175	.28

Bank Sta: Left	Right	Lengths: Left	Channel	Right	Coeff Contr.	Expan.
10972	11175	5500	8600	6200	.1	.3

CROSS SECTION INPUT Reach: 1 River Station: 8.43
Description: Section B (Columbia)

Station Elevation Data, num = 74

Sta.	Elev.	Sta.	Elev.	Sta.	Elev.	Sta.	Elev.	Sta.	Elev.
10000	38	10181	36.2	10431	36	10664	36	10849	33.8
11010	33.9	11014	32.7	11041	32.7	11046	33.2	11193	34
11328	32.2	11429	31.3	11538	31.1	11623	31.1	11707	30.3
11781	31.5	11819	32.7	11835	33.2	11855	32.2	11863	31.9
11891	31.8	12019	31	12206	30.8	12304	29	12359	28.2
12362	26.9	12369	27.1	12375	27	12378	27.3	12415	26
12472	25	12515	23.4	12537	21.1	12559	17.4	12579	14.2
12592	12.1	12610	10.73	12638	12.1	12647	15.7	12677	15.7
12702	15.8	12710	15.8	12714	15.2	12720	12.1	12730	4.67
12800	-1	12830	2.77	12884	12.1	12896	18.6	12942	17.7
13004	17.7	13180	17.6	13277	24.7	13305	28.3	13322	27.3
13330	26.4	13333	25.3	13335	26.5	13355	27.7	13541	29

13705	26.7	13891	27	14100	27.3	14310	27.6	14510	28.4
14856	30.2	15078	31.3	15386	30.2	15582	30.7	15779	31.2
16054	30.7	16257	30.3	16376	31.3	16639	38		

Manning's n Values, num = 3

Sta.	Value	Sta.	Value	Sta.	Value
10000	.28	12714	.045	12896	.28

Bank Sta: Left	Right	Lengths: Left	Channel	Right	Coeff Contr.	Expan.
12714	12896	2600	4170	4600	.1	.3

CROSS SECTION INPUT Reach: 1 River Station: 7.64
Description: 7.64

Station Elevation Data, num = 59

Sta.	Elev.	Sta.	Elev.	Sta.	Elev.	Sta.	Elev.	Sta.	Elev.
10000	38	10083	34.9	10106	34.9	10112	34.3	10114	33.4
10127	33.4	10130	34.9	10135	34.7	10139	33.8	10207	34.6
10267	34.5	10282	34.1	10310	34.2	10329	34.3	10394	33.7
10561	33.6	10875	33.4	11000	31.9	11330	31.9	11668	31.1
11785	31.1	11999	30.3	12182	30.3	12527	16.4	12750	16.4
12958	18.4	13084	18.4	13100	12.3	13166	2.75	13236	10.05
13252	12.4	13266	15.6	13305	16.6	13336	17.7	13359	20.7
13380	23.3	13414	24.6	13458	25	13472	24.8	13481	24.4
13497	24.6	13511	24	13516	23	13521	23.6	13542	24.5
13630	22.3	13858	23	14088	22.8	14397	29.2	14848	31.3
15206	31.9	15230	31.6	15240	31.6	15294	32	15347	33.1
15390	33.2	15405	33.2	15461	33.5	15720	38		

Manning's n Values, num = 3

Sta.	Value	Sta.	Value	Sta.	Value
10000	.28	13084	.045	13266	.28

Bank Sta: Left	Right	Lengths: Left	Channel	Right	Coeff Contr.	Expan.
13084	13266	4950	6230	4900	.1	.3

CROSS SECTION INPUT Reach: 1 River Station: 6.46
Description: 6.46

Station Elevation Data, num = 99

Sta.	Elev.	Sta.	Elev.	Sta.	Elev.	Sta.	Elev.	Sta.	Elev.
10000	40.3	10049	40.2	10052	39.9	10063	39.8	10080	39.9
10108	40	10130	39.9	10167	39.6	10232	38.7	10302	35.9
10379	35	10422	35.1	10496	35.3	10544	38.1	10588	38
10627	37.6	10659	35.4	10671	34.4	10678	34.4	10708	36.1
10744	37.6	10824	37.9	10848	37.2	10877	36.8	10940	36.9
11029	36.7	11120	37.2	11217	36.6	11346	36.1	11451	36.7
11572	37.2	11660	37.8	11807	38.8	11835	38.7	11879	37.9
11910	37.7	11983	37.5	12048	37.3	12139	36.1	12228	34.7
12480	33.4	12675	33.1	12704	33	12836	33.2	12943	33.1
12970	32.3	12980	32.2	12989	33.1	12995	33.1	13007	31.3
13133	31.3	13215	30.7	13321	28.7	13410	25.1	13477	20.7
13596	19.8	13692	16.2	14143	15.9	14263	15	14360	14
14497	14	14538	14	14544	11.2	14619	2.53	14744	11
14754	12.8	14794	13.9	14825	15.3	14866	19.6	14895	22.1
14928	21.9	14956	21.1	15044	21.1	15205	24.2	15252	28
15276	26.3	15286	26.4	15296	27.5	15306	27.5	15318	27.1

15322	27.1	15372	28.7	15456	29.1	15659	28.3	15733	27.4
15791	27.4	15860	27.1	15924	27.9	15989	29.2	16077	32.5
16172	34.9	16285	36.4	16497	34.1	16615	32	16704	33.8
16828	35.7	16934	38.3	17048	40.4	17123	40.9		

Manning's n Values, num = 3

Sta.	Value	Sta.	Value	Sta.	Value
10000	.28	14538	.045	14754	.28

Bank Sta: Left	Right	Lengths: Left	Channel	Right	Coeff Contr.	Expan.
14538	14754	8200	9150	9900	.1	.3

CROSS SECTION INPUT Reach: 1 River Station: 4.73
Description: 4.73

Station Elevation Data, num = 53

Sta.	Elev.	Sta.	Elev.	Sta.	Elev.	Sta.	Elev.	Sta.	Elev.
10000	40.7	10052	38.2	10114	37.6	10172	35.6	10232	34.5
10299	33.4	10368	33.5	10431	32.3	10482	31.9	10540	31.7
10604	31.3	10668	30.5	10720	29.3	10771	24.8	10833	21.2
10901	19.7	10969	19.3	11043	18.7	11139	18	11214	15.9
11283	12.2	11367	12.1	11388	13.9	11436	14.8	11473	14.7
11482	11.7	11492	9.65	11552	1.55	11615	9.65	11646	11.7
11675	21.2	11707	21.6	11753	19.1	11813	19.1	11860	19.2
11907	19.2	11997	15.7	12084	15.9	12157	19.1	12265	22.8
12358	26	12453	28.4	12522	28.7	12587	29.7	12677	32.3
12814	34.3	12931	34.3	13040	34.7	13176	33.8	13309	33.5
13457	35.9	13559	37.1	13654	40.2				

Manning's n Values, num = 3

Sta.	Value	Sta.	Value	Sta.	Value
10000	.28	11473	.045	11646	.28

Bank Sta: Left	Right	Lengths: Left	Channel	Right	Coeff Contr.	Expan.
11473	11646	5600	5960	4400	.1	.3

CROSS SECTION INPUT Reach: 1 River Station: 3.6
Description: 3.6

Station Elevation Data, num = 50

Sta.	Elev.	Sta.	Elev.	Sta.	Elev.	Sta.	Elev.	Sta.	Elev.
10000	36	10093	33.1	10172	31.3	10218	30.6	10254	31.1
10289	31.3	10322	30.1	10366	29.7	10407	28.7	10447	26.3
10486	22.7	10522	19.5	10552	17.3	10579	16.1	10614	15
10640	14.1	10656	11.7	10665	9.35	10770	.75	10831	9.35
11136	11.7	11154	16.9	11198	15.3	11261	13.1	11328	13.2
11382	13.5	11435	14.8	11496	14.8	11548	18.2	11622	19.7
11718	20.5	11791	19.4	11880	22	11967	20.8	12069	20.4
12169	20.4	12264	20.4	12323	23.5	12354	25.4	12403	26.1
12438	26.6	12476	28.3	12576	32.2	12640	33.7	12711	33.6
12793	33	12887	33.7	12942	33.7	13025	34.7	13115	36.4

Manning's n Values, num = 3

Sta.	Value	Sta.	Value	Sta.	Value
10000	.28	10656	.045	10831	.28

Bank Sta: Left Right Lengths: Left Channel Right Coeff Contr. Expan.

10656	10831	3750	3800	3800	.1	.3

CROSS SECTION INPUT Reach: 1 River Station: 2.88
Description: 2.88

Station Elevation Data, num = 49

Sta.	Elev.	Sta.	Elev.	Sta.	Elev.	Sta.	Elev.	Sta.	Elev.
10000	36.5	10037	33.8	10101	32.1	10140	32	10197	31.1
10263	30.3	10334	29.4	10408	29.4	10486	30	10558	29.2
10623	27.6	10700	26	10788	23.4	10912	20.5	10972	18.5
11070	18.2	11222	18.2	11307	19.1	11353	19	11487	21.7
11592	23.2	11703	25.4	11775	20.6	11857	19	11970	16
12074	15.9	12170	15.9	12197	11.6	12210	9.19	12274	.89
12294	.2	12344	3.99	12363	9.19	12377	11.6	12427	13.3
12527	14.2	12649	13.8	12722	16.6	12818	20.9	12924	20
13036	21.2	13134	22.6	13291	27.4	13464	30	13657	31.8
13741	32.8	13810	34	13846	34.8	13877	36.5		

Manning's n Values, num = 3

Sta.	Value	Sta.	Value	Sta.	Value
10000	.28	12170	.045	12377	.28

Bank Sta: Left	Right	Lengths: Left	Channel	Right	Coeff Contr.	Expan.
12170	12377	2000	2006	1900	.1	.3

CROSS SECTION INPUT Reach: 1 River Station: 2.5
Description: 2.5

Station Elevation Data, num = 67

Sta.	Elev.	Sta.	Elev.	Sta.	Elev.	Sta.	Elev.	Sta.	Elev.
10000	35.9	10066	29.4	10127	30.4	10193	31	10262	30.9
10336	33.3	10413	33.8	10480	32.6	10545	31.9	10617	31.7
10674	31.6	10764	30.8	10839	30.1	10922	29.1	10999	27.6
11098	28.8	11175	30.1	11222	30.1	11294	30.2	11335	27.8
11375	25.6	11416	24.3	11438	23.9	11487	23.4	11562	23.3
11643	22.5	11663	24.8	11697	23.6	11730	21.7	11769	20.5
11860	18.3	11963	18	12060	18.5	12145	18.5	12224	17.7
12295	17.9	12373	18.9	12448	19	12488	16.8	12547	16.4
12575	18.3	12599	18.9	12612	16.5	12632	9.42	12757	-2.58
12792	16.5	12860	16.6	13039	16.6	13214	17.3	13250	19.1
13298	22	13375	23.7	13470	25.1	13557	26.5	13667	29.2
13747	28.9	13846	28.5	13920	27.4	13999	28.4	14088	29.3
14173	31.7	14275	33	14339	33.1	14371	33.8	14417	34.5
14452	34.5	14491	35.6						

Manning's n Values, num = 3

Sta.	Value	Sta.	Value	Sta.	Value
10000	.28	12612	.045	12792	.28

Bank Sta: Left	Right	Lengths: Left	Channel	Right	Coeff Contr.	Expan.
12612	12792	205	205	205	.1	.3

CROSS SECTION INPUT Reach: 1 River Station: 2.46
Description: 2.46

Station Elevation Data, num = 67

Sta.	Elev.	Sta.	Elev.	Sta.	Elev.	Sta.	Elev.	Sta.	Elev.

10000	35.9	10066	29.4	10127	30.4	10193	31	10262	30.9
10336	33.3	10413	33.8	10480	32.6	10545	31.9	10617	31.7
10674	31.6	10764	30.8	10839	30.1	10922	29.1	10999	27.6
11098	28.8	11175	30.1	11222	30.1	11294	30.2	11335	27.8
11375	25.6	11416	24.3	11438	23.9	11487	23.4	11562	23.3
11643	22.5	11663	24.8	11697	23.6	11730	21.7	11769	20.5
11860	18.3	11963	18	12060	18.5	12145	18.5	12224	17.7
12295	17.9	12373	18.9	12448	19	12488	16.8	12547	16.4
12575	18.3	12599	18.9	12612	16.5	12632	9.42	12757	-2.58
12792	16.5	12860	16.6	13039	16.6	13214	17.3	13250	19.1
13298	22	13375	23.7	13470	25.1	13557	26.5	13667	29.2
13747	28.9	13846	28.5	13920	27.4	13999	28.4	14088	29.3
14173	31.7	14275	33	14339	33.1	14371	33.8	14417	34.5
14452	34.5	14491	35.6						

Manning's n Values, num = 3

Sta.	Value	Sta.	Value	Sta.	Value
10000	.28	12612	.045	12792	.28

Bank Sta: Left	Right	Lengths: Left	Channel	Right	Coeff Contr.	Expan.
12612	12792	70	70	70	.3	.5

CROSS SECTION INPUT Reach: 1 River Station: 2.45
Description: 2.45

Station Elevation Data, num = 66

Sta.	Elev.	Sta.	Elev.	Sta.	Elev.	Sta.	Elev.	Sta.	Elev.
10000	35.7	10095	32.5	10168	32.5	10264	32.5	10374	32.6
10455	32.6	10550	32.7	10659	32.7	10782	32.8	10926	32.9
11074	33	11156	33.1	11226	33	11310	33	11389	32.9
11459	32.9	11550	33.1	11576	15.44	11670	13.63	11670	31.33
11675	31.3	11675	13.12	11680	13.12	11698	9.58	11700	7.33
11700	31.3	11705	31.33	11705	7.33	11765	-2.6	11765	29.89
11771	29.9	11771	-6.51	11773	-7.5	11854	6.53	11860	9.54
11870	11.3	11870	31.33	11875	31.33	11875	11.35	11885	14.33
11885	31.3	11890	31.33	11890	15.33	12000	33.3	12044	33.4
12150	33.4	12217	33.5	12320	33.5	12398	33.5	12468	33.4
12558	33.3	12680	33.2	12792	33.2	12911	33.3	13016	33.3
13092	33.3	13195	33.4	13291	33.4	13435	33.3	13583	33.4
13725	33.3	13878	33.3	14023	33.4	14157	33.7	14217	34.1
14356	35.9								

Manning's n Values, num = 3

Sta.	Value	Sta.	Value	Sta.	Value
10000	.28	11550	.045	12000	.28

Bank Sta: Left	Right	Lengths: Left	Channel	Right	Coeff Contr.	Expan.
11550	12000	25	25	25	.3	.5

BRIDGE INPUT Reach: 1 River Station: 2.445
Description: US-129 Bridge
Distance from Upstream XS = 0
Deck/Roadway Width = 25
Weir Coefficient = 2.6
Bridge Deck/Roadway Skew =
Upstream Deck/Roadway Coordinates, num = 8

Sta.	Hi Cord	Lo Cord	Sta.	Hi Cord	Lo Cord	Sta.	Hi Cord	Lo Cord

```
**********************************************************************
   11550    33.1    33.1   11675    33.1    31.3   11705    33.1    31.3
   11765    33.1    29.9   11860    33.1    29.9   11870    33.1    31.3
   11890    33.1    31.3   12000    33.3    33.3
Downstream Deck/Roadway Coordinates,  num = 8
    Sta. Hi Cord Lo Cord    Sta. Hi Cord Lo Cord    Sta. Hi Cord Lo Cord
**********************************************************************
   11550    33.1    33.1   11675    33.1    31.3   11705    33.1    31.3
   11765    33.1    29.9   11860    33.1    29.9   11870    33.1    31.3
   11890    33.1    31.3   12000    33.3    33.3
Elevation at which weir flow begins          =
Maximum allowable submergence for weir flow =     .95
Submergence criteria :Broad Crested

Number of Bridge Coefficient Sets =  1

Low Flow Methods
       Energy
       Momentum                Cd   =       0
       Yarnell                 KVal =
       W.S. Pro Method         CVal =
Selected Low Flow Methods = Energy

High Flow Method
       Energy Only

Additional Bridge Parameters
       Add Friction component to Momentum
       Do not add Weight component to Momentum
       Class B flow critical depth computations use critical depth
           inside the bridge at the downstream end
       Criteria to check for pressure flow = Upstream water surface

CROSS SECTION INPUT    Reach: 1              River Station: 2.44
Description:  2.44

Station Elevation Data,  num = 66
    Sta.   Elev.    Sta.   Elev.    Sta.   Elev.    Sta.   Elev.    Sta.   Elev.
   10000    35.7   10095    32.5   10168    32.5   10264    32.5   10374    32.6
   10455    32.6   10550    32.7   10659    32.7   10782    32.8   10926    32.9
   11074      33   11156    33.1   11226      33   11310      33   11389    32.9
   11459    32.9   11550    33.1   11576   15.44   11670   13.63   11670   31.33
   11675    31.3   11675   13.12   11680   13.12   11698    9.58   11700    7.33
   11700    31.3   11705   31.33   11705    7.33   11765    -2.6   11765   29.89
   11771    29.9   11771   -6.51   11773    -7.5   11854    6.53   11860    9.54
   11870    11.3   11870   31.33   11875   31.33   11875   11.35   11885   14.33
   11885    31.3   11890   31.33   11890   15.33   12000    33.3   12044    33.4
   12150    33.4   12217    33.5   12320    33.5   12398    33.5   12468    33.4
   12558    33.3   12680    33.2   12792    33.2   12911    33.3   13016    33.3
   13092    33.3   13195    33.4   13291    33.4   13435    33.3   13583    33.4
   13725    33.3   13878    33.3   14023    33.4   14157    33.7   14217    34.1
   14356    35.9

Manning's n Values,  num = 3
    Sta.   Value    Sta.   Value    Sta.   Value
   10000     .28   11550    .045   12000     .28
```

```
Bank Sta: Left   Right    Lengths: Left Channel   Right    Coeff Contr.   Expan.
         11550   12000              275     275     275             .3       .5

CROSS SECTION INPUT    Reach: 1              River Station: 2.39
Description:  2.39

Station Elevation Data,  num = 41
    Sta.   Elev.    Sta.   Elev.    Sta.   Elev.    Sta.   Elev.    Sta.   Elev.
   10000    35.5   10081    30.3   10178      27   10304    28.9   10401    27.9
   10484    27.4   10594      24   10711    26.6   10793    24.5   10868    26.2
   10947    25.1   11042    21.4   11135    18.7   11207    19.1   11374    17.3
   11447    14.9   11866    16.7   11896    17.3   11922    18.6   11933    16.4
   11946    13.4   11956    8.79   12041   -5.21   12111    8.79   12123    16.4
   12156    16.6   12192    16.2   12267    16.4   12325    16.4   12371    16.2
   12394    16.3   12434    21.5   12470    25.2   12488    25.8   12522    26.4
   12569    26.9   12610    27.7   12671    28.5   12742    29.2   12814    30.2
   12862    35.5

Manning's n Values,  num = 3
    Sta.   Value    Sta.   Value    Sta.   Value
   10000     .28   11933    .045   12123     .28

Bank Sta: Left   Right    Lengths: Left Channel   Right    Coeff Contr.   Expan.
         11933   12123              3000    4118    4300             .1       .3

CROSS SECTION INPUT    Reach: 1              River Station: 1.61
Description:  1.61

Station Elevation Data,  num = 30
    Sta.   Elev.    Sta.   Elev.    Sta.   Elev.    Sta.   Elev.    Sta.   Elev.
   10000    35.5   10071    29.6   10159    29.6   10250    27.4   10331    23.7
   10382    20.9   10451    18.9   10520    18.1   10585    16.7   10640    17.9
   10697    19.3   10762    19.4   10820    19.1   10867    18.2   10931    19.1
   10979    20.9   11119    16.2   11147    9.24   11222   -3.46   11282  -10.46
   11317     9.2   11389    16.2   11507    19.1   11561    20.1   11607    25.4
   11666    27.9   11731    30.9   11783    32.1   11846    31.8   11894   35.59

Manning's n Values,  num = 3
    Sta.   Value    Sta.   Value    Sta.   Value
   10000     .28   11119    .045   11389     .28

Bank Sta: Left   Right    Lengths: Left Channel   Right    Coeff Contr.   Expan.
         11119   11389                 0       0       0             .1       .3

*******************************************************************************

SUMMARY OF MANNING'S N VALUES

*********************************************************************
*    Reach    * River Sta. *   n1   *   n2   *   n3   *   n4   *   n5   *
*********************************************************************
*1           *    79.85   *    .42*    .089*    .42*        *        *
*1           *    79.1    *    .42*    .089*    .42*      99*        *
*1           *    78.16   *    .42*    .089*    .42*      99*        *
*1           *    76.67   *    .42*    .089*    .42*      99*        *
*1           *    75.55   *     99*     .42*   .089*     .42*      99*
*1           *    75.15   *     99*     .42*   .089*     .42*      99*
```

*1	*	75	*	99*	.42*	.089*	.42*	99*
*1	*	74.98	*	.42*	.089*	.42*	*	*
*1	*	74.9750	*	Bridge*	*	*	*	*
*1	*	74.97	*	.42*	.089*	.42*	*	*
*1	*	74.92	*	99*	.42*	.089*	.42*	99*
*1	*	74.35	*	99*	.42*	.089*	.42*	99*
*1	*	74.3	*	99*	.42*	.089*	.42*	99*
*1	*	74.28	*	.42*	.089*	.42*	*	*
*1	*	74.2749	*	Bridge*	*	*	*	*
*1	*	74.27	*	.42*	.089*	.42*	*	*
*1	*	74.23	*	99*	.42*	.089*	.42*	99*
*1	*	74.04	*	99*	.42*	.089*	.42*	99*
*1	*	73.94	*	99*	.42*	.089*	.42*	99*
*1	*	73.36	*	.42*	.089*	.42*	*	*
*1	*	73.32	*	.42*	.089*	.42*	*	*
*1	*	73.31	*	.42*	.089*	.42*	*	*
*1	*	73.305	*	Bridge*	*	*	*	*
*1	*	73.3	*	.42*	.089*	.42*	*	*
*1	*	73.27	*	.42*	.089*	.42*	*	*
*1	*	72.59	*	.42*	.089*	.42*	*	*
*1	*	71.46	*	.42*	.089*	.42*	*	*
*1	*	70.18	*	.42*	.089*	.42*	*	*
*1	*	69.45	*	.42*	.089*	.42*	*	*
*1	*	69.38	*	.42*	.089*	.42*	*	*
*1	*	69.375	*	Bridge*	*	*	*	*
*1	*	69.37	*	.42*	.089*	.42*	*	*
*1	*	69.22	*	.42*	.089*	.42*	*	*
*1	*	68.72	*	.42*	.089*	.42*	*	*
*1	*	67.83	*	.42*	.089*	.42*	*	*
*1	*	67.11	*	.42*	.089*	.42*	*	*
*1	*	65.99	*	.42*	.089*	.42*	*	*
*1	*	65.97	*	.42*	.089*	.42*	*	*
*1	*	65.965	*	Bridge*	*	*	*	*
*1	*	65.96	*	.42*	.089*	.42*	*	*
*1	*	65.89	*	.42*	.089*	.42*	*	*
*1	*	65.86	*	.42*	.089*	.42*	*	*
*1	*	64.57	*	.42*	.089*	.42*	*	*
*1	*	63.6	*	.42*	.089*	.42*	*	*
*1	*	62.24	*	.42*	.089*	.42*	*	*
*1	*	61.02	*	.42*	.089*	.42*	*	*
*1	*	59.68	*	.42*	.089*	.42*	*	*
*1	*	59.66	*	.42*	.089*	.42*	*	*
*1	*	59.655	*	Bridge*	*	*	*	*
*1	*	59.65	*	.42*	.089*	.42*	*	*
*1	*	59.57	*	.42*	.089*	.42*	*	*
*1	*	59.26	*	.42*	.089*	.42*	*	*
*1	*	58.81	*	.42*	.089*	.42*	*	*
*1	*	58.79	*	.42*	.089*	.42*	*	*
*1	*	58.785	*	Bridge*	*	*	*	*
*1	*	58.78	*	.42*	.089*	.42*	*	*
*1	*	58.7	*	.42*	.089*	.42*	*	*
*1	*	58.15	*	.42*	.089*	.42*	*	*
*1	*	57.21	*	.42*	.089*	.42*	*	*
*1	*	56.22	*	.4*	.06*	.4*	*	*
*1	*	55.99	*	.4*	.06*	.4*	*	*
*1	*	55.96	*	.4*	.06*	.4*	*	*
*1	*	55.955	*	Bridge*	*	*	*	*

*1	*	55.95	*	.4*	.06*	.4*	*	*
*1	*	55.83	*	.4*	.06*	.4*	*	*
*1	*	54.27	*	.4*	.06*	.4*	*	*
*1	*	53.44	*	.4*	.06*	.4*	*	*
*1	*	51.87	*	.4*	.06*	.4*	*	*
*1	*	49.61	*	.31*	.059*	.31*	*	*
*1	*	49.48	*	.31*	.059*	.31*	*	*
*1	*	49.46	*	.31*	.059*	.31*	*	*
*1	*	49.455	*	Bridge*	*	*	*	*
*1	*	49.45	*	.31*	.059*	.31*	*	*
*1	*	49.38	*	.31*	.059*	.31*	*	*
*1	*	49.31	*	.31*	.059*	.31*	*	*
*1	*	49.29	*	.31*	.059*	.31*	*	*
*1	*	49.285	*	Bridge*	*	*	*	*
*1	*	49.28	*	.31*	.059*	.31*	*	*
*1	*	49.19	*	.31*	.059*	.31*	*	*
*1	*	48.04	*	.31*	.059*	.31*	*	*
*1	*	46.59	*	.31*	.059*	.31*	*	*
*1	*	45.48	*	.31*	.059*	.31*	*	*
*1	*	44.02	*	.31*	.059*	.31*	*	*
*1	*	42.54	*	.31*	.059*	.31*	*	*
*1	*	41.67	*	.31*	.059*	.31*	*	*
*1	*	41.63	*	.31*	.059*	.31*	*	*
*1	*	41.62	*	.31*	.059*	.31*	*	*
*1	*	41.615	*	Bridge*	*	*	*	*
*1	*	41.61	*	.31*	.059*	.31*	*	*
*1	*	41.56	*	.31*	.059*	.31*	*	*
*1	*	40.91	*	.31*	.059*	.31*	*	*
*1	*	39.81	*	.2*	.035*	.2*	*	*
*1	*	39.02	*	.2*	.035*	.2*	*	*
*1	*	37.98	*	.2*	.035*	.2*	*	*
*1	*	37.25	*	.2*	.035*	.2*	*	*
*1	*	37.19	*	.2*	.035*	.2*	*	*
*1	*	37.17	*	.2*	.035*	.2*	*	*
*1	*	37.165	*	Bridge*	*	*	*	*
*1	*	37.16	*	.2*	.035*	.2*	*	*
*1	*	37.07	*	.2*	.035*	.2*	*	*
*1	*	35.58	*	.2*	.035*	.2*	*	*
*1	*	35.57	*	.2*	.035*	.2*	*	*
*1	*	33.85	*	.2*	.1*	.2*	*	*
*1	*	33.09	*	.2*	.1*	.2*	*	*
*1	*	32.18	*	.2*	.1*	.2*	*	*
*1	*	30.42	*	.2*	.1*	.2*	*	*
*1	*	28.94	*	.2*	.035*	.2*	*	*
*1	*	27.82	*	.2*	.035*	.2*	*	*
*1	*	27.79	*	.2*	.035*	.2*	*	*
*1	*	27.77	*	.2*	.035*	.2*	*	*
*1	*	27.765	*	Bridge*	*	*	*	*
*1	*	27.76	*	.2*	.035*	.2*	*	*
*1	*	27.68	*	.2*	.035*	.2*	*	*
*1	*	26.52	*	.2*	.035*	.2*	*	*
*1	*	25.19	*	.2*	.035*	.2*	*	*
*1	*	24.54	*	.2*	.035*	.2*	*	*
*1	*	24.52	*	.2*	.035*	.2*	*	*
*1	*	24.51	*	.2*	.035*	.2*	*	*
*1	*	24.505	*	Bridge*	*	*	*	*
*1	*	24.5	*	.2*	.035*	.2*	*	*

*1	*	24.49	*	.2*	.035*	.2*	*	*
*1	*	24.48	*	.2*	.035*	.2*	*	*
*1	*	24.475	*	Bridge*	*	*	*	*
*1	*	24.47	*	.2*	.035*	.2*	*	*
*1	*	24.44	*	.2*	.035*	.2*	*	*
*1	*	24.15	*	.2*	.035*	.2*	*	*
*1	*	23.82	*	.2*	.035*	.2*	*	*
*1	*	23.14	*	.2*	.035*	.2*	*	*
*1	*	22.24	*	.2*	.035*	.2*	*	*
*1	*	21.59	*	.2*	.035*	.2*	*	*
*1	*	20.44	*	.2*	.035*	.2*	*	*
*1	*	19.62	*	.2*	.035*	.2*	*	*
*1	*	18.49	*	.2*	.035*	.2*	*	*
*1	*	17.78	*	.28*	.045*	.28*	*	*
*1	*	17.28	*	.28*	.045*	.28*	*	*
*1	*	16.53	*	.28*	.045*	.28*	*	*
*1	*	15.75	*	.28*	.045*	.28*	*	*
*1	*	15.72	*	.28*	.045*	.28*	*	*
*1	*	15.71	*	.28*	.045*	.28*	*	*
*1	*	15.705	*	Bridge*	*	*	*	*
*1	*	15.7	*	.28*	.045*	.28*	*	*
*1	*	15.66	*	.28*	.045*	.28*	*	*
*1	*	15.18	*	.28*	.045*	.28*	*	*
*1	*	15.08	*	.28*	.045*	.28*	*	*
*1	*	14.08	*	.28*	.045*	.28*	*	*
*1	*	13.03	*	.28*	.045*	.28*	*	*
*1	*	11.3	*	.28*	.045*	.28*	*	*
*1	*	10.06	*	.28*	.045*	.28*	*	*
*1	*	8.43	*	.28*	.045*	.28*	*	*
*1	*	7.64	*	.28*	.045*	.28*	*	*
*1	*	6.46	*	.28*	.045*	.28*	*	*
*1	*	4.73	*	.28*	.045*	.28*	*	*
*1	*	3.6	*	.28*	.045*	.28*	*	*
*1	*	2.88	*	.28*	.045*	.28*	*	*
*1	*	2.5	*	.28*	.045*	.28*	*	*
*1	*	2.46	*	.28*	.045*	.28*	*	*
*1	*	2.45	*	.28*	.045*	.28*	*	*
*1	*	2.445	*	Bridge*	*	*	*	*
*1	*	2.44	*	.28*	.045*	.28*	*	*
*1	*	2.39	*	.28*	.045*	.28*	*	*
*1	*	1.61	*	.28*	.045*	.28*	*	*

SUMMARY OF REACH LENGTHS

*	Reach	*	River Sta.	*	Left	*	Channel	*	Right	*
*1		*	79.85	*	4150	*	3960	*	3900	*
*1		*	79.1	*	4800	*	4963	*	5500	*
*1		*	78.16	*	7300	*	7867	*	8200	*
*1		*	76.67	*	4500	*	5914	*	7000	*
*1		*	75.55	*	1950	*	2080	*	2250	*
*1		*	75.15	*	692	*	792	*	840	*
*1		*	75	*	125	*	125	*	125	*
*1		*	74.98	*	32	*	32	*	32	*

*1	*	74.9750	*	Bridge*	*	*
*1	*	74.97	*	300*	250*	250*
*1	*	74.92	*	3350*	3009*	2450*
*1	*	74.35	*	265*	265*	265*
*1	*	74.3	*	136*	136*	136*
*1	*	74.28	*	13.5*	13.5*	13.5*
*1	*	74.2749	*	Bridge*	*	*
*1	*	74.27	*	200*	200*	200*
*1	*	74.23	*	1000*	1000*	1000*
*1	*	74.04	*	550*	528*	525*
*1	*	73.94	*	2062*	3062*	2000*
*1	*	73.36	*	211*	211*	211*
*1	*	73.32	*	50*	50*	50*
*1	*	73.31	*	75*	75*	75*
*1	*	73.305	*	Bridge*	*	*
*1	*	73.3	*	150*	150*	150*
*1	*	73.27	*	3300*	3590*	3550*
*1	*	72.59	*	5850*	5966*	5650*
*1	*	71.46	*	6350*	6758*	6700*
*1	*	70.18	*	3400*	3854*	3200*
*1	*	69.45	*	370*	370*	370*
*1	*	69.38	*	30*	30*	30*
*1	*	69.375	*	Bridge*	*	*
*1	*	69.37	*	792*	792*	792*
*1	*	69.22	*	2000*	2640*	2200*
*1	*	68.72	*	4150*	4699*	4300*
*1	*	67.83	*	3600*	3802*	3550*
*1	*	67.11	*	4500*	5914*	4800*
*1	*	65.99	*	130*	130*	130*
*1	*	65.97	*	25*	25*	25*
*1	*	65.965	*	Bridge*	*	*
*1	*	65.96	*	370*	370*	370*
*1	*	65.89	*	100*	158*	90*
*1	*	65.86	*	5500*	6811*	4600*
*1	*	64.57	*	4400*	5122*	3900*
*1	*	63.6	*	5500*	7180*	5900*
*1	*	62.24	*	5400*	6442*	5000*
*1	*	61.02	*	6000*	7075*	6700*
*1	*	59.68	*	100*	100*	100*
*1	*	59.66	*	50*	50*	50*
*1	*	59.655	*	Bridge*	*	*
*1	*	59.65	*	400*	400*	400*
*1	*	59.57	*	1500*	1637*	1400*
*1	*	59.26	*	2100*	2376*	2000*
*1	*	58.81	*	106*	106*	106*
*1	*	58.79	*	50*	50*	50*
*1	*	58.785	*	Bridge*	*	*
*1	*	58.78	*	422*	422*	422*
*1	*	58.7	*	2500*	2904*	2600*
*1	*	58.15	*	4100*	4963*	4200*
*1	*	57.21	*	3600*	5227*	3550*
*1	*	56.22	*	800*	1214*	890*
*1	*	55.99	*	100*	150*	110*
*1	*	55.96	*	50*	50*	50*
*1	*	55.955	*	Bridge*	*	*
*1	*	55.95	*	650*	634*	600*
*1	*	55.83	*	5800*	8237*	4600*

*1	*	54.27	*	2900*	4382*	2700*
*1	*	53.44	*	5900*	8290*	6200*
*1	*	51.87	*	6000*	11933*	7100*
*1	*	49.61	*	725*	745*	525*
*1	*	49.48	*	100*	100*	100*
*1	*	49.46	*	25*	25*	25*
*1	*	49.455	*	Bridge*	*	*
*1	*	49.45	*	250*	350*	450*
*1	*	49.38	*	325*	375*	425*
*1	*	49.31	*	100*	100*	100*
*1	*	49.29	*	25*	25*	25*
*1	*	49.285	*	Bridge*	*	*
*1	*	49.28	*	500*	450*	350*
*1	*	49.19	*	4450*	6072*	4250*
*1	*	48.04	*	5800*	7656*	6200*
*1	*	46.59	*	4200*	5861*	4550*
*1	*	45.48	*	5150*	7709*	5100*
*1	*	44.02	*	5300*	7814*	5600*
*1	*	42.54	*	3400*	4594*	3400*
*1	*	41.67	*	200*	242*	200*
*1	*	41.63	*	50*	50*	50*
*1	*	41.62	*	25*	25*	25*
*1	*	41.615	*	Bridge*	*	*
*1	*	41.61	*	250*	264*	250*
*1	*	41.56	*	3250*	3432*	3000*
*1	*	40.91	*	3500*	5808*	5000*
*1	*	39.81	*	3900*	4171*	3500*
*1	*	39.02	*	5600*	5491*	4200*
*1	*	37.98	*	3175*	3854*	3900*
*1	*	37.25	*	300*	300*	300*
*1	*	37.19	*	105*	105*	105*
*1	*	37.17	*	70*	70*	70*
*1	*	37.165	*	Bridge*	*	*
*1	*	37.16	*	450*	475*	450*
*1	*	37.07	*	4700*	7867*	5400*
*1	*	35.58	*	20*	20*	20*
*1	*	35.57	*	6500*	9134*	7700*
*1	*	33.85	*	4000*	4013*	3200*
*1	*	33.09	*	3700*	4805*	4700*
*1	*	32.18	*	5500*	9293*	3000*
*1	*	30.42	*	6000*	7814*	5800*
*1	*	28.94	*	5300*	5914*	3900*
*1	*	27.82	*	186*	186*	186*
*1	*	27.79	*	106*	106*	106*
*1	*	27.77	*	25*	25*	25*
*1	*	27.765	*	Bridge*	*	*
*1	*	27.76	*	325*	325*	325*
*1	*	27.68	*	4000*	6125*	5500*
*1	*	26.52	*	5800*	7022*	2730*
*1	*	25.19	*	1700*	3432*	3500*
*1	*	24.54	*	145*	145*	145*
*1	*	24.52	*	25*	25*	25*
*1	*	24.51	*	30*	30*	30*
*1	*	24.505	*	Bridge*	*	*
*1	*	24.5	*	90*	90*	90*
*1	*	24.49	*	40*	40*	40*
*1	*	24.48	*	20*	20*	20*

*1	* 24.475	* Bridge*	*	*
*1	* 24.47	* 150*	150*	150*
*1	* 24.44	* 1100*	1531*	1700*
*1	* 24.15	* 1900*	1742*	1500*
*1	* 23.82	* 4700*	3600*	2300*
*1	* 23.14	* 4900*	4752*	3400*
*1	* 22.24	* 2900*	3432*	4000*
*1	* 21.59	* 5600*	6072*	5900*
*1	* 20.44	* 4400*	4330*	3500*
*1	* 19.62	* 4900*	5970*	4950*
*1	* 18.49	* 3000*	3750*	2400*
*1	* 17.78	* 2000*	2650*	3500*
*1	* 17.28	* 4300*	3960*	3400*
*1	* 16.53	* 3400*	4120*	3350*
*1	* 15.75	* 175*	175*	175*
*1	* 15.72	* 50*	50*	50*
*1	* 15.71	* 25*	25*	25*
*1	* 15.705	* Bridge*	*	*
*1	* 15.7	* 200*	200*	200*
*1	* 15.66	* 3000*	2640*	2100*
*1	* 15.18	* 400*	400*	400*
*1	* 15.08	* 5700*	5280*	4000*
*1	* 14.08	* 4700*	5540*	5500*
*1	* 13.03	* 6100*	9130*	5400*
*1	* 11.3	* 5900*	6550*	4400*
*1	* 10.06	* 5500*	8600*	6200*
*1	* 8.43	* 2600*	4170*	4600*
*1	* 7.64	* 4950*	6230*	4900*
*1	* 6.46	* 8200*	9150*	9900*
*1	* 4.73	* 5600*	5960*	4400*
*1	* 3.6	* 3750*	3800*	3800*
*1	* 2.88	* 2000*	2006*	1900*
*1	* 2.5	* 205*	205*	205*
*1	* 2.46	* 70*	70*	70*
*1	* 2.45	* 25*	25*	25*
*1	* 2.445	* Bridge*	*	*
*1	* 2.44	* 275*	275*	275*
*1	* 2.39	* 3000*	4118*	4300*
*1	* 1.61	* 0*	0*	0*

SUMMARY OF CONTRACTION AND EXPANSION COEFFICIENTS

Reach	River Sta.	Contr.	Expan.
*1	* 79.85	* .1*	.3*
*1	* 79.1	* .1*	.3*
*1	* 78.16	* .1*	.3*
*1	* 76.67	* .1*	.3*
*1	* 75.55	* .1*	.3*
*1	* 75.15	* .1*	.3*
*1	* 75	* .1*	.3*
*1	* 74.98	* .3*	.5*
*1	* 74.9750	* Bridge*	*

*1	*	74.97	*	.3*	.5*
*1	*	74.92	*	.1*	.3*
*1	*	74.35	*	.1*	.3*
*1	*	74.3	*	.1*	.3*
*1	*	74.28	*	.3*	.5*
*1	*	74.2749	*	Bridge*	*
*1	*	74.27	*	.3*	.5*
*1	*	74.23	*	.1*	.3*
*1	*	74.04	*	.1*	.3*
*1	*	73.94	*	.1*	.3*
*1	*	73.36	*	.1*	.3*
*1	*	73.32	*	.1*	.3*
*1	*	73.31	*	.3*	.5*
*1	*	73.305	*	Bridge*	*
*1	*	73.3	*	.3*	.5*
*1	*	73.27	*	.1*	.3*
*1	*	72.59	*	.1*	.3*
*1	*	71.46	*	.1*	.3*
*1	*	70.18	*	.1*	.3*
*1	*	69.45	*	.1*	.3*
*1	*	69.38	*	.3*	.5*
*1	*	69.375	*	Bridge*	*
*1	*	69.37	*	.3*	.5*
*1	*	69.22	*	.1*	.3*
*1	*	68.72	*	.1*	.3*
*1	*	67.83	*	.1*	.3*
*1	*	67.11	*	.1*	.3*
*1	*	65.99	*	.1*	.3*
*1	*	65.97	*	.3*	.5*
*1	*	65.965	*	Bridge*	*
*1	*	65.96	*	.3*	.5*
*1	*	65.89	*	.1*	.3*
*1	*	65.86	*	.1*	.3*
*1	*	64.57	*	.1*	.3*
*1	*	63.6	*	.1*	.3*
*1	*	62.24	*	.1*	.3*
*1	*	61.02	*	.1*	.3*
*1	*	59.68	*	.1*	.3*
*1	*	59.66	*	.3*	.5*
*1	*	59.655	*	Bridge*	*
*1	*	59.65	*	.3*	.5*
*1	*	59.57	*	.1*	.3*
*1	*	59.26	*	.1*	.3*
*1	*	58.81	*	.1*	.3*
*1	*	58.79	*	.3*	.5*
*1	*	58.785	*	Bridge*	*
*1	*	58.78	*	.3*	.5*
*1	*	58.7	*	.1*	.3*
*1	*	58.15	*	.1*	.3*
*1	*	57.21	*	.1*	.3*
*1	*	56.22	*	.1*	.3*
*1	*	55.99	*	.1*	.3*
*1	*	55.96	*	.3*	.5*
*1	*	55.955	*	Bridge*	*
*1	*	55.95	*	.3*	.5*
*1	*	55.83	*	.1*	.3*
*1	*	54.27	*	.1*	.3*

*1	*	53.44	*	.1*	.3*
*1	*	51.87	*	.1*	.3*
*1	*	49.61	*	.1*	.3*
*1	*	49.48	*	.1*	.3*
*1	*	49.46	*	.3*	.5*
*1	*	49.455	*	Bridge*	*
*1	*	49.45	*	.3*	.5*
*1	*	49.38	*	.1*	.3*
*1	*	49.31	*	.1*	.3*
*1	*	49.29	*	.3*	.5*
*1	*	49.285	*	Bridge*	*
*1	*	49.28	*	.3*	.5*
*1	*	49.19	*	.1*	.3*
*1	*	48.04	*	.1*	.3*
*1	*	46.59	*	.1*	.3*
*1	*	45.48	*	.1*	.3*
*1	*	44.02	*	.1*	.3*
*1	*	42.54	*	.1*	.3*
*1	*	41.67	*	.1*	.3*
*1	*	41.63	*	.1*	.3*
*1	*	41.62	*	.3*	.5*
*1	*	41.615	*	Bridge*	*
*1	*	41.61	*	.3*	.5*
*1	*	41.56	*	.1*	.3*
*1	*	40.91	*	.1*	.3*
*1	*	39.81	*	.1*	.3*
*1	*	39.02	*	.1*	.3*
*1	*	37.98	*	.1*	.3*
*1	*	37.25	*	.1*	.3*
*1	*	37.19	*	.1*	.3*
*1	*	37.17	*	.3*	.5*
*1	*	37.165	*	Bridge*	*
*1	*	37.16	*	.3*	.5*
*1	*	37.07	*	.1*	.3*
*1	*	35.58	*	.1*	.3*
*1	*	35.57	*	.1*	.3*
*1	*	33.85	*	.1*	.3*
*1	*	33.09	*	.1*	.3*
*1	*	32.18	*	.1*	.3*
*1	*	30.42	*	.1*	.3*
*1	*	28.94	*	.1*	.3*
*1	*	27.82	*	.1*	.3*
*1	*	27.79	*	.1*	.3*
*1	*	27.77	*	.3*	.5*
*1	*	27.765	*	Bridge*	*
*1	*	27.76	*	.3*	.5*
*1	*	27.68	*	.1*	.3*
*1	*	26.52	*	.1*	.3*
*1	*	25.19	*	.1*	.3*
*1	*	24.54	*	.1*	.3*
*1	*	24.52	*	.3*	.5*
*1	*	24.51	*	.3*	.5*
*1	*	24.505	*	Bridge*	*
*1	*	24.5	*	.3*	.5*
*1	*	24.49	*	.3*	.5*
*1	*	24.48	*	.3*	.5*
*1	*	24.475	*	Bridge*	*

```
*1          *    24.47   *      .3*      .5*
*1          *    24.44   *      .1*      .3*
*1          *    24.15   *      .1*      .3*
*1          *    23.82   *      .1*      .3*
*1          *    23.14   *      .1*      .3*
*1          *    22.24   *      .1*      .3*
*1          *    21.59   *      .1*      .3*
*1          *    20.44   *      .1*      .3*
*1          *    19.62   *      .1*      .3*
*1          *    18.49   *      .1*      .3*
*1          *    17.78   *      .1*      .3*
*1          *    17.28   *      .1*      .3*
*1          *    16.53   *      .1*      .3*
*1          *    15.75   *      .1*      .3*
*1          *    15.72   *      .3*      .5*
*1          *    15.71   *      .3*      .5*
*1          *    15.705  *  Bridge*        *
*1          *    15.7    *      .3*      .5*
*1          *    15.66   *      .1*      .3*
*1          *    15.18   *      .1*      .3*
*1          *    15.08   *      .1*      .3*
*1          *    14.08   *      .1*      .3*
*1          *    13.03   *      .1*      .3*
*1          *    11.3    *      .1*      .3*
*1          *    10.06   *      .1*      .3*
*1          *    8.43    *      .1*      .3*
*1          *    7.64    *      .1*      .3*
*1          *    6.46    *      .1*      .3*
*1          *    4.73    *      .1*      .3*
*1          *    3.6     *      .1*      .3*
*1          *    2.88    *      .1*      .3*
*1          *    2.5     *      .1*      .3*
*1          *    2.46    *      .3*      .5*
*1          *    2.45    *      .3*      .5*
*1          *    2.445   *  Bridge*        *
*1          *    2.44    *      .3*      .5*
*1          *    2.39    *      .1*      .3*
*1          *    1.61    *      .1*      .3*
*******************************************
```

Profile Output Table - Standard Table 1

River Sta.	Q Total (cfs)	Min Ch El (ft)	W.S. Elev (ft)	Crit W.S. (ft)	E.G. Elev (ft)	E.G. Slope (ft/ft)	Vel Chnl (ft/s)	Flow Area (sq ft)	Top Width (ft)	Froude # Chl
79.85	374.00	127.50	143.90		143.90	0.000000	0.01	34645.11	4225.53	0.00
79.1	374.00	137.00	143.90		143.90	0.000009	0.14	23620.46	11459.12	0.01
78.16	374.00	138.50	143.81		143.81	0.000034	0.22	27308.99	16601.50	0.02
76.67	374.00	138.00	143.01		143.02	0.001060	1.06	6954.20	14140.53	0.11
75.55	374.00	137.10	141.07		141.07	0.000145	0.42	3224.29	2818.42	0.04
75.15	374.00	133.70	140.82		140.82	0.000096	0.44	1498.35	768.87	0.04
75	374.00	133.70	140.74		140.74	0.000103	0.45	1438.09	751.55	0.04
74.98	374.00	132.30	140.61	137.46	140.70	0.005266	2.36	158.76	54.15	0.24
74.9750	Bridge									
74.97	374.00	132.30	140.60	137.47	140.68	0.005329	2.37	158.02	54.00	0.24
74.92	374.00	133.50	139.67		139.70	0.002737	2.21	1821.65	3462.85	0.19
74.35	374.00	133.40	139.34		139.34	0.000037	0.26	7141.12	5629.45	0.02
74.3	374.00	132.90	139.33		139.33	0.000017	0.21	7582.52	4383.03	0.02
74.28	374.00	133.50	139.28	137.25	139.32	0.004747	1.71	218.27	118.16	0.22
74.2749	Bridge									
74.27	374.00	133.50	139.27	137.27	139.31	0.004798	1.72	217.33	117.83	0.22
74.23	374.00	132.90	139.28		139.28	0.000017	0.20	9444.35	5726.27	0.02
74.04	374.00	132.90	139.26		139.26	0.000017	0.20	9348.96	5713.29	0.02
73.94	374.00	132.90	139.25		139.26	0.000012	0.17	16431.25	5485.41	0.01
73.36	2965.00	129.50	138.96		138.96	0.000241	0.89	15375.45	4308.48	0.06
73.32	2965.00	129.50	138.90		138.91	0.000251	0.91	15151.96	4284.41	0.06
73.31	2965.00	127.30	138.74	134.55	138.86	0.004566	2.81	1054.91	242.88	0.24
73.305	Bridge									
73.3	2965.00	127.30	137.84		138.03	0.008150	3.50	847.38	218.10	0.31
73.27	2965.00	124.10	137.71		137.71	0.000621	1.62	12137.10	3575.44	0.09
72.59	2965.00	119.10	132.24		132.48	0.007733	5.39	2729.94	1084.44	0.33
71.46	2965.00	114.40	127.19		127.20	0.000322	1.40	9414.06	2254.84	0.08
70.18	2965.00	110.70	124.63		124.65	0.000469	1.82	7341.63	1493.08	0.09
69.45	2965.00	108.70	121.51		121.59	0.002043	3.16	3564.86	959.02	0.19
69.38	2965.00	106.00	119.42	115.15	119.92	0.015510	5.71	519.68	81.24	0.39
69.375	Bridge									
69.37	2965.00	106.00	118.29		119.01	0.024153	6.81	435.67	71.28	0.49
69.22	2965.00	104.00	116.68		116.72	0.000874	2.61	5471.52	1114.14	0.13
68.72	2965.00	100.00	113.94		114.05	0.001501	3.55	3344.73	709.37	0.17
67.83	2965.00	96.40	111.38		111.40	0.000315	1.71	9622.53	1764.16	0.08
67.11	4665.00	93.70	109.53		109.58	0.000700	2.67	8124.97	1344.26	0.12
65.99	4665.00	88.00	107.13		107.16	0.000335	2.12	12308.94	1895.52	0.09
65.97	4665.00	88.00	106.87	99.37	107.03	0.007169	3.97	4465.26	2000.00	0.21
65.965	Bridge									
65.96	4665.00	88.00	105.81		106.25	0.017557	5.83	2300.47	1712.82	0.32
65.89	4665.00	88.00	105.33		105.38	0.000649	2.76	9098.26	1660.05	0.12
65.86	4665.00	88.00	105.24		105.30	0.000671	2.80	8958.20	1648.77	0.12
64.57	4665.00	86.00	99.76		99.87	0.001220	3.18	5726.40	1742.95	0.16
63.6	4665.00	83.50	93.77		93.79	0.001407	2.75	10863.24	3370.73	0.16
62.24	4665.00	80.50	91.11		91.11	0.000220	1.13	23633.80	3687.71	0.06
61.02	4665.00	75.30	90.55		90.55	0.000064	0.77	34915.96	4236.90	0.04

59.68	4665.00	71.10	89.93		89.94	0.000144	1.35	16980.18	2124.20	0.06
59.66	4665.00	72.60	89.79	79.19	89.89	0.001632	2.55	1829.29	160.05	0.13
59.655	Bridge									
59.65	4665.00	72.60	89.67		89.78	0.001677	2.58	1810.21	159.44	0.13
59.57	4665.00	71.10	89.57		89.58	0.000160	1.40	16230.91	2064.93	0.06
59.26	4665.00	71.10	89.32		89.33	0.000172	1.44	15726.89	2010.50	0.06
58.81	4665.00	66.80	89.04		89.04	0.000113	1.33	20154.34	2062.70	0.05
58.79	4665.00	69.00	88.92	77.24	89.01	0.001433	2.34	2821.82	1835.36	0.12
58.785	Bridge									
58.78	4665.00	69.00	88.26		88.36	0.001790	2.52	2069.36	511.01	0.13
58.7	4665.00	66.80	88.16		88.17	0.000143	1.45	18376.84	1995.15	0.06
58.15	4665.00	66.80	87.76		87.77	0.000160	1.52	17583.82	1979.40	0.06
57.21	8767.00	63.10	85.28		85.42	0.001653	4.83	9134.80	1111.85	0.19
56.22	8767.00	59.30	82.62		82.70	0.000313	2.80	12523.28	1464.01	0.12
55.99	8767.00	59.30	82.25		82.34	0.000346	2.89	11988.65	1453.10	0.13
55.96	8767.00	58.20	82.14	69.95	82.26	0.001208	3.15	8469.92	1933.91	0.15
55.955	Bridge									
55.95	8767.00	58.20	82.05		82.16	0.001253	3.19	8279.91	1916.11	0.15
55.83	8767.00	57.90	81.83		81.87	0.000201	2.36	22632.54	2781.65	0.10
54.27	8767.00	54.80	80.43		80.47	0.000242	2.55	23054.30	2588.40	0.10
53.44	8767.00	53.10	79.86		79.89	0.000124	2.15	23858.06	2161.29	0.08
51.87	8767.00	49.80	79.21		79.22	0.000083	1.88	39936.87	3430.91	0.06
49.61	25162.00	45.20	77.48		77.58	0.000279	3.76	33090.30	3576.46	0.13
49.48	25162.00	44.50	77.40		77.44	0.000130	2.55	45826.99	3532.12	0.09
49.46	25162.00	45.00	77.38	59.47	77.43	0.000246	2.03	48577.69	10000.00	0.08
49.455	Bridge									
49.45	25162.00	45.00	77.35		77.40	0.000248	2.04	48278.62	10000.00	0.08
49.38	25162.00	44.50	77.29		77.33	0.000132	2.57	45432.90	3504.73	0.09
49.31	25162.00	44.50	77.24		77.28	0.000134	2.58	45250.66	3491.98	0.09
49.29	25162.00	44.10	77.18	55.99	77.26	0.000251	2.41	25233.28	4576.44	0.09
49.285	Bridge									
49.28	25162.00	44.10	72.59		72.77	0.000650	3.43	8581.24	1653.60	0.14
49.19	25162.00	44.00	72.50		72.57	0.000209	2.96	34178.27	3152.68	0.11
48.04	25162.00	43.50	70.90		70.99	0.000521	4.42	28399.37	2259.43	0.17
46.59	25162.00	42.90	67.99		68.12	0.000354	3.61	27884.81	3679.43	0.14
45.48	25162.00	42.00	66.19		66.28	0.000357	3.57	28986.73	2021.35	0.14
44.02	23767.00	40.00	63.03		63.13	0.000857	5.12	25468.27	2259.89	0.21
42.54	23767.00	39.10	60.86		60.87	0.000212	2.35	56207.97	5197.38	0.10
41.67	23767.00	36.00	60.01		60.05	0.000239	2.83	46842.57	4401.16	0.11
41.63	23767.00	36.00	59.96		59.99	0.000242	2.84	46616.92	4394.73	0.11
41.62	23767.00	36.00	59.58	47.10	59.94	0.001548	4.79	4965.96	300.82	0.21
41.615	Bridge									
41.61	23767.00	36.00	59.54		59.90	0.001558	4.80	4953.59	300.66	0.21
41.56	23767.00	36.00	59.60		59.62	0.000198	2.53	56472.67	5020.04	0.10
40.91	23767.00	35.00	58.58		58.68	0.000456	4.12	27362.90	2027.82	0.16
39.81	32800.00	31.50	57.75		57.87	0.000097	3.39	31570.98	2270.23	0.12
39.02	32800.00	31.00	56.44		57.09	0.000448	7.10	10996.06	911.41	0.26
37.98	32800.00	30.70	55.92		55.99	0.000097	3.02	45437.23	3923.02	0.12
37.25	32569.00	31.60	55.60		55.67	0.000075	2.79	46527.21	3553.86	0.11
37.19	32569.00	31.60	55.58		55.65	0.000075	2.79	46446.32	3553.48	0.11
37.17	32569.00	31.00	55.14	41.89	55.59	0.000477	5.39	6047.50	332.49	0.22

37.165	Bridge									
37.16	32569.00	31.00	55.11		55.56	0.000480	5.40	6035.61	332.36	0.22
37.07	32569.00	31.60	55.24		55.29	0.000066	2.60	56649.09	4394.34	0.10
35.58	32569.00	30.50	54.63		54.73	0.000116	3.14	46809.27	6132.65	0.13
35.57	32569.00	30.50	54.63		54.72	0.000116	3.14	46795.09	6131.52	0.13
33.85	24427.00	39.90	53.77		53.77	0.000115	0.90	52077.06	5401.42	0.04
33.09	24427.00	31.00	53.22		53.23	0.000187	1.40	38095.45	3579.37	0.06
32.18	24427.00	30.50	52.33		52.34	0.000236	1.63	34343.81	3201.63	0.07
30.42	24427.00	33.00	50.89		50.90	0.000241	1.37	40180.02	4970.32	0.06
28.94	23206.00	27.40	49.34		49.47	0.000192	3.96	28710.82	3713.85	0.16
27.82	23206.00	27.40	48.78		48.84	0.000084	2.77	38682.41	4258.17	0.11
27.79	20910.00	27.40	48.77		48.82	0.000068	2.49	38658.23	4257.75	0.10
27.77	20910.00	26.20	48.34	36.18	48.77	0.000553	5.26	5067.36	2266.00	0.23
27.765	Bridge									
27.76	20910.00	26.20	48.00		48.45	0.000594	5.39	4452.29	1479.45	0.23
27.68	20910.00	28.30	48.14		48.20	0.000079	2.64	32579.31	3629.48	0.11
26.52	20910.00	23.20	47.57		47.67	0.000123	3.54	28314.79	3331.85	0.14
25.19	19587.00	25.43	46.77		46.89	0.000124	3.26	17350.45	1999.78	0.13
24.54	19587.00	16.26	46.42		46.53	0.000090	2.93	14634.77	1578.14	0.12
24.52	19587.00	16.26	46.40		46.52	0.000090	2.94	14613.95	1577.79	0.12
24.51	19587.00	16.30	45.93	33.01	46.41	0.000637	5.56	3563.25	497.43	0.24
24.505	Bridge									
24.5	19587.00	16.30	45.50		46.00	0.000689	5.71	3428.70	215.22	0.25
24.49	19587.00	16.26	45.66		45.80	0.000105	3.09	13455.39	1558.59	0.12
24.48	19587.00	22.60	44.41	35.95	45.50	0.002186	8.37	2339.45	159.46	0.39
24.475	Bridge									
24.47	19587.00	22.60	44.34		45.44	0.002208	8.41	2328.64	159.06	0.39
24.44	19587.00	16.30	44.62		44.96	0.000342	5.41	12005.70	1511.21	0.22
24.15	19587.00	22.45	43.82		44.35	0.000437	6.03	5673.22	606.98	0.25
23.82	19587.00	17.36	43.41		43.69	0.000260	4.83	11165.57	1192.13	0.20
23.14	19587.00	17.29	41.99		42.42	0.000521	6.14	11023.66	2009.63	0.26
22.24	19587.00	21.10	40.61		40.84	0.000232	4.05	9335.34	1203.58	0.18
21.59	19587.00	15.87	39.60		39.90	0.000313	5.07	10809.66	1271.75	0.21
20.44	19587.00	16.14	38.57		38.69	0.000132	3.42	20550.21	2111.36	0.14
19.62	16717.00	17.74	38.19		38.26	0.000070	2.48	21854.34	2282.47	0.10
18.49	16717.00	8.89	37.60		37.70	0.000160	3.57	23414.66	3007.23	0.15
17.78	16717.00	15.15	37.18		37.23	0.000124	2.44	28971.80	3800.13	0.10
17.28	16717.00	13.26	36.89		36.94	0.000089	2.30	28939.46	3346.01	0.09
16.53	16717.00	13.60	36.55		36.60	0.000085	2.28	35561.04	3895.85	0.09
15.75	16717.00	11.90	36.29		36.33	0.000058	1.73	35688.72	4933.76	0.07
15.72	16717.00	11.90	36.28		36.32	0.000058	1.73	35638.30	4930.25	0.07
15.71	16717.00	9.40	36.15	19.66	36.28	0.000296	3.02	11811.16	4416.03	0.13
15.705	Bridge									
15.7	16717.00	9.40	36.14		36.27	0.000297	3.02	11778.45	4411.34	0.13
15.66	16359.00	10.22	36.16		36.21	0.000071	2.21	35342.00	4844.81	0.08
15.18	16359.00	6.52	35.95		36.00	0.000080	2.26	25485.47	2463.26	0.09
15.08	16359.00	6.52	35.91		35.97	0.000080	2.26	25680.35	2520.03	0.09
14.08	16359.00	10.50	35.47		35.53	0.000088	2.38	27647.80	3111.94	0.09
13.03	16359.00	-5.45	35.15		35.19	0.000047	2.07	39322.95	3888.19	0.07
11.3	16359.00	7.00	34.83		34.86	0.000036	1.71	32640.31	2485.38	0.06
10.06	16359.00	1.81	34.49		34.56	0.000069	2.40	21015.61	2539.86	0.08

8.43	16359.00	-1.00	34.02		34.08	0.000053	2.23	34241.57	5652.46	0.07
7.64	16359.00	2.75	33.79		33.84	0.000063	2.23	35082.47	5108.93	0.08
6.46	16359.00	2.53	33.52		33.56	0.000039	1.82	37273.10	3822.68	0.06
4.73	16359.00	1.55	33.04		33.10	0.000067	2.35	27472.24	2335.94	0.08
3.6	16359.00	0.75	32.75		32.79	0.000047	2.04	33685.95	2490.91	0.07
2.88	16359.00	0.20	32.59		32.62	0.000039	1.84	39572.85	3640.80	0.06
2.5	16359.00	-2.58	32.49		32.53	0.000053	2.12	35456.80	4020.53	0.07
2.46	16359.00	-2.58	32.48		32.52	0.000053	2.12	35413.20	4018.22	0.07
2.45	16359.00	-7.50	32.45	8.05	32.51	0.000119	1.93	8472.71	443.87	0.08
2.445	Bridge									
2.44	16359.00	-7.50	32.44		32.50	0.000119	1.93	8467.26	443.77	0.08
2.39	16359.00	-5.21	32.43		32.47	0.000047	2.07	31703.86	2786.33	0.07
1.61	16359.00	-10.46	32.27	4.11	32.31	0.000036	1.80	22755.23	1813.08	0.06

FEDERAL EMERGENCY MANAGEMENT AGENCY
NATIONAL FLOOD INSURANCE PROGRAM

ELEVATION CERTIFICATE

O.M.B. No. 3067-0077
Expires December 31, 2005

Important: Read the instructions on pages 1 - 7.

SECTION A - PROPERTY OWNER INFORMATION

For Insurance Company Use:
Policy Number
Company NAIC Number

BUILDING OWNER'S NAME
JOHN AND DIANE FITZGERALD

BUILDING STREET ADDRESS (Including Apt., Unit, Suite, and/or Bldg. No.) OR P.O. ROUTE AND BOX NO.
380 SW BLUFF DRIVE

CITY	STATE	ZIP CODE
FT. WHITE	FL	32038

PROPERTY DESCRIPTION (Lot and Block Numbers, Tax Parcel Number, Legal Description, etc.)
LOT 32 CEDAR SPRINGS SHORES - UNIT 1

BUILDING USE (e.g., Residential, Non-residential, Addition, Accessory, etc. Use a Comments area, if necessary.)
RESIDENTIAL

LATITUDE/LONGITUDE (OPTIONAL)
(##° - ##' - ##.##" or ##.#####°)

HORIZONTAL DATUM: ☐ NAD 1927 ☐ NAD 1983

SOURCE: ☐ GPS (Type):____ ☐ USGS Quad Map ☐ Other: ____

SECTION B - FLOOD INSURANCE RATE MAP (FIRM) INFORMATION

B1. NFIP COMMUNITY NAME & COMMUNITY NUMBER	B2. COUNTY NAME	B3. STATE
COLUMBIA COUNTY, FL. 120070	COLUMBIA	FL

B4. MAP AND PANEL NUMBER	B5. SUFFIX	B6. FIRM INDEX DATE	B7. FIRM PANEL EFFECTIVE/REVISED DATE	B8. FLOOD ZONE(S)	B9. BASE FLOOD ELEVATION(S) (Zone AO, use depth of flooding)
120070 0255	B	1/6/88	1/6/88	AE	36

B10. Indicate the source of the Base Flood Elevation (BFE) data or base flood depth entered in B9.
☐ FIS Profile ☒ FIRM ☐ Community Determined ☐ Other (Describe): ____

B11. Indicate the elevation datum used for the BFE in B9: ☒ NGVD 1929 ☐ NAVD 1988 ☐ Other (Describe): ____

B12. Is the building located in a Coastal Barrier Resources System (CBRS) area or Otherwise Protected Area (OPA)? ☐ Yes ☒ No Designation Date____

SECTION C - BUILDING ELEVATION INFORMATION (SURVEY REQUIRED)

C1. Building elevations are based on: ☐ Construction Drawings* ☐ Building Under Construction* ☒ Finished Construction
*A new Elevation Certificate will be required when construction of the building is complete.

C2. Building Diagram Number 1 (Select the building diagram most similar to the building for which this certificate is being completed - see pages 6 and 7. If no diagram accurately represents the building, provide a sketch or photograph.)

C3. Elevations – Zones A1-A30, AE, AH, A (with BFE), VE, V1-V30, V (with BFE), AR, AR/A, AR/AE, AR/A1-A30, AR/AH, AR/AO
Complete Items C3.-a-i below according to the building diagram specified in Item C2. State the datum used. If the datum is different from the datum used for the BFE in Section B, convert the datum to that used for the BFE. Show field measurements and datum conversion calculation. Use the space provided or the Comments area of Section D or Section G, as appropriate, to document the datum conversion.
Datum NA Conversion/Comments ____
Elevation reference mark used LOCAL BM Does the elevation reference mark used appear on the FIRM? ☐ Yes ☒ No

- ☐ a) Top of bottom floor (including basement or enclosure) 39. 0 ft.(m)
- ☐ b) Top of next higher floor 49. 2 ft.(m)
- ☐ c) Bottom of lowest horizontal structural member (V zones only) NA. __ ft.(m)
- ☐ d) Attached garage (top of slab) NA. __ ft.(m)
- ☐ e) Lowest elevation of machinery and/or equipment servicing the building (Describe in a Comments area) NA. __ ft.(m)
- ☐ f) Lowest adjacent (finished) grade (LAG) 32. 0 ft.(m)
- ☐ g) Highest adjacent (finished) grade (HAG) 35. 0 ft.(m)
- ☐ h) No. of permanent openings (flood vents) within 1 ft. above adjacent grade NA
- ☐ i) Total area of all permanent openings (flood vents) in C3.h NA sq. in. (sq. cm)

License Number, Embossed Seal, Signature, and Date

LS 4708
6/27/06

SECTION D - SURVEYOR, ENGINEER, OR ARCHITECT CERTIFICATION

This certification is to be signed and sealed by a land surveyor, engineer, or architect authorized by law to certify elevation information.
I certify that the information in Sections A, B, and C on this certificate represents my best efforts to interpret the data available.
I understand that any false statement may be punishable by fine or imprisonment under 18 U.S. Code, Section 1001.

CERTIFIER'S NAME MARK D. DUREN LICENSE NUMBER LS 4708

TITLE SURVEYOR AND MAPPER COMPANY NAME MARK D. DUREN, PSM

ADDRESS	CITY	STATE	ZIP CODE
1604 SW SISTERS WELCOME ROAD	LAKE CITY	FL	32025

SIGNATURE	DATE	TELEPHONE
	6/27/065	386-758-9831

IMPORTANT: In these spaces, copy the corresponding information from Section A.			For Insurance Company Use:
BUILDING STREET ADDRESS (Including Apt., Unit, Suite, and/or Bldg. No.) OR P.O. ROUTE AND BOX NO. 360 SW BLUFF DRIVE			Policy Number
CITY FT. WHITE	STATE FL	ZIP CODE 32038	Company NAIC Number

SECTION D - SURVEYOR, ENGINEER, OR ARCHITECT CERTIFICATION (CONTINUED)

Copy both sides of this Elevation Certificate for (1) community official, (2) insurance agent/company, and (3) building owner.

COMMENTS
SPLIT LEVEL FRAME DWELLING

☐ Check here if attachments

SECTION E - BUILDING ELEVATION INFORMATION (SURVEY NOT REQUIRED) FOR ZONE AO AND ZONE A (WITHOUT BFE)

For Zone AO and Zone A (without BFE), complete Items E1 through E4. If the Elevation Certificate is intended for use as supporting information for a LOMA or LOMR-F, Section C must be completed.

E1. Building Diagram Number __(Select the building diagram most similar to the building for which this certificate is being completed – see pages 6 and 7. If no diagram accurately represents the building, provide a sketch or photograph.)

E2. The top of the bottom floor (including basement or enclosure) of the building is __ ft.(m) __in.(cm) ☐ above or ☐ below (check one) the highest adjacent grade. (Use natural grade, if available).

E3. For Building Diagrams 6-8 with openings (see page 7), the next higher floor or elevated floor (elevation b) of the building is __ ft.(m) __in.(cm) above the highest adjacent grade. Complete items C3.h and C3.i on front of form.

E4. The top of the platform of machinery and/or equipment servicing the building is __ ft.(m) __in.(cm) ☐ above or ☐ below (check one) the highest adjacent grade. (Use natural grade, if available).

E5. For Zone AO only: If no flood depth number is available, is the top of the bottom floor elevated in accordance with the community's floodplain management ordinance?
☐ Yes ☐ No ☐ Unknown. The local official must certify this information in Section G.

SECTION F - PROPERTY OWNER (OR OWNER'S REPRESENTATIVE) CERTIFICATION

The property owner or owner's authorized representative who completes Sections A, B, C (Items C3.h and C3.i only), and E for Zone A (without a FEMA-issued or community-issued BFE) or Zone AO must sign here. *The statements in Sections A, B, C, and E are correct to the best of my knowledge.*

PROPERTY OWNER'S OR OWNER'S AUTHORIZED REPRESENTATIVE'S NAME MARK D. DUREN			
ADDRESS 1604 SW SISTERS WELCOME ROAD	CITY LAKE CITY	STATE FL	ZIP CODE 32025
SIGNATURE	DATE	TELEPHONE 386-758-9831	

COMMENTS

☐ Check here if attachments

SECTION G - COMMUNITY INFORMATION (OPTIONAL)

The local official who is authorized by law or ordinance to administer the community's floodplain management ordinance can complete Sections A, B, C (or E), and G of this Elevation Certificate. Complete the applicable item(s) and sign below.

G1. ☐ The information in Section C was taken from other documentation that has been signed and embossed by a licensed surveyor, engineer, or architect who is authorized by state or local law to certify elevation information. (Indicate the source and date of the elevation data in the Comments area below.)

G2. ☐ A community official completed Section E for a building located in Zone A (without a FEMA-issued or community-issued BFE) or Zone AO.

G3. ☐ The following information (Items G4-G9) is provided for community floodplain management purposes.

G4. PERMIT NUMBER	G5. DATE PERMIT ISSUED	G6. DATE CERTIFICATE OF COMPLIANCE/OCCUPANCY ISSUED

G7. This permit has been issued for: ☐ New Construction ☐ Substantial Improvement

G8. Elevation of as-built lowest floor (including basement) of the building is: ____.__ft.(m) Datum: ____

G9. BFE or (in Zone AO) depth of flooding at the building site is: ____.__ft.(m) Datum: ____

LOCAL OFFICIAL'S NAME	TITLE
COMMUNITY NAME	TELEPHONE
SIGNATURE	DATE

COMMENTS

☐ Check here if attachments

CERTIFICATE OF

OCCUPANCY

COLUMBIA COUNTY, FLORIDA

Department of Building and Zoning Inspection

This Certificate of Occupancy is issued to the below named permit holder for the building and premises at the below named location, and certifies that the work has been completed in accordance with the Columbia County Building Code.

Parcel Number 18-7S-16-04236-012

Building permit No. 000023728

Use Classification SFD,UTILITY

Fire: 11.84

Permit Holder DENNIS ONEIL/ONEIL CONSTRUCT

Waste: 24.50

Owner of Building JOHN FITZGERALD

Total: 36.34

Location: 380 SW BLUFF DRIVE

Date: 08/24/2006

Harry Dicks

Building Inspector

POST IN A CONSPICUOUS PLACE
(Business Places Only)

23728

GEO-TECH, INC.

ENGINEERING CONSULTANTS IN GEOTECHNICAL • ENVIRONMENTAL • CONSTRUCTION MATERIALS TESTING

October 5, 2005
Project No. 051583.13G

O'Neil Construction
P.O. Box 1633
High Springs, FL 32655

Attention: Mr. Dennis O'Neil

Project: Proposed Fitzgerald Residence
Fort White, FL
Preliminary Site Exploration

Dear Mr. Oneil:

As requested, Geo-Technologies, Inc. (Geo-Tech) has completed a preliminary geotechnical engineering evaluation at the project site. The purpose of the borings was to identify the shallow subsurface soils within the proposed building site and briefly comment on the suitability of the shallow soils for a conventional foundation system.

On October 3, 2005, Geo-Tech performed four (4) auger borings at the site to a depth of approximately eight (8) feet below the existing site grade in the proposed building area. The building area was staked by you. Representative samples were obtained from the borings and returned to our laboratory for visual classification. General soil stratification is based on a visual review of recovered soil samples and interpretation of field boring logs by a geotechnical engineer.

Subsurface Conditions

As interpreted from the auger borings the soils at the site generally consisted of a surface layer of fine approximately four (4) to six (6) feet thick underlain by slightly clayey sand, clayey sand and slightly sandy clay to the depth augered. The free groundwater level was not found at our boring locations to the depth augered. In Geo-Tech's opinion, groundwater levels are not expected to influence near surface construction at this site, a graphic presentation of the borings is presented on the attached sheets. The interface between soil layers is typically more gradual than suggested by the horizontal lines on the soil profiles.

Preliminary Evaluation and Recommendations

Based on the information found at our boring locations, it is Geo-Tech's opinion that the clayey soils are at a depth that should not affect the foundation system for this project (dependent upon final site grade). Should you encounter these clayey soils at shallower depths during the earthwork phase of construction, a minimum separation of two (2) feet from the bottom of the slab and foundation should be maintained (see Figure 1). If undercutting, the depth of the

4000 SW 35TH TERRACE, SUITE C • GAINESVILLE, FLORIDA 32608 • PHONE: (352) 372-1274 • FAX: (352) 372-2721

undercut excavation should be controlled so that a "bathtub effect" that will trap water is not created. The bottom of the undercut should be graded to drain to a positive gravity outfall. If it is not feasible to have a positive gravity outfall, an underdrain should be placed in the bottom of the excavation to drain stormwater that may accumulate in the excavation. Backfill soils should consist of clean sand soils compacted in twelve (12) inch loose lifts. Generally sand with between three (3) and twelve (12) percent fines passing a no. 200 sieve is used for this purpose. The upper sand soils found on site should meet these requirements and can be used if kept separate from the clay soils during the earthwork phase of construction. The structural fill soils should be compacted to a minimum of 95 percent of the maximum dry density per the modified proctor determination. We wish to emphasize that the excavation and replacement of the underlying clay soils from beneath the building is not a guarantee that the deeper clays will not cause foundation movements. However the risk is reduced significantly.

Proof-Rolling

Proof-rolling of the cleared surface is recommended to: (1) locate any soft areas or unsuitable surface or near surface soils, (2) increase the density of the near surface soils, and (3) prepare the existing surface for the addition of fill soils (if required). Proof-rolling of the building areas should consist of a least ten (10) passes of a self-propelled static compactor. Each pass of the compactor should overlap the preceding pass by thirty (30) percent to insure complete coverage. If deemed necessary, in areas that continues to "yield", remove all deleterious material and replace with a clean, compacted sand backfill. **The proof-rolling should occur after cutting and before filling. Vibratory compaction equipment should not be used within one-hundred (100) feet of neighboring structures.**

Closure

The preliminary recommendations and conclusions presented in this report are based on the limited data obtained from the shallow soil borings. Deeper soil profiles were not requested for this project. Variations in soils may be presented adjacent to or between the borings which were not apparent in the boring logs presented. If variations are found during construction of the project, it will be necessary to review the preliminary recommendations found in this report.

Geo-Tech trusts this report is sufficient to meet your immediate needs. Should you have any questions concerning this report or if we may be of further assistance, please do not hesitate to contact the undersigned.

Sincerely,

Donald "Bubba" Youngblood
Branch Manager

David A. Cappa, P.E.
Florida Registration No. 58334

DY/DC:kw

Log of Borehole: A-1

Project: FITZGERALD RESIDENCE, FORT WHITE, FL
Boring Location: N.W. CORNER AREA OF PROPOSED RESIDENCE
Client: O'NEIL CONSTRUCTION

Project No: 051583.13G
Engineer: NJH/DAC
Enclosure: NONE

GEO-TECH, Inc.
Engineering Consultants
4000 SW 35th Terr., Suite C
Gainesville, Florida 32608

SUBSURFACE PROFILE				SAMPLE	
Depth	Symbol	Description	Depth/Elev.	Number	Remarks
0		Ground Surface	0.0		
1		***FINE SAND*** GRAY AND LIGHT BROWN FINE SAND (SP)			
2				1	
3					
4			4.0		
5		***SLIGHTLY CLAYEY SAND*** DARK BROWN SLIGHTLY CLAYEY SAND (SP-SC)			
6				2	
7					
8			8.0		
		End of Borehole			
9					

Depth to Ground Water: NOT FOUND
Drill Date: OCTOBER 3, 2005

Drilled By: MC
Drill Method: ASTM D-4700

Remarks: (SP) UNIFIED SOIL GROUP CLASSIFICATION SYMBOL AS DETERMINED BY VISUAL REVIEW

Log of Borehole: A-2

Project: FITZGERALD RESIDENCE, FORT WHITE, FL
Boring Location: N.E. CORNER AREA OF PROPOSED RESIDENCE
Client: O'NEIL CONSTRUCTION

Project No: 051583.13G
Engineer: NJH/DAC
Enclosure: NONE

GEO-TECH, Inc.
Engineering Consultants
4000 SW 35th Terr., Suite C
Gainesville, Florida 32608

SUBSURFACE PROFILE				SAMPLE	
Depth	Symbol	Description	Depth/Elev.	Number	Remarks
0		Ground Surface	0.0		
1		***FINE SAND*** GRAY AND LIGHT BROWN FINE SAND (SP)			
2				1	
3					
4			4.0		
5		***CLAYEY SAND*** LIGHT BROWN AND ORANGE CLAYEY SAND (SC)			
6				2	
7					
8			8.0		
		End of Borehole			
9					

Depth to Ground Water: NOT FOUND
Drill Date: OCTOBER 3, 2005

Drilled By: MC
Drill Method: ASTM D-4700

Remarks: (SP) UNIFIED SOIL GROUP CLASSIFICATION SYMBOL AS DETERMINED BY VISUAL REVIEW

Log of Borehole: A-3

Project: FITZGERALD RESIDENCE, FORT WHITE, FL
Boring Location: S.E. CORNER AREA OF PROPOSED RESIDENCE
Client: O'NEIL CONSTRUCTION

Project No: 051583.13G
Engineer: NJH/DAC
Enclosure: NONE

GEO-TECH, Inc.
Engineering Consultants
4000 SW 35th Terr., Suite C
Gainesville, Florida 32608

SUBSURFACE PROFILE				SAMPLE	
Depth	Symbol	Description	Depth/Elev.	Number	Remarks
0		Ground Surface	0.0		
1, 2, 3		***FINE SAND*** GRAY AND LIGHT BROWN FINE SAND (SP)	4.0	1	
4, 5		***SLIGHTLY CLAYEY SAND*** DARK BROWN SLIGHTLY CLAYEY SAND (SP-SC)	5.0	2	
6, 7, 8		***SLIGHTLY SANDY CLAY*** GRAY AND BROWN SLIGHTLY SANDY CLAY (CH)	8.0	3	
9		End of Borehole			

Depth to Ground Water: NOT FOUND
Drill Date: OCTOBER 3, 2005

Drilled By: MC
Drill Method: ASTM D-4700

Remarks: (SP) UNIFIED SOIL GROUP CLASSIFICATION SYMBOL AS DETERMINED BY VISUAL REVIEW

Log of Borehole: A-4

Project: FITZGERALD RESIDENCE, FORT WHITE, FL
Boring Location: S.W. CORNER AREA OF PROPOSED RESIDENCE
Client: O'NEIL CONSTRUCTION

Project No:
Engineer: NJH/DAC
Enclosure: NONE

GEO-TECH, Inc.
Engineering Consultants
4000 SW 35th Terr., Suite C
Gainesville, Florida 32608

SUBSURFACE PROFILE				SAMPLE	
Depth	Symbol	Description	Depth/Elev.	Number	Remarks
0		Ground Surface	0.0		
		FINE SAND GRAY AND LIGHT BROWN FINE SAND (SP)		1	
1					
2					
3					
4					
5					
6			6.0		
		CLAYEY SAND BROWN AND ORANGE CLAYEY SAND (SC)		2	
7					
8			8.0		
		End of Borehole			
9					

Depth to Ground Water: NOT FOUND
Drill Date: OCTOBER 3, 2005

Drilled By: MC
Drill Method: ASTM D-4700

Remarks: (SP) UNIFIED SOIL GROUP CLASSIFICATION SYMBOL AS DETERMINED BY VISUAL REVIEW

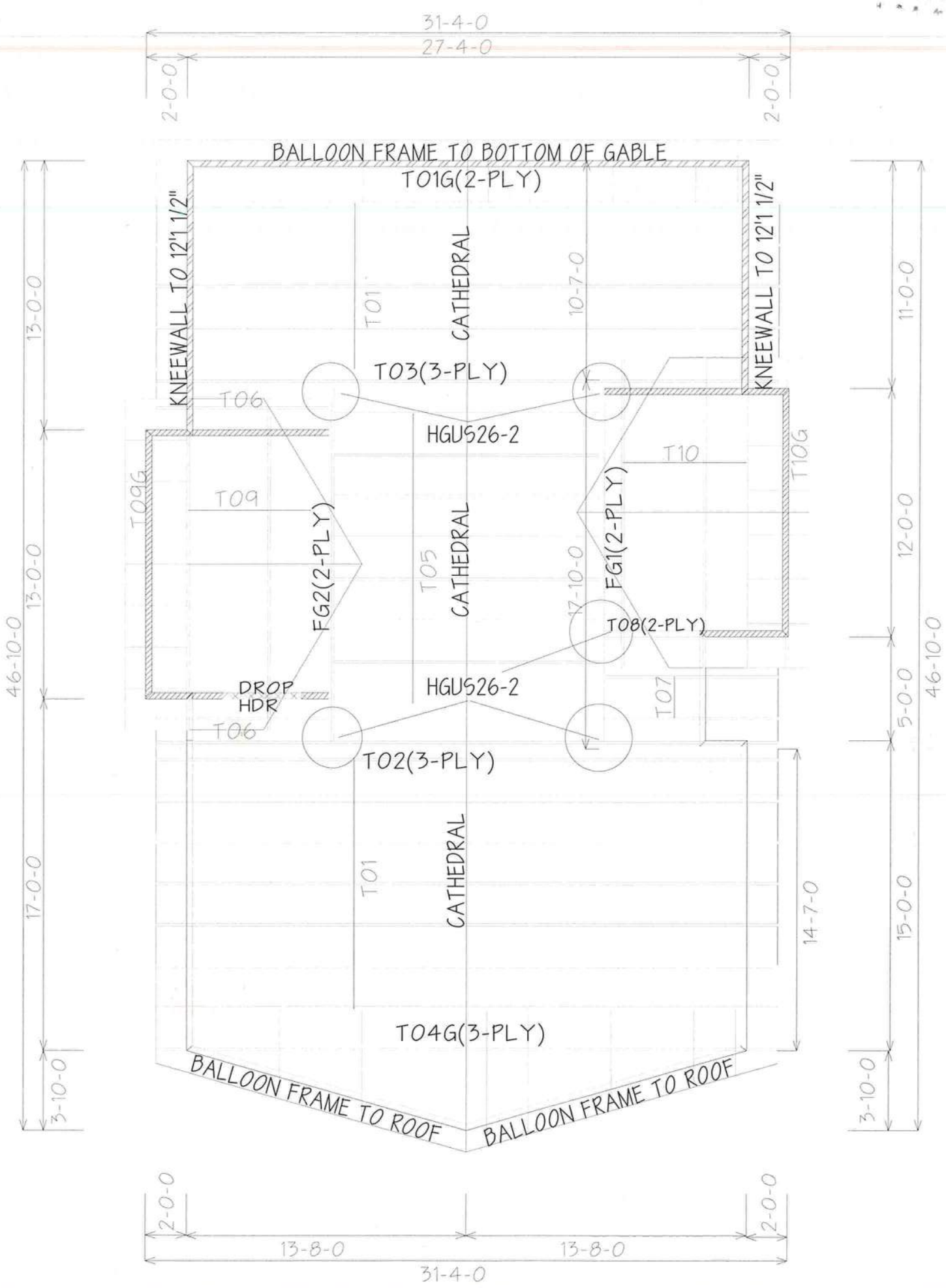

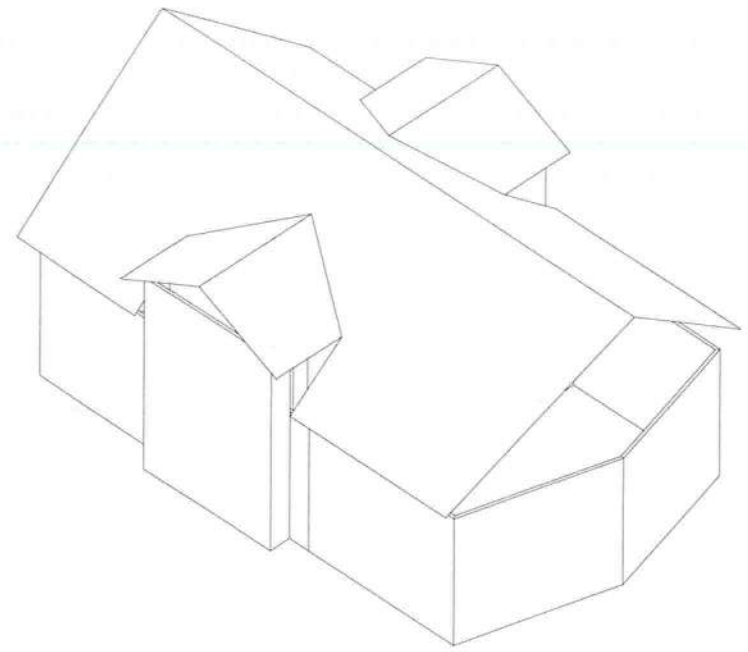

END DETAIL
PARALLEL CHORD TRUSS

APPROVED TRUSS ANCHOR BY BUILDER
HEEL HEIGHT = 2'-0"
BOTTOM = 2x6 MIN.
TOP = 2x6 MIN.

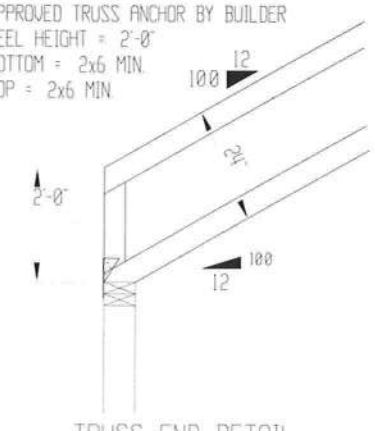

TRUSS END DETAIL

END DETAIL
ROOF ABOVE

APPROVED TRUSS ANCHOR BY BUILDER
PLUMB CUT OVERHANG
HEEL HEIGHT = 2x4 STD.
BOTTOM = 2x4 MIN.
TOP = 2x4 MIN.

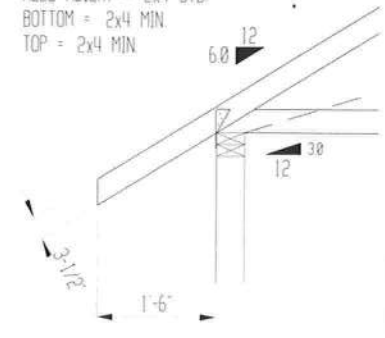

TRUSS END DETAIL

BEARING HEIGHT SCHEDUL

- 12'1 1/2"PLA
- 18'3 5/8" PL
- KNEEWALL OV UP TO 12'1 1/2" PI
- HEADER

HANGER SCHEDUL

16 - HUS26
5 - HGUS26-2

NOTES:

1) REFER TO HIB 91 (RECOMMENDATIONS FOR HANDLING INSTALLATION AND TEMPORARY BR) REFER TO ENGINEERED DRAWINGS FOR PERMAN BRACING REQUIRED.
2) ALL TRUSSES (INCLUDING TRUSSES UNDER VALLEY FRAMING) MUST BE COMPLETELY DECKED OR REFER TO DETAIL V105 FOR ALTERNATE BRACING REQUIREMENTS.
3) ALL VALLEYS ARE TO BE CONVENTIONALLY FRAMED BY BUILDER.
4) ALL TRUSSES ARE DESIGNED FOR 2' o.c. MAXIMUM SPACING, UNLESS OTHERWISE NOTED.
5) ALL WALLS SHOWN ON PLACEMENT PLAN ARE CONSIDERED TO BE LOAD BEARING, UNLESS OTHERWISE NOTED.
6) SY42 TRUSSES MUST BE INSTALLED WITH THE TOP BEING UP.
7) ALL ROOF TRUSS HANGERS TO BE SIMPSON HUS26 UNLESS OTHERWISE NOTED. ALL FLOOR TRUSS HANGERS TO BE SIMPSON THA422 UNLESS OTHERWISE NOTED.
8) BEAM/HEADER/LINTEL (HDR) TO BE FURNISHED BY BUILDER.

SHOP DRAWING APPROVA

THIS LAYOUT IS THE SOLE SOURCE FOR FABRICATION O TRUSSES AND VOIDS ALL PREVIOUS ARCHITECTURAL OR O TRUSS LAYOUTS. REVIEW AND APPROVAL OF THIS LAYOUT BE RECEIVED BEFORE ANY TRUSSES WILL BE BUILT. VERIF CONDITIONS TO INSURE AGAINST CHANGES THAT WILL RE IN EXTRA CHARGES TO YOU.

Requested Delivery Date: _____

Approved by: _____ Date: _____

Builders FirstSource
Bunnell
PHONE: 904-437-3340 FAX: 904-437-
Jacksonville
PHONE: 904-772-6100 FAX: 904-772-
Lake City
PHONE: 904-755-6894 FAX: 904-755-
Sanford
PHONE: 407-322-0059 FAX: 407-322-5

BUILDER:	O'NEIL CONSTRUCTIC
LEGAL ADDRESS:	FITZGERALD RES.
MODEL:	CUSTOM
REVISION:	
SCALE:	NT
DATE:	4-18-05
DRAWN BY:	G.DORRIS
JOB #:	L11091