SYSTEM INFORMATION	
MODULE	HANWHA Q.PEAK DUO BLK ML-G10+ 400
INVERTER	ENPHASE IQ8PLUS-72-2-US
RACKING	ROOFTECH RT-MINI II W/ UNIRAC NXT HORIZON 2-RAIL RACKING SYSTEM
SYSTEM SIZE (DC)	6.4 KW
LOCATION	30.1891350,-82.7021430

CLIMATIC & GEOGRAPHIC DESIGN CRITERIA TABLE R301.2(1)	
SPEED (MPH)	120
TOPOGRAPHIC EFFECTS	B
SPECIAL WIND REGION	NO
WIND BORNE DEBRIS ZONE	2
SEISMIC DESIGN CATEGORY	C
CLIMATE ZONE	2A
WIND EXPOSURE CATETORY	B

PLAN KEY	
PV-1	COVER PAGE
PV-1.1	ATTACHMENT DETAIL
PV-1.2	ATTACHMENT DETAIL
PV-2	PANEL LAYOUT
PV-3	ELETRICAL
PV-3.1	ELECTRICAL CONT.
PV-3.2	EQUIPMENT LABELS

GENERAL NOTES:

THIS PV SYSTEM HAS BEEN DESIGNED TO MEET THE MINIMUM DESIGN STANDARDS FOR BUILDING AND OTHER STRUCTURES OF THE ASCE 7-16, 7TH EDITION 2020 FLORIDA RESIDENTIAL CODE, 7TH EDITION 2020 FLORIDA BUILDING CODE, 7TH EDITION 2020 FLORIDA FIRE PREVENTION CODE, NEC 2017 AND ALL LOCAL CODES & ORDINANCES.

ROOF SHALL HAVE NO MORE THAN TWO LAYERS OF COVERING IN ADDITION TO THE SOLAR EQUIPMENT.

INSTALLATION OF SOLAR EQUIPMENT SHALL BE FLUSH MOUNTED, PARALLEL TO AND NO MORE THAN 6-INCHES ABOVE THE SURFACE OF THE ROOF.

ANY PLUMBING VENTS ARE NOT TO BE CUT OR COVERED FOR SOLAR EQUIPMENT INSTALLATION. ANY RELOCATION OR MODIFICATION OF THE VENT REQUIRES A PLUMBING PERMIT AND INSPECTION.

ALL DESIGN, CALCULATIONS ARE PERFORMED BY DANIEL DUNZIK REGISTERED ARCHITECT. FLORIDA STATE STATUTE 471.003(3) PROVIDES THAT LICENSED ARCHITECTS ARE EXEMPTED FROM THE PROVISIONS OF CHAPTER 471 ENGINEERING AND NOT PRECLUDED FROM PERFORMING ENGINEERING SERVICES FOR INTEGRATED SYSTEMS AND SERVICES THAT ARE INCIDENTAL TO BUILDINGS AND STRUCTURES.

INVERTER PLACEMENT:

SYSTEM UTILIZES "ENPHASE" MICRO-INVERTERS WITH RAPID SHUTDOWN CONTROL LOCATED ON THE BACK SIDE OF EACH MODULE.

STRUCTURAL STATEMENT:

THE EXISTING STRUCTURE IS ADEQUATE TO SUPPORT THE NEW LOADS IMPOSED BY THE PHOTOVOLTAIC MODULE SYSTEM INCLUDING UPLIFT & SHEAR.EXISTING RAFTER SIZES & DIMENSIONS CONFORM TO 7TH EDITION 2020 FLORIDA RESIDENTIAL CODE

MOUNTING BRACKETS AND HARDWARE MEET OR EXCEED FLORIDA CODE REQUIREMENTS FOR THE DESIGN CRITERIA OF THE TOWN.

FSEC CERTIFICATION STATEMENT:

PER FL. STATUE 377.705 , I, MINA A. MAKAR PE# 86753, CERTIFICATE OF AUTHORIZATION #33404, AN ENGINEER LICENSED PURSUANT TO CHAPTER 471,CERTIFY THAT THE PV ELECTRICAL SYSTEM AND ELECTRICAL COMPONENTS ARE DESIGNED AND APPROVED USING THE STANDARDS CONTAINED IN THE MOST RECENT VERSION OF THE FLORIDA BUILDING CODE. FBC 2020

FBC, RESIDENTIAL 2020

TABLE R301.2.1.3

WIND SPEED CONVERSIONS[a]

V_{ult}	110	115	120	130	140	150	160	170	180	190	200
V_{asd}	85	89	93	101	108	116	124	132	139	147	155

For SI: 1 mile per hour = 0.447 m/s.

a. Linear interpolation is permitted.

HANWHA Q.PEAK DUO BLK ML-G10+ 400
400 WATT MODULE
74" X 41.1" X 1.26"
(SEE DATASHEET)

BILL OF MATERIALS	
MODULES	16
INVERTERS	16
L-FOOT ATTACHMENT W/ RT-MINI	42
171" RAILS	7
SKIRTS	0
ENPHASE COMBINER BOX	1
EATON 60A FUSIBLE AC DISCONNECT	1
35A FUSES	2
25A BACKFEED BREAKER	1

momentum SOLAR

PRO CUSTOM SOLAR LLC D.B.A. MOMENTUM SOLAR
325 HIGH STREET, METUCHEN, NJ 08840
(732) 902-6224
MOMENTUMSOLAR.COM

PROFESSIONAL ENGINEERING

MINA A. MAKAR
LICENSE
No PE86753
STATE OF FLORIDA
PROFESSIONAL ENGINEER

Digitally signed by
Reason: Digitally signed by Mina A Makar. Reason : This item has been electronically signed and sealed by [Mina A. Makar, PE 86753, COA # 33404] on the Date and Time Stamp shown using a digital signature. Printed copies of this document are not considered signed and sealed and the signature must be verified on any electronic copies
Date: 2023.07.20 10:07:59 -05:00

Digitally signed by Mina A Makar. Reason : This item has been electronically signed and sealed by [Mina A. Makar, PE 86753, COA # 33404] on the Date and Time Stamp shown using a digital signature. Printed copies of this document are not considered signed and sealed and the signature must be verified on any electronic copies

SOLAR CONTRACTOR

CAMERON CHRISTENSEN
CERTIFIED SOLAR CONTRACTOR LICENSE NUMBER: CVC57036
MOMENTUM SOLAR
5728 MAJOR BLVD. SUITE 307, ORLANDO FL. 32819

CUSTOMER INFORMATION

JOHNNY TRAN - MS132176
586 NORTHWEST OAKMONT WAY
LAKE CITY, FL 32055
6787335731

PV SYSTEM INFORMATION

SYSTEM SIZE (DC): 6.4 KW
16 MODULES: HANWHA Q.PEAK DUO BLK ML-G10+ 400
16 INVERTERS: ENPHASE IQ8PLUS-72-2-US

PROJECT INFORMATION

INITIAL	DATE: 7/19/2023	DESIGNER: JT
REV:	DATE:	DESIGNER:
REV:	DATE:	DESIGNER:

COVER PAGE

PV-1

PART # TABLE		
P/N	DESCRIPTION	LENGTH
084RLM1	NXT HORIZON RAIL 84" MILL	84"
084RLD1	NXT HORIZON RAIL 84" DARK	84"
168RLM1	NXT HORIZON RAIL 168" MILL	168"
168RLD1	NXT HORIZON RAIL 168" DARK	168"
208RLM1	NXT HORIZON RAIL 208" MILL	208"
208RLD1	NXT HORIZON RAIL 208" DARK	208"
246RLM1	NXT HORIZON RAIL 246" MILL	246"
246RLD1	NXT HORIZON RAIL 246" DARK	246"

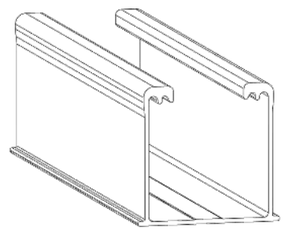

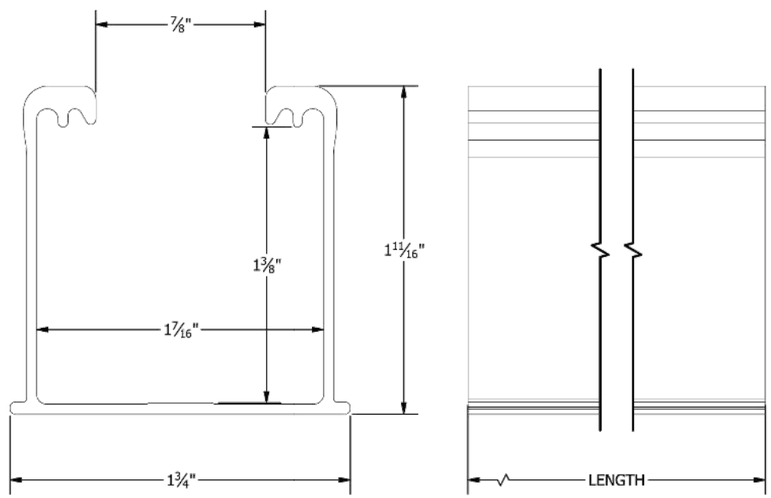

UNIRAC
1411 BROADWAY BLVD. NE
ALBUQUERQUE, NM 87102 USA
PHONE: 505.242.6411
WWW.UNIRAC.COM

PRODUCT LINE:	NXT HORIZON
DRAWING TYPE:	PART DETAIL
DESCRIPTION:	RAIL
REVISION DATE:	9/13/2021

DRAWING NOT TO SCALE
ALL DIMENSIONS ARE NOMINAL

PRODUCT PROTECTED BY ONE OR MORE US PATENTS
LEGAL NOTICE

NH-P01
SHEET

PART # TABLE		
P/N	DESCRIPTION	LENGTH
RLSPLCM1	NXT HORIZON RAIL SPLICE	10"

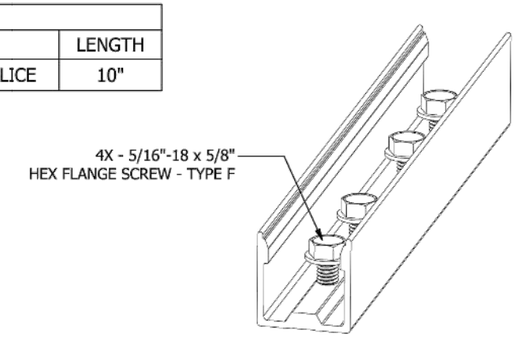

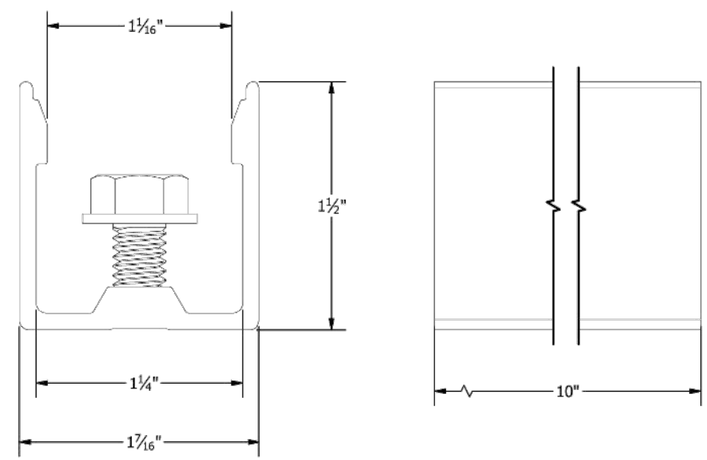

UNIRAC
1411 BROADWAY BLVD. NE
ALBUQUERQUE, NM 87102 USA
PHONE: 505.242.6411
WWW.UNIRAC.COM

PRODUCT LINE:	NXT HORIZON
DRAWING TYPE:	PART DETAIL
DESCRIPTION:	RAIL SPLICE
REVISION DATE:	9/22/2021

DRAWING NOT TO SCALE
ALL DIMENSIONS ARE NOMINAL

PRODUCT PROTECTED BY ONE OR MORE US PATENTS
LEGAL NOTICE

NH-P02
SHEET

momentum SOLAR

PRO CUSTOM SOLAR LLC D.B.A. MOMENTUM SOLAR
325 HIGH STREET, METUCHEN, NJ 08840
(732) 902-6224
MOMENTUMSOLAR.COM

PROFESSIONAL ENGINEERING

MINA A. MAKAR
LICENSE
No PE86753
STATE OF FLORIDA
PROFESSIONAL ENGINEER

Digitally signed by
Reason: Digitally signed by Mina A Makar. Reason: This item has been electronically signed and sealed by [Mina A. Makar, PE 86753, COA # 33404] on the Date and Time Stamp shown using a digital signature. Printed copies of this document are not considered signed and sealed and the signature must be verified on any electronic copies
Date: 2023.07.20 10:07:59 -05:00

Digitally signed by Mina A Makar.
Reason: This item has been electronically signed and sealed by [Mina A. Makar, PE 86753, COA # 33404] on the Date and Time Stamp shown using a digital signature. Printed copies of this document are not considered signed and sealed and the signature must be verified on any electronic copies

SOLAR CONTRACTOR

CAMERON CHRISTENSEN
CERTIFIED SOLAR CONTRACTOR LICENSE NUMBER: CVC57036
MOMENTUM SOLAR
5728 MAJOR BLVD. SUITE 307, ORLANDO FL. 32819

CUSTOMER INFORMATION

JOHNNY TRAN - MS132176
586 NORTHWEST OAKMONT WAY
LAKE CITY, FL 32055
6787335731

PV SYSTEM INFORMATION

SYSTEM SIZE (DC): 6.4 KW
16 MODULES: HANWHA Q.PEAK DUO BLK ML-G10+ 400
16 INVERTERS: ENPHASE IQ8PLUS-72-2-US

PROJECT INFORMATION

INITIAL	DATE: 7/19/2023	DESIGNER: JT
REV:	DATE:	DESIGNER:
REV:	DATE:	DESIGNER:

ATTACHMENT DETAIL

PV-1.1

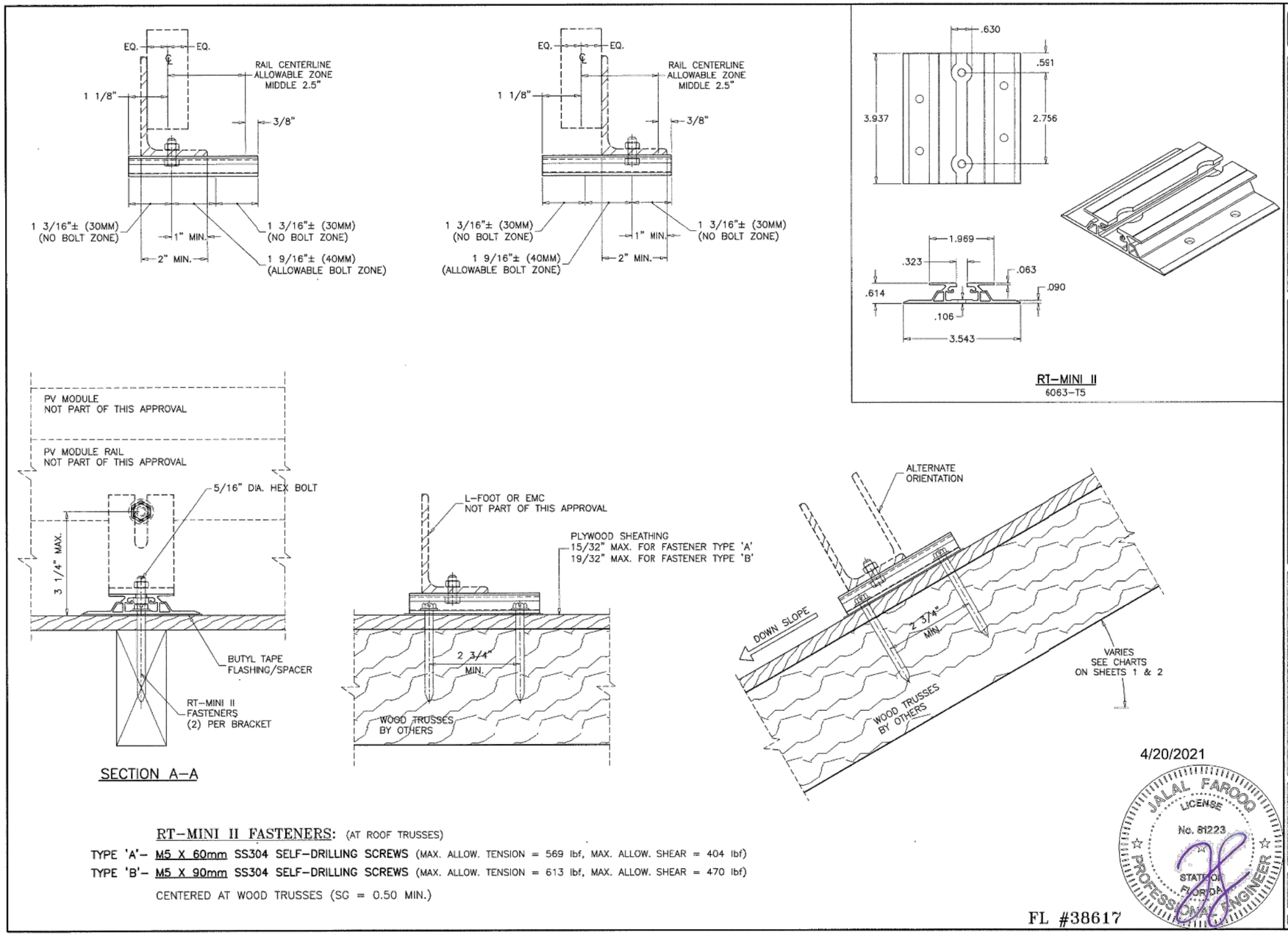

ATTACHMENT DETAIL FOR SHINGLE ROOF

momentum SOLAR

PRO CUSTOM SOLAR LLC D.B.A. MOMENTUM SOLAR
325 HIGH STREET, METUCHEN, NJ 08840
(732) 902-6224
MOMENTUMSOLAR.COM

PROFESSIONAL ENGINEERING

MINA A. MAKAR
LICENSE
No PE86753
STATE OF FLORIDA
PROFESSIONAL ENGINEER

Digitally signed by
Reason: Digitally signed by Mina A Makar. Reason: This item has been electronically signed and sealed by [Mina A. Makar, PE 86753, COA # 33404] on the Date and Time Stamp shown using a digital signature. Printed copies of this document are not considered signed and sealed and the signature must be verified on any electronic copies
Date: 2023.07.20 10:07:59 -05:00

Digitally signed by Mina A Makar.
Reason: This item has been electronically signed and sealed by [Mina A. Makar, PE 86753, COA # 33404] on the Date and Time Stamp shown using a digital signature. Printed copies of this document are not considered signed and sealed and the signature must be verified on any electronic copies

SOLAR CONTRACTOR

CAMERON CHRISTENSEN
CERTIFIED SOLAR CONTRACTOR LICENSE NUMBER: CVC57036
MOMENTUM SOLAR
5728 MAJOR BLVD. SUITE 307, ORLANDO FL. 32819

CUSTOMER INFORMATION

JOHNNY TRAN - MS132176
586 NORTHWEST OAKMONT WAY
LAKE CITY, FL 32055
6787335731

PV SYSTEM INFORMATION

SYSTEM SIZE (DC): 6.4 KW
16 MODULES: HANWHA Q.PEAK DUO BLK ML-G10+ 400
16 INVERTERS: ENPHASE IQ8PLUS-72-2-US

PROJECT INFORMATION

INITIAL	DATE: 7/19/2023	DESIGNER: JT
REV:	DATE:	DESIGNER:
REV:	DATE:	DESIGNER:

ATTACHMENT DETAIL

PV-1.2

SCALE: 3/32" = 1'-0"

ROOF	PANEL COUNT	TILT	AZIMUTH	SHADING	~~LANDSCAPE MAX SPAN (ROOF AREA 1/2/3)~~	~~PORTRAIT MAX SPAN (ROOF AREA 1/2/3)~~	LANDSCAPE MAX CANTILEVER	PORTRAIT MAX CANTILEVER
R1	11	25°	179°	100%	48 /32 /32	48 /32 /32	16 /10 /10	16 /10 /10
R2	5	25°	269°	100%	48 /32 /32	48 /32 /32	16 /10 /10	16 /10 /10

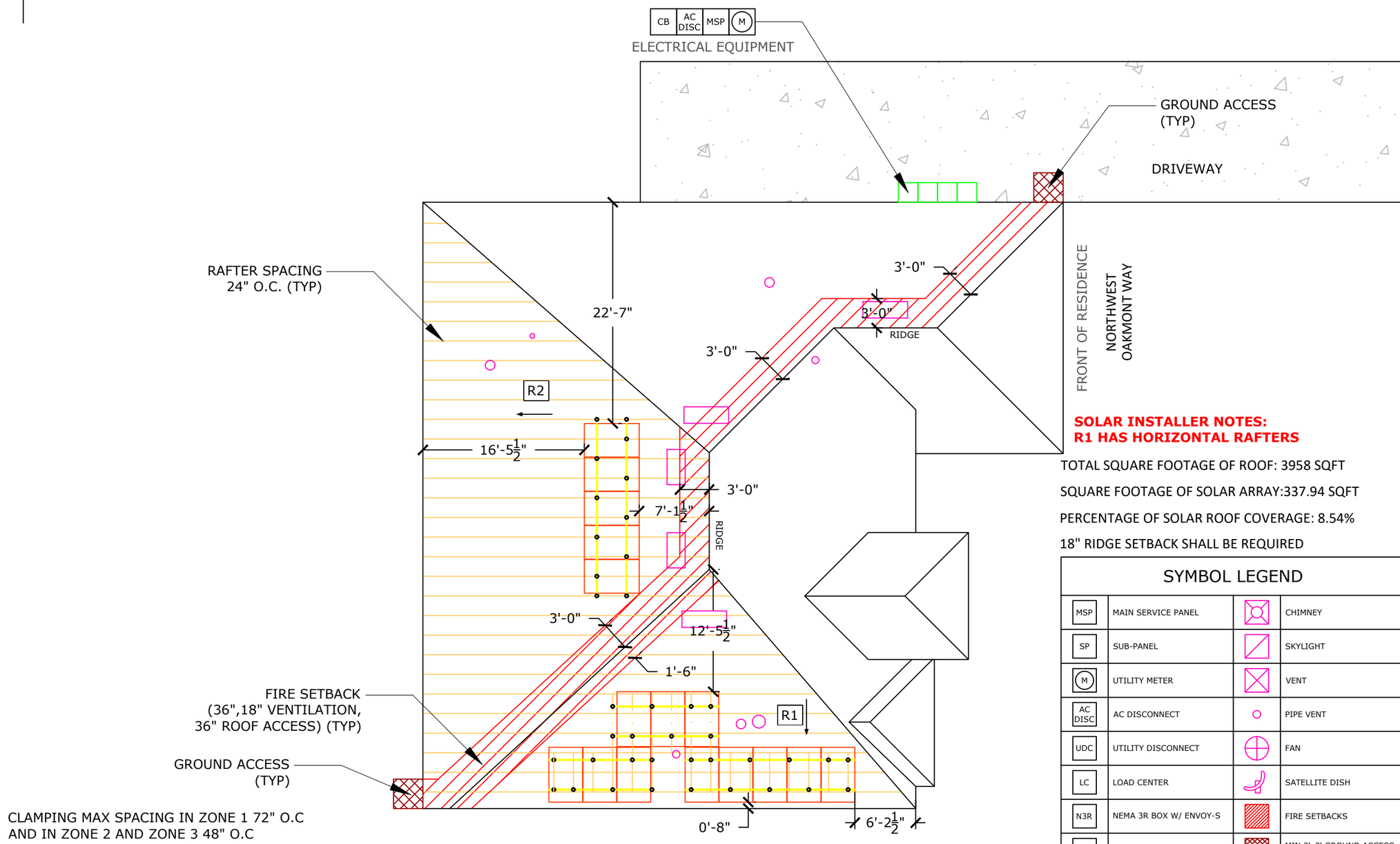

CLAMPING MAX SPACING IN ZONE 1 72" O.C
AND IN ZONE 2 AND ZONE 3 48" O.C

NOTE:
1. ROOF COVERING MATERIAL IS COMPOSED OF SINGLE LAYER ASPHALT COMPOSITE SHINGLE.
2. REFER TO LAYOUT DETAIL DRAWING PV-3 FOR ALL ROOFTOP DIMENSIONS.

SOLAR INSTALLER NOTES:
R1 HAS HORIZONTAL RAFTERS

TOTAL SQUARE FOOTAGE OF ROOF: 3958 SQFT

SQUARE FOOTAGE OF SOLAR ARRAY:337.94 SQFT

PERCENTAGE OF SOLAR ROOF COVERAGE: 8.54%

18" RIDGE SETBACK SHALL BE REQUIRED

SYMBOL LEGEND

MSP	MAIN SERVICE PANEL		CHIMNEY
SP	SUB-PANEL		SKYLIGHT
M	UTILITY METER		VENT
AC DISC	AC DISCONNECT		PIPE VENT
UDC	UTILITY DISCONNECT		FAN
LC	LOAD CENTER		SATELLITE DISH
N3R	NEMA 3R BOX W/ ENVOY-S		FIRE SETBACKS
CB	COMBINER BOX		MIN 3'x3' GROUND ACCESS POINT
	MODULE		PITCH DIRECTION
			WIND PRESSURE ZONE LINES. REFER TO PV-2.2 FOR ADDITIONAL INFO

momentum SOLAR

PRO CUSTOM SOLAR LLC D.B.A. MOMENTUM SOLAR
325 HIGH STREET, METUCHEN, NJ 08840
(732) 902-6224
MOMENTUMSOLAR.COM

PROFESSIONAL ENGINEERING

MINA A. MAKAR LICENSE No PE86753 STATE OF FLORIDA PROFESSIONAL ENGINEER

Digitally signed by
Reason: Digitally signed by Mina A Makar. Reason: This item has been electronically signed and sealed by Mina A. Makar, PE 86753, COA # 33404] on the Date and Time Stamp shown using a digital signature. Printed copies of this document are not considered signed and sealed and the signature must be verified on any electronic copies
Date: 2023.07.20 10:07:59 -05:00

Digitally signed by Mina A Makar.
Reason: This item has been electronically signed and sealed by [Mina A. Makar, PE 86753, COA # 33404] on the Date and Time Stamp shown using a digital signature. Printed copies of this document are not considered signed and sealed and the signature must be verified on any electronic copies

SOLAR CONTRACTOR

CAMERON CHRISTENSEN
CERTIFIED SOLAR CONTRACTOR LICENSE NUMBER: CVC57036
MOMENTUM SOLAR
5728 MAJOR BLVD. SUITE 307, ORLANDO FL. 32819

CUSTOMER INFORMATION

JOHNNY TRAN - MS132176
586 NORTHWEST OAKMONT WAY
LAKE CITY, FL 32055
6787335731

PV SYSTEM INFORMATION

SYSTEM SIZE (DC): 6.4 KW
16 MODULES: HANWHA Q.PEAK DUO BLK ML-G10+ 400
16 INVERTERS: ENPHASE IQ8PLUS-72-2-US

PROJECT INFORMATION

INITIAL	DATE: 7/19/2023	DESIGNER: JT
REV:	DATE:	DESIGNER:
REV:	DATE:	DESIGNER:

ROOF LAYOUT

PV-2

PV MODULE RATINGS	
MODULE MAKE	HANWHA
MODEL	Q.PEAK DUO BLK ML-G10+ 400
MAX POWER	400W
OPEN CIRCUIT VOLTAGE	45.3V
MPP VOLTAGE	37.13V
SHORT CIRCUIT CURRENT	11.14A
MPP CURRENT	10.77A
NUMBER OF MODULES	16
UL1703 COMPLIANT	YES

INVERTER RATINGS	
INVERTER MAKE	ENPHASE
MODEL	IQ8PLUS-72-2-US
MAX OUTPUT POWER	290W
OPEN DC VOLTAGE	60V
NOMINAL AC VOLTAGE	240V
MAX AC CURRENT	1.21A
CEC INVERTER EFFICIENCY	97%
NUMBER OF INVERTERS	16
UL1703 COMPLIANT	YES

SUB PANEL BREAKER SIZE	# OF MODULES	PV BREAKER PER BRANCH
	UP TO 16	20A

THIS SOLAR PHOTOVOLTAIC SYSTEM COMPLIES WITH THE 2020 FLORIDA BUILDING CODE AND THE 2017 NATIONAL ELECTRICAL CODE

VOLTAGE DROP CALCULATIONS

FORMULA USED PER NEC HANDBOOK 215.2(A)(4) WHERE APPLICABLE

WIRE RUN	V_{mp}	I_{mp}	R	L (FT)	V_o	% V_o	WIRE SIZE
BRANCH TO J-BOX	240.00	9.68	1.98	52.67	2.019	0.84%	12 AWG
J-BOX TO LOAD CENTER	240.00	19.36	1.24	50.00	2.401	1.00%	10 AWG
LOAD CENTER TO AC DISCONNECT	240.00	24.2	0.778	3.00	0.113	0.05%	08 AWG
AC DISCONNECT TO INTERCONNECTION	240.00	24.2	0.778	10.00	0.377	0.16%	08 AWG

NEC 705.12(B)(2)(3)(b) 120% RULE

(1.25 x INVERTER OUTPUT) + MAIN OCPD ≤ BUS RATING x 1.20

(1.25 x 19.36) + 200 ≤ 200 x 1.20

FSEC CERTIFICATION STATEMENT:

PER FL. STATUE 377.705 , I, MINA A. MAKAR PE# 86753, CERTIFICATE OF AUTHORIZATION #33404, AN ENGINEER LICENSED PURSUANT TO CHAPTER 471,CERTIFY THAT THE PV ELECTRICAL SYSTEM AND ELECTRICAL COMPONENTS ARE DESIGNED AND APPROVED USING THE STANDARDS CONTAINED IN THE MOST RECENT VERSION OF THE FLORIDA BUILDING CODE. FBC 2020

16 HANWHA Q.PEAK DUO BLK ML-G10+ 400 400W MODULES PAIRED WITH

16 ENPHASE IQ8PLUS-72-2-US MICRO-INVERTERS

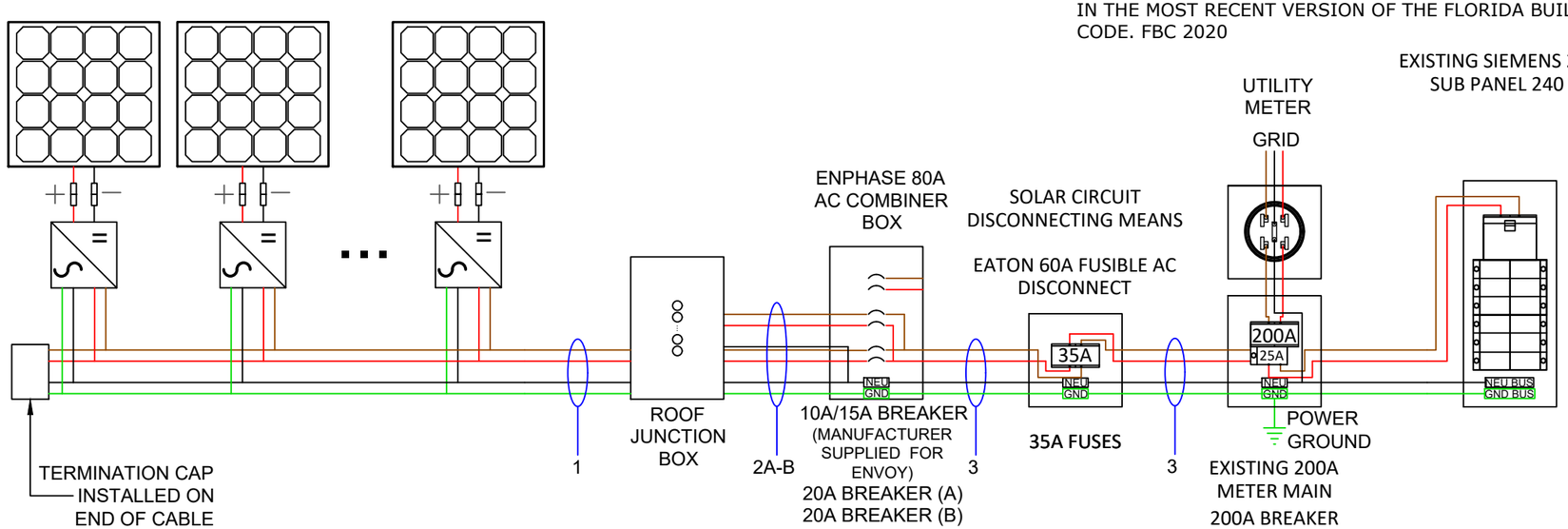

Wire Tag	Conduit	Wire Qty	Wire Gauge	Wire Type	Temp. Rating	Wire Ampacity (A)	Temp. Derate	Conduit Fill Derate	Derated Ampacity (A)	Inverter Qty	NOC (A)	NEC Correction	Design Current (A)	Ground Size	Ground Wire Type
1	OPEN AIR	2	12 AWG	Trunk Cable	90°C	30	0.96	1	28.80	8	1.21	1.25	12.10	12 AWG	Trunk Cable
2A	3/4" PVC	4	10 AWG	THWN-2	75°C	35	0.96	0.8	26.88	8	1.21	1.25	12.10	08 AWG	THWN-2
2B			10 AWG	THWN-2	75°C	35	0.96		26.88	8	1.21	1.25	12.10		
3	3/4" PVC	3 + G	08 AWG	THWN-2	75°C	50	0.96	1	48.00	16	1.21	1.25	24.20	08 AWG	THWN-2

NOTE: LETTER "G" IN WIRE QTY TAB STANDS FOR GROUNDING CONDUCTOR.

momentum SOLAR

PRO CUSTOM SOLAR LLC D.B.A. MOMENTUM SOLAR
325 HIGH STREET, METUCHEN, NJ 08840
(732) 902-6224
MOMENTUMSOLAR.COM

PROFESSIONAL ENGINEERING

MINA A. MAKAR LICENSE No PE86753 STATE OF FLORIDA PROFESSIONAL ENGINEER

Digitally signed by Reason: Digitally signed by Mina A Makar. Reason: This item has been electronically signed and sealed by [Mina A. Makar, PE 86753, COA # 33404] on the Date and Time Stamp shown using a digital signature. Printed copies of this document are not considered signed and sealed and the signature must be verified on any electronic copies
Date: 2023.07.20 10:07:59 -05:00

SOLAR CONTRACTOR

CAMERON CHRISTENSEN
CERTIFIED SOLAR CONTRACTOR LICENSE NUMBER: CVC57036
MOMENTUM SOLAR
5728 MAJOR BLVD. SUITE 307, ORLANDO FL. 32819

CUSTOMER INFORMATION

JOHNNY TRAN - MS132176
586 NORTHWEST OAKMONT WAY
LAKE CITY, FL 32055
6787335731

PV SYSTEM INFORMATION

SYSTEM SIZE (DC): 6.4 KW
16 MODULES: HANWHA Q.PEAK DUO BLK ML-G10+ 400
16 INVERTERS: ENPHASE IQ8PLUS-72-2-US

PROJECT INFORMATION

INITIAL	DATE: 7/19/2023	DESIGNER: JT
REV:	DATE:	DESIGNER:
REV:	DATE:	DESIGNER:

THREE LINE DIAGRAM

PV-3

ELECTRICAL NOTES:

1. ALL CALCULATIONS FOR VOC, VMAX, IMP AND ISC HAVE BEEN CALCULATED USING THE MANUFACTURED STRING CALCULATOR BASED ON ASHRAE 2% HIGH AND EXTREME MINIMUM TEMPERATURE COEFFICIENTS.
2. THE ENTIRE ARRAY IS BONDED ACCORDING TO (NEC 690.46 - 250.120 PARAGRAPH C). THE GROUND IS CARRIED AWAY FROM THE GROUNDING LUG USING #6 BARE COPPER WIRE OR #8 THWN-2 COPPER WIRE.
3. THIS SYSTEM COMPLIES WITH NEC 2017
4. BRANCH CIRCUIT CALCULATION FOR WIRE TAG 1 DISPLAYS THE LARGEST BRANCH CIRCUIT IN SYSTEM. OTHER BRANCH CIRCUITS SHALL HAVE LOWER DESIGN CURRENT THAN THE ONE SHOWN. IN ADDITION, VOLTAGE DROP CALCULATIONS FROM PANELS TO THE COMBINER BOX SHALL BE SHOWN IN A SIMILAR FASHION
5. ALL CONDUCTORS ARE SIZED BASED ON NEC 2017 ARTICLE 310
6. ALL EQUIPMENT INSTALLED IS RATED AT 75°C
7. INVERTER NOC (NOMINAL OPEN CURRENT) OBTAINED FROM EQUIPMENT DATASHEET
8. CONTRACTOR SHALL BE RESPONSIBLE FOR COMPLYING WITH ALL LOCAL AND NATIONAL CODE REQUIREMENTS.
9. EACH MODULE MUST BE GROUNDED ACCORDING TO USER INSTRUCTIONS
10. ALL EQUIPMENT SHALL BE LISTED PER NEC 690.4(B)
11. PER NEC 690.13, 690.15, PROVIDE A WARNING SIGN AT ALL LOCATIONS WHERE TERMINALS OF THE DISCONNECTING MEANS MAY BE ENERGIZED IN THE OPEN POSITION> SIGN SHALL READ *WARNING - ELECTRIC SHOCK HAZARD - DO NOT TOUCH TERMINALS - OR EQUIVALENT.
12. PER NEC 705.10, PROVIDE A PERMANENT PLAQUE OR DIRECTORY SHOWING ALL ELECTRIC POWER SOURCES ON THE PREMISES AT SERVICE ENTRANCE.
13. INTERCONNECTION METHOD SHALL COMPLY WITH NEC 705.12
14. AND OPTION FOR A SINGLE CIRCUIT BRANCH TO BE SPLIT INTO TWO SUB-CIRCUIT BRANCHES IS ACCEPTABLE.
15. ALL CONDUCTORS MUST BE COPPER.
16. NEUTRAL AND EQUIPMENT GROUNDING CONDUCTOR BONDED AS PER NEC 250.24(C).
17. EQUIPMENT GROUNDING CONDUCTOR IS CONNECTED TO A GROUNDING ELECTRODE SYSTEM PER 250.54(D).
18. FUSES FOR PV DISCONNECT HAVE AIC RATINGS OF 200KA AC AND 20KA DC.
19. SUPPLY SIDE CONNECTION SHALL BE MADE USING ILSCO INSULATION PIERCING CONNECTORS (IPC). MAKE, MODEL, AND RATING OF INTERCONNECTION CAN BE SEEN ON TABLE 1 BELOW.
20. METHOD OF INTERCONNECTION CAN BE SEEN IN FIGURE 1.
21. UTILITY HAS 24-HR UNRESTRICTED ACCESS TO ALL PHOTOVOLTAIC SYSTEM COMPONENTS LOCATED AT THE SERVICE ENTRANCE.
22. WORKING CLEARANCES AROUND THE EXISTING AND NEW ELECTRICAL EQUIPMENT WILL BE MAINTAINED IN ACCORDANCE WITH NEC ARTICLE 110.26.
23. CONDUCTORS EXPOSED TO SUNLIGHT SHALL BE LISTED AS SUNLIGHT RESISTANT PER NEC ARTICLE 300.6 (C)(1) AND ARTICLE 310.8 (D).
24. CONDUCTORS EXPOSED TO WET LOCATIONS SHALL BE SUITABLE FOR USE IN WET LOCATIONS PER NEC ARTICLE 310.10 (C).
25. TOTAL AREA OF ALL CONDUCTORS, SPLICES, AND TAPS INSTALLED AT ANY CROSS SECTION OF THE WIRING DOES NOT EXCEED 75% OF THE CROSS SECTIONAL AREA OF THE SPACE. NEC 312.8(A)(2).
26. SYSTEM IS CONSIDERED AN AC MODULE SYSTEM. NO DC CONDUCTORS ARE PRESENT IN CONDUIT, COMBINER, JUNCTION BOX, DISCONNECT. AND COMPLIES WITH 690.6 - NO DC DISCONNECT AND ASSOCIATED DC LABELING ARE REQUIRED.
27. SYSTEM COMPLIES WITH 690.12 RAPID SHUTDOWN AND ASSOCIATED LABELING AS PER 690.56(C). AC VOLTAGE AND SYSTEM OPERATING CURRENT SHALL BE PROVIDED 690.52.
28. CONDUCTORS IN CONDUIT ARE AC CONDUCTORS BRANCH CIRCUITS AND NOT PV SOURCE CIRCUITS. 690.6.
29. ALL GROUNDING SHALL COMPLY WITH 690.47(A) IN THAT THE AC MODULES WILL COMPLY WITH 250.64.
30. NO TERMINALS SHALL BE ENERGIZED IN THE OPEN POSITION IN THIS AC MODULE SYSTEM 690.13, 690.15, 690.6.
31. WHERE APPLICABLE: INTERCONNECTION SHALL COMPLY WITH 705.12(A) OR 705.12(B)
32. ALL WARNING SIGN(S) OR LABEL(S) SHALL COMPLY WITH 2017 NEC ARTICLE 110.21(B). LABEL WARNINGS SHALL ADEQUATELY WARN OF THE HAZARD. LABELS SHALL BE PERMANENTLY AFFIXED TO THE EQUIPMENT, AND LABELS REQUIRED SHALL BE SUITABLE FOR THE ENVIRONMENT.
33. PV POWER CIRCUIT LABELS SHALL APPEAR ON EVERY SECTION OF THE WIRING SYSTEM THAT IS SEPARATED BY ENCLOSURES, WALLS, PARTITIONS, CEILINGS, OR FLOORS.

TABLE 1:

MAKE	MODEL	VOLTAGE RATING	CONDUCTOR RANGE MAIN	CONDUCTOR RANGE TAP
ILSCO	IPC 4006	600 V	4/0-4 AWG	6-14 AWG
ILSCO	IPC 4020	600 V	4/0-2 AWG	2/0-6 AWG

INSTRUCTIONS FOR LINE TAPS

FIGURE 1:

1. ADJUST THE CONNECTOR NUT TO SUITABLE LOCATION
2. PUT THE BRANCH WIRE INTO THE CAP SHEATH FULLY
3. INSERT THE MAIN WIRE, IF THERE ARE TWO LAYS OF INSULATED LAY IN THE MAIN CABLE, SHOULD STRIP A CERTAIN LENGTH OF THE FIRST INSULATED LAY FROM INSERTED END
4. TURN THE NUT BY HAND, AND FIX THE CONNECTOR IN SUITABLE LOCATION.
5. SCREW THE NUT WITH THE SLEEVE SPANNER.
6. SCREW THE NUT CONTINUALLY UNTIL THE TOP PART IS CRACKED AND DROPPED DOWN

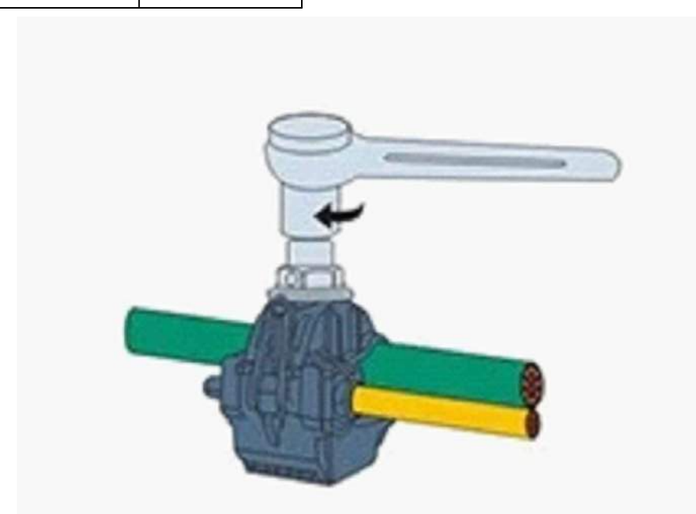

momentum SOLAR

PRO CUSTOM SOLAR LLC D.B.A. MOMENTUM SOLAR
325 HIGH STREET, METUCHEN, NJ 08840
(732) 902-6224
MOMENTUMSOLAR.COM

PROFESSIONAL ENGINEERING

MINA A. MAKAR
LICENSE
No PE86753
STATE OF FLORIDA
PROFESSIONAL ENGINEER

Digitally signed by
Reason: Digitally signed by Mina A Makar. Reason : This item has been electronically signed and sealed by [Mina A. Makar, PE 86753, COA # 33404] on the Date and Time Stamp shown using a digital signature. Printed copies of this document are not considered signed and sealed and the signature must be verified on any electronic copies
Date: 2023.07.20 10:07:59 -05:00

Digitally signed by Mina A Makar. Reason : This item has been electronically signed and sealed by [Mina A. Makar, PE 86753, COA # 33404] on the Date and Time Stamp shown using a digital signature. Printed copies of this document are not considered signed and sealed and the signature must be verified on any electronic copies

SOLAR CONTRACTOR

CAMERON CHRISTENSEN
CERTIFIED SOLAR CONTRACTOR LICENSE NUMBER: CVC57036
MOMENTUM SOLAR
5728 MAJOR BLVD. SUITE 307, ORLANDO FL. 32819

CUSTOMER INFORMATION

JOHNNY TRAN - MS132176
586 NORTHWEST OAKMONT WAY
LAKE CITY, FL 32055
6787335731

PV SYSTEM INFORMATION

SYSTEM SIZE (DC): 6.4 KW
16 MODULES: HANWHA Q.PEAK DUO BLK ML-G10+ 400
16 INVERTERS: ENPHASE IQ8PLUS-72-2-US

PROJECT INFORMATION

INITIAL	DATE: 7/19/2023	DESIGNER: JT
REV:	DATE:	DESIGNER:
REV:	DATE:	DESIGNER:

ELECTRICAL CONT.

PV-3.1

ALL WARNING SIGN(S) OR LABEL(S) SHALL COMPLY WITH NEC ARTICLE 110.21(B). LABEL WARNINGS SHALL ADEQUATELY WARN OF THE HAZARD. LABELS SHALL BE PERMANENTLY AFFIXED TO THE EQUIPMENT, AND LABELS REQUIRED SHALL BE SUITABLE FOR THE ENVIRONMENT.

TAG	LABEL	QUANTITY	LOCATION	NOTE
Ⓐ	CAUTION AC SOLAR VOLTAGE	12	AC CONDUITS	1 AT EVERY SEPARATION BY ENCLOSURES / WALLS / PARTITIONS / CEILINGS / FLOORS OR NO MORE THAN 10'
Ⓑ	WARNING: PHOTOVOLTAIC POWER SOURCE PHOTOVOLTAIC SYSTEM EQUIPPED WITH RAPID SHUTDOWN	1	COMBINER BOX	1 AT ANY COMBINER BOX
Ⓒ	WARNING ELECTRICAL SHOCK HAZARD TERMINALS ON BOTH LINE AND LOAD SIDES MAY BE ENERGIZED IN THE OPEN POSITION	1	JUNCTION BOX	1 AT ANY JUNCTION BOX
Ⓓ Ⓔ	PHOTOVOLTAIC SYSTEM AC DISCONNECT RATED AC OUTPUT CURRENT A NOMINAL OPERATING AC VOLTAGE 240 V WARNING ELECTRICAL SHOCK HAZARD TERMINALS ON BOTH LINE AND LOAD SIDES MAY BE ENERGIZED IN THE OPEN POSITION CAUTION POWER TO THIS SERVICE IS ALSO SUPPLIED FROM ON-SITE SOLAR GENERATION AC SYSTEM DISCONNECT RAPID SHUTDOWN SWITCH FOR SOLAR PV SYSTEM PHOTOVOLTAIC SYSTEM INSTALLED BY MOMENTUM SOLAR 3096 B HAMILTON BLVD S. PLAINFIELD, NJ 07080 PHONE NUMBER:732-902-6224	1	AC DISCONNECT (RSD SWITCH)	1 OF EACH AT FUSED AC DISCONNECT COMPLETE VOLTAGE AND CURRENT VALUES ON DISCONNECT LABEL
Ⓕ	WARNING DUAL POWER SUPPLY SECOND SOURCE IS PHOTOVOLTAIC SYSTEM REVENUE METER	1	UTILITY METER	1 AT UTILITY METER AND ONE DIRECTORY PLACARD
Ⓖ	EMERGENCY RESPONDER THIS SOLAR PV SYSTEM EQUIPPED WITH RAPID SHUTDOWN TURN RAPID SHUTDOWN SWITCH TO THE "OFF" POSITION TO SHUT DOWN ENTIRE PV SYSTEM SECTIONS OF THE PV SYSTEM THAT ARE SHUT DOWN WHEN THE RAPID SHUTDOWN SWITCH IS OPERATED SECTIONS OF THE PV SYSTEM THAT ARE NOT SHUT DOWN WHEN THE RAPID SHUTDOWN SWITCH IS OPERATED SOLAR ELECTRIC PV ARRAYS WARNING DUAL POWER SUPPLY SECOND SOURCE IS PHOTOVOLTAIC SYSTEM	1	INTERCONNECTION POINT	1 OF EACH AT BUILDING INTERCONNECTION POINT AND ONE DIRECTORY PLACARD
	WARNING POWER SOURCE OUTPUT CONNECTION. DO NOT RELOCATE THIS OVERCURRENT DEVICE	1	BACKFEED PANEL	
Ⓗ	NOMINAL OPERATING AC VOLTAGE : 240V NOMINAL OPERATING AC FREQUENCY : 60HZ MAXIMUM AC POWER : VA MAXIMUM AC CURRENT : A MAXIMUM OVERCURRENT DEVICE RATING FOR AC MODULE PROTECTION : 20A	1	AC CURRENT PV MODULES	

EXAMPLES

Ⓐ

Ⓑ

Ⓒ

Ⓓ

Ⓕ

Ⓖ BACKFEED

momentum SOLAR

PRO CUSTOM SOLAR LLC D.B.A. MOMENTUM SOLAR
325 HIGH STREET, METUCHEN, NJ 08840
(732) 902-6224
MOMENTUMSOLAR.COM

PROFESSIONAL ENGINEERING

MINA A. MAKAR
LICENSE
No PE86753
STATE OF FLORIDA
PROFESSIONAL ENGINEER

Digitally signed by
Reason: Digitally signed by Mina A Makar. Reason: This item has been electronically signed and sealed by [Mina A. Makar, PE 86753, COA # 33404] on the Date and Time Stamp shown using a digital signature. Printed copies of this document are not considered signed and sealed and the signature must be verified on any electronic copies
Date: 2023.07.20 10:07:59 -05:00

SOLAR CONTRACTOR

CAMERON CHRISTENSEN
CERTIFIED SOLAR CONTRACTOR LICENSE NUMBER: CVC57036
MOMENTUM SOLAR
5728 MAJOR BLVD. SUITE 307, ORLANDO FL. 32819

CUSTOMER INFORMATION

JOHNNY TRAN - MS132176
586 NORTHWEST OAKMONT WAY
LAKE CITY, FL 32055
6787335731

PV SYSTEM INFORMATION

SYSTEM SIZE (DC): 6.4 KW
16 MODULES: HANWHA Q.PEAK DUO BLK ML-G10+ 400
16 INVERTERS: ENPHASE IQ8PLUS-72-2-US

PROJECT INFORMATION

INITIAL	DATE: 7/19/2023	DESIGNER: JT
REV:	DATE:	DESIGNER:
REV:	DATE:	DESIGNER:

EQUIPMENT LABELS

PV-3.2