LOT 9 MARION PLACE S/D BLOCK B P
WD 1047-2063, WD 1398-2336, WD 1

RUST JAMES DALE SR
1849 SW PALOMA CT
LAKE CITY, FL 32025

2023

05-4S-17-07610-359

COLUMBIA COUNTY PROPERTY

BUILDING CHARACTERISTICS

ELEMENT	CD	CONSTRUCTION
Exterior Wall	19	COMMON BRK 100
Roof Structur	03	GABLE/HIP 100
Roof Cover	03	COMP SHNGL 100
Interior Wall	05	DRYWALL 100
Interior Floo	14	CARPET 50
Interior Floo	15	HARDTILE 50
Air Condition	03	CENTRAL 100
Heating Type	04	AIR DUCTED 100
Bedrooms		2 100
Bathrooms		2 100
Frame	02	WOOD FRAME 100
Stories	1.	1. 100
Architectual	05	CONV 100
Units		0 100
Condition Adj	03	03 100
Kitchen Adjus	01	01 100
Quality	06	06
DOR CODE	0100	SINGLE FAMILY
MAP NUM		MKT AREA 06
NEIGHBORHOOD/LOC	5417.00	1.00/

AREA TYPE	TOTAL GROSS AREA	PCT OF BASE	TOT ADJ AREA	SUBAREA MARKET VALUE
BAS	265	100	265	23,471
BAS	1,355	100	1,355	120,010
FGR	320	55	176	15,588
FOP	210	30	63	5,580
TOTALS	2,150		1,859	164,649

MARKET ADJUSTMENTS

TYPE	MDL	EFF. AREA	TOT ADJ PTS	EFF. BASE RATE	REPL. COST NEW	AYB	EYB	ECON	FNCT		NORM	% COND
0100	01	1,859	130.1355	108.01	200,791	2004	2004	0	0	0	18.00	82.00

1 SINGLE FAM – 100% - 2022 HX Base Yr 2022

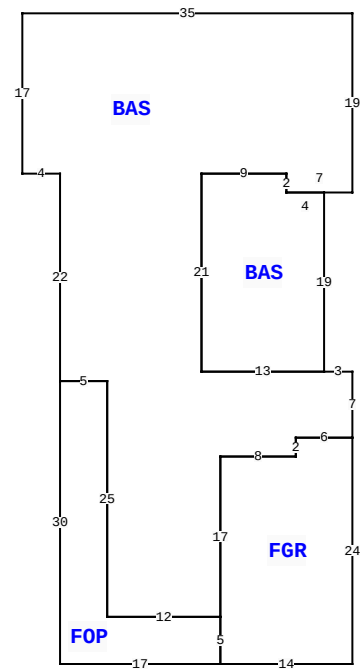

1849 SW PALOMA CT, LAKE CITY

BLD DATE		LGL DATE	
XF DATE		LAND DATE	04/27/2022 MLU
INC DATE		AG DATE	

VALUATION SUMMARY

VALUATION BY		STANDARD
Tax Group: 1	Tax Dist:	
BUILDING MARKET VALUE		164,649
TOTAL MARKET OB/XF VALUE		2,560
TOTAL LAND VALUE - MARKET		15,000
TOTAL MARKET VALUE		182,209
SOH/AGL Deduction		24,610
ASSESSED VALUE		157,599
TOTAL EXEMPTION VALUE	HX HB WR	55,000
BASE TAXABLE VALUE		102,599
TOTAL JUST VALUE		182,209
NCON VALUE		0
INCOME VALUE		
PREVIOUS YEAR MKT VALUE		

PERMIT NUM	DESCRIPTION	AMT	ISSUED
2810	SFR	262	10/31/2003

SALES DATA

OFF RECORD Number	DATE	TYPE INST	Q U	V I	RSN CD	SALE PRICE
1435/2540	4/22/2021	WD	Q	I	01	193,500
GRANTOR: STREICHER MICHAEL						
GRANTEE: RUST JAMES DALE SR						
1398/2336	11/14/2019	WD	Q	I	01	143,000
GRANTOR: K C TROWELL						
GRANTEE: MICHAEL STREICHER						

BUILDING NOTES

BUILDING DIMENSIONS

BAS=[ORIG=0,0] W35 S17 E4 S22 E5 S25 E12 N17 E8 N2 E6 N7 W3 W13 N21 E9 S2 E7 N19 $
FGR=[ORIG=-14,64] S5 E14 N24 W6 S2 W8 S17 $
BAS=[ORIG=-3,38] N19 W4 N2 W9 S21 E13 $
FOP=[ORIG=-31,39] S30 E17 N5 W12 N25 W5 $
.

EXTRA FEATURES

L N	OB/XF CODE	DESCRIPTION	BLD	CAP	L	W	UNITS	UT	Adj R	ADJ UNIT PRICE	ORIG COND	YEAR ON	YEAR ACTUAL	Q	% COND	OB/XF MKT VALUE	NOTES
1	0180	FPLC 1STRY	0	100	0	0	1.00	UT	2,000.00	2,000.00	100	2004	2004	3	100	2,000	
2	0166	CONC,PAVMT	0	100	0	0	280.00	UT	2.00	2.00	100	2004	2004	3	100	560	

LAND DESCRIPTION

TOTAL OB/XF 2,560

L N	USE CODE	LAND USE DESCRIPTION	CAP	R D	LOC ZONE	FRONT	DEPTH	TOT LND UTS	UNIT TYPE	D T	DPTH FACT	% COND	TOT ADJ	UNIT PRICE	ADJ UNIT PRICE	LAND VALUE	OTHER ADJUSTMENTS AND NOTES	YEAR	DENSITY	DECL	FRZ	YR	CONSRV
1	0100	SFR	100			0.00	104.00	1.00	LT		1.00	1.00	1.00	15,000.00	15,000.00	15,000							

REVIEW DATE 09/30/2016 BY DFRP Total Acres: 0.09 Total Land Value: 15,000 Market: 0 Agricultural: 0 Common: 15,000 PRINTED 04/05/2023