DATE 09/14/2006

Columbia County Building Permit

This Permit Expires One Year From the Date of Issue

PERMIT
000024972

APPLICANT J.L. DUPREE, SR. PHONE 386.754.5678

ADDRESS POB 2861 LAKE CITY FL 32056

OWNER PHOENIX LAND DEVELOPMENT PHONE 386.754.5678

ADDRESS 164 SW BIRCH GLEN LAKE CITY FL 32025

CONTRACTOR J.L. DUPREE, JR. PHONE 386.754.5678

LOCATION OF PROPERTY 90-W TO C-252 TO SW DEPUTY J. DAVIS LN TO LAUREL LAKES S.D TO BIRCH GLEN,TL AND IT'S THE 2ND LOT ON THE L.

TYPE DEVELOPMENT SFD/UTILITY ESTIMATED COST OF CONSTRUCTION 91000.00

HEATED FLOOR AREA 1820.00 TOTAL AREA 2478.00 HEIGHT 23.00 STORIES 1

FOUNDATION CONC WALLS FRAMED ROOF PITCH 8'12 FLOOR CONC

LAND USE & ZONING RSF-2 MAX. HEIGHT 35

Minimum Set Back Requirments: STREET-FRONT 25.00 REAR 15.00 SIDE 10.00

NO. EX.D.U. 0 FLOOD ZONE XPP DEVELOPMENT PERMIT NO.

PARCEL ID 03-4S-16-02732-202 SUBDIVISION LAUREL LAKES

LOT 2 BLOCK PHASE 2 UNIT TOTAL ACRES 1.00

000001202		CGC06031	Lamar Dupree	
Culvert Permit No.	Culvert Waiver	Contractor's License Number	Applicant/Owner/Contractor	
18"X32'MITERED	X-06-0309	BLK	JTH	N
Driveway Connection	Septic Tank Number	LU & Zoning checked by	Approved for Issuance	New Resident

COMMENTS: 1 FOOT ABOVE ROAD. PREVENTATIVE TERMITE REPORT REC'D.

Check # or Cash 12380

FOR BUILDING & ZONING DEPARTMENT ONLY

(footer/Slab)

Temporary Power _____ date/app. by Foundation _____ date/app. by Monolithic _____ date/app. by

Under slab rough-in plumbing _____ date/app. by Slab _____ date/app. by Sheathing/Nailing _____ date/app. by

Framing _____ date/app. by Rough-in plumbing above slab and below wood floor _____ date/app. by

Electrical rough-in _____ date/app. by Heat & Air Duct _____ date/app. by Peri. beam (Lintel) _____ date/app. by

Permanent power _____ date/app. by C.O. Final _____ date/app. by Culvert _____ date/app. by

M/H tie downs, blocking, electricity and plumbing _____ date/app. by Pool _____ date/app. by

Reconnection _____ date/app. by Pump pole _____ date/app. by Utility Pole _____ date/app. by

M/H Pole _____ date/app. by Travel Trailer _____ date/app. by Re-roof _____ date/app. by

BUILDING PERMIT FEE $ 455.00 CERTIFICATION FEE $ 12.39 SURCHARGE FEE $ 12.39

MISC. FEES $ 0.00 ZONING CERT. FEE $ 50.00 FIRE FEE $ 0.00 WASTE FEE $

FLOOD DEVELOPMENT FEE $ FLOOD ZONE FEE $ 25.00 CULVERT FEE $ 25.00 **TOTAL FEE** 579.78

INSPECTORS OFFICE _____ CLERKS OFFICE CH

NOTICE: IN ADDITION TO THE REQUIREMENTS OF THIS PERMIT, THERE MAY BE ADDITIONAL RESTRICTIONS APPLICABLE TO THIS PROPERTY THAT MAY BE FOUND IN THE PUBLIC RECORDS OF THIS COUNTY. AND THERE MAY BE ADDITIONAL PERMITS REQUIRED FROM OTHER GOVERNMENTAL ENTITIES SUCH AS WATER MANAGEMENT DISTRICTS, STATE AGENCIES, OR FEDERAL AGENCIES.

"WARNING TO OWNER: YOUR FAILURE TO RECORD A NOTICE OF COMMENCEMENT MAY RESULT IN YOUR PAYING TWICE FOR IMPROVEMENTS TO YOUR PROPERTY. IF YOU INTEND TO OBTAIN FINANCING, CONSULT WITH YOUR LENDER OR AN ATTORNEY BEFORE RECORDING YOUR NOTICE OF COMMENCEMENT."

This Permit Must Be Prominently Posted on Premises During Construction

PLEASE NOTIFY THE COLUMBIA COUNTY BUILDING DEPARTMENT AT LEAST 24 HOURS IN ADVANCE OF EACH INSPECTION, IN ORDER THAT IT MAY BE MADE WITHOUT DELAY OR INCONVIENCE, PHONE 758-1008. THIS PERMIT IS NOT VALID UNLESS THE WORK AUTHORIZED BY IT IS COMMENCED WITHIN 6 MONTHS AFTER ISSUANCE.

The Issuance of this Permit Does Not Waive Compliance by Permittee with Deed Restrictions.

Columbia County Building Permit Application

Revised 9-23-04

For Office Use Only Application # 0608-67 Date Received 8/17 By JW Permit # 18021-24972
Application Approved by - Zoning Official BLK Date 30 08 06 Plans Examiner OKEITH Date 9-13-06
Flood Zone X Pyl Development Permit N/A Zoning RSF-2 Land Use Plan Map Category Res Low Dev.
Comments ~~[illegible]~~ - NOC

Applicants Name Lamar Dupree, Sr. Phone 386-754-5678
Address p.o. Box 2861
Owners Name Joseph L. Dupree PHOENIX LAND DEVELOPMENT Phone 386-754-5678
911 Address ~~P.O. Box 2861~~ 164 SW BIRCH GLEN, LC, FL 32024
Contractors Name Joseph L. Dupree, Jr. Phone 386-754-5678
Address P.O. Box 2861
Fee Simple Owner Name & Address –
Bonding Co. Name & Address –
Architect/Engineer Name & Address Freeman Design Group
Mortgage Lenders Name & Address

Circle the correct power company - FL Power & Light - Clay Elec. - Suwannee Valley Elec. - Progressive Energy
PROPOSED 2007
Property ID Number 03-4F-16-02732-202 Estimated Cost of Construction 149,500.00
Subdivision Name Laurel Lakes Lot 2 Block ___ Unit ___ Phase 2
Driving Directions 90 W TO Deputy J. Davis Ln. pass Corbitt's Mobile Home Sub. on (L) 1st Rd on left (SW Birch Glenn) 2nd lot on the left.

Type of Construction residential Number of Existing Dwellings on Property 0
Total Acreage 1 Lot Size 1 AC Do you need a - Culvert Permit or Culvert Waiver or Have an Existing Drive
Actual Distance of Structure from Property Lines - Front 27' Side 33'-7" 26'8" Side 47'-6" 38'6" Rear 87'-6"
Total Building Height 23' Number of Stories 1 Heated Floor Area 1820 TOTAL 2,478 Roof Pitch 8/12

Application is hereby made to obtain a permit to do work and installations as indicated. I certify that no work or installation has commenced prior to the issuance of a permit and that all work be performed to meet the standards of all laws regulating construction in this jurisdiction.

OWNERS AFFIDAVIT: I hereby certify that all the foregoing information is accurate and all work will be done in compliance with all applicable laws and regulating construction and zoning.

WARNING TO OWNER: YOUR FAILURE TO RECORD A NOTICE OF COMMENCMENT MAY RESULT IN YOU PAYING TWICE FOR IMPROVEMENTS TO YOUR PROPERTY. IF YOU INTEND TO OBTAIN FINANCING, CONSULT WITH YOUR LENDER OR ATTORNEY BEFORE RECORDING YOUR NOTICE OF COMMENCEMENT.

Owner Builder or Agent (Including Contractor)

STATE OF FLORIDA
COUNTY OF COLUMBIA

Shannon M Regar
My Commission DD364938
Expires October 21, 2008

Sworn to (or affirmed) and subscribed before me
this 17th day of August 20 06.
Personally known X or Produced Identification ___

Contractor Signature
Contractors License Number CGC060631
Competency Card Number
NOTARY STAMP/SEAL

Shannon Regar
Notary Signature

FROM :COLUMBIA CO BUILDING + ZONING FAX NO. :386-758-2160 Aug. 10 2006 07:42AM P2
57978

FLORIDA ENERGY EFFICIENCY CODE FOR BUILDING CONSTRUCTION

Florida Department of Community Affairs

Residential Whole Building Performance Method A

Project Name:	**Laural Lake Lot 1 ph2**	Builder:	**Glenn I. Jones Inc.**
Address:		Permitting Office:	columbia
City, State:	,	Permit Number:	24972
Owner:	**Laurel Lake Lot 1 ph2**	Jurisdiction Number:	221000
Climate Zone:	**North**		

1. New construction or existing	New	
2. Single family or multi-family	Single family	
3. Number of units, if multi-family	1	
4. Number of Bedrooms	3	
5. Is this a worst case?	Yes	
6. Conditioned floor area (ft²)	1820 ft²	
7. Glass type[1] and area: (Label reqd. by 13-104.4.5 if not default)		
a. U-factor: (or Single or Double DEFAULT)	Description Area 7a. (Dble, U=0.6) 48.3 ft²	
b. SHGC: (or Clear or Tint DEFAULT)	7b. (Clear) 230.6 ft²	
8. Floor types		
a. Slab-On-Grade Edge Insulation	R=0.0, 244.9(p) ft	
b. N/A		
c. N/A		
9. Wall types		
a. Frame, Wood, Exterior	R=13.0, 2198.4 ft²	
b. Frame, Wood, Adjacent	R=11.0, 260.0 ft²	
c. N/A		
d. N/A		
e. N/A		
10. Ceiling types		
a. Under Attic	R=30.0, 2347.0 ft²	
b. N/A		
c. N/A		
11. Ducts		
a. Sup: Unc. Ret: Unc. AH(Scaled):Garage	Sup. R=6.0, 175.0 ft	
b. N/A		

12. Cooling systems		
a. Central Unit	Cap: 44.5 kBtu/hr SEER: 14.00	
b. N/A		
c. N/A		
13. Heating systems		
a. Electric Heat Pump	Cap: 44.5 kBtu/hr HSPF: 8.00	
b. N/A		
c. N/A		
14. Hot water systems		
a. Electric Resistance	Cap: 40.0 gallons EF: 0.92	
b. N/A		
c. Conservation credits (HR-Heat recovery, Solar DHP-Dedicated heat pump)		
15. HVAC credits (CF-Ceiling fan, CV-Cross ventilation, HF-Whole house fan, PT-Programmable Thermostat, MZ-C-Multizone cooling, MZ-H-Multizone heating)		

Glass/Floor Area: 0.13

Total as-built points: 24821
Total base points: 30340

PASS

I hereby certify that the plans and specifications covered by this calculation are in compliance with the Florida Energy Code.

PREPARED BY: [signature]

DATE: 8-3-06

I hereby certify that this building, as designed, is in compliance with the Florida Energy Code.

OWNER/AGENT: _____

DATE: _____

Review of the plans and specifications covered by this calculation indicates compliance with the Florida Energy Code. Before construction is completed this building will be inspected for compliance with Section 553.908 Florida Statutes.

GREAT SEAL OF THE STATE OF FLORIDA · IN GOD WE TRUST

BUILDING OFFICIAL: _____

DATE: _____

1 Predominant glass type. For actual glass type and areas, see Summer & Winter Glass output on pages 2&4.

SUMMER CALCULATIONS

Residential Whole Building Performance Method A - Details

ADDRESS: , , , PERMIT #:

BASE				AS-BUILT							
GLASS TYPES .18 X Conditioned Floor Area	X BSPM	= Points		Type/SC	Overhang Ornt	Len	Hgt	Area X	SPM X	SOF	= Points
.18	1820.0	20.04	6565.1	Double,U=0.61,Clear	E	1.5	6.0	43.3	43.20	0.91	1707.2
				Double,U=0.61,Clear	N	1.5	6.0	30.0	20.46	0.94	576.2
				Double,U=0.61,Clear	W	1.5	6.0	48.3	39.69	0.91	1751.0
				Double,U=0.52,Clear	W	6.0	8.0	35.0	40.18	0.60	847.1
				Double,U=0.61,Clear	N	1.5	5.0	16.0	20.46	0.92	299.8
				Double,U=0.61,Clear	W	1.5	4.0	6.0	39.69	0.81	193.8
				Double,U=0.61,Clear	E	1.5	8.0	28.0	43.20	0.96	1156.0
				Double,U=0.61,Clear	S	1.5	6.0	15.0	37.01	0.86	475.4
				Double,U=0.61,Clear	S	1.5	4.0	9.0	37.01	0.74	245.6
				As-Built Total:				**230.6**			**7252.2**

WALL TYPES	Area X	BSPM =	Points	Type	R-Value	Area X	SPM =	Points
Exterior	2198.4	1.70	3737.3	Frame, Wood, Exterior	13.0	2198.4	1.50	3297.6
Adjacent	260.0	0.70	182.0	Frame, Wood, Adjacent	11.0	260.0	0.70	182.0
Base Total:	**2458.4**		**3919.3**	**As-Built Total:**		**2458.4**		**3479.6**

DOOR TYPES	Area X	BSPM =	Points	Type	Area X	SPM =	Points
Exterior	21.0	4.10	86.1	Exterior Wood	21.0	6.10	128.1
Adjacent	0.0	0.00	0.0				
Base Total:	**21.0**		**86.1**	**As-Built Total:**	**21.0**		**128.1**

CEILING TYPES	Area X	BSPM =	Points	Type	R-Value	Area X	SPM X SCM =	Points
Under Attic	2347.0	1.73	4060.3	Under Attic	30.0	2347.0	1.73 X 1.00	4060.3
Base Total:	**2347.0**		**4060.3**	**As-Built Total:**		**2347.0**		**4060.3**

FLOOR TYPES	Area X	BSPM =	Points	Type	R-Value	Area X	SPM =	Points
Slab	244.9(p)	-37.0	-9061.3	Slab-On-Grade Edge Insulation	0.0	244.9(p	-41.20	-10089.9
Raised	0.0	0.00	0.0					
Base Total:			**-9061.3**	**As-Built Total:**		**244.9**		**-10089.9**

INFILTRATION	Area X	BSPM =	Points	Area X	SPM =	Points
	1820.0	10.21	18582.2	1820.0	10.21	18582.2

SUMMER CALCULATIONS

Residential Whole Building Performance Method A - Details

ADDRESS: , , ,	PERMIT #:

BASE				AS-BUILT							
Summer Base Points: 24151.7				**Summer As-Built Points:**							**23412.5**
Total Summer Points	X	System Multiplier	=	Cooling Points	Total Component (System - Points)	X	Cap Ratio	X	Duct Multiplier (DM x DSM x AHU)	X	System Multiplier	X	Credit Multiplier	=	Cooling Points
					(sys 1: Central Unit 44500 btuh ,SEER/EFF(14.0) Ducts:Unc(S),Unc(R),Gar(AH),R6.0(INS)										
					23413		1.00		(1.09 x 1.147 x 0.95)		0.244		1.000		6779.1
24151.7		**0.4266**		**10303.1**	**23412.5**		**1.00**		**1.188**		**0.244**		**1.000**		**6779.1**

WINTER CALCULATIONS

Residential Whole Building Performance Method A - Details

ADDRESS: , , , PERMIT #:

BASE

GLASS TYPES

.18 X Conditioned Floor Area	X BWPM	= Points
.18 1820.0	12.74	4173.6

WALL TYPES	Area X	BWPM =	Points
Exterior	2198.4	3.70	8134.1
Adjacent	260.0	3.60	936.0
Base Total:	**2458.4**		**9070.1**

DOOR TYPES	Area X	BWPM =	Points
Exterior	21.0	8.40	176.4
Adjacent	0.0	0.00	0.0
Base Total:	**21.0**		**176.4**

CEILING TYPES	Area X	BWPM =	Points
Under Attic	2347.0	2.05	4811.4
Base Total:	**2347.0**		**4811.4**

FLOOR TYPES	Area X	BWPM =	Points
Slab	244.9(p)	8.9	2179.6
Raised	0.0	0.00	0.0
Base Total:			**2179.6**

INFILTRATION	Area X	BWPM =	Points
	1820.0	-0.59	-1073.8

AS-BUILT

Type/SC	Overhang Ornt	Len	Hgt	Area X	WPM X	WOF =	Points
Double,U=0.61,Clear	E	1.5	6.0	43.3	11.68	1.04	523.8
Double,U=0.61,Clear	N	1.5	6.0	30.0	17.34	1.00	521.4
Double,U=0.61,Clear	W	1.5	6.0	48.3	13.51	1.02	668.0
Double,U=0.52,Clear	W	6.0	8.0	35.0	10.85	1.13	430.8
Double,U=0.61,Clear	N	1.5	5.0	16.0	17.34	1.00	278.5
Double,U=0.61,Clear	W	1.5	4.0	6.0	13.51	1.05	85.5
Double,U=0.61,Clear	E	1.5	8.0	28.0	11.68	1.02	333.8
Double,U=0.61,Clear	S	1.5	6.0	15.0	6.22	1.12	104.3
Double,U=0.61,Clear	S	1.5	4.0	9.0	6.22	1.35	75.8
As-Built Total:				**230.6**			**3022.0**

Type	R-Value	Area X	WPM =	Points
Frame, Wood, Exterior	13.0	2198.4	3.40	7474.6
Frame, Wood, Adjacent	11.0	260.0	3.60	936.0
As-Built Total:		**2458.4**		**8410.6**

Type	Area X	WPM =	Points
Exterior Wood	21.0	12.30	258.3
As-Built Total:	**21.0**		**258.3**

Type	R-Value	Area X	WPM X WCM =	Points
Under Attic	30.0	2347.0	2.05 X 1.00	4811.4
As-Built Total:		**2347.0**		**4811.4**

Type	R-Value	Area X	WPM =	Points
Slab-On-Grade Edge Insulation	0.0	244.9(p	18.80	4604.1
As-Built Total:		**244.9**		**4604.1**

Area X	WPM =	Points
1820.0	-0.59	-1073.8

WINTER CALCULATIONS

Residential Whole Building Performance Method A - Details

ADDRESS: , , , PERMIT #:

BASE				AS-BUILT							
Winter Base Points:			**19337.3**	**Winter As-Built Points:**							**20032.5**
Total Winter Points	X	System Multiplier	= Heating Points	Total Component (System - Points)	X	Cap Ratio	X Duct Multiplier (DM x DSM x AHU)	X System Multiplier	X Credit Multiplier	=	Heating Points
				(sys 1: Electric Heat Pump 44500 btuh ,EFF(8.0) Ducts:Unc(S),Unc(R),Gar(AH),R6.0							
				20032.5		1.000	(1.069 x 1.169 x 0.95)	0.426	1.000		10137.1
19337.3		**0.6274**	**12132.2**	**20032.5**		**1.00**	**1.187**	**0.426**	**1.000**		**10137.1**

WATER HEATING & CODE COMPLIANCE STATUS

Residential Whole Building Performance Method A - Details

ADDRESS: , , , PERMIT #:

BASE				AS-BUILT							
WATER HEATING											
Number of Bedrooms	X	Multiplier	= Total	Tank Volume	EF	Number of Bedrooms	X	Tank Ratio	X Multiplier	X Credit Multiplier	= Total
3		2635.00	7905.0	40.0	0.92	3		1.00	2635.00	1.00	7905.0
				As-Built Total:							**7905.0**

CODE COMPLIANCE STATUS

BASE				AS-BUILT			
Cooling Points +	Heating Points +	Hot Water Points =	Total Points	Cooling Points +	Heating Points +	Hot Water Points =	Total Points
10303	**12132**	**7905**	**30340**	**6779**	**10137**	**7905**	**24821**

PASS

Code Compliance Checklist

Residential Whole Building Performance Method A - Details

ADDRESS: , , , PERMIT #:

6A-21 INFILTRATION REDUCTION COMPLIANCE CHECKLIST

COMPONENTS	SECTION	REQUIREMENTS FOR EACH PRACTICE	CHECK
Exterior Windows & Doors	606.1.ABC.1.1	Maximum: .3 cfm/sq.ft. window area; .5 cfm/sq.ft. door area.	
Exterior & Adjacent Walls	606.1.ABC.1.2.1	Caulk, gasket, weatherstrip or seal between: windows/doors & frames, surrounding wall; foundation & wall sole or sill plate; joints between exterior wall panels at corners; utility penetrations; between wall panels & top/bottom plates; between walls and floor. EXCEPTION: Frame walls where a continuous infiltration barrier is installed that extends from, and is sealed to, the foundation to the top plate.	
Floors	606.1.ABC.1.2.2	Penetrations/openings >1/8" sealed unless backed by truss or joint members. EXCEPTION: Frame floors where a continuous infiltration barrier is installed that is sealed to the perimeter, penetrations and seams.	
Ceilings	606.1.ABC.1.2.3	Between walls & ceilings; penetrations of ceiling plane of top floor; around shafts, chases, soffits, chimneys, cabinets sealed to continuous air barrier; gaps in gyp board & top plate; attic access. EXCEPTION: Frame ceilings where a continuous infiltration barrier is installed that is sealed at the perimeter, at penetrations and seams.	
Recessed Lighting Fixtures	606.1.ABC.1.2.4	Type IC rated with no penetrations, sealed; or Type IC or non-IC rated, installed inside a sealed box with 1/2" clearance & 3" from insulation; or Type IC rated with < 2.0 cfm from conditioned space, tested.	
Multi-story Houses	606.1.ABC.1.2.5	Air barrier on perimeter of floor cavity between floors.	
Additional Infiltration reqts	606.1.ABC.1.3	Exhaust fans vented to outdoors, dampers; combustion space heaters comply with NFPA, have combustion air.	

6A-22 OTHER PRESCRIPTIVE MEASURES (must be met or exceeded by all residences.)

COMPONENTS	SECTION	REQUIREMENTS	CHECK
Water Heaters	612.1	Comply with efficiency requirements in Table 612.1.ABC.3.2. Switch or clearly marked cir breaker (electric) or cutoff (gas) must be provided. External or built-in heat trap required.	
Swimming Pools & Spas	612.1	Spas & heated pools must have covers (except solar heated). Non-commercial pools must have a pump timer. Gas spa & pool heaters must have a minimum thermal efficiency of 78%.	
Shower heads	612.1	Water flow must be restricted to no more than 2.5 gallons per minute at 80 PSIG.	
Air Distribution Systems	610.1	All ducts, fittings, mechanical equipment and plenum chambers shall be mechanically attached, sealed, insulated, and installed in accordance with the criteria of Section 610. Ducts in unconditioned attics: R-6 min. insulation.	
HVAC Controls	607.1	Separate readily accessible manual or automatic thermostat for each system.	
Insulation	604.1, 602.1	Ceilings-Min. R-19. Common walls-Frame R-11 or CBS R-3 both sides. Common ceiling & floors R-11.	

ENERGY PERFORMANCE LEVEL (EPL) DISPLAY CARD

ESTIMATED ENERGY PERFORMANCE SCORE* = 86.5

The higher the score, the more efficient the home.

Laurel Lake Lot 1 ph2, , , ,

1.	New construction or existing	New	
2.	Single family or multi-family	Single family	
3.	Number of units, if multi-family	1	
4.	Number of Bedrooms	3	
5.	Is this a worst case?	Yes	
6.	Conditioned floor area (ft²)	1820 ft²	
7.	Glass type[1] and area: (Label reqd. by 13-104.4.5 if not default)		
a.	U-factor: (or Single or Double DEFAULT)	7a. (Dble. U=0.6) 48.3 ft²	
b.	SHGC: (or Clear or Tint DEFAULT)	7b. (Clear) 230.6 ft²	
8.	Floor types		
a.	Slab-On-Grade Edge Insulation	R=0.0, 244.9(p) ft	
b.	N/A		
c.	N/A		
9.	Wall types		
a.	Frame, Wood, Exterior	R=13.0, 2198.4 ft²	
b.	Frame, Wood, Adjacent	R=11.0, 260.0 ft²	
c.	N/A		
d.	N/A		
e.	N/A		
10.	Ceiling types		
a.	Under Attic	R=30.0, 2347.0 ft²	
b.	N/A		
c.	N/A		
11.	Ducts		
a.	Sup: Unc. Ret: Unc. AH(Sealed):Garage	Sup. R=6.0, 175.0 ft	
b.	N/A		

12.	Cooling systems		
a.	Central Unit	Cap: 44.5 kBtu/hr SEER: 14.00	
b.	N/A		
c.	N/A		
13.	Heating systems		
a.	Electric Heat Pump	Cap: 44.5 kBtu/hr HSPF: 8.00	
b.	N/A		
c.	N/A		
14.	Hot water systems		
a.	Electric Resistance	Cap: 40.0 gallons EF: 0.92	
b.	N/A		
c.	Conservation credits (HR-Heat recovery, Solar DHP-Dedicated heat pump)		
15.	HVAC credits (CF-Ceiling fan, CV-Cross ventilation, HF-Whole house fan, PT-Programmable Thermostat, MZ-C-Multizone cooling, MZ-H-Multizone heating)		

I certify that this home has complied with the Florida Energy Efficiency Code For Building Construction through the above energy saving features which will be installed (or exceeded) in this home before final inspection. Otherwise, a new EPL Display Card will be completed based on installed Code compliant features.

Builder Signature: _____ Date: _____

Address of New Home: _____ City/FL Zip: _____

**NOTE: The home's estimated energy performance score is only available through the FLA/RES computer program. This is not a Building Energy Rating. If your score is 80 or greater (or 86 for a US EPA/DOE EnergyStar™ designation), your home may qualify for energy efficiency mortgage (EEM) incentives if you obtain a Florida Energy Gauge Rating. Contact the Energy Gauge Hotline at 321/638-1492 or see the Energy Gauge web site at www.fsec.ucf.edu for information and a list of certified Raters. For information about Florida's Energy Efficiency Code For Building Construction, contact the Department of Community Affairs at 850/487-1824.*

1 Predominant glass type. For actual glass type and areas, see Summer & Winter Glass output on pages 2&4.

EnergyGauge® (Version: FLRCSB v4.21)

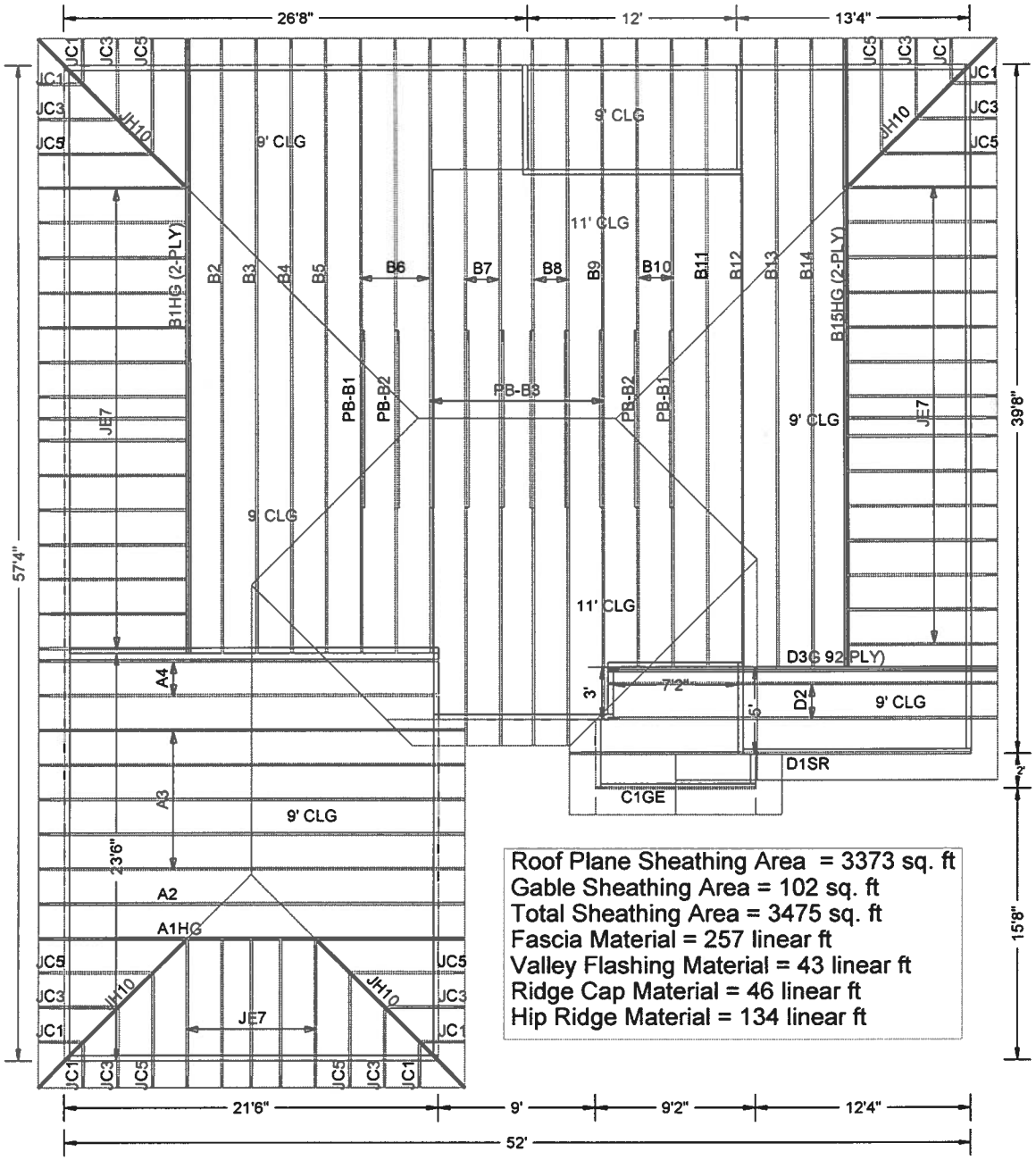

Roof Plane Sheathing Area = 3373 sq. ft
Gable Sheathing Area = 102 sq. ft
Total Sheathing Area = 3475 sq. ft
Fascia Material = 257 linear ft
Valley Flashing Material = 43 linear ft
Ridge Cap Material = 46 linear ft
Hip Ridge Material = 134 linear ft

W.B. Howland Truss Co.
P.O. Box 700
Live Oak, FL 32064
(386) 362-1235
(386) 362-7124 (fax)

NOTES:

ALL VALLEYS TO BE CONV. FRAMED

ALL WALLS SHOWN ARE LOAD BEARING

ALL GABLE END TRUSSES HAVE A DROPPED TOP CHORD

ROOF PITCH:	8/12
CLG PITCH:	N/A
OVERHANG:	1'6" PLUMB CUT
LOADING:	40 PSF T.L./SHINGLE
WIND LOAD:	110 MPH/ENCLOSED
EXT WALLS:	2x4 FRAMING
DATE:	8/3/06

Job Name: Lot 2 Laurel Lakes II
Customer: J.L. DUPREE
Designer: Chris McCall

JOB NO:
3754

PAGE NO:
1 OF 1

```
@ CAM110M01        CamaUSA Appraisal System                          Columbia County
 9/14/2006 11:28   Property Maintenance                     34000  Land   001
Year T Property    * FUTURE YEAR *        Sel                      AG     000
2007 R 03-4S-16-02732-202                 ...                      Bldg   000
 Owner PHOENIX LAND DEVELOPMENT &         Conf                     Xfea   000
  Addr PROPERTY MANAGEMENT INC                                    34000  TOTAL      B
       P O BOX 2187                                              .500  Total Acres
                                                     Retain Cap?   Renewal    Notice
City,St LAKE CITY            FL Zip 32056                N
Country                         (PUD1)            (PUD2)          (PUD3) MKTA06

Appr By CM   Date  9/07/2006 AppCode     UseCd 000000 VACANT
     TxDist Nbhd        MktA    ExCode  Exemption/%     TxCode   Units    Tp
       002    3416.00   06
            DIST 3
House#      164       Street BIRCH                        MD GLN  Dir SW #
                        City
  Subd       N/A                    Condo       .00 N/A
  Sect       3 Twn      4S Rnge     16 Subd        Blk          Lot
Legals LOT 2 LAUREL LAKE S/D PHASE 2.

  Map# 45-A                                          Mnt  9/07/2006 CHUCK
F1=Task  F2=ExTx  F3=Exit  F4=Prompt  F11=Docs  F10=GoTo  PgUp/PgDn  F24=More
```

Columbia County Building Department
Culvert Permit

Culvert Permit No.
000001202

DATE 09/14/2006 PARCEL ID # 03-4S-16-02732-202

APPLICANT J.L. DUPREE, SR. PHONE 386.754.5678

ADDRESS POB 2861 LAKE CITY FL 32056

OWNER J.L. DUPREE CONSTRUCTION SVCS, INC. PHONE 386.754.5678

ADDRESS 164 SW BIRCH GLEN LAKE CITY FL 32025

CONTRACTOR J.L. DUPREE, JR. PHONE 386.754.5678

LOCATION OF PROPERTY 90-W TO SW DEPUTY J.LN OFF C-252 TO LAUREL LAKES S.D TO BIRCH GLN,TL AND IT'S THE 2ND LOT ON THE L.

SUBDIVISION/LOT/BLOCK/PHASE/UNIT LAUREL LAKES 2 2

SIGNATURE Lamar Dupree

INSTALLATION REQUIREMENTS

[X] Culvert size will be 18 inches in diameter with a total lenght of 32 feet, leaving 24 feet of driving surface. Both ends will be mitered 4 foot with a 4 : 1 slope and poured with a 4 inch thick reinforced concrete slab.

INSTALLATION NOTE: Turnouts will be required as follows:
a) a majority of the current and existing driveway turnouts are paved, or;
b) the driveway to be served will be paved or formed with concrete.
Turnouts shall be concrete or paved a minimum of 12 feet wide or the width of the concrete or paved driveway, whichever is greater. The width shall conform to the current and existing paved or concreted turnouts.

[ ] Culvert installation shall conform to the approved site plan standards.

[ ] Department of Transportation Permit installation approved standards.

[ ] Other

ALL PROPER SAFETY REQUIREMENTS SHOULD BE FOLLOWED DURING THE INSTALATION OF THE CULVERT.

135 NE Hernando Ave., Suite B-21
Lake City, FL 32055
Phone: 386-758-1008 Fax: 386-758-2160

Amount Paid 25.00

Freeman Design Group inc

Engineers / Planners 161 NW Madison St Ste#102
Lake City, Fl. 32055
Tel: 386-758-4209
Fax: 386-758-4290
Cert. Of Auth. 00008701

Permit Number #24972 Address Lot 2 Laurel Lake Order By: Kurt

Foundation 11/24/06 date/app. by

Monolithic N/A date/app. by

Under slab rough-in plumbing 12/1/06 date/app. by

Slab 12/3/06 date/app. by

Sheating/ Nailing 12/12/06 date/app. by

Rough-in plumbing above slab and below wood floor 12/22/06 date/app. by

Framing 12/22/06 date/app. by

Electrical rough-in 12/22/06 date/app. by

Heat & Air Duct 12/22/06 date/app. by

Peri. Beam (Lintel) N/A date/app. by

Comments:

William H. Freeman 12/29/06
William H. Freeman P.E. 56001

CERTIFICATE OF

OCCUPANCY

COLUMBIA COUNTY, FLORIDA

Department of Building and Zoning Inspection

This Certificate of Occupancy is issued to the below named permit holder for the building and premises at the below named location, and certifies that the work has been completed in accordance with the Columbia County Building Code.

Parcel Number 03-4S-16-02732-202

Building permit No. 24972

Use Classification SINGLE FAMILY DWELLING

Fire: 39.06

Permit Holder JL DUPREE CONSTRUCTION

Waste: 117.25

Owner of Building PHOENIX LAND DEVELOPMENT

Total: 156.31

Location: 164 SW BIRCH GLEN, LAKE CITY, FL (LAUREL LAKES, LOT 2)

Date: 3-12-07

John Kence

Building Inspector

POST IN A CONSPICUOUS PLACE
(Business Places Only)

MIAMI-DADE

BUILDING CODE COMPLIANCE OFFICE (BCCO)
PRODUCT CONTROL DIVISION

MIAMI-DADE COUNTY, FLORIDA
METRO-DADE FLAGLER BUILDING
140 WEST FLAGLER STREET, SUITE 1603
MIAMI, FLORIDA 33130-1563
(305) 375-2901 FAX (305) 375-2908

NOTICE OF ACCEPTANCE (NOA)

Ceco Door Products
9159 Telecom Drive
Milan, TN 38358

In Swing

SCOPE:

This NOA is being issued under the applicable rules and regulations governing the use of construction materials. The documentation submitted has been reviewed by Miami-Dade County Product Control Division and accepted by the Board of Rules and Appeals (BORA) to be used in Miami Dade County and other areas where allowed by the Authority Having Jurisdiction (AHJ).

This NOA shall not be valid after the expiration date stated below. The Miami-Dade County Product Control Division (In Miami Dade County) and/or the AHJ (in areas other than Miami Dade County) reserve the right to have this product or material tested for quality assurance purposes. If this product or material fails to perform in the accepted manner, the manufacturer will incur the expense of such testing and the AHJ may immediately revoke, modify, or suspend the use of such product or material within their jurisdiction. BORA reserves the right to revoke this acceptance, if it is determined by Miami-Dade County Product Control Division that this product or material fails to meet the requirements of the applicable building code.

This product is approved as described herein, and has been designed to comply with the High Velocity Hurricane Zone of the Florida Building Code.

DESCRIPTION: The Ceco Series Single Flush / Embossed Inswing Commercial Steel Doors –Impact

APPROVAL DOCUMENT: Drawing No RD0728, titled "3-0 x 7-0 , Series Regent, Omega, Imperial, Versa door", prepared by manufacturer, sheets 1 through 9 of 9 dated 05/22/02 and latest revised on 10-10-02, bearing the Miami-Dade County Product Control Approval stamp with the Notice of Acceptance number and approval date by the Miami-Dade County Product Control Division.

MISSILE IMPACT RATING: Large and Small Missile Impact

LABELING: Each unit shall bear a permanent label with the manufacturer's name or logo, city, state and following statement: "Miami-Dade County Product Control Approved", unless otherwise noted herein.

RENEWAL of this NOA shall be considered after a renewal application has been filed and there has been no change in the applicable building code negatively affecting the performance of this product.

TERMINATION of this NOA will occur after the expiration date or if there has been a revision or change in the materials, use, and/or manufacture of the product or process. Misuse of this NOA as an endorsement of any product, for sales, advertising or any other purposes shall automatically terminate this NOA. Failure to comply with any section of this NOA shall be cause for termination and removal of NOA.

ADVERTISEMENT: The NOA number preceded by the words Miami-Dade County, Florida, and followed by the expiration date may be displayed in advertising literature. If any portion of the NOA is displayed, then it shall be done in its entirety.

INSPECTION: A copy of this entire NOA shall be provided to the user by the manufacturer or its distributors and shall be available for inspection at the job site at the request of the Building Official.

This NOA consists of this page 1 as well as approval document mentioned above.

The submitted documentation was reviewed by **Ishaq I. Chanda, P.E.**

PRODUCT CONTROL ACCEPTED

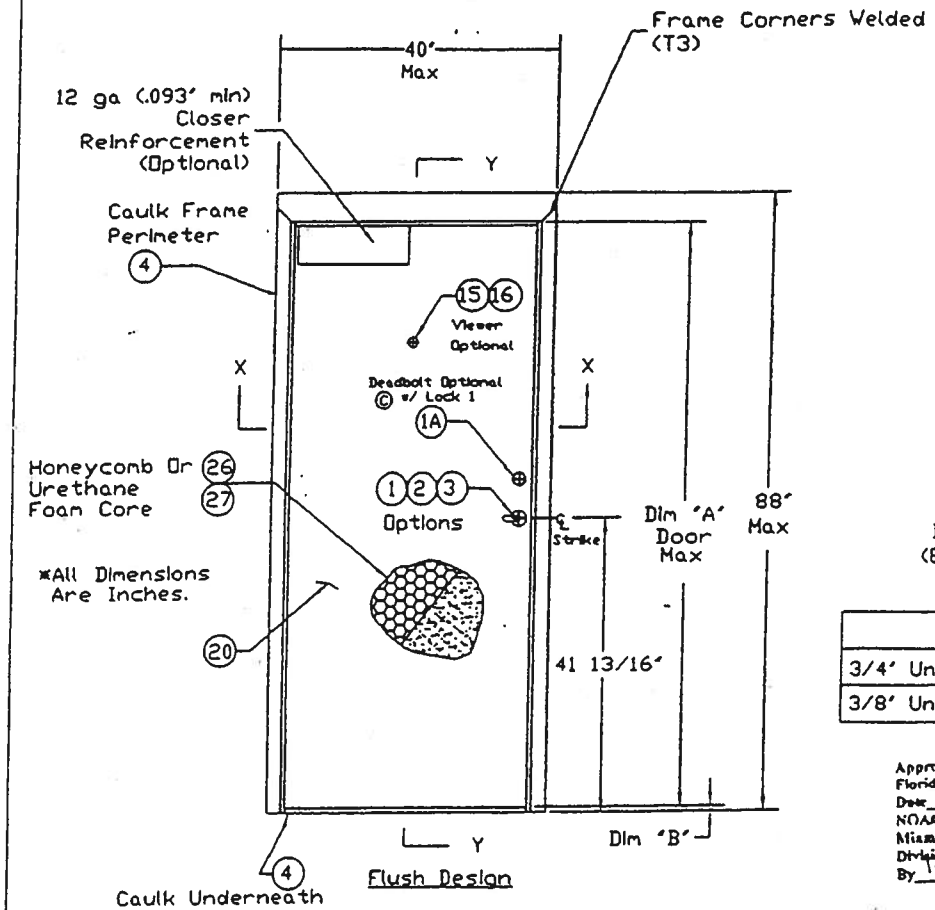

Flush Design

In-Swing Door
(Exterior View)

	Dim "A"	Dim "B"
3/4" Undercut	83 1/8	3/4
3/8" Undercut	83 1/2	3/8

Approved as complying with the
Florida Building Code
Date OCTOBER 31, 2002
NOA# 02-0807.04
Miami Dade Product Control
Division
By Ishaq I. Chanda

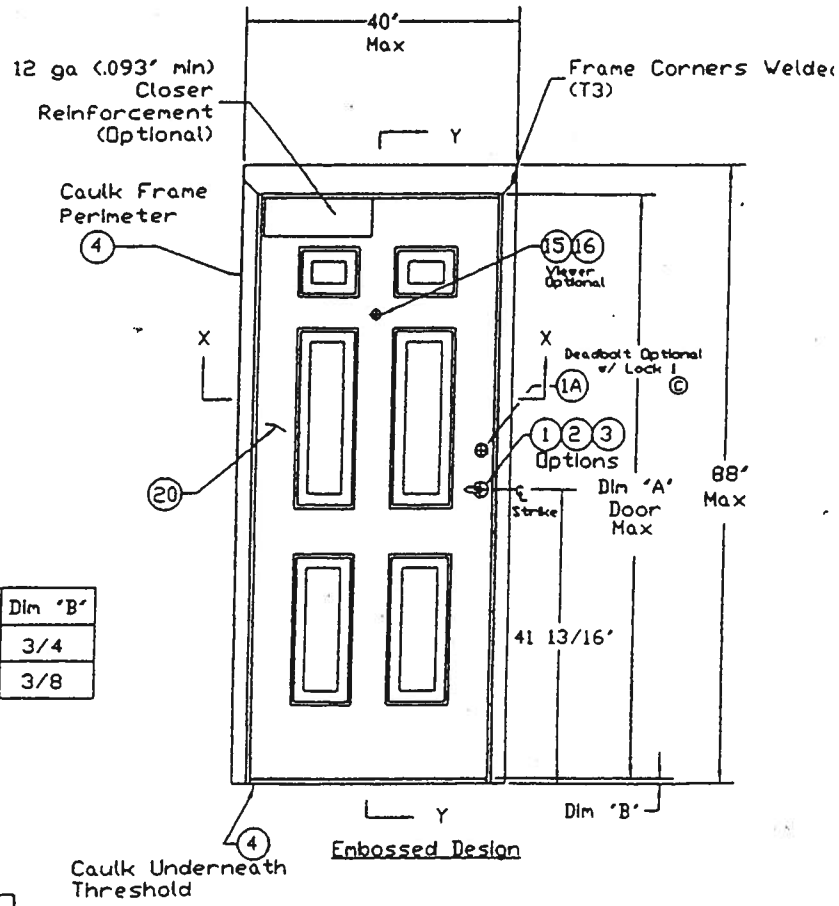

Embossed Design

Design Pressure Rating		
	Where Water Infiltration Requirement Is Needed	Where Water Infiltration Requirement Is Not Needed
Positive	Not Approved	+70 PSF
Negative	Not Approved	-70 PSF

Notes:

1) In-swing Not Approved For Water Infiltration
2) This Door Does Not Need A Hurricane Protection System
3) Hinge Spacing Is 33" O.C., 13" From Top Of Frame & 9" From The Botton.

Sheet 2	Frame Anchor Installation
Sheet 3	Threshold Installation
Sheet 3	Weatherstrip Installation
Sheet 4	Door Latch Reinforcement
Sheet 5-8	Cross Section View
Sheet 9	Bill Of Material

MATERIAL SPECIFICATIONS:

Finish: Rust Inhibitive Primer

3-0 x 7-0 Series
Regent, Omega, Imperial, & Versadoor
In-Swing Elevation Drawing

CECO DOOR PRODUCTS
Milan, Tennessee 38358

ISSUE	REVISIONS
B 10/10/02 LT	Revised Per Marked Up Drawings From Ishaq Chanda.
A 8/28/02 LT	Revised Per Marked Up Drawings From Ishaq Chanda.

DRAWN BY:	DATE:
LT	5/22/02

DRAWING NUMBER:
RD0728
Sheet 1 of 9

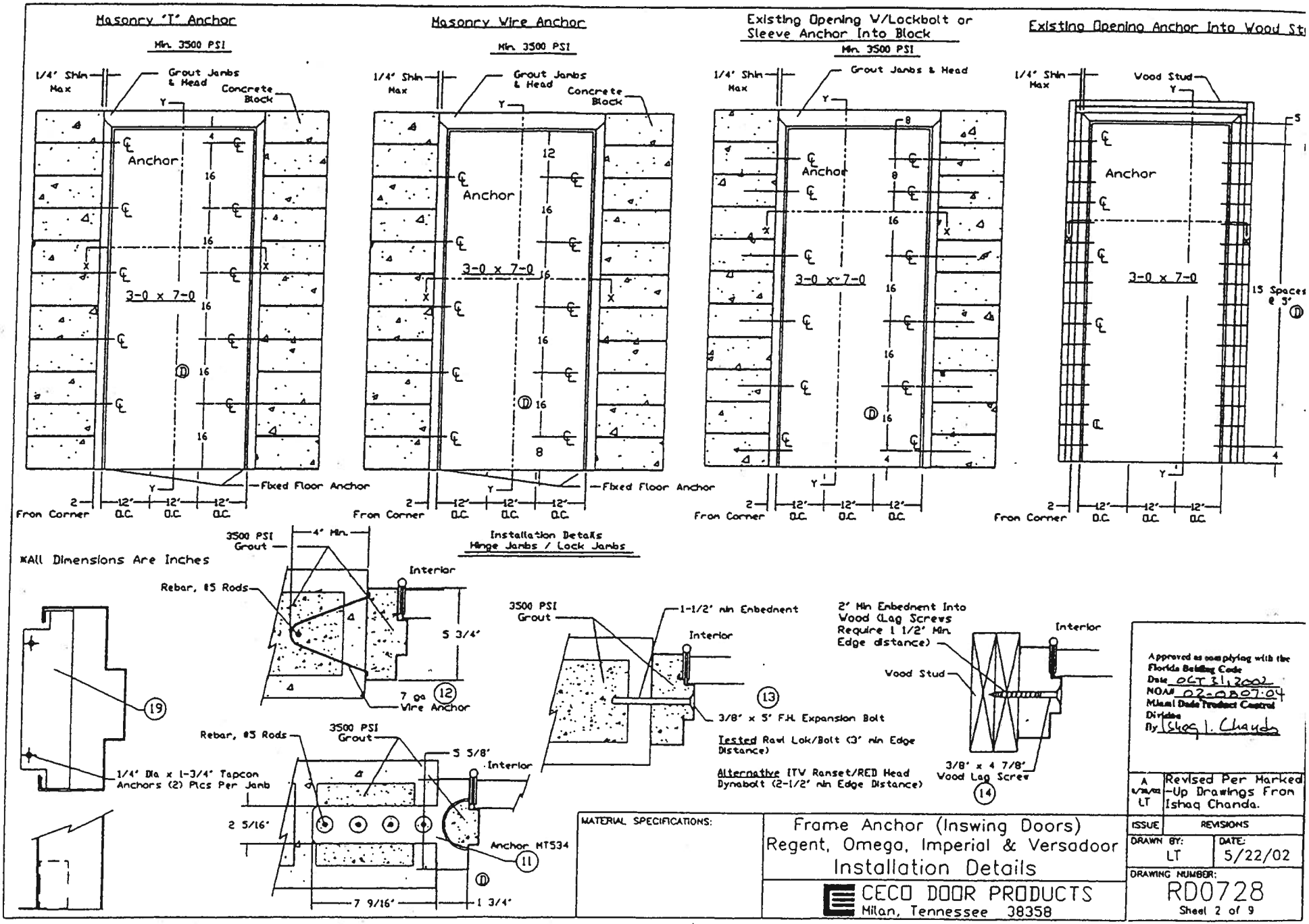
Masonry 'T' Anchor
Min. 3500 PSI
Masonry Wire Anchor
Min. 3500 PSI
Existing Opening W/Lockbolt or Sleeve Anchor Into Block
Min. 3500 PSI
Existing Opening Anchor Into Wood Stu
1/4' Shim Max
Grout Jambs & Head
Concrete Block
Wood Stud
Anchor
3-0 x 7-0
15 Spaces @ 3"
Fixed Floor Anchor
From Corner
12' O.C.
*All Dimensions Are Inches
Installation Details Hinge Jambs / Lock Jambs
3500 PSI Grout
4' Min.
Interior
Rebar, #5 Rods
5 3/4'
7 ga Wire Anchor
1-1/2' min Embedment
3/8' x 5' F.H. Expansion Bolt
Tested Rawl Lok/Bolt (3' min Edge Distance)
Alternative ITW Ramset/RED Head Dynabolt (2-1/2' min Edge Distance)
2' Min Embedment Into Wood (Lag Screws Require 1 1/2' Min. Edge distance)
3/8' x 4 7/8' Wood Lag Screw
1/4' Dia x 1-3/4' Tapcon Anchors (2) Pcs Per Jamb
5 5/8'
2 5/16'
Anchor MT534
7 9/16'
1 3/4'
Approved as complying with the Florida Building Code
Date OCT 31, 2002
NOA# 02-0807.04
Miami Dade Product Control Division
By Ishaq I. Chanda
A 5/28/02 LT
Revised Per Marked-Up Drawings From Ishaq Chanda.
ISSUE
REVISIONS
DRAWN BY: LT
DATE: 5/22/02
DRAWING NUMBER: RD0728
Sheet 2 of 9
MATERIAL SPECIFICATIONS:
Frame Anchor (Inswing Doors)
Regent, Omega, Imperial & Versadoor
Installation Details
CECO DOOR PRODUCTS
Milan, Tennessee 38358

*Note: Structural Member At Header Must Be Designed To carry 58.3#/ft load Imposed And Must Be Reviewed By Building Official.

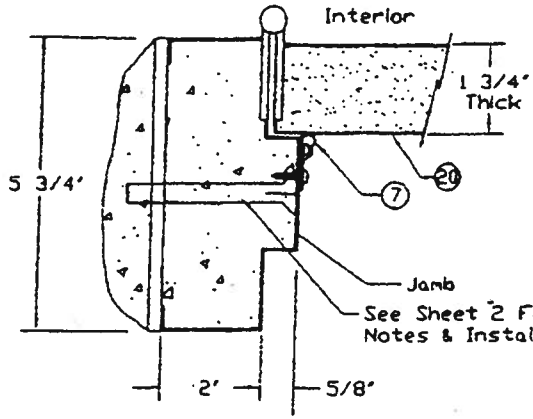

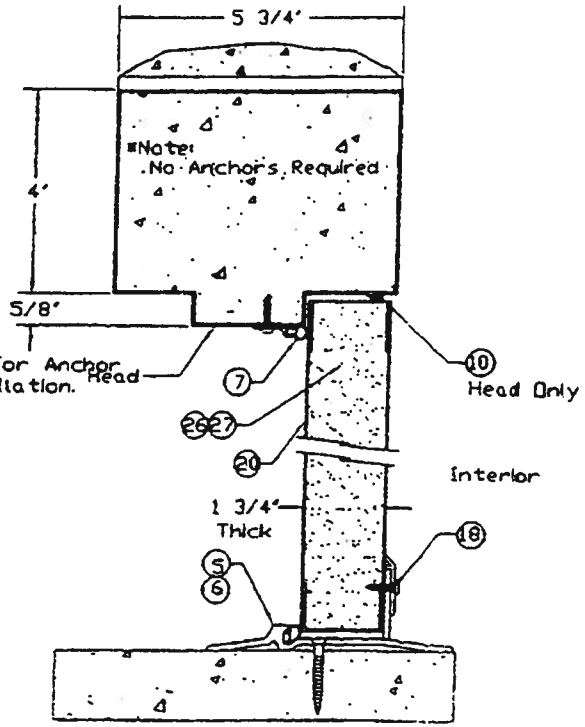

Section Y-Y

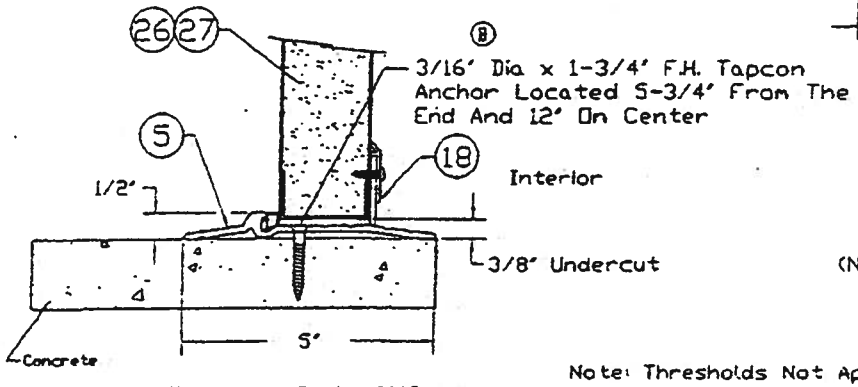

Threshold: Pemko 200SAV

Inswing

(Not Approved For Water)

Note: Thresholds Not Approved For Water.

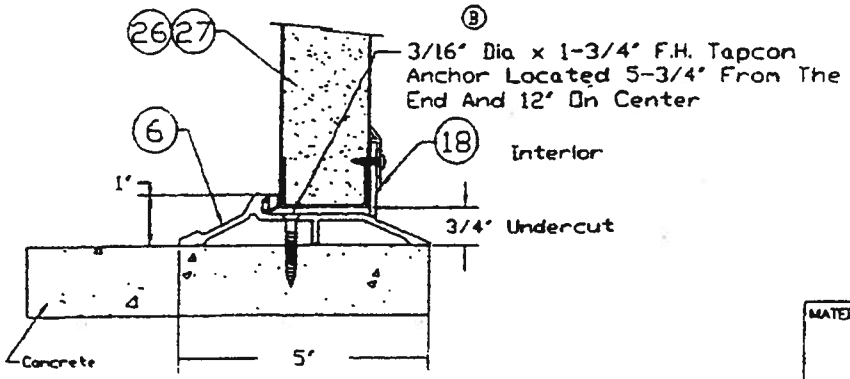

Threshold: Pemko 181AV

Approved as complying with the Florida Building Code
Date OCT 31, 2002
NOA# 02-0807.04
Miami Dade Product Control Division
By Ishaq I. Chanda

ISSUE	REVISIONS
B LT	Revised Per Marked-Up Drawings From Ishaq Chanda
C LT	Revised Per Marked-Up Drawings From Ishaq Chanda

MATERIAL SPECIFICATIONS:

Threshold & Weatherstrip (Inswing Doors)
Regent, Omega, Imperial, Versadoor
Installation Details

CECO DOOR PRODUCTS
Milan, Tennessee 38358

DRAWN BY:	DATE:
LT	5/22/02

RD0728

Sheet 3 Of 9

*Note: Structural Member At Head Must Be Designed To Carry 58.3 #/ft. Load Imposed And Must Be Reviewed By Building Official.

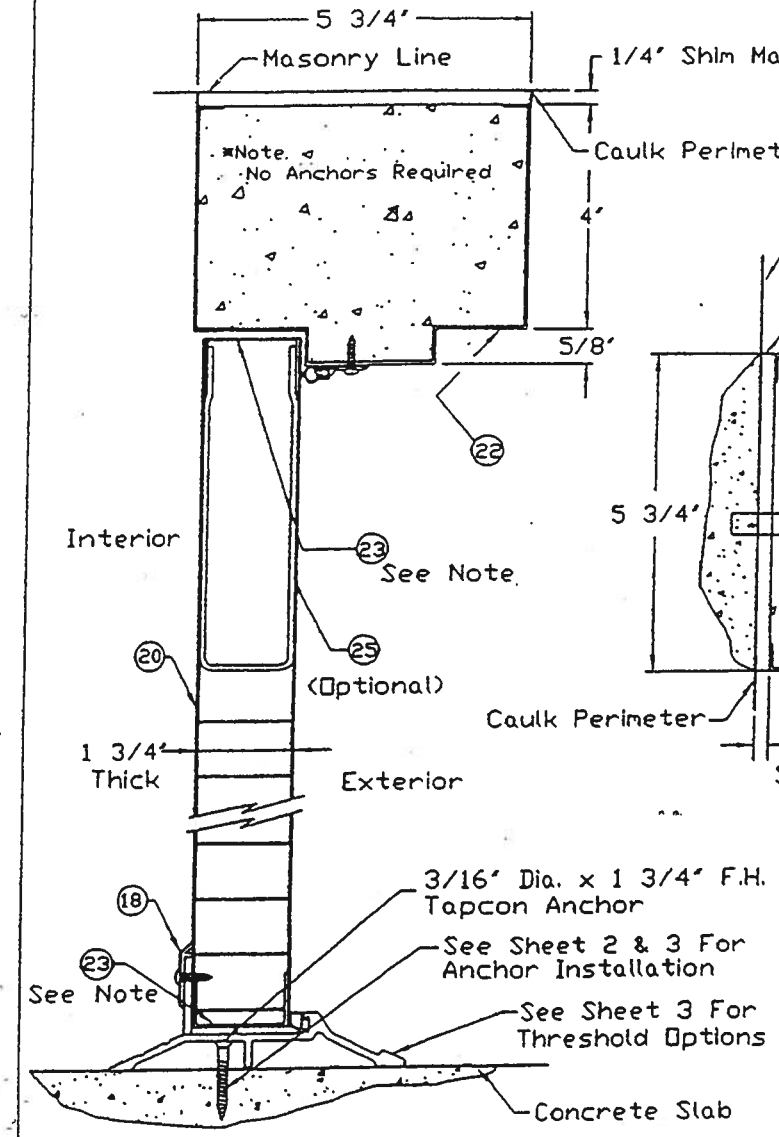

Section Y-Y

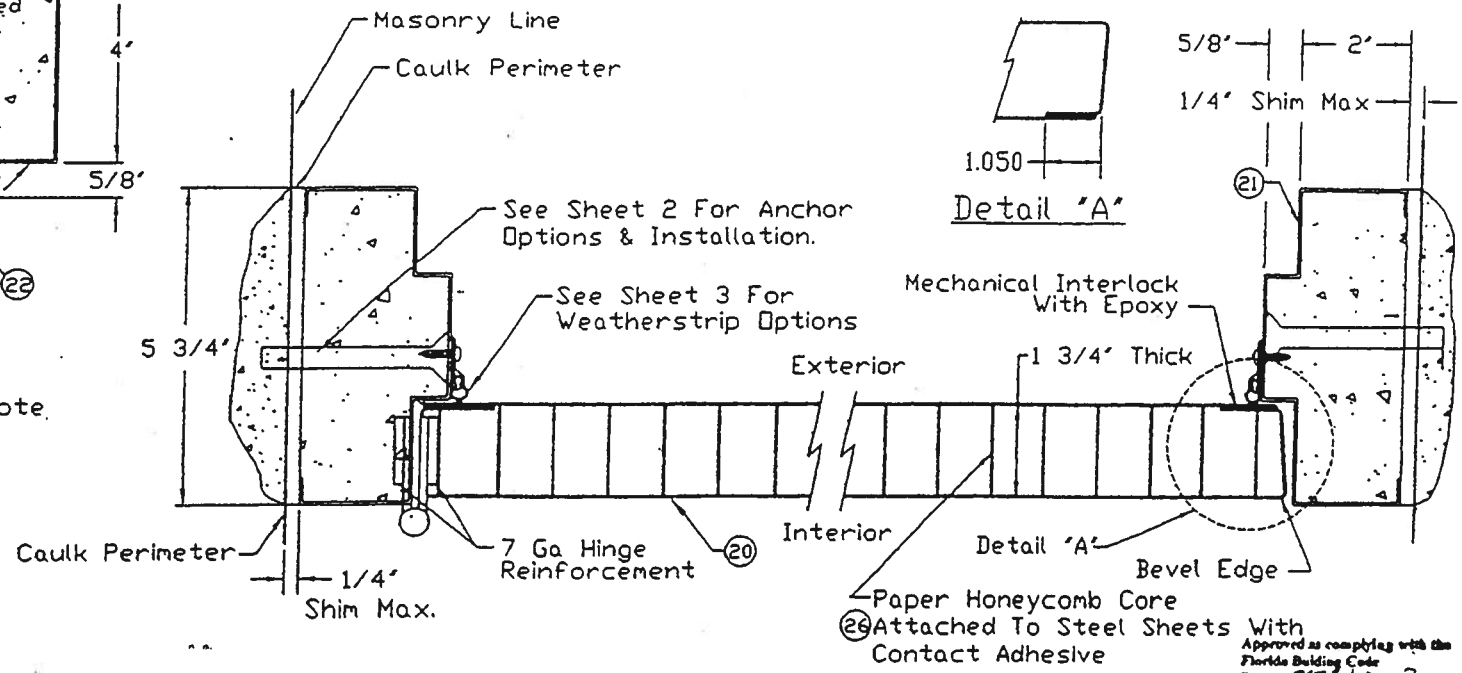

Section X-X

Note 1: Top and Bottom Channel Tack Welded To Both Skins 3 Inches From Lock Edge And 6 Inches On Centers

Approved as complying with the Florida Building Code
Date OCT 1, 2002
NOA# 02-0307.04
Milani Dade Product Control Division
By Isaac J. Chanda

C 10/28/02 LT	Revised Per Marked-up Drawings From Ishaq Chanda.	
B 8/30/02 LT	Revised Per Marked-up Drawings From Ishaq Chanda.	
ISSUE	REVISIONS	
DRAWN BY: LT	DATE: 5/22/02	

MATERIAL SPECIFICATIONS:

Cross Section View
(Inswing Doors)
Regent Handed Door

CECO DOOR PRODUCTS
Milan, Tennessee 38358

DRAWING NUMBER: RD0728
Sheet 5 of 9

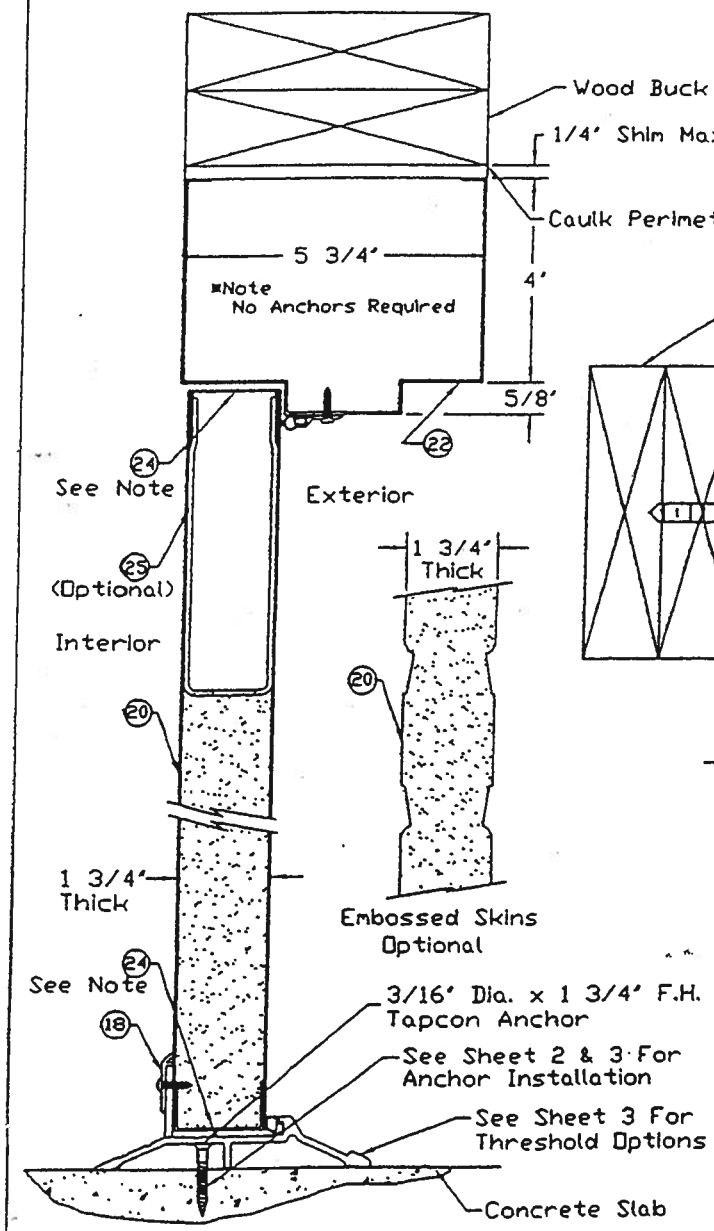

Section Y-Y

Note: Structural member at Head Must Be Designed To carry 58.3 #/ft. Load Imposed And Must Be Reviewed By Building Official.

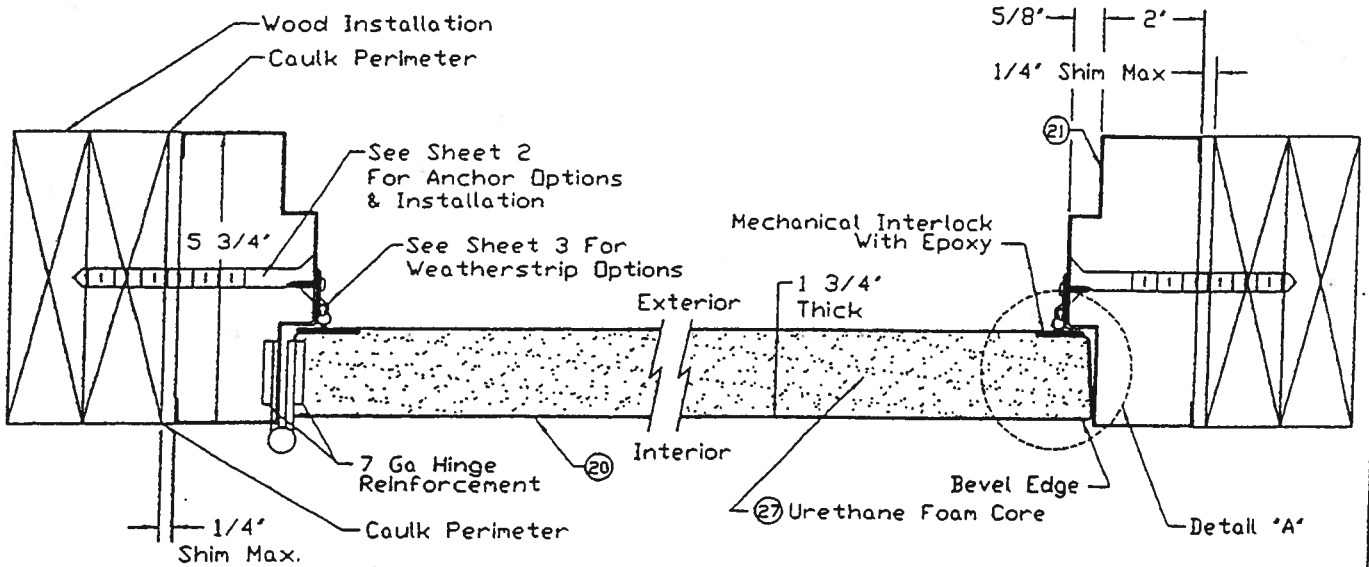

Section X-X

Note: Top & Bottom Channels Assembled Std Method To Skins With Spot Welds & Tape. Channels Are Then Tack Welded To Both Skins 3' From Lock Edge And 6 Inches On Center.

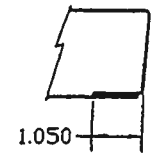

Detail 'A'

Approved as complying with the Florida Building Code
Date OCT 31, 2002
NOA# 02-0807.04
Miami Dade Product Control Division
By Shaq J. Chanda

B LT	Revised Per Marked-Up Drawings From Ishaq Chanda.
ISSUE	REVISIONS

MATERIAL SPECIFICATIONS:

Cross Section View
(In-Swing Doors)
Imperial Handed Door

CECO DOOR PRODUCTS
Milan, Tennessee 38358

DRAWN BY: LT
DATE: 5/23/02
DRAWING NUMBER: RD0728
Sheet 7 of 9

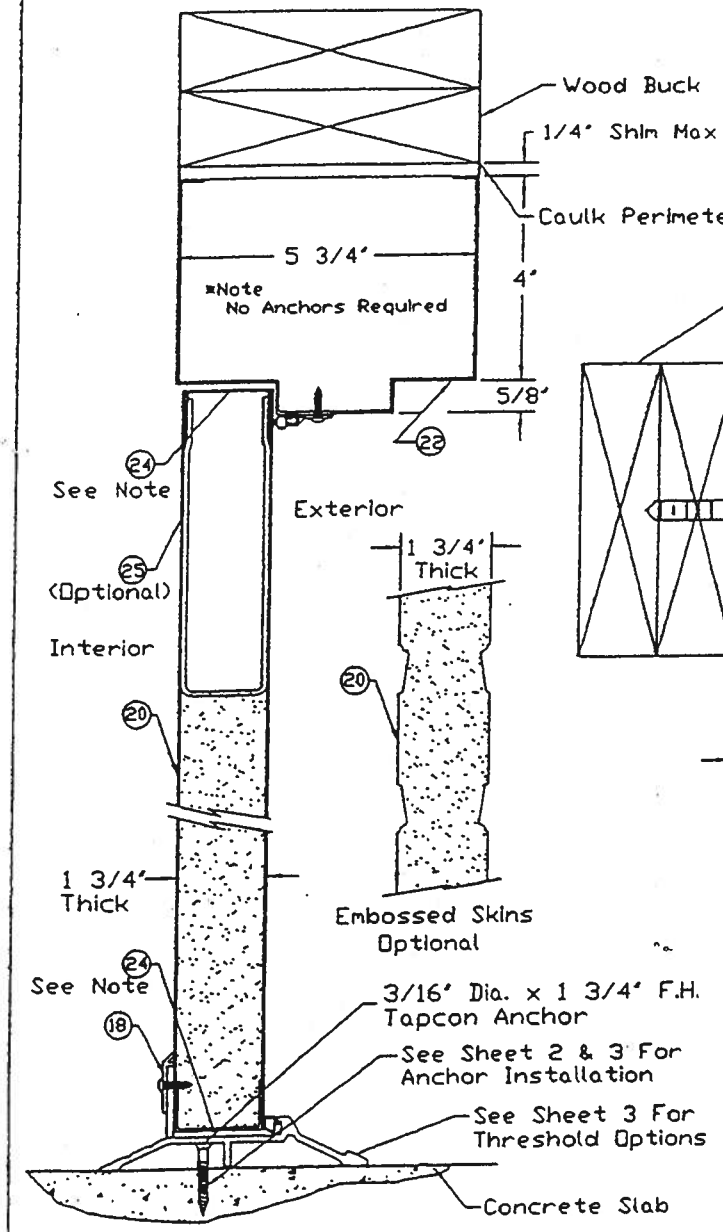

Section Y-Y

Note: Structural member at Head Must Be Designed To carry 58.3 #/ft. Load Imposed And Must Be Reviewed By Building Official.

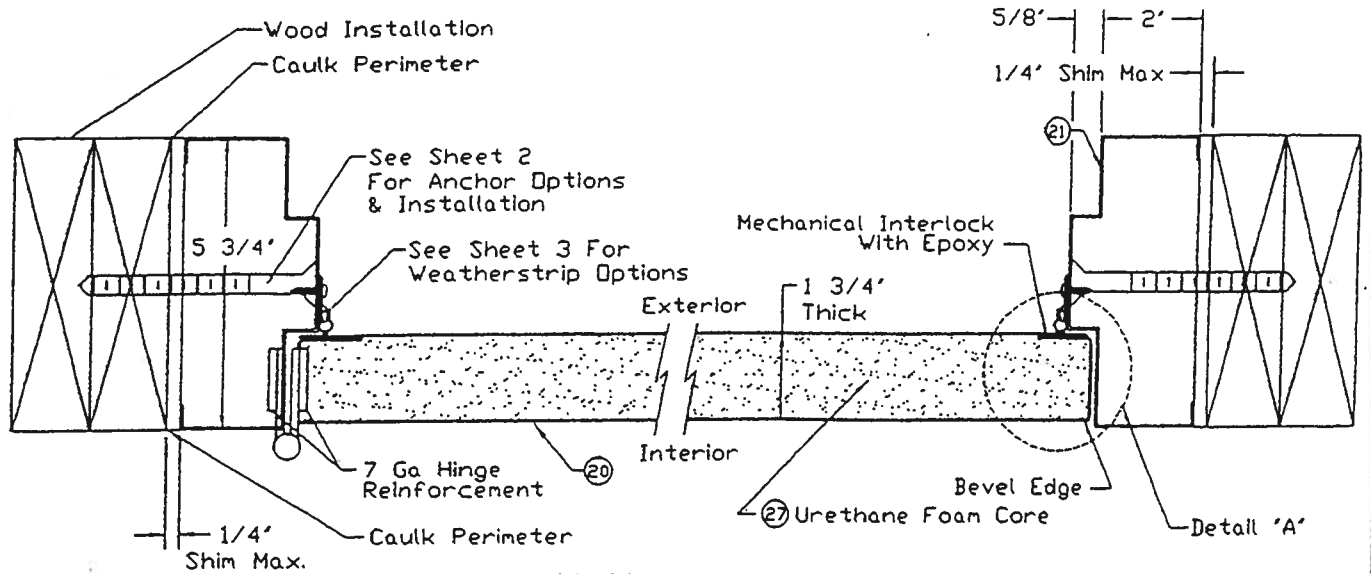

Section X-X

Note: Top & Bottom Channels Assembled Std Method To Skins With Spot Welds & Tape. Channels Are Then Tack Welded To Both Skins 3' From Lock Edge And 6 Inches On Center.

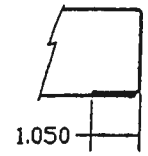

Detail 'A'

Approved as complying with the Florida Building Code
Date OCT 21, 2002
NOA# 02-0507.04
Miami Dade Product Control Division
By Ishaq I. Chanda

B 5/23/02 LT	Revised Per Marked-Up Drawings From Ishaq Chanda.
ISSUE	REVISIONS

MATERIAL SPECIFICATIONS:

Cross Section View
(In-Swing Doors)
Versadoor Handed Door

CECO DOOR PRODUCTS
Milan, Tennessee 38358

DRAWN BY: LT
DATE: 5/23/02
DRAWING NUMBER: RD0728
Sheet 8 of 9

1	Cylindrical Lock & Lock Reinforcement (RD0528)	Schlage	AL53PD
1A	Deadbolt (Optional) (D)	Schlage	B100
2	Or Cylindrical Lock & Lock Reinforcement	Saflok	Premier SL2500
3	Or Mortise Lock	Saflok	MT
4	Caulk	Dow Corning	899 Silicone Glazing Sealant
5	Threshold	Pemko	2005AV36
6	Or	Pemko	181AV36
7	Weatherstrip	Pemko	303AV3684
8	Hinge (Ball Bearing)	Hager or Equal (Attached w/ (8) #12-24 x 1/2 MS Per Hinge)	4-1/2 x 4-1/2 x .134 (Std Weight)
9	Or (Spring)	Hager or Equal (Attached w/ (8) #12-24 x 1/2 MS Per Hinge)	4-1/2 x 4-1/2 x .134 (Std Weight)
10	Weatherstrip	Pemko	S88
11	Frame Anchor	Masonary Tee (RD0057)	16 ga (.053' min) Galv Steel Fymin = 30ksi
12	Or	Wire, Relaxed Dimension 9' x 8'	#7 (.167 ' min) Galv Steel Wire (70,000 - 90,000 psi Tensile Strength)
13	Or	Expansion Bolt	3/8' x 5' F.H. Rawl Lok/Bolt Or 3/8' x 5' F.H. Ranset/RED Head
14	Or	Wood Lag Screw	3/8' x 4-5/8'
15	Viewer	Hager	1755
16	Or	MAG Security	8724-C
17	Drip Cap; Top	Pemko	346
18	Sweep	Pemko	315 N
19	Floor Anchor	Fixed Floor Anchor	16 ga (.053' min) galvanized Steel
20	Face Sheet A60 Galv Conforming To ASTM A653	Commercial Steel Type B (Minimum Yield Strength 30,000psi)	16 Ga (.053' min)
21	Series SF, Frame Jamb, Double Rabbet Profile, A60 Galv Conforming To ASTM A653	16 Ga (.053' min) Commercial Steel Type B (Minimum Yield Strength 30,000psi)	2' Face, 5-3/4' Depth Min. (RD0033)
22	Series SF, Frame Head, Double Rabbet, Profile A60 Galv Conforming To ASTM A653	16 Ga (.053' min) Commercial Steel Type B (Minimum Yield Strength 30,000psi)	4' Face, 5-3/4' Depth Min. (RD0033)
23	Door Channels; Spot Welded To Bottom Skin Glued To Top Skin; Tack Welded To Both	16 Ga (.053' min) A60 Galv Conforming To ASTM A653 Commercial Steel Type B (Minimum Yield Strength 30,000psi)	16 ga (.053' min) x 1' x 1-3/4' x 1'
24	Door Channels; Spot Welded To Bottom Skin Taped To Top Skin; Tack Welded To Both	16 Ga (.053' min) A60 Galv Conforming To ASTM A653 Commercial Steel Type B (Minimum Yield Strength 30,000psi)	16 ga (.053' min x 1' x 1-3/4' x 1'
25	Closer Reinforcement (Optional)	12 Ga (.093' min) CS Type B	12 ga (.093' min) x 5-3/8' x 16'
26	Honeycomb Core	Non-Impregnated Kraft Paper (E)	1.2' Nominal Cell Size
27	Urethane Core	Foam Enterprises	2 lb/ft³ Density

Approved as complying with the Florida Building Code
Date Oct 31, 2002
NOA# 02-0807.04
Miami Dade Product Control Division
By Ishaq I. Chanda

ISSUE		REVISIONS
B	10/10/02 LT	Revised Per Marked-Up Drawings From Ishaq Chanda.
A	9/4/02 LT	Revised Per Marked-Up Drawings From Ishaq Chanda.

MATERIAL SPECIFICATIONS:

3-0 x 7-0 Series
In-Swing Bill Of Materials

CECO DOOR PRODUCTS
Milan, Tennessee 38358

DRAWN BY: LT
DATE: 5/28/02
DRAWING NUMBER: RD0728
Sheet 9 Of 9

MIAMI-DADE

BUILDING CODE COMPLIANCE OFFICE (BCCO)
PRODUCT CONTROL DIVISION

MIAMI-DADE COUNTY, FLORIDA
METRO-DADE FLAGLER BUILDING
140 WEST FLAGLER STREET, SUITE 1603
MIAMI, FLORIDA 33130-1563
(305) 375-2901 FAX (305) 375-2908

NOTICE OF ACCEPTANCE (NOA)

Ceco Door Products
9159 Telecom Drive
Milan, TN 38358

Outswing

SCOPE:
This NOA is being issued under the applicable rules and regulations governing the use of construction materials. The documentation submitted has been reviewed by Miami-Dade County Product Control Division and accepted by the Board of Rules and Appeals (BORA) to be used in Miami Dade County and other areas where allowed by the Authority Having Jurisdiction (AHJ).

This NOA shall not be valid after the expiration date stated below. The Miami-Dade County Product Control Division (In Miami Dade County) and/or the AHJ (in areas other than Miami Dade County) reserve the right to have this product or material tested for quality assurance purposes. If this product or material fails to perform in the accepted manner, the manufacturer will incur the expense of such testing and the AHJ may immediately revoke, modify, or suspend the use of such product or material within their jurisdiction. BORA reserves the right to revoke this acceptance, if it is determined by Miami-Dade County Product Control Division that this product or material fails to meet the requirements of the applicable building code.

This product is approved as described herein, and has been designed to comply with the High Velocity Hurricane Zone of the Florida Building Code.

DESCRIPTION: Series "Regent" & "Omega" 18 ga. 3^0-7^0 Outswing Commercial Steel Door

APPROVAL DOCUMENT: Drawing No. **RD0087**, titled "3-0 x 7-0 Series", sheets 1 through 7 of 7, dated 5/30/97 with revision C dated 2/24/00,prepared by the manufacturer, bearing the Miami-Dade County Product Control Renewal stamp with the Notice of Acceptance number and expiration date by the Miami-Dade County Product Control Division.

MISSILE IMPACT RATING: Large and Small Missile Impact

LABELING: Each unit shall bear a permanent label with the manufacturer's name or logo, city, state and following statement: "Miami-Dade County Product Control Approved", unless otherwise noted herein.

RENEWAL of this NOA shall be considered after a renewal application has been filed and there has been no change in the applicable building code negatively affecting the performance of this product.

TERMINATION of this NOA will occur after the expiration date or if there has been a revision or change in the materials, use, and/or manufacture of the product or process. Misuse of this NOA as an endorsement of any product, for sales, advertising or any other purposes shall automatically terminate this NOA. Failure to comply with any section of this NOA shall be cause for termination and removal of NOA.

ADVERTISEMENT: The NOA number preceded by the words Miami-Dade County, Florida, and followed by the expiration date may be displayed in advertising literature. If any portion of the NOA is displayed, then it shall be done in its entirety.

INSPECTION: A copy of this entire NOA shall be provided to the user by the manufacturer or its distributors and shall be available for inspection at the job site at the request of the Building Official.
This NOA **renews NOA # 00-0315.03** and consists of this page 1 as well as approval document mentioned above.
The submitted documentation was reviewed by **Manuel Perez, P.E.**

PRODUCT CONTROL ACCEPTED

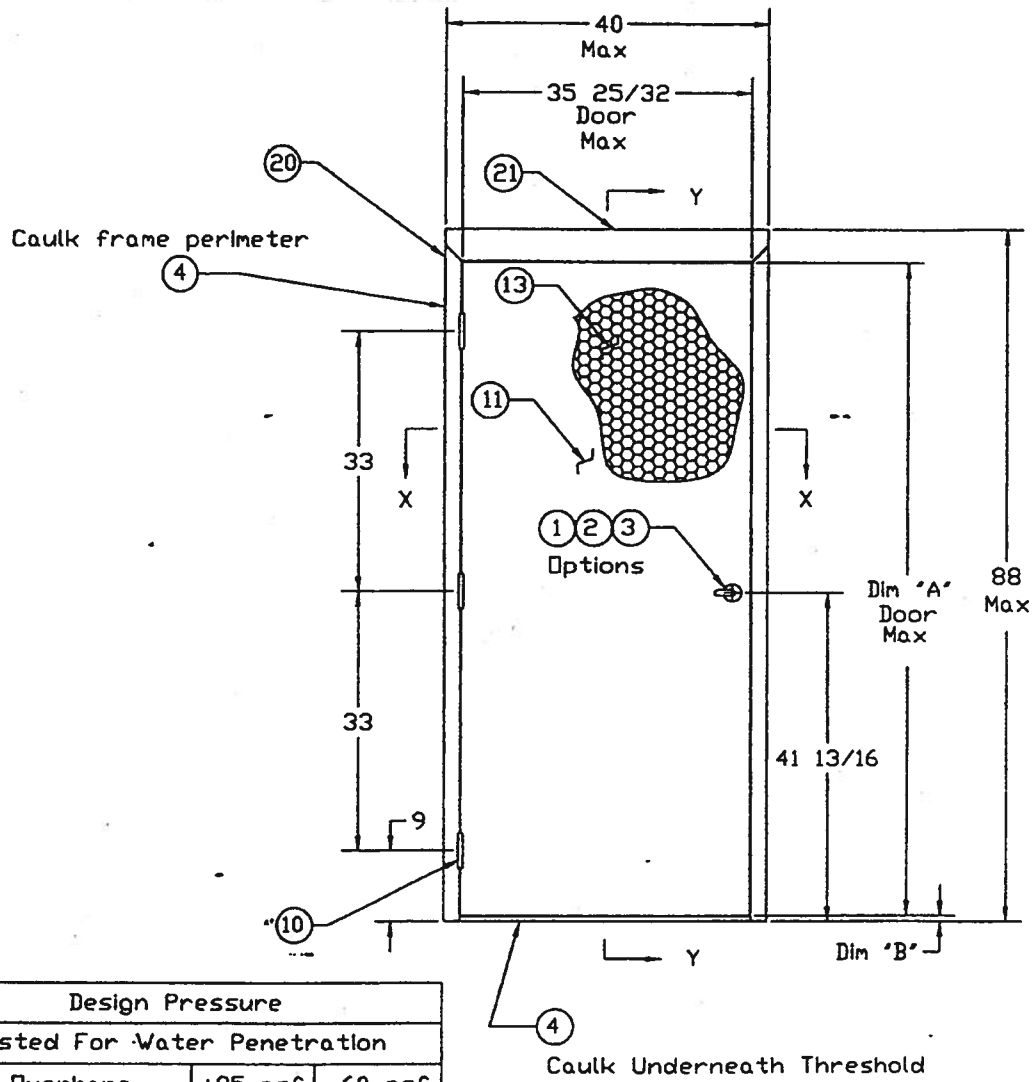

Sheet 2	Frame Anchor Installation
Sheet 3	Threshold Installation
Sheet 3	Weatherstrip Installation
Sheet 4	Door Latch Reinforcement
Sheet 5-6	Cross Section View
Sheet 7	Bill Of Material

Design Pressure		
Tested For Water Penetration		
With Overhang	+85 psf	-60 psf
Without Overhang	+60 psf	-60 psf

	Dim 'A'	Dim 'B'
3/4" Undercut	83 1/8	3/4
3/8" Undercut	83 1/2	3/8

PRODUCT RENEWED
as complying with the Florida
Building Code
Acceptance No. 03-0411.01
Expiration Date Aug. 14, 2008
By Miami-Dade Product Control
Division

APPROVED AS COMPLYING WITH THE
SOUTH FLORIDA BUILDING CODE
DATE June 08, 2009
BY
PRODUCT CONTROL DIV.S OF
BUILDING CODE COMPLIANCE OFFICE
ACCEPTANCE NO. 00-0315.03

MATERIAL SPECIFICATIONS:

Finish: Rust Inhibitive Primer

3-0 x 7-0 Series Elevation Drawing

CECO DOOR PRODUCTS
Milan, Tennessee 38358

ISSUE	REVISIONS
C 2/24/00 JAR	Revised Format, Transfered Information from NOA
B 7/22/97 GWS	Deleted CD Drawings Revised Sheet Numbers

DRAWN BY: GWS
DATE: 5/30/97

DRAWING NUMBER:
RD0087
Sheet 1 Of 7

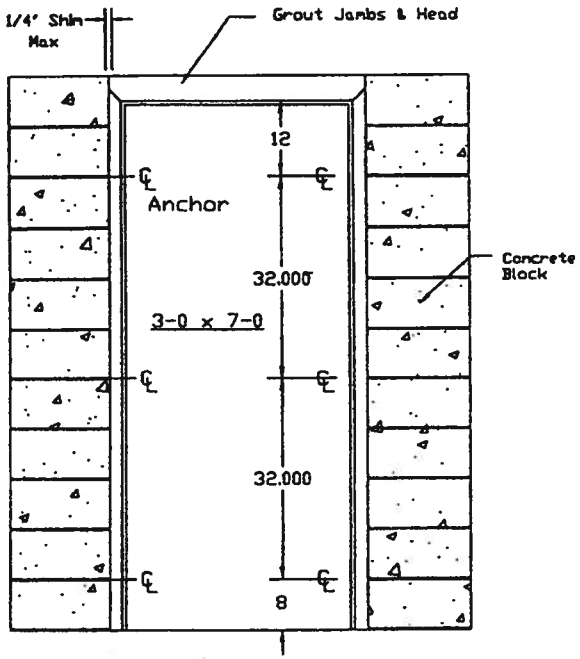

Masonry "T" Anchor

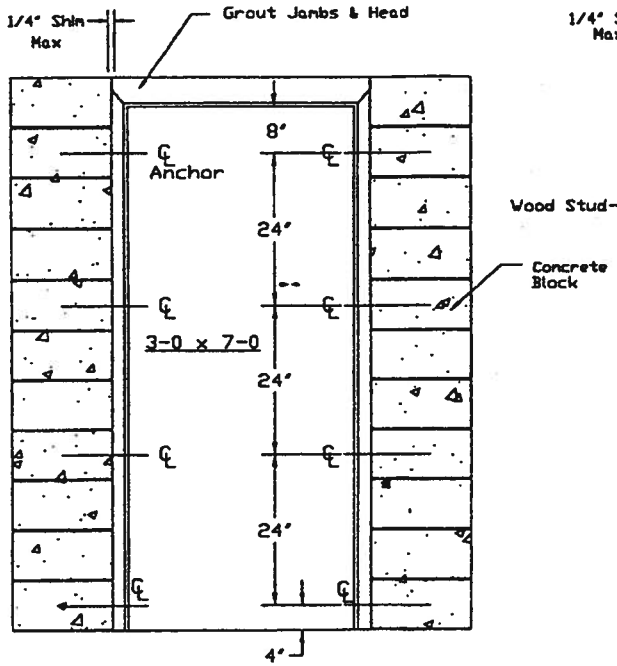

Existing Opening Anchor Into Block

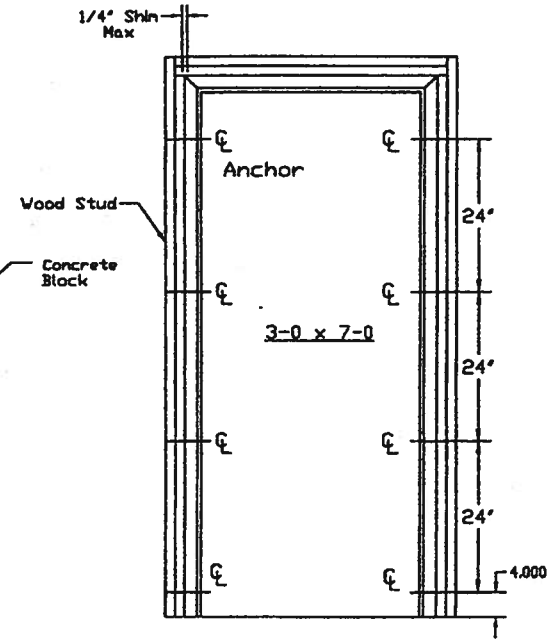

Existing Opening Anchor Into Wood Stud

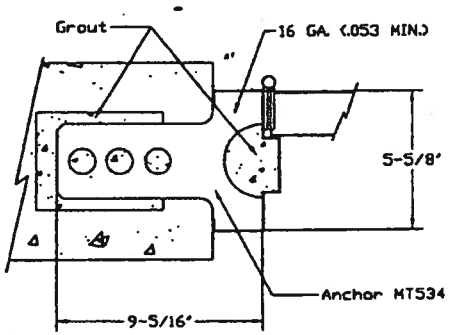

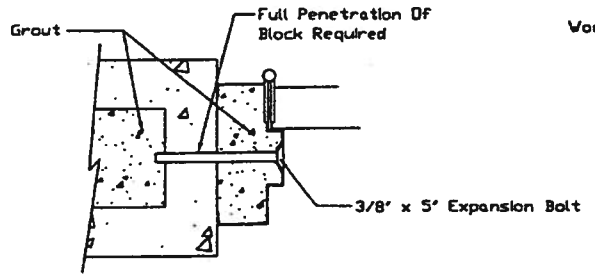

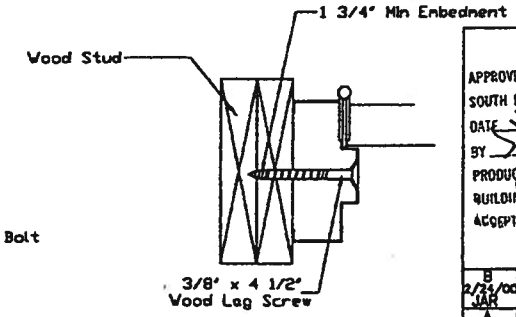

PRODUCT RENEWED
as complying with the Florida Building Code
Acceptance No. 03-0411.01
Expiration Date Aug. 14, 2008
By Manuel Perez
Miami-Dade Product Control Division

APPROVED AS COMPLYING WITH THE SOUTH FLORIDA BUILDING CODE
DATE June 08, 2000
BY Manuel Perez
PRODUCT CONTROL DIVISION
BUILDING CODE COMPLIANCE OFFICE
ACCEPTANCE NO. 00-0315.03

NOTES:
1. SEE SHEET 7 FOR BILL OF MATERIALS

MATERIAL SPECIFICATIONS:

Frame Anchor Installation Details

CECO DOOR PRODUCTS
Milan, Tennessee 38358

ISSUE	REVISIONS
B 2/24/00 JAR	Revised Format, Transfered Information from NOA
A 7/22/97 GWS	Revised Sheet Number

DRAWN BY:	DATE:
GWS	5/30/97

DRAWING NUMBER: RD0087
Sheet 2 of 7

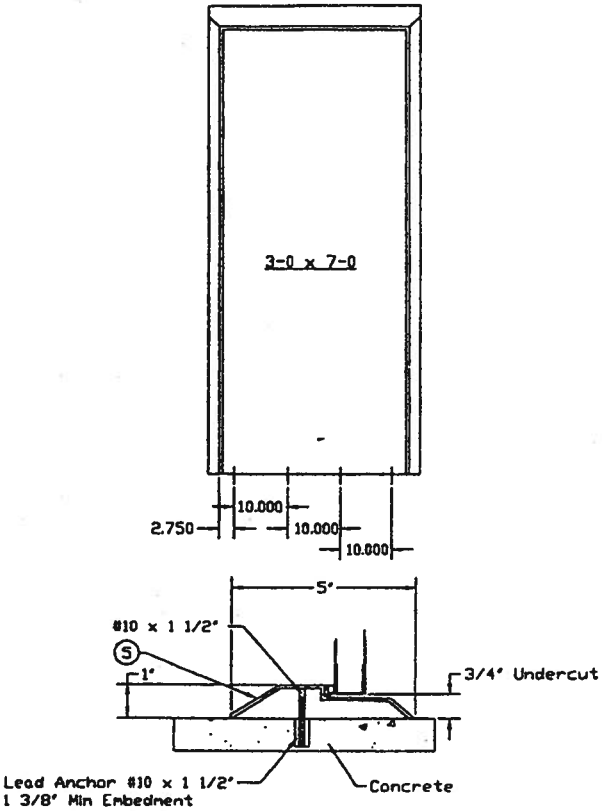

Threshold: National Guard 803S

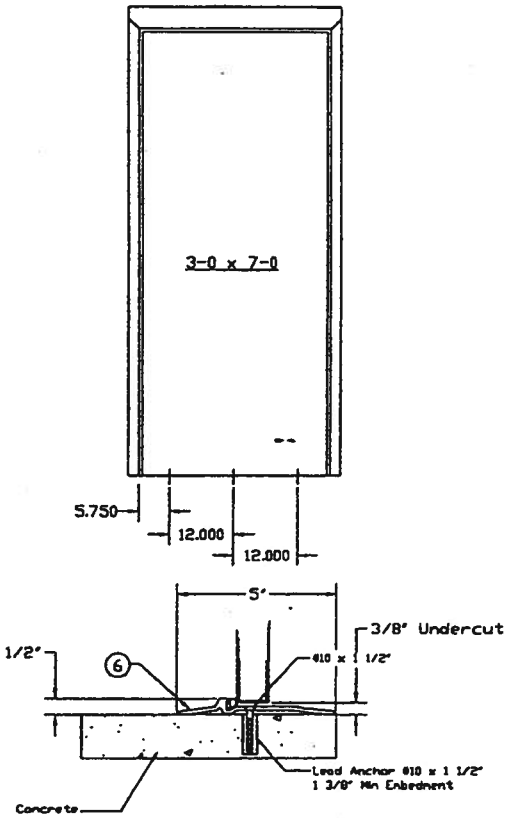

Threshold: Penko 2005AV

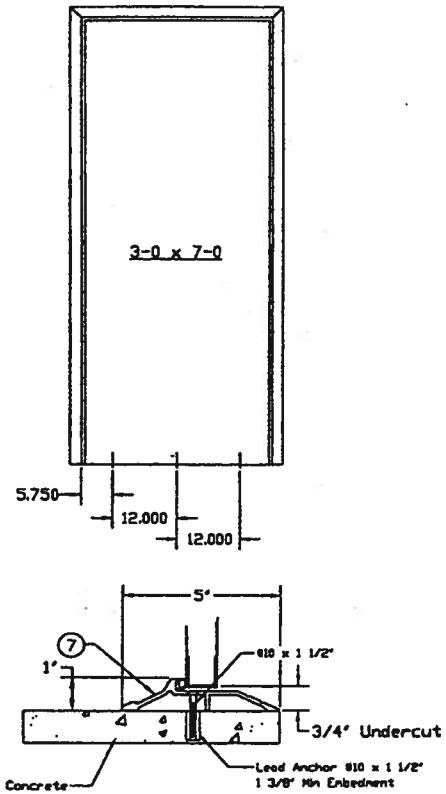

Threshold: Penko 181AV

NOTE: 1. All thresholds shown are made from extruded aluminum with slide-in vinyl weatherstrip insert.

PRODUCT RENEWED
as complying with the Florida Building Code
Acceptance No. 03-0411.01
Expiration Date AUG. 16, 2008
By Manuel Perez
Miami-Dade Product Control Division

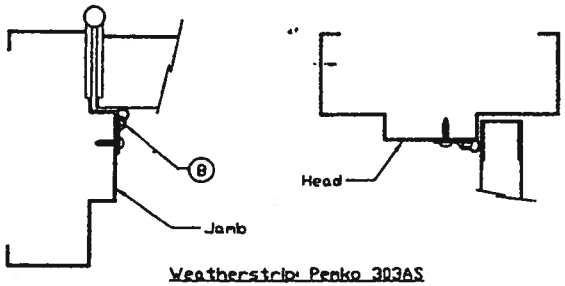

Weatherstrip: Penko 303AS

NOTE:
2. LOCATION: ALONG THE ENTIRE HEAD AND JAMB PERIMETER. ATTACHED WITH THIRTY FOUR (34) #8 X 3/4" PPH SMS SPACED AT 6" O/C.

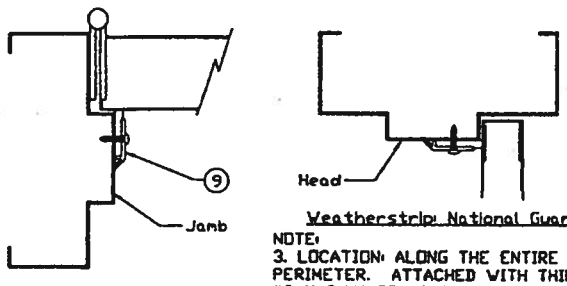

Weatherstrip: National Guard 130NA

NOTE:
3. LOCATION: ALONG THE ENTIRE HEAD AND JAMB PERIMETER. ATTACHED WITH THIRTY FOUR (34) #8 X 3/4" PPH SMS SPACED AT 6" O/C.

NOTE: 4. See Sheet 7 For Bill of Material

APPROVED AS COMPLYING WITH THE SOUTH FLORIDA BUILDING CODE
DATE June 08, 2000
BY Manuel Perez
PRODUCT CONTROL DIVISION
BUILDING CODE COMPLIANCE OFFICE
ACCEPTANCE NO. 00-0315.03

ISSUE	REVISIONS
C 2/24/00 JAR	Revised Format, Transfered Information from NOA
B 7/22/97 GWS	Revised Sheet Number

MATERIAL SPECIFICATIONS:

Threshold & Weatherstrip Installation details

CECO DOOR PRODUCTS
Milan, Tennessee 38358

DRAWN BY: GWS
DATE: 5/30/97

RD0087
Sheet 3 Of 7

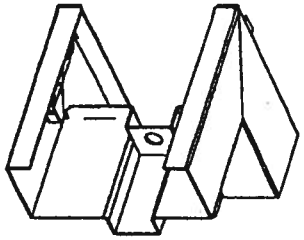

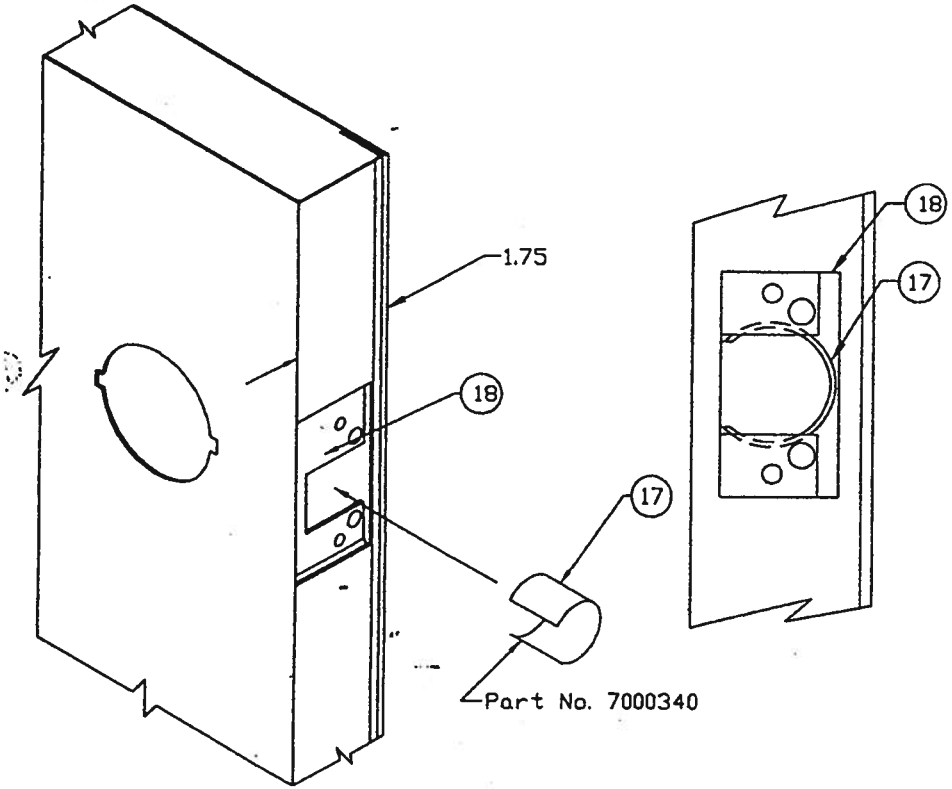

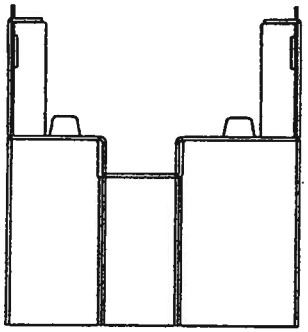

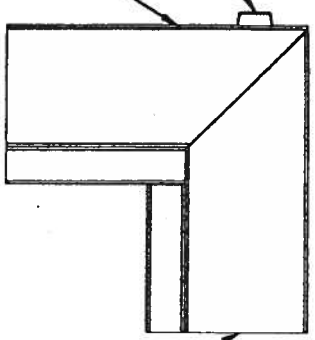

PRODUCT RENEWED
as complying with the Florida
Building Code
Acceptance No. 03-0411.01
Expiration Date AUG. 14 2008
By Manuel Perez
Miami Dade Product Control
Division

APPROVED AS COMPLYING WITH THE
SOUTH FLORIDA BUILDING CODE
DATE June 08 2000
BY Manuel Perez
PRODUCT CONTROL DIVISION
BUILDING CODE COMPLIANCE OFFICE
ACCEPTANCE NO. 00-0315.03

Note: 1. For Cylindrical Lock Only
2. See Sheet 7 For Bill Of Material

ISSUE	REVISIONS
B 2/24/00 JAR	Revised Format, Transfered Information from NOA
A 7/22/97 GWS	Revised Sheet Number

MATERIAL SPECIFICATIONS:

Cylindrical Lock Reinforcement and "SF" Seriers Frame Corner Installation Details

CECO DOOR PRODUCTS
Milan, Tennessee 38358

DRAWN BY: GWS
DATE: 6/06/97
DRAWING NUMBER: RD0087
Sheet 4 of 7

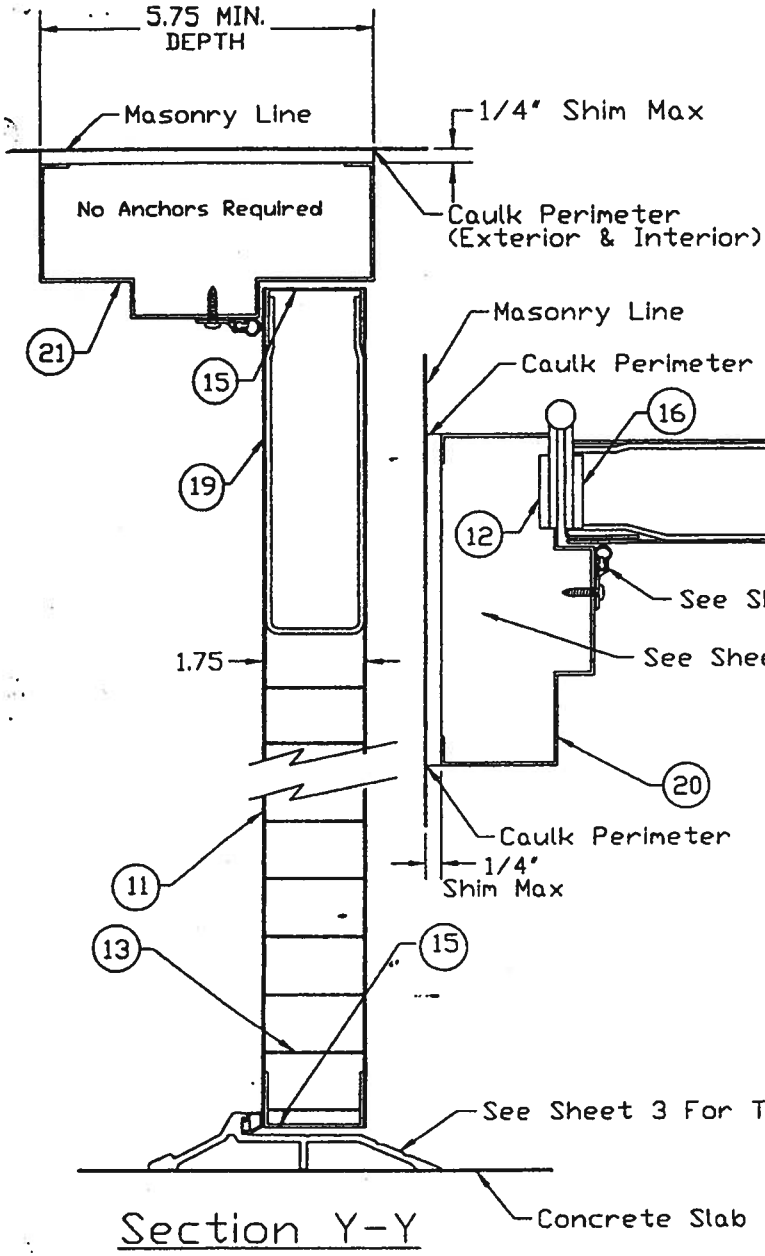

Section Y-Y

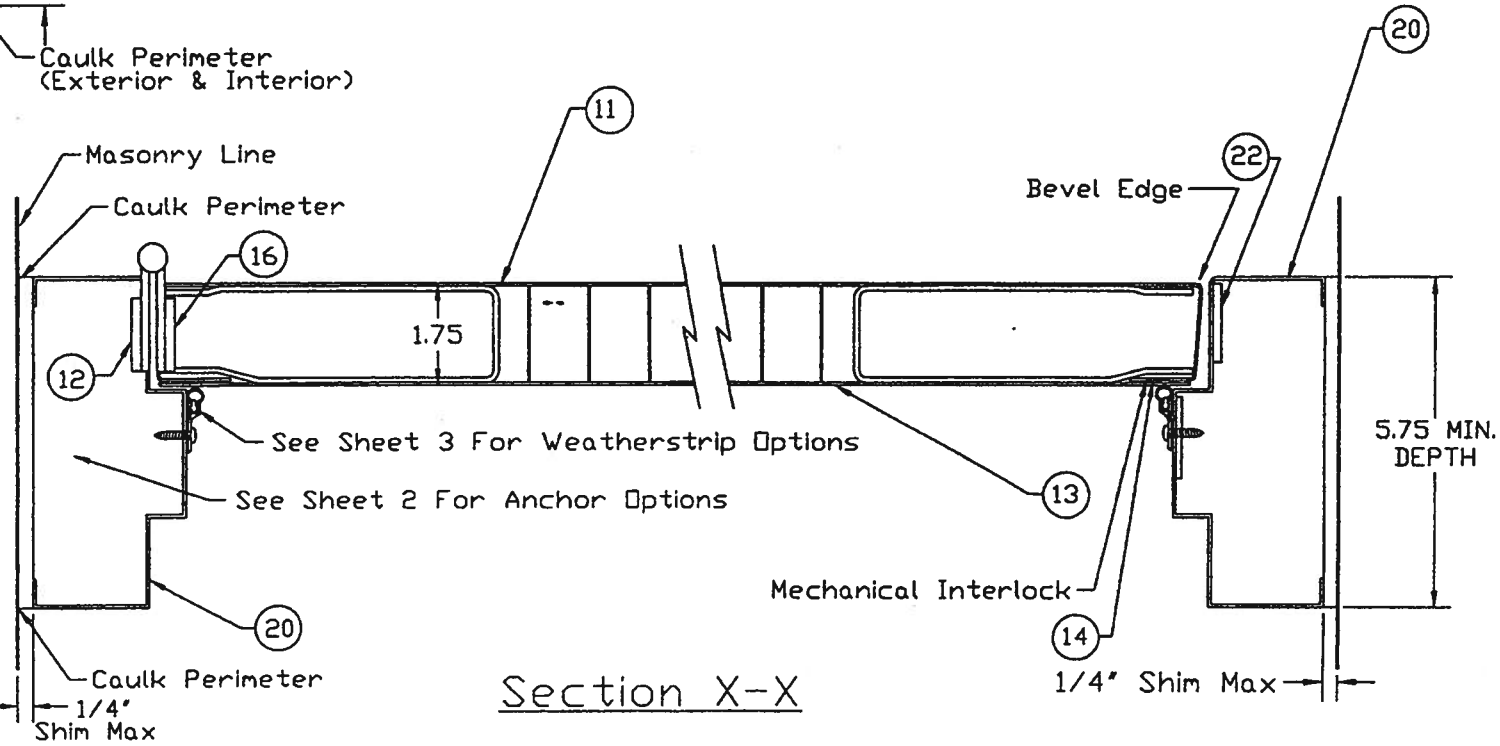

Section X-X

Note: See Sheet 7 For Bill Of Material

APPROVED AS COMPLYING WITH THE SOUTH FLORIDA BUILDING CODE
DATE June 08, 2000
BY Manuel Perez
PRODUCT CONTROL DIVISION
BUILDING CODE COMPLIANCE OFFICE
ACCEPTANCE NO. 00-0315.03

PRODUCT RENEWED as complying with the Florida Building Code
Acceptance No. 03-0411.01
Expiration Date AUG. 14, 2008
By Manuel Perez
Miami Dade Product Control Division

ISSUE	REVISIONS
C 2/24/00 JAR	Revised Format, Transfered Information from NOA
B 7/22/97 GWS	Revised Sheet Number

MATERIAL SPECIFICATIONS:

Cross Section View
Regent Door

CECO DOOR PRODUCTS
Milan, Tennessee 38358

DRAWN BY: GWS
DATE: 5/30/97
DRAWING NUMBER: RD0087
Sheet 5 of 7

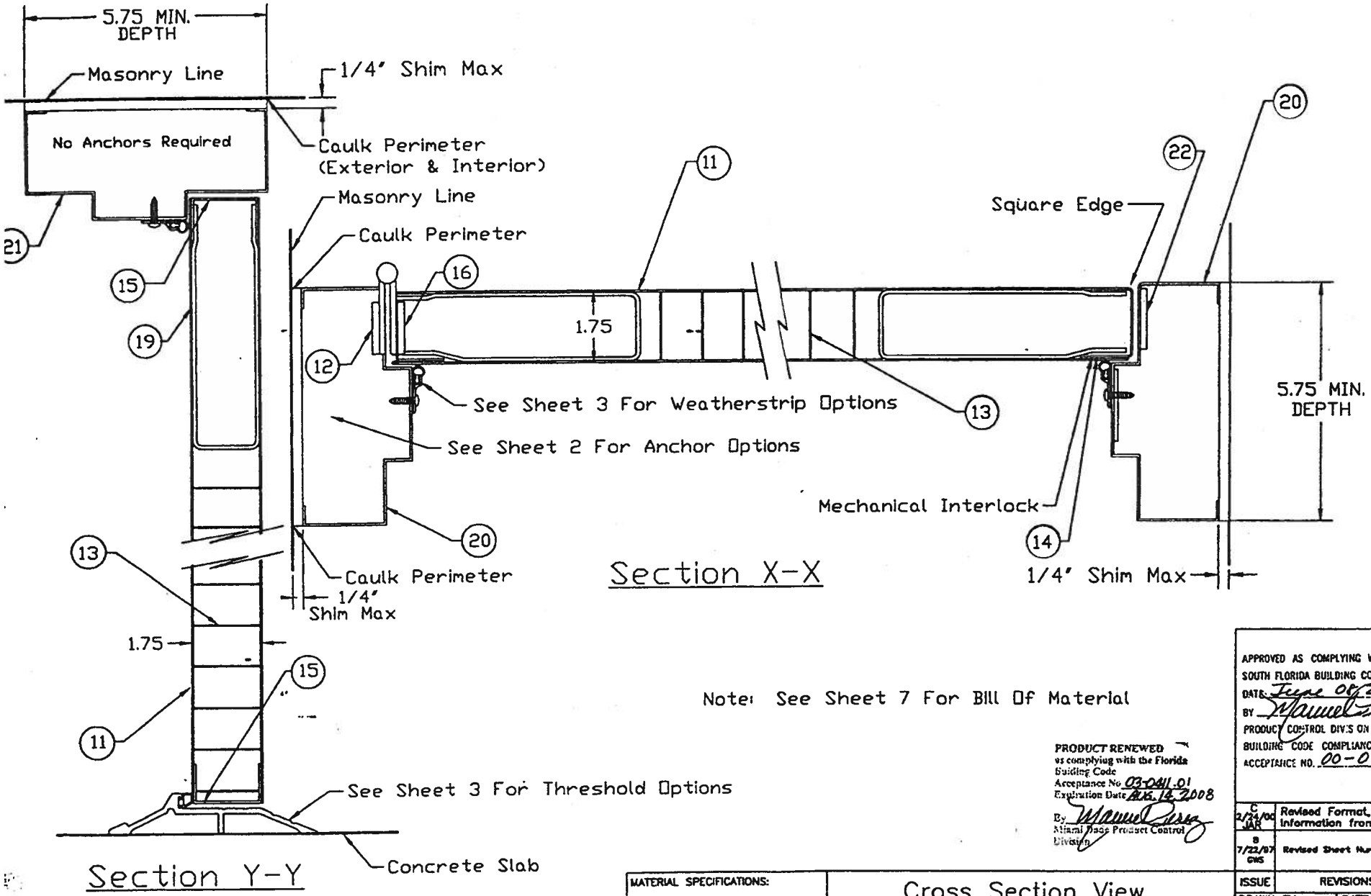

Note: See Sheet 7 For Bill Of Material

PRODUCT RENEWED
as complying with the Florida Building Code
Acceptance No. 03-0411.01
Expiration Date AUG. 14, 2008
By Miami-Dade Product Control Division

APPROVED AS COMPLYING WITH THE SOUTH FLORIDA BUILDING CODE
DATE: June 06, 2000
BY: Manuel Perez
PRODUCT CONTROL DIVISION
BUILDING CODE COMPLIANCE OFFICE
ACCEPTANCE NO. 00-0315.03

ISSUE	REVISIONS
C 2/24/00 JAR	Revised Format, Transfered Information from NOA
B 7/22/97 GWS	Revised Sheet Number

MATERIAL SPECIFICATIONS:

Cross Section View
Omega Door

CECO DOOR PRODUCTS
Milan, Tennessee 38358

DRAWN BY: GWS
DATE: 5/30/97
DRAWING NUMBER: RD0087
Sheet 6 of 7

ITEM	QTY	DESCRIPTION	MATERIAL	SIZE
1	1	SCHLAGE SERIES AL53PD GRADE 2, LATCH LOCK, SINGLE LEVER OR KNOB OPERATED		
2	1	MARKS SERIES 170AB GRADE 2, LATCH LOCK, INSIDE/OUTSIDE LEVER OPERATED		
3	1	YALE SERIES AU53070 GRADE 2 LATCH LOCK, SINGLE LEVER OR KNOB OPERATED.		
4	1	CAULK FOR INSTALLATION AND WEATHERSTRIP ADAPTER SCREWS FRAME PERIMETER (INSIDE & OUT) AND FRAME SILL CORNERS	GE SILICONE HOUSEHOLD SEALANT	
5	1	NATIONAL GUARD #803S		
6	1	PEMKO #2005AV		
7	1	PEMKO #181AV		
8	1 ROW	PEMKO #303AS HIGH SURFACE APPLIED EXTRUDED ALUMINUM WEATHERSTRIP ADAPTER WITH A SILICON (TM) BULB INSERT		
9	1 ROW	NATIONAL GUARD #130NA 1-1/4" WIDE X 0.188" SURFACE APPLIED EXTRUDED ALUMINUM WEATHERSTRIP ADAPT. WITH A FOAM INSERT		
10	3	HAGAR BB1279, 4-1/2" X 4-1/2" X .0134" THICK STEEL HINGE EACH ATTACHED WITH EIGHT #12-24 X 1/2" FH MS		
11	1	FACE SHEET CONFORMING TO ASTM A366 AND ASTM-A568	COMMERCIAL QUALITY COLD ROLLED STEEL (MINIMUM YEILD STR. OF Fy=36,000 psi)	18 GAUGE (.042" MIN. THICK)
12	3	HINGE REINFORCING PLATE, PLATE SPOT WELDED TO FRAME JAMB AT EACH HINGE LOCATION	STEEL	1-1/4" X 9" X 7 GA.
13	1	CORE: FULL HONEYCOMB CORE PERMANENTLY BONDED TO THE INSIDE OF EACH FACE SKIN WITH NON-FLAMMABLE ADHESIVE	PHENOLIC RESIN-IMPREGNATED KRAFT PAPER	1-1/8" CELL
14	1	DENFLEX 3500 STRUCTURAL ADHESIVE EPOXY		
15	1	ROLL FORMED STEEL CHANNEL ON THE TOP AND BOTTOM OF THE DOOR SPOT WELDED TO EXTERIOR AND GLUED TO INTERIOR SKIN		1" X 1-3/4" X 1" X 16 GA. (.053" MIN)
16	3	DOOR HINGE REINFORCEMENT		1-1/4" X 9" X 7 GA.
17	1	DOOR LATCH REINFORCEMENT, STEEL "C" RING	28 GA. GALV.	.015" THICK X 1.313 INSIDE DIAMETER
18	1	DOOR LOCK REINFORCEMENT	STEEL	16 GA.
19	1	DOOR CLOSER REINFORCEMENT, ROLLED FORM CHANNELS TACK WELDED TO DOOR END CHANNELS	STEEL	12 GA. (.093")
20	2	SERIES "SF", FRAME JAMB, DOUBLE RABBET PROFILE FACE SHEET CONFORMING TO ASTM A366 AND ASTM-A653	16 GA. (.053" MIN.) STEEL COMMERCIAL QUALITY COLD ROLLED STEEL (MINIMUM YEILD STR. OF Fy=40,000 psi)	2" FACE, 5-3/4" DEPTH MIN.
21	1	SERIES "SF", FRAME HEAD, DOUBLE RABBET PROFILE FACE SHEET CONFORMING TO ASTM A366 AND ASTM-A653	16 GA. (.053" MIN.) STEEL COMMERCIAL QUALITY COLD ROLLED STEEL (MINIMUM YEILD STR. OF Fy=40,000 psi)	2" FACE, 5-3/4" DEPTH MIN.
22	1	JAMB LOCK STRIKE REINFORCING PLATE	STEEL	1-1/8" X 2-1/2" X 12 GA.

PRODUCT RENEWED
as complying with the Florida
Building Code
Acceptance No. 03-0411.01
Expiration Date AUG 14, 2008
By Manuel Perez
Miami Dade Product Control
Division

APPROVED AS COMPLYING WITH THE
SOUTH FLORIDA BUILDING CODE
DATE June 08, 2000
BY Manuel Perez
PRODUCT CONTROL DIVISION
BUILDING CODE COMPLIANCE OFFICE
ACCEPTANCE NO. 00-0315.03

MATERIAL SPECIFICATIONS:

3-0 x 7-0 Series
Bill Of Materials

CECO DOOR PRODUCTS
Milan, Tennessee 38358

ISSUE		REVISIONS
B	2/24/00 JAR	Revised Format, Transfered Information from NOA
A	7/22/97 GWS	Revised Sheet Number

DRAWN BY: GWS
DATE: 6/02/97
DRAWING NUMBER: RD0087
Sheet 7 of 7

Architectural Testing

ANSI/AAMA/NWWDA 101/I.S.2-97
TEST REPORT

Rendered to:

MI HOME PRODUCTS, INC.

SERIES/MODEL: 480/680/880 Drop-in
PRODUCT TYPE: Aluminum Horizontal Sliding Window (XO-Fin)

	Results	
Title	**Test Specimen #1**	**Test Specimen #2**
Rating	HS-C30 71 x 71	HS-C40 71 x 59
Operating Force	11 lbf max.	14 lbf max.
Air Infiltration	0.11 cfm/ft^2	0.09 cfm/ft^2
Water Resistance Test Pressure	5.3 psf	6.0 psf
Uniform Load Deflection Test Pressure	± 30.0 psf	+ 45.0 psf -47.2 psf
Uniform Structural Load Test Pressure	± 45.0 psf	+ 67.5 psf -70.8 psf
Forced Entry Resistance	Grade 10	Grade 10

Reference should be made to ATI Report Identification No. 01-47320.03 for complete test specimen description and data.

130 Derry Court
York, PA 17402-9405
phone: 717.764.7700
fax: 717.764.4129
www.archtest.com

Architectural Testing

ANSI/AAMA/NWWDA 101/I.S.2-97 TEST REPORT

Rendered to:

MI HOME PRODUCTS, INC.
P.O. Box 370
650 West Market Street
Gratz, Pennsylvania 17030-0370

ATI Report Identification No.:	01-47320.03
Test Dates:	10/07/03
Through:	10/08/03
And:	12/01/03
And:	12/15/03
And:	03/17/04
Report Date:	04/16/04
Expiration Date:	10/07/07

Project Summary: Architectural Testing, Inc. (ATI) was contracted by MI Home Products, Inc. to witness testing on two Series/Model 480/680/880 Drop-in, aluminum horizontal sliding windows at MI Home Products, Inc. test facility in Elizabethville, Pennsylvania. The samples tested successfully met the performance requirements for the following ratings: Test Specimen #1: HS-C30 71 x 71; Test Specimen #2: HS-C40 71 x 59. Test specimen description and results are reported herein.

Test Specification: The test specimens were evaluated in accordance with ANSI/AAMA/NWWDA 101/I.S.2-97, *Voluntary Specifications for Aluminum, Vinyl (PVC) and Wood Windows and Glass Doors.*

Test Specimen Description:

Series/Model: 480/680/880 Drop-in

Product Type: Aluminum Horizontal Sliding Window (XO Fin)

Test Specimen #1: HS-C30 71 x 71

Overall Size: 5' 11-7/16" wide by 5' 11" high

Active Sash Size: 2' 11-5/8" wide by 5' 8-3/8" high

Fixed Daylight Opening Size: 2' 8-3/16" wide by 5' 5-5/8" high

Screen Size: 2' 10" wide by 5' 6-1/2" high

130 Derry Court
York, PA 17402-9405
phone: 717.764.7700
fax: 717.764.4129
www.archtest.com

Test Specimen Description: (Continued)

Weatherstripping:

Description	Quantity	Location
0.250" high by 0.187" backed polypile with center fin	1 Row	Active sash top and bottom rails and fixed meeting rail interlock
0.250" high by 0.187" backed polypile with center fin	2 Rows	Jamb stile

Test Specimen #2: HS-C40 71 x 59

Overall Size: 5' 11-3/8" wide by 4' 11-1/8" high

Active Sash Size: 2' 11-5/8" wide by 4' 8-1/4" high

Fixed Daylight Opening Size: 2' 8-1/4" wide by 4' 5-7/8" high

Screen Size: 2' 10-1/4" wide by 4' 7-1/8" high

Weatherstripping:

Description	Quantity	Location
0.310" high by 0.187" backed polypile with center fin	1 Row	Active sash top and bottom rails
0.250" high by 0.187" backed polypile with center fin	1 Rows	Fixed meeting rail interlock
0.310" high by 0.187" backed polypile with center fin	2 Rows	Jamb stile
0.550" high by 1" by 1" backed polypile pad	1 Pad	Corner of bottom rail and locking stile

Test Specimen Description: (Continued)

The following descriptions apply to all specimens.

Finish: All aluminum was white.

Glazing Details: The window utilized 5/8" thick sealed insulating glass constructed from two sheets of 1/8" thick clear annealed glass and a Swiggle spacer system. The lites were interior glazed onto double-sided adhesive foam tape and secured with PVC snap-in glazing beads.

Frame Construction: The frame was constructed of thermally broken extruded aluminum. The corners were secured utilizing three #8 x 1" screws per corner through the jambs into the head and sill screw bosses. End caps were utilized on the ends of the fixed meeting rails and secured with two #8 x 3/4" screws per cap. The meeting rails were then secured to the frame with two #8 x 3/4" screws.

Sash Construction: The sash was constructed of thermally broken extruded aluminum. The corners were secured utilizing one #8 x 1" screw per corner through the head and sill into the jambs screw boss.

Screen Construction: The screen was constructed from roll-formed aluminum with keyed corners. The fiberglass mesh was secured with a flexible vinyl spline.

Hardware:

Description	Quantity	Location
Cam lock	1	One midspan of active panel with integral lock keeper on fixed meeting stile
Roller assembly	2	One each end of bottom rail
Screen constant force spring	2	5" from rails on screen stiles
Screen lift handles	2	5" from rails on screen stiles

Drainage:

Description	Quantity	Location
1-1/4" long by 1/4" wide weepslot with cover	2	3-1/2" from jambs on sill face
1/2" long by 1/8" wide weepslot	2	2" from jambs on sill track

Reinforcement: No reinforcement was utilized.

Installation: The window was installed into a #2 Spruce-Pine-Fir wood buck. The window was secured utilizing #8 x 1-5/8" drywall screws located in corners and 12" on center around nail-fin perimeter. Silicone was utilized around the exterior perimeter.

Test Results:

The results are tabulated as follows:

Paragraph	Title of Test - Test Method	Results	Allowed
Test Specimen #1: HS-C30 71 x 71			
2.2.2.5.1	Operating Force	11 lbf	25 lbf max.
2.1.2	Air Infiltration per ASTM E 283 1.57 psf (25 mph)	0.11 cfm/ft^2	0.3 cfm/ft^2 max.

***Note #1**: The tested specimen meets the performance levels specified in ANSI/AAMA/NWWDA 101/I.S. 2-97 for air infiltration.*

2.1.3	Water Resistance per ASTM E 547-00 (with and without screen) 4.50 psf	No leakage	No leakage
2.1.4.1	Uniform Load Deflection per ASTM E 330 (Deflections reported were taken on the meeting stile) (Loads were held for 52 seconds)		
	30.0 psf (positive)	0.75"	See Note #2
	30.0 psf (negative)	0.71"	See Note #2

***Note #2**: The Uniform Load Deflection test is not requirement of ANSI/AAMA/NWWDA 101/I.S.2-97 for this product designation. The deflection data is recorded in this report for special code compliance and information only.*

2.1.4.2	Uniform Load Structural per ASTM E 330 (Permanent sets reported were taken on the meeting stile) (Loads were held for 10 seconds)		
	45.0 psf (positive)	0.13"	0.26" max.
	45.0 psf (negative)	<0.01"	0.26" max.
2.2.2.5.2	Deglazing Test per ASTM E 987 In operating direction - 70 lbs		
	Handle stile	0.13"/25%	0.50"/100%
	Lock stile	0.19"/38%	0.50"/100%
	In remaining direction - 50 lbs		
	Top rail	0.09"/19%	0.50"/100%
	Bottom rail	0.06"/13%	0.50"/100%

Test Results: (Continued)

Paragraph	Title of Test - Test Method	Results	Allowed
Test Specimen #1: HS-C30 71 x 71 (Continued)			
2.1.8	Forced Entry Resistance per ASTM F 588		
Type: A	Grade: 10		
	Lock Manipulation Test	No entry	No entry
	Test A1 thru A5	No entry	No entry
	Test A7	No entry	No entry
	Lock Manipulation Test	No entry	No entry
Optional Performance			
4.3	Water Resistance per ASTM E 547-00 (with and without screen) 5.3 psf	No leakage	No leakage
Test Specimen #2: HS-C40 71 x 59			
2.2.2.5.1	Operating Force	14 lbf	25 lbf max.
2.1.2	Air Infiltration per ASTM E 283 1.57 psf (25 mph)	0.09 cfm/ft^2	0.3 cfm/ft^2 max.

Note #1: *The tested specimen meets the performance levels specified in ANSI/AAMA/NWWDA 101/I.S. 2-97 for air infiltration.*

2.1.3	Water Resistance per ASTM E 547-00 (with and without screen) 4.50 psf	No leakage	No leakage
2.1.4.1	Uniform Load Deflection per ASTM E 330 (Deflections reported were taken on the meeting stile) (Loads were held for 52 seconds)		
	30.0 psf (positive)	0.62"	See Note #2
	30.0 psf (negative)	0.51"	See Note #2
2.1.4.2	Uniform Load Structural per ASTM E 330 (Permanent sets reported were taken on the meeting stile) (Loads were held for 10 seconds)		
	45.0 psf (positive)	0.03"	0.21" max.
	45.0 psf (negative)	0.04"	0.21" max.

Test Results: (Continued)

Paragraph	Title of Test - Test Method	Results	Allowed
Test Specimen #2: HS-C40 71 x 59 (Continued)			
2.2.2.5.2	Deglazing Test per ASTM E 987 In operating direction - 70 lbs		
	Handle stile	0.13"/25%	0.50"/100%
	Lock stile	0.13"/25%	0.50"/100%
	In remaining direction - 50 lbs		
	Top rail	0.03"/6%	0.50"/100%
	Bottom rail	0.03"/6%	0.50"/100%
2.1.8	Forced Entry Resistance per ASTM F 588		
	Type: A	Grade: 10	
	Lock Manipulation Test	No entry	No entry
	Test A1 thru A5	No entry	No entry
	Test A7	No entry	No entry
	Lock Manipulation Test	No entry	No entry
Optional Performance			
4.3	Water Resistance per ASTM E 547-00 (with and without screen) 6.0 psf	No leakage	No leakage
4.4.1	Uniform Load Deflection per ASTM E 330 (Deflections reported were taken on the meeting stile) (Loads were held for 52 seconds)		
	45.0 psf (positive)	0.62"	See Note #2
	47.2 psf (negative)	0.54"	See Note #2
4.4.2	Uniform Load Structural per ASTM E 330 (Permanent sets reported were taken on the meeting stile) (Loads were held for 10 seconds)		
	67.5 psf (positive)	0.04"	0.21" max.
	70.8 psf (negative)	0.08"	0.21" max.

Detailed drawings, representative samples of the test specimen, and a copy of this report will be retained by ATI for a period of four years from the original test date. The above results were secured by using the designated test methods and they indicate compliance with the performance requirements of the above referenced specification. This report does not constitute certification of this product, which may only be granted by the certification program administrator. This report may not be reproduced except in full without approval of Architectural Testing.

For ARCHITECTURAL TESTING, INC

Digitally Signed by: Eric Westphal

Eric Westphal
Technician

Digitally Signed by: Steven M. Urich

Steven M. Urich, P. E.
Senior Project Engineer

EW:dme
01-47320.03

April 20, 2004

Project Summary
Entire House
Glenn I. Jones Inc.

Job: Laurel Lake Lot 1
Date: Aug 02, 2006
By: Louis Weeks

552 N.W. Hilton Ave., Lake City, Fl 32055 Phone: (386)752-5389 Fax: (386)755-3401 Email: louis@bizsea.rr.com Web: www.glennijones.com

Project Information

For: J.L Dupree Construction

Notes:

Design Information

Weather: Jacksonville Cecil Fld Na, FL, US

Winter Design Conditions

Outside db	34	°F
Inside db	70	°F
Design TD	37	°F

Summer Design Conditions

Outside db	94	°F
Inside db	75	°F
Design TD	19	°F
Daily range	M	
Relative humidity	50	%
Moisture difference	41	gr/lb

Heating Summary

Structure	27657	Btuh
Ducts	3955	Btuh
Central vent (0 cfm)	0	Btuh
Humidification	0	Btuh
Piping	0	Btuh
Equipment load	31612	Btuh

Sensible Cooling Equipment Load Sizing

Structure	21504	Btuh
Ducts	8623	Btuh
Central vent (0 cfm)	0	Btuh
Blower	0	Btuh
Use manufacturer's data	n	
Rate/swing multiplier	0.99	
Equipment sensible load	29946	Btuh

Infiltration

Method	Simplified
Construction quality	Average
Fireplaces	0

	Heating	Cooling
Area (ft²)	1820	1820
Volume (ft³)	18199	18199
Air changes/hour	0.80	0.40
Equiv. AVF (cfm)	243	121

Latent Cooling Equipment Load Sizing

Structure	4769	Btuh
Ducts	0	Btuh
Central vent (0 cfm)	0	Btuh
Equipment latent load	4769	Btuh
Equipment total load	34716	Btuh
Req. total capacity at 0.70 SHR	3.6	ton

Heating Equipment Summary

Make	Carrier
Trade	Model 38SYG Heat Pump w/Puron
Model	38SYG04830

Efficiency	8 HSPF	
Heating input		
Heating output	45500	Btuh @ 47°F
Temperature rise	28	°F
Actual air flow	1483	cfm
Air flow factor	0.047	cfm/Btuh
Static pressure	0.50	in H2O
Space thermostat		

Cooling Equipment Summary

Make	Carrier
Trade	Model 38SYG Heat Pump w/Puron
Cond	38SYG04830
Coil	FV4BNF005

Efficiency	14 SEER	
Sensible cooling	31150	Btuh
Latent cooling	13350	Btuh
Total cooling	44500	Btuh
Actual air flow	1483	cfm
Air flow factor	0.049	cfm/Btuh
Static pressure	0.50	in H2O
Load sensible heat ratio	0.86	

Printout certified by ACCA to meet all requirements of Manual J 7th Ed.

Notice of Treatment 12186

Applicator: Florida Pest Control & Chemical Co. (www.flapest .com)
Address: BAYA AVE
City LAKE CITY FL Phone (386) 752-1703

Site Location: Subdivision ~~164 SW~~ LAUREL LAKES
Lot # 2 Block# ____ Permit # 24972
Address 164 SW Birch Gln

Product used	Active Ingredient	% Concentration
☐ Premise	Imidacloprid	0.1%
☐ Termidor	Fipronil	0.12%
☑ Bora-Care	Disodium Octaborate Tetrahydrate	23.0%

Type treatment: ☐ Soil ☑ Wood

Area Treated	Square feet	Linear feet	Gallons Applied
Dwl ord	2478	682	4.0

As per Florida Building Code 104.2.6 – If soil chemical barrier method for termite prevention is used, final exterior treatment shall be completed prior to final building approval.

If this notice is for the final exterior treatment, initial this line _____.

12/8/06	8:30 AM	F254 "Bunny" F299 "Don"
Date	Time	Print Technician's Name

Remarks: _____

Applicator - White Permit File - Canary Permit Holder - Pink

10/05 ©

From: The Columbia County Building & Zoning Department
Plan Review
135 NE Hernando Av.
P.O. Box 1529
Lake City Florida 32056-1529

Reference to a building permit application Number: 0608-67

Contractor Joseph Dupree Owner Joseph Dupree Property ID# 3-4s16-62732-202

On the date of August 23, 2006 application 0608-67and plans for construction of a single family dwelling were reviewed and the following information or alteration to the plans will be required to continue processing this application. If you should have any question please contact the above address, or contact phone number (386) 758-1163 or fax any information to (386) 754-7088.

Please include application number 0608-67 and when making reference to this application.

This is a plan review for compliance with the Florida Residential Code 2004 only and doesn't make any consideration toward the land use and zoning requirements.

To help ensure compliance with the Florida Residential Code 2004 the comments below need to be addressed on the plans.

1. Please provide a copy of a signed released site plan from the Columbia County Environmental Health Department which confirms approval of the waste water disposal system.
2. Please submit a recorded (with the Columbia County Clerk Office) notice of commencement before any inspections can be preformed by the Columbia County Building Department.
3. Please provide a recorded deed (with the Columbia County Clerk Office) which shows that Joseph Dupree is the title holder of Lot 2 Phase 2 of Laurel Lakes.

Joe Haltiwanger

Columbia County
Plan Examiner

24972

THIS INSTRUMENT PREPARED BY
& RETURN TO:
Columbia County Bank
173 NW Hillsboro Street
Lake City, FL 32055
REC: $

Inst:2006027521 Date:11/21/2006 Time:11:26
DC,P.DeWitt Cason,Columbia County B:1102 P:1548

NOTICE OF COMMENCEMENT

THE UNDERSIGNED hereby gives notice that improvement will be made to certain real property, and in accordance with Chapter 713, Florida Statutes, the following information is provided in this Notice of Commencement:

1. Description of Property: Lot 2 Phase 2, Laurel Lake Subdivision according to the Tax Parcel # 03-4F-16-0-2732-202 of the Public Records of Columbia County, Florida.

2. General Description of Improvements: Construction of a single family dwelling.

3. Owner Information: Phoenix Land Development
P O Box 2131
Lake City, Fl 32056
Phone: 386-755-8851

Owner's Interest in Property: Fee Simple

4. Contractor: Joseph L. Dupree, Jr.
J.L. Dupree Construction Services
P. O. Box 2861
Lake City, Fl 32056
Phone 386 754-5678

5. Lender: Columbia Bank
173 NW Hillsboro Street
Lake City, FL 32055

6. Additional persons within the State of Florida designated by Owner upon whom notices or other documents may be served as provided by Section 713.13(1)(a)7., Florida Statutes:

7. Expiration date of Notice of Commencement is one (1) year from the date of recording.

J.L. Dupree Construction Services

Joseph L. Dupree, Jr.

STATE OF FLORIDA
COUNTY OF Columbia

The foregoing instrument was acknowledged before me this 16th day of November, 2006 by Joseph L. Dupree, Jr.

NOTARY PUBLIC
Janice Elaine Gonzalez
Name:
State of Florida at Large (SEAL)
Personally Known:
Produced Identification:
Type:
My Commission Expires:

(NOC)

JANICE ELAINE GONZALEZ
MY COMMISSION # DD 599192
EXPIRES: April 11, 2010
Bonded Thru Notary Public Underwriters

Alpine Engineered Products, Inc.

1950 Marley Drive Haines City, FL 33844
Florida Engineering Certificate of Authorization Number: 567
Florida Certificate of Product Approval # FL1999
 Document ID:1SZG215-Z0204083643

Truss Fabricator: W.B. Howland
Job Identification: 3754-/Lot 2 Laurel Lakes II /J.L. DUPREE -- LAKE CITY, FL
Truss Count: 31
Model Code: Florida Building Code 2004
Truss Criteria: ANSI/TPI-2002(STD)/FBC
Engineering Software: Alpine Software,Version 7.25.
Structural Engineer of Record: The identity of the structural EOR did not exist as of
Address: the seal date per section 61G15-31.003(5a) of the FAC
Minimum Design Loads: Roof - 32.0 PSF @ 1.25 Duration
Floor - N/A
Wind - 110 MPH ASCE 7-02 -Closed

Seal Date: 08/04/2006

-Truss Design Engineer-
James F. Collins Jr.
Florida License Number: 52212
1950 Marley Drive
Haines City, FL 33844

Notes:

1. Determination as to the suitability of these truss components for the structure is the responsibility of the building designer/engineer of record, as defined in ANSI/TPI 1
2. The drawing date shown on this index sheet must match the date shown on the individual truss component drawing.
3. As shown on attached drawings; the drawing number is preceded by: HCUSR215

Details: BRCLBSUB-A11015EE-GBLLETIN-CNBRGBLK-

#	Ref Description	Drawing#	Date
1	59596--A1HG	06215001	08/03/06
2	59597--A2	06215011	08/03/06
3	59598--A3	06215020	08/03/06
4	59599--A4	06215026	08/03/06
5	59600--B1HG (2-PLY)	06215008	08/03/06
6	59601--B2	06215009	08/03/06
7	59602--B3	06215010	08/03/06
8	59603--B4	06215012	08/03/06
9	59604--B5	06215013	08/03/06
10	59605--B6	06215027	08/03/06
11	59606--B7	06215016	08/03/06
12	59607--B8	06215025	08/03/06
13	59608--B9	06215005	08/03/06
14	59609--B10	06215023	08/03/06
15	59610--B11	06215022	08/03/06
16	59611--B12	06215021	08/03/06
17	59612--B13	06215019	08/03/06
18	59613--B14	06215018	08/03/06
19	59614--B15HG (2-PLY)	06215017	08/03/06
20	59615--C1GE	06215003	08/03/06
21	59616--D1SR	06215004	08/03/06
22	59617--D2	06215006	08/03/06
23	59618--D3G 92-PLY)	06215007	08/03/06
24	59619--JC1	06215031	08/03/06
25	59620--JC3	06215030	08/03/06
26	59621--JC5	06215029	08/03/06
27	59622--JE7	06215002	08/03/06
28	59623--JH10	06215028	08/03/06
29	59624--PB-B1	06215015	08/03/06
30	59625--PB-B2	06215014	08/03/06
31	59626--PB-B3	06215024	08/03/06

THIS DWG PREPARED FROM COMPUTER INPUT (LOADS & DIMENSIONS) SUBMITTED BY TRUSS MFR.

Top chord 2x4 SP #2 N :T2 2x6 SP #2 N:
Bot chord 2x6 SP #2 N
Webs 2x4 SP #2 N

In lieu of structural panels use purlins to brace all flat TC @ 24" OC.

Plates sized for a minimum of 3.00 sq.in./piece.

110 mph wind, 15.00 ft mean hgt, ASCE 7-02, CLOSED bldg, Located anywhere in roof, CAT II, EXP B, wind TC DL=5.0 psf, wind BC DL=5.0 psf.

#1 hip supports 7-0-0 jacks W/2 panel TC and no end vert.

Deflection meets L/360 live and L/240 total load.

The overall height of this truss excluding overhang is 5-0-7.

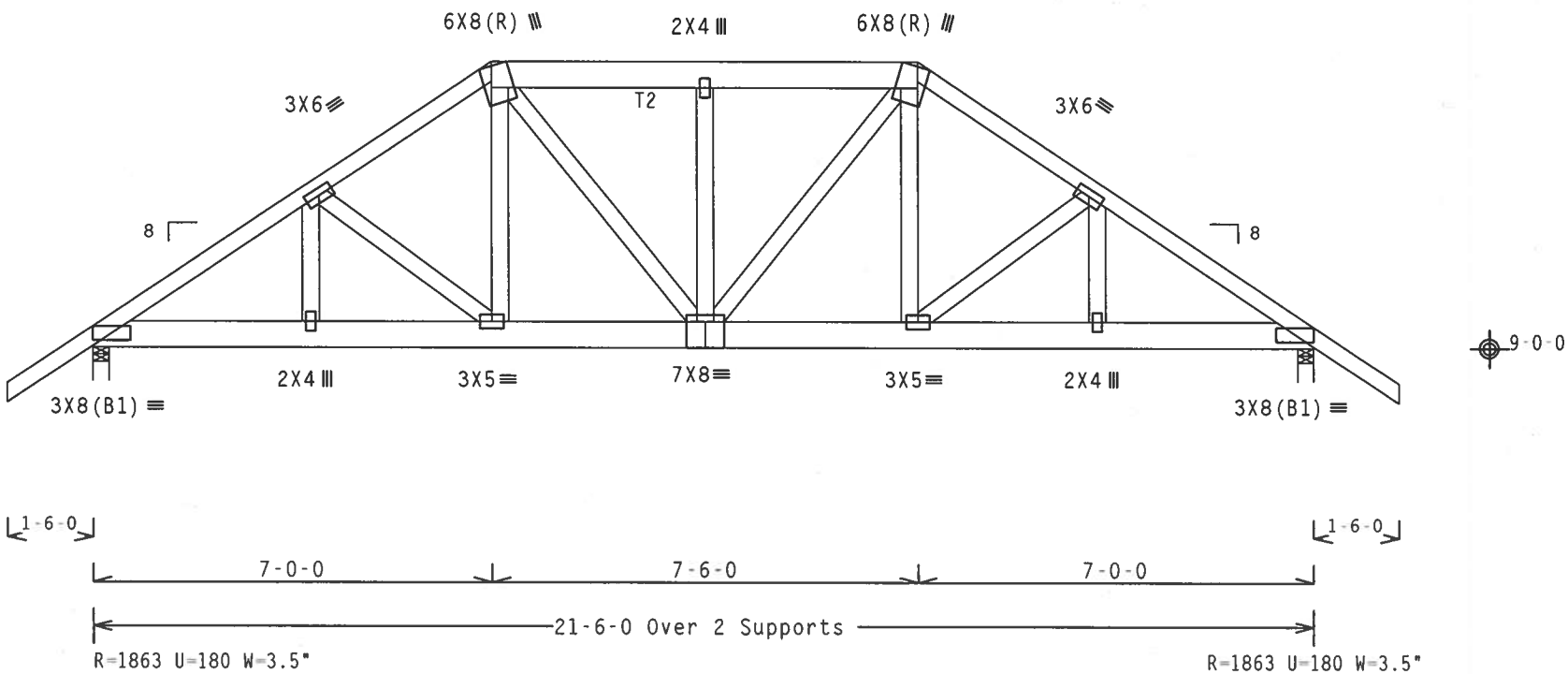

Design Crit: TPI-2002(STD)/FBC

PLT TYP. Wave\R Cq/RT=1.00(1.25)/10(0) 7.25.0503 [illegible] QTY:1 FL/-/5/-/-/R/- Scale =.3125"/Ft.

ALPINE
Alpine Engineered Products, Inc.
1950 Marley Drive
Haines City, FL 33844
FL Certificate of Authorization # 567

WARNING TRUSSES REQUIRE EXTREME CARE IN FABRICATION, HANDLING, SHIPPING, INSTALLING AND BRACING. REFER TO BCSI 1-03 (BUILDING COMPONENT SAFETY INFORMATION), PUBLISHED BY TPI (TRUSS PLATE INSTITUTE, 583 D'ONOFRIO DR., SUITE 200, MADISON, WI 53719) AND WTCA (WOOD TRUSS COUNCIL OF AMERICA, 6300 ENTERPRISE LN, MADISON, WI 53719) FOR SAFETY PRACTICES PRIOR TO PERFORMING THESE FUNCTIONS. UNLESS OTHERWISE INDICATED, TOP CHORD SHALL HAVE PROPERLY ATTACHED STRUCTURAL PANELS AND BOTTOM CHORD SHALL HAVE A PROPERLY ATTACHED RIGID CEILING.

IMPORTANTFURNISH A COPY OF THIS DESIGN TO THE INSTALLATION CONTRACTOR. ALPINE ENGINEERED PRODUCTS, INC. SHALL NOT BE RESPONSIBLE FOR ANY DEVIATION FROM THIS DESIGN; ANY FAILURE TO BUILD THE TRUSS IN CONFORMANCE WITH TPI; OR FABRICATING, HANDLING, SHIPPING, INSTALLING & BRACING OF TRUSSES. DESIGN CONFORMS WITH APPLICABLE PROVISIONS OF NDS (NATIONAL DESIGN SPEC, BY AF&PA) AND TPI. ALPINE CONNECTOR PLATES ARE MADE OF 20/18/16GA (W.H/S/K) ASTM A653 GRADE 40/60 (W. K/H.S) GALV. STEEL. APPLY PLATES TO EACH FACE OF TRUSS AND, UNLESS OTHERWISE LOCATED ON THIS DESIGN, POSITION PER DRAWINGS 160A-Z. ANY INSPECTION OF PLATES FOLLOWED BY (1) SHALL BE PER ANNEX A3 OF TPI1-2002 SEC.3. A SEAL ON THIS DRAWING INDICATES ACCEPTANCE OF PROFESSIONAL ENGINEERING RESPONSIBILITY SOLELY FOR THE TRUSS COMPONENT DESIGN SHOWN. THE SUITABILITY AND USE OF THIS COMPONENT FOR ANY BUILDING IS THE RESPONSIBILITY OF THE BUILDING DESIGNER PER ANSI/TPI 1 SEC. 2.

JAMES F. COLLINS, JR. LICENSE No. 52212 STATE OF FLORIDA PROFESSIONAL ENGINEER
Aug 04 [illegible]

TC LL	20.0 PSF	REF R215-- 59596
TC DL	10.0 PSF	DATE 08/03/06
BC DL	10.0 PSF	DRW HCUSR215 06215001
BC LL	0.0 PSF	HC-ENG JK/WHK
TOT.LD.	40.0 PSF	SEQN- 133616
DUR.FAC.	1.25	FROM CDM
SPACING	24.0"	JREF- 1SZG215_Z02

THIS DWG PREPARED FROM COMPUTER INPUT (LOADS & DIMENSIONS) SUBMITTED BY TRUSS MFR.

Top chord 2x4 SP #2 N
Bot chord 2x4 SP #2 N
Webs 2x4 SP #2 N

In lieu of structural panels use purlins to brace all flat TC @ 24" OC.

The overall height of this truss excluding overhang is 6-4-7.

110 mph wind, 15.00 ft mean hgt, ASCE 7-02, CLOSED bldg, not located within 4.50 ft from roof edge, CAT II, EXP B, wind TC DL=5.0 psf, wind BC DL=5.0 psf.

Deflection meets L/360 live and L/240 total load.

Plates sized for a minimum of 3.00 sq.in./piece.

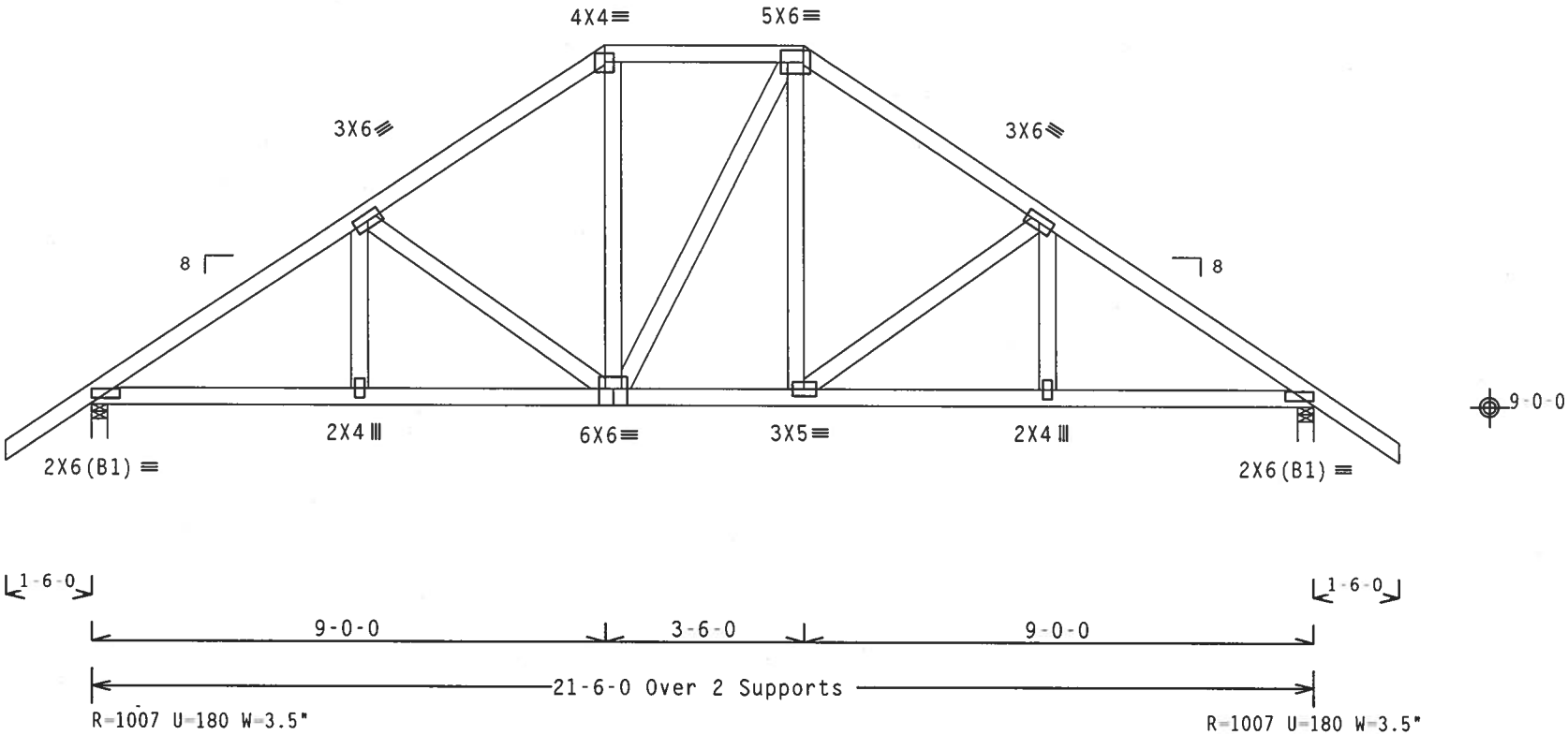

Design Crit: TPI-2002(STD)/FBC

PLT TYP. Wave\R Cq/RT=1.00(1.25)/10(0) 7.25.0503 00 QTY:1 FL/-/5/-/-/R/- Scale =.3125"/Ft.

ALPINE
Alpine Engineered Products, Inc.
1950 Marley Drive
Haines City, FL 33844
FL Certificate of Authorization # 567

WARNING TRUSSES REQUIRE EXTREME CARE IN FABRICATION, HANDLING, SHIPPING, INSTALLING AND BRACING. REFER TO BCSI 1-03 (BUILDING COMPONENT SAFETY INFORMATION), PUBLISHED BY TPI (TRUSS PLATE INSTITUTE, 583 D'ONOFRIO DR., SUITE 200, MADISON, WI 53719) AND WTCA (WOOD TRUSS COUNCIL OF AMERICA, 6300 ENTERPRISE LN, MADISON, WI 53719) FOR SAFETY PRACTICES PRIOR TO PERFORMING THESE FUNCTIONS. UNLESS OTHERWISE INDICATED, TOP CHORD SHALL HAVE PROPERLY ATTACHED STRUCTURAL PANELS AND BOTTOM CHORD SHALL HAVE A PROPERLY ATTACHED RIGID CEILING.

IMPORTANTFURNISH A COPY OF THIS DESIGN TO THE INSTALLATION CONTRACTOR. ALPINE ENGINEERED PRODUCTS, INC. SHALL NOT BE RESPONSIBLE FOR ANY DEVIATION FROM THIS DESIGN; ANY FAILURE TO BUILD THE TRUSS IN CONFORMANCE WITH TPI; OR FABRICATING, HANDLING, SHIPPING, INSTALLING & BRACING OF TRUSSES. DESIGN CONFORMS WITH APPLICABLE PROVISIONS OF NDS (NATIONAL DESIGN SPEC, BY AF&PA) AND TPI. ALPINE CONNECTOR PLATES ARE MADE OF 20/18/16GA (W,H/S/K) ASTM A653 GRADE 40/60 (W, K/H,S) GALV. STEEL. APPLY PLATES TO EACH FACE OF TRUSS AND, UNLESS OTHERWISE LOCATED ON THIS DESIGN, POSITION PER DRAWINGS 160A-Z. ANY INSPECTION OF PLATES FOLLOWED BY (1) SHALL BE PER ANNEX A3 OF TPI1-2002 SEC.3. A SEAL ON THIS DRAWING INDICATES ACCEPTANCE OF PROFESSIONAL ENGINEERING RESPONSIBILITY SOLELY FOR THE TRUSS COMPONENT DESIGN SHOWN. THE SUITABILITY AND USE OF THIS COMPONENT FOR ANY BUILDING IS THE RESPONSIBILITY OF THE BUILDING DESIGNER PER ANSI/TPI 1 SEC. 2.

JAMES F. COLLINS, JR. LICENSE No. 52212 STATE OF FLORIDA PROFESSIONAL ENGINEER

Aug 04 2006

TC LL	20.0 PSF	REF R215-- 59597
TC DL	10.0 PSF	DATE 08/03/06
BC DL	10.0 PSF	DRW HCUSR215 06215011
BC LL	0.0 PSF	HC-ENG JK/WHK *
TOT.LD.	40.0 PSF	SEQN- 133620
DUR.FAC.	1.25	FROM CDM
SPACING	24.0"	JREF- 1SZG215_Z02

THIS DWG PREPARED FROM COMPUTER INPUT (LOADS & DIMENSIONS) SUBMITTED BY TRUSS MFR.

Top chord 2x4 SP #2 N
Bot chord 2x4 SP #2 N
Webs 2x4 SP #2 N

Deflection meets L/360 live and L/240 total load.

The overall height of this truss excluding overhang is 7-6-7.

110 mph wind, 15.00 ft mean hgt, ASCE 7-02, CLOSED bldg, not located within 4.50 ft from roof edge, CAT II, EXP B, wind TC DL=5.0 psf, wind BC DL=5.0 psf.

Plates sized for a minimum of 3.00 sq.in./piece.

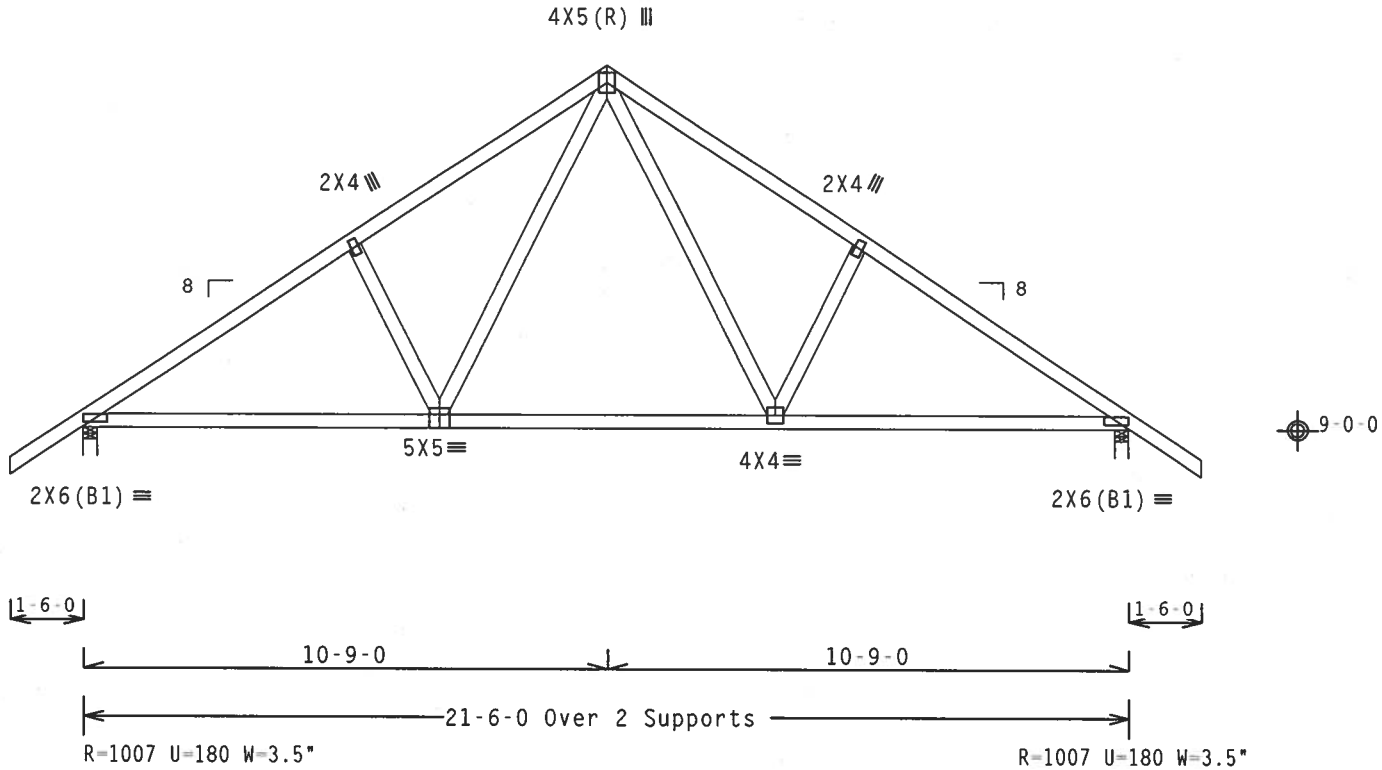

Design Crit: TPI-2002(STD)/FBC

PLT TYP. Wave\R Cq/RT=1.00(1.25)/10(0) 7.25.0503 QTY:5 FL/-/5/-/-/R/- Scale =.25"/Ft.

ALPINE
Alpine Engineered Products, Inc.
1950 Marley Drive
Haines City, FL 33844
FL Certificate of Authorization # 567

WARNING TRUSSES REQUIRE EXTREME CARE IN FABRICATION, HANDLING, SHIPPING, INSTALLING AND BRACING. REFER TO BCSI 1-03 (BUILDING COMPONENT SAFETY INFORMATION), PUBLISHED BY TPI (TRUSS PLATE INSTITUTE, 583 D'ONOFRIO DR., SUITE 200, MADISON, WI 53719) AND WTCA (WOOD TRUSS COUNCIL OF AMERICA, 6300 ENTERPRISE LN, MADISON, WI 53719) FOR SAFETY PRACTICES PRIOR TO PERFORMING THESE FUNCTIONS. UNLESS OTHERWISE INDICATED, TOP CHORD SHALL HAVE PROPERLY ATTACHED STRUCTURAL PANELS AND BOTTOM CHORD SHALL HAVE A PROPERLY ATTACHED RIGID CEILING.

IMPORTANTFURNISH A COPY OF THIS DESIGN TO THE INSTALLATION CONTRACTOR. ALPINE ENGINEERED PRODUCTS, INC. SHALL NOT BE RESPONSIBLE FOR ANY DEVIATION FROM THIS DESIGN; ANY FAILURE TO BUILD THE TRUSS IN CONFORMANCE WITH TPI; OR FABRICATING, HANDLING, SHIPPING, INSTALLING & BRACING OF TRUSSES. DESIGN CONFORMS WITH APPLICABLE PROVISIONS OF NDS (NATIONAL DESIGN SPEC. BY AF&PA) AND TPI. ALPINE CONNECTOR PLATES ARE MADE OF 20/18/16GA (W,H/S/K) ASTM A653 GRADE 40/60 (W, K/H,S) GALV. STEEL. APPLY PLATES TO EACH FACE OF TRUSS AND, UNLESS OTHERWISE LOCATED ON THIS DESIGN, POSITION PER DRAWINGS 160A-Z. ANY INSPECTION OF PLATES FOLLOWED BY (1) SHALL BE PER ANNEX A3 OF TPI1-2002 SEC.3. A SEAL ON THIS DRAWING INDICATES ACCEPTANCE OF PROFESSIONAL ENGINEERING RESPONSIBILITY SOLELY FOR THE TRUSS COMPONENT DESIGN SHOWN. THE SUITABILITY AND USE OF THIS COMPONENT FOR ANY BUILDING IS THE RESPONSIBILITY OF THE BUILDING DESIGNER PER ANSI/TPI 1 SEC. 2.

JAMES F. COLLINS, JR. LICENSE No. 52217 STATE OF FLORIDA PROFESSIONAL ENGINEER
Aug 04 06

TC LL	20.0 PSF	REF	R215-- 59598
TC DL	10.0 PSF	DATE	08/03/06
BC DL	10.0 PSF	DRW	HCUSR215 06215020
BC LL	0.0 PSF	HC-ENG	JK/WHK *
TOT.LD.	40.0 PSF	SEQN-	133624
DUR.FAC.	1.25	FROM	CDM
SPACING	24.0"	JREF-	1SZG215_Z02

THIS DWG PREPARED FROM COMPUTER INPUT (LOADS & DIMENSIONS) SUBMITTED BY TRUSS MFR.

Top chord 2x4 SP #2 N
Bot chord 2x4 SP #2 N
Webs 2x4 SP #2 N

Deflection meets L/360 live and L/240 total load.

The overall height of this truss excluding overhang is 7-6-7.

110 mph wind, 15.00 ft mean hgt, ASCE 7-02, CLOSED bldg, not located within 4.50 ft from roof edge, CAT II, EXP B, wind TC DL=5.0 psf, wind BC DL=5.0 psf.

Plates sized for a minimum of 3.00 sq.in./piece.

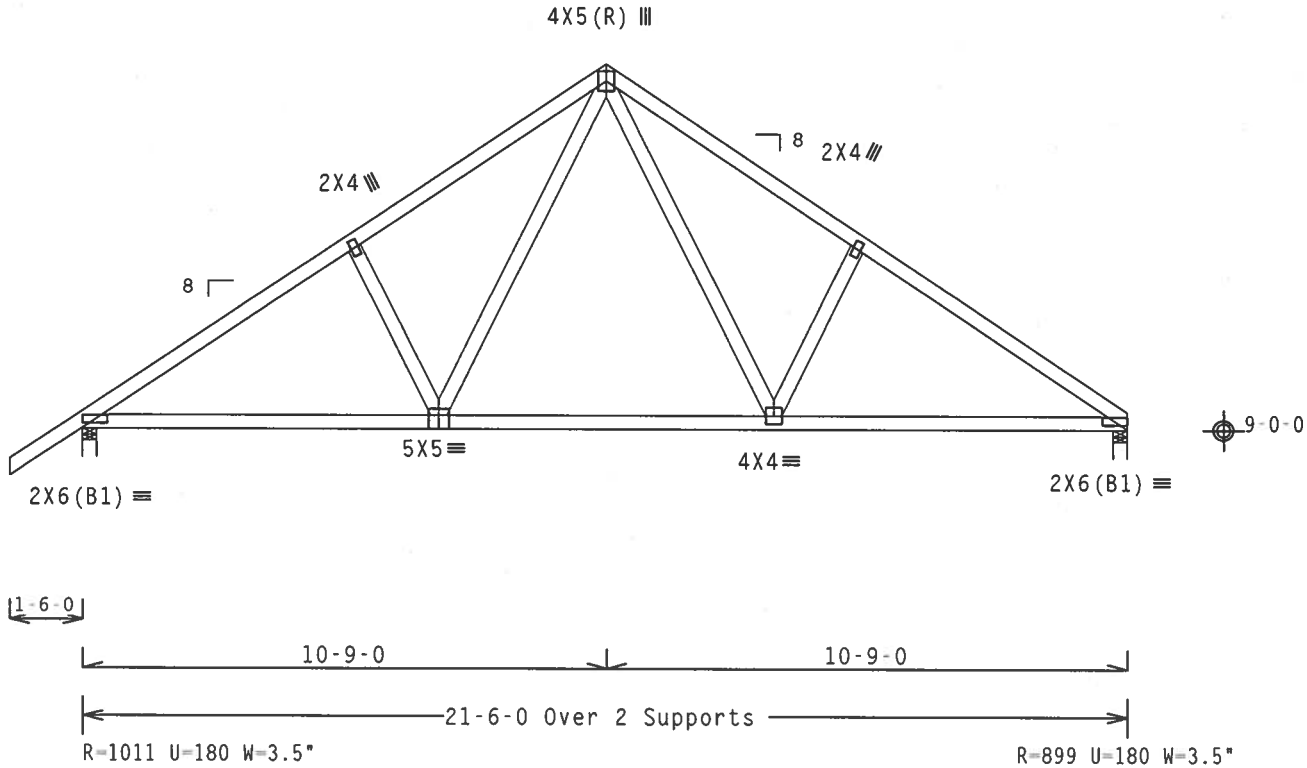

Design Crit: TPI-2002(STD)/FBC

PLT TYP. Wave\R Cq/RT=1.00(1.25)/10(0) 7.25.0503.00 QTY:2 FL/-/5/-/-/R/- Scale =.25"/Ft.

ALPINE
Alpine Engineered Products, Inc.
1950 Marley Drive
Haines City, FL 33844
FL Certificate of Authorization # 567

WARNING TRUSSES REQUIRE EXTREME CARE IN FABRICATION, HANDLING, SHIPPING, INSTALLING AND BRACING. REFER TO BCSI 1-03 (BUILDING COMPONENT SAFETY INFORMATION), PUBLISHED BY TPI (TRUSS PLATE INSTITUTE, 583 D'ONOFRIO DR., SUITE 200, MADISON, WI 53719) AND WTCA (WOOD TRUSS COUNCIL OF AMERICA, 6300 ENTERPRISE LN, MADISON, WI 53719) FOR SAFETY PRACTICES PRIOR TO PERFORMING THESE FUNCTIONS. UNLESS OTHERWISE INDICATED, TOP CHORD SHALL HAVE PROPERLY ATTACHED STRUCTURAL PANELS AND BOTTOM CHORD SHALL HAVE A PROPERLY ATTACHED RIGID CEILING.

IMPORTANTFURNISH A COPY OF THIS DESIGN TO THE INSTALLATION CONTRACTOR. ALPINE ENGINEERED PRODUCTS, INC. SHALL NOT BE RESPONSIBLE FOR ANY DEVIATION FROM THIS DESIGN: ANY FAILURE TO BUILD THE TRUSS IN CONFORMANCE WITH TPI: OR FABRICATING, HANDLING, SHIPPING, INSTALLING & BRACING OF TRUSSES DESIGN CONFORMS WITH APPLICABLE PROVISIONS OF NDS (NATIONAL DESIGN SPEC. BY AF&PA) AND TPI. ALPINE CONNECTOR PLATES ARE MADE OF 20/18/16GA (W,H/S/K) ASTM A653 GRADE 40/60 (W, K/H,S) GALV. STEEL. APPLY PLATES TO EACH FACE OF TRUSS AND, UNLESS OTHERWISE LOCATED ON THIS DESIGN, POSITION PER DRAWINGS 160A-Z. ANY INSPECTION OF PLATES FOLLOWED BY (1) SHALL BE PER ANNEX A3 OF TPI1-2002 SEC.3. A SEAL ON THIS DRAWING INDICATES ACCEPTANCE OF PROFESSIONAL ENGINEERING RESPONSIBILITY SOLELY FOR THE TRUSS COMPONENT DESIGN SHOWN. THE SUITABILITY AND USE OF THIS COMPONENT FOR ANY BUILDING IS THE RESPONSIBILITY OF THE BUILDING DESIGNER PER ANSI/TPI 1 SEC. 2.

JAMES F. COLLINS, JR. LICENSED No. 52212 STATE OF FLORIDA PROFESSIONAL ENGINEER

Aug 8, 2006

TC LL	20.0 PSF	REF	R215-- 59599
TC DL	10.0 PSF	DATE	08/03/06
BC DL	10.0 PSF	DRW	HCUSR215 06215026
BC LL	0.0 PSF	HC-ENG	JK/WHK *
TOT.LD.	40.0 PSF	SEQN-	133628
DUR.FAC.	1.25	FROM	CDM
SPACING	24.0"	JREF-	1SZG215_Z02

Top chord 2x6 SP #2 N :T1 2x4 SP #2 N:
Bot chord 2x6 SP #2 N
Webs 2x4 SP #2 N

110 mph wind, 15.00 ft mean hgt, ASCE 7-02, CLOSED bldg, Located anywhere in roof, CAT II, EXP B, wind TC DL=5.0 psf, wind BC DL=5.0 psf.

In lieu of structural panels use purlins to brace all flat TC @ 24" OC.

#1 hip supports 7-0-0 jacks W/2 panel TC and no end vert.

Plates sized for a minimum of 3.00 sq.in./piece.

2 COMPLETE TRUSSES REQUIRED

Nailing Schedule: (0.131"x3"_Gun_nails)
Top Chord: 1 Row @12.00" o.c.
Bot Chord: 1 Row @12.00" o.c.
Webs : 1 Row @ 4" o.c.
Use equal spacing between rows and stagger nails in each row to avoid splitting.

Right end vertical not exposed to wind pressure.

Deflection meets L/360 live and L/240 total load.

The overall height of this truss excluding overhang is 5-0-7.

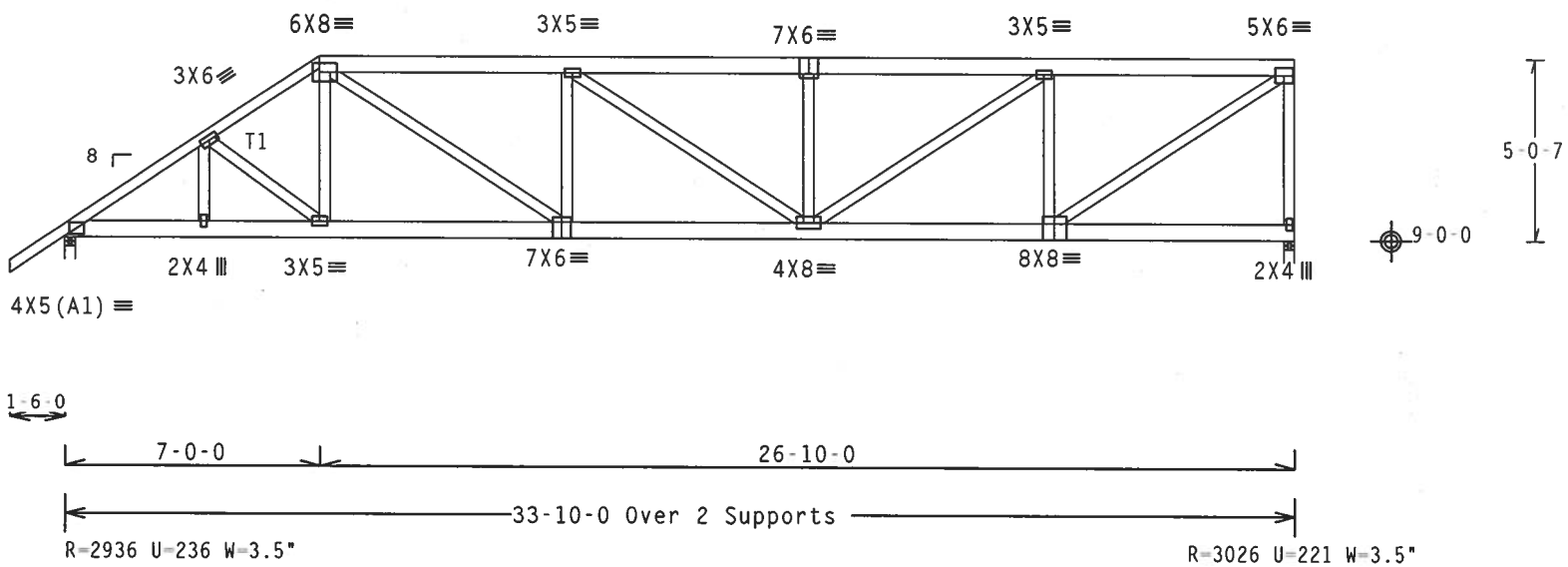

Design Crit: TPI-2002(STD)/FBC

PLT TYP. Wave\R Cq/RT=1.00(1.25)/10(0) 7.25.0502.20 QTY:1 FL/-/5/-/-/R/- Scale =.1875"/Ft.

ALPINE
Alpine Engineered Products, Inc.
1950 Marley Drive
Haines City, FL 33844
FL Certificate of Authorization # 567

WARNING TRUSSES REQUIRE EXTREME CARE IN FABRICATION, HANDLING, SHIPPING, INSTALLING AND BRACING. REFER TO BCSI 1-03 (BUILDING COMPONENT SAFETY INFORMATION), PUBLISHED BY TPI (TRUSS PLATE INSTITUTE, 583 D'ONOFRIO DR., SUITE 200, MADISON, WI 53719) AND WTCA (WOOD TRUSS COUNCIL OF AMERICA, 6300 ENTERPRISE LN, MADISON, WI 53719) FOR SAFETY PRACTICES PRIOR TO PERFORMING THESE FUNCTIONS. UNLESS OTHERWISE INDICATED, TOP CHORD SHALL HAVE PROPERLY ATTACHED STRUCTURAL PANELS AND BOTTOM CHORD SHALL HAVE A PROPERLY ATTACHED RIGID CEILING.

IMPORTANTFURNISH A COPY OF THIS DESIGN TO THE INSTALLATION CONTRACTOR. ALPINE ENGINEERED PRODUCTS, INC. SHALL NOT BE RESPONSIBLE FOR ANY DEVIATION FROM THIS DESIGN; ANY FAILURE TO BUILD THE TRUSS IN CONFORMANCE WITH TPI; OR FABRICATING, HANDLING, SHIPPING, INSTALLING & BRACING OF TRUSSES. DESIGN CONFORMS WITH APPLICABLE PROVISIONS OF NDS (NATIONAL DESIGN SPEC. BY AF&PA) AND TPI. ALPINE CONNECTOR PLATES ARE MADE OF 20/18/16GA (W.H/S/K) ASTM A653 GRADE 40/60 (W. K/H.S) GALV. STEEL. APPLY PLATES TO EACH FACE OF TRUSS AND, UNLESS OTHERWISE LOCATED ON THIS DESIGN, POSITION PER DRAWINGS 160A-Z. ANY INSPECTION OF PLATES FOLLOWED BY (I) SHALL BE PER ANNEX A3 OF TPI1-2002 SEC.3. A SEAL ON THIS DRAWING INDICATES ACCEPTANCE OF PROFESSIONAL ENGINEERING RESPONSIBILITY SOLELY FOR THE TRUSS COMPONENT DESIGN SHOWN. THE SUITABILITY AND USE OF THIS COMPONENT FOR ANY BUILDING IS THE RESPONSIBILITY OF THE BUILDING DESIGNER PER ANSI/TPI 1 SEC. 2.

JAMES F. COLLINS JR. LICENSE No. 52212 STATE OF FLORIDA PROFESSIONAL ENGINEER

Aug 04 '06

TC LL	20.0	PSF
TC DL	10.0	PSF
BC DL	10.0	PSF
BC LL	0.0	PSF
TOT.LD.	40.0	PSF
DUR.FAC.	1.25	
SPACING	24.0"	

REF	R215-- 59600
DATE	08/03/06
DRW	HCUSR215 06215008
HC-ENG	JK/WHK
SEQN-	133636
FROM	CDM
JREF-	1SZG215_Z02

THIS DWG PREPARED FROM COMPUTER INPUT (LOADS & DIMENSIONS) SUBMITTED BY TRUSS MFR.

Top chord 2x4 SP #2 N
Bot chord 2x4 SP #2 N
Webs 2x4 SP #2 N

(A) Continuous lateral bracing equally spaced on member.

In lieu of structural panels use purlins to brace all flat TC @ 24" OC.

The overall height of this truss excluding overhang is 6-4-7.

110 mph wind, 15.00 ft mean hgt, ASCE 7-02, CLOSED bldg, not located within 4.50 ft from roof edge, CAT II, EXP B, wind TC DL=5.0 psf, wind BC DL=5.0 psf.

Right end vertical not exposed to wind pressure.

Deflection meets L/360 live and L/240 total load.

Plates sized for a minimum of 3.00 sq.in./piece.

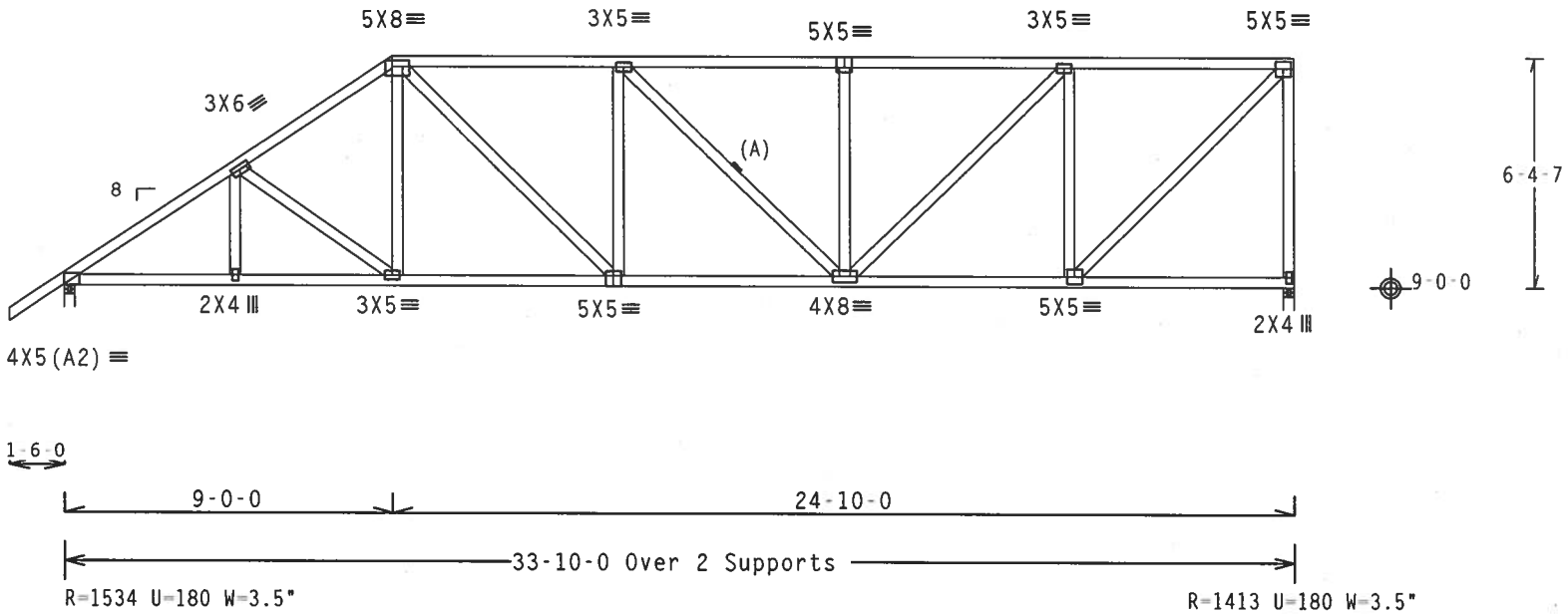

Design Crit: TPI-2002(STD)/FBC

PLT TYP. Wave\R Cq/RT=1.00(1.25)/10(0) 7.25.0503.00 QTY:1 FL/-/5/-/-/R/- Scale =.1875"/Ft.

ALPINE
Alpine Engineered Products, Inc.
1950 Marley Drive
Haines City, FL 33844
FL Certificate of Authorization # 567

WARNING TRUSSES REQUIRE EXTREME CARE IN FABRICATION, HANDLING, SHIPPING, INSTALLING AND BRACING. REFER TO BCSI 1-03 (BUILDING COMPONENT SAFETY INFORMATION), PUBLISHED BY TPI (TRUSS PLATE INSTITUTE, 583 D'ONOFRIO DR., SUITE 200, MADISON, WI 53719) AND WTCA (WOOD TRUSS COUNCIL OF AMERICA, 6300 ENTERPRISE LN, MADISON, WI 53719) FOR SAFETY PRACTICES PRIOR TO PERFORMING THESE FUNCTIONS. UNLESS OTHERWISE INDICATED, TOP CHORD SHALL HAVE PROPERLY ATTACHED STRUCTURAL PANELS AND BOTTOM CHORD SHALL HAVE A PROPERLY ATTACHED RIGID CEILING.

IMPORTANT FURNISH A COPY OF THIS DESIGN TO THE INSTALLATION CONTRACTOR. ALPINE ENGINEERED PRODUCTS, INC. SHALL NOT BE RESPONSIBLE FOR ANY DEVIATION FROM THIS DESIGN; ANY FAILURE TO BUILD THE TRUSS IN CONFORMANCE WITH TPI: OR FABRICATING, HANDLING, SHIPPING, INSTALLING & BRACING OF TRUSSES. DESIGN CONFORMS WITH APPLICABLE PROVISIONS OF NDS (NATIONAL DESIGN SPEC. BY AF&PA) AND TPI. ALPINE CONNECTOR PLATES ARE MADE OF 20/18/16GA (W.H/S/K) ASTM A653 GRADE 40/60 (W. K/H.S) GALV. STEEL. APPLY PLATES TO EACH FACE OF TRUSS AND, UNLESS OTHERWISE LOCATED ON THIS DESIGN, POSITION PER DRAWINGS 160A-Z. ANY INSPECTION OF PLATES FOLLOWED BY (1) SHALL BE PER ANNEX A3 OF TPI1-2002 SEC.3. A SEAL ON THIS DRAWING INDICATES ACCEPTANCE OF PROFESSIONAL ENGINEERING RESPONSIBILITY SOLELY FOR THE TRUSS COMPONENT DESIGN SHOWN. THE SUITABILITY AND USE OF THIS COMPONENT FOR ANY BUILDING IS THE RESPONSIBILITY OF THE BUILDING DESIGNER PER ANSI/TPI 1 SEC. 2.

JAMES F. COLLINS, JR. LICENSE No. 52212 STATE OF FLORIDA PROFESSIONAL ENGINEER
Aug 04,2006

TC LL	20.0 PSF	REF	R215-- 59601
TC DL	10.0 PSF	DATE	08/03/06
BC DL	10.0 PSF	DRW	HCUSR215 06215009
BC LL	0.0 PSF	HC-ENG	JK/WHK *
TOT.LD.	40.0 PSF	SEQN-	133652
DUR.FAC.	1.25	FROM	CDM
SPACING	24.0"	JREF-	1SZG215_Z02

THIS DWG PREPARED FROM COMPUTER INPUT (LOADS & DIMENSIONS) SUBMITTED BY TRUSS MFR.

Top chord 2x4 SP #2 N
Bot chord 2x4 SP #2 N
Webs 2x4 SP #2 N

In lieu of structural panels use purlins to brace all flat TC @ 24" OC.

Plates sized for a minimum of 3.00 sq.in./piece.

110 mph wind, 15.00 ft mean hgt, ASCE 7-02, CLOSED bldg, not located within 4.50 ft from roof edge, CAT II, EXP B, wind TC DL=5.0 psf, wind BC DL=5.0 psf.

Right end vertical not exposed to wind pressure.

Deflection meets L/360 live and L/240 total load.

The overall height of this truss excluding overhang is 7-8-7.

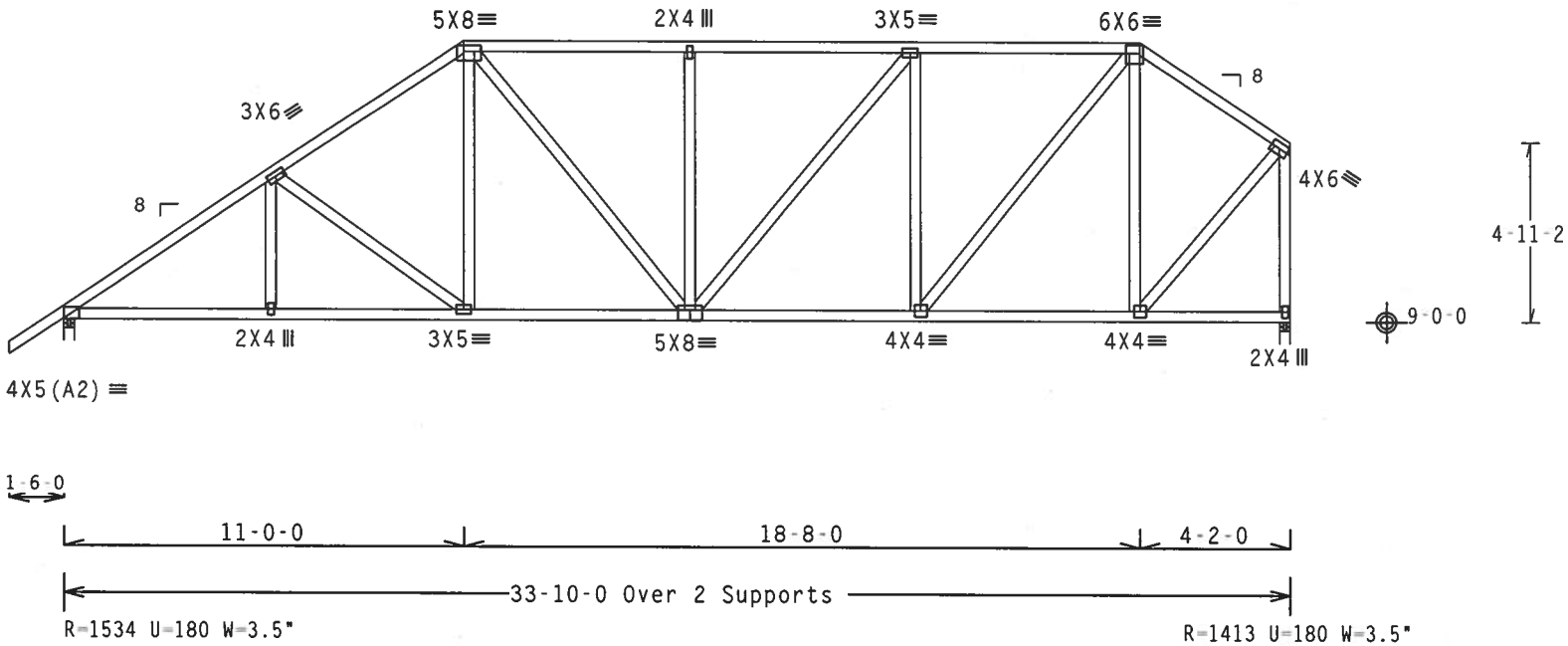

Design Crit: TPI-2002(STD)/FBC

PLT TYP. Wave\R Cq/RT=1.00(1.25)/10(0) 7.25.0503.00 QTY:1 FL/-/5/-/-/R/- Scale =.1875"/Ft.

WARNING TRUSSES REQUIRE EXTREME CARE IN FABRICATION, HANDLING, SHIPPING, INSTALLING AND BRACING. REFER TO BCSI 1-03 (BUILDING COMPONENT SAFETY INFORMATION), PUBLISHED BY TPI (TRUSS PLATE INSTITUTE, 583 D'ONOFRIO DR., SUITE 200, MADISON, WI 53719) AND WTCA (WOOD TRUSS COUNCIL OF AMERICA, 6300 ENTERPRISE LN, MADISON, WI 53719) FOR SAFETY PRACTICES PRIOR TO PERFORMING THESE FUNCTIONS. UNLESS OTHERWISE INDICATED, TOP CHORD SHALL HAVE PROPERLY ATTACHED STRUCTURAL PANELS AND BOTTOM CHORD SHALL HAVE A PROPERLY ATTACHED RIGID CEILING.

IMPORTANTFURNISH A COPY OF THIS DESIGN TO THE INSTALLATION CONTRACTOR. ALPINE ENGINEERED PRODUCTS, INC. SHALL NOT BE RESPONSIBLE FOR ANY DEVIATION FROM THIS DESIGN; ANY FAILURE TO BUILD THE TRUSS IN CONFORMANCE WITH TPI; OR FABRICATING, HANDLING, SHIPPING, INSTALLING & BRACING OF TRUSSES DESIGN CONFORMS WITH APPLICABLE PROVISIONS OF NDS (NATIONAL DESIGN SPEC. BY AF&PA) AND TPI. ALPINE CONNECTOR PLATES ARE MADE OF 20/18/16GA (W,H/S/K) ASTM A653 GRADE 40/60 (W, K/H,S) GALV. STEEL. APPLY PLATES TO EACH FACE OF TRUSS AND, UNLESS OTHERWISE LOCATED ON THIS DESIGN, POSITION PER DRAWINGS 160A-Z. ANY INSPECTION OF PLATES FOLLOWED BY (1) SHALL BE PER ANNEX A3 OF TPI1-2002 SEC.3. A SEAL ON THIS DRAWING INDICATES ACCEPTANCE OF PROFESSIONAL ENGINEERING RESPONSIBILITY SOLELY FOR THE TRUSS COMPONENT DESIGN SHOWN. THE SUITABILITY AND USE OF THIS COMPONENT FOR ANY BUILDING IS THE RESPONSIBILITY OF THE BUILDING DESIGNER PER ANSI/TPI 1 SEC. 2.

ALPINE
Alpine Engineered Products, Inc.
1950 Marley Drive
Haines City, FL 33844
FL Certificate of Authorization # 567

JAMES F. COLLINS, JR. LICENSE No. 52212 STATE OF FLORIDA PROFESSIONAL ENGINEER
Aug 04, 06

TC LL	20.0 PSF	REF	R215-- 59602
TC DL	10.0 PSF	DATE	08/03/06
BC DL	10.0 PSF	DRW	HCUSR215 06215010
BC LL	0.0 PSF	HC-ENG	JK/WHK *
TOT.LD.	40.0 PSF	SEQN-	133656
DUR.FAC.	1.25	FROM	CDM
SPACING	24.0"	JREF-	1SZG215_Z02

THIS DWG PREPARED FROM COMPUTER INPUT (LOADS & DIMENSIONS) SUBMITTED BY TRUSS MFR.

Top chord 2x4 SP #2 N
Bot chord 2x4 SP #2 N
Webs 2x4 SP #2 N

(A) Continuous lateral bracing equally spaced on member.

In lieu of structural panels use purlins to brace all flat TC @ 24" OC.

The overall height of this truss excluding overhang is 9-0-7.

110 mph wind, 15.00 ft mean hgt, ASCE 7-02, CLOSED bldg, not located within 4.50 ft from roof edge, CAT II, EXP B, wind TC DL=5.0 psf, wind BC DL=5.0 psf.

Right end vertical not exposed to wind pressure.

Deflection meets L/360 live and L/240 total load.

Plates sized for a minimum of 3.00 sq.in./piece.

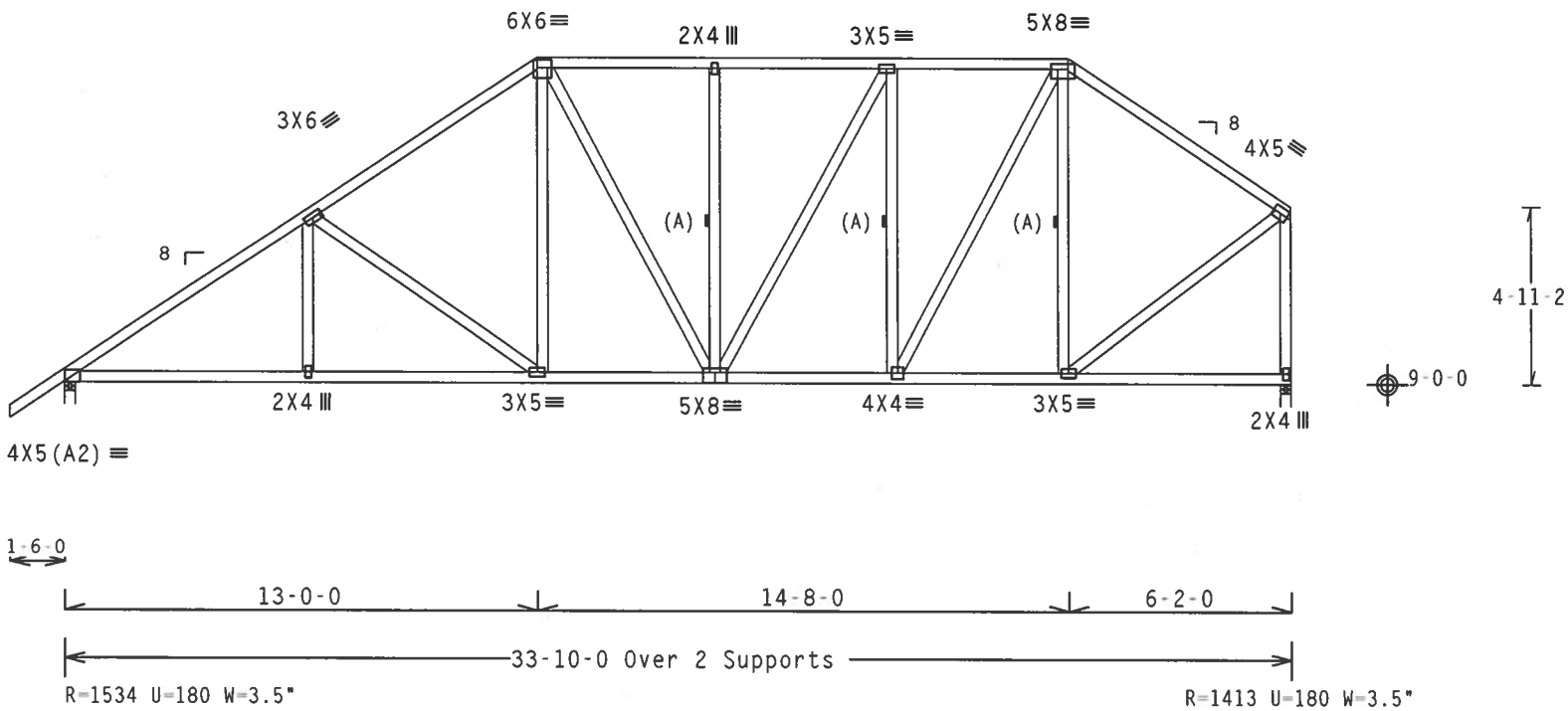

Design Crit: TPI-2002(STD)/FBC
Cq/RT=1.00(1.25)/10(0) 7.25.0503 QTY:1 FL/-/5/-/-/R/-

PLT TYP. Wave\R

Scale =.1875"/Ft.

ALPINE
Alpine Engineered Products, Inc.
1950 Marley Drive
Haines City, FL 33844
FL Certificate of Authorization # 567

WARNING TRUSSES REQUIRE EXTREME CARE IN FABRICATION, HANDLING, SHIPPING, INSTALLING AND BRACING. REFER TO BCSI 1-03 (BUILDING COMPONENT SAFETY INFORMATION), PUBLISHED BY TPI (TRUSS PLATE INSTITUTE, 583 D'ONOFRIO DR., SUITE 200, MADISON, WI 53719) AND WTCA (WOOD TRUSS COUNCIL OF AMERICA, 6300 ENTERPRISE LN. MADISON, WI 53719) FOR SAFETY PRACTICES PRIOR TO PERFORMING THESE FUNCTIONS. UNLESS OTHERWISE INDICATED, TOP CHORD SHALL HAVE PROPERLY ATTACHED STRUCTURAL PANELS AND BOTTOM CHORD SHALL HAVE A PROPERLY ATTACHED RIGID CEILING.

IMPORTANTFURNISH A COPY OF THIS DESIGN TO THE INSTALLATION CONTRACTOR. ALPINE ENGINEERED PRODUCTS, INC. SHALL NOT BE RESPONSIBLE FOR ANY DEVIATION FROM THIS DESIGN; ANY FAILURE TO BUILD THE TRUSS IN CONFORMANCE WITH TPI; OR FABRICATING, HANDLING, SHIPPING, INSTALLING & BRACING OF TRUSSES. DESIGN CONFORMS WITH APPLICABLE PROVISIONS OF NDS (NATIONAL DESIGN SPEC. BY AF&PA) AND TPI. ALPINE CONNECTOR PLATES ARE MADE OF 20/18/16GA (W,H/S/K) ASTM A653 GRADE 40/60 (W, K/H,S) GALV. STEEL. APPLY PLATES TO EACH FACE OF TRUSS AND, UNLESS OTHERWISE LOCATED ON THIS DESIGN, POSITION PER DRAWINGS 160A-Z. ANY INSPECTION OF PLATES FOLLOWED BY (I) SHALL BE PER ANNEX A3 OF TPI1-2002 SEC.3. A SEAL ON THIS DRAWING INDICATES ACCEPTANCE OF PROFESSIONAL ENGINEERING RESPONSIBILITY SOLELY FOR THE TRUSS COMPONENT DESIGN SHOWN. THE SUITABILITY AND USE OF THIS COMPONENT FOR ANY BUILDING IS THE RESPONSIBILITY OF THE BUILDING DESIGNER PER ANSI/TPI 1 SEC. 2.

JAMES F. COLLINS, JR. LICENSE No. 52212 STATE OF FLORIDA PROFESSIONAL ENGINEER

Aug 04 '06

TC LL	20.0 PSF	REF R215-- 59603
TC DL	10.0 PSF	DATE 08/03/06
BC DL	10.0 PSF	DRW HCUSR215 06215012
BC LL	0.0 PSF	HC-ENG JK/WHK *
TOT.LD.	40.0 PSF	SEQN- 133660
DUR.FAC.	1.25	FROM CDM
SPACING	24.0"	JREF- 1SZG215_Z02

(3754-/Lot 2 Laurel Lakes II /J.L. DUPREE -- LAKE CITY, FL - B5)

THIS DWG PREPARED FROM COMPUTER INPUT (LOADS & DIMENSIONS) SUBMITTED BY TRUSS MFR.

Top chord 2x4 SP #2 N
Bot chord 2x4 SP #2 N
Webs 2x4 SP #2 N

(A) Continuous lateral bracing equally spaced on member.

In lieu of structural panels use purlins to brace all flat TC @ 24" OC.

The overall height of this truss excluding overhang is 10-4-7.

110 mph wind, 15.00 ft mean hgt, ASCE 7-02, CLOSED bldg, not located within 4.50 ft from roof edge, CAT II, EXP B, wind TC DL=5.0 psf, wind BC DL=5.0 psf.

Right end vertical not exposed to wind pressure.

Deflection meets L/360 live and L/240 total load.

Plates sized for a minimum of 3.00 sq.in./piece.

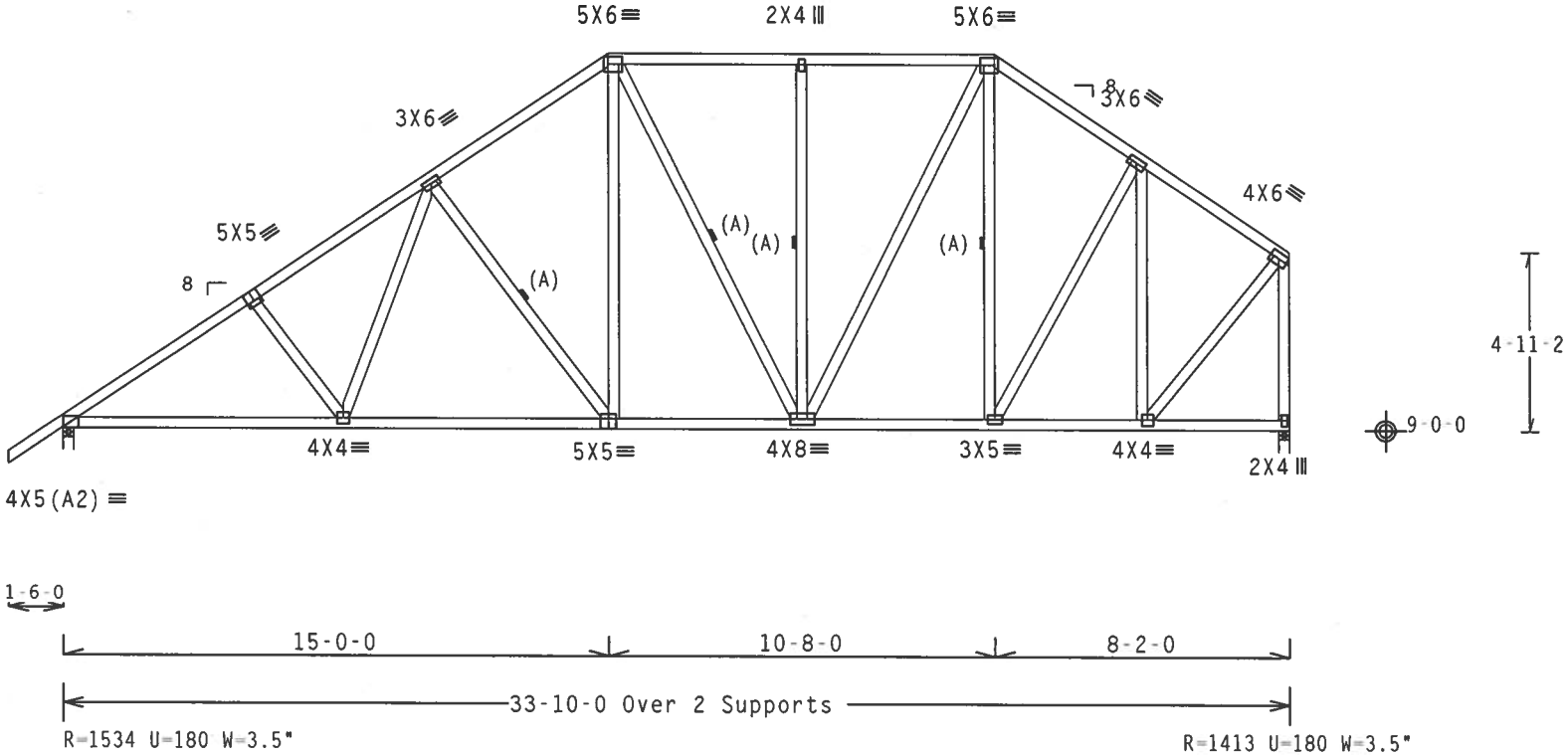

Design Crit: TPI-2002(STD)/FBC

PLT TYP. Wave\R Cq/RT=1.00(1.25)/10(0) 7.25.0503.00 QTY:1 FL/-/5/-/-/R/- Scale =.1875"/Ft.

ALPINE
Alpine Engineered Products, Inc.
1950 Marley Drive
Haines City, FL 33844
FL Certificate of Authorization # 567

WARNING TRUSSES REQUIRE EXTREME CARE IN FABRICATION, HANDLING, SHIPPING, INSTALLING AND BRACING. REFER TO BCSI 1-03 (BUILDING COMPONENT SAFETY INFORMATION), PUBLISHED BY TPI (TRUSS PLATE INSTITUTE, 583 D'ONOFRIO DR., SUITE 200, MADISON, WI 53719) AND WTCA (WOOD TRUSS COUNCIL OF AMERICA, 6300 ENTERPRISE LN. MADISON, WI 53719) FOR SAFETY PRACTICES PRIOR TO PERFORMING THESE FUNCTIONS. UNLESS OTHERWISE INDICATED, TOP CHORD SHALL HAVE PROPERLY ATTACHED STRUCTURAL PANELS AND BOTTOM CHORD SHALL HAVE A PROPERLY ATTACHED RIGID CEILING.

IMPORTANTFURNISH A COPY OF THIS DESIGN TO THE INSTALLATION CONTRACTOR. ALPINE ENGINEERED PRODUCTS, INC. SHALL NOT BE RESPONSIBLE FOR ANY DEVIATION FROM THIS DESIGN; ANY FAILURE TO BUILD THE TRUSS IN CONFORMANCE WITH TPI: OR FABRICATING, HANDLING, SHIPPING, INSTALLING & BRACING OF TRUSSES DESIGN CONFORMS WITH APPLICABLE PROVISIONS OF NDS (NATIONAL DESIGN SPEC. BY AF&PA) AND TPI. ALPINE CONNECTOR PLATES ARE MADE OF 20/18/16GA (W.H/S/K) ASTM A653 GRADE 40/60 (W. K/H.S) GALV. STEEL. APPLY PLATES TO EACH FACE OF TRUSS AND, UNLESS OTHERWISE LOCATED ON THIS DESIGN. POSITION PER DRAWINGS 160A-Z. ANY INSPECTION OF PLATES FOLLOWED BY (1) SHALL BE PER ANNEX A3 OF TPI1-2002 SEC.3. A SEAL ON THIS DRAWING INDICATES ACCEPTANCE OF PROFESSIONAL ENGINEERING RESPONSIBILITY SOLELY FOR THE TRUSS COMPONENT DESIGN SHOWN. THE SUITABILITY AND USE OF THIS COMPONENT FOR ANY BUILDING IS THE RESPONSIBILITY OF THE BUILDING DESIGNER PER ANSI/TPI 1 SEC. 2.

JAMES F. COLLINS JR. LICENSE No. 52212 STATE OF FLORIDA PROFESSIONAL ENGINEER

Aug 0

TC LL	20.0 PSF	REF	R215-- 59604
TC DL	10.0 PSF	DATE	08/03/06
BC DL	10.0 PSF	DRW	HCUSR215 06215013
BC LL	0.0 PSF	HC-ENG	JK/WHK *
TOT.LD.	40.0 PSF	SEQN-	133664
DUR.FAC.	1.25	FROM	CDM
SPACING	24.0"	JREF-	1SZG215_Z02

THIS DWG PREPARED FROM COMPUTER INPUT (LOADS & DIMENSIONS) SUBMITTED BY TRUSS MFR.

Top chord 2x4 SP #2 N
Bot chord 2x4 SP #2 N
Webs 2x4 SP #2 N

(A) Continuous lateral bracing equally spaced on member.

In lieu of structural panels use purlins to brace all flat TC @ 24" OC.

The overall height of this truss excluding overhang is 10-6-4.

110 mph wind, 15.00 ft mean hgt, ASCE 7-02, CLOSED bldg, not located within 4.50 ft from roof edge, CAT II, EXP B, wind TC DL=5.0 psf, wind BC DL=5.0 psf.

Right end vertical not exposed to wind pressure.

Deflection meets L/360 live and L/240 total load.

Plates sized for a minimum of 3.00 sq.in./piece.

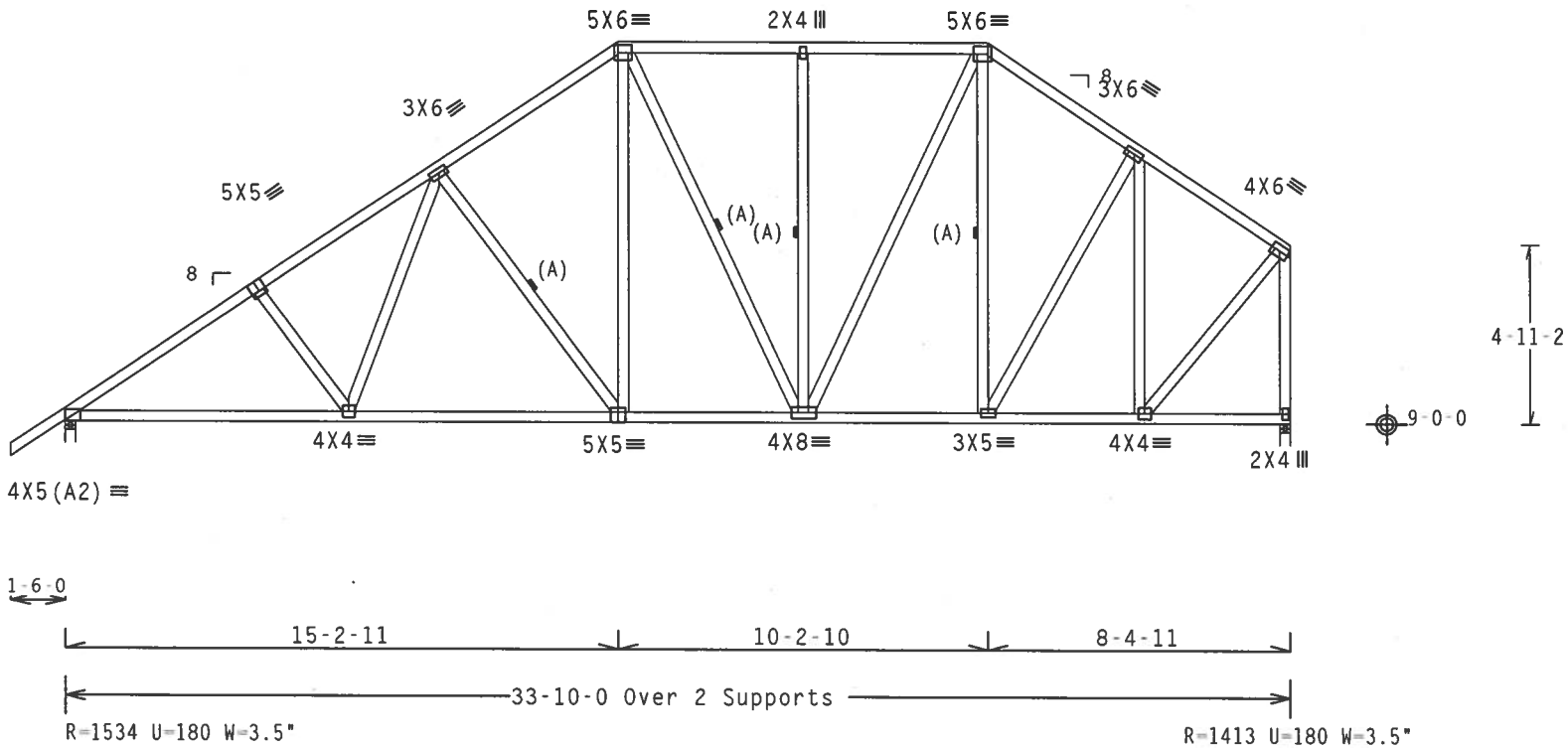

Design Crit: TPI-2002(STD)/FBC

PLT TYP. Wave\R Cq/RT=1.00(1.25)/10(0) 7.25.0503.10 QTY:3 FL/-/5/-/-/R/- Scale =.1875"/Ft.

ALPINE
Alpine Engineered Products, Inc.
1950 Marley Drive
Haines City, FL 33844
FL Certificate of Authorization # 567

WARNING TRUSSES REQUIRE EXTREME CARE IN FABRICATION, HANDLING, SHIPPING, INSTALLING AND BRACING. REFER TO BCSI 1-03 (BUILDING COMPONENT SAFETY INFORMATION), PUBLISHED BY TPI (TRUSS PLATE INSTITUTE, 583 D'ONOFRIO DR., SUITE 200, MADISON, WI 53719) AND WTCA (WOOD TRUSS COUNCIL OF AMERICA, 6300 ENTERPRISE LN, MADISON, WI 53719) FOR SAFETY PRACTICES PRIOR TO PERFORMING THESE FUNCTIONS. UNLESS OTHERWISE INDICATED, TOP CHORD SHALL HAVE PROPERLY ATTACHED STRUCTURAL PANELS AND BOTTOM CHORD SHALL HAVE A PROPERLY ATTACHED RIGID CEILING.

IMPORTANTFURNISH A COPY OF THIS DESIGN TO THE INSTALLATION CONTRACTOR. ALPINE ENGINEERED PRODUCTS, INC. SHALL NOT BE RESPONSIBLE FOR ANY DEVIATION FROM THIS DESIGN; ANY FAILURE TO BUILD THE TRUSS IN CONFORMANCE WITH TPI; OR FABRICATING, HANDLING, SHIPPING, INSTALLING & BRACING OF TRUSSES. DESIGN CONFORMS WITH APPLICABLE PROVISIONS OF NDS (NATIONAL DESIGN SPEC. BY AF&PA) AND TPI. ALPINE CONNECTOR PLATES ARE MADE OF 20/18/16GA (W,H/S/K) ASTM A653 GRADE 40/60 (W, K/H,S) GALV. STEEL. APPLY PLATES TO EACH FACE OF TRUSS AND, UNLESS OTHERWISE LOCATED ON THIS DESIGN, POSITION PER DRAWINGS 160A-Z. ANY INSPECTION OF PLATES FOLLOWED BY (1) SHALL BE PER ANNEX A3 OF TPI1-2002 SEC.3. A SEAL ON THIS DRAWING INDICATES ACCEPTANCE OF PROFESSIONAL ENGINEERING RESPONSIBILITY SOLELY FOR THE TRUSS COMPONENT DESIGN SHOWN. THE SUITABILITY AND USE OF THIS COMPONENT FOR ANY BUILDING IS THE RESPONSIBILITY OF THE BUILDING DESIGNER PER ANSI/TPI 1 SEC. 2.

JAMES F. COLLINS JR. LICENSE No. 52212 STATE OF FLORIDA PROFESSIONAL ENGINEER

Aug 04 06

TC LL	20.0 PSF	REF	R215-- 59605
TC DL	10.0 PSF	DATE	08/03/06
BC DL	10.0 PSF	DRW	HCUSR215 06215027
BC LL	0.0 PSF	HC-ENG	JK/WHK *
TOT.LD.	40.0 PSF	SEQN-	133717
DUR.FAC.	1.25	FROM	CDM
SPACING	24.0"	JREF-	1SZG215_Z02

THIS DWG PREPARED FROM COMPUTER INPUT (LOADS & DIMENSIONS) SUBMITTED BY TRUSS MFR.

Top chord 2x4 SP #2 N
Bot chord 2x4 SP #2 N
Webs 2x4 SP #2 N

Calculated horizontal deflection is 0.13" due to live load and 0.14" due to dead load.

Deflection meets L/360 live and L/240 total load.

Plates sized for a minimum of 3.00 sq.in./piece.

110 mph wind, 15.00 ft mean hgt, ASCE 7-02, CLOSED bldg, not located within 4.50 ft from roof edge, CAT II, EXP B, wind TC DL=5.0 psf, wind BC DL=5.0 psf.

(A) Continuous lateral bracing equally spaced on member.

In lieu of structural panels use purlins to brace all flat TC @ 24" OC.

The overall height of this truss excluding overhang is 10-6-4.

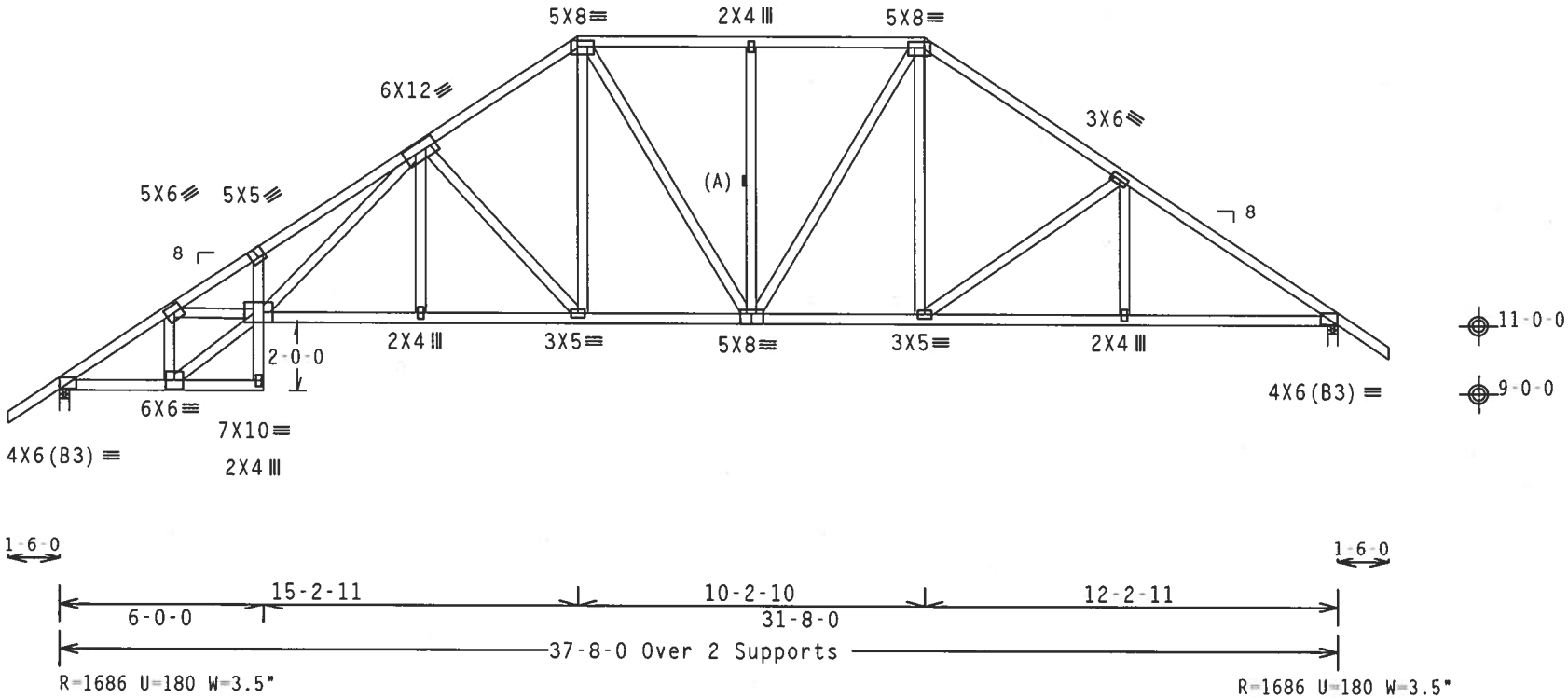

Design Crit: TPI-2002(STD)/FBC

PLT TYP. Wave\R Cq/RT=1.00(1.25)/10(0) 7.25.0503.00 QTY:2 FL/-/5/-/-/R/- Scale =.1875"/Ft.

ALPINE
Alpine Engineered Products, Inc.
1950 Marley Drive
Haines City, FL 33844
FL Certificate of Authorization # 567

WARNING TRUSSES REQUIRE EXTREME CARE IN FABRICATION, HANDLING, SHIPPING, INSTALLING AND BRACING. REFER TO BCSI 1-03 (BUILDING COMPONENT SAFETY INFORMATION), PUBLISHED BY TPI (TRUSS PLATE INSTITUTE, 583 D'ONOFRIO DR., SUITE 200, MADISON, WI 53719) AND WTCA (WOOD TRUSS COUNCIL OF AMERICA, 6300 ENTERPRISE LN, MADISON, WI 53719) FOR SAFETY PRACTICES PRIOR TO PERFORMING THESE FUNCTIONS. UNLESS OTHERWISE INDICATED, TOP CHORD SHALL HAVE PROPERLY ATTACHED STRUCTURAL PANELS AND BOTTOM CHORD SHALL HAVE A PROPERLY ATTACHED RIGID CEILING.

IMPORTANTFURNISH A COPY OF THIS DESIGN TO THE INSTALLATION CONTRACTOR. ALPINE ENGINEERED PRODUCTS, INC. SHALL NOT BE RESPONSIBLE FOR ANY DEVIATION FROM THIS DESIGN; ANY FAILURE TO BUILD THE TRUSS IN CONFORMANCE WITH TPI; OR FABRICATING, HANDLING, SHIPPING, INSTALLING & BRACING OF TRUSSES. DESIGN CONFORMS WITH APPLICABLE PROVISIONS OF NDS (NATIONAL DESIGN SPEC. BY AF&PA) AND TPI. ALPINE CONNECTOR PLATES ARE MADE OF 20/18/16GA (W,H/S/K) ASTM A653 GRADE 40/60 (W, K/H,S) GALV. STEEL. APPLY PLATES TO EACH FACE OF TRUSS AND, UNLESS OTHERWISE LOCATED ON THIS DESIGN, POSITION PER DRAWINGS 160A-Z. ANY INSPECTION OF PLATES FOLLOWED BY (1) SHALL BE PER ANNEX A3 OF TPI1-2002 SEC.3. A SEAL ON THIS DRAWING INDICATES ACCEPTANCE OF PROFESSIONAL ENGINEERING RESPONSIBILITY SOLELY FOR THE TRUSS COMPONENT DESIGN SHOWN. THE SUITABILITY AND USE OF THIS COMPONENT FOR ANY BUILDING IS THE RESPONSIBILITY OF THE BUILDING DESIGNER PER ANSI/TPI 1 SEC. 2.

JAMES F. COLLINS JR. LICENSE No. 52272 STATE OF FLORIDA PROFESSIONAL ENGINEER
Aug 04,2006

TC LL	20.0 PSF	REF	R215-- 59606
TC DL	10.0 PSF	DATE	08/03/06
BC DL	10.0 PSF	DRW	HCUSR215 06215016
BC LL	0.0 PSF	HC-ENG	JK/WHK *
TOT.LD.	40.0 PSF	SEQN-	133733
DUR.FAC.	1.25	FROM	CDM
SPACING	24.0"	JREF-	1SZG215_Z02

THIS DWG PREPARED FROM COMPUTER INPUT (LOADS & DIMENSIONS) SUBMITTED BY TRUSS MFR.

Top chord 2x4 SP #2 N
Bot chord 2x4 SP #2 N
Webs 2x4 SP #2 N :W1 2x4 SP #2 Dense:

(A) Continuous lateral bracing equally spaced on member.

Deflection meets L/360 live and L/240 total load.

The overall height of this truss excluding overhang is 10-6-4.

110 mph wind, 15.00 ft mean hgt, ASCE 7-02, CLOSED bldg, not located within 4.50 ft from roof edge, CAT II, EXP B, wind TC DL=5.0 psf, wind BC DL=5.0 psf.

In lieu of structural panels use purlins to brace all flat TC @ 24" OC.

Plates sized for a minimum of 3.00 sq.in./piece.

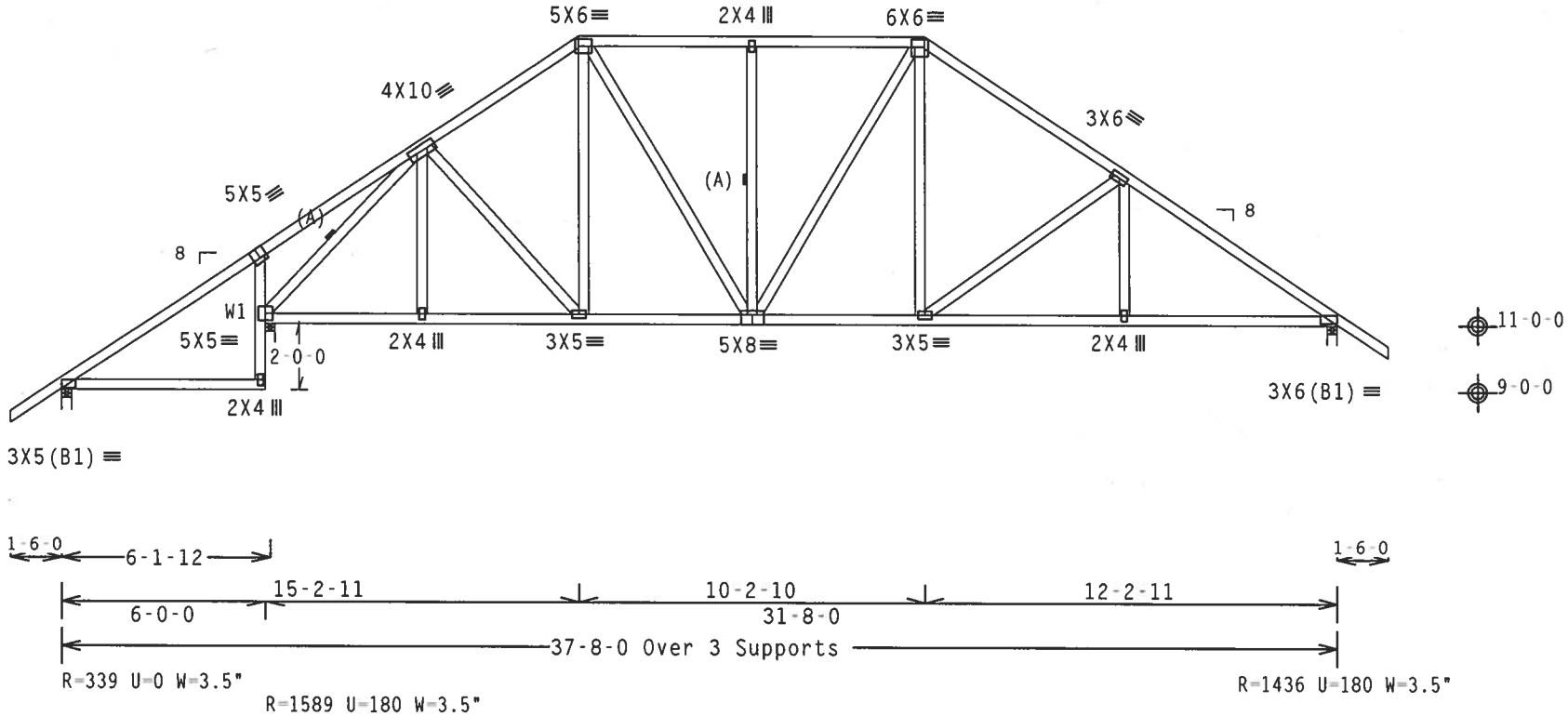

Design Crit: TPI-2002(STD)/FBC

PLT TYP. Wave\R Cq/RT=1.00(1.25)/10(0) 7.25.0503.30 QTY:2 FL/-/5/-/-/R/- Scale =.1875"/Ft.

ALPINE
Alpine Engineered Products, Inc.
1950 Marley Drive
Haines City, FL 33844
FL Certificate of Authorization # 567

WARNING TRUSSES REQUIRE EXTREME CARE IN FABRICATION, HANDLING, SHIPPING, INSTALLING AND BRACING. REFER TO BCSI 1-03 (BUILDING COMPONENT SAFETY INFORMATION), PUBLISHED BY TPI (TRUSS PLATE INSTITUTE, 583 D'ONOFRIO DR., SUITE 200, MADISON, WI 53719) AND WTCA (WOOD TRUSS COUNCIL OF AMERICA, 6300 ENTERPRISE LN, MADISON, WI 53719) FOR SAFETY PRACTICES PRIOR TO PERFORMING THESE FUNCTIONS. UNLESS OTHERWISE INDICATED, TOP CHORD SHALL HAVE PROPERLY ATTACHED STRUCTURAL PANELS AND BOTTOM CHORD SHALL HAVE A PROPERLY ATTACHED RIGID CEILING.

IMPORTANTFURNISH A COPY OF THIS DESIGN TO THE INSTALLATION CONTRACTOR. ALPINE ENGINEERED PRODUCTS, INC. SHALL NOT BE RESPONSIBLE FOR ANY DEVIATION FROM THIS DESIGN; ANY FAILURE TO BUILD THE TRUSS IN CONFORMANCE WITH TPI; OR FABRICATING, HANDLING, SHIPPING, INSTALLING & BRACING OF TRUSSES. DESIGN CONFORMS WITH APPLICABLE PROVISIONS OF NDS (NATIONAL DESIGN SPEC. BY AF&PA) AND TPI. ALPINE CONNECTOR PLATES ARE MADE OF 20/18/16GA (W,H/S/K) ASTM A653 GRADE 40/60 (W, K/H,S) GALV. STEEL. APPLY PLATES TO EACH FACE OF TRUSS AND, UNLESS OTHERWISE LOCATED ON THIS DESIGN, POSITION PER DRAWINGS 160A-Z. ANY INSPECTION OF PLATES FOLLOWED BY (1) SHALL BE PER ANNEX A3 OF TPI1-2002 SEC.3. A SEAL ON THIS DRAWING INDICATES ACCEPTANCE OF PROFESSIONAL ENGINEERING RESPONSIBILITY SOLELY FOR THE TRUSS COMPONENT DESIGN SHOWN. THE SUITABILITY AND USE OF THIS COMPONENT FOR ANY BUILDING IS THE RESPONSIBILITY OF THE BUILDING DESIGNER PER ANSI/TPI 1 SEC. 2.

JAMES F. COLLINS, JR. LICENSE No. 52212 STATE OF FLORIDA PROFESSIONAL ENGINEER
Aug 04-06

TC LL	20.0 PSF	REF	R215-- 59607
TC DL	10.0 PSF	DATE	08/03/06
BC DL	10.0 PSF	DRW	HCUSR215 06215025
BC LL	0.0 PSF	HC-ENG	JK/WHK
TOT.LD.	40.0 PSF	SEQN-	133768
DUR.FAC.	1.25	FROM	CDM
SPACING	24.0"	JREF-	1SZG215_Z02

Top chord 2x4 SP #2 N
Bot chord 2x4 SP #2 N
Webs 2x4 SP #2 N :W1 2x4 SP #2 Dense:

(A) Continuous lateral bracing equally spaced on member.

Deflection meets L/360 live and L/240 total load.

The overall height of this truss excluding overhang is 10-6-4.

110 mph wind, 15.00 ft mean hgt, ASCE 7-02, CLOSED bldg, not located within 4.50 ft from roof edge, CAT II, EXP B, wind TC DL=5.0 psf, wind BC DL=5.0 psf.

In lieu of structural panels use purlins to brace all flat TC @ 24" OC.

Plates sized for a minimum of 3.00 sq.in./piece.

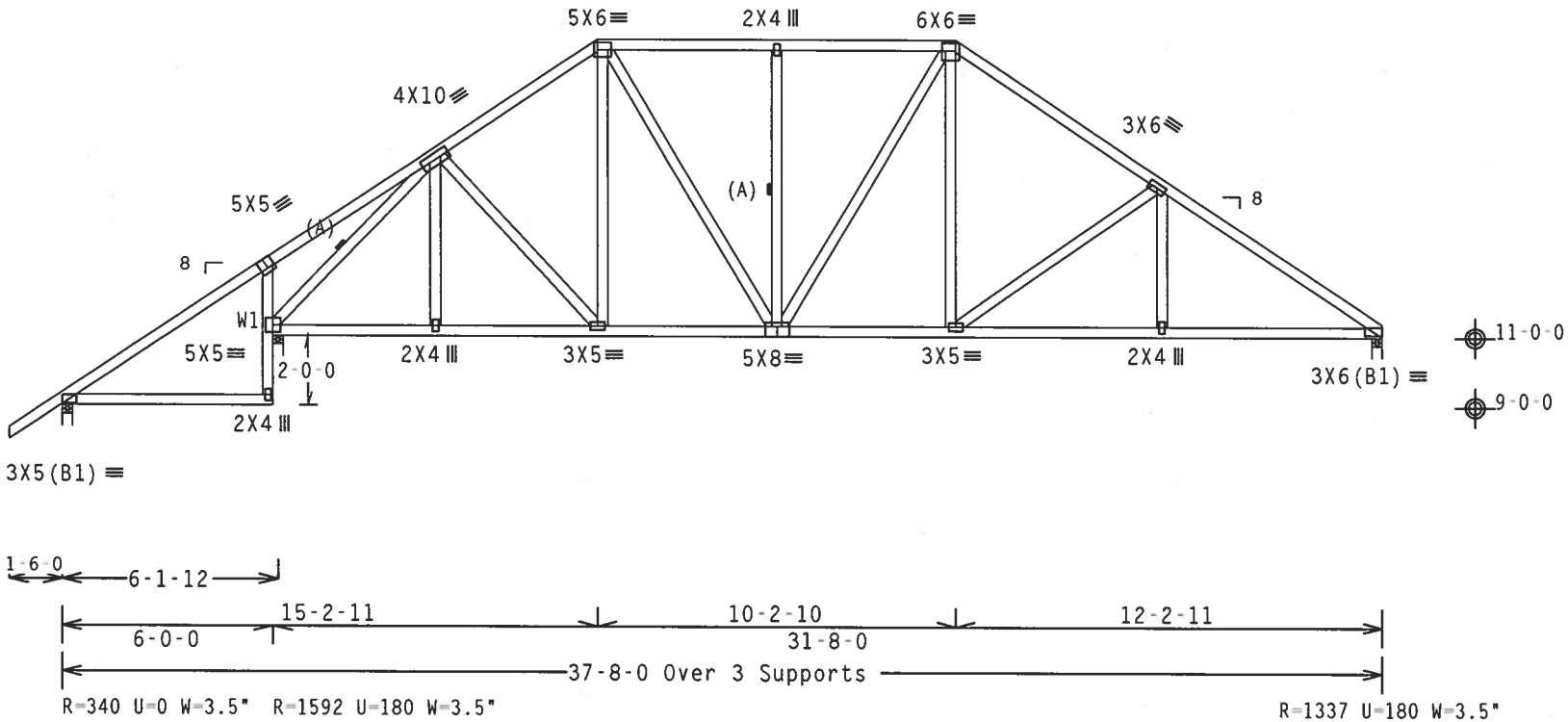

Design Crit: TPI-2002(STD)/FBC

PLT TYP. Wave\R Cq/RT=1.00(1.25)/10(0) 7.25.0503.09 QTY:1 FL/-/5/-/-/R/- Scale =.1875"/Ft.

ALPINE
Alpine Engineered Products, Inc.
1950 Marley Drive
Haines City, FL 33844
FL Certificate of Authorization # 567

WARNING TRUSSES REQUIRE EXTREME CARE IN FABRICATION, HANDLING, SHIPPING, INSTALLING AND BRACING. REFER TO BCSI 1-03 (BUILDING COMPONENT SAFETY INFORMATION), PUBLISHED BY TPI (TRUSS PLATE INSTITUTE, 583 D'ONOFRIO DR., SUITE 200, MADISON, WI 53719) AND WTCA (WOOD TRUSS COUNCIL OF AMERICA, 6300 ENTERPRISE LN, MADISON, WI 53719) FOR SAFETY PRACTICES PRIOR TO PERFORMING THESE FUNCTIONS. UNLESS OTHERWISE INDICATED, TOP CHORD SHALL HAVE PROPERLY ATTACHED STRUCTURAL PANELS AND BOTTOM CHORD SHALL HAVE A PROPERLY ATTACHED RIGID CEILING.

IMPORTANT FURNISH A COPY OF THIS DESIGN TO THE INSTALLATION CONTRACTOR. ALPINE ENGINEERED PRODUCTS, INC. SHALL NOT BE RESPONSIBLE FOR ANY DEVIATION FROM THIS DESIGN; ANY FAILURE TO BUILD THE TRUSS IN CONFORMANCE WITH TPI; OR FABRICATING, HANDLING, SHIPPING, INSTALLING & BRACING OF TRUSSES. DESIGN CONFORMS WITH APPLICABLE PROVISIONS OF NDS (NATIONAL DESIGN SPEC. BY AF&PA) AND TPI. ALPINE CONNECTOR PLATES ARE MADE OF 20/18/16GA (W,H/S/K) ASTM A653 GRADE 40/60 (W, K/H,S) GALV. STEEL. APPLY PLATES TO EACH FACE OF TRUSS AND, UNLESS OTHERWISE LOCATED ON THIS DESIGN, POSITION PER DRAWINGS 160A-Z. ANY INSPECTION OF PLATES FOLLOWED BY (1) SHALL BE PER ANNEX A3 OF TPI1-2002 SEC.3. A SEAL ON THIS DRAWING INDICATES ACCEPTANCE OF PROFESSIONAL ENGINEERING RESPONSIBILITY SOLELY FOR THE TRUSS COMPONENT DESIGN SHOWN. THE SUITABILITY AND USE OF THIS COMPONENT FOR ANY BUILDING IS THE RESPONSIBILITY OF THE BUILDING DESIGNER PER ANSI/TPI 1 SEC. 2.

JAMES F. COLLINS, JR. LICENSED No. 52212 STATE OF FLORIDA PROFESSIONAL ENGINEER

Aug

TC LL	20.0 PSF	REF	R215-- 59608
TC DL	10.0 PSF	DATE	08/03/06
BC DL	10.0 PSF	DRW	HCUSR215 06215005
BC LL	0.0 PSF	HC-ENG	JK/WHK
TOT.LD.	40.0 PSF	SEQN-	133764
DUR.FAC.	1.25	FROM	CDM
SPACING	24.0"	JREF-	1SZG215_Z02

THIS DWG PREPARED FROM COMPUTER INPUT (LOADS & DIMENSIONS) SUBMITTED BY TRUSS MFR.

Top chord 2x4 SP #2 N
Bot chord 2x4 SP #2 N
Webs 2x4 SP #2 N

(A) Continuous lateral bracing equally spaced on member.

In lieu of structural panels use purlins to brace all flat TC @ 24" OC.

The overall height of this truss excluding overhang is 10-6-4.

110 mph wind, 15.00 ft mean hgt, ASCE 7-02, CLOSED bldg, not located within 4.50 ft from roof edge, CAT II, EXP B, wind TC DL=5.0 psf, wind BC DL=5.0 psf.

Right end vertical not exposed to wind pressure.

Deflection meets L/360 live and L/240 total load.

Plates sized for a minimum of 3.00 sq.in./piece.

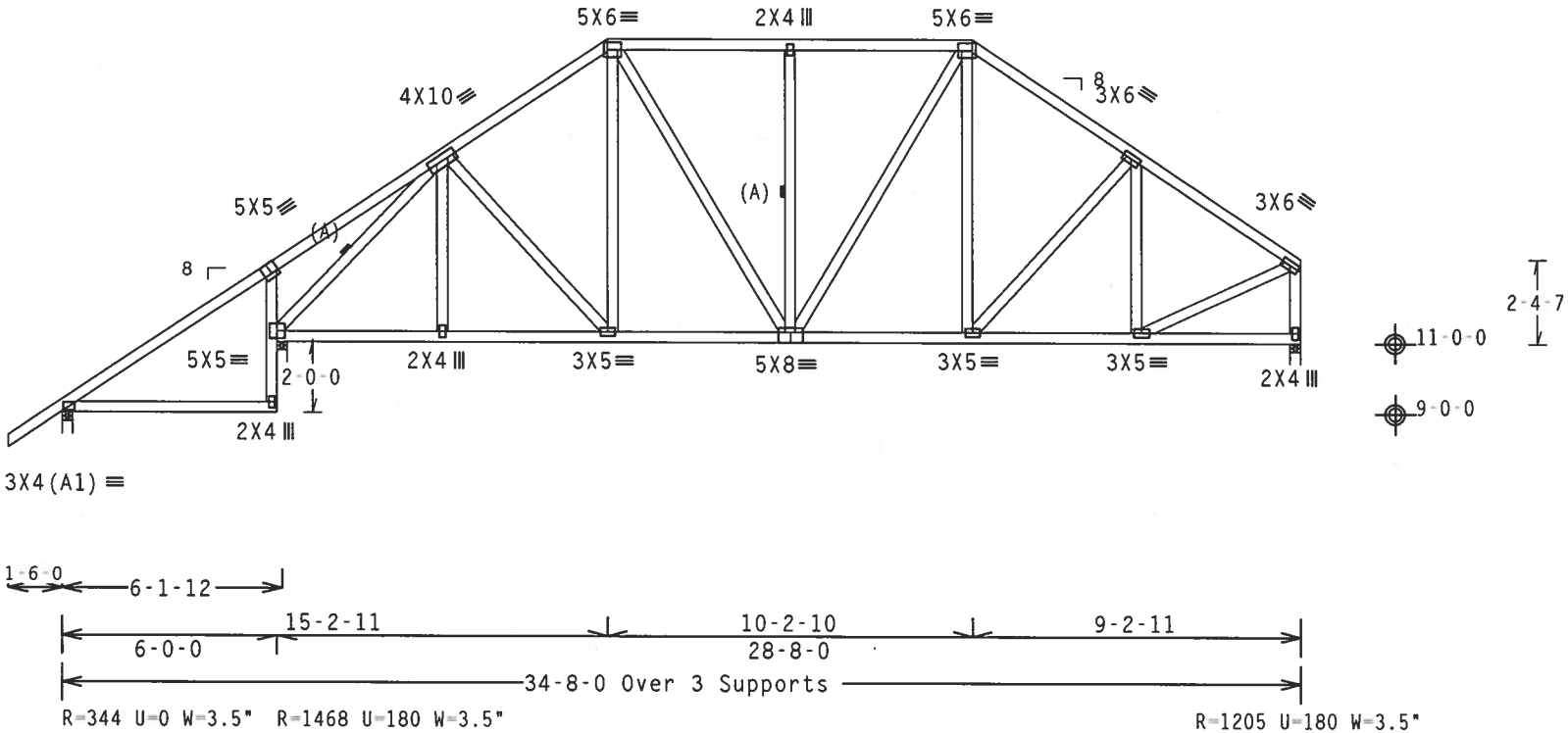

Design Crit: TPI-2002(STD)/FBC

PLT TYP. Wave\R Cq/RT=1.00(1.25)/10(0) 7.25.0503.00 QTY:2 FL/-/5/-/-/R/- Scale =.1875"/Ft.

ALPINE
Alpine Engineered Products, Inc.
1950 Marley Drive
Haines City, FL 33844
FL Certificate of Authorization # 567

WARNING TRUSSES REQUIRE EXTREME CARE IN FABRICATION, HANDLING, SHIPPING, INSTALLING AND BRACING. REFER TO BCSI 1-03 (BUILDING COMPONENT SAFETY INFORMATION), PUBLISHED BY TPI (TRUSS PLATE INSTITUTE, 583 D'ONOFRIO DR., SUITE 200, MADISON, WI 53719) AND WTCA (WOOD TRUSS COUNCIL OF AMERICA, 6300 ENTERPRISE LN, MADISON, WI 53719) FOR SAFETY PRACTICES PRIOR TO PERFORMING THESE FUNCTIONS. UNLESS OTHERWISE INDICATED, TOP CHORD SHALL HAVE PROPERLY ATTACHED STRUCTURAL PANELS AND BOTTOM CHORD SHALL HAVE A PROPERLY ATTACHED RIGID CEILING.

IMPORTANTFURNISH A COPY OF THIS DESIGN TO THE INSTALLATION CONTRACTOR. ALPINE ENGINEERED PRODUCTS, INC. SHALL NOT BE RESPONSIBLE FOR ANY DEVIATION FROM THIS DESIGN; ANY FAILURE TO BUILD THE TRUSS IN CONFORMANCE WITH TPI; OR FABRICATING, HANDLING, SHIPPING, INSTALLING & BRACING OF TRUSSES. DESIGN CONFORMS WITH APPLICABLE PROVISIONS OF NDS (NATIONAL DESIGN SPEC. BY AF&PA) AND TPI. ALPINE CONNECTOR PLATES ARE MADE OF 20/18/16GA (W,H/S/K) ASTM A653 GRADE 40/60 (W, K/H,S) GALV. STEEL. APPLY PLATES TO EACH FACE OF TRUSS AND, UNLESS OTHERWISE LOCATED ON THIS DESIGN, POSITION PER DRAWINGS 160A-Z. ANY INSPECTION OF PLATES FOLLOWED BY (i) SHALL BE PER ANNEX A3 OF TPI1-2002 SEC.3. A SEAL ON THIS DRAWING INDICATES ACCEPTANCE OF PROFESSIONAL ENGINEERING RESPONSIBILITY SOLELY FOR THE TRUSS COMPONENT DESIGN SHOWN. THE SUITABILITY AND USE OF THIS COMPONENT FOR ANY BUILDING IS THE RESPONSIBILITY OF THE BUILDING DESIGNER PER ANSI/TPI 1 SEC. 2.

JAMES F. COLLINS JR. LICENSE No. 52212 STATE OF FLORIDA PROFESSIONAL ENGINEER

Aug 0[illegible]

TC LL	20.0 PSF	REF	R215-- 59609
TC DL	10.0 PSF	DATE	08/03/06
BC DL	10.0 PSF	DRW	HCUSR215 06215023
BC LL	0.0 PSF	HC-ENG	JK/WHK
TOT.LD.	40.0 PSF	SEQN-	133756
DUR.FAC.	1.25	FROM	CDM
SPACING	24.0"	JREF-	1SZG215_Z02

THIS DWG PREPARED FROM COMPUTER INPUT (LOADS & DIMENSIONS) SUBMITTED BY TRUSS MFR.

Top chord 2x4 SP #2 N
Bot chord 2x4 SP #2 N
Webs 2x4 SP #2 N

(A) Continuous lateral bracing equally spaced on member.

In lieu of structural panels use purlins to brace all flat TC @ 24" OC.

The overall height of this truss excluding overhang is 10-4-7.

110 mph wind, 15.00 ft mean hgt, ASCE 7-02, CLOSED bldg, not located within 4.50 ft from roof edge, CAT II, EXP B, wind TC DL=5.0 psf, wind BC DL=5.0 psf.

Right end vertical not exposed to wind pressure.

Deflection meets L/360 live and L/240 total load.

Plates sized for a minimum of 3.00 sq.in./piece.

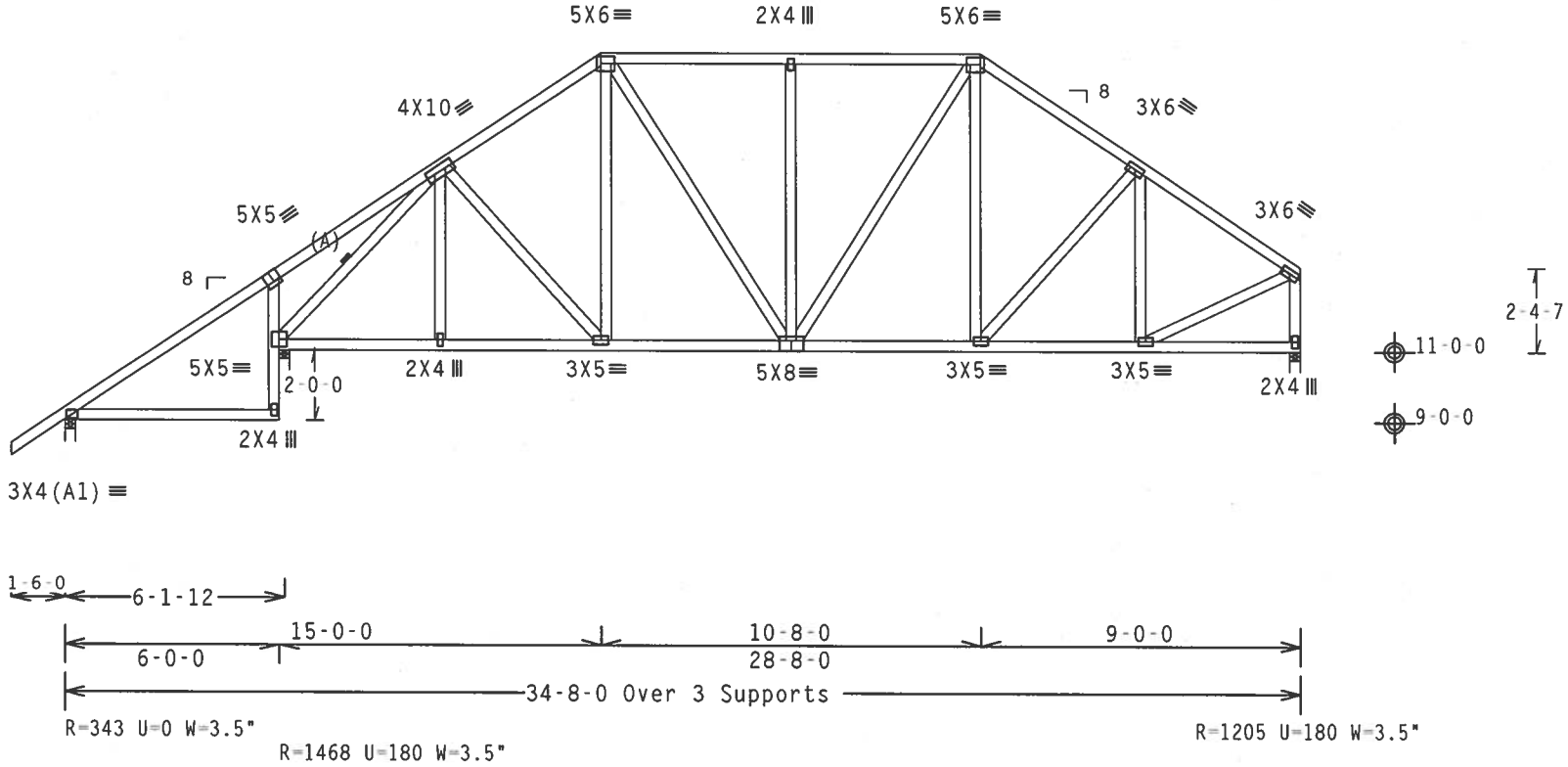

Design Crit: TPI-2002(STD)/FBC

PLT TYP. Wave\R Cq/RT=1.00(1.25)/10(0) 7.25.0503.08 QTY:1 FL/-/5/-/-/R/- Scale =.1875"/Ft.

ALPINE
Alpine Engineered Products, Inc.
1950 Marley Drive
Haines City, FL 33844
FL Certificate of Authorization # 567

WARNING TRUSSES REQUIRE EXTREME CARE IN FABRICATION, HANDLING, SHIPPING, INSTALLING AND BRACING. REFER TO BCSI 1-03 (BUILDING COMPONENT SAFETY INFORMATION), PUBLISHED BY TPI (TRUSS PLATE INSTITUTE, 583 D'ONOFRIO DR., SUITE 200, MADISON, WI 53719) AND WTCA (WOOD TRUSS COUNCIL OF AMERICA, 6300 ENTERPRISE LN, MADISON, WI 53719) FOR SAFETY PRACTICES PRIOR TO PERFORMING THESE FUNCTIONS. UNLESS OTHERWISE INDICATED, TOP CHORD SHALL HAVE PROPERLY ATTACHED STRUCTURAL PANELS AND BOTTOM CHORD SHALL HAVE A PROPERLY ATTACHED RIGID CEILING.

IMPORTANTFURNISH A COPY OF THIS DESIGN TO THE INSTALLATION CONTRACTOR. ALPINE ENGINEERED PRODUCTS, INC. SHALL NOT BE RESPONSIBLE FOR ANY DEVIATION FROM THIS DESIGN; ANY FAILURE TO BUILD THE TRUSS IN CONFORMANCE WITH TPI; OR FABRICATING, HANDLING, SHIPPING, INSTALLING & BRACING OF TRUSSES. DESIGN CONFORMS WITH APPLICABLE PROVISIONS OF NDS (NATIONAL DESIGN SPEC. BY AF&PA) AND TPI. ALPINE CONNECTOR PLATES ARE MADE OF 20/18/16GA (W,H/S/K) ASTM A653 GRADE 40/60 (W, K/H,S) GALV. STEEL. APPLY PLATES TO EACH FACE OF TRUSS AND, UNLESS OTHERWISE LOCATED ON THIS DESIGN, POSITION PER DRAWINGS 160A-Z. ANY INSPECTION OF PLATES FOLLOWED BY (1) SHALL BE PER ANNEX A3 OF TPI1-2002 SEC.3. A SEAL ON THIS DRAWING INDICATES ACCEPTANCE OF PROFESSIONAL ENGINEERING RESPONSIBILITY SOLELY FOR THE TRUSS COMPONENT DESIGN SHOWN. THE SUITABILITY AND USE OF THIS COMPONENT FOR ANY BUILDING IS THE RESPONSIBILITY OF THE BUILDING DESIGNER PER ANSI/TPI 1 SEC. 2.

JAMES F. COLLINS JR. LICENSE No. 52212 STATE OF FLORIDA PROFESSIONAL ENGINEER
Aug 0[illegible]

TC LL	20.0 PSF	REF	R215-- 59610
TC DL	10.0 PSF	DATE	08/03/06
BC DL	10.0 PSF	DRW	HCUSR215 06215022
BC LL	0.0 PSF	HC-ENG	JK/WHK
TOT.LD.	40.0 PSF	SEQN-	133751
DUR.FAC.	1.25	FROM	CDM
SPACING	24.0"	JREF-	1SZG215_Z02

THIS DWG PREPARED FROM COMPUTER INPUT (LOADS & DIMENSIONS) SUBMITTED BY TRUSS MFR.

Top chord 2x4 SP #2 N
Bot chord 2x4 SP #2 N
Webs 2x4 SP #2 N

(A) Continuous lateral bracing equally spaced on member.

In lieu of structural panels use purlins to brace all flat TC @ 24" OC.

The overall height of this truss excluding overhang is 9-0-7.

110 mph wind, 15.00 ft mean hgt, ASCE 7-02, CLOSED bldg, not located within 4.50 ft from roof edge, CAT II, EXP B, wind TC DL=5.0 psf, wind BC DL=5.0 psf.

Right end vertical not exposed to wind pressure.

Deflection meets L/360 live and L/240 total load.

Plates sized for a minimum of 3.00 sq.in./piece.

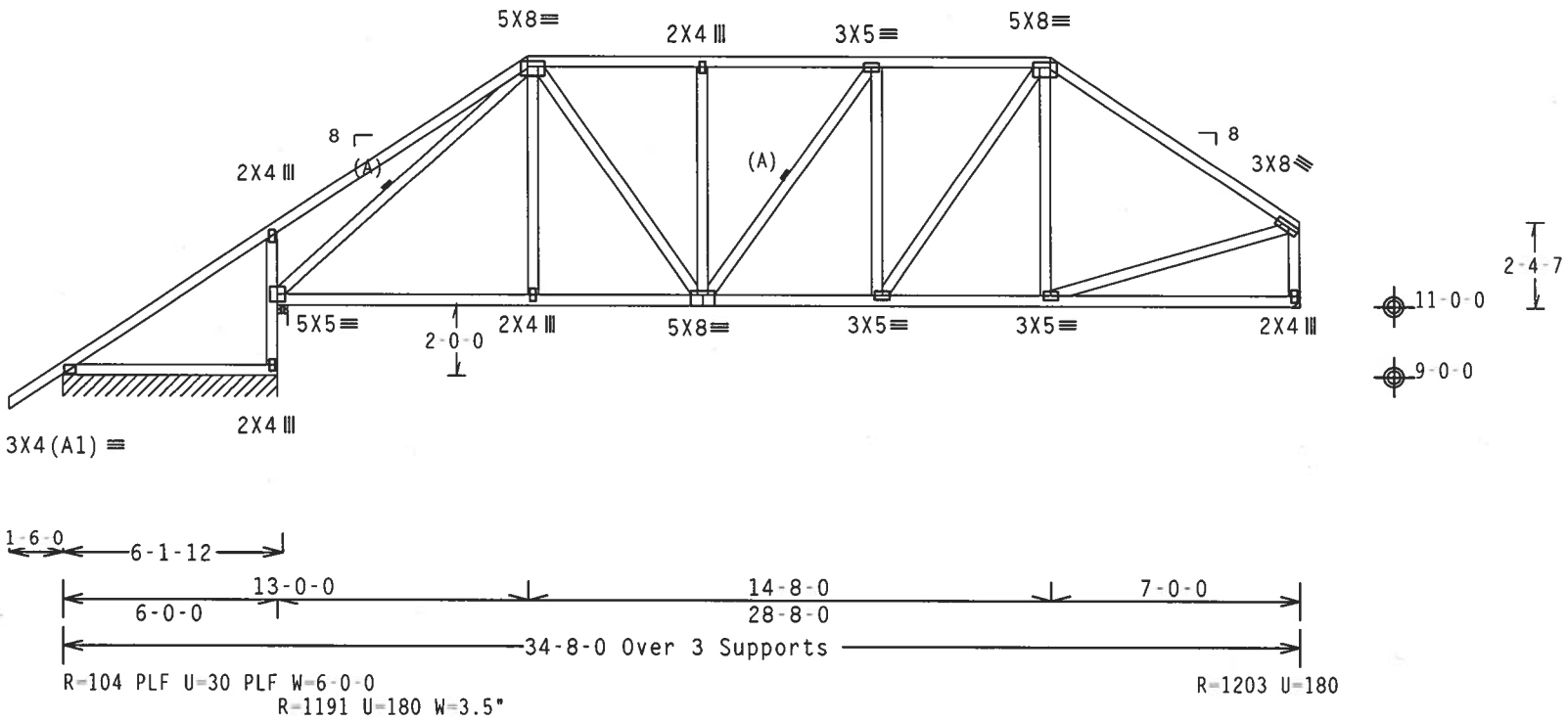

Design Crit: TPI-2002(STD)/FBC

PLT TYP. Wave\R Cq/RT=1.00(1.25)/10(0) 7.25.0503 QTY:1 FL/-/5/-/-/R/- Scale =.1875"/Ft.

ALPINE
Alpine Engineered Products, Inc.
1950 Marley Drive
Haines City, FL 33844
FL Certificate of Authorization # 567

WARNING TRUSSES REQUIRE EXTREME CARE IN FABRICATION, HANDLING, SHIPPING, INSTALLING AND BRACING. REFER TO BCSI 1-03 (BUILDING COMPONENT SAFETY INFORMATION), PUBLISHED BY TPI (TRUSS PLATE INSTITUTE, 583 D'ONOFRIO DR., SUITE 200, MADISON, WI 53719) AND WTCA (WOOD TRUSS COUNCIL OF AMERICA, 6300 ENTERPRISE LN, MADISON, WI 53719) FOR SAFETY PRACTICES PRIOR TO PERFORMING THESE FUNCTIONS. UNLESS OTHERWISE INDICATED, TOP CHORD SHALL HAVE PROPERLY ATTACHED STRUCTURAL PANELS AND BOTTOM CHORD SHALL HAVE A PROPERLY ATTACHED RIGID CEILING.

IMPORTANTFURNISH A COPY OF THIS DESIGN TO THE INSTALLATION CONTRACTOR. ALPINE ENGINEERED PRODUCTS, INC. SHALL NOT BE RESPONSIBLE FOR ANY DEVIATION FROM THIS DESIGN; ANY FAILURE TO BUILD THE TRUSS IN CONFORMANCE WITH TPI; OR FABRICATING, HANDLING, SHIPPING, INSTALLING & BRACING OF TRUSSES. DESIGN CONFORMS WITH APPLICABLE PROVISIONS OF NDS (NATIONAL DESIGN SPEC. BY AF&PA) AND TPI. ALPINE CONNECTOR PLATES ARE MADE OF 20/18/16GA (W,H/S/K) ASTM A653 GRADE 40/60 (W, K/H,S) GALV. STEEL. APPLY PLATES TO EACH FACE OF TRUSS AND, UNLESS OTHERWISE LOCATED ON THIS DESIGN, POSITION PER DRAWINGS 160A-Z. ANY INSPECTION OF PLATES FOLLOWED BY (1) SHALL BE PER ANNEX A3 OF TPI1-2002 SEC.3. A SEAL ON THIS DRAWING INDICATES ACCEPTANCE OF PROFESSIONAL ENGINEERING RESPONSIBILITY SOLELY FOR THE TRUSS COMPONENT DESIGN SHOWN. THE SUITABILITY AND USE OF THIS COMPONENT FOR ANY BUILDING IS THE RESPONSIBILITY OF THE BUILDING DESIGNER PER ANSI/TPI 1 SEC. 2.

JAMES F. COLLINS JR. LICENSED No. 52212 STATE OF FLORIDA PROFESSIONAL ENGINEER
Aug 04 06

TC LL	20.0 PSF	REF	R215-- 59611
TC DL	10.0 PSF	DATE	08/03/06
BC DL	10.0 PSF	DRW	HCUSR215 06215021
BC LL	0.0 PSF	HC-ENG	JK/WHK
TOT.LD.	40.0 PSF	SEQN-	133745
DUR.FAC.	1.25	FROM	CDM
SPACING	24.0"	JREF-	1SZG215_Z02

THIS DWG PREPARED FROM COMPUTER INPUT (LOADS & DIMENSIONS) SUBMITTED BY TRUSS MFR.

Top chord 2x4 SP #2 N
Bot chord 2x4 SP #2 N
Webs 2x4 SP #2 N

(A) Continuous lateral bracing equally spaced on member.

In lieu of structural panels use purlins to brace all flat TC @ 24" OC.

The overall height of this truss excluding overhang is 7-8-7.

110 mph wind, 15.00 ft mean hgt, ASCE 7-02, CLOSED bldg, not located within 4.50 ft from roof edge, CAT II, EXP B, wind TC DL=5.0 psf, wind BC DL=5.0 psf.

Right end vertical not exposed to wind pressure.

Deflection meets L/360 live and L/240 total load.

Plates sized for a minimum of 3.00 sq.in./piece.

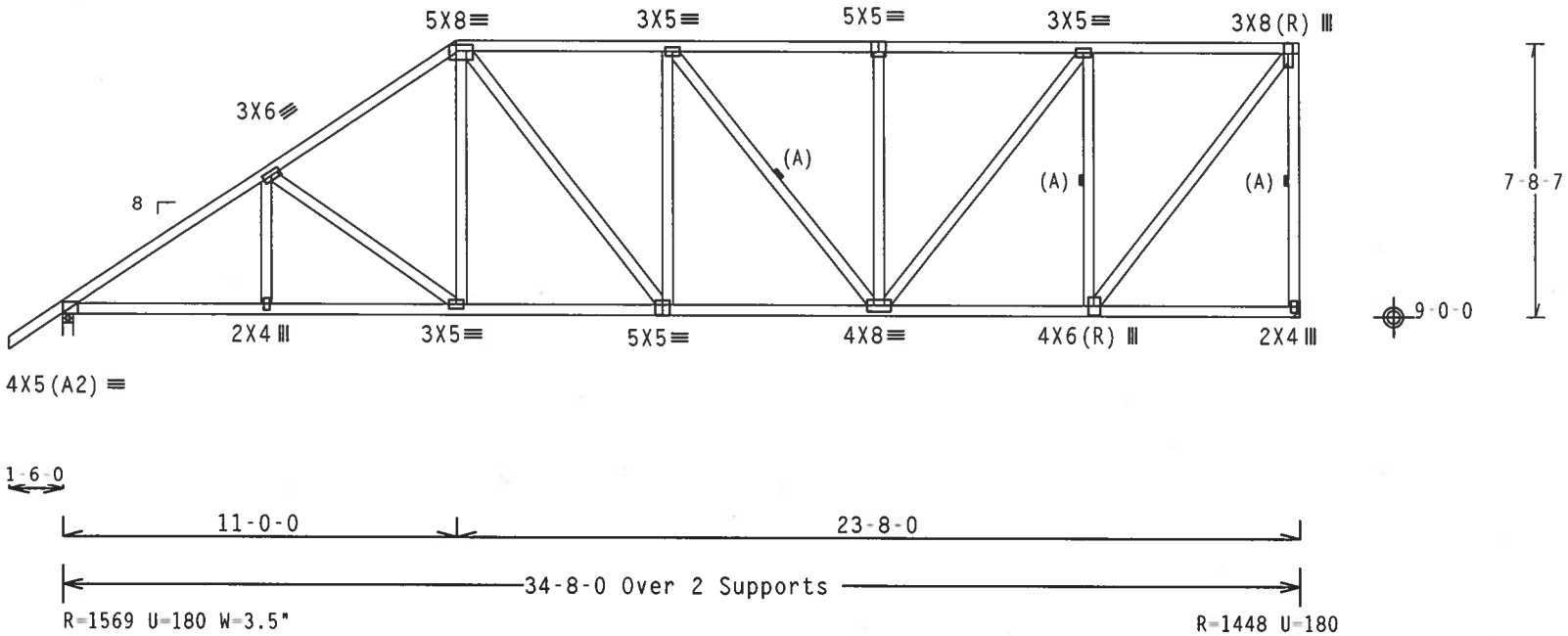

Design Crit: TPI-2002(STD)/FBC

PLT TYP. Wave\R Cq/RT=1.00(1.25)/10(0) 7.25.0503.0 QTY:1 FL/-/5/-/-/R/- Scale =.1875"/Ft.

ALPINE
Alpine Engineered Products, Inc.
1950 Marley Drive
Haines City, FL 33844
FL Certificate of Authorization # 567

WARNING TRUSSES REQUIRE EXTREME CARE IN FABRICATION, HANDLING, SHIPPING, INSTALLING AND BRACING. REFER TO BCSI 1-03 (BUILDING COMPONENT SAFETY INFORMATION), PUBLISHED BY TPI (TRUSS PLATE INSTITUTE, 583 D'ONOFRIO DR., SUITE 200, MADISON, WI 53719) AND WTCA (WOOD TRUSS COUNCIL OF AMERICA, 6300 ENTERPRISE LN. MADISON, WI 53719) FOR SAFETY PRACTICES PRIOR TO PERFORMING THESE FUNCTIONS. UNLESS OTHERWISE INDICATED, TOP CHORD SHALL HAVE PROPERLY ATTACHED STRUCTURAL PANELS AND BOTTOM CHORD SHALL HAVE A PROPERLY ATTACHED RIGID CEILING.

IMPORTANTFURNISH A COPY OF THIS DESIGN TO THE INSTALLATION CONTRACTOR. ALPINE ENGINEERED PRODUCTS, INC. SHALL NOT BE RESPONSIBLE FOR ANY DEVIATION FROM THIS DESIGN; ANY FAILURE TO BUILD THE TRUSS IN CONFORMANCE WITH TPI; OR FABRICATING, HANDLING, SHIPPING, INSTALLING & BRACING OF TRUSSES. DESIGN CONFORMS WITH APPLICABLE PROVISIONS OF NDS (NATIONAL DESIGN SPEC. BY AF&PA) AND TPI. ALPINE CONNECTOR PLATES ARE MADE OF 20/18/16GA (W,H/S/K) ASTM A653 GRADE 40/60 (W, K/H,S) GALV. STEEL. APPLY PLATES TO EACH FACE OF TRUSS AND, UNLESS OTHERWISE LOCATED ON THIS DESIGN, POSITION PER DRAWINGS 160A-Z. ANY INSPECTION OF PLATES FOLLOWED BY (1) SHALL BE PER ANNEX A3 OF TPI1-2002 SEC.3. A SEAL ON THIS DRAWING INDICATES ACCEPTANCE OF PROFESSIONAL ENGINEERING RESPONSIBILITY SOLELY FOR THE TRUSS COMPONENT DESIGN SHOWN. THE SUITABILITY AND USE OF THIS COMPONENT FOR ANY BUILDING IS THE RESPONSIBILITY OF THE BUILDING DESIGNER PER ANSI/TPI 1 SEC. 2.

JAMES F. COLLINS JR. LICENSE No.52211 STATE OF FLORIDA PROFESSIONAL ENGINEER
Aug 04 06

TC LL	20.0 PSF	REF	R215-- 59612
TC DL	10.0 PSF	DATE	08/03/06
BC DL	10.0 PSF	DRW	HCUSR215 06215019
BC LL	0.0 PSF	HC-ENG	JK/WHK
TOT.LD.	40.0 PSF	SEQN-	133683
DUR.FAC.	1.25	FROM	CDM
SPACING	24.0"	JREF-	1SZG215_Z02

THIS DWG PREPARED FROM COMPUTER INPUT (LOADS & DIMENSIONS) SUBMITTED BY TRUSS MFR.

Top chord 2x4 SP #2 N
Bot chord 2x4 SP #2 N
Webs 2x4 SP #2 N

(A) Continuous lateral bracing equally spaced on member.

In lieu of structural panels use purlins to brace all flat TC @ 24" OC.

The overall height of this truss excluding overhang is 6-4-7.

110 mph wind, 15.00 ft mean hgt, ASCE 7-02, CLOSED bldg, not located within 4.50 ft from roof edge, CAT II, EXP B, wind TC DL=5.0 psf, wind BC DL=5.0 psf.

Right end vertical not exposed to wind pressure.

Deflection meets L/360 live and L/240 total load.

Plates sized for a minimum of 3.00 sq.in./piece.

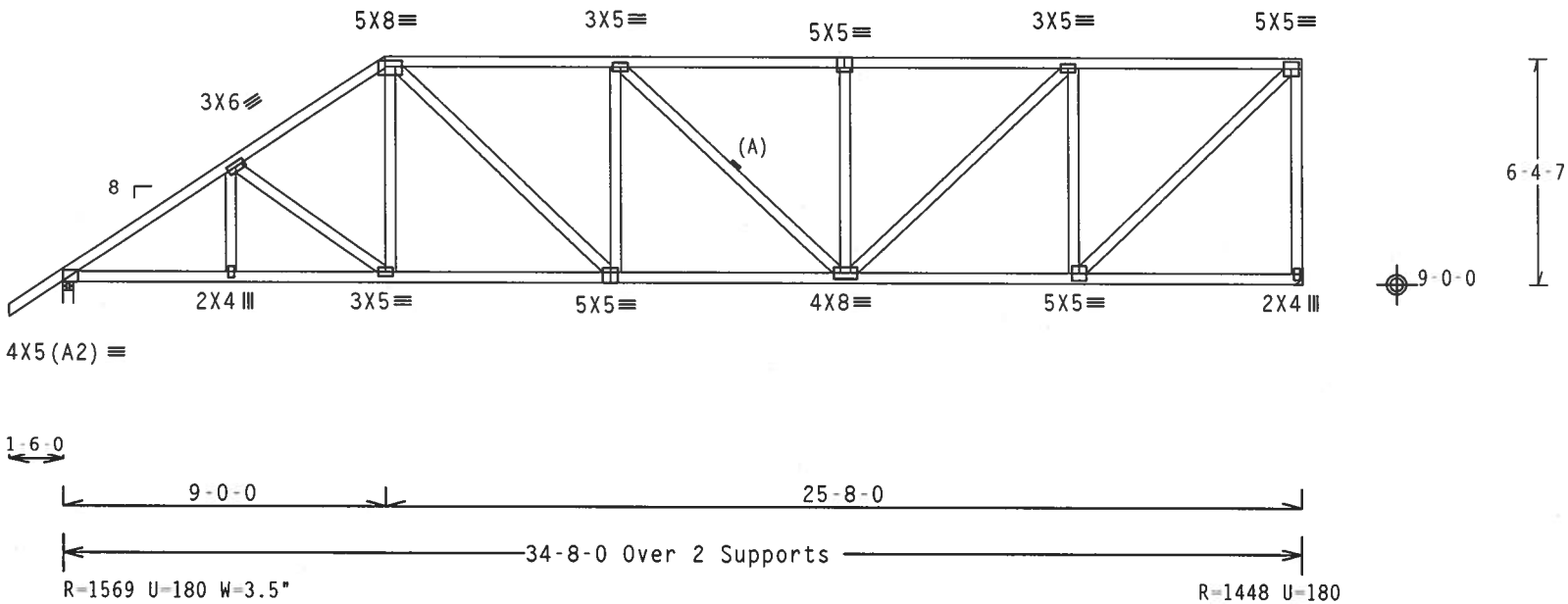

Design Crit: TPI-2002(STD)/FBC

PLT TYP. Wave\R Cq/RT=1.00(1.25)/10(0) 7.25.0503 [illegible] QTY:1 FL/-/5/-/-/R/- Scale =.1875"/Ft.

ALPINE

Alpine Engineered Products, Inc.
1950 Marley Drive
Haines City, FL 33844
FL Certificate of Authorization # 567

WARNING TRUSSES REQUIRE EXTREME CARE IN FABRICATION, HANDLING, SHIPPING, INSTALLING AND BRACING. REFER TO BCSI 1-03 (BUILDING COMPONENT SAFETY INFORMATION), PUBLISHED BY TPI (TRUSS PLATE INSTITUTE, 583 D'ONOFRIO DR., SUITE 200, MADISON, WI 53719) AND WTCA (WOOD TRUSS COUNCIL OF AMERICA, 6300 ENTERPRISE LN, MADISON, WI 53719) FOR SAFETY PRACTICES PRIOR TO PERFORMING THESE FUNCTIONS. UNLESS OTHERWISE INDICATED, TOP CHORD SHALL HAVE PROPERLY ATTACHED STRUCTURAL PANELS AND BOTTOM CHORD SHALL HAVE A PROPERLY ATTACHED RIGID CEILING.

IMPORTANTFURNISH A COPY OF THIS DESIGN TO THE INSTALLATION CONTRACTOR. ALPINE ENGINEERED PRODUCTS, INC. SHALL NOT BE RESPONSIBLE FOR ANY DEVIATION FROM THIS DESIGN; ANY FAILURE TO BUILD THE TRUSS IN CONFORMANCE WITH TPI; OR FABRICATING, HANDLING, SHIPPING, INSTALLING & BRACING OF TRUSSES. DESIGN CONFORMS WITH APPLICABLE PROVISIONS OF NDS (NATIONAL DESIGN SPEC. BY AF&PA) AND TPI. ALPINE CONNECTOR PLATES ARE MADE OF 20/18/16GA (W,H/S/K) ASTM A653 GRADE 40/60 (W, K/H,S) GALV. STEEL. APPLY PLATES TO EACH FACE OF TRUSS AND, UNLESS OTHERWISE LOCATED ON THIS DESIGN, POSITION PER DRAWINGS 160A-Z. ANY INSPECTION OF PLATES FOLLOWED BY (1) SHALL BE PER ANNEX A3 OF TPI1-2002 SEC.3. A SEAL ON THIS DRAWING INDICATES ACCEPTANCE OF PROFESSIONAL ENGINEERING RESPONSIBILITY SOLELY FOR THE TRUSS COMPONENT DESIGN SHOWN. THE SUITABILITY AND USE OF THIS COMPONENT FOR ANY BUILDING IS THE RESPONSIBILITY OF THE BUILDING DESIGNER PER ANSI/TPI 1 SEC. 2.

JAMES F. COLLINS, JR. LICENSE No. 52212 STATE OF FLORIDA PROFESSIONAL ENGINEER

Aug 04 [illegible]

TC LL	20.0 PSF	REF	R215-- 59613
TC DL	10.0 PSF	DATE	08/03/06
BC DL	10.0 PSF	DRW	HCUSR215 06215018
BC LL	0.0 PSF	HC-ENG	JK/WHK
TOT.LD.	40.0 PSF	SEQN-	133678
DUR.FAC.	1.25	FROM	CDM
SPACING	24.0"	JREF-	1SZG215_Z02

THIS DWG PREPARED FROM COMPUTER INPUT (LOADS & DIMENSIONS) SUBMITTED BY TRUSS MFR.

Top chord 2x6 SP #2 N :T1 2x4 SP #2 N:
Bot chord 2x6 SP #2 N
Webs 2x4 SP #2 N

110 mph wind, 15.00 ft mean hgt, ASCE 7-02, CLOSED bldg, Located anywhere in roof, CAT II, EXP B, wind TC DL=5.0 psf, wind BC DL=5.0 psf.

In lieu of structural panels use purlins to brace all flat TC @ 24" OC.

#1 hip supports 7-0-0 jacks W/2 panel TC and no end vert.

Plates sized for a minimum of 3.00 sq.in./piece.

2 COMPLETE TRUSSES REQUIRED

Nailing Schedule: (0.131"x3"_Gun_nails)
Top Chord: 1 Row @12.00" o.c.
Bot Chord: 1 Row @12.00" o.c.
Webs : 1 Row @ 4" o.c.
Use equal spacing between rows and stagger nails in each row to avoid splitting.

Right end vertical not exposed to wind pressure.

Deflection meets L/360 live and L/240 total load.

The overall height of this truss excluding overhang is 5-0-7.

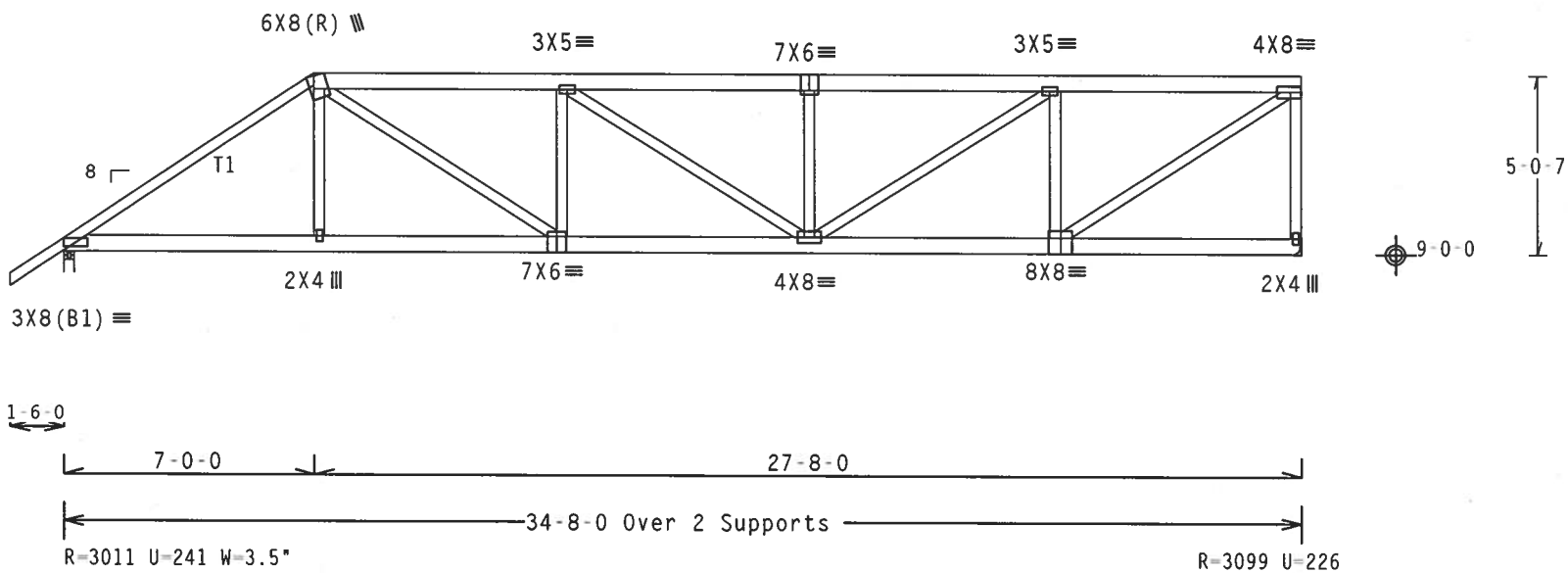

Design Crit: TPI-2002(STD)/FBC

PLT TYP. Wave\R Cq/RT=1.00(1.25)/10(0) 7.25.0503 QTY:1 FL/-/5/-/-/R/- Scale =.1875"/Ft.

ALPINE
Alpine Engineered Products, Inc.
1950 Marley Drive
Haines City, FL 33844
FL Certificate of Authorization # 567

WARNING TRUSSES REQUIRE EXTREME CARE IN FABRICATION, HANDLING, SHIPPING, INSTALLING AND BRACING. REFER TO BCSI 1-03 (BUILDING COMPONENT SAFETY INFORMATION), PUBLISHED BY TPI (TRUSS PLATE INSTITUTE, 583 D'ONOFRIO DR., SUITE 200, MADISON, WI 53719) AND WTCA (WOOD TRUSS COUNCIL OF AMERICA, 6300 ENTERPRISE LN, MADISON, WI 53719) FOR SAFETY PRACTICES PRIOR TO PERFORMING THESE FUNCTIONS. UNLESS OTHERWISE INDICATED, TOP CHORD SHALL HAVE PROPERLY ATTACHED STRUCTURAL PANELS AND BOTTOM CHORD SHALL HAVE A PROPERLY ATTACHED RIGID CEILING.

IMPORTANTFURNISH A COPY OF THIS DESIGN TO THE INSTALLATION CONTRACTOR. ALPINE ENGINEERED PRODUCTS, INC. SHALL NOT BE RESPONSIBLE FOR ANY DEVIATION FROM THIS DESIGN; ANY FAILURE TO BUILD THE TRUSS IN CONFORMANCE WITH TPI; OR FABRICATING, HANDLING, SHIPPING, INSTALLING & BRACING OF TRUSSES. DESIGN CONFORMS WITH APPLICABLE PROVISIONS OF NDS (NATIONAL DESIGN SPEC. BY AF&PA) AND TPI. ALPINE CONNECTOR PLATES ARE MADE OF 20/18/16GA (W.H/S/K) ASTM A653 GRADE 40/60 (W. K/H.S) GALV. STEEL. APPLY PLATES TO EACH FACE OF TRUSS AND. UNLESS OTHERWISE LOCATED ON THIS DESIGN, POSITION PER DRAWINGS 160A-Z. ANY INSPECTION OF PLATES FOLLOWED BY (1) SHALL BE PER ANNEX A3 OF TPI1-2002 SEC.3. A SEAL ON THIS DRAWING INDICATES ACCEPTANCE OF PROFESSIONAL ENGINEERING RESPONSIBILITY SOLELY FOR THE TRUSS COMPONENT DESIGN SHOWN. THE SUITABILITY AND USE OF THIS COMPONENT FOR ANY BUILDING IS THE RESPONSIBILITY OF THE BUILDING DESIGNER PER ANSI/TPI 1 SEC. 2.

JAMES F. COLLINS JR. LICENSE No. 52212 STATE OF FLORIDA PROFESSIONAL ENGINEER
Aug 04 '06

TC LL	20.0 PSF	REF R215-- 59614
TC DL	10.0 PSF	DATE 08/03/06
BC DL	10.0 PSF	DRW HCUSR215 06215017
BC LL	0.0 PSF	HC-ENG JK/WHK
TOT.LD.	40.0 PSF	SEQN- 133671
DUR.FAC.	1.25	FROM CDM
SPACING	24.0"	JREF- 1SZG215_Z02

Top chord 2x4 SP #2 N
Bot chord 2x4 SP #2 N
Webs 2x4 SP #2 N

110 mph wind, 15.00 ft mean hgt, ASCE 7-02, CLOSED bldg, Located anywhere in roof, CAT II, EXP B, wind TC DL=5.0 psf, wind BC DL=5.0 psf.

See DWGS A11015EE0405 & GBLLETIN0405 for more requirements.

Plates sized for a minimum of 3.00 sq.in./piece.

THE BUILDING DESIGNER IS RESPONSIBLE FOR THE DESIGN OF THE ROOF AND CEILING DIAPHRAGMS, GABLE END SHEAR WALLS, AND SUPPORTING SHEAR WALLS. SHEAR WALLS MUST PROVIDE CONTINUOUS LATERAL RESTRAINT TO THE GABLE END. ALL CONNECTIONS TO BE DESIGNED BY THE BUILDING DESIGNER.

Truss spaced at 24.0" OC designed to support 2-0-0 top chord outlookers. Cladding load shall not exceed 0.00 PSF. Top chord must not be cut or notched.

Deflection meets L/360 live and L/240 total load.

The overall height of this truss excluding overhang is 3-0-15.

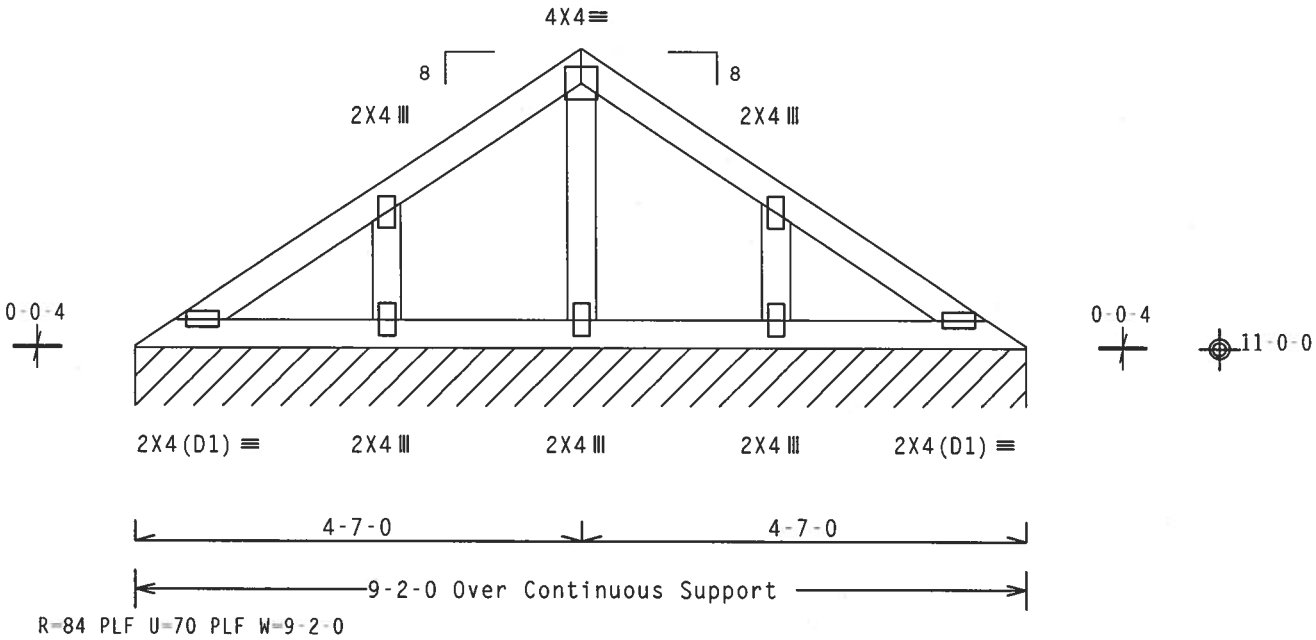

Design Crit: TPI-2002(STD)/FBC

PLT TYP. Wave\R Cq/RT=1.00(1.25)/10(0) 7.25.0503.09 QTY:1 FL/-/5/-/-/R/- Scale =.5"/Ft.

ALPINE
Alpine Engineered Products, Inc.
1950 Marley Drive
Haines City, FL 33844
FL Certificate of Authorization # 567

WARNING TRUSSES REQUIRE EXTREME CARE IN FABRICATION, HANDLING, SHIPPING, INSTALLING AND BRACING. REFER TO BCSI 1-03 (BUILDING COMPONENT SAFETY INFORMATION), PUBLISHED BY TPI (TRUSS PLATE INSTITUTE, 583 D'ONOFRIO DR., SUITE 200, MADISON, WI 53719) AND WTCA (WOOD TRUSS COUNCIL OF AMERICA, 6300 ENTERPRISE LN, MADISON, WI 53719) FOR SAFETY PRACTICES PRIOR TO PERFORMING THESE FUNCTIONS. UNLESS OTHERWISE INDICATED, TOP CHORD SHALL HAVE PROPERLY ATTACHED STRUCTURAL PANELS AND BOTTOM CHORD SHALL HAVE A PROPERLY ATTACHED RIGID CEILING.

IMPORTANTFURNISH A COPY OF THIS DESIGN TO THE INSTALLATION CONTRACTOR. ALPINE ENGINEERED PRODUCTS, INC. SHALL NOT BE RESPONSIBLE FOR ANY DEVIATION FROM THIS DESIGN; ANY FAILURE TO BUILD THE TRUSS IN CONFORMANCE WITH TPI; OR FABRICATING, HANDLING, SHIPPING, INSTALLING & BRACING OF TRUSSES. DESIGN CONFORMS WITH APPLICABLE PROVISIONS OF NDS (NATIONAL DESIGN SPEC. BY AF&PA) AND TPI. ALPINE CONNECTOR PLATES ARE MADE OF 20/18/16GA (W,H/S/K) ASTM A653 GRADE 40/60 (W, K/H,S) GALV. STEEL. APPLY PLATES TO EACH FACE OF TRUSS AND, UNLESS OTHERWISE LOCATED ON THIS DESIGN, POSITION PER DRAWINGS 160A-Z. ANY INSPECTION OF PLATES FOLLOWED BY (1) SHALL BE PER ANNEX A3 OF TPI1-2002 SEC.3. A SEAL ON THIS DRAWING INDICATES ACCEPTANCE OF PROFESSIONAL ENGINEERING RESPONSIBILITY SOLELY FOR THE TRUSS COMPONENT DESIGN SHOWN. THE SUITABILITY AND USE OF THIS COMPONENT FOR ANY BUILDING IS THE RESPONSIBILITY OF THE BUILDING DESIGNER PER ANSI/TPI 1 SEC. 2.

JAMES F. COLLINS, JR. LICENSED No. 22112 STATE OF FLORIDA PROFESSIONAL ENGINEER

Aug 04-06

TC LL	20.0 PSF	REF	R215-- 59615
TC DL	10.0 PSF	DATE	08/03/06
BC DL	10.0 PSF	DRW	HCUSR215 06215003
BC LL	0.0 PSF	HC-ENG	JK/WHK
TOT.LD.	40.0 PSF	SEQN-	133611
DUR.FAC.	1.25	FROM	CDM
SPACING	24.0"	JREF-	1SZG215_Z02

Top chord 2x4 SP #2 N
Bot chord 2x4 SP #2 N
Webs 2x4 SP #2 N

Deflection meets L/360 live and L/240 total load.

Plates sized for a minimum of 3.00 sq.in./piece.

THE BUILDING DESIGNER IS RESPONSIBLE FOR THE DESIGN OF THE ROOF AND CEILING DIAPHRAGMS, GABLE END SHEAR WALLS, AND SUPPORTING SHEAR WALLS. SHEAR WALLS MUST PROVIDE CONTINUOUS LATERAL RESTRAINT TO THE GABLE END. ALL CONNECTIONS TO BE DESIGNED BY THE BUILDING DESIGNER.

See DWGS A11015EE0405 & GBLLETIN0405 for more requirements.

(**) 2 plate(s) require special positioning. Refer to scaled plate plot details for special positioning requirements.

110 mph wind, 15.00 ft mean hgt, ASCE 7-02, CLOSED bldg, Located anywhere in roof, CAT II, EXP B, wind TC DL=5.0 psf, wind BC DL=5.0 psf.

The overall height of this truss excluding overhang is 6-2-4.

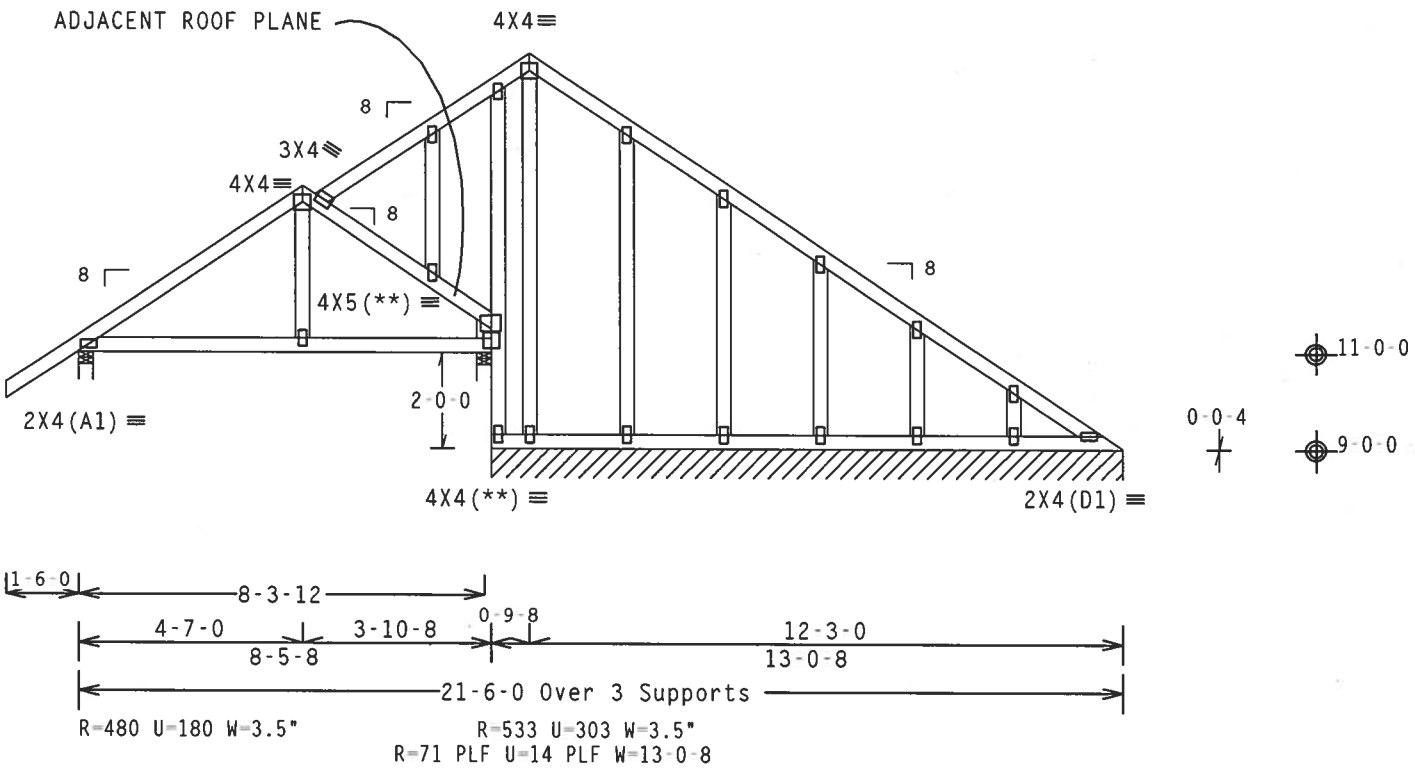

Note: All Plates Are 2X4 Except As Shown.

Design Crit: TPI-2002(STD)/FBC

PLT TYP. Wave\R | Cq/RT=1.00(1.25)/10(0) | 7.25.0503 | QTY:1 | FL/-/5/-/-/R/- | Scale =.25"/Ft.

ALPINE
Alpine Engineered Products, Inc.
1950 Marley Drive
Haines City, FL 33844
FL Certificate of Authorization # 567

WARNING TRUSSES REQUIRE EXTREME CARE IN FABRICATION, HANDLING, SHIPPING, INSTALLING AND BRACING. REFER TO BCSI 1-03 (BUILDING COMPONENT SAFETY INFORMATION), PUBLISHED BY TPI (TRUSS PLATE INSTITUTE, 583 D'ONOFRIO DR., SUITE 200, MADISON, WI 53719) AND WTCA (WOOD TRUSS COUNCIL OF AMERICA, 6300 ENTERPRISE LN, MADISON, WI 53719) FOR SAFETY PRACTICES PRIOR TO PERFORMING THESE FUNCTIONS. UNLESS OTHERWISE INDICATED, TOP CHORD SHALL HAVE PROPERLY ATTACHED STRUCTURAL PANELS AND BOTTOM CHORD SHALL HAVE A PROPERLY ATTACHED RIGID CEILING.

IMPORTANT FURNISH A COPY OF THIS DESIGN TO THE INSTALLATION CONTRACTOR. ALPINE ENGINEERED PRODUCTS, INC. SHALL NOT BE RESPONSIBLE FOR ANY DEVIATION FROM THIS DESIGN; ANY FAILURE TO BUILD THE TRUSS IN CONFORMANCE WITH TPI; OR FABRICATING, HANDLING, SHIPPING, INSTALLING & BRACING OF TRUSSES DESIGN CONFORMS WITH APPLICABLE PROVISIONS OF NDS (NATIONAL DESIGN SPEC. BY AF&PA) AND TPI. ALPINE CONNECTOR PLATES ARE MADE OF 20/18/16GA (W,H/S/K) ASTM A653 GRADE 40/60 (W, K/H,S) GALV. STEEL. APPLY PLATES TO EACH FACE OF TRUSS AND, UNLESS OTHERWISE LOCATED ON THIS DESIGN, POSITION PER DRAWINGS 160A-Z. ANY INSPECTION OF PLATES FOLLOWED BY (1) SHALL BE PER ANNEX A3 OF TPI1-2002 SEC.3. A SEAL ON THIS DRAWING INDICATES ACCEPTANCE OF PROFESSIONAL ENGINEERING RESPONSIBILITY SOLELY FOR THE TRUSS COMPONENT DESIGN SHOWN. THE SUITABILITY AND USE OF THIS COMPONENT FOR ANY BUILDING IS THE RESPONSIBILITY OF THE BUILDING DESIGNER PER ANSI/TPI 1 SEC. 2.

JAMES F. COLLINS, JR. LICENSE No. 52212 STATE OF FLORIDA PROFESSIONAL ENGINEER

Aug 04 06

TC LL	20.0 PSF	REF R215-- 59616
TC DL	10.0 PSF	DATE 08/03/06
BC DL	10.0 PSF	DRW HCUSR215 06215004
BC LL	0.0 PSF	HC-ENG JK/WHK
TOT.LD.	40.0 PSF	SEQN- 133780
DUR.FAC.	1.25	FROM CDM
SPACING	24.0"	JREF- 1SZG215_Z02

(3754-/Lot 2 Laurel Lakes II /J.L. DUPREE -- LAKE CITY, FL - D2)

THIS DWG PREPARED FROM COMPUTER INPUT (LOADS & DIMENSIONS) SUBMITTED BY TRUSS MFR.

Top chord 2x4 SP #2 N
Bot chord 2x4 SP #2 N
Webs 2x4 SP #2 N

Deflection meets L/360 live and L/240 total load.

The overall height of this truss excluding overhang is 6-6-7.

110 mph wind, 15.00 ft mean hgt, ASCE 7-02, CLOSED bldg, Located anywhere in roof, CAT II, EXP B, wind TC DL=5.0 psf, wind BC DL=5.0 psf.

Plates sized for a minimum of 3.00 sq.in./piece.

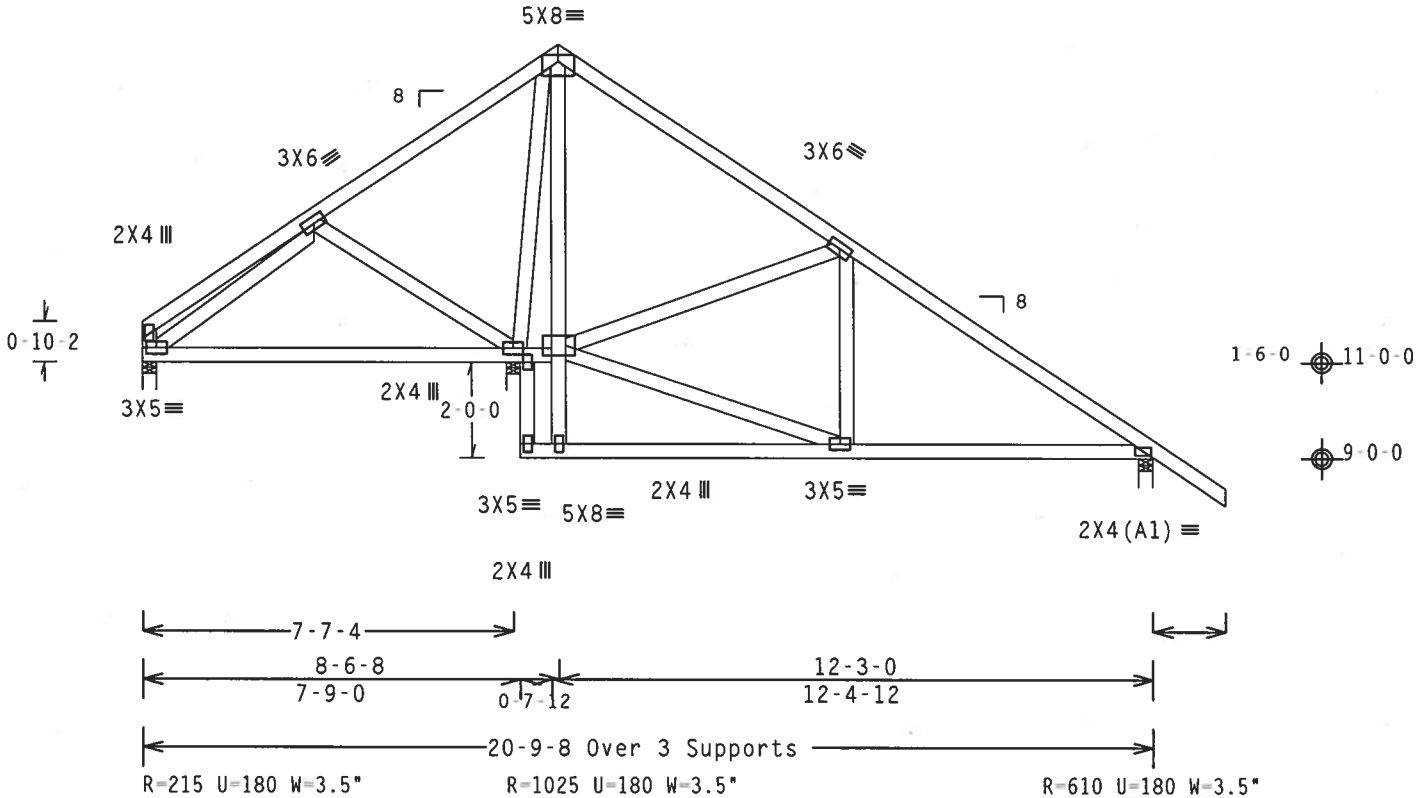

Design Crit: TPI-2002(STD)/FBC

PLT TYP. Wave\R Cq/RT=1.00(1.25)/10(0) 7.25.0503.0 QTY:2 FL/-/5/-/-/R/- Scale =.25"/Ft.

ALPINE
Alpine Engineered Products, Inc.
1950 Marley Drive
Haines City, FL 33844
FL Certificate of Authorization # 567

WARNING TRUSSES REQUIRE EXTREME CARE IN FABRICATION, HANDLING, SHIPPING, INSTALLING AND BRACING. REFER TO BCSI 1-03 (BUILDING COMPONENT SAFETY INFORMATION), PUBLISHED BY TPI (TRUSS PLATE INSTITUTE, 583 D'ONOFRIO DR., SUITE 200, MADISON, WI 53719) AND WTCA (WOOD TRUSS COUNCIL OF AMERICA, 6300 ENTERPRISE LN, MADISON, WI 53719) FOR SAFETY PRACTICES PRIOR TO PERFORMING THESE FUNCTIONS. UNLESS OTHERWISE INDICATED, TOP CHORD SHALL HAVE PROPERLY ATTACHED STRUCTURAL PANELS AND BOTTOM CHORD SHALL HAVE A PROPERLY ATTACHED RIGID CEILING.

IMPORTANTFURNISH A COPY OF THIS DESIGN TO THE INSTALLATION CONTRACTOR. ALPINE ENGINEERED PRODUCTS, INC. SHALL NOT BE RESPONSIBLE FOR ANY DEVIATION FROM THIS DESIGN; ANY FAILURE TO BUILD THE TRUSS IN CONFORMANCE WITH TPI; OR FABRICATING, HANDLING, SHIPPING, INSTALLING & BRACING OF TRUSSES. DESIGN CONFORMS WITH APPLICABLE PROVISIONS OF NDS (NATIONAL DESIGN SPEC. BY AF&PA) AND TPI. ALPINE CONNECTOR PLATES ARE MADE OF 20/18/16GA (W,H/S/K) ASTM A653 GRADE 40/60 (W, K/H,S) GALV. STEEL. APPLY PLATES TO EACH FACE OF TRUSS AND, UNLESS OTHERWISE LOCATED ON THIS DESIGN, POSITION PER DRAWINGS 160A-Z. ANY INSPECTION OF PLATES FOLLOWED BY (1) SHALL BE PER ANNEX A3 OF TPI1-2002 SEC.3. A SEAL ON THIS DRAWING INDICATES ACCEPTANCE OF PROFESSIONAL ENGINEERING RESPONSIBILITY SOLELY FOR THE TRUSS COMPONENT DESIGN SHOWN. THE SUITABILITY AND USE OF THIS COMPONENT FOR ANY BUILDING IS THE RESPONSIBILITY OF THE BUILDING DESIGNER PER ANSI/TPI 1 SEC. 2.

JAMES F. COLLINS JR. LICENSE No. 52212 STATE OF FLORIDA PROFESSIONAL ENGINEER
Aug 04 06

TC LL	20.0 PSF	REF	R215-- 59617
TC DL	10.0 PSF	DATE	08/03/06
BC DL	10.0 PSF	DRW	HCUSR215 06215006
BC LL	0.0 PSF	HC-ENG	JK/WHK
TOT.LD.	40.0 PSF	SEQN-	133631
DUR.FAC.	1.25	FROM	CDM
SPACING	24.0"	JREF-	1SZG215_Z02

THIS DWG PREPARED FROM COMPUTER INPUT (LOADS & DIMENSIONS) SUBMITTED BY TRUSS MFR.

Top chord 2x4 SP #2 N
Bot chord 2x6 SP #2 N
Webs 2x4 SP #2 N
:Lt Slider 2x4 SP #2 N: BLOCK LENGTH = 1.500'

SPECIAL LOADS
------(LUMBER DUR.FAC.=1.25 / PLATE DUR.FAC.=1.25)
TC - From 64 PLF at 0.00 to 64 PLF at 22.29
BC - From 20 PLF at 0.00 to 20 PLF at 20.79
BC - From 5 PLF at 20.79 to 5 PLF at 22.29
PLB- 1201 LB Conc. Load at (7.73,11.04)
PLB- 1448 LB Conc. Load at (9.73,9.04), (11.73,9.04)
PLB- 3099 LB Conc. Load at (13.67,9.04)

110 mph wind, 15.00 ft mean hgt, ASCE 7-02, CLOSED bldg, Located anywhere in roof, CAT II, EXP B, wind TC DL=5.0 psf, wind BC DL=5.0 psf.

The overall height of this truss excluding overhang is 6-6-7.

2 COMPLETE TRUSSES REQUIRED

Nailing Schedule: (0.131"x3"_Gun_nails)
Top Chord: 1 Row @12.00" o.c.
Bot Chord: 1 Row @ 4.50" o.c.
Webs : 1 Row @ 4" o.c.
Use equal spacing between rows and stagger nails in each row to avoid splitting.

Bearing blocks: Nail type: 0.131"x3"_Gun_nails

BRG	X-LOC	#BLOCKS	LENGTH/BLK	#NAILS/BLK	WALL PLATE
2	7.458'	1	12"	8	Match Truss

Bearing block to be same size and species as bottom chord.
Refer to drawing CNBRGBLK1103 for additional information.

Deflection meets L/360 live and L/240 total load.

Plates sized for a minimum of 3.00 sq.in./piece.

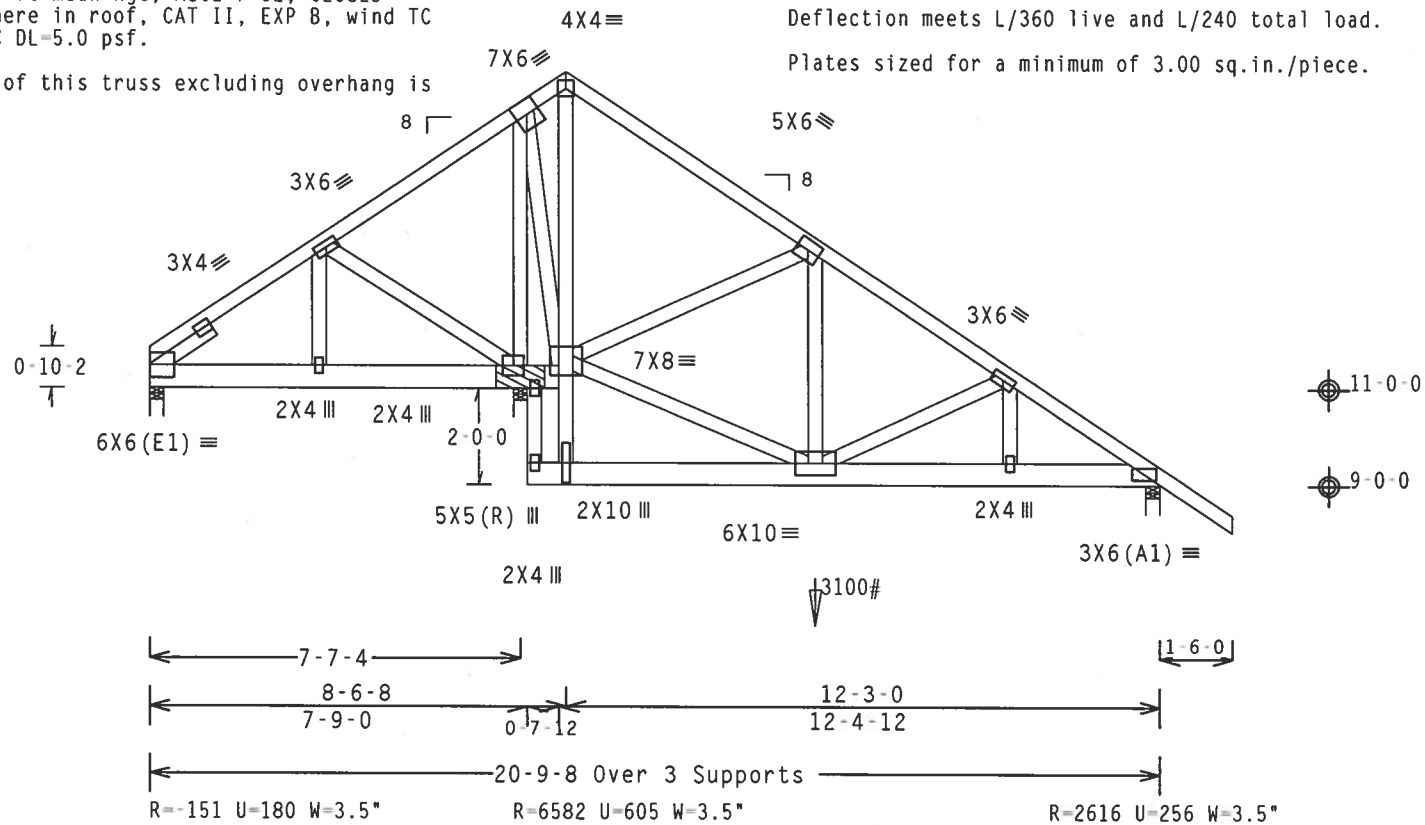

Design Crit: TPI-2002(STD)/FBC

PLT TYP. Wave\R Cq/RT=1.00(1.25)/10(0) 7.25.0503 QTY:1 FL/-/5/-/-/R/- Scale =.25"/Ft.

ALPINE
Alpine Engineered Products, Inc.
1950 Marley Drive
Haines City, FL 33844
FL Certificate of Authorization # 567

WARNING TRUSSES REQUIRE EXTREME CARE IN FABRICATION, HANDLING, SHIPPING, INSTALLING AND BRACING. REFER TO BCSI 1-03 (BUILDING COMPONENT SAFETY INFORMATION), PUBLISHED BY TPI (TRUSS PLATE INSTITUTE, 583 D'ONOFRIO DR., SUITE 200, MADISON, WI 53719) AND WTCA (WOOD TRUSS COUNCIL OF AMERICA, 6300 ENTERPRISE LN, MADISON, WI 53719) FOR SAFETY PRACTICES PRIOR TO PERFORMING THESE FUNCTIONS. UNLESS OTHERWISE INDICATED, TOP CHORD SHALL HAVE PROPERLY ATTACHED STRUCTURAL PANELS AND BOTTOM CHORD SHALL HAVE A PROPERLY ATTACHED RIGID CEILING.

IMPORTANTFURNISH A COPY OF THIS DESIGN TO THE INSTALLATION CONTRACTOR. ALPINE ENGINEERED PRODUCTS, INC. SHALL NOT BE RESPONSIBLE FOR ANY DEVIATION FROM THIS DESIGN; ANY FAILURE TO BUILD THE TRUSS IN CONFORMANCE WITH TPI; OR FABRICATING, HANDLING, SHIPPING, INSTALLING & BRACING OF TRUSSES. DESIGN CONFORMS WITH APPLICABLE PROVISIONS OF NDS (NATIONAL DESIGN SPEC. BY AF&PA) AND TPI. ALPINE CONNECTOR PLATES ARE MADE OF 20/18/16GA (W.H/S/K) ASTM A653 GRADE 40/60 (W. K/H.S) GALV. STEEL. APPLY PLATES TO EACH FACE OF TRUSS AND, UNLESS OTHERWISE LOCATED ON THIS DESIGN, POSITION PER DRAWINGS 160A-Z. ANY INSPECTION OF PLATES FOLLOWED BY (1) SHALL BE PER ANNEX A3 OF TPI1-2002 SEC.3. A SEAL ON THIS DRAWING INDICATES ACCEPTANCE OF PROFESSIONAL ENGINEERING RESPONSIBILITY SOLELY FOR THE TRUSS COMPONENT DESIGN SHOWN. THE SUITABILITY AND USE OF THIS COMPONENT FOR ANY BUILDING IS THE RESPONSIBILITY OF THE BUILDING DESIGNER PER ANSI/TPI 1 SEC. 2.

JAMES F. COLLINS JR. LICENSE No. 52212 STATE OF FLORIDA PROFESSIONAL ENGINEER
Aug 04 '06

TC LL	20.0	PSF
TC DL	10.0	PSF
BC DL	10.0	PSF
BC LL	0.0	PSF
TOT.LD.	40.0	PSF
DUR.FAC.	1.25	
SPACING	24.0"	

REF	R215-- 59618
DATE	08/03/06
DRW	HCUSR215 06215007
HC-ENG	JK/WHK
SEQN-	133784
FROM	CDM
JREF-	1SZG215_Z02

THIS DWG PREPARED FROM COMPUTER INPUT (LOADS & DIMENSIONS) SUBMITTED BY TRUSS MFR.

Top chord 2x4 SP #2 N
Bot chord 2x4 SP #2 N

Deflection meets L/360 live and L/240 total load.

The overall height of this truss excluding overhang is 1-0-7.

110 mph wind, 15.00 ft mean hgt, ASCE 7-02, CLOSED bldg, Located anywhere in roof, CAT II, EXP B, wind TC DL=5.0 psf, wind BC DL=5.0 psf.

Plates sized for a minimum of 3.00 sq.in./piece.

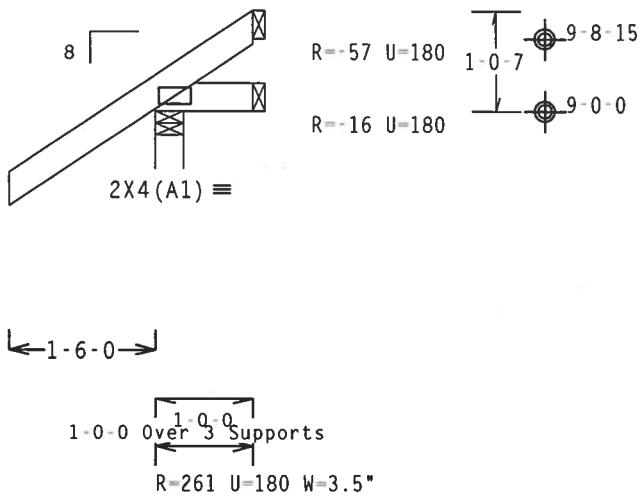

Design Crit: TPI-2002(STD)/FBC

PLT TYP. Wave\R Cg/RT=1.00(1.25)/10(0) 7.25.0503.0 QTY:8 FL/-/5/-/-/R/- Scale =.5"/Ft.

ALPINE
Alpine Engineered Products, Inc.
1950 Marley Drive
Haines City, FL 33844
FL Certificate of Authorization # 567

WARNING TRUSSES REQUIRE EXTREME CARE IN FABRICATION, HANDLING, SHIPPING, INSTALLING AND BRACING. REFER TO BCSI 1-03 (BUILDING COMPONENT SAFETY INFORMATION), PUBLISHED BY TPI (TRUSS PLATE INSTITUTE, 583 D'ONOFRIO DR., SUITE 200, MADISON, WI 53719) AND WTCA (WOOD TRUSS COUNCIL OF AMERICA, 6300 ENTERPRISE LN, MADISON, WI 53719) FOR SAFETY PRACTICES PRIOR TO PERFORMING THESE FUNCTIONS. UNLESS OTHERWISE INDICATED, TOP CHORD SHALL HAVE PROPERLY ATTACHED STRUCTURAL PANELS AND BOTTOM CHORD SHALL HAVE A PROPERLY ATTACHED RIGID CEILING.

IMPORTANT FURNISH A COPY OF THIS DESIGN TO THE INSTALLATION CONTRACTOR. ALPINE ENGINEERED PRODUCTS, INC. SHALL NOT BE RESPONSIBLE FOR ANY DEVIATION FROM THIS DESIGN; ANY FAILURE TO BUILD THE TRUSS IN CONFORMANCE WITH TPI; OR FABRICATING, HANDLING, SHIPPING, INSTALLING & BRACING OF TRUSSES DESIGN CONFORMS WITH APPLICABLE PROVISIONS OF NDS (NATIONAL DESIGN SPEC. BY AF&PA) AND TPI. ALPINE CONNECTOR PLATES ARE MADE OF 20/18/16GA (W,H/S/K) ASTM A653 GRADE 40/60 (W, K/H,S) GALV. STEEL. APPLY PLATES TO EACH FACE OF TRUSS AND, UNLESS OTHERWISE LOCATED ON THIS DESIGN, POSITION PER DRAWINGS 160A. ANY INSPECTION OF PLATES FOLLOWED BY (I) SHALL BE PER ANNEX A3 OF TPI1-2002 SEC.3. A SEAL ON THIS DRAWING INDICATES ACCEPTANCE OF PROFESSIONAL ENGINEERING RESPONSIBILITY SOLELY FOR THE TRUSS COMPONENT DESIGN SHOWN. THE SUITABILITY AND USE OF THIS COMPONENT FOR ANY BUILDING IS THE RESPONSIBILITY OF THE BUILDING DESIGNER PER ANSI/TPI 1 SEC. 2.

JAMES F. COLLINS JR. LICENSE No. 52212 STATE OF FLORIDA PROFESSIONAL ENGINEER
Aug 04-06

TC LL	20.0 PSF	REF R215-- 59619
TC DL	10.0 PSF	DATE 08/03/06
BC DL	10.0 PSF	DRW HCUSR215 06215031
BC LL	0.0 PSF	HC-ENG JK/WHK
TOT.LD.	40.0 PSF	SEQN- 133648
DUR.FAC.	1.25	FROM CDM
SPACING	24.0"	JREF- 1SZG215_Z02

THIS DWG PREPARED FROM COMPUTER INPUT (LOADS & DIMENSIONS) SUBMITTED BY TRUSS MFR.

Top chord 2x4 SP #2 N
Bot chord 2x4 SP #2 N

Deflection meets L/360 live and L/240 total load.

The overall height of this truss excluding overhang is 2-4-7.

110 mph wind, 15.00 ft mean hgt, ASCE 7-02, CLOSED bldg, Located anywhere in roof, CAT II, EXP B, wind TC DL=5.0 psf, wind BC DL=5.0 psf.

Plates sized for a minimum of 3.00 sq.in./piece.

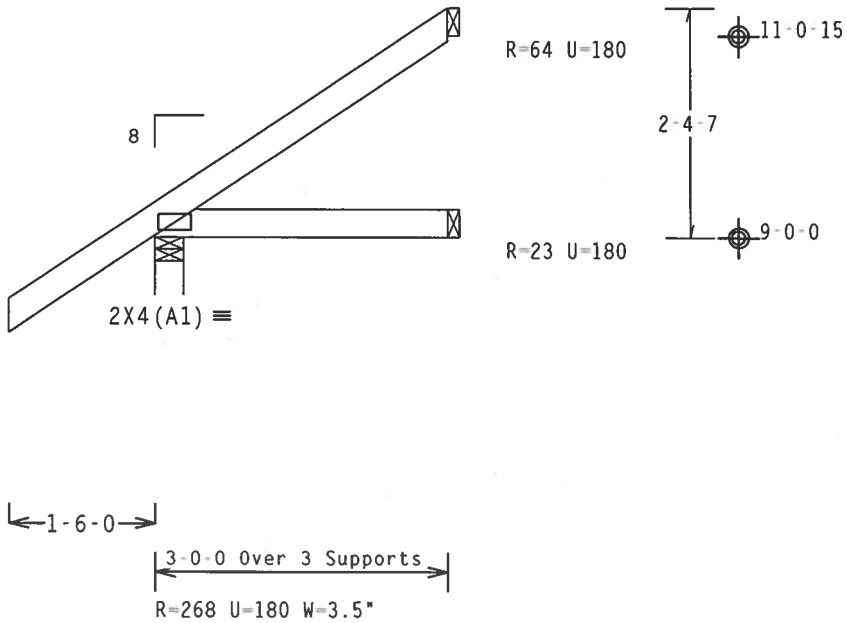

Design Crit: TPI-2002(STD)/FBC

PLT TYP. Wave\R Cq/RT=1.00(1.25)/10(0) 7.25.0503 QTY:8 FL/-/5/-/-/R/- Scale =.5"/Ft.

ALPINE
Alpine Engineered Products, Inc.
1950 Marley Drive
Haines City, FL 33844
FL Certificate of Authorization # 567

WARNING TRUSSES REQUIRE EXTREME CARE IN FABRICATION, HANDLING, SHIPPING, INSTALLING AND BRACING. REFER TO BCSI 1-03 (BUILDING COMPONENT SAFETY INFORMATION), PUBLISHED BY TPI (TRUSS PLATE INSTITUTE, 583 D'ONOFRIO DR., SUITE 200, MADISON, WI 53719) AND WTCA (WOOD TRUSS COUNCIL OF AMERICA, 6300 ENTERPRISE LN, MADISON, WI 53719) FOR SAFETY PRACTICES PRIOR TO PERFORMING THESE FUNCTIONS. UNLESS OTHERWISE INDICATED, TOP CHORD SHALL HAVE PROPERLY ATTACHED STRUCTURAL PANELS AND BOTTOM CHORD SHALL HAVE A PROPERLY ATTACHED RIGID CEILING.

IMPORTANTFURNISH A COPY OF THIS DESIGN TO THE INSTALLATION CONTRACTOR. ALPINE ENGINEERED PRODUCTS, INC. SHALL NOT BE RESPONSIBLE FOR ANY DEVIATION FROM THIS DESIGN; ANY FAILURE TO BUILD THE TRUSS IN CONFORMANCE WITH TPI; OR FABRICATING, HANDLING, SHIPPING, INSTALLING & BRACING OF TRUSSES. DESIGN CONFORMS WITH APPLICABLE PROVISIONS OF NDS (NATIONAL DESIGN SPEC, BY AF&PA) AND TPI. ALPINE CONNECTOR PLATES ARE MADE OF 20/18/16GA (W,H/S/K) ASTM A653 GRADE 40/60 (W, K/H,S) GALV. STEEL. APPLY PLATES TO EACH FACE OF TRUSS AND, UNLESS OTHERWISE LOCATED ON THIS DESIGN, POSITION PER DRAWINGS 160A-Z. ANY INSPECTION OF PLATES FOLLOWED BY (1) SHALL BE PER ANNEX A3 OF TPI1-2002 SEC.3. A SEAL ON THIS DRAWING INDICATES ACCEPTANCE OF PROFESSIONAL ENGINEERING RESPONSIBILITY SOLELY FOR THE TRUSS COMPONENT DESIGN SHOWN. THE SUITABILITY AND USE OF THIS COMPONENT FOR ANY BUILDING IS THE RESPONSIBILITY OF THE BUILDING DESIGNER PER ANSI/TPI 1 SEC. 2.

JAMES F. COLLINS, JR. LICENSE No. 62212 STATE OF FLORIDA PROFESSIONAL ENGINEER
Aug 04 06

TC LL	20.0 PSF	REF	R215-- 59620
TC DL	10.0 PSF	DATE	08/03/06
BC DL	10.0 PSF	DRW	HCUSR215 06215030
BC LL	0.0 PSF	HC-ENG	JK/WHK *
TOT.LD.	40.0 PSF	SEQN-	133645
DUR.FAC.	1.25	FROM	CDM
SPACING	24.0"	JREF-	1SZG215_Z02

THIS DWG PREPARED FROM COMPUTER INPUT (LOADS & DIMENSIONS) SUBMITTED BY TRUSS MFR.

Top chord 2x4 SP #2 N
Bot chord 2x4 SP #2 N

Deflection meets L/360 live and L/240 total load.

The overall height of this truss excluding overhang is 3-8-7.

110 mph wind, 15.00 ft mean hgt, ASCE 7-02, CLOSED bldg, not located within 4.50 ft from roof edge, CAT II, EXP B, wind TC DL=5.0 psf, wind BC DL=5.0 psf.

Plates sized for a minimum of 3.00 sq.in./piece.

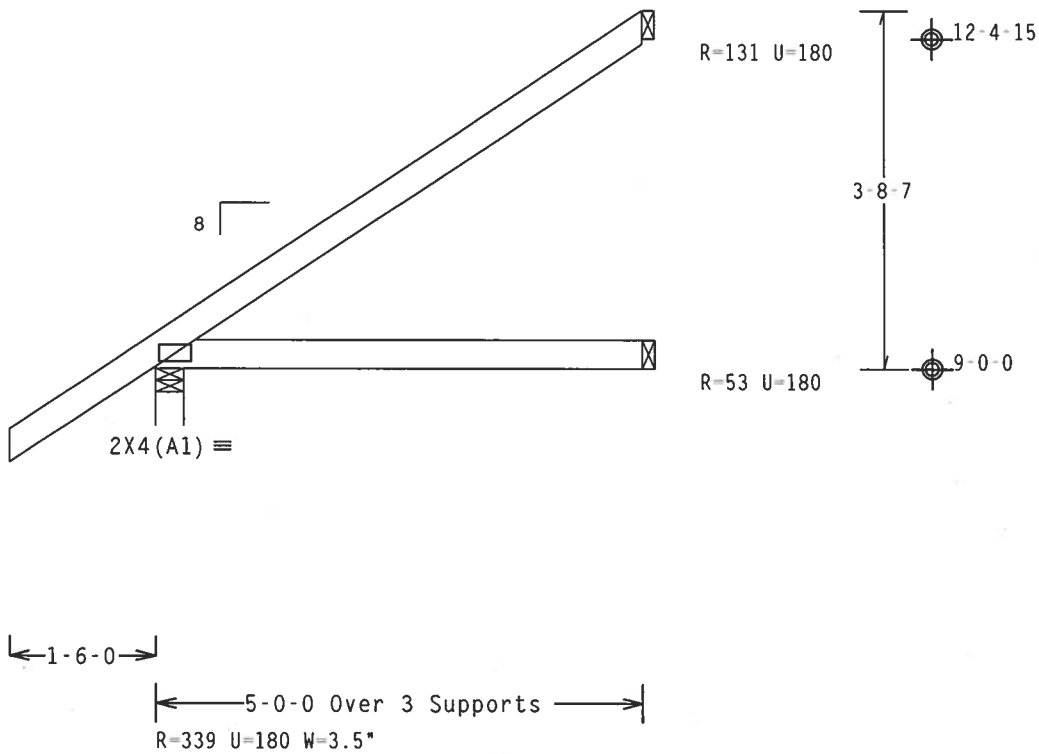

Design Crit: TPI-2002(STD)/FBC
PLT TYP. Wave\R Cq/RT=1.00(1.25)/10(0) 7.25.0503 QTY:8 FL/-/5/-/-/R/- Scale =.5"/Ft.

ALPINE
Alpine Engineered Products, Inc.
1950 Marley Drive
Haines City, FL 33844
FL Certificate of Authorization # 567

WARNING TRUSSES REQUIRE EXTREME CARE IN FABRICATION, HANDLING, SHIPPING, INSTALLING AND BRACING. REFER TO BCSI 1-03 (BUILDING COMPONENT SAFETY INFORMATION), PUBLISHED BY TPI (TRUSS PLATE INSTITUTE, 583 D'ONOFRIO DR., SUITE 200, MADISON, WI 53719) AND WTCA (WOOD TRUSS COUNCIL OF AMERICA, 6300 ENTERPRISE LN. MADISON, WI 53719) FOR SAFETY PRACTICES PRIOR TO PERFORMING THESE FUNCTIONS. UNLESS OTHERWISE INDICATED, TOP CHORD SHALL HAVE PROPERLY ATTACHED STRUCTURAL PANELS AND BOTTOM CHORD SHALL HAVE A PROPERLY ATTACHED RIGID CEILING.

IMPORTANTFURNISH A COPY OF THIS DESIGN TO THE INSTALLATION CONTRACTOR. ALPINE ENGINEERED PRODUCTS, INC. SHALL NOT BE RESPONSIBLE FOR ANY DEVIATION FROM THIS DESIGN; ANY FAILURE TO BUILD THE TRUSS IN CONFORMANCE WITH TPI; OR FABRICATING, HANDLING, SHIPPING, INSTALLING & BRACING OF TRUSSES. DESIGN CONFORMS WITH APPLICABLE PROVISIONS OF NDS (NATIONAL DESIGN SPEC. BY AF&PA) AND TPI. ALPINE CONNECTOR PLATES ARE MADE OF 20/18/16GA (W,H/S/K) ASTM A653 GRADE 40/60 (W. K/H,S) GALV. STEEL. APPLY PLATES TO EACH FACE OF TRUSS AND, UNLESS OTHERWISE LOCATED ON THIS DESIGN, POSITION PER DRAWINGS 160A-Z. ANY INSPECTION OF PLATES FOLLOWED BY (1) SHALL BE PER ANNEX A3 OF TPI1-2002 SEC.3. A SEAL ON THIS DRAWING INDICATES ACCEPTANCE OF PROFESSIONAL ENGINEERING RESPONSIBILITY SOLELY FOR THE TRUSS COMPONENT DESIGN SHOWN. THE SUITABILITY AND USE OF THIS COMPONENT FOR ANY BUILDING IS THE RESPONSIBILITY OF THE BUILDING DESIGNER PER ANSI/TPI 1 SEC. 2.

JAMES F. COLLINS, JR. LICENSE No. 52212 STATE OF FLORIDA PROFESSIONAL ENGINEER
Aug 04 '06

TC LL	20.0 PSF	REF	R215-- 59621
TC DL	10.0 PSF	DATE	08/03/06
BC DL	10.0 PSF	DRW	HCUSR215 06215029
BC LL	0.0 PSF	HC-ENG	JK/WHK *
TOT.LD.	40.0 PSF	SEQN-	133642
DUR.FAC.	1.25	FROM	CDM
SPACING	24.0"	JREF-	1SZG215_Z02

THIS DWG PREPARED FROM COMPUTER INPUT (LOADS & DIMENSIONS) SUBMITTED BY TRUSS MFR.

Top chord 2x4 SP #2 N
Bot chord 2x4 SP #2 N

Deflection meets L/360 live and L/240 total load.

The overall height of this truss excluding overhang is 5-0-7.

110 mph wind, 15.00 ft mean hgt, ASCE 7-02, CLOSED bldg, not located within 4.50 ft from roof edge, CAT II, EXP B, wind TC DL=5.0 psf, wind BC DL=5.0 psf.

Plates sized for a minimum of 3.00 sq.in./piece.

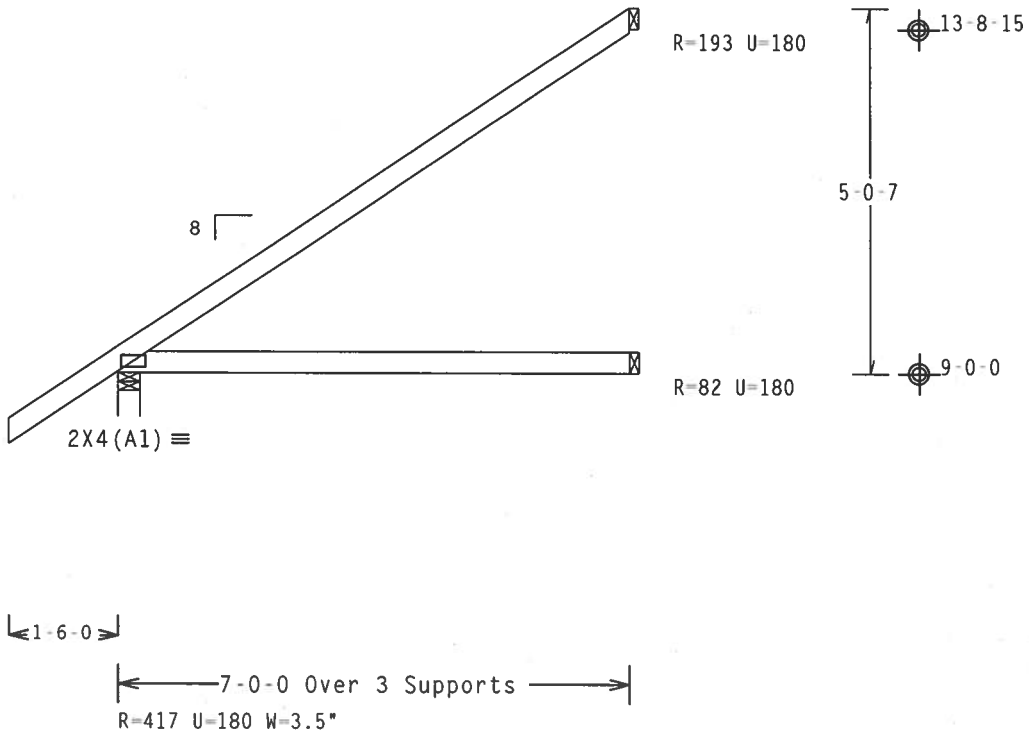

Design Crit: TPI-2002(STD)/FBC

PLT TYP. Wave\R Cq/RT=1.00(1.25)/10(0) 7.25.0503.00 QTY:35 FL/-/5/-/-/R/- Scale =.375"/Ft.

ALPINE
Alpine Engineered Products, Inc.
1950 Marley Drive
Haines City, FL 33844
FL Certificate of Authorization # 567

WARNING TRUSSES REQUIRE EXTREME CARE IN FABRICATION, HANDLING, SHIPPING, INSTALLING AND BRACING. REFER TO BCSI 1-03 (BUILDING COMPONENT SAFETY INFORMATION), PUBLISHED BY TPI (TRUSS PLATE INSTITUTE, 583 D'ONOFRIO DR., SUITE 200, MADISON, WI 53719) AND WTCA (WOOD TRUSS COUNCIL OF AMERICA, 6300 ENTERPRISE LN, MADISON, WI 53719) FOR SAFETY PRACTICES PRIOR TO PERFORMING THESE FUNCTIONS. UNLESS OTHERWISE INDICATED, TOP CHORD SHALL HAVE PROPERLY ATTACHED STRUCTURAL PANELS AND BOTTOM CHORD SHALL HAVE A PROPERLY ATTACHED RIGID CEILING.

IMPORTANTFURNISH A COPY OF THIS DESIGN TO THE INSTALLATION CONTRACTOR. ALPINE ENGINEERED PRODUCTS, INC. SHALL NOT BE RESPONSIBLE FOR ANY DEVIATION FROM THIS DESIGN; ANY FAILURE TO BUILD THE TRUSS IN CONFORMANCE WITH TPI; OR FABRICATING, HANDLING, SHIPPING, INSTALLING & BRACING OF TRUSSES. DESIGN CONFORMS WITH APPLICABLE PROVISIONS OF NDS (NATIONAL DESIGN SPEC, BY AF&PA) AND TPI. ALPINE CONNECTOR PLATES ARE MADE OF 20/18/16GA (W,H/S/K) ASTM A653 GRADE 40/60 (W, K/H,S) GALV. STEEL. APPLY PLATES TO EACH FACE OF TRUSS AND, UNLESS OTHERWISE LOCATED ON THIS DESIGN, POSITION PER DRAWINGS 160A-Z. ANY INSPECTION OF PLATES FOLLOWED BY (1) SHALL BE PER ANNEX A3 OF TPI1-2002 SEC.3. A SEAL ON THIS DRAWING INDICATES ACCEPTANCE OF PROFESSIONAL ENGINEERING RESPONSIBILITY SOLELY FOR THE TRUSS COMPONENT DESIGN SHOWN. THE SUITABILITY AND USE OF THIS COMPONENT FOR ANY BUILDING IS THE RESPONSIBILITY OF THE BUILDING DESIGNER PER ANSI/TPI 1 SEC. 2.

JAMES F. COLLINS JR. LICENSE No. 52212 STATE OF FLORIDA PROFESSIONAL ENGINEER
Aug 0

TC LL	20.0 PSF	REF	R215-- 59622
TC DL	10.0 PSF	DATE	08/03/06
BC DL	10.0 PSF	DRW	HCUSR215 06215002
BC LL	0.0 PSF	HC-ENG	JK/WHK *
TOT.LD.	40.0 PSF	SEQN-	133639
DUR.FAC.	1.25	FROM	CDM
SPACING	24.0"	JREF-	1SZG215_Z02

THIS DWG PREPARED FROM COMPUTER INPUT (LOADS & DIMENSIONS) SUBMITTED BY TRUSS MFR.

Top chord 2x4 SP #2 N
Bot chord 2x4 SP #2 N
Webs 2x4 SP #2 N

Hipjack supports 7-0-0 setback jacks with no webs.

Plates sized for a minimum of 3.00 sq.in./piece.

* Toenail allowed based on average reaction.

110 mph wind, 15.00 ft mean hgt, ASCE 7-02, CLOSED bldg, Located anywhere in roof, CAT II, EXP B, wind TC DL=5.0 psf, wind BC DL=5.0 psf.

Deflection meets L/360 live and L/240 total load.

The overall height of this truss excluding overhang is 5-0-2.

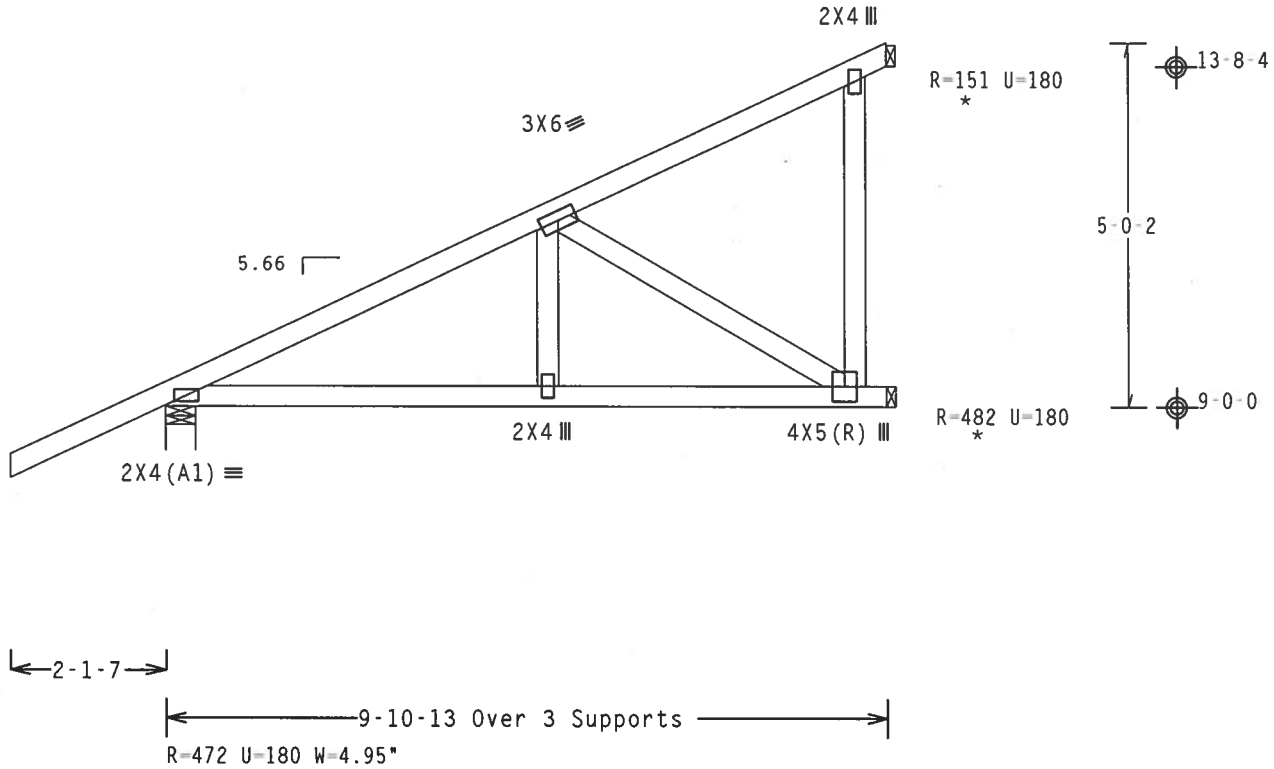

Design Crit: TPI-2002(STD)/FBC

PLT TYP. Wave\R Cq/RT=1.00(1.25)/10(0) 7.25.0503.00 QTY:4 FL/-/5/-/-/R/- Scale =.375"/Ft.

ALPINE
Alpine Engineered Products, Inc.
1950 Marley Drive
Haines City, FL 33844
FL Certificate of Authorization # 567

WARNING TRUSSES REQUIRE EXTREME CARE IN FABRICATION, HANDLING, SHIPPING, INSTALLING AND BRACING. REFER TO BCSI 1-03 (BUILDING COMPONENT SAFETY INFORMATION), PUBLISHED BY TPI (TRUSS PLATE INSTITUTE, 583 D'ONOFRIO DR., SUITE 200, MADISON, WI 53719) AND WTCA (WOOD TRUSS COUNCIL OF AMERICA, 6300 ENTERPRISE LN. MADISON, WI 53719) FOR SAFETY PRACTICES PRIOR TO PERFORMING THESE FUNCTIONS. UNLESS OTHERWISE INDICATED, TOP CHORD SHALL HAVE PROPERLY ATTACHED STRUCTURAL PANELS AND BOTTOM CHORD SHALL HAVE A PROPERLY ATTACHED RIGID CEILING.

IMPORTANTFURNISH A COPY OF THIS DESIGN TO THE INSTALLATION CONTRACTOR. ALPINE ENGINEERED PRODUCTS, INC. SHALL NOT BE RESPONSIBLE FOR ANY DEVIATION FROM THIS DESIGN; ANY FAILURE TO BUILD THE TRUSS IN CONFORMANCE WITH TPI; OR FABRICATING, HANDLING, SHIPPING, INSTALLING & BRACING OF TRUSSES DESIGN CONFORMS WITH APPLICABLE PROVISIONS OF NDS (NATIONAL DESIGN SPEC. BY AF&PA) AND TPI. ALPINE CONNECTOR PLATES ARE MADE OF 20/18/16GA (W,H/S/K) ASTM A653 GRADE 40/60 (W, K/H,S) GALV. STEEL. APPLY PLATES TO EACH FACE OF TRUSS AND, UNLESS OTHERWISE LOCATED ON THIS DESIGN, POSITION PER DRAWINGS 160A-Z. ANY INSPECTION OF PLATES FOLLOWED BY (I) SHALL BE PER ANNEX A3 OF TPI1-2002 SEC.3. A SEAL ON THIS DRAWING INDICATES ACCEPTANCE OF PROFESSIONAL ENGINEERING RESPONSIBILITY SOLELY FOR THE TRUSS COMPONENT DESIGN SHOWN. THE SUITABILITY AND USE OF THIS COMPONENT FOR ANY BUILDING IS THE RESPONSIBILITY OF THE BUILDING DESIGNER PER ANSI/TPI 1 SEC. 2.

JAMES E. MOLLINS JR. LICENSE No 52212 STATE OF FLORIDA PROFESSIONAL ENGINEER
Aug 04

TC LL	20.0 PSF	REF	R215-- 59623
TC DL	10.0 PSF	DATE	08/03/06
BC DL	10.0 PSF	DRW	HCUSR215 06215028
BC LL	0.0 PSF	HC-ENG	JK/WHK
TOT.LD.	40.0 PSF	SEQN-	133603
DUR.FAC.	1.25	FROM	CDM
SPACING	24.0"	JREF-	1SZG215_Z02

Top chord 2x4 SP #2 N
Bot chord 2x4 SP #2 N
Webs 2x4 SP #2 N

In lieu of structural panels or rigid ceiling use purlins to brace all flat TC @ 24" OC, all BC @ 24" OC.

The overall height of this truss excluding overhang is 1-2-3.

REFER TO PIGBACKA0405 OR PIGBACKB0405 FOR PIGYBACK DETAILS. TOP CHORD OF SUPPORTING TRUSS UNDER PIGGYBACK TO BE BRACED @ 24" O.C, UNLESS OTHERWISE SPECIFIED.

110 mph wind, 20.12 ft mean hgt, ASCE 7-02, CLOSED bldg, not located within 4.50 ft from roof edge, CAT II, EXP B, wind TC DL=5.0 psf, wind BC DL=1.2 psf.

Deflection meets L/360 live and L/240 total load.

Plates sized for a minimum of 3.00 sq.in./piece.

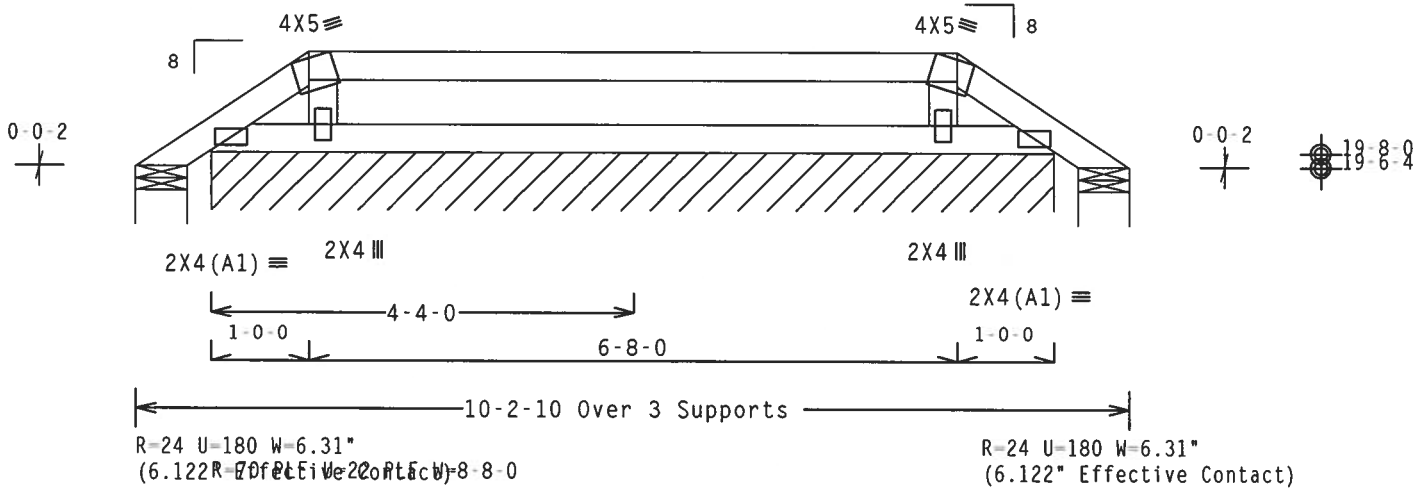

Design Crit: TPI-2002(STD)/FBC

PLT TYP. Wave\R Cq/RT=1.00(1.25)/10(0) 7.25.0503.00 QTY:2 FL/-/5/-/-/R/- Scale =.5"/Ft.

ALPINE
Alpine Engineered Products, Inc.
1950 Marley Drive
Haines City, FL 33844
FL Certificate of Authorization # 567

WARNING TRUSSES REQUIRE EXTREME CARE IN FABRICATION, HANDLING, SHIPPING, INSTALLING AND BRACING. REFER TO BCSI 1-03 (BUILDING COMPONENT SAFETY INFORMATION), PUBLISHED BY TPI (TRUSS PLATE INSTITUTE, 583 D'ONOFRIO DR., SUITE 200, MADISON, WI 53719) AND WTCA (WOOD TRUSS COUNCIL OF AMERICA, 6300 ENTERPRISE LN, MADISON, WI 53719) FOR SAFETY PRACTICES PRIOR TO PERFORMING THESE FUNCTIONS. UNLESS OTHERWISE INDICATED, TOP CHORD SHALL HAVE PROPERLY ATTACHED STRUCTURAL PANELS AND BOTTOM CHORD SHALL HAVE A PROPERLY ATTACHED RIGID CEILING.

IMPORTANT FURNISH A COPY OF THIS DESIGN TO THE INSTALLATION CONTRACTOR. ALPINE ENGINEERED PRODUCTS, INC. SHALL NOT BE RESPONSIBLE FOR ANY DEVIATION FROM THIS DESIGN; ANY FAILURE TO BUILD THE TRUSS IN CONFORMANCE WITH TPI; OR FABRICATING, HANDLING, SHIPPING, INSTALLING & BRACING OF TRUSSES. DESIGN CONFORMS WITH APPLICABLE PROVISIONS OF NDS (NATIONAL DESIGN SPEC. BY AF&PA) AND TPI. ALPINE CONNECTOR PLATES ARE MADE OF 20/18/16GA (W,H/S/K) ASTM A653 GRADE 40/60 (W, K/H,S) GALV. STEEL. APPLY PLATES TO EACH FACE OF TRUSS AND, UNLESS OTHERWISE LOCATED ON THIS DESIGN, POSITION PER DRAWINGS 160A-Z. ANY INSPECTION OF PLATES FOLLOWED BY (1) SHALL BE PER ANNEX A3 OF TPI1-2002 SEC.3. A SEAL ON THIS DRAWING INDICATES ACCEPTANCE OF PROFESSIONAL ENGINEERING RESPONSIBILITY SOLELY FOR THE TRUSS COMPONENT DESIGN SHOWN. THE SUITABILITY AND USE OF THIS COMPONENT FOR ANY BUILDING IS THE RESPONSIBILITY OF THE BUILDING DESIGNER PER ANSI/TPI 1 SEC. 2.

JAMES F. COLLINS, JR. LICENSED No. 52212 STATE OF FLORIDA PROFESSIONAL ENGINEER
Aug 0[illegible]

TC LL	20.0 PSF	REF R215-- 59624
TC DL	10.0 PSF	DATE 08/03/06
BC DL	2.0 PSF	DRW HCUSR215 06215015
BC LL	0.0 PSF	HC-ENG JK/WHK
TOT.LD.	32.0 PSF	SEQN- 133720
DUR.FAC.	1.25	FROM CDM
SPACING	24.0"	JREF- 1SZG215_Z02

Top chord 2x4 SP #2 N
Bot chord 2x4 SP #2 N
Webs 2x4 SP #2 N

In lieu of structural panels or rigid ceiling use purlins to brace all flat TC @ 24" OC, all BC @ 24" OC.

The overall height of this truss excluding overhang is 2-6-3.

REFER TO PIGBACKA0405 OR PIGBACKB0405 FOR PIGYBACK DETAILS. TOP CHORD OF SUPPORTING TRUSS UNDER PIGGYBACK TO BE BRACED @ 24" O.C, UNLESS OTHERWISE SPECIFIED.

110 mph wind, 20.78 ft mean hgt, ASCE 7-02, CLOSED bldg, not located within 4.50 ft from roof edge, CAT II, EXP B, wind TC DL=5.0 psf, wind BC DL=1.2 psf.

Deflection meets L/360 live and L/240 total load.

Plates sized for a minimum of 3.00 sq.in./piece.

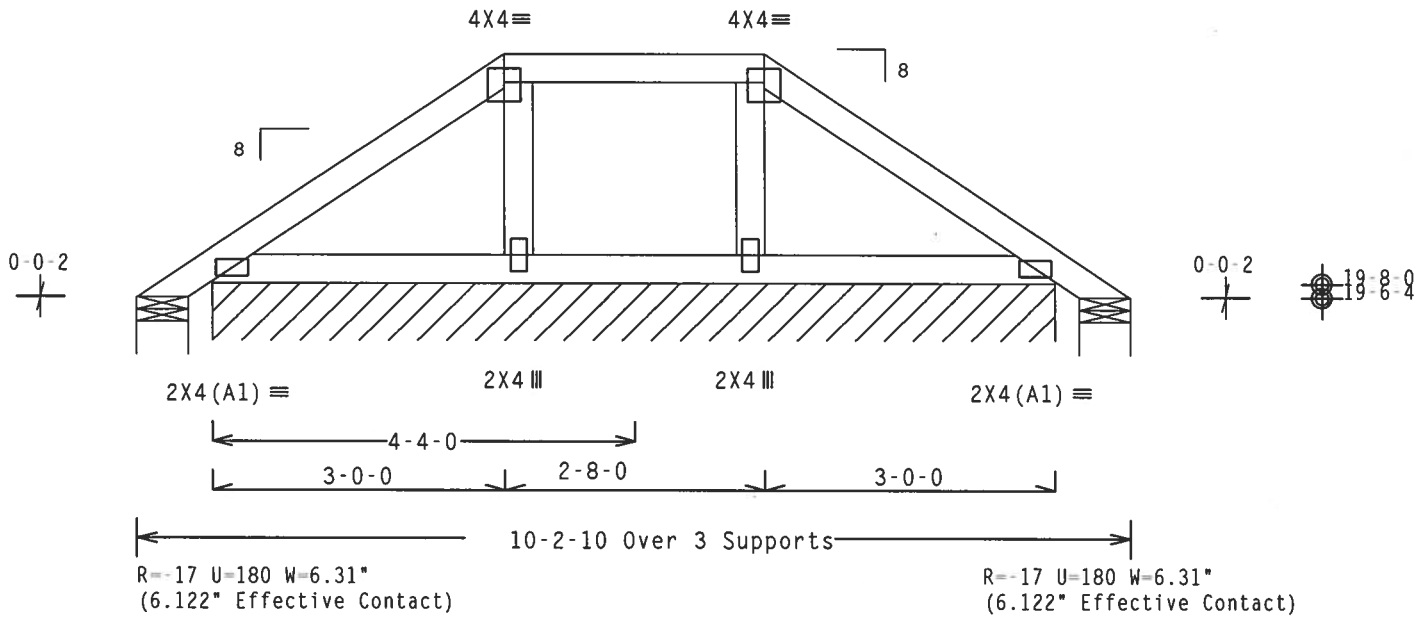

Design Crit: TPI-2002(STD)/FBC

PLT TYP. Wave\R Cq/RT=1.00(1.25)/10(0) 7.25.0503.00 QTY:2 FL/-/5/-/-/R/- Scale =.5"/Ft.

ALPINE
Alpine Engineered Products, Inc.
1950 Marley Drive
Haines City, FL 33844
FL Certificate of Authorization # 567

WARNING TRUSSES REQUIRE EXTREME CARE IN FABRICATION, HANDLING, SHIPPING, INSTALLING AND BRACING. REFER TO BCSI 1-03 (BUILDING COMPONENT SAFETY INFORMATION), PUBLISHED BY TPI (TRUSS PLATE INSTITUTE, 583 D'ONOFRIO DR., SUITE 200, MADISON, WI 53719) AND WTCA (WOOD TRUSS COUNCIL OF AMERICA, 6300 ENTERPRISE LN, MADISON, WI 53719) FOR SAFETY PRACTICES PRIOR TO PERFORMING THESE FUNCTIONS. UNLESS OTHERWISE INDICATED, TOP CHORD SHALL HAVE PROPERLY ATTACHED STRUCTURAL PANELS AND BOTTOM CHORD SHALL HAVE A PROPERLY ATTACHED RIGID CEILING.

IMPORTANTFURNISH A COPY OF THIS DESIGN TO THE INSTALLATION CONTRACTOR. ALPINE ENGINEERED PRODUCTS, INC. SHALL NOT BE RESPONSIBLE FOR ANY DEVIATION FROM THIS DESIGN; ANY FAILURE TO BUILD THE TRUSS IN CONFORMANCE WITH TPI; OR FABRICATING, HANDLING, SHIPPING, INSTALLING & BRACING OF TRUSSES. DESIGN CONFORMS WITH APPLICABLE PROVISIONS OF NDS (NATIONAL DESIGN SPEC. BY AF&PA) AND TPI. ALPINE CONNECTOR PLATES ARE MADE OF 20/18/16GA (W,H/S/K) ASTM A653 GRADE 40/60 (W, K/H,S) GALV. STEEL. APPLY PLATES TO EACH FACE OF TRUSS AND, UNLESS OTHERWISE LOCATED ON THIS DESIGN, POSITION PER DRAWINGS 160A-Z. ANY INSPECTION OF PLATES FOLLOWED BY (1) SHALL BE PER ANNEX A3 OF TPI1-2002 SEC.3. A SEAL ON THIS DRAWING INDICATES ACCEPTANCE OF PROFESSIONAL ENGINEERING RESPONSIBILITY SOLELY FOR THE TRUSS COMPONENT DESIGN SHOWN. THE SUITABILITY AND USE OF THIS COMPONENT FOR ANY BUILDING IS THE RESPONSIBILITY OF THE BUILDING DESIGNER PER ANSI/TPI 1 SEC. 2.

JAMES F. COLLINS JR. LICENSE No. 52212 STATE OF FLORIDA PROFESSIONAL ENGINEER

Aug 04,2006

TC LL	20.0 PSF	REF R215-- 59625
TC DL	10.0 PSF	DATE 08/03/06
BC DL	2.0 PSF	DRW HCUSR215 06215014
BC LL	0.0 PSF	HC-ENG JK/WHK
TOT.LD.	32.0 PSF	SEQN- 133723
DUR.FAC.	1.25	FROM CDM
SPACING	24.0"	JREF- 1SZG215_Z02

THIS DWG PREPARED FROM COMPUTER INPUT (LOADS & DIMENSIONS) SUBMITTED BY TRUSS MFR.

Top chord 2x4 SP #2 N
Bot chord 2x4 SP #2 N
Webs 2x4 SP #2 N

Plates sized for a minimum of 3.00 sq.in./piece.

REFER TO PIGBACKA0405 OR PIGBACKB0405 FOR PIGYBACK DETAILS.
TOP CHORD OF SUPPORTING TRUSS UNDER PIGGYBACK TO BE BRACED @ 24" O.C, UNLESS OTHERWISE SPECIFIED.

In lieu of rigid ceiling use purlins to brace BC @ 24" OC.

Deflection meets L/360 live and L/240 total load.

The overall height of this truss excluding overhang is 3-4-14.

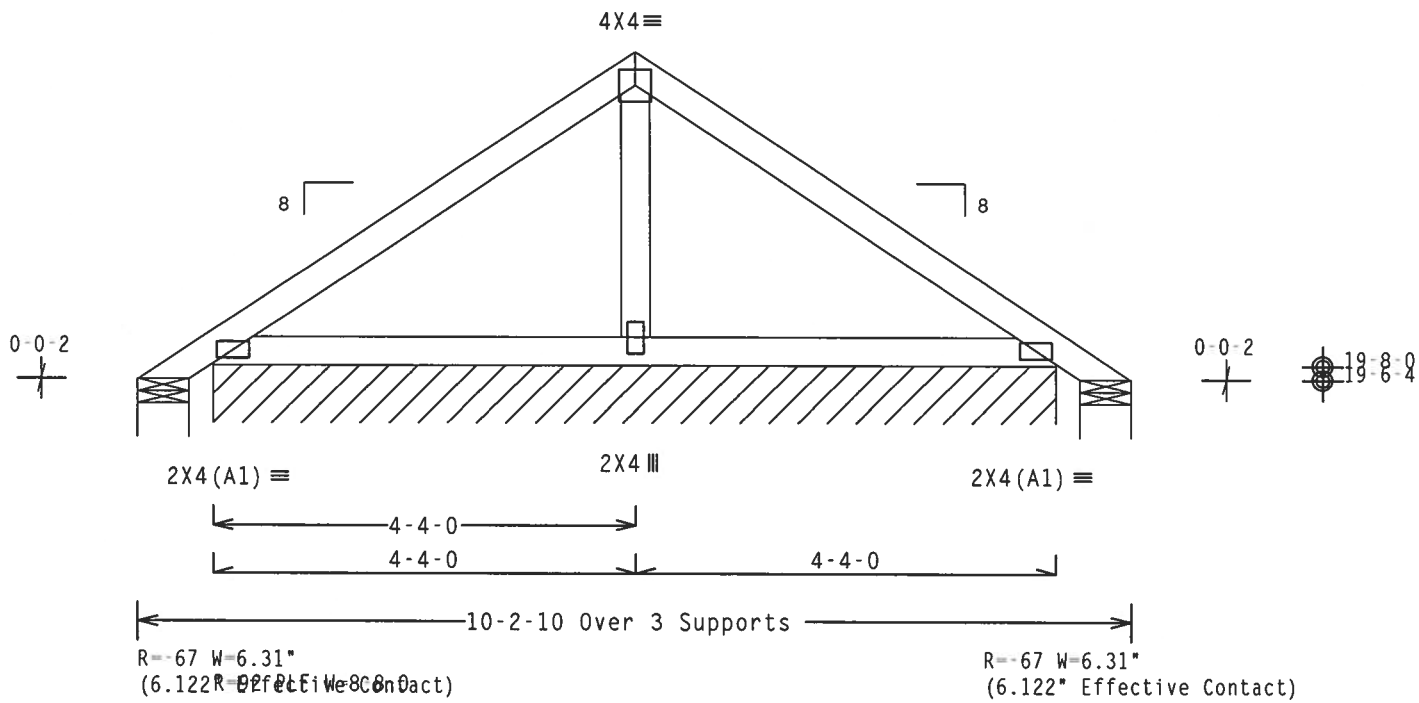

Design Crit: TPI-2002(STD)/FBC

PLT TYP. Wave\R Cq/RT=1.00(1.25)/10(0) 7.25.0503 QTY:6 FL/-/5/-/-/R/- Scale =.5"/Ft.

ALPINE
Alpine Engineered Products, Inc.
1950 Marley Drive
Haines City, FL 33844
FL Certificate of Authorization # 567

WARNING TRUSSES REQUIRE EXTREME CARE IN FABRICATION, HANDLING, SHIPPING, INSTALLING AND BRACING. REFER TO BCSI 1-03 (BUILDING COMPONENT SAFETY INFORMATION), PUBLISHED BY TPI (TRUSS PLATE INSTITUTE, 583 D'ONOFRIO DR., SUITE 200, MADISON, WI 53719) AND WTCA (WOOD TRUSS COUNCIL OF AMERICA, 6300 ENTERPRISE LN, MADISON, WI 53719) FOR SAFETY PRACTICES PRIOR TO PERFORMING THESE FUNCTIONS. UNLESS OTHERWISE INDICATED, TOP CHORD SHALL HAVE PROPERLY ATTACHED STRUCTURAL PANELS AND BOTTOM CHORD SHALL HAVE A PROPERLY ATTACHED RIGID CEILING.

IMPORTANTFURNISH A COPY OF THIS DESIGN TO THE INSTALLATION CONTRACTOR. ALPINE ENGINEERED PRODUCTS, INC. SHALL NOT BE RESPONSIBLE FOR ANY DEVIATION FROM THIS DESIGN; ANY FAILURE TO BUILD THE TRUSS IN CONFORMANCE WITH TPI; OR FABRICATING, HANDLING, SHIPPING, INSTALLING & BRACING OF TRUSSES. DESIGN CONFORMS WITH APPLICABLE PROVISIONS OF NDS (NATIONAL DESIGN SPEC. BY AF&PA) AND TPI. ALPINE CONNECTOR PLATES ARE MADE OF 20/18/16GA (W.H/S/K) ASTM A653 GRADE 40/60 (W. K/H.S) GALV. STEEL. APPLY PLATES TO EACH FACE OF TRUSS AND, UNLESS OTHERWISE LOCATED ON THIS DESIGN, POSITION PER DRAWINGS 160A-Z. ANY INSPECTION OF PLATES FOLLOWED BY (1) SHALL BE PER ANNEX A3 OF TPI1-2002 SEC.3. A SEAL ON THIS DRAWING INDICATES ACCEPTANCE OF PROFESSIONAL ENGINEERING RESPONSIBILITY SOLELY FOR THE TRUSS COMPONENT DESIGN SHOWN. THE SUITABILITY AND USE OF THIS COMPONENT FOR ANY BUILDING IS THE RESPONSIBILITY OF THE BUILDING DESIGNER PER ANSI/TPI 1 SEC. 2.

JAMES F. COLLINS JR. LICENSE No. 52212 STATE OF FLORIDA PROFESSIONAL ENGINEER
Aug 04 06

TC LL	20.0 PSF	REF R215-- 59626
TC DL	10.0 PSF	DATE 08/03/06
BC DL	2.0 PSF	DRW HCUSR215 06215024
BC LL	0.0 PSF	HC-ENG JK/WHK
TOT.LD.	32.0 PSF	SEQN- 133726
DUR.FAC.	1.25	FROM CDM
SPACING	24.0"	JREF- 1SZG215_Z02

CLB WEB BRACE SUBSTITUTION

THIS DETAIL IS TO BE USED WHEN CONTINUOUS LATERAL BRACING (CLB) IS SPECIFIED ON AN ALPINE TRUSS DESIGN BUT AN ALTERNATIVE WEB BRACING METHOD IS DESIRED.

NOTES:

THIS DETAIL IS ONLY APPLICABLE FOR CHANGING THE SPECIFIED CLB SHOWN ON SINGLE PLY SEALED DESIGNS TO T-BRACING OR SCAB BRACING.

ALTERNATIVE BRACING SPECIFIED IN CHART BELOW MAY BE CONSERVATIVE. FOR MINIMUM ALTERNATIVE BRACING, RE-RUN DESIGN WITH APPROPRIATE BRACING.

WEB MEMBER SIZE	SPECIFIED CLB BRACING	ALTERNATIVE BRACING T OR L-BRACE	ALTERNATIVE BRACING SCAB BRACE
2X3 OR 2X4	1 ROW	2X4	1-2X4
2X3 OR 2X4	2 ROWS	2X6	2-2X4
2X6	1 ROW	2X4	1-2X6
2X6	2 ROWS	2X6	2-2X4(*)
2X8	1 ROW	2X6	1-2X8
2X8	2 ROWS	2X6	2-2X6(*)

T-BRACE, L-BRACE AND SCAB BRACE TO BE SAME SPECIES AND GRADE OR BETTER THAN WEB MEMBER UNLESS SPECIFIED OTHERWISE ON ENGINEER'S SEALED DESIGN.

(*) CENTER SCAB ON WIDE FACE OF WEB. APPLY (1) SCAB TO EACH FACE OF WEB.

T-BRACING OR L-BRACING:

APPLY TO EITHER SIDE OF WEB NARROW FACE

ATTACH WITH 16d NAILS AT 6" O.C.

BRACE IS A MINIMUM 80% OF WEB MEMBER LENGTH

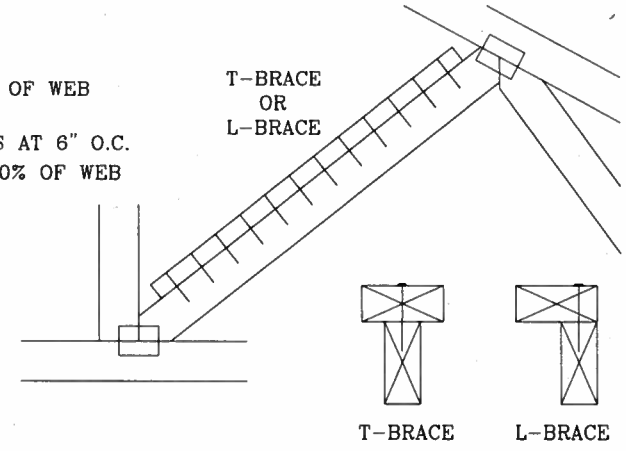

SCAB BRACING:

APPLY SCAB(S) TO WIDE FACE OF WEB.

NO MORE THAN (1) SCAB PER FACE.

ATTACH WITH 10d OR .128"x3" GUN NAILS AT 6" O.C. BRACE IS A MINIMUM 80% OF WEB MEMBER LENGTH

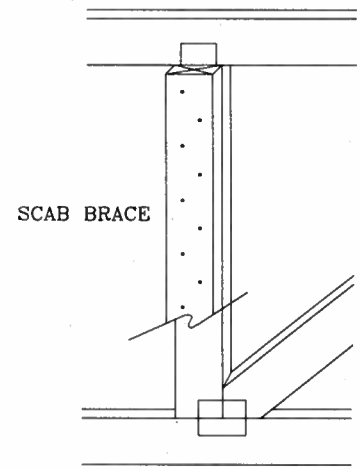

THIS DRAWING REPLACES DRAWING 579,640

ALPINE

ALPINE ENGINEERED PRODUCTS, INC.
POMPANO BEACH, FLORIDA

WARNING TRUSSES REQUIRE EXTREME CARE IN FABRICATING, HANDLING, SHIPPING, INSTALLING AND BRACING. REFER TO BCSI 1-03 (BUILDING COMPONENT SAFETY INFORMATION), PUBLISHED BY TPI (TRUSS PLATE INSTITUTE, 583 D'ONOFRIO DR., SUITE 200, MADISON, WI. 53719) AND WTCA (WOOD TRUSS COUNCIL OF AMERICA, 6300 ENTERPRISE LN, MADISON, WI 53719) FOR SAFETY PRACTICES PRIOR TO PERFORMING THESE FUNCTIONS. UNLESS OTHERWISE INDICATED, TOP CHORD SHALL HAVE PROPERLY ATTACHED STRUCTURAL PANELS AND BOTTOM CHORD SHALL HAVE A PROPERLY ATTACHED RIGID CEILING.

IMPORTANT FURNISH COPY OF THIS DESIGN TO INSTALLATION CONTRACTOR. ALPINE ENGINEERED PRODUCTS, INC., SHALL NOT BE RESPONSIBLE FOR ANY DEVIATION FROM THIS DESIGN; ANY FAILURE TO BUILD THE TRUSS IN CONFORMANCE WITH TPI; OR FABRICATING, HANDLING, SHIPPING, INSTALLING & BRACING OF TRUSSES. DESIGN CONFORMS WITH APPLICABLE PROVISIONS OF NDS (NATIONAL DESIGN SPEC, BY AF&PA) AND TPI. ALPINE CONNECTOR PLATES ARE MADE OF 20/18/16GA (W,H/S/K) ASTM A653 GRADE 40/60 (W,K/H,S) GALV. STEEL. APPLY PLATES TO EACH FACE OF TRUSS AND, UNLESS OTHERWISE LOCATED ON THIS DESIGN, POSITION PER DRAWINGS 160A-Z. ANY INSPECTION OF PLATES FOLLOWED BY (I) SHALL BE PER ANNEX A3 OF TPI 1-2002 SEC. 3. A SEAL ON THIS DRAWING INDICATES ACCEPTANCE OF PROFESSIONAL ENGINEERING RESPONSIBILITY SOLELY FOR THE TRUSS COMPONENT DESIGN SHOWN. THE SUITABILITY AND USE OF THIS COMPONENT FOR ANY BUILDING IS THE RESPONSIBILITY OF THE BUILDING DESIGNER, PER ANSI/TPI 1 SEC. 2.

JAMES F. COLLINS, JR. LICENSE No. 52213 STATE OF FLORIDA PROFESSIONAL ENGINEER

Aug 21 '03

TC LL	PSF	
TC DL	PSF	
BC DL	PSF	
BC LL	PSF	
TOT. LD.	PSF	
DUR. FAC.		
SPACING		

REF	CLB SUBST.
DATE	11/26/03
DRWG	BRCLBSUB1103
-ENG	MLH/KAR

ASCE 7-02: 110 MPH WIND SPEED, 15' MEAN HEIGHT, ENCLOSED, I = 1.00, EXPOSURE C

MAX GABLE VERTICAL LENGTH

2X4 GABLE VERTICAL SPACING	SPECIES	BRACE GRADE	NO BRACES	(1) 1X4 "L" BRACE * GROUP A	(1) 1X4 "L" BRACE * GROUP B	(1) 2X4 "L" BRACE * GROUP A	(1) 2X4 "L" BRACE * GROUP B	(2) 2X4 "L" BRACE ** GROUP A	(2) 2X4 "L" BRACE ** GROUP B	(1) 2X6 "L" BRACE * GROUP A	(1) 2X6 "L" BRACE * GROUP B	(2) 2X6 "L" BRACE ** GROUP A	(2) 2X6 "L" BRACE ** GROUP B
24" O.C.	SPF HF	#1 / #2	3' 10"	6' 8"	6' 10"	7' 11"	8' 1"	9' 5"	9' 8"	12' 5"	12' 9"	14' 0"	14' 0"
		#3	3' 9"	6' 0"	6' 0"	7' 11"	7' 11"	9' 5"	9' 5"	12' 4"	12' 4"	14' 0"	14' 0"
		STUD	3' 9"	6' 0"	6' 0"	7' 11"	7' 11"	9' 5"	9' 5"	12' 3"	12' 3"	14' 0"	14' 0"
		STANDARD	3' 9"	5' 2"	5' 2"	6' 9"	6' 9"	9' 1"	9' 1"	10' 7"	10' 7"	14' 0"	14' 0"
	SP DFL	#1	4' 3"	6' 8"	7' 2"	7' 11"	8' 6"	9' 5"	10' 2"	12' 5"	13' 5"	14' 0"	14' 0"
		#2	4' 2"	6' 8"	7' 2"	7' 11"	8' 6"	9' 5"	10' 2"	12' 5"	13' 5"	14' 0"	14' 0"
		#3	4' 0"	6' 2"	6' 2"	7' 11"	8' 1"	9' 5"	9' 11"	12' 5"	12' 8"	14' 0"	14' 0"
		STUD	4' 0"	6' 1"	6' 1"	7' 11"	8' 0"	9' 5"	9' 11"	12' 5"	12' 6"	14' 0"	14' 0"
		STANDARD	3' 10"	5' 3"	5' 3"	6' 11"	6' 11"	9' 4"	9' 4"	10' 10"	10' 10"	14' 0"	14' 0"
16" O.C.	SPF HF	#1 / #2	4' 5"	7' 8"	7' 10"	9' 1"	9' 4"	10' 10"	11' 1"	14' 0"	14' 0"	14' 0"	14' 0"
		#3	4' 4"	7' 4"	7' 4"	9' 1"	9' 1"	10' 10"	10' 10"	14' 0"	14' 0"	14' 0"	14' 0"
		STUD	4' 4"	7' 4"	7' 4"	9' 1"	9' 1"	10' 10"	10' 10"	14' 0"	14' 0"	14' 0"	14' 0"
		STANDARD	4' 4"	6' 4"	6' 4"	8' 4"	8' 4"	10' 10"	10' 10"	12' 11"	12' 11"	14' 0"	14' 0"
	SP DFL	#1	4' 10"	7' 8"	8' 3"	9' 1"	9' 9"	10' 10"	11' 8"	14' 0"	14' 0"	14' 0"	14' 0"
		#2	4' 9"	7' 8"	8' 3"	9' 1"	9' 9"	10' 10"	11' 8"	14' 0"	14' 0"	14' 0"	14' 0"
		#3	4' 6"	7' 7"	7' 7"	9' 1"	9' 6"	10' 10"	11' 4"	14' 0"	14' 0"	14' 0"	14' 0"
		STUD	4' 6"	7' 6"	7' 6"	9' 1"	9' 6"	10' 10"	11' 4"	14' 0"	14' 0"	14' 0"	14' 0"
		STANDARD	4' 5"	6' 5"	6' 5"	8' 6"	8' 6"	10' 10"	11' 1"	13' 3"	13' 3"	14' 0"	14' 0"
12" O.C.	SPF HF	#1 / #2	4' 11"	8' 5"	8' 8"	10' 0"	10' 3"	11' 11"	12' 3"	14' 0"	14' 0"	14' 0"	14' 0"
		#3	4' 9"	8' 5"	8' 5"	10' 0"	10' 0"	11' 11"	11' 11"	14' 0"	14' 0"	14' 0"	14' 0"
		STUD	4' 9"	8' 5"	8' 5"	10' 0"	10' 0"	11' 11"	11' 11"	14' 0"	14' 0"	14' 0"	14' 0"
		STANDARD	4' 9"	7' 3"	7' 3"	9' 7"	9' 7"	11' 11"	11' 11"	14' 0"	14' 0"	14' 0"	14' 0"
	SP DFL	#1	5' 4"	8' 5"	9' 1"	10' 0"	10' 9"	11' 11"	12' 10"	14' 0"	14' 0"	14' 0"	14' 0"
		#2	5' 3"	8' 5"	9' 1"	10' 0"	10' 9"	11' 11"	12' 10"	14' 0"	14' 0"	14' 0"	14' 0"
		#3	5' 0"	8' 5"	8' 5"	10' 0"	10' 6"	11' 11"	12' 6"	14' 0"	14' 0"	14' 0"	14' 0"
		STUD	5' 0"	8' 5"	8' 7"	10' 0"	10' 6"	11' 11"	12' 6"	14' 0"	14' 0"	14' 0"	14' 0"
		STANDARD	4' 11"	7' 5"	7' 5"	9' 10"	9' 10"	11' 11"	12' 3"	14' 0"	14' 0"	14' 0"	14' 0"

BRACING GROUP SPECIES AND GRADES:

GROUP A:

SPRUCE-PINE-FIR

#1 / #2	STANDARD
#3	STUD

HEM-FIR

#2	STUD
#3	STANDARD

DOUGLAS FIR-LARCH

#3
STUD
STANDARD

SOUTHERN PINE

#3
STUD
STANDARD

GROUP B:

HEM-FIR

#1 & BTR
#1

SOUTHERN PINE

#1
#2

DOUGLAS FIR-LARCH

#1
#2

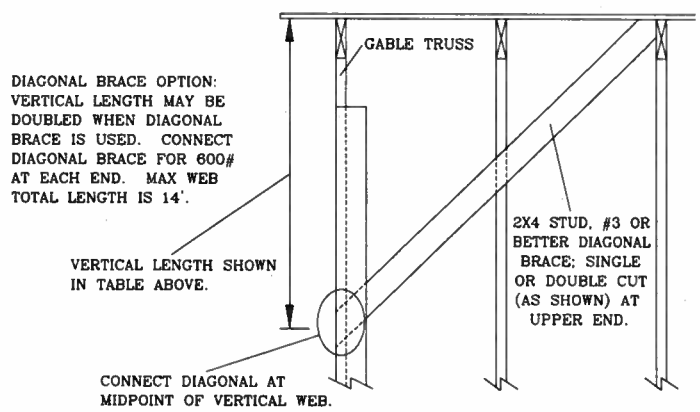

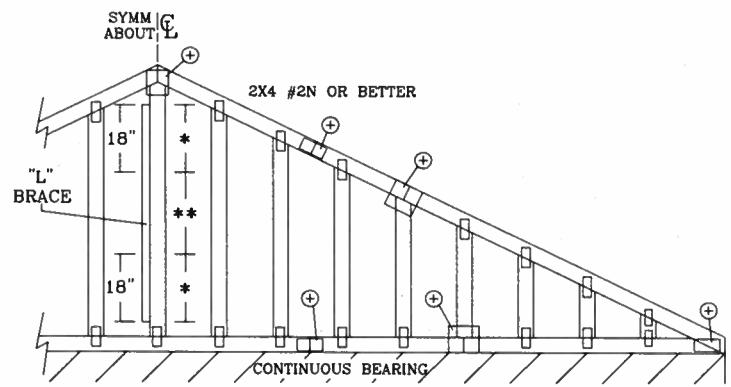

REFER TO CHART ABOVE FOR MAX GABLE VERTICAL LENGTH.

GABLE TRUSS DETAIL NOTES:

LIVE LOAD DEFLECTION CRITERIA IS L/240.

PROVIDE UPLIFT CONNECTIONS FOR 80 PLF OVER CONTINUOUS BEARING (5 PSF TC DEAD LOAD).

GABLE END SUPPORTS LOAD FROM 4' 0" OUTLOOKERS WITH 2' 0" OVERHANG, OR 12" PLYWOOD OVERHANG.

ATTACH EACH "L" BRACE WITH 10d NAILS.

* FOR (1) "L" BRACE: SPACE NAILS AT 2" O.C. IN 18" END ZONES AND 4" O.C. BETWEEN ZONES.

** FOR (2) "L" BRACES: SPACE NAILS AT 3" O.C. IN 18" END ZONES AND 6" O.C. BETWEEN ZONES.

"L" BRACING MUST BE A MINIMUM OF 80% OF WEB MEMBER LENGTH.

GABLE VERTICAL PLATE SIZES

VERTICAL LENGTH	NO SPLICE
LESS THAN 4' 0"	1X4 OR 2X3
GREATER THAN 4' 0", BUT LESS THAN 11' 6"	2X4
GREATER THAN 11' 6"	2.5X4

\+ REFER TO COMMON TRUSS DESIGN FOR PEAK, SPLICE, AND HEEL PLATES.

ALPINE

ALPINE ENGINEERED PRODUCTS, INC.
POMPANO BEACH, FLORIDA

WARNING TRUSSES REQUIRE EXTREME CARE IN FABRICATING, HANDLING, SHIPPING, INSTALLING AND BRACING. REFER TO BCSI 1-03 (BUILDING COMPONENT SAFETY INFORMATION), PUBLISHED BY TPI (TRUSS PLATE INSTITUTE, 583 D'ONOFRIO DR., SUITE 200, MADISON, WI. 53719) AND WTCA (WOOD TRUSS COUNCIL OF AMERICA, 6300 ENTERPRISE LN, MADISON, WI 53719) FOR SAFETY PRACTICES PRIOR TO PERFORMING THESE FUNCTIONS. UNLESS OTHERWISE INDICATED, TOP CHORD SHALL HAVE PROPERLY ATTACHED STRUCTURAL PANELS AND BOTTOM CHORD SHALL HAVE A PROPERLY ATTACHED RIGID CEILING.

IMPORTANT FURNISH COPY OF THIS DESIGN TO INSTALLATION CONTRACTOR. ALPINE ENGINEERED PRODUCTS, INC., SHALL NOT BE RESPONSIBLE FOR ANY DEVIATION FROM THIS DESIGN; ANY FAILURE TO BUILD THE TRUSS IN CONFORMANCE WITH TPI; OR FABRICATING, HANDLING, SHIPPING, INSTALLING & BRACING OF TRUSSES. DESIGN CONFORMS WITH APPLICABLE PROVISIONS OF NDS (NATIONAL DESIGN SPEC. BY AF&PA) AND TPI. ALPINE CONNECTOR PLATES ARE MADE OF 20/18/16GA (W,H/S/K) ASTM A653 GRADE 40/60 (W,K/H,S) GALV. STEEL. APPLY PLATES TO EACH FACE OF TRUSS AND, UNLESS OTHERWISE LOCATED ON THIS DESIGN, POSITION PER DRAWINGS 160A-Z. ANY INSPECTION OF PLATES FOLLOWED BY (I) SHALL BE PER ANNEX A3 OF TPI 1-2002 SEC. 3. A SEAL ON THIS DRAWING INDICATES ACCEPTANCE OF PROFESSIONAL ENGINEERING RESPONSIBILITY SOLELY FOR THE TRUSS COMPONENT DESIGN SHOWN. THE SUITABILITY AND USE OF THIS COMPONENT FOR ANY BUILDING IS THE RESPONSIBILITY OF THE BUILDING DESIGNER, PER ANSI/TPI 1 SEC. 2.

JAMES F. COLLINS, JR. LICENSE No. 52212 STATE OF FLORIDA PROFESSIONAL ENGINEER

Apr 04, '06

MAX. TOT. LD. 60 PSF

MAX. SPACING 24.0"

REF	ASCE7-02-GAB11015
DATE	04/15/05
DRWG	A11015EE0405
-ENG	

GABLE DETAIL
FOR LET-IN VERTICALS

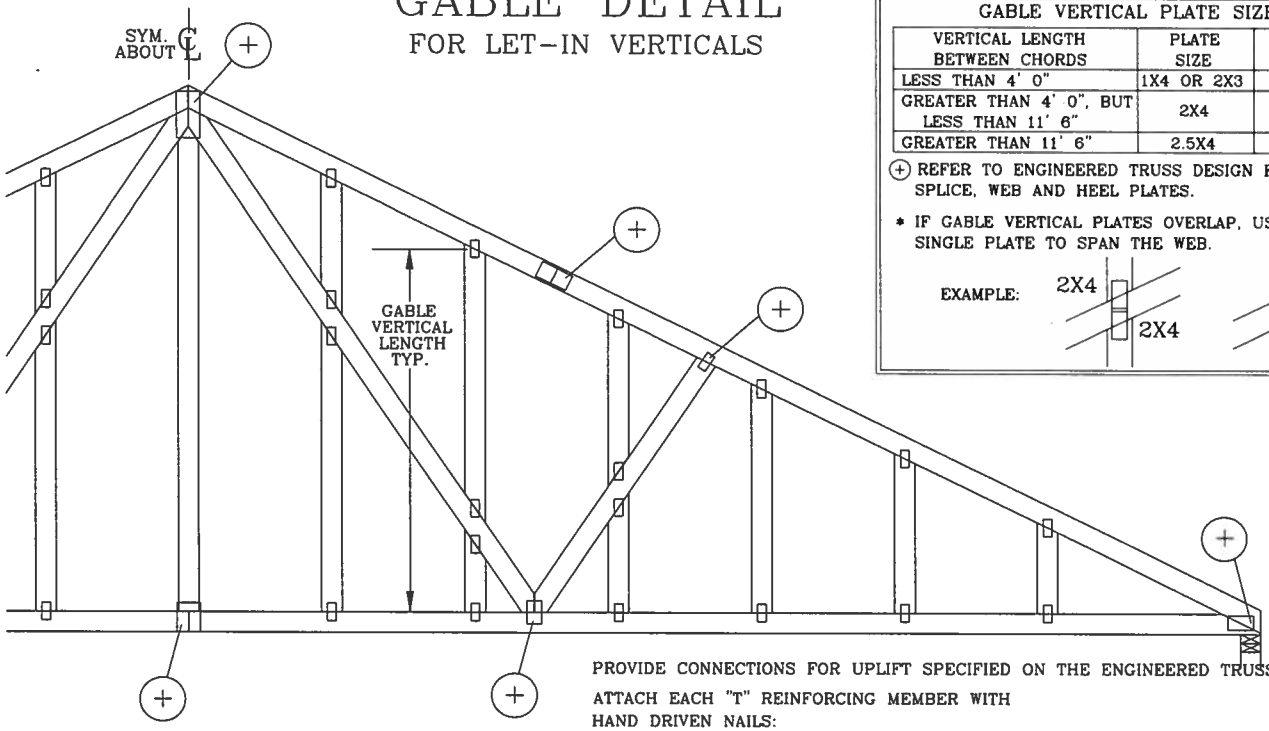

GABLE VERTICAL PLATE SIZES		
VERTICAL LENGTH BETWEEN CHORDS	PLATE SIZE	IF PLATES OVERLAP*
LESS THAN 4' 0"	1X4 OR 2X3	2X8
GREATER THAN 4' 0", BUT LESS THAN 11' 6"	2X4	2X8
GREATER THAN 11' 6"	2.5X4	2.5X8

(+) REFER TO ENGINEERED TRUSS DESIGN FOR PEAK, SPLICE, WEB AND HEEL PLATES.

* IF GABLE VERTICAL PLATES OVERLAP, USE A SINGLE PLATE TO SPAN THE WEB.

EXAMPLE:

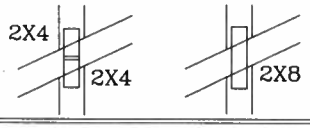

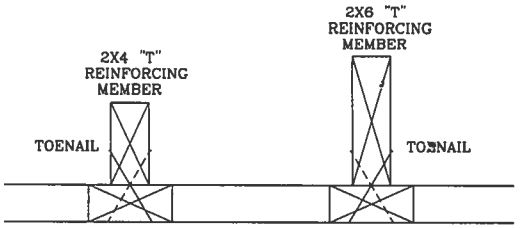

TO CONVERT FROM "L" TO "T" REINFORCING MEMBERS, MULTIPLY "T" FACTOR BY LENGTH (BASED ON GABLE VERTICAL SPECIES, GRADE AND SPACING) FOR (1) 2X4 "L" BRACE, GROUP A, OBTAINED FROM THE APPROPRIATE ALPINE GABLE DETAIL FOR ASCE OR SBCCI WIND LOAD.

MAXIMUM ALLOWABLE "T" REINFORCED GABLE VERTICAL LENGTH IS 14' FROM TOP TO BOTTOM CHORD.

WEB LENGTH INCREASE W/ "T" BRACE

WIND SPEED AND MRH	"T" REINF. MBR. SIZE	SBCCI	ASCE
110 MPH	2x4	10 %	10 %
15 FT	2x6	40 %	50 %
110 MPH	2x4	10 %	10 %
30 FT	2x6	50 %	50 %
100 MPH	2x4	10 %	10 %
15 FT	2x6	30 %	50 %
100 MPH	2x4	10 %	10 %
30 FT	2x6	40 %	40 %
90 MPH	2x4	20 %	10 %
15 FT	2x6	20 %	40 %
90 MPH	2x4	10 %	10 %
30 FT	2x6	30 %	50 %
80 MPH	2x4	10 %	20 %
15 FT	2x6	10 %	30 %
80 MPH	2x4	20 %	10 %
30 FT	2x6	20 %	40 %
70 MPH	2x4	0 %	20 %
15 FT	2x6	0 %	20 %
70 MPH	2x4	10 %	20 %
30 FT	2x6	10 %	30 %

EXAMPLE:
ASCE WIND SPEED = 100 MPH
MEAN ROOF HEIGHT = 30 FT
GABLE VERTICAL = 24" O.C. SP #3
"T" REINFORCING MEMBER SIZE = 2X4
"T" BRACE INCREASE (FROM ABOVE) = 10% = 1.10
(1) 2X4 "L" BRACE LENGTH = 6' 7"
MAXIMUM "T" REINFORCED GABLE VERTICAL LENGTH
1.10 x 6' 7" = 7' 3"

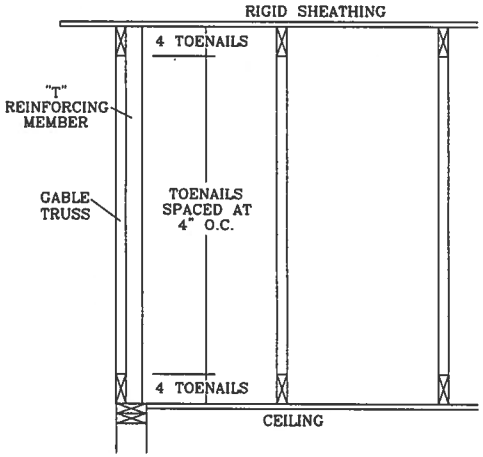

PROVIDE CONNECTIONS FOR UPLIFT SPECIFIED ON THE ENGINEERED TRUSS DESIGN.

ATTACH EACH "T" REINFORCING MEMBER WITH
HAND DRIVEN NAILS:
10d COMMON (0.148"X 3.",MIN) TOENAILS AT 4" O.C. PLUS
(4) 16d COMMON (0.162" X 3.5",MIN) TOENAILS IN TOP AND BOTTOM CHORD.

GUN DRIVEN NAILS:
8d COMMON (0.131"X 2.5",MIN) TOENAILS AT 4" O.C. PLUS
(4) TOENAILS IN TOP AND BOTTOM CHORD.

THIS DETAIL TO BE USED WITH THE APPROPRIATE ALPINE GABLE DETAIL FOR ASCE OR SBCCI WIND LOAD.
ASCE 7-93 GABLE DETAIL DRAWINGS
A11015EN1103, A10015EN1103, A09015EN1103, A08015EN1103, A07015EN1103
A11030EN1103, A10030EN1103, A09030EN1103, A08030EN1103, A07030EN1103
ASCE 7-98 GABLE DETAIL DRAWINGS
A13015EC1103, A12015EC1103, A11015EC1103, A10015EC1103, A08515EC1103
A13030EC1103, A12030EC1103, A11030EC1103, A10030EC1103, A08530EC1103
ASCE 7-02 GABLE DETAIL DRAWINGS
A13015EE0405, A12015EE0405, A11015EE0405, A10015EE0405, A08515EE0405,
A13030EE0405, A12030EE0405, A11030EE0405, A10030EE0405, A08530EE0405

SEE APPROPRIATE ALPINE GABLE DETAIL (ASCE OR SBCCI WIND LOAD) FOR MAXIMUM UNREINFORCED GABLE VERTICAL LENGTH.

THIS DRAWING REPLACES DRAWINGS GAB98117 876,719 & HC26294035

ALPINE
ALPINE ENGINEERED PRODUCTS, INC.
POMPANO BEACH, FLORIDA

WARNING TRUSSES REQUIRE EXTREME CARE IN FABRICATING, HANDLING, SHIPPING, INSTALLING AND BRACING. REFER TO BCSI 1-03 (BUILDING COMPONENT SAFETY INFORMATION), PUBLISHED BY TPI (TRUSS PLATE INSTITUTE, 583 D'ONOFRIO DR., SUITE 200, MADISON, WI. 53719) AND WTCA (WOOD TRUSS COUNCIL OF AMERICA, 6300 ENTERPRISE LN, MADISON, WI 53719) FOR SAFETY PRACTICES PRIOR TO PERFORMING THESE FUNCTIONS. UNLESS OTHERWISE INDICATED, TOP CHORD SHALL HAVE PROPERLY ATTACHED STRUCTURAL PANELS AND BOTTOM CHORD SHALL HAVE A PROPERLY ATTACHED RIGID CEILING.

IMPORTANT FURNISH COPY OF THIS DESIGN TO INSTALLATION CONTRACTOR. ALPINE ENGINEERED PRODUCTS, INC., SHALL NOT BE RESPONSIBLE FOR ANY DEVIATION FROM THIS DESIGN; ANY FAILURE TO BUILD THE TRUSS IN CONFORMANCE WITH TPI; OR FABRICATING, HANDLING, SHIPPING, INSTALLING & BRACING OF TRUSSES. DESIGN CONFORMS WITH APPLICABLE PROVISIONS OF NDS (NATIONAL DESIGN SPEC, BY AF&PA) AND TPI. ALPINE CONNECTOR PLATES ARE MADE OF 20/18/16GA (W,H/S/K) ASTM A653 GRADE 40/60 (W,K/H,S) GALV. STEEL. APPLY PLATES TO EACH FACE OF TRUSS AND, UNLESS OTHERWISE LOCATED ON THIS DESIGN, POSITION PER DRAWINGS 160A-Z. ANY INSPECTION OF PLATES FOLLOWED BY (1) SHALL BE PER ANNEX A3 OF TPI 1-2002 SEC. 3. A SEAL ON THIS DRAWING INDICATES ACCEPTANCE OF PROFESSIONAL ENGINEERING RESPONSIBILITY SOLELY FOR THE TRUSS COMPONENT DESIGN SHOWN. THE SUITABILITY AND USE OF THIS COMPONENT FOR ANY BUILDING IS THE RESPONSIBILITY OF THE BUILDING DESIGNER, PER ANSI/TPI 1 SEC. 2.

Aug 04,06

JAMES F. COLLINS, JR. LICENSE No. 52212 STATE OF FLORIDA PROFESSIONAL ENGINEER

MAX TOT. LD. 60 PSF
DUR. FAC. ANY
MAX SPACING 24.0"

REF	LET-IN VERT
DATE	04/14/05
DRWG	GBLLETIN0405
-ENG	DLJ/KAR

BEARING BLOCK NAIL SPACING DETAIL

MINIMUM SPACING FOR SINGLE BEARING BLOCK IS SHOWN. DOUBLE NAIL SPACINGS AND STAGGER NAILING FOR TWO BLOCKS. GREATER SPACING MAY BE REQUIRED TO AVOID SPLITTING.

A – EDGE DISTANCE AND SPACING BETWEEN STAGGERED ROWS OF NAILS (6 NAIL DIAMETERS)
B – SPACING OF NAILS IN A ROW (12 NAIL DIAMETERS)
C – END DISTANCE (15 NAIL DIAMETERS)

IF NAIL HOLES ARE PREBORED, SOME SPACING MAY BE REDUCED BY THE AMOUNTS GIVEN BELOW:
- • SPACING MAY BE REDUCED BY 50%
- •• SPACING MAY BE REDUCED BY 33%

BEARING BLOCK TO BE SAME SIZE AND SPECIES AS BOTTOM CHORD. BLOCKS MAY BE ANY GRADE WITHIN THE SPECIES, PROVIDED THE COMPRESSION PERPENDICULAR TO GRAIN VALUE (Fc-perp) IS AT LEAST THAT OF THE CHORD.

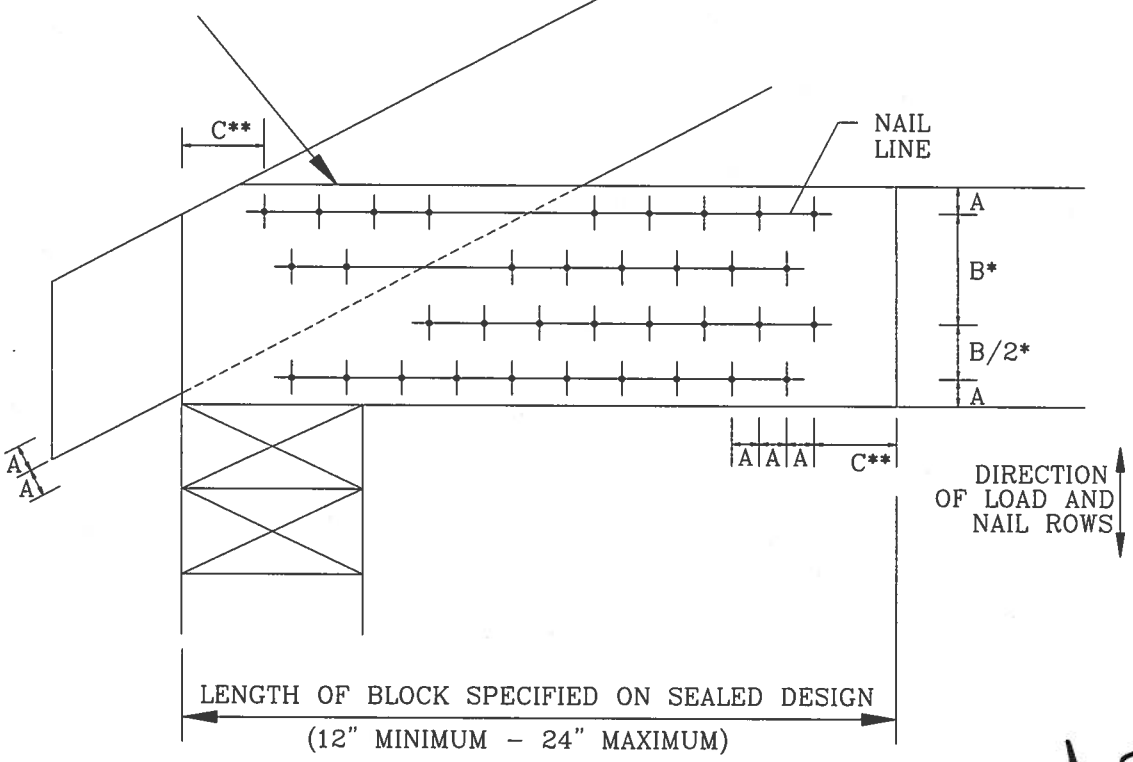

MAXIMUM NUMBER OF NAIL LINES PARALLEL TO GRAIN

NAIL TYPE	CHORD SIZE 2X4	2X6	2X8	2X10	2X12
8d BOX (0.113"X2.5")	3	6	9	12	15
10d BOX (0.128"X3")	3	5	7	10	12
12d BOX (0.128"X3.25")	3	5	7	10	12
16d BOX (0.135"X3.5")	3	5	7	10	12
20d BOX (0.148"X4")	2	4	5	6	8
8d COMMON (0.131"X2.5")	3	5	7	10	12
10d COMMON (0.148"X3")	2	4	6	8	10
12d COMMON (0.148"X3.25")	2	4	6	8	10
16d COMMON (0.162"X3.5")	2	4	6	8	10
0.120"X2.5" GUN	3	6	8	11	14
0.131"X2.5" GUN	3	5	7	10	12
0.120"X3.0" GUN	3	6	8	11	14
0.131"x3.0" GUN	3	5	7	10	12

MINIMUM NAIL SPACING DISTANCES

NAIL TYPE	DISTANCES A	B*	C**
8d BOX (0.113"X2.5")	3/4"	1 3/8"	1 3/4"
10d BOX (0.128"X3")	7/8"	1 5/8"	2"
12d BOX (0.128"X3.25")	7/8"	1 5/8"	2"
16d BOX (0.135"X3.5")	7/8"	1 5/8"	2 1/8"
20d BOX (0.148"X4")	1"	1 7/8"	2 1/4"
8d COMMON (0.131"X2.5")	7/8"	1 5/8"	2"
10d COMMON (0.148"X3")	1"	1 7/8"	2 1/4"
12d COMMON (0.148"X3.25")	1"	1 7/8"	2 1/4"
16d COMMON (0.162"X3.5")	1'	2"	2 1/2"
0.120"X2.5" GUN	3/4"	1 1/2"	1 7/8"
0.131"X2.5" GUN	7/8"	1 5/8"	2"
0.120"X3.0" GUN	3/4"	1 1/2"	1 7/8"
0.131"x3.0" GUN	7/8"	1 5/8"	2"

THIS DRAWING REPLACES DRAWING B139 AND CNBRGBLK0699

ALPINE
ALPINE ENGINEERED PRODUCTS, INC.
POMPANO BEACH, FLORIDA

WARNING TRUSSES REQUIRE EXTREME CARE IN FABRICATING, HANDLING, SHIPPING, INSTALLING AND BRACING. REFER TO BCSI 1-03 (BUILDING COMPONENT SAFETY INFORMATION), PUBLISHED BY TPI (TRUSS PLATE INSTITUTE, 583 D'ONOFRIO DR., SUITE 200, MADISON, WI. 53719) AND WTCA (WOOD TRUSS COUNCIL OF AMERICA, 6300 ENTERPRISE LN, MADISON, WI 53719) FOR SAFETY PRACTICES PRIOR TO PERFORMING THESE FUNCTIONS. UNLESS OTHERWISE INDICATED, TOP CHORD SHALL HAVE PROPERLY ATTACHED STRUCTURAL PANELS AND BOTTOM CHORD SHALL HAVE A PROPERLY ATTACHED RIGID CEILING.

IMPORTANT FURNISH COPY OF THIS DESIGN TO INSTALLATION CONTRACTOR. ALPINE ENGINEERED PRODUCTS, INC., SHALL NOT BE RESPONSIBLE FOR ANY DEVIATION FROM THIS DESIGN; ANY FAILURE TO BUILD THE TRUSS IN CONFORMANCE WITH TPI; OR FABRICATING, HANDLING, SHIPPING, INSTALLING & BRACING OF TRUSSES. DESIGN CONFORMS WITH APPLICABLE PROVISIONS OF NDS (NATIONAL DESIGN SPEC, BY AF&PA) AND TPI. ALPINE CONNECTOR PLATES ARE MADE OF 20/18/16GA (W,H/S/K) ASTM A653 GRADE 40/60 (W,K/H,S) GALV. STEEL. APPLY PLATES TO EACH FACE OF TRUSS AND, UNLESS OTHERWISE LOCATED ON THIS DESIGN, POSITION PER DRAWINGS 160A-Z. ANY INSPECTION OF PLATES FOLLOWED BY (I) SHALL BE PER ANNEX A3 OF TPI 1-2002 SEC. 3. A SEAL ON THIS DRAWING INDICATES ACCEPTANCE OF PROFESSIONAL ENGINEERING RESPONSIBILITY SOLELY FOR THE TRUSS COMPONENT DESIGN SHOWN. THE SUITABILITY AND USE OF THIS COMPONENT FOR ANY BUILDING IS THE RESPONSIBILITY OF THE BUILDING DESIGNER, PER ANSI/TPI 1 SEC. 2.

JAMES F. COLANS, JR. LICENSE No. 52242 STATE OF FLORIDA PROFESSIONAL ENGINEER

Aug 04 '06

REF	BEARING BLOCK
DATE	11/26/03
DRWG	CNBRGBLK1103
-ENG	SJP/KAR