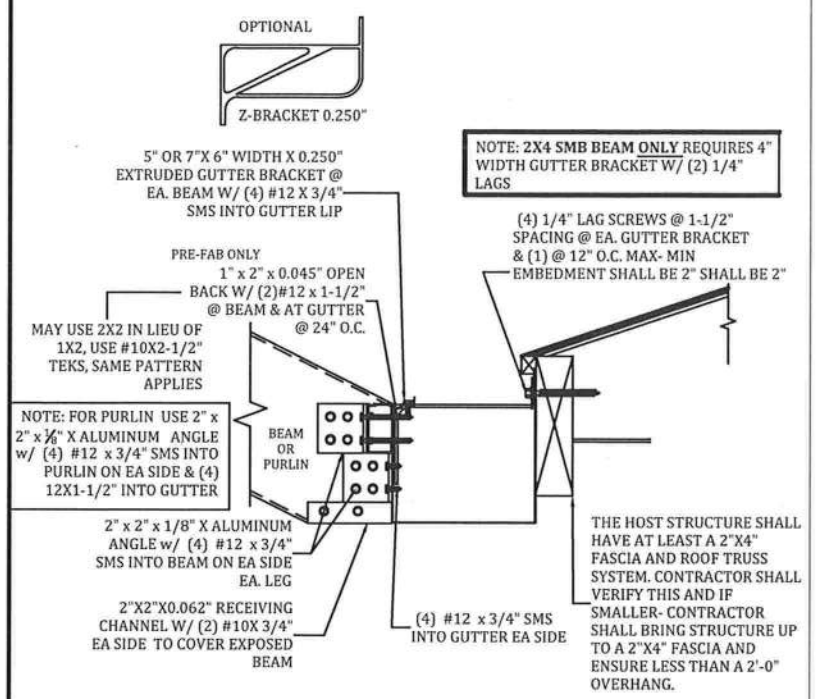

A / S-3 GUTTER BRACKET & BEAM ATTACHMENT DETAIL
N.T.S.

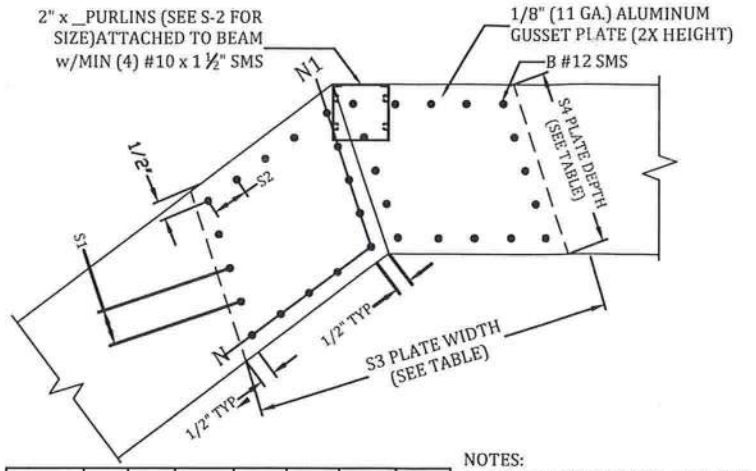

BEAM	"B"	"N"	"N1"	"S1"	"S2"	"S3"	"S4"
2X4	14	4	4	1"	1"	8"	4"
2X5	16	5	4	1 3/8"	1 1/4"	10"	5"
2X6	18	6	5	1"	1 3/16"	12"	6"
2X7	20	6	6	1"	1"	14"	7"
2X8	24	7	7	1 3/8"	1 3/8"	16"	8"
2X9	32	10	8	1 5/16"	1 1/8"	18"	9"
2X9 H	32	10	8	1 5/16"	1 1/8"	18"	9"
2X10	40	13	9	1 1/4"	7/8"	20"	10"

NOTES:
1. "N" NUMBER OF SCREWS IN ANY DIRECTION.
2. TOTAL NUMBER OF SCREWS PER JOINT EQUALS 4 TIMES "B".
3. PLATE WIDTH SHALL BE DETERMINED FROM ANGLE OF BEAM AND MIN. SPACE REQUIRED.
4. GUSSET PLATES EXTERNAL.
5. INTERNAL SCREWS FOR PURLIN CONNECTION MAY BE INCLUDED IN TOTAL NUMBER OF SCREWS.
6. GABLE SPLICE WILL HAVE THE SAME PATTERN.

B / S-3 #12 SMS BEAM SPLICE GUSSET DETAIL
SCALE: NTS

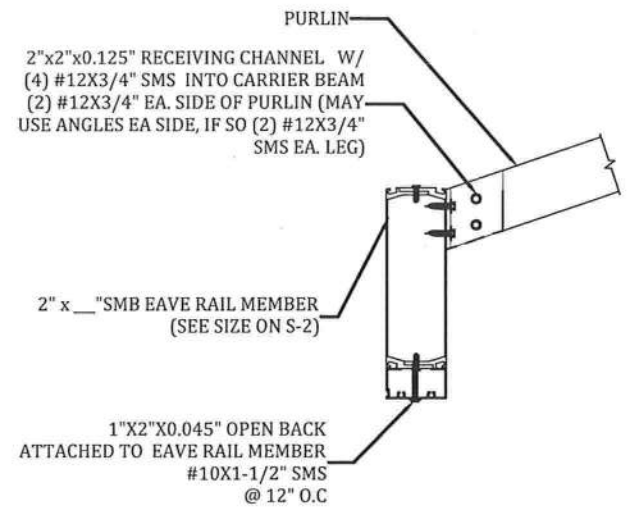

C / S-3 SLOPED OR FLAT PURLIN CONNECTION DETAIL
SCALE: NTS

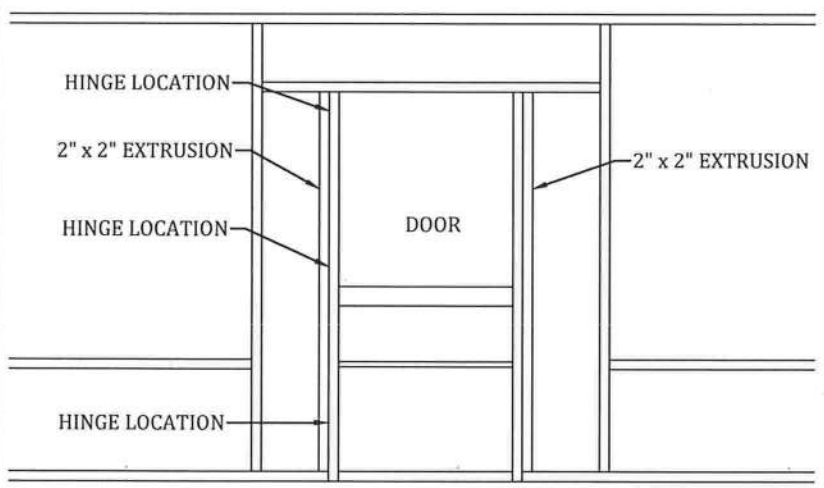

NOTES:
1. HINGES SHALL BE ATTACHED TO STRUCTURE W/ (4) #10 x 5/8" SMS MINIMUM.
2. DOOR SHALL BE ATTACHED TO ENCLOSURE w/(2) HINGES MINIMUM.
3. HINGES SHALL BE ATTACHED TO DOOR WITH (3)#10 x 5/8" SMS. FASTEN A 1" x 2" x 0.044" TO UPRIGHT W/#12 x 1" SMS @ 12" O.C. AND WITHIN 3" FROM END OF THE UPRIGHT.

F / S-3 TYPICAL SCREEN DOOR CONNECTION DETAIL
SCALE: NTS

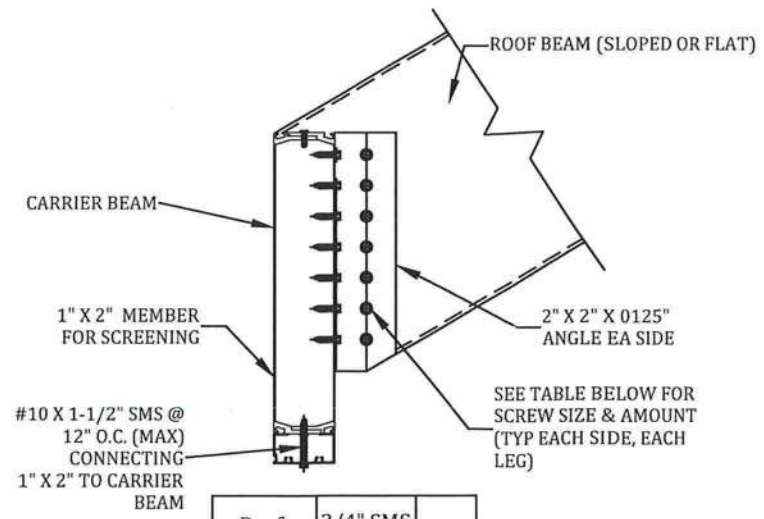

Roof Beam Size	3/4" SMS PER SIDE PER LEG OF ANGLE	QTY
2x4	#12	4
2x5	#12	5
2x6	#12	5
2x7	#14	6
2x8	#14	7
2x9	#14	8
2x10	#14	9

D / S-3 BEAM TO CARRIER BEAM CONNECTION DETAIL
SCALE: NTS

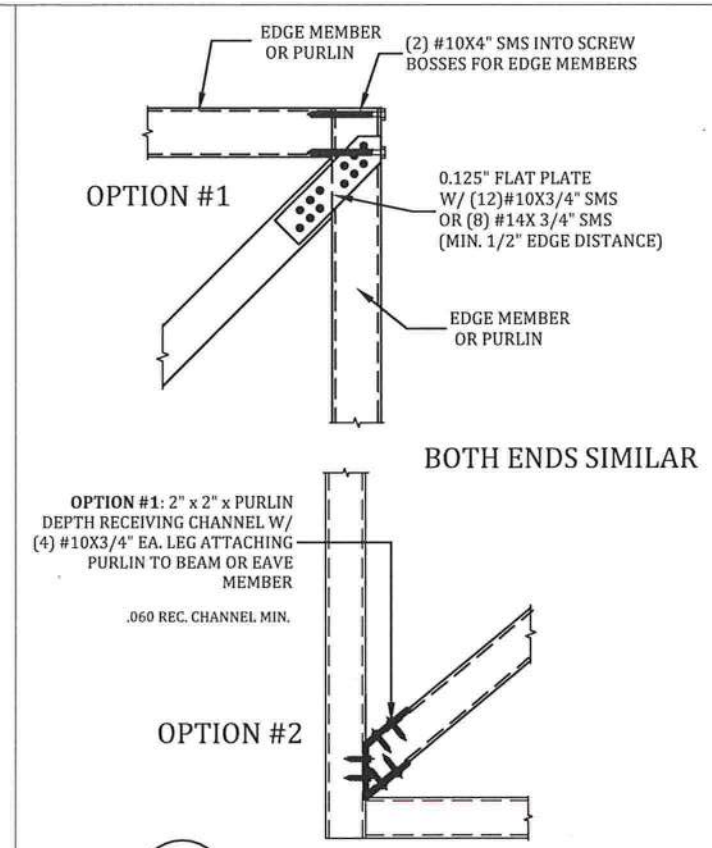

E / S-3 ROOF BRACING CONNECTION DETAIL
SCALE: N.T.S.

IAN J. FOSTER
LICENSE
No. 93654
06/28/2022
STATE OF FLORIDA
PROFESSIONAL ENGINEER
PROFESSIONAL ENGINEER SEAL

ENGINEER OF RECORD:
David W. Smith P.E.
FLORIDA LICENSE: 53608
Thomas L. Hanson P.E.
FLORIDA LICENSE: 38654
Ian J. Foster P.E.
FLORIDA LICENSE: 93654
Joel Falardeau P.E.
FLORIDA LICENSE: 70667
Erik Stuart P.E.
FLORIDA LICENSE: 77605

FBC Plans & Engineering Services, Inc.
6272 Abbott Station Dr. Unit 101
Zephyrhills, FL 33542
Ph# (813)788-5314
Fax# 1-(866)824-7894
E-mail-erb@fbcplans.com
Website-www.fbcplans.com
C.O.A.-#29054

DATE: 06/27/2022
DRAWN BY: BB

REVISION:	DATE:
RO 1	
RO 2	
RO 3	
RO 4	

Job# 22_0621_286

PROJECT ADDRESS:
SLONE
198 SW MAGPIE CT
FORT WHITE, FL 32038

CONTRACTOR:
LAKESIDE ALUMINUM, INC.

DETAILS
S-3