ABBREVIATIONS

A/C	AIR COOLING UNIT
ADJ	ADJACENT
AFF	ABOVE FINISHED FLOOR
AHU	AIR HANDLING UNIT
ALUM	ALUMINUM
BLK	BLOCK
BOT	BOTTOM
BRG	BEARING
CJ	CONTROL JOINT
CLG	CEILING
COL	COLUMN
CONC	CONCRETE
CONT	CONTINUOUS
CPT	CARPET
DIA	DIAMETER
DN	DOWN
DWG	DRAWING
EA	EACH
ELEC	ELECTRIC
EQ	EQUAL
FF	FINISH FLOOR
FTG	FOOTING
HB	HOSE BIB
HDR	HEADER
HGT	HEIGHT
MAX	MAXIMUM
MIN	MINIMUM
NTS	NOT TO SCALE
OPNG	OPENING
SIM	SIMILAR
TYP	TYPICAL
VLT	VAULT
UNO	UNLESS NOTED OTHERWISE

area tabulation 'a'

GARAGE	401	SF
FRONT PORCH	21	SF
REAR PATIO	72	SF
FLOOR 1 LIVING	1,607	SF
TOTAL LIVING	1,607	SF

area tabulation 'b'

GARAGE	401	SF
FRONT PORCH	108	SF
REAR PATIO	72	SF
FLOOR 1 LIVING	1,607	SF
TOTAL LIVING	1,607	SF

BUILDING CODE COMPLIANCE

ALL CONSTRUCTION TO COMPLY WITH LOCAL CODES AND ORDINANCE CURRENTLY IN USE WITH THE LOCAL JURISDICTION.

PRODUCT: NEW SINGLE FAMILY DETACHED

OCCUPANCY CLASSIFICATION:

RESIDENTIAL R-3

CONSTRUCTION CLASS:

UNPROTECTED

CONSTRUCTION TYPE:

TYPE VB

EMERGENCY ESCAPE:

EGRESS OR RESCUE WINDOWS FROM SLEEPING ROOMS SHALL HAVE MINIMUM OF 5.7 SQUARE FEET

APPLICABLE CODES:
FOLLOW ALL APPLICABLE STATE AND LOCAL CODES.
FLORIDA STATE SUPPLEMENTS AND AMENDMENTS.

2020 Florida Building Code, Residential, 7th Edition

2017 National Electrical Code, NFPA 70

Covington

38' - 1607 - LH

Florida Region (Frame)

INDEX

ARCHITECTURAL

CS	GENERAL NOTES & LEGENDS
A1	EXTERIOR ELEVATIONS
A2	SLAB PENETRATION PLAN
A3	FLOOR PLANS
A4	SECTIONS & DETAILS
A5	INTERIOR DETAILS
A6	ROOF PLAN
E1	ELECTRICAL PLANS
CD	CONSTRUCTION DETAILS

REVISIONS

NUMBER	DATE	DESCRIPTION
01	03.04.2021	Added Elevations A1 & B1
02	06.14.21	Added outlet to O.Suite & noted outlets to meet 6' max from wall break & 12' max between outlet spacing at habitable rooms (E1.1)
03	07.08.21	Added floor break transition strips to plan
04	07.20.21	Added elevations A4 & B4
05	08.02.21	labeled egress windows, labeled accessible bath, smoke/carbon alarms near appliances noted
06	08.30.21	Added stemwall options, called out GFI at outlets within 6'-0" of Kitchen sink
07	09.08.21	Carbon / smoke alarm moved 3' min away from bathroom door/opening with tub/shower

CENTURY Complete

FDS Engineering & Associates
238 Southhall Lane, Suite 200
Maitland, FL 32751
O: 321.972.0101 F: 321.972.0204
Certificate Of Authorization No. 9161
CARLA BROWN, PE - FL #59338
LUIS PABLO TORRES, PE - FL #87864
WWW.FDSENG.COM

Reserve at Jewel Lake
Lot 032
456 SW Jewel Lake Drive
Lake City, FL 32024

Century Communities expressly reserves its common law copyright in these plans. Plans are not to be copied, reproduced, or changed, in any manner whatsoever, nor are they to be assigned to a third party without written permission and consent of Century Communities.

PLAN NUMBER: 33811607

RELEASE DATE: 08.30.2021

MODEL: COVINGTON

DRAWING TITLE: COVER SHEET

SHEET NO: CS

Keynotes | Legend

1. CORROSION RESISTANT ROOF TO WALL FLASHING AT ALL ROOF / WALL INTERSECTIONS.
2. CORROSION RESISTANT SCREEN LOUVERED VENTS, SIZE AS NOTED.
3. BRICK WAINSCOT WITH SLOPED BRICK ROWLOCK CAP.
4. STONE WAINSCOT WITH SLOPED STONE CAP.
5. 3 1/2" VINYL TRIM SURROUND
6. 36" H. GUARDRAIL AS REQUIRED

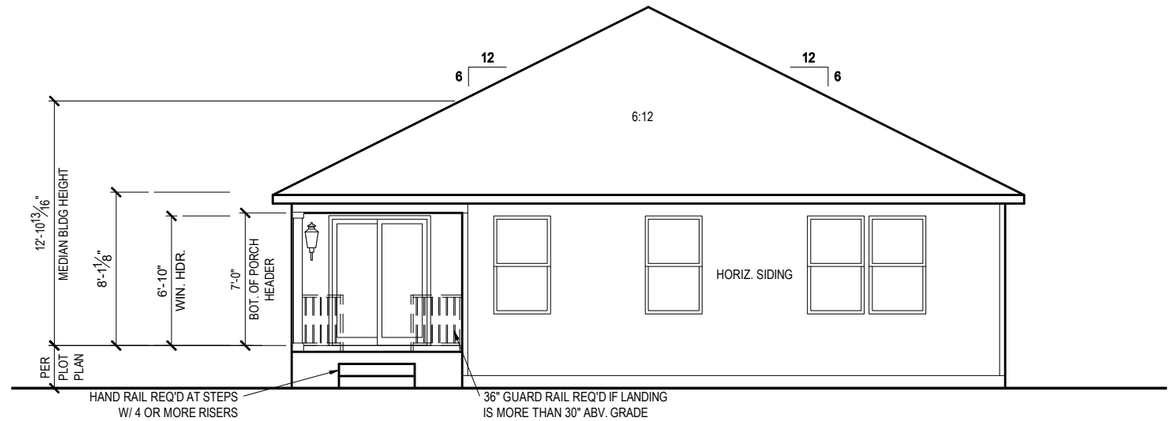

REAR ELEVATION 'A1'

1/8" = 1'-0" @ 11x17
1/4" = 1'-0" @ 22x34

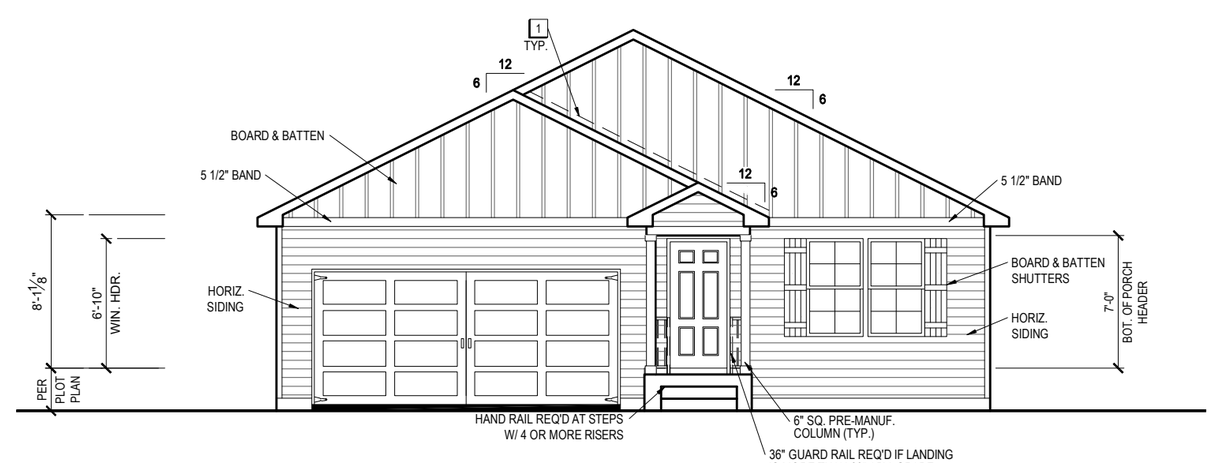

FRONT ELEVATION 'A1'

1/8" = 1'-0" @ 11x17
1/4" = 1'-0" @ 22x34

CENTURY Complete

IN THE EVENT OF AN ERROR OR OMISSION, NO PART, SECTION OR PORTION OF THE PLANS, SPECIFICATIONS, WORK DONE, OR TO BE DONE IN ACCORDANCE WITH THE PLANS, SPECIFICATIONS OR ANY ORDER, OR ANY OTHER MATERIAL OR WORK SHALL BE VALID, BINDING OR ENFORCEABLE UNLESS AND UNTIL THE SAME SHALL HAVE BEEN REVIEWED AND SEALED BY A LICENSED STRUCTURAL ENGINEER.

1-14-2022

IF SEAL AND SIGNATURE ARE NOT BLUE OR CAN NOT BE SEALED CONTACT THE E.O.R. FOR AUTHORIZATION.

FDS Engineering & Associates
238 Southhall Lane, Suite 200
Maitland, FL 32751
O: 321.972.0101 F: 407.909.2204
Certificate Of Authorization No. 9161

WWW.FDSENG.COM

☐ CARL A. BROWN, PE - FL #58338
☐ LUIS PABLO TORRES, PE - FL #87804

Reserve at Jewel Lake
Lot 032
456 SW Jewel Lake Drive
Lake City, FL 32024

Century Communities expressly reserves its common law copyright in these plans. Plans are not to be copied, reproduced, or changed, in any manner whatsoever, nor are they to be assigned to a third party without written permission and consent of Century Communities.

PLAN NUMBER: 33811607

RELEASE DATE: 08.30.2021

MODEL: COVINGTON

DRAWING TITLE: EXTERIOR ELEVATIONS - STEMWALL

SHEET NO: 1.1-A1s

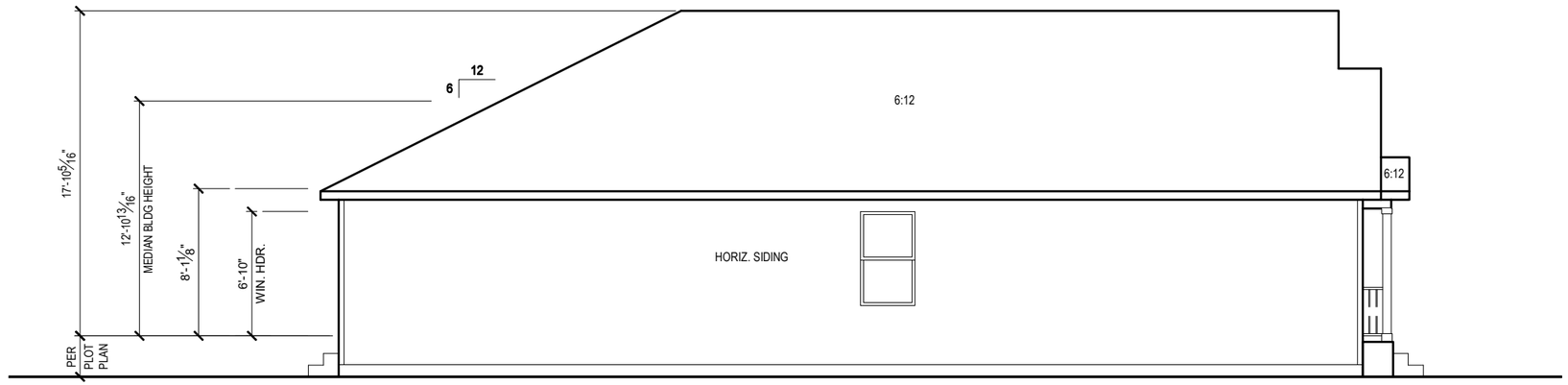

LEFT ELEVATION 'A1'

1/8" = 1'-0" @ 11x17
1/4" = 1'-0" @ 22x34

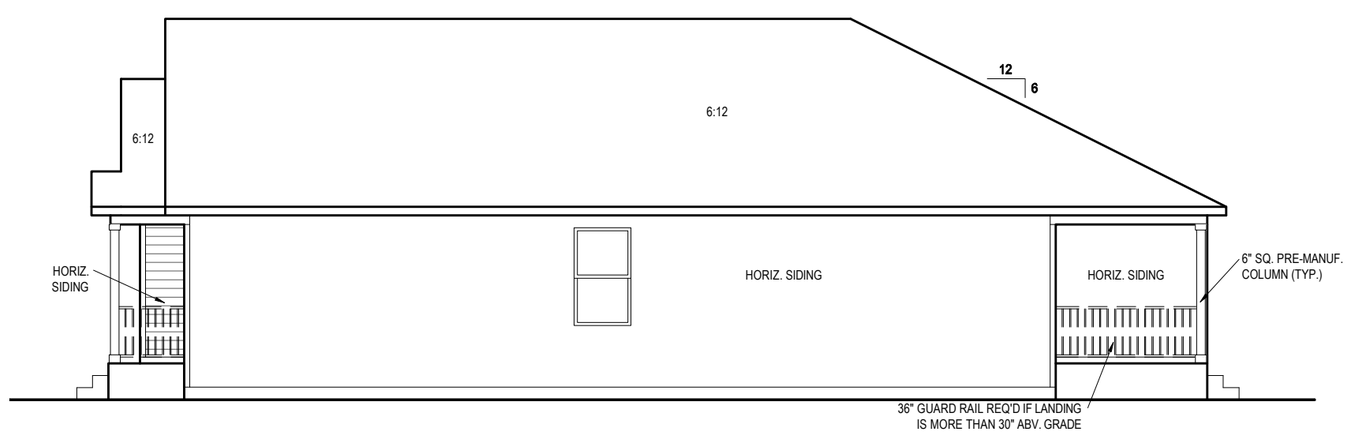

RIGHT ELEVATION 'A1'

1/8" = 1'-0" @ 11x17
1/4" = 1'-0" @ 22x34

CENTURY Complete

"IN THE EVENT OF IMPERFECT JURISDICTION, THE ARCHITECT WILL ASSUME NO RESPONSIBILITY FOR THE DESIGN, DRAWINGS, DATA, OR SPECIFICATIONS IN THIS SET, IN ACCORDANCE WITH THE ARCHITECT'S ETHICS, THE ARCHITECT'S PURPOSE IS TO PROTECT THE PUBLIC HEALTH, SAFETY & WELFARE. IN THE EVENT AN ERROR, OMISSION, OR AMBIGUITY IS FOUND, THE ARCHITECT WILL ASSUME NO RESPONSIBILITY FOR THE ERROR, OMISSION, OR AMBIGUITY, BUT WILL ASSUME RESPONSIBILITY FOR THE REMAINDER OF THE DESIGN, DRAWINGS, DATA, OR SPECIFICATIONS IN THIS SET, IN ACCORDANCE WITH 61G15-19.001(4)(b) F.A.C."

1-14-2022

"IF SEAL AND SIGNATURE ARE NOT BLUE, OR CAN NOT BE SEARCHED CONTACT THE E.O.R. FOR AUTHORIZATION."

FDS Engineering & Associates, Inc.
238 Southhall Lane, Suite 200
Maitland, FL 32751
O: 321.972.0101 F: 321.972.0204
Certificate Of Authorization No. 9161

☐ CARL A. BROWN, PE - FL # 56139
☐ LUIS PABLO TORRES, PE - FL #87804

WWW.FDSENG.COM

Reserve at Jewel Lake
Lot 032
456 SW Jewel Lake Drive
Lake City, FL 32024

Century Communities expressly reserves its common law copyright in these plans. Plans are not to be copied, reproduced, or changed, in any manner whatsoever, nor are they to be assigned to a third party without written permission and consent of Century Communities.

PLAN NUMBER: 33811607

RELEASE DATE: 08.30.2021

MODEL: COVINGTON

DRAWING TITLE: EXTERIOR ELEVATIONS - STEMWALL

SHEET NO:

1.2-A1s

GENERAL SLAB FOUNDATION NOTES

- PLUMBING CONTRACTOR SHALL FIELD VERIFY ALL PLUMBING LOCATIONS.
- REFER TO EXTERIOR ELEVATIONS FOR BRICK/STONE LOCATIONS.
- GARAGE SLAB SHALL SLOPE TOWARD GARAGE DOOR OPENING.

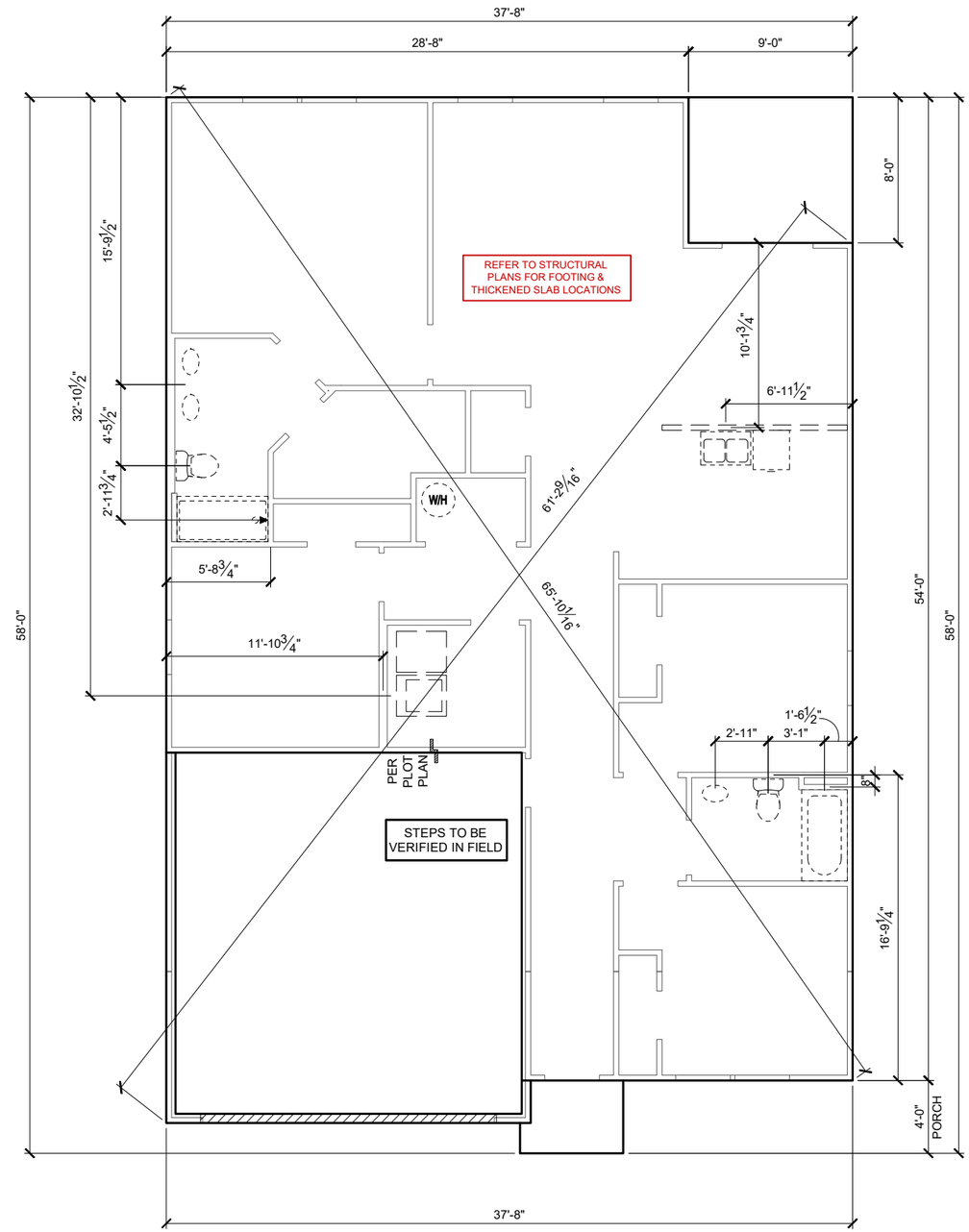

SLAB PENETRATION PLAN 'A1'

1/8" = 1'-0" @ 11x17

1/4" = 1'-0" @ 22x34

CENTURY Complete

IN THE EVENT OF AMBIGUITY, DISCREPANCY, OMISSION, OR DEFECT IN THE PLANS, SPECIFICATIONS, OR OTHER CONTRACT DOCUMENTS, THE MATTER SHALL BE REFERRED TO THE ARCHITECT FOR CLARIFICATION. FAILURE TO NOTIFY THE ARCHITECT PRIOR TO THE LATEST REASONABLE TIME WILL BE DEEMED A WAIVER OF ANY CLAIM ARISING OUT OF AMBIGUITY, DISCREPANCY, OMISSION, OR DEFECT. ANY ARCHITECTURAL SEAL, SIGNATURE OR DOCUMENT NOT BEARING AN ORIGINAL SIGNATURE IS NOT A VALID DOCUMENT.

1-14-2022

IF SEAL AND SIGNATURE ARE NOT BLUE, OR CAN NOT BE SEARCHED CONTACT THE E.O.R. FOR AUTHORIZATION.

FDS Engineering & Associates, Inc.
238 Southhall Lane, Suite 200
Maitland, FL 32751
O: 321.972.0101 F: 321.972.0204
Certificate Of Authorization No. 9161

☐ CARL A. BROWN, PE - FL #59338
☐ LUIS PABLO TORRES, PE - FL #87804

WWW.FDSENG.COM

Reserve at Jewel Lake
Lot 032
456 SW Jewel Lake Drive
Lake City, FL 32024

Century Communities expressly reserves its common law copyright in these plans. Plans are not to be copied, reproduced, or changed, in any manner whatsoever, nor are they to be assigned to a third party without written permission and consent of Century Communities.

PLAN NUMBER: 33811607

RELEASE DATE: 08.30.2021

MODEL: COVINGTON

DRAWING TITLE: SLAB PENETRATION PLAN

SHEET NO: 2.1-A

NOTES & LEGENDS

1. REFER TO ENGINEERING STRUCTURAL DRAWINGS (S-#) FOR BEARING WALL LOCATIONS AND FOR ALL BEAM & HEADER SIZES AND BEARING WALL LOCATIONS
2. ALL BEARING WALLS SHALL BE 16" O.C. WALL CONST. W/ DOUBLE TOP PLATE U.N.O.
3. ALL INTERIOR NON BEARING DOOR & WINDOW HEADERS SHALL BE (1) 2x4 OR (1) 2x6 W/VERTICAL CRIPPLERS @ 2'-0" O.C. TO MATCH WALL WIDTH UNLESS NOTED OTHERWISE.
4. (2) HOSE BIBS SHALL BE INSTALLED, LOCATION TO BE DETERMINED BY PLUMBING CONTRACTOR

OPTIONAL WINDOW | 2X4 FRAME WALL | 2X6 FRAME WALL | BALLOON FRAME WALL (PER STRUCTURALS)

KEYNOTES

A1 GARAGE CEILING - 5/8" TYPE X DRYWALL, VERTICAL SURFACE WALLS - 1/2" DRYWALL
A2 22"X30" ATTIC ACCESS CONSTRUCTED WITH GYP. BD. (5/8" TYPE X AT GARAGE) WITH DOOR TRIM FRAME ACCESS SUPPORT
A3 PROVIDE 6" MIN. FLAT CLG AT ANGLED CLG CONDITION
A4 PULL DOWN STAIRS 25.5" x 54"
A5 TEMPERED SAFETY GLASS PER IRC R308.4
A6 HOUSE TO GARAGE DOOR SEPARATION. PROVIDE APPROVED 20 MINUTE RATED DOOR PER IRC 302.5.1
A7 A/C CONDENSER PAD. REFER TO SITE PLAN FOR FINAL LOCATION. VERIFY CONNECTION TO CONC. PAD W/ MANUF. SPECS
A8 1/2" TYPE X DRYWALL AT ACCESSIBLE AREAS UNDER STAIRS
A9 LOUVERED DOOR w/ GAS FURNACE

D1 DRYWALL SOFFIT - 12" DROP FROM CEILING LINE
D2 DRYWALL SOFFIT - 8" DROP FROM CEILING LINE

K1 39" KNEE WALL WITH CAP PER SPECS
K2 38" KNEE WALL WITH 1x CAP
K3 46" KNEE WALL WITH CAP PER SPECS
K4 34 1/2" KNEE WALL
K5 42" KNEE WALL WITH 1x CAP
K6 KNEE WALL WITH 1x CAP 42" ABOVE STAIR NOSING OR LANDING

P1 30" X 60" SHOWER ENCLOSURE PER SPECS
P2 30"X60" TUB PER SPECS

S1 BOX STAIR WITH 38" KNEE WALL & 1X CAP
S2 1X CAPPED STRINGER, TOP AT 3" ABOVE TREAD
S3 HANDRAIL AT +36" ABV. STAIR NOSING OR LANDING

area tabulation 'a'

GARAGE	401	SF
FRONT PORCH	21	SF
REAR PATIO	72	SF
FLOOR 1 LIVING	1,607	SF
TOTAL LIVING	1,607	SF

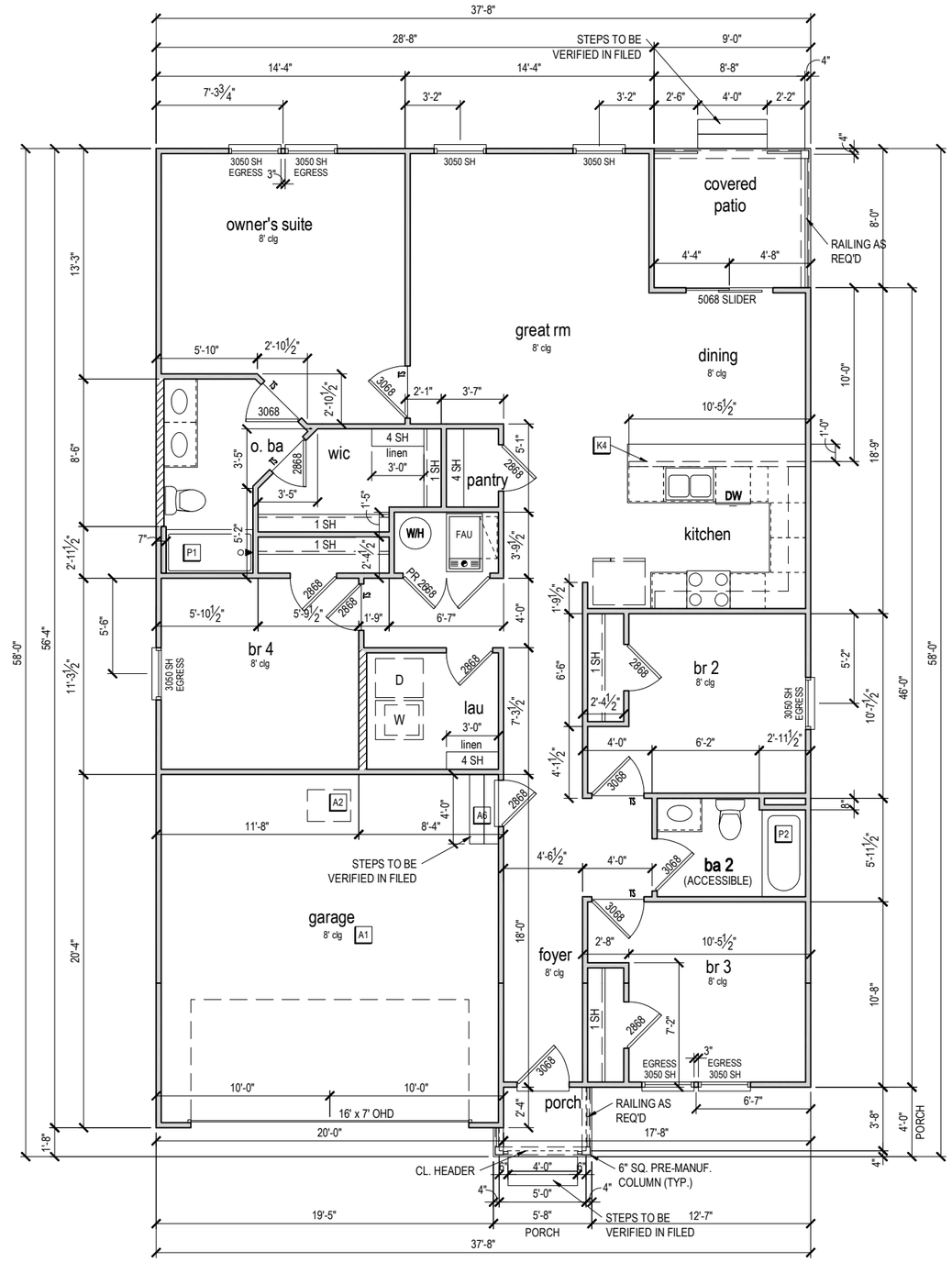

FIRST FLOOR PLAN 'A'

1/8" = 1'-0" @ 11x17
1/4" = 1'-0" @ 22x34

CENTURY Complete

THE SEAL OF AN ARCHITECT AUTHORIZED BY THE STATE OF FLORIDA TO PRACTICE ARCHITECTURE, AS SET FORTH IN CHAPTER 481, FLORIDA STATUTES, SHALL BE AFFIXED TO THIS DOCUMENT. THE ARCHITECT'S SEAL AUTHORIZES THE ARCHITECT TO ASSUME RESPONSIBILITY FOR THE WORK SHOWN ON THIS DOCUMENT. THE ARCHITECT WILL ASSUME RESPONSIBILITY FOR WORK SHOWN ON THIS DOCUMENT ONLY IF THE ARCHITECT'S SEAL IS AFFIXED TO IT. IN ADDITION, THE ARCHITECT WILL ASSUME RESPONSIBILITY FOR WORK SHOWN ON THIS DOCUMENT ONLY IF THE ARCHITECT'S SEAL IS AFFIXED TO THE ORIGINAL DOCUMENT OR TO A COPY OF THE ORIGINAL DOCUMENT. IT IS A VIOLATION OF LAW FOR ANY PERSON, UNLESS THEY ARE ACTING UNDER THE DIRECTION OF A PROFESSIONAL ARCHITECT, TO ALTER AN ARCHITECTURAL DOCUMENT IN ANY WAY. SECTIONS 455.227(1) AND 455.651(6), FLORIDA STATUTES, 1997 EDITION.

1-14-2022

IF SEAL AND SIGNATURE ARE NOT BLUE OR CAN NOT BE SEEN/READ CONTACT THE E.O.R. FOR AUTHORIZATION.

FDS Engineering & Associates
238 Southhall Lane Suite 200
Maitland, FL 32751
O: 321.972.0101 F: 407.909.3204
Certificate Of Authorization No. 9161
WWW.FDSENG.COM

☐ CARL A. BROWN, PE - FL # 58338
☐ LUIS PABLO TORRES, PE - FL #87804

Reserve at Jewel Lake
Lot 032
456 SW Jewel Lake Drive
Lake City, FL 32024

Century Communities expressly reserves its common law copyright in these plans. Plans are not to be copied, reproduced, or changed, in any manner whatsoever, nor are they to be assigned to a third party without written permission and consent of Century Communities.

PLAN NUMBER: 33811607
RELEASE DATE: 08.30.2021

MODEL: COVINGTON
DRAWING TITLE: FIRST FLOOR PLAN - STEMWALL

SHEET NO: 3.1-As

ATTIC VENT CALCULATION

ATTIC VENTILATION TO COMPLY w/ F.B.C RESIDENTIAL CODE. THE REQUIRED NET FREE VENTILATING AREA OF NOT LESS THAN 1/150 OF THE SPACE VENTILATED. AREA MAY BE REDUCED TO 1/300 PROVIDED THAT 40 TO 50 PERCENT OF THE REQ'D VENTILATING AREA IS PROVIDED IN THE UPPER PORTION OF THE SPACE TO BE VENTILATED AT LEAST 3 FEET ABOVE EAVE OR CORNICE WITH THE BALANCE OF THE REQ'D VENTILATION PROVIDED BY THE EAVE OR CORNICE VENTS.

MANUFACTURE SELECTED TO VERIFY THE NET FREE VENTILATION OF THE VENT PRODUCT SELECTED AND TO MAINTAIN THE REQUIRED VENTILATION.

DO NOT LOCATE VENTS ON ROOF PLANE(S) FACING STREET.

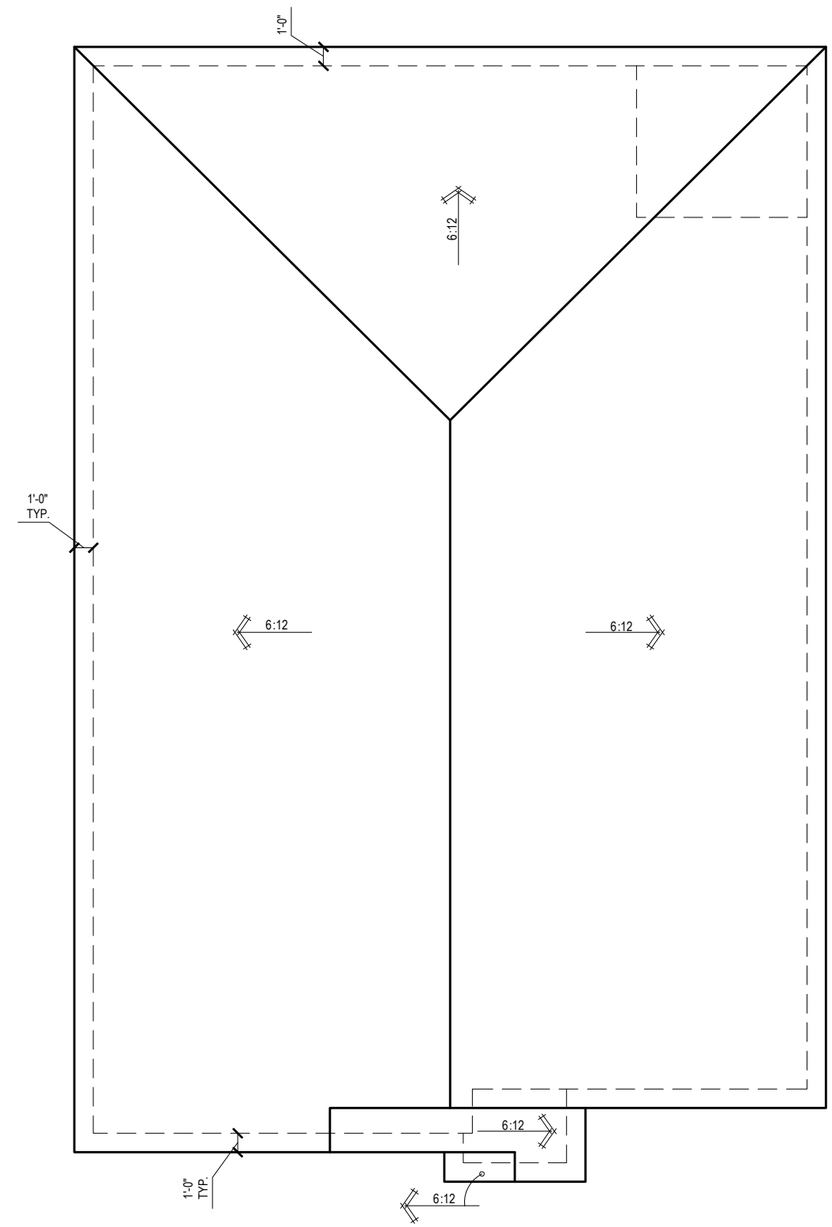

ROOF VENTILATION CALCULATIONS

ROOF AREA	2,296 SF		
TOTAL NET FREE AREA REQ'D (1 TO 300)	1102.1 SQ. IN.		
MAIN HOUSE INLET (SOFFIT) VENTILATION	95.0 LF x	6.4 SQ. IN / LINEAR FT =	608.0 SQ. IN.
POD VENT(S) REQUIRED WITH BASE HOUSE	8	VENTS AT 70.0 SQ. IN EA. =	560.0 SQ. IN.
LOWER VENTING PROVIDED (551.0 SQ. IN. REQ'D)	608.0 SQ. IN	52.1%	
UPPER VENTING PROVIDED (551.0 SQ. IN. REQ'D)	560.0 SQ. IN	47.9%	

NOTE: TYPICAL VENTILATION INCLUDES:
1. SOFFIT VENTS
(AREA: 6.4 SQ. IN PER FOOT - VERIFY WITH MANUFACTURE)
2. LOMANCO 770" ATTIC VENT LOCATED 12" MIN. FROM RIDGE
(AREA: 70 SQ. IN. - VERIFY W MANUFACTURE)
*(1) LOMANCO 770D VENT AT 140 S.I. EA.CAN BE USED IN PLACE OF (2) 770 VENTS.

ROOF PLAN 'A'

1/8" = 1'-0" @ 11x17
1/4" = 1'-0" @ 22x34

CENTURY Complete

IN THE ABSENCE OF COMPANY AUTHORIZED LICENSED SEAL, THE ATTACHED PLANS, SPECIFICATIONS, REPORTS, DOCUMENTS, OR DATA SHALL NOT BE VALID, AND SHALL NOT BE RELIED UPON OR USED FOR ANY PURPOSE WHATSOEVER. THE ATTACHED PLANS, SPECIFICATIONS, REPORTS, DOCUMENTS, OR DATA SHALL NOT BE VALID UNLESS ACCOMPANIED BY A VERIFICATION OF THE ENGINEER OF RECORD STATING THAT THE ATTACHED PLANS, SPECIFICATIONS, REPORTS, DOCUMENTS, OR DATA ARE ACCURATE, IN ACCORDANCE WITH THE ENGINEER OF RECORD'S SEALED PLANS, SPECIFICATIONS, REPORTS, DOCUMENTS, OR DATA. BY: K.E.B.

1-14-2022

IF SEAL AND SIGNATURE ARE NOT BLUE OR CAN NOT BE SEALED CONTACT THE E.O.R. FOR AUTHORIZATION.

FDS Engineering & Associates
238 Southeast Lake Suite 200
Maitland, FL 32751
O: 321-972-0101 F: 321-200-2204
Certificate Of Authorization No. 9161
☐ CARL A. BROWN, PE - FL #56139
☐ LUIS PABLO TORRES, PE - FL #87804
WWW.FDSENG.COM

Reserve at Jewel Lake
Lot 032
456 SW Jewel Lake Drive
Lake City, FL 32024

Century Communities expressly reserves its common law copyright in these plans. Plans are not to be copied, reproduced, or changed, in any manner whatsoever, nor are they to be assigned to a third party without written permission and consent of Century Communities.

PLAN NUMBER: 33811607
RELEASE DATE: 08.30.2021
MODEL: COVINGTON
DRAWING TITLE: ROOF PLAN
SHEET NO: 6.1-A

ELECTRICAL LEGEND

SWITCH	110v RECEPTACLE
3 WAY SWITCH	110v SWITCHED RECEPTACLE
4 WAY SWITCH	110v ABOVE COUNTER RECEPTACLE. GFI PROTECTED AT KITCHEN, BATH & LAUNDRY
WALL MOUNTED LIGHT	110v DEDICATED RECEPTACLE FOR SECURITY/STRUCTURED WIRING PANEL
LED DOWNLIGHT VP=VAPOR PROTECTED	GFI OUTLET
DISCONNECT	220v RECEPTACLE
CEILING FIXTURE OUTLET B = BRACE FOR FUTURE FAN, H = HANGING, P = OPT. PENDANT	110v FLOOR RECEPTACLE
SMOKE DETECTOR	DISPOSAL
SMOKE/CARBON MONOXIDE ALARM	CHIME
	BATH EXHAUST FAN
	CEILING FAN PREWIRE WITH BRACING FOR FUTURE FAN

- PROVIDE ADDITIONAL EXTERIOR WEATHERPROOF RECEPTACLE WITHIN 15 FEET OF CONDENSING UNITS
- INSTALL GFCI AND ARC FAULT CIRCUIT IINTERRUPTER PROTECTION PER NEC SECTIONS 210.52G
- ALL GARAGE OUTLETS SHALL BE ON A DEDICATED CIRCUIT
- IONIZATION SMOKE ALARMS WITH AN ALARM-SILENCING SWITCH SHALL NOT BE INSTALLED LESS THAN 10 FEET (3048 MM) HORIZONTALLY FROM A PERMANENTLY INSTALLED COOKING APPLIANCE.
- DWGS. ARE DIAGRAMMATICAL & INDICATE THE GENERAL ARRANGEMENT OF THE ELECTRICAL WORK. ANY DISCREPANCIES ON THE DOCUMENTS SHALL BE CALLED TO THE ARCHITECT'S ATTENTION PRIOR TO THE COMMENCEMENT OF WORK. DO NOT SCALE ELECTRICAL DRAWINGS.

KEYNOTES

E1	ELECTRICAL PANEL PER SPECS
E2	INSTALL GFI OUTLET UNDER SINK FOR FUTURE DISPOSAL
E3	DOOR CHIME TRANSFORMER LOCATION
E4	MECHANICAL ROOMS TO INCLUDE KEYLESS LIGHT, PLUG AND DISCONNECT FOR AIR HANDLER
E5	COACH LIGHT ONLY IF REQUIRED BY LOCAL MUNICIPALITY. INSTALL AT 68" AFF
E6	INSTALL COACH LIGHT AT 68" AFF

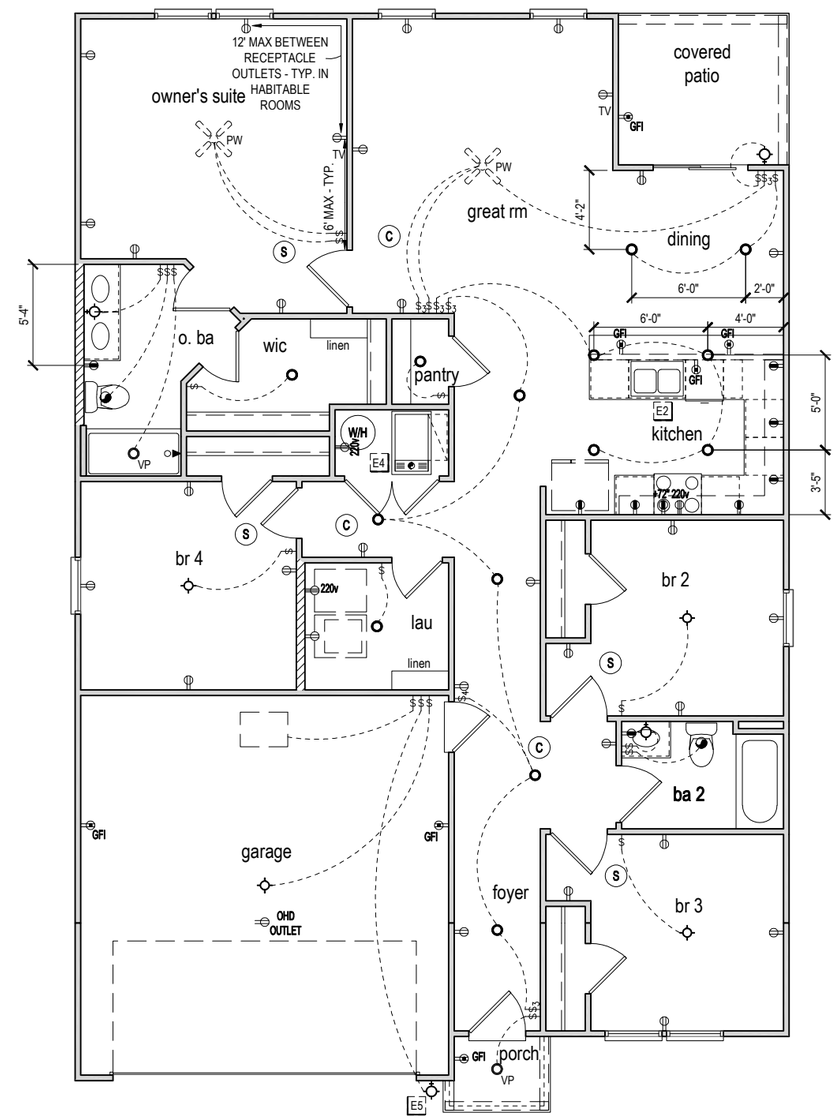

FIRST FLOOR ELECTRICAL PLAN 'A'

1/8" = 1'-0" @ 11x17
1/4" = 1'-0" @ 22x34

CENTURY Complete

1-14-2022

Reserve at Jewel Lake
Lot 032
456 SW Jewel Lake Drive
Lake City, FL 32024

Century Communities expressly reserves its common law copyright in these plans. Plans are not to be copied, reproduced, or changed, in any manner whatsoever, nor are they to be assigned to a third party without written permission and consent of Century Communities.

PLAN NUMBER: 33811607
RELEASE DATE: 08.30.2021

MODEL: COVINGTON
DRAWING TITLE: FIRST FLOOR ELECTRICAL

SHEET NO: E1.1

CENTURY COMPLETE
38-1607 COVINGTON A LH

REVISION SUMMARY

NO.	DATE	REVISION DESCRIPTION	DESIGNER

ABBREVIATIONS

A.B.	Anchor Bolt	Flr. Sys.	Floor System	PSF	Pounds per square foot
Abv.	Above	F.O.M.	Face Of Masonry	P.T.	Pressure Treated
Adj.	Adjustable	Ft.	Foot / Feet	Rad.	Radius
A.F.F.	Above Finished Floor	Ftg.	Footing	Req'd.	Required
ALT.	Alternate	Galv.	Galvanized	Rm.	Room
Bm.	Beam	G.C.	General Contractor	Rnd.	Round
B/Beam	Bottom of Beam	G.F.I.	Ground Fault Interrupter	S.F.	Square Ft.
Brg.	Bearing	G.T.	Girder Truss	SHT	Sheet
Cant.	Cantilever	Hdr.	Header	S.L.	Side Lights
Cir.	Circle	Hgt.	Height	S.P.F.	Spruce Pine Fir
Clg.	Ceiling	Int.	Interior	Sq.	Square
CJ	Control Joint	K/Wall	Kneewall	S.Y.P.	Southern Yellow Pine
Col.	Column	L.F.	Linear Ft.	Thik'n.	Thicken
Cont.	Continuous	Mas.	Masonry	T.O.B.	Top of Block
Dbl.	Double	Max	Maximum	T.O.M.	Top of Masonry
Dia.	Diameter	Min	Minimum	T.O.P.	Top of Plate
Ea.	Each	M.L.	Microlam	Trans.	Transom Window
E.W.	Each Way	Mir.	Mirror	Typ.	Typical
Elec.	Electrical	Mono	Monolithic	U.N.O.	Unless Noted Otherwise
Elev.	Elevation	N.T.S.	Not to Scale	Vert.	Vertical
E.O.R	Engineering or Record	O.C.	On center	V.L.	Versalam
Ext.	Exterior	Opn'g.	Opening	VTR	Vent through Roof
Exp.	Expansion	Opt.	Optional	W	Washer
F.B.C.	Florida Bldg. Code	Pc.	Piece	W/	With
Fin. Flr.	Finished Floor	P.L.	Parallam	W.A.	Wedge Anchor
Flr.	Floor	PLF	Pounds per linear foot	Wd	Wood
Fdn.	Foundation	Plt. Ht.	Plate Height	WP	Water Proof

TERMITE SPECIFICATIONS

SECTION R318 PROTECTION AGAINST TERMITES

TERMITE PROTECTION SHALL BE PROVIDED BY REGISTERED TERMITICIDES, INCLUDING SOIL APPLIED PESTICIDES, BAITING SYSTEMS, AND PESTICIDES APPLIED TO WOOD, OR OTHER APPROVED METHODS OF TERMITE PROTECTION LABELED FOR USE A PREVENTIVE TREATMENT TO NEW CONSTRUCTION (SEE SECTION 202, REGISTERED TERMITICIDE). UPON COMPLETION OF THE APPLICATION OF THE TERMITE PROTECTIVE TREATMENT, A CERTIFICATE OF COMPLIANCE SHALL BE ISSUED TO THE BUILDING DEPARTMENT BY THE LICENSED PEST CONTROL COMPANY THAT CONTAINS THE FOLLOWING STATEMENT: "THE BUILDING HAS RECEIVED A COMPLETE TREATMENT FOR THE PREVENTION OF SUBTERRANEAN TERMITES. TREATMENT IS IN ACCORDANCE WITH RULES AND LAWS ESTABLISHED BY THE FLORIDA DEPARTMENT OF AGRICULTURE AND CONSUMER SERVICES."

NOTES:

1. METHOD OF TREATMENT SHALL BE APPROVED BY THE GOVERNING JURISDICTION "LIQUID BORATE OR BOR-A-COR" PRODUCT METHODS MUST BE DETERMINED AT PERMIT STAGE AND PRODUCT APPROVAL DATA MUST BE ON FILE WITH THE BUILDING DEPARTMENT.
2. PRESSURE TREATED LUMBER THAT HAS BEEN CUT OR DRILLED THAT EXPOSES UNTREATED PORTIONS OF WOOD ARE REQUIRED TO BE FIELD TREATED TO PREVENT INSECT INFESTATION.
3. OPTIONAL BORATE APPLIED TO ALL FRAME MEMBERS WITHIN 24" A.F.F.

- -NOTICE TO BUILDER AND ALL SUBCONTRACTORS- -

IT IS THE INTENT OF THE ENGINEER LISTED IN THE TITLEBLOCK OF THESE DOCUMENTS THAT THESE DOCUMENTS BE ACCURATE, PROVIDING LICENSED PROFESSIONALS CLEAR INFORMATION. EVERY ATTEMPT HAS BEEN MADE TO PREVENT ERROR. THE BUILDER AND ALL SUBCONTRACTORS ARE REQUIRED TO:

1. REVIEW ALL THE INFORMATION CONTAINED IN THESE DOCUMENTS, PRIOR TO THE COMMENCEMENT OF ANY WORK. THE ENGINEER ARE NOT RESPONSIBLE FOR ANY PLAN ERRORS, OMISSIONS, OR MISINTERPRETATIONS UNDETECTED AND NOT REPORTED TO THE ENGINEER PRIOR TO CONSTRUCTION.
2. SHALL STRICTLY OBSERVE ALL APPLICATION CODES DURING THE COURSE OF CONSTRUCTION INCLUDING ALL STATE, CITY, AND COUNTY BUILDING, ZONING, ELECTRICAL, MECHANICAL, PLUMBING AND FIRE CODES. CONTRACTOR SHALL VERIFY ALL CODE REQUIREMENTS PRIOR TO COMMENCEMENT OF WORK.
3. THE ARCHITECT / ENGINEER SHALL NOT BE RESPONSIBLE FOR SAFETY PROCEDURES, THE MEANS AND METHODS OF CONSTRUCTION, TECHNOLOGIES, OR THE CONTRACTION TO CARRY OUT THE WORK IN ACCORDANCE WITH THE DRAWINGS AND SPECIFICATIONS OR RELATED CODES.
4. THE FRAMING PLAN SHOWN INDICATES THE "TRUSS SYSTEM" AND IS THE RESPONSIBILITY OF THE TRUSS SYSTEM ENGINEER (DESIGN PROFESSIONAL OF RECORD). THE TRUSS DESIGN ENGINEER (DELEGATED ENGINEER) HAS FINAL, RESPONSIBILITY FOR EACH INDIVIDUAL TRUSS AND TRUSS PROFILE, AND IS TO SUBMIT A FINAL SET OF TRUSS ENGINEERING SIGNED AND SEALED TRUSS DRAWINGS TO DESIGN PROFESSIONAL OF RECORD FOR REVIEW PRIOR TO FABRICATION
5. ANY DISCREPANCY OR ERROR IN DIMENSIONS OR NOTES WITH IN THIS PLAN SHALL BE BROUGHT TO THE ATTENTION OF THE DESIGN PROFESSIONAL FOR CLARIFICATION PRIOR TO CONSTRUCTION.
6. ALL CONSTRUCTION MUST BE IN ACCORDANCE TO THE INFORMATION FOUND IN THESE DOCUMENTS. ANY QUESTIONS REGARDING THE INFORMATION FOUND IN THESE PLANS SHOULD BE DIRECTED TO OUR QUALITY ASSURANCE MANAGER AT 321-972-0491 IMMEDIATELY. NO BACK CHARGES WILL BE CONSIDERED FOR REIMBURSEMENT BY THE THE ENGINEER WITHOUT ADVANCED NOTIFICATION AND APPROVAL BY THE ENGINEER. PAYMENTS WILL BE MADE IN ACCORDANCE TO THE TERMS OF THE AGREEMENT.

HOME MAINTENANCE & INSPECTIONS

YEARLY MAINTENANCE AND INSPECTIONS BY THE BUILDER/HOMEOWNER ARE NECESSARY FOR THE FUTURE LIFE OF THIS HOME. CARE MUST BE TAKEN TO CHECK WINDOWS AND DOORS FOR CAULKING, REMOVE LEAVES AND DEBRIS OFF ROOFS, MAKE SURE THAT WATER FLOW IS AWAY FROM THE HOUSE AND HAVE YOUR HOME REPAINTED EVERY 3 - 5 YEARS TO PROTECT THE COATINGS. THE DESIGNER AND ENGINEER OF RECORD ARE NOT RESPONSIBLE FOR THE UPKEEP OF THE HOME AND WILL NOT BE HELD LIABLE FOR INSTANCES THAT MAY OCCUR OVER THE NORMAL LIFE OF THE HOME WITHOUT PROPER MAINTENANCE.

GENERAL STRUCTURAL NOTES

CAST IN PLACE REINFORCED CONCRETE

1. ALL CONCRETE SHALL HAVE A MINIMUM COMPRESSIVE STRENGTH AT 28 DAYS OF 2500 PSI (SLABS) 3000 PSI (COLUMNS AND BEAMS), A SLUMP OF 5" PLUS OR MINUS 1", AND HAVE 2 TO 5% AIR ENTRAINMENT, AND A MAXIMUM WATER/CEMENT RATIO OF 0.63
2. HOOKS SHALL BE PROVIDED AT DISCONTINUOUS ENDS OF ALL TOP BARS OF BEAMS.
3. HORIZONTAL FOOTING BARS SHALL BE BENT 25" AROUND CORNERS OR CORNER BARS WITH A 25" LAP PROVIDED EA WAY.
4. CONCRETE COVER MIN. 3" WHEN EXPOSED TO EARTH OR 1 1/2" TO FORM U.N.O.
5. FIBER MESH LENGTH SHALL BE ⅔" TO 2", DOSAGE AMOUNT SHALL BE FROM 1.0 TO 1.5 LBS PER CUBIC YARD IN ACCORDANCE WITH THE MANUFACTURER'S AND SHALL COMPLY WITH ASTM C116
6. ALL REINFORCING STEEL / STIRRUPS AND TIES SHALL BE NEW DOMESTIC DEFORMED BARS FREE FROM RUST,SCALE & OIL & SHALL MEET ASTM A615/ A615M GRADE 60 U.N.O. REINFORCING FOR FOOTING SHALL BE SUPPORTED ON PRE-CAST CONCRETE PADS, STEEL WIRE OR PLASTIC SUPPORT. TOP REINFORCING SHALL BE POSITIVELY SUPPORTED BY TEMPORARY STRINGERS. DOWELS FOR COLUMNS & FILLED CELLS SHALL BE SECURED IN PLACE BY USING ADDITIONAL CROSS- REINFORCING TIED TO FOOTING REINFORCING. SPLICES IN REINFORCING WHERE PERMITTED SHALL BE AS PER DETAIL **M505/D1**.
7. HIGH STRENGTH SIMPSON SET EPOXY-TIE WAS USED IN THE DESIGN OF THIS PRODUCT. IF CONTRACTORS WISH TO USE A DIFFERENT EPOXY, THEY MUST FIRST CONTACT THE ENGINEER OF RECORD FOR WRITTEN APPROVAL.
8. WHERE PROJECT IS TO BE LOCATED IN KNOWN RADON GAS PREVALENT AREAS, APPENDIX "R" OF THE FLORIDA BUILDING CODE 7TH EDITION (2020) RESIDENTIAL IS TO BE IMPLEMENTED. F303.4 CONCRETE STRENGTH IN THESE AREAS ARE TO BE A MINIMUM OF 3000 P.S.I. THEREFORE, ANY AND ALL NOTES ON THESE PLANS THAT INDICATE 2500 P.S.I. SHALL BE REPLACED WITH 3000 P.S.I. FOR THE CONCRETE STRENGTH.

MASONRY

1. HOLLOW LOAD BEARING UNITS SHALL BE NORMAL WEIGHT, GRADE N, TYPE 2, CONFORMING TO ASTM C90-014, WITH A MINIMUM NET COMPRESSIVE STRENGTH OF 2000 PSI (fm = 2000 PSI)
2. MORTAR SHALL BE TYPE "S", CONFORMING TO ASTM C270-14A.
3. COARSE GROUT SHALL CONFORM TO ASTM C476-10 WITH A MAXIMUM AGGREGATE SIZE OF 3/8" AND A MINIMUM COMPRESSIVE STRENGTH AT 28 DAYS OF 3000 PSI SLUMP 8" TO 11". CONTINUOUS MASONRY INSPECTIONS ARE REQUIRED DURING CONSTRUCTION
4. GRADE 60 U.N.O. VERTICAL REINFORCEMENT SHALL BE AS NOTED ON THE DRAWINGS WITH THE CELLS FILLED WITH COARSE GROUT.
5. GRADE 60 U.N.O.VERTICAL REINFORCEMENT SHALL BE HELD IN POSITION AT THE TOP AND BOTTOM AND AT A MAXIMUM SPACING OF 192 DIA OR 10FT WHICH EVER IS LESS. REINFORCING SHALL BE PLACED IN THE CENTER OF THE MASONRY CELL WITH MIN 1/2" CLEARANCE TO INSIDE FACE.
6. REINFORCING STEEL SHALL BE LAPPED PER DETAIL **MS05/D1**, UNLESS OTHERWISE NOTED ON THE DRAWINGS.
7. GROUT STOPS SHALL BE PROVIDED BELOW BOND BEAM. PLASTIC SCREEN, METAL LATH STRIP OR CAVITY CAPS MAY BE USED TO PREVENT THE FLOW OF GROUT INTO CELLS BELOW. THE USE OF FELT PAPER AS A STOP IS PROHIBITED.
8. TEMPORARY BRACING AND SHORING OF WALL TO PROVIDE STABILITY DURING CONSTRUCTION SHALL BE THE RESPONSIBILITY OF THE CONTRACTOR
9. TYPICAL FILLED CELL REINFORCING SIZE AND SPACING SHALL BE ABOVE AND BELOW ALL WALL OPENINGS
10. DO NOT APPLY UNIFORM LOADS TO MASONRY WALLS FOR (3) DAYS AND NO CONCENTRATED LOADS FOR (7) DAYS. PER CODE ACI 318-14
11. CONSOLIDATE POURS EXCEEDING 12" IN HEIGHT BY MECHANICAL VIBRATION, AND RECONSOLIDATE BY MECHANICAL VIBRATION AFTER INITIAL WATER LOSS AND SETTLEMENT HAS OCCURRED. GROUT SHALL BE FLUSH WITH TOP OF WALL.

WOOD

1. ALL EXTERIOR WOOD STUDS WALLS, BEARING WALLS, SHEAR WALLS, AND MISC. STRUCTURAL WOOD FRAMING MEMBERS,(I.E. BLOCKING OR GABLE END BRACING) SHALL BE EITHER AS SPECIFIED IN PLAN OR IN DETAILS. IF CONFLICTS OCCUR BETWEEN PLAN AND DETAILS, THE STRONGEST MATERIAL SHALL BE USED. AT A MINIMUM, ALL WOOD STRUCTURAL FRAMING MEMBERS SHALL BE SPF #2.
2. ALL LUMBER SPECIFIED ON DRAWINGS ARE INTENDED FOR DRY USE ONLY (MOISTURE CONTENT 19% OR LESS), U.N.O. ALL WATERPROOFING AND FIRE SAFETY SYSTEMS ARE THE RESPONSIBILITY OF THE CONTRACTOR AND ARE TO BE DESIGNED AND DETAILED BY OTHERS
3. ANY WOOD FRAME INTERIOR BEARING WALL STUDS THAT HAVE NOTCHES IN THE CENTER OF THE STUD UP TO 1" DIA. SHALL HAVE STUD PROTECTION SHIELDS. ALL HOLES OVER 1" IN DIA. FOR PLUMBING LINES, ETC. SHALL BE REPAIRED WITH SIMPSON HSS2 STUD SHOES,TYP., U.N.O.
4. MANY OF THE NEW PRESSURE TREATED WOODS USE CHEMICALS THAT ARE CORROSIVE TO STEEL. IT IS THE CONTRACTOR'S RESPONSIBILITY TO VERIFY THE TYPE OF WOOD TREATMENT AND TO SELECT APPROPRIATE CONNECTORS THAT RESIST CORROSION. FOR EXAMPLE, ACQ-C, ACQ-D, CBA-A OR CA-B REQUIRE HOT-DIPPED GALVANIZED OR STAINLESS STEEL FASTENERS. DOT SODIUM BORATE (SBX) DOES NOT.
5. ALL EXPOSED WOOD OR WOOD IN CONTACT WITH EARTH OR CONCRETE TO BE PRESSURE TREATED.
6. UNTREATED WOOD SHALL NOT BE IN DIRECT CONTACT WITH CONCRETE OR MASONRY. SEAT PLATES SHALL BE PROVIDED AT BEARING LOCATIONS WITHOUT WOODEN TOP PLATES.
7. SEE PLAN FOR STUD PACK AND BEAM NAILING PATTERNS
8. ALL ENGINEERED LUMBER TO HAVE THE FOLLOWING MIN VALUES U.N.O.
   PARALLAM COLUMNS: 1.8E Fb = 2400 PSI
   MICROLAM (LVL) BEAMS: 2.0E Fb= 2600 PSI
   GULLAM BEAMS: SP/SP 24F-V5 LAYUP (1.7E FB=2400 PSI) MIN.
9. SEE PLAN NOTE FOR ADDITIONAL ROOF, WALL, SHEAR WALL AND FLOOR SHEATHING REQUIREMENTS ALONG W/ NAILING INFORMATION OTHERWISE:
   9.1. ROOF DECK: PLYWOOD C-C/C-D, EXTERIOR OR OSB
   9.2. FLOOR SHEATHING: T&G A-C GROUP 1 APA RATED (48/24) SHEATHING SHALL FINISH FLUSH TO EXTERIOR WALL FACE.
   9.3. WALL SHEATHING: ⅞" STRUCTURAL I OSB EXPOSURE 1 OR ⅞" RATED OSB EXPOSURE 1 (SPECIFIC GRAVITY, G=0.50, MIN.). A MINIMUM ¼" SPACE IS RECOMMENDED BETWEEN PANELS AT EDGE AND END JOINTS TO ALLOW FOR EXPANSION. PER R604.3 SHEATHING SHALL NOT BE USED AS WEATHER RESISTANCE BARRIER UNLESS SPECIFIED.
10. LATH AND LATH ATTACHMENTS SHALL BE OF CORROSION-RESISTANT MATERIALS. EXPANDED METAL OR WOVEN WIRE LATH SHALL BE ATTACHED TO WOOD SHEATHING WITH ½" LONG, 11 GAGE NAILS HAVING A 7/16" HEAD, OR 1 ½" LONG, 16 GAGE STAPLES, SPACED IN ACCORDANCE WITH ASTM C1062 OR C1787, OR AS OTHERWISE APPROVED (REF. 2020 FBC-R-R703.7.1).

STRUCTURAL STEEL

1. MATERIAL SPECIFICATIONS: WIDE FLANGE SECTIONS: ASTM A992, GRADE 50, Fy=50 KSI TUBE STEEL (HSS): ASTM A500, GRADE B, Fy = 46 KSI PIPE STEEL: ASTM F3125, TYPE E OR S, Fy = 35 KSI ALL OTHER STRUCTURAL & MISC. STEEL: A36 Fy=36 KSI STRUCTURAL CONNECTIONS: ALL STRUCTURAL BOLTS TO BE A325 U.N.O
2. STRUCTURAL BOLTS SMALLER THAN 5/8" DIA. TO BE A307 THREADED ROD SHALL CONFORM TO A36 OR A307 ANCHOR BOLTS SHALL CONFORM TO ASTM F1554 ALL BOLTS CAST IN CONCRETE: ASTM A36 OR ASTM A-307 SHOP AND FIELD WELDS: E70XX ELECTRODES STEEL REINFORCEMENT SHOP DRAWINGS TO BE PROVIDED TO ENGINEER OF RECORD BEFORE FABRICATION FOR REVIEW AND APPROVAL
3. STRUCTURAL CONNECTIONS: ALL STRUCTURAL BOLTS TO BE A325N U.N.O. ALL A325N BOLTS SHALL BE BROUGHT TO A "SNUG-TIGHT" CONDITION , AS DEFINED IN THE SPECIFICATION. SLIP CRITICAL (SC) BOLTS MUST BE FULLY TENSIONED PER SPECIFICATION STRUCTURAL BOLTS SMALLER THAN 5/8" DIA. TO BE A307 THREADED ROD SHALL CONFORM TO A36 OR A307 ANCHOR BOLTS SHALL CONFORM TO ASTM F1554 ALL BOLTS CAST IN CONCRETE: ASTM A36 OR ASTM A-307 SHOP AND FIELD WELDS: E70XX ELECTRODES STEEL REINFORCEMENT SHOP DRAWINGS TO BE PROVIDED TO ENGINEER OF RECORD BEFORE FABRICATION FOR REVIEW AND APPROVAL. WELDED CONNECTIONS: ELECTRODES - E70XX UNO (LOW HYDROGEN). FILLET WELDS SHALL BE 3/16" UNO.
4. SHOP DRAWINGS OF ALL STRUCTURAL STEEL SHALL BE SUBMITTED TO THE ENGINEER OF RECORD FOR REVIEW PRIOR TO FABRICATION. SHOP DRAWINGS SHALL INCLUDE COMPLETE DETAILS AND SCHEDULES FOR FABRICATION AND ASSEMBLY OF STRUCTURAL STEEL MEMBERS, PROCEDURES, AND DIAGRAMS INCLUDING DETAILS OF CUTS, CAMBERS, HOLES, PROFILES, SIZES, SPACING, AND LOCATIONS OF STRUCTURAL MEMBERS, CONNECTION ATTACHMENTS, FASTENERS, LOAD, TOLERANCES, AND OTHER PERTINENT DATA. INDICATE WELDS BY STANDARD AWS SYMBOLS AND SHOW SIZE, LENGTHS, AND TYPES OF WELDS. PROVIDE SETTING DRAWINGS, TEMPLATES, AND DIRECTIONS FOR INSTALLATION OF ANCHOR BOLTS AND OTHER ANCHORAGE TO BE INSTALLED FOR WORK OF OTHER TRADES.
5. STRUCTURAL STEEL SHALL RECEIVE SHOP COAT OF PRIMER (COLOR AS DIRECTED BY ARCHITECT) EXCEPT FOR AREAS WHICH WILL RECEIVE SPRAY-ON FIRE PROTECTION.
6. A CERTIFIED TESTING AGENCY SHALL BE ENGAGED TO PERFORM INDUSTRY STANDARD INSPECTIONS TO ENSURE CONFORMANCE WITH PLANS AND SPECIFICATIONS (IF PROVIDED). SUBMIT REPORTS TO ARCHITECT AND ENGINEER.

PRE ENGINEERED WOOD TRUSSES

1. ALL PREFABRICATED WOOD TRUSSES SHALL BE SECURELY FASTENED TO THEIR SUPPORTING WALLS OR BEAMS WITH HURRICANE CLIPS OR ANCHORS PER STRUCTURAL PLAN
2. PREFABRICATED WOOD TRUSSES SHALL BE DESIGNED IN ACCORDANCE WITH THE LATEST EDITION OF THE "NATIONAL DESIGN SPECIFICATION FOR STRESS-GRADE LUMBER AND ITS FASTENERS" AS RECOMMENDED BY THE NATIONAL FOREST PRODUCTS ASSOCIATION.
3. TRUSS MEMBERS AND CONNECTIONS SHALL BE PROPORTIONED (WITH A MAXIMUM ALLOWABLE STRESS INCREASE FOR LOAD DURATION OF 25%) TO WITHSTAND THE LIVE LOADS GIVEN IN THE NOTES AND TOTAL DEAD LOAD.
4. BRIDGING FOR PRE-ENGINEERED TRUSSES SHALL BE AS REQUIRED BY THE TRUSS MANUFACTURER UNLESS NOTED ON THE PLANS.
5. TRUSS ELEVATIONS AND SECTIONS ARE FOR GENERAL CONFIGURATION OF TRUSSES ONLY. WEB MEMBERS ARE NOT SHOWN, BUT SHALL BE DESIGNED BY THE TRUSS MANUFACTURER IN ACCORDANCE WITH THE FRAMING DESIGN LOADS.
6. DESIGN SPECIFICATIONS FOR LIGHT WEIGHT METAL PLATE CONNECTED WOOD TRUSSES PER THE TRUSS PLATE INSTITUTE TPI LATEST EDITION.
7. PRE-ENGINEERED WOOD TRUSSES SHALL BE DESIGNED BY THE MANUFACTURER IN ACCORDANCE WITH SPECIFIED LOADS AND GOVERNING CODES . SUBMITTALS SHALL INCLUDE TRUSS FRAMING PLANS AND DETAILS SHOWING MEMBER SIZES, BRACING, ANCHORAGE, CONNECTIONS, TRUSS LOCATIONS, AND PERMANENT BRACING AND/OR BRIDGING AS REQUIRED FOR ERECTION AND FOR THE PERMANENT STRUCTURE. EACH SUBMITTAL SHALL BE SIGNED AND SEALED BY A FLORIDA REGISTERED STRUCTURAL ENGINEER. SUBMIT 3 COPIES FOR REVIEW AND APPROVAL PRIOR TO FABRICATION.
8. THE TRUSS MANUFACTURER SHALL DETERMINE ALL SPANS WORKING POINTS, BEARING POINTS, AND SIMILAR CONDITIONS. TRUSS SHOP DRAWINGS SHALL SHOW ALL TRUSSES, ALL BRACING MEMBERS, AND ALL TRUSS TO TRUSS HANGERS.

UPLIFT CONNECTORS

1. UPLIFT CONNECTORS SUCH AS HURRICANE CLIPS, TRUSS ANCHORS AND ANCHOR BOLTS ARE ONLY REQUIRED ON MEMBERS IN WALLS THAT ARE EXPOSED TO UPLIFT OR LATERAL FORCES. INTERIOR LOAD BEARING WALLS ARE NOT ALWAYS EXPOSED TO UPLIFT FORCES. THE MEMBERS OF THESE WALLS WOULD NOT NEED TO HAVE CONNECTORS APPLIED. PLEASE COORDINATE THE TRUSS ENGINEER FOR THE LOCATION OF THESE WALLS AND STRUCTURAL PLANS FOR MORE INFO.

FIELD REPAIR NOTES

1. MISSED "J" BOLTS FOR WOOD BEARING WALLS MAY BE SUBSTITUTED WITH 1/2" DIA. EPOXY ANCHORS WITH 7" EMBEDMENT. SIMPSON "SET" EPOXY ADHESIVE BINDER FOLLOWING ALL MANUFACTURER'S RECOMMENDATIONS OR SIMPSON 1/2" TITEN HD BOLTS WITH MINIMUM 7" EMBEDMENT. SEE PLAN FOR EMBEDMENT DEPTH AT FLOOR STEPS.
2. FOR MISSED VERT. DOWELS, DRILL A 3/4" DIAMETER HOLE 6" DEEP AT THE LOCATION OF THE OMITTED REBAR AND INSTALL A 32" LONG #5 BAR INTO THE EPOXY FILLED HOLE. USE A TWO PART EMBEDMENT EPOXY (SIMPSON HIGH STRENGTH EPOXY-TIE ANCHORING ADHESIVE) MIXED PER THE MANUFACTURER'S INSTRUCTIONS. ASSURE THAT ALL DUST AND DEBRIS FROM DRILLING ARE REMOVED FROM THE HOLE BY BRUSHING AND USING COMPRESSED AIR PRIOR TO APPLYING THE EPOXY. ALLOW THE EPOXY TO CURE TO THE MANUFACTURER'S SPECIFICATIONS, THEN FILL THE CELL IN THE NORMAL WAY DURING BOND BEAM POUR.
3. FOR MORTAR JOINTS LESS THAN 1/4", PROVIDE (1) #5 VERT. IN CONC. FILLED CELL EACH SIDE OF THE JOINT (BAR DOES NOT HAVE TO BE CONT. TO FOOTING).
4. MISSED LINTEL STRAPS FOR MASONRY CONSTRUCTION MAY BE SUBSTITUTED WITH (1) SIMPSON MTSM16 TWIST STRAP W/ (4) ¼"x 2¼" TITENS TO MASONRY AND (7)-10d NAILS TO TRUSS FOR UPLIFTS LESS THAN 860 LBS (USE (2) MTSM16 FOR UPLIFTS LESS THAN 1660#). IF CORNER STRAP IS MISSED, CONTRACTOR IS TO INSTALL (2) SIMPSON HGAM10 W/ (4) 1/4" x 1 1/2" SDS SCREWS AND (5) 1/4" x 2 1/4" TITENS ONE EACH SIDE OF TRUSS.
5. NO MORE THAN 10 STRAPS MAY BE SUBSTITUTED OR NO MORE THAN 3 IN A ROW WITHOUT APPROVAL FROM EOR. IF GIRDER TRUSS CONNECTIONS ARE MISSED, CONTACT THE EOR FOR SUBSTITUTION.
6. IF MISSED, MSTAM36 OR MSTAM40 STRAP IS MISSED FOR 2ND FLOOR JAMB STUD CONNECTION. CONTRACTOR MAY INSTALL SIMPSON HTT5 W/ (26) 16d x 2 1/2" NAILS AND 5/8" ANCHOR BOLT SET IN SIMPSON HIGH STRENGTH EPOXY W/ MIN 6" EMBEDMENT AND MIN 3" EDGE DISTANCE. CONTACT EOR IF STRAPS ARE MISSED UNDER GIRDER JAMB STUD LOCATIONS.

STRUCTURAL DESIGN CRITERIA

CODE CRITERIA

- FLORIDA BUILDING CODE 7TH EDITION (2020) RESIDENTIAL.
- FLORIDA FIRE PREVENTION CODE 7TH EDITION (2020)
- FLORIDA BUILDING CODE ACCESSIBILITY 7TH EDITION (2020)
- NFPA 70-17. NATIONAL ELECTRICAL CODES. (NEC 2017)
- BUILDING CODE REQUIREMENTS FOR STRUCTURAL CONCRETE - (ACI 318-14).
- SPECIFICATIONS FOR STRUCTURAL CONCRETE - (ACI 301-16).
- BUILDING CODE REQUIREMENTS FOR MASONRY STRUCTURES - (ACI 530-13).
- NATIONAL DESIGN SPECIFICATION FOR WOOD CONSTRUCTION - 2018 EDITION.
- WOOD FRAMED CONSTRUCTION MANUAL 2018 EDITION.
- APA PLYWOOD DESIGN SPECIFICATION E30-16
- AMERICAN SOCIETY OF CIVIL ENGINEERS: ASCE/SEI 7-16
- ALUMINUM DESIGN MANUAL - AAF-20

GENERAL ROOF LOADING

	SHINGLE ROOF (PSF)	METAL ROOF (PSF)	TILE ROOF (PSF)	HEAVY ROOF (PSF)
TOP CHORD LL TOP CHORD DL	20 10	20 10	20 15	20 25
BOTTOM CHORD LL* BOTTOM CHORD DL	0 10	0 10	0 10	0 10
TOTAL (PSF)	40	40	45	55
BOTTOM CHORD LL (OPT) ATTICS W/ LIMITED STORAGE ATTICS W/ HEAVY STORAGE * ATTICS W/ NO STORAGE (NON-CONCURRENT)	20 50 10			

NOTE: LL REDUCTIONS ARE ALLOWED PER CODE BUT ONLY WITH WRITTEN APPROVAL FROM EOR OR INDICATED ON PLAN

GENERAL FLOOR LOADING

TOP CHORD LL TOP CHORD DL	40 (PSF) 10 (PSF)	COMMENTS:
BOTTOM CHORD LL BOTTOM CHORD DL	0 (PSF) 5 (PSF)	

SPECIAL FLOOR LOADING

GAME ROOM / READING ROOMS BALCONIES/ DECKS BALCONIES OVER 100 SQ:FT LIGHT STORAGE GUARDRAILS AND HANDRAILS GUARDRAIL IN-FILL COMPONENTS STAIRS / NON SLEEPING ROOMS SLEEPING ROOMS LIBRARIES - STACK ROOMS HABITABLE ATTICS SERVED w/ FIXED STAIRS PASSENGER VEHICLE GARAGES	60 (PSF) 40(PSF) 100(PSF) 125(PSF) 200(LBS)(d) 50 (LBS)(f) 40 (PSF) 30 (PSF) 150(PSF) 30(PSF) 50(PSF)	COMMENTS: d. A SINGLE CONCENTRATED LOAD APPLIED IN ANY DIRECTION AT ANY POINT ALONG THE TOP. f. BALUSTERS AND PANELS FILLERS SHALL BE DESIGNED TO WITHSTAND A HORIZONTALLY APPLIED NORMAL LOAD OF 50 POUNDS ON AN AREA EQUAL TO 1 SQ. FT.

DEFLECTION CRITERIA

ROOF TRUSSES* ROOF RAFTERS ROOF RAFTERS (W/O CLG) FLOOR TRUSSES/ BEAMS ** FLOOR I-JOIST***	LL/360 LL/180 LL/360 LL/360 LL/480	TL/240 TL/120 TL/240 TL/240 TL/240	COMMENTS:

*TL MAX 2" UP TO 40FT SPAN
**TL MAX 3/4"
*** TL MAX 1/2"
****TL MAX 1/4" DIFFERENTIAL BETWEEN ADJACENT TRUSSES

WIND LOADING CRITERIA

WIND SPEED (ULTIMATE) WIND SPEED (ALLOWABLE) EXPOSURE CATEGORY BUILDING CATEGORY BUILDING TYPE ENCLOSURE CLASSIFICATION INTERNAL PRESSURE COEFFICIENT	130.0 MPH 101.0 MPH C II V ENCLOSED +/- 0.18

NOTE: MEAN ROOF HEIGHT FOR TYPICAL SINGLE STORY HOME IS 15FT, AND FOR 2 STORY HOME IS 30FT

ASCE 7-16 WALL DESIGN ALLOWABLE COMPONENTS AND CLADDING WIND PRESSURES AND SUCTIONS FOR MEAN ROOF HEIGHT ≤ 60 ft

EFFECTIVE WIND AREA (SQ FEET)	WIND PRESSURE AND SUCTION (PSF) (+) VALUE DENOTES PRESSURE (-) VALUE DENOTES SUCTION			
AREA	4		5	
10 - 19.99	A	(+) 25.5 (-) 26.6	B	(+) 25.5 (-) 33.6
20 - 49.99	C	(+) 24.4 (-) 26.6	D	(+) 24.4 (-) 30.8
50 - 99.99	E	(+) 22.8 (-) 23.8	F	(+) 22.8 (-) 28.0
> 100	G	(+) 21.7 (-) 23.8	H	(+) 21.7 (-) 26.6
GARAGE DOORS*			SOFFIT	
9'-0" x 7'-0"		16'-0" x 7'-0"		
(+) 22.5 (-) 25.5	J	(+) 21.7 (-) 24.1	K	(+) 25.5 (-) 33.6

WIND PRESSURE AND SUCTION DIAGRAM

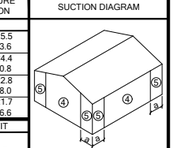

DIAGRAM

GENERAL PRESSURE NOTES

NOTES:
1. MULTIPLY THE ABOVE PRESSURES BY 1.67 TO GET ULTIMATE WIND PRESSURES.
2. "a" = END ZONE IS ONLY WITHIN 4'-0" OF ALL EXTERIOR BUILDING CORNERS. * INDICATED PRESSURES CAN BE INTERPOLATED FOR OTHER DOOR SIZES, OTHERWISE USE LOAD ASSOCIATED WITH THE LOWER EFFECTIVE AREAS.
3. DESIGNATED AREAS WHERE THE ULTIMATE WIND SPEED IS 140 MPH OR GREATER AND IS CONSIDER TO BE IN THE WIND-BOURNE DEBRIS AREA. CONTRACTOR TO PROVIDED ADDITIONAL INFO AS REQUIRED FOR PERMITTING.

SHEET INDEX

S0	NOTES & SCHEDULES		
S1	FOUNDATION PLAN		
S2	ROOF FRAMING PLAN		
SN	NOTES & SCHEDULES		
D1	FOUNDATION DETAILS		
D2	FRAMING DETAILS		
D3	FRAMING DETAILS		
D4	FRAMING DETAILS		
D5	FRAMING DETAILS		

CENTURY Complete

DATE: January 20, 2022

FDS Engineering Associates, Inc.
258 Southhall Lane, Suite 200
Maitland, FL 32751
O. 321-972-0491 F. 407-880-2304
Certificate Of Authorization No. 9161
WWW.FDSENG.COM
☐ CARLA. BROWN, PE - FL # 56126
☐ LUIS PABLO TORRES, PE - FL #87864
☐ SCOTT LEWKOWSKI, PE - FL #78750

LOT 32
RESERVE @ JEWEL LAKE
456 SW JEWEL LAKE DR.
LAKE CITY, FL 32024

PLAN NUMBER: 33811607
RELEASE DATE: 08.03.2020

MODEL: COVINGTON
DRAWING TITLE: NOTES & SCHEDULES

SHEET NO: S0

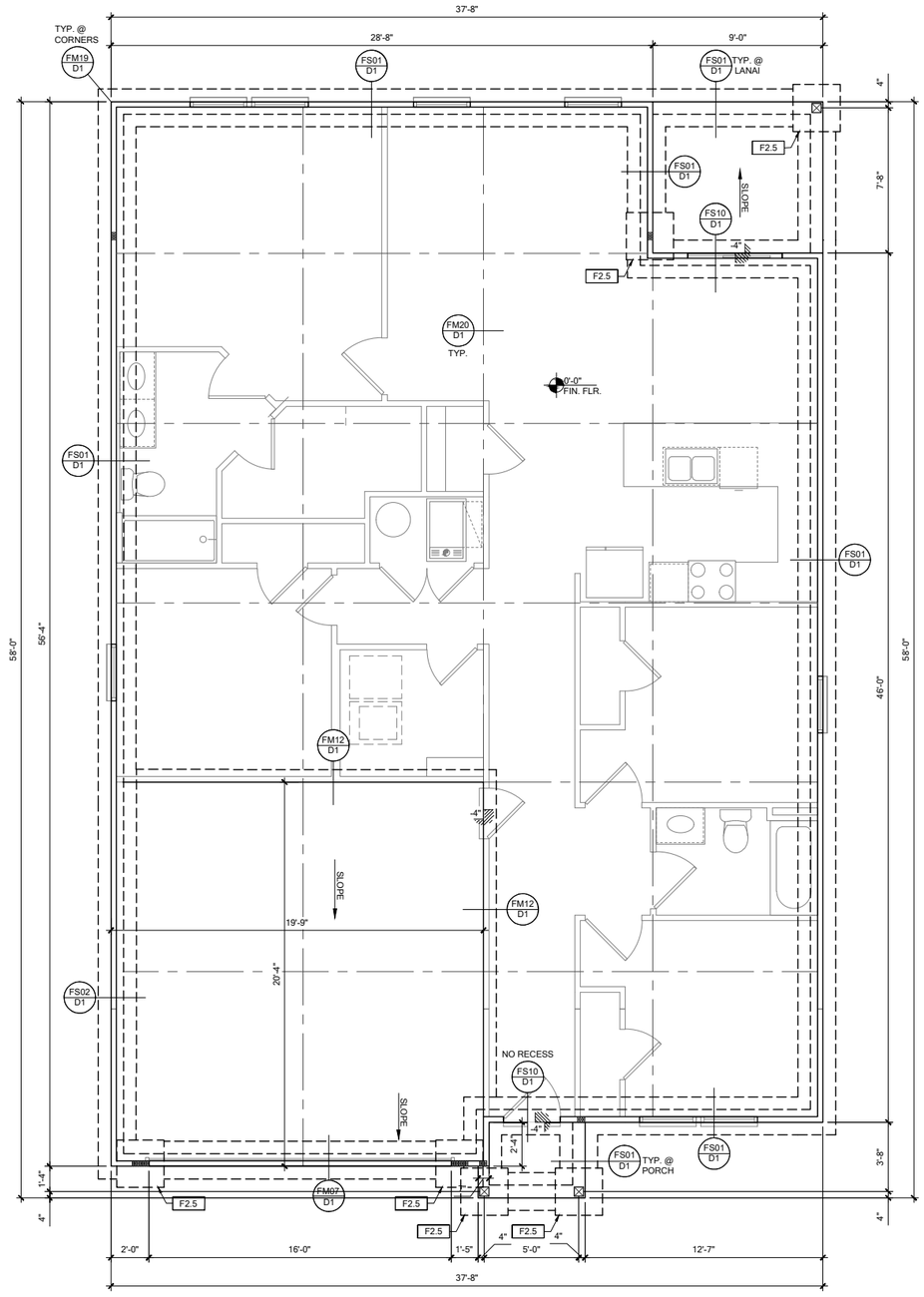

FOUNDATION PLAN A

SCALE: 1/4" = 1'-0" @ 22x34
SCALE: 1/8" = 1'-0" @ 11x17

FOUNDATION LEGEND

SYMBOL	DESIGN DESCRIPTION
F#.#	INDICATES CONCRETE FOOTING w/ MINIMUM SOIL BEARING CAPACITY OF 2000 PSF. REINFORCE PER GENERAL FOUNDATIONS SCHEDULE ON SHEET **SN** FOR DESIGN SPECIFICATIONS.
	INDICATES CONSTRUCTION JOINT (IF SHOWN) SHALL BE ⅞" x 1" SAW CUTS FILLED WITH APPROVED SLAB JOINT MATERIAL COVERING A 12'x12' SQUARE MAXIMUM
-#"	INDICATES STEP IN FOUNDATION, VERIFY PER ARCHITECTURAL PLANS CONSTRUCT PER PLAN SECTION CUT AND DETAIL SHEET **D1**
0'-0" FIN. FLR.	4" 2500 PSI CONC. SLAB W/ REINF. PER S0 w/6 MIL VISQUEEN VAPOR BARRIER & TREATED FOR TERMITES. SEE FOUNDATION SCHEDULE ON SN
	INDICATES BUILT UP COLUMN, SEE FRAMING PLAN FOR SIZE, DETAIL WF37/SN FOR PLY ATTACHMENT, AND UPLIFT CONNECTION SCHEDULE ON SN FOR CONNECTION TO SLAB

GENERAL NOTES:
1. TYPICAL CORNER FRAMING PER DETAIL FM19/D1
2. SEE ARCHITECTURAL PLANS FOR ALL SLAB STEP DEPTHS IF SHOW SHOWN WITHIN THESE DOCUMENTS.

PLAN KEY NOTES

BUILDER NOTE:
ANY DISCREPANCY OR ERROR IN DIMENSIONS OR NOTES SHALL BE BROUGHT TO THE ATTENTION OF THE DESIGN PROFESSIONAL FOR CLARIFICATION PRIOR TO COMMENCEMENT OF CONSTRUCTION

WALL TYPE

SYMBOL	DESIGN DESCRIPTION
	2x_ INTERIOR BEARING SHEARWALL - SEE BEARING WALL SCHEDULE ON SHEET SN FOR REQUIREMENTS.
	INDICATES BEARING WALL SEE BEARING WOOD BEARING SCHEDULE ON SN
	2x WOOD FRAME EXTERIOR WALL

CENTURY Complete

THIS SET OF PLANS AND SPECIFICATIONS AND SUBMITTALS ARE THE PROPERTY OF FDS ENGINEERING AND ARCHITECTURE, INC. THEY ARE TO BE USED FOR THE CONSTRUCTION OF ONE (1) BUILDING ONLY. ANY REPRODUCTION OR REPRODUCTIONS, IN WHOLE OR IN PART, OR ANY OTHER USE OF THESE PLANS WITHOUT THE WRITTEN CONSENT OF FDS ENGINEERING AND ARCHITECTURE, INC. IS PROHIBITED. ALL RIGHTS RESERVED.

DATE: January 20, 2022
REVISED DATE: 08.03.2022
REVISED DATE: 08.03.2020

FDS ENGINEERING AND ARCHITECTURE
238 Southhall Lane, Suite 200
Maitland, FL 32751
O. 321.800.0081 Ext. 1
Certificate Of Authorization No. 9161
WWW.FDSENG.COM
CARLA BROWN, PE - FL # 56126
LUIS PABLO TORRES, PE - FL #87864
SCOTT LEWKOWSKI, PE - FL #78750

LOT 32
RESERVE @ JEWEL LAKE
456 SW JEWEL LAKE DR.
LAKE CITY, FL 32024

PLAN NUMBER: 33811607
RELEASE DATE: 08.03.2020
MODEL: COVINGTON
DRAWING TITLE: FOUNDATION PLAN A & B
SHEET NO: S1

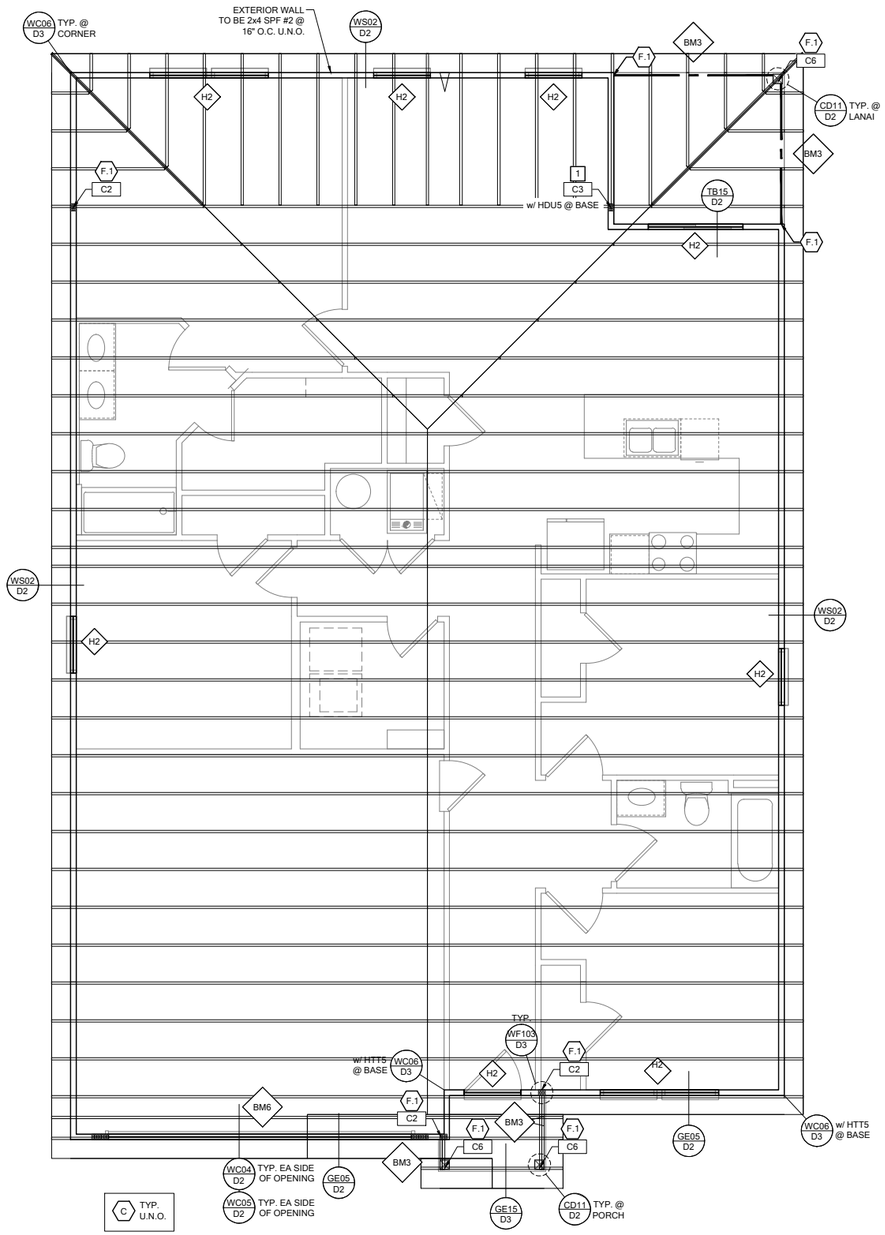

ROOF FRAMING PLAN A

SCALE: 1/4" = 1'-0" @ 22x34
SCALE: 1/8" = 1'-0" @ 11x17

RSH

ENGINEERED ROOF PER ASCE 7-16 ROOF DESIGN ALLOWABLE COMPONENTS AND CLADDING WIND PRESSURES AND SUCTIONS FOR MEAN ROOF HEIGHT ≤ 25 ft

WIND SPEED (ULTIMATE)	130 MPH
WIND SPEED (ALLOWABLE)	100.7 MPH
EXPOSURE CATEGORY	C

EFFECTIVE WIND AREA (SQ FEET)	WIND PRESSURE AND SUCTION (PSF) (+) VALUE DENOTES PRESSURE (-) VALUE DENOTES SUCTION							
AREA	ROOF	1	2e	2n	2r	3	3e	3r
10	HIP	-33.0	-45.50		-45.50	-45.50		
	GABLE	-35.0	-35.0	-55.90	-55.90		-55.90	-65.20

ROOF NAILING SCHEDULE/ NAILING ZONES (SHINGLE AND TILE):

ZONE 1: ASTM F1667 RSRS-01 (8d) NAILS @ 6" O.C. ON EDGE AND 6" O.C IN FIELD

ZONE 2e, 2n, 2r: ASTM F1667 RSRS-01 (8d) NAILS @ 4" O.C. ON EDGE AND 4" O.C IN FIELD

ZONE 3, 3e, 3r: ASTM F1667 RSRS-01 (8d) NAILS @ 4" O.C. ON EDGE AND 4" O.C IN FIELD

ROOF SHEATHING:
SHINGLE: 7/16" EXP. 1 (29/64) or 15/32" EXP. 1 (32/16)

TILE: 15/32" EXP. 1 (32/16)

NOTE:
1. PER CODE ASTM F1667 RSRS-01 REFERENCE TO 8d (2 3/4" x 0.113") NAILS
2. WHERE THE SHEATHING THICKNESS IS GREATER THAN 15/32", SHEATHING SHALL BE FASTENED WITH ASTM F1667 RSRS-03 10d (2½" x 0.131") NAILS OR ASTM F1667 RSRS-04 (3" x .120") NAILS
3. GABLES- DROP GABLE END & (1) ADDITIONAL DROPPED TRUSS 2x4 #2 SYP OUTLOOKER RAFTER W/ BLOCKING @ 16" O.C. IF NO DROPPED GABLE END, ATTACH 2x4 #2 SYP BLOCKING @ 16" O.C FIRST 4 BAYS WITH (2) 12d NAILS EA. END. ATTACH ROOF SHEATHING TO RAFTERS W/ BLOCKING PER NAILING SCHEDULE.

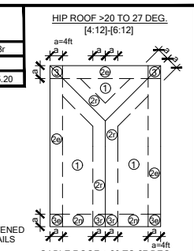

SYMBOL	DESIGN DESCRIPTION
BW# 2x_	INDICATES BEARING WALL SEE BEARING WOOD BEARING SCHEDULE ON SN , SEE ARCHITECTURAL PLANS FOR WALL WIDTH, 2x4 MINIMUM U.O.N.
C#	INDICATES BUILT UP COLUMN, SEE FRAMING PLAN FOR SIZE, DETAIL WF37/SN FOR PLY ATTACHMENT AND UPLIFT CONNECTION SCHEDULE ON SN FOR CONNECTION TO SLAB
C# *	INDICATES NO BOTTOM CONNECTOR REQUIRED
#	INDICATES UPLIFT CONNECTION CONSTRUCTED PER DETAIL UPLIFT CONNECTOR SCHEDULE ON SHEET **SN**

FRAMING NOTES:
1. SEE WIND SPEED CHART ON **S0** FOR WINDOW PRESSURES
2. AT SECOND FLOOR FOR TYPICAL CORNER FRAMING SEE DETAIL **FB06/D4**

GENERAL NOTES:
1. THE FRAMING PLAN SHOWN INDICATES THE "TRUSS SYSTEM" AND IS THE RESPONSIBILITY OF THE TRUSS SYSTEM ENGINEER (DESIGN PROFESSIONAL OF RECORD). THE TRUSS DESIGN ENGINEER (DELEGATED ENGINEER) HAS FINAL, RESONSIBILITY FOR EACH INDIVIDUAL TRUSS AND TRUSS PROFILE, AND IS TO SUBMIT A FINAL SET OF TRUSS ENGINEERING SIGNED AND SEALED TRUSS DRAWINGS TO DESIGN PROFESSIONAL OF RECORD FOR REVIEW PRIOR TO FABRICATION
2. ANY DISCREPANCY OR ERROR IN DIMENSIONS OR NOTES WITH IN THIS PLAN SHALL BE BROUGHT TO THE ATTENTION OF THE DESIGN PROFESSIONAL FOR CLARIFICATION PRIOR TO CONSTRUCTION.
3. SEE SHEET SN FOR DESIGN SCHEDULES AND NOTES: FOUNDATION SCHEDULE / COLUMN SCHEDULE / BEARING WALL SCHEDULE / BEAM SCHEDULE / HEADER SCHEDULE / CONNECTION SCHEDULE / FLOOR AND ROOF NOTES.

PLAN KEY NOTES

1 SIMPSON MGT w/ (22) 0.148 x 1 ½" & (1) ⅝" ATR & SIMPSON HDU4-SDS 2.5 w/ (10) ¼" x 2 ½" SDS SCREWS

BUILDER NOTE:
IF THE TRUSS LAYOUT SHOWN DOES NOT MATCH THE TRUSS MANUFACTURERS LAYOUT

----STOP-----

AND CALL THE ENGINEER OF RECORD PRIOR TO PLACEMENT OF ANY TRUSSES.

WALL TYPE

SYMBOL	DESIGN DESCRIPTION
	2x_ INTERIOR BEARING SHEARWALL - SEE BEARING WALL SCHEDULE ON SHEET SN FOR REQUIREMENTS.
	INDICATES BEARING WALL SEE BEARING WOOD BEARING SCHEDULE ON SN
	2x WOOD FRAME EXTERIOR WALL

CENTURY Complete

THIS SET OF PLANS AND SPECIFICATIONS, INCORPORATED HEREIN, IS COPYRIGHTED BY AND IS THE PROPERTY OF FDS ENGINEERING COMPANY, INC. NO REPRODUCTION OR REPRODUCTIONS, IN WHOLE OR IN PART, ARE TO BE MADE WITHOUT THE WRITTEN PERMISSION OF FDS ENGINEERING COMPANY, INC. ALL REPRODUCTIONS MUST BEAR THE ABOVE COPYRIGHT NOTICE.

DATE: January 20, 2022
THIS PLAN IS NOT VALID UNLESS SIGNED AND SEALED BY A LICENSED PROFESSIONAL ENGINEER

FDS ENGINEERING COMPANY, INC.
238 Southhall Lane, Suite 200
Maitland, FL 32751
O: 321-972-0880 - 2304
Certificate Of Authorization No. 9161
☐ CARLA. BROWN, PE - FL # 56126
☐ LUIS PABLO TORRES, PE - FL #87864
☐ SCOTT LEWKOWSKI, PE - FL #78750
WWW.FDSENG.COM

LOT 32
RESERVE @ JEWEL LAKE
456 SW JEWEL LAKE DR.
LAKE CITY, FL 32024

PLAN NUMBER: 33811607
RELEASE DATE: 08.03.2020

MODEL: COVINGTON
DRAWING TITLE: ROOF FRAMING PLAN A & B

SHEET NO: S2

FOUNDATION SCHEDULE

MARK	SIZE	DEPTH	REINFORCING
F1.5	1'-6" x 1'-6"	1'-0"	(2) #5 E.W. BOT.
F2.0	2'-0" x 2'-0"	1'-0"	(3) #5 E.W. BOT.
F2.5	2'-6" x 2'-6"	1'-0"	(3) #5 E.W. BOT.
F3.0	3'-0" x 3'-0"	1'-0"	(4) #5 E.W. BOT.
F3.5	3'-6" x 3'-6"	1'-0"	(4) #5 E.W. BOT.
F4.0	4'-0" x 4'-0"	1'-0"	(5) #5 E.W. BOT.
F4.5	4'-6" x 4'-6"	1'-4"	(5) #5 E.W. BOT.
F5.0	5'-0" x 5'-0"	1'-4"	(6) #5 E.W. BOT.
F6.0	6'-0" x 6'-0"	1'-6"	(8) #5 E.W. BOT.

FOUNDATION DEPTH NOTE:
- INTERIOR PAD DEPTHS AS LISTED IN THE SCHEDULE ARE THE TOTAL DEPTH AND MEASURED FROM THE TOP OF THE SLAB.
- EXTERIOR PAD DEPTHS AS LISTED IN THE SCHEDULE ARE TOTAL DEPTH WITH THE BOTTOM OF THE FOOTING TO MATCH THE BOTTOM OF THE CONTINUOUS MONOLITHIC POUR WHICH RUNS THROUGH IT.

GENERAL FOUNDATION NOTES:
1. PROVIDE MIN. 6 MIL. APPROVED VAPOR BARRIER. ALL JOINTS TO BE LAPPED MIN. 6" AND SEALED.
2. 4" 2500 PSI CONC. SLAB WITH W1.4xW1.4 OVER 6 MIL VISQUEEN VAPOR BARRIER & TREATED FOR TERMITES.
3. GC/ BUILDER, SEE ARCH PLANS FOR ROUGH OPENING LOCATIONS AND ADDITIONAL INFORMATION REQ'D FOR DOOR/WINDOW INSTALLATION ALONG w/ DIMENSIONS NOT SHOWN ON FOUNDATION
4. CONSULT W/ MANUFACTURER SPECIFICATIONS PRIOR TO POURING OR RECESSING DOOR SILLS OR SLIDING GLASS DOOR SILLS.
5. NO WOOD STAKES PERMITTED IN FOUNDATION.
6. PENDING SITE CONDITIONS, FOUNDATION MAY HAVE TO BE STEPPED DOWN. SEE **FM18/D1** FOR ADDITIONAL INFORMATION. G.C. TO DETERMINE STEP LOCATIONS, IF REQUIRED.
7. STEEL BENDS AND LAP SPLICE SEE **FM18/D1 AND FM19/D1**
8. ALL EQUIPMENT AND/OR APPLIANCES HAVING AN IGNITION SOURCE SHALL BE ELEVATED A MIN OF 18". CONTRACTOR TO PROVIDE SUCH PLATFORM w/ EITHER MASONRY OR WOOD CONSTRUCTION
9. ASSUMED ALLOWABLE SOIL BEARING PRESSURE AFTER COMPACTION: 2000 PSF (SEE SOILS REPORT AND SPECIFICATIONS FOR COMPACTION REQUIREMENTS). IF SOIL CONDITIONS ON THE PROJECT DO NOT MEET OR EXCEED THE CAPACITY, THE GENERAL CONTRACTOR SHALL CONTACT THE ENGINEER PRIOR TO FOUNDATION POUR FOR VERIFICATION OF FOUNDATION DESIGN. SOIL TO BE FREE OF ORGANIC MATERIAL AND COHESIVE SOILS, COMPACTED IN 12" LIFTS TO AT LEAST 95% OF MAX. DRY DENSITY AS DETERMINED BY ASTM D 1557 (MODIFIED PROCTOR).
10. R.403.1.4 MINIMUM DEPTH: EXTERIOR FOOTINGS SHALL BE PLACED NOT LESS THAN 12 INCHES (305mm) BELOW THE FINISHED GRADE OF GROUND SURFACE.

WOOD BEARING WALL SCHEDULE

MARK	STUD SPACING	CONNECTION & FASTENERS TOP	CONNECTION & FASTENERS BOTTOM	LUMBER SPECIES	UPLIFT CAP. [plf]
BW1	16"	(2)16d TOENAILS	(3) 12d TOENAILS OR (2) 12d END OR BOX NAILS	#2 SPF	NO UPLIFT
BW2	16"	SP2 w/ (6)10d NAILS	SP1 w/ (6) 10d NAILS & ANCHOR BOLTS	#2 SPF	402
BW3	16"	(2) SP2 w/ (6)10d NAILS	(2) SP1 w/ (6) 10d NAILS & ANCHOR BOLTS	#2 SPF	804
BW4	16"	(2)16d TOENAILS	(3) 12d TOENAILS OR (2) 12d END OR BOX NAILS	#2 SYP	NO UPLIFT
BW5	16"	SP2 w/ (6)10d NAILS	SP1 w/ (6) 10d NAILS & ANCHOR BOLTS	#2 SYP	439
BW6	16"	(2) SP2 w/ (6)10d NAILS	(2) SP1 w/ (6) 10d NAILS & ANCHOR BOLTS	#2 SYP	878
BW7	12"	(2)16d TOENAILS	(3) 12d TOENAILS OR (2) 12d END OR BOX NAILS	#2 SPF	NO UPLIFT
BW8	12"	SP2 w/ (6)10d NAILS	SP1 w/ (6) 10d NAILS & ANCHOR BOLTS	#2 SPF	535
BW9	12"	(2) SP2 w/ (6)10d NAILS	(2) SP1 w/ (6) 10d NAILS & ANCHOR BOLTS	#2 SPF	1070
BW10	12"	(2)16d TOENAILS	(3) 12d TOENAILS OR (2) 12d END OR BOX NAILS	#2 SYP	NO UPLIFT
BW11	12"	SP2 w/ (6)10d NAILS	SP1 w/ (6) 10d NAILS & ANCHOR BOLTS	#2 SYP	585
BW12	12"	(2) SP2 w/ (6)10d NAILS	(2) SP1 w/ (6) 10d NAILS & ANCHOR BOLTS	#2 SYP	1170

CROSS REFERENCE CHART
SIMPSON SP1 / USP SPT22 SIMPSON SP2 / USP SPT24

(2) 2x HEADER (U.N.O.) SEE FLOOR PLAN FOR MIN. SIZE. SEE HD/SN FOR CONNECTION INFO. IF HEADER IS WITHIN A WALL w/ NO UPLIFT AS INDICATED IN THE WOOD BEARING WALL SCHEDULE, THE CONNECTORS INDICATED IN WF09 & HD CAN BE IGNORED.

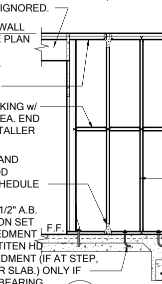

BWD BEARING WALL DETAIL
SCALE: NONE

GENERAL BEARING WALL NOTES:
1. ALL STRUCTURAL LUMBER DESIGNATED AS SYP SHALL BE SYP #2 AND ALL STRUCTURAL LUMBER DESIGNATED AS SPF SHALL BE SPF #2 U.N.O.
2. SEE FLOOR PLAN FOR WALL SIZE, ASSUME 2x4 STUDS USED UNO.
3. CONNECTIONS TO BE INSTALLED TO EACH STUD AS INDICATED
4. CONTACT E.O.R. IF SP4's, SP6's OR SP8's CONNECTORS ARE SUBSTITUTED, TO VERIFY THEY MEET THE STRUCTURAL REQUIREMENTS.
5. IF "BW" IS INDICATED ON SECOND FLOOR BASE CONNECTION TO BE IGNORED. SEE WF06 AND FB06 OR INDICATED DETAIL FOR PROPER CONNECTIONS FOR 2ND FLOOR TO FIRST FLOOR CONNECTIONS. (NOTE: THIS IS FOR 2 STORY PROJECTS ONLY)
6. IF "SW" IS INDICATED ON PLAN THE WALL IS CONSIDERED A SHEAR WALL AND REQUIRES MIN. 7/16" OSB / PLYWOOD w/8d NAILS @ 4" O.C. IN FIELD AND EDGE TO ONE SIDE OF WALL. U.N.O. ON PLANS.
7. ALL 2x EXTERIOR WALLS w/ SHEATHING ATTACHED PER NAILING SCHEDULE TB13/SN ACTS AS SHEAR WALLS, SEE PLAN AND WALL SECTIONS FOR STUD SPACING AND GRADE.
8. ALL TOP PLATES AND SILL PLATES SHALL BE THE SAME SPECIES AS THE WOOD STUDS.
9. IF THE BEARING WALL IS INDICATED WITH THE BW1, BW4, BW7, BW10, THESE WALLS ARE ONLY SUPPORTING THE FLOOR LOAD AND DO NOT HAVE UPLIFT, THE STUDS ARE TOE NAILED TO THE PLATE AND THE 2X PLATE CAN BE ATTACHED WITH HARD CASED NAILS (GUN NAILS) AND WILL NOT REQUIRE THE ANCHOR BOLT ATTACHMENT INDICATED IN THE BEARING WALL SCHEDULE.

HEADER SCHEDULE

MARK	HEADER SIZE
H1	(2) 2x6 #2 SYP w/ 7/16" FLITCH PLATE
H2	(2) 2x8 #2 SYP w/ 7/16" FLITCH PLATE
H3	(2) 2x10 #2 SYP w/ 7/16" FLITCH PLATE
H4	(2) 2x12 #2 SYP w/ 7/16" FLITCH PLATE
H5	(2) 1 3/4" x 11 1/4" LVL 2.0E Fb=2600
H6	(2) 1 3/4" x 9 1/4" LVL 2.0E Fb=2600
H7	(3) 2x10 #2 SYP w/ 1" FLITCH PLATE
H8	(2) 1 3/4" x 7 1/4" LVL 2.0E Fb=2600

HEADER NOTES
1. VERIFY w/ PLAN CORRECT LENGTH OF HEADER REQUIRED.
2. IF HEADER IS ON THE 1ST FLOOR SEE PLAN FOR BEARING WALL TYPE AND FOLLOW INSTRUCTIONS WITHIN BEARING WALL SCHEDULE FOR REQUIRED CORRECTIONS U.N.O. ON PLAN.
3. IF HEADER IS ON THE 2ND FLOOR SEE PLAN FOR INDICATED HEADER CONNECTION FOR REQUIRED CONNECTIONS.
4. ALL HEADER JACK AND KING STUDS SHALL BE FASTENED TO EACH PER DETAIL **WF37/SN**.
5. FASTEN ALL MULTI-PLY HEADERS TOGETHER w/ (2) ROWS 12d COMMON NAILS AT 12" O.C. OR (3) ROWS IF 2x10 OR LARGER TYP. EACH SIDE OR (2) ROWS 1/4" x 3 1/2" SDS WOOD SCREWS @ 16" O.C. TYP. EACH SIDE.
6. FASTEN ALL HEADERS TO KING STUDS w/ (3) 10d TOENAILS PER SIDE.
7. IF HEADER IS NOT SPECIFIED CONTACT E.O.R.

HEADER SUPPORT - NUMBER OF JACKS & STUDS REQUIRED AT OPENINGS

OPENING SIZE	2x4 WALL JACKS EA END	2x4 WALL KINGS EA END	2x6 OR 2x8 WALL JACKS EA END	2x6 OR 2x8 WALL KINGS EA END
1'-0" - 3'-11"	(1)	(2)	(1)	(2)
4'-0" - 8'-11"	(2)	(3)	(2)	(2)
10'-0" - 16'-0"	(3)	(4)	(3)	(4)

2x CRIPPLE STUDS @ 16" O.C. w/ (1) SIMPSON SP2 CONNECTOR @ TOP AND BOTTOM. **PROVIDE (3) 2x CRIPPLE STUDS BELOW ANY GIRDER TRUSS BEARING OVER HEADER. CONNECT G.T. TO STUD w/ (2) SIMPSON HTS20 STRAPS AND CONNECT BOTTOM OF STUD TO HEADER w/ (2) SIMPSON HTS20 STRAPS, U.N.O. (IF STUD IS LESS THAN 10" TALL THEN USE SIMPSON CS18 INSTALLED FROM BOTTOM OF HEADER, UP STUD, OVER TOP PLATE & BACK DOWN OTHER SIDE OF WALL TO BOTTOM OF HEADER - FASTEN STRAP w/ (2) 10d NAILS @ 3" O.C.)

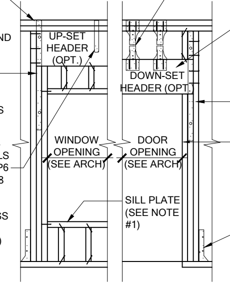

NOTES:
1. OPENINGS GREATER THAN 4'-0" PROVIDE (2) 2x SILL PLATE w/ A35 CLIPS EACH SIDE.
2. NO TOP PLATE SPLICES SHALL OCCUR OVER OR WITHIN 2 FEET OF HEADER.
3. HOLD DOWN CONNECTIONS NOT REQUIRED AT BEARING WALLS WITHOUT UPLIFT.

CROSS REFERENCE CHART
SIMPSON LSTA30 / USP LSTA30
SIMPSON SP4 / USP SPT4
SIMPSON SP6 / USP SPT6
SIMPSON SP8 / USP SPT8
SIMPSON HTS20 / USP HTW20
SIMPSON SP2 / USP SPT24
SIMPSON A35 / USP MPA1
SIMPSON HTT4 / USP HTT45

HD TYPICAL FRAMING CONNECTIONS AT OPENINGS
SCALE: NONE

BEAM SCHEDULE

MARK	BEAM SIZE	FASTENING SCHEDULE	SIMPSON CONNECTOR	USP CONNECTOR
BM1	(2) 2x8 SYP #2 w/ 7/16" OSB FLITCH PLATE	(2) ROWS OF 12d @ 12" O.C. TYP. EACH SIDE	U.N.O. ON FRAMING PLAN	U.N.O. ON FRAMING PLAN
BM2	(2) 2x10 SYP #2 w/ 7/16" OSB FLITCH PLATE.			
BM3	(2) 2x12 SYP #2 w/ 7/16" OSB FLITCH PLATE.			
BM4	(2) 1 3/4"x11 1/4" LVL 2.0E Fb=2600	(2) ROWS 1/4" x 3 1/2" SDS WOOD SCREWS @ 16" O.C TYP. EACH SIDE OR (2) ROWS OF 12d NAILS @ 12" O.C. TYP. EACH SIDE	WOOD POST: (2) LSTA18 OR (2) HTS20; CMU COLUMN: (2) HETA16	WOOD POST: (2) LSTA18 OR (2) HTW20; CMU COLUMN: (2) HTA16
BM5	(2) 1 3/4"x11 7/8" LVL 2.0E Fb=2600			
BM6	(2) 1 3/4"x16" LVL 2.0E Fb=2600			
BM7	(3) 2x10 SYP #2 w/ (2) 7/16" OSB FLITCH PLATES			
BM8	(3) 1 3/4"x9 1/4" LVL 2.0E Fb=2600			
BM10				

GENERAL BEAM NOTES:
1. VERIFY WITH PLAN CORRECT LENGTH OF BEAMS REQUIRED (MIN 4" BEARING EACH END)
2. SEE PLAN FOR TOP OR BOTTOM OF BEAM INDICATIONS
3. BEAMS ARE NOT TO BE DRILLED OR NOTCHED IN ANY WAY WITHOUT WRITTEN APPROVAL FROM THE E.O.R.

SIMPSON - CONNECTOR SCHEDULE

MARK	TYPE	CONNECTOR & FASTENERS	SPF	SYP
B	FRAME TO FRAME	H2.5A w/ (10)8d NAILS	535	565
C	FRAME TO FRAME	H10A w/(18)10d x 1 1/2" H10A-2 w/(18)10d x 1 1/2" AT 2 PLY TRUSSES	1015 930	1040 1080
D	FRAME TO FRAME	MTS12 w/(14)10d x 1 1/2" (AT EXTERIOR LOCATION INCLUDE (3) 12d TOENAILS)	850	990
F	FRAME TO FRAME	HTS20 w/(24)10d x 1 1/2" (AT EXTERIOR LOCATION INCLUDE (3)12d TOENAILS	1125	1310
F.1	FRAME TO FRAME	(2) HTS20 w/(48)10d x 1 1/2" (AT EXTERIOR LOCATION INCLUDE (6)12d TOENAILS	2250	2620
J2	FRAME TO MASONRY / FRAME	(2) LGT2 w/ (32) 16d SINKERS & (14) 1/4" x 2 1/4" TITEN (2 PLY TRUSS) OR (28) 16d SINKERS FOR FRAME (EA)	3500-M 3240-F	4060-M 3770-F
J3	FRAME TO MASONRY / FRAME	(2) LGT3 w/ (24) 1/4" x 3" SDS SCREWS & (8) 3/8" x 5" TITEN (2 PLY TRUSS) OR (52) 16d SINKERS FOR FRAME (EA)	4730-M 5010-F	6570-M 6960-F
K	BEAM TO BEAM	HU410 OPT HUC410 w/ (18) 16d & (10) 10d NAILS		G#2680 U#1895
L2	BEAM TO MASONRY / FRAME	HU46 OPT HUC46 w/ (6) 10d NAILS & (12) 1/4" x 2 3/4" TITEN (TO MAS.) OR (12) 16d & (6) 10d (FOR FRAME)	G#1785 U#1135 SYP-F	G#3000 U#1135 SYP-M
T	FRAME TO FRAME	H10S w/ (24) 10d x1 1/2" NAILS	770	910
X	FRAME TO FRAME	VGT w/ (16) 1/4"x3" SDS WOOD SCREWS & HDU4-SDS2.5 w/ (10) 1/4"x2 1/2" SDS WOOD SCREWS & (1) 5/8"ϕ A.T.R.	3285	4565
Y	FRAME TO FRAME	(2) HTT5 w/ (52) 16d"x2 1/2" NAILS & (2) 5/8"ϕ A.T.R. (SEE NOTE #4)	8750	10180

GENERAL CONNECTOR NOTES:
1. CONNECT ALL FLOOR TRUSSES TO INTERIOR BEARING WOOD WALLS / BEAMS w/ (2) 12d TOENAILS.
2. ALL TRUSS TO TRUSS CONNECTIONS ARE PROVIDED BY TRUSS MANUFACTURER, U.N.O ON PLAN.
3. G.C. MAY USE EITHER SIMPSON OR USP CONNECTIONS, SEE FRAMING PLAN FOR CONNECTOR CALL OUT.
4. FOR SINGLE PLY TRUSSES, SCAB ON FULL HEIGHT SYP #1 2"x4" TO TRUSS VERTICAL WEB w/ (2) ROWS OF 10d NAILS @ 3" O.C. STAGGERED.
5. MINIMUM A.T.R. EMBEDMENT: 5" EMBEDMENT FOR 1/2" A.T.R. 6" EMBEDMENT FOR 5/8" A.T.R. 8" EMBEDMENT FOR 7/8" A.T.R. (IF AT STEP, DEPTH IS FROM LOWER SLAB).

(A) MINIMAL CONNECTOR UNO ON FRAMING PLAN

1. CONNECTION FOR ALL ROOF / FLOOR TRUSSES TO MASONRY WALLS/ LINTELS/ ICF WALLS UNO ON PLAN
2. CONNECTION AT 24" OR 32" O.C. PENDING VERTICALS FOR ALL FLOOR TRUSSES PARALLEL TO MASONRY WALLS SEE DETAIL FB12/D3 FOR MORE INFORMATION
3. CONNECTION FOR ALL HIP JACK (CORNER JACK) TO MASONRY WALLS/ICF WALLS/LINTELS
4. CONNECTION FOR ALL CONTINUOUS RIM BOARD TO TOP OF MASONRY AT 32" O.C MAX. w/ (2) AT EACH CORNER. G.C. TO VERIFY LOCATION DOES NOT CONFLICT w/TJI (IF APPLICABLE) LAYOUT
5. CONNECT ALL FLOOR TRUSSES TO INTERIOR BEARING WOOD WALL/BEAMS w/ (2) 12d TOENAILS

(B) MINIMAL CONNECTOR UNO ON FRAMING PLAN

1. CONNECTION FOR JACK TRUSS TO WOOD WALL OR BEAM

(C) MINIMAL CONNECTOR UNO ON FRAMING PLAN

1. CONNECTION FOR ALL TRUSSES TO INTERIOR/EXTERIOR BEARING WOOD WALLS AND/OR BEAMS

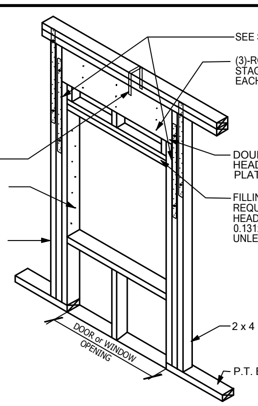

WF09 WALL HEADER DETAIL
SCALE: N.T.S.

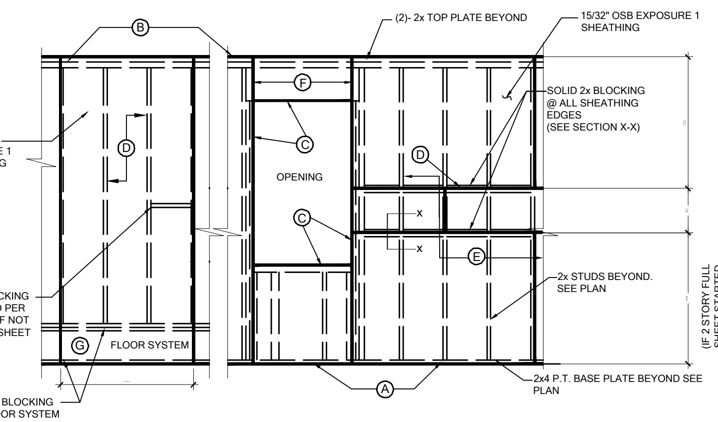

VERTICAL HORIZONTAL
WALL ELEVATION DIAGRAM

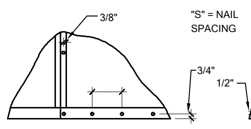

SINGLE NAIL EDGE SPACING

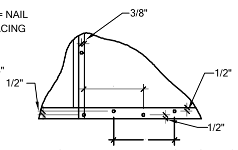

DOUBLE NAIL EDGE SPACING

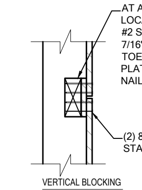

SECTION X-X

WALL SHEATHING MAY BE INSTALLED VERTICALLY OR HORIZONTALLY, ATTACH PER NAILING SCHEDULE. PANEL EDGES WILL NEED TO BE ATTACHED TO STUD AND OR BLOCKING AT ALL EDGES. A MINIMUM ⅛" SPACE IS RECOMMENDED BETWEEN PANELS AT EDGES AND END JOINTS TO ALLOW FOR EXPANSION. FASTENERS SHALL NOT PENETRATE SURFACE MORE THAN ⅛".

(A) NAIL AT BASE 2 ROWS @ 4" O.C. w/ 8d COMMON NAIL.
(B) NAIL AT TOP PLATE TWO ROWS @ 4" O.C. w/ 8d COMMON NAIL.
(C) NAIL OPENING PERIMETER w/ (2) ROWS @ 4" O.C. w/ 8d COMMON NAIL.
(D) NAIL INTERIOR AT 6" O.C. w/ 8d COMMON NAIL.
(E) STAGGER ALL VERTICAL JOINTS & NAIL @ 4" O.C. w/ 8d COMMON NAIL.
(F) PLYWOOD SPLICES @ HEADER - NAIL SHEATHING TO HEADER w/ 8d COMMON NAILS @ 4" O.C. (2) ROWS @ TOP & BOTT.
(G) (2) 8d NAILS @ 3" O.C. TO EACH TRUSS END OR @ VERTICAL MEMBER IF GABLE END.

NOTE: 8d NAILS FOR WALL SHEATHING MUST BE MIN .131" X 2 1/2". DO NOT OVERDRIVE NAILS: FASTENERS SHALL NOT PENETRATE SURFACE MORE THAN ⅛"

TB13 WALL SHEATHING INSTALL & NAILING SCHEDULE
SCALE: N.T.S. REV. FBC 7TH ED. 2020

COLUMN SCHEDULE

MARK	COLUMN SIZE	FIRST FLOOR BASE CONNECTIONS, SEE PLAN FOR SECOND FLOOR CONNECTIONS	UPLIFT(lb)
C1	(3) 2x #2 SPF	(4)12d TOENAILS	NO UPLIFT
C2	(3) 2x #2 SPF	DTT2Z W/ ½" ATR & (8) ¼" X 1 ½" SDS SCREWS	1835
C3	(3) 2x #1 SYP	(4)12d TOENAILS	NO UPLIFT
C4	(3) 2x #1 SYP	DTT2Z w/ ½" ATR & (8) ¼" x 1½" SDS SCREWS	1835
C5	4x4 P.T.#2 SYP POST	ABU44 w/ ⅝" ATR & (12)16d NAILS FIRST/SECOND FLOOR CONN.	G = 6665 U = 1782
C6	6x6 P.T. #2 SYP POST	ABU66 w/ ⅝" ATR & (12)16d NAILS FIRST/SECOND FLOOR CONN.	G = 12000 U = 2070
C7	8x8 P.T. #2 SYP POST	ABU88 w/(2)⅝" ATR & (18)16d FIRST/SECOND FLOOR CONN.	G = 24335 U = 2088
C8	3.5" x 3.5" P.L. 1.8E Fb=2400 PSI (WOLMANIZED IF EXT.)	HDU5-SDS2.5 w/ ⅝" ATR AND (14) ¼"x2½" SDS WOOD SCREWS	5080
C9	3.5" x 5.25" P.L. 1.8E Fb=2400 PSI (WOLMANIZED IF EXT.)	HDU5-SDS2.5 w/ ⅝" ATR AND (14) ¼"x2 ½" SDS WOOD SCREWS	5080
C10	3.5" x 7" P.L. 1.8E Fb=2400 PSI (WOLMANIZED IF EXT.)	HDU8-SDS2.5 w/ ⅞" ATR AND (20) ¼"x2½" SDS WOOD SCREWS	6372
C11	5.25" x 5.25" P.L. 1.8E Fb=2400 PSI (WOLMANIZED IF EXT.)	HDU8-SDS2.5 w/ ⅞" ATR AND (20) ¼"x2 ½" SDS WOOD SCREWS	7082
C12	5.25" x 5.25" P.L. 1.8E Fb=2400 PSI (WOLMANIZED IF EXT.)	HDU8-SDS2.5 w/ ⅞" ATR AND (20) ¼"x2 ½" SDS WOOD SCREWS	7082
C13	5.25" x 7" P.L. 1.8E Fb=2400 PSI (WOLMANIZED IF EXT.)	HDU8-SDS2.5 w/ ⅞" ATR AND (20) ¼"x2 ½" SDS WOOD SCREWS	7082

GENERAL COLUMN NOTES:
1. ALL STRUCTURAL LUMBER TO BE SYP#2 OR SPF#2 UNO ON PLAN.
2. MINIMUM BOLT EMBEDMENT: 5" EMBEDMENT FOR 1/2" ATR. 6" EMBEDMENT FOR 5/8" ATR. 8" EMBEDMENT FOR 7/8" ATR.
3. P.L. COL. TO BRG DIRECTLY ON FOUNDATION. CUT BASE PLATE AS REQ'D. G.C. TO PROVIDE MOISTURE BARRIER
4. IF COL. IS CALLED OUT ON 2ND FLOOR, THE BASE CONNECTION IS NOT REQ'D. SEE PLANS FOR BASE CONNECTION
5. VALUES HAVE BEEN REDUCED FOR NARROW FACE APPLICATION. CONNECTIONS SHALL BE INSTALLED ON NARROW OR WIDE FACE PER SIMPSON TC-SCLCLM

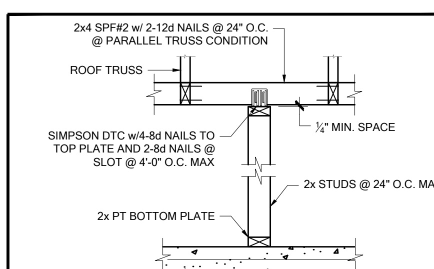

WF18 NON-BRG INTERIOR WALL
SCALE: 3/4" = 1'-0" @ 22x34
SCALE: 3/8" = 1'-0" @ 11x17

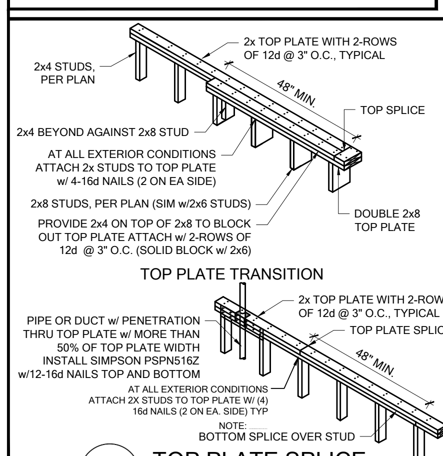

WF17 TOP PLATE SPLICE
SCALE: 3/4" = 1'-0" @ 22x34
SCALE: 3/8" = 1'-0" @ 11x17

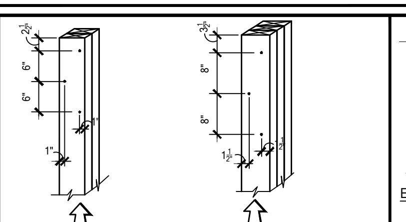

2-2x4 LAMINATIONS w/ 1-ROW OF STAGGERED 10d COMMON WIRE NAILS (D = 0.148", L= 3") OR EQUAL

3-2x_ LAMINATIONS w/ 2-ROWS OF STAGGERED 16d COMMON WIRE NAILS (ONE INTO EACH OUTSIDE FACE) (D = 0.162", L= 3-1/2") OR EQUAL

4-2x_ LAMINATION PROVIDE ¼"ϕx5½" LAG SCREWS AT SAME SPACING AS ABOVE

NOTES:
1. ADJACENT NAILS ARE DRIVEN FROM OPPOSITE SIDES OF THE COLUMN.
2. ALL NAILS PENETRATE AT LEAST ¾" OF THE THICKNESS OF THE LAST LAMINATION
3. REFER TO NDS SECTION 15.3 FOR ADDITIONAL INFO.

WF37 MULI-PLY FASTENING
SCALE: 3/4" = 1'-0" @ 22x34
SCALE: 3/8" = 1'-0" @ 11x17

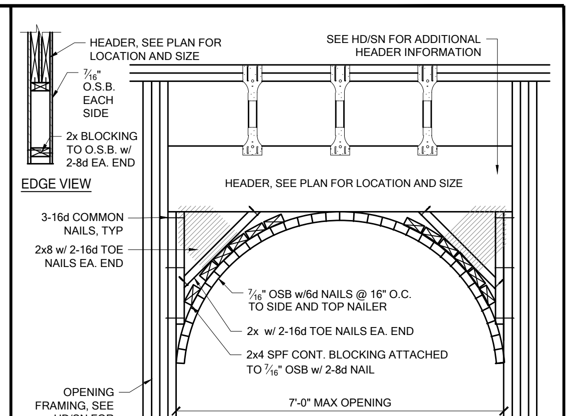

WF02 WOOD FRAMED ARCH
SCALE: 3/4" = 1'-0" @ 22x34
SCALE: 3/8" = 1'-0" @ 11x17

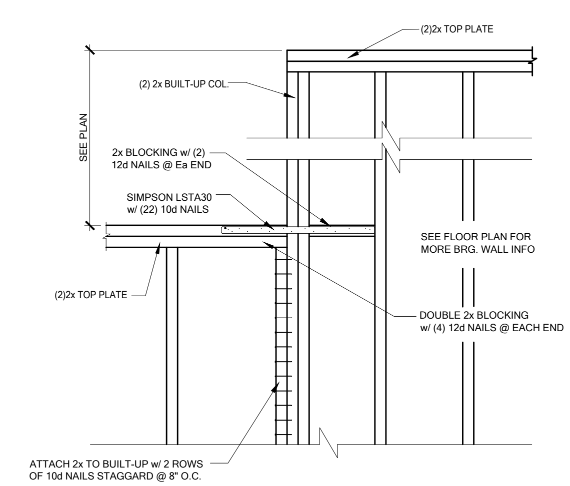

WC07 WALL STEP @ BRG. FRAME WALL
SCALE: 3/4" = 1'-0" @ 22x34
SCALE: 3/8" = 1'-0" @ 11x17

CENTURY Complete

TO THE BEST OF THE ENGINEER'S KNOWLEDGE, INFORMATION, AND BELIEF, THE STRUCTURAL PLANS AND SPECIFICATIONS CONTAINED WITHIN THESE DRAWINGS COMPLY WITH THE 2020 FLORIDA BUILDING CODE- RESIDENTIAL 7TH EDITION. ENGINEER'S SIGNATURE AND SEAL IS ONLY FOR THE STRUCTURAL ENGINEERING PORTIONS OF THE DRAWING PAGES BEARING ENGINEER'S SIGNATURE AND SEAL. ANY FURTHER REVISIONS OR ADDITIONS TO THIS PLAN / DESIGN ARE NOT APPROVED UNLESS SIGNED AND SEALED BY THE E.O.R.

FDS JOB NO:22-00919

DATE: January 20, 2022

IF SEAL AND SIGNATURE ARE NOT BLUE OR CAN NOT BE SMUDGED CONTACT THE E.O.R. FOR AUTHORIZATION.

FDS ENGINEERING ASSOCIATES
258 Southhall Lane, Suite 200
Maitland, FL 32751
O: 321-972-0491 F: 407-880-2304
Certificate Of Authorization No. 9161
☐ CARL A. BROWN, PE - FL # 56126
☐ LUIS PABLO TORRES, PE - FL #87864
☐ SCOTT LEWKOWSKI, PE - FL #78750
WWW.FDSENG.COM

LOT 32
RESERVE @ JEWEL LAKE
456 SW JEWEL LAKE DR.
LAKE CITY, FL 32024

PLAN NUMBER: 33811607
RELEASE DATE: 08.03.2020
MODEL: COVINGTON
DRAWING TITLE: NOTES & SCHEDULES
SHEET NO: SN

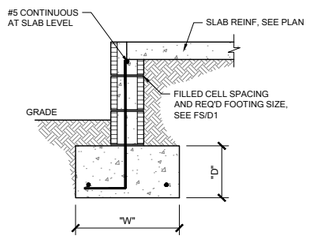

FS01 SINGLE OR 2-STORY FOOTING
SCALE: 3/4" = 1'-0" @ 22x34
SCALE: 3/8" = 1'-0" @ 11x17

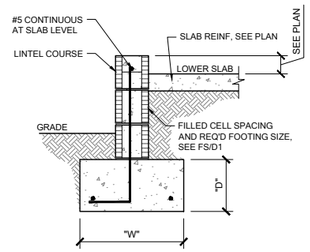

FS02 EXTERIOR BEARING @ GARAGE
SCALE: 3/4" = 1'-0" @ 22x34
SCALE: 3/8" = 1'-0" @ 11x17

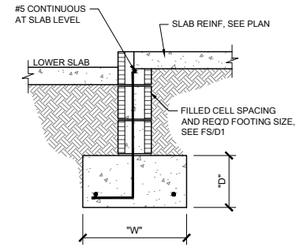

FS03 EXTERIOR BEARING
SCALE: 3/4" = 1'-0" @ 22x34
SCALE: 3/8" = 1'-0" @ 11x17

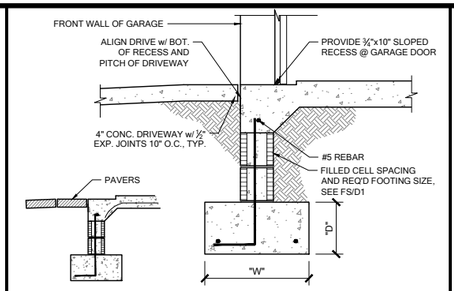

FS07 FOOTING @ GARAGE DOOR
SCALE: 3/4" = 1'-0" @ 22x34
SCALE: 3/8" = 1'-0" @ 11x17

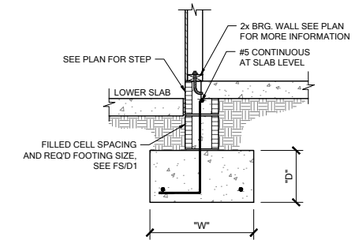

FS08 INT. BRG. @ STEP DOWN
SCALE: 3/4" = 1'-0" @ 22x34
SCALE: 3/8" = 1'-0" @ 11x17

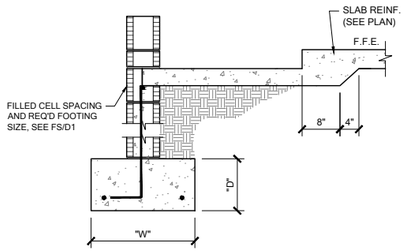

FS09 SECTION @ SHOWER
SCALE: 3/4" = 1'-0" @ 22x34
SCALE: 3/8" = 1'-0" @ 11x17

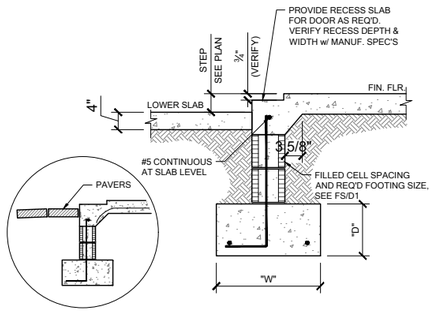

FS10 EXTERIOR BEARING @ RECESS
SCALE: 3/4" = 1'-0" @ 22x34
SCALE: 3/8" = 1'-0" @ 11x17

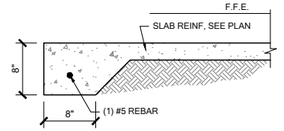

FM03 THICKENED EDGE
SCALE: 3/4" = 1'-0" @ 22x34
SCALE: 3/8" = 1'-0" @ 11x17

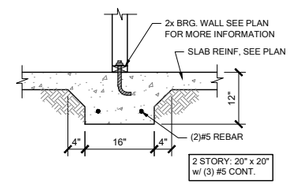

FM10 INT. BRG WALL
SCALE: 3/4" = 1'-0" @ 22x34
SCALE: 3/8" = 1'-0" @ 11x17

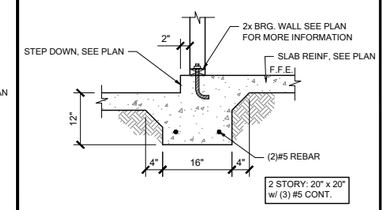

FM11 STEP DOWN BEARING
SCALE: 3/4" = 1'-0" @ 22x34
SCALE: 3/8" = 1'-0" @ 11x17

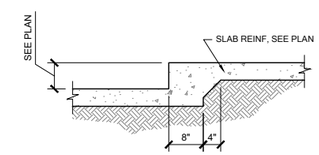

FM12 STEP DOWN @ NON BRG.
SCALE: 3/4" = 1'-0" @ 22x34
SCALE: 3/8" = 1'-0" @ 11x17

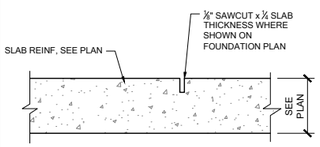

FM20 CONTROL JOINT
SCALE: 3/4" = 1'-0" @ 22x34
SCALE: 3/8" = 1'-0" @ 11x17

ALTERNATE: THE REINF. BARS SHALL BE CONTINUOUS AROUND CORNER BY COLD BENDING THE BAR WITH MIN. BAR LAP OF 25"

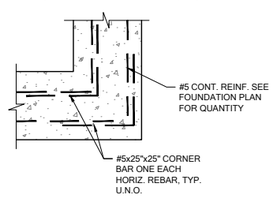

FM19 TYP. CORNER BAR DETAIL
SCALE: 3/4" = 1'-0" @ 22x34
SCALE: 3/8" = 1'-0" @ 11x17

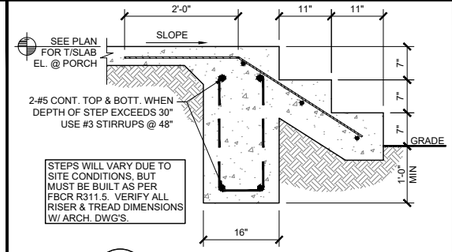

FM22 PORCH STEP
SCALE: 3/4" = 1'-0" @ 22x34
SCALE: 3/8" = 1'-0" @ 11x17

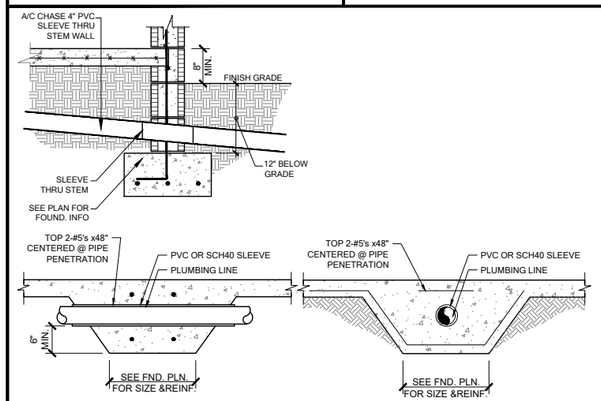

PIPE PERPENDICULAR TO FND.

FS23 FOUNDATION PENETRATIONS, TYPICAL
SCALE: 3/4" = 1'-0" @ 22x34
SCALE: 3/8" = 1'-0" @ 11x17

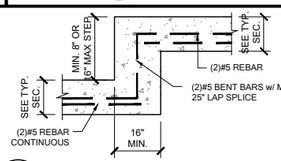

FM18 TYP. STEP FOOTING DETAIL
SCALE: 3/4" = 1'-0" @ 22x34
SCALE: 3/8" = 1'-0" @ 11x17

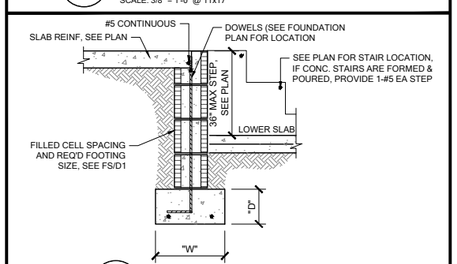

FS16 LARGE STEP DOWN
SCALE: 3/4" = 1'-0" @ 22x34
SCALE: 3/8" = 1'-0" @ 11x17

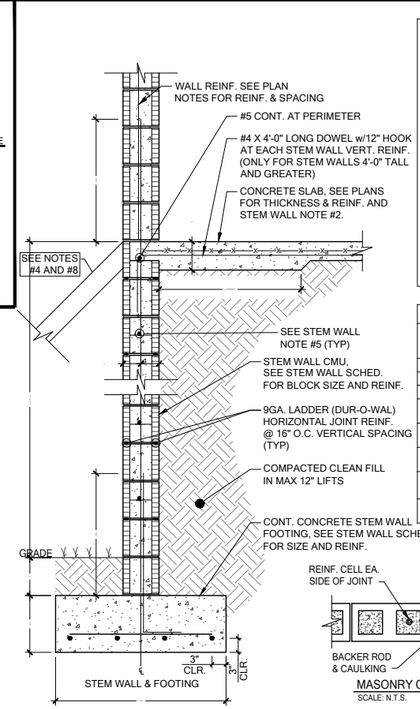

STEM WALL NOTES:

1. VERTICAL REINFORCING IN SOLID GROUTED CELLS (3,000 PSI CONCRETE) AT ALL CORNERS, JAMBS, WALL INTERSECTIONS, BELOW GIRDER TRUSS LOCATIONS, AND AT THE MAXIMUM SPACING STATED IN SCHEDULE.
2. A. 6x6 - W1.4 x W1.4 W.W.M. IS REQUIRED TO MAKE ADEQUATE CONNECTION BETWEEN SLAB AND WALL WHEN STEM WALL EXCEEDS 4'-0" TALL.
   B. FIBERMESH CONCRETE CAN NOT BE USED.
   C. #4 TURN BARS ARE REQUIRED AT EACH FILLED CELL LOCATION.
   D. EACH BAR TO TIE INTO VERTICAL STEM WALL REINFORCING BAR AND EXTEND OUT A MINIMUM OF 4'-0" INTO SLAB.
3. IF STEM WALL IS REQUIRED TO BE HIGHER THAN 12 FEET (18 COURSES), CONTACT ENGINEER OF RECORD PRIOR TO CONSTRUCTION FOR MORE INFORMATION.
4. GENERAL CONTRACTOR TO PROVIDE ADEQUATE BRACING OF STEM WALL WHEN UNEVEN BACK FILLING IS TAKING PLACE.
5. A. WHEN STEM WALL IS LESS THAN 4'-0" TALL, PROVIDE (1) - #5 HORIZONTAL CORNER BARS WITH 4'-0" X 4'-0" LEGS IN KNOCKOUT BLOCK SPACED @ 16" O.C. VERTICALLY. (TYPICAL AT ALL CORNERS).
   B. WHEN STEM WALL IS 4'-0" TALL AND GREATER, PROVIDE CORNER BAR MENTIONED ABOVE AND (1) - #5 CONTINUOUS HORIZONTAL BAR IN KNOCKOUT BLOCK SPACED @ 16" O.C. VERTICALLY. GROUT ENTIRE WALL SOLID.
   C. ALL STEM WALLS GREATER THAN (4) COURSES, SHALL BE GROUTED SOLID WITH 3,000 PSI CONCRETE.
6. IF STEM WALL IS WITHIN 5'-0" OF POOL OR WATER FEATURE, FOUNDATIONS TO BE A MINIMUM 12" BELOW BOTTOM OF POOL OR WATER FEATURE.
7. R.403.1.4 MINIMUM DEPTH: ALL EXTERIOR FOOTINGS (BOTTOM) SHALL BE PLACED NOT LESS THAN 12" BELOW THE FINISHED GRADE OF GROUND SURFACE. WHERE APPLICABLE, THE DEPTH OF FOOTINGS SHALL ALSO CONFORM TO SECTION R403.1.4.1.
8. EXTERIOR SHORING BY CONTRACTOR AS REQUIRED WHEN STEM IS OVER 4'- 0" TALL.
9. CONTROL JOINTS TO BE LOCATED AT 20' O.C. MAX AND @ ALL CHANGES IN WALL WIDTHS.

STEM WALL SCHEDULE

STEMWALL HEIGHT (h)	COURSES OF BLOCKS	BLOCK SIZE	FOOTING DIMENSION (d) & (w)				NUMBER/SIZE OF BOTTOM BARS IN CONT. FOOTING	MAXIMUM VERTICAL FILLED CELL SPACING IN STEM WALL CENTERED (U.N.O.)
			(d) 1 STRY.	(d) 2 STRY	(w) 1 STRY.	(w) 2 STRY.		
0'-0" - 2'-0"	1 - 3	8"	8"	10"	16"	20"	(2) - #5 BARS	#5 @ 80" O.C.
2'-8" - 3'-4"	4 - 5	8"	10"	10"	20"	24"	(3) - #5 BARS	#5 @ 64" O.C.
4'-0"	6	8"	12"	12"	32"	32"	(4) - #5 BARS	#5 @ 48" O.C.
4'-8" - 5'-4"	7 - 8	8"	16"	16"	40"	40"	(4) - #5 BARS CONT. & #5 AT 24" O.C. TRANSV.	#5 @ 32" O.C.
6'-0" - 6'-8"	9 - 10	8"	16"	16"	48"	48"	(4) - #5 BARS CONT. & #5 AT 12" O.C. TRANSV.	#5 @ 32" O.C.
7'-4" - 8'-0"	11 - 12	8"	16"	16"	48"	48"	(5) - #5 BARS CONT. & #5 AT 12" O.C. TRANSV.	#5 @ 16" O.C.
8'-8" - 10'-0"	13 - 15	12"	16"	16"	54"	54"	(5) - #5 BARS CONT. & #5 AT 12" O.C. TRANSV.	#5 @ 8" O.C.
10'-8" - 12'-0"	16 - 18	12"	16"	16"	54"	54"	(6) - #5 BARS CONT. & #5 AT 12" O.C. TRANSV.	(2) - #5 @ 16" O.C. SPACED 4" APART IN CELL

NOTE: SEE FOUNDATION PLAN FOR FILLED CELL SPACING ABOVE SLAB LEVEL.

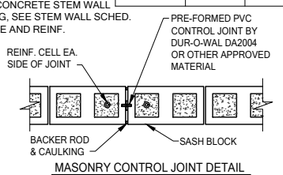

MASONRY CONTROL JOINT DETAIL
SCALE: N.T.S.

FS STEM WALL FOOTING SCHEDULE
SCALE: N.T.S.

CENTURY Complete

THIS SET IS THE PROPERTY OF FDS ENGINEERING AND MUST BE RETURNED ON REQUEST. REPRODUCTION OF THIS DRAWING, IN WHOLE OR IN PART, WITHOUT WRITTEN PERMISSION OF FDS ENGINEERING IS PROHIBITED. ALL RIGHTS RESERVED. COPYRIGHT © 2020 FDS ENGINEERING

DATE: January 20, 2022
REVISED FOR CITY COMMENTS

FDS ENGINEERING ASSOCIATES, INC.
258 Southhall Lane, Suite 200
Maitland, FL 32751
O. 321.900.9181 F. 321.880.2304
Certificate Of Authorization No. 9161
WWW.FDSENG.COM
☐ CARLA. BROWN, PE - FL # 56126
☐ LUIS PABLO TORRES, PE - FL #87864
☐ SCOTT LEWKOWSKI, PE - FL #78750

LOT 32
RESERVE @ JEWEL LAKE
456 SW JEWEL LAKE DR.
LAKE CITY, FL 32024

PLAN NUMBER: 33811607
RELEASE DATE: 08.03.2020

MODEL: COVINGTON
DRAWING TITLE: FOUNDATION DETAILS

SHEET NO: D1

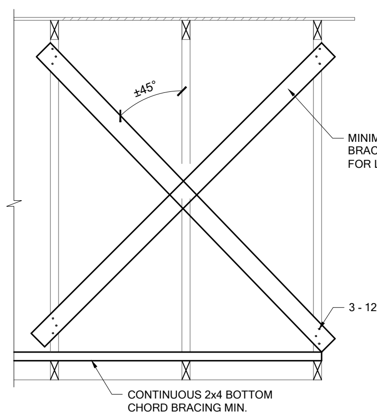

TB01 CROSS BRACING, TYP.
SCALE: 3/4" = 1'-0" @ 22x34
SCALE: 3/8" = 1'-0" @ 11x17

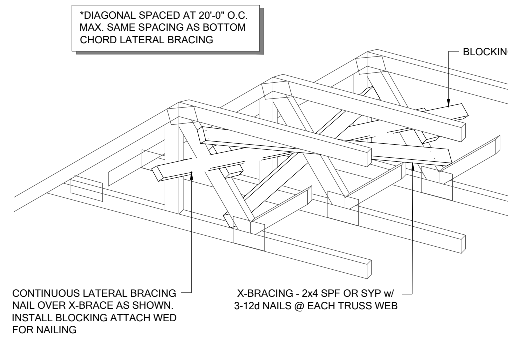

TB02 CROSS BRACING TYPICAL
SCALE: N.T.S.

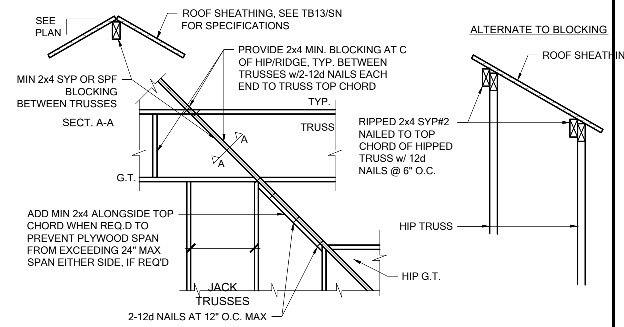

TB03 HIP/RIDGE BLOCKING
SCALE: 3/4" = 1'-0" @ 22x34
SCALE: 3/8" = 1'-0" @ 11x17

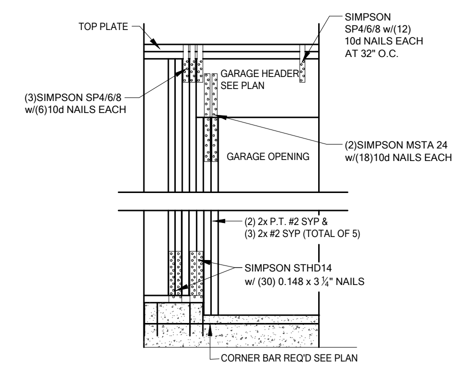

WC04 GARAGE HEADER ANCHOR
SCALE: 3/4" = 1'-0" @ 22x34
SCALE: 3/8" = 1'-0" @ 11x17

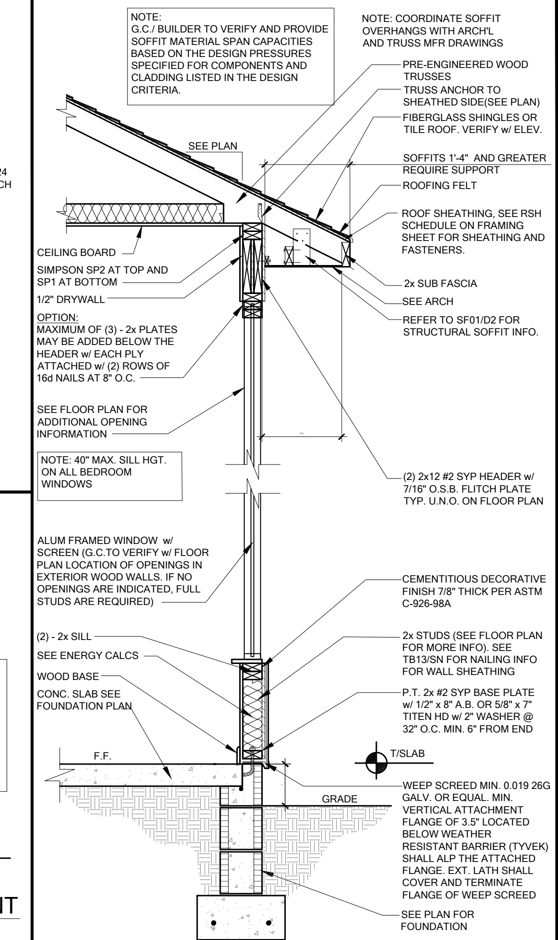

WS02 TYP. WALL SECTION
SCALE: 3/4" = 1'-0" @ 22x34
SCALE: 3/8" = 1'-0" @ 11x17

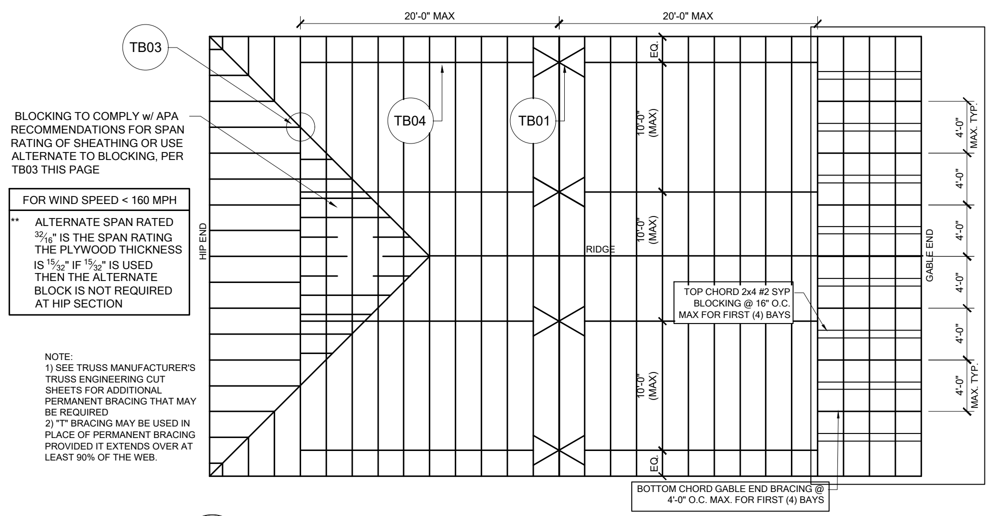

NOTE:
1) SEE TRUSS MANUFACTURER'S TRUSS ENGINEERING CUT SHEETS FOR ADDITIONAL PERMANENT BRACING THAT MAY BE REQUIRED
2) "T" BRACING MAY BE USED IN PLACE OF PERMANENT BRACING PROVIDED IT EXTENDS OVER AT LEAST 90% OF THE WEB.

TB05 REQUIRED MIN. PERMANENT TRUSS BRACING PLAN
SCALE: N.T.S.

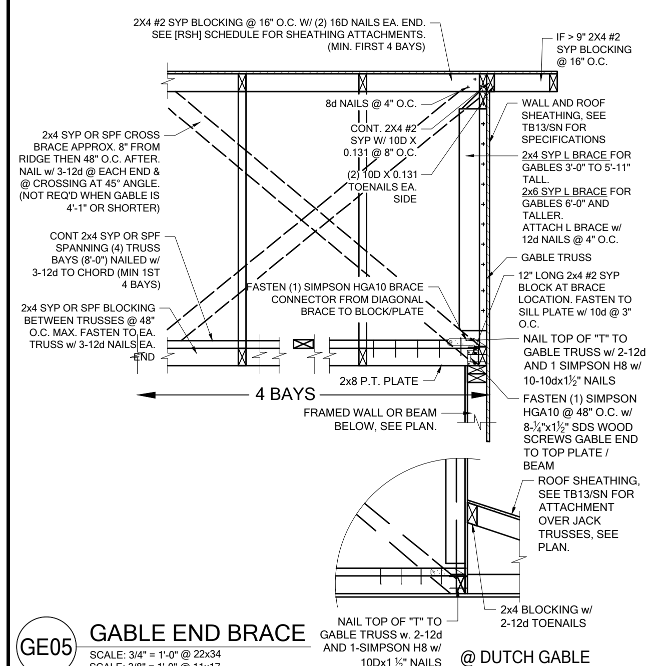

GE05 GABLE END BRACE
SCALE: 3/4" = 1'-0" @ 22x34
SCALE: 3/8" = 1'-0" @ 11x17

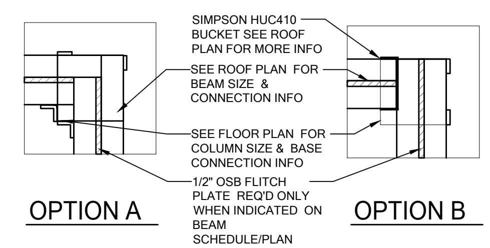

A COMMON BM. TO POST ATTACHMENT
SCALE: 3/4" = 1'-0" @ 22x34
SCALE: 3/8" = 1'-0" @ 11x17

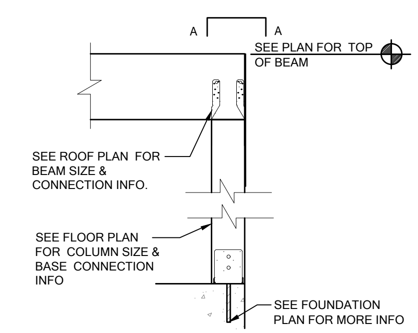

CD11 COMMON BM. ATTACHMENT
SCALE: 3/4" = 1'-0" @ 22x34
SCALE: 3/8" = 1'-0" @ 11x17

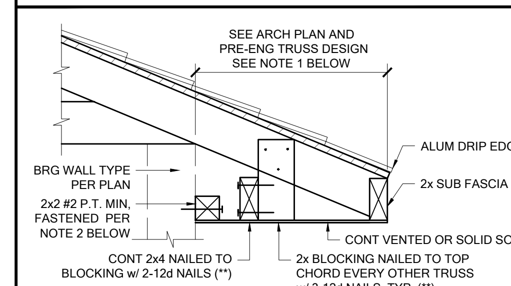

1. G.C./ BUILDER TO VERIFY/PROVIDE SOFFIT MATERIAL SPAN CAPACITIES BASED ON THE DESIGN PRESSURES SPECIFIED FOR COMPONENTS AND CLADDING LISTED IN THE DESIGN CRITERIA ON **SHEET S0**.
2. 2x2 #2 MIN. P.T. w/ J-CHANNEL SECURED @ 24" O.C. FASTEN TO:
   - CMU w/ 3 3/16" x 3" TITEN @ 16" O.C. (ALT. PAF 0.145/0.157 & 0.300 WASHER w/ MIN. 1" EMBEMENT @ 16" O.C.)
   - WOOD w/ 0.148"x 3 1/4" @ 16" O.C.
3. [F] CHANNEL APPLICATION: 2X2 NOT REQUIRED SEE (PA) INSTALLATION GUIDE

SF01 STRUCTURAL SOFFIT
SCALE: 3/4" = 1'-0" @ 22x34
SCALE: 3/8" = 1'-0" @ 11x17
REV. 03.26.2021
REV. 09.10.2021

(**) FOR ALUMINUM SOFFITS >1'-4" BLOCKING REQUIRED, FOR SOFFITS <1'-4" MID BLOCKING NOT REQUIRED. VINYL SOFFITS >1'-0" SHALL HAVE MID BLOCKING PER R704.2.1

REFER TO THE PRODUCT APPROVAL FOR INSTALLATION DETAILS.

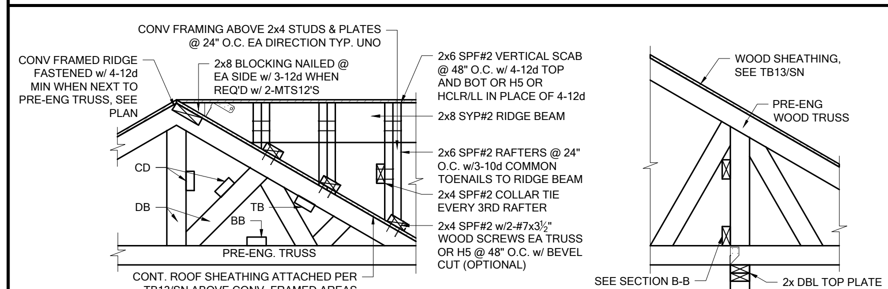

TRUSS BRACING/BLOCKING NOTES:
1. WOOD TRUSS ERECTOR SHALL PROVIDE BRACING ACCORDING TO ANSI/TP1-2014 (TRUSS PLATE INSTITUTE) NOTE THAT THE COMBINED WIND AREA IS GREATER BEFORE THE ROOF SHEATHING IS APPLIED, AND BRACING SHALL THEREFORE BE INSTALLED AS THE TRUSSES ARE ERECTED. INADEQUATE TRUSSES BRACING IS THE MOST COMMON CAUSE OF ACCIDENT IN WOOD TRUSS CONSTRUCTION. FULL BUNDLES OF PLYWOOD SHALL NOT BE PLACED ON TRUSSES. THIS CONSTRUCTION LOAD SHOULD BE LIMITED TO 8 SHEETS OF PLYWOOD ON ANY PAIR OF TRUSSES & SHALL BE LOCATED ADJACENT TO THE SUPPORTS. NO EXCESS CONCENTRATION OF ANY CONSTRUCTION MATERIAL (SUCH AS GRAVEL OR SHINGLES) SHALL BE PLACED ON THE TRUSSES IN ANY ONE AREA THEY SHALL BE SPREAD OUT EVENLY OVER A LARGE SO AS TO AVOID OVERLOADING ANY ONE TRUSS.
2. ALL BRACING (DB, CB, BB) SHOWN ABOVE SHALL BE IN ADDITION TO CONTINUOUS LATERAL BRACING SPECIFIED BY THE TRUSS MANUFACTURER ALL LATERAL BRACING SPECIFIED BY TRUSS MANUF. SHALL HAVE ADDITIONAL DIAGONAL BRACES AT 20'-0" O.C. MAXIMUM.
3. ALL BRACES SHALL BE 2x4 NOMINAL DIMENSION LUMBER & SHALL BE ATTACHED W/ (3)12d NAILS AT EACH TRUSS INTERSECTION.
4. ADDITIONAL BOTTOM CHORD BRACING SHALL BE INSTALLED AS REQUIRED BY TRUSS DESIGN WHEREVER ADEQUATE STRUCTURAL CEILING ARE NOT ATTACHED DIRECTLY TO THE BOTTOM CHORD OF THE TRUSS.
5. PROVIDE TRUSS BLOCKING AT ALL TRUSS BEARING SUPPORTS WHERE DEPTH EXCEEDS STANDARD HEEL HEIGHT.
6. SEE TYP. TRUSS BLOCKING DETAILS.

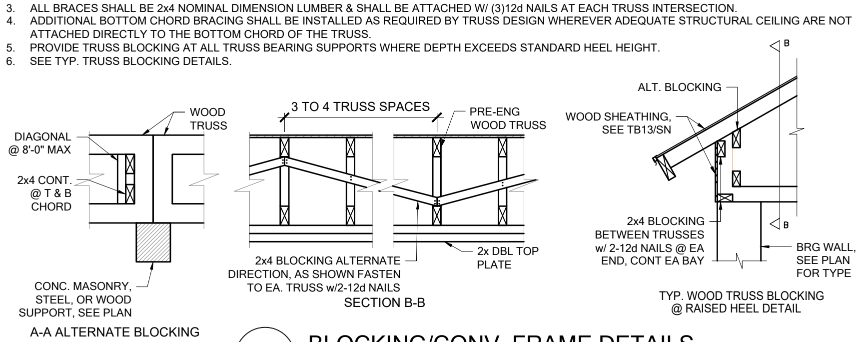

TB06 BLOCKING/CONV. FRAME DETAILS
SCALE: 1/2" = 1'-0" @ 22x34
SCALE: 3/8" = 1'-0" @ 11x17

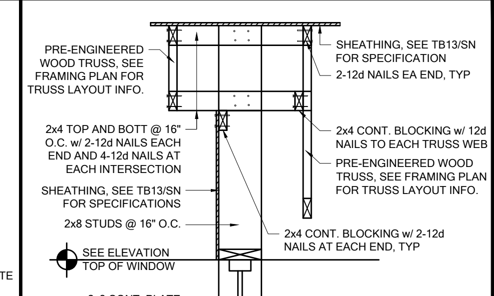

WF27 KNEEWALL @ ENTRY
SCALE: 3/4" = 1'-0" @ 22x34
SCALE: 3/8" = 1'-0" @ 11x17

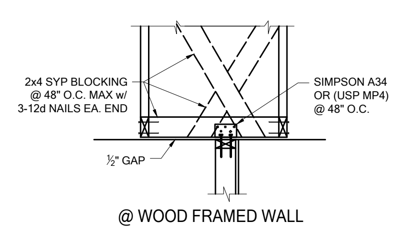

TB15 NON-BEARING EXTERIOR WALL
SCALE: 3/4" = 1'-0" @ 22x34
SCALE: 3/8" = 1'-0" @ 11x17

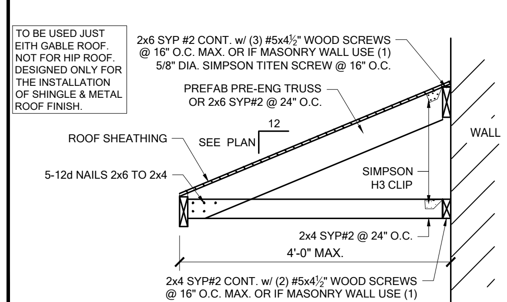

SR01 SHED ROOF CONNECTION
SCALE: 3/4" = 1'-0" @ 22x34
SCALE: 3/8" = 1'-0" @ 11x17

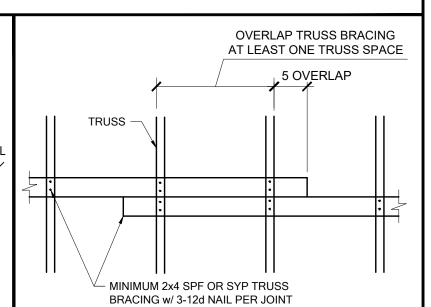

TB04 TRUSS BRACING OVER LAP
SCALE: 3/4" = 1'-0" @ 22x34
SCALE: 3/8" = 1'-0" @ 11x17

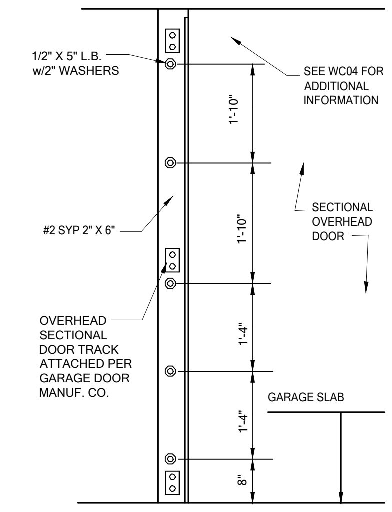

WC05 SECT. OVERHEAD GAR. DOOR INSTALL
SCALE: 3/4" = 1'-0" @ 22x34
SCALE: 3/8" = 1'-0" @ 11x17

TYP. CORNER @ GARAGE

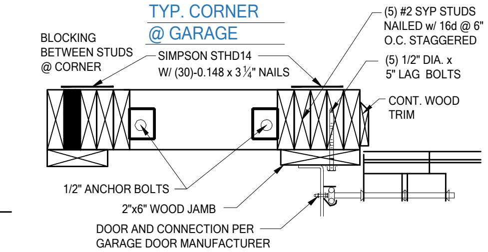

TRACK MOUNTING DET.

TO THE BEST OF THE ENGINEER'S KNOWLEDGE, INFORMATION, AND BELIEF, THE STRUCTURAL PLANS AND SPECIFICATIONS CONTAINED WITHIN THESE DRAWINGS COMPLY WITH THE 2020 FLORIDA BUILDING CODE-RESIDENTIAL 7TH EDITION. ENGINEER'S SIGNATURE AND SEAL IS ONLY FOR THE STRUCTURAL ENGINEERING PORTIONS OF THE DRAWING PAGES BEARING ENGINEER'S SIGNATURE AND SEAL. ANY FURTHER REVISIONS OR ADDITIONS TO THIS PLAN / DESIGN ARE NOT APPROVED UNLESS SIGNED AND SEALED BY THE E.O.R.
FDS JOB NO.:22-00919

DATE: January 20, 2022
IF SEAL AND SIGNATURE ARE NOT BLUE OR CAN NOT BE SMUDGED CONTACT THE E.O.R. FOR AUTHORIZATION.

FDS ENGINEERING ASSOCIATES
258 Southhall Lane, Suite 200
Maitland, FL 32751
O: 321-972-0491 F: 407-880-2304
Certificate Of Authorization No. 9161
☐ CARL A. BROWN, PE - FL # 56126
☐ LUIS PABLO TORRES, PE - FL #87864
☐ SCOTT LEWKOWSKI, PE - FL #78750
WWW.FDSENG.COM

LOT 32
RESERVE @ JEWEL LAKE
456 SW JEWEL LAKE DR.
LAKE CITY, FL 32024

PLAN NUMBER: 33811607
RELEASE DATE: 08.03.2020
MODEL: COVINGTON
DRAWING TITLE: FLOOR FRAMING DETAILS
SHEET NO: D2

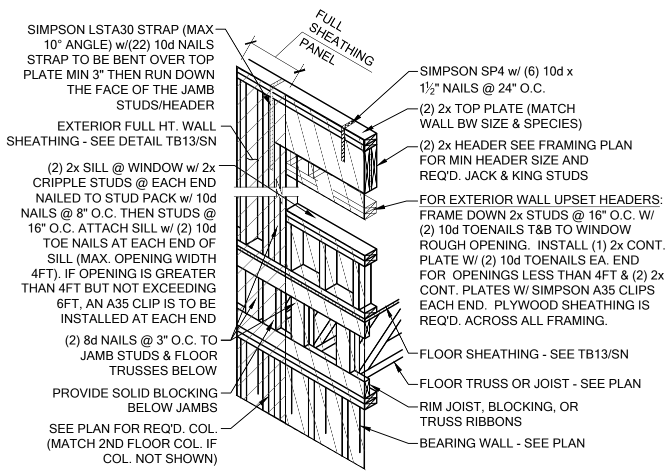

GENERAL NOTES
1. SEE SH07/D4 FOR ALT. CONDITION.

SH00 HEADER CONN. @ 2ND FLOOR (NO BASE STRAP)
SCALE: 3/4" = 1'-0" @ 22x34
SCALE: 3/8" = 1'-0" @ 11x17

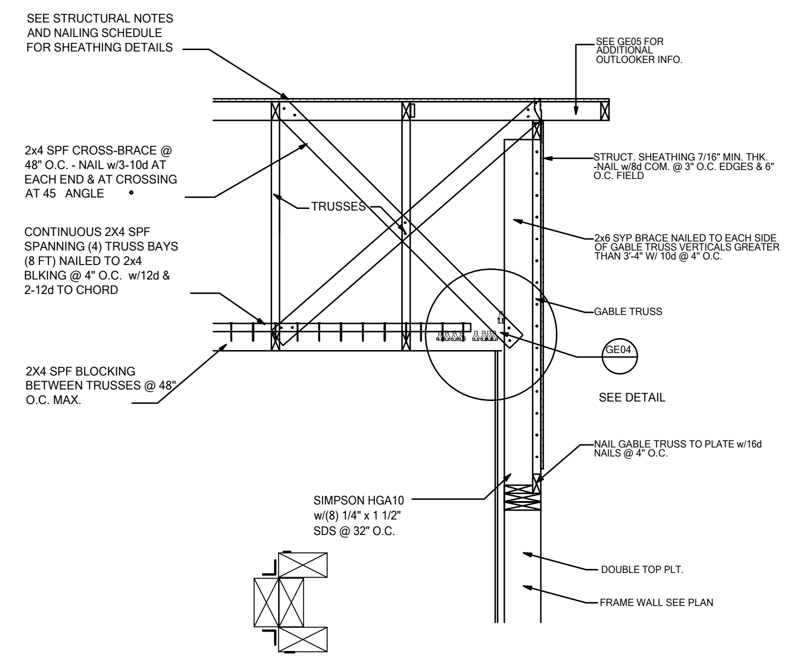

GE03 GABLE END BRACIN w/ VOLUME CEILING
SCALE: 3/4" = 1'-0" @ 22x34
SCALE: 3/8" = 1'-0" @ 11x17

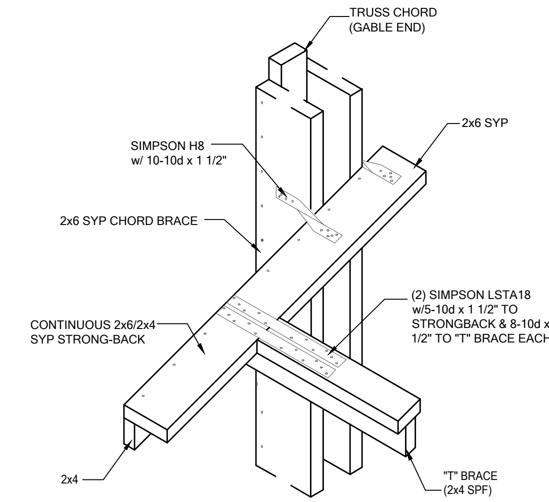

GE04 "T" BRACE CONNECTION @ VOLUME CEILING
SCALE: 3/4" = 1'-0" @ 22x34
SCALE: 3/8" = 1'-0" @ 11x17

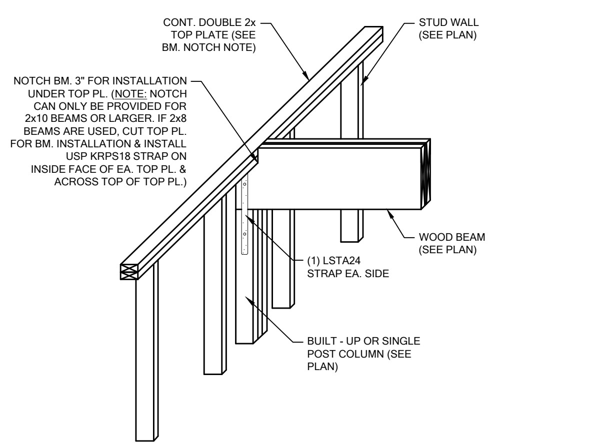

WF103 TYP. WOOD BEAM TO WOOD WALL CONN.
SCALE: 3/4" = 1'-0" @ 22x34
SCALE: 3/8" = 1'-0" @ 11x17

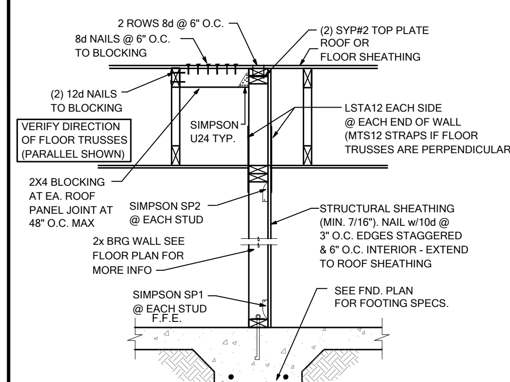

SW04 INTERIOR SHEAR WALL @ TRUSSES
SCALE: 3/4" = 1'-0" @ 22x34
SCALE: 3/8" = 1'-0" @ 11x17

RAFTER SIZE
0'-8' SPAN - 2"X6" W/4-12d EACH END
8'-12' SPAN - 2"X8" W/4-12d EACH END
12'-15' SPAN - 2"X10" W/ SIMPSON A 34 @ EA. END
15'-18' SPAN - 2"X12" W/SIMPSON A 34 @ EA. END

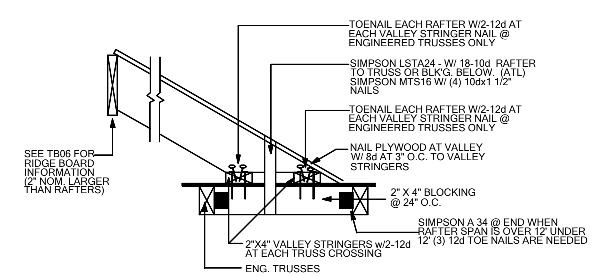

TB17 CONV. FRAMING & VALLEY FRAMING
SCALE: 3/4" = 1'-0" @ 22x34
SCALE: 3/8" = 1'-0" @ 11x17

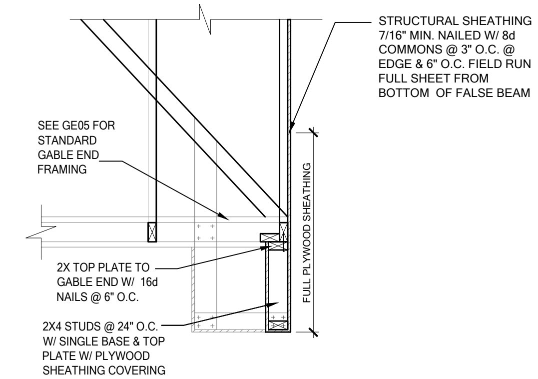

GE15 FALSE BEAM @ GABLE END
SCALE: 3/4" = 1'-0" @ 22x34
SCALE: 3/8" = 1'-0" @ 11x17

NOTE: @ ALL EXT. CONDITIONS ATTACH 2x STUDS TO TOP PLATE W/ (4) 16d TONAILS (2) ON EA. SIDE TYP. TOE NAILS MAY BE SUBSTITUTED W/ (1) SIMPSON H2.5A CONNECTOR @ EA. STUD TO TOP PLATE W/ 8d 2 1/2" x 0.131 NAILS

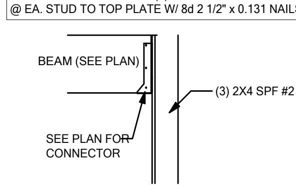

CD25 BEAM TO WALL CONNECTION
SCALE: 3/4" = 1'-0"

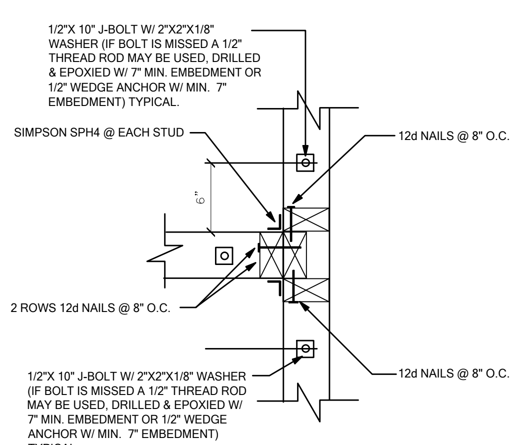

WC03 WALL TO WALL @ END OF SHEAR WALL
SCALE: 3/4" = 1'-0" @ 22x34
SCALE: 3/8" = 1'-0" @ 11x17

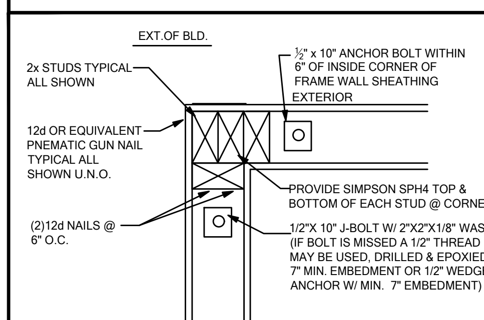

WC06 EXTERIOR FRAME CORNER
SCALE: 3/4" = 1'-0" @ 22x34
SCALE: 3/8" = 1'-0" @ 11x17

CONTRACTOR NOTE:
INSTALLATION FOR GARAGE DOOR TYPES (AS PER TEST *960507-A)

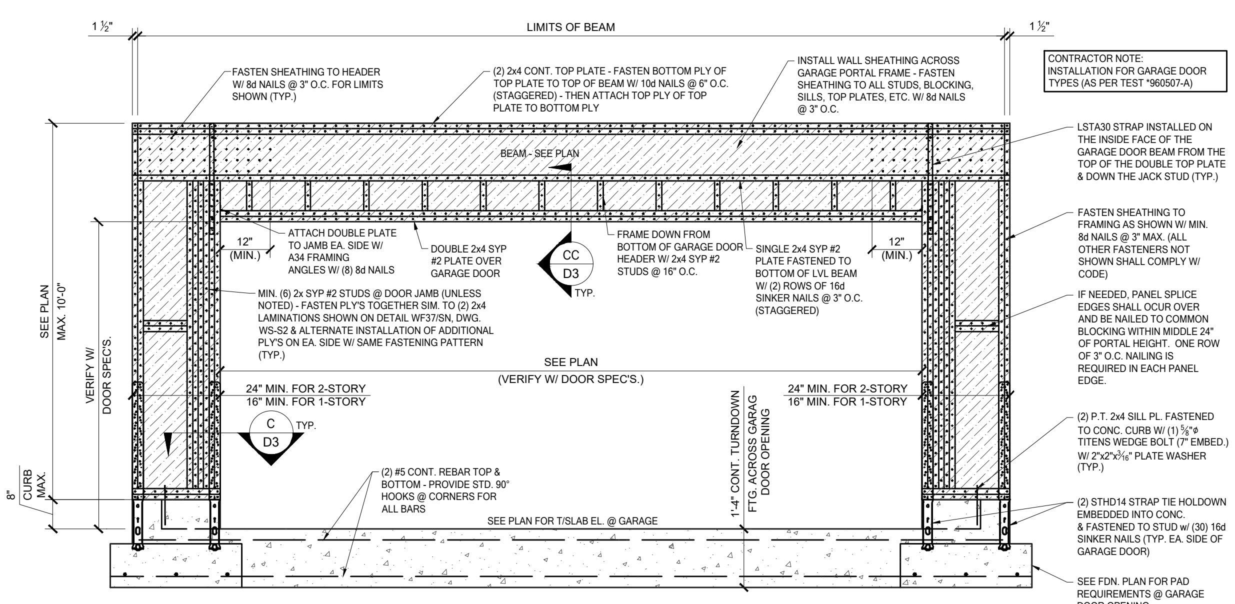

PF01 GARAGE DOOR PORTAL FRAME
SCALE: 3/4" = 1'-0" @ 22x34
SCALE: 3/8" = 1'-0" @ 11x17

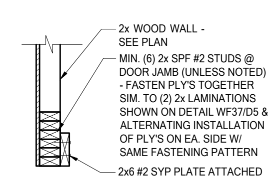

C GARAGE DOOR JAMB BUCK DETAIL
SCALE: N.T.S.

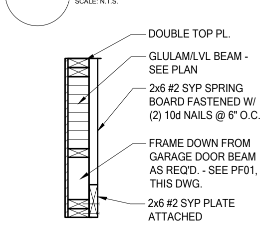

CC GARAGE DOOR HEAD BUCK DETAIL
SCALE: N.T.S.

CENTURY Complete

TO THE BEST OF THE ENGINEER'S KNOWLEDGE, INFORMATION, AND BELIEF, THE STRUCTURAL PLANS AND SPECIFICATIONS CONTAINED WITHIN THESE DRAWINGS COMPLY WITH THE 2020 FLORIDA BUILDING CODE-RESIDENTIAL 7TH EDITION. ENGINEER'S SIGNATURE AND SEAL IS ONLY FOR THE STRUCTURAL ENGINEERING PORTIONS OF THE DRAWING PAGES BEARING ENGINEER'S SIGNATURE AND SEAL. ANY FURTHER REVISIONS OR ADDITIONS TO THIS PLAN / DESIGN ARE NOT APPROVED UNLESS SIGNED AND SEALED BY THE E.O.R.
FDS JOB NO:22-00919

DATE: January 20, 2022
IF SEAL AND SIGNATURE ARE NOT BLUE OR CAN NOT BE SMUDGED CONTACT THE E.O.R. FOR AUTHORIZATION.

FDS ENGINEERING ASSOCIATES
258 Southhall Lane, Suite 200
Maitland, FL 32751
O: 321-972-0491 F: 407-880-2304
Certificate Of Authorization No. 9161
☐ CARL A. BROWN, PE - FL # 56126
☐ LUIS PABLO TORRES, PE - FL #87864
☐ SCOTT LEWKOWSKI, PE - FL #78750
WWW.FDSENG.COM

LOT 32
RESERVE @ JEWEL LAKE
456 SW JEWEL LAKE DR.
LAKE CITY, FL 32024

PLAN NUMBER: 33811607
RELEASE DATE: 08.03.2020

MODEL: COVINGTON
DRAWING TITLE: FLOOR FRAMING DETAILS

SHEET NO: D3

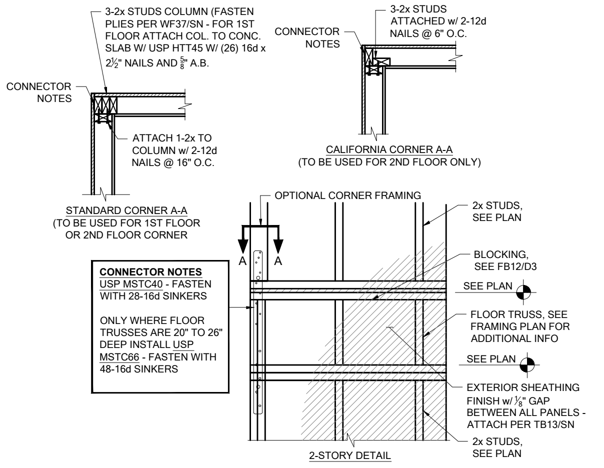

FB06 TYP. CORNER FRAMING

SCALE: 3/4" = 1'-0" @ 22x34
SCALE: 3/8" = 1'-0" @ 11x17

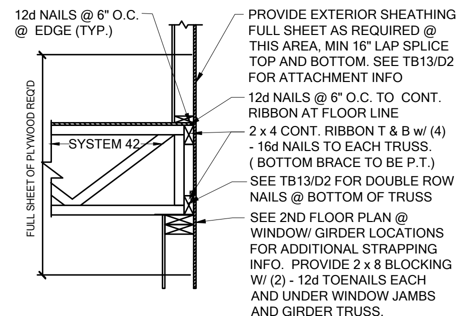

WS06 FLOOR ATTACHMENT

SCALE: 3/4" = 1'-0" @ 22x34
SCALE: 3/8" = 1'-0" @ 11x17

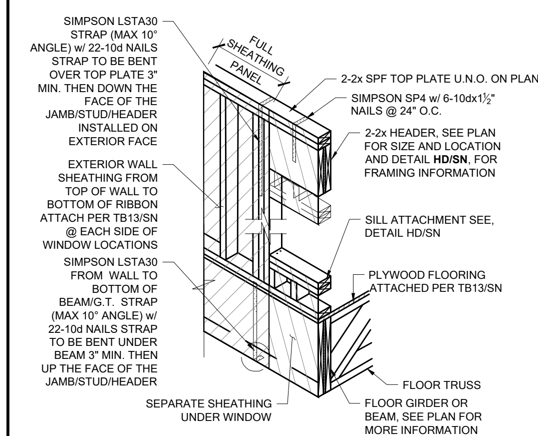

SH05 HEADER CONN. @ BEAM

SCALE: N.T.S.

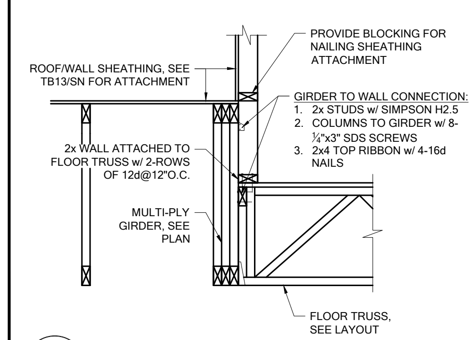

WF100 BRG. WALL OVER FLOOR SYSTEM

SCALE: 3/4" = 1'-0" @ 22x34
SCALE: 3/8" = 1'-0" @ 11x17

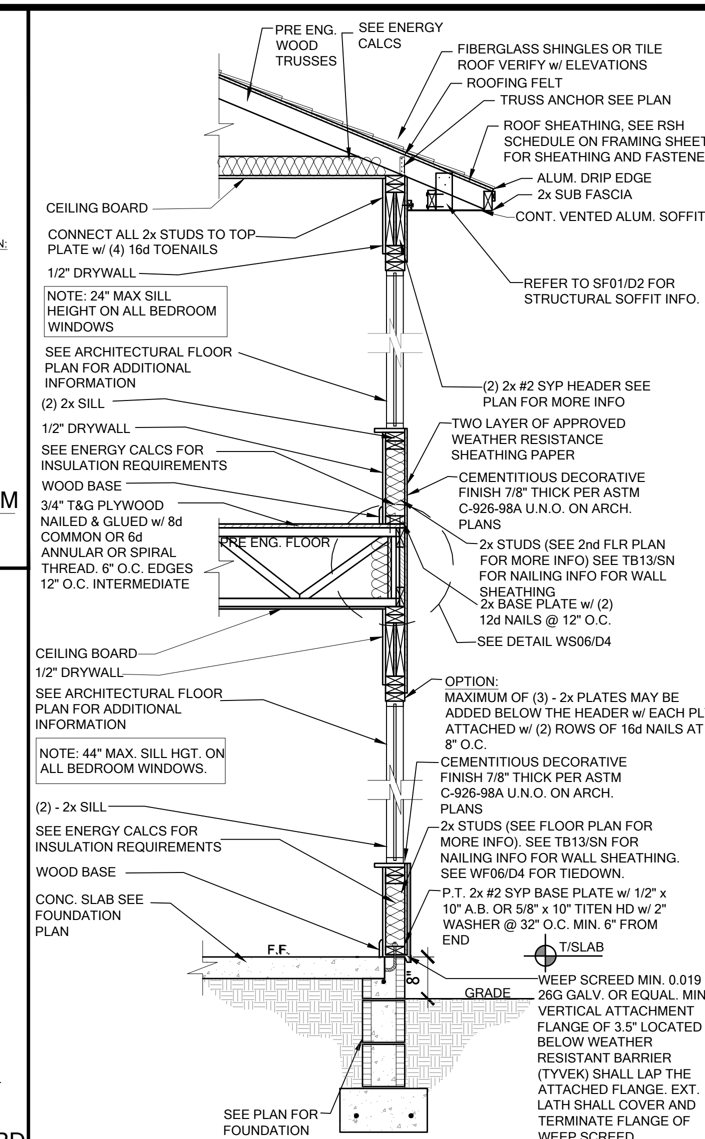

WS04 2 STORY FRAME WALL SECTION

SCALE: 3/4" = 1'-0" @ 22x34
SCALE: 3/8" = 1'-0" @ 11x17

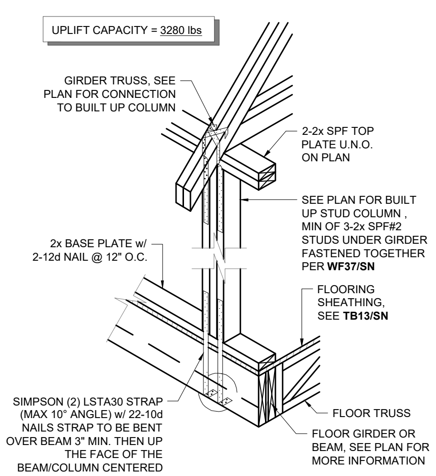

SG01 COLUMN CONN. @ BEAM

SCALE: 3/4" = 1'-0" @ 22x34
SCALE: 3/8" = 1'-0" @ 11x17

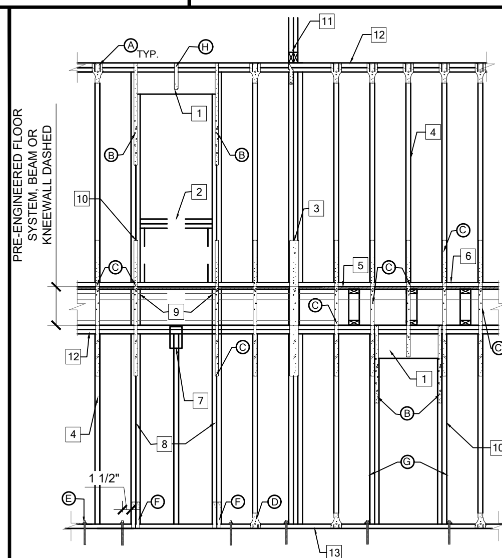

A SIMPSON SP2 @ EA. STUD w/ 6- 10d TO STUD & TO TOP PLATE MIN. SEE PLAN/BRG WALL SCHEDULE/SN

B SIMPSON LSTA30 w/ 22- 10d NAILS

C SIMPSON CS16 W/ (22)- 10D X 2 ½" OR (26) 8D NAILS EXTEND MIN. 14" UNTO STUDS ABOVE & BELOW

D SIMPSON SP1 w/ (6)- 10d EA. STUD & (4)- 10d TO BASE PLATE U.N.O. ON FLOOR PLAN/BRG WALL SCHEDULE

E SEE BRG WALL SCHEDULE FOR A.B. REQUIREMENTS

F SIMPSON SP4 EACH STD @ JAMB CONDITION

G SIMPSON HTT5 w/ (26) 10d NAILS & (1) ⅝" ANCHOR BOLT w/ 8" EMBED (SEE WF09/SN FOR MORE INFO)

H SIMPSON SP4 w/ (6) 10x x 1 ½" @ 24" O.C.

PROVIDE EXTERIOR SHEATHING ATTACHED PER NAILING SCHEDULE SHEATHING SHOULD EXTEND TO FLOOR LEVEL

1. (2) - 2x HEADER SEE FLOOR PLAN FOR MIN HEADER AND ADDITIONAL INFO SEE PLAN FOR ADDITIONAL FRAMING INFO
2. AT WINDOW LOCATIONS FRAME IN SILL FOLLOWING HD/SN
3. SEE PLAN FOR G.T. COLUMN AND CONNECTION INFORMATION
4. 2x STUDS PER BRG WALL SCHEDULE. STUDS TO LINE UP TOP & BOTTOM
5. PLYWOOD FLOORING SEE PLAN FOR ATTACHMENT INFO
6. 2x BASE w/ (2) 12d NAILS @ 12" O.C.
7. NO CONNECTION FOR STUDS w/in 2nd FLOOR HEADER
8. MATCH STUDS UNDER 2nd FLOOR HEADER
9. SOLID BLOCKING / FLOOR TRUSS UNDER STUD PACK
10. SEE HEADER SCHEDULE FOR MIN STUDS EACH SIDE
11. GIRDER TRUSS SEE PLAN FOR LOCATION AND ADDITIONAL INFORMATION
12. (2) 2x TOP PLATE SEE PLAN FOR MORE INFORMATION
13. 2x P.T. BASE PLATE

WF06 2-STORY INT. BEAR & EXT. WALL

SCALE: 3/4" = 1'-0" @ 22x34
SCALE: 3/8" = 1'-0" @ 11x17

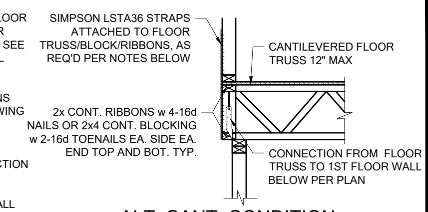

ALT. CANT. CONDITION

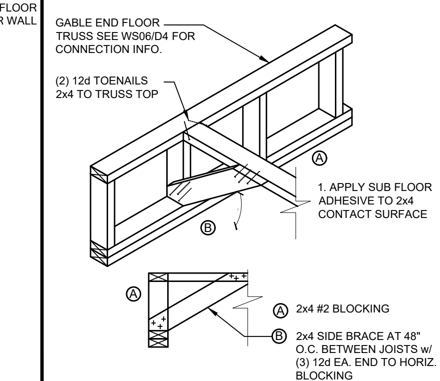

FB12 BLOCKING w/BOTTOM CHORD

SCALE: 3/4" = 1'-0" @ 22x34
SCALE: 3/8" = 1'-0" @ 11x17

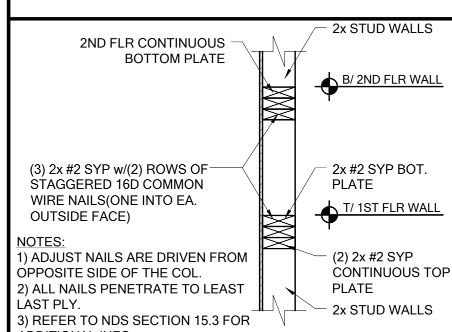

NOTES:
1) ADJUST NAILS ARE DRIVEN FROM OPPOSITE SIDE OF THE COL.
2) ALL NAILS PENETRATE TO LEAST LAST PLY.
3) REFER TO NDS SECTION 15.3 FOR ADDITIONAL INFO.

WF03 WALL SPLICE DETAILS

SCALE: 3/4" = 1'-0" @ 22x34
SCALE: 3/8" = 1'-0" @ 11x17

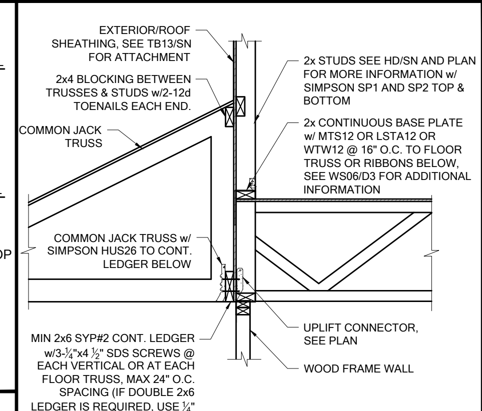

LD07 LEDGER CONNECTION

SCALE: 3/4" = 1'-0" @ 22x34
SCALE: 3/8" = 1'-0" @ 11x17

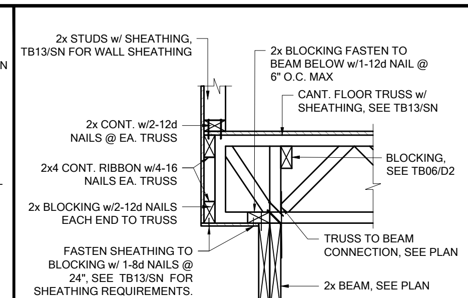

FC03 CANTILEVER FLOOR

SCALE: 3/4" = 1'-0" @ 22x34
SCALE: 3/8" = 1'-0" @ 11x17

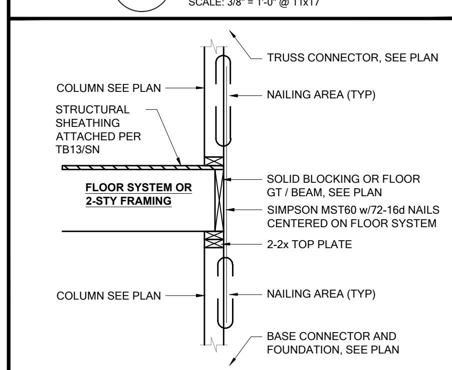

SG07 2-STORY COLUMN @ GIRDER

SCALE: 3/4" = 1'-0" @ 22x34
SCALE: 3/8" = 1'-0" @ 11x17

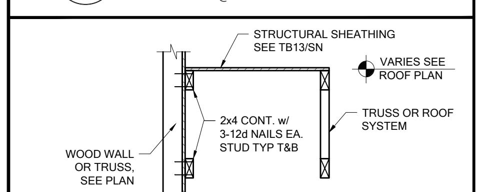

LD02 SHEAR TRANSFER

SCALE: 3/4" = 1'-0" @ 22x34 @ EXT. WALL
SCALE: 3/8" = 1'-0" @ 11x17

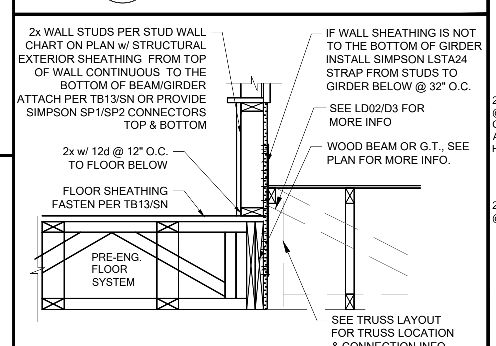

WF31 TYPICAL WALL SECTION

SCALE: 3/4" = 1'-0" @ 22x34
SCALE: 3/8" = 1'-0" @ 11x17

STAIR NOTES:

- Stairway construction and handrail to conform to the FBC Residential section R311.7
- Riser height:
- The maximum riser height shall be 7 3/4". The greatest riser height within any flight of stairs shall not exceed the smallest by more than 3/8 inch.
- Tread depth:
- The minimum tread depth shall be 10". The greatest tread depth within any flight of stairs shall not exceed the smallest by more than 3/8 inch.
- Handrails:
- Handrails shall be provided on at least one side of each continuous run of treads or flight with four or more risers. Handrail height, measured vertically from the sloped plane adjoining the tread nosing, or finish surface of ramp slope, shall be not less than 34" and not more than 38". Handrails adjacent to a wall shall have a space of not less than 1 1/2" between the wall and the handrails.
- Grip-size:
- Handrails with a circular cross section shall have an outside diameter of at least 1 1/2" and not greater than 2" or provide equivalent graspability in compliance with FBCR Section R311.7.8.3.
- Guards:
- Guards shall be located along open-sided walking surfaces, including stairs, ramps and landings, that are located more than 30" and shall be not less than 36". Required guards shall not have openings from the walking surface to the required guard height which allow passage of a sphere 4" in diameter.
- (guardrails and handrails shall have a uniformly distributed live load of 200 psf.) (guardrail in fill components (pickets) shall have a uniformly distributed live load of 50 psf).
- Winders:
- Winder treads shall have a minimum tread depth of 6" at the narrow end and shall have a minimum tread depth of 10" at the intersections with the walkline (12" from the narrower side).

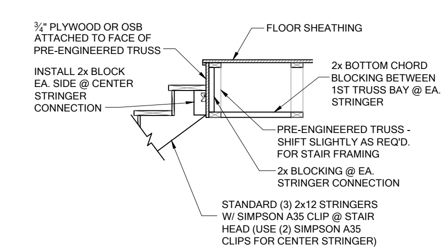

TYP. HEAD OF STAIR FRAMING SECTION

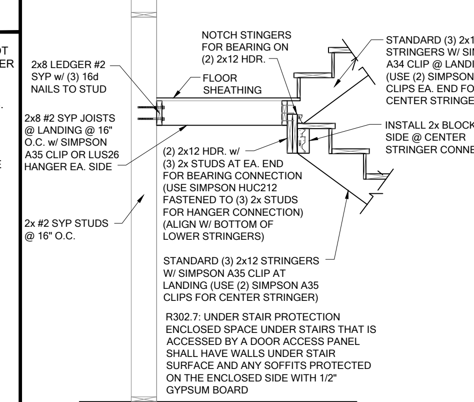

TYP. LANDING FRAMING SECTION

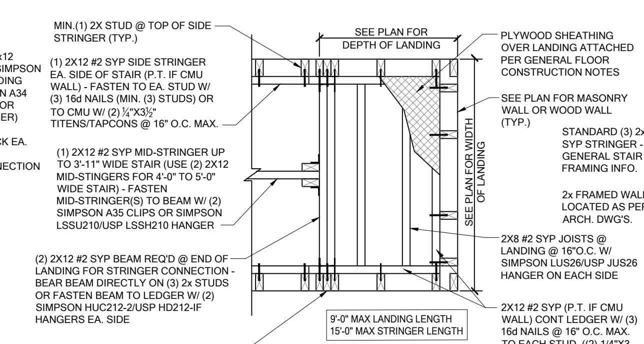

TYP. LANDING FRAMING PLAN

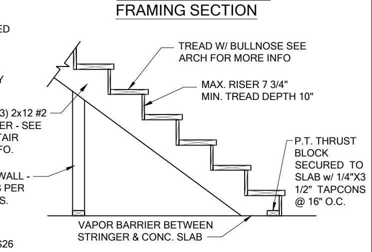

TYP. BASE OF STAIR FRAMING SECTION

NOTE: SEE ARCH. DWG'S. FOR ALL RISER AND TREAD DIMENSIONS, HANDRAIL & GUARDRAIL INFORMATION, AND FINISH REQUIREMENTS. ALL HANDRAILS & GUARDRAILS SHALL BE SUPPLIED BY THE CONTRACTOR AND SHALL BE DESIGNED TO RESIST SINGLE LOADING 200-POUND CONCENTRATED LOAD APPLIED IN ANY DIRECTION AT ANY POINT ALONG THE TOP RAIL AS SPECIFIED IN TABLE R301.5 OF THE 2020 FLORIDA RESIDENTIAL BUILDING CODE.

SD02 GENERAL STAIR SECTIONS & PLANS

SCALE: 3/4" = 1'-0" @ 22x34
SCALE: 3/8" = 1'-0" @ 11x17

CENTURY Complete

TO THE BEST OF THE ENGINEER'S KNOWLEDGE, INFORMATION, AND BELIEF, THE STRUCTURAL PLANS AND SPECIFICATIONS CONTAINED WITHIN THESE DRAWINGS COMPLY WITH THE 2020 FLORIDA BUILDING CODE-RESIDENTIAL 7TH EDITION. ENGINEER'S SIGNATURE AND SEAL IS ONLY FOR THE STRUCTURAL ENGINEERING PORTIONS OF THE DRAWING PAGES BEARING ENGINEER'S SIGNATURE AND SEAL. ANY FURTHER REVISIONS OR ADDITIONS TO THIS PLAN / DESIGN ARE NOT APPROVED UNLESS SIGNED AND SEALED BY THE E.O.R.

FDS JOB NO:22-00919

DATE: January 20, 2022

IF SEAL AND SIGNATURE ARE NOT BLUE OR CAN NOT BE SMUDGED CONTACT THE E.O.R. FOR AUTHORIZATION.

FDS ENGINEERING ASSOCIATES
258 Southhall Lane, Suite 200
Maitland, FL 32751
O: 321-972-0491 F: 407-880-2304
Certificate Of Authorization No. 9161
☐ CARL A. BROWN, PE - FL # 56126
☐ LUIS PABLO TORRES, PE - FL #87864
☐ SCOTT LEWKOWSKI, PE - FL #78750
WWW.FDSENG.COM

LOT 32
RESERVE @ JEWEL LAKE
456 SW JEWEL LAKE DR.
LAKE CITY, FL 32024

PLAN NUMBER: 33811607

RELEASE DATE: 08.03.2020

MODEL: COVINGTON

DRAWING TITLE: FLOOR FRAMING DETAILS

SHEET NO: D4

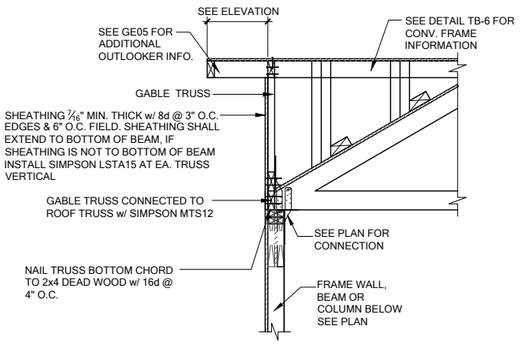

GE13A SECTION AT HIP GABLE
SCALE: 3/4" = 1'-0"
SCALE: 3/8" = 1'-0" @ 11x17

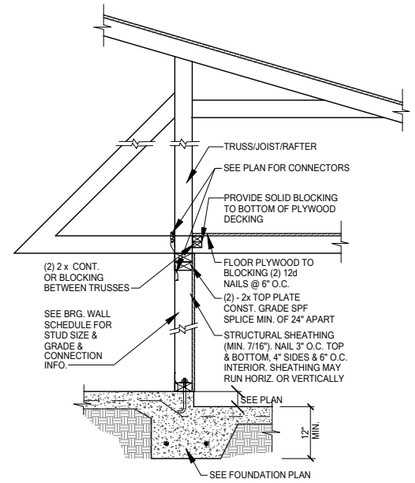

SW01 INTERIOR BEARING STEP-DOWN SHEARWALL w/UPLIFT
SCALE: 3/4" = 1'-0" @ 22x34
SCALE: 3/8" = 1'-0" @ 11x17

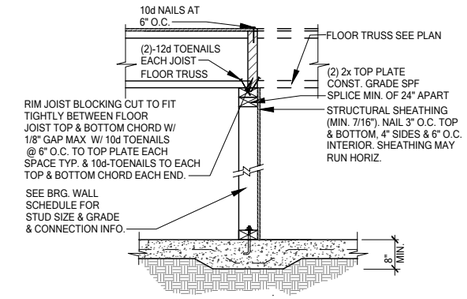

UPLIFT VALUES - (DOUBLE SIDE PLYWOOD DOUBLES VALUE BELOW)
SHEATHING I-SIDE - 860 LBS. PER TRUSS/JOIST/RAFTER

SW02 INTERIOR SHEAR WALL
SCALE: 3/4" = 1'-0" @ 22x34
SCALE: 3/8" = 1'-0" @ 11x17

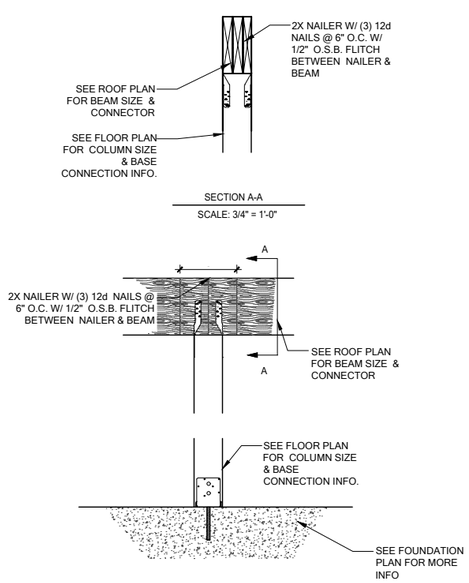

CD13 COLUMN BM. ATTACHMENT
SCALE: 3/4" = 1'-0"
SCALE: 3/8" = 1'-0" @ 11x17

CENTURY Complete

THIS SET OF PLANS AND SPECIFICATIONS, INCLUDING BUT NOT LIMITED TO THE FLOOR PLANS, PLOT PLANS, ELEVATIONS, SECTIONS, DETAILS, SCHEDULES AND THEIR ACCOMPANYING DIGITAL VERSIONS, ARE THE PROPERTY OF CENTURY COMPLETE, LLC. THE REPRODUCTION, ALTERATION OR DISTRIBUTION OF THESE PLANS WITHOUT THE WRITTEN CONSENT OF CENTURY COMPLETE, LLC, MAY BE SUBJECT TO LEGAL ACTION.

LICENSED ARCHITECT

DATE: January 20, 2022
PLANS PREPARED FOR CENTURY COMPLETE
BASED ON CODES IN EFFECT AT THE TIME OF PREPARATION

FDS ENGINEERING CORPORATION
238 Southhall Lane, Suite 200
Maitland, FL 32751
O: 321-972-0067 F: 407-880-2304
Certificate Of Authorization No. 9161
☐ CARLA. BROWN, PE - FL # 56126
☐ LUIS PABLO TORRES, PE - FL # 87864
☐ SCOTT LEWKOWSKI, PE - FL # 78750
WWW.FDSENG.COM

LOT 32
RESERVE @ JEWEL LAKE
456 SW JEWEL LAKE DR.
LAKE CITY, FL 32024

PLAN NUMBER: 33811607
RELEASE DATE: 08.03.2020
MODEL: COVINGTON
DRAWING TITLE: FLOOR FRAMING DETAILS
SHEET NO: D5