DATE 02/07/2011

Columbia County Building Permit

This Permit Must Be Prominently Posted on Premises During Construction

PERMIT
000029168

APPLICANT RONALD M. ROBINSON,JR. PHONE 386.623.2404

ADDRESS 557 SW LITTLE ROAD LAKE CITY FL 32024

OWNER RICHARD & TAMMY DURRANCE PHONE 386.758.6922

ADDRESS 857 SW BOYETTE TERRACE LAKE CITY FL 32024

CONTRACTOR RONALD M. ROBINSON,JR. PHONE 386.623.2404

LOCATION OF PROPERTY 47-S THRU COLUMBA CITY TO C-240,TR TO BOYETTE,TR AND IT'S THE 4TH DRIVEWAY ON R.

TYPE DEVELOPMENT SFD/UTILITY ESTIMATED COST OF CONSTRUCTION 151000.00

HEATED FLOOR AREA 2132.00 TOTAL AREA 3020.00 HEIGHT ____ STORIES 1

FOUNDATION CONC WALLS FRAMED ROOF PITCH 6'12 FLOOR CONC

LAND USE & ZONING A-3 MAX. HEIGHT 35

Minimum Set Back Requirments: STREET-FRONT 30.00 REAR 25.00 SIDE 25.00

NO. EX.D.U. 1 FLOOD ZONE X DEVELOPMENT PERMIT NO. ____

PARCEL ID 07-5S-16-03486-007 SUBDIVISION ____

LOT ____ BLOCK ____ PHASE ____ UNIT ____ TOTAL ACRES 10.04

Culvert Permit No.	Culvert Waiver	Contractor's License Number	Applicant/Owner/Contractor	
		CBC1253729	Ronald Mark Robinson Jr	
EXISTING	11-0049	BLK	TC	N
Driveway Connection	Septic Tank Number	LU & Zoning checked by	Approved for Issuance	New Resident

COMMENTS: EXISTING STRUCTURE WILL HAVE TO HAVE COOKING FACILITIES REMOVED AFTER CO INSPECTION. 1 FOOT ABOVE ROAD.

Check # or Cash 2652

FOR BUILDING & ZONING DEPARTMENT ONLY

(footer/Slab)

Temporary Power ____ date/app. by Foundation ____ date/app. by Monolithic ____ date/app. by

Under slab rough-in plumbing ____ date/app. by Slab ____ date/app. by Sheathing/Nailing ____ date/app. by

Framing ____ date/app. by Insulation ____ date/app. by

Rough-in plumbing above slab and below wood floor ____ date/app. by Electrical rough-in ____ date/app. by

Heat & Air Duct ____ date/app. by Peri. beam (Lintel) ____ date/app. by Pool ____ date/app. by

Permanent power ____ date/app. by C.O. Final ____ date/app. by Culvert ____ date/app. by

Pump pole ____ date/app. by Utility Pole ____ date/app. by M/H tie downs, blocking, electricity and plumbing ____ date/app. by

Reconnection ____ date/app. by RV ____ date/app. by Re-roof ____ date/app. by

BUILDING PERMIT FEE $ 755.00 CERTIFICATION FEE $ 15.10 SURCHARGE FEE $ 15.10

MISC. FEES $ 0.00 ZONING CERT. FEE $ 50.00 FIRE FEE $ 0.00 WASTE FEE $ ____

FLOOD DEVELOPMENT FEE $ ____ FLOOD ZONE FEE $ 25.00 CULVERT FEE $ ____ **TOTAL FEE** 860.20

INSPECTORS OFFICE ____ CLERKS OFFICE CH

NOTICE: IN ADDITION TO THE REQUIREMENTS OF THIS PERMIT, THERE MAY BE ADDITIONAL RESTRICTIONS APPLICABLE TO THIS PROPERTY THAT MAY BE FOUND IN THE PUBLIC RECORDS OF THIS COUNTY. AND THERE MAY BE ADDITIONAL PERMITS REQUIRED FROM OTHER GOVERNMENTAL ENTITIES SUCH AS WATER MANAGEMENT DISTRICTS, STATE AGENCIES, OR FEDERAL AGENCIES.

"WARNING TO OWNER: YOUR FAILURE TO RECORD A NOTICE OF COMMENCEMENT MAY RESULT IN YOUR PAYING TWICE FOR IMPROVEMENTS TO YOUR PROPERTY. IF YOU INTEND TO OBTAIN FINANCING, CONSULT WITH YOUR LENDER OR AN ATTORNEY BEFORE RECORDING YOUR NOTICE OF COMMENCEMENT."

EVERY PERMIT ISSUED SHALL BECOME INVALID UNLESS THE WORK AUTHORIZED BY SUCH PERMIT IS COMMENCED WITHIN 180 DAYS AFTER ITS ISSUANCE, OR IF THE WORK AUTHORIZED BY SUCH PERMIT IS SUSPENDED OR ABANDONED FOR A PERIOD OF 180 DAYS AFTER THE TIME THE WORK IS COMMENCED. A VALID PERMIT RECIEVES AN APPROVED INSPECTION EVERY 180 DAYS. WORK SHALL BE CONSIDERED NOT SUSPENDED, ABANDONED OR INVALID WHEN THE PERMIT HAS RECIEVED AN APPROVED INSPECTION WITHIN 180 DAYS OT THE PREVIOUS INSPECTION.

The Issuance of this Permit Does Not Waive Compliance by Permittee with Deed Restrictions.

FLORIDA PEST CONTROL & CHEMICAL CO.
Since 1949

FOUNDED 1949

CORPORATE HEADQUARTERS:

P.O. BOX 5369
116 N.W. 16TH AVENUE
GAINESVILLE, FL 32602-5369

(352) 376-2661
FAX (352) 376-2791

SCIENTIFIC PEST CONTROL DIRECTED BY GRADUATE ENTOMOLOGISTS

Complete Pest Control Service
Member Florida & National Pest Control Associations

Reply to: 536 SE Baya Dr
Lake City, FL 32025
Phone (386) 752-1703 Fax (386) 752-0171

M/m Richard Durrance
857 SW Boyette Ter.
Lake CIty,Fl
32055

TERMITE TREATMENT CERTIFICATION

Owner: M/M Richard Durrance	Permit Number: 29168
Lot:	Block:
Subdivision:	Street Address: 857 SW Boyette Ter.
City: Lake City	County: Columbia
General Contractor: Ronnie Robinson	Area Treated: 254 Linear Ft
Date: 6/21/11	Time: 4:15pm
Name of applicator: Bobby Smith & James D PArker	Applicator ID Number: JB573 & JE55238
Product Used: Active Ingredient: % Concentration: Premise: Imidacloprid: 0.10%	Number of gallons used: 55
Method of termite prevention treatment: **Soil treatment**	

The building has received a complete treatment for the prevention of subterranean termites. Treatment is in accordance with rules and laws established by the Florida Department of Agriculture and Consumer Services.

This form is proof of complete treatment for Certificate of Occupancy or Closing.

THIS IS PROOF OF WARRANTY

Warranty and Treatment Certifications Have Been Issued.

Authorized Signature:	Date:
Phillip Arnold	6-22-2011

FLORIDA PEST CONTROL & CHEMICAL CO.
Since 1949

FOUNDED 1949

CORPORATE HEADQUARTERS:

P.O. BOX 5369
116 N.W. 16TH AVENUE
GAINESVILLE, FL 32627-5369

(352) 376-2661
FAX (352) 376-2791

SCIENTIFIC PEST CONTROL DIRECTED BY GRADUATE ENTOMOLOGISTS

Complete Pest Control Service
Member Florida & National Pest Control Associations

Reply: 536 SE Baya Dr
Lake City, FL 32025-6098
Phone (386) 752-1703 Fax (386) 752-0171

Fax Transmittal

ATTENTION: Col. Co. Bldg Dept.

COMPANY: Col. Co Bldg Dept.

FAX NUMBER: (386) 758-2160

FROM: Florida Pest Control

REGARDING: Termite Cert. for 857 SW Boyette Ter. M/M Richard Durrance

Pages 1 (2) 3 4 5 6 7 8 9 other_____(includes cover letter)

• Crystal River • Daytona Beach • Ft. Walton Beach • Jacksonville South • Jacksonville West • Lake City • Milton • Ocala •
Orlando • Palatka • Panama City • Pensacola • Starke • St. Augustine • Tallahassee • Winter Haven • Leesburg • Kissimmee •
BRANCHES:

Columbia County Building Permit Application

2652

For Office Use Only Application # 1101-29 Date Received 1/24 By JW Permit # 29168

Zoning Official BLK Date 01.02.11 Flood Zone X Land Use A-3 Zoning A-3

FEMA Map # N/A Elevation N/A MFE 1' above Rd River N/A Plans Examiner J.C. Date 1-27-1

Comments Existing Structure will have to have cooking facilities removed after C.O. inspect

☑ NOC ☑ EH ☑ Deed or PA ☑ Site Plan ☐ State Road Info ☐ Parent Parcel #

☐ Dev Permit # ☐ In Floodway ☐ Letter of Auth. from Contractor ☐ F W Comp. letter

IMPACT FEES: EMS Fire Corr Road/Code

School = TOTAL Ø Suspended

Septic Permit No. 110049 Fax

Name Authorized Person Signing Permit Ronald Mack Robinson Jr. Phone 386-623-2404

Address 557 SW Little Rd Lake City, Fl. 32024

Owners Name Richard & Tammy Durrance Phone 758-6922

911 Address 857 SW Boyette Terrace Lake City, Fl. 32024

Contractors Name Ronald Mack Robinson Jr. Phone 623-2404

Address 557 SW Little Rd Lake City, Fl. 32024

Fee Simple Owner Name & Address —

Bonding Co. Name & Address —

Architect/Engineer Name & Address Tim Delbane / Mark Disosway

Mortgage Lenders Name & Address First Federal

Circle the correct power company – FL Power & Light – (Clay Elec.) – Suwannee Valley Elec. – Progress Energy

Property ID Number 07-5S-16-03486-007 Estimated Cost of Construction $178,000

Subdivision Name — Lot ___ Block ___ Unit ___ Phase ___

Driving Directions South on 47 to Columbia City, Take right on 240, go to Boyette Terrace take right, 4th driveway on right.

Number of Existing Dwellings on Property * 1

Construction of S70 Total Acreage 10.04 Lot Size

Do you need a - Culvert Permit or Culvert Waiver or (Have an Existing Drive) Total Building Height

Site Plan on Blueprints

Actual Distance of Structure from Property Lines - Front 515 Side 75 Side 185 Rear 776

Number of Stories 1 Heated Floor Area 2132 Total Floor Area 3020 Roof Pitch 6/12

Application is hereby made to obtain a permit to do work and installations as indicated. I certify that no work or installation has commenced prior to the issuance of a permit and that all work be performed to meet the standards of all laws regulating construction in this jurisdiction.

JW left a message 2.1.11

Columbia County Building Permit Application APPL# 1101-29

TIME LIMITATIONS OF APPLICATION : An application for a permit for any proposed work shall be deemed to have been abandoned 180 days after the date of filing, unless such application has been pursued in good faith or a permit has been issued; except that the building official is authorized to grant one or more extensions of time for additional periods not exceeding 90 days each. The extension shall be requested in writing and justifiable cause demonstrated.

TIME LIMITATIONS OF PERMITS: Every permit issued shall become invalid unless the work authorized by such permit is commenced within 180 days after its issuance, or if the work authorized by such permit is suspended or abandoned for a period of 180 days after the time work is commenced. A valid permit receives an approved inspection every 180 days. Work shall be considered not suspended, abandoned or invalid when the permit has received an approved inspection within 180 days of the previous approved inspection.

FLORIDA'S CONSTRUCTION LIEN LAW: Protect Yourself and Your Investment: According to Florida Law, those who work on your property or provide materials, and are not paid-in-full, have a right to enforce their claim for payment against your property. This claim is known as a construction lien. If your contractor fails to pay subcontractors or material suppliers or neglects to make other legally required payments, the people who are owed money may look to your property for payment, even if you have paid your contractor in full.
This means if a lien is filed against your property, it could be sold against your will to pay for labor, materials or othe services which your contractor may have failed to pay.

NOTICE OF RESPONSIBILITY TO BUILDING PERMITEE: ***YOU ARE HEREBY NOTIFIED*** as the recipient of a building permit from Columbia County, Florida, you will be held responsible to the County for any damage to sidewalks and/or road curbs and gutters, concrete features and structures, together with damage to drainage facilities, removal of sod, major changes to lot grades that result in ponding of water, or other damage to roadway and other public infrastructure facilities caused by you or your contractor, subcontractors, agents or representatives in the construction and/or improvement of the building and lot for which this permit is issued. No certificate of occupancy will be issued until all corrective work to these public infrastructures and facilities has been corrected.

WARNING TO OWNER: YOUR FAILURE TO RECORD A NOTICE OF COMMENCMENT MAY RESULT IN YOU PAYING TWICE FOR IMPROVEMENTS TO YOUR PROPERTY. A NOTICE OF COMMENCEMENT MUST BE RECORDED AND POSTED ON THE JOB SITE BEFORE THE FIRST INSPECTION. IF YOU INTEND TO OBTAIN FINANCING, CONSULT WITH YOUR LENDER OR ATTORNEY BEFORE RECORDING YOUR NOTICE OF COMMENCEMENT.

OWNERS CERTIFICATION: I CERTIFY THAT ALL THE FOREGOING INFORMATION IS ACCURATE AND THAT ALL WORK WILL BE DONE IN COMPLIANCE WITH ALL APPLICABLE LAWS REGULATING CONSTRUCTION AND ZONING.

NOTICE TO OWNER: There are some properties that may have deed restrictions recorded upon them. These restrictions may limit or prohibit the work applied for in your building permit. It may be to your advantage to check and see if your property is encumbered by any restrictions.

(Owners Must Sign All Applications Before Permit Issuance.)

Richard Surrance
Owners Signature ****OWNER BUILDERS MUST PERSONALLY APPEAR AND SIGN THE BUILDING PERMIT**

CONTRACTORS AFFIDAVIT: By my signature I understand and agree that I have informed and provided this written statement to the owner of all the above written responsibilities in Columbia County for obtaining this Building Permit including all application and permit time limitations.

Ronald Mark Johnson Jr.
Contractor's Signature (Permitee)

Contractor's License Number CBC 1253729
Columbia County
Competency Card Number _____

Affirmed under penalty of perjury to by the Contractor and subscribed before me this 24th **day of** January **20**11.

Personally known ✓ **or Produced Identification** _____

Lori Hodson
State of Florida Notary Signature (For the Contractor)

SEAL:

LAURIE HODSON
MY COMMISSION # DD 805657
EXPIRES: July 14, 2012
Bonded Thru Notary Public Underwriters

COLUMBIA COUNTY 9-1-1 ADDRESSING

P. O. Box 1787, Lake City, FL 32056-1787
PHONE: (386) 758-1125 * FAX: (386) 758-1365 * Email: ron_croft@columbiacountyfla.com

Addressing Maintenance

To maintain the Countywide Addressing Policy you must make application for a 9-1-1 Address at the time you apply for a building permit. The established standards for assigning and posting numbers to all principal buildings, dwellings, businesses and industries are contained in Columbia County Ordinance 2001-9. The addressing system is to enable Emergency Service Agencies to locate you in an emergency, and to assist the United States Postal Service and the public in the timely and efficient provision of services to residents and businesses of Columbia County.

DATE REQUESTED: 1/6/2011 **DATE ISSUED:** 1/6/2011

ENHANCED 9-1-1 ADDRESS:

857 SW BOYETTE TER

LAKE CITY FL 32024

PROPERTY APPRAISER PARCEL NUMBER:

07-5S-06-03486-007

Remarks:

RE-ISSUED OF EXISTING ADDRESS MOVING FROM BARN TO NEW PROPOSED STRUCTURE.

Approved Address

911Addressing/GIS Dept

Address Issued By: _____

Columbia County 9-1-1 Addressing / GIS Department

NOTICE: THIS ADDRESS WAS ISSUED BASED ON LOCATION INFORMATION RECEIVED FROM THE REQUESTER. SHOULD, AT A LATER DATE, THE LOCATION INFORMATION BE FOUND TO BE IN ERROR, THIS ADDRESS IS SUBJECT TO CHANGE.

1873

Location: Project Name:

As required by Florida Statute 553.842 and Florida Administrative Code 9B-72, please provide the information and product approval number(s) on the building components listed below if they will be utilized on the construction proj which you are applying for a building permit on or after April 1, 2004. We recommend you contact your local prod supplier should you not know the product approval number for any of the applicable listed products. More informa about statewide product approval can be obtained at www.floridabuilding.org

Category/Subcategory	Manufacturer	Product Description	Approval Num
A. EXTERIOR DOORS			FL 4242
1. Swinging			
2. Sliding			
3. Sectional			
4. Roll up			
5. Automatic			
6. Other			
B. WINDOWS		Atrium SH 160 Seri	FL 675
1. Single hung			FL 5108
2. Horizontal Slider			FL 545
3. Casement			
4. Double Hung			
5. Fixed			FL 5418
6. Awning			
7. Pass -through			
8. Projected			
9. Mullion			
10. Wind Breaker			
11 Dual Action			
12. Other			
C. PANEL WALL			
1. Siding			
2. Soffits			FL 889-
3. EIFS			FL 4899
4. Storefronts		Vinyl Siding D5	FL 4905
5. Curtain walls			
6. Wall louver			
7. Glass block			
8. Membrane			FL 3820-E
9. Greenhouse			
10. Other			
D. ROOFING PRODUCTS			
1. Asphalt Shingles			
2. Underlayments			FL 586-R2
3. Roofing Fasteners			FL 1814-R1
4. Non-structural Metal Rf			
5. Built-Up Roofing			
6. Modified Bitumen			
7. Single Ply Roofing Sys.			
8. Roofing Tiles			
9. Roofing Insulation			
10. Waterproofing			
11. Wood shingles /shakes			
12. Roofing Slate			

ory/Subcategory (cont.)	Manufacturer	Product Description	Approval Number
3. Liquid Applied Roof Sys			
14. Cements-Adhesives – Coatings			FL. 1960-1
15. Roof Tile Adhesive			
16. Spray Applied Polyurethane Roof			
17. Other			
E. SHUTTERS			
1. Accordion			
2. Bahama			
3. Storm Panels			
4. Colonial			
5. Roll-up			
6. Equipment			
7. Others			
F. SKYLIGHTS			
1. Skylight			FL 451 -
2. Other			
G. STRUCTURAL COMPONENTS			
1. Wood connector/anchor			FL. 474-R1
2. Truss plates			
3. Engineered lumber			FL 1008 R
4. Railing			
5. Coolers-freezers			
6. Concrete Admixtures			
7. Material			
8. Insulation Forms			
9. Plastics			
10. Deck-Roof			
11. Wall			
12. Sheds			
13. Other			
H. NEW EXTERIOR ENVELOPE PRODUCTS			
1.			
2.			

The products listed below did not demonstrate product approval at plan review. I understand that at the time of inspection of these products, the following information must be available to the inspector on the jobsite; 1) copy of the product approval, 2) the performance characteristics which the product was tested and certified to comply with, 3) copy of the applicable manufacturers installation requirements.

I understand these products may have to be removed if approval cannot be demonstrated during inspection.

Ronald Mack Robinson Jr.

Contractor or Contractor's Authorized Agent Signature

Ronald Mack Robinson Jr.

Print Name

1-24-2011

Date

Location

Permit # (FOR STAFF USE ONLY)

Application for Onsite Sewage Disposal System Construction Permit. Part II Site Plan

Permit Application Number: 11-0049

ALL CHANGES MUST BE APPROVED BY THE COUNTY HEALTH UNIT

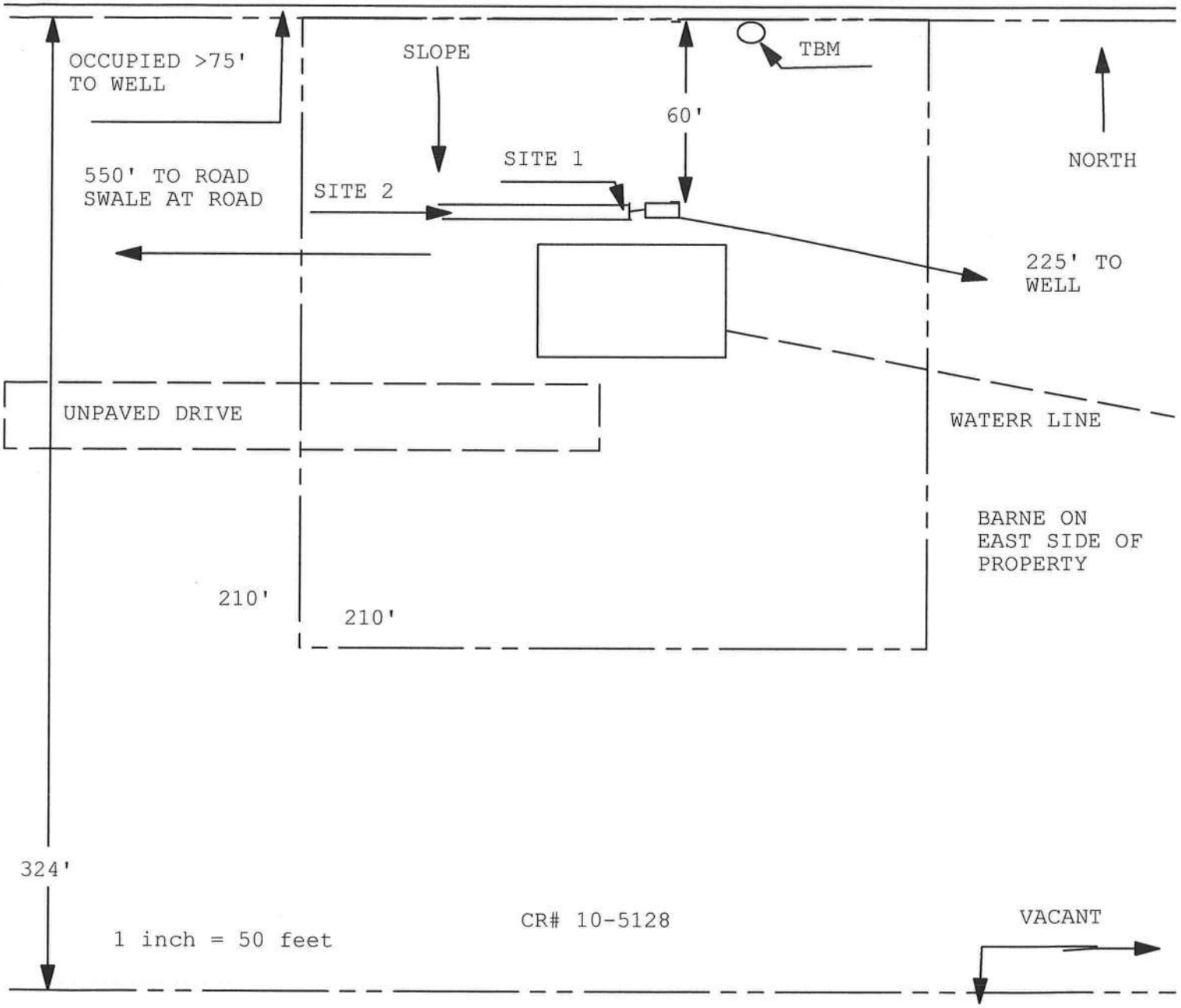

Site Plan Submitted By Paul Lloyd **Date** 1/31/11

Plan Approved ✓ **Not Approved** ___ **Date** 2/4/11

By Sallie Ford · EH Director **CPHU**

Notes:

Columbia CHD

4.00 cc

THIS INSTRUMENT WAS PREPARED BY:
FIRST FEDERAL BANK OF FLORIDA
4705 WEST U.S. HIGHWAY 90
P.O. BOX 2029
LAKE CITY, FLORIDA 32056

Inst:201112001580 Date:2/1/2011 Time:4:24 PM
DC,P.DeWitt Cason,Columbia County Page 1 of 2 B:1209 P:317

PERMIT NO._____ TAX FOLIO NO. R03488-007

NOTICE OF COMMENCEMENT

STATE OF FLORIDA
COUNTY OF COLUMBIA

The undersigned hereby gives notice that improvement will be made to certain real property, and in accordance with Chapter 713, Florida Statutes, the following information is provided in this Notice of Commencement.

1. Description of property: See Exhibit "A"

2. General description of improvement: **Construction of Dwelling**

3. Owner information:
   a. Name and address: Tammy Renee Eades Durrance & Richard D. Durrance
   867 SW Boyette Terrace, Lake City, FL 32024

   b. Interest in property: **Fee Simple**

   c. Name and address of fee simple title holder (if other than Owner): **NONE**

4. Contractor (name and address): Ronald Mack Robinson, Jr.
   Robinson Construction, 557 SW Little Rd, Lake City, FL 32024

5. Surety:
   a. Name and address: None

   b. Amount of bond: _____

6. Lender: **FIRST FEDERAL BANK OF FLORIDA**
   4705 WEST U.S. HIGHWAY 90
   P. O. BOX 2029
   LAKE CITY, FLORIDA 32056

7. Persons within the State of Florida designated by Owner upon whom notices or other document may be served as provided by Section 713.13 (1) (a) 7., Florida Statutes: NONE

8. In addition to himself, Owner designates **PAULA HACKER of FIRST FEDERAL BANK OF FLORIDA, 4705 West U.S. Highway 90 / P. O. Box 2029, Lake City, Florida 32056** to receive a copy of the Lienor's Notice as provided in Section 713.13 (1) (b), Florida Statutes.

9. Expiration date of notice of commencement (the expiration date is 1 year from the date of recording unless a different date is specified).

Tammy Renee Eades Durrance
Borrower Name

Richard D Durrance
Co-Borrower Name

The foregoing instrument was acknowledged before me this 25th day of January, 2011 by Tammy Renee Eades Durrance *, who is personally known to me or who has produced driver's license for identification.

Notary Public
My Commission Expires:

TERRY MCDAVID
MY COMMISSION # DD 934109
EXPIRES: January 16, 2014
Bonded Thru Notary Public Underwriters

* and Richard D. Durrance

EXHIBIT "A"

A PART OF THE SOUTH 1/2 OF SECTION 7. TOWNSHIP 5 SOUTH, RANGE 16 EAST, MORE PARTICULARLY DESCRIBED AS FOLLOWS:

COMMENCE AT THE SOUTHWEST CORNER OF THE SE 1/4 OF SAID SOUTH 1/2 AND RUN N 0 DEGREES 20'00" WEST, ALONG THE WEST LINE THEREOF, 1331.59 FEET FOR A POINT OF BEGINNING; THENCE S 89 DEGREES 11'05" WEST, 15.35 FEET TO A POINT ON THE EAST RIGHT OF WAY LINE OF BOYETTE LANE; THENCE N 0 DEGREES 59'33" WEST, ALONG SAID EAST RIGHT OF WAY LINE, 324.79; THENCE N 89 DEGREES 11'23" EAST, 1348.98 FEET TO A POINT ON THE EAST LINE OF THE WEST 1/2 OF THE SE 1/4 OF SAID SOUTH 1/2; THENCE S 0 DEGREES 27'14" EAST, ALONG THE EAST LINE THEREOF, 324.68 FEET; THENCE S 89 DEGREES 11'05" WEST, 1330.58 FEET TO THE POINT OF BEGINNING.

Prepared by: Dale C. Ferguson
Attorney at Law
P.O. Box 111
Lake City, Florida 32056-0111

BK 0851 PG 1245

WARRANTY DEED

OFFICIAL RECORDS

THIS INDENTURE, Made this 7th day of January, 1998, ***BETWEEN*** DARRELL W. HUNT, a married man not residing on the below described real property, as to an undivided one-half interest and DALE C. FERGUSON AND JOY S. FERGUSON, his wife, neither residing on the below described real property, as to an undivided one-half interest, parties of the first part, and RICHARD D. DURRANCE AND TAMMY RENEE EADES DURRANCE, his wife, whose post office address is Rt. 11, Box 109, Lake City, FL 32024 and whose social security numbers are [redacted] and [redacted], parties of the second part.

WITNESSETH, That the parties of the first part, for and in consideration of the sum of Ten and No/100 ($10.00) Dollars, to them in hand paid by the said parties of the second part, the receipt whereof is hereby acknowledged, have granted, bargained, and sold to the said parties of the second part, their heirs and assigns forever, the following described land, situate, and being in the County of Columbia, State of Florida, to-wit:

A part of the South 1/2 of Section 7, Township 5 South, Range 16 East, more particularly described as follows: Commence at the Southwest corner of the SE 1/4 of said South 1/2 and run N 0 degrees 20'00" West, along the West line thereof, 1331.59 feet for a point of beginning; thence S 89 degrees 11'05" West, 15.35 feet to a point on the East right of way line of Boyette Lanae; thence N 0 degrees 59'33" West, along said East right of way line, 324.79 feet; thence N 89 degrees 11' 23" East, 1348.98 feet to a point on the East line of the West 1/2 of the SE 1/4 of said South 1/2; thence S 0 degrees 27'14" East, along the East line thereof, 324.68 feet; thence S 89 degrees 11'05" West, 1330.58 feet to the point of beginning. Containing 10.04 acres, more or less.

Subject to real property taxes accruing subsequent to December 31, 1997 and subject to easements and mineral rights and interest of record.

And the said parties of the first part do hereby fully warrant the title to said land, and will defend the same against the lawful claims of all persons whomsoever.

IN WITNESS WHEREOF, The said parties of the first part have hereunto set their hand and seal the day and year first above written.

Signed, sealed and delivered in the presence of:

Richard R. Bicknell
Printed Name: RICHARD R. BICKNELL

Karen A. Wright
Printed Name: KAREN A. WRIGHT
"Witnesses"

DARRELL W. HUNT (SEAL)

Dale C. Ferguson (SEAL)
DALE C. FERGUSON

Joy S. Ferguson (SEAL)
JOY S. FERGUSON

Documentary Stamp $192.50
Intangible Tax —
P. DeWitt Cason
Clerk of Court
By MK D.C.

STATE OF FLORIDA
COUNTY OF COLUMBIA

The foregoing instrument was acknowledged before me this 7th day of January, 1998, by DARRELL W. HUNT, a married man and DALE C. FERGUSON AND JOY S. FERGUSON, his wife, who are personally known to me or who have produced Personal Knowledge as identification and who did not take an oath.

(Notarial Seal)

Notary Public

Commission No.
My

KAREN M. WRIGHT
MY COMMISSION # CC 344937
EXPIRES: January 17, 1998
Bonded Thru Notary Public Underwriters

BK 0851 PG 1246

OFFICIAL RECORDS

98-00227

FILED AND RECORDED IN PUBLIC RECORDS OF COLUMBIA COUNTY

1998 JAN -7 PM 3:00

CLERK OF COURTS
COLUMBIA COUNTY, FLORIDA
BY _____ D.C

BK: SEE "ASTERIK"

Columbia County Property Appraiser

DB Last Updated: 1/6/2011

2010 Tax Year

Tax Collector | Tax Estimator | Property Card | Parcel List Generator | Interactive GIS Map | Print

Parcel: 07-5S-16-03486-007

<< Next Lower Parcel | Next Higher Parcel >>

Search Result: 1 of 1

Owner & Property Info

Owner's Name	DURRANCE RICHARD D &		
Mailing Address	TAMMY RENEE EADES DURRANCE 857 SW BOYETTE TERR LAKE CITY, FL 32024		
Site Address	857 SW BOYETTE TER		
Use Desc. (code)	IMPROVED A (005000)		
Tax District	3 (County)	**Neighborhood**	7516
Land Area	10.040 ACRES	**Market Area**	02
Description	NOTE: This description is not to be used as the Legal Description for this parcel in any legal transaction.		

COMM SW COR OF SE1/4, RUN N 1331.59 FT FOR POB, RUN W 15.35 FT TO E R/W BOYETTE LN, RUN N 324.79 FT, E 1348.98 FT, S 324.68 FT, W 1330.58 FT TO POB. ORB 851-1245.

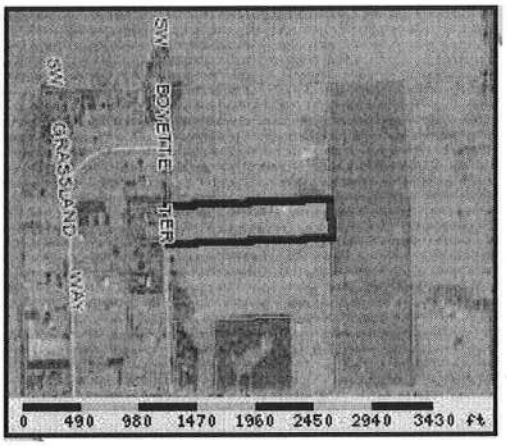

Property & Assessment Values

2010 Certified Values		
Mkt Land Value	cnt: (1)	$5,771.00
Ag Land Value	cnt: (1)	$1,808.00
Building Value	cnt: (1)	$41,054.00
XFOB Value	cnt: (0)	$0.00
Total Appraised Value		$48,633.00
Just Value		$98,997.00
Class Value		$48,633.00
Assessed Value		$48,633.00
Exempt Value	(code: HX)	$25,000.00
Total Taxable Value		Cnty: $23,633 Other: $23,633 | Schl: $23,633

2011 Working Values

NOTE:
2011 Working Values are NOT certified values and therefore are subject to change before being finalized for ad valorem assessment purposes.

Show Working Values

Sales History

Show Similar Sales within 1/2 mile

Sale Date	OR Book/Page	OR Code	Vacant / Improved	Qualified Sale	Sale RCode	Sale Price
1/7/1998	851/1245	WD	V	Q		$27,500.00

- Flagged BK (*?)

Building Characteristics

Bldg Item	Bldg Desc	Year Blt	Ext. Walls	Heated S.F.	Actual S.F.	Bldg Value
1	SINGLE FAM (000100)	2006	CONC BLOCK (15)	600	2100	$38,075.00
	Note: All S.F. calculations are based on exterior building dimensions.					

Extra Features & Out Buildings

Cooking facilities to be removed

Code	Desc	Year Blt	Value	Units	Dims	Condition (% Good)
NONE						

Land Breakdown

Lnd Code	Desc	Units	Adjustments	Eff Rate	Lnd Value

DURRANCE RESIDENCE
HVAC LOAD ANALYSIS

for

ROBINSON CONSTRUCTION

Prepared By:

DAVID HALL
DAVID HALL'S INC.
PO BOX 244
LAKE CITY FL 32056
386-755-9792
1/3/11

Miscellaneous Project Data

Project File Name: ROBINSON, DURRANCE

System Input Data

---System 1---	Outdoor Dry Bulb	Outdoor Wet Bulb	Indoor Rel.Hum.	Indoor Dry Bulb	Grains Difference
Winter:	27	N/A	N/A	72	N/A
Summer:	96	78	50%	75	51

External Overhangs

No.	Projection	Offset	No.	Projection	Offset
1	3	1	6	0	0
2	5	0	7	0	0
3	4	0.5	8	0	0
4	0	0	9	0	0
5	0	0	10	0	0

Duct Sizing Inputs

	Runouts	Main Trunk
Duct Material:	Flexible Duct	Fiberglass Duct Board
Roughness Factor:	0.010000	0.003000
Pressure Drop:	0.1000 In.wg/100 Ft.	0.1000 In.wg/100 Ft.
Minimum Velocity:	450.0 Ft./Minute	650.0 Ft./Minute
Maximum Velocity:	750.0 Ft./Minute	900.0 Ft./Minute
Minimum Height:	0 Inches	0 Inches
Maximum Height:	0 Inches	0 Inches

Outside Air Data

	Winter	Summer
Infiltration:	0.900 AC/Hr	0.400 AC/Hr
Volume of Conditioned Space:	X 20000 Cu.Ft.	X 20000 Cu.Ft.
	18,000 Cu.Ft./Hr	8,000 Cu.Ft./Hr
	X 0.0167	X 0.0167
Total Building Infiltration:	300 CFM	133.3333 CFM
Total Building Ventilation:	0 CFM	0 CFM

---System 1---

Infiltration & Ventilation Sensible Gain Multiplier:	23.10	= (1.10 X 21.00 Summer Temp. Difference)
Infiltration & Ventilation Latent Gain Multiplier:	34.86	= (0.68 X 51.27 Grains Difference)
Infiltration & Ventilation Sensible Loss Multiplier:	49.50	= (1.10 X 45.00 Winter Temp. Difference)

Total Building Summary Loads

Component Description	Area Quan	Sen. Loss	Lat. Gain	Sen. Gain	Total Gain
3C Window Double Pane Clear Glass Metal Frame	159	5,187	0	7,129	7,129
9G French Door Double Clear Glass Wood Frame	42	987	0	983	983
11A Door Metal Fiberglass Core	42	1,116	0	610	610
12C Wall R-11 + 1/2" Gypsum(R-0.5)	1,581	6,405	0	3,500	3,500
16G Ceiling R-30 Insulation	2,132	3,165	0	3,165	3,165
22A Slab on Grade No Edge Insulation	189	6,890	0	0	0
Subtotals for structure:	4,145	23,750	0	15,387	15,387
Active People:	4	0	920	1,200	2,120
Inactive People:	0	0	0	0	0
Appliances:	0	0	1,700	1,700	3,400
Lighting:	0	0		7,161	
Ductwork:	0	1,930	0	2,854	2,854
Infiltration: Winter CFM: 300.0, Summer CFM: 133.3	243	14,849	4,648	3,078	7,726
Ventilation: Winter CFM: 0.0, Summer CFM: 0.0	0	0	0	0	0
Sensible Gain Total:				31,380	
Temperature Swing Multiplier:				X1.00	
Building Load Totals:		40,529	7,268	31,380	38,648

Check Figures

Total Building Supply CFM:	1426	CFM per square foot:	0.669
Square feet of room area:	2,132	Square feet per ton:	627.778

Building Loads

Total heating required with outside air:	40,529 Btuh	40.529	MBH
Total sensible gain:	31,380 Btuh	81	%
Total latent gain:	7,268 Btuh	19	%
Total cooling required with outside air:	38,648 Btuh	3.221	Tons (based on sensible + latent)
		3.396	Tons (based on 77% sensible capacity)

Notes

Calculations are based on 7th edition of ACCA Manual J.
All computed results are estimates as building use and weather may vary.
Be sure to select a unit that meets both sensible and latent loads.

System #1 Summary Loads

Component Description	Area Quan	Sen. Loss	Lat. Gain	Sen. Gain	Total Gain
3C Window Double Pane Clear Glass Metal Frame	159	5,187	0	7,129	7,129
9G French Door Double Clear Glass Wood Frame	42	987	0	983	983
11A Door Metal Fiberglass Core	42	1,116	0	610	610
12C Wall R-11 + 1/2" Gypsum(R-0.5)	1,581	6,405	0	3,500	3,500
16G Ceiling R-30 Insulation	2,132	3,165	0	3,165	3,165
22A Slab on Grade No Edge Insulation	189	6,890	0	0	0
Subtotals for structure:	4,145	23,750	0	15,387	15,387
Active People:	4	0	920	1,200	2,120
Inactive People:	0	0	0	0	0
Appliances:	0	0	1,700	1,700	3,400
Lighting:	0	0		7,161	
Ductwork:	0	1,930	0	2,854	2,854
Infiltration: Winter CFM: 300.0, Summer CFM: 133.3	243	14,849	4,648	3,078	7,726
Ventilation: Winter CFM: 0.0, Summer CFM: 0.0	0	0	0	0	0
Sensible Gain Total:				31,380	
Temperature Swing Multiplier:				X1.00	
System Load Totals:		40,529	7,268	31,380	38,648

Check Figures

Supply CFM:	1,426	CFM per square foot:	0.669
Square feet of room area:	2,132	Square feet per ton:	627.778

System Loads

Total heating required with outside air:	40,529	Btuh	40.529	MBH
Total sensible gain:	31,380	Btuh	81	%
Total latent gain:	7,268	Btuh	19	%
Total cooling required with outside air:	38,648	Btuh	3.221	Tons (based on sensible + latent)
			3.396	Tons (based on 77% sensible capacity)

Notes

Calculations are based on 7th edition of ACCA Manual J.
All computed results are estimates as building use and weather may vary.
Be sure to select a unit that meets both sensible and latent loads.

Room Load Summary Reports

System #1 Room Load Summary

No	Room Name	Area SF	Htg Sens Btuh	Htg Nom CFM	Run Duct Size	Run Duct Vel	Clg Sens Btuh	Clg Lat Btuh	Clg Nom CFM	Zone Adj Fact	Clg Adj CFM	Air Sys CFM
	---Zone 1---											
1	Utility Room	160	4,933	64	1-7	454	2,669	1,074	121	1.00	121	121
2	Master Bath/closet	256	2,754	36	2-4	681	2,613	230	119	1.00	119	119
3	Master Bedroom	240	4,855	63	1-8	466	3,579	632	163	1.00	163	163
4	Dining Room	225	6,296	82	1-9	451	3,708	976	169	1.18	199	169
5	Den	124	3,877	50	1-7	571	2,816	574	128	1.19	152	128
6	Kitchen	188	2,771	36	1-8	521	4,004	1,774	182	1.00	182	182
7	Living Room	410	5,553	72	2-6	477	4,118	1,033	187	1.00	187	187
8	Bedroom#2	225	4,343	56	1-9	482	3,746	574	170	1.25	213	170
9	Bath #2	79	804	10	1-4	663	1,272	57	58	1.00	58	58
10	Bedroom #3	225	4,343	56	1-7	565	2,855	344	130	1.16	151	130
System 1 Totals		2132	40,529	526			31,380	7,268	1,426		1,545	1,426

Main Trunk Size: 18x14 in.

System #1 Cooling System Summary

	Cooling Tons	Sensible/Latent Split	Sensible Btuh	Latent Btuh	Total Btuh
Net Required:	3.221	81%/19%	31,380	7,268	38,648
Recommended:	3.396	77%/23%	31,380	9,373	40,753

SUBCONTRACTOR VERIFICATION FORM

APPLICATION NUMBER 1101-24 CONTRACTOR Ronnie Robinson PHONE 623. 2404

THIS FORM MUST BE SUBMITTED PRIOR TO THE ISSUANCE OF A PERMIT

In Columbia County one permit will cover all trades doing work at the permitted site. It is REQUIRED that we have records of the subcontractors who actually did the trade specific work under the permit. Per Florida Statute 440 and Ordinance 89-6, a contractor shall require all subcontractors to provide evidence of workers' compensation or exemption, general liability insurance and a valid Certificate of Competency license in Columbia County.

Any changes, the permitted contractor is responsible for the corrected form being submitted to this office prior to the start of that subcontractor beginning any work. Violations will result in stop work orders and/or fines.

ELECTRICAL 162	Print Name Gary L. Williams License #: ER0008825	Signature Gary Williams Phone #: 850 673-9580
MECHANICAL/ A/C 568	Print Name DAVID HALL'S INC License #: CACO 57424	Signature [illegible] Phone #: 386-755-9792
PLUMBING/ GAS 1081	Print Name Scott Wolfe License #: CFC051621	Signature [illegible] Phone #: 386 935-0616
ROOFING 523	Print Name Ronald Mack Robinson Jr. License #: CBC 1253729	Signature Ronald Mack Robinson Jr. Phone #: 386-623-2404
SHEET METAL	Print Name License #:	Signature Phone #:
FIRE SYSTEM/ SPRINKLER	Print Name License#:	Signature Phone #:
SOLAR	Print Name License #:	Signature Phone #:

Specialty License	License Number	Sub-Contractors Printed Name	Sub-Contractors Signature
MASON	0844	Southpoint masonry	J. D. Dixon
CONCRETE FINISHER	000063	DARRELL SANDLIN	Darrell Sandlin
FRAMING 523	CBC 1253729	Ronald Mack Robinson Jr.	Ronald Mack Robinson Jr
INSULATION 523	CBC 1253729	Ronald Mack Robinson Jr.	Ronald Mack Robinson Jr.
STUCCO	—	—	—
DRYWALL 621		Jesse AMBROS	Jesse ambros
PLASTER	—	—	—
CABINET INSTALLER 8.15.16	745	John milton	[illegible]
PAINTING	CBC 1253729	Ronald Mack Robinson Jr.	Ronald Mack Robinson Jr.
ACOUSTICAL CEILING	—	—	—
GLASS	—	—	—
CERAMIC TILE	000188	Ron. Humphrey	[illegible]
FLOOR COVERING	000546	Ryan Hardin	Ryan Hardin
ALUM/VINYL SIDING	000312	Paul Phinney	Paul [illegible]
GARAGE DOOR	—	—	—
METAL BLDG ERECTOR	—	—	—

F. S. 440.103 Building permits; identification of minimum premium policy.--Every employer shall, as a condition to applying for and receiving a building permit, show proof and certify to the permit issuer that it has secured compensation for its employees under this chapter as provided in ss. 440.10 and 440.38, and shall be presented each time the employer applies for a building permit.

FORM 1100A-08

FLORIDA ENERGY EFFICIENCY CODE FOR BUILDING CONSTRUCTION

Florida Department of Community Affairs Residential Performance Method A

Project Name:	Durrance Residence	Builder Name:	Ronnie Robinson
Street:	857 SW Boyette Terr	Permit Office:	Columbia County
City, State, Zip:	Lake City , FL , 32024-	Permit Number:	29168
Owner:	R. Durrance	Jurisdiction:	~~121000~~ 221000
Design Location:	FL, Gainesville		

1. New construction or existing	New (From Plans)
2. Single family or multiple family	Single-family
3. Number of units, if multiple family	1
4. Number of Bedrooms	3
5. Is this a worst case?	No
6. Conditioned floor area (ft²)	2132

7. Windows	Description	Area
a. U-Factor:	Dbl, U=0.80	175.33 ft²
SHGC:	SHGC=0.70	
b. U-Factor:	Dbl, U=0.55	6.00 ft²
SHGC:	SHGC=0.60	
c. U-Factor:	N/A	ft²
SHGC:		
d. U-Factor:	N/A	ft²
SHGC:		
e. U-Factor:	N/A	ft²
SHGC:		

8. Floor Types	Insulation	Area
a. Slab-On-Grade Edge Insulation	R=0.0	2132.00 ft²
b. N/A	R=	ft²
c. N/A	R=	ft²

9. Wall Types	Insulation	Area
a. Frame - Wood, Exterior	R=13.0	1528.00 ft²
b. N/A	R=	ft²
c. N/A	R=	ft²
d. N/A	R=	ft²

10. Ceiling Types	Insulation	Area
a. Under Attic (Vented)	R=30.0	2132.00 ft²
b. N/A	R=	ft²
c. N/A	R=	ft²

11. Ducts
a. Sup: Attic Ret: Attic AH: Interior Sup. R= 6, 533 ft²

12. Cooling systems
a. Central Unit — Cap: 35 kBtu/hr, SEER: 13

13. Heating systems
a. Electric Heat Pump — Cap: 35 kBtu/hr, HSPF: 7.7

14. Hot water systems
a. Electric — Cap: 40 gallons, EF: 0.92

b. Conservation features
None

15. Credits — Pstat

Glass/Floor Area: 0.085

Total As-Built Modified Loads: 33.25
Total Baseline Loads: 42.43

PASS

I hereby certify that the plans and specifications covered by this calculation are in compliance with the Florida Energy Code.

PREPARED BY: T. A. Delhere
DATE: 1/3/11

I hereby certify that this building, as designed, is in compliance with the Florida Energy Code.

OWNER/AGENT:
DATE:

Review of the plans and specifications covered by this calculation indicates compliance with the Florida Energy Code. Before construction is completed this building will be inspected for compliance with Section 553.908 Florida Statutes.

BUILDING OFFICIAL:
DATE:

PROJECT

Title:	Durrance Residence	Bedrooms:	3	Adress Type:	Street Address
Building Type:	FLAsBuilt	Bathrooms:	0	Lot #	
Owner:	R. Durrance	Conditioned Area:	2132	SubDivision:	
# of Units:	1	Total Stories:	1	PlatBook:	
Builder Name:	Ronnie Robinson	Worst Case:	No	Street:	857 SW Boyette Terr
Permit Office:	Columbia County	Rotate Angle:	0	County:	Columbia
Jurisdiction:	121000	Cross Ventilation:		City, State, Zip:	Lake City ,
Family Type:	Single-family	Whole House Fan:			FL , 32024-
New/Existing:	New (From Plans)				
Comment:					

CLIMATE

√	Design Location	TMY Site	IECC Zone	Design Temp 97.5 %	Design Temp 2.5 %	Int Design Temp Winter	Int Design Temp Summer	Heating Degree Days	Design Moisture	Daily Temp Range
_____	FL, Gainesville	FL_GAINESVILLE_REGI	2	32	92	75	70	1305.5	51	Medium

FLOORS

√	#	Floor Type	Perimeter	R-Value	Area	Tile	Wood	Carpet
_____	1	Slab-On-Grade Edge Insulatio	202 ft	0	2132 ft²	0.2	0.5	0.3

ROOF

√	#	Type	Materials	Roof Area	Gable Area	Roof Color	Solar Absor.	Tested	Deck Insul.	Pitch
_____	1	Gable or shed	Composition shingles	2309 ft²	444 ft²	Medium	0.96	No	0	22.6 deg

ATTIC

√	#	Type	Ventilation	Vent Ratio (1 in)	Area	RBS	IRCC
_____	1	Full attic	Vented	300	2132 ft²	N	N

CEILING

√	#	Ceiling Type	R-Value	Area	Framing Frac	Truss Type
_____	1	Under Attic (Vented)	30	2132 ft²	0.11	Wood

WALLS

√	#	Ornt	Adjacent To	Wall Type	Cavity R-Value	Area	Sheathing R-Value	Framing Fraction	Solar Absor.
_____	1	N	Exterior	Frame - Wood	13	288 ft²	0.6	0.23	0.75
_____	2	E	Exterior	Frame - Wood	13	456 ft²	0.6	0.23	0.75
_____	3	S	Exterior	Frame - Wood	13	328 ft²	0.6	0.23	0.75
_____	4	W	Exterior	Frame - Wood	13	456 ft²	0.6	0.23	0.75

DOORS

√	#	Ornt	Door Type	Storms	U-Value	Area
____	1	E	Insulated	None	0.4	20 ft²
____	2	W	Insulated	None	0.46	20 ft²

WINDOWS

Window orientation below is as entered. Actual orientation is modified by rotate angle shown in "Project" section above.

√	#	Ornt	Frame	Panes	NFRC	U-Factor	SHGC	Storms	Area	Overhang Depth	Overhang Separation	Int Shade	Screening
____	1	N	Metal	Low-E Double	Yes	0.55	0.6	N	6 ft²	2 ft 0 in	2 ft 0 in	HERS 2006	None
____	2	E	Metal	Low-E Double	Yes	0.8	0.7	N	15 ft²	2 ft 0 in	0 ft 4 in	HERS 2006	None
____	3	E	Metal	Low-E Double	Yes	0.8	0.7	N	30 ft²	12 ft 0 in	0 ft 4 in	HERS 2006	None
____	4	E	Metal	Low-E Double	Yes	0.8	0.7	N	13.33 ft²	12 ft 0 in	0 ft 4 in	HERS 2006	None
____	5	S	Metal	Low-E Double	Yes	0.8	0.7	N	9 ft²	2 ft 0 in	2 ft 0 in	HERS 2006	None
____	6	S	Metal	Low-E Double	Yes	0.8	0.7	N	12 ft²	2 ft 0 in	5 ft 0 in	HERS 2006	None
____	7	S	Metal	Low-E Double	Yes	0.8	0.7	N	6 ft²	2 ft 0 in	2 ft 0 in	HERS 2006	None
____	8	W	Metal	Low-E Double	Yes	0.8	0.7	N	30 ft²	2 ft 0 in	0 ft 4 in	HERS 2006	None
____	9	W	Metal	Low-E Double	Yes	0.8	0.7	N	60 ft²	10 ft 0 in	0 ft 4 in	HERS 2006	None

INFILTRATION & VENTING

√	Method	SLA	CFM 50	ACH 50	ELA	EqLA	---- Forced Ventilation ---- Supply CFM	Exhaust CFM	Run Time Fraction	Fan Watts
____	Default	0.00036	2013	7.08	110.5	207.9	0 cfm	0 cfm	0	0

COOLING SYSTEM

√	#	System Type	Subtype	Efficiency	Capacity	Air Flow	SHR	Ductless
____	1	Central Unit	None	SEER: 13	35 kBtu/hr	1050 cfm	0.75	False

HEATING SYSTEM

√	#	System Type	Subtype	Efficiency	Capacity	Ductless
____	1	Electric Heat Pump	None	HSPF: 7.7	35 kBtu/hr	False

HOT WATER SYSTEM

√	#	System Type	EF	Cap	Use	SetPnt	Conservation
____	1	Electric	0.92	40 gal	60 gal	120 deg	None

SOLAR HOT WATER SYSTEM

√	FSEC Cert #	Company Name	System Model #	Collector Model #	Collector Area	Storage Volume	FEF
____	None	None			ft²		

DUCTS

√	#	---- Supply ---- Location	R-Value	Area	---- Return ---- Location	Area	Leakage Type	Air Handler	CFM 25	Percent Leakage	QN	RLF
_____	1	Attic	6	533 ft²	Attic	106.6 ft	Default Leakage	Interior				

TEMPERATURES

Programable Thermostat: Y

Ceiling Fans:

Cooling	[X] Jan	[X] Feb	[X] Mar	[X] Apr	[X] May	[X] Jun	[X] Jul	[X] Aug	[X] Sep	[X] Oct	[X] Nov	[X] Dec
Heating	[X] Jan	[X] Feb	[X] Mar	[X] Apr	[X] May	[X] Jun	[X] Jul	[X] Aug	[X] Sep	[X] Oct	[X] Nov	[X] Dec
Venting	[X] Jan	[X] Feb	[X] Mar	[X] Apr	[X] May	[X] Jun	[X] Jul	[X] Aug	[X] Sep	[X] Oct	[X] Nov	[X] Dec

Thermostat Schedule: HERS 2006 Reference

Schedule Type		Hours 1	2	3	4	5	6	7	8	9	10	11	12
Cooling (WD)	AM	78	78	78	78	78	78	78	78	80	80	80	80
	PM	80	80	78	78	78	78	78	78	78	78	78	78
Cooling (WEH)	AM	78	78	78	78	78	78	78	78	78	78	78	78
	PM	78	78	78	78	78	78	78	78	78	78	78	78
Heating (WD)	AM	66	66	66	66	66	68	68	68	68	68	68	68
	PM	68	68	68	68	68	68	68	68	68	68	66	66
Heating (WEH)	AM	66	66	66	66	66	68	68	68	68	68	68	68
	PM	68	68	68	68	68	68	68	68	68	68	66	66

FORM 1100A-08

Code Compliance Cheklist

Residential Whole Building Performance Method A - Details

ADDRESS: 857 SW Boyette Terr Lake City, FL, 32024-	PERMIT #:

INFILTRATION REDUCTION COMPLIANCE CHECKLIST

COMPONENTS	SECTION	REQUIREMENTS FOR EACH PRACTICE	CHECK
Exterior Windows & Doors	N1106.AB.1.1	Maximum: .3 cfm/sq.ft. window area; .5 cfm/sq.ft. door area.	✓
Exterior & Adjacent Walls	N1106.AB.1.2.1	Caulk, gasket, weatherstrip or seal between: windows/doors & frames, surrounding wall; foundation & wall sole or sill plate; joints between exterior wall panels at corners; utility penetrations; between wall panels & top/bottom plates; between walls and floor. EXCEPTION: Frame walls where a continuous infiltration barrier is installed that extends from, and is sealed to, the foundation to the top plate.	✓
Floors	N1106.AB.1.2.2	Penetrations/openings > 1/8" sealed unless backed by truss or joint members. EXCEPTION: Frame floors where a continuous infiltration barrier is installed that is sealed to the perimeter, penetrations and seams.	✓
Ceilings	N1106.AB.1.2.3	Between walls & ceilings; penetrations of ceiling plane to top floor; around shafts, chases, soffits, chimneys, cabinets sealed to continuous air barrier; gaps in gyp board & top plate; attic access. EXCEPTION: Frame ceilings where a continuous infiltration barrier is installed that is sealed at the perimeter, at penetrations and seams.	✓
Recessed Lighting Fixtures	N1106.AB.1.2.4	Type IC rated with no penetrations, sealed; or Type IC or non-IC rated, installed inside a sealed box with 1/2" clearance & 3" from insulation; or Type IC with < 2.0 cfm from conditioned space, tested.	✓
Multi-story Houses	N1106.AB.1.2.5	Air barrier on perimeter of floor cavity between floors.	N/A
Additional Infiltration reqts	N1106.AB.1.3	Exhaust fans vented to outdoors, dampers; combustion space heaters comply with NFPA, have combustion air.	✓

OTHER PRESCRIPTIVE MEASURES (must be met or exceeded by all residences.)

COMPONENTS	SECTION	REQUIREMENTS	CHECK
Water Heaters	N1112.AB.3	Comply with efficiency requirements in Table N112.ABC.3. Switch or clearly marked circuit breaker (electric) or cutoff (gas) must be provided. External or built-in heat trap required.	✓
Swimming Pools & Spas	N1112.AB.2.3	Spas & heated pools must have covers (except solar heated). Non-commercial pools must have a pump timer. Gas spa & pool heaters must have a minimum thermal efficiency of 78%. Heat pump pool heaters shall have a minimum COP of 4.0.	N/A
Shower heads	N1112.AB.2.4	Water flow must be restricted to no more than 2.5 gallons per minute at 80 PSIG.	✓
Air Distribution Systems	N1110.AB	All ducts, fittings, mechanical equipment and plenum chambers shall be mechanically attached, sealed, insulated and installed in accordance with the criteria of Section N1110.AB. Ducts in unconditioned attics: R-6 min. insulation.	✓
HVAC Controls	N1107.AB.2	Separate readily accessible manual or automatic thermostat for each system.	✓
Insulation	N1104.AB.1 N1102.B.1.1	Ceilings-Min. R-19. Common walls-frame R-11 or CBS R-3 both sides. Common ceiling & floors R-11.	✓

CERTIFICATE OF

OCCUPANCY

COLUMBIA COUNTY, FLORIDA

Department of Building and Zoning Inspection

This Certificate of Occupancy is issued to the below named permit holder for the building and premises at the below named location, and certifies that the work has been completed in accordance with the Columbia County Building Code.

Parcel Number 07-5S-16-03486-007 **Building permit No.** 000029168

Use Classification SFD/UTILITY **Fire:** 0.00

Permit Holder RONALD M. ROBINSON,JR. **Waste:**

Owner of Building RICHARD & TAMMY DURRANCE **Total:** 0.00

Location: 857 SW BOYETTE TERRACE, LAKE CITY, FL 32024

Date: 06/22/2011

Harvey Hicks By

Building Inspector

POST IN A CONSPICUOUS PLACE
(Business Places Only)

ITW Building Components Group, Inc.

1950 Marley Drive Haines City, FL 33844
Florida Engineering Certificate of Authorization Number: 0 278
Florida Certificate of Product Approval # FL1999
Page 1 of 1 Document ID:1U8Q487-Z0119111704

DOUGLAS FLEMING
LICENSE
No. 66648
STATE OF
FLORIDA
PROFESSIONAL ENGINEER
01/19/2011

Truss Fabricator:	Anderson Truss Company
Job Identification:	10-244--Fill in later RONNIE ROBINSON/DURRANCE -- , **
Truss Count:	14
Model Code:	Florida Building Code 2007 and 2009 Supplement
Truss Criteria:	FBC2007Res/TPI-2002(STD)
Engineering Software:	Alpine Software,Version 9.05.
Structural Engineer of Record:	The identity of the structural EOR did not exist as of
Address:	the seal date per section 61G15-31.003(5a) of the FAC
Minimum Design Loads:	Roof - 40.0 PSF @ 1.25 Duration
	Floor - N/A
	Wind - 110 MPH ASCE 7-05 -Closed

Notes:

1. Determination as to the suitability of these truss components for the structure is the responsibility of the building designer/engineer of record, as defined in ANSI/TPI 1
2. The drawing date shown on this index sheet must match the date shown on the individual truss component drawing.
3. As shown on attached drawings; the drawing number is preceded by: HCUSR487

Details: BRCLBSUB-A1101505-GBLLETIN-

#	Ref Description	Drawing#	Date
1	52516--AV	11019004	01/19/11
2	52517--AV1GE	11019005	01/19/11
3	52518--AVGE	11019006	01/19/11
4	52519--B	11019001	01/19/11
5	52520--BGE	11019007	01/19/11
6	52521--BTGE	11019008	01/19/11
7	52522--BT	11019009	01/19/11
8	52523--BV	11019002	01/19/11
9	52524--C	11019010	01/19/11
10	52525--C1	11019011	01/19/11
11	52526--CGE	11019012	01/19/11
12	52527--C1GE	11019013	01/19/11
13	52528--M	11019003	01/19/11
14	52529--MGE	11019014	01/19/11

Douglas M. Fleming
-Truss Design Engineer-

1950 Marley Drive
Haines City, FL 33844

COLUMBIA COUNTY BUILDING DEPARTMENT
Received for FILE COPY
Code Compliance
PLANS EXAMINER

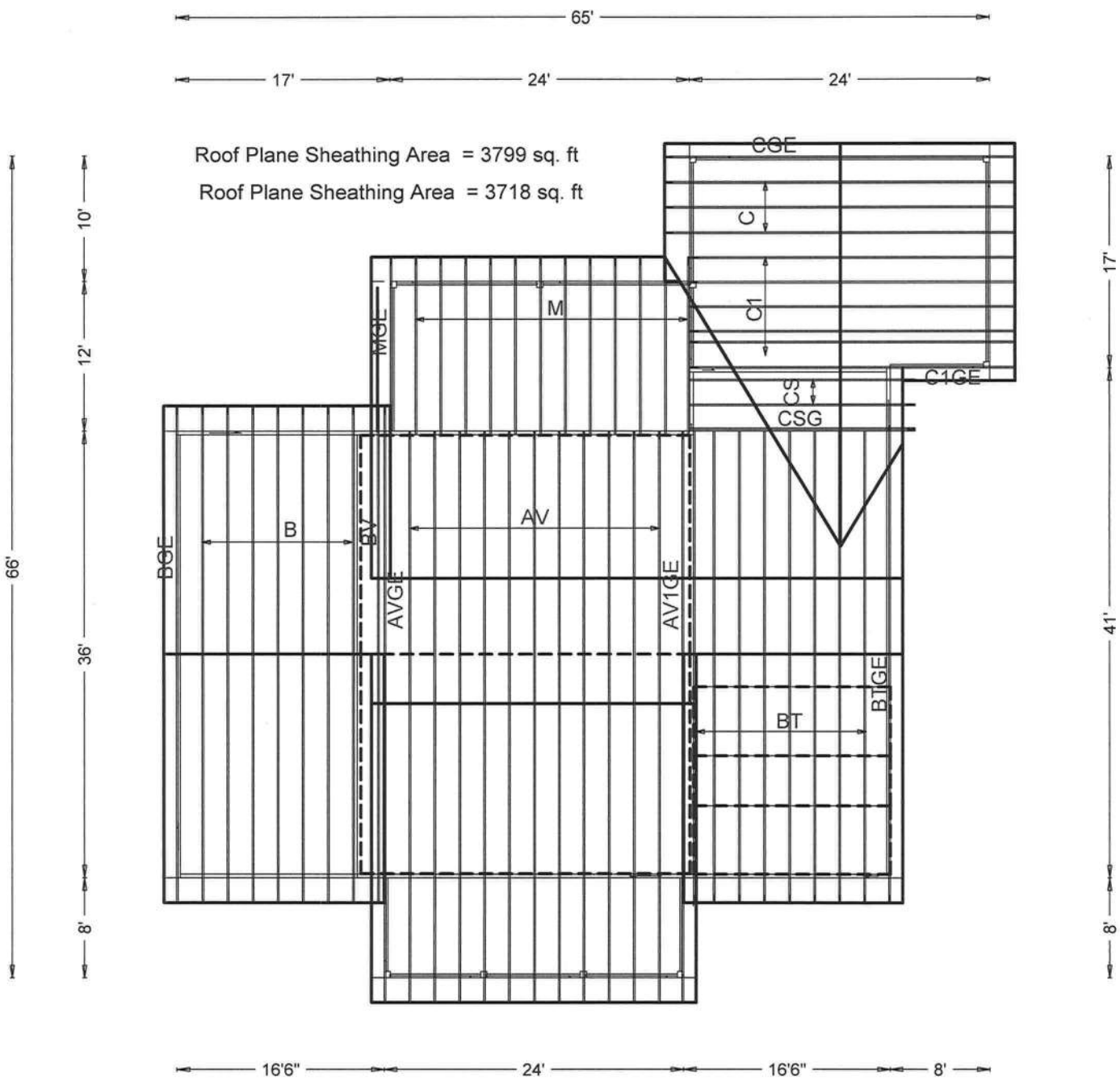

RONNIE ROBINSON/ DURRANCE

JOB DESCRIPTION:: Fill in later
/: RONNIE ROBINSON/DURRANCE

JOB NO:
10-244

PAGE NO:
1 OF 1

THIS DWG PREPARED FROM COMPUTER INPUT (LOADS & DIMENSIONS) SUBMITTED BY TRUSS MFR.

(10-244--Fill in later RONNIE ROBINSON/DURRANCE -- , ** - AV)

Top chord 2x4 SP #2 Dense
Bot chord 2x4 SP #2 Dense
Webs 2x4 SP #3

Left end vertical not exposed to wind pressure.

Roof overhang supports 2.00 psf soffit load.

(A) Continuous lateral bracing equally spaced on member.

Deflection meets L/240 live and L/180 total load.

MWFRS loads based on trusses located at least 15.00 ft. from roof edge.

Negative reaction(s) of -265# MAX. (See below) from a non-wind load case requires uplift connection.

110 mph wind, 15.00 ft mean hgt, ASCE 7-05, CLOSED bldg, not located within 6.50 ft from roof edge, CAT II, EXP B, wind TC DL=5.0 psf, wind BC DL=5.0 psf. Iw=1.00 GCpi(+/-)=0.18

Wind reactions based on MWFRS pressures.

Bottom chord checked for 10.00 psf non-concurrent live load.

Shim all supports to solid bearing.

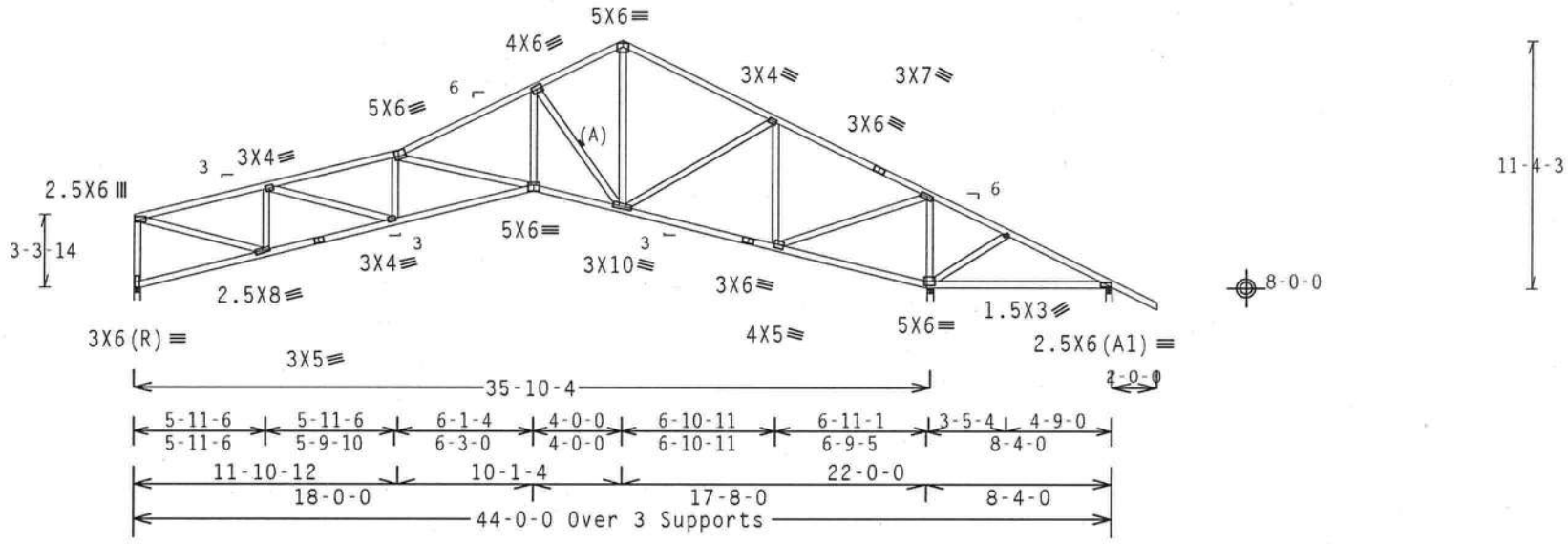

R=1301 U=0 W=3.5"
RL=214/-205

R=2723 U=0 W=3.5"
R=-265 Rw=143 U=219 W=3.5"

Design Crit: FBC2007Res/TPI-2002(STD)
FT/RT=10%(0%)/0(0) 9.05.03.0319.16

PLT TYP. Wave

QTY:11 FL/-/4/-/-/R/-

Scale =.125"/Ft.

ALPINE
ITW Building Components Group Inc.
Haines City, FL 33844
FL COA #0 278

WARNING READ AND FOLLOW ALL NOTES ON THIS SHEET!
IMPORTANT FURNISH THIS DESIGN TO ALL CONTRACTORS INCLUDING INSTALLERS.

Trusses require extreme care in fabricating, handling, shipping, installing and bracing. Refer to and follow the latest edition of BCSI (Building Component Safety Information, by TPI and WTCA) for safety practices prior to performing these functions. Installers shall provide temporary bracing per BCSI. Unless noted otherwise, top chord shall have properly attached structural sheathing and bottom chord shall have a properly attached rigid ceiling. Locations shown for permanent lateral restraint of webs shall have bracing installed per BCSI sections B3, B7 or B10, as applicable.

ITW Building Components Group Inc. (ITWBCG) shall not be responsible for any deviation from this design, any failure to build the truss in conformance with ANSI/TPI 1, or for handling, shipping, installation and bracing of trusses. Apply plates to each face of truss and position as shown above and on the joint Details, unless noted otherwise. Refer to drawings 160A-Z for standard plate positions. A seal on this drawing or cover page listing this drawing, indicates acceptance of professional engineering responsibility solely for the design shown. The suitability and use of this design for any structure is the responsibility of the Building Designer per ANSI/TPI 1 Sec.2. For more information see: This item's general notes page; ITW-BCG: www.itwbcg.com; TPI: www.tpinst.org; WTCA: www.sbcindustry.com; ICC: www.iccsafe.org

DOUGLAS FLEMING LICENSE No. 66648 STATE OF FLORIDA PROFESSIONAL ENGINEER

01/19/2011

TC LL	20.0 PSF	REF	R487-- 52516
TC DL	10.0 PSF	DATE	01/19/11
BC DL	10.0 PSF	DRW	HCUSR487 11019004
BC LL	0.0 PSF	HC-ENG	DF/DF
TOT.LD.	40.0 PSF	SEQN-	174760
DUR.FAC.	1.25		
SPACING	24.0"	JREF-	1U8Q487_Z01

THIS DWG PREPARED FROM COMPUTER INPUT (LOADS & DIMENSIONS) SUBMITTED BY TRUSS MFR.

(10-244--Fill in later RONNIE ROBINSON/DURRANCE -- , ** - AV1GE)

Top chord 2x4 SP #2 Dense :T5 2x4 SP #1:
Bot chord 2x4 SP #2 Dense
Webs 2x4 SP #3 :W10 2x4 SP #2 Dense:
:W12 2x4 SP #1:
:Stack Chord SC1 2x4 SP #2 Dense:

Left end vertical not exposed to wind pressure.

Roof overhang supports 2.00 psf soffit load.

Truss spaced at 24.0" OC designed to support 1-0-0 top chord outlookers. Cladding load shall not exceed 10.00 PSF. Top chord must not be cut or notched.

(A) #3 or better scab brace. Same size & 80% length of web member. Attach with 10d Box or Gun (0.128"x3",min.)nails @ 6" OC.

Bottom chord checked for 10.00 psf non-concurrent live load.

Deflection meets L/240 live and L/180 total load.

(**) 2 plate(s) require special positioning. Refer to scaled plate plot details for special positioning requirements.

110 mph wind, 15.00 ft mean hgt, ASCE 7-05, CLOSED bldg, Located anywhere in roof, CAT II, EXP B, wind TC DL=5.0 psf, wind BC DL=5.0 psf. Iw=1.00 GCpi(+/-)=0.18

Wind reactions based on MWFRS pressures.

Calculated horizontal deflection is 0.14" due to live load and 0.24" due to dead load.

See DWGS A11015050109 & GBLLETIN0109 for more requirements.

Stacked top chord must NOT be notched or cut in area (NNL). Dropped top chord braced at 24" o.c. intervals. Attach stacked top chord (SC) to dropped top chord in notchable area using 3x4 tie-plates 24" o.c. Center plate on stacked/dropped chord interface, plate length perpendicular to chord length. Splice top chord in notchable area using 3x6.

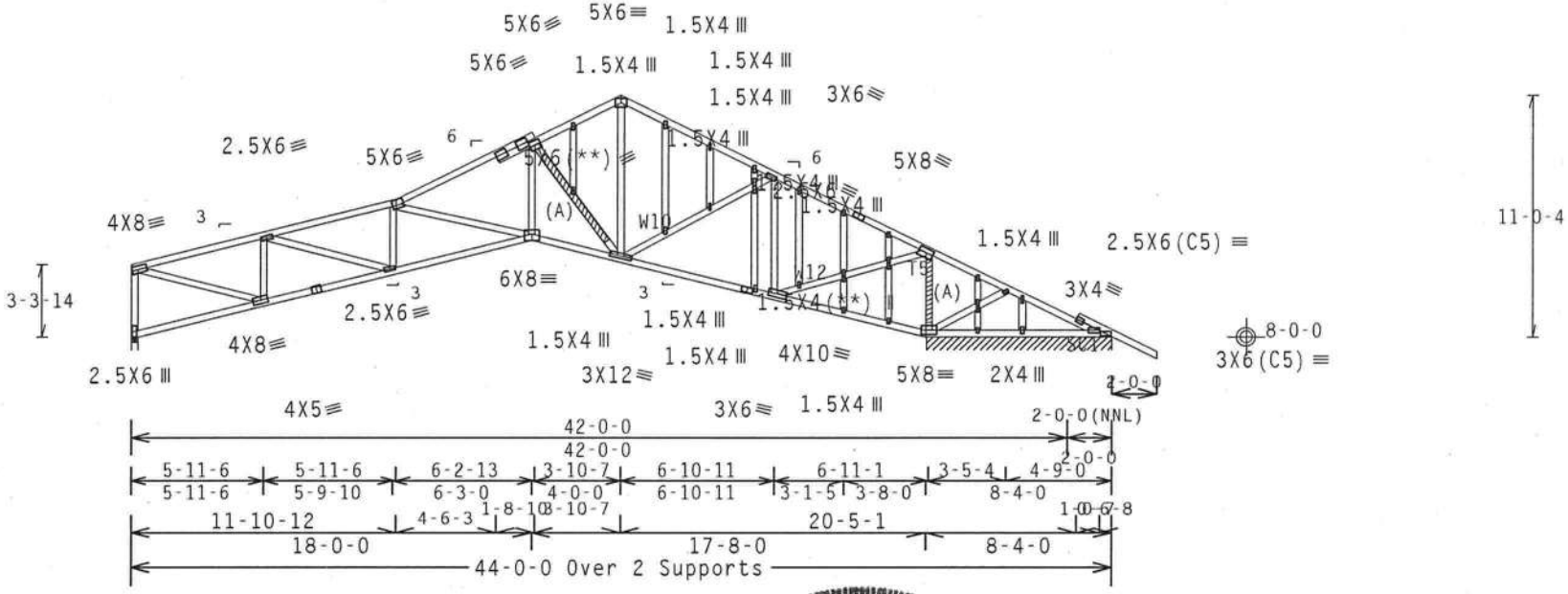

R=1826 U=160 W=3.5"
RL=240/-231

R=440 PLF U=37 PLF W=8-3-8

Note: All Plates Are 1.5X3 Except As Shown.

Design Crit: FBC2007Res/TPI-2002(SPD)

PLT TYP. Wave FT/RT=10%(0%)/0(0) 1.05.03.0319.16 TY:1 FL/-/4/-/-/R/- Scale =.125"/Ft.

ALPINE
ITW Building Components Group Inc.
Haines City, FL 33844
FL COA #0 278

WARNING READ AND FOLLOW ALL NOTES ON THIS SHEET!
IMPORTANT FURNISH THIS DESIGN TO ALL CONTRACTORS INCLUDING INSTALLERS.

Trusses require extreme care in fabricating, handling, shipping, installing and bracing. Refer to and follow the latest edition of BCSI (Building Component Safety Information, by TPI and WTCA) for safety practices prior to performing these functions. Installers shall provide temporary bracing per BCSI. Unless noted otherwise, top chord shall have properly attached structural sheathing and bottom chord shall have a properly attached rigid ceiling. Locations shown for permanent lateral restraint of webs shall have bracing installed per BCSI sections B3, B7 or B10, as applicable.

ITW Building Components Group Inc. (ITWBCG) shall not be responsible for any deviation from this design, any failure to build the truss in conformance with ANSI/TPI 1, or for handling, shipping, installing and bracing of trusses. Apply plates to each face of truss and position as shown above and on the Joint Details, unless noted otherwise. Refer to drawings 160A-Z for standard plate positions. A seal on this drawing or cover page listing this drawing, indicates acceptance of professional engineering responsibility solely for the design shown. The suitability and use of this design for any structure is the responsibility of the Building Designer per ANSI/TPI 1 Sec.2. For more information see: This job general notes page; ITW-BCG: www.itwbcg.com; TPI: www.tpinst.org; WTCA: www.sbcindustry.com; ICC: www.iccsafe.org

DOUGLAS FLEMING LICENSE No. 66648 STATE OF FLORIDA PROFESSIONAL ENGINEER

01/19/2011

TC LL	20.0 PSF	REF	R487-- 52517
TC DL	10.0 PSF	DATE	01/19/11
BC DL	10.0 PSF	DRW	HCUSR487 11019005
BC LL	0.0 PSF	HC-ENG	DF/DF
TOT.LD.	40.0 PSF	SEQN-	174807
DUR.FAC.	1.25		
SPACING	24.0"	JREF-	1U8Q487_Z01

(10-244--Fill in later RONNIE ROBINSON/DURRANCE -- , ** - AVGE)

Top chord 2x4 SP #2 Dense :T5 2x4 SP #1:
Bot chord 2x4 SP #2 Dense :B1 2x6 SP #1 Dense:
:B2 2x6 SP #2:
Webs 2x4 SP #3 :W8 2x4 SP #2 Dense:
:W10 2x4 SP #1:
:Stack Chord SC1 2x4 SP #2 Dense:

Roof overhang supports 2.00 psf soffit load.

Calculated horizontal deflection is 0.17" due to live load and 0.26" due to dead load.

See DWGS A11015050109 & GBLLETIN0109 for more requirements.

(A) #3 or better scab brace. Same size & 80% length of web member. Attach with 10d Box or Gun (0.128"x3",min.)nails @ 6" OC.

Bottom chord checked for 10.00 psf non-concurrent live load.

Deflection meets L/240 live and L/180 total load.

(**) 4 plate(s) require special positioning. Refer to scaled plate plot details for special positioning requirements.

110 mph wind, 15.00 ft mean hgt, ASCE 7-05, CLOSED bldg, Located anywhere in roof, CAT II, EXP B, wind TC DL=5.0 psf, wind BC DL=5.0 psf. Iw=1.00 GCpi(+/-)=0.18

Wind reactions based on MWFRS pressures.

Truss spaced at 24.0" OC designed to support 1-0-0 top chord outlookers. Cladding load shall not exceed 10.00 PSF. Top chord must not be cut or notched.

Stacked top chord must NOT be notched or cut in area (NNL). Dropped top chord braced at 24" o.c. intervals. Attach stacked top chord (SC) to dropped top chord in notchable area using 3x4 tie-plates 24" o.c. Center plate on stacked/dropped chord interface, plate length perpendicular to chord length. Splice top chord in notchable area using 3x6.

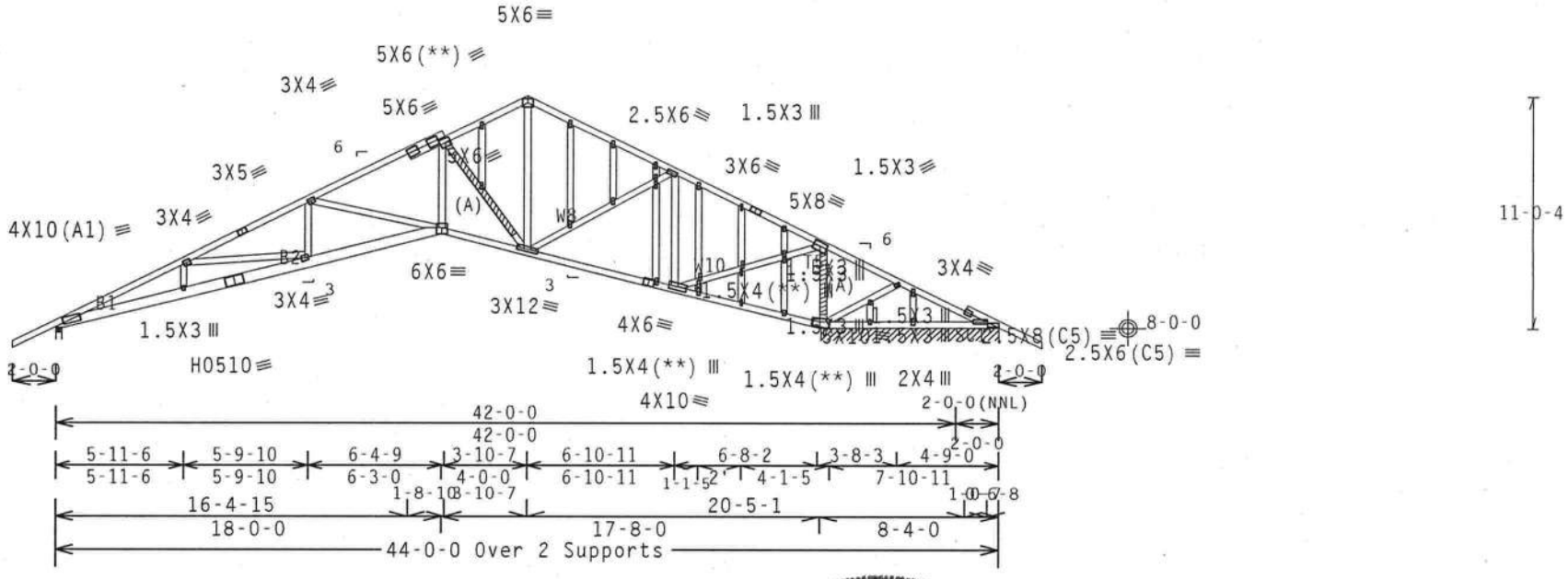

Note: All Plates Are 1.5X4 Except As Shown.

Design Crit: FBC2007Res/TPI-2002(STD)

PLT TYP. 20 Gauge HS,Wave FT/RT=10%(0%)/0(0) 09.05.03.0319.16 QTY:1 FL/-/4/-/-/R/- Scale =.125"/Ft.

ALPINE
ITW Building Components Group Inc.
Haines City, FL 33844
FL COA #0 278

WARNING READ AND FOLLOW ALL NOTES ON THIS SHEET!
IMPORTANT FURNISH THIS DESIGN TO ALL CONTRACTORS INCLUDING INSTALLERS.

Trusses require extreme care in fabricating, handling, shipping, installing and bracing. Refer to and follow the latest edition of BCSI (Building Component Safety Information, by TPI and WTCA) for safety practices prior to performing these functions. Installers shall provide temporary bracing per BCSI. Unless noted otherwise, top chord shall have properly attached structural sheathing and bottom chord shall have a properly attached rigid ceiling. Locations shown for permanent lateral restraint of webs shall have bracing installed per BCSI sections B3, B7 or B10, as applicable.

ITW Building Components Group Inc. (ITWBCG) shall not be responsible for any deviation from this design, any failure to build the truss in conformance with ANSI/TPI 1, or for handling, shipping, installation and bracing of trusses. Apply plates to each face of truss and position as shown above and on individual Truss Details, unless noted otherwise. Refer to drawings 160A-Z for standard plate positions. A licensed professional engineer drawing or cover page listing this drawing, indicates acceptance of professional engineering responsibility solely for the design shown. The suitability and use of this design for any structure is the responsibility of the Building Designer per ANSI/TPI 1 Sec.2. For more information see: This company's general notes page; ITW-BCG: www.itwbcg.com; TPI: www.tpinst.org; WTCA: www.sbcindustry.com; ICC: www.iccsafe.org

DOUGLAS FLEMING LICENSE No. 66648 STATE OF FLORIDA PROFESSIONAL ENGINEER

01/19/2011

TC LL	20.0 PSF	REF	R487-- 52518
TC DL	10.0 PSF	DATE	01/19/11
BC DL	10.0 PSF	DRW	HCUSR487 11019006
BC LL	0.0 PSF	HC-ENG	DF/DF
TOT.LD.	40.0 PSF	SEQN-	174864
DUR.FAC.	1.25		
SPACING	24.0"	JREF-	1U8Q487_Z01

THIS DWG PREPARED FROM COMPUTER INPUT (LOADS & DIMENSIONS) SUBMITTED BY TRUSS MFR.

(10-244--Fill in later RONNIE ROBINSON/DURRANCE -- , ** - B)

Top chord 2x4 SP #2 Dense
Bot chord 2x4 SP #2 Dense
Webs 2x4 SP #3

Roof overhang supports 2.00 psf soffit load.

(A) Continuous lateral bracing equally spaced on member.

Bottom chord checked for 10.00 psf non-concurrent live load.

110 mph wind, 15.00 ft mean hgt, ASCE 7-05, CLOSED bldg, Located anywhere in roof, CAT II, EXP B, wind TC DL=5.0 psf, wind BC DL=5.0 psf. Iw=1.00 GCpi(+/-)=0.18

Wind reactions based on MWFRS pressures.

Truss passed check for 20 psf additional bottom chord live load in areas with 42"-high x 24"-wide clearance.

Deflection meets L/240 live and L/180 total load.

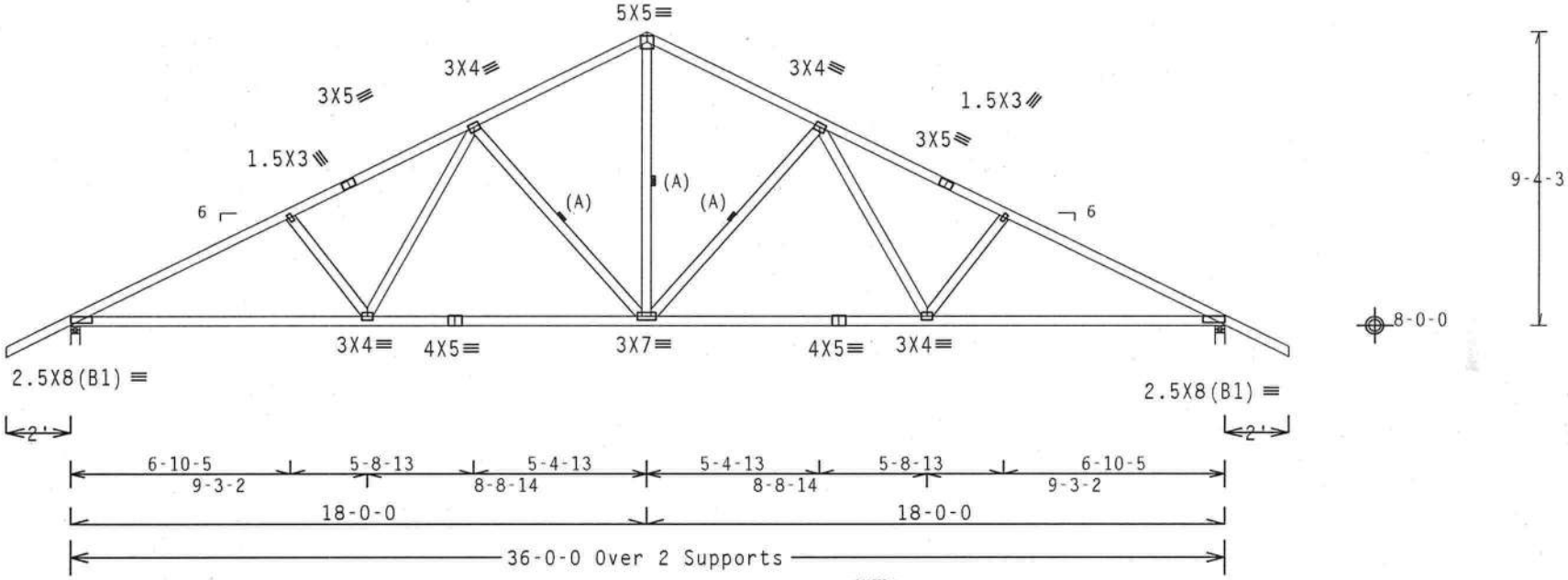

Design Crit: FBC2007Res/TPI-2002(SPID) 9.05.03.0319.16 QTY:7 FL/-/4/-/-/R/-

PLT TYP. Wave FT/RT=10%(0%)/0(0) Scale =.1875"/Ft.

ALPINE
ITW Building Components Group Inc.
Haines City, FL 33844
FL COA #0 278

WARNING READ AND FOLLOW ALL NOTES ON THIS SHEET!
IMPORTANT FURNISH THIS DESIGN TO ALL CONTRACTORS INCLUDING INSTALLERS.

Trusses require extreme care in fabricating, handling, shipping, installing and bracing. Refer to and follow the latest edition of BCSI (Building Component Safety Information, by TPI and WTCA) for safety practices prior to performing these functions. Installers shall provide temporary bracing per BCSI. Unless noted otherwise, top chord shall have properly attached structural sheathing and bottom chord shall have a properly attached rigid ceiling. Locations shown for permanent lateral restraint of webs shall have bracing installed per BCSI sections B3, B7 or B10, as applicable.

ITW Building Components Group Inc. (ITWBCG) shall not be responsible for any deviation from this design, any failure to build the truss in conformance with ANSI/TPI 1, or for handling, shipping, installation and bracing of trusses. Apply plates to each face of truss and position as shown above and on the drawing. Details, unless noted otherwise. Refer to drawings 160A-Z for standard plate positions. A signature on this drawing or cover page listing this drawing, indicates acceptance of professional engineering responsibility solely for the design shown. The suitability and use of this design for any structure is the responsibility of the Building Designer per ANSI/TPI 1 Sec.2. For more information see: This job's general notes page: ITW-BCG: www.itwbcg.com; TPI: www.tpinst.org; WTCA: www.sbcindustry.com; ICC: www.iccsafe.org

DOUGLAS FLEMING LICENSE No. 66648 STATE OF FLORIDA PROFESSIONAL ENGINEER

01/19/2011

TC LL	20.0 PSF	REF	R487-- 52519
TC DL	10.0 PSF	DATE	01/19/11
BC DL	10.0 PSF	DRW	HCUSR487 11019001
BC LL	0.0 PSF	HC-ENG	DF/DF *
TOT.LD.	40.0 PSF	SEQN-	174881
DUR.FAC.	1.25		
SPACING	24.0"	JREF-	1U8Q487_Z01

(10-244--Fill in later RONNIE ROBINSON/DURRANCE -- , ** - BGE)

Top chord 2x4 SP #2 Dense
Bot chord 2x4 SP #2 Dense
Webs 2x4 SP #3
:Stack Chord SC1 2x4 SP #2 Dense::Stack Chord SC2 2x4 SP #2 Dense:

Roof overhang supports 2.00 psf soffit load.

See DWGS A11015050109 & GBLLETIN0109 for more requirements.

Stacked top chord must NOT be notched or cut in area (NNL). Dropped top chord braced at 24" o.c. intervals. Attach stacked top chord (SC) to dropped top chord in notchable area using 3x4 tie-plates 24" o.c. Center plate on stacked/dropped chord interface, plate length perpendicular to chord length. Splice top chord in notchable area using 3x6.

Deflection meets L/240 live and L/180 total load.

110 mph wind, 15.00 ft mean hgt, ASCE 7-05, CLOSED bldg, Located anywhere in roof, CAT II, EXP B, wind TC DL=5.0 psf, wind BC DL=5.0 psf. Iw=1.00 GCpi(+/-)=0.18

Wind reactions based on MWFRS pressures.

Truss spaced at 24.0" OC designed to support 1-0-0 top chord outlookers. Cladding load shall not exceed 10.00 PSF. Top chord must not be cut or notched.

(A) 1x4 #3SRB SPF-S or better "L" brace. 80% length of web member. Attach with 8d Box or Gun (0.113"x2.5",min.)nails @ 6" OC.

In lieu of structural panels use purlins to brace TC @ 24" OC.

Bottom chord checked for 10.00 psf non-concurrent live load.

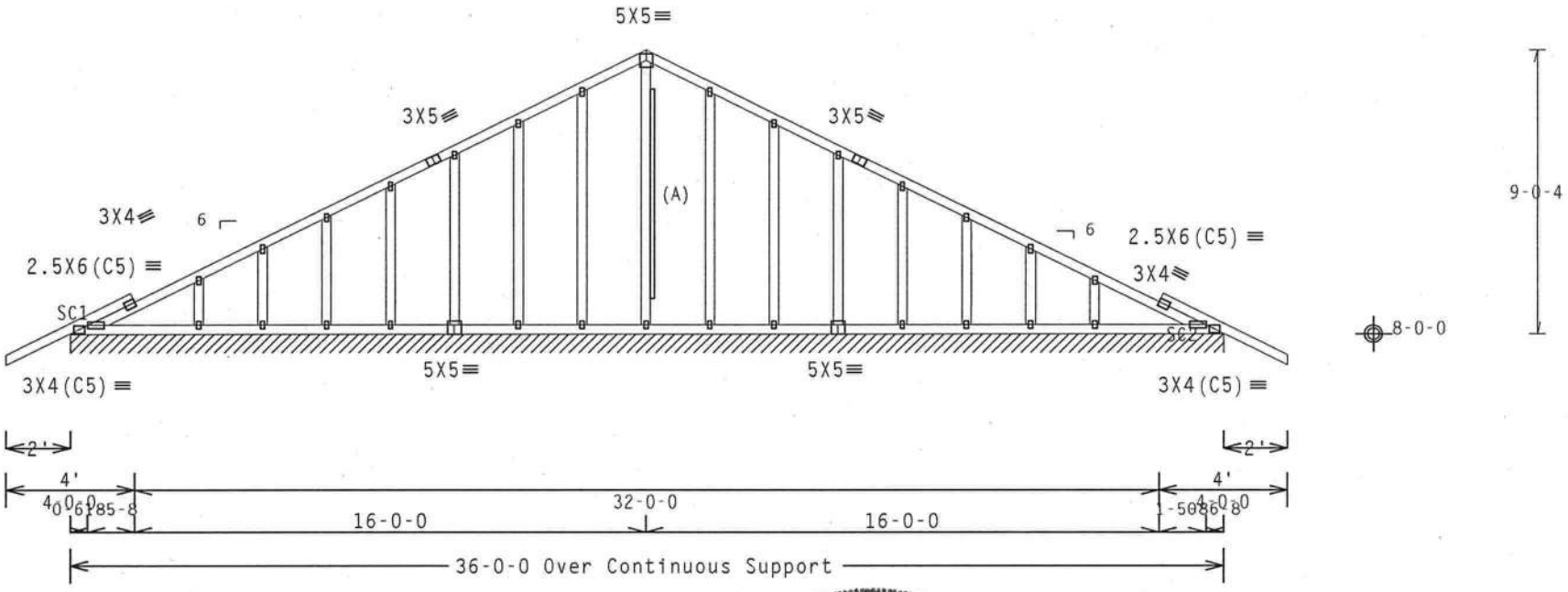

R=135 PLF U=12 PLF W=36-0-0
RL=7/-7 PLF

Note: All Plates Are 1.5X3 Except As Shown.

Design Crit: FBC2007Res/TPI-2002(SPI) 09.05.03.0319.16

PLT TYP. Wave FT/RT=10%(0%)/0(0) QTY:1 FL/-/4/-/-/R/- Scale =.1875"/Ft.

ALPINE
ITW Building Components Group Inc.
Haines City, FL 33844
FL COA #0 278

WARNING READ AND FOLLOW ALL NOTES ON THIS SHEET!
IMPORTANT FURNISH THIS DESIGN TO ALL CONTRACTORS INCLUDING INSTALLERS.

Trusses require extreme care in fabricating, handling, shipping, installing and bracing. Refer to and follow the latest edition of BCSI (Building Component Safety Information, by TPI and WTCA) for safety practices prior to performing these functions. Installers shall provide temporary bracing per BCSI. Unless noted otherwise, top chord shall have properly attached structural sheathing and bottom chord shall have a properly attached rigid ceiling. Locations shown for permanent lateral restraint of webs shall have bracing installed per BCSI sections B3, B7 or B10, as applicable.

ITW Building Components Group Inc. (ITWBCG) shall not be responsible for any deviation from this design, any failure to build the truss in conformance with ANSI/TPI 1, or for handling, shipping, installing and bracing of trusses. Apply plates to each face of truss and position as shown above and on individual Truss Details, unless noted otherwise. Refer to drawings 160A-Z for standard plate positions. A stamped engineering drawing or cover page listing this drawing, indicates acceptance of professional engineering responsibility solely for the design shown. The suitability and use of this design for any structure is the responsibility of the Building Designer per ANSI/TPI 1 Sec.2. For more information see: This job's general notes page; ITW-BCG: www.itwbcg.com; TPI: www.tpinst.org; WTCA: www.sbcindustry.com; ICC: www.iccsafe.org

DOUGLAS FLEMING LICENSE No. 66648 STATE OF FLORIDA PROFESSIONAL ENGINEER
01/19/2011

TC LL	20.0 PSF	REF	R487-- 52520
TC DL	10.0 PSF	DATE	01/19/11
BC DL	10.0 PSF	DRW	HCUSR487 11019007
BC LL	0.0 PSF	HC-ENG	DF/DF
TOT.LD.	40.0 PSF	SEQN-	174887
DUR.FAC.	1.25		
SPACING	24.0"	JREF-	1U8Q487_Z01

THIS DWG PREPARED FROM COMPUTER INPUT (LOADS & DIMENSIONS) SUBMITTED BY TRUSS MFR.

(10-244--Fill in later RONNIE ROBINSON/DURRANCE -- , ** - BTGE)

Top chord 2x4 SP #2 Dense :T4 2x4 SP #1:
Bot chord 2x4 SP #2 Dense
Webs 2x4 SP #3 :M16, M17 2x4 SP #2 Dense:
:Stack Chord SC1 2x4 SP #2 Dense:

Roof overhang supports 2.00 psf soffit load.

Gable end supports 8" max rake overhang.

Stacked top chord must NOT be notched or cut in area (NNL). Dropped top chord braced at 24" o.c. intervals. Attach stacked top chord (SC) to dropped top chord in notchable area using 3x4 tie-plates 24" o.c. Center plate on stacked/dropped chord interface, plate length perpendicular to chord length. Splice top chord in notchable area using 3x6.

Deflection meets L/240 live and L/180 total load.

110 mph wind, 15.00 ft mean hgt, ASCE 7-05, CLOSED bldg, Located anywhere in roof, CAT II, EXP B, wind TC DL=5.0 psf, wind BC DL=5.0 psf. Iw=1.00 GCpi(+/-)=0.18

Wind reactions based on MWFRS pressures.

Right end vertical not exposed to wind pressure.

See DWGS A11015050109 & GBLLETIN0109 for more requirements.

(A) Continuous lateral bracing equally spaced on member.

Truss passed check for 20 psf additional bottom chord live load in areas with 42"-high x 24"-wide clearance.

Bottom chord checked for 10.00 psf non-concurrent live load.

Shim all supports to solid bearing.

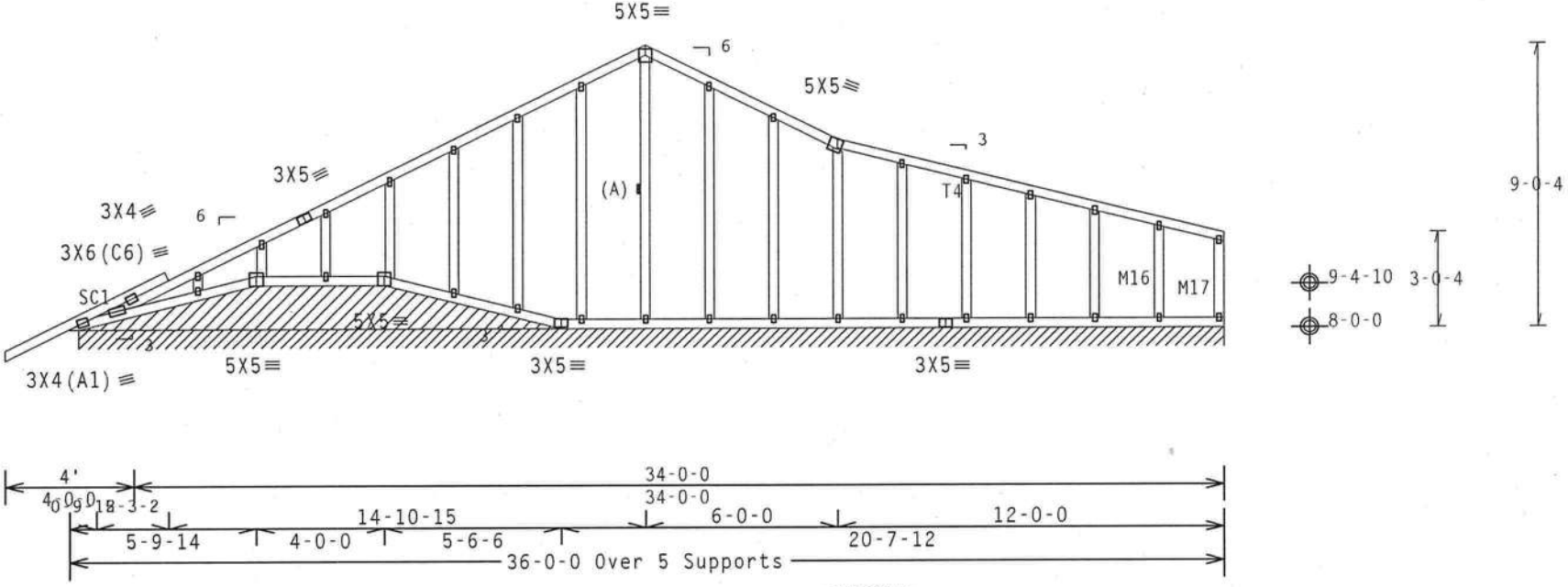

R=90 PLF U=7 PLF W=35-8-8
RL=4/-4 PLF

Note: All Plates Are 1.5X3 Except As Shown.

Design Crit: FBC2007Res/TPI-2002(STD)

PLT TYP. Wave FT/RT=10%(0%)/0(0) 9.05.03.0319.16 QTY:1 FL/-/4/-/-/R/- Scale =.1875"/Ft.

ALPINE
ITW Building Components Group Inc.
Haines City, FL 33844
FL COA #0 278

WARNING READ AND FOLLOW ALL NOTES ON THIS SHEET!
IMPORTANT FURNISH THIS DESIGN TO ALL CONTRACTORS INCLUDING INSTALLERS.

Trusses require extreme care in fabricating, handling, shipping, installing and bracing. Refer to and follow the latest edition of BCSI (Building Component Safety Information, by TPI and WTCA) for safety practices prior to performing these functions. Installers shall provide temporary bracing per BCSI. Unless noted otherwise, top chord shall have properly attached structural sheathing and bottom chord shall have a properly attached rigid ceiling. Locations shown for permanent lateral restraint of webs shall have bracing installed per BCSI sections B3, B7 or B10, as applicable.

ITW Building Components Group Inc. (ITWBCG) shall not be responsible for any deviation from this design, any failure to build the truss in conformance with ANSI/TPI 1, or for handling, shipping, installation or bracing of trusses. Apply plates to each face of truss and position as shown above and on the Joint Details, unless noted otherwise. Refer to drawings 160A-Z for standard plate positions. A seal on this drawing or cover page listing this drawing, indicates acceptance of professional engineering responsibility solely for the design shown. The suitability and use of this design for any structure is the responsibility of the Building Designer per ANSI/TPI 1 Sec.2. For more information see: This job's general notes page; ITW-BCG: www.itwbcg.com; TPI: www.tpinst.org; WTCA: www.sbcindustry.com; ICC: www.iccsafe.org

DOUGLAS FLEMING LICENSE No. 66648 STATE OF FLORIDA PROFESSIONAL ENGINEER

01/19/2011

TC LL	20.0 PSF	REF	R487-- 52521
TC DL	10.0 PSF	DATE	01/19/11
BC DL	10.0 PSF	DRW	HCUSR487 11019008
BC LL	0.0 PSF	HC-ENG	DF/DF
TOT.LD.	40.0 PSF	SEQN-	174902
DUR.FAC.	1.25		
SPACING	24.0"	JREF-	1U8Q487_Z01

(10-244--Fill in later RONNIE ROBINSON/DURRANCE -- , ** - BT)

Top chord 2x4 SP #2 Dense
Bot chord 2x4 SP #2 Dense :B1 2x4 SP #1:
Webs 2x4 SP #3

Roof overhang supports 2.00 psf soffit load.

Calculated horizontal deflection is 0.14" due to live load and 0.13" due to dead load.

Truss passed check for 20 psf additional bottom chord live load in areas with 42"-high x 24"-wide clearance.

Deflection meets L/240 live and L/180 total load.

110 mph wind, 15.00 ft mean hgt, ASCE 7-05, CLOSED bldg, not located within 4.50 ft from roof edge, CAT II, EXP B, wind TC DL=5.0 psf, wind BC DL=5.0 psf. Iw=1.00 GCpi(+/-)=0.18

Wind reactions based on MWFRS pressures.

Right end vertical not exposed to wind pressure.

(A) Continuous lateral bracing equally spaced on member.

Bottom chord checked for 10.00 psf non-concurrent live load.

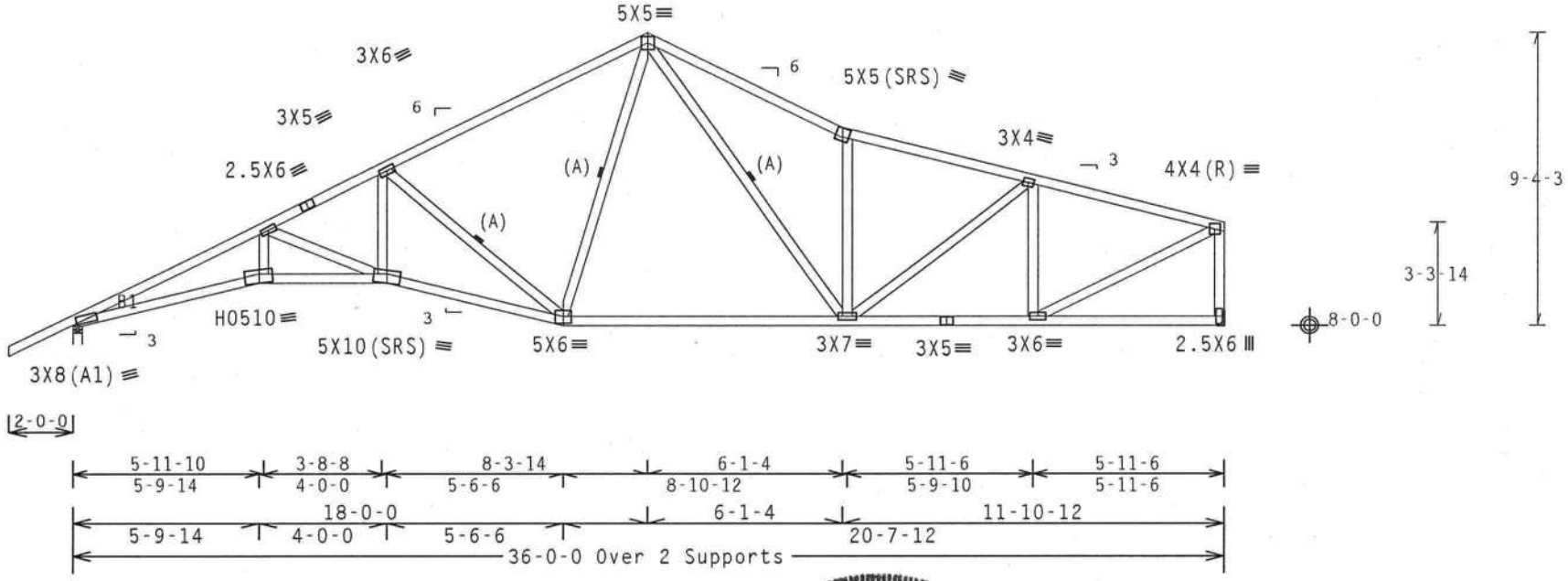

R=1692 U=155 W=3.5"
RL=158/-162

R=1533 U=141

Design Crit: FBC2007Res/TPI-2002(SPD) 9.05.03.0319.16

PLT TYP. 20 Gauge HS,Wave FT/RT=10%(0%)/0(0) TY:8 FL/-/4/-/-/R/- Scale =.1875"/Ft.

ALPINE
ITW Building Components Group Inc.
Haines City, FL 33844
FL COA #0 278

WARNING READ AND FOLLOW ALL NOTES ON THIS SHEET!
IMPORTANT FURNISH THIS DESIGN TO ALL CONTRACTORS INCLUDING INSTALLERS.

Trusses require extreme care in fabricating, handling, shipping, installing and bracing. Refer to and follow the latest edition of BCSI (Building Component Safety Information, by TPI and WTCA) for safety practices prior to performing these functions. Installers shall provide temporary bracing per BCSI. Unless noted otherwise, top chord shall have properly attached structural sheathing and bottom chord shall have a properly attached rigid ceiling. Locations shown for permanent lateral restraint of webs shall have bracing installed per BCSI sections B3, B7 or B10, as applicable.

ITW Building Components Group Inc. (ITWBCG) shall not be responsible for any deviation from this design, any failure to build the truss in conformance with ANSI/TPI 1, or for handling, shipping, installation and bracing of trusses. Apply plates to each face of truss and position as shown above and on the Joint Details, unless noted otherwise. Refer to drawings 160A-Z for standard plate positions. A seal on this drawing or cover page listing this drawing, indicates acceptance of professional engineering responsibility solely for the design shown. The suitability and use of this design for any structure is the responsibility of the Building Designer per ANSI/TPI 1 Sec.2. For more information see: This job general notes page; ITW-BCG: www.itwbcg.com; TPI: www.tpinst.org; WTCA: www.sbcindustry.com; ICC: www.iccsafe.org

DOUGLAS FLEMING LICENSE No. 66648 STATE OF FLORIDA PROFESSIONAL ENGINEER

01/19/2011

TC LL	20.0 PSF	REF R487-- 52522
TC DL	10.0 PSF	DATE 01/19/11
BC DL	10.0 PSF	DRW HCUSR487 11019009
BC LL	0.0 PSF	HC-ENG DF/DF
TOT.LD.	40.0 PSF	SEQN- 174906
DUR.FAC.	1.25	
SPACING	24.0"	JREF- 1U8Q487_Z01

(10-244--Fill in later RONNIE ROBINSON/DURRANCE -- , ** - BV)

Top chord 2x4 SP #2 Dense
Bot chord 2x4 SP #1 :B2, B3 2x4 SP #2 Dense:
Webs 2x4 SP #3

Roof overhang supports 2.00 psf soffit load.

Calculated horizontal deflection is 0.33" due to live load and 0.35" due to dead load.

MWFRS loads based on trusses located at least 15.00 ft. from roof edge.

110 mph wind, 15.00 ft mean hgt, ASCE 7-05, CLOSED bldg, not located within 4.50 ft from roof edge, CAT II, EXP B, wind TC DL=5.0 psf, wind BC DL=5.0 psf. Iw=1.00 GCpi(+/-)=0.18

Wind reactions based on MWFRS pressures.

Bottom chord checked for 10.00 psf non-concurrent live load.

Deflection meets L/240 live and L/180 total load.

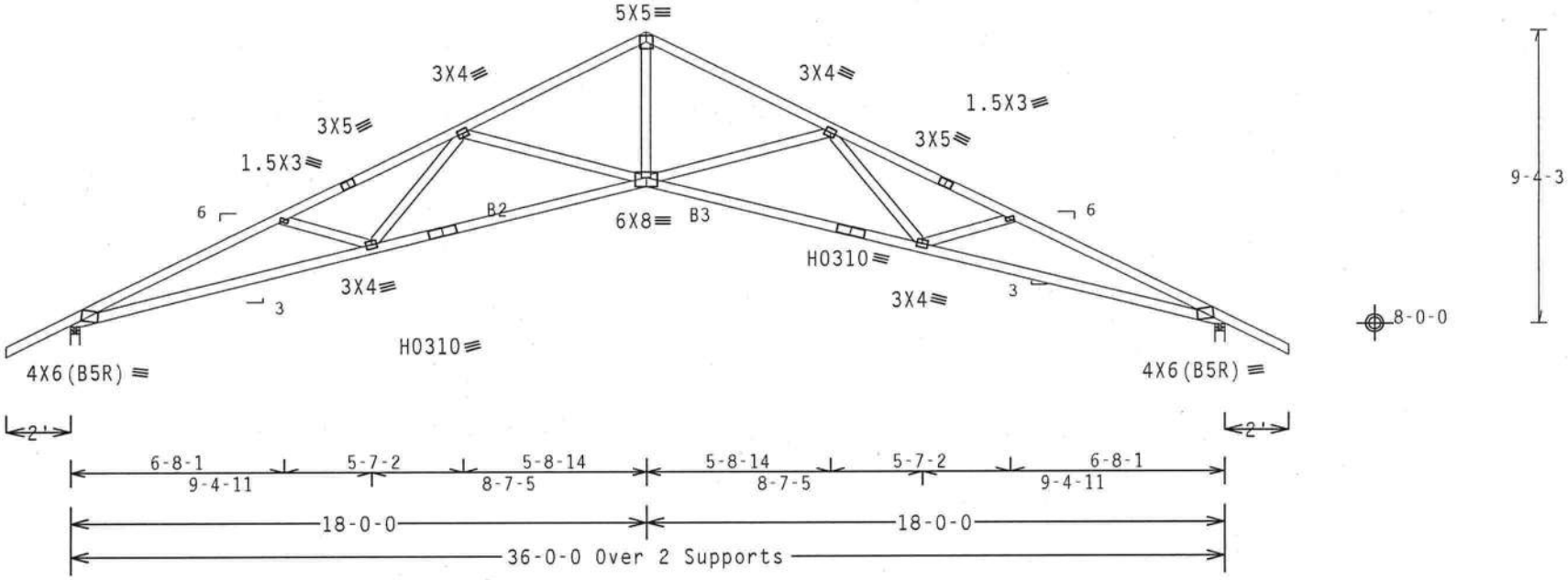

Design Crit: FBC2007Res/TPI-2002(STD) 9.05.03.0319.16

PLT TYP. 20 Gauge HS,Wave FT/RT=10%(0%)/0(0) QTY:1 FL/-/4/-/-/R/- Scale =.1875"/Ft.

ALPINE
ITW Building Components Group Inc.
Haines City, FL 33844
FL COA #0 278

WARNING READ AND FOLLOW ALL NOTES ON THIS SHEET!
IMPORTANT FURNISH THIS DESIGN TO ALL CONTRACTORS INCLUDING INSTALLERS.

Trusses require extreme care in fabricating, handling, shipping, installing and bracing. Refer to and follow the latest edition of BCSI (Building Component Safety Information, by TPI and WTCA) for safety practices prior to performing these functions. Installers shall provide temporary bracing per BCSI. Unless noted otherwise, top chord shall have properly attached structural sheathing and bottom chord shall have a properly attached rigid ceiling. Locations shown for permanent lateral restraint of webs shall have bracing installed per BCSI sections B3, B7 or B10, as applicable.

ITW Building Components Group Inc. (ITWBCG) shall not be responsible for any deviation from the design, any failure to build the truss in conformance with ANSI/TPI 1, or for handling, shipping, installation and bracing of trusses. Apply plates to each face of truss and position as shown above and on the attached Details, unless noted otherwise. Refer to drawings 160A-Z for standard plate positions. The seal on this drawing or cover page listing this drawing, indicates acceptance of professional engineering responsibility solely for the design shown. The suitability and use of this design for any structure is the responsibility of the Building Designer per ANSI/TPI 1 Sec.2. For more information see: The general notes page; ITW-BCG: www.itwbcg.com; TPI: www.tpinst.org; WTCA: www.sbcindustry.com; ICC: www.iccsafe.org

DOUGLAS FLEMING LICENSE No. 66648 STATE OF FLORIDA PROFESSIONAL ENGINEER

01/19/2011

TC LL	20.0 PSF	REF	R487-- 52523
TC DL	10.0 PSF	DATE	01/19/11
BC DL	10.0 PSF	DRW	HCUSR487 11019002
BC LL	0.0 PSF	HC-ENG	DF/DF *
TOT.LD.	40.0 PSF	SEQN-	174898
DUR.FAC.	1.25		
SPACING	24.0"	JREF-	1U8Q487_Z01

THIS DWG PREPARED FROM COMPUTER INPUT (LOADS & DIMENSIONS) SUBMITTED BY TRUSS MFR.

(10-244--Fill in later RONNIE ROBINSON/DURRANCE -- , ** - C)

Top chord 2x4 SP #2 Dense
Bot chord 2x4 SP #2 Dense
Webs 2x4 SP #3
:Lt Stub Wedge 2x4 SP #3::Rt Stub Wedge 2x4 SP #3:

Roof overhang supports 2.00 psf soffit load.

Bottom chord checked for 10.00 psf non-concurrent live load.

Deflection meets L/240 live and L/180 total load.

110 mph wind, 15.00 ft mean hgt, ASCE 7-05, CLOSED bldg, Located anywhere in roof, CAT II, EXP B, wind TC DL=5.0 psf, wind BC DL=5.0 psf. Iw=1.00 GCpi(+/-)=0.18

Wind reactions based on MWFRS pressures.

Truss passed check for 20 psf additional bottom chord live load in areas with 42"-high x 24"-wide clearance.

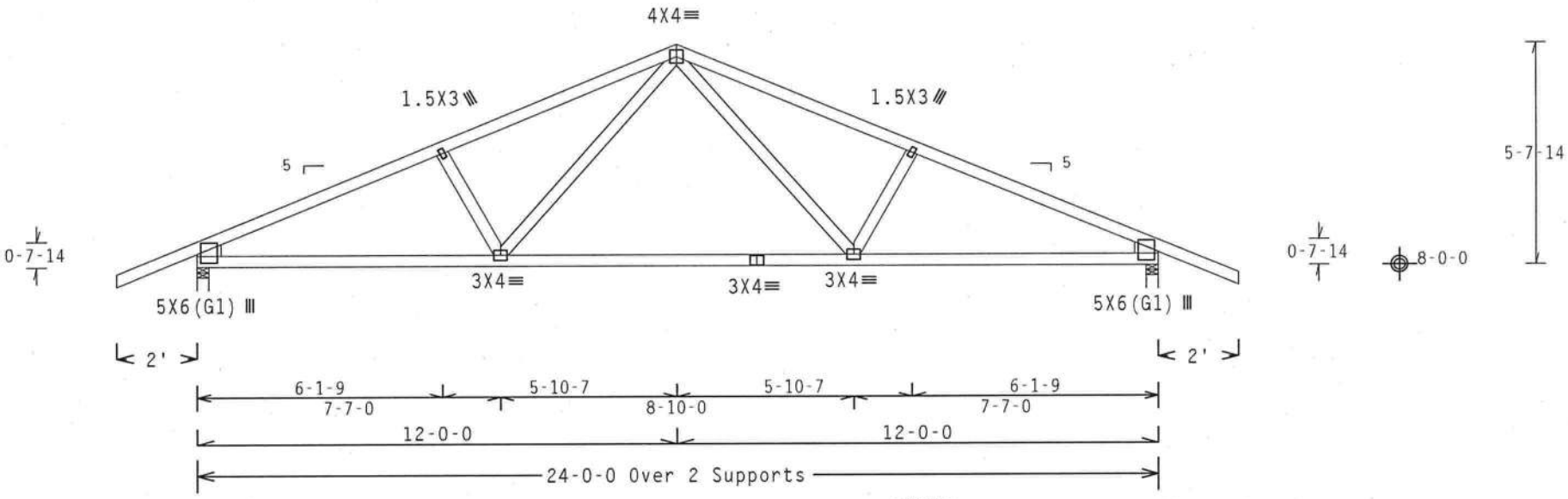

R=1157 U=117 W=3.5"
RL=123/-123

R=1157 U=117 W=3.5"

Design Crit: FBC2007Res/TPI-2002(SPB 9.05.03.0319.16) QTY:3 FL/-/4/-/-/R/-

PLT TYP. Wave

FT/RT=10%(0%)/0(0)

Scale =.25"/Ft.

ALPINE
ITW Building Components Group Inc.
Haines City, FL 33844
FL COA #0 278

WARNING READ AND FOLLOW ALL NOTES ON THIS SHEET!
IMPORTANT FURNISH THIS DESIGN TO ALL CONTRACTORS INCLUDING INSTALLERS.

Trusses require extreme care in fabricating, handling, shipping, installing and bracing. Refer to and follow the latest edition of BCSI (Building Component Safety Information, by TPI and WTCA) for safety practices prior to performing these functions. Installers shall provide temporary bracing per BCSI. Unless noted otherwise, top chord shall have properly attached structural sheathing and bottom chord shall have a properly attached rigid ceiling. Locations shown for permanent lateral restraint of webs shall have bracing installed per BCSI sections B3, B7 or B10, as applicable.

ITW Building Components Group Inc. (ITWBCG) shall not be responsible for any deviation from this design, any failure to build the truss in conformance with ANSI/TPI 1, or for handling, shipping, installation and bracing of trusses. Apply plates to each face of truss and position as shown above and on individual Details, unless noted otherwise. Refer to drawings 160A-Z for standard plate positions. Approval of this drawing or cover page listing this drawing, indicates acceptance of professional engineering responsibility solely for the design shown. The suitability and use of this design for any structure is the responsibility of the Building Designer per ANSI/TPI 1 Sec.2. For more information see: this truss' general notes page; ITW-BCG: www.itwbcg.com; TPI: www.tpinst.org; WTCA: www.sbcindustry.com; ICC: www.iccsafe.org

DOUGLAS FLEMING LICENSE No.66648 STATE OF FLORIDA PROFESSIONAL ENGINEER

01/19/2011

TC LL	20.0 PSF	REF R487-- 52524
TC DL	10.0 PSF	DATE 01/19/11
BC DL	10.0 PSF	DRW HCUSR487 11019010
BC LL	0.0 PSF	HC-ENG DF/DF
TOT.LD.	40.0 PSF	SEQN- 174606
DUR.FAC.	1.25	
SPACING	24.0"	JREF- 1U8Q487_Z01

THIS DWG PREPARED FROM COMPUTER INPUT (LOADS & DIMENSIONS) SUBMITTED BY TRUSS MFR.

(10-244--Fill in later RONNIE ROBINSON/DURRANCE -- , ** - C1)

Top chord 2x4 SP #2 Dense
Bot chord 2x4 SP #2 Dense
Webs 2x4 SP #3
:Lt Stub Wedge 2x4 SP #3::Rt Stub Wedge 2x4 SP #3:

Roof overhang supports 2.00 psf soffit load.

Bottom chord checked for 10.00 psf non-concurrent live load.

Deflection meets L/240 live and L/180 total load.

110 mph wind, 15.00 ft mean hgt, ASCE 7-05, CLOSED bldg, Located anywhere in roof, CAT II, EXP B, wind TC DL=5.0 psf, wind BC DL=5.0 psf. Iw=1.00 GCpi(+/-)=0.18

Wind reactions based on MWFRS pressures.

Truss passed check for 20 psf additional bottom chord live load in areas with 42"-high x 24"-wide clearance.

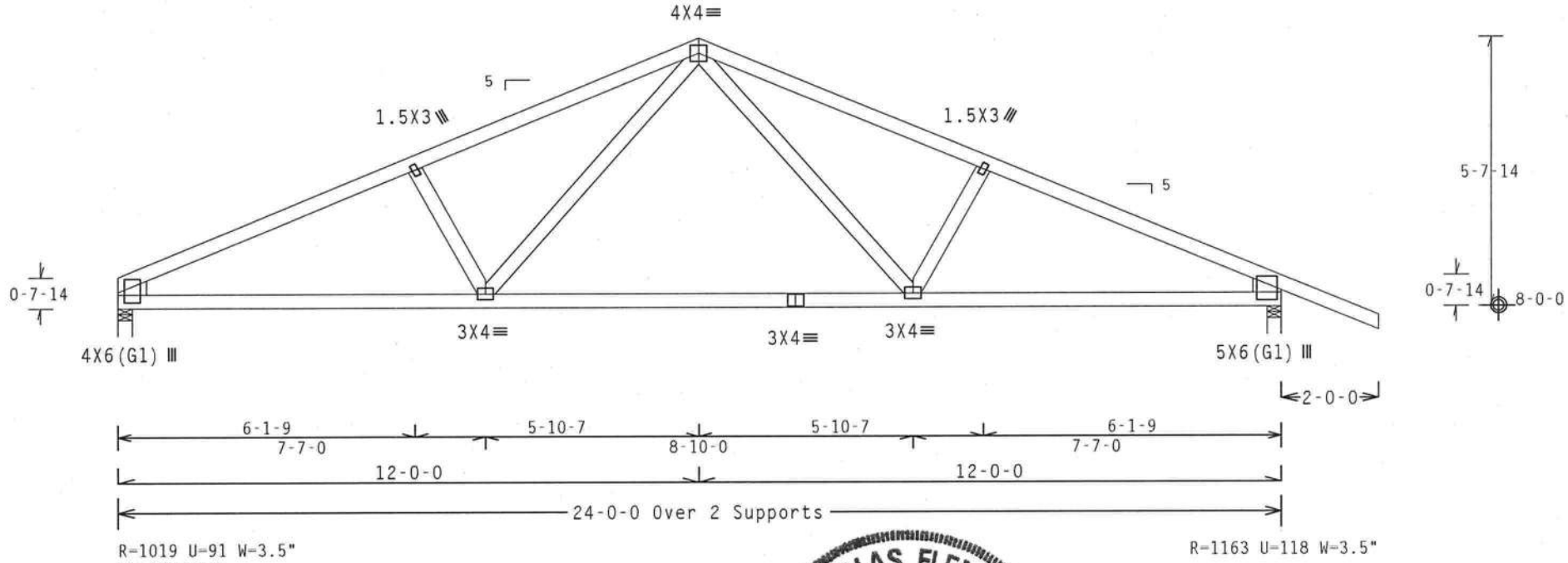

Design Crit: FBC2007Res/TPI-2002(STD)

PLT TYP. Wave FT/RT=10%(0%)/0(0) 9.05.03.0319.16 QTY:5 FL/-/4/-/-/R/- Scale =.3125"/Ft.

ALPINE
ITW Building Components Group Inc.
Haines City, FL 33844
FL COA #0 278

WARNING READ AND FOLLOW ALL NOTES ON THIS SHEET!
IMPORTANT FURNISH THIS DESIGN TO ALL CONTRACTORS INCLUDING INSTALLERS.

Trusses require extreme care in fabricating, handling, shipping, installing and bracing. Refer to and follow the latest edition of BCSI (Building Component Safety Information, by TPI and WTCA) for safety practices prior to performing these functions. Installers shall provide temporary bracing per BCSI. Unless noted otherwise, top chord shall have properly attached structural sheathing and bottom chord shall have a properly attached rigid ceiling. Locations shown for permanent lateral restraint of webs shall have bracing installed per BCSI sections B3, B7 or B10, as applicable.

ITW Building Components Group Inc. (ITWBCG) shall not be responsible for any deviation from this design, any failure to build the truss in conformance with ANSI/TPI 1, or for handling, shipping, installation & bracing of trusses. Apply plates to each face of truss and position as shown above and on the Jaffe Details, unless noted otherwise. Refer to drawings 160A-Z for standard plate positions. A seal on this drawing or cover page listing this drawing, indicates acceptance of professional engineering responsibility solely for the design shown. The suitability and use of this design for any structure is the responsibility of the Building Designer per ANSI/TPI 1 Sec.2. For more information see: This job's general notes page; ITW-BCG: www.itwbcg.com; TPI: www.tpinst.org; WTCA: www.sbcindustry.com; ICC: www.iccsafe.org

DOUGLAS FLEMING LICENSE No. 66648 STATE OF FLORIDA PROFESSIONAL ENGINEER

01/19/2011

TC LL	20.0 PSF	REF	R487-- 52525
TC DL	10.0 PSF	DATE	01/19/11
BC DL	10.0 PSF	DRW	HCUSR487 11019011
BC LL	0.0 PSF	HC-ENG	DF/DF
TOT.LD.	40.0 PSF	SEQN-	174611
DUR.FAC.	1.25		
SPACING	24.0"	JREF-	1U8Q487_Z01

(10-244--Fill in later RONNIE ROBINSON/DURRANCE -- , ** - CGE)

Top chord 2x4 SP #2 Dense
Bot chord 2x4 SP #2 Dense
Webs 2x4 SP #3
:Stack Chord SC1 2x4 SP #2 Dense::Stack Chord SC2 2x4 SP #2 Dense:

Roof overhang supports 2.00 psf soffit load.

See DWGS A11015050109 & GBLLETIN0109 for more requirements.

Stacked top chord must NOT be notched or cut in area (NNL). Dropped top chord braced at 24" o.c. intervals. Attach stacked top chord (SC) to dropped top chord in notchable area using 3x4 tie-plates 24" o.c. Center plate on stacked/dropped chord interface, plate length perpendicular to chord length. Splice top chord in notchable area using 3x6.

110 mph wind, 15.00 ft mean hgt, ASCE 7-05, CLOSED bldg, Located anywhere in roof, CAT II, EXP B, wind TC DL=5.0 psf, wind BC DL=5.0 psf. Iw=1.00 GCpi(+/-)=0.18

Wind reactions based on MWFRS pressures.

Truss spaced at 24.0" OC designed to support 1-0-0 top chord outlookers. Cladding load shall not exceed 10.00 PSF. Top chord must not be cut or notched.

In lieu of structural panels use purlins to brace TC @ 24" OC.

Bottom chord checked for 10.00 psf non-concurrent live load.

Deflection meets L/240 live and L/180 total load.

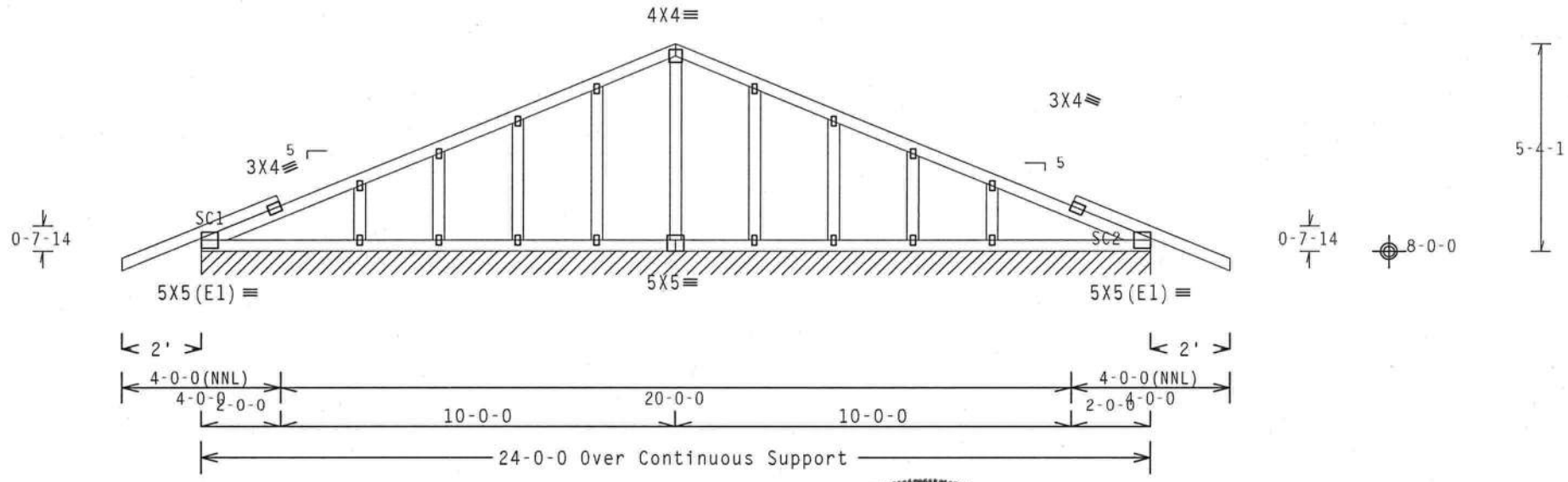

R=122 PLF U=14 PLF W=24-0-0
RL=6/-6 PLF

Note: All Plates Are 1.5X3 Except As Shown.

Design Crit: FBC2007Res/TPI-2002(STD) 09.05.03.0319.16

PLT TYP. Wave FT/RT=10%(0%)/0(0) QTY:1 FL/-/4/-/-/R/- Scale =.25"/Ft.

ALPINE
ITW Building Components Group Inc.
Haines City, FL 33844
FL COA #0 278

WARNING READ AND FOLLOW ALL NOTES ON THIS SHEET!
IMPORTANT FURNISH THIS DESIGN TO ALL CONTRACTORS INCLUDING INSTALLERS.

Trusses require extreme care in fabricating, handling, shipping, installing and bracing. Refer to and follow the latest edition of BCSI (Building Component Safety Information, by TPI and WTCA) for safety practices prior to performing these functions. Installers shall provide temporary bracing per BCSI. Unless noted otherwise, top chord shall have properly attached structural sheathing and bottom chord shall have a properly attached rigid ceiling. Locations shown for permanent lateral restraint of webs shall have bracing installed per BCSI sections B3, B7 or B10, as applicable.

ITW Building Components Group Inc. (ITWBCG) shall not be responsible for any deviation from this design, any failure to build the truss in conformance with ANSI/TPI 1, or for handling, shipping, installation and bracing of trusses. Apply plates to each face of truss and position as shown above and on Joint Details, unless noted otherwise. Refer to drawings 160A-Z for standard plate positions. A signed drawing or cover page listing this drawing, indicates acceptance of professional engineering responsibility solely for the design shown. The suitability and use of this design for any structure is the responsibility of the Building Designer per ANSI/TPI 1 Sec.2. For more information see: This job's general notes page; ITW-BCG: www.itwbcg.com; TPI: www.tpinst.org; WTCA: www.sbcindustry.com; ICC: www.iccsafe.org

DOUGLAS FLEMING LICENSE No.66648 STATE OF FLORIDA PROFESSIONAL ENGINEER

01/19/2011

TC LL	20.0 PSF	REF	R487-- 52526
TC DL	10.0 PSF	DATE	01/19/11
BC DL	10.0 PSF	DRW	HCUSR487 11019012
BC LL	0.0 PSF	HC-ENG	DF/DF
TOT.LD.	40.0 PSF	SEQN-	174620
DUR.FAC.	1.25		
SPACING	24.0"	JREF-	1U80487_Z01

(10-244--Fill in later RONNIE ROBINSON/DURRANCE -- , ** - C1GE)

Top chord 2x4 SP #2 Dense
Bot chord 2x4 SP #2 Dense
Webs 2x4 SP #3
:Stack Chord SC1 2x4 SP #2 Dense::Lt Stub Wedge 2x4 SP #3:

Roof overhang supports 2.00 psf soffit load.

Truss spaced at 24.0" OC designed to support 1-0-0 top chord outlookers. Cladding load shall not exceed 10.00 PSF. Top chord must not be cut or notched.

Truss passed check for 20 psf additional bottom chord live load in areas with 42"-high x 24"-wide clearance.

Bottom chord checked for 10.00 psf non-concurrent live load.

Deflection meets L/240 live and L/180 total load.

(**) 1 plate(s) require special positioning. Refer to scaled plate plot details for special positioning requirements.

110 mph wind, 15.00 ft mean hgt, ASCE 7-05, CLOSED bldg, Located anywhere in roof, CAT II, EXP B, wind TC DL=5.0 psf, wind BC DL=5.0 psf. Iw=1.00 GCpi(+/-)=0.18

Wind reactions based on MWFRS pressures.

See DWGS A11015050109 & GBLLETIN0109 for more requirements.

Stacked top chord must NOT be notched or cut in area (NNL). Dropped top chord braced at 24" o.c. intervals. Attach stacked top chord (SC) to dropped top chord in notchable area using 3x4 tie-plates 24" o.c. Center plate on stacked/dropped chord interface, plate length perpendicular to chord length. Splice top chord in notchable area using 3x6.

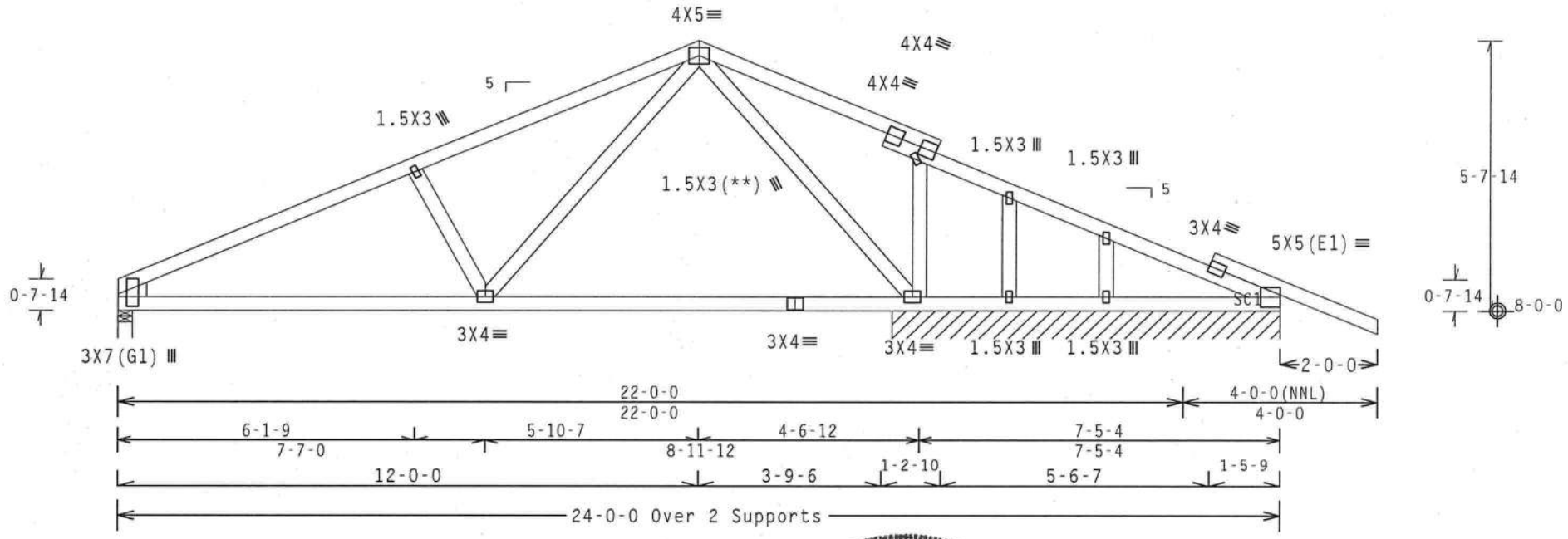

R=856 U=77 W=3.5"
RL=123/-116

R=344 PLF U=20 PLF W=8-0-0

Design Crit: FBC2007Res/TPI-2002(STD)
FT/RT=10%(0%)/0(0) 9.05.03.0319.16 TY:1 FL/-/4/-/-/R/-

PLT TYP. Wave

Scale =.3125"/Ft.

ALPINE
ITW Building Components Group Inc.
Haines City, FL 33844
FL COA #0 278

WARNING READ AND FOLLOW ALL NOTES ON THIS SHEET!
IMPORTANT FURNISH THIS DESIGN TO ALL CONTRACTORS INCLUDING INSTALLERS.

Trusses require extreme care in fabricating, handling, shipping, installing and bracing. Refer to and follow the latest edition of BCSI (Building Component Safety Information, by TPI and WTCA) for safety practices prior to performing these functions. Installers shall provide temporary bracing per BCSI. Unless noted otherwise, top chord shall have properly attached structural sheathing and bottom chord shall have a properly attached rigid ceiling. Locations shown for permanent lateral restraint of webs shall have bracing installed per BCSI sections B3, B7 or B10, as applicable.

ITW Building Components Group Inc. (ITWBCG) shall not be responsible for any deviation from this design, any failure to build the truss in conformance with ANSI/TPI 1, or for handling, shipping, installing and bracing of trusses. Apply plates to each face of truss and position as shown above and on the individual Details, unless noted otherwise. Refer to drawings 160A-Z for standard plate positions. A stamped drawing or cover page listing this drawing, indicates acceptance of professional engineering responsibility solely for the design shown. The suitability and use of this design for any structure is the responsibility of the Building Designer per ANSI/TPI 1 Sec.2. For more information see: This job's general notes page; ITW-BCG: www.itwbcg.com; TPI: www.tpinst.org; WTCA: www.sbcindustry.com; ICC: www.iccsafe.org

DOUGLAS FLEMING LICENSE No. 66648 STATE OF FLORIDA PROFESSIONAL ENGINEER

01/19/2011

TC LL	20.0 PSF	REF	R487-- 52527
TC DL	10.0 PSF	DATE	01/19/11
BC DL	10.0 PSF	DRW	HCUSR487 11019013
BC LL	0.0 PSF	HC-ENG	DF/DF
TOT.LD.	40.0 PSF	SEQN-	174649
DUR.FAC.	1.25		
SPACING	24.0"	JREF-	1U8Q487_Z01

THIS DWG PREPARED FROM COMPUTER INPUT (LOADS & DIMENSIONS) SUBMITTED BY TRUSS MFR.

(10-244--Fill in later RONNIE ROBINSON/DURRANCE -- , ** - M)

Top chord 2x4 SP #2 Dense
Bot chord 2x4 SP #2 Dense
Webs 2x4 SP #3

Roof overhang supports 2.00 psf soffit load.

Bottom chord checked for 10.00 psf non-concurrent live load.

Deflection meets L/240 live and L/180 total load.

110 mph wind, 15.00 ft mean hgt, ASCE 7-05, CLOSED bldg, Located anywhere in roof, CAT II, EXP B, wind TC DL=5.0 psf, wind BC DL=5.0 psf. Iw=1.00 GCpi(+/-)=0.18

Wind reactions based on MWFRS pressures.

Right end vertical not exposed to wind pressure.

Stacked top chord must NOT be notched or cut in area (NNL). Dropped top chord braced at 24" o.c. intervals. Attach stacked top chord (SC) to dropped top chord in notchable area using 3x4 tie-plates 24" o.c. Center plate on stacked/dropped chord interface, plate length perpendicular to chord length. Splice top chord in notchable area using 3x6.

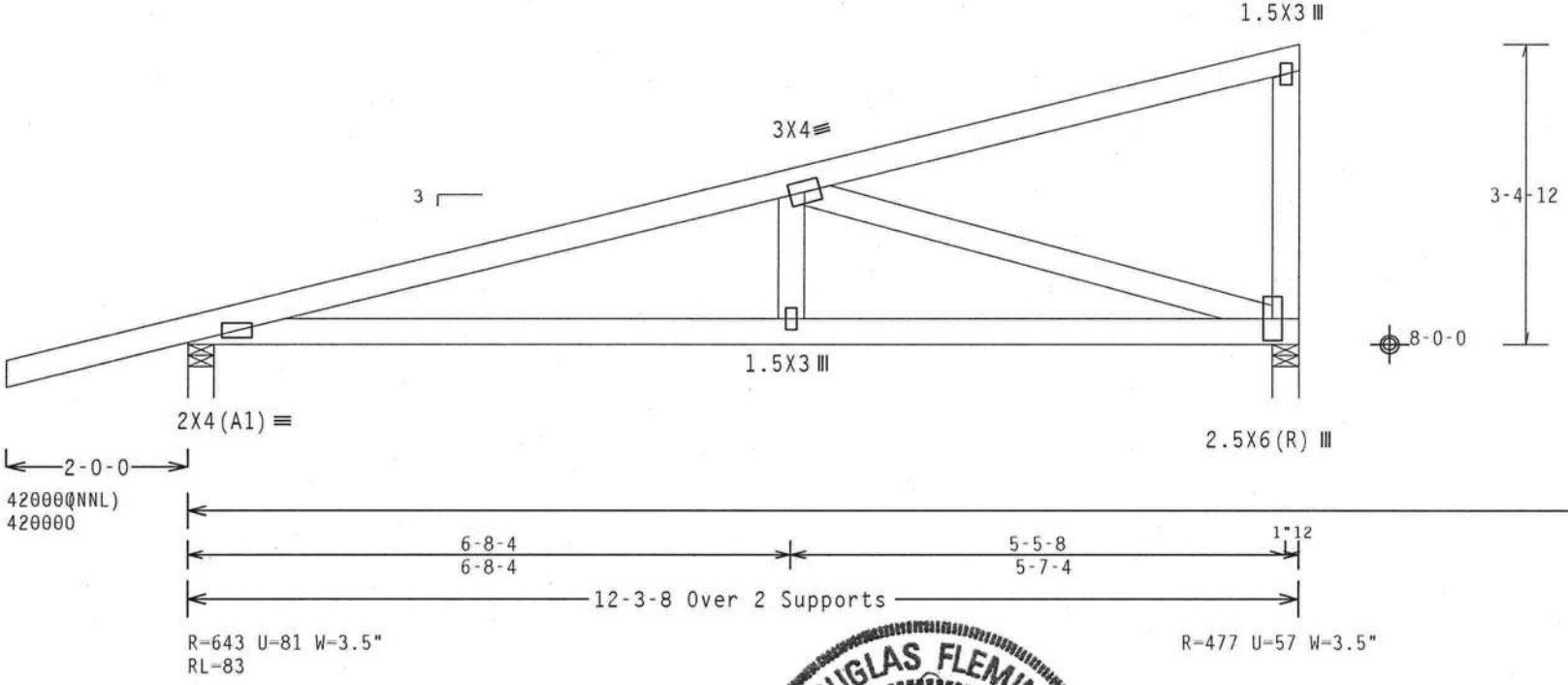

Design Crit: FBC2007Res/TPI-2002(SPD) 9.05.03.0319.16 QTY:12 FL/-/4/-/-/R/-

PLT TYP. Wave FT/RT=10%(0%)/0(0) Scale =.5"/Ft.

ALPINE
ITW Building Components Group Inc.
Haines City, FL 33844
FL COA #0 278

WARNING READ AND FOLLOW ALL NOTES ON THIS SHEET!
IMPORTANT FURNISH THIS DESIGN TO ALL CONTRACTORS INCLUDING INSTALLERS.

Trusses require extreme care in fabricating, handling, shipping, installing and bracing. Refer to and follow the latest edition of BCSI (Building Component Safety Information, by TPI and WTCA) for safety practices prior to performing these functions. Installers shall provide temporary bracing per BCSI. Unless noted otherwise, top chord shall have properly attached structural sheathing and bottom chord shall have a properly attached rigid ceiling. Locations shown for permanent lateral restraint of webs shall have bracing installed per BCSI sections B3, B7 or B10, as applicable.

ITW Building Components Group Inc. (ITWBCG) shall not be responsible for any deviation from this design, any failure to build the truss in conformance with ANSI/TPI 1, or for handling, shipping, installing and bracing of trusses. Apply plates to each face of truss and position as shown above and on the Joint Details, unless noted otherwise. Refer to drawings 160A-Z for standard plate positions. A seal on this drawing or cover page listing this drawing, indicates acceptance of professional engineering responsibility solely for the design shown. The suitability and use of this design for any structure is the responsibility of the Building Designer per ANSI/TPI 1 Sec.2. For more information see: This job's general notes page; ITW-BCG: www.itwbcg.com; TPI: www.tpinst.org; WTCA: www.sbcindustry.com; ICC: www.iccsafe.org

DOUGLAS FLEMING LICENSE No. 66648 STATE OF FLORIDA PROFESSIONAL ENGINEER

01/19/2011

TC LL	20.0 PSF	REF R487-- 52528
TC DL	10.0 PSF	DATE 01/19/11
BC DL	10.0 PSF	DRW HCUSR487 11019003
BC LL	0.0 PSF	HC-ENG DF/DF *
TOT.LD.	40.0 PSF	SEQN- 174591
DUR.FAC.	1.25	
SPACING	24.0"	JREF- 1U80487_Z01

THIS DWG PREPARED FROM COMPUTER INPUT (LOADS & DIMENSIONS) SUBMITTED BY TRUSS MFR.

(10-244--Fill in later RONNIE ROBINSON/DURRANCE -- , ** - MGE)

Top chord 2x4 SP #1
Bot chord 2x4 SP #2 Dense
Webs 2x4 SP #3
:Stack Chord SC1 2x4 SP #2 Dense:

Roof overhang supports 2.00 psf soffit load.

Truss spaced at 24.0" OC designed to support 1-0-0 top chord outlookers. Cladding load shall not exceed 10.00 PSF. Top chord must not be cut or notched.

Stacked top chord must NOT be notched or cut in area (NNL). Dropped top chord braced at 24" o.c. intervals. Attach stacked top chord (SC) to dropped top chord in notchable area using 3x4 tie-plates 24" o.c. Center plate on stacked/dropped chord interface, plate length perpendicular to chord length. Splice top chord in notchable area using 3x6.

110 mph wind, 15.00 ft mean hgt, ASCE 7-05, CLOSED bldg, Located anywhere in roof, CAT II, EXP B, wind TC DL=5.0 psf, wind BC DL=5.0 psf. Iw=1.00 GCpi(+/-)=0.18

Wind reactions based on MWFRS pressures.

Right end vertical not exposed to wind pressure.

See DWGS A11015050109 & GBLLETIN0109 for more requirements.

In lieu of structural panels use purlins to brace TC @ 24" OC.

Bottom chord checked for 10.00 psf non-concurrent live load.

Deflection meets L/240 live and L/180 total load.

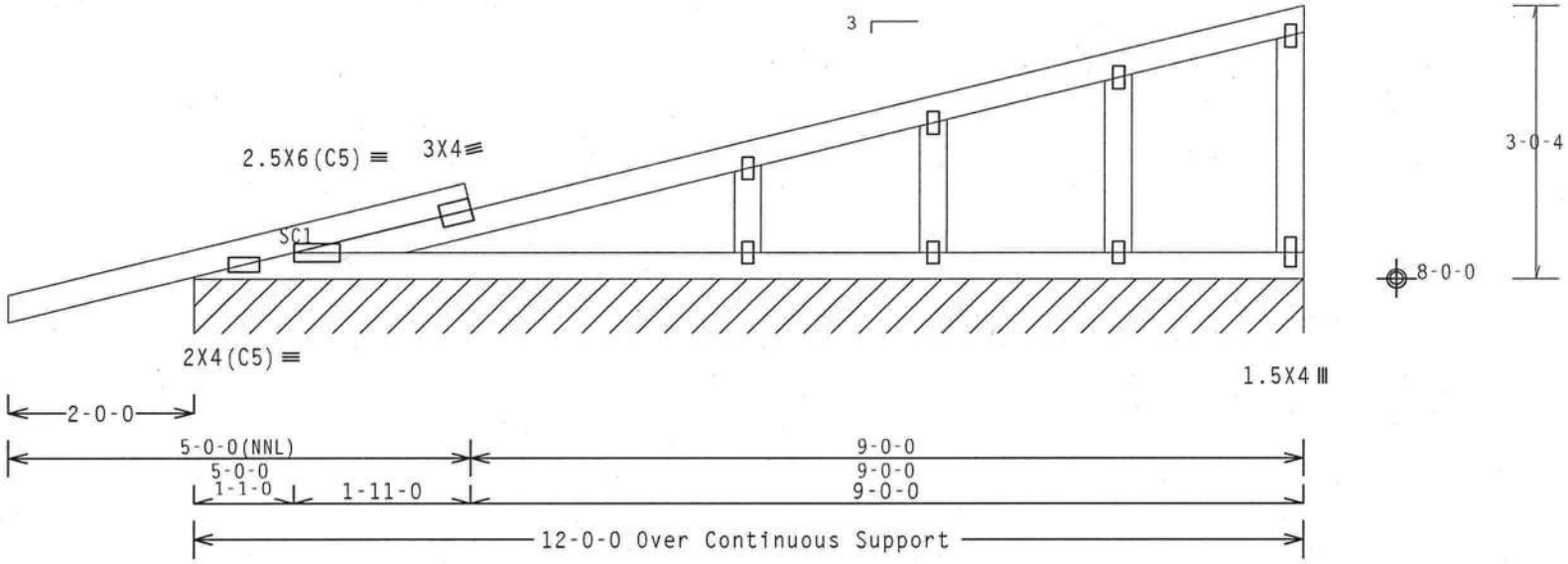

R=107 PLF U=34 PLF W=12-0-0
RL=13 PLF

Note: All Plates Are 1.5X3 Except As Shown.

Design Crit: FBC2007Res/TPI-2002(STD)

PLT TYP. Wave FT/RT=10%(0%)/0(0) 9.05.03.0319.16 QTY:1 FL/-/4/-/-/R/- Scale =.5"/Ft.

ALPINE
ITW Building Components Group Inc.
Haines City, FL 33844
FL COA #0 278

WARNING READ AND FOLLOW ALL NOTES ON THIS SHEET!
IMPORTANT FURNISH THIS DESIGN TO ALL CONTRACTORS INCLUDING INSTALLERS.

Trusses require extreme care in fabricating, handling, shipping, installing and bracing. Refer to and follow the latest edition of BCSI (Building Component Safety Information, by TPI and WTCA) for safety practices prior to performing these functions. Installers shall provide temporary bracing per BCSI. Unless noted otherwise, top chord shall have properly attached structural sheathing and bottom chord shall have a properly attached rigid ceiling. Locations shown for permanent lateral restraint of webs shall have bracing installed per BCSI sections B3, B7 or B10, as applicable.

ITW Building Components Group Inc. (ITWBCG) shall not be responsible for any deviation from this design, any failure to build the truss in conformance with ANSI/TPI 1, or for handling, shipping, installation and bracing of trusses. Apply plates to each face of truss and position as shown above and on the plate. Details, unless noted otherwise. Refer to drawings 160A-Z for standard plate positions. A seal on this drawing or cover page listing this drawing, indicates acceptance of professional engineering responsibility solely for the design shown. The suitability and use of this design for any structure is the responsibility of the Building Designer per ANSI/TPI 1 Sec.2. For more information see: This job general notes page; ITW-BCG: www.itwbcg.com; TPI: www.tpinst.org; WTCA: www.sbcindustry.com; ICC: www.iccsafe.org

DOUGLAS FLEMING
LICENSE
No. 66648
STATE OF FLORIDA
PROFESSIONAL ENGINEER

01/19/2011

TC LL	20.0 PSF	REF	R487-- 52529
TC DL	10.0 PSF	DATE	01/19/11
BC DL	10.0 PSF	DRW	HCUSR487 11019014
BC LL	0.0 PSF	HC-ENG	DF/DF
TOT.LD.	40.0 PSF	SEQN-	174595
DUR.FAC.	1.25		
SPACING	24.0"	JREF-	1U8Q487_Z01

CLB WEB BRACE SUBSTITUTION

THIS DETAIL IS TO BE USED WHEN CONTINUOUS LATERAL BRACING (CLB) IS SPECIFIED ON A TRUSS DESIGN BUT AN ALTERNATIVE WEB BRACING METHOD IS DESIRED.

NOTES:

THIS DETAIL IS ONLY APPLICABLE FOR CHANGING THE SPECIFIED CLB SHOWN ON SINGLE PLY SEALED DESIGNS TO T-BRACING OR SCAB BRACING.

ALTERNATIVE BRACING SPECIFIED IN CHART BELOW MAY BE CONSERVATIVE. FOR MINIMUM ALTERNATIVE BRACING, RE-RUN DESIGN WITH APPROPRIATE BRACING.

WEB MEMBER SIZE	SPECIFIED CLB BRACING	ALTERNATIVE BRACING T OR L-BRACE	ALTERNATIVE BRACING SCAB BRACE
2X3 OR 2X4	1 ROW	2X4	1-2X4
2X3 OR 2X4	2 ROWS	2X6	2-2X4
2X6	1 ROW	2X4	1-2X6
2X6	2 ROWS	2X6	2-2X4(*)
2X8	1 ROW	2X6	1-2X8
2X8	2 ROWS	2X6	2-2X6(*)

T-BRACE, L-BRACE AND SCAB BRACE TO BE SAME SPECIES AND GRADE OR BETTER THAN WEB MEMBER UNLESS SPECIFIED OTHERWISE ON ENGINEER'S SEALED DESIGN.

(*) CENTER SCAB ON WIDE FACE OF WEB. APPLY (1) SCAB TO EACH FACE OF WEB.

T-BRACING OR L-BRACING:

APPLY TO EITHER SIDE OF WEB NARROW FACE.
ATTACH WITH 10d BOX OR GUN
(0.128"x 3.",MIN) NAILS.
AT 6" O.C.
BRACE IS A
MINIMUM 80% OF WEB
MEMBER LENGTH

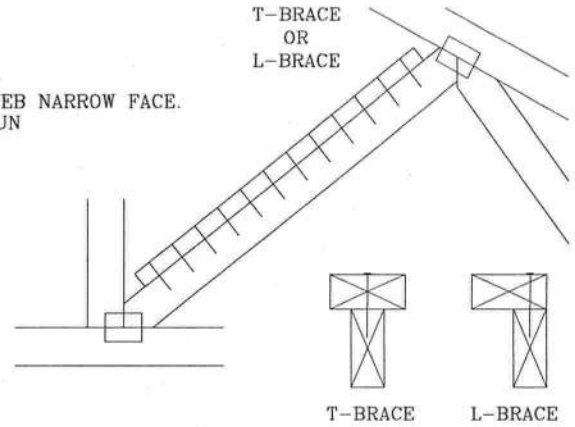

SCAB BRACING:

APPLY SCAB(S) TO WIDE FACE OF WEB.
NO MORE THAN (1) SCAB PER FACE.
ATTACH WITH 10d BOX OR GUN
(0.128"x 3.",MIN) NAILS.
AT 6" O.C.
BRACE IS A MINIMUM
80% OF WEB MEMBER LENGTH

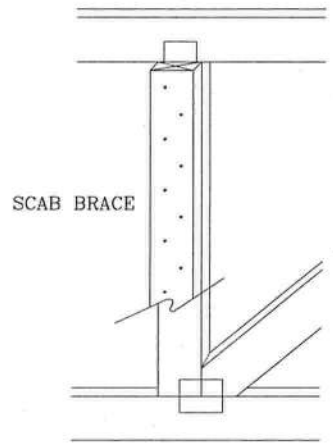

ITW
Building Components Group Inc.

Earth City, MO 63045

WARNING READ AND FOLLOW ALL NOTES ON THIS SHEET!
Trusses require extreme care in fabricating, handling, shipping, installing and bracing. Refer to and follow BCSI (Building Component Safety Information, by TPI and WTCA) for safety practices prior to performing these functions. Installers shall provide temporary bracing per BCSI. Unless noted otherwise, top chord shall have properly attached structural panels and bottom chord shall have a properly attached rigid ceiling. Locations shown for permanent lateral restraint of webs shall have bracing installed per BCSI sections B3 & B7. See this job's general notes page for more information.

IMPORTANT FURNISH COPY OF THIS DESIGN TO INSTALLATION CONTRACTOR.
ITW Building Components Group Inc. (ITWBCG) shall not be responsible for any deviation from this design, any failure to build the truss in conformance with TPI, or fabricating, handling, shipping, installing & bracing of trusses. ITWBCG connector plates are made of 20/18/16GA (W,H/S/K) ASTM A653 grade 37/40/60 (K/W/H,S) galv. steel. Apply plates to each face of truss, positioned as shown above and on joint details. A seal on this drawing or cover page indicates acceptance and professional engineering responsibility solely for the truss component design shown. The suitability and use of this component for any building is the responsibility of the Building Designer per ANST/TPI 1 Sec. 2.
ITW-BCG: www.itwbcg.com; TPI: www.tpinst.com; WTCA: www.sbcindustry.com; ICC: www.iccsafe.org

DOUGLAS FLEMING
LICENSE
No. 66648
STATE OF
FLORIDA
PROFESSIONAL ENGINEER

TC LL	PSF	REF	CLB SUBST.
TC DL	PSF	DATE	1/1/09
BC DL	PSF	DRWG	BRCLBSUB0109
BC LL	PSF		
TOT. LD.	PSF		
DUR. FAC.			
SPACING			

01/19/2011

GABLE STUD REINFORCEMENT DETAIL

ASCE 7-05: 110 MPH WIND SPEED, 15' MEAN HEIGHT, ENCLOSED, I = 1.00, EXPOSURE C, Kzt = 1.00

MAX GABLE VERTICAL LENGTH

2X4 GABLE VERTICAL SPACING	SPECIES	BRACE GRADE	NO BRACES	(1) 1X4 "L" BRACE * GROUP A	(1) 1X4 "L" BRACE * GROUP B	(1) 2X4 "L" BRACE * GROUP A	(1) 2X4 "L" BRACE * GROUP B	(2) 2X4 "L" BRACE ** GROUP A	(2) 2X4 "L" BRACE ** GROUP B	(1) 2X6 "L" BRACE * GROUP A	(1) 2X6 "L" BRACE * GROUP B	(2) 2X6 "L" BRACE ** GROUP A	(2) 2X6 "L" BRACE ** GROUP B
24" O.C.	SPF HF	#1 / #2	3' 10"	6' 8"	6' 10"	7' 11"	8' 1"	9' 5"	9' 8"	12' 5"	12' 9"	14' 0"	14' 0"
		#3	3' 9"	6' 0"	6' 0"	7' 11"	7' 11"	9' 5"	9' 5"	12' 4"	12' 4"	14' 0"	14' 0"
		STUD	3' 9"	6' 0"	6' 0"	7' 11"	7' 11"	9' 5"	9' 5"	12' 3"	12' 3"	14' 0"	14' 0"
		STANDARD	3' 9"	5' 2"	5' 2"	6' 9"	6' 9"	9' 1"	9' 1"	10' 7"	10' 7"	14' 0"	14' 0"
	SP DFL	#1	4' 3"	6' 8"	7' 2"	7' 11"	8' 6"	9' 5"	10' 2"	12' 5"	13' 5"	14' 0"	14' 0"
		#2	4' 2"	6' 8"	7' 2"	7' 11"	8' 6"	9' 5"	10' 2"	12' 5"	13' 5"	14' 0"	14' 0"
		#3	4' 0"	6' 2"	6' 2"	7' 11"	8' 1"	9' 5"	9' 11"	12' 5"	12' 8"	14' 0"	14' 0"
		STUD	4' 0"	6' 1"	6' 1"	7' 11"	8' 0"	9' 5"	9' 11"	12' 5"	12' 6"	14' 0"	14' 0"
		STANDARD	3' 10"	5' 3"	5' 3"	6' 11"	6' 11"	9' 4"	9' 4"	10' 10"	10' 10"	14' 0"	14' 0"
16" O.C.	SPF HF	#1 / #2	4' 5"	7' 8"	7' 10"	9' 1"	9' 4"	10' 10"	11' 1"	14' 0"	14' 0"	14' 0"	14' 0"
		#3	4' 4"	7' 4"	7' 4"	9' 1"	9' 1"	10' 10"	10' 10"	14' 0"	14' 0"	14' 0"	14' 0"
		STUD	4' 4"	7' 4"	7' 4"	9' 1"	9' 1"	10' 10"	10' 10"	14' 0"	14' 0"	14' 0"	14' 0"
		STANDARD	4' 4"	6' 4"	6' 4"	8' 4"	8' 4"	10' 10"	10' 10"	12' 11"	12' 11"	14' 0"	14' 0"
	SP DFL	#1	4' 10"	7' 8"	8' 3"	9' 1"	9' 9"	10' 10"	11' 8"	14' 0"	14' 0"	14' 0"	14' 0"
		#2	4' 9"	7' 8"	8' 3"	9' 1"	9' 9"	10' 10"	11' 8"	14' 0"	14' 0"	14' 0"	14' 0"
		#3	4' 6"	7' 7"	7' 7"	9' 1"	9' 6"	10' 10"	11' 4"	14' 0"	14' 0"	14' 0"	14' 0"
		STUD	4' 6"	7' 6"	7' 6"	9' 1"	9' 6"	10' 10"	11' 4"	14' 0"	14' 0"	14' 0"	14' 0"
		STANDARD	4' 5"	6' 5"	6' 5"	8' 6"	8' 6"	10' 10"	11' 1"	13' 3"	13' 3"	14' 0"	14' 0"
12" O.C.	SPF HF	#1 / #2	4' 11"	8' 5"	8' 8"	10' 0"	10' 3"	11' 11"	12' 3"	14' 0"	14' 0"	14' 0"	14' 0"
		#3	4' 9"	8' 5"	8' 5"	10' 0"	10' 0"	11' 11"	11' 11"	14' 0"	14' 0"	14' 0"	14' 0"
		STUD	4' 9"	8' 5"	8' 5"	10' 0"	10' 0"	11' 11"	11' 11"	14' 0"	14' 0"	14' 0"	14' 0"
		STANDARD	4' 9"	7' 3"	7' 3"	9' 7"	9' 7"	11' 11"	11' 11"	14' 0"	14' 0"	14' 0"	14' 0"
	SP DFL	#1	5' 4"	8' 5"	9' 1"	10' 0"	10' 9"	11' 11"	12' 10"	14' 0"	14' 0"	14' 0"	14' 0"
		#2	5' 3"	8' 5"	9' 1"	10' 0"	10' 9"	11' 11"	12' 10"	14' 0"	14' 0"	14' 0"	14' 0"
		#3	5' 0"	8' 5"	8' 5"	10' 0"	10' 6"	11' 11"	12' 6"	14' 0"	14' 0"	14' 0"	14' 0"
		STUD	5' 0"	8' 5"	8' 7"	10' 0"	10' 6"	11' 11"	12' 6"	14' 0"	14' 0"	14' 0"	14' 0"
		STANDARD	4' 11"	7' 5"	7' 5"	9' 10"	9' 10"	11' 11"	12' 3"	14' 0"	14' 0"	14' 0"	14' 0"

BRACING GROUP SPECIES AND GRADES:

GROUP A:

SPRUCE-PINE-FIR

#1 / #2	STANDARD
#3	STUD

HEM-FIR

#2	STUD
#3	STANDARD

DOUGLAS FIR-LARCH

#3
STUD
STANDARD

SOUTHERN PINE

#3
STUD
STANDARD

GROUP B:

HEM-FIR

#1 & BTR
#1

SOUTHERN PINE

#1
#2

DOUGLAS FIR-LARCH

#1
#2

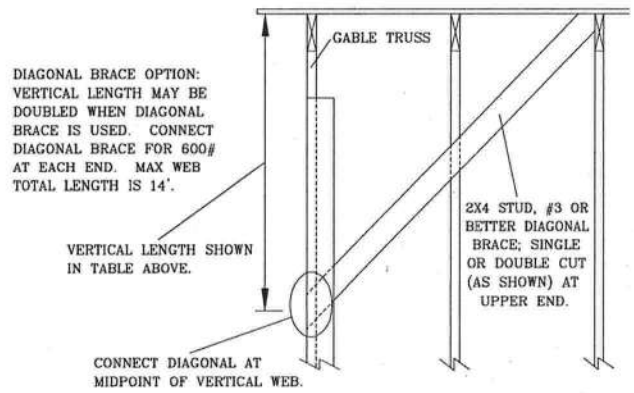

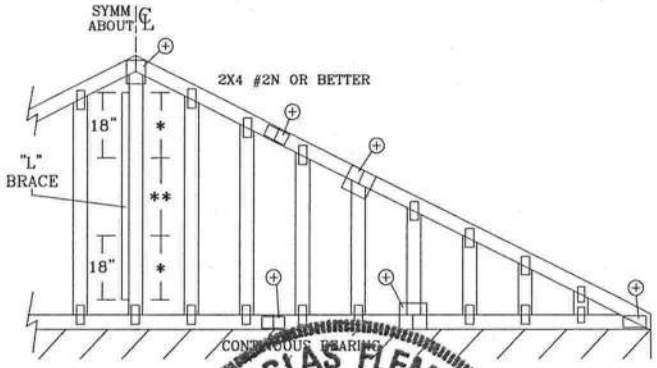

REFER TO CHART ABOVE FOR MAX GABLE VERTICAL LENGTH.

GABLE TRUSS DETAIL NOTES:

LIVE LOAD DEFLECTION CRITERIA IS L/240.

PROVIDE UPLIFT CONNECTIONS FOR 80 PLF OVER CONTINUOUS BEARING (5 PSF TC DEAD LOAD).

GABLE END SUPPORTS LOAD FROM 4' 0" OUTLOOKERS WITH 2' 0" OVERHANG, OR 12" PLYWOOD OVERHANG.

ATTACH EACH "L" BRACE WITH 10d NAILS. (0.128"x3" min)

* FOR (1) "L" BRACE: SPACE NAILS AT 2" O.C. IN 18" END ZONES AND 4" O.C. BETWEEN ZONES.

** FOR (2) "L" BRACES: SPACE NAILS AT 3" O.C. IN 18" END ZONES AND 6" O.C. BETWEEN ZONES.

"L" BRACING MUST BE A MINIMUM OF 80% OF WEB MEMBER LENGTH.

GABLE VERTICAL PLATE SIZES

VERTICAL LENGTH	NO SPLICE
LESS THAN 4' 0"	1X4 OR 2X3
GREATER THAN 4' 0", BUT LESS THAN 11' 6"	2.5X4
GREATER THAN 11' 6"	3X4

\+ REFER TO COMMON TRUSS DESIGN FOR PEAK, SPLICE, AND HEEL PLATES.

TW Building Components Group Inc.

Earth City, MO 63045

WARNING READ AND FOLLOW ALL NOTES ON THIS SHEET!
Trusses require extreme care in fabricating, handling, shipping, installing and bracing. Refer to and follow BCSI (Building Component Safety Information, by TPI and WTCA) for safety practices prior to performing these functions. Installers shall provide temporary bracing per BCSI. Unless noted otherwise, top chord shall have properly attached structural panels and bottom chord shall have a properly attached rigid ceiling. Locations shown for permanent lateral restraint of webs shall have bracing installed per BCSI sections B3 & B7. See this job's general notes page for more information.

IMPORTANT FURNISH COPY OF THIS DESIGN TO INSTALLATION CONTRACTOR.
ITW Building Components Group Inc. (ITWBCG) shall not be responsible for any deviation from this design, any failure to build the truss in conformance with TPI, or fabricating, handling, shipping, installing & bracing of trusses. ITWBCG connector plates are made of 20/18/16GA (W,H/S/K) ASTM A653 Grade 37/40/60 (K/W/H,S) galv. steel. Apply plates to each face of truss, positioned as shown above and on joint detail. A seal on this drawing or cover page indicates acceptance and professional engineering responsibility solely for the truss component design shown. The suitability and use of this component for any building is the responsibility of the Building Designer per ANST/TPI 1 Sec. 2.
ITW-BCG: www.itwbcg.com; TPI: www.tpinst.com; WTCA: www.sbcindustry.com; ICC: www.iccsafe.org

DOUGLAS FLEMING LICENSE No. 66648 STATE OF FLORIDA PROFESSIONAL ENGINEER 01/19/2011

MAX. TOT. LD. 60 PSF

MAX. SPACING 24.0"

REF	ASCE7-05-GAB11015
DATE	1/1/09
DRWG	A11015050109

GABLE DETAIL
FOR LET-IN VERTICALS

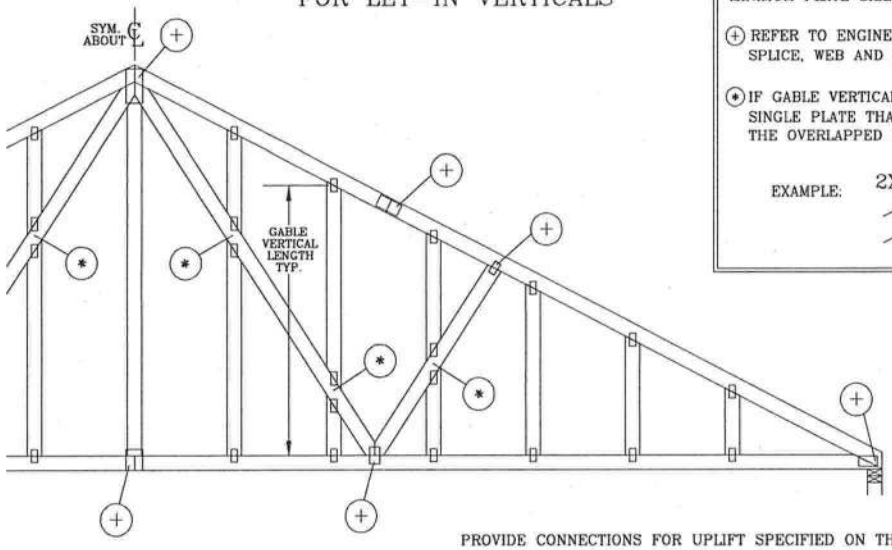

GABLE TRUSS PLATE SIZES

REFER TO APPROPRIATE ITW GABLE DETAIL FOR MINIMUM PLATE SIZES FOR VERTICAL STUDS.

(+) REFER TO ENGINEERED TRUSS DESIGN FOR PEAK, SPLICE, WEB AND HEEL PLATES.

(*) IF GABLE VERTICAL PLATES OVERLAP, USE A SINGLE PLATE THAT COVERS THE TOTAL AREA OF THE OVERLAPPED PLATES TO SPAN THE WEB.

EXAMPLE:

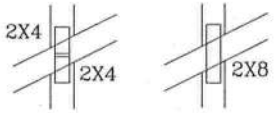

"T" REINFORCEMENT ATTACHMENT DETAIL

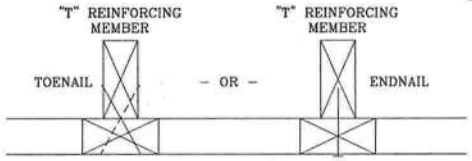

TO CONVERT FROM "L" TO "T" REINFORCING MEMBERS, MULTIPLY "T" INCREASE BY LENGTH (BASED ON APPROPRIATE ITW GABLE DETAIL).

MAXIMUM ALLOWABLE "T" REINFORCED GABLE VERTICAL LENGTH IS 14' FROM TOP TO BOTTOM CHORD.

WEB LENGTH INCREASE W/ "T" BRACE

WIND SPEED AND MRH	"T" REINF. MBR. SIZE	"T" INCREASE
140 MPH	2x4	10 %
15 FT	2x6	50 %
140 MPH	2x4	10 %
30 FT	2x6	50 %
130 MPH	2x4	10 %
15 FT	2x6	50 %
130 MPH	2x4	10 %
30 FT	2x6	50 %
120 MPH	2x4	10 %
15 FT	2x6	50 %
120 MPH	2x4	10 %
30 FT	2x6	40 %
110 MPH	2x4	10 %
15 FT	2x6	40 %
110 MPH	2x4	10 %
30 FT	2x6	50 %
100 MPH	2x4	20 %
15 FT	2x6	30 %
100 MPH	2x4	10 %
30 FT	2x6	40 %
90 MPH	2x4	20 %
15 FT	2x6	20 %
90 MPH	2x4	20 %
30 FT	2x6	30 %

EXAMPLE:
ASCE WIND SPEED = 100 MPH
MEAN ROOF HEIGHT = 30 FT, Kzt = 1.00
GABLE VERTICAL = 24" O.C. SP #3
"T" REINFORCING MEMBER SIZE = 2X4
"T" BRACE INCREASE (FROM ABOVE) = 10% = 1.10
(1) 2X4 "L" BRACE LENGTH = 6' 7"
MAXIMUM "T" REINFORCED GABLE VERTICAL LENGTH
1.10 x 6' 7" = 7' 3"

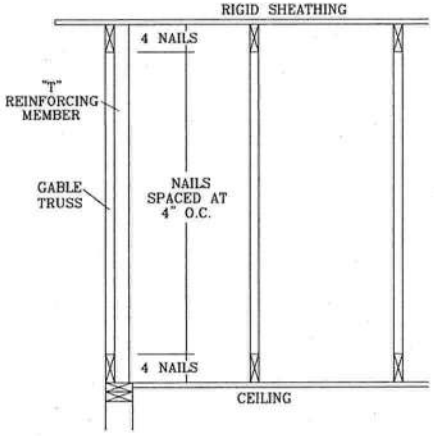

PROVIDE CONNECTIONS FOR UPLIFT SPECIFIED ON THE ENGINEERED TRUSS DESIGN.

ATTACH EACH "T" REINFORCING MEMBER WITH
END DRIVEN NAILS:
10d COMMON (0.148"X 3.",MIN) NAILS AT 4" O.C. PLUS
(4) NAILS IN TOP AND BOTTOM CHORD.

TOENAILED NAILS:
10d COMMON (0.148"x3",MIN) TOENAILS AT 4" O.C. PLUS
(4) TOENAILS IN TOP AND BOTTOM CHORD.

THIS DETAIL TO BE USED WITH THE APPROPRIATE ITW GABLE DETAIL FOR ASCE WIND LOAD.
ASCE 7-98 GABLE DETAIL DRAWINGS
A13015980109, A12015980109, A11015980109, A10015980109,
A13030980109, A12030980109, A11030980109, A10030980109
ASCE 7-02 GABLE DETAIL DRAWINGS
A13015020109, A12015020109, A11015020109, A10015020109, A14015020109,
A13030020109, A12030020109, A11030020109, A10030020109, A14030020109
ASCE 7-05 GABLE DETAIL DRAWINGS
A13015050109, A12015050109, A11015050109, A10015050109, A14015050109,
A13030050109, A12030050109, A11030050109, A10030050109, A14030050109

SEE APPROPRIATE ITW GABLE DETAIL FOR MAXIMUM UNREINFORCED GABLE VERTICAL LENGTH.

DOUGLAS FLEMING LICENSE No. 66648 STATE OF FLORIDA PROFESSIONAL ENGINEER
Jan 19 '11
01/19/2011

ITW
Building Components Group Inc.
Earth City, MO 63045

WARNING READ AND FOLLOW ALL NOTES ON THIS SHEET!
Trusses require extreme care in fabricating, handling, shipping, installing and bracing. Refer to and follow BCSI (Building Component Safety Information, by TPI and WTCA) for safety practices prior to performing these functions. Installers shall provide temporary bracing per BCSI. Unless noted otherwise, top chord shall have properly attached structural panels and bottom chord shall have a properly attached rigid ceiling. Locations shown for permanent lateral restraint of webs shall have bracing installed per BCSI sections B3 & B7. See this job's general notes page for more information.

IMPORTANT FURNISH COPY OF THIS DESIGN TO INSTALLATION CONTRACTOR.
ITW Building Components Group Inc. (ITWBCG) shall not be responsible for any deviation from this design, any failure to build the truss in conformance with TPI, or fabricating, handling, shipping, installing & bracing of trusses. ITWBCG connector plates are made of 20/18/16GA (W,H/S/K) ASTM A653 grade 33/40/60 (K/W/H,S) galv. steel. Apply plates to each face of truss, positioned as shown above and on joints. Details A seal on this drawing or cover page indicates acceptance and professional engineering responsibility solely for the truss component design shown. The suitability and use of this component for any building is the responsibility of the Building Designer per ANST/TPI 1 Sec. 2.
ITW-BCG: www.itwbcg.com; TPI: www.tpinst.com; WTCA: www.sbcindustry.com; ICC: www.iccsafe.org

MAX TOT. LD. 60 PSF
DUR. FAC. ANY
MAX SPACING 24.0"

REF	LET-IN VERT
DATE	1/1/09
DRWG	GBLLETIN0109