ADDL	ADDITIONAL
AFF	ABOVE FINISHED FLOOR
AISC	AMERICAN INSTITUTE OF STEEL CONSTRUCTION
AISI	AMERICAN IRON AND STEEL INSTITUTE
AL, ALUM	ALUMINUM
ALT	ALTERNATE
ANSI	AMERICAN NATIONAL STANDARDS INSTITUTE
APPROX	APPROXIMATELY
ARCH	ARCHITECTURAL
ASSY	ASSEMBLY
ASTM	AMERICAN SOCIETY FOR TESTING MATERIALS
AWG	AMERICAN WIRE GAGE
AWS	AMERICAN WELDING SOCIETY
B/	BOTTOM OF
BL	BUILDING LINE
BLDG	BUILDING
BLK	BLOCKING
BM	BEAM OR BENCH MARK
BP	BASE PLATE
BTW	BETWEEN
CF	CUBIC FOOT OR FEET
CH	CHORD
CJ	CONTROL JOINT
CLR	CLEAR
CMU	CONCRETE MASONRY UNIT
CO	CLEAN OUT
COL	COLUMN
CONC	CONCRETE
CONN	CONNECTION
CONST	CONSTRUCTION
CONT	CONTINUOUS
CONTR	CONTRACTOR
CSK	COUNTER SUNK
CTR	CENTER
CY	CUBIC YARD
DBL	DOUBLE
DEG	DEGREE
DEMO	DEMOLITION
DET, DTL	DETAIL
DIA	DIAMETER
DIAG	DIAGONAL OR DIAGRAM
DIM	DIMENSION
DL	DEAD LOAD
DN	DOWN
DO	DITTO
DWG	DRAWING
DWL	DOWEL
EA	EACH
EF	EACH FACE
EJ	EXPANSION JOINT
EL	ELEVATION
ELEC	ELECTRICAL
ELEV	ELEVATIONS
ENGR	ENGINEER
EOS	EDGE OF SLAB
EQ	EQUAL
EQUIP	EQUIPMENT
EQV	EQUIVALENT
ETC	ET CETERA
EXIST	EXISTING
EXP	EXPANSION
EXT	EXTERIOR
EW	EA WAY
FD	FLOOR DRAIN
FDN	FOUNDATION
FFE	FINISHED FLOOR ELEVATION
FF	FINISHED FLOOR
FIN	FINISH
FLG	FLANGE
FLR	FLOOR OR FLOORING
FMG	FRAMING
FP	FULL PENETRATION WELD
FR	FROM OR FIRE RATED
FT	FOOT OR FEET
FTG	FOOTING
FUT	FUTURE
GA	GAGE/GAUGE
GALV	GALVANIZED
GB	GRADE BEAM
GC	GENERAL CONTRACTOR
GEN	GENERAL
GR	GROUND
GRTG	GRATING
H	HIGH
HDW	HARDWARE
HM	HOLLOW METAL
HT	HEIGHT
HORIZ	HORIZONTAL
HP	HIGH POINT
HVAC	HEATING VENT. AIR COND.
HK	HOOK

IN	INCHES
INCL	INCLUDING
INFO	INFORMATION
INT	INTERIOR OR INTERNAL
JT	JOINT
K	KIPS
KO	KNOCK OUT
KSI	KIPS PER SQUARE INCH
LF	LINEAR FEET
LLH	LONG LEG HORIZONTAL
LLV	LONG LEG VERTICAL
LOC	LOCATION
LONG	LONGITUDINAL
LP	LOW POINT
LW	LONG WAY
MATL	MATERIAL
MAX	MAXIMUM
MECH	MECHANICAL
MEZZ	MEZZANINE
MTL	METAL
MFG	MANUFACTURING
MFR	MANUFACTURER
MIN	MINIMUM
MISC	MISCELLANEOUS
MK	MARK
MOD	MODIFY OR MODIFICATION
NF	NEAR FACE
N	NORTH
NA	NOT APPLICABLE
NIC	NOT IN CONTRACT
NO	NUMBER
NOM	NOMINAL
NS	NEAR SIDE
NTS	NOT TO SCALE
OC	ON CENTER
OD	OUTSIDE DIAMETER
OF	OUTSIDE FACE
OH	OPPOSITE HAND
OPNG	OPENING
OPP	OPPOSITE
PAF	POWER ACTUATED FASTENER
PERM	PERMANENT
PL	PLATE
PLF	POUNDS PER LINEAR FOOT
PLYWD	PLYWOOD
PREFAB	PREFABRICATED
PRO	PROJECTION
PSF	POUND PER SQUARE FOOT
PSI	POUND PER SQUARE INCH
PT	PRESSURE TREATED
PTD	PAINTED
QTY	QUALITY
RC	REINFORCED CONCRETE
RD	ROOF DRAIN
REF	REFERENCE
REINF	REINFORCED OR REINFORCEMENT
REQD	REQUIRED
REV	REVISION
RO	ROUGH OPENING
RP	REFERENCE POINT
SCHED	SCHEDULE OR SCHEDULED
SDS	SELF-DRILLING SCREW
SIM	SIMILAR
SJI	STEEL JOIST INSTITUTE
SPEC	SPECIFICATION(S)
SQ	SQUARE
SS	STAINLESS STEEL
STD	STANDARD
STL	STEEL
STRUCT	STRUCTURE OR STRUCTURAL
SUSP	SUSPENDED
SYM	SYMMETRICAL
SYS	SYSTEM
SW	SHORT WAY
T	TOP
T&G	TONGUE AND GROOVE
TBD	TO BE DETERMINED
TEMP	TEMPORARY
THRU	THROUGH
T/	TOP OF
TYP	TYPICAL
UL	UNDERWRITER'S LABORATORIES
UNO	UNLESS NOTED OTHERWISE
VERT	VERTICAL
VFY	VERIFY
VIF	VERIFY IN FIELD
W	WIDTH
W/	WITH
W/O	WITHOUT
WP	WORK POINT
WT	WEIGHT
WWR	WELDED WIRE REINFORCEMENT

1. ALL CONCRETE SHALL HAVE A MINIMUM COMPRESSIVE STRENGTH AT 28 DAYS OF 2500 PSI (SLABS) 3000 PSI (COLUMNS AND BEAMS), A SLUMP OF 5" PLUS OR MINUS 1", AND HAVE 2 TO 5% AIR ENTRAINMENT, AND A MAXIMUM WATER/CEMENT RATIO OF 0.63
2. HOOKS SHALL BE PROVIDED AT DISCONTINUOUS ENDS OF ALL TOP BARS OF BEAMS.
3. HORIZONTAL FOOTING BARS SHALL BE BENT 1'-0" AROUND CORNERS OR CORNER BARS WITH A 2'-0" LAP PROVIDED.
4. CONCRETE COVER MIN. 3" WHEN EXPOSED TO EARTH OR 1 1/2" TO FORM U.N.O.
5. WELDED WIRE FABRIC SHALL CONFORM TO ASTM A-185/ A185M. WWF SHALL BE LAPPED AT LEAST 6" AND CONTAIN AT LEAST ONE CROSS WIRE WITHIN THE 6". POLYPROPYLENE FIBERS FOR SLABS ON GRADE TO BE MIN 1.5 LBS OF FIBER PER CUBIC YARD
6. ALL REINFORCING STEEL / STIRRUPS AND TIES SHALL BE NEW DOMESTIC DEFORMED BARS FREE FROM RUST,SCALE & OIL & SHALL MEET ASTM A615/ A185M GRADE 40 U.N.O. REINFORCING FOR FOOTING SHALL BE SUPPORTED ON PRE-CAST CONCRETE PADS, TOP REINFORCING SHALL BE POSITIVELY SUPPORTED BY TEMPORARY STRINGERS. DOWELS FOR COLUMNS & FILLED CELLS SHALL BE SECURED IN PLACE BY USING ADDITIONAL CROSS- REINFORCING TIED TO FOOTING REINFORCING. SPLICES IN REINFORCING WHERE PERMITTED SHALL BE AS PER DETAIL MS05.
7. SIMPSON HIGH STRENGTH EPOXY-TIE ANCHORING ADHESIVE WAS USED IN THE DESIGN OF THIS PRODUCT. IF CONTRACTORS WISH TO USE A DIFFERENT EPOXY, THEY MUST FIRST CONTACT THE ENGINEER OF RECORD FOR WRITTEN APPROVAL.
8. WHERE PROJECT IS TO BE LOCATED IN KNOWN RADON GAS PREVALENT AREAS, APPENDIX "F" OF THE 2014 FLORIDA RESIDENTIAL BUILDING CODE IS TO BE IMPLEMENTED. F303.4 CONCRETE STRENGTH IN THESE AREAS ARE TO BE A MINIMUM OF 3000 P.S.I. THEREFORE, ANY AND ALL NOTES ON THESE PLANS THAT INDICATE 2500 P.S.I. SHALL BE REPLACED WITH 3000 P.S.I. FOR THE CONCRETE STRENGTH.

MASONRY

1. HOLLOW LOAD BEARING UNITS SHALL BE NORMAL WEIGHT, GRADE N, TYPE 2, CONFORMING TO ASTM C90-0601, WITH A MINIMUM NET COMPRESSIVE STRENGTH OF 1900 PSI (f'm = 1500 PSI)
2. MORTAR SHALL BE TYPE "S", CONFORMING TO ASTM C270.
3. COARSE GROUT SHALL CONFORM TO ASTM C476 WITH A MAXIMUM AGGREGATE SIZE OF 3/8" AND A MINIMUM COMPRESSIVE STRENGTH AT 28 DAYS OF 3000 PSI SLUMP 8" TO 11". CONTINUOUS MASONRY INSPECTIONS ARE REQUIRED DURING CONSTRUCTION
4. VERTICAL REINFORCEMENT SHALL BE AS NOTED ON THE DRAWINGS WITH THE CELLS FILLED WITH COARSE GROUT.
5. VERTICAL REINFORCEMENT SHALL BE HELD IN POSITION AT THE TOP AND BOTTOM AND AT A MAXIMUM SPACING OF 192 DIA OR 10FT WHICH EVER IS LESS. REINFORCING SHALL BE PLACED IN THE CENTER OF THE MASONRY CELL WITH MIN 1/2" CLEARANCE TO INSIDE FACE.
6. REINFORCING STEEL SHALL BE LAPPED PER DETAIL MS05, UNLESS OTHERWISE NOTED ON THE DRAWINGS.
7. GROUT STOPS SHALL BE PROVIDED BELOW BOND BEAM. PLASTIC SCREEN, METAL LATH STRIP OR CAVITY CAPS MAY BE USED TO PREVENT THE FLOW OF GROUT INTO CELLS BELOW. THE USE OF FELT PAPER AS A STOP IS PROHIBITED.
8. TEMPORARY BRACING AND SHORING OF WALL TO PROVIDE STABILITY DURING CONSTRUCTION SHALL BE THE RESPONSIBILITY OF THE CONTRACTOR
9. TYPICAL FILLED CELL REINFORCING SIZE AND SPACING SHALL BE ABOVE AND BELOW ALL WALL OPENINGS
10. DO NOT APPLY UNIFORM LOADS TO MASONRY WALLS FOR (3) DAYS AND NO CONCENTRATED LOADS FOR (7) DAYS. PER CODE ACI 318, 5.11.1
11. DURING CONCRETE POURS, THE CONTRACTOR TO ADEQUATELY VIBRATE THE FILLED CELL WITH EITHER RODDING OR PENCIL VIBRATOR TO ENSURE PROPER CONCRETE CONSOLIDATION

WOOD CONSTRUCTION

1. ALL EXTERIOR WOOD STUD WALLS, BEARING WALLS, SHEAR WALLS AND MISC. STRUCTURAL WOOD FRAMING MEMBERS, (I.E. BLOCKING OR GABLE END BRACING) SHALL BE EITHER #1 SOUTHERN PINE, OR S.P.F. NUMBER 2 GRADE OR BETTER SHALL BE USED REGARDLESS OF SPECIES.
2. ALL LUMBER SPECIFIED ON DRAWINGS ARE INTENDED FOR DRY USE ONLY (MOISTURE CONTENT 19% OR LESS), U.N.O. ALL WATERPROOFING AND FIRE SAFETY SYSTEMS ARE THE RESPONSIBILITY OF THE CONTRACTOR AND ARE TO BE DESIGNED AND DETAILED BY OTHERS
3. ANY WOOD FRAME INTERIOR BEARING WALL STUDS THAT HAVE HOLES IN THE CENTER OF THE STUD UP TO 1" DIA. SHALL HAVE STUD PROTECTION SHIELDS. ALL HOLES OVER 1" IN DIA. FOR PLUMBING LINES, ETC. SHALL BE REPAIRED WITH SIMPSON HSS2 STUD SHOES,TYP., U.N.O.
4. MANY OF THE NEW PRESSURE TREATED WOODS USE CHEMICALS THAT ARE CORROSIVE TO STEEL. IT IS THE CONTRACTOR'S RESPONSIBILITY TO VERIFY THE TYPE OF WOOD TREATMENT AND TO SELECT APPROPRIATE CONNECTORS THAT RESIST CORROSION. FOR EXAMPLE, ACQ-C, ACQ-D, CBA-A OR CA-B REQUIRE HOT-DIPPED GALVANIZED OR STAINLESS STEEL FASTENERS. DOT SODIUM BORATE (SBX) DOES NOT.
5. ALL EXPOSED WOOD OR WOOD IN CONTACT WITH EARTH OR CONCRETE TO BE PRESSURE TREATED.
6. UNTREATED WOOD SHALL NOT BE IN DIRECT CONTACT WITH CONCRETE OR MASONRY. SEAT PLATES SHALL BE PROVIDED AT BEARING LOCATIONS WITHOUT WOODEN TOP PLATES.
7. SEE PLAN FOR STUD PACK AND BEAM NAILING PATTERNS
8. ALL ENGINEERING LUMBER TO HAVE THE FOLLOWING MIN VALUES U.N.O.
   COLUMNS: 2.0E Fb = 2950
   BEAMS: 2.0E Fb= 2950
9. SEE PLAN NOTE FOR ADDITIONAL ROOF, WALL, SHEAR WALL AND FLOOR SHEATHING REQUIREMENTS ALONG W/ NAILING INFORMATION OTHERWISE:
   ROOF DECK: PLYWOOD C-C/C-D, EXTERIOR OR OSB
   FLOOR SHEATHING: T&G A-C GROUP 1 APA RATED (48/24)
   WALL SHEATHING: PLYWOOD C-C/C-D EXTERIOR OR OSB

1. MATERIAL SPECIFICATIONS:
   WIDE FLANGE SECTIONS: ASTM A992, GRADE 50, Fy=50 KSI
   TUBE STEEL (HSS): ASTM A500, GRADE B, Fy = 46 KSI
   PIPE STEEL: ASTM A53, TYPE E OR S, Fy = 35 KSI
   ALL OTHER STRUCTURAL & MISC. STEEL: A36 Fy=36 KSI
2. STRUCTURAL CONNECTIONS:
   ALL STRUCTURAL BOLTS TO BE A325N U.N.O
   STRUCTURAL BOLTS SMALLER THAN 5/8" DIA. TO BE A307
   THREADED ROD SHALL CONFORM TO A36 OR A307
   ANCHOR BOLTS SHALL CONFORM TO ASTM F1554
   ALL BOLTS CAST IN CONCRETE: ASTM A36 OR ASTM A-307
   SHOP AND FIELD WELDS: E70XX ELECTRODES
   STEEL REINFORCEMENT SHOP DRAWINGS TO BE PROVIDED TO ENGINEER OF RECORD BEFORE FABRICATION FOR REVIEW AND APPROVAL

PRE ENGINEERED WOOD TRUSSES

1. ALL PREFABRICATED WOOD TRUSSES SHALL BE SECURELY FASTENED TO THEIR SUPPORTING WALLS OR BEAMS WITH HURRICANE CLIPS OR ANCHORS PER STRUCTURAL PLAN
2. PREFABRICATED WOOD TRUSSES SHALL BE DESIGNED IN ACCORDANCE WITH THE LATEST EDITION OF THE "NATIONAL DESIGN SPECIFICATION FOR STRESS-GRADE LUMBER AND ITS FASTENERS" AS RECOMMENDED BY THE NATIONAL FOREST PRODUCTS ASSOCIATION.
3. TRUSS MEMBERS AND CONNECTIONS SHALL BE PROPORTIONED (WITH A MAXIMUM ALLOWABLE STRESS INCREASE FOR LOAD DURATION OF 25%) TO WITHSTAND THE LIVE LOADS GIVEN IN THE NOTES AND TOTAL DEAD LOAD.
4. BRIDGING FOR PRE-ENGINEERED TRUSSES SHALL BE AS REQUIRED BY THE TRUSS MANUFACTURER UNLESS NOTED ON THE PLANS.
5. TRUSS ELEVATIONS AND SECTIONS ARE FOR GENERAL CONFIGURATION OF TRUSSES ONLY. WEB MEMBERS ARE NOT SHOWN, BUT SHALL BE DESIGNED BY THE TRUSS MANUFACTURER IN ACCORDANCE WITH THE FRAMING DESIGN LOADS:
6. DESIGN SPECIFICATIONS FOR LIGHT WEIGHT METAL PLATE CONNECTED WOOD TRUSSES PER THE TRUSS PLATE INSTITUTE TPI LATEST EDITION.
7. PRE-ENGINEERED WOOD TRUSSES SHALL BE DESIGNED BY THE MANUFACTURER IN ACCORDANCE WITH SPECIFIED LOADS AND GOVERNING CODES . SUBMITTALS SHALL INCLUDE TRUSS FRAMING PLANS AND DETAILS SHOWING MEMBER SIZES, BRACING, ANCHORAGE, CONNECTIONS, TRUSS LOCATIONS, AND PERMANENT BRACING AND/OR BRIDGING AS REQUIRED FOR ERECTION AND FOR THE PERMANENT STRUCTURE. EACH SUBMITTAL SHALL BE SIGNED AND SEALED BY A FLORIDA REGISTERED STRUCTURAL ENGINEER. SUBMIT 3 COPIES FOR REVIEW AND APPROVAL PRIOR TO FABRICATION.
8. THE TRUSS MANUFACTURER SHALL DETERMINE ALL SPANS WORKING POINTS, BEARING POINTS, AND SIMILAR CONDITIONS. TRUSS SHOP DRAWINGS SHALL SHOW ALL TRUSSES, ALL BRACING MEMBERS, AND ALL TRUSS TO TRUSS HANGERS.

UPLIFT CONNECTORS

1. UPLIFT CONNECTORS SUCH AS HURRICANE CLIPS, TRUSS ANCHORS AND ANCHOR BOLTS ARE ONLY REQUIRED ON MEMBERS IN WALLS THAT ARE EXPOSED TO UPLIFT OR LATERAL FORCES. INTERIOR LOAD BEARING WALLS ARE NOT ALWAYS EXPOSED TO UPLIFT FORCES. THE MEMBERS OF THESE WALLS WOULD NOT NEED TO HAVE CONNECTORS APPLIED. PLEASE COORDINATE THE TRUSS ENGINEER FOR THE LOCATION OF THESE WALLS.AND STRUCTURAL PLANS FOR MORE INFO.

INDEX OF DRAWINGS:

SN - STRUCTURAL NOTES
S1.0 - DAMAGE ASSESSMENT - FLOOR LAYOUT
S2.0 - DAMAGE ASSESSMENT - ROOF LAYOUT
S3.0 - REPAIR FLOOR LAYOUT
S4.0 - REPAIR ROOF LAYOUT
S5.0 - STRUCTURAL DETAILS
S6.0 - STRUCTURAL DETAILS
S7.0 - TRUSS DAMAGE SKETCHES

CODE CRITERIA

- 2023 FLORIDA BUILDING CODE - EXISTING
- 2023 FLORIDA BUILDING CODE - RESIDENTIAL
- NATIONAL DESIGN SPECIFICATION FOR WOOD CONSTRUCTION.
- WOOD FRAMED CONSTRUCTION MANUAL.
- APA PLYWOOD DESIGN SPECIFICATION.
- AMERICAN SOCIETY OF CIVIL ENGINEERS: ASCE/SEI 7-16

GENERAL ROOF LOADING

	SHINGLE ROOF (PSF)	METAL ROOF (PSF)	TILE ROOF (PSF)	HEAVY ROOF (PSF)
TOP CHORD LL	20	20	20	20
TOP CHORD DL	10	10	15	25
BOTTOM CHORD LL*	0	0	0	0
BOTTOM CHORD DL	10	10	10	10
TOTAL (PSF)	40	40	45	55
BOTTOM CHORD LL (OPT) ATTICS W/ LIMITED STORAGE	20			
ATTICS W/ HEAVY STORAGE	50			
* ATTICS W/ NO STORAGE (NON-CONCURRENT)	10			

NOTE: LL REDUCTIONS ARE ALLOWED PER CODE BUT ONLY WITH WRITTEN APPROVAL FROM EOR OR INDICATED ON PLAN

GENERAL FLOOR LOADING

TOP CHORD LL TOP CHORD DL	40 (PSF) 10 (PSF)	COMMENTS:
BOTTOM CHORD LL BOTTOM CHORD DL	0 (PSF) 5 (PSF)	

SPECIAL FLOOR LOADING

GAME ROOM	60 (PSF)	COMMENTS:
BALCONIES/ DECKS	40 (PSF)	
BALCONIES OVER 100 SQ:FT	60 (PSF)	
LIGHT STORAGE	125 (PSF)	
LIBRARIES		
READING ROOMS	60 (PSF)	
STACK ROOMS	150 (PSF)	

DEFLECTION CRITERIA

ROOF TRUSSES*	LL/240	TL/180	COMMENTS:
ROOF RAFTERS	LL/240	TL/180	
ROOF RAFTERS (W/O CLG)	LL/240	TL/180	
FLOOR TRUSSES/ BEAMS **	LL/360	TL/240	
FLOOR I-JOIST***	LL/480	TL/240	

*TL MAX 1" UP TO 40FT SPAN
**TL MAX 3/4"
*** TL MAX 1/2"

WIND LOADING CRITERIA

WIND SPEED (ULTIMATE)	120 MPH
WIND SPEED (ALLOWABLE)	93 MPH
EXPOSURE CATEGORY	C
BUILDING CATEGORY	II
BUILDING TYPE	V
ENCLOSURE CLASSIFICATION	ENCLOSED
INTERNAL PRESSURE COEFFICIENT	+/- 0.18

NOTE: MEAN ROOF HEIGHT FOR TYPICAL SINGLE STORY HOME IS 15FT, AND FOR 2 STORY HOME IS 30FT

ASCE 7 WALL DESIGN ALLOWABLE COMPONENTS AND CLADDING WIND PRESSURES AND SUCTIONS

FOR MEAN ROOF HEIGHT ≤ 30 ft

EFFECTIVE WIND AREA (SQ FEET)	WIND PRESSURE AND SUCTION (PSF) (+) VALUE DENOTES PRESSURE (-) VALUE DENOTES SUCTION		WIND PRESSURE AND SUCTION DIAGRAM
AREA	4	5	
10	(+) 21.9 (-) 23.7	(+) 21.9 (-) 29.3	
20	(+) 20.9 (-) 22.7	(+) 20.9 (-) 27.3	
50	(+) 19.6 (-) 21.4	(+) 19.6 (-) 24.7	
100	(+) 18.6 (-) 20.4	(+) 18.6 (-) 22.7	
GARAGE DOORS*		SOFFIT	
9'-0" x 7'-0"	16'-0" x 7'-0"	(+) 21.9	
(+) 19.2 (-) 21.7	(+) 18.4 (-) 20.5		

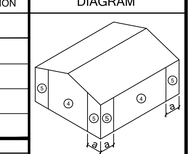

DIAGRAM

GENERAL PRESSURE NOTES

NOTES:
1. MULTIPLE THE ABOVE PRESSURES BY 1.67 TO GET ULTIMATE WIND PRESSURES.
2. "a" = END ZONE IS ONLY WITHIN 5'-0" OF ALL EXTERIOR BUILDING CORNERS.
3. INDICATED PRESSURES CAN BE INTERPOLATED FOR OTHER AREAS, OTHERWISE USE LOAD ASSOCIATED WITH THE LOWER EFFECTIVE AREA.

Ryan Gissal
2024.06.18
14:09:01 -04'00'

RYAN M. GISSAL LICENSE No. 78615 STATE OF FLORIDA PROFESSIONAL ENGINEER

THIS DRAWING HAS BEEN ELECTRONICALLY SIGNED AND SEALED BY RYAN GISSAL, P.E. (#78615) ON THE REFERENCED DATE USING A DIGITAL SIGNATURE.

PRINTED COPIES OF THIS DOCUMENT ARE NOT CONSIDERED SIGNED AND SEALED AND THE SHA AUTHENTICATION CODE MUST BE VERIFIED ON ANY ELECTRONIC COPY.

IFG Independent Forensics Group
3564 AVALON PARK BLVD
ORLANDO, FL 32828
COA#: 34577

ENGINEER:

ENGINEER:
RYAN M. GISSAL, P.E.
PE #: 78615

DATE: REFERENCE DIGITAL SIGNATURE

PROJECT:

GARDE RESIDENCE
2094 NW THUNDER STREET
WHITE SPRINGS, FLORIDA 32096
IFG#: IFG240292

PLAN HISTORY

DATE	DESCRIP:

SHEET DATA:

ENGINEERED BY: RMG

DRAWN BY: RMG

SHEET DESCRIP:

STRUCTURAL NOTES

SHEET

SN

DAMAGE ASSESSMENT & SCOPE

SCOPE

1. THE INDEPENDENT FORENSICS GROUP (IFG) WAS HIRED BY SECURITY FIRST INSURANCE COMPANY TO PERFORM A STRUCTURAL ASSESSMENT OF THE DAMAGE TO THE SUBJECT PROPERTY DUE TO A TREE IMPACT, WHICH REPORTEDLY OCCURRED ON OR AROUND MAY 10, 2024. THE SCOPE OF THIS ASSIGNMENT WAS TO:
   - 1.1. EVALUATE THE EXTENT OF THE STRUCTURAL DAMAGE TO THE SUBJECT PROPERTY AS A RESULT OF THE REPORTED TREE IMPACT.
   - 1.2. DETERMINE IF THE SUBJECT PROPERTY SUSTAINED SUBSTANTIAL STRUCTURAL DAMAGE.
   - 1.3. PROVIDE STRUCTURAL REPAIR PLANS BASED UPON THIS EVALUATION.
2. IN RESPONSE TO THIS REQUEST, IFG PERFORMED A NON-DESTRUCTIVE INSPECTION ON MAY 24, 2024.
3. ELECTRICAL, PLUMBING, AND MECHANICAL COMPONENTS ARE OUTSIDE OF IFG'S AREA OF EXPERTISE, AND SHOULD BE EVALUATED BY LICENSED PROFESSIONALS IN THOSE FIELDS. REPAIRS TO SUCH COMPONENTS ARE OUTSIDE OF THE SCOPE OF THIS STRUCTURAL REPAIR PLAN.

DAMAGE ASSESSMENT

1. STRUCTURAL DAMAGE TO THE VERTICAL GRAVITY LOAD BEARING COMPONENTS SUPPORT LESS THAN 30% OF THE TOTAL ROOF AREA. THEREFORE, "SUBSTANTIAL STRUCTURAL DAMAGE" AS DEFINED BY THE FLORIDA BUILDING CODE - EXISTING (2023), WAS NOT FOUND TO THIS STRUCTURE.
   - 1.1. FOR DAMAGE LESS THAN SUBSTANTIAL STRUCTURAL DAMAGE, THE DAMAGED ELEMENTS SHALL BE PERMITTED TO BE RESTORED TO THEIR PRE-DAMAGE CONDITION ACCORDING TO THE FLORIDA BUILDING CODE - EXISTING (2023). BASED UPON THIS, CODE UPGRADES WOULD NOT BE REQUIRED BASED UPON THE "SUBSTANTIAL STRUCTURAL DAMAGE" DEFINITION AND CHAPTER 4 OF THE 2023 FLORIDA BUILDING CODE - EXISTING.
2. DAMAGED COMPONENTS TO THE STRUCTURE INCLUDE:
   - 2.1. WHILE IFG MADE EVERY EFFORT TO EVALUATE THE STRUCTURE DURING OUR VISIT, WE RESERVE THE RIGHT TO PERFORM ADDITIONAL EVALUATION(S). IF ADDITIONAL STRUCTURAL DAMAGE IS FOUND DURING REPAIRS -STOP- AND CONTACT IFG FOR ADDITIONAL REVIEW.
   - 2.2. DAMAGED EXTERIOR CLADDING, FASCIA, AND SOFFITS NEAR THE NORTHWEST CORNER OF THE RESIDENCE (GUEST BEDROOM #2). DAMAGE TO THE INTERIOR DRYWALL IN GUEST BEDROOM #2 WAS FOUND. NO DAMAGE TO THE EXTERIOR 2X FRAME WALL WAS FOUND DURING IFG'S INSPECTION; HOWEVER, IFG RECOMMENDS REMOVAL OF THE INTERIOR DRYWALL TO PERMIT INSPECTION OF THE WALL FRAMING AS SPECIFIED IN THIS PLAN.
   - 2.3. DAMAGE TO MULTIPLE ROOF TRUSSES WAS FOUND ABOVE GUEST BEDROOM #2, NEAR THE NORTHWEST CORNER OF THE RESIDENCE. DAMAGE SKETCHES AND REPAIR RECOMMENDATIONS ARE PRESENTED IN THIS PLAN.
   - 2.4. WHILE NOT THE RESULT OF STORM OR IMPACT-RELATED DAMAGE, TWO TRUSSES WERE CUT ABOVE THE AC CLOSET. THIS IS NOT STRUCTURALLY SOUND, AND REPAIRS ARE RECOMMENDED.
   - 2.5. DAMAGE TO THE METAL ROOF COVERING AND SHEATHING WAS FOUND. COMPLETE REPLACEMENT OF THE METAL ROOF COVERING IS REQUIRED BASED UPON THE DAMAGE FOUND.
   - 2.6. DAMAGE TO THE ROOF SHEATHING WAS ALSO FOUND, AND REPLACEMENT OF THE DAMAGED SHEATHING IS REQUIRED; HOWEVER, COMPLETE REPLACEMENT OF ALL ROOF SHEATHING/DECKING IS NOT REQUIRED.
   - 2.7. THE NAIL SPACING OF THE EXISTING ROOF SHEATHING COULD NOT BE OBSERVED; HOWEVER, RE-NAILING OF THE EXISTING ROOF DECKING MAY BE REQUIRED FOR THIS RESIDENCE IN ACCORDANCE WITH FBC-E SECTION 706.7.1.2.

ADDITIONAL NOTES

1. THE GENERAL CONTRACTOR IS RESPONSIBLE FOR ALL TEMPORARY SHORING AND BRACING. CONSTRUCTION MEANS AND METHODS ARE THE SOLE RESPONSIBILITY OF THE GENERAL CONTRACTOR.
2. THE GENERAL CONTRACTOR IS RESPONSIBLE FOR ALL OTHER REPAIRS TO THE SUBJECT PROPERTY OTHER THAN THE STRUCTURAL REPAIRS ADDRESSED IN THIS PLAN; INCLUDING, BUT NOT LIMITED TO: WATERPROOFING, CLADDING, FENESTRATIONS, APPLIANCES, ELECTRICAL, PLUMBING, AND MECHANICAL COMPONENTS.
3. ALL DIMENSIONS ARE APPROXIMATE. CONTRACTOR TO FIELD VERIFY ALL DIMENSIONS AND MATCH EXISTING.
4. IF ADDITIONAL STRUCTURAL DAMAGES ARE FOUND, -STOP- AND CONTACT IFG FOR ADDITIONAL REVIEW.

MAIN FLOOR WALL TYPE

SYMBOL	TYPE
	2 x FRAMED BEARING WALL (EXTERIOR). WIDTH MAY NOT BE SHOWN TO SCALE AS SITE MEASUREMENTS MAY INCLUDE EXTERIOR CLADDING.
	2 x FRAMED BEARING WALL (INTERIOR).
	NON BEARING INTERIOR WALL.

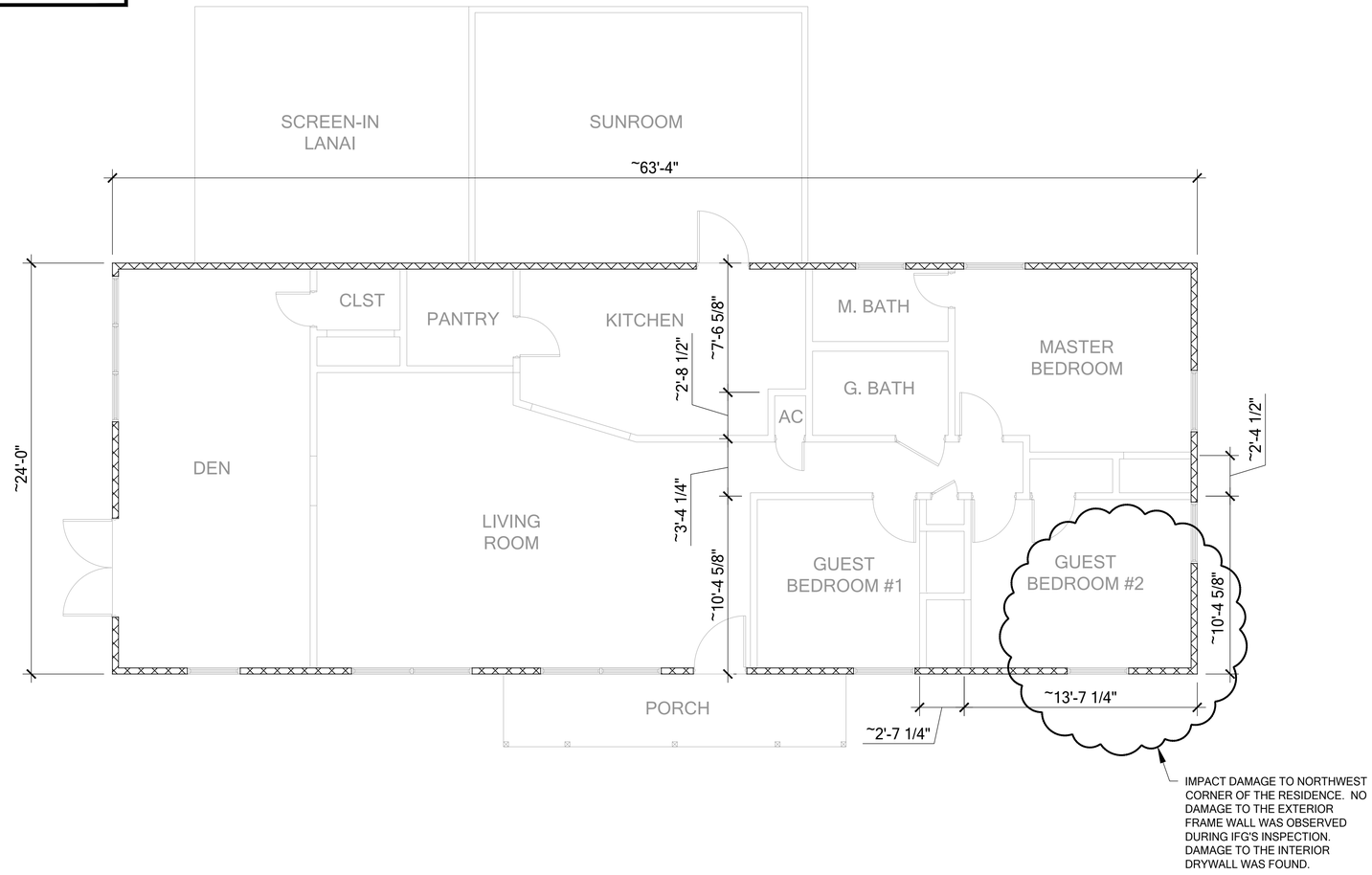

EXISTING FLOOR PLAN

THIS DRAWING HAS BEEN ELECTRONICALLY SIGNED AND SEALED BY RYAN GISSAL, P.E. (#78615) ON THE REFERENCED DATE USING A DIGITAL SIGNATURE.

PRINTED COPIES OF THIS DOCUMENT ARE NOT CONSIDERED SIGNED AND SEALED AND THE SHA AUTHENTICATION CODE MUST BE VERIFIED ON ANY ELECTRONIC COPY.

IFG Independent Forensics Group
3564 AVALON PARK BLVD
ORLANDO, FL 32828
COA#: 34577

ENGINEER:

ENGINEER:
RYAN M. GISSAL, P.E.
PE#: 78615

DATE: REFERENCE DIGITAL SIGNATURE

PROJECT:

GARDE RESIDENCE
2094 NW THUNDER STREET
WHITE SPRINGS, FLORIDA 32096
IFG#: IFG240292

PLAN HISTORY

DATE	DESCRIP:

SHEET DATA:

ENGINEERED BY: RMG

DRAWN BY: RMG

SHEET DESCRIP:

DAMAGE ASSESSMENT - FLOOR LAYOUT

SHEET

S1.0

DAMAGE ASSESSMENT & SCOPE

SCOPE

1. THE INDEPENDENT FORENSICS GROUP (IFG) WAS HIRED BY SECURITY FIRST INSURANCE COMPANY TO PERFORM A STRUCTURAL ASSESSMENT OF THE DAMAGE TO THE SUBJECT PROPERTY DUE TO A TREE IMPACT, WHICH REPORTEDLY OCCURRED ON OR AROUND MAY 10, 2024. THE SCOPE OF THIS ASSIGNMENT WAS TO:
   - 1.1. EVALUATE THE EXTENT OF THE STRUCTURAL DAMAGE TO THE SUBJECT PROPERTY AS A RESULT OF THE REPORTED TREE IMPACT.
   - 1.2. DETERMINE IF THE SUBJECT PROPERTY SUSTAINED SUBSTANTIAL STRUCTURAL DAMAGE.
   - 1.3. PROVIDE STRUCTURAL REPAIR PLANS BASED UPON THIS EVALUATION.
2. IN RESPONSE TO THIS REQUEST, IFG PERFORMED A NON-DESTRUCTIVE INSPECTION ON MAY 23, 2024.
3. ELECTRICAL, PLUMBING, AND MECHANICAL COMPONENTS ARE OUTSIDE OF IFG'S AREA OF EXPERTISE, AND SHOULD BE EVALUATED BY LICENSED PROFESSIONALS IN THOSE FIELDS. REPAIRS TO SUCH COMPONENTS ARE OUTSIDE OF THE SCOPE OF THIS STRUCTURAL REPAIR PLAN.

DAMAGE ASSESSMENT

1. STRUCTURAL DAMAGE TO THE VERTICAL GRAVITY LOAD BEARING COMPONENTS SUPPORT LESS THAN 30% OF THE TOTAL ROOF AREA. THEREFORE, "SUBSTANTIAL STRUCTURAL DAMAGE" AS DEFINED BY THE FLORIDA BUILDING CODE - EXISTING (2023), WAS NOT FOUND TO THIS STRUCTURE.
   - 1.1. FOR DAMAGE LESS THAN SUBSTANTIAL STRUCTURAL DAMAGE, THE DAMAGED ELEMENTS SHALL BE PERMITTED TO BE RESTORED TO THEIR PRE-DAMAGE CONDITION ACCORDING TO THE FLORIDA BUILDING CODE - EXISTING (2023). BASED UPON THIS, CODE UPGRADES WOULD NOT BE REQUIRED BASED UPON THE "SUBSTANTIAL STRUCTURAL DAMAGE" DEFINITION AND CHAPTER 4 OF THE 2023 FLORIDA BUILDING CODE - EXISTING.
2. DAMAGED COMPONENTS TO THE STRUCTURE INCLUDE:
   - 2.1. WHILE IFG MADE EVERY EFFORT TO EVALUATE THE STRUCTURE DURING OUR VISIT, WE RESERVE THE RIGHT TO PERFORM ADDITIONAL EVALUATION(S). IF ADDITIONAL STRUCTURAL DAMAGE IS FOUND DURING REPAIRS -STOP- AND CONTACT IFG FOR ADDITIONAL REVIEW.
   - 2.2. DAMAGED EXTERIOR 2x FRAME WALL IN BEDROOM #2, INCLUDING DAMAGED CLADDING AND WINDOWS.
   - 2.3. CRACKED DRYWALL WAS FOUND ABOVE THE SLIDING DOOR IN THE DINING ROOM, AND THE ROOF OVERHANG WAS OUT OF LEVEL.
   - 2.4. DAMAGE TO THE SHINGLE ROOF COVERING AND SHEATHING. COMPLETE REPLACEMENT OF THE ROOF COVERING IS REQUIRED BASED UPON THE DAMAGE FOUND.
   - 2.5. DAMAGE TO THE ROOF DECKING WAS ALSO FOUND, AND REPLACEMENT OF THE DAMAGED DECKING IS REQUIRED; HOWEVER, COMPLETE REPLACEMENT OF ALL ROOF SHEATHING/DECKING IS NOT REQUIRED.
   - 2.6. THE NAIL SPACING OF THE EXISTING ROOF DECKING COULD NOT BE OBSERVED; HOWEVER, RE-NAILING OF THE EXISTING ROOF DECKING MAY BE REQUIRED FOR THIS RESIDENCE IN ACCORDANCE WITH FBC-E SECTION 706.7.1.2.
   - 2.7. DAMAGE TO THE EXTERIOR CLADDING, SIDING, SOFFITS, AND FASCIA, PRIMARILY NEAR THE SOUTHWEST CORNER.

ADDITIONAL NOTES

1. THE GENERAL CONTRACTOR IS RESPONSIBLE FOR ALL TEMPORARY SHORING AND BRACING. CONSTRUCTION MEANS AND METHODS ARE THE SOLE RESPONSIBILITY OF THE GENERAL CONTRACTOR.
2. THE GENERAL CONTRACTOR IS RESPONSIBLE FOR ALL OTHER REPAIRS TO THE SUBJECT PROPERTY OTHER THAN THE STRUCTURAL REPAIRS ADDRESSED IN THIS PLAN; INCLUDING, BUT NOT LIMITED TO: WATERPROOFING, CLADDING, FENESTRATIONS, APPLIANCES, ELECTRICAL, PLUMBING, AND MECHANICAL COMPONENTS.
3. ALL DIMENSIONS ARE APPROXIMATE. CONTRACTOR TO FIELD VERIFY ALL DIMENSIONS AND MATCH EXISTING.
4. IF ADDITIONAL STRUCTURAL DAMAGES ARE FOUND, -STOP- AND CONTACT IFG FOR ADDITIONAL REVIEW.

MAIN FLOOR WALL TYPE

SYMBOL	TYPE
	2 x FRAMED BEARING WALL (EXTERIOR). WIDTH NOT SHOWN TO SCALE AS SITE MEASUREMENTS INCLUDED EXTERIOR CLADDING.
	2 x FRAMED BEARING WALL (INTERIOR).
	NON BEARING INTERIOR WALL.

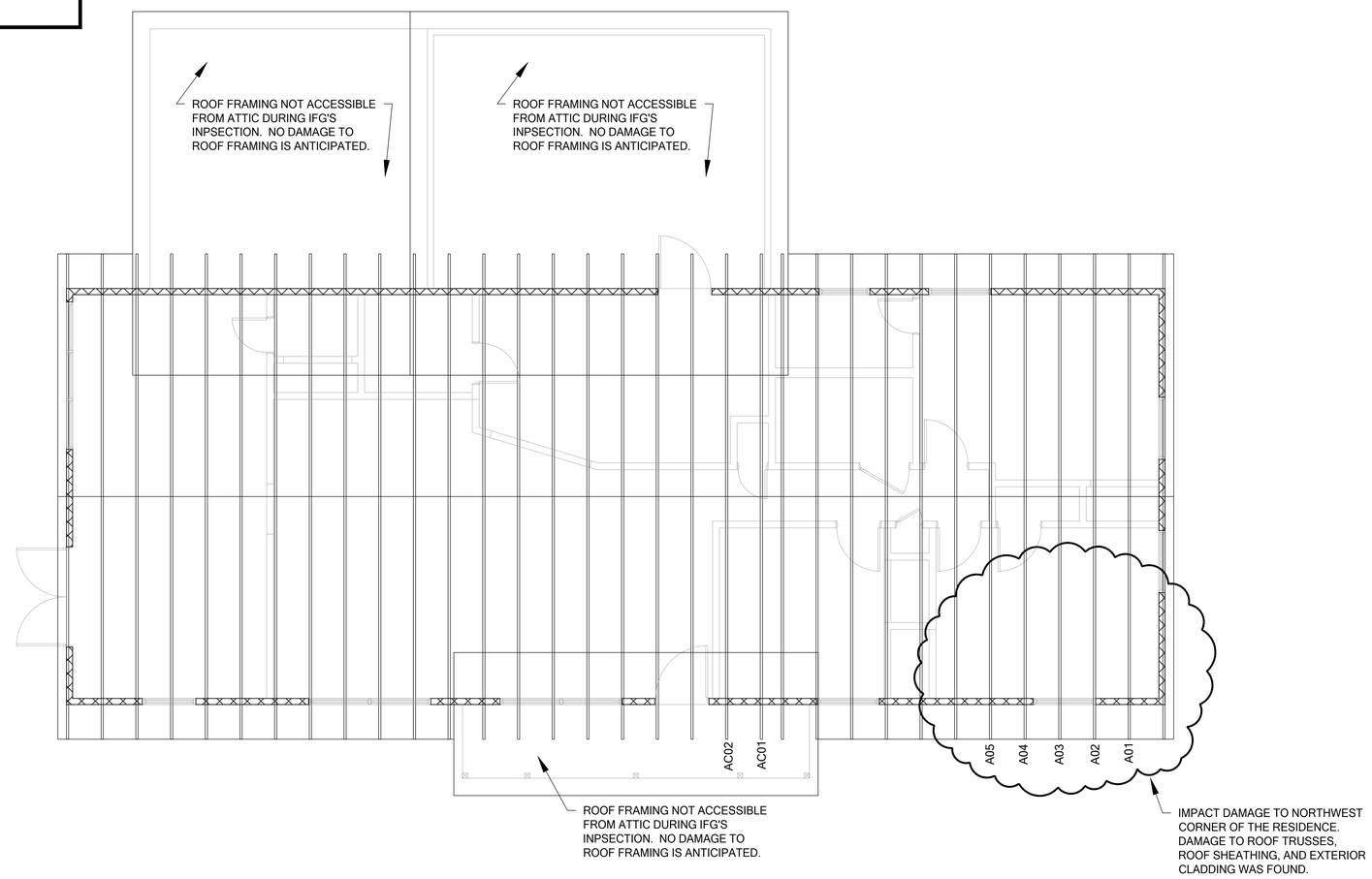

EXISTING ROOF PLAN

THIS DRAWING HAS BEEN ELECTRONICALLY SIGNED AND SEALED BY RYAN GISSAL, P.E. (#78615) ON THE REFERENCED DATE USING A DIGITAL SIGNATURE.

PRINTED COPIES OF THIS DOCUMENT ARE NOT CONSIDERED SIGNED AND SEALED AND THE SHA AUTHENTICATION CODE MUST BE VERIFIED ON ANY ELECTRONIC COPY.

IFG Independent Forensics Group
3564 AVALON PARK BLVD
ORLANDO, FL 32828
COA#: 34577

ENGINEER:

ENGINEER:
RYAN M. GISSAL, P.E.
PE#: 78615

DATE: REFERENCE DIGITAL SIGNATURE

PROJECT:

GARDE RESIDENCE
2094 NW THUNDER STREET
WHITE SPRINGS, FLORIDA 32096
IFG#: IFG240292

PLAN HISTORY

DATE	DESCRIP:

SHEET DATA:

ENGINEERED BY: RMG

DRAWN BY: RMG

SHEET DESCRIP:

DAMAGE ASSESSMENT - ROOF LAYOUT

SHEET

S2.0

BEARING WALL LEGEND

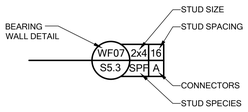

BEARING CONNECTOR SCHEDULE

MARK	CONNECTION & FASTENERS TOP	CONNECTION & FASTENERS BOTTOM	STUD SPACING	LUMBER SPECIES	UPLIFT CAP. [plf]
A	(2) 16d TOENAILS	(2) 16d TOENAILS	12"	SPF	NO UPLIFT
				SYP	NO UPLIFT
			16"	SPF	NO UPLIFT
				SYP	NO UPLIFT
B	(1) SIMPSON SP2 W/ (6)-10d NAILS	(1) SIMPSON SP1W/ (6)-10d NAILS	12"	SPF	535
				SYP	585
			16"	SPF	402
				SYP	439
C	SIMPSON SPH4 W/ (12)-10d x 1-1/2" NAILS	SIMPSON SPH4 W/ (12)-10d x 1-1/2" NAILS	12"	SPF	1030
				SYP	1200
			16"	SPF	770
				SYP	900

GENERAL BEARING WALL NOTES

1. SEE FLOOR PLAN FOR WALL SIZE, ASSUME 2x4 STUDS USED UNO.
2. ALL STRUCTURAL LUMBER TO BE SYP #2 OR SPF #2 UNO ON PLAN.
3. CONNECTIONS TO BE INSTALLED TO EACH STUD AS INDICATED
4. CONTACT E.O.R. IF SPH'S, SP6'S OR SP8'S CONNECTORS ARE SUBSTITUTED, TO VERIFY THEY MEET THE STRUCTURAL REQUIREMENTS.

HEADER LEGEND

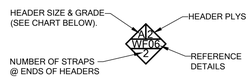

HEADER SCHEDULE

MARK	HEADER SIZE & GRADE	MARK	HEADER SIZE & GRADE
A	2x6 #2 SYP	E	1¾ x 11⅞ LVL 2.0E Fb=2950
B	2x8 #2 SYP	F	1¾ x 11⅞ LVL 2.0E Fb=2950
C	2x10 #2 SYP	G	1¾ x 16 LVL 2.0E Fb=2950
D	2x12 #2 SYP	H	

HEADER SUPPORT NO. OF JACKS & STUDS REQ. AT OPENINGS

OPENING SIZE	2x4 WALL JACKS EA END	2x4 WALL KINGS EA END	2x6 OR 2x8 WALL JACKS EA END	2x6 OR 2x8 WALL KINGS EA END
1'-0" - 3'-11"	(2)	(1)	(2)	(1)
4'-0" - 10'-5"	(2)	(2)	(2)	(2)
10'-6" - 16'-0"	(3)	(4)	(3)	(4)

GENERAL HEADER NOTES

1. VERIFY W/ PLAN CORRECT LENGTH OF HEADER REQUIRED
2. IF HEADER IS ON THE 1ST FLOOR SEE PLAN FOR BEARING WALL TYPE AND FOLLOW INSTRUCTIONS WITHIN BEARING WALL SCHEDULE FOR REQUIRED CORRECTIONS UNO ON PLAN.
3. IF HEADER IS ON THE 2ND FLOOR SEE PLAN FOR INDICATED HEADER CONNECTION FOR REQUIRED CONNECTIONS.
4. ALL HEADER JACK AND KING STUDS SHALL BE FASTENED TO EACH PER DETAIL WF11.
5. FASTEN ALL MULTI-PLY HEADERS TOGETHER W/(2) ROWS 10d COMMON NAILS AT 8"oc ALONG EACH EDGE OR (3) ROWS IF 2x10 OR LARGER.
6. FASTEN ALL HEADERS TO KING STUDS WITH (3) 10d TOENAILS PER SIDE.
7. IF HEADER IS NOT SPECIFIED CONTACT E.O.R.

MAIN FLOOR WALL TYPE

SYMBOL	TYPE
	2 x FRAMED BEARING WALL (EXTERIOR). WIDTH NOT SHOWN TO SCALE AS SITE MEASUREMENTS INCLUDED EXTERIOR CLADDING.
	2 x FRAMED BEARING WALL (INTERIOR).
	NON BEARING INTERIOR WALL.

REPAIR NOTES

GENERAL CONTRACTOR IS RESPONSIBLE FOR ALL TEMPORARY SHORING AND BRACING DURING REPAIRS. SHOULD FIELD CONDITIONS DIFFER FROM THESE PLANS, OR ANY ADDITIONAL STRUCTURAL DAMAGES FOUND DURING REPAIRS, --STOP-- AND CONTACT E.O.R. FOR ADDITIONAL REVIEW.

R1	REMOVE INTERIOR CLADDING AND CEILING GYPSUM AS NEEDED TO REVEAL THE WALL, ROOF, AND CEILING FRAMING IN THE IMPACT-AFFECTED AREA. IFG RECOMMENDS REMOVAL OF THE INTERIOR WALL CLADDING ON THE WESTERN AND NORTHERN WALLS OF GUEST BEDROOM #2, AND THE CEILING IN GUEST BEDROOM #2. G.C. SHALL "CHASE" DAMAGE FOUND, AND REMOVE INTERIOR CLADDING AS NEEDED TO THOROUGHLY INSPECT DAMAGE THAT MAY HAVE BEEN HIDDEN DURING IFG'S INSPECTION.
R2	DAMAGE TO THE 2X EXTERIOR FRAME WALL IS NOT ANTICIPATED; HOWEVER, IF DAMAGE IS FOUND REMOVE AND REPLACE ANY DAMAGED WALL FRAMING WITH NEW MATERIAL AS INDICATED PER PLAN. NOTE: STUD SIZES AND HEADER SIZES SHOWN ON THE PLANS ARE MINIMUMS; G.C. SHALL MATCH EXISTING IF LARGER. IF NO DAMAGE IS FOUND, NO FRAMING REPAIRS ARE REQUIRED.

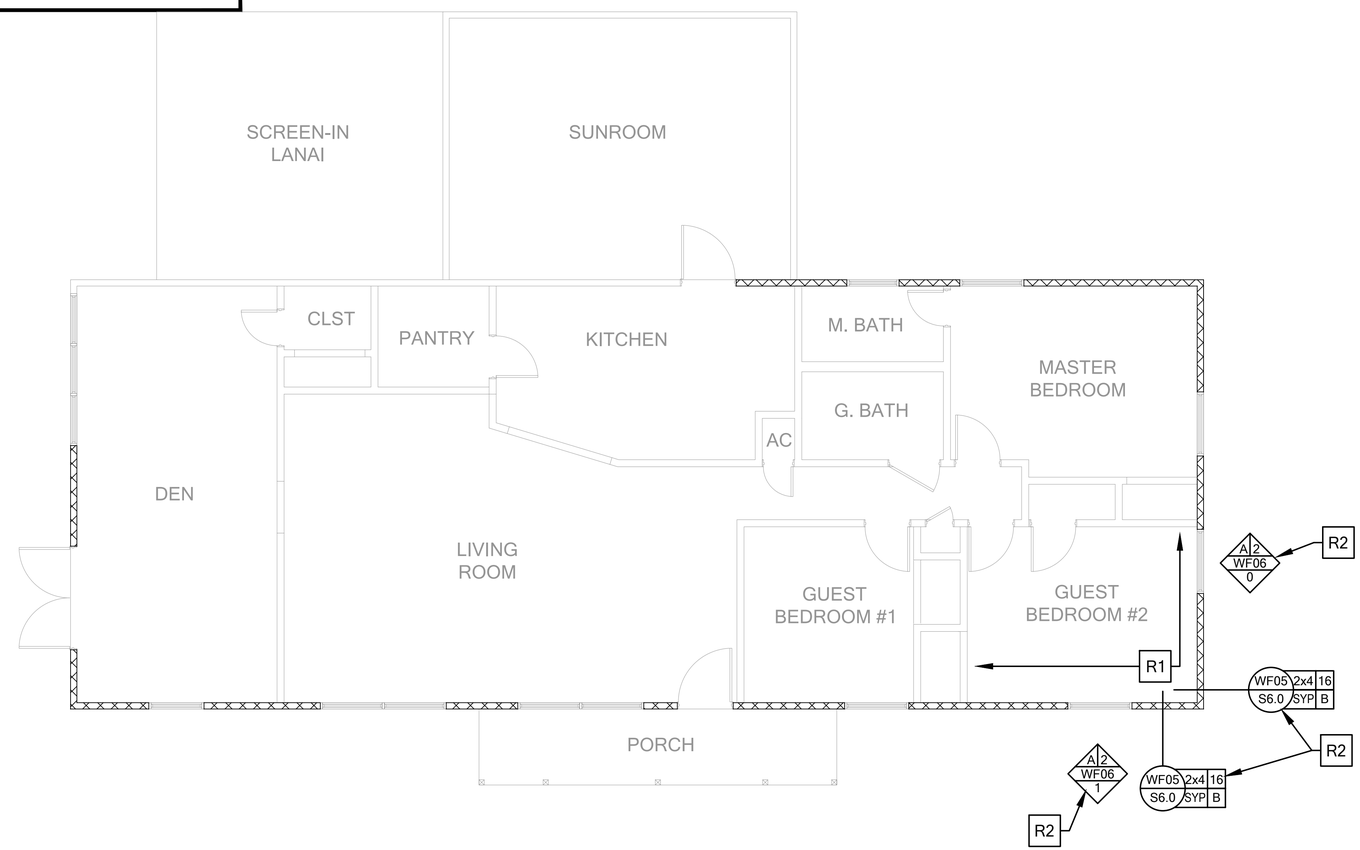

REPAIR FLOOR PLAN

THIS DRAWING HAS BEEN ELECTRONICALLY SIGNED AND SEALED BY RYAN GISSAL, P.E. (#78615) ON THE REFERENCED DATE USING A DIGITAL SIGNATURE.

PRINTED COPIES OF THIS DOCUMENT ARE NOT CONSIDERED SIGNED AND SEALED AND THE SHA AUTHENTICATION CODE MUST BE VERIFIED ON ANY ELECTRONIC COPY.

IFG Independent Forensics Group
3564 AVALON PARK BLVD
ORLANDO, FL 32828
COA#: 34577

ENGINEER:

ENGINEER:
RYAN M. GISSAL, P.E.
PE#: 78615

DATE: REFERENCE DIGITAL SIGNATURE

PROJECT:

GARDE RESIDENCE
2094 NW THUNDER STREET
WHITE SPRINGS, FLORIDA 32096
IFG#: IFG240292

PLAN HISTORY

DATE	DESCRIP:

SHEET DATA:

ENGINEERED BY: RMG

DRAWN BY: RMG

SHEET DESCRIP:

REPAIR FLOOR LAYOUT

SHEET

S3.0

REPAIR NOTES

GENERAL CONTRACTOR IS RESPONSIBLE FOR ALL TEMPORARY SHORING AND BRACING DURING REPAIRS. SHOULD FIELD CONDITIONS DIFFER FROM THESE PLANS, OR ANY ADDITIONAL STRUCTURAL DAMAGES FOUND DURING REPAIRS, --STOP-- AND CONTACT E.O.R. FOR ADDITIONAL REVIEW.

R3	REMOVE DAMAGED ROOF SHEATHING FROM THE NORTH-FACING ROOF SLOPE MEASURED AT APPROXIMATELY 12'-0" FROM THE WESTERN RAKE. REMOVE AND REPLACE ANY DAMAGED ROOF OR CEILING FRAMING AS FOLLOWS. ALL REPLACEMENT LUMBER SHALL BE SYP #2 OR BETTER. NAIL OR FASTEN ALL SIMPSON STRAPS PER SIMPSON'S WRITTEN SPECIFICATIONS: ROOF TRUSS DAMAGE IS DOCUMENTED ON SHEET S7.0. SOME TRUSSES MAY REQUIRE PRE-ENGINEERED AND PRE-FABRICATED JACK SCABS. G.C. TO COORDINATE WITH TRUSS SUPPLIER, AND SUBMIT REPAIR DRAWINGS TO IFG FOR APPROVAL. ALL REPAIRED TRUSSES SHALL BE ATTACHED TO BEARING WALLS WITH SIMPSON H2.5A ON EACH END, OR (2)- 6" SIMPSON SDWC SCREWS. REFER TO SIMPSON SPECIFICATIONS FOR APPROVED INSTALLATION GEOMETRY.
R4	GABLE WAS STICK-FRAMED. FRAMING MAY BE REMOVED AND REPLACED WITH LIKE MATERIAL. GABLE CROSS BRACING PER EG01 / S5.0.
R5	ANY DAMAGED ROOF SHEATHING SHALL BE REMOVED AND REPLACED WITH LIKE MATERIAL: MIN. 7/16" EXPOSURE 1 SHEATHING, NAILED TO EA. RAFTER WITH NAILS AT 6" O.C. AT EDGES AND 12" O.C. IN THE FIELD. NAIL SIZES PER FBC-R803.

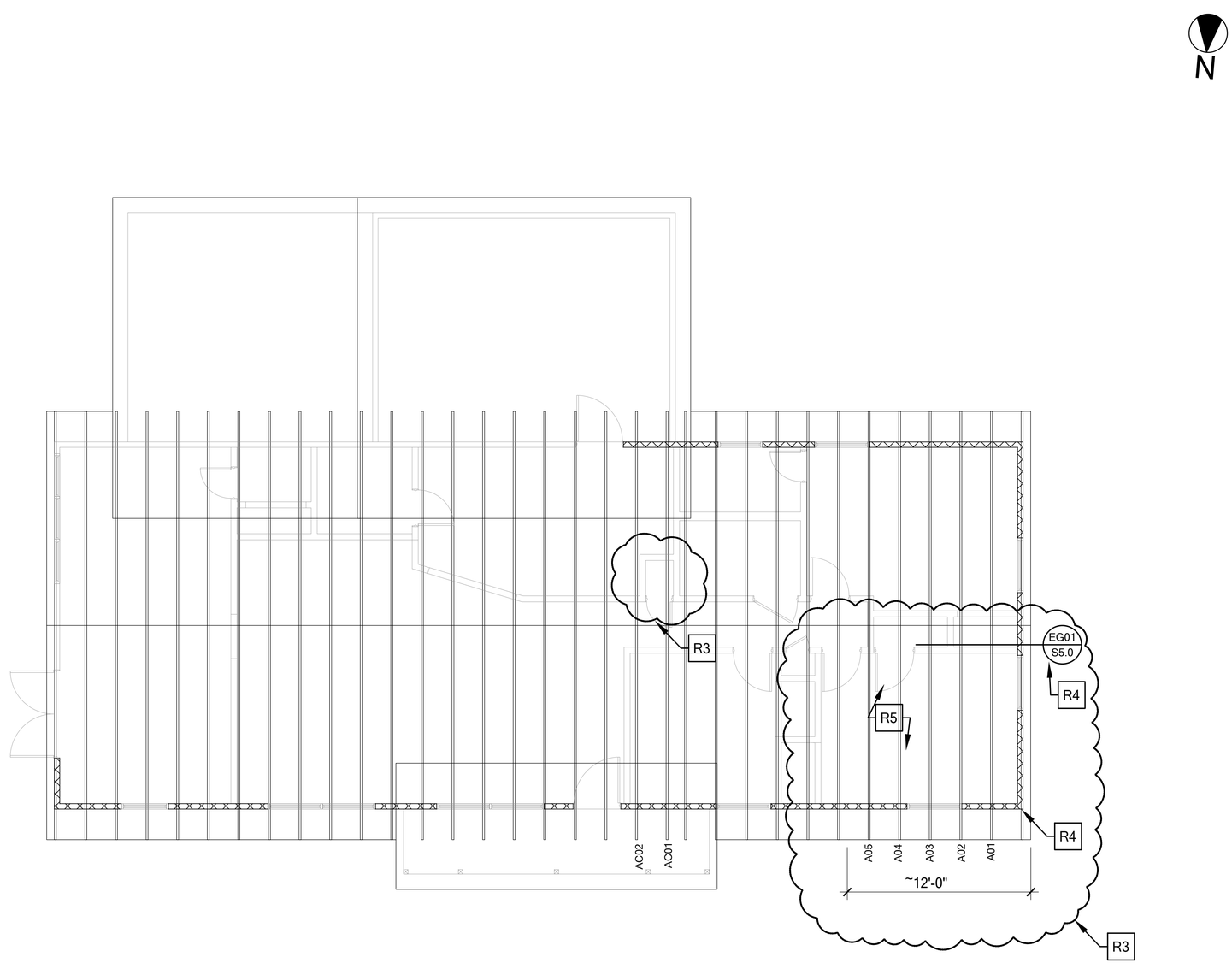

REPAIR ROOF PLAN

THIS DRAWING HAS BEEN ELECTRONICALLY SIGNED AND SEALED BY RYAN GISSAL, P.E. (#78615) ON THE REFERENCED DATE USING A DIGITAL SIGNATURE.

PRINTED COPIES OF THIS DOCUMENT ARE NOT CONSIDERED SIGNED AND SEALED AND THE SHA AUTHENTICATION CODE MUST BE VERIFIED ON ANY ELECTRONIC COPY.

IFG Independent Forensics Group
3564 AVALON PARK BLVD
ORLANDO, FL 32828
COA#: 34577

ENGINEER:

ENGINEER:
RYAN M. GISSAL, P.E.
PE#: 78615

DATE: REFERENCE DIGITAL SIGNATURE

PROJECT:

GARDE RESIDENCE
2094 NW THUNDER STREET
WHITE SPRINGS, FLORIDA 32096
IFG#: IFG240292

PLAN HISTORY

DATE	DESCRIP:

SHEET DATA:

ENGINEERED BY: RMG

DRAWN BY: RMG

SHEET DESCRIP:

REPAIR ROOF LAYOUT

SHEET

S4.0

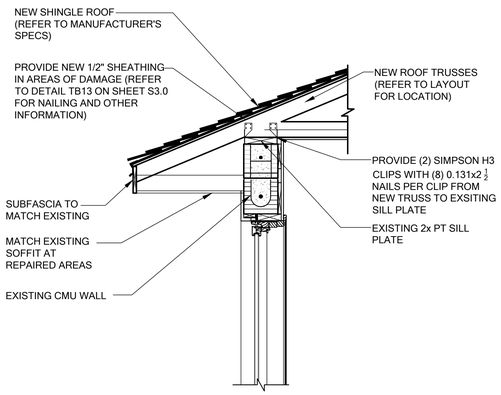

WS02 WALL SECTION
SCALE: N.T.S.

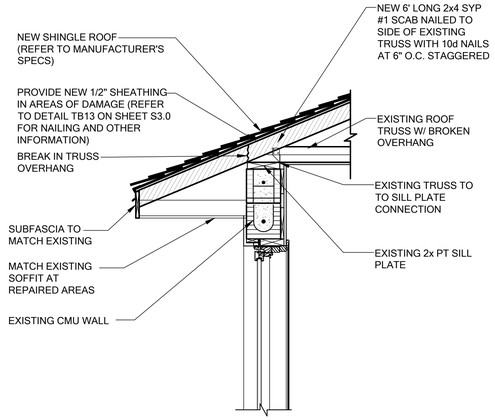

WS03 OVERHANG REPAIR
SCALE: N.T.S.

TRUSS NOTES:

1. WOOD TRUSS ERECTOR SHALL PROVIDE BRACING ACCORDING TO ANSI/TP1 (TRUSS PLATE INSTITUTE) NOTE THAT THE COMBINED WIND AREA IS GREATER BEFORE THE ROOF SHEATHING IS APPLIED, AND BRACING SHALL THEREFORE BE INSTALLED AS THE TRUSSES ARE ERECTED. INADEQUATE TRUSSES BRACING IS THE MOST COMMON CAUSE OF ACCIDENT IN WOOD TRUSS CONSTRUCTION. FULL BUNDLES OF PLYWOOD SHALL NOT BE PLACED ON TRUSSES. THIS CONSTRUCTION LOAD SHOULD BE LIMITED TO 8 SHEETS OF PLYWOOD ON ANY PAIR OF TRUSSES & SHALL BE LOCATED ADJACENT TO THE SUPPORTS. NO EXCESS CONCENTRATION OF ANY CONSTRUCTION MATERIAL (SUCH AS GRAVEL OR SHINGLES) SHALL BE PLACED ON THE TRUSSES IN ANY ONE AREA THEY SHALL BE SPREAD OUT EVENLY OVER A LARGE SO AS TO AVOID OVERLOADING ANY ONE TRUSS.

2. ALL BRACING (DB, CBB, BB) SHOWN ABOVE SHALL BE IN ADDITION TO CONTINUOUS LATERAL BRACING SPECIFIED BY THE TRUSS MANUFACTURER ALL LATERAL BRACING SPECIFIED BY TRUSS MANUF. SHALL HAVE ADDITIONAL DIAGONAL BRACES AT 20'-0" O.C. MAXIMUM.

3. ALL BRACES SHALL BE 2x4 NOMINAL DIMENSION LUMBER & SHALL BE ATTACHED W/ (2)- 16d NAILS AT EACH TRUSS INTERSECTION.

4. ADDITIONAL BOTTOM CHORD BRACING SHALL BE INSTALLED AS REQUIRED BY TRUSS DESIGN WHEREVER ADEQUATE STRUCTURAL CEILING ARE NOT ATTACHED DIRECTLY TO THE BOTTOM CHORD OF THE TRUSS.

5. PROVIDE TRUSS BLOCKING AT ALL TRUSS BEARING SUPPORTS WHERE DEPTH EXCEEDS STANDARD HELL HEIGHT. SEE TYP. TRUSS BLCKING DETAILS.

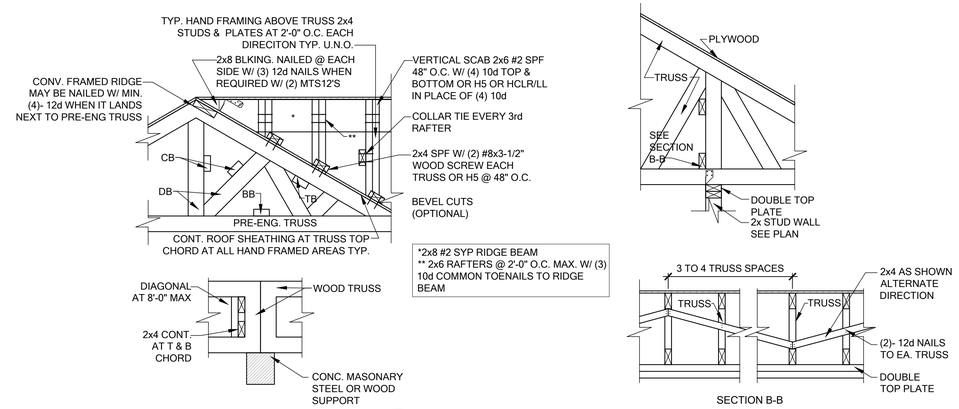

TB06 BLOCKING/CONV. FRAME DETAILS
SCALE: 3/4" = 1'-0"

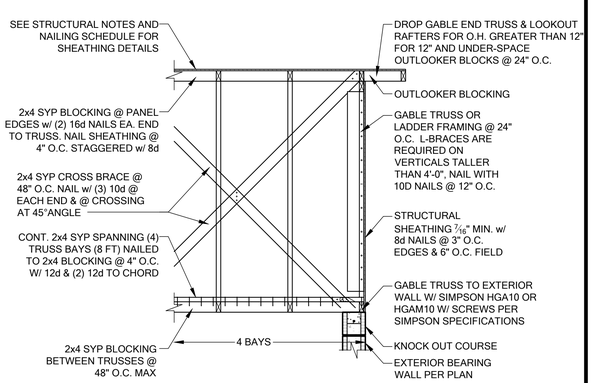

EG01 GABLE END BRACING
SCALE: 3/4" = 1'-0"

THIS DRAWING HAS BEEN ELECTRONICALLY SIGNED AND SEALED BY RYAN GISSAL, P.E. (#78615) ON THE REFERENCED DATE USING A DIGITAL SIGNATURE.

PRINTED COPIES OF THIS DOCUMENT ARE NOT CONSIDERED SIGNED AND SEALED AND THE SHA AUTHENTICATION CODE MUST BE VERIFIED ON ANY ELECTRONIC COPY.

IFG Independent Forensics Group
3564 AVALON PARK BLVD
ORLANDO, FL 32828
COA#: 34577

ENGINEER:

ENGINEER:
RYAN M. GISSAL, P.E.
PE#: 78615

DATE: REFERENCE DIGITAL SIGNATURE

PROJECT:

GARDE RESIDENCE
2094 NW THUNDER STREET
WHITE SPRINGS, FLORIDA 32096
IFG#: IFG240292

PLAN HISTORY

DATE	DESCRIP:

SHEET DATA:

ENGINEERED BY: RMG

DRAWN BY: RMG

SHEET DESCRIP:

STRUCTURAL DETAILS

SHEET

S5.0

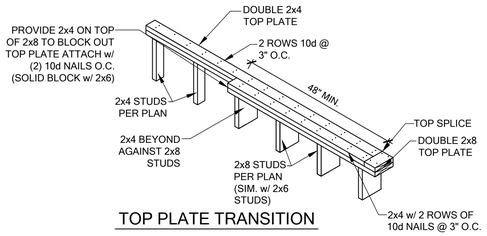

TOP PLATE TRANSITION

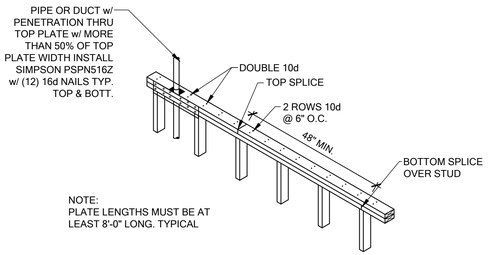

WF08 TOP PLATE SPLICE DETAIL
SCALE: 3/4" = 1'-0"

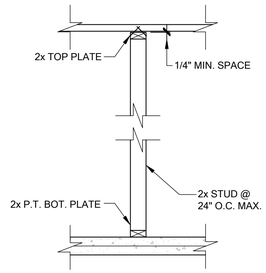

WF10 TYP. INTERIOR NON BEARING
SCALE: 3/4" = 1'-0"

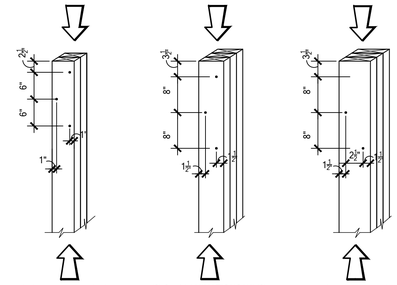

(2) 2 x 4 LAMINATIONS W/ (1) ROW OF STAGGERED 10d COMMON WIRE NAILS (D = 0.148", L= 3") OR EQUAL

(3) 2 x 4 LAMINATIONS W/ (2) ROWS OF STAGGERED 16d COMMON WIRE NAILS (ONE INTO EACH OUTSIDE FACE) (D = 0.162", L= 3-1/2") OR EQUAL

(3) 2 x 6 LAMINATIONS W/ (2) ROWS OF STAGGERED 16d COMMON WIRE NAILS (ONE INTO EACH OUTSIDE FACE) (D = 0.162", L= 3-1/2") OR EQUAL

NOTES:
1) ADJACENT NAILS ARE DRIVEN FROM OPPOSITE SIDES OF THE COLUMN.

2) ALL NAILS PENETRATE AT LEAST 3/4" OF THE THICKNESS OF THE LAST LAMINATION

3) FOR 4-PLY, PROVIDE 1/4"DIA. x 5 1/2" LAG SCREWS OR EQUAL (SPACE AS SHOWN FOR 3-PLY)

4) REFER TO NDS SECTION 15.3 FOR ADDITIONAL INFO.

WF11 BUILT UP COLUMN NAILILNG SCHEDULE
SCALE: 3/4" = 1'-0"

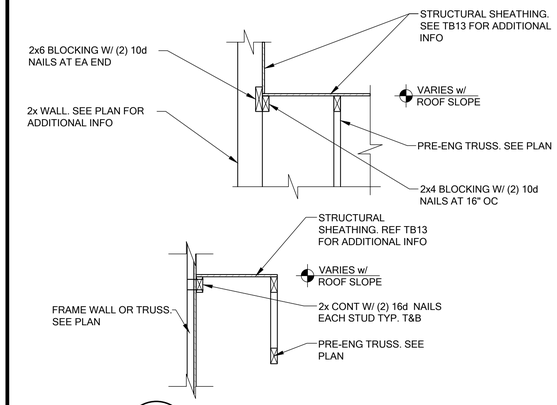

LD02 SHEAR TRANSFER EXT. WALL
SCALE: 3/4" = 1'-0"

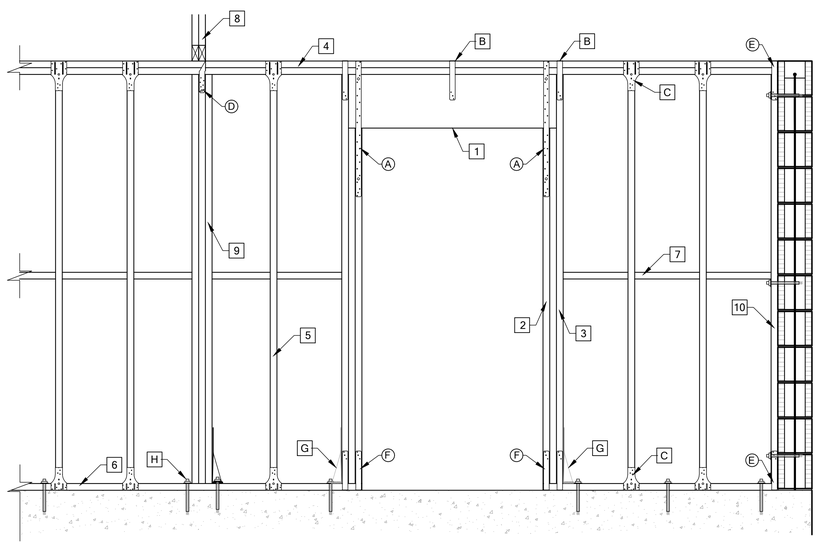

WF05 FIRST FLOOR WOOD-FRAMED BEARING WALL
SCALE: 3/4" = 1'-0"

1. OPENING HEADER SEE FLOOR PLAN FOR SIZE AND TYPE. IF NO HEADERS ARE SPECIFIED ON PLANS USE (2) 2X12 SYP #2.
2. JACK STUDS BELOW HEADER. SEE FLOOR PLAN FOR JACK STUD REQUIREMENTS.
3. 2x KING STUDS AT END OF HEADER. SEE FLOOR PLAN FOR KING STUD REQUIREMENTS.
4. (2) 2x TOP PLATE. SEE WF08 FOR SPLICE IN TOP PLATE.
5. 2x STUDS @ 16" O.C. U.N.O. ON PLANS. ATTACH STUDS TO TOP AND BOTTOM PLATES WITH (2) 10d NAILS.
6. 2x P.T. SILL PLATE
7. 2X MID HEIGHT BLOCKING W/ (2) 10d NAILS EACH END.
8. GIRDER/BEAM. SEE PLAN FOR ADDITIONAL INFORMATION.
9. COLUMN UNDER GIRDER/BEAM. SEE PLAN FOR SIZE,TYPE, AND BASE CONNECTION OF COLUMN.
10. 2X P.T. STUD AT EXTERIOR WALL CONDITION. CONNECT TO CMU WITH ONE OF THE FOLLOWING METHODS:
    (3) ½"x8" J-BOLTS
    (3) ½"x6" EXPANSION BOLTS
    (6) 3½"x¼" TAPCONS
    (8) 2⅞" HILTI TIX-DNI NAILS

(A) SIMPSON LSTA30 w/ (22)- 10d NAILS @ EACH END OF HEADER TO JACK STUD IF SPECIFIED ON PLANS. DOUBLE IF SPECIFIED ON PLANS.

(B) SIMPSON SP4 W/ (6) 10d x 1 ½" NAILS AT EACH KING STUD AND @ 24" O.C. ABOVE HEADER OPENING WHERE STRAPS ARE SPECIFIED AT EACH END OF HEADER ON PLANS.

(C) CONNECTOR AT TOP AND BOTTOM OF EACH STUD IF SPECIFIED ON PLANS.

(D) SEE PLAN FOR GIRDER/BEAM CONNECTION.

(E) SIMPSON SP4 W/ (6) 10d x 1½" NAILS AT TOP OF BOTTOM OF END STUD.

(F) (2) SIMPSON SP4 W/ (6) 10d X 1½" NAILS AT EACH END OF OPENING. USE ALTERNATE CONNECTION (G) WHEN STRAPS AT HEADER ABOVE ARE DOUBLED.

(G) SIMPSON HTT5 W/ (18) 16d NAILS AND ⅝" EXPANSION ANCHOR w/ 6" EMBEDMENT TYPICAL (8½" AT STEP-DOWN CONDITION).

(H) ½" ANCHOR BOLTS @ 32" O.C. AND 6" FROM ENDS OF SILL PLATE W/ MIN. 7" EMBEDMENT. IN LIEU OF ANCHOR BOLTS USE ½" SIMPSON TITEN HD AT SAME SPACING AND EMBEDMENT.

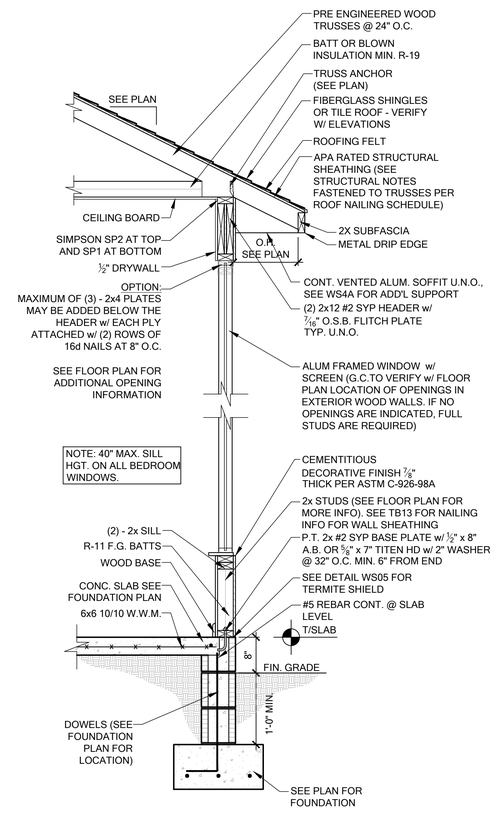

WS02 TYPICAL WALL SECTION

THIS DRAWING HAS BEEN ELECTRONICALLY SEALED AND SHA'D BY RYAN GISSAL, P.E. (#78615) ON THE REFERENCED DATE USING A DIGITAL SIGNATURE.

PRINTED COPIES OF THIS DOCUMENT ARE NOT CONSIDERED SIGNED AND SEALED AND THE SHA AUTHENTICATION CODE MUST BE VERIFIED ON ANY ELECTRONIC COPY.

IFG Independent Forensics Group
3564 AVALON PARK BLVD
ORLANDO, FL 32828
COA#: 34577

ENGINEER:

ENGINEER:
RYAN M. GISSAL, P.E.
P.E.#: 78615

DATE: REFERENCE DIGITAL SIGNATURE

PROJECT:

GARDE RESIDENCE
2094 NW THUNDER STREET
WHITE SPRINGS, FLORIDA 32096
IFG#: IFG240292

PLAN HISTORY

DATE	DESCRIP:

SHEET DATA:

ENGINEERED BY: RMG

DRAWN BY: RMG

SHEET DESCRIP:

STRUCTURAL DETAILS

SHEET

S6.0

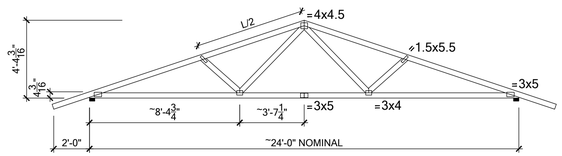

NOTES:

1. THIS DESIGN IS FOR ALL COMMON TRUSSES (A01-A05, AND AC01).
2. DIMENSIONS AND PLATE SIZES PROVIDED ARE FOR ESTIMATION PURPOSES ONLY. TRUSS SUPPLIER / G.C. TO VERIFY ALL TRUSS DIMENSIONS AND PLATES PRIOR TO TRUSS FABRICATION.
3. RECOMMENDED DESIGN GRAVITY LOADS: 20/5/0/10 (TCLL/TCDL/BCLL/BCDL).
4. RECOMMENDED DESIGN UPLIFT LOADS: 0/3/0/5 (TCLL/TCDL/BCLL/BCDL).
5. RECOMMENDED WIND CRITERIA: VULT = 120 MPH, EXPOSURE C, H = 15 FT.
6. IFG FOUND NO INTERIOR BEARING WALLS, ALTHOUGH THE TRUSSES WERE NOT HELD OFF FROM THE INTERIOR WALLS. IF INTERIOR BEARING WALLS ARE REQUIRED, CONTACT IFG FOR ADDITIONAL REVIEW.
7. SUBMIT REPAIR DRAWINGS TO IFG FOR APPROVAL.

LEGEND:

R RETRACTED, BENT, OR DAMAGED TRUSS PLATE

X DAMAGED MEMBER APPROXIMATE EXTENT OF DAMAGE

DRAWINGS PROVIDED FOR ESTIMATION PURPOSES ONLY. TRUSS SUPPLIER / G.C. SHALL VERIFY ALL DIMENSIONS.

IF ADDITIONAL DAMAGES ARE FOUND, CONTACT E.O.R. FOR REVIEW.

A01, A02

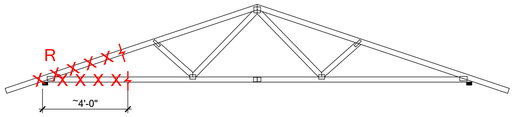

A03

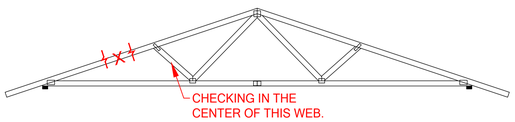

A04

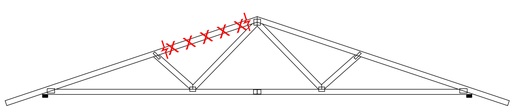

A05

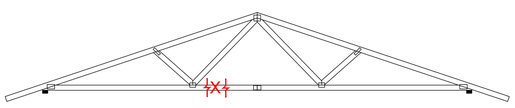

AC01, AC02

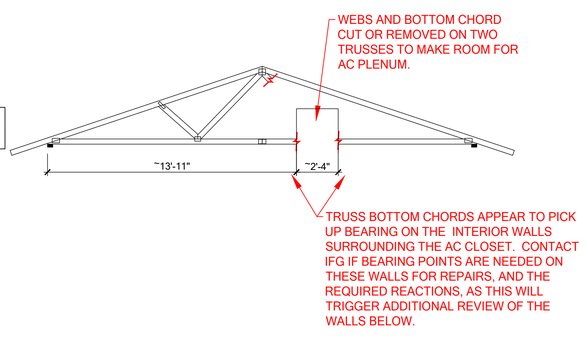

THIS DRAWING HAS BEEN ELECTRONICALLY SIGNED AND SEALED BY RYAN GISSAL, P.E. (#78615) ON THE REFERENCED DATE USING A DIGITAL SIGNATURE.

PRINTED COPIES OF THIS DOCUMENT ARE NOT CONSIDERED SIGNED AND SEALED AND THE SHA AUTHENTICATION CODE MUST BE VERIFIED ON ANY ELECTRONIC COPY.

Independent Forensics Group
3564 AVALON PARK BLVD
ORLANDO, FL 32828
COA#: 34577

ENGINEER:

ENGINEER:
RYAN M. GISSAL, P.E.
PE#: 78615

DATE: REFERENCE DIGITAL SIGNATURE

PROJECT:

GARDE RESIDENCE
2094 NW THUNDER STREET
WHITE SPRINGS, FLORIDA 32096
IFG#: IFG240292

PLAN HISTORY

DATE	DESCRIP:

SHEET DATA:

ENGINEERED BY: RMG

DRAWN BY: RMG

SHEET DESCRIP:

TRUSS DAMAGE SKETCHES

SHEET

S7.0