| Job | Truss | Truss Type | Qty | Ply | WALKER RES |
|---|---|---|---|---|---|
| WALG | 2X12 | SPECIAL | 2 | 1 | T1874995 |

Job Reference (optional)

SANTA FE TRUSS, HIGH SPRINGS FL., p.colacino — 6.200 s Oct 18 2005 MiTek Industries, Inc. Mon Nov 21 16:20:52 2005 Page 1

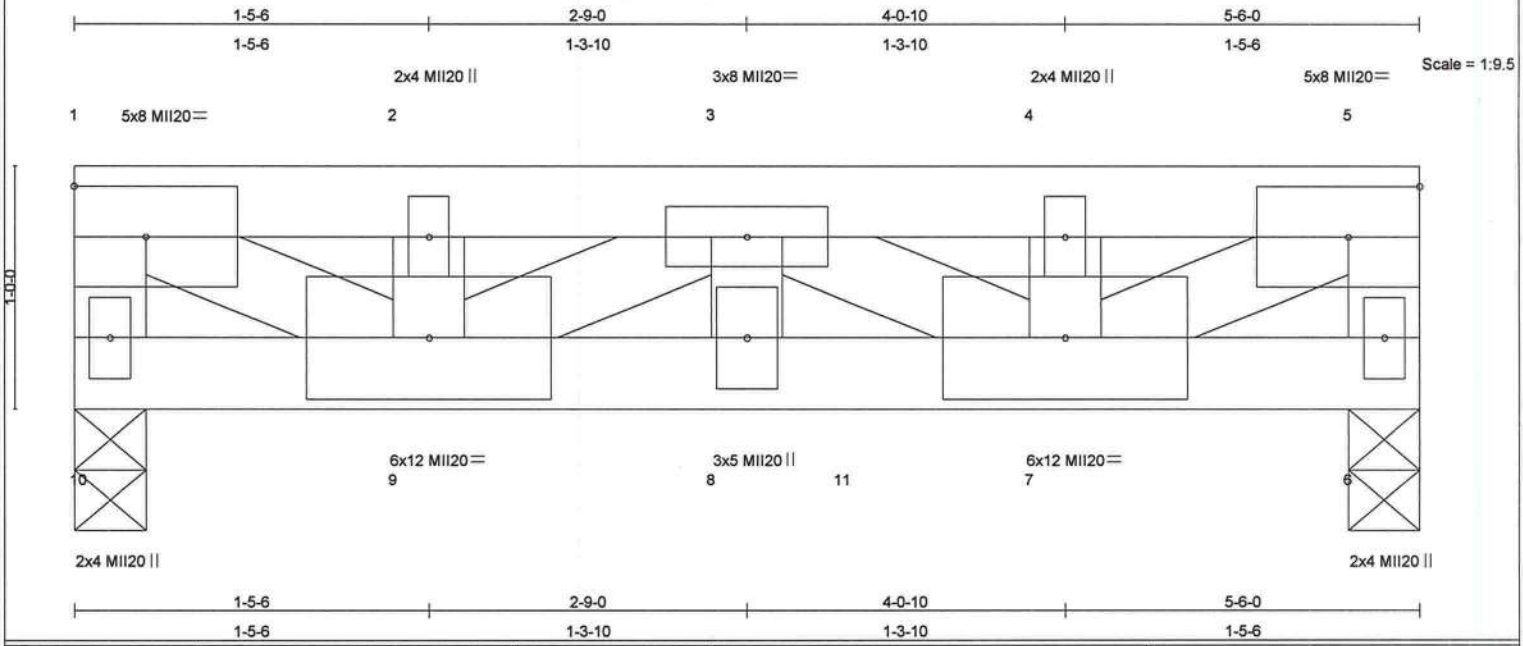


| LOADING (psf) | | SPACING | 2-0-0 | CSI | | DEFL | in | (loc) | l/defl | L/d | PLATES | GRIP |
|---|---|---|---|---|---|---|---|---|---|---|---|---|
| TCLL | 20.0 | Plates Increase | 1.25 | TC | 0.22 | Vert(LL) | 0.03 | 8 | >999 | 240 | MII20 | 249/190 |
| TCDL | 10.0 | Lumber Increase | 1.25 | BC | 0.67 | Vert(TL) | -0.07 | 7-8 | >908 | 180 | | |
| BCLL | 0.0 | Rep Stress Incr | NO | WB | 0.89 | Horz(TL) | 0.01 | 6 | n/a | n/a | | |
| BCDL | 10.0 | Code FBC2004/TPI2002 | | (Matrix) | | | | | | | Weight: 26 lb | |

**LUMBER**
TOP CHORD 2 X 4 SYP No.2D
BOT CHORD 2 X 4 SYP SS
WEBS 2 X 4 SYP No.3

**BRACING**
TOP CHORD Structural wood sheathing directly applied or 4-0-0 oc purlins, except end verticals.
BOT CHORD Rigid ceiling directly applied or 7-2-15 oc bracing.

**REACTIONS** (lb/size) 10=1545/0-3-8, 6=2057/0-3-8
Max Uplift10=-411(load case 3), 6=-575(load case 3)

**FORCES** (lb) - Maximum Compression/Maximum Tension
TOP CHORD 1-10=-1429/388, 1-2=-2432/646, 2-3=-2432/646, 3-4=-2062/546, 4-5=-2062/546, 5-6=-1205/327
BOT CHORD 9-10=-0/0, 8-9=-819/3081, 8-11=-819/3081, 7-11=-819/3081, 6-7=0/0
WEBS 1-9=-736/2768, 2-9=-7/29, 3-9=-739/196, 3-8=-207/846, 3-7=-1160/310, 4-7=-54/35, 5-7=-622/2347

**NOTES**
1) Wind: ASCE 7-98; 110mph (3-second gust); h=18ft; TCDL=5.0psf; BCDL=5.0psf; Category II; Exp C; enclosed; MWFRS interior zone; Lumber DOL=1.33 plate grip DOL=1.33.
2) Provide adequate drainage to prevent water ponding.
3) This truss has been designed for a 10.0 psf bottom chord live load nonconcurrent with any other live loads.
4) This truss requires plate inspection per the Tooth Count Method when this truss is chosen for quality assurance inspection.
5) Provide mechanical connection (by others) of truss to bearing plate capable of withstanding 411 lb uplift at joint 10 and 575 lb uplift at joint 6.
6) Hanger(s) or other connection device(s) shall be provided sufficient to support concentrated load(s) 1162 lb down and 311 lb up at 1-3-4, and 1163 lb down and 310 lb up at 3-3-4, and 861 lb down and 258 lb up at 5-4-4 on bottom chord. The design/selection of such connection device(s) is the responsibility of others.
7) In the LOAD CASE(S) section, loads applied to the face of the truss are noted as front (F) or back (B).

**LOAD CASE(S)** Standard
1) Regular: Lumber Increase=1.25, Plate Increase=1.25
Uniform Loads (plf)
Vert: 1-5=-60, 6-10=-20
Concentrated Loads (lb)
Vert: 6=-861(F) 9=-1162(F) 11=-1163(F)


Guo-Jie Zhang, FL Lic #47744
MiTek Industries, Inc.
1801 Massaro Blvd
Tampa FL 33619
FL Cert.#6634


November 22,2005

# Symbols

**PLATE LOCATION AND ORIENTATION**

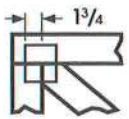


*Center plate on joint unless x,y offsets are indicated. Dimensions are in ft-in-sixteenths. Apply plates to both sides of truss and securely seat.

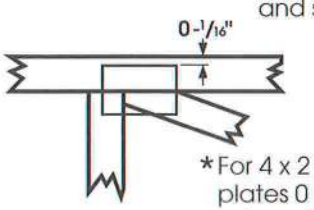


*For 4 x 2 orientation, locate plates 0 - 1/16" from outside edge of truss.



*This symbol indicates the required direction of slots in connector plates.

*** Plate location details available in MiTek 20/20 software or upon request.**

**PLATE SIZE**

4 x 4 — The first dimension is the width perpendicular to slots. Second dimension is the length parallel to slots.

**LATERAL BRACING**

Indicated by symbol shown and/or by text in the bracing section of the output. Use T, I or Eliminator bracing if indicated.

**BEARING**

Indicates location where bearings (supports) occur. Icons vary but reaction section indicates joint number where bearings occur.

**Industry Standards:**

ANSI/TPI1: National Design Specification for Metal Plate Connected Wood Truss Construction.
DSB-89: Design Standard for Bracing.
BCSI1: Building Component Safety Information, Guide to Good Practice for Handling, Installing & Bracing of Metal Plate Connected Wood Trusses.

# Numbering System

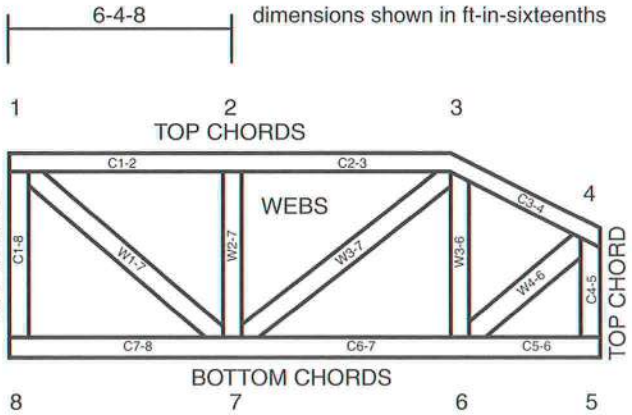


**JOINTS ARE GENERALLY NUMBERED/LETTERED CLOCKWISE AROUND THE TRUSS STARTING AT THE JOINT FARTHEST TO THE LEFT.**

**CHORDS AND WEBS ARE IDENTIFIED BY END JOINT NUMBERS/LETTERS.**

**CONNECTOR PLATE CODE APPROVALS**

| | |
|---|---|
| BOCA | 96-31, 95-43, 96-20-1, 96-67, 84-32 |
| ICBO | 4922, 5243, 5363, 3907 |
| SBCCI | 9667, 9730, 9604B, 9511, 9432A |

MiTek®

TEE-LOK®

# ⚠General Safety Notes

## Failure to Follow Could Cause Property Damage or Personal Injury

1. Additional stability bracing for truss system, e.g. diagonal or X-bracing, is always required. See BCSI1.
2. Never exceed the design loading shown and never stack materials on inadequately braced trusses.
3. Provide copies of this truss design to the building designer, erection supervisor, property owner and all other interested parties.
4. Cut members to bear tightly against each other.
5. Place plates on each face of truss at each joint and embed fully. Knots and wane at joint locations are regulated by ANSI/TPI1.
6. Design assumes trusses will be suitably protected from the environment in accord with ANSI/TPI1.
7. Unless otherwise noted, moisture content of lumber shall not exceed 19% at time of fabrication.
8. Unless expressly noted, this design is not applicable for use with fire retardant or preservative treated lumber.
9. Camber is a non-structural consideration and is the responsibility of truss fabricator. General practice is to camber for dead load deflection.
10. Plate type, size, orientation and location dimensions shown indicate minimum plating requirements.
11. Lumber used shall be of the species and size, and in all respects, equal to or better than that specified.
12. Top chords must be sheathed or purlins provided at spacing shown on design.
13. Bottom chords require lateral bracing at 10 ft. spacing, or less, if no ceiling is installed, unless otherwise noted.
14. Connections not shown are the responsibility of others.
15. Do not cut or alter truss member or plate without prior approval of a professional engineer.
16. Install and load vertically unless indicated otherwise.

| Job | Truss | Truss Type | Qty | Ply | WALKER RES |
|---|---|---|---|---|---|
| WALG | A1 | HIP | 1 | 1 | T1874996 |

Job Reference (optional)

SANTA FE TRUSS, HIGH SPRINGS FL., p.colacino

6.200 s Oct 18 2005 MiTek Industries, Inc. Mon Nov 21 16:20:54 2005 Page 1

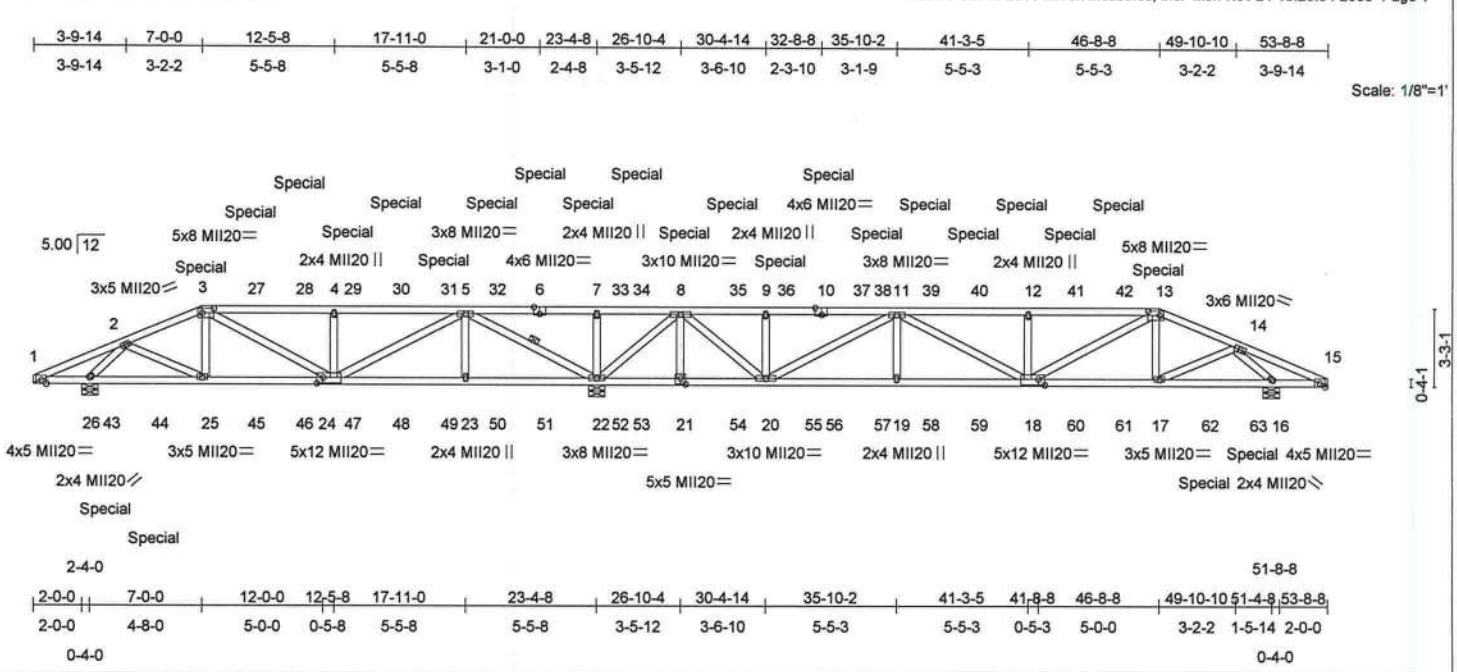


Plate Offsets (X,Y): [3:0-5-12,0-2-8], [6:0-3-0,Edge], [10:0-3-0,Edge], [13:0-5-12,0-2-8], [18:0-3-4,0-3-0], [21:0-2-8,0-3-0], [24:0-3-0,0-3-0]

| LOADING (psf) | | SPACING | 2-0-0 | CSI | | DEFL | in | (loc) | l/defl | L/d | PLATES | GRIP |
|---|---|---|---|---|---|---|---|---|---|---|---|---|
| TCLL | 20.0 | Plates Increase | 1.25 | TC | 0.53 | Vert(LL) | -0.08 | 18-19 | >999 | 240 | MII20 | 249/190 |
| TCDL | 10.0 | Lumber Increase | 1.25 | BC | 0.41 | Vert(TL) | -0.23 | 18-19 | >999 | 180 | | |
| BCLL | 0.0 | Rep Stress Incr | NO | WB | 0.74 | Horz(TL) | 0.05 | 16 | n/a | n/a | | |
| BCDL | 10.0 | Code FBC2004/TPI2002 | | (Matrix) | | | | | | | Weight: 278 lb | |

**LUMBER**
TOP CHORD 2 X 4 SYP No.2D
BOT CHORD 2 X 4 SYP No.2D
WEBS 2 X 4 SYP No.3

**BRACING**
TOP CHORD Structural wood sheathing directly applied or 4-8-15 oc purlins.
BOT CHORD Rigid ceiling directly applied or 6-0-0 oc bracing.
WEBS 1 Row at midpt 5-22

**REACTIONS** (lb/size) 26=812/0-8-0, 22=2348/0-8-0, 16=1139/0-8-0
Max Horz 26=44(load case 5)
Max Uplift26=-277(load case 5), 22=-443(load case 4), 16=-312(load case 6)
Max Grav26=816(load case 7), 22=2348(load case 1), 16=1142(load case 8)

**FORCES** (lb) - Maximum Compression/Maximum Tension

TOP CHORD 1-2=-171/261, 2-3=-782/210, 3-27=-688/183, 27-28=-688/183, 4-28=-688/183, 4-29=-725/204, 29-30=-725/204, 30-31=-725/204, 5-31=-725/204, 5-32=-291/1737, 6-32=-291/1737, 6-33=-291/1737, 7-33=-291/1737, 7-34=-291/1737, 8-34=-291/1737, 8-35=-645/158, 9-35=-645/158, 9-36=-645/158, 10-36=-645/158, 10-37=-645/158, 37-38=-645/158, 11-38=-645/158, 11-39=-1817/401, 39-40=-1817/401, 12-40=-1817/401, 12-41=-1817/401, 41-42=-1817/401, 13-42=-1818/401, 13-14=-1393/319, 14-15=-164/246

BOT CHORD 1-26=-200/182, 26-43=-116/473, 43-44=-116/473, 25-44=-116/473, 25-45=-125/692, 45-46=-125/692, 24-46=-125/692, 24-47=-176/88, 47-48=-176/88, 48-49=-176/88, 23-49=-176/88, 23-50=-176/88, 50-51=-176/88, 51-52=-176/88, 22-52=-176/88, 22-53=-461/139, 21-53=-461/139, 21-54=-461/139, 20-54=-461/139, 20-55=-261/1617, 55-56=-261/1617, 56-57=-261/1617, 19-57=-261/1617, 19-58=-261/1617, 58-59=-261/1617, 18-59=-261/1617, 18-60=-219/1249, 60-61=-219/1249, 17-61=-219/1249, 17-62=-156/780, 62-63=-156/780, 16-63=-156/780, 15-16=-188/174

WEBS 2-26=-957/361, 2-25=-46/264, 3-25=0/151, 3-24=-13/61, 4-24=-244/136, 5-24=-211/974, 5-23=0/307, 5-22=-1794/347, 7-22=-224/117, 8-22=-1676/318, 8-20=-269/1419, 9-20=-210/115, 11-20=-1112/220, 11-19=0/293, 11-18=-60/233, 12-18=-236/132, 13-18=-114/681, 13-17=-58/96, 14-17=-95/530, 14-16=-1400/408, 8-21=0/132

**NOTES**
1) Unbalanced roof live loads have been considered for this design.
2) Wind: ASCE 7-98; 110mph (3-second gust); h=18ft; TCDL=5.0psf; BCDL=5.0psf; Category II; Exp C; enclosed; MWFRS interior zone; cantilever left and right exposed ; Lumber DOL=1.33 plate grip DOL=1.33.
3) Provide adequate drainage to prevent water ponding.
4) This truss has been designed for a 10.0 psf bottom chord live load nonconcurrent with any other live loads.
5) This truss requires plate inspection per the Tooth Count Method when this truss is chosen for quality assurance inspection.
6) Provide mechanical connection (by others) of truss to bearing plate capable of withstanding 277 lb uplift at joint 26, 443 lb uplift at joint 22 and 312 lb uplift at joint 16.


Guo-Jie Zhang, FL Lic #47744
MiTek Industries, Inc.
1801 Massaro Blvd
Tampa FL 33619
FL Cert.#6634


November 22,2005

Continued on page 2

# Symbols

**PLATE LOCATION AND ORIENTATION**

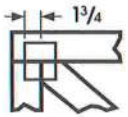


*Center plate on joint unless x,y offsets are indicated. Dimensions are in ft-in-sixteenths. Apply plates to both sides of truss and securely seat.

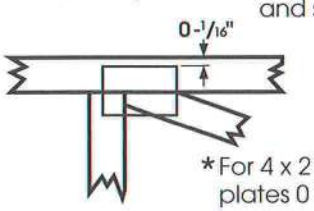


*For 4 x 2 orientation, locate plates 0 - 1/16" from outside edge of truss.

*This symbol indicates the required direction of slots in connector plates.

*** Plate location details available in MiTek 20/20 software or upon request.**

**PLATE SIZE**

4 x 4 — The first dimension is the width perpendicular to slots. Second dimension is the length parallel to slots.

**LATERAL BRACING**

Indicated by symbol shown and/or by text in the bracing section of the output. Use T, I or Eliminator bracing if indicated.

**BEARING**

Indicates location where bearings (supports) occur. Icons vary but reaction section indicates joint number where bearings occur.

**Industry Standards:**

ANSI/TPI1: National Design Specification for Metal Plate Connected Wood Truss Construction.
DSB-89: Design Standard for Bracing.
BCSI1: Building Component Safety Information, Guide to Good Practice for Handling, Installing & Bracing of Metal Plate Connected Wood Trusses.

# Numbering System

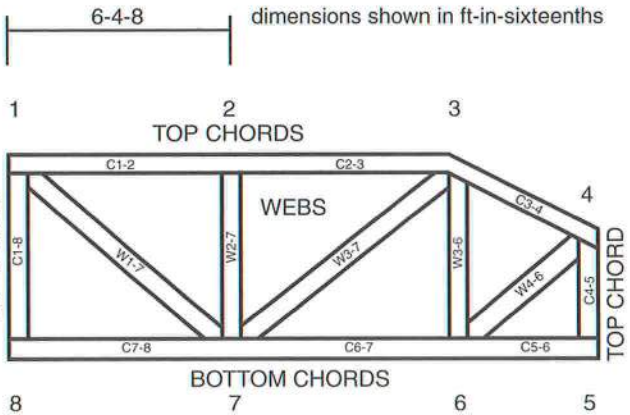


**JOINTS ARE GENERALLY NUMBERED/LETTERED CLOCKWISE AROUND THE TRUSS STARTING AT THE JOINT FARTHEST TO THE LEFT.**

**CHORDS AND WEBS ARE IDENTIFIED BY END JOINT NUMBERS/LETTERS.**

**CONNECTOR PLATE CODE APPROVALS**

| | |
|---|---|
| BOCA | 96-31, 95-43, 96-20-1, 96-67, 84-32 |
| ICBO | 4922, 5243, 5363, 3907 |
| SBCCI | 9667, 9730, 9604B, 9511, 9432A |

MiTek®

TEE-LOK®

# ⚠General Safety Notes

## Failure to Follow Could Cause Property Damage or Personal Injury

1. Additional stability bracing for truss system, e.g. diagonal or X-bracing, is always required. See BCSI1.
2. Never exceed the design loading shown and never stack materials on inadequately braced trusses.
3. Provide copies of this truss design to the building designer, erection supervisor, property owner and all other interested parties.
4. Cut members to bear tightly against each other.
5. Place plates on each face of truss at each joint and embed fully. Knots and wane at joint locations are regulated by ANSI/TPI1.
6. Design assumes trusses will be suitably protected from the environment in accord with ANSI/TPI1.
7. Unless otherwise noted, moisture content of lumber shall not exceed 19% at time of fabrication.
8. Unless expressly noted, this design is not applicable for use with fire retardant or preservative treated lumber.
9. Camber is a non-structural consideration and is the responsibility of truss fabricator. General practice is to camber for dead load deflection.
10. Plate type, size, orientation and location dimensions shown indicate minimum plating requirements.
11. Lumber used shall be of the species and size, and in all respects, equal to or better than that specified.
12. Top chords must be sheathed or purlins provided at spacing shown on design.
13. Bottom chords require lateral bracing at 10 ft. spacing, or less, if no ceiling is installed, unless otherwise noted.
14. Connections not shown are the responsibility of others.
15. Do not cut or alter truss member or plate without prior approval of a professional engineer.
16. Install and load vertically unless indicated otherwise.

**NOTES**

7) Hanger(s) or other connection device(s) shall be provided sufficient to support concentrated load(s) 34 lb down and 78 lb up at 7-0-0, 13 lb down and 34 lb up at 9-0-12, 13 lb down and 34 lb up at 11-0-12, 13 lb down and 34 lb up at 13-0-12, 13 lb down and 34 lb up at 15-0-12, 13 lb down and 34 lb up at 17-0-12, 13 lb down and 34 lb up at 19-0-12, 13 lb down and 34 lb up at 21-0-12, 13 lb down and 34 lb up at 23-0-12, 13 lb down and 34 lb up at 25-0-12, 13 lb down and 34 lb up at 27-0-12, 13 lb down and 34 lb up at 29-0-12, 13 lb down and 34 lb up at 31-0-12, 13 lb down and 34 lb up at 33-0-12, 13 lb down and 34 lb up at 35-0-12, 13 lb down and 34 lb up at 37-0-12, 13 lb down and 34 lb up at 39-0-12, 13 lb down and 34 lb up at 41-0-12, 13 lb down and 34 lb up at 43-0-12, and 13 lb down and 34 lb up at 45-0-12, and 34 lb down and 78 lb up at 46-8-8 on top chord, and 25 lb down at 3-0-12, 20 lb down and 10 lb up at 5-0-12, 28 lb down at 7-0-12, 28 lb down at 9-0-12, 28 lb down at 11-0-12, 28 lb down at 13-0-12, 28 lb down at 15-0-12, 28 lb down at 17-0-12, 28 lb down at 19-0-12, 28 lb down at 21-0-12, 28 lb down at 23-0-12, 28 lb down at 25-0-12, 28 lb down at 27-0-12, 28 lb down at 29-0-12, 28 lb down at 31-0-12, 28 lb down at 33-0-12, 28 lb down at 35-0-12, 28 lb down at 37-0-12, 28 lb down at 39-0-12, 28 lb down at 41-0-12, 28 lb down at 43-0-12, 28 lb down at 45-0-12, 28 lb down at 46-7-12, and 20 lb down and 10 lb up at 48-7-12, and 25 lb down at 50-7-12 on bottom chord. The design/selection of such connection device(s) is the responsibility of others.

8) In the LOAD CASE(S) section, loads applied to the face of the truss are noted as front (F) or back (B).

**LOAD CASE(S)** Standard

1) Regular: Lumber Increase=1.25, Plate Increase=1.25

Uniform Loads (plf)

Vert: 1-3=-60, 3-13=-60, 13-15=-60, 1-15=-20

Concentrated Loads (lb)

Vert: 3=-34(F) 6=34(F) 13=-34(F) 25=-28(F) 8=34(F) 12=34(F) 18=-28(F) 17=-28(F) 21=-28(F) 27=34(F) 28=34(F) 29=34(F) 30=34(F) 31=34(F) 32=34(F) 33=34(F) 34=34(F) 35=34(F) 36=34(F) 37=34(F) 38=34(F) 39=34(F) 40=34(F) 41=34(F) 42=34(F) 43=-13(F) 44=10(F) 45=-28(F) 46=-28(F) 47=-28(F) 48=-28(F) 49=-28(F) 50=-28(F) 51=-28(F) 52=-28(F) 53=-28(F) 54=-28(F) 55=-28(F) 56=-28(F) 57=-28(F) 58=-28(F) 59=-28(F) 60=-28(F) 61=-28(F) 62=10(F) 63=-13(F)

# Symbols

**PLATE LOCATION AND ORIENTATION**

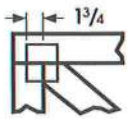


*Center plate on joint unless x,y offsets are indicated. Dimensions are in ft-in-sixteenths. Apply plates to both sides of truss and securely seat.

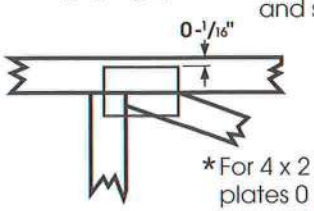


*For 4 x 2 orientation, locate plates 0 - 1/16" from outside edge of truss.

*This symbol indicates the required direction of slots in connector plates.

*** Plate location details available in MiTek 20/20 software or upon request.**

**PLATE SIZE**

4 x 4 — The first dimension is the width perpendicular to slots. Second dimension is the length parallel to slots.

**LATERAL BRACING**

Indicated by symbol shown and/or by text in the bracing section of the output. Use T, I or Eliminator bracing if indicated.

**BEARING**

Indicates location where bearings (supports) occur. Icons vary but reaction section indicates joint number where bearings occur.

**Industry Standards:**

ANSI/TPI1: National Design Specification for Metal Plate Connected Wood Truss Construction.
DSB-89: Design Standard for Bracing.
BCSI1: Building Component Safety Information, Guide to Good Practice for Handling, Installing & Bracing of Metal Plate Connected Wood Trusses.

# Numbering System

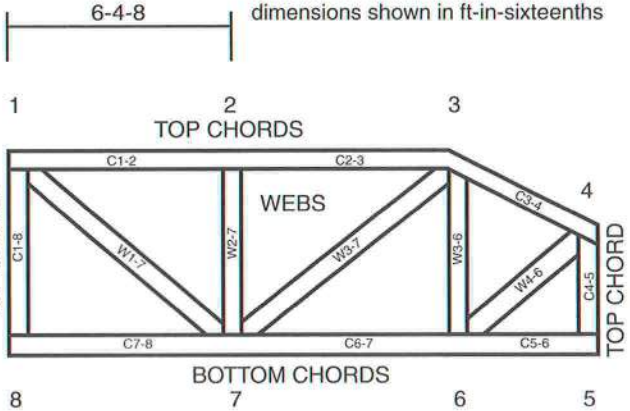


**JOINTS ARE GENERALLY NUMBERED/LETTERED CLOCKWISE AROUND THE TRUSS STARTING AT THE JOINT FARTHEST TO THE LEFT.**

**CHORDS AND WEBS ARE IDENTIFIED BY END JOINT NUMBERS/LETTERS.**

**CONNECTOR PLATE CODE APPROVALS**

| | |
|---|---|
| BOCA | 96-31, 95-43, 96-20-1, 96-67, 84-32 |
| ICBO | 4922, 5243, 5363, 3907 |
| SBCCI | 9667, 9730, 9604B, 9511, 9432A |

MiTek®

TEE-LOK®

# ⚠General Safety Notes

## Failure to Follow Could Cause Property Damage or Personal Injury

1. Additional stability bracing for truss system, e.g. diagonal or X-bracing, is always required. See BCSI1.
2. Never exceed the design loading shown and never stack materials on inadequately braced trusses.
3. Provide copies of this truss design to the building designer, erection supervisor, property owner and all other interested parties.
4. Cut members to bear tightly against each other.
5. Place plates on each face of truss at each joint and embed fully. Knots and wane at joint locations are regulated by ANSI/TPI1.
6. Design assumes trusses will be suitably protected from the environment in accord with ANSI/TPI1.
7. Unless otherwise noted, moisture content of lumber shall not exceed 19% at time of fabrication.
8. Unless expressly noted, this design is not applicable for use with fire retardant or preservative treated lumber.
9. Camber is a non-structural consideration and is the responsibility of truss fabricator. General practice is to camber for dead load deflection.
10. Plate type, size, orientation and location dimensions shown indicate minimum plating requirements.
11. Lumber used shall be of the species and size, and in all respects, equal to or better than that specified.
12. Top chords must be sheathed or purlins provided at spacing shown on design.
13. Bottom chords require lateral bracing at 10 ft. spacing, or less, if no ceiling is installed, unless otherwise noted.
14. Connections not shown are the responsibility of others.
15. Do not cut or alter truss member or plate without prior approval of a professional engineer.
16. Install and load vertically unless indicated otherwise.

| Job | Truss | Truss Type | Qty | Ply | WALKER RES |
|---|---|---|---|---|---|
| WALG | A10 | HIP | 1 | 1 | T1874997 |

Job Reference (optional)

SANTA FE TRUSS, HIGH SPRINGS FL., p.colacino

6.200 s Oct 18 2005 MiTek Industries, Inc. Mon Nov 21 16:20:55 2005 Page 1

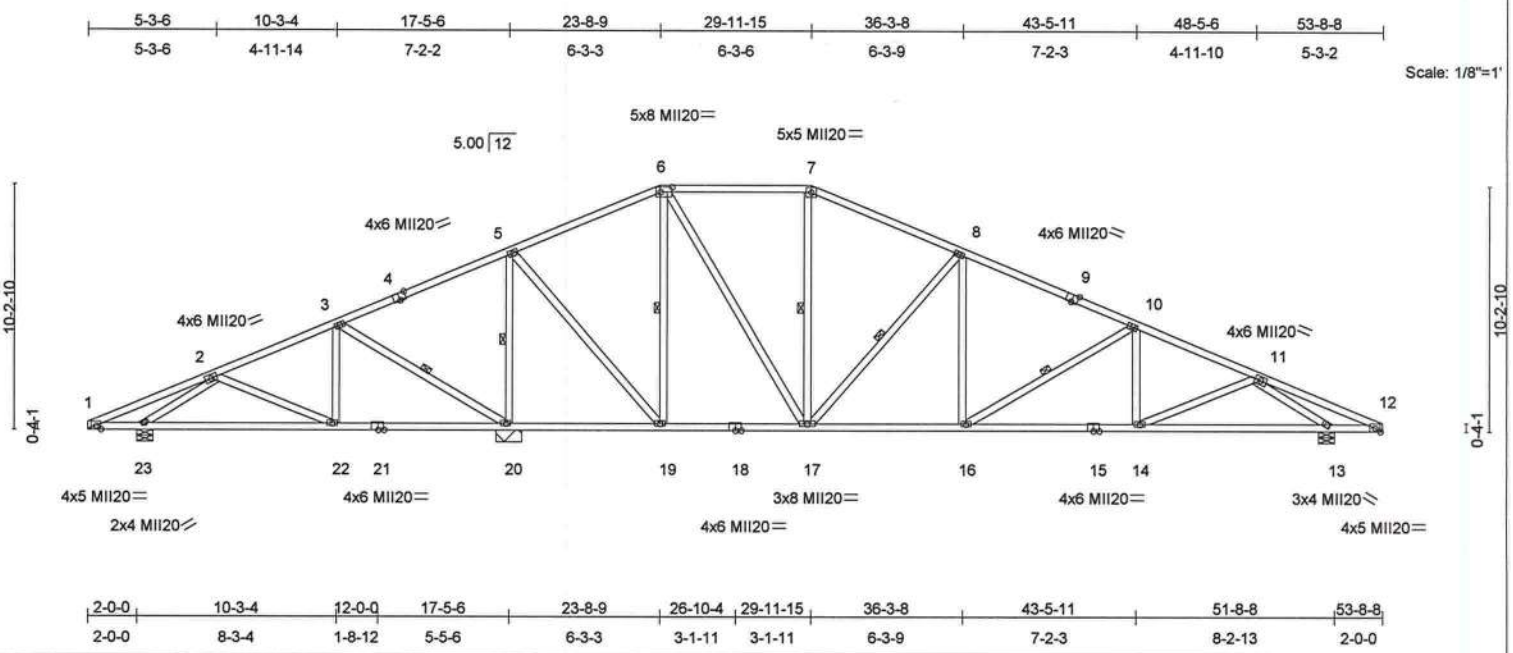


Plate Offsets (X,Y): [4:0-3-0,Edge], [6:0-5-12,0-2-8], [9:0-3-0,Edge]

| LOADING (psf) | | SPACING | 2-0-0 | CSI | | DEFL | in | (loc) | l/defl | L/d | PLATES | GRIP |
|---|---|---|---|---|---|---|---|---|---|---|---|---|
| TCLL | 20.0 | Plates Increase | 1.25 | TC | 0.40 | Vert(LL) | 0.08 | 14-16 | >999 | 240 | MII20 | 249/190 |
| TCDL | 10.0 | Lumber Increase | 1.25 | BC | 0.45 | Vert(TL) | -0.23 | 14-16 | >999 | 180 | | |
| BCLL | 0.0 | Rep Stress Incr | YES | WB | 0.55 | Horz(TL) | 0.06 | 13 | n/a | n/a | | |
| BCDL | 10.0 | Code FBC2004/TPI2002 | | (Matrix) | | | | | | | Weight: 323 lb | |

**LUMBER**
TOP CHORD 2 X 4 SYP No.2D
BOT CHORD 2 X 4 SYP No.2D
WEBS 2 X 4 SYP No.3

**BRACING**
TOP CHORD Structural wood sheathing directly applied or 4-4-2 oc purlins.
BOT CHORD Rigid ceiling directly applied or 6-0-0 oc bracing.
WEBS 1 Row at midpt 3-20, 5-20, 6-19, 7-17, 8-17, 10-16

**REACTIONS** (lb/size) 20=2368/1-0-13, 23=515/0-8-0, 13=1414/0-8-0
Max Horz 23=147(load case 5)
Max Uplift20=-425(load case 5), 23=-192(load case 5), 13=-396(load case 6)
Max Grav 20=2368(load case 1), 23=596(load case 7), 13=1415(load case 8)

**FORCES** (lb) - Maximum Compression/Maximum Tension
TOP CHORD 1-2=-220/218, 2-3=-293/159, 3-4=-87/562, 4-5=-74/668, 5-6=-498/226, 6-7=-831/335, 7-8=-977/323, 8-9=-1464/405, 9-10=-1545/388, 10-11=-1970/459, 11-12=-211/187
BOT CHORD 1-23=-146/236, 22-23=-176/376, 21-22=-125/222, 20-21=-125/222, 19-20=-538/277, 18-19=0/374, 17-18=0/374, 16-17=-129/1351, 15-16=-288/1771, 14-15=-288/1771, 13-14=-311/1508, 12-13=-121/228
WEBS 2-22=-212/138, 3-22=0/347, 3-20=-707/235, 5-20=-1862/367, 5-19=-170/1404, 6-19=-937/189, 6-17=-208/877, 7-17=-37/134, 8-17=-787/293, 8-16=-30/465, 10-16=-489/185, 10-14=0/202, 11-14=0/288, 2-23=-641/325, 11-13=-2009/665

**NOTES**
1) Unbalanced roof live loads have been considered for this design.
2) Wind: ASCE 7-98; 110mph (3-second gust); h=18ft; TCDL=5.0psf; BCDL=5.0psf; Category II; Exp C; enclosed; MWFRS interior zone; cantilever left and right exposed ; Lumber DOL=1.33 plate grip DOL=1.33.
3) Provide adequate drainage to prevent water ponding.
4) This truss has been designed for a 10.0 psf bottom chord live load nonconcurrent with any other live loads.
5) All plates are 3x5 MII20 unless otherwise indicated.
6) This truss requires plate inspection per the Tooth Count Method when this truss is chosen for quality assurance inspection.
7) Provide mechanical connection (by others) of truss to bearing plate capable of withstanding 425 lb uplift at joint 20, 192 lb uplift at joint 23 and 396 lb uplift at joint 13.

**LOAD CASE(S)** Standard


Guo-Jie Zhang, FL Lic #47744
MiTek Industries, Inc.
1801 Massaro Blvd
Tampa FL 33619
FL Cert.#6634


November 22,2005

# Symbols

**PLATE LOCATION AND ORIENTATION**

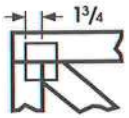


*Center plate on joint unless x,y offsets are indicated. Dimensions are in ft-in-sixteenths. Apply plates to both sides of truss and securely seat.

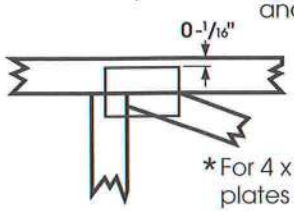


*For 4 x 2 orientation, locate plates 0 - 1/16" from outside edge of truss.

*This symbol indicates the required direction of slots in connector plates.

*** Plate location details available in MiTek 20/20 software or upon request.**

**PLATE SIZE**

4 x 4 — The first dimension is the width perpendicular to slots. Second dimension is the length parallel to slots.

**LATERAL BRACING**

Indicated by symbol shown and/or by text in the bracing section of the output. Use T, I or Eliminator bracing if indicated.

**BEARING**

Indicates location where bearings (supports) occur. Icons vary but reaction section indicates joint number where bearings occur.

**Industry Standards:**

ANSI/TPI1: National Design Specification for Metal Plate Connected Wood Truss Construction.
DSB-89: Design Standard for Bracing.
BCSI1: Building Component Safety Information, Guide to Good Practice for Handling, Installing & Bracing of Metal Plate Connected Wood Trusses.

# Numbering System

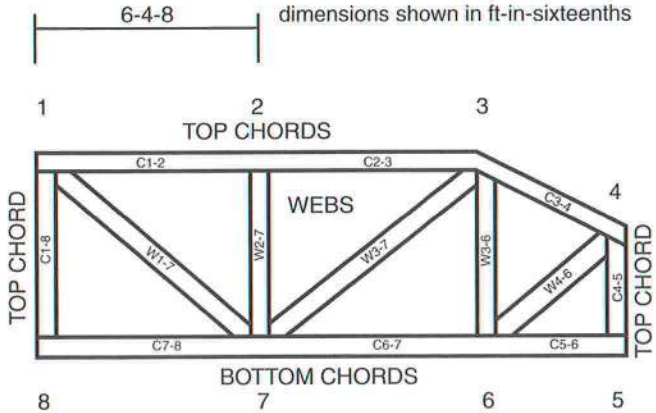


**JOINTS ARE GENERALLY NUMBERED/LETTERED CLOCKWISE AROUND THE TRUSS STARTING AT THE JOINT FARTHEST TO THE LEFT.**

**CHORDS AND WEBS ARE IDENTIFIED BY END JOINT NUMBERS/LETTERS.**

**CONNECTOR PLATE CODE APPROVALS**

| | |
|---|---|
| BOCA | 96-31, 95-43, 96-20-1, 96-67, 84-32 |
| ICBO | 4922, 5243, 5363, 3907 |
| SBCCI | 9667, 9730, 9604B, 9511, 9432A |

MiTek®

TEE-LOK®

# ⚠General Safety Notes

## Failure to Follow Could Cause Property Damage or Personal Injury

1. Additional stability bracing for truss system, e.g. diagonal or X-bracing, is always required. See BCSI1.
2. Never exceed the design loading shown and never stack materials on inadequately braced trusses.
3. Provide copies of this truss design to the building designer, erection supervisor, property owner and all other interested parties.
4. Cut members to bear tightly against each other.
5. Place plates on each face of truss at each joint and embed fully. Knots and wane at joint locations are regulated by ANSI/TPI1.
6. Design assumes trusses will be suitably protected from the environment in accord with ANSI/TPI1.
7. Unless otherwise noted, moisture content of lumber shall not exceed 19% at time of fabrication.
8. Unless expressly noted, this design is not applicable for use with fire retardant or preservative treated lumber.
9. Camber is a non-structural consideration and is the responsibility of truss fabricator. General practice is to camber for dead load deflection.
10. Plate type, size, orientation and location dimensions shown indicate minimum plating requirements.
11. Lumber used shall be of the species and size, and in all respects, equal to or better than that specified.
12. Top chords must be sheathed or purlins provided at spacing shown on design.
13. Bottom chords require lateral bracing at 10 ft. spacing, or less, if no ceiling is installed, unless otherwise noted.
14. Connections not shown are the responsibility of others.
15. Do not cut or alter truss member or plate without prior approval of a professional engineer.
16. Install and load vertically unless indicated otherwise.

| Job | Truss | Truss Type | Qty | Ply | WALKER RES |
|---|---|---|---|---|---|
| WALG | A11 | HIP | 1 | 1 | T1874998 |

Job Reference (optional)

SANTA FE TRUSS, HIGH SPRINGS FL., p.colacino

6.200 s Oct 18 2005 MiTek Industries, Inc. Mon Nov 21 16:20:57 2005 Page 1

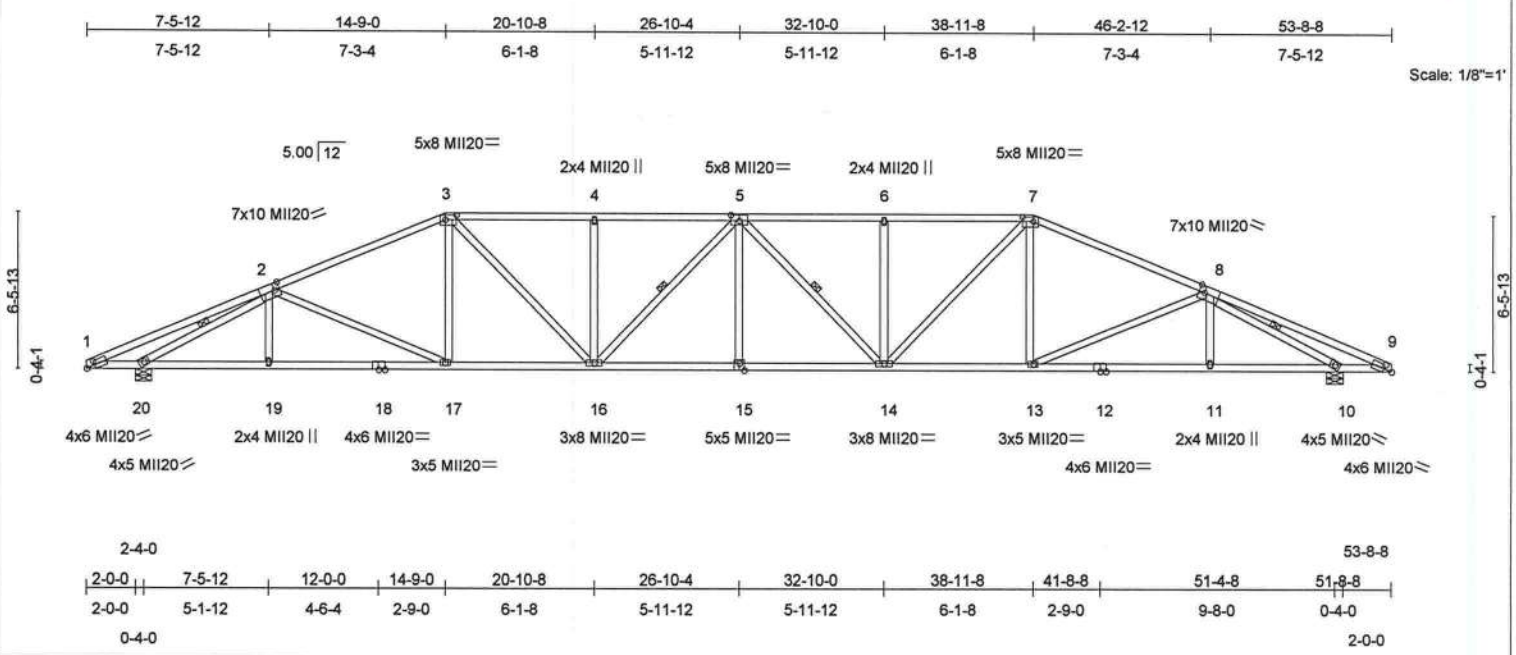


Plate Offsets (X,Y): [1:0-4-3,0-2-0], [2:0-2-12,Edge], [3:0-5-4,0-2-4], [5:0-4-0,0-3-0], [7:0-5-4,0-2-4], [8:0-2-12,Edge], [9:0-4-3,0-2-0], [15:0-2-8,0-3-4]

| LOADING (psf) | | SPACING | 2-0-0 | CSI | | DEFL | in | (loc) | l/defl | L/d | PLATES | GRIP |
|---|---|---|---|---|---|---|---|---|---|---|---|---|
| TCLL | 20.0 | Plates Increase | 1.25 | TC | 0.41 | Vert(LL) | -0.32 | 15 | >999 | 240 | MII20 | 249/190 |
| TCDL | 10.0 | Lumber Increase | 1.25 | BC | 0.84 | Vert(TL) | -0.81 | 14-15 | >739 | 180 | | |
| BCLL | 0.0 | Rep Stress Incr | YES | WB | 0.78 | Horz(TL) | 0.27 | 10 | n/a | n/a | | |
| BCDL | 10.0 | Code FBC2004/TPI2002 | | (Matrix) | | | | | | | Weight: 306 lb | |

**LUMBER**
TOP CHORD 2 X 4 SYP No.2D
BOT CHORD 2 X 4 SYP No.2D
WEBS 2 X 4 SYP No.3

**BRACING**
TOP CHORD Structural wood sheathing directly applied or 3-1-15 oc purlins.
BOT CHORD Rigid ceiling directly applied or 6-0-0 oc bracing.
WEBS 1 Row at midpt 5-16, 5-14, 2-20, 8-10

**REACTIONS** (lb/size) 20=2148/0-8-0, 10=2148/0-8-0
Max Horz 20=92(load case 5)
Max Uplift20=-454(load case 3), 10=-454(load case 4)

**FORCES** (lb) - Maximum Compression/Maximum Tension
TOP CHORD 1-2=-126/94, 2-3=-3391/761, 3-4=-3746/911, 4-5=-3746/911, 5-6=-3746/911, 6-7=-3746/911, 7-8=-3391/761, 8-9=-127/93
BOT CHORD 1-20=-8/154, 19-20=-561/3083, 18-19=-566/3079, 17-18=-566/3079, 16-17=-550/3056, 15-16=-785/3982, 14-15=-785/3982, 13-14=-546/3056, 12-13=-562/3079, 11-12=-562/3079, 10-11=-558/3083, 9-10=-7/154
WEBS 2-19=0/236, 2-17=-53/208, 3-17=-1/295, 3-16=-261/1097, 4-16=-370/181, 5-16=-421/89, 5-15=0/247, 5-14=-421/89, 6-14=-369/181, 7-14=-261/1097, 7-13=-1/295, 8-13=-53/208, 8-11=0/236, 2-20=-3559/735, 8-10=-3559/735

**NOTES**
1) Unbalanced roof live loads have been considered for this design.
2) Wind: ASCE 7-98; 110mph (3-second gust); h=18ft; TCDL=5.0psf; BCDL=5.0psf; Category II; Exp C; enclosed; MWFRS interior zone; cantilever left and right exposed ; Lumber DOL=1.33 plate grip DOL=1.33.
3) Provide adequate drainage to prevent water ponding.
4) This truss has been designed for a 10.0 psf bottom chord live load nonconcurrent with any other live loads.
5) This truss requires plate inspection per the Tooth Count Method when this truss is chosen for quality assurance inspection.
6) Provide mechanical connection (by others) of truss to bearing plate capable of withstanding 454 lb uplift at joint 20 and 454 lb uplift at joint 10.

**LOAD CASE(S)** Standard


Guo-Jie Zhang, FL Lic #47744
MiTek Industries, Inc.
1801 Massaro Blvd
Tampa FL 33619
FL Cert.#6634


November 22,2005

# Symbols

**PLATE LOCATION AND ORIENTATION**


*Center plate on joint unless x,y offsets are indicated. Dimensions are in ft-in-sixteenths. Apply plates to both sides of truss and securely seat.

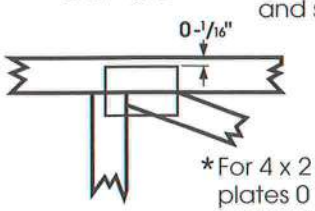


*For 4 x 2 orientation, locate plates 0 - 1/16" from outside edge of truss.

*This symbol indicates the required direction of slots in connector plates.

*** Plate location details available in MiTek 20/20 software or upon request.**

**PLATE SIZE**

4 x 4 — The first dimension is the width perpendicular to slots. Second dimension is the length parallel to slots.

**LATERAL BRACING**

Indicated by symbol shown and/or by text in the bracing section of the output. Use T, I or Eliminator bracing if indicated.

**BEARING**

Indicates location where bearings (supports) occur. Icons vary but reaction section indicates joint number where bearings occur.

**Industry Standards:**

ANSI/TPI1: National Design Specification for Metal Plate Connected Wood Truss Construction.
DSB-89: Design Standard for Bracing.
BCSI1: Building Component Safety Information, Guide to Good Practice for Handling, Installing & Bracing of Metal Plate Connected Wood Trusses.

# Numbering System

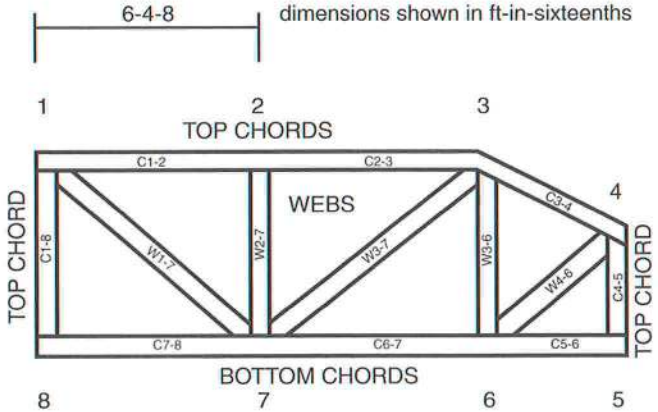


**JOINTS ARE GENERALLY NUMBERED/LETTERED CLOCKWISE AROUND THE TRUSS STARTING AT THE JOINT FARTHEST TO THE LEFT.**

**CHORDS AND WEBS ARE IDENTIFIED BY END JOINT NUMBERS/LETTERS.**

**CONNECTOR PLATE CODE APPROVALS**

| | |
|---|---|
| BOCA | 96-31, 95-43, 96-20-1, 96-67, 84-32 |
| ICBO | 4922, 5243, 5363, 3907 |
| SBCCI | 9667, 9730, 9604B, 9511, 9432A |

MiTek®

TEE-LOK®

# ⚠General Safety Notes

## Failure to Follow Could Cause Property Damage or Personal Injury

1. Additional stability bracing for truss system, e.g. diagonal or X-bracing, is always required. See BCSI1.
2. Never exceed the design loading shown and never stack materials on inadequately braced trusses.
3. Provide copies of this truss design to the building designer, erection supervisor, property owner and all other interested parties.
4. Cut members to bear tightly against each other.
5. Place plates on each face of truss at each joint and embed fully. Knots and wane at joint locations are regulated by ANSI/TPI1.
6. Design assumes trusses will be suitably protected from the environment in accord with ANSI/TPI1.
7. Unless otherwise noted, moisture content of lumber shall not exceed 19% at time of fabrication.
8. Unless expressly noted, this design is not applicable for use with fire retardant or preservative treated lumber.
9. Camber is a non-structural consideration and is the responsibility of truss fabricator. General practice is to camber for dead load deflection.
10. Plate type, size, orientation and location dimensions shown indicate minimum plating requirements.
11. Lumber used shall be of the species and size, and in all respects, equal to or better than that specified.
12. Top chords must be sheathed or purlins provided at spacing shown on design.
13. Bottom chords require lateral bracing at 10 ft. spacing, or less, if no ceiling is installed, unless otherwise noted.
14. Connections not shown are the responsibility of others.
15. Do not cut or alter truss member or plate without prior approval of a professional engineer.
16. Install and load vertically unless indicated otherwise.

| Job | Truss | Truss Type | Qty | Ply | WALKER RES |
|---|---|---|---|---|---|
| WALG | A12 | HIP | 1 | 1 | T1874999 |

Job Reference (optional)

SANTA FE TRUSS, HIGH SPRINGS FL., p.colacino

6.200 s Oct 18 2005 MiTek Industries, Inc. Mon Nov 21 16:20:58 2005 Page 1

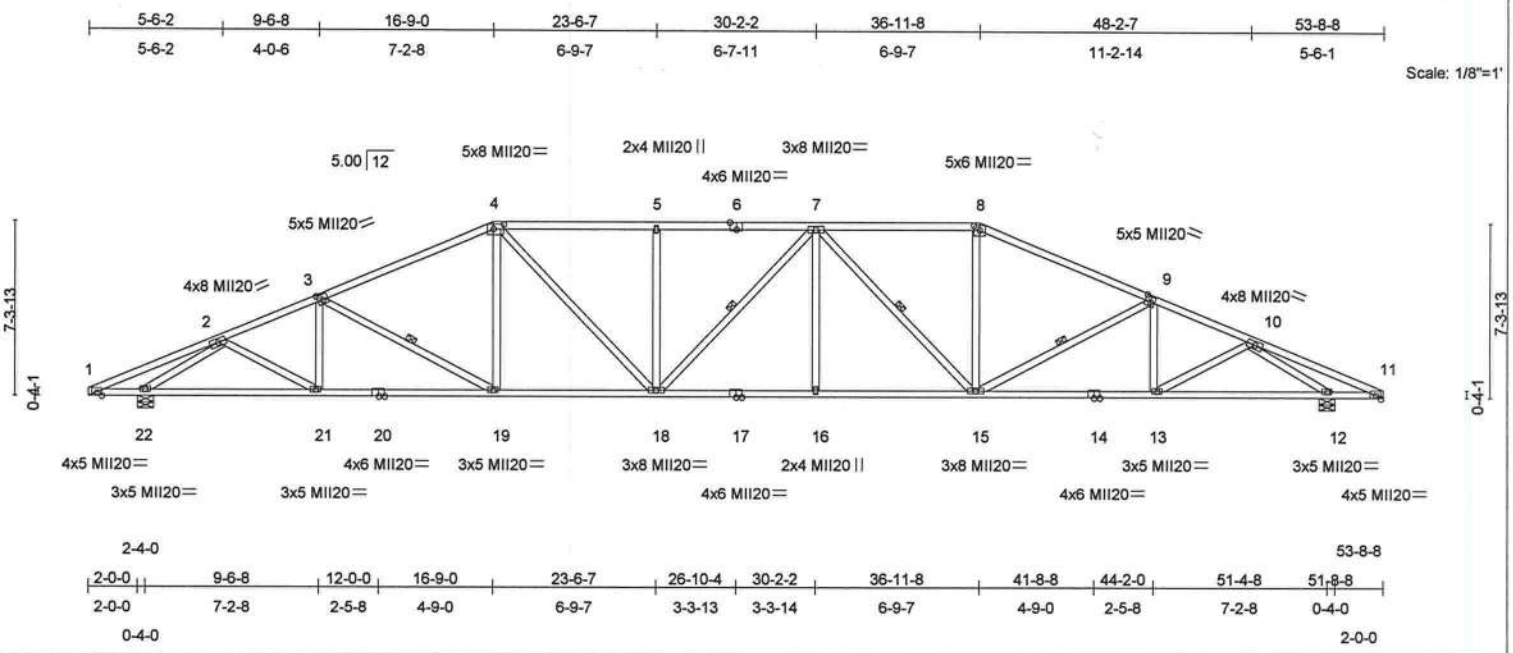


Plate Offsets (X,Y): [3:0-2-8,0-3-0], [4:0-5-4,0-2-4], [6:0-3-0,Edge], [8:0-3-0,0-2-4], [9:0-2-8,0-3-0]

| LOADING (psf) | | SPACING | 2-0-0 | CSI | | DEFL | in | (loc) | l/defl | L/d | PLATES | GRIP |
|---|---|---|---|---|---|---|---|---|---|---|---|---|
| TCLL | 20.0 | Plates Increase | 1.25 | TC | 0.45 | Vert(LL) | -0.27 | 16-18 | >999 | 240 | MII20 | 249/190 |
| TCDL | 10.0 | Lumber Increase | 1.25 | BC | 0.65 | Vert(TL) | -0.69 | 16-18 | >859 | 180 | | |
| BCLL | 0.0 | Rep Stress Incr | YES | WB | 1.00 | Horz(TL) | 0.25 | 12 | n/a | n/a | | |
| BCDL | 10.0 | Code FBC2004/TPI2002 | | (Matrix) | | | | | | | Weight: 306 lb | |

**LUMBER**
TOP CHORD 2 X 4 SYP No.2D
BOT CHORD 2 X 4 SYP No.2D
WEBS 2 X 4 SYP No.3

**BRACING**
TOP CHORD Structural wood sheathing directly applied or 3-2-11 oc purlins.
BOT CHORD Rigid ceiling directly applied or 6-0-0 oc bracing.
WEBS 1 Row at midpt 3-19, 7-18, 7-15, 9-15

**REACTIONS** (lb/size) 22=2148/0-8-0, 12=2148/0-8-0
Max Horz 22=104(load case 5)
Max Uplift22=-434(load case 3), 12=-434(load case 4)

**FORCES** (lb) - Maximum Compression/Maximum Tension
TOP CHORD 1-2=-194/176, 2-3=-3443/671, 3-4=-3259/714, 4-5=-3443/820, 5-6=-3442/820, 6-7=-3442/820, 7-8=-2952/695, 8-9=-3260/714, 9-10=-3443/671, 10-11=-194/175
BOT CHORD 1-22=-112/217, 21-22=-473/2604, 20-21=-524/3142, 19-20=-524/3142, 18-19=-486/2941, 17-18=-611/3442, 16-17=-611/3442, 15-16=-611/3442, 14-15=-521/3142, 13-14=-521/3142, 12-13=-470/2605, 11-12=-111/216
WEBS 2-21=-72/611, 3-21=-158/118, 3-19=-258/173, 4-19=-16/376, 4-18=-191/868, 5-18=-415/201, 7-18=-109/110, 7-16=0/260, 7-15=-859/191, 8-15=-86/780, 9-15=-258/174, 9-13=-157/118, 10-13=-72/610, 2-22=-3303/738, 10-12=-3303/738

**NOTES**
1) Unbalanced roof live loads have been considered for this design.
2) Wind: ASCE 7-98; 110mph (3-second gust); h=18ft; TCDL=5.0psf; BCDL=5.0psf; Category II; Exp C; enclosed; MWFRS interior zone; cantilever left and right exposed ; Lumber DOL=1.33 plate grip DOL=1.33.
3) Provide adequate drainage to prevent water ponding.
4) This truss has been designed for a 10.0 psf bottom chord live load nonconcurrent with any other live loads.
5) This truss requires plate inspection per the Tooth Count Method when this truss is chosen for quality assurance inspection.
6) Provide mechanical connection (by others) of truss to bearing plate capable of withstanding 434 lb uplift at joint 22 and 434 lb uplift at joint 12.

**LOAD CASE(S)** Standard


Guo-Jie Zhang, FL Lic #47744
MiTek Industries, Inc.
1801 Massaro Blvd
Tampa FL 33619
FL Cert.#6634


November 22,2005

# Symbols

**PLATE LOCATION AND ORIENTATION**

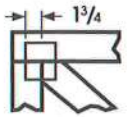


*Center plate on joint unless x,y offsets are indicated. Dimensions are in ft-in-sixteenths. Apply plates to both sides of truss and securely seat.

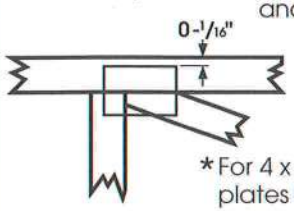


*For 4 x 2 orientation, locate plates 0 - 1/16" from outside edge of truss.



*This symbol indicates the required direction of slots in connector plates.

*** Plate location details available in MiTek 20/20 software or upon request.**

**PLATE SIZE**

4 x 4 — The first dimension is the width perpendicular to slots. Second dimension is the length parallel to slots.

**LATERAL BRACING**

Indicated by symbol shown and/or by text in the bracing section of the output. Use T, I or Eliminator bracing if indicated.

**BEARING**

Indicates location where bearings (supports) occur. Icons vary but reaction section indicates joint number where bearings occur.

**Industry Standards:**

ANSI/TPI1: National Design Specification for Metal Plate Connected Wood Truss Construction.
DSB-89: Design Standard for Bracing.
BCSI1: Building Component Safety Information, Guide to Good Practice for Handling, Installing & Bracing of Metal Plate Connected Wood Trusses.

# Numbering System

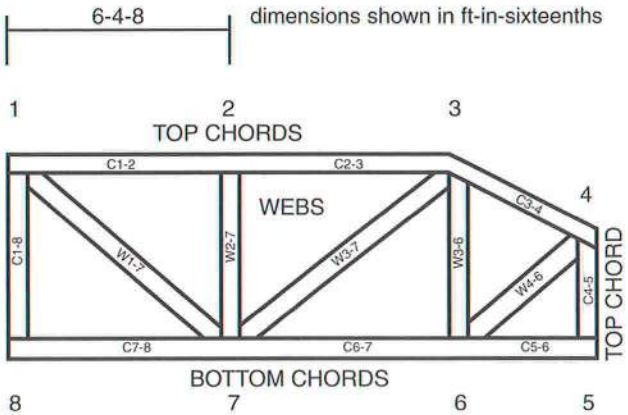


**JOINTS ARE GENERALLY NUMBERED/LETTERED CLOCKWISE AROUND THE TRUSS STARTING AT THE JOINT FARTHEST TO THE LEFT.**

**CHORDS AND WEBS ARE IDENTIFIED BY END JOINT NUMBERS/LETTERS.**

**CONNECTOR PLATE CODE APPROVALS**

| | |
|---|---|
| BOCA | 96-31, 95-43, 96-20-1, 96-67, 84-32 |
| ICBO | 4922, 5243, 5363, 3907 |
| SBCCI | 9667, 9730, 9604B, 9511, 9432A |

MiTek®

TEE-LOK®

# ⚠General Safety Notes

## Failure to Follow Could Cause Property Damage or Personal Injury

1. Additional stability bracing for truss system, e.g. diagonal or X-bracing, is always required. See BCSI1.
2. Never exceed the design loading shown and never stack materials on inadequately braced trusses.
3. Provide copies of this truss design to the building designer, erection supervisor, property owner and all other interested parties.
4. Cut members to bear tightly against each other.
5. Place plates on each face of truss at each joint and embed fully. Knots and wane at joint locations are regulated by ANSI/TPI1.
6. Design assumes trusses will be suitably protected from the environment in accord with ANSI/TPI1.
7. Unless otherwise noted, moisture content of lumber shall not exceed 19% at time of fabrication.
8. Unless expressly noted, this design is not applicable for use with fire retardant or preservative treated lumber.
9. Camber is a non-structural consideration and is the responsibility of truss fabricator. General practice is to camber for dead load deflection.
10. Plate type, size, orientation and location dimensions shown indicate minimum plating requirements.
11. Lumber used shall be of the species and size, and in all respects, equal to or better than that specified.
12. Top chords must be sheathed or purlins provided at spacing shown on design.
13. Bottom chords require lateral bracing at 10 ft. spacing, or less, if no ceiling is installed, unless otherwise noted.
14. Connections not shown are the responsibility of others.
15. Do not cut or alter truss member or plate without prior approval of a professional engineer.
16. Install and load vertically unless indicated otherwise.

| Job | Truss | Truss Type | Qty | Ply | WALKER RES |
|---|---|---|---|---|---|
| WALG | A13 | HIP | 1 | 1 | T1875000 |

Job Reference (optional)

SANTA FE TRUSS, HIGH SPRINGS FL., p.colacino

6.200 s Oct 18 2005 MiTek Industries, Inc. Mon Nov 21 16:20:59 2005 Page 1

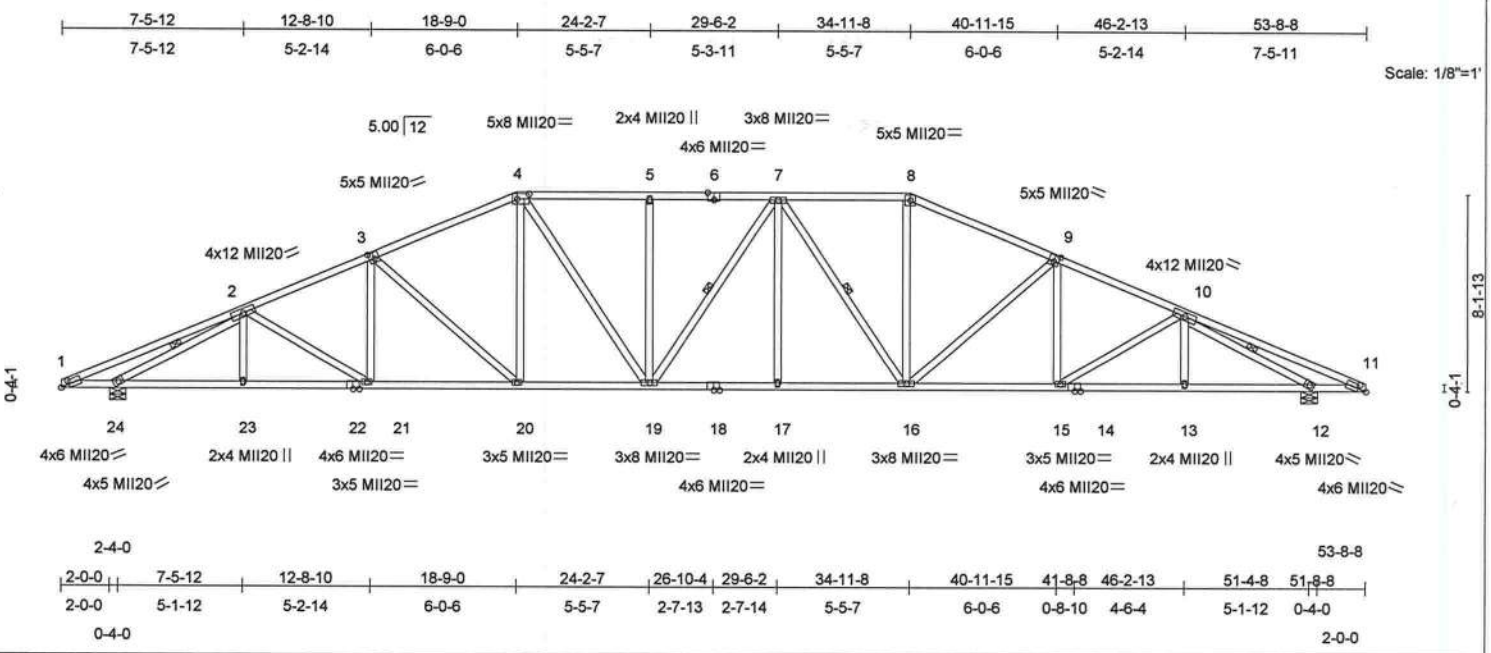





Plate Offsets (X,Y): [1:0-4-3,0-2-0], [3:0-2-8,0-3-0], [4:0-5-12,0-2-8], [6:0-3-0,Edge], [9:0-2-8,0-3-0], [11:0-4-3,0-2-0]

| LOADING (psf) | | SPACING | 2-0-0 | CSI | | DEFL | in | (loc) | l/defl | L/d | PLATES | GRIP |
|---|---|---|---|---|---|---|---|---|---|---|---|---|
| TCLL | 20.0 | Plates Increase | 1.25 | TC | 0.38 | Vert(LL) | -0.25 | 17-19 | >999 | 240 | MII20 | 249/190 |
| TCDL | 10.0 | Lumber Increase | 1.25 | BC | 0.84 | Vert(TL) | -0.64 | 17-19 | >927 | 180 | | |
| BCLL | 0.0 | Rep Stress Incr | YES | WB | 0.77 | Horz(TL) | 0.25 | 12 | n/a | n/a | | |
| BCDL | 10.0 | Code FBC2004/TPI2002 | | (Matrix) | | | | | | | Weight: 332 lb | |

**LUMBER**
TOP CHORD 2 X 4 SYP No.2D
BOT CHORD 2 X 4 SYP No.2D
WEBS 2 X 4 SYP No.3

**BRACING**
TOP CHORD Structural wood sheathing directly applied or 3-4-1 oc purlins.
BOT CHORD Rigid ceiling directly applied or 6-0-0 oc bracing.
WEBS 1 Row at midpt 7-19, 7-16, 2-24, 10-12

**REACTIONS** (lb/size) 24=2148/0-8-0, 12=2148/0-8-0
Max Horz 24=117(load case 5)
Max Uplift24=-444(load case 5), 12=-444(load case 6)

**FORCES** (lb) - Maximum Compression/Maximum Tension
TOP CHORD 1-2=-121/85, 2-3=-3441/664, 3-4=-3100/668, 4-5=-3094/718, 5-6=-3094/718, 6-7=-3094/718, 7-8=-2816/647, 8-9=-3100/668, 9-10=-3441/664, 10-11=-121/84
BOT CHORD 1-24=-4/156, 23-24=-531/3036, 22-23=-531/3036, 21-22=-531/3036, 20-21=-478/3114, 19-20=-413/2807, 18-19=-484/3094, 17-18=-484/3094, 16-17=-484/3094, 15-16=-474/3114, 14-15=-483/3037, 13-14=-483/3037, 12-13=-483/3037, 11-12=-4/156
WEBS 2-23=0/170, 2-21=-3/198, 3-21=0/200, 3-20=-438/203, 4-20=-75/444, 4-19=-136/658, 5-19=-331/160, 7-19=-128/129, 7-17=0/205, 7-16=-651/136, 8-16=-104/806, 9-16=-437/204, 9-15=0/200, 10-15=-3/197, 10-13=0/170, 2-24=-3503/663, 10-12=-3503/663

**NOTES**
1) Unbalanced roof live loads have been considered for this design.
2) Wind: ASCE 7-98; 110mph (3-second gust); h=18ft; TCDL=5.0psf; BCDL=5.0psf; Category II; Exp C; enclosed; MWFRS interior zone; cantilever left and right exposed ; Lumber DOL=1.33 plate grip DOL=1.33.
3) Provide adequate drainage to prevent water ponding.
4) This truss has been designed for a 10.0 psf bottom chord live load nonconcurrent with any other live loads.
5) This truss requires plate inspection per the Tooth Count Method when this truss is chosen for quality assurance inspection.
6) Provide mechanical connection (by others) of truss to bearing plate capable of withstanding 444 lb uplift at joint 24 and 444 lb uplift at joint 12.

**LOAD CASE(S)** Standard


Guo-Jie Zhang, FL Lic #47744
MiTek Industries, Inc.
1801 Massaro Blvd
Tampa FL 33619
FL Cert.#6634


November 22,2005

# Symbols

**PLATE LOCATION AND ORIENTATION**

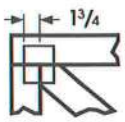


*Center plate on joint unless x,y offsets are indicated. Dimensions are in ft-in-sixteenths. Apply plates to both sides of truss and securely seat.

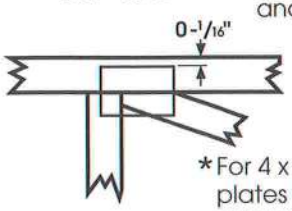


*For 4 x 2 orientation, locate plates 0 - 1/16" from outside edge of truss.

*This symbol indicates the required direction of slots in connector plates.

*** Plate location details available in MiTek 20/20 software or upon request.**

**PLATE SIZE**

4 x 4 — The first dimension is the width perpendicular to slots. Second dimension is the length parallel to slots.

**LATERAL BRACING**

Indicated by symbol shown and/or by text in the bracing section of the output. Use T, I or Eliminator bracing if indicated.

**BEARING**

Indicates location where bearings (supports) occur. Icons vary but reaction section indicates joint number where bearings occur.

**Industry Standards:**

ANSI/TPI1: National Design Specification for Metal Plate Connected Wood Truss Construction.
DSB-89: Design Standard for Bracing.
BCSI1: Building Component Safety Information, Guide to Good Practice for Handling, Installing & Bracing of Metal Plate Connected Wood Trusses.

# Numbering System

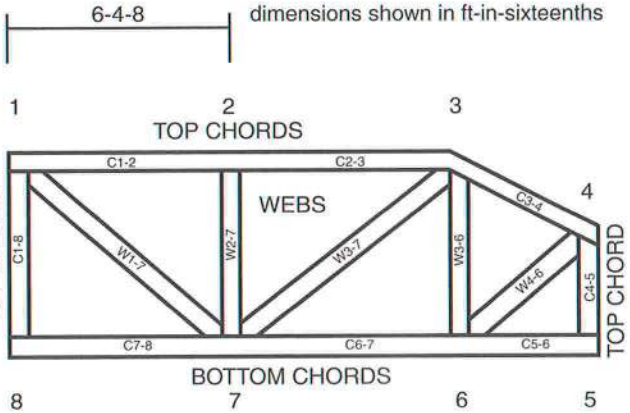


**JOINTS ARE GENERALLY NUMBERED/LETTERED CLOCKWISE AROUND THE TRUSS STARTING AT THE JOINT FARTHEST TO THE LEFT.**

**CHORDS AND WEBS ARE IDENTIFIED BY END JOINT NUMBERS/LETTERS.**

**CONNECTOR PLATE CODE APPROVALS**

| | |
|---|---|
| BOCA | 96-31, 95-43, 96-20-1, 96-67, 84-32 |
| ICBO | 4922, 5243, 5363, 3907 |
| SBCCI | 9667, 9730, 9604B, 9511, 9432A |

MiTek®

TEE-LOK®

# ⚠General Safety Notes

## Failure to Follow Could Cause Property Damage or Personal Injury

1. Additional stability bracing for truss system, e.g. diagonal or X-bracing, is always required. See BCSI1.
2. Never exceed the design loading shown and never stack materials on inadequately braced trusses.
3. Provide copies of this truss design to the building designer, erection supervisor, property owner and all other interested parties.
4. Cut members to bear tightly against each other.
5. Place plates on each face of truss at each joint and embed fully. Knots and wane at joint locations are regulated by ANSI/TPI1.
6. Design assumes trusses will be suitably protected from the environment in accord with ANSI/TPI1.
7. Unless otherwise noted, moisture content of lumber shall not exceed 19% at time of fabrication.
8. Unless expressly noted, this design is not applicable for use with fire retardant or preservative treated lumber.
9. Camber is a non-structural consideration and is the responsibility of truss fabricator. General practice is to camber for dead load deflection.
10. Plate type, size, orientation and location dimensions shown indicate minimum plating requirements.
11. Lumber used shall be of the species and size, and in all respects, equal to or better than that specified.
12. Top chords must be sheathed or purlins provided at spacing shown on design.
13. Bottom chords require lateral bracing at 10 ft. spacing, or less, if no ceiling is installed, unless otherwise noted.
14. Connections not shown are the responsibility of others.
15. Do not cut or alter truss member or plate without prior approval of a professional engineer.
16. Install and load vertically unless indicated otherwise.

| Job | Truss | Truss Type | Qty | Ply | WALKER RES |
|---|---|---|---|---|---|
| WALG | A14 | HIP | 1 | 1 | T1875001 |

Job Reference (optional)

SANTA FE TRUSS, HIGH SPRINGS FL., p.colacino

6.200 s Oct 18 2005 MiTek Industries, Inc. Mon Nov 21 16:21:00 2005 Page 1

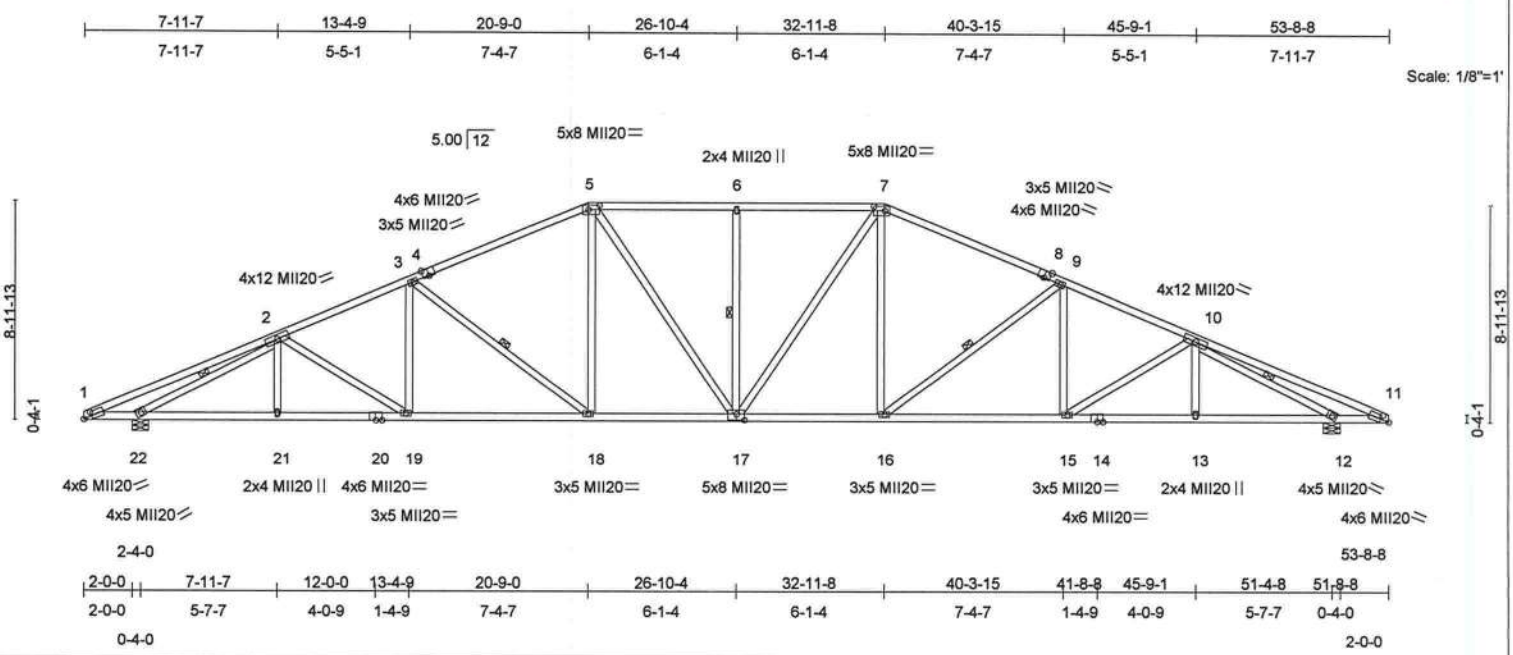


Plate Offsets (X,Y): [1:0-4-3,0-2-0], [4:0-3-0,Edge], [5:0-5-4,0-2-4], [7:0-5-4,0-2-4], [8:0-3-0,Edge], [9:0-0-0,0-0-0], [10:0-0-0,0-0-0], [11:0-4-3,0-2-0], [17:0-4-0,0-3-0]

| LOADING (psf) | | SPACING | 2-0-0 | CSI | | DEFL | in | (loc) | l/defl | L/d | PLATES | GRIP |
|---|---|---|---|---|---|---|---|---|---|---|---|---|
| TCLL | 20.0 | Plates Increase | 1.25 | TC | 0.44 | Vert(LL) | -0.24 | 17 | >999 | 240 | MII20 | 249/190 |
| TCDL | 10.0 | Lumber Increase | 1.25 | BC | 0.88 | Vert(TL) | -0.61 | 18-19 | >974 | 180 | | |
| BCLL | 0.0 | Rep Stress Incr | YES | WB | 0.84 | Horz(TL) | 0.25 | 12 | n/a | n/a | | |
| BCDL | 10.0 | Code FBC2004/TPI2002 | | (Matrix) | | | | | | | Weight: 322 lb | |

**LUMBER**
TOP CHORD 2 X 4 SYP No.2D
BOT CHORD 2 X 4 SYP No.2D
WEBS 2 X 4 SYP No.3

**BRACING**
TOP CHORD Structural wood sheathing directly applied or 3-2-10 oc purlins.
BOT CHORD Rigid ceiling directly applied or 8-5-5 oc bracing.
WEBS 1 Row at midpt 3-18, 6-17, 9-16, 2-22, 10-12

**REACTIONS** (lb/size) 22=2148/0-8-0, 12=2148/0-8-0
Max Horz 22=129(load case 5)
Max Uplift22=-460(load case 5), 12=-460(load case 6)

**FORCES** (lb) - Maximum Compression/Maximum Tension
TOP CHORD 1-2=-158/61, 2-3=-3434/621, 3-4=-2980/585, 4-5=-2899/611, 5-6=-2832/637, 6-7=-2832/637, 7-8=-2899/611, 8-9=-2980/585, 9-10=-3434/621, 10-11=-158/61
BOT CHORD 1-22=0/152, 21-22=-575/3081, 20-21=-575/3081, 19-20=-575/3081, 18-19=-495/3112, 17-18=-342/2683, 16-17=-337/2683, 15-16=-428/3112, 14-15=-452/3081, 13-14=-452/3081, 12-13=-452/3081, 11-12=0/152
WEBS 2-21=0/176, 2-19=-8/142, 3-19=0/257, 3-18=-570/242, 5-18=-73/531, 5-17=-86/459, 6-17=-349/172, 7-17=-86/459, 7-16=-73/531, 9-16=-570/242, 9-15=0/257, 10-15=-8/142, 10-13=0/176, 2-22=-3499/687, 10-12=-3499/688

**NOTES**
1) Unbalanced roof live loads have been considered for this design.
2) Wind: ASCE 7-98; 110mph (3-second gust); h=18ft; TCDL=5.0psf; BCDL=5.0psf; Category II; Exp C; enclosed; MWFRS interior zone; cantilever left and right exposed ; Lumber DOL=1.33 plate grip DOL=1.33.
3) Provide adequate drainage to prevent water ponding.
4) This truss has been designed for a 10.0 psf bottom chord live load nonconcurrent with any other live loads.
5) This truss requires plate inspection per the Tooth Count Method when this truss is chosen for quality assurance inspection.
6) Provide mechanical connection (by others) of truss to bearing plate capable of withstanding 460 lb uplift at joint 22 and 460 lb uplift at joint 12.

**LOAD CASE(S)** Standard


Guo-Jie Zhang, FL Lic #47744
MiTek Industries, Inc.
1801 Massaro Blvd
Tampa FL 33619
FL Cert.#6634


November 22,2005

# Symbols

**PLATE LOCATION AND ORIENTATION**

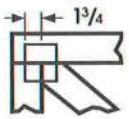


*Center plate on joint unless x,y offsets are indicated. Dimensions are in ft-in-sixteenths. Apply plates to both sides of truss and securely seat.

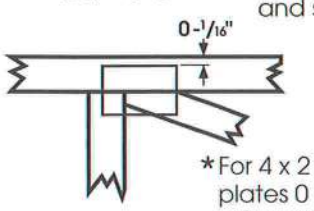


*For 4 x 2 orientation, locate plates 0 - 1/16" from outside edge of truss.

*This symbol indicates the required direction of slots in connector plates.

*** Plate location details available in MiTek 20/20 software or upon request.**

**PLATE SIZE**

4 x 4 — The first dimension is the width perpendicular to slots. Second dimension is the length parallel to slots.

**LATERAL BRACING**

Indicated by symbol shown and/or by text in the bracing section of the output. Use T, I or Eliminator bracing if indicated.

**BEARING**

Indicates location where bearings (supports) occur. Icons vary but reaction section indicates joint number where bearings occur.

**Industry Standards:**

ANSI/TPI1: National Design Specification for Metal Plate Connected Wood Truss Construction.
DSB-89: Design Standard for Bracing.
BCSI1: Building Component Safety Information, Guide to Good Practice for Handling, Installing & Bracing of Metal Plate Connected Wood Trusses.

# Numbering System

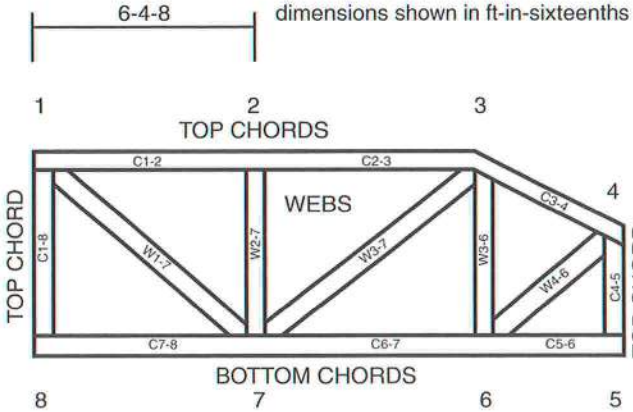


**JOINTS ARE GENERALLY NUMBERED/LETTERED CLOCKWISE AROUND THE TRUSS STARTING AT THE JOINT FARTHEST TO THE LEFT.**

**CHORDS AND WEBS ARE IDENTIFIED BY END JOINT NUMBERS/LETTERS.**

**CONNECTOR PLATE CODE APPROVALS**

| | |
|---|---|
| BOCA | 96-31, 95-43, 96-20-1, 96-67, 84-32 |
| ICBO | 4922, 5243, 5363, 3907 |
| SBCCI | 9667, 9730, 9604B, 9511, 9432A |

MiTek®

TEE-LOK®

# ⚠General Safety Notes

## Failure to Follow Could Cause Property Damage or Personal Injury

1. Additional stability bracing for truss system, e.g. diagonal or X-bracing, is always required. See BCSI1.
2. Never exceed the design loading shown and never stack materials on inadequately braced trusses.
3. Provide copies of this truss design to the building designer, erection supervisor, property owner and all other interested parties.
4. Cut members to bear tightly against each other.
5. Place plates on each face of truss at each joint and embed fully. Knots and wane at joint locations are regulated by ANSI/TPI1.
6. Design assumes trusses will be suitably protected from the environment in accord with ANSI/TPI1.
7. Unless otherwise noted, moisture content of lumber shall not exceed 19% at time of fabrication.
8. Unless expressly noted, this design is not applicable for use with fire retardant or preservative treated lumber.
9. Camber is a non-structural consideration and is the responsibility of truss fabricator. General practice is to camber for dead load deflection.
10. Plate type, size, orientation and location dimensions shown indicate minimum plating requirements.
11. Lumber used shall be of the species and size, and in all respects, equal to or better than that specified.
12. Top chords must be sheathed or purlins provided at spacing shown on design.
13. Bottom chords require lateral bracing at 10 ft. spacing, or less, if no ceiling is installed, unless otherwise noted.
14. Connections not shown are the responsibility of others.
15. Do not cut or alter truss member or plate without prior approval of a professional engineer.
16. Install and load vertically unless indicated otherwise.

| Job | Truss | Truss Type | Qty | Ply | WALKER RES |
|---|---|---|---|---|---|
| WALG | A15 | HIP | 1 | 1 | T1875002 |

Job Reference (optional)

SANTA FE TRUSS, HIGH SPRINGS FL., p.colacino

6.200 s Oct 18 2005 MiTek Industries, Inc. Mon Nov 21 16:21:02 2005 Page 1

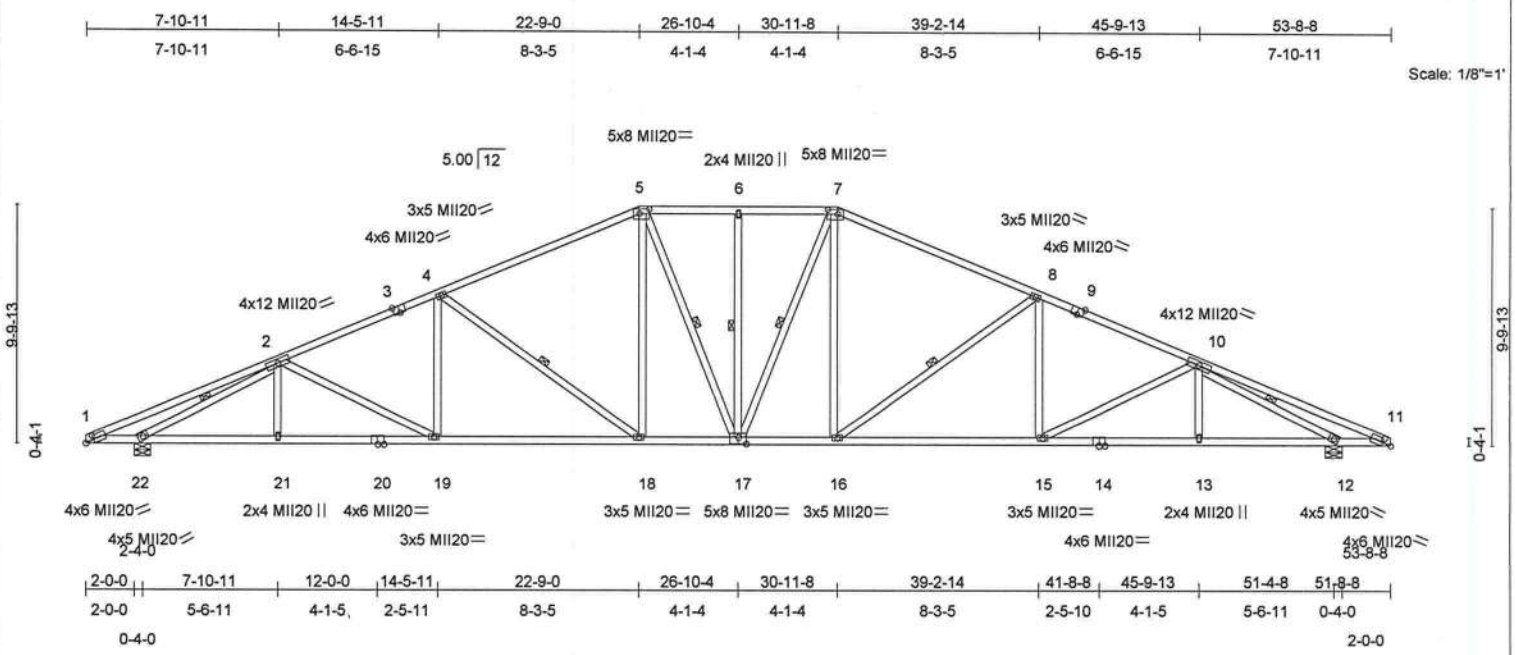


Plate Offsets (X,Y): [1:0-4-3,0-2-0], [3:0-3-0,Edge], [5:0-5-4,0-2-4], [7:0-5-4,0-2-4], [8:0-0-0,0-0-0], [9:0-3-0,Edge], [10:0-0-0,0-0-0], [11:0-4-3,0-2-0], [17:0-4-0,0-3-0]

| LOADING (psf) | | SPACING | 2-0-0 | CSI | | DEFL | in | (loc) | l/defl | L/d | PLATES | GRIP |
|---|---|---|---|---|---|---|---|---|---|---|---|---|
| TCLL | 20.0 | Plates Increase | 1.25 | TC | 0.57 | Vert(LL) | -0.23 | 18 | >999 | 240 | MII20 | 249/190 |
| TCDL | 10.0 | Lumber Increase | 1.25 | BC | 0.86 | Vert(TL) | -0.66 | 18-19 | >899 | 180 | | |
| BCLL | 0.0 | Rep Stress Incr | YES | WB | 0.84 | Horz(TL) | 0.25 | 12 | n/a | n/a | | |
| BCDL | 10.0 | Code FBC2004/TPI2002 | | (Matrix) | | | | | | | Weight: 333 lb | |

**LUMBER**
TOP CHORD 2 X 4 SYP No.2D
BOT CHORD 2 X 4 SYP No.2D
WEBS 2 X 4 SYP No.3

**BRACING**
TOP CHORD Structural wood sheathing directly applied or 3-2-10 oc purlins.
BOT CHORD Rigid ceiling directly applied or 8-1-13 oc bracing.
WEBS 1 Row at midpt 4-18, 5-17, 6-17, 7-17, 8-16, 2-22, 10-12

**REACTIONS** (lb/size) 22=2148/0-8-0, 12=2148/0-8-0
Max Horz 22=142(load case 5)
Max Uplift22=-476(load case 5), 12=-476(load case 6)

**FORCES** (lb) - Maximum Compression/Maximum Tension
TOP CHORD 1-2=-142/78, 2-3=-3413/604, 3-4=-3277/626, 4-5=-2836/553, 5-6=-2562/556, 6-7=-2562/556, 7-8=-2836/553, 8-9=-3277/627, 9-10=-3413/604, 10-11=-142/78
BOT CHORD 1-22=0/150, 21-22=-617/3087, 20-21=-617/3087, 19-20=-617/3087, 18-19=-520/3084, 17-18=-294/2538, 16-17=-263/2538, 15-16=-378/3084, 14-15=-476/3086, 13-14=-476/3086, 12-13=-476/3086, 11-12=0/151
WEBS 2-21=0/202, 2-19=-61/116, 4-19=0/322, 4-18=-711/280, 5-18=-87/597, 5-17=-112/303, 6-17=-145/61, 7-17=-112/303, 7-16=-87/597, 8-16=-711/280, 8-15=0/322, 10-15=-61/116, 10-13=0/202, 2-22=-3522/720, 10-12=-3522/721

**NOTES**
1) Unbalanced roof live loads have been considered for this design.
2) Wind: ASCE 7-98; 110mph (3-second gust); h=18ft; TCDL=5.0psf; BCDL=5.0psf; Category II; Exp C; enclosed; MWFRS interior zone; cantilever left and right exposed ; Lumber DOL=1.33 plate grip DOL=1.33.
3) Provide adequate drainage to prevent water ponding.
4) This truss has been designed for a 10.0 psf bottom chord live load nonconcurrent with any other live loads.
5) This truss requires plate inspection per the Tooth Count Method when this truss is chosen for quality assurance inspection.
6) Provide mechanical connection (by others) of truss to bearing plate capable of withstanding 476 lb uplift at joint 22 and 476 lb uplift at joint 12.

**LOAD CASE(S)** Standard


Guo-Jie Zhang, FL Lic #47744
MiTek Industries, Inc.
1801 Massaro Blvd
Tampa FL 33619
FL Cert.#6634


November 22,2005

# Symbols

**PLATE LOCATION AND ORIENTATION**

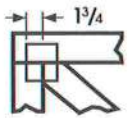


*Center plate on joint unless x,y offsets are indicated. Dimensions are in ft-in-sixteenths. Apply plates to both sides of truss and securely seat.

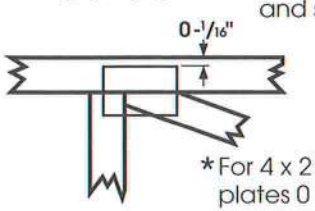


*For 4 x 2 orientation, locate plates 0 - 1/16" from outside edge of truss.

*This symbol indicates the required direction of slots in connector plates.

*** Plate location details available in MiTek 20/20 software or upon request.**

**PLATE SIZE**

4 x 4 — The first dimension is the width perpendicular to slots. Second dimension is the length parallel to slots.

**LATERAL BRACING**

Indicated by symbol shown and/or by text in the bracing section of the output. Use T, I or Eliminator bracing if indicated.

**BEARING**

Indicates location where bearings (supports) occur. Icons vary but reaction section indicates joint number where bearings occur.

**Industry Standards:**

ANSI/TPI1: National Design Specification for Metal Plate Connected Wood Truss Construction.
DSB-89: Design Standard for Bracing.
BCSI1: Building Component Safety Information, Guide to Good Practice for Handling, Installing & Bracing of Metal Plate Connected Wood Trusses.

# Numbering System

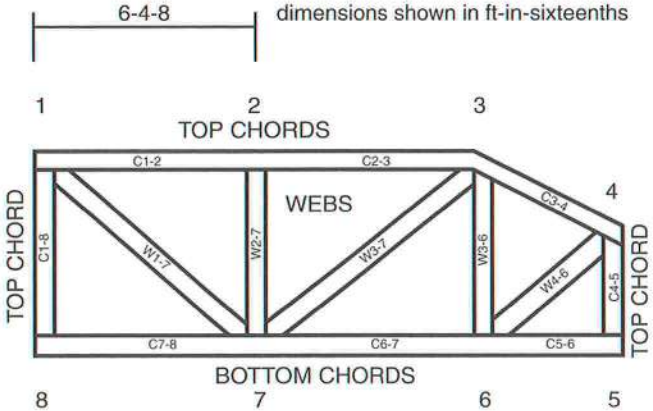


**JOINTS ARE GENERALLY NUMBERED/LETTERED CLOCKWISE AROUND THE TRUSS STARTING AT THE JOINT FARTHEST TO THE LEFT.**

**CHORDS AND WEBS ARE IDENTIFIED BY END JOINT NUMBERS/LETTERS.**

**CONNECTOR PLATE CODE APPROVALS**

| | |
|---|---|
| BOCA | 96-31, 95-43, 96-20-1, 96-67, 84-32 |
| ICBO | 4922, 5243, 5363, 3907 |
| SBCCI | 9667, 9730, 9604B, 9511, 9432A |

MiTek®

TEE-LOK®

# ⚠General Safety Notes

## Failure to Follow Could Cause Property Damage or Personal Injury

1. Additional stability bracing for truss system, e.g. diagonal or X-bracing, is always required. See BCSI1.
2. Never exceed the design loading shown and never stack materials on inadequately braced trusses.
3. Provide copies of this truss design to the building designer, erection supervisor, property owner and all other interested parties.
4. Cut members to bear tightly against each other.
5. Place plates on each face of truss at each joint and embed fully. Knots and wane at joint locations are regulated by ANSI/TPI1.
6. Design assumes trusses will be suitably protected from the environment in accord with ANSI/TPI1.
7. Unless otherwise noted, moisture content of lumber shall not exceed 19% at time of fabrication.
8. Unless expressly noted, this design is not applicable for use with fire retardant or preservative treated lumber.
9. Camber is a non-structural consideration and is the responsibility of truss fabricator. General practice is to camber for dead load deflection.
10. Plate type, size, orientation and location dimensions shown indicate minimum plating requirements.
11. Lumber used shall be of the species and size, and in all respects, equal to or better than that specified.
12. Top chords must be sheathed or purlins provided at spacing shown on design.
13. Bottom chords require lateral bracing at 10 ft. spacing, or less, if no ceiling is installed, unless otherwise noted.
14. Connections not shown are the responsibility of others.
15. Do not cut or alter truss member or plate without prior approval of a professional engineer.
16. Install and load vertically unless indicated otherwise.

| Job | Truss | Truss Type | Qty | Ply | WALKER RES |
|---|---|---|---|---|---|
| WALG | A16 | HIP | 1 | 1 | T1875003 |

Job Reference (optional)

SANTA FE TRUSS, HIGH SPRINGS FL., p.colacino

6.200 s Oct 18 2005 MiTek Industries, Inc. Mon Nov 21 16:21:03 2005 Page 1

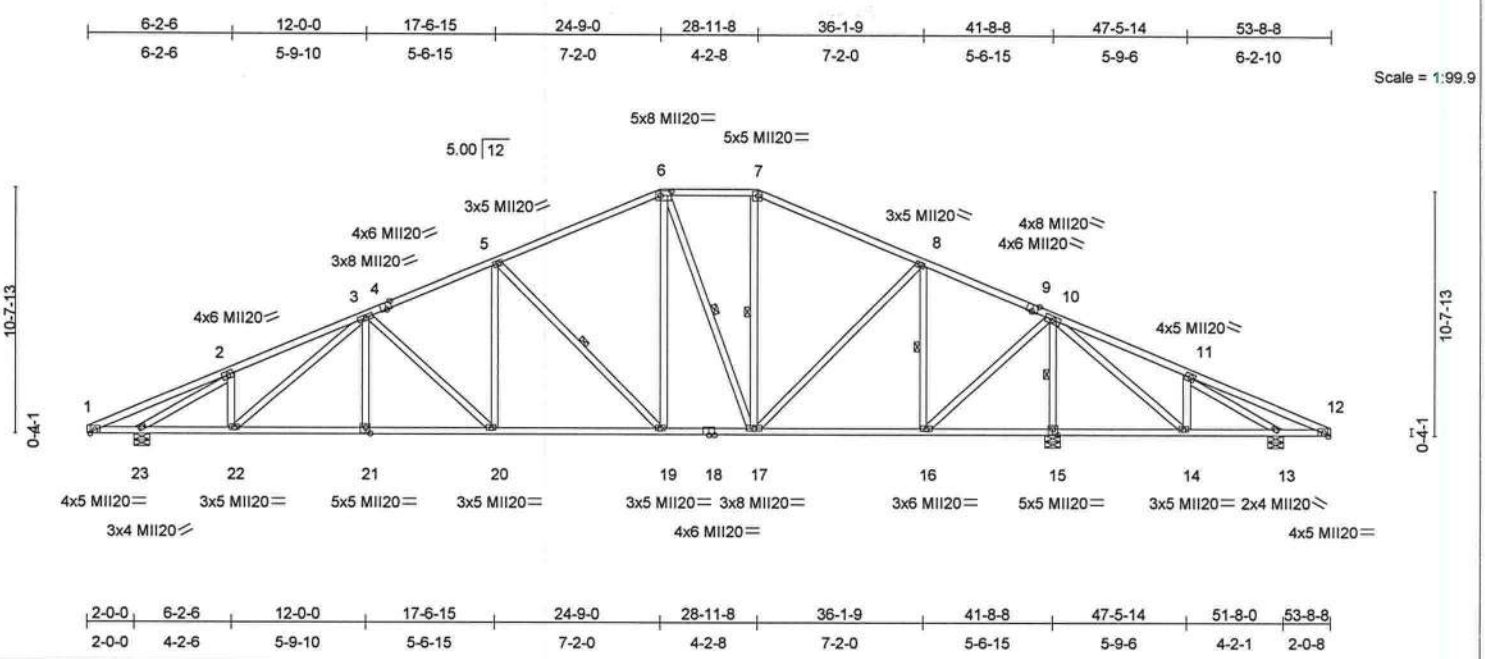


Plate Offsets (X,Y): [4:0-3-0,Edge], [6:0-5-12,0-2-8], [9:0-3-0,Edge], [15:0-2-8,0-3-0], [21:0-2-8,0-3-0]

| LOADING (psf) | | SPACING | 2-0-0 | CSI | | DEFL | in | (loc) | l/defl | L/d | PLATES | GRIP |
|---|---|---|---|---|---|---|---|---|---|---|---|---|
| TCLL | 20.0 | Plates Increase | 1.25 | TC | 0.39 | Vert(LL) | -0.11 | 20 | >999 | 240 | MII20 | 249/190 |
| TCDL | 10.0 | Lumber Increase | 1.25 | BC | 0.58 | Vert(TL) | -0.34 | 19-20 | >999 | 180 | | |
| BCLL | 0.0 | Rep Stress Incr | YES | WB | 1.00 | Horz(TL) | 0.09 | 15 | n/a | n/a | | |
| BCDL | 10.0 | Code FBC2004/TPI2002 | | (Matrix) | | | | | | | Weight: 341 lb | |

**LUMBER**
TOP CHORD 2 X 4 SYP No.2D
BOT CHORD 2 X 4 SYP No.2D
WEBS 2 X 4 SYP No.3

**BRACING**
TOP CHORD Structural wood sheathing directly applied or 4-1-5 oc purlins.
BOT CHORD Rigid ceiling directly applied or 6-0-0 oc bracing.
WEBS 1 Row at midpt 5-19, 6-17, 7-17, 8-16, 10-15

**REACTIONS** (lb/size) 15=2426/0-8-0, 23=1662/0-8-0, 13=209/0-8-0
Max Horz 23=154(load case 5)
Max Uplift15=-394(load case 6), 23=-424(load case 5), 13=-177(load case 6)
Max Grav 15=2426(load case 1), 23=1662(load case 1), 13=320(load case 8)

**FORCES** (lb) - Maximum Compression/Maximum Tension
TOP CHORD 1-2=-123/187, 2-3=-2337/575, 3-4=-2077/456, 4-5=-1961/476, 5-6=-1482/372, 6-7=-1109/333, 7-8=-1285/324, 8-9=-634/233, 9-10=-750/213, 10-11=-58/348, 11-12=-151/328
BOT CHORD 1-23=-107/154, 22-23=-518/2093, 21-22=-466/2170, 20-21=-466/2170, 19-20=-337/1864, 18-19=-127/1298, 17-18=-127/1298, 16-17=0/637, 15-16=-688/194, 14-15=-687/194, 13-14=-301/105, 12-13=-234/180
WEBS 2-22=0/232, 3-22=-124/0, 3-21=0/225, 3-20=-427/174, 5-20=-47/481, 5-19=-820/301, 6-19=-158/688, 6-17=-627/185, 7-17=-49/229, 8-17=-98/679, 8-16=-1070/236, 10-16=-247/1785, 10-15=-2298/442, 10-14=-199/668, 11-14=-361/201, 2-23=-2599/613, 11-13=-255/228

**NOTES**
1) Unbalanced roof live loads have been considered for this design.
2) Wind: ASCE 7-98; 110mph (3-second gust); h=18ft; TCDL=5.0psf; BCDL=5.0psf; Category II; Exp C; enclosed; MWFRS interior zone; cantilever left and right exposed ; Lumber DOL=1.33 plate grip DOL=1.33.
3) Provide adequate drainage to prevent water ponding.
4) This truss has been designed for a 10.0 psf bottom chord live load nonconcurrent with any other live loads.
5) This truss requires plate inspection per the Tooth Count Method when this truss is chosen for quality assurance inspection.
6) Provide mechanical connection (by others) of truss to bearing plate capable of withstanding 394 lb uplift at joint 15, 424 lb uplift at joint 23 and 177 lb uplift at joint 13.

**LOAD CASE(S)** Standard


Guo-Jie Zhang, FL Lic #47744
MiTek Industries, Inc.
1801 Massaro Blvd
Tampa FL 33619
FL Cert.#6634


November 22,2005

# Symbols

**PLATE LOCATION AND ORIENTATION**


*Center plate on joint unless x,y offsets are indicated. Dimensions are in ft-in-sixteenths. Apply plates to both sides of truss and securely seat.

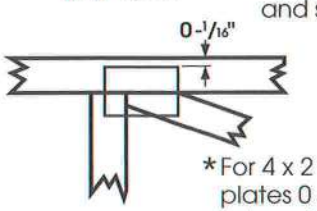


*For 4 x 2 orientation, locate plates 0 - 1/16" from outside edge of truss.

*This symbol indicates the required direction of slots in connector plates.

*** Plate location details available in MiTek 20/20 software or upon request.**

**PLATE SIZE**

4 x 4 — The first dimension is the width perpendicular to slots. Second dimension is the length parallel to slots.

**LATERAL BRACING**

Indicated by symbol shown and/or by text in the bracing section of the output. Use T, I or Eliminator bracing if indicated.

**BEARING**

Indicates location where bearings (supports) occur. Icons vary but reaction section indicates joint number where bearings occur.

**Industry Standards:**

ANSI/TPI1: National Design Specification for Metal Plate Connected Wood Truss Construction.
DSB-89: Design Standard for Bracing.
BCSI1: Building Component Safety Information, Guide to Good Practice for Handling, Installing & Bracing of Metal Plate Connected Wood Trusses.

# Numbering System

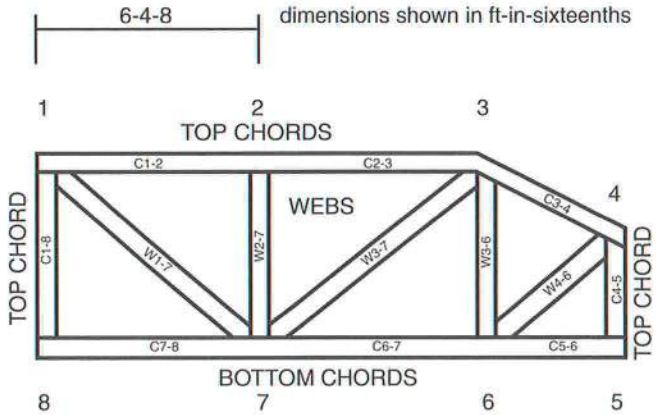


**JOINTS ARE GENERALLY NUMBERED/LETTERED CLOCKWISE AROUND THE TRUSS STARTING AT THE JOINT FARTHEST TO THE LEFT.**

**CHORDS AND WEBS ARE IDENTIFIED BY END JOINT NUMBERS/LETTERS.**

**CONNECTOR PLATE CODE APPROVALS**

| | |
|---|---|
| BOCA | 96-31, 95-43, 96-20-1, 96-67, 84-32 |
| ICBO | 4922, 5243, 5363, 3907 |
| SBCCI | 9667, 9730, 9604B, 9511, 9432A |

MiTek®

TEE-LOK®

# ⚠General Safety Notes

## Failure to Follow Could Cause Property Damage or Personal Injury

1. Additional stability bracing for truss system, e.g. diagonal or X-bracing, is always required. See BCSI1.
2. Never exceed the design loading shown and never stack materials on inadequately braced trusses.
3. Provide copies of this truss design to the building designer, erection supervisor, property owner and all other interested parties.
4. Cut members to bear tightly against each other.
5. Place plates on each face of truss at each joint and embed fully. Knots and wane at joint locations are regulated by ANSI/TPI1.
6. Design assumes trusses will be suitably protected from the environment in accord with ANSI/TPI1.
7. Unless otherwise noted, moisture content of lumber shall not exceed 19% at time of fabrication.
8. Unless expressly noted, this design is not applicable for use with fire retardant or preservative treated lumber.
9. Camber is a non-structural consideration and is the responsibility of truss fabricator. General practice is to camber for dead load deflection.
10. Plate type, size, orientation and location dimensions shown indicate minimum plating requirements.
11. Lumber used shall be of the species and size, and in all respects, equal to or better than that specified.
12. Top chords must be sheathed or purlins provided at spacing shown on design.
13. Bottom chords require lateral bracing at 10 ft. spacing, or less, if no ceiling is installed, unless otherwise noted.
14. Connections not shown are the responsibility of others.
15. Do not cut or alter truss member or plate without prior approval of a professional engineer.
16. Install and load vertically unless indicated otherwise.

| Job | Truss | Truss Type | Qty | Ply | WALKER RES |
|---|---|---|---|---|---|
| WALG | A17 | HIP | 1 | 1 | T1875004 |

Job Reference (optional)

SANTA FE TRUSS, HIGH SPRINGS FL., p.colacino

6.200 s Oct 18 2005 MiTek Industries, Inc. Mon Nov 21 16:21:04 2005 Page 1

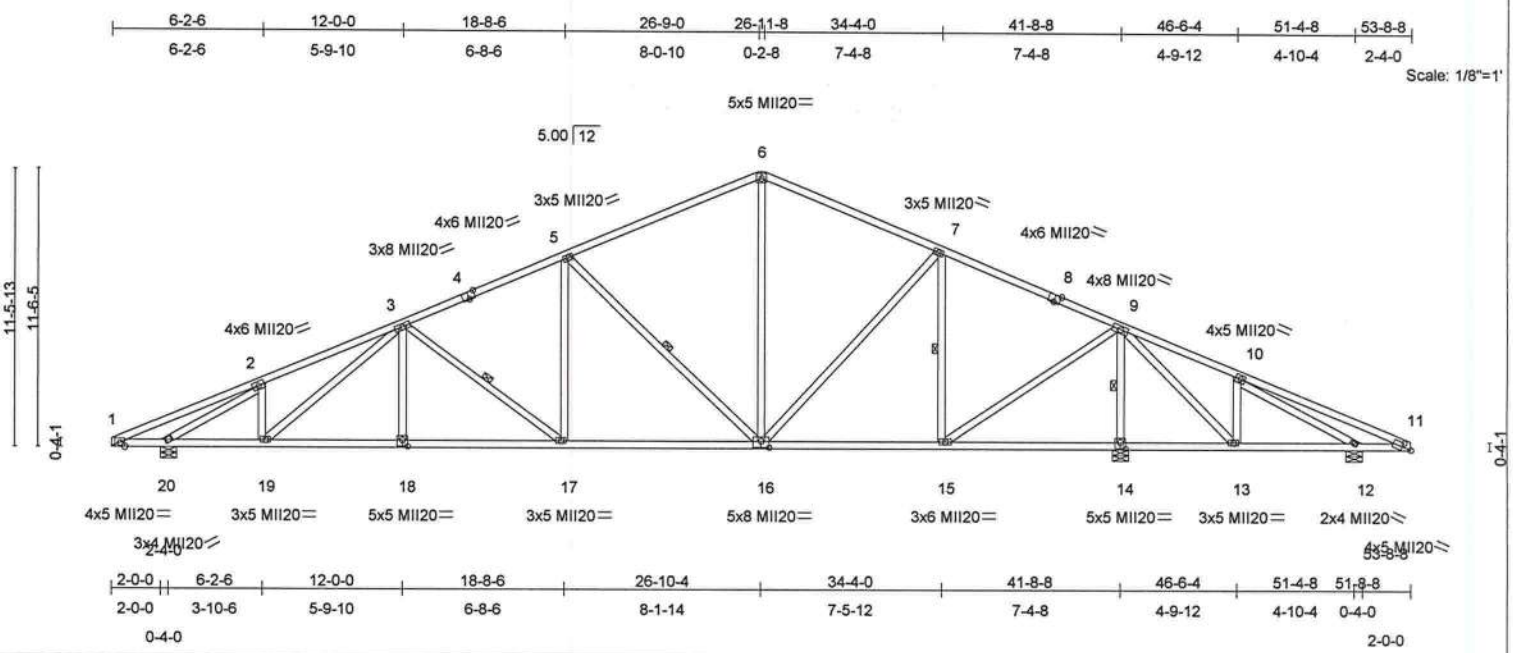


Plate Offsets (X,Y): [4:0-3-0,Edge], [8:0-3-0,Edge], [11:0-4-3,0-2-0], [14:0-2-8,0-3-0], [16:0-4-0,0-3-0], [18:0-2-8,0-3-0]

| LOADING (psf) | | SPACING | 2-0-0 | CSI | | DEFL | in | (loc) | l/defl | L/d | PLATES | GRIP |
|---|---|---|---|---|---|---|---|---|---|---|---|---|
| TCLL | 20.0 | Plates Increase | 1.25 | TC | 0.39 | Vert(LL) | 0.11 | 17 | >999 | 240 | MII20 | 249/190 |
| TCDL | 10.0 | Lumber Increase | 1.25 | BC | 0.58 | Vert(TL) | -0.35 | 16-17 | >999 | 180 | | |
| BCLL | 0.0 | Rep Stress Incr | YES | WB | 0.99 | Horz(TL) | 0.09 | 14 | n/a | n/a | | |
| BCDL | 10.0 | Code FBC2004/TPI2002 | | (Matrix) | | | | | | | Weight: 320 lb | |

**LUMBER**
TOP CHORD 2 X 4 SYP No.2D
BOT CHORD 2 X 4 SYP No.2D
WEBS 2 X 4 SYP No.3

**BRACING**
TOP CHORD Structural wood sheathing directly applied or 4-1-12 oc purlins.
BOT CHORD Rigid ceiling directly applied or 6-0-0 oc bracing.
WEBS 1 Row at midpt 3-17, 5-16, 7-15, 9-14

**REACTIONS** (lb/size) 14=2424/0-8-0, 20=1663/0-8-0, 12=210/0-8-0
Max Horz 20=167(load case 5)
Max Uplift14=-421(load case 6), 20=-432(load case 5), 12=-167(load case 6)
Max Grav 14=2424(load case 1), 20=1663(load case 1), 12=326(load case 8)

**FORCES** (lb) - Maximum Compression/Maximum Tension
TOP CHORD 1-2=-122/188, 2-3=-2329/586, 3-4=-2014/463, 4-5=-1875/479, 5-6=-1327/359, 6-7=-1318/383, 7-8=-915/270, 8-9=-996/252, 9-10=-34/389, 10-11=-146/296
BOT CHORD 1-20=-109/154, 19-20=-542/2089, 18-19=-498/2182, 17-18=-498/2182, 16-17=-342/1794, 15-16=-34/844, 14-15=-669/197, 13-14=-668/197, 12-13=-340/126, 11-12=-199/185
WEBS 2-19=0/235, 3-19=-123/0, 3-18=0/254, 3-17=-497/196, 5-17=-40/523, 5-16=-934/338, 7-16=-94/509, 7-15=-891/234, 9-15=-279/1832, 9-14=-2280/477, 9-13=-189/585, 10-13=-359/199, 2-20=-2592/627, 10-12=-139/300, 6-16=-87/545

**NOTES**
1) Unbalanced roof live loads have been considered for this design.
2) Wind: ASCE 7-98; 110mph (3-second gust); h=18ft; TCDL=5.0psf; BCDL=5.0psf; Category II; Exp C; enclosed; MWFRS interior zone; cantilever left and right exposed ; Lumber DOL=1.33 plate grip DOL=1.33.
3) This truss has been designed for a 10.0 psf bottom chord live load nonconcurrent with any other live loads.
4) This truss requires plate inspection per the Tooth Count Method when this truss is chosen for quality assurance inspection.
5) Provide mechanical connection (by others) of truss to bearing plate capable of withstanding 421 lb uplift at joint 14, 432 lb uplift at joint 20 and 167 lb uplift at joint 12.

**LOAD CASE(S)** Standard


Guo-Jie Zhang, FL Lic #47744
MiTek Industries, Inc.
1801 Massaro Blvd
Tampa FL 33619
FL Cert.#6634


November 22,2005

# Symbols

**PLATE LOCATION AND ORIENTATION**

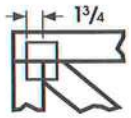


*Center plate on joint unless x,y offsets are indicated. Dimensions are in ft-in-sixteenths. Apply plates to both sides of truss and securely seat.

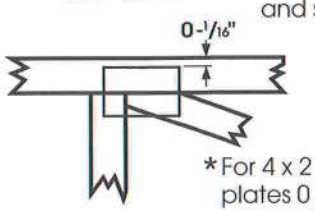


*For 4 x 2 orientation, locate plates 0 - 1/16" from outside edge of truss.

*This symbol indicates the required direction of slots in connector plates.

*** Plate location details available in MiTek 20/20 software or upon request.**

**PLATE SIZE**

4 x 4 — The first dimension is the width perpendicular to slots. Second dimension is the length parallel to slots.

**LATERAL BRACING**

Indicated by symbol shown and/or by text in the bracing section of the output. Use T, I or Eliminator bracing if indicated.

**BEARING**

Indicates location where bearings (supports) occur. Icons vary but reaction section indicates joint number where bearings occur.

**Industry Standards:**

ANSI/TPI1: National Design Specification for Metal Plate Connected Wood Truss Construction.
DSB-89: Design Standard for Bracing.
BCSI1: Building Component Safety Information, Guide to Good Practice for Handling, Installing & Bracing of Metal Plate Connected Wood Trusses.

# Numbering System

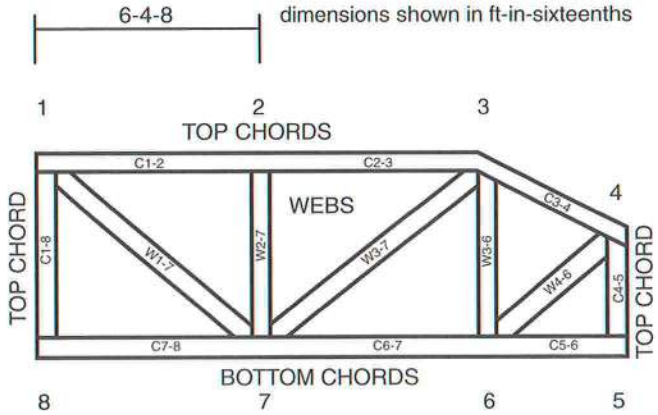


**JOINTS ARE GENERALLY NUMBERED/LETTERED CLOCKWISE AROUND THE TRUSS STARTING AT THE JOINT FARTHEST TO THE LEFT.**

**CHORDS AND WEBS ARE IDENTIFIED BY END JOINT NUMBERS/LETTERS.**

**CONNECTOR PLATE CODE APPROVALS**

| | |
|---|---|
| BOCA | 96-31, 95-43, 96-20-1, 96-67, 84-32 |
| ICBO | 4922, 5243, 5363, 3907 |
| SBCCI | 9667, 9730, 9604B, 9511, 9432A |

MiTek®

TEE-LOK®

# ⚠General Safety Notes

## Failure to Follow Could Cause Property Damage or Personal Injury

1. Additional stability bracing for truss system, e.g. diagonal or X-bracing, is always required. See BCSI1.
2. Never exceed the design loading shown and never stack materials on inadequately braced trusses.
3. Provide copies of this truss design to the building designer, erection supervisor, property owner and all other interested parties.
4. Cut members to bear tightly against each other.
5. Place plates on each face of truss at each joint and embed fully. Knots and wane at joint locations are regulated by ANSI/TPI1.
6. Design assumes trusses will be suitably protected from the environment in accord with ANSI/TPI1.
7. Unless otherwise noted, moisture content of lumber shall not exceed 19% at time of fabrication.
8. Unless expressly noted, this design is not applicable for use with fire retardant or preservative treated lumber.
9. Camber is a non-structural consideration and is the responsibility of truss fabricator. General practice is to camber for dead load deflection.
10. Plate type, size, orientation and location dimensions shown indicate minimum plating requirements.
11. Lumber used shall be of the species and size, and in all respects, equal to or better than that specified.
12. Top chords must be sheathed or purlins provided at spacing shown on design.
13. Bottom chords require lateral bracing at 10 ft. spacing, or less, if no ceiling is installed, unless otherwise noted.
14. Connections not shown are the responsibility of others.
15. Do not cut or alter truss member or plate without prior approval of a professional engineer.
16. Install and load vertically unless indicated otherwise.

| Job | Truss | Truss Type | Qty | Ply | WALKER RES |
|---|---|---|---|---|---|
| WALG | A18 | COMMON | 1 | 1 | T1875005 |

Job Reference (optional)

SANTA FE TRUSS, HIGH SPRINGS FL., p.colacino

6.200 s Oct 18 2005 MiTek Industries, Inc. Mon Nov 21 16:21:05 2005 Page 1

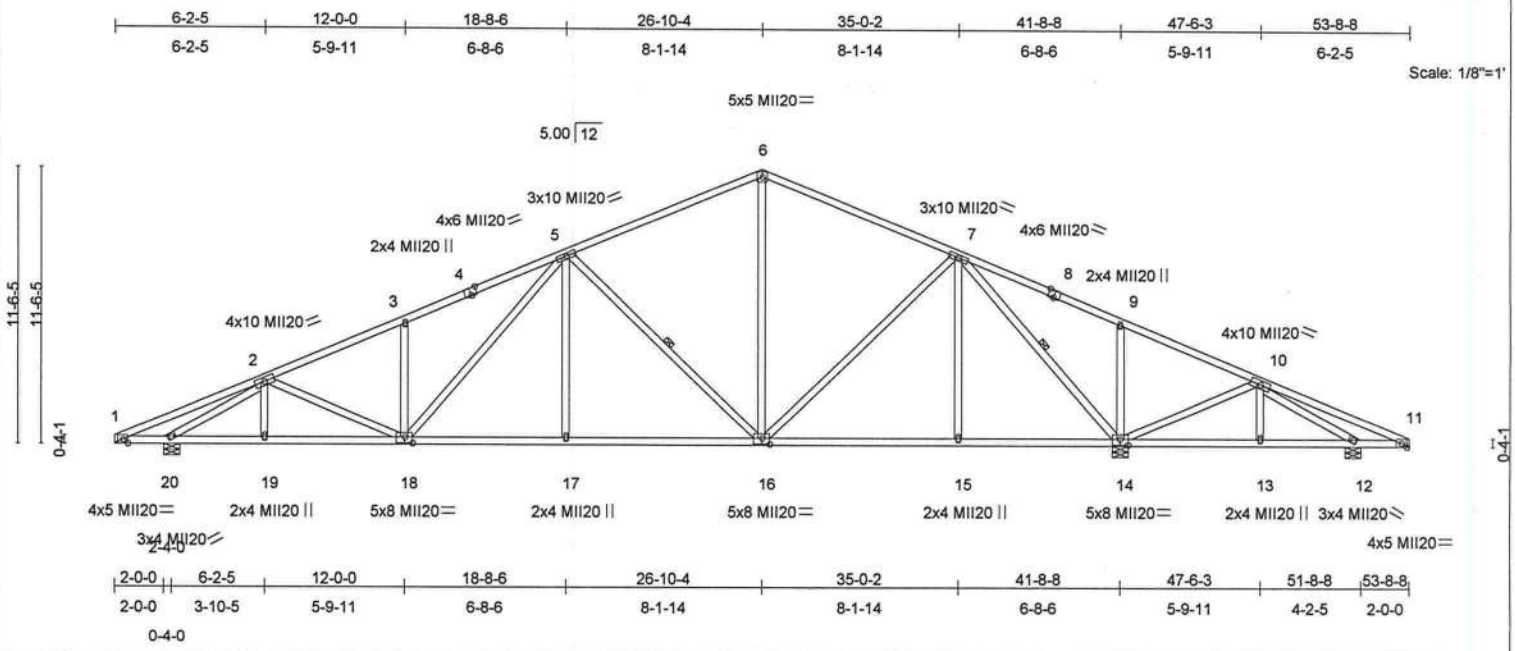


Plate Offsets (X,Y): [4:0-3-0,Edge], [7:0-0-0,0-0-0], [8:0-3-0,Edge], [9:0-0-0,0-0-0], [10:0-0-0,0-0-0], [14:0-4-0,0-3-0], [16:0-4-0,0-3-0], [18:0-4-0,0-3-0]

| LOADING (psf) | | SPACING | 2-0-0 | CSI | | DEFL | in | (loc) | l/defl | L/d | PLATES | GRIP |
|---|---|---|---|---|---|---|---|---|---|---|---|---|
| TCLL | 20.0 | Plates Increase | 1.25 | TC | 0.47 | Vert(LL) | -0.10 | 17-18 | >999 | 240 | MII20 | 249/190 |
| TCDL | 10.0 | Lumber Increase | 1.25 | BC | 0.57 | Vert(TL) | -0.32 | 16-17 | >999 | 180 | | |
| BCLL | 0.0 | Rep Stress Incr | YES | WB | 0.98 | Horz(TL) | 0.10 | 14 | n/a | n/a | | |
| BCDL | 10.0 | Code FBC2004/TPI2002 | | (Matrix) | | | | | | | Weight: 320 lb | |

**LUMBER**
TOP CHORD 2 X 4 SYP No.2D
BOT CHORD 2 X 4 SYP No.2D
WEBS 2 X 4 SYP No.3 *Except*
5-18 2 X 4 SYP No.2D, 7-14 2 X 4 SYP No.2D

**BRACING**
TOP CHORD Structural wood sheathing directly applied or 4-0-4 oc purlins.
BOT CHORD Rigid ceiling directly applied or 6-0-0 oc bracing.
WEBS 1 Row at midpt 5-16, 7-14

**REACTIONS** (lb/size) 14=2510/0-8-0, 20=1646/0-8-0, 12=141/0-8-0
Max Horz 20=167(load case 5)
Max Uplift14=-461(load case 6), 20=-426(load case 5), 12=-136(load case 6)
Max Grav 14=2510(load case 1), 20=1646(load case 1), 12=273(load case 8)

**FORCES** (lb) - Maximum Compression/Maximum Tension
TOP CHORD 1-2=-124/190, 2-3=-2393/523, 3-4=-2397/618, 4-5=-2257/633, 5-6=-1289/343, 6-7=-1289/365, 7-8=-93/957, 8-9=-106/865, 9-10=-176/943, 10-11=-153/328
BOT CHORD 1-20=-111/155, 19-20=-534/2064, 18-19=-534/2064, 17-18=-328/1756, 16-17=-328/1756, 15-16=0/707, 14-15=0/707, 13-14=-353/150, 12-13=-353/150, 11-12=-234/181
WEBS 2-19=0/169, 2-18=0/93, 3-18=-359/218, 5-18=-240/612, 5-17=0/298, 5-16=-932/339, 6-16=-66/519, 7-16=-122/591, 7-15=0/294, 7-14=-2330/377, 9-14=-366/219, 10-14=-576/184, 10-13=0/195, 2-20=-2566/619, 10-12=-173/289

**NOTES**
1) Unbalanced roof live loads have been considered for this design.
2) Wind: ASCE 7-98; 110mph (3-second gust); h=18ft; TCDL=5.0psf; BCDL=5.0psf; Category II; Exp C; enclosed; MWFRS interior zone; cantilever left and right exposed ; Lumber DOL=1.33 plate grip DOL=1.33.
3) This truss has been designed for a 10.0 psf bottom chord live load nonconcurrent with any other live loads.
4) This truss requires plate inspection per the Tooth Count Method when this truss is chosen for quality assurance inspection.
5) Provide mechanical connection (by others) of truss to bearing plate capable of withstanding 461 lb uplift at joint 14, 426 lb uplift at joint 20 and 136 lb uplift at joint 12.

**LOAD CASE(S)** Standard


Guo-Jie Zhang, FL Lic #47744
MiTek Industries, Inc.
1801 Massaro Blvd
Tampa FL 33619
FL Cert.#6634


November 22,2005

# Symbols

**PLATE LOCATION AND ORIENTATION**

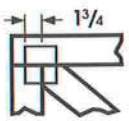


*Center plate on joint unless x,y offsets are indicated. Dimensions are in ft-in-sixteenths. Apply plates to both sides of truss and securely seat.

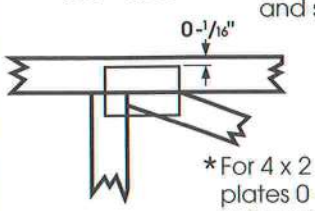


*For 4 x 2 orientation, locate plates 0 - 1/16" from outside edge of truss.

*This symbol indicates the required direction of slots in connector plates.

*** Plate location details available in MiTek 20/20 software or upon request.**

**PLATE SIZE**

4 x 4 — The first dimension is the width perpendicular to slots. Second dimension is the length parallel to slots.

**LATERAL BRACING**

Indicated by symbol shown and/or by text in the bracing section of the output. Use T, I or Eliminator bracing if indicated.

**BEARING**

Indicates location where bearings (supports) occur. Icons vary but reaction section indicates joint number where bearings occur.

**Industry Standards:**

ANSI/TPI1: National Design Specification for Metal Plate Connected Wood Truss Construction.
DSB-89: Design Standard for Bracing.
BCSI1: Building Component Safety Information, Guide to Good Practice for Handling, Installing & Bracing of Metal Plate Connected Wood Trusses.

# Numbering System

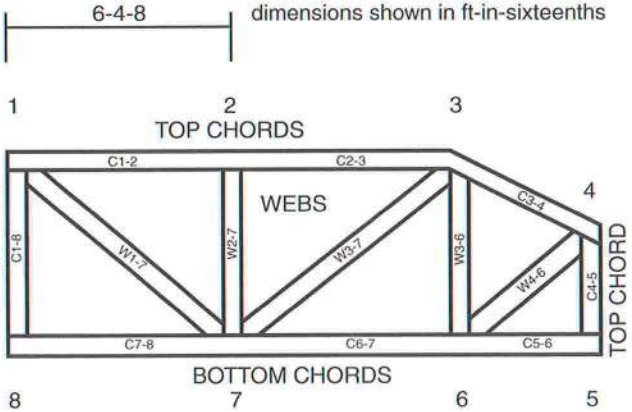


**JOINTS ARE GENERALLY NUMBERED/LETTERED CLOCKWISE AROUND THE TRUSS STARTING AT THE JOINT FARTHEST TO THE LEFT.**

**CHORDS AND WEBS ARE IDENTIFIED BY END JOINT NUMBERS/LETTERS.**

**CONNECTOR PLATE CODE APPROVALS**

| | |
|---|---|
| BOCA | 96-31, 95-43, 96-20-1, 96-67, 84-32 |
| ICBO | 4922, 5243, 5363, 3907 |
| SBCCI | 9667, 9730, 9604B, 9511, 9432A |

MiTek®

TEE-LOK®

# ⚠General Safety Notes

## Failure to Follow Could Cause Property Damage or Personal Injury

1. Additional stability bracing for truss system, e.g. diagonal or X-bracing, is always required. See BCSI1.
2. Never exceed the design loading shown and never stack materials on inadequately braced trusses.
3. Provide copies of this truss design to the building designer, erection supervisor, property owner and all other interested parties.
4. Cut members to bear tightly against each other.
5. Place plates on each face of truss at each joint and embed fully. Knots and wane at joint locations are regulated by ANSI/TPI1.
6. Design assumes trusses will be suitably protected from the environment in accord with ANSI/TPI1.
7. Unless otherwise noted, moisture content of lumber shall not exceed 19% at time of fabrication.
8. Unless expressly noted, this design is not applicable for use with fire retardant or preservative treated lumber.
9. Camber is a non-structural consideration and is the responsibility of truss fabricator. General practice is to camber for dead load deflection.
10. Plate type, size, orientation and location dimensions shown indicate minimum plating requirements.
11. Lumber used shall be of the species and size, and in all respects, equal to or better than that specified.
12. Top chords must be sheathed or purlins provided at spacing shown on design.
13. Bottom chords require lateral bracing at 10 ft. spacing, or less, if no ceiling is installed, unless otherwise noted.
14. Connections not shown are the responsibility of others.
15. Do not cut or alter truss member or plate without prior approval of a professional engineer.
16. Install and load vertically unless indicated otherwise.

| Job | Truss | Truss Type | Qty | Ply | WALKER RES |
|---|---|---|---|---|---|
| WALG | A19 | COMMON | 1 | 1 | T1875006 |

Job Reference (optional)

SANTA FE TRUSS, HIGH SPRINGS FL., p.colacino

6.200 s Oct 18 2005 MiTek Industries, Inc. Mon Nov 21 16:21:07 2005 Page 1

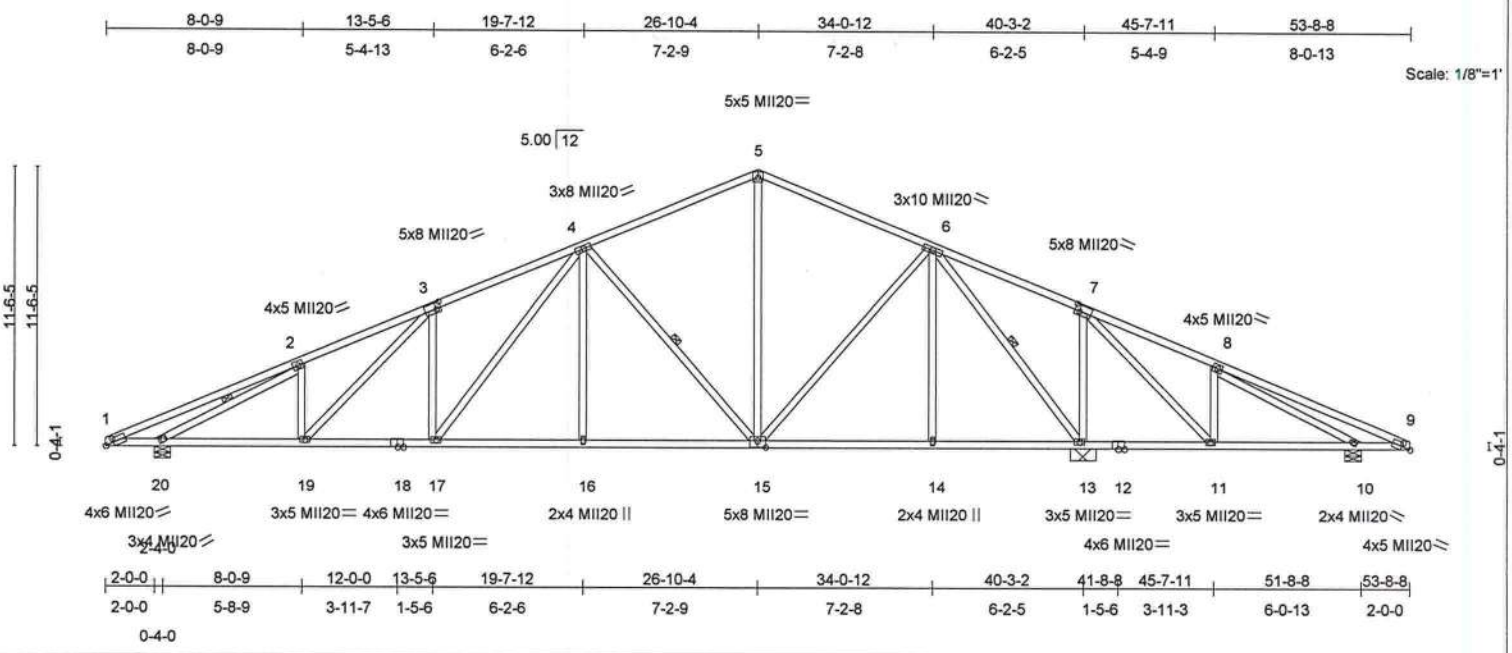


Plate Offsets (X,Y): [1:0-4-3,0-2-0], [3:0-2-4,0-3-0], [7:0-2-4,0-3-0], [9:0-4-3,0-2-0], [15:0-4-0,0-3-0]

| LOADING (psf) | | SPACING | 2-0-0 | CSI | | DEFL | in | (loc) | l/defl | L/d | PLATES | GRIP |
|---|---|---|---|---|---|---|---|---|---|---|---|---|
| TCLL | 20.0 | Plates Increase | 1.25 | TC | 0.46 | Vert(LL) | -0.10 | 17-19 | >999 | 240 | MII20 | 249/190 |
| TCDL | 10.0 | Lumber Increase | 1.25 | BC | 0.65 | Vert(TL) | -0.26 | 16-17 | >999 | 180 | | |
| BCLL | 0.0 | Rep Stress Incr | YES | WB | 0.86 | Horz(TL) | 0.08 | 13 | n/a | n/a | | |
| BCDL | 10.0 | Code FBC2004/TPI2002 | | (Matrix) | | | | | | | Weight: 334 lb | |

**LUMBER**
TOP CHORD 2 X 4 SYP No.2D
BOT CHORD 2 X 4 SYP No.2D
WEBS 2 X 4 SYP No.3 *Except*
4-17 2 X 4 SYP No.2D, 6-13 2 X 4 SYP No.2D

**BRACING**
TOP CHORD Structural wood sheathing directly applied or 3-11-0 oc purlins.
BOT CHORD Rigid ceiling directly applied or 6-0-0 oc bracing.
WEBS 1 Row at midpt 4-15, 6-13, 2-20

**REACTIONS** (lb/size) 13=2524/1-0-13, 20=1568/0-8-0, 10=204/0-8-0
Max Horz 20=-167(load case 6)
Max Uplift13=-454(load case 6), 20=-412(load case 5), 10=-154(load case 6)
Max Grav 13=2524(load case 1), 20=1568(load case 1), 10=336(load case 8)

**FORCES** (lb) - Maximum Compression/Maximum Tension
TOP CHORD 1-2=-109/124, 2-3=-2322/608, 3-4=-2148/593, 4-5=-1087/318, 5-6=-1087/337, 6-7=-97/971, 7-8=-64/447, 8-9=-141/284
BOT CHORD 1-20=-33/156, 19-20=-530/2078, 18-19=-423/1917, 17-18=-423/1917, 16-17=-271/1516, 15-16=-271/1516, 14-15=0/496, 13-14=0/496, 12-13=-837/264, 11-12=-837/264, 10-11=-394/168, 9-10=-177/185
WEBS 2-19=-119/188, 3-19=-154/261, 3-17=-418/256, 4-17=-259/683, 4-16=0/270, 4-15=-914/330, 5-15=-71/431, 6-15=-138/660, 6-14=0/266, 6-13=-2198/362, 7-13=-641/299, 7-11=-252/747, 8-11=-443/254, 2-20=-2415/596, 8-10=-107/373

**NOTES**
1) Unbalanced roof live loads have been considered for this design.
2) Wind: ASCE 7-98; 110mph (3-second gust); h=18ft; TCDL=5.0psf; BCDL=5.0psf; Category II; Exp C; enclosed; MWFRS interior zone; cantilever left and right exposed ; Lumber DOL=1.33 plate grip DOL=1.33.
3) This truss has been designed for a 10.0 psf bottom chord live load nonconcurrent with any other live loads.
4) This truss requires plate inspection per the Tooth Count Method when this truss is chosen for quality assurance inspection.
5) Provide mechanical connection (by others) of truss to bearing plate capable of withstanding 454 lb uplift at joint 13, 412 lb uplift at joint 20 and 154 lb uplift at joint 10.

**LOAD CASE(S)** Standard


Guo-Jie Zhang, FL Lic #47744
MiTek Industries, Inc.
1801 Massaro Blvd
Tampa FL 33619
FL Cert.#6634


November 22,2005

# Symbols

**PLATE LOCATION AND ORIENTATION**

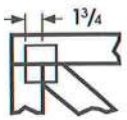


*Center plate on joint unless x,y offsets are indicated. Dimensions are in ft-in-sixteenths. Apply plates to both sides of truss and securely seat.

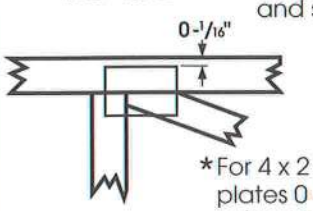


*For 4 x 2 orientation, locate plates 0 - 1/16" from outside edge of truss.

*This symbol indicates the required direction of slots in connector plates.

*** Plate location details available in MiTek 20/20 software or upon request.**

**PLATE SIZE**

4 x 4 — The first dimension is the width perpendicular to slots. Second dimension is the length parallel to slots.

**LATERAL BRACING**

Indicated by symbol shown and/or by text in the bracing section of the output. Use T, I or Eliminator bracing if indicated.

**BEARING**

Indicates location where bearings (supports) occur. Icons vary but reaction section indicates joint number where bearings occur.

**Industry Standards:**

ANSI/TPI1: National Design Specification for Metal Plate Connected Wood Truss Construction.
DSB-89: Design Standard for Bracing.
BCSI1: Building Component Safety Information, Guide to Good Practice for Handling, Installing & Bracing of Metal Plate Connected Wood Trusses.

# Numbering System

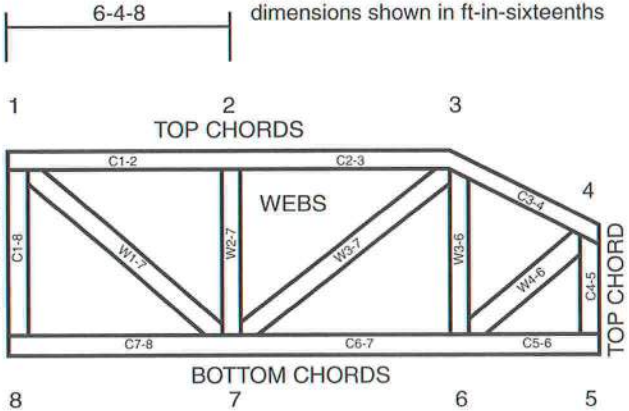


**JOINTS ARE GENERALLY NUMBERED/LETTERED CLOCKWISE AROUND THE TRUSS STARTING AT THE JOINT FARTHEST TO THE LEFT.**

**CHORDS AND WEBS ARE IDENTIFIED BY END JOINT NUMBERS/LETTERS.**

**CONNECTOR PLATE CODE APPROVALS**

| | |
|---|---|
| BOCA | 96-31, 95-43, 96-20-1, 96-67, 84-32 |
| ICBO | 4922, 5243, 5363, 3907 |
| SBCCI | 9667, 9730, 9604B, 9511, 9432A |

MiTek®

TEE-LOK®

# ⚠General Safety Notes

## Failure to Follow Could Cause Property Damage or Personal Injury

1. Additional stability bracing for truss system, e.g. diagonal or X-bracing, is always required. See BCSI1.
2. Never exceed the design loading shown and never stack materials on inadequately braced trusses.
3. Provide copies of this truss design to the building designer, erection supervisor, property owner and all other interested parties.
4. Cut members to bear tightly against each other.
5. Place plates on each face of truss at each joint and embed fully. Knots and wane at joint locations are regulated by ANSI/TPI1.
6. Design assumes trusses will be suitably protected from the environment in accord with ANSI/TPI1.
7. Unless otherwise noted, moisture content of lumber shall not exceed 19% at time of fabrication.
8. Unless expressly noted, this design is not applicable for use with fire retardant or preservative treated lumber.
9. Camber is a non-structural consideration and is the responsibility of truss fabricator. General practice is to camber for dead load deflection.
10. Plate type, size, orientation and location dimensions shown indicate minimum plating requirements.
11. Lumber used shall be of the species and size, and in all respects, equal to or better than that specified.
12. Top chords must be sheathed or purlins provided at spacing shown on design.
13. Bottom chords require lateral bracing at 10 ft. spacing, or less, if no ceiling is installed, unless otherwise noted.
14. Connections not shown are the responsibility of others.
15. Do not cut or alter truss member or plate without prior approval of a professional engineer.
16. Install and load vertically unless indicated otherwise.

| Job | Truss | Truss Type | Qty | Ply | WALKER RES |
|---|---|---|---|---|---|
| WALG | A2 | HIP | 1 | 1 | T1875007 |

Job Reference (optional)

SANTA FE TRUSS, HIGH SPRINGS FL., p.colacino

6.200 s Oct 18 2005 MiTek Industries, Inc. Mon Nov 21 16:21:08 2005 Page 1

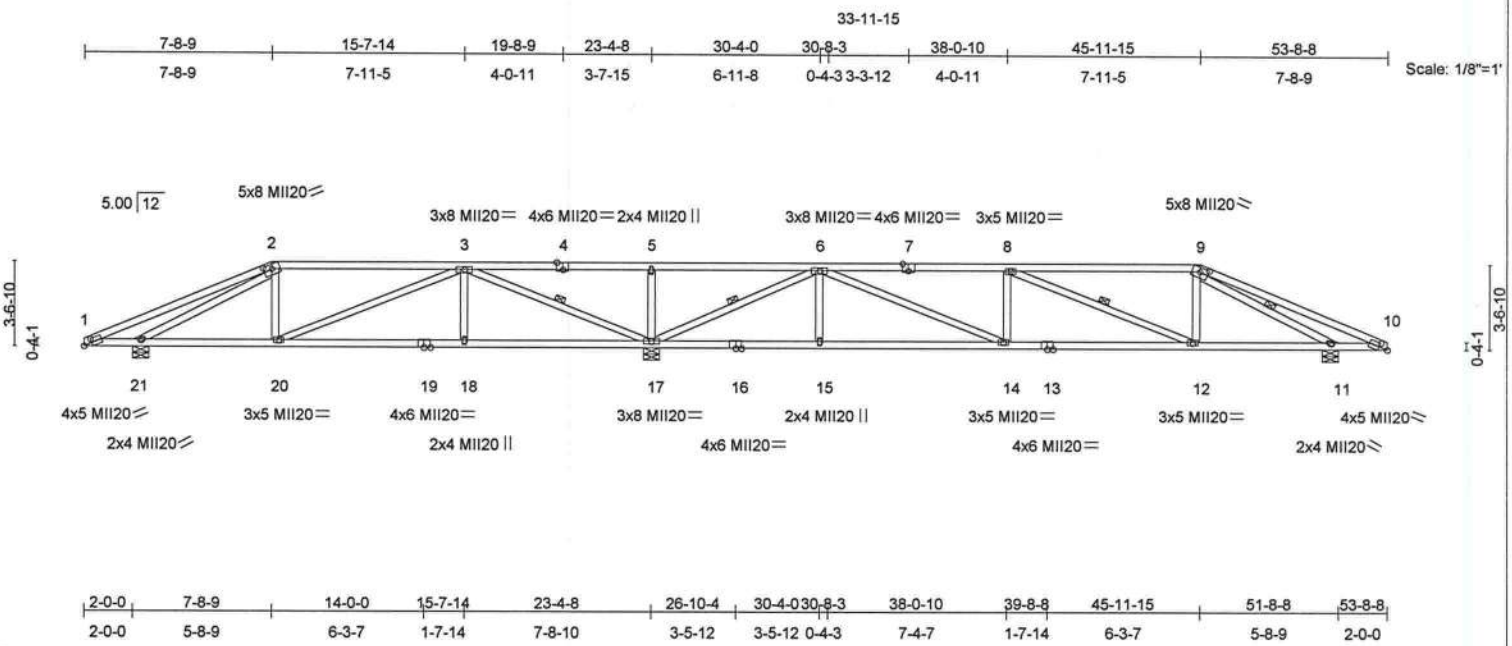


Plate Offsets (X,Y): [1:0-4-3,0-2-0], [2:0-4-0,0-2-2], [4:0-3-0,Edge], [7:0-3-0,Edge], [9:0-4-0,0-2-2], [10:0-4-3,0-2-0]

| LOADING (psf) | | SPACING 2-0-0 | | CSI | | DEFL | in | (loc) | l/defl | L/d | PLATES | GRIP |
|---|---|---|---|---|---|---|---|---|---|---|---|---|
| TCLL | 20.0 | Plates Increase | 1.25 | TC | 0.59 | Vert(LL) | -0.10 | 14 | >999 | 240 | MII20 | 249/190 |
| TCDL | 10.0 | Lumber Increase | 1.25 | BC | 0.47 | Vert(TL) | -0.31 | 12-14 | >999 | 180 | | |
| BCLL | 0.0 | Rep Stress Incr | YES | WB | 0.76 | Horz(TL) | 0.07 | 11 | n/a | n/a | | |
| BCDL | 10.0 | Code FBC2004/TPI2002 | | (Matrix) | | | | | | | Weight: 266 lb | |

**LUMBER**
TOP CHORD 2 X 4 SYP No.2D
BOT CHORD 2 X 4 SYP No.2D
WEBS 2 X 4 SYP No.3

**BRACING**
TOP CHORD Structural wood sheathing directly applied or 4-5-11 oc purlins.
BOT CHORD Rigid ceiling directly applied or 10-0-0 oc bracing, Except: 6-0-0 oc bracing: 1-21,10-11.
WEBS 1 Row at midpt 3-17, 6-17, 8-12, 9-11

**REACTIONS** (lb/size) 17=2380/0-8-0, 11=1125/0-8-0, 21=792/0-8-0
Max Horz 21=-48(load case 6)
Max Uplift17=-586(load case 4), 11=-278(load case 4), 21=-225(load case 5)
Max Grav 17=2380(load case 1), 11=1128(load case 8), 21=798(load case 7)

**FORCES** (lb) - Maximum Compression/Maximum Tension
TOP CHORD 1-2=-138/269, 2-3=-758/214, 3-4=-286/1402, 4-5=-286/1402, 5-6=-286/1402, 6-7=-1822/499, 7-8=-1822/499, 8-9=-1352/361, 9-10=-128/216
BOT CHORD 1-21=-162/180, 20-21=-122/758, 19-20=-58/432, 18-19=-58/432, 17-18=-58/432, 16-17=-149/771, 15-16=-149/771, 14-15=-149/771, 13-14=-401/1822, 12-13=-401/1822, 11-12=-264/1338, 10-11=-114/172
WEBS 2-20=-19/170, 3-20=-76/368, 3-18=0/316, 3-17=-1965/476, 5-17=-450/222, 6-17=-2376/589, 6-14=-273/1150, 8-14=-282/186, 8-12=-602/159, 9-12=0/416, 6-15=0/281, 9-11=-1676/432, 2-21=-1064/280

**NOTES**
1) Unbalanced roof live loads have been considered for this design.
2) Wind: ASCE 7-98; 110mph (3-second gust); h=18ft; TCDL=5.0psf; BCDL=5.0psf; Category II; Exp C; enclosed; MWFRS interior zone; cantilever left and right exposed ; Lumber DOL=1.33 plate grip DOL=1.33.
3) Provide adequate drainage to prevent water ponding.
4) This truss has been designed for a 10.0 psf bottom chord live load nonconcurrent with any other live loads.
5) This truss requires plate inspection per the Tooth Count Method when this truss is chosen for quality assurance inspection.
6) Provide mechanical connection (by others) of truss to bearing plate capable of withstanding 586 lb uplift at joint 17, 278 lb uplift at joint 11 and 225 lb uplift at joint 21.

**LOAD CASE(S)** Standard


Guo-Jie Zhang, FL Lic #47744
MiTek Industries, Inc.
1801 Massaro Blvd
Tampa FL 33619
FL Cert.#6634


November 22,2005

# Symbols

**PLATE LOCATION AND ORIENTATION**


*Center plate on joint unless x,y offsets are indicated. Dimensions are in ft-in-sixteenths. Apply plates to both sides of truss and securely seat.

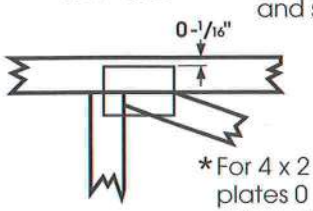


*For 4 x 2 orientation, locate plates 0 - 1/16" from outside edge of truss.

*This symbol indicates the required direction of slots in connector plates.

*** Plate location details available in MiTek 20/20 software or upon request.**

**PLATE SIZE**

4 x 4 — The first dimension is the width perpendicular to slots. Second dimension is the length parallel to slots.

**LATERAL BRACING**

Indicated by symbol shown and/or by text in the bracing section of the output. Use T, I or Eliminator bracing if indicated.

**BEARING**

Indicates location where bearings (supports) occur. Icons vary but reaction section indicates joint number where bearings occur.

**Industry Standards:**

ANSI/TPI1: National Design Specification for Metal Plate Connected Wood Truss Construction.
DSB-89: Design Standard for Bracing.
BCSI1: Building Component Safety Information, Guide to Good Practice for Handling, Installing & Bracing of Metal Plate Connected Wood Trusses.

# Numbering System

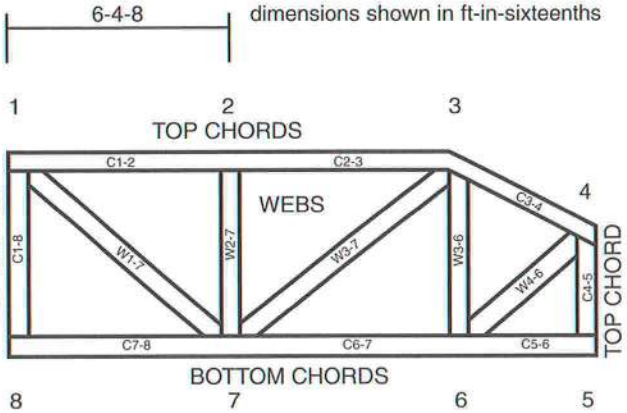


**JOINTS ARE GENERALLY NUMBERED/LETTERED CLOCKWISE AROUND THE TRUSS STARTING AT THE JOINT FARTHEST TO THE LEFT.**

**CHORDS AND WEBS ARE IDENTIFIED BY END JOINT NUMBERS/LETTERS.**

**CONNECTOR PLATE CODE APPROVALS**

| | |
|---|---|
| BOCA | 96-31, 95-43, 96-20-1, 96-67, 84-32 |
| ICBO | 4922, 5243, 5363, 3907 |
| SBCCI | 9667, 9730, 9604B, 9511, 9432A |

MiTek®

TEE-LOK®

# ⚠General Safety Notes

## Failure to Follow Could Cause Property Damage or Personal Injury

1. Additional stability bracing for truss system, e.g. diagonal or X-bracing, is always required. See BCSI1.
2. Never exceed the design loading shown and never stack materials on inadequately braced trusses.
3. Provide copies of this truss design to the building designer, erection supervisor, property owner and all other interested parties.
4. Cut members to bear tightly against each other.
5. Place plates on each face of truss at each joint and embed fully. Knots and wane at joint locations are regulated by ANSI/TPI1.
6. Design assumes trusses will be suitably protected from the environment in accord with ANSI/TPI1.
7. Unless otherwise noted, moisture content of lumber shall not exceed 19% at time of fabrication.
8. Unless expressly noted, this design is not applicable for use with fire retardant or preservative treated lumber.
9. Camber is a non-structural consideration and is the responsibility of truss fabricator. General practice is to camber for dead load deflection.
10. Plate type, size, orientation and location dimensions shown indicate minimum plating requirements.
11. Lumber used shall be of the species and size, and in all respects, equal to or better than that specified.
12. Top chords must be sheathed or purlins provided at spacing shown on design.
13. Bottom chords require lateral bracing at 10 ft. spacing, or less, if no ceiling is installed, unless otherwise noted.
14. Connections not shown are the responsibility of others.
15. Do not cut or alter truss member or plate without prior approval of a professional engineer.
16. Install and load vertically unless indicated otherwise.

| Job | Truss | Truss Type | Qty | Ply | WALKER RES |
|---|---|---|---|---|---|
| WALG | A20 | HIP | 1 | 1 | T1875008 |

Job Reference (optional)

SANTA FE TRUSS, HIGH SPRINGS FL., p.colacino

6.200 s Oct 18 2005 MiTek Industries, Inc. Mon Nov 21 16:21:09 2005 Page 1

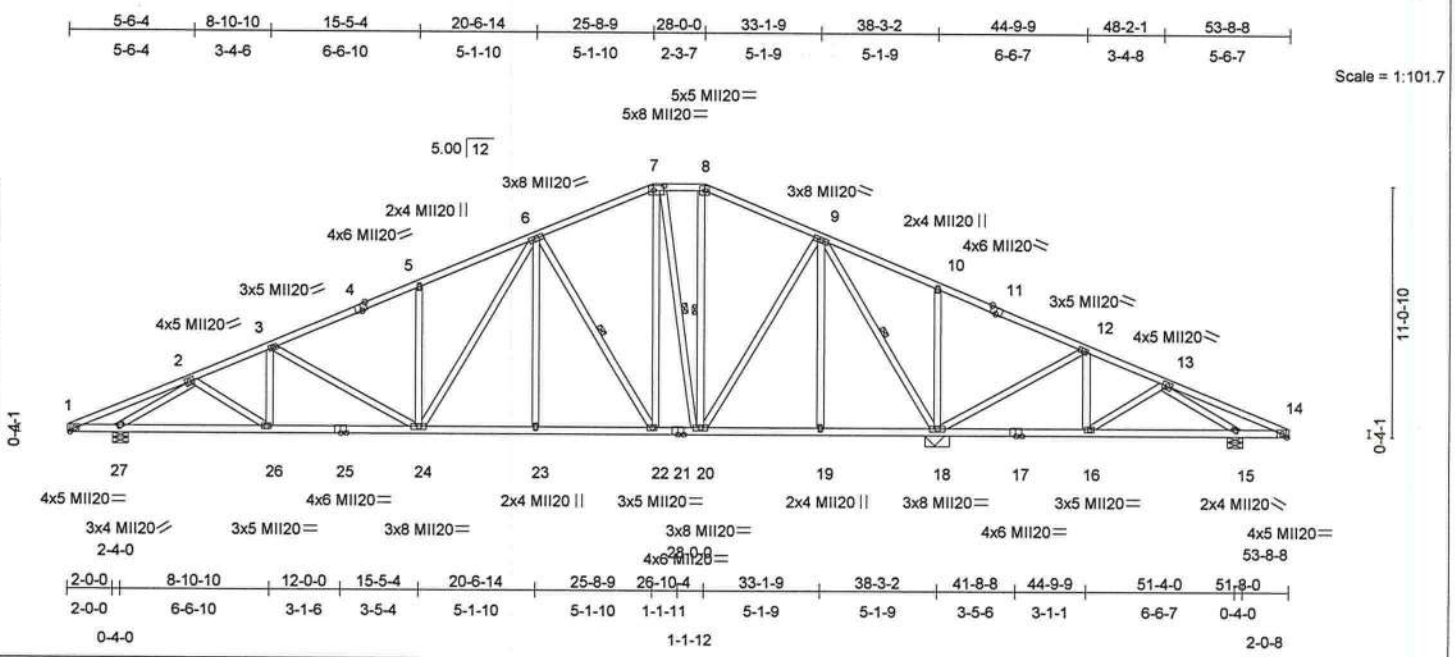


Plate Offsets (X,Y): [4:0-3-0,Edge], [7:0-5-12,0-2-8], [11:0-3-0,Edge]

| LOADING (psf) | | SPACING 2-0-0 | | CSI | | DEFL | in | (loc) | l/defl | L/d | PLATES | GRIP |
|---|---|---|---|---|---|---|---|---|---|---|---|---|
| TCLL | 20.0 | Plates Increase | 1.25 | TC | 0.45 | Vert(LL) | -0.09 | 24-26 | >999 | 240 | MII20 | 249/190 |
| TCDL | 10.0 | Lumber Increase | 1.25 | BC | 0.46 | Vert(TL) | -0.25 | 24-26 | >999 | 180 | | |
| BCLL | 0.0 | Rep Stress Incr | YES | WB | 0.89 | Horz(TL) | 0.07 | 18 | n/a | n/a | | |
| BCDL | 10.0 | Code FBC2004/TPI2002 | | (Matrix) | | | | | | | Weight: 369 lb | |

**LUMBER**
TOP CHORD 2 X 4 SYP No.2D
BOT CHORD 2 X 4 SYP No.2D
WEBS 2 X 4 SYP No.3

**BRACING**
TOP CHORD Structural wood sheathing directly applied or 4-3-0 oc purlins.
BOT CHORD Rigid ceiling directly applied or 6-0-0 oc bracing.
WEBS 1 Row at midpt 6-22, 7-20, 8-20, 9-18

**REACTIONS** (lb/size) 18=2460/1-0-13, 27=1484/0-8-0, 15=352/0-8-0
Max Horz 27=-160(load case 6)
Max Uplift18=-462(load case 6), 27=-393(load case 5), 15=-179(load case 6)
Max Grav 18=2460(load case 1), 27=1484(load case 1), 15=461(load case 8)

**FORCES** (lb) - Maximum Compression/Maximum Tension
TOP CHORD 1-2=-185/216, 2-3=-2102/457, 3-4=-1837/409, 4-5=-1745/422, 5-6=-1827/529, 6-7=-929/293, 7-8=-686/274, 8-9=-802/267, 9-10=-71/815, 10-11=-129/843, 11-12=-144/764, 12-13=-107/299, 13-14=-198/275
BOT CHORD 1-27=-147/208, 26-27=-467/1658, 25-26=-459/1911, 24-25=-459/1911, 23-24=-186/1241, 22-23=-186/1241, 21-22=-31/810, 20-21=-31/810, 19-20=0/269, 18-19=0/269, 17-18=-262/168, 16-17=-262/168, 15-16=-158/174, 14-15=-198/220
WEBS 2-26=0/301, 3-26=-41/112, 3-24=-343/145, 5-24=-367/229, 6-24=-285/763, 6-23=0/215, 6-22=-850/303, 7-22=-212/756, 7-20=-680/209, 8-20=-54/175, 9-20=-150/797, 9-19=0/193, 9-18=-1901/316, 10-18=-379/230, 12-18=-637/204, 12-16=0/318, 13-16=-204/106, 2-27=-2192/626, 13-15=-450/260

**NOTES**
1) Unbalanced roof live loads have been considered for this design.
2) Wind: ASCE 7-98; 110mph (3-second gust); h=18ft; TCDL=5.0psf; BCDL=5.0psf; Category II; Exp C; enclosed; MWFRS interior zone; cantilever left and right exposed ; Lumber DOL=1.33 plate grip DOL=1.33.
3) Provide adequate drainage to prevent water ponding.
4) This truss has been designed for a 10.0 psf bottom chord live load nonconcurrent with any other live loads.
5) This truss requires plate inspection per the Tooth Count Method when this truss is chosen for quality assurance inspection.
6) Provide mechanical connection (by others) of truss to bearing plate capable of withstanding 462 lb uplift at joint 18, 393 lb uplift at joint 27 and 179 lb uplift at joint 15.

**LOAD CASE(S)** Standard


Guo-Jie Zhang, FL Lic #47744
MiTek Industries, Inc.
1801 Massaro Blvd
Tampa FL 33619
FL Cert.#6634


November 22,2005

# Symbols

**PLATE LOCATION AND ORIENTATION**


*Center plate on joint unless x,y offsets are indicated. Dimensions are in ft-in-sixteenths. Apply plates to both sides of truss and securely seat.

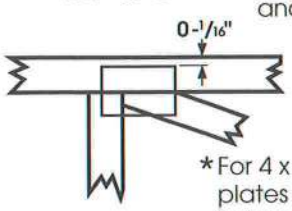


*For 4 x 2 orientation, locate plates 0 - 1/16" from outside edge of truss.

*This symbol indicates the required direction of slots in connector plates.

*** Plate location details available in MiTek 20/20 software or upon request.**

**PLATE SIZE**

4 x 4 — The first dimension is the width perpendicular to slots. Second dimension is the length parallel to slots.

**LATERAL BRACING**

Indicated by symbol shown and/or by text in the bracing section of the output. Use T, I or Eliminator bracing if indicated.

**BEARING**

Indicates location where bearings (supports) occur. Icons vary but reaction section indicates joint number where bearings occur.

**Industry Standards:**

ANSI/TPI1: National Design Specification for Metal Plate Connected Wood Truss Construction.
DSB-89: Design Standard for Bracing.
BCSI1: Building Component Safety Information, Guide to Good Practice for Handling, Installing & Bracing of Metal Plate Connected Wood Trusses.

# Numbering System

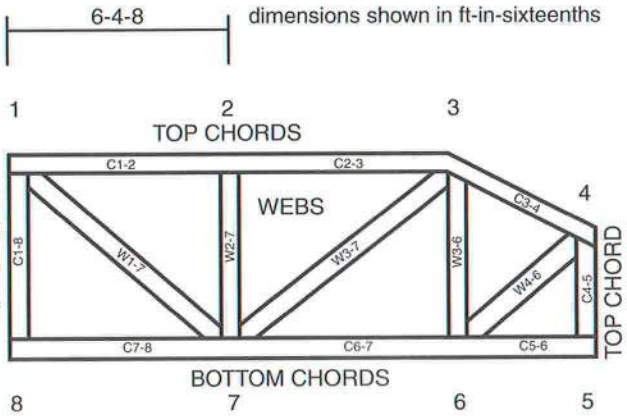


**JOINTS ARE GENERALLY NUMBERED/LETTERED CLOCKWISE AROUND THE TRUSS STARTING AT THE JOINT FARTHEST TO THE LEFT.**

**CHORDS AND WEBS ARE IDENTIFIED BY END JOINT NUMBERS/LETTERS.**

**CONNECTOR PLATE CODE APPROVALS**

| | |
|---|---|
| BOCA | 96-31, 95-43, 96-20-1, 96-67, 84-32 |
| ICBO | 4922, 5243, 5363, 3907 |
| SBCCI | 9667, 9730, 9604B, 9511, 9432A |

MiTek®

TEE-LOK®

# ⚠General Safety Notes

## Failure to Follow Could Cause Property Damage or Personal Injury

1. Additional stability bracing for truss system, e.g. diagonal or X-bracing, is always required. See BCSI1.
2. Never exceed the design loading shown and never stack materials on inadequately braced trusses.
3. Provide copies of this truss design to the building designer, erection supervisor, property owner and all other interested parties.
4. Cut members to bear tightly against each other.
5. Place plates on each face of truss at each joint and embed fully. Knots and wane at joint locations are regulated by ANSI/TPI1.
6. Design assumes trusses will be suitably protected from the environment in accord with ANSI/TPI1.
7. Unless otherwise noted, moisture content of lumber shall not exceed 19% at time of fabrication.
8. Unless expressly noted, this design is not applicable for use with fire retardant or preservative treated lumber.
9. Camber is a non-structural consideration and is the responsibility of truss fabricator. General practice is to camber for dead load deflection.
10. Plate type, size, orientation and location dimensions shown indicate minimum plating requirements.
11. Lumber used shall be of the species and size, and in all respects, equal to or better than that specified.
12. Top chords must be sheathed or purlins provided at spacing shown on design.
13. Bottom chords require lateral bracing at 10 ft. spacing, or less, if no ceiling is installed, unless otherwise noted.
14. Connections not shown are the responsibility of others.
15. Do not cut or alter truss member or plate without prior approval of a professional engineer.
16. Install and load vertically unless indicated otherwise.

| Job | Truss | Truss Type | Qty | Ply | WALKER RES |
|---|---|---|---|---|---|
| WALG | A3 | HIP | 1 | 1 | T1875009 |

Job Reference (optional)

SANTA FE TRUSS, HIGH SPRINGS FL., p.colacino

6.200 s Oct 18 2005 MiTek Industries, Inc. Mon Nov 21 16:21:10 2005 Page 1

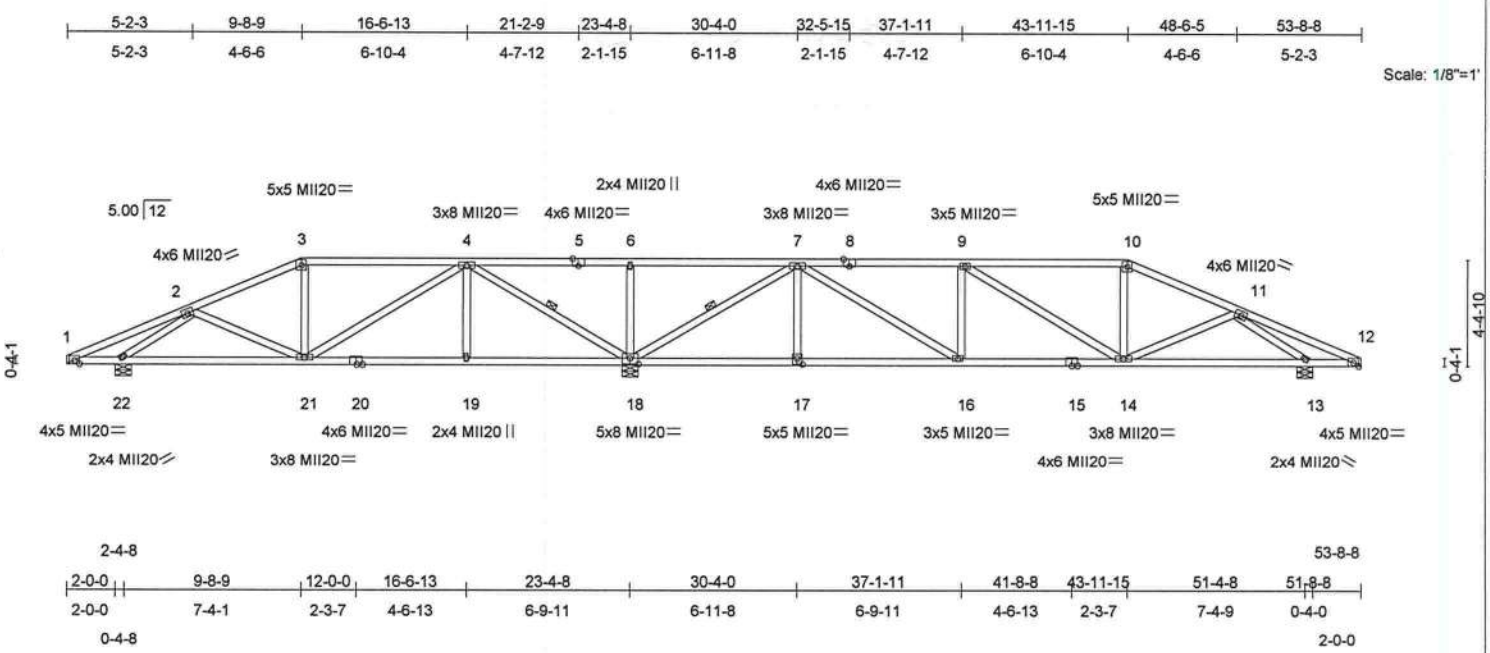





Plate Offsets (X,Y): [5:0-3-0,Edge], [8:0-3-0,Edge], [17:0-2-8,0-3-0], [18:0-4-0,0-3-0]

| LOADING (psf) | | SPACING | 2-0-0 | CSI | | DEFL | in | (loc) | l/defl | L/d | PLATES | GRIP |
|---|---|---|---|---|---|---|---|---|---|---|---|---|
| TCLL | 20.0 | Plates Increase | 1.25 | TC | 0.48 | Vert(LL) | -0.07 | 16 | >999 | 240 | MII20 | 249/190 |
| TCDL | 10.0 | Lumber Increase | 1.25 | BC | 0.38 | Vert(TL) | -0.18 | 16-17 | >999 | 180 | | |
| BCLL | 0.0 | Rep Stress Incr | YES | WB | 0.65 | Horz(TL) | 0.06 | 13 | n/a | n/a | | |
| BCDL | 10.0 | Code FBC2004/TPI2002 | | (Matrix) | | | | | | | Weight: 278 lb | |

**LUMBER**
TOP CHORD 2 X 4 SYP No.2D
BOT CHORD 2 X 4 SYP No.2D
WEBS 2 X 4 SYP No.3

**BRACING**
TOP CHORD Structural wood sheathing directly applied or 5-2-8 oc purlins.
BOT CHORD Rigid ceiling directly applied or 10-0-0 oc bracing, Except:
6-0-0 oc bracing: 1-22,12-13.
WEBS 1 Row at midpt 4-18, 7-18

**REACTIONS** (lb/size) 18=2377/0-8-0, 22=793/0-8-0, 13=1127/0-8-0
Max Horz 22=61(load case 5)
Max Uplift18=-572(load case 4), 22=-240(load case 5), 13=-274(load case 6)
Max Grav 18=2377(load case 1), 22=805(load case 7), 13=1134(load case 8)

**FORCES** (lb) - Maximum Compression/Maximum Tension
TOP CHORD 1-2=-211/220, 2-3=-739/166, 3-4=-634/175, 4-5=-201/1128, 5-6=-201/1128, 6-7=-201/1128, 7-8=-1401/395, 8-9=-1401/395, 9-10=-1258/328, 10-11=-1404/330, 11-12=-209/207
BOT CHORD 1-22=-151/226, 21-22=-158/657, 20-21=0/235, 19-20=0/235, 18-19=0/235, 17-18=-92/627, 16-17=-92/627, 15-16=-272/1401, 14-15=-272/1401, 13-14=-218/1106, 12-13=-140/225
WEBS 2-21=-28/117, 3-21=-100/98, 4-21=-78/491, 4-19=0/256, 4-18=-1541/363, 6-18=-422/210, 7-18=-1992/483, 7-17=0/272, 7-16=-210/917, 9-16=-339/173, 9-14=-252/86, 10-14=0/270, 11-14=-5/264, 2-22=-1000/400, 11-13=-1543/457

**NOTES**
1) Unbalanced roof live loads have been considered for this design.
2) Wind: ASCE 7-98; 110mph (3-second gust); h=18ft; TCDL=5.0psf; BCDL=5.0psf; Category II; Exp C; enclosed; MWFRS interior zone; cantilever left and right exposed ; Lumber DOL=1.33 plate grip DOL=1.33.
3) Provide adequate drainage to prevent water ponding.
4) This truss has been designed for a 10.0 psf bottom chord live load nonconcurrent with any other live loads.
5) This truss requires plate inspection per the Tooth Count Method when this truss is chosen for quality assurance inspection.
6) Provide mechanical connection (by others) of truss to bearing plate capable of withstanding 572 lb uplift at joint 18, 240 lb uplift at joint 22 and 274 lb uplift at joint 13.

**LOAD CASE(S)** Standard


Guo-Jie Zhang, FL Lic #47744
MiTek Industries, Inc.
1801 Massaro Blvd
Tampa FL 33619
FL Cert.#6634


November 22,2005

# Symbols

**PLATE LOCATION AND ORIENTATION**

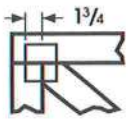


*Center plate on joint unless x,y offsets are indicated. Dimensions are in ft-in-sixteenths. Apply plates to both sides of truss and securely seat.

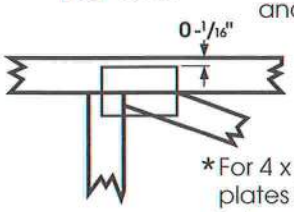


*For 4 x 2 orientation, locate plates 0 - 1/16" from outside edge of truss.

*This symbol indicates the required direction of slots in connector plates.

*** Plate location details available in MiTek 20/20 software or upon request.**

**PLATE SIZE**

4 x 4 — The first dimension is the width perpendicular to slots. Second dimension is the length parallel to slots.

**LATERAL BRACING**

Indicated by symbol shown and/or by text in the bracing section of the output. Use T, I or Eliminator bracing if indicated.

**BEARING**

Indicates location where bearings (supports) occur. Icons vary but reaction section indicates joint number where bearings occur.

**Industry Standards:**

ANSI/TPI1: National Design Specification for Metal Plate Connected Wood Truss Construction.
DSB-89: Design Standard for Bracing.
BCSI1: Building Component Safety Information, Guide to Good Practice for Handling, Installing & Bracing of Metal Plate Connected Wood Trusses.

# Numbering System

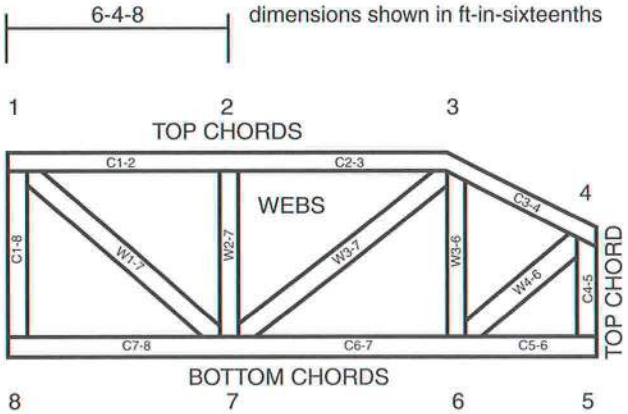


**JOINTS ARE GENERALLY NUMBERED/LETTERED CLOCKWISE AROUND THE TRUSS STARTING AT THE JOINT FARTHEST TO THE LEFT.**

**CHORDS AND WEBS ARE IDENTIFIED BY END JOINT NUMBERS/LETTERS.**

**CONNECTOR PLATE CODE APPROVALS**

| | |
|---|---|
| BOCA | 96-31, 95-43, 96-20-1, 96-67, 84-32 |
| ICBO | 4922, 5243, 5363, 3907 |
| SBCCI | 9667, 9730, 9604B, 9511, 9432A |

MiTek®

TEE-LOK®

# General Safety Notes

## Failure to Follow Could Cause Property Damage or Personal Injury

1. Additional stability bracing for truss system, e.g. diagonal or X-bracing, is always required. See BCSI1.
2. Never exceed the design loading shown and never stack materials on inadequately braced trusses.
3. Provide copies of this truss design to the building designer, erection supervisor, property owner and all other interested parties.
4. Cut members to bear tightly against each other.
5. Place plates on each face of truss at each joint and embed fully. Knots and wane at joint locations are regulated by ANSI/TPI1.
6. Design assumes trusses will be suitably protected from the environment in accord with ANSI/TPI1.
7. Unless otherwise noted, moisture content of lumber shall not exceed 19% at time of fabrication.
8. Unless expressly noted, this design is not applicable for use with fire retardant or preservative treated lumber.
9. Camber is a non-structural consideration and is the responsibility of truss fabricator. General practice is to camber for dead load deflection.
10. Plate type, size, orientation and location dimensions shown indicate minimum plating requirements.
11. Lumber used shall be of the species and size, and in all respects, equal to or better than that specified.
12. Top chords must be sheathed or purlins provided at spacing shown on design.
13. Bottom chords require lateral bracing at 10 ft. spacing, or less, if no ceiling is installed, unless otherwise noted.
14. Connections not shown are the responsibility of others.
15. Do not cut or alter truss member or plate without prior approval of a professional engineer.
16. Install and load vertically unless indicated otherwise.

| Job | Truss | Truss Type | Qty | Ply | WALKER RES |
|---|---|---|---|---|---|
| WALG | A4 | HIP | 1 | 1 | T1875010 |

Job Reference (optional)

SANTA FE TRUSS, HIGH SPRINGS FL., p.colacino

6.200 s Oct 18 2005 MiTek Industries, Inc. Mon Nov 21 16:21:11 2005 Page 1

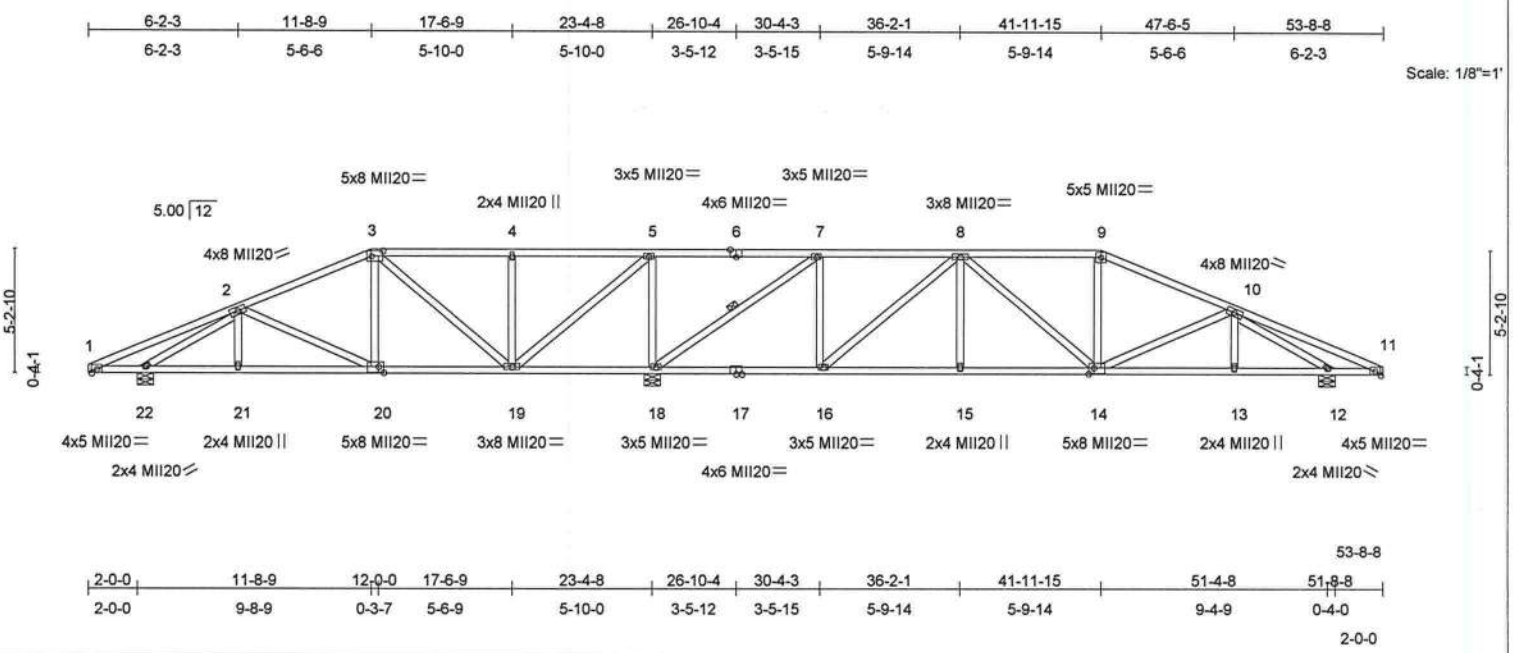


Plate Offsets (X,Y): [3:0-5-12,0-2-8], [6:0-3-0,Edge], [14:0-2-12,0-3-0], [20:0-2-12,0-3-0]

| LOADING (psf) | | SPACING | 2-0-0 | CSI | | DEFL | in | (loc) | l/defl | L/d | PLATES | GRIP |
|---|---|---|---|---|---|---|---|---|---|---|---|---|
| TCLL | 20.0 | Plates Increase | 1.25 | TC | 0.43 | Vert(LL) | -0.05 | 15 | >999 | 240 | MII20 | 249/190 |
| TCDL | 10.0 | Lumber Increase | 1.25 | BC | 0.39 | Vert(TL) | -0.15 | 13-14 | >999 | 180 | | |
| BCLL | 0.0 | Rep Stress Incr | YES | WB | 0.79 | Horz(TL) | 0.05 | 12 | n/a | n/a | | |
| BCDL | 10.0 | Code FBC2004/TPI2002 | | (Matrix) | | | | | | | Weight: 297 lb | |

**LUMBER**
TOP CHORD 2 X 4 SYP No.2D
BOT CHORD 2 X 4 SYP No.2D
WEBS 2 X 4 SYP No.3

**BRACING**
TOP CHORD Structural wood sheathing directly applied or 5-7-5 oc purlins.
BOT CHORD Rigid ceiling directly applied or 10-0-0 oc bracing, Except:
6-0-0 oc bracing: 1-22,18-19,11-12.
WEBS 1 Row at midpt 7-18

**REACTIONS** (lb/size) 18=2404/0-8-0, 22=779/0-8-0, 12=1115/0-8-0
Max Horz 22=73(load case 5)
Max Uplift18=-555(load case 4), 22=-251(load case 5), 12=-290(load case 6)
Max Grav 18=2404(load case 1), 22=801(load case 7), 12=1129(load case 8)

**FORCES** (lb) - Maximum Compression/Maximum Tension
TOP CHORD 1-2=-146/278, 2-3=-587/143, 3-4=-47/75, 4-5=-47/75, 5-6=-141/1008, 6-7=-141/1008, 7-8=-502/195, 8-9=-1143/308, 9-10=-1294/308, 10-11=-138/234
BOT CHORD 1-22=-190/175, 21-22=-162/732, 20-21=-162/732, 19-20=-40/496, 18-19=-1008/289, 17-18=-47/502, 16-17=-47/502, 15-16=-174/1085, 14-15=-174/1085, 13-14=-196/1255, 12-13=-196/1255, 11-12=-151/167
WEBS 2-21=0/190, 2-20=-285/134, 3-20=-0/327, 3-19=-622/118, 4-19=-347/173, 5-19=-282/1289, 5-18=-1235/384, 7-18=-1774/412, 7-16=-39/638, 8-16=-786/166, 8-15=0/214, 8-14=-52/97, 9-14=0/229, 10-14=-139/119, 10-13=0/183, 2-22=-1094/313, 10-12=-1664/383

**NOTES**
1) Unbalanced roof live loads have been considered for this design.
2) Wind: ASCE 7-98; 110mph (3-second gust); h=18ft; TCDL=5.0psf; BCDL=5.0psf; Category II; Exp C; enclosed; MWFRS interior zone; cantilever left and right exposed ; Lumber DOL=1.33 plate grip DOL=1.33.
3) Provide adequate drainage to prevent water ponding.
4) This truss has been designed for a 10.0 psf bottom chord live load nonconcurrent with any other live loads.
5) This truss requires plate inspection per the Tooth Count Method when this truss is chosen for quality assurance inspection.
6) Provide mechanical connection (by others) of truss to bearing plate capable of withstanding 555 lb uplift at joint 18, 251 lb uplift at joint 22 and 290 lb uplift at joint 12.

**LOAD CASE(S)** Standard


Guo-Jie Zhang, FL Lic #47744
MiTek Industries, Inc.
1801 Massaro Blvd
Tampa FL 33619
FL Cert.#6634


November 22,2005

# Symbols

**PLATE LOCATION AND ORIENTATION**

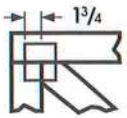


*Center plate on joint unless x,y offsets are indicated. Dimensions are in ft-in-sixteenths. Apply plates to both sides of truss and securely seat.

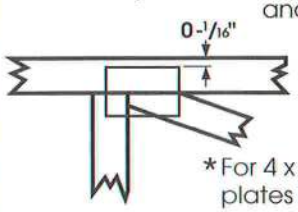


*For 4 x 2 orientation, locate plates 0 - 1/16" from outside edge of truss.

*This symbol indicates the required direction of slots in connector plates.

*** Plate location details available in MiTek 20/20 software or upon request.**

**PLATE SIZE**

4 x 4 — The first dimension is the width perpendicular to slots. Second dimension is the length parallel to slots.

**LATERAL BRACING**

Indicated by symbol shown and/or by text in the bracing section of the output. Use T, I or Eliminator bracing if indicated.

**BEARING**

Indicates location where bearings (supports) occur. Icons vary but reaction section indicates joint number where bearings occur.

**Industry Standards:**

ANSI/TPI1: National Design Specification for Metal Plate Connected Wood Truss Construction.
DSB-89: Design Standard for Bracing.
BCSI1: Building Component Safety Information, Guide to Good Practice for Handling, Installing & Bracing of Metal Plate Connected Wood Trusses.

# Numbering System

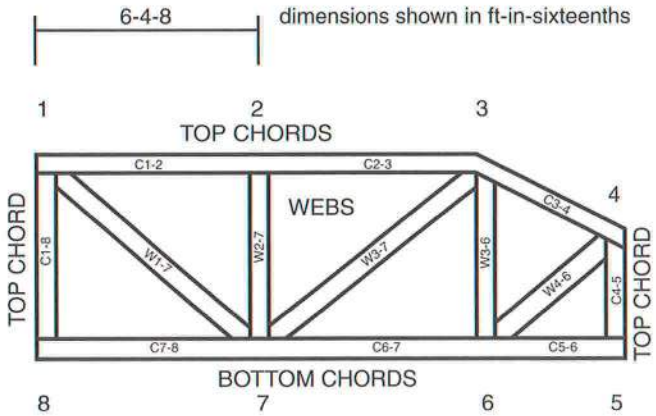


**JOINTS ARE GENERALLY NUMBERED/LETTERED CLOCKWISE AROUND THE TRUSS STARTING AT THE JOINT FARTHEST TO THE LEFT.**

**CHORDS AND WEBS ARE IDENTIFIED BY END JOINT NUMBERS/LETTERS.**

**CONNECTOR PLATE CODE APPROVALS**

| | |
|---|---|
| BOCA | 96-31, 95-43, 96-20-1, 96-67, 84-32 |
| ICBO | 4922, 5243, 5363, 3907 |
| SBCCI | 9667, 9730, 9604B, 9511, 9432A |

MiTek®

TEE-LOK®

# ⚠General Safety Notes

## Failure to Follow Could Cause Property Damage or Personal Injury

1. Additional stability bracing for truss system, e.g. diagonal or X-bracing, is always required. See BCSI1.
2. Never exceed the design loading shown and never stack materials on inadequately braced trusses.
3. Provide copies of this truss design to the building designer, erection supervisor, property owner and all other interested parties.
4. Cut members to bear tightly against each other.
5. Place plates on each face of truss at each joint and embed fully. Knots and wane at joint locations are regulated by ANSI/TPI1.
6. Design assumes trusses will be suitably protected from the environment in accord with ANSI/TPI1.
7. Unless otherwise noted, moisture content of lumber shall not exceed 19% at time of fabrication.
8. Unless expressly noted, this design is not applicable for use with fire retardant or preservative treated lumber.
9. Camber is a non-structural consideration and is the responsibility of truss fabricator. General practice is to camber for dead load deflection.
10. Plate type, size, orientation and location dimensions shown indicate minimum plating requirements.
11. Lumber used shall be of the species and size, and in all respects, equal to or better than that specified.
12. Top chords must be sheathed or purlins provided at spacing shown on design.
13. Bottom chords require lateral bracing at 10 ft. spacing, or less, if no ceiling is installed, unless otherwise noted.
14. Connections not shown are the responsibility of others.
15. Do not cut or alter truss member or plate without prior approval of a professional engineer.
16. Install and load vertically unless indicated otherwise.

| Job | Truss | Truss Type | Qty | Ply | WALKER RES |
|---|---|---|---|---|---|
| WALG | A5 | HIP | 1 | 1 | T1875011 |

Job Reference (optional)

SANTA FE TRUSS, HIGH SPRINGS FL., p.colacino

6.200 s Oct 18 2005 MiTek Industries, Inc. Mon Nov 21 16:21:12 2005 Page 1

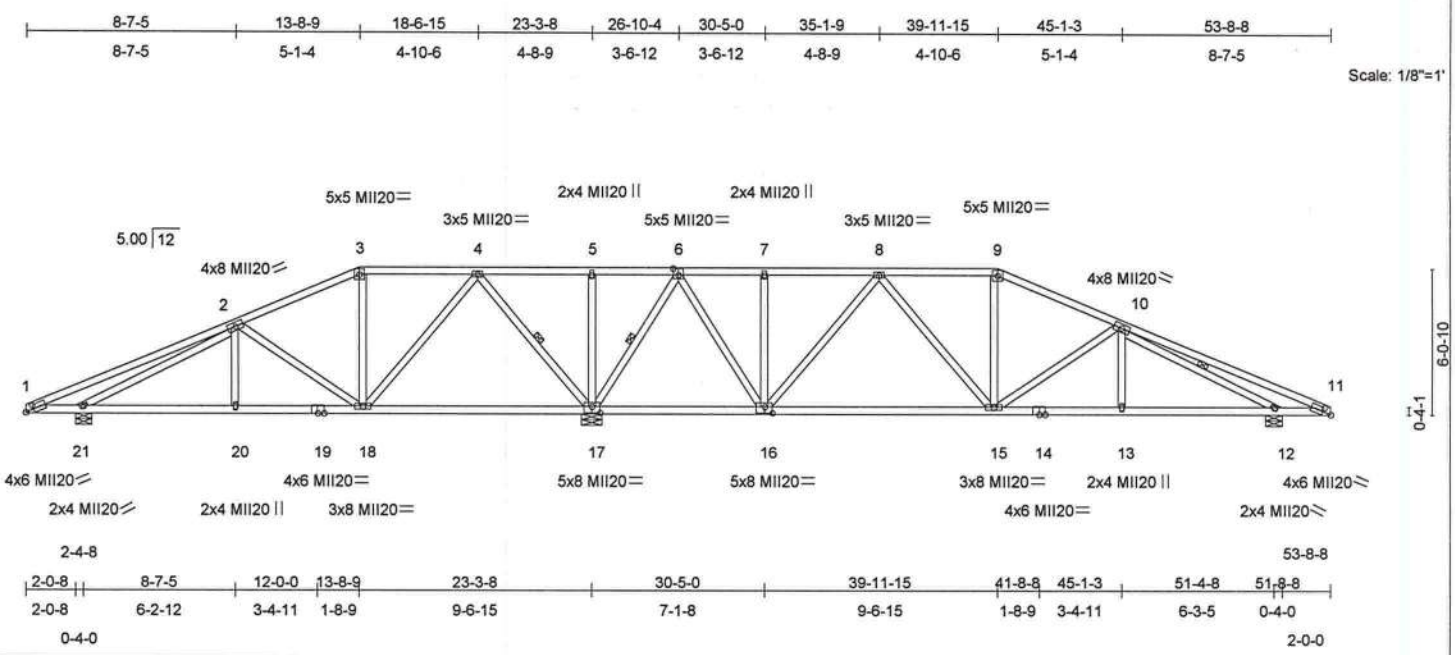


Plate Offsets (X,Y): [1:0-4-3,0-2-0], [6:0-2-8,0-3-0], [11:0-4-3,0-2-0], [16:0-4-0,0-3-0], [17:0-4-0,0-3-0]

| LOADING (psf) | | SPACING | 2-0-0 | CSI | | DEFL | in | (loc) | l/defl | L/d | PLATES | GRIP |
|---|---|---|---|---|---|---|---|---|---|---|---|---|
| TCLL | 20.0 | Plates Increase | 1.25 | TC | 0.47 | Vert(LL) | -0.15 | 15-16 | >999 | 240 | MII20 | 249/190 |
| TCDL | 10.0 | Lumber Increase | 1.25 | BC | 0.64 | Vert(TL) | -0.41 | 15-16 | >826 | 180 | | |
| BCLL | 0.0 | Rep Stress Incr | YES | WB | 0.74 | Horz(TL) | 0.04 | 12 | n/a | n/a | | |
| BCDL | 10.0 | Code FBC2004/TPI2002 | | (Matrix) | | | | | | | Weight: 307 lb | |

**LUMBER**
TOP CHORD 2 X 4 SYP No.2D
BOT CHORD 2 X 4 SYP No.2D
WEBS 2 X 4 SYP No.3

**BRACING**
TOP CHORD Structural wood sheathing directly applied or 5-6-6 oc purlins.
BOT CHORD Rigid ceiling directly applied or 6-0-0 oc bracing.
WEBS 1 Row at midpt 4-17, 6-17, 10-12

**REACTIONS** (lb/size) 17=2508/0-10-1, 21=715/0-8-0, 12=1074/0-8-0
Max Horz 21=86(load case 5)
Max Uplift17=-549(load case 4), 21=-249(load case 5), 12=-300(load case 6)
Max Grav 17=2508(load case 1), 21=755(load case 7), 12=1101(load case 8)

**FORCES** (lb) - Maximum Compression/Maximum Tension
TOP CHORD 1-2=-135/209, 2-3=-338/120, 3-4=-239/132, 4-5=-141/1094, 5-6=-141/1094, 6-7=-327/151, 7-8=-327/151, 8-9=-958/260, 9-10=-1108/264, 10-11=-122/144
BOT CHORD 1-21=-103/183, 20-21=-156/623, 19-20=-156/623, 18-19=-156/623, 17-18=-345/178, 16-17=-375/168, 15-16=-96/767, 14-15=-174/1252, 13-14=-174/1252, 12-13=-174/1252, 11-12=-44/171
WEBS 2-20=0/189, 2-18=-473/206, 3-18=-179/76, 4-18=-111/794, 4-17=-1183/288, 5-17=-261/128, 6-17=-1367/335, 6-16=-219/1145, 8-16=-730/188, 9-15=0/206, 10-15=-371/192, 10-13=0/182, 2-21=-825/290, 10-12=-1477/386, 8-15=-44/335, 7-16=-248/125

**NOTES**
1) Unbalanced roof live loads have been considered for this design.
2) Wind: ASCE 7-98; 110mph (3-second gust); h=18ft; TCDL=5.0psf; BCDL=5.0psf; Category II; Exp C; enclosed; MWFRS interior zone; cantilever left and right exposed ; Lumber DOL=1.33 plate grip DOL=1.33.
3) Provide adequate drainage to prevent water ponding.
4) This truss has been designed for a 10.0 psf bottom chord live load nonconcurrent with any other live loads.
5) This truss requires plate inspection per the Tooth Count Method when this truss is chosen for quality assurance inspection.
6) Provide mechanical connection (by others) of truss to bearing plate capable of withstanding 549 lb uplift at joint 17, 249 lb uplift at joint 21 and 300 lb uplift at joint 12.

**LOAD CASE(S)** Standard


Guo-Jie Zhang, FL Lic #47744
MiTek Industries, Inc.
1801 Massaro Blvd
Tampa FL 33619
FL Cert.#6634


November 22,2005

# Symbols

## PLATE LOCATION AND ORIENTATION

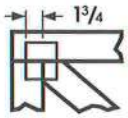


*Center plate on joint unless x,y offsets are indicated. Dimensions are in ft-in-sixteenths. Apply plates to both sides of truss and securely seat.

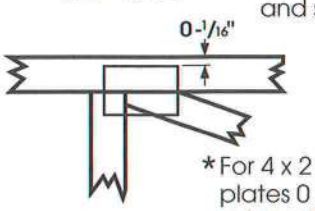


*For 4 x 2 orientation, locate plates 0 - 1/16" from outside edge of truss.



*This symbol indicates the required direction of slots in connector plates.

*** Plate location details available in MiTek 20/20 software or upon request.**

## PLATE SIZE

4 x 4 — The first dimension is the width perpendicular to slots. Second dimension is the length parallel to slots.

## LATERAL BRACING

Indicated by symbol shown and/or by text in the bracing section of the output. Use T, I or Eliminator bracing if indicated.

## BEARING

Indicates location where bearings (supports) occur. Icons vary but reaction section indicates joint number where bearings occur.

**Industry Standards:**

ANSI/TPI1: National Design Specification for Metal Plate Connected Wood Truss Construction.
DSB-89: Design Standard for Bracing.
BCSI1: Building Component Safety Information, Guide to Good Practice for Handling, Installing & Bracing of Metal Plate Connected Wood Trusses.

# Numbering System

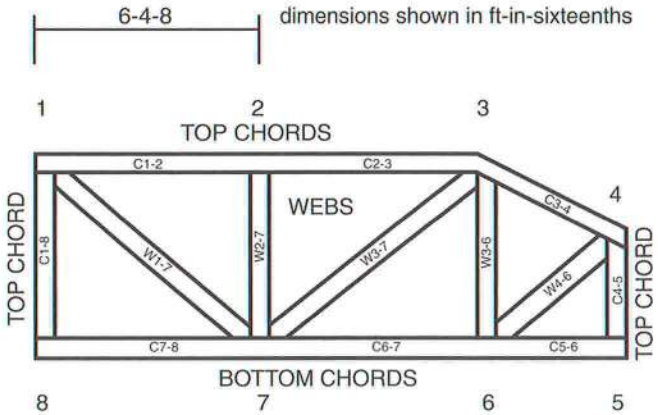


**JOINTS ARE GENERALLY NUMBERED/LETTERED CLOCKWISE AROUND THE TRUSS STARTING AT THE JOINT FARTHEST TO THE LEFT.**

**CHORDS AND WEBS ARE IDENTIFIED BY END JOINT NUMBERS/LETTERS.**

## CONNECTOR PLATE CODE APPROVALS

| | |
|---|---|
| BOCA | 96-31, 95-43, 96-20-1, 96-67, 84-32 |
| ICBO | 4922, 5243, 5363, 3907 |
| SBCCI | 9667, 9730, 9604B, 9511, 9432A |

MiTek®

TEE-LOK®

# ⚠General Safety Notes

## Failure to Follow Could Cause Property Damage or Personal Injury

1. Additional stability bracing for truss system, e.g. diagonal or X-bracing, is always required. See BCSI1.
2. Never exceed the design loading shown and never stack materials on inadequately braced trusses.
3. Provide copies of this truss design to the building designer, erection supervisor, property owner and all other interested parties.
4. Cut members to bear tightly against each other.
5. Place plates on each face of truss at each joint and embed fully. Knots and wane at joint locations are regulated by ANSI/TPI1.
6. Design assumes trusses will be suitably protected from the environment in accord with ANSI/TPI1.
7. Unless otherwise noted, moisture content of lumber shall not exceed 19% at time of fabrication.
8. Unless expressly noted, this design is not applicable for use with fire retardant or preservative treated lumber.
9. Camber is a non-structural consideration and is the responsibility of truss fabricator. General practice is to camber for dead load deflection.
10. Plate type, size, orientation and location dimensions shown indicate minimum plating requirements.
11. Lumber used shall be of the species and size, and in all respects, equal to or better than that specified.
12. Top chords must be sheathed or purlins provided at spacing shown on design.
13. Bottom chords require lateral bracing at 10 ft. spacing, or less, if no ceiling is installed, unless otherwise noted.
14. Connections not shown are the responsibility of others.
15. Do not cut or alter truss member or plate without prior approval of a professional engineer.
16. Install and load vertically unless indicated otherwise.

| Job | Truss | Truss Type | Qty | Ply | WALKER RES |
|---|---|---|---|---|---|
| WALG | A6 | HIP | 1 | 1 | T1875012 |

Job Reference (optional)

SANTA FE TRUSS, HIGH SPRINGS FL., p.colacino — 6.200 s Oct 18 2005 MiTek Industries, Inc. Mon Nov 21 16:21:14 2005 Page 1

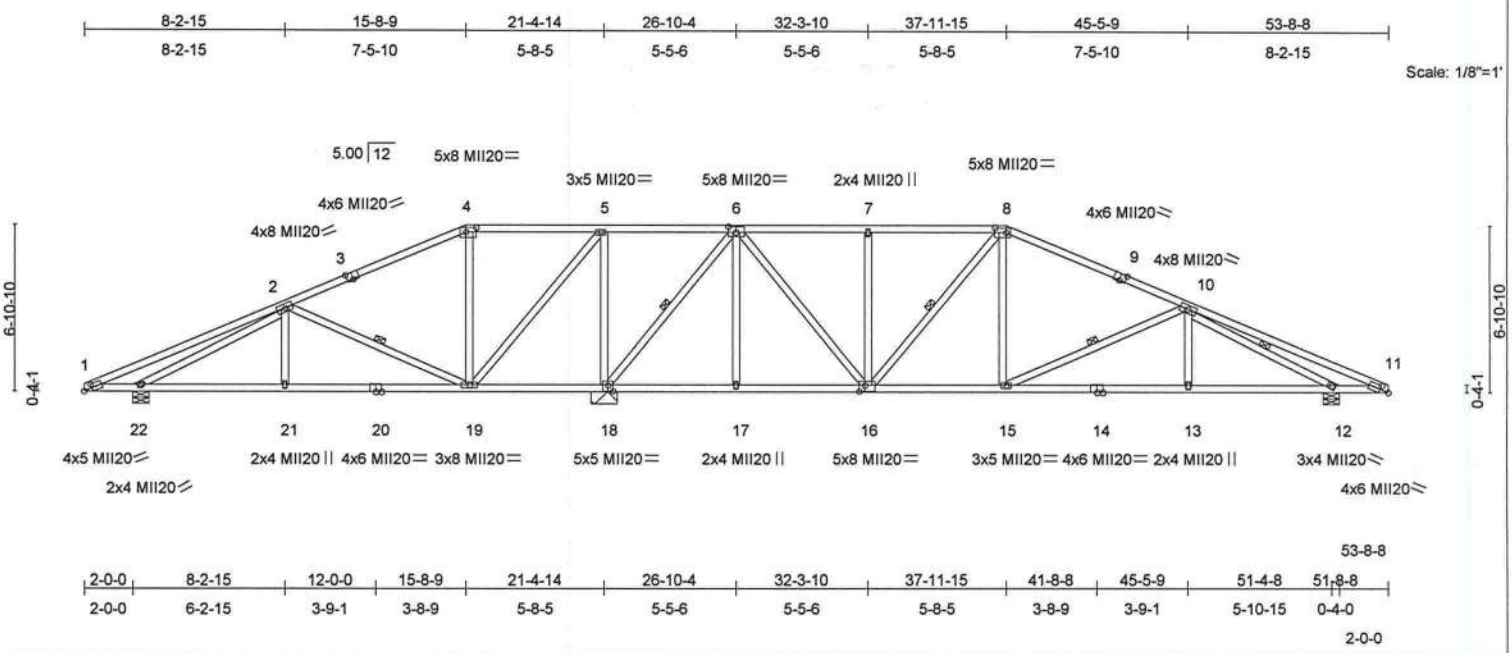


Plate Offsets (X,Y): [1:0-4-4,0-2-0], [3:0-3-0,Edge], [4:0-5-0,0-2-4], [6:0-4-0,0-3-0], [8:0-5-12,0-2-8], [9:0-3-0,Edge], [11:0-4-4,0-2-0], [16:0-2-12,0-3-0], [18:0-2-8,0-3-0]

| LOADING (psf) | | SPACING | 2-0-0 | CSI | | DEFL | in | (loc) | l/defl | L/d | PLATES | GRIP |
|---|---|---|---|---|---|---|---|---|---|---|---|---|
| TCLL | 20.0 | Plates Increase | 1.25 | TC | 0.42 | Vert(LL) | -0.08 | 13-15 | >999 | 240 | MII20 | 249/190 |
| TCDL | 10.0 | Lumber Increase | 1.25 | BC | 0.55 | Vert(TL) | -0.24 | 13-15 | >999 | 180 | | |
| BCLL | 0.0 | Rep Stress Incr | YES | WB | 0.94 | Horz(TL) | 0.04 | 12 | n/a | n/a | | |
| BCDL | 10.0 | Code FBC2004/TPI2002 | | (Matrix) | | | | | | | Weight: 313 lb | |

**LUMBER**
TOP CHORD 2 X 4 SYP No.2D
BOT CHORD 2 X 4 SYP No.2D
WEBS 2 X 4 SYP No.3

**BRACING**
TOP CHORD Structural wood sheathing directly applied or 5-7-6 oc purlins.
BOT CHORD Rigid ceiling directly applied or 10-0-0 oc bracing, Except: 6-0-0 oc bracing: 1-22,18-19,11-12.
WEBS 1 Row at midpt 2-19, 6-18, 8-16, 10-15, 10-12

**REACTIONS** (lb/size) 18=2531/1-0-13, 22=605/0-8-0, 12=1161/0-8-0
Max Horz 22=98(load case 5)
Max Uplift18=-517(load case 4), 22=-239(load case 5), 12=-323(load case 6)
Max Grav 18=2531(load case 1), 22=662(load case 7), 12=1191(load case 8)

**FORCES** (lb) - Maximum Compression/Maximum Tension
TOP CHORD 1-2=-131/257, 2-3=-7/289, 3-4=0/341, 4-5=0/295, 5-6=-70/970, 6-7=-727/261, 7-8=-734/264, 8-9=-1098/287, 9-10=-1188/261, 10-11=-121/185
BOT CHORD 1-22=-147/174, 21-22=-166/513, 20-21=-166/513, 19-20=-166/513, 18-19=-970/269, 17-18=0/145, 16-17=0/145, 15-16=-98/1020, 14-15=-217/1448, 13-14=-217/1448, 12-13=-217/1448, 11-12=-82/165
WEBS 2-21=0/287, 2-19=-682/244, 4-19=-475/154, 5-19=-227/1168, 5-18=-1219/313, 6-18=-1558/334, 6-17=0/216, 6-16=-189/984, 7-16=-343/164, 8-16=-471/121, 8-15=-24/432, 10-15=-488/216, 10-13=0/276, 2-22=-749/278, 10-12=-1750/437

**NOTES**
1) Unbalanced roof live loads have been considered for this design.
2) Wind: ASCE 7-98; 110mph (3-second gust); h=18ft; TCDL=5.0psf; BCDL=5.0psf; Category II; Exp C; enclosed; MWFRS interior zone; cantilever left and right exposed ; Lumber DOL=1.33 plate grip DOL=1.33.
3) Provide adequate drainage to prevent water ponding.
4) This truss has been designed for a 10.0 psf bottom chord live load nonconcurrent with any other live loads.
5) This truss requires plate inspection per the Tooth Count Method when this truss is chosen for quality assurance inspection.
6) Provide mechanical connection (by others) of truss to bearing plate capable of withstanding 517 lb uplift at joint 18, 239 lb uplift at joint 22 and 323 lb uplift at joint 12.

**LOAD CASE(S)** Standard


Guo-Jie Zhang, FL Lic #47744
MiTek Industries, Inc.
1801 Massaro Blvd
Tampa FL 33619
FL Cert.#6634


November 22,2005

# Symbols

**PLATE LOCATION AND ORIENTATION**

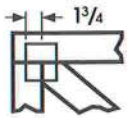


*Center plate on joint unless x,y offsets are indicated. Dimensions are in ft-in-sixteenths. Apply plates to both sides of truss and securely seat.

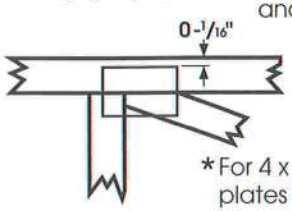


*For 4 x 2 orientation, locate plates 0 - 1/16" from outside edge of truss.

*This symbol indicates the required direction of slots in connector plates.

*** Plate location details available in MiTek 20/20 software or upon request.**

**PLATE SIZE**

4 x 4 — The first dimension is the width perpendicular to slots. Second dimension is the length parallel to slots.

**LATERAL BRACING**

Indicated by symbol shown and/or by text in the bracing section of the output. Use T, I or Eliminator bracing if indicated.

**BEARING**

Indicates location where bearings (supports) occur. Icons vary but reaction section indicates joint number where bearings occur.

**Industry Standards:**

ANSI/TPI1: National Design Specification for Metal Plate Connected Wood Truss Construction.
DSB-89: Design Standard for Bracing.
BCSI1: Building Component Safety Information, Guide to Good Practice for Handling, Installing & Bracing of Metal Plate Connected Wood Trusses.

# Numbering System

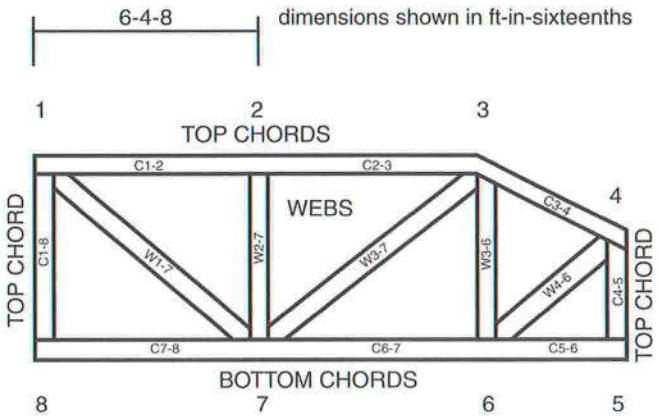


**JOINTS ARE GENERALLY NUMBERED/LETTERED CLOCKWISE AROUND THE TRUSS STARTING AT THE JOINT FARTHEST TO THE LEFT.**

**CHORDS AND WEBS ARE IDENTIFIED BY END JOINT NUMBERS/LETTERS.**

**CONNECTOR PLATE CODE APPROVALS**

| | |
|---|---|
| BOCA | 96-31, 95-43, 96-20-1, 96-67, 84-32 |
| ICBO | 4922, 5243, 5363, 3907 |
| SBCCI | 9667, 9730, 9604B, 9511, 9432A |

MiTek®

TEE-LOK®

# ⚠General Safety Notes

## Failure to Follow Could Cause Property Damage or Personal Injury

1. Additional stability bracing for truss system, e.g. diagonal or X-bracing, is always required. See BCSI1.
2. Never exceed the design loading shown and never stack materials on inadequately braced trusses.
3. Provide copies of this truss design to the building designer, erection supervisor, property owner and all other interested parties.
4. Cut members to bear tightly against each other.
5. Place plates on each face of truss at each joint and embed fully. Knots and wane at joint locations are regulated by ANSI/TPI1.
6. Design assumes trusses will be suitably protected from the environment in accord with ANSI/TPI1.
7. Unless otherwise noted, moisture content of lumber shall not exceed 19% at time of fabrication.
8. Unless expressly noted, this design is not applicable for use with fire retardant or preservative treated lumber.
9. Camber is a non-structural consideration and is the responsibility of truss fabricator. General practice is to camber for dead load deflection.
10. Plate type, size, orientation and location dimensions shown indicate minimum plating requirements.
11. Lumber used shall be of the species and size, and in all respects, equal to or better than that specified.
12. Top chords must be sheathed or purlins provided at spacing shown on design.
13. Bottom chords require lateral bracing at 10 ft. spacing, or less, if no ceiling is installed, unless otherwise noted.
14. Connections not shown are the responsibility of others.
15. Do not cut or alter truss member or plate without prior approval of a professional engineer.
16. Install and load vertically unless indicated otherwise.

| Job | Truss | Truss Type | Qty | Ply | WALKER RES |
|---|---|---|---|---|---|
| WALG | A7 | HIP | 1 | 1 | T1875013 |

Job Reference (optional)

SANTA FE TRUSS, HIGH SPRINGS FL., p.colacino — 6.200 s Oct 18 2005 MiTek Industries, Inc. Mon Nov 21 16:21:15 2005 Page 1

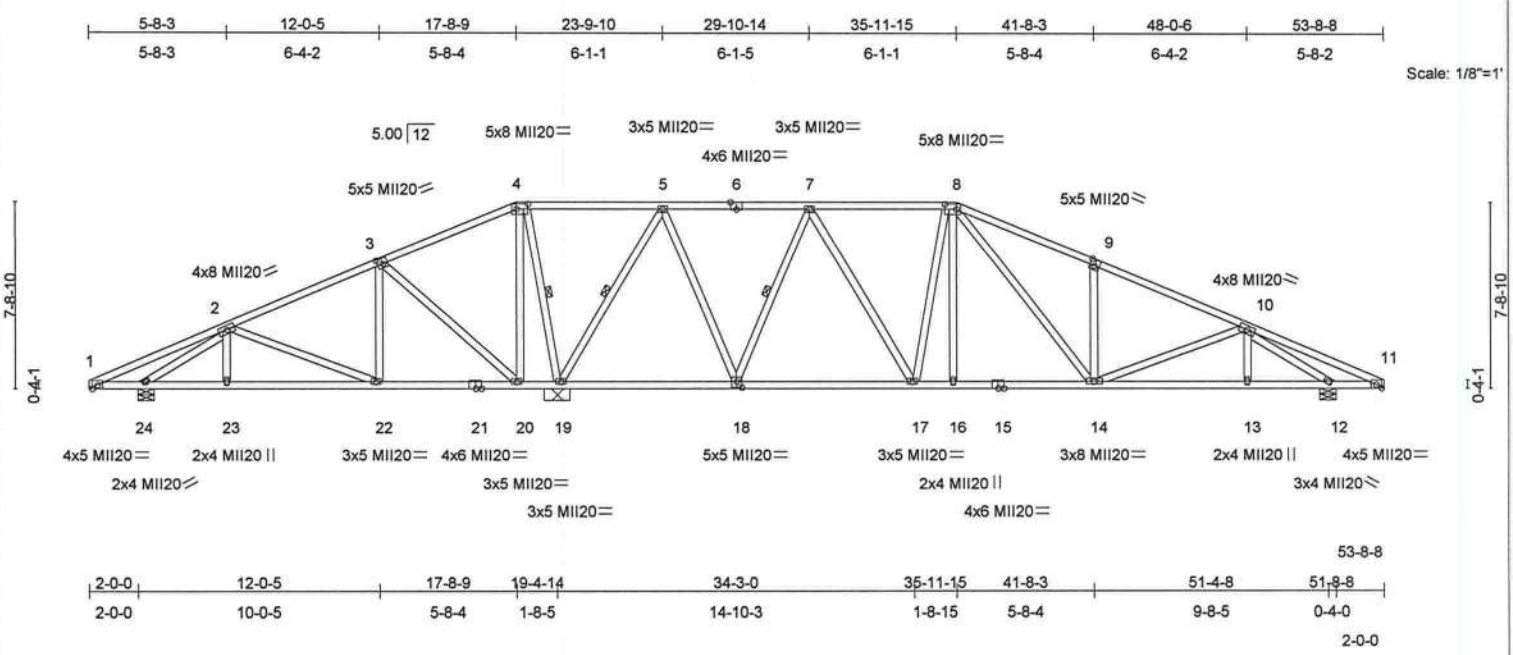





Plate Offsets (X,Y): [3:0-2-8,0-3-0], [4:0-5-12,0-2-8], [6:0-3-0,Edge], [8:0-5-12,0-2-8], [9:0-2-8,0-3-0], [18:0-2-8,0-3-0]

| LOADING (psf) | | SPACING | 2-0-0 | CSI | | DEFL | in | (loc) | l/defl | L/d | PLATES | GRIP |
|---|---|---|---|---|---|---|---|---|---|---|---|---|
| TCLL | 20.0 | Plates Increase | 1.25 | TC | 0.37 | Vert(LL) | 0.06 | 13-14 | >999 | 240 | MII20 | 249/190 |
| TCDL | 10.0 | Lumber Increase | 1.25 | BC | 0.41 | Vert(TL) | -0.19 | 17-18 | >999 | 180 | | |
| BCLL | 0.0 | Rep Stress Incr | YES | WB | 0.71 | Horz(TL) | 0.04 | 12 | n/a | n/a | | |
| BCDL | 10.0 | Code FBC2004/TPI2002 | | (Matrix) | | | | | | | Weight: 331 lb | |

**LUMBER**
TOP CHORD 2 X 4 SYP No.2D
BOT CHORD 2 X 4 SYP No.2D
WEBS 2 X 4 SYP No.3

**BRACING**
TOP CHORD Structural wood sheathing directly applied or 4-11-5 oc purlins.
BOT CHORD Rigid ceiling directly applied or 6-0-0 oc bracing.
WEBS 1 Row at midpt 4-19, 5-19, 7-18

**REACTIONS** (lb/size) 19=2594/1-0-13, 24=462/0-8-0, 12=1240/0-8-0
Max Horz 24=110(load case 5)
Max Uplift19=-494(load case 4), 24=-217(load case 5), 12=-346(load case 6)
Max Grav 19=2594(load case 1), 24=537(load case 7), 12=1271(load case 8)

**FORCES** (lb) - Maximum Compression/Maximum Tension
TOP CHORD 1-2=-142/302, 2-3=-44/429, 3-4=-61/827, 4-5=-59/945, 5-6=-355/185, 6-7=-355/185, 7-8=-939/289, 8-9=-1590/459, 9-10=-1601/350, 10-11=-131/233
BOT CHORD 1-24=-212/166, 23-24=-159/361, 22-23=-159/361, 21-22=-379/197, 20-21=-379/197, 19-20=-695/263, 18-19=-151/179, 17-18=-51/684, 16-17=-85/1013, 15-16=-85/1012, 14-15=-85/1012, 13-14=-239/1446, 12-13=-239/1446, 11-12=-151/157
WEBS 2-23=0/201, 2-22=-466/152, 3-22=0/391, 3-20=-683/233, 4-20=-120/444, 4-19=-1111/261, 5-19=-1566/374, 5-18=-144/1056, 7-18=-899/231, 7-17=-96/540, 8-17=-355/140, 8-16=0/82, 8-14=-248/654, 9-14=-360/232, 10-14=-54/81, 10-13=0/187, 2-24=-682/258, 10-12=-1917/476

**NOTES**
1) Unbalanced roof live loads have been considered for this design.
2) Wind: ASCE 7-98; 110mph (3-second gust); h=18ft; TCDL=5.0psf; BCDL=5.0psf; Category II; Exp C; enclosed; MWFRS interior zone; cantilever left and right exposed ; Lumber DOL=1.33 plate grip DOL=1.33.
3) Provide adequate drainage to prevent water ponding.
4) This truss has been designed for a 10.0 psf bottom chord live load nonconcurrent with any other live loads.
5) This truss requires plate inspection per the Tooth Count Method when this truss is chosen for quality assurance inspection.
6) Provide mechanical connection (by others) of truss to bearing plate capable of withstanding 494 lb uplift at joint 19, 217 lb uplift at joint 24 and 346 lb uplift at joint 12.

**LOAD CASE(S)** Standard


Guo-Jie Zhang, FL Lic #47744
MiTek Industries, Inc.
1801 Massaro Blvd
Tampa FL 33619
FL Cert.#6634


November 22,2005

# Symbols

**PLATE LOCATION AND ORIENTATION**

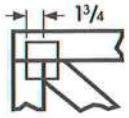


*Center plate on joint unless x,y offsets are indicated. Dimensions are in ft-in-sixteenths. Apply plates to both sides of truss and securely seat.

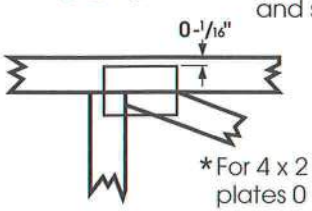


*For 4 x 2 orientation, locate plates 0 - 1/16" from outside edge of truss.

*This symbol indicates the required direction of slots in connector plates.

*** Plate location details available in MiTek 20/20 software or upon request.**

**PLATE SIZE**

4 x 4 — The first dimension is the width perpendicular to slots. Second dimension is the length parallel to slots.

**LATERAL BRACING**

Indicated by symbol shown and/or by text in the bracing section of the output. Use T, I or Eliminator bracing if indicated.

**BEARING**

Indicates location where bearings (supports) occur. Icons vary but reaction section indicates joint number where bearings occur.

**Industry Standards:**

ANSI/TPI1: National Design Specification for Metal Plate Connected Wood Truss Construction.
DSB-89: Design Standard for Bracing.
BCSI1: Building Component Safety Information, Guide to Good Practice for Handling, Installing & Bracing of Metal Plate Connected Wood Trusses.

# Numbering System

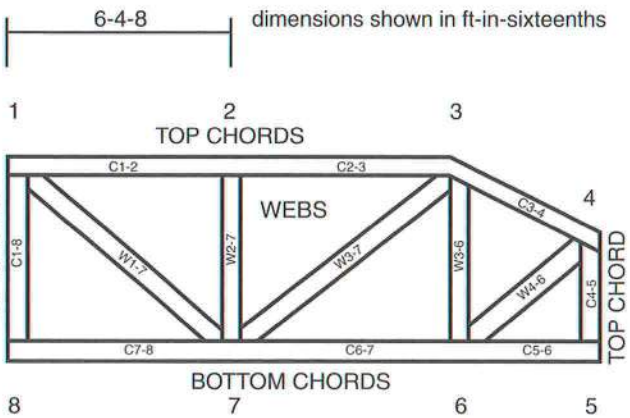


**JOINTS ARE GENERALLY NUMBERED/LETTERED CLOCKWISE AROUND THE TRUSS STARTING AT THE JOINT FARTHEST TO THE LEFT.**

**CHORDS AND WEBS ARE IDENTIFIED BY END JOINT NUMBERS/LETTERS.**

**CONNECTOR PLATE CODE APPROVALS**

| | |
|---|---|
| BOCA | 96-31, 95-43, 96-20-1, 96-67, 84-32 |
| ICBO | 4922, 5243, 5363, 3907 |
| SBCCI | 9667, 9730, 9604B, 9511, 9432A |

MiTek®

TEE-LOK®

# ⚠General Safety Notes

## Failure to Follow Could Cause Property Damage or Personal Injury

1. Additional stability bracing for truss system, e.g. diagonal or X-bracing, is always required. See BCSI1.
2. Never exceed the design loading shown and never stack materials on inadequately braced trusses.
3. Provide copies of this truss design to the building designer, erection supervisor, property owner and all other interested parties.
4. Cut members to bear tightly against each other.
5. Place plates on each face of truss at each joint and embed fully. Knots and wane at joint locations are regulated by ANSI/TPI1.
6. Design assumes trusses will be suitably protected from the environment in accord with ANSI/TPI1.
7. Unless otherwise noted, moisture content of lumber shall not exceed 19% at time of fabrication.
8. Unless expressly noted, this design is not applicable for use with fire retardant or preservative treated lumber.
9. Camber is a non-structural consideration and is the responsibility of truss fabricator. General practice is to camber for dead load deflection.
10. Plate type, size, orientation and location dimensions shown indicate minimum plating requirements.
11. Lumber used shall be of the species and size, and in all respects, equal to or better than that specified.
12. Top chords must be sheathed or purlins provided at spacing shown on design.
13. Bottom chords require lateral bracing at 10 ft. spacing, or less, if no ceiling is installed, unless otherwise noted.
14. Connections not shown are the responsibility of others.
15. Do not cut or alter truss member or plate without prior approval of a professional engineer.
16. Install and load vertically unless indicated otherwise.

| Job | Truss | Truss Type | Qty | Ply | WALKER RES |
|---|---|---|---|---|---|
| WALG | A8 | HIP | 1 | 1 | T1875014 |

Job Reference (optional)

SANTA FE TRUSS, HIGH SPRINGS FL., p.colacino

6.200 s Oct 18 2005 MiTek Industries, Inc. Mon Nov 21 16:21:16 2005 Page 1

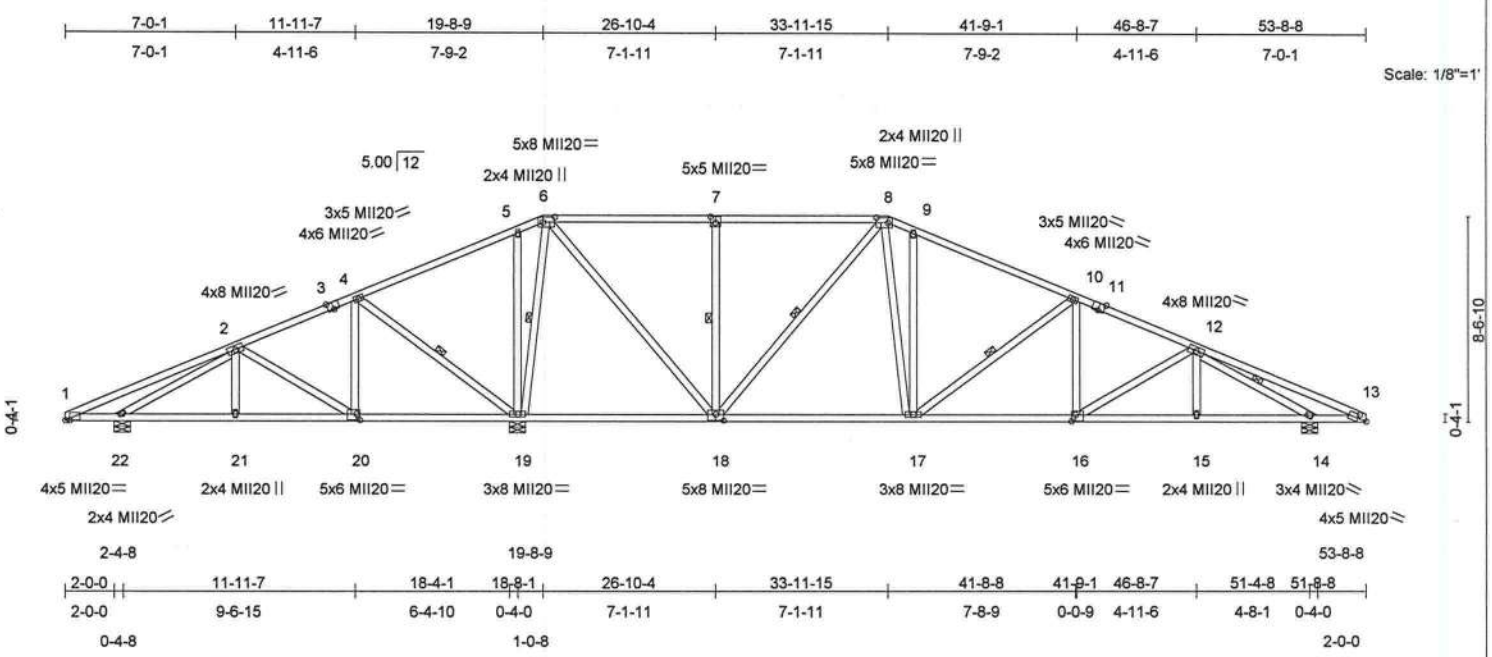


Plate Offsets (X,Y): [1:0-2-2,0-0-2], [3:0-3-0,Edge], [6:0-5-12,0-2-8], [7:0-2-8,0-3-0], [8:0-5-12,0-2-8], [11:0-3-0,Edge], [13:0-4-3,0-2-0], [16:0-1-12,0-3-4], [18:0-4-0,0-3-0], [20:0-1-12,0-3-0]

| LOADING (psf) | | SPACING | 2-0-0 | CSI | | DEFL | in | (loc) | l/defl | L/d | PLATES | GRIP |
|---|---|---|---|---|---|---|---|---|---|---|---|---|
| TCLL | 20.0 | Plates Increase | 1.25 | TC | 0.53 | Vert(LL) | -0.08 | 17-18 | >999 | 240 | MII20 | 249/190 |
| TCDL | 10.0 | Lumber Increase | 1.25 | BC | 0.30 | Vert(TL) | -0.24 | 17-18 | >999 | 180 | | |
| BCLL | 0.0 | Rep Stress Incr | YES | WB | 0.61 | Horz(TL) | 0.04 | 14 | n/a | n/a | | |
| BCDL | 10.0 | Code FBC2004/TPI2002 | | (Matrix) | | | | | | | Weight: 333 lb | |

**LUMBER**
TOP CHORD 2 X 4 SYP No.2D
BOT CHORD 2 X 4 SYP SS *Except*
18-20 2 X 4 SYP No.2D
WEBS 2 X 4 SYP No.3

**BRACING**
TOP CHORD Structural wood sheathing directly applied or 4-8-13 oc purlins.
BOT CHORD Rigid ceiling directly applied or 6-0-0 oc bracing.
WEBS 1 Row at midpt 4-19, 7-18, 8-18, 10-17, 12-14, 6-19

**REACTIONS** (lb/size) 19=2556/0-8-0, 22=449/0-8-0, 14=1292/0-8-0
Max Horz 22=123(load case 5)
Max Uplift 19=-449(load case 4), 22=-192(load case 5), 14=-360(load case 6)
Max Grav 19=2556(load case 1), 22=532(load case 7), 14=1332(load case 8)

**FORCES** (lb) - Maximum Compression/Maximum Tension
TOP CHORD 1-2=-143/279, 2-3=-26/350, 3-4=-9/384, 4-5=-102/932, 5-6=-11/831, 6-7=-552/238, 7-8=-552/238, 8-9=-1170/394, 9-10=-1248/309, 10-11=-1614/394, 11-12=-1717/377, 12-13=-123/180
BOT CHORD 1-22=-185/180, 21-22=-116/293, 20-21=-116/293, 19-20=-336/218, 18-19=-575/274, 17-18=-60/993, 16-17=-193/1535, 15-16=-268/1615, 14-15=-268/1615, 13-14=-96/163
WEBS 2-21=0/188, 2-20=-431/149, 4-20=-22/385, 4-19=-714/252, 6-18=-296/1543, 7-18=-453/228, 8-18=-726/174, 10-17=-574/224, 10-16=0/271, 12-16=-110/86, 12-15=0/168, 2-22=-547/197, 12-14=-1988/501, 5-19=-316/225, 9-17=-207/209, 6-19=-1679/348, 8-17=-268/707

**NOTES**
1) Unbalanced roof live loads have been considered for this design.
2) Wind: ASCE 7-98; 110mph (3-second gust); h=18ft; TCDL=5.0psf; BCDL=5.0psf; Category II; Exp C; enclosed; MWFRS interior zone; cantilever left and right exposed ; Lumber DOL=1.33 plate grip DOL=1.33.
3) Provide adequate drainage to prevent water ponding.
4) This truss has been designed for a 10.0 psf bottom chord live load nonconcurrent with any other live loads.
5) This truss requires plate inspection per the Tooth Count Method when this truss is chosen for quality assurance inspection.
6) Provide mechanical connection (by others) of truss to bearing plate capable of withstanding 449 lb uplift at joint 19, 192 lb uplift at joint 22 and 360 lb uplift at joint 14.

**LOAD CASE(S)** Standard


Guo-Jie Zhang, FL Lic #47744
MiTek Industries, Inc.
1801 Massaro Blvd
Tampa FL 33619
FL Cert.#6634


November 22,2005

# Symbols

**PLATE LOCATION AND ORIENTATION**

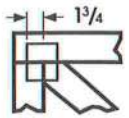


*Center plate on joint unless x,y offsets are indicated. Dimensions are in ft-in-sixteenths. Apply plates to both sides of truss and securely seat.

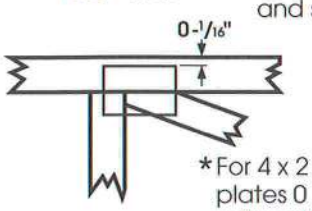


*For 4 x 2 orientation, locate plates 0 - 1/16" from outside edge of truss.

*This symbol indicates the required direction of slots in connector plates.

*** Plate location details available in MiTek 20/20 software or upon request.**

**PLATE SIZE**

4 x 4 — The first dimension is the width perpendicular to slots. Second dimension is the length parallel to slots.

**LATERAL BRACING**

Indicated by symbol shown and/or by text in the bracing section of the output. Use T, I or Eliminator bracing if indicated.

**BEARING**

Indicates location where bearings (supports) occur. Icons vary but reaction section indicates joint number where bearings occur.

**Industry Standards:**

ANSI/TPI1: National Design Specification for Metal Plate Connected Wood Truss Construction.
DSB-89: Design Standard for Bracing.
BCSI1: Building Component Safety Information, Guide to Good Practice for Handling, Installing & Bracing of Metal Plate Connected Wood Trusses.

# Numbering System

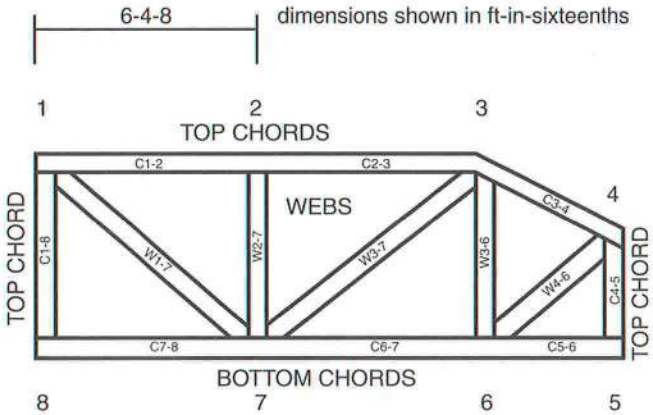


**JOINTS ARE GENERALLY NUMBERED/LETTERED CLOCKWISE AROUND THE TRUSS STARTING AT THE JOINT FARTHEST TO THE LEFT.**

**CHORDS AND WEBS ARE IDENTIFIED BY END JOINT NUMBERS/LETTERS.**

**CONNECTOR PLATE CODE APPROVALS**

| | |
|---|---|
| BOCA | 96-31, 95-43, 96-20-1, 96-67, 84-32 |
| ICBO | 4922, 5243, 5363, 3907 |
| SBCCI | 9667, 9730, 9604B, 9511, 9432A |

MiTek®

TEE-LOK®

# ⚠General Safety Notes

## Failure to Follow Could Cause Property Damage or Personal Injury

1. Additional stability bracing for truss system, e.g. diagonal or X-bracing, is always required. See BCSI1.
2. Never exceed the design loading shown and never stack materials on inadequately braced trusses.
3. Provide copies of this truss design to the building designer, erection supervisor, property owner and all other interested parties.
4. Cut members to bear tightly against each other.
5. Place plates on each face of truss at each joint and embed fully. Knots and wane at joint locations are regulated by ANSI/TPI1.
6. Design assumes trusses will be suitably protected from the environment in accord with ANSI/TPI1.
7. Unless otherwise noted, moisture content of lumber shall not exceed 19% at time of fabrication.
8. Unless expressly noted, this design is not applicable for use with fire retardant or preservative treated lumber.
9. Camber is a non-structural consideration and is the responsibility of truss fabricator. General practice is to camber for dead load deflection.
10. Plate type, size, orientation and location dimensions shown indicate minimum plating requirements.
11. Lumber used shall be of the species and size, and in all respects, equal to or better than that specified.
12. Top chords must be sheathed or purlins provided at spacing shown on design.
13. Bottom chords require lateral bracing at 10 ft. spacing, or less, if no ceiling is installed, unless otherwise noted.
14. Connections not shown are the responsibility of others.
15. Do not cut or alter truss member or plate without prior approval of a professional engineer.
16. Install and load vertically unless indicated otherwise.

| Job | Truss | Truss Type | Qty | Ply | WALKER RES |
|---|---|---|---|---|---|
| WALG | A9 | HIP | 1 | 1 | T1875015 |

Job Reference (optional)

SANTA FE TRUSS, HIGH SPRINGS FL., p.colacino — 6.200 s Oct 18 2005 MiTek Industries, Inc. Mon Nov 21 16:21:17 2005 Page 1

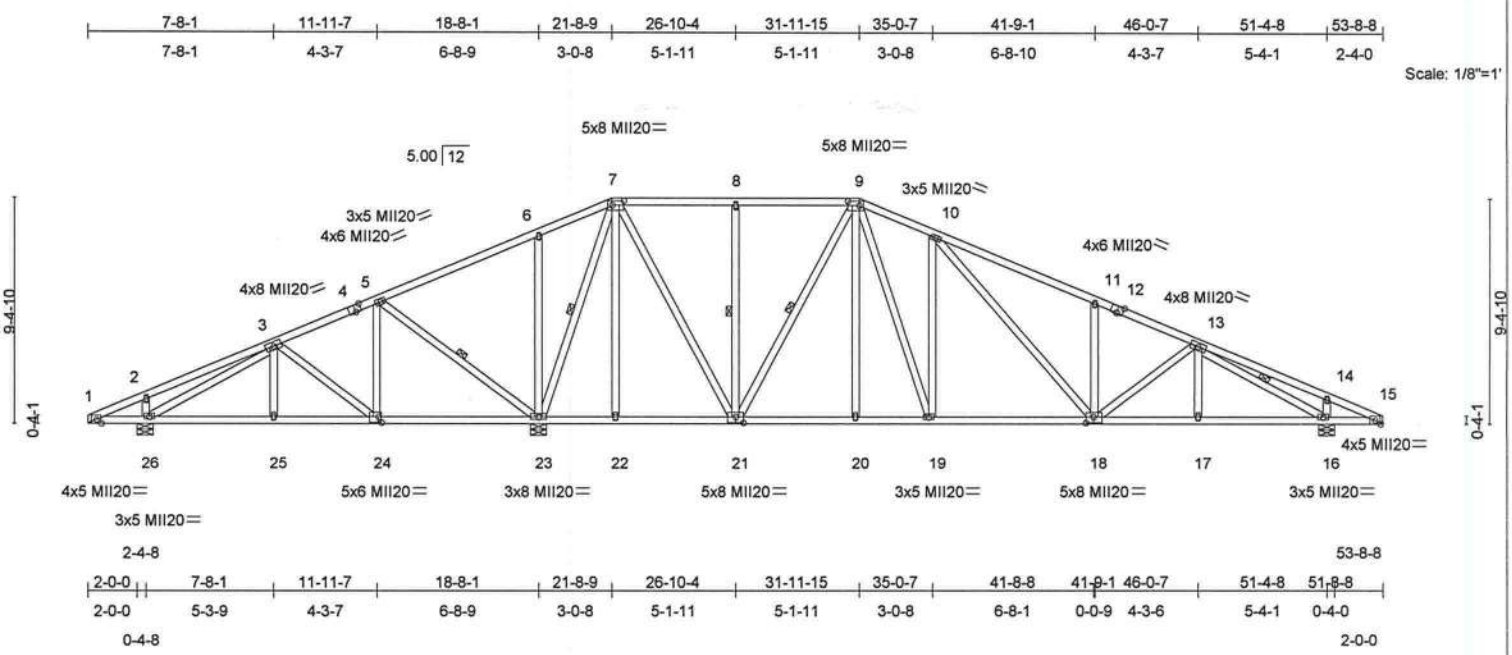


Plate Offsets (X,Y): [4:0-3-0,Edge], [7:0-5-12,0-2-8], [9:0-5-12,0-2-8], [12:0-3-0,Edge], [18:0-3-12,0-3-0], [21:0-4-0,0-3-0], [24:0-1-12,0-3-0]

| LOADING (psf) | | SPACING | 2-0-0 | CSI | | DEFL | in | (loc) | l/defl | L/d | PLATES | GRIP |
|---|---|---|---|---|---|---|---|---|---|---|---|---|
| TCLL | 20.0 | Plates Increase | 1.25 | TC | 0.43 | Vert(LL) | -0.07 | 18 | >999 | 240 | MII20 | 249/190 |
| TCDL | 10.0 | Lumber Increase | 1.25 | BC | 0.29 | Vert(TL) | -0.22 | 18-19 | >999 | 180 | | |
| BCLL | 0.0 | Rep Stress Incr | YES | WB | 0.73 | Horz(TL) | 0.04 | 16 | n/a | n/a | | |
| BCDL | 10.0 | Code FBC2004/TPI2002 | | (Matrix) | | | | | | | Weight: 368 lb | |

**LUMBER**

TOP CHORD 2 X 4 SYP No.2D *Except*
1-4 2 X 4 SYP SS, 12-15 2 X 4 SYP SS
BOT CHORD 2 X 4 SYP No.2D *Except*
1-24 2 X 4 SYP SS, 15-18 2 X 4 SYP SS
WEBS 2 X 4 SYP No.3

**BRACING**

TOP CHORD Structural wood sheathing directly applied or 4-8-2 oc purlins.
BOT CHORD Rigid ceiling directly applied or 6-0-0 oc bracing.
WEBS 1 Row at midpt 8-21, 9-21, 7-23, 5-23, 13-16

**REACTIONS** (lb/size) 23=2475/0-8-0, 26=498/0-8-0, 16=1323/0-8-0
Max Horz 26=135(load case 5)
Max Uplift23=-400(load case 5), 26=-213(load case 5), 16=-386(load case 6)
Max Grav 23=2475(load case 1), 26=585(load case 7), 16=1351(load case 8)

**FORCES** (lb) - Maximum Compression/Maximum Tension

TOP CHORD 1-2=-102/100, 2-3=-36/107, 3-4=0/322, 4-5=0/329, 5-6=-84/846, 6-7=0/785, 7-8=-495/235, 8-9=-495/235, 9-10=-1206/430, 10-11=-1699/514, 11-12=-1574/406, 12-13=-1663/402, 13-14=-128/80, 14-15=-81/9
BOT CHORD 1-26=-45/95, 25-26=-117/267, 24-25=-117/267, 23-24=-284/215, 22-23=-179/237, 21-22=-178/237, 20-21=-6/818, 19-20=-6/817, 18-19=-56/1069, 17-18=-248/1526, 16-17=-248/1526, 15-16=0/73
WEBS 3-25=0/176, 3-24=-339/112, 5-24=-9/380, 6-23=-342/216, 7-22=0/114, 7-21=-222/1214, 8-21=-343/172, 9-21=-689/167, 9-20=0/127, 11-18=-357/218, 13-18=-44/54, 13-17=0/161, 2-26=-299/191, 14-16=-328/198, 10-19=-649/338, 7-23=-1667/249, 9-19=-297/800, 5-23=-708/244, 10-18=-253/664, 3-26=-355/97, 13-16=-1721/375

**NOTES**

1) Unbalanced roof live loads have been considered for this design.
2) Wind: ASCE 7-98; 110mph (3-second gust); h=18ft; TCDL=5.0psf; BCDL=5.0psf; Category II; Exp C; enclosed; MWFRS interior zone; cantilever left and right exposed ; Lumber DOL=1.33 plate grip DOL=1.33.
3) Provide adequate drainage to prevent water ponding.
4) This truss has been designed for a 10.0 psf bottom chord live load nonconcurrent with any other live loads.
5) All plates are 2x4 MII20 unless otherwise indicated.
6) This truss requires plate inspection per the Tooth Count Method when this truss is chosen for quality assurance inspection.
7) Provide mechanical connection (by others) of truss to bearing plate capable of withstanding 400 lb uplift at joint 23, 213 lb uplift at joint 26 and 386 lb uplift at joint 16.

**LOAD CASE(S)** Standard


Guo-Jie Zhang, FL Lic #47744
MiTek Industries, Inc.
1801 Massaro Blvd
Tampa FL 33619
FL Cert.#6634


November 22,2005

# Symbols

**PLATE LOCATION AND ORIENTATION**


*Center plate on joint unless x,y offsets are indicated. Dimensions are in ft-in-sixteenths. Apply plates to both sides of truss and securely seat.

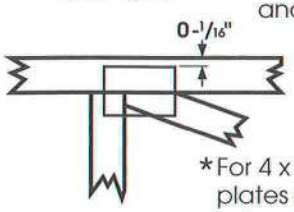


*For 4 x 2 orientation, locate plates 0 - 1/16" from outside edge of truss.

*This symbol indicates the required direction of slots in connector plates.

*** Plate location details available in MiTek 20/20 software or upon request.**

**PLATE SIZE**

4 x 4 — The first dimension is the width perpendicular to slots. Second dimension is the length parallel to slots.

**LATERAL BRACING**

Indicated by symbol shown and/or by text in the bracing section of the output. Use T, I or Eliminator bracing if indicated.

**BEARING**

Indicates location where bearings (supports) occur. Icons vary but reaction section indicates joint number where bearings occur.

**Industry Standards:**

ANSI/TPI1: National Design Specification for Metal Plate Connected Wood Truss Construction.
DSB-89: Design Standard for Bracing.
BCSI1: Building Component Safety Information, Guide to Good Practice for Handling, Installing & Bracing of Metal Plate Connected Wood Trusses.

# Numbering System

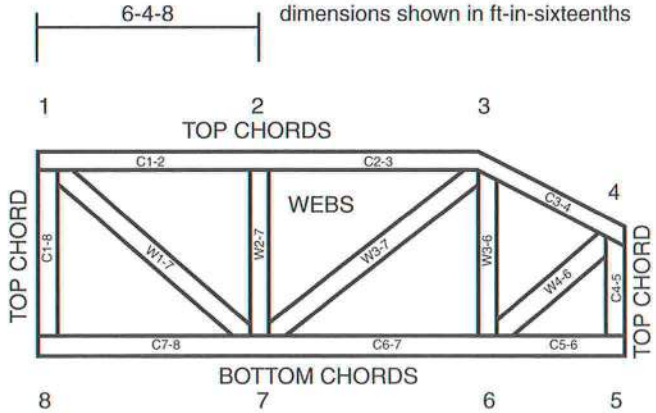


**JOINTS ARE GENERALLY NUMBERED/LETTERED CLOCKWISE AROUND THE TRUSS STARTING AT THE JOINT FARTHEST TO THE LEFT.**

**CHORDS AND WEBS ARE IDENTIFIED BY END JOINT NUMBERS/LETTERS.**

**CONNECTOR PLATE CODE APPROVALS**

| | |
|---|---|
| BOCA | 96-31, 95-43, 96-20-1, 96-67, 84-32 |
| ICBO | 4922, 5243, 5363, 3907 |
| SBCCI | 9667, 9730, 9604B, 9511, 9432A |

MiTek®

TEE-LOK®

# ⚠General Safety Notes

## Failure to Follow Could Cause Property Damage or Personal Injury

1. Additional stability bracing for truss system, e.g. diagonal or X-bracing, is always required. See BCSI1.
2. Never exceed the design loading shown and never stack materials on inadequately braced trusses.
3. Provide copies of this truss design to the building designer, erection supervisor, property owner and all other interested parties.
4. Cut members to bear tightly against each other.
5. Place plates on each face of truss at each joint and embed fully. Knots and wane at joint locations are regulated by ANSI/TPI1.
6. Design assumes trusses will be suitably protected from the environment in accord with ANSI/TPI1.
7. Unless otherwise noted, moisture content of lumber shall not exceed 19% at time of fabrication.
8. Unless expressly noted, this design is not applicable for use with fire retardant or preservative treated lumber.
9. Camber is a non-structural consideration and is the responsibility of truss fabricator. General practice is to camber for dead load deflection.
10. Plate type, size, orientation and location dimensions shown indicate minimum plating requirements.
11. Lumber used shall be of the species and size, and in all respects, equal to or better than that specified.
12. Top chords must be sheathed or purlins provided at spacing shown on design.
13. Bottom chords require lateral bracing at 10 ft. spacing, or less, if no ceiling is installed, unless otherwise noted.
14. Connections not shown are the responsibility of others.
15. Do not cut or alter truss member or plate without prior approval of a professional engineer.
16. Install and load vertically unless indicated otherwise.

| Job | Truss | Truss Type | Qty | Ply | WALKER RES |
|---|---|---|---|---|---|
| WALG | B1 | SPECIAL | 1 | 1 | T1875016 |
| | | | | | Job Reference (optional) |

SANTA FE TRUSS, HIGH SPRINGS FL., p.colacino

6.200 s Oct 18 2005 MiTek Industries, Inc. Mon Nov 21 16:21:19 2005 Page 1

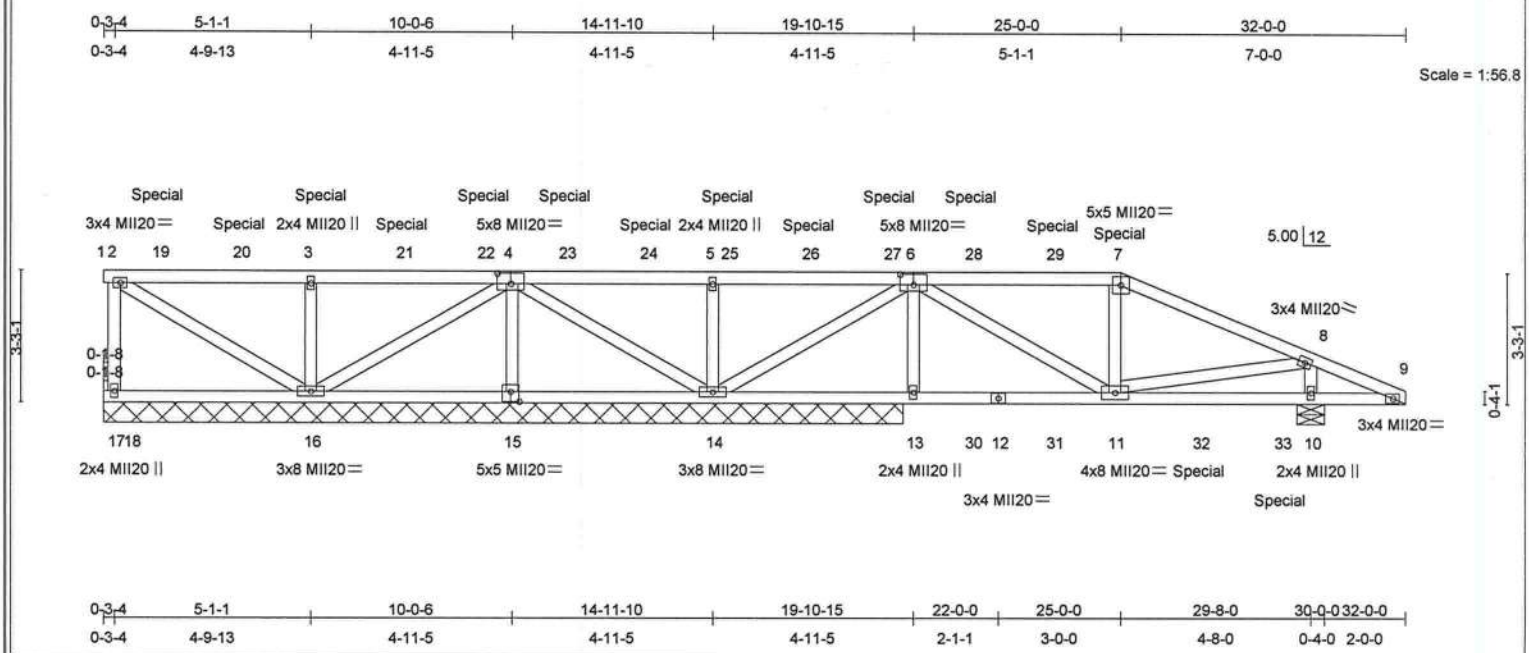


Plate Offsets (X,Y): [4:0-4-0,0-3-0], [6:0-4-0,0-3-0], [15:0-2-8,0-3-0]

| LOADING (psf) | | SPACING | 2-0-0 | CSI | | DEFL | in | (loc) | l/defl | L/d | PLATES | GRIP |
|---|---|---|---|---|---|---|---|---|---|---|---|---|
| TCLL | 20.0 | Plates Increase | 1.25 | TC | 0.27 | Vert(LL) | 0.02 | 11-13 | >999 | 240 | MII20 | 249/190 |
| TCDL | 10.0 | Lumber Increase | 1.25 | BC | 0.20 | Vert(TL) | -0.06 | 11-13 | >999 | 180 | | |
| BCLL | 0.0 | Rep Stress Incr | NO | WB | 0.53 | Horz(TL) | 0.01 | 10 | n/a | n/a | | |
| BCDL | 10.0 | Code FBC2004/TPI2002 | | (Matrix) | | | | | | | Weight: 168 lb | |

**LUMBER**
TOP CHORD 2 X 4 SYP No.2D
BOT CHORD 2 X 4 SYP No.2D
WEBS 2 X 4 SYP No.3

**BRACING**
TOP CHORD Structural wood sheathing directly applied or 6-0-0 oc purlins.
BOT CHORD Rigid ceiling directly applied or 6-0-0 oc bracing.

**REACTIONS** (lb/size) 1=-373/19-8-0, 18=-129/19-8-0, 16=524/19-8-0, 15=334/19-8-0, 14=1077/19-8-0, 10=773/0-8-0, 17=685/19-8-0
Max Horz 1=-120(load case 6)
Max Uplift1=-373(load case 7), 18=-260(load case 2), 16=-232(load case 3), 15=-88(load case 4), 14=-362(load case 3), 10=-289(load case 6), 17=-187(load case 4)
Max Grav 1=223(load case 3), 16=525(load case 7), 15=338(load case 7), 14=1077(load case 1), 10=773(load case 1), 17=686(load case 7)

**FORCES** (lb) - Maximum Compression/Maximum Tension
TOP CHORD 1-2=-0/120, 2-19=0/85, 19-20=0/85, 3-20=0/85, 3-21=0/85, 21-22=0/85, 4-22=0/85, 4-23=-44/282, 23-24=-44/282, 5-24=-44/282, 5-25=-44/282, 25-26=-44/282, 26-27=-44/282, 6-27=-44/282, 6-28=-596/226, 28-29=-596/226, 7-29=-597/226, 7-8=-704/227, 8-9=-96/121
BOT CHORD 17-18=0/0, 16-17=0/0, 15-16=-85/56, 14-15=-85/56, 13-14=-106/511, 13-30=-106/510, 12-30=-106/510, 12-31=-106/510, 11-31=-106/510, 11-32=-69/93, 32-33=-69/93, 10-33=-69/93, 9-10=-69/93
WEBS 2-16=-100/99, 3-16=-374/215, 4-16=-4/38, 4-15=-241/138, 4-14=-229/97, 5-14=-384/219, 6-14=-924/276, 6-13=0/221, 6-11=-48/100, 7-11=-42/119, 8-11=-208/682, 8-10=-679/287, 2-17=-504/279

**NOTES**
1) Unbalanced roof live loads have been considered for this design.
2) Wind: ASCE 7-98; 110mph (3-second gust); h=18ft; TCDL=5.0psf; BCDL=5.0psf; Category II; Exp C; enclosed; MWFRS interior zone; cantilever right exposed ; Lumber DOL=1.33 plate grip DOL=1.33.
3) Provide adequate drainage to prevent water ponding.
4) This truss has been designed for a 10.0 psf bottom chord live load nonconcurrent with any other live loads.
5) This truss requires plate inspection per the Tooth Count Method when this truss is chosen for quality assurance inspection.
6) Provide mechanical connection (by others) of truss to bearing plate capable of withstanding 373 lb uplift at joint 1, 260 lb uplift at joint 18, 232 lb uplift at joint 16, 88 lb uplift at joint 15, 362 lb uplift at joint 14, 289 lb uplift at joint 10 and 187 lb uplift at joint 17.
7) Hanger(s) or other connection device(s) shall be provided sufficient to support concentrated load(s) 27 lb down and 39 lb up at 1-4-4, 27 lb down and 39 lb up at 3-4-4, 27 lb down and 39 lb up at 5-4-4, 27 lb down and 39 lb up at 7-4-4, 27 lb down and 39 lb up at 9-4-4, 27 lb down and 39 lb up at 11-4-4, 27 lb down and 39 lb up at 13-4-4, 27 lb down and 39 lb up at 15-4-4, 27 lb down and 39 lb up at 17-4-4, 27 lb down and 39 lb up at 19-4-4, 13 lb down and 34 lb up at 21-4-4, and 13 lb down and 34 lb up at 23-4-4, and 79 lb down and 99 lb up at 25-0-0 on top chord, and 28 lb down at 21-4-4, 28 lb down at 23-4-4, 28 lb down at 24-11-4, and 20 lb down and 10 lb up at 26-11-4, and 25 lb down at 28-11-4 on bottom chord. The design/selection of such connection device(s) is the responsibility of others.
8) In the LOAD CASE(S) section, loads applied to the face of the truss are noted as front (F) or back (B).

**LOAD CASE(S)** Standard

Guo-Jie Zhang, FL Lic #47744
MiTek Industries, Inc.
1801 Massaro Blvd
Tampa FL 33619
FL Cert.#6634

November 22,2005

Continued on page 2

# Symbols

## PLATE LOCATION AND ORIENTATION

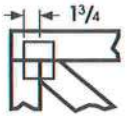


*Center plate on joint unless x,y offsets are indicated. Dimensions are in ft-in-sixteenths. Apply plates to both sides of truss and securely seat.

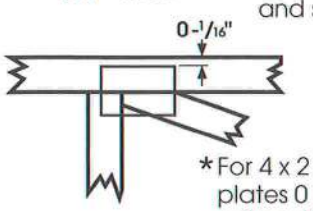


*For 4 x 2 orientation, locate plates 0 - 1/16" from outside edge of truss.

*This symbol indicates the required direction of slots in connector plates.

*** Plate location details available in MiTek 20/20 software or upon request.**

## PLATE SIZE

4 x 4 — The first dimension is the width perpendicular to slots. Second dimension is the length parallel to slots.

## LATERAL BRACING

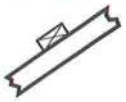

Indicated by symbol shown and/or by text in the bracing section of the output. Use T, I or Eliminator bracing if indicated.

## BEARING

Indicates location where bearings (supports) occur. Icons vary but reaction section indicates joint number where bearings occur.

**Industry Standards:**

ANSI/TPI1: National Design Specification for Metal Plate Connected Wood Truss Construction.
DSB-89: Design Standard for Bracing.
BCSI1: Building Component Safety Information, Guide to Good Practice for Handling, Installing & Bracing of Metal Plate Connected Wood Trusses.

# Numbering System

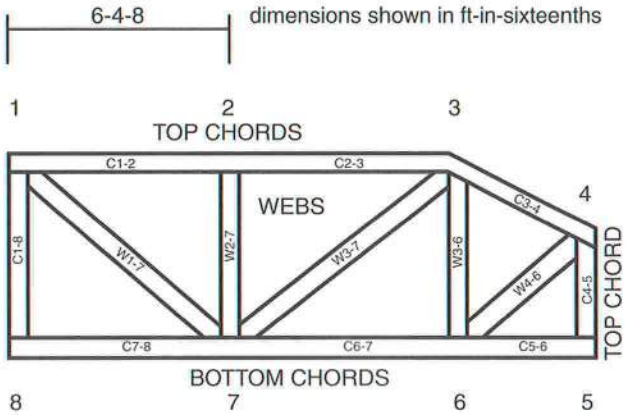


**JOINTS ARE GENERALLY NUMBERED/LETTERED CLOCKWISE AROUND THE TRUSS STARTING AT THE JOINT FARTHEST TO THE LEFT.**

**CHORDS AND WEBS ARE IDENTIFIED BY END JOINT NUMBERS/LETTERS.**

## CONNECTOR PLATE CODE APPROVALS

| | |
|---|---|
| BOCA | 96-31, 95-43, 96-20-1, 96-67, 84-32 |
| ICBO | 4922, 5243, 5363, 3907 |
| SBCCI | 9667, 9730, 9604B, 9511, 9432A |

MiTek®

TEE-LOK®

# ⚠General Safety Notes

## Failure to Follow Could Cause Property Damage or Personal Injury

1. Additional stability bracing for truss system, e.g. diagonal or X-bracing, is always required. See BCSI1.
2. Never exceed the design loading shown and never stack materials on inadequately braced trusses.
3. Provide copies of this truss design to the building designer, erection supervisor, property owner and all other interested parties.
4. Cut members to bear tightly against each other.
5. Place plates on each face of truss at each joint and embed fully. Knots and wane at joint locations are regulated by ANSI/TPI1.
6. Design assumes trusses will be suitably protected from the environment in accord with ANSI/TPI1.
7. Unless otherwise noted, moisture content of lumber shall not exceed 19% at time of fabrication.
8. Unless expressly noted, this design is not applicable for use with fire retardant or preservative treated lumber.
9. Camber is a non-structural consideration and is the responsibility of truss fabricator. General practice is to camber for dead load deflection.
10. Plate type, size, orientation and location dimensions shown indicate minimum plating requirements.
11. Lumber used shall be of the species and size, and in all respects, equal to or better than that specified.
12. Top chords must be sheathed or purlins provided at spacing shown on design.
13. Bottom chords require lateral bracing at 10 ft. spacing, or less, if no ceiling is installed, unless otherwise noted.
14. Connections not shown are the responsibility of others.
15. Do not cut or alter truss member or plate without prior approval of a professional engineer.
16. Install and load vertically unless indicated otherwise.

**LOAD CASE(S)** Standard

1) Regular: Lumber Increase=1.25, Plate Increase=1.25

Uniform Loads (plf)

Vert: 1-7=-60, 7-9=-60, 9-18=-20

Concentrated Loads (lb)

Vert: 7=-39(F) 3=-27(F) 11=-28(F) 19=-27(F) 20=-27(F) 21=-27(F) 22=-27(F) 23=-27(F) 24=-27(F) 25=-27(F) 26=-27(F) 27=-27(F) 28=34(F) 29=34(F) 30=-28(F) 31=-28(F) 32=10(F) 33=-13(F)

# Symbols

**PLATE LOCATION AND ORIENTATION**

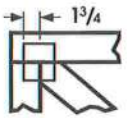


*Center plate on joint unless x,y offsets are indicated. Dimensions are in ft-in-sixteenths. Apply plates to both sides of truss and securely seat.

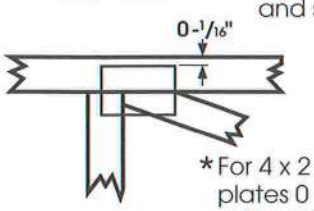


*For 4 x 2 orientation, locate plates 0 - 1/16" from outside edge of truss.

*This symbol indicates the required direction of slots in connector plates.

*** Plate location details available in MiTek 20/20 software or upon request.**

**PLATE SIZE**

4 x 4 — The first dimension is the width perpendicular to slots. Second dimension is the length parallel to slots.

**LATERAL BRACING**

Indicated by symbol shown and/or by text in the bracing section of the output. Use T, I or Eliminator bracing if indicated.

**BEARING**

Indicates location where bearings (supports) occur. Icons vary but reaction section indicates joint number where bearings occur.

**Industry Standards:**

ANSI/TPI1: National Design Specification for Metal Plate Connected Wood Truss Construction.
DSB-89: Design Standard for Bracing.
BCSI1: Building Component Safety Information, Guide to Good Practice for Handling, Installing & Bracing of Metal Plate Connected Wood Trusses.

# Numbering System

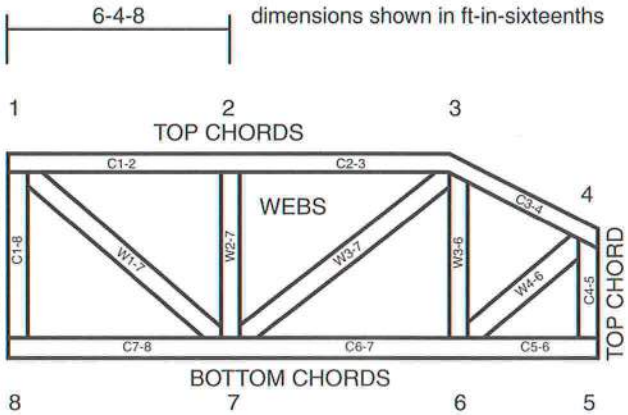


**JOINTS ARE GENERALLY NUMBERED/LETTERED CLOCKWISE AROUND THE TRUSS STARTING AT THE JOINT FARTHEST TO THE LEFT.**

**CHORDS AND WEBS ARE IDENTIFIED BY END JOINT NUMBERS/LETTERS.**

**CONNECTOR PLATE CODE APPROVALS**

| | |
|---|---|
| BOCA | 96-31, 95-43, 96-20-1, 96-67, 84-32 |
| ICBO | 4922, 5243, 5363, 3907 |
| SBCCI | 9667, 9730, 9604B, 9511, 9432A |

MiTek®

TEE-LOK®

# ⚠General Safety Notes

## Failure to Follow Could Cause Property Damage or Personal Injury

1. Additional stability bracing for truss system, e.g. diagonal or X-bracing, is always required. See BCSI1.
2. Never exceed the design loading shown and never stack materials on inadequately braced trusses.
3. Provide copies of this truss design to the building designer, erection supervisor, property owner and all other interested parties.
4. Cut members to bear tightly against each other.
5. Place plates on each face of truss at each joint and embed fully. Knots and wane at joint locations are regulated by ANSI/TPI1.
6. Design assumes trusses will be suitably protected from the environment in accord with ANSI/TPI1.
7. Unless otherwise noted, moisture content of lumber shall not exceed 19% at time of fabrication.
8. Unless expressly noted, this design is not applicable for use with fire retardant or preservative treated lumber.
9. Camber is a non-structural consideration and is the responsibility of truss fabricator. General practice is to camber for dead load deflection.
10. Plate type, size, orientation and location dimensions shown indicate minimum plating requirements.
11. Lumber used shall be of the species and size, and in all respects, equal to or better than that specified.
12. Top chords must be sheathed or purlins provided at spacing shown on design.
13. Bottom chords require lateral bracing at 10 ft. spacing, or less, if no ceiling is installed, unless otherwise noted.
14. Connections not shown are the responsibility of others.
15. Do not cut or alter truss member or plate without prior approval of a professional engineer.
16. Install and load vertically unless indicated otherwise.

| Job | Truss | Truss Type | Qty | Ply | WALKER RES |
|---|---|---|---|---|---|
| WALG | B2 | MONO HIP | 1 | 1 | T1875017 |

Job Reference (optional)

SANTA FE TRUSS, HIGH SPRINGS FL., p.colacino — 6.200 s Oct 18 2005 MiTek Industries, Inc. Mon Nov 21 16:21:20 2005 Page 1

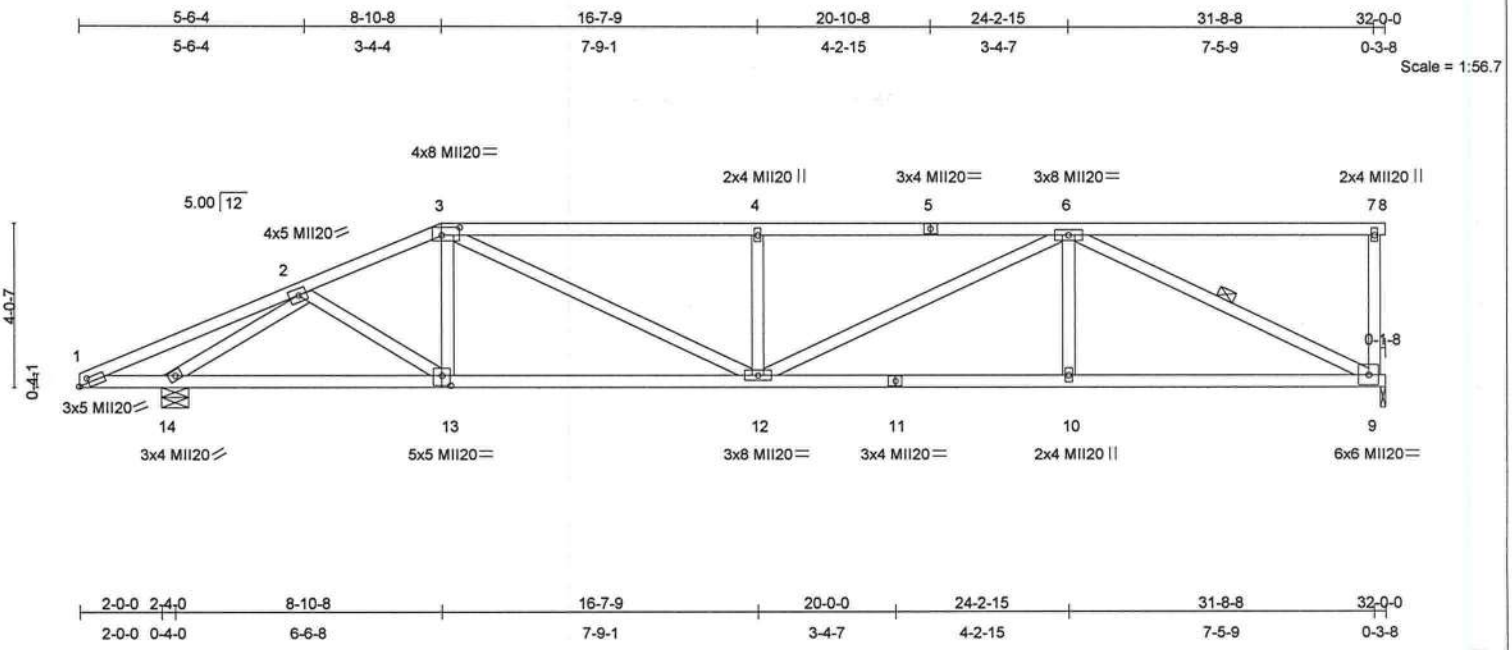


Plate Offsets (X,Y): [1:0-2-15,0-1-8], [3:0-5-4,0-2-4], [13:0-2-8,0-3-0]

| LOADING (psf) | | SPACING 2-0-0 | | CSI | | DEFL | in | (loc) | l/defl | L/d | PLATES | GRIP |
|---|---|---|---|---|---|---|---|---|---|---|---|---|
| TCLL | 20.0 | Plates Increase | 1.25 | TC | 0.43 | Vert(LL) | 0.12 | 12 | >999 | 240 | MII20 | 249/190 |
| TCDL | 10.0 | Lumber Increase | 1.25 | BC | 0.60 | Vert(TL) | -0.33 | 12-13 | >999 | 180 | | |
| BCLL | 0.0 | Rep Stress Incr | YES | WB | 0.72 | Horz(TL) | 0.09 | 9 | n/a | n/a | | |
| BCDL | 10.0 | Code FBC2004/TPI2002 | | (Matrix) | | | | | | | Weight: 165 lb | |

**LUMBER**
TOP CHORD 2 X 4 SYP No.2D
BOT CHORD 2 X 4 SYP No.2D
WEBS 2 X 4 SYP No.3

**BRACING**
TOP CHORD Structural wood sheathing directly applied or 3-9-2 oc purlins.
BOT CHORD Rigid ceiling directly applied or 6-0-0 oc bracing.
WEBS 1 Row at midpt 6-9

**REACTIONS** (lb/size) 9=1185/0-1-8, 14=1359/0-8-0
Max Horz 14=151(load case 5)
Max Uplift9=-307(load case 4), 14=-319(load case 3)

**FORCES** (lb) - Maximum Compression/Maximum Tension
TOP CHORD 1-2=-191/227, 2-3=-1873/440, 3-4=-2419/618, 4-5=-2418/618, 5-6=-2418/618, 6-7=0/0, 7-8=0/0
BOT CHORD 1-14=-159/213, 13-14=-407/1470, 12-13=-427/1706, 11-12=-478/1878, 10-11=-478/1878, 9-10=-478/1878
WEBS 2-13=-43/382, 3-13=-57/156, 3-12=-219/855, 4-12=-461/234, 6-12=-156/602, 6-10=0/339, 6-9=-2100/535, 2-14=-1982/525, 7-9=-185/97

**NOTES**
1) Unbalanced roof live loads have been considered for this design.
2) Wind: ASCE 7-98; 110mph (3-second gust); h=18ft; TCDL=5.0psf; BCDL=5.0psf; Category II; Exp C; enclosed; MWFRS interior zone; cantilever left exposed ; Lumber DOL=1.33 plate grip DOL=1.33.
3) Provide adequate drainage to prevent water ponding.
4) This truss has been designed for a 10.0 psf bottom chord live load nonconcurrent with any other live loads.
5) This truss requires plate inspection per the Tooth Count Method when this truss is chosen for quality assurance inspection.
6) Provide mechanical connection (by others) of truss to bearing plate at joint(s) 9.
7) Provide mechanical connection (by others) of truss to bearing plate capable of withstanding 307 lb uplift at joint 9 and 319 lb uplift at joint 14.

**LOAD CASE(S)** Standard


Guo-Jie Zhang, FL Lic #47744
MiTek Industries, Inc.
1801 Massaro Blvd
Tampa FL 33619
FL Cert.#6634


November 22,2005

# Symbols

**PLATE LOCATION AND ORIENTATION**


*Center plate on joint unless x,y offsets are indicated. Dimensions are in ft-in-sixteenths. Apply plates to both sides of truss and securely seat.

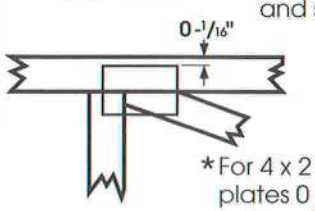


*For 4 x 2 orientation, locate plates 0 - 1/16" from outside edge of truss.

*This symbol indicates the required direction of slots in connector plates.

*** Plate location details available in MiTek 20/20 software or upon request.**

**PLATE SIZE**

4 x 4 — The first dimension is the width perpendicular to slots. Second dimension is the length parallel to slots.

**LATERAL BRACING**

Indicated by symbol shown and/or by text in the bracing section of the output. Use T, I or Eliminator bracing if indicated.

**BEARING**

Indicates location where bearings (supports) occur. Icons vary but reaction section indicates joint number where bearings occur.

**Industry Standards:**

ANSI/TPI1: National Design Specification for Metal Plate Connected Wood Truss Construction.
DSB-89: Design Standard for Bracing.
BCSI1: Building Component Safety Information, Guide to Good Practice for Handling, Installing & Bracing of Metal Plate Connected Wood Trusses.

# Numbering System

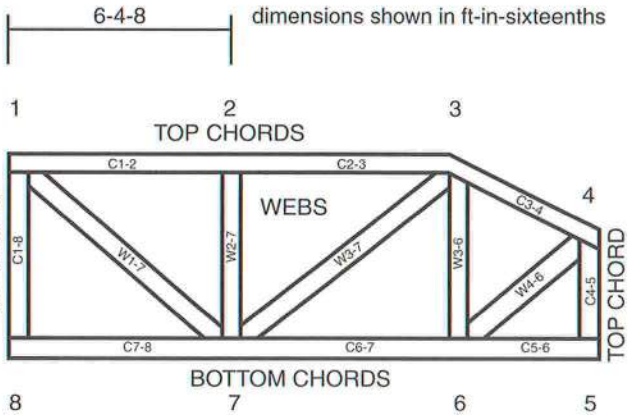


**JOINTS ARE GENERALLY NUMBERED/LETTERED CLOCKWISE AROUND THE TRUSS STARTING AT THE JOINT FARTHEST TO THE LEFT.**

**CHORDS AND WEBS ARE IDENTIFIED BY END JOINT NUMBERS/LETTERS.**

**CONNECTOR PLATE CODE APPROVALS**

| | |
|---|---|
| BOCA | 96-31, 95-43, 96-20-1, 96-67, 84-32 |
| ICBO | 4922, 5243, 5363, 3907 |
| SBCCI | 9667, 9730, 9604B, 9511, 9432A |

MiTek®

TEE-LOK®

# ⚠General Safety Notes

## Failure to Follow Could Cause Property Damage or Personal Injury

1. Additional stability bracing for truss system, e.g. diagonal or X-bracing, is always required. See BCSI1.
2. Never exceed the design loading shown and never stack materials on inadequately braced trusses.
3. Provide copies of this truss design to the building designer, erection supervisor, property owner and all other interested parties.
4. Cut members to bear tightly against each other.
5. Place plates on each face of truss at each joint and embed fully. Knots and wane at joint locations are regulated by ANSI/TPI1.
6. Design assumes trusses will be suitably protected from the environment in accord with ANSI/TPI1.
7. Unless otherwise noted, moisture content of lumber shall not exceed 19% at time of fabrication.
8. Unless expressly noted, this design is not applicable for use with fire retardant or preservative treated lumber.
9. Camber is a non-structural consideration and is the responsibility of truss fabricator. General practice is to camber for dead load deflection.
10. Plate type, size, orientation and location dimensions shown indicate minimum plating requirements.
11. Lumber used shall be of the species and size, and in all respects, equal to or better than that specified.
12. Top chords must be sheathed or purlins provided at spacing shown on design.
13. Bottom chords require lateral bracing at 10 ft. spacing, or less, if no ceiling is installed, unless otherwise noted.
14. Connections not shown are the responsibility of others.
15. Do not cut or alter truss member or plate without prior approval of a professional engineer.
16. Install and load vertically unless indicated otherwise.

| Job | Truss | Truss Type | Qty | Ply | WALKER RES |
|---|---|---|---|---|---|
| WALG | B3 | MONO HIP | 1 | 1 | T1875018 |

Job Reference (optional)

SANTA FE TRUSS, HIGH SPRINGS FL., p.colacino

6.200 s Oct 18 2005 MiTek Industries, Inc. Mon Nov 21 16:21:21 2005 Page 1

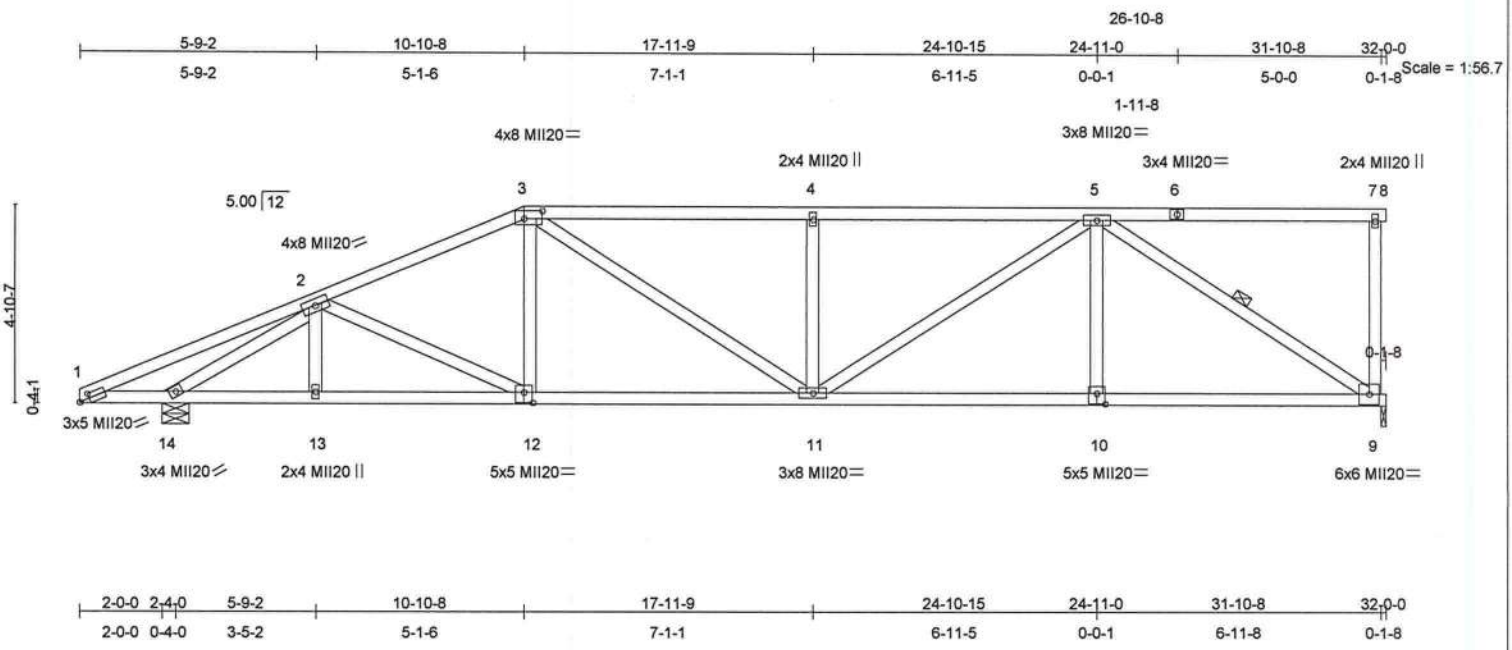


| 2-0-0 | 2-4-0 | 5-9-2 | 10-10-8 | 17-11-9 | 24-10-15 | 24-11-0 | 31-10-8 | 32-0-0 |
|---|---|---|---|---|---|---|---|---|
| 2-0-0 | 0-4-0 | 3-5-2 | 5-1-6 | 7-1-1 | 6-11-5 | 0-0-1 | 6-11-8 | 0-1-8 |

Plate Offsets (X,Y): [1:0-2-15,0-1-8], [3:0-5-4,0-2-4], [10:0-2-8,0-3-0], [12:0-2-8,0-3-0]

| LOADING (psf) | | SPACING | 2-0-0 | CSI | | DEFL | in | (loc) | l/defl | L/d | PLATES | GRIP |
|---|---|---|---|---|---|---|---|---|---|---|---|---|
| TCLL | 20.0 | Plates Increase | 1.25 | TC | 0.35 | Vert(LL) | 0.08 | 11 | >999 | 240 | MII20 | 249/190 |
| TCDL | 10.0 | Lumber Increase | 1.25 | BC | 0.49 | Vert(TL) | -0.24 | 11-12 | >999 | 180 | | |
| BCLL | 0.0 | Rep Stress Incr | YES | WB | 0.64 | Horz(TL) | 0.08 | 9 | n/a | n/a | | |
| BCDL | 10.0 | Code FBC2004/TPI2002 | | (Matrix) | | | | | | | Weight: 175 lb | |

**LUMBER**
TOP CHORD 2 X 4 SYP No.2D
BOT CHORD 2 X 4 SYP No.2D
WEBS 2 X 4 SYP No.3

**BRACING**
TOP CHORD Structural wood sheathing directly applied or 4-4-4 oc purlins.
BOT CHORD Rigid ceiling directly applied or 10-0-0 oc bracing, Except: 6-0-0 oc bracing: 1-14.
WEBS 1 Row at midpt 5-9

**REACTIONS** (lb/size) 9=1185/0-1-8, 14=1358/0-8-0
Max Horz 14=185(load case 5)
Max Uplift9=-305(load case 4), 14=-299(load case 3)

**FORCES** (lb) - Maximum Compression/Maximum Tension
TOP CHORD 1-2=-139/211, 2-3=-1828/413, 3-4=-1958/494, 4-5=-1958/494, 5-6=0/0, 6-7=0/0, 7-8=0/0
BOT CHORD 1-14=-136/166, 13-14=-399/1548, 12-13=-399/1548, 11-12=-406/1641, 10-11=-362/1433, 9-10=-362/1434
WEBS 2-13=0/138, 2-12=-29/230, 3-12=0/232, 3-11=-111/481, 4-11=-425/213, 5-11=-157/628, 5-10=0/309, 5-9=-1727/436, 2-14=-2020/422, 7-9=-169/88

**NOTES**
1) Unbalanced roof live loads have been considered for this design.
2) Wind: ASCE 7-98; 110mph (3-second gust); h=18ft; TCDL=5.0psf; BCDL=5.0psf; Category II; Exp C; enclosed; MWFRS interior zone; cantilever left exposed ; Lumber DOL=1.33 plate grip DOL=1.33.
3) Provide adequate drainage to prevent water ponding.
4) This truss has been designed for a 10.0 psf bottom chord live load nonconcurrent with any other live loads.
5) This truss requires plate inspection per the Tooth Count Method when this truss is chosen for quality assurance inspection.
6) Provide mechanical connection (by others) of truss to bearing plate at joint(s) 9.
7) Provide mechanical connection (by others) of truss to bearing plate capable of withstanding 305 lb uplift at joint 9 and 299 lb uplift at joint 14.

**LOAD CASE(S)** Standard


Guo-Jie Zhang, FL Lic #47744
MiTek Industries, Inc.
1801 Massaro Blvd
Tampa FL 33619
FL Cert.#6634


November 22,2005

# Symbols

**PLATE LOCATION AND ORIENTATION**

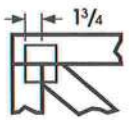


*Center plate on joint unless x,y offsets are indicated. Dimensions are in ft-in-sixteenths. Apply plates to both sides of truss and securely seat.

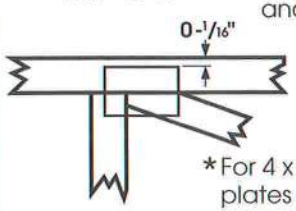


*For 4 x 2 orientation, locate plates 0 - 1/16" from outside edge of truss.

*This symbol indicates the required direction of slots in connector plates.

*** Plate location details available in MiTek 20/20 software or upon request.**

**PLATE SIZE**

4 x 4 — The first dimension is the width perpendicular to slots. Second dimension is the length parallel to slots.

**LATERAL BRACING**

Indicated by symbol shown and/or by text in the bracing section of the output. Use T, I or Eliminator bracing if indicated.

**BEARING**

Indicates location where bearings (supports) occur. Icons vary but reaction section indicates joint number where bearings occur.

**Industry Standards:**

ANSI/TPI1: National Design Specification for Metal Plate Connected Wood Truss Construction.
DSB-89: Design Standard for Bracing.
BCSI1: Building Component Safety Information, Guide to Good Practice for Handling, Installing & Bracing of Metal Plate Connected Wood Trusses.

# Numbering System

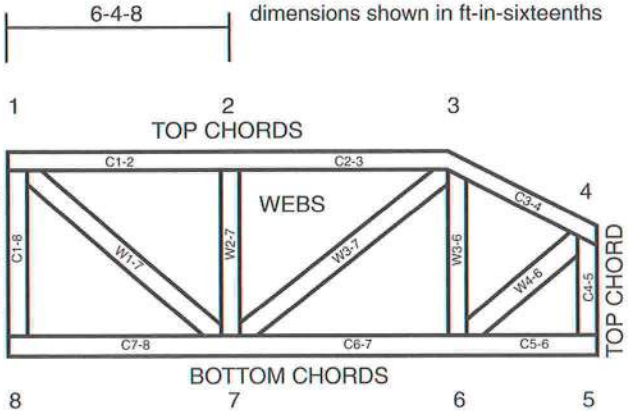


**JOINTS ARE GENERALLY NUMBERED/LETTERED CLOCKWISE AROUND THE TRUSS STARTING AT THE JOINT FARTHEST TO THE LEFT.**

**CHORDS AND WEBS ARE IDENTIFIED BY END JOINT NUMBERS/LETTERS.**

**CONNECTOR PLATE CODE APPROVALS**

| | |
|---|---|
| BOCA | 96-31, 95-43, 96-20-1, 96-67, 84-32 |
| ICBO | 4922, 5243, 5363, 3907 |
| SBCCI | 9667, 9730, 9604B, 9511, 9432A |

MiTek®

TEE-LOK®

# ⚠General Safety Notes

## Failure to Follow Could Cause Property Damage or Personal Injury

1. Additional stability bracing for truss system, e.g. diagonal or X-bracing, is always required. See BCSI1.
2. Never exceed the design loading shown and never stack materials on inadequately braced trusses.
3. Provide copies of this truss design to the building designer, erection supervisor, property owner and all other interested parties.
4. Cut members to bear tightly against each other.
5. Place plates on each face of truss at each joint and embed fully. Knots and wane at joint locations are regulated by ANSI/TPI1.
6. Design assumes trusses will be suitably protected from the environment in accord with ANSI/TPI1.
7. Unless otherwise noted, moisture content of lumber shall not exceed 19% at time of fabrication.
8. Unless expressly noted, this design is not applicable for use with fire retardant or preservative treated lumber.
9. Camber is a non-structural consideration and is the responsibility of truss fabricator. General practice is to camber for dead load deflection.
10. Plate type, size, orientation and location dimensions shown indicate minimum plating requirements.
11. Lumber used shall be of the species and size, and in all respects, equal to or better than that specified.
12. Top chords must be sheathed or purlins provided at spacing shown on design.
13. Bottom chords require lateral bracing at 10 ft. spacing, or less, if no ceiling is installed, unless otherwise noted.
14. Connections not shown are the responsibility of others.
15. Do not cut or alter truss member or plate without prior approval of a professional engineer.
16. Install and load vertically unless indicated otherwise.

| Job | Truss | Truss Type | Qty | Ply | WALKER RES |
|---|---|---|---|---|---|
| WALG | B4 | MONO HIP | 1 | 1 | T1875019 |

Job Reference (optional)

SANTA FE TRUSS, HIGH SPRINGS FL., p.colacino

6.200 s Oct 18 2005 MiTek Industries, Inc. Mon Nov 21 16:21:21 2005 Page 1

| 7-5-12 | 12-10-8 | 19-3-9 | 25-6-15 | 28-10-8 | 32-0-0 |
|---|---|---|---|---|---|
| 7-5-12 | 5-4-12 | 6-5-1 | 6-3-5 | 3-3-9 | 3-1-8 |

Scale = 1:56.7

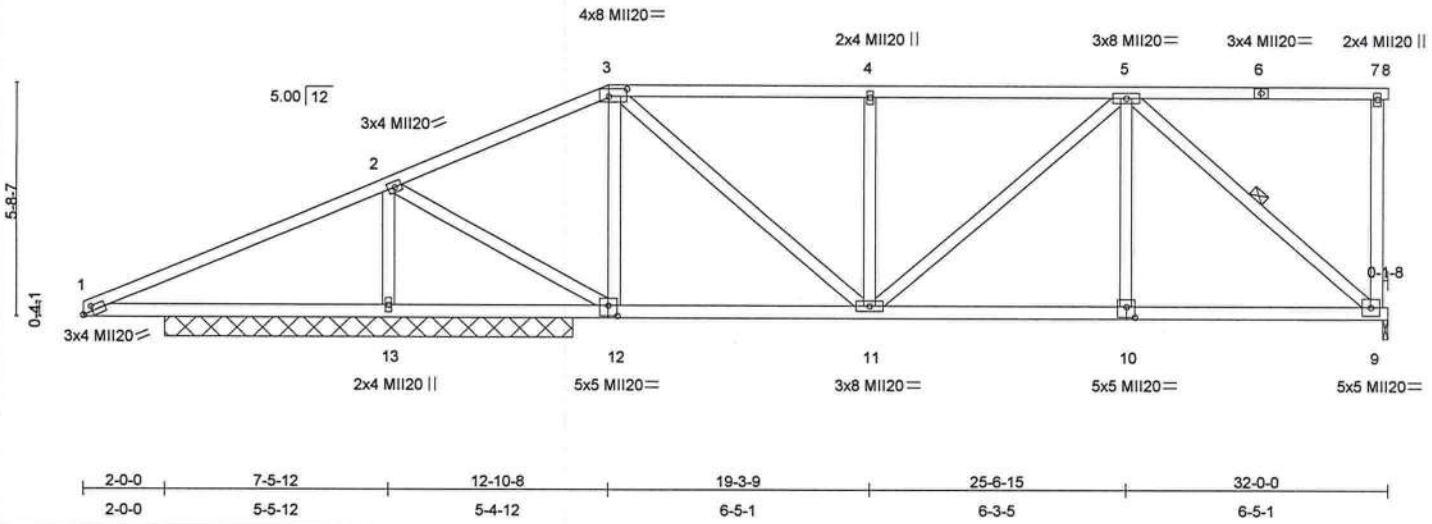


| 2-0-0 | 7-5-12 | 12-10-8 | 19-3-9 | 25-6-15 | 32-0-0 |
|---|---|---|---|---|---|
| 2-0-0 | 5-5-12 | 5-4-12 | 6-5-1 | 6-3-5 | 6-5-1 |

Plate Offsets (X,Y): [1:0-2-15,0-1-8], [3:0-5-4,0-2-4], [10:0-2-8,0-3-0], [12:0-2-8,0-3-0]

| LOADING (psf) | | SPACING 2-0-0 | | CSI | | DEFL | in | (loc) | l/defl | L/d | PLATES | GRIP |
|---|---|---|---|---|---|---|---|---|---|---|---|---|
| TCLL | 20.0 | Plates Increase | 1.25 | TC | 0.46 | Vert(LL) | -0.04 | 9-10 | >999 | 240 | MII20 | 249/190 |
| TCDL | 10.0 | Lumber Increase | 1.25 | BC | 0.35 | Vert(TL) | -0.11 | 9-10 | >999 | 180 | | |
| BCLL | 0.0 | Rep Stress Incr | YES | WB | 0.39 | Horz(TL) | 0.02 | 9 | n/a | n/a | | |
| BCDL | 10.0 | Code FBC2004/TPI2002 | | (Matrix) | | | | | | | Weight: 176 lb | |

**LUMBER**
TOP CHORD 2 X 4 SYP No.2D
BOT CHORD 2 X 4 SYP No.2D
WEBS 2 X 4 SYP No.3

**BRACING**
TOP CHORD Structural wood sheathing directly applied or 6-0-0 oc purlins.
BOT CHORD Rigid ceiling directly applied or 6-0-0 oc bracing.
WEBS 1 Row at midpt 5-9

**REACTIONS** (lb/size) 13=1661/10-0-0, 9=883/0-1-8
Max Horz 13=219(load case 5)
Max Uplift13=-290(load case 5), 9=-254(load case 4)
Max Grav 13=1661(load case 1), 9=905(load case 8)

**FORCES** (lb) - Maximum Compression/Maximum Tension
TOP CHORD 1-2=-161/715, 2-3=-615/197, 3-4=-975/290, 4-5=-975/291, 5-6=0/0, 6-7=0/0, 7-8=0/0
BOT CHORD 1-13=-571/196, 12-13=-571/0, 11-12=-201/540, 10-11=-225/800, 9-10=-225/800
WEBS 2-13=-1472/336, 2-12=-176/1208, 3-12=-506/148, 3-11=-118/599, 4-11=-390/194, 5-11=-87/231, 5-10=0/277, 5-9=-1065/299, 7-9=-152/80

**NOTES**
1) Unbalanced roof live loads have been considered for this design.
2) Wind: ASCE 7-98; 110mph (3-second gust); h=18ft; TCDL=5.0psf; BCDL=5.0psf; Category II; Exp C; enclosed; MWFRS interior zone; cantilever left exposed ; Lumber DOL=1.33 plate grip DOL=1.33.
3) Provide adequate drainage to prevent water ponding.
4) This truss has been designed for a 10.0 psf bottom chord live load nonconcurrent with any other live loads.
5) This truss requires plate inspection per the Tooth Count Method when this truss is chosen for quality assurance inspection.
6) Provide mechanical connection (by others) of truss to bearing plate at joint(s) 9.
7) Provide mechanical connection (by others) of truss to bearing plate capable of withstanding 290 lb uplift at joint 13 and 254 lb uplift at joint 9.

**LOAD CASE(S)** Standard


Guo-Jie Zhang, FL Lic #47744
MiTek Industries, Inc.
1801 Massaro Blvd
Tampa FL 33619
FL Cert.#6634


November 22,2005

# Symbols

**PLATE LOCATION AND ORIENTATION**

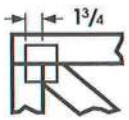


*Center plate on joint unless x,y offsets are indicated. Dimensions are in ft-in-sixteenths. Apply plates to both sides of truss and securely seat.

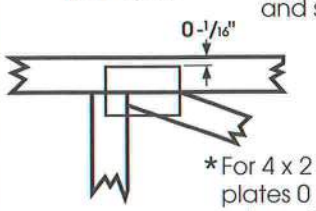


*For 4 x 2 orientation, locate plates 0 - 1/16" from outside edge of truss.

*This symbol indicates the required direction of slots in connector plates.

*** Plate location details available in MiTek 20/20 software or upon request.**

**PLATE SIZE**

4 x 4 — The first dimension is the width perpendicular to slots. Second dimension is the length parallel to slots.

**LATERAL BRACING**

Indicated by symbol shown and/or by text in the bracing section of the output. Use T, I or Eliminator bracing if indicated.

**BEARING**

Indicates location where bearings (supports) occur. Icons vary but reaction section indicates joint number where bearings occur.

**Industry Standards:**

ANSI/TPI1: National Design Specification for Metal Plate Connected Wood Truss Construction.
DSB-89: Design Standard for Bracing.
BCSI1: Building Component Safety Information, Guide to Good Practice for Handling, Installing & Bracing of Metal Plate Connected Wood Trusses.

# Numbering System

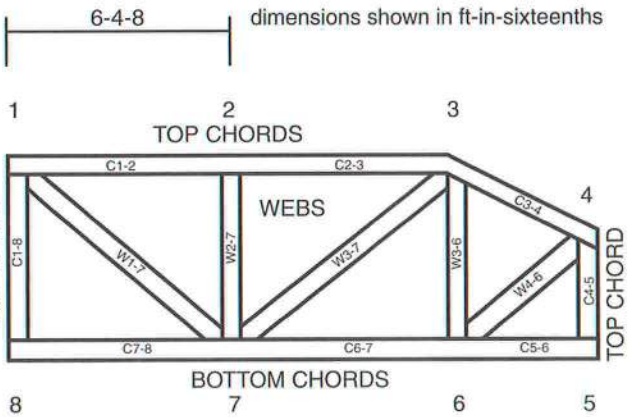


**JOINTS ARE GENERALLY NUMBERED/LETTERED CLOCKWISE AROUND THE TRUSS STARTING AT THE JOINT FARTHEST TO THE LEFT.**

**CHORDS AND WEBS ARE IDENTIFIED BY END JOINT NUMBERS/LETTERS.**

**CONNECTOR PLATE CODE APPROVALS**

| | |
|---|---|
| BOCA | 96-31, 95-43, 96-20-1, 96-67, 84-32 |
| ICBO | 4922, 5243, 5363, 3907 |
| SBCCI | 9667, 9730, 9604B, 9511, 9432A |

MiTek®

TEE-LOK®

# ⚠General Safety Notes

## Failure to Follow Could Cause Property Damage or Personal Injury

1. Additional stability bracing for truss system, e.g. diagonal or X-bracing, is always required. See BCSI1.
2. Never exceed the design loading shown and never stack materials on inadequately braced trusses.
3. Provide copies of this truss design to the building designer, erection supervisor, property owner and all other interested parties.
4. Cut members to bear tightly against each other.
5. Place plates on each face of truss at each joint and embed fully. Knots and wane at joint locations are regulated by ANSI/TPI1.
6. Design assumes trusses will be suitably protected from the environment in accord with ANSI/TPI1.
7. Unless otherwise noted, moisture content of lumber shall not exceed 19% at time of fabrication.
8. Unless expressly noted, this design is not applicable for use with fire retardant or preservative treated lumber.
9. Camber is a non-structural consideration and is the responsibility of truss fabricator. General practice is to camber for dead load deflection.
10. Plate type, size, orientation and location dimensions shown indicate minimum plating requirements.
11. Lumber used shall be of the species and size, and in all respects, equal to or better than that specified.
12. Top chords must be sheathed or purlins provided at spacing shown on design.
13. Bottom chords require lateral bracing at 10 ft. spacing, or less, if no ceiling is installed, unless otherwise noted.
14. Connections not shown are the responsibility of others.
15. Do not cut or alter truss member or plate without prior approval of a professional engineer.
16. Install and load vertically unless indicated otherwise.

| Job | Truss | Truss Type | Qty | Ply | WALKER RES |
|---|---|---|---|---|---|
| WALG | C1 | HIP | 1 | 1 | T1875020 |

Job Reference (optional)

SANTA FE TRUSS, HIGH SPRINGS FL., p.colacino

6.200 s Oct 18 2005 MiTek Industries, Inc. Mon Nov 21 16:21:23 2005 Page 1

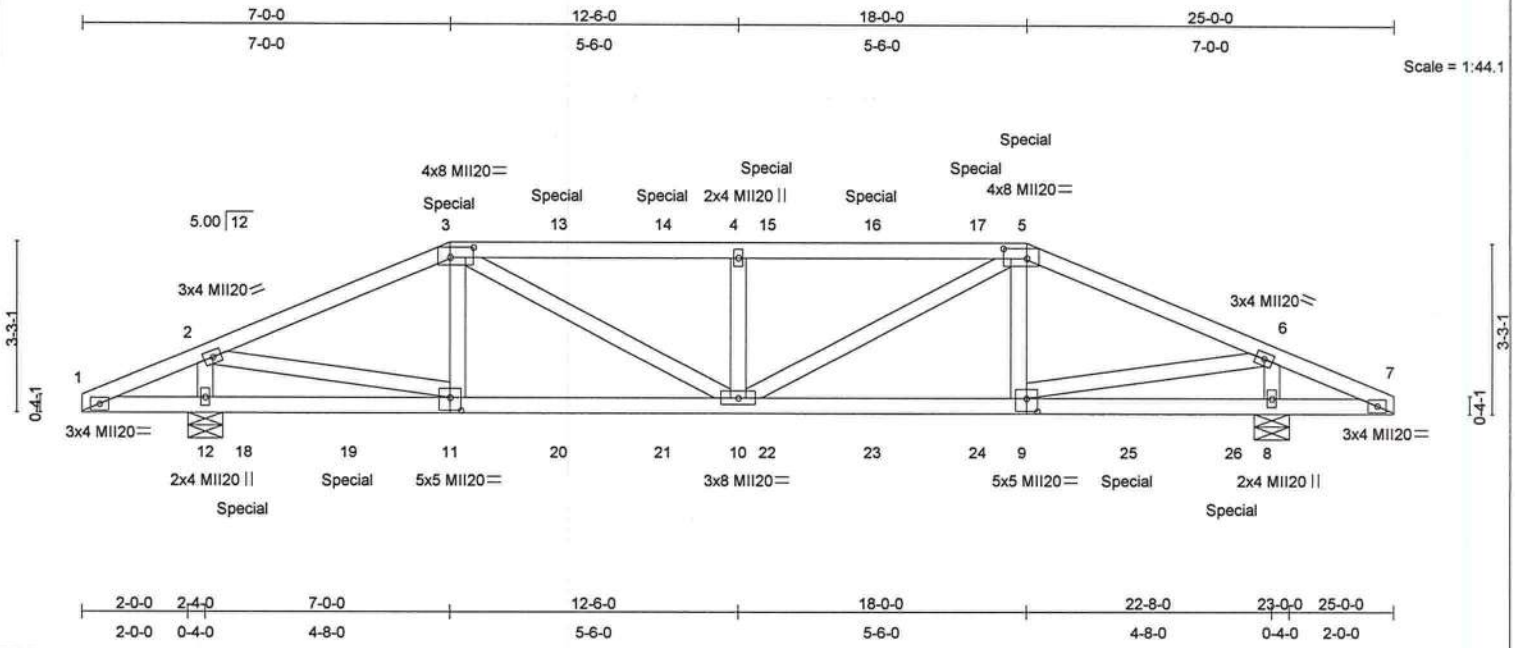


Plate Offsets (X,Y): [1:0-0-0,0-0-0], [2:0-0-0,0-0-0], [3:0-5-4,0-2-4], [4:0-0-0,0-0-0], [5:0-5-4,0-2-4], [6:0-0-0,0-0-0], [7:0-0-0,0-0-0], [9:0-2-8,0-3-0], [11:0-2-8,0-3-0]

| LOADING (psf) | | SPACING | 2-0-0 | CSI | | DEFL | in | (loc) | l/defl | L/d | PLATES | GRIP |
|---|---|---|---|---|---|---|---|---|---|---|---|---|
| TCLL | 20.0 | Plates Increase | 1.25 | TC | 0.22 | Vert(LL) | 0.04 | 10 | >999 | 240 | MII20 | 249/190 |
| TCDL | 10.0 | Lumber Increase | 1.25 | BC | 0.32 | Vert(TL) | -0.13 | 9-10 | >999 | 180 | | |
| BCLL | 0.0 | Rep Stress Incr | NO | WB | 0.36 | Horz(TL) | 0.02 | 8 | n/a | n/a | | |
| BCDL | 10.0 | Code FBC2004/TPI2002 | | (Matrix) | | | | | | | Weight: 121 lb | |

**LUMBER**
TOP CHORD 2 X 4 SYP No.2D
BOT CHORD 2 X 4 SYP No.2D
WEBS 2 X 4 SYP No.3

**BRACING**
TOP CHORD Structural wood sheathing directly applied or 5-4-4 oc purlins.
BOT CHORD Rigid ceiling directly applied or 6-0-0 oc bracing.

**REACTIONS** (lb/size) 12=1051/0-8-0, 8=1049/0-8-0
Max Horz 12=44(load case 5)
Max Uplift12=-345(load case 5), 8=-334(load case 6)

**FORCES** (lb) - Maximum Compression/Maximum Tension
TOP CHORD 1-2=-95/112, 2-3=-1178/317, 3-13=-1436/381, 13-14=-1436/381, 4-14=-1436/381, 4-15=-1436/381, 15-16=-1436/381, 16-17=-1436/381, 5-17=-1436/381, 5-6=-1175/320, 6-7=-94/113
BOT CHORD 1-12=-61/92, 12-18=-61/83, 18-19=-61/83, 11-19=-61/83, 11-20=-228/1037, 20-21=-228/1037, 10-21=-228/1037, 10-22=-229/1034, 22-23=-229/1034, 23-24=-229/1034, 9-24=-229/1034, 9-25=-61/92, 25-26=-61/92, 8-26=-61/92, 7-8=-61/92
WEBS 2-11=-298/1123, 3-11=-97/121, 3-10=-95/503, 4-10=-240/134, 5-10=-92/488, 5-9=-80/121, 6-9=-300/1120, 2-12=-951/339, 6-8=-952/328

**NOTES**
1) Unbalanced roof live loads have been considered for this design.
2) Wind: ASCE 7-98; 110mph (3-second gust); h=18ft; TCDL=5.0psf; BCDL=5.0psf; Category II; Exp C; enclosed; MWFRS interior zone; cantilever left and right exposed ; Lumber DOL=1.33 plate grip DOL=1.33.
3) Provide adequate drainage to prevent water ponding.
4) This truss has been designed for a 10.0 psf bottom chord live load nonconcurrent with any other live loads.
5) This truss requires plate inspection per the Tooth Count Method when this truss is chosen for quality assurance inspection.
6) Provide mechanical connection (by others) of truss to bearing plate capable of withstanding 345 lb uplift at joint 12 and 334 lb uplift at joint 8.
7) Hanger(s) or other connection device(s) shall be provided sufficient to support concentrated load(s) 37 lb down and 98 lb up at 7-0-0, 13 lb down and 34 lb up at 9-0-12, 13 lb down and 34 lb up at 11-0-12, 13 lb down and 34 lb up at 13-0-12, 13 lb down and 34 lb up at 15-0-12, and 13 lb down and 34 lb up at 17-0-12, and 77 lb down and 98 lb up at 18-0-0 on top chord, and 25 lb down at 3-0-12, 20 lb down and 10 lb up at 5-0-12, 28 lb down at 7-0-12, 28 lb down at 9-0-12, 28 lb down at 11-0-12, 28 lb down at 13-0-12, 28 lb down at 15-0-12, 28 lb down at 17-0-12, 28 lb down at 17-11-4, and 20 lb down and 10 lb up at 19-11-4, and 25 lb down at 21-11-4 on bottom chord. The design/selection of such connection device(s) is the responsibility of others.
8) In the LOAD CASE(S) section, loads applied to the face of the truss are noted as front (F) or back (B).

**LOAD CASE(S)** Standard


Guo-Jie Zhang, FL Lic #47744
MiTek Industries, Inc.
1801 Massaro Blvd
Tampa FL 33619
FL Cert.#6634


November 22,2005

Continued on page 2

# Symbols

**PLATE LOCATION AND ORIENTATION**

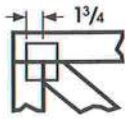


*Center plate on joint unless x,y offsets are indicated. Dimensions are in ft-in-sixteenths. Apply plates to both sides of truss and securely seat.

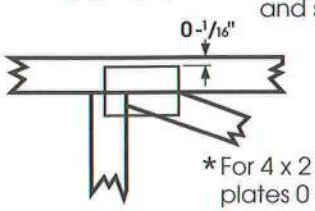


*For 4 x 2 orientation, locate plates 0 - 1/16" from outside edge of truss.

*This symbol indicates the required direction of slots in connector plates.

*** Plate location details available in MiTek 20/20 software or upon request.**

**PLATE SIZE**

4 x 4 — The first dimension is the width perpendicular to slots. Second dimension is the length parallel to slots.

**LATERAL BRACING**

Indicated by symbol shown and/or by text in the bracing section of the output. Use T, I or Eliminator bracing if indicated.

**BEARING**

Indicates location where bearings (supports) occur. Icons vary but reaction section indicates joint number where bearings occur.

**Industry Standards:**

ANSI/TPI1: National Design Specification for Metal Plate Connected Wood Truss Construction.
DSB-89: Design Standard for Bracing.
BCSI1: Building Component Safety Information, Guide to Good Practice for Handling, Installing & Bracing of Metal Plate Connected Wood Trusses.

# Numbering System

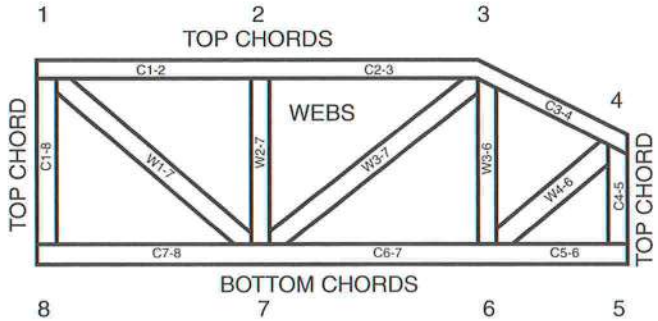


**JOINTS ARE GENERALLY NUMBERED/LETTERED CLOCKWISE AROUND THE TRUSS STARTING AT THE JOINT FARTHEST TO THE LEFT.**

**CHORDS AND WEBS ARE IDENTIFIED BY END JOINT NUMBERS/LETTERS.**

**CONNECTOR PLATE CODE APPROVALS**

| | |
|---|---|
| BOCA | 96-31, 95-43, 96-20-1, 96-67, 84-32 |
| ICBO | 4922, 5243, 5363, 3907 |
| SBCCI | 9667, 9730, 9604B, 9511, 9432A |

MiTek®

TEE-LOK®

# ⚠General Safety Notes

## Failure to Follow Could Cause Property Damage or Personal Injury

1. Additional stability bracing for truss system, e.g. diagonal or X-bracing, is always required. See BCSI1.
2. Never exceed the design loading shown and never stack materials on inadequately braced trusses.
3. Provide copies of this truss design to the building designer, erection supervisor, property owner and all other interested parties.
4. Cut members to bear tightly against each other.
5. Place plates on each face of truss at each joint and embed fully. Knots and wane at joint locations are regulated by ANSI/TPI1.
6. Design assumes trusses will be suitably protected from the environment in accord with ANSI/TPI1.
7. Unless otherwise noted, moisture content of lumber shall not exceed 19% at time of fabrication.
8. Unless expressly noted, this design is not applicable for use with fire retardant or preservative treated lumber.
9. Camber is a non-structural consideration and is the responsibility of truss fabricator. General practice is to camber for dead load deflection.
10. Plate type, size, orientation and location dimensions shown indicate minimum plating requirements.
11. Lumber used shall be of the species and size, and in all respects, equal to or better than that specified.
12. Top chords must be sheathed or purlins provided at spacing shown on design.
13. Bottom chords require lateral bracing at 10 ft. spacing, or less, if no ceiling is installed, unless otherwise noted.
14. Connections not shown are the responsibility of others.
15. Do not cut or alter truss member or plate without prior approval of a professional engineer.
16. Install and load vertically unless indicated otherwise.

**LOAD CASE(S)** Standard

1) Regular: Lumber Increase=1.25, Plate Increase=1.25

Uniform Loads (plf)

Vert: 1-3=-60, 3-5=-60, 5-7=-60, 1-7=-20

Concentrated Loads (lb)

Vert: 3=-37(F) 5=-37(F) 11=-28(F) 9=-28(F) 13=34(F) 14=34(F) 15=34(F) 16=34(F) 17=34(F) 18=-13(F) 19=10(F) 20=-28(F) 21=-28(F) 22=-28(F) 23=-28(F) 24=-28(F) 25=10(F) 26=-13(F)

# Symbols

**PLATE LOCATION AND ORIENTATION**

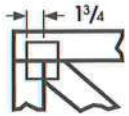


*Center plate on joint unless x,y offsets are indicated. Dimensions are in ft-in-sixteenths. Apply plates to both sides of truss and securely seat.

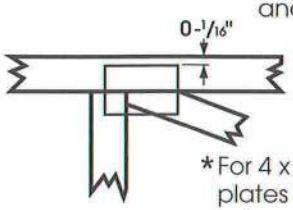


*For 4 x 2 orientation, locate plates 0 - 1/16" from outside edge of truss.



*This symbol indicates the required direction of slots in connector plates.

*** Plate location details available in MiTek 20/20 software or upon request.**

**PLATE SIZE**

4 x 4 — The first dimension is the width perpendicular to slots. Second dimension is the length parallel to slots.

**LATERAL BRACING**

Indicated by symbol shown and/or by text in the bracing section of the output. Use T, I or Eliminator bracing if indicated.

**BEARING**

Indicates location where bearings (supports) occur. Icons vary but reaction section indicates joint number where bearings occur.

**Industry Standards:**

ANSI/TPI1: National Design Specification for Metal Plate Connected Wood Truss Construction.
DSB-89: Design Standard for Bracing.
BCSI1: Building Component Safety Information, Guide to Good Practice for Handling, Installing & Bracing of Metal Plate Connected Wood Trusses.

# Numbering System

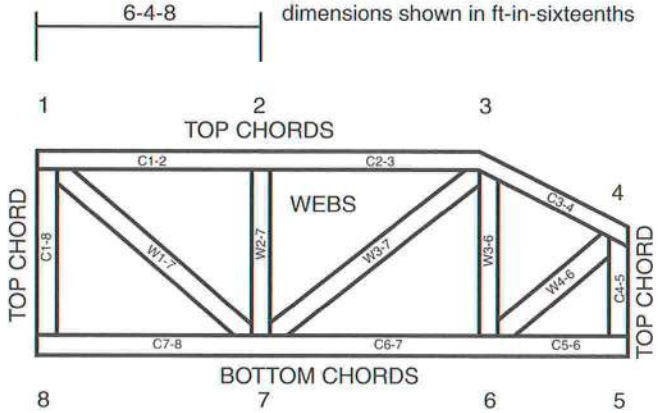


**JOINTS ARE GENERALLY NUMBERED/LETTERED CLOCKWISE AROUND THE TRUSS STARTING AT THE JOINT FARTHEST TO THE LEFT.**

**CHORDS AND WEBS ARE IDENTIFIED BY END JOINT NUMBERS/LETTERS.**

**CONNECTOR PLATE CODE APPROVALS**

| | |
|---|---|
| BOCA | 96-31, 95-43, 96-20-1, 96-67, 84-32 |
| ICBO | 4922, 5243, 5363, 3907 |
| SBCCI | 9667, 9730, 9604B, 9511, 9432A |

MiTek®

TEE-LOK®

# ⚠General Safety Notes

## Failure to Follow Could Cause Property Damage or Personal Injury

1. Additional stability bracing for truss system, e.g. diagonal or X-bracing, is always required. See BCSI1.
2. Never exceed the design loading shown and never stack materials on inadequately braced trusses.
3. Provide copies of this truss design to the building designer, erection supervisor, property owner and all other interested parties.
4. Cut members to bear tightly against each other.
5. Place plates on each face of truss at each joint and embed fully. Knots and wane at joint locations are regulated by ANSI/TPI1.
6. Design assumes trusses will be suitably protected from the environment in accord with ANSI/TPI1.
7. Unless otherwise noted, moisture content of lumber shall not exceed 19% at time of fabrication.
8. Unless expressly noted, this design is not applicable for use with fire retardant or preservative treated lumber.
9. Camber is a non-structural consideration and is the responsibility of truss fabricator. General practice is to camber for dead load deflection.
10. Plate type, size, orientation and location dimensions shown indicate minimum plating requirements.
11. Lumber used shall be of the species and size, and in all respects, equal to or better than that specified.
12. Top chords must be sheathed or purlins provided at spacing shown on design.
13. Bottom chords require lateral bracing at 10 ft. spacing, or less, if no ceiling is installed, unless otherwise noted.
14. Connections not shown are the responsibility of others.
15. Do not cut or alter truss member or plate without prior approval of a professional engineer.
16. Install and load vertically unless indicated otherwise.

| Job | Truss | Truss Type | Qty | Ply | WALKER RES |
|---|---|---|---|---|---|
| WALG | C2 | HIP | 1 | 1 | T1875021 |

Job Reference (optional)

SANTA FE TRUSS, HIGH SPRINGS FL., p.colacino

6.200 s Oct 18 2005 MiTek Industries, Inc. Mon Nov 21 16:21:24 2005 Page 1

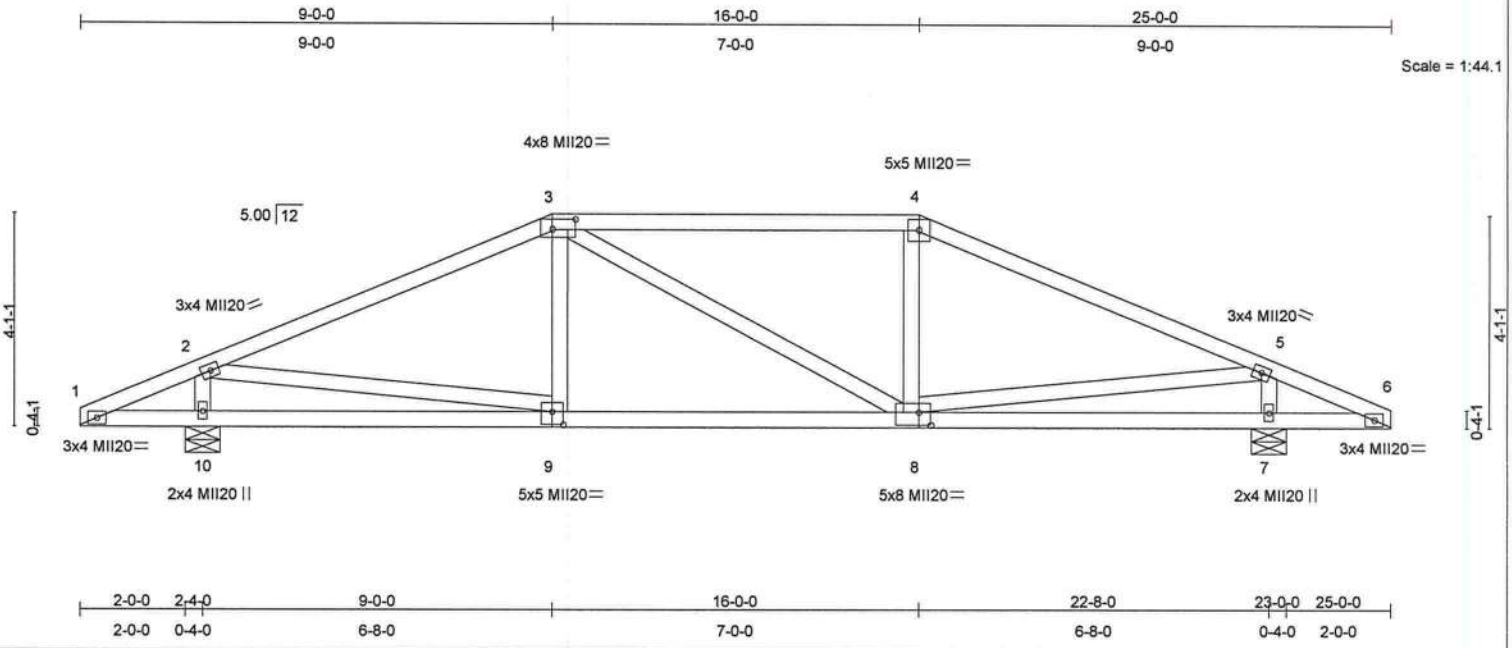


Plate Offsets (X,Y): [1:0-0-0,0-0-0], [2:0-0-0,0-0-0], [3:0-5-4,0-2-4], [4:0-0-0,0-0-0], [5:0-0-0,0-0-0], [6:0-0-0,0-0-0], [8:0-2-12,0-3-0], [9:0-2-8,0-3-0]

| LOADING (psf) | | SPACING | 2-0-0 | CSI | | DEFL | in | (loc) | l/defl | L/d | PLATES | GRIP |
|---|---|---|---|---|---|---|---|---|---|---|---|---|
| TCLL | 20.0 | Plates Increase | 1.25 | TC | 0.30 | Vert(LL) | -0.04 | 8-9 | >999 | 240 | MII20 | 249/190 |
| TCDL | 10.0 | Lumber Increase | 1.25 | BC | 0.30 | Vert(TL) | -0.13 | 8-9 | >999 | 180 | | |
| BCLL | 0.0 | Rep Stress Incr | YES | WB | 0.30 | Horz(TL) | 0.01 | 7 | n/a | n/a | | |
| BCDL | 10.0 | Code FBC2004/TPI2002 | | (Matrix) | | | | | | | Weight: 120 lb | |

**LUMBER**
TOP CHORD 2 X 4 SYP No.2D
BOT CHORD 2 X 4 SYP No.2D
WEBS 2 X 4 SYP No.3

**BRACING**
TOP CHORD Structural wood sheathing directly applied or 5-10-2 oc purlins.
BOT CHORD Rigid ceiling directly applied or 10-0-0 oc bracing.

**REACTIONS** (lb/size) 10=1000/0-8-0, 7=1000/0-8-0
Max Horz 10=-56(load case 6)
Max Uplift10=-262(load case 5), 7=-262(load case 6)

**FORCES** (lb) - Maximum Compression/Maximum Tension
TOP CHORD 1-2=-82/21, 2-3=-1141/231, 3-4=-985/245, 4-5=-1141/230, 5-6=-82/20
BOT CHORD 1-10=-10/72, 9-10=-3/74, 8-9=-133/985, 7-8=-9/71, 6-7=-9/71
WEBS 2-9=-196/950, 3-9=-6/171, 3-8=-110/110, 4-8=-51/171, 5-8=-196/950, 2-10=-882/290, 5-7=-882/289

**NOTES**
1) Unbalanced roof live loads have been considered for this design.
2) Wind: ASCE 7-98; 110mph (3-second gust); h=18ft; TCDL=5.0psf; BCDL=5.0psf; Category II; Exp C; enclosed; MWFRS interior zone; cantilever left and right exposed ; Lumber DOL=1.33 plate grip DOL=1.33.
3) Provide adequate drainage to prevent water ponding.
4) This truss has been designed for a 10.0 psf bottom chord live load nonconcurrent with any other live loads.
5) This truss requires plate inspection per the Tooth Count Method when this truss is chosen for quality assurance inspection.
6) Provide mechanical connection (by others) of truss to bearing plate capable of withstanding 262 lb uplift at joint 10 and 262 lb uplift at joint 7.

**LOAD CASE(S)** Standard


Guo-Jie Zhang, FL Lic #47744
MiTek Industries, Inc.
1801 Massaro Blvd
Tampa FL 33619
FL Cert.#6634


November 22,2005

# Symbols

**PLATE LOCATION AND ORIENTATION**


*Center plate on joint unless x,y offsets are indicated. Dimensions are in ft-in-sixteenths. Apply plates to both sides of truss and securely seat.

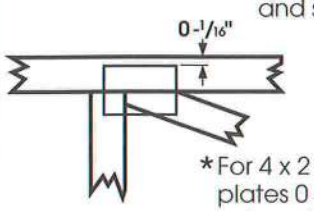


*For 4 x 2 orientation, locate plates 0 - 1/16" from outside edge of truss.

*This symbol indicates the required direction of slots in connector plates.

*** Plate location details available in MiTek 20/20 software or upon request.**

**PLATE SIZE**

4 x 4 — The first dimension is the width perpendicular to slots. Second dimension is the length parallel to slots.

**LATERAL BRACING**

Indicated by symbol shown and/or by text in the bracing section of the output. Use T, I or Eliminator bracing if indicated.

**BEARING**

Indicates location where bearings (supports) occur. Icons vary but reaction section indicates joint number where bearings occur.

**Industry Standards:**

ANSI/TPI1: National Design Specification for Metal Plate Connected Wood Truss Construction.
DSB-89: Design Standard for Bracing.
BCSI1: Building Component Safety Information, Guide to Good Practice for Handling, Installing & Bracing of Metal Plate Connected Wood Trusses.

# Numbering System

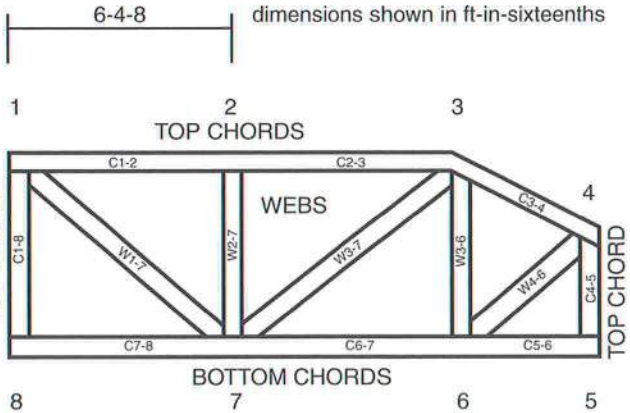


**JOINTS ARE GENERALLY NUMBERED/LETTERED CLOCKWISE AROUND THE TRUSS STARTING AT THE JOINT FARTHEST TO THE LEFT.**

**CHORDS AND WEBS ARE IDENTIFIED BY END JOINT NUMBERS/LETTERS.**

**CONNECTOR PLATE CODE APPROVALS**

| | |
|---|---|
| BOCA | 96-31, 95-43, 96-20-1, 96-67, 84-32 |
| ICBO | 4922, 5243, 5363, 3907 |
| SBCCI | 9667, 9730, 9604B, 9511, 9432A |

MiTek®

TEE-LOK®

# ⚠General Safety Notes

## Failure to Follow Could Cause Property Damage or Personal Injury

1. Additional stability bracing for truss system, e.g. diagonal or X-bracing, is always required. See BCSI1.
2. Never exceed the design loading shown and never stack materials on inadequately braced trusses.
3. Provide copies of this truss design to the building designer, erection supervisor, property owner and all other interested parties.
4. Cut members to bear tightly against each other.
5. Place plates on each face of truss at each joint and embed fully. Knots and wane at joint locations are regulated by ANSI/TPI1.
6. Design assumes trusses will be suitably protected from the environment in accord with ANSI/TPI1.
7. Unless otherwise noted, moisture content of lumber shall not exceed 19% at time of fabrication.
8. Unless expressly noted, this design is not applicable for use with fire retardant or preservative treated lumber.
9. Camber is a non-structural consideration and is the responsibility of truss fabricator. General practice is to camber for dead load deflection.
10. Plate type, size, orientation and location dimensions shown indicate minimum plating requirements.
11. Lumber used shall be of the species and size, and in all respects, equal to or better than that specified.
12. Top chords must be sheathed or purlins provided at spacing shown on design.
13. Bottom chords require lateral bracing at 10 ft. spacing, or less, if no ceiling is installed, unless otherwise noted.
14. Connections not shown are the responsibility of others.
15. Do not cut or alter truss member or plate without prior approval of a professional engineer.
16. Install and load vertically unless indicated otherwise.

| Job | Truss | Truss Type | Qty | Ply | WALKER RES |
|---|---|---|---|---|---|
| WALG | C3 | HIP | 1 | 1 | T1875022 |

Job Reference (optional)

SANTA FE TRUSS, HIGH SPRINGS FL., p.colacino

6.200 s Oct 18 2005 MiTek Industries, Inc. Mon Nov 21 16:21:25 2005 Page 1

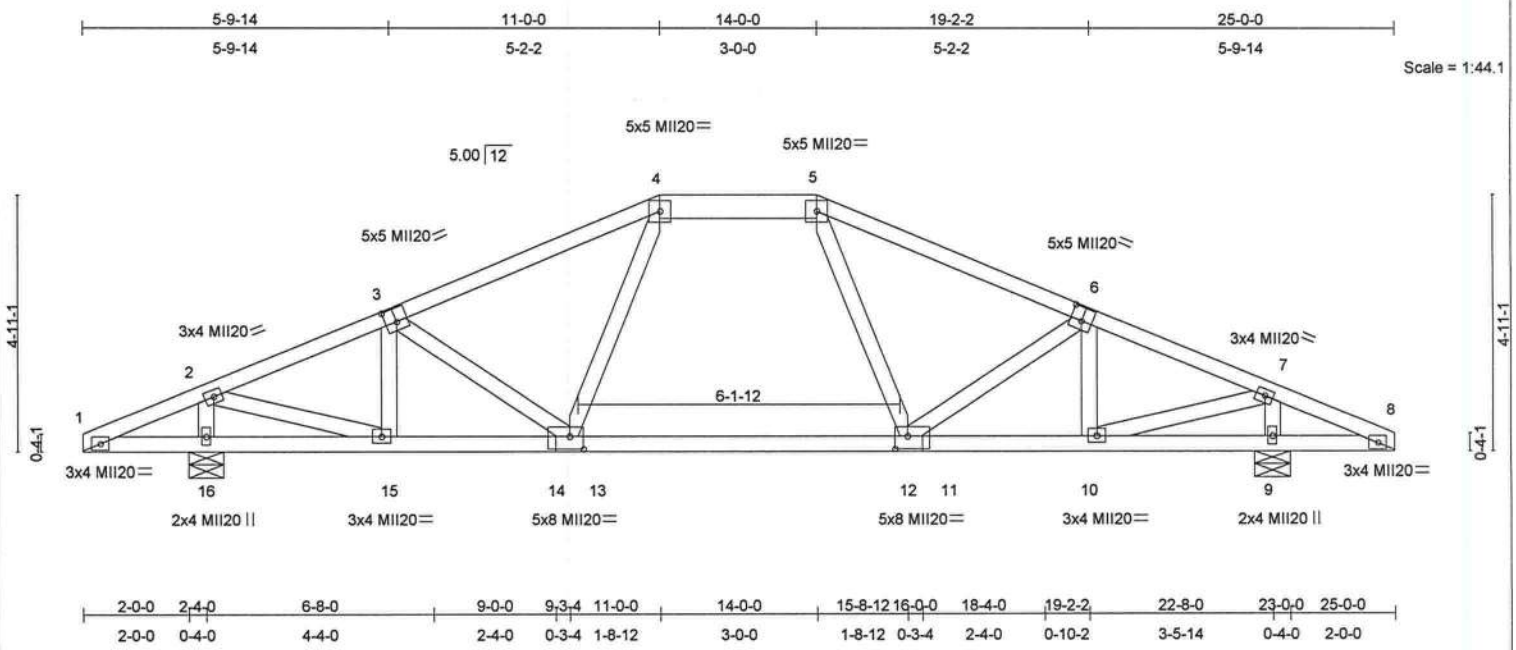


Plate Offsets (X,Y): [3:0-2-8,0-3-0], [6:0-2-8,0-3-0], [11:0-3-0,0-3-0], [14:0-3-0,0-3-0]

| LOADING (psf) | | SPACING | 2-0-0 | CSI | | DEFL | in | (loc) | l/defl | L/d | PLATES | GRIP |
|---|---|---|---|---|---|---|---|---|---|---|---|---|
| TCLL | 20.0 | Plates Increase | 1.25 | TC | 0.27 | Vert(LL) | -0.06 | 12 | >999 | 240 | MII20 | 249/190 |
| TCDL | 10.0 | Lumber Increase | 1.25 | BC | 0.30 | Vert(TL) | -0.12 | 12-13 | >999 | 180 | | |
| BCLL | 0.0 | Rep Stress Incr | YES | WB | 0.33 | Horz(TL) | 0.02 | 9 | n/a | n/a | | |
| BCDL | 10.0 | Code FBC2004/TPI2002 | | (Matrix) | | | | | | | Weight: 124 lb | |

**LUMBER**
TOP CHORD 2 X 4 SYP No.2D *Except*
4-5 2 X 6 SYP No.2
BOT CHORD 2 X 4 SYP No.2D
WEBS 2 X 4 SYP No.3

**BRACING**
TOP CHORD Structural wood sheathing directly applied or 6-0-0 oc purlins.
BOT CHORD Rigid ceiling directly applied or 6-0-0 oc bracing.

**REACTIONS** (lb/size) 16=1000/0-8-0, 9=1000/0-8-0
Max Horz 16=68(load case 5)
Max Uplift16=-278(load case 5), 9=-278(load case 6)

**FORCES** (lb) - Maximum Compression/Maximum Tension
TOP CHORD 1-2=-123/162, 2-3=-1008/176, 3-4=-1030/187, 4-5=-857/205, 5-6=-1030/187, 6-7=-1008/176, 7-8=-122/162
BOT CHORD 1-16=-118/126, 15-16=-118/98, 14-15=-162/904, 13-14=-162/904, 12-13=-79/857, 11-12=-102/904, 10-11=-102/904, 9-10=-118/125, 8-9=-118/125
WEBS 3-15=-257/90, 3-13=-94/139, 6-12=-94/139, 6-10=-257/90, 2-16=-894/262, 2-15=-225/1038, 7-9=-894/261, 7-10=-224/1038, 4-13=0/216, 5-12=0/216

**NOTES**
1) Unbalanced roof live loads have been considered for this design.
2) Wind: ASCE 7-98; 110mph (3-second gust); h=18ft; TCDL=5.0psf; BCDL=5.0psf; Category II; Exp C; enclosed; MWFRS interior zone; cantilever left and right exposed ; Lumber DOL=1.33 plate grip DOL=1.33.
3) Provide adequate drainage to prevent water ponding.
4) This truss has been designed for a 10.0 psf bottom chord live load nonconcurrent with any other live loads.
5) This truss requires plate inspection per the Tooth Count Method when this truss is chosen for quality assurance inspection.
6) Provide mechanical connection (by others) of truss to bearing plate capable of withstanding 278 lb uplift at joint 16 and 278 lb uplift at joint 9.

**LOAD CASE(S)** Standard


Guo-Jie Zhang, FL Lic #47744
MiTek Industries, Inc.
1801 Massaro Blvd
Tampa FL 33619
FL Cert.#6634


November 22,2005

# Symbols

**PLATE LOCATION AND ORIENTATION**


*Center plate on joint unless x,y offsets are indicated. Dimensions are in ft-in-sixteenths. Apply plates to both sides of truss and securely seat.

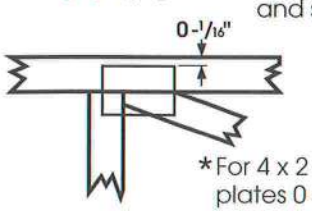


*For 4 x 2 orientation, locate plates 0 - 1/16" from outside edge of truss.

*This symbol indicates the required direction of slots in connector plates.

*** Plate location details available in MiTek 20/20 software or upon request.**

**PLATE SIZE**

4 x 4 — The first dimension is the width perpendicular to slots. Second dimension is the length parallel to slots.

**LATERAL BRACING**

Indicated by symbol shown and/or by text in the bracing section of the output. Use T, I or Eliminator bracing if indicated.

**BEARING**

Indicates location where bearings (supports) occur. Icons vary but reaction section indicates joint number where bearings occur.

**Industry Standards:**

ANSI/TPI1: National Design Specification for Metal Plate Connected Wood Truss Construction.
DSB-89: Design Standard for Bracing.
BCSI1: Building Component Safety Information, Guide to Good Practice for Handling, Installing & Bracing of Metal Plate Connected Wood Trusses.

# Numbering System

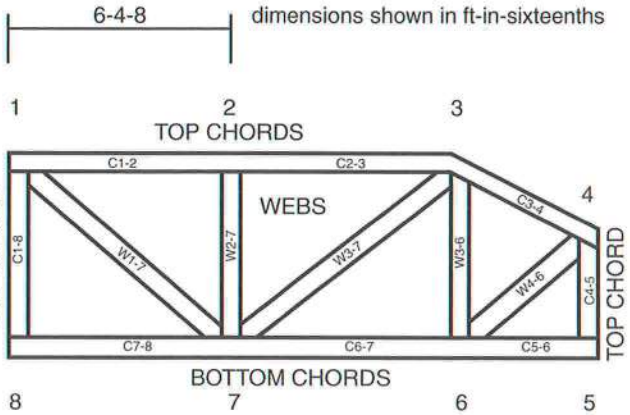


**JOINTS ARE GENERALLY NUMBERED/LETTERED CLOCKWISE AROUND THE TRUSS STARTING AT THE JOINT FARTHEST TO THE LEFT.**

**CHORDS AND WEBS ARE IDENTIFIED BY END JOINT NUMBERS/LETTERS.**

**CONNECTOR PLATE CODE APPROVALS**

| | |
|---|---|
| BOCA | 96-31, 95-43, 96-20-1, 96-67, 84-32 |
| ICBO | 4922, 5243, 5363, 3907 |
| SBCCI | 9667, 9730, 9604B, 9511, 9432A |

MiTek®

TEE-LOK®

# ⚠General Safety Notes

## Failure to Follow Could Cause Property Damage or Personal Injury

1. Additional stability bracing for truss system, e.g. diagonal or X-bracing, is always required. See BCSI1.
2. Never exceed the design loading shown and never stack materials on inadequately braced trusses.
3. Provide copies of this truss design to the building designer, erection supervisor, property owner and all other interested parties.
4. Cut members to bear tightly against each other.
5. Place plates on each face of truss at each joint and embed fully. Knots and wane at joint locations are regulated by ANSI/TPI1.
6. Design assumes trusses will be suitably protected from the environment in accord with ANSI/TPI1.
7. Unless otherwise noted, moisture content of lumber shall not exceed 19% at time of fabrication.
8. Unless expressly noted, this design is not applicable for use with fire retardant or preservative treated lumber.
9. Camber is a non-structural consideration and is the responsibility of truss fabricator. General practice is to camber for dead load deflection.
10. Plate type, size, orientation and location dimensions shown indicate minimum plating requirements.
11. Lumber used shall be of the species and size, and in all respects, equal to or better than that specified.
12. Top chords must be sheathed or purlins provided at spacing shown on design.
13. Bottom chords require lateral bracing at 10 ft. spacing, or less, if no ceiling is installed, unless otherwise noted.
14. Connections not shown are the responsibility of others.
15. Do not cut or alter truss member or plate without prior approval of a professional engineer.
16. Install and load vertically unless indicated otherwise.

| Job | Truss | Truss Type | Qty | Ply | WALKER RES |
|---|---|---|---|---|---|
| WALG | C4 | COMMON | 2 | 1 | T1875023 |
| | | | | | Job Reference (optional) |

SANTA FE TRUSS, HIGH SPRINGS FL., p.colacino — 6.200 s Oct 18 2005 MiTek Industries, Inc. Mon Nov 21 16:21:26 2005 Page 1

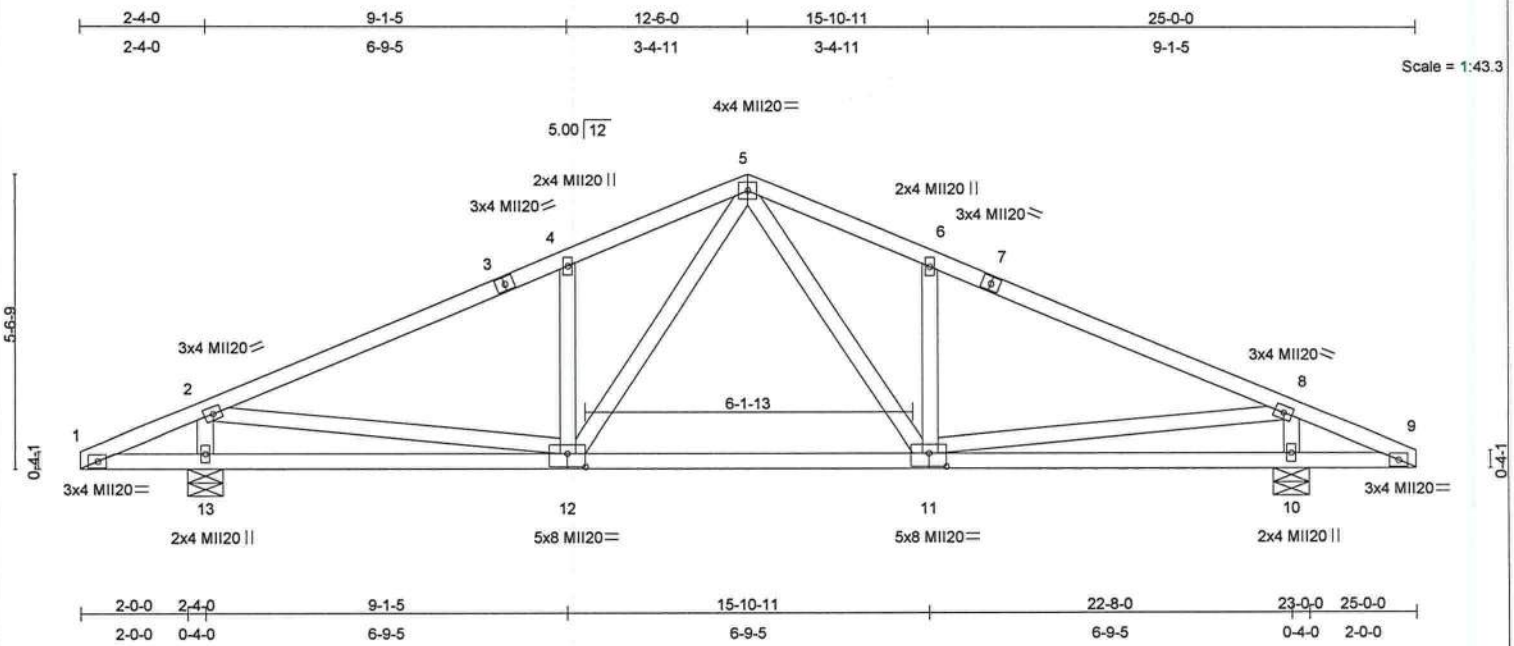


Plate Offsets (X,Y): [11:0-4-0,0-3-0], [12:0-4-0,0-3-0]

| LOADING (psf) | | SPACING | 2-0-0 | CSI | | DEFL | in | (loc) | l/defl | L/d | PLATES | GRIP |
|---|---|---|---|---|---|---|---|---|---|---|---|---|
| TCLL | 20.0 | Plates Increase | 1.25 | TC | 0.43 | Vert(LL) | -0.09 | 11-12 | >999 | 240 | MII20 | 249/190 |
| TCDL | 10.0 | Lumber Increase | 1.25 | BC | 0.41 | Vert(TL) | -0.26 | 11-12 | >925 | 180 | | |
| BCLL | 0.0 | Rep Stress Incr | NO | WB | 0.38 | Horz(TL) | 0.01 | 10 | n/a | n/a | | |
| BCDL | 10.0 | Code FBC2004/TPI2002 | | (Matrix) | | | | | | | Weight: 128 lb | |

**LUMBER**
TOP CHORD 2 X 4 SYP No.2D
BOT CHORD 2 X 4 SYP No.2D
WEBS 2 X 4 SYP No.3

**BRACING**
TOP CHORD Structural wood sheathing directly applied or 5-2-3 oc purlins.
BOT CHORD Rigid ceiling directly applied or 10-0-0 oc bracing.

**REACTIONS** (lb/size) 13=1136/0-8-0, 10=1136/0-8-0
Max Horz 13=-78(load case 6)
Max Uplift13=-322(load case 5), 10=-322(load case 6)

**FORCES** (lb) - Maximum Compression/Maximum Tension
TOP CHORD 1-2=-76/14, 2-3=-1411/261, 3-4=-1270/274, 4-5=-1385/371, 5-6=-1383/368, 6-7=-1272/274, 7-8=-1412/262, 8-9=-77/16
BOT CHORD 1-13=-10/62, 12-13=-19/69, 11-12=-118/935, 10-11=-9/63, 9-10=-9/63
WEBS 5-12=-188/572, 5-11=-185/567, 2-13=-1055/361, 2-12=-203/1179, 8-10=-1055/360, 8-11=-203/1183, 4-12=-341/220, 6-11=-338/217

**NOTES**
1) Unbalanced roof live loads have been considered for this design.
2) Wind: ASCE 7-98; 110mph (3-second gust); h=18ft; TCDL=5.0psf; BCDL=5.0psf; Category II; Exp C; enclosed; MWFRS interior zone; cantilever left and right exposed ; Lumber DOL=1.33 plate grip DOL=1.33.
3) This truss has been designed for a 10.0 psf bottom chord live load nonconcurrent with any other live loads.
4) This truss requires plate inspection per the Tooth Count Method when this truss is chosen for quality assurance inspection.
5) Provide mechanical connection (by others) of truss to bearing plate capable of withstanding 322 lb uplift at joint 13 and 322 lb uplift at joint 10.
6) In the LOAD CASE(S) section, loads applied to the face of the truss are noted as front (F) or back (B).

**LOAD CASE(S)** Standard
1) Regular: Lumber Increase=1.25, Plate Increase=1.25
Uniform Loads (plf)
Vert: 1-5=-60, 5-9=-60, 1-12=-20, 11-12=-60(F=-40), 9-11=-20


Guo-Jie Zhang, FL Lic #47744
MiTek Industries, Inc.
1801 Massaro Blvd
Tampa FL 33619
FL Cert.#6634


November 22,2005

# Symbols

**PLATE LOCATION AND ORIENTATION**


*Center plate on joint unless x,y offsets are indicated. Dimensions are in ft-in-sixteenths. Apply plates to both sides of truss and securely seat.

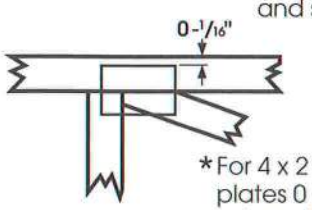


*For 4 x 2 orientation, locate plates 0 - 1/16" from outside edge of truss.

*This symbol indicates the required direction of slots in connector plates.

*** Plate location details available in MiTek 20/20 software or upon request.**

**PLATE SIZE**

4 x 4 — The first dimension is the width perpendicular to slots. Second dimension is the length parallel to slots.

**LATERAL BRACING**

Indicated by symbol shown and/or by text in the bracing section of the output. Use T, I or Eliminator bracing if indicated.

**BEARING**

Indicates location where bearings (supports) occur. Icons vary but reaction section indicates joint number where bearings occur.

**Industry Standards:**

ANSI/TPI1: National Design Specification for Metal Plate Connected Wood Truss Construction.
DSB-89: Design Standard for Bracing.
BCSI1: Building Component Safety Information, Guide to Good Practice for Handling, Installing & Bracing of Metal Plate Connected Wood Trusses.

# Numbering System

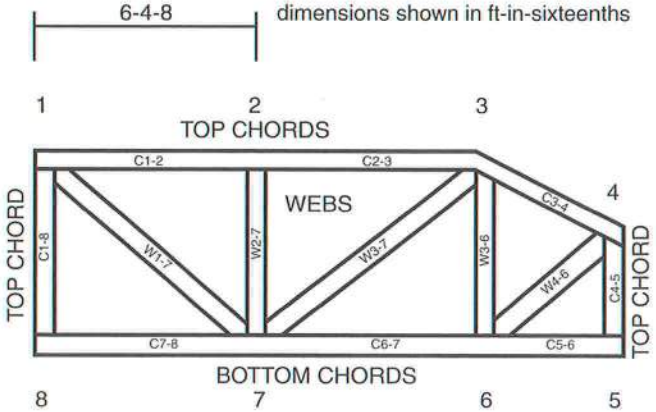


**JOINTS ARE GENERALLY NUMBERED/LETTERED CLOCKWISE AROUND THE TRUSS STARTING AT THE JOINT FARTHEST TO THE LEFT.**

**CHORDS AND WEBS ARE IDENTIFIED BY END JOINT NUMBERS/LETTERS.**

**CONNECTOR PLATE CODE APPROVALS**

| | |
|---|---|
| BOCA | 96-31, 95-43, 96-20-1, 96-67, 84-32 |
| ICBO | 4922, 5243, 5363, 3907 |
| SBCCI | 9667, 9730, 9604B, 9511, 9432A |

MiTek®

TEE-LOK®

# ⚠General Safety Notes

## Failure to Follow Could Cause Property Damage or Personal Injury

1. Additional stability bracing for truss system, e.g. diagonal or X-bracing, is always required. See BCSI1.
2. Never exceed the design loading shown and never stack materials on inadequately braced trusses.
3. Provide copies of this truss design to the building designer, erection supervisor, property owner and all other interested parties.
4. Cut members to bear tightly against each other.
5. Place plates on each face of truss at each joint and embed fully. Knots and wane at joint locations are regulated by ANSI/TPI1.
6. Design assumes trusses will be suitably protected from the environment in accord with ANSI/TPI1.
7. Unless otherwise noted, moisture content of lumber shall not exceed 19% at time of fabrication.
8. Unless expressly noted, this design is not applicable for use with fire retardant or preservative treated lumber.
9. Camber is a non-structural consideration and is the responsibility of truss fabricator. General practice is to camber for dead load deflection.
10. Plate type, size, orientation and location dimensions shown indicate minimum plating requirements.
11. Lumber used shall be of the species and size, and in all respects, equal to or better than that specified.
12. Top chords must be sheathed or purlins provided at spacing shown on design.
13. Bottom chords require lateral bracing at 10 ft. spacing, or less, if no ceiling is installed, unless otherwise noted.
14. Connections not shown are the responsibility of others.
15. Do not cut or alter truss member or plate without prior approval of a professional engineer.
16. Install and load vertically unless indicated otherwise.

| Job | Truss | Truss Type | Qty | Ply | WALKER RES |
|---|---|---|---|---|---|
| WALG | C5 | COMMON | 1 | 1 | T1875024 |
| | | | | | Job Reference (optional) |

SANTA FE TRUSS, HIGH SPRINGS FL., p.colacino — 6.200 s Oct 18 2005 MiTek Industries, Inc. Mon Nov 21 16:21:27 2005 Page 1

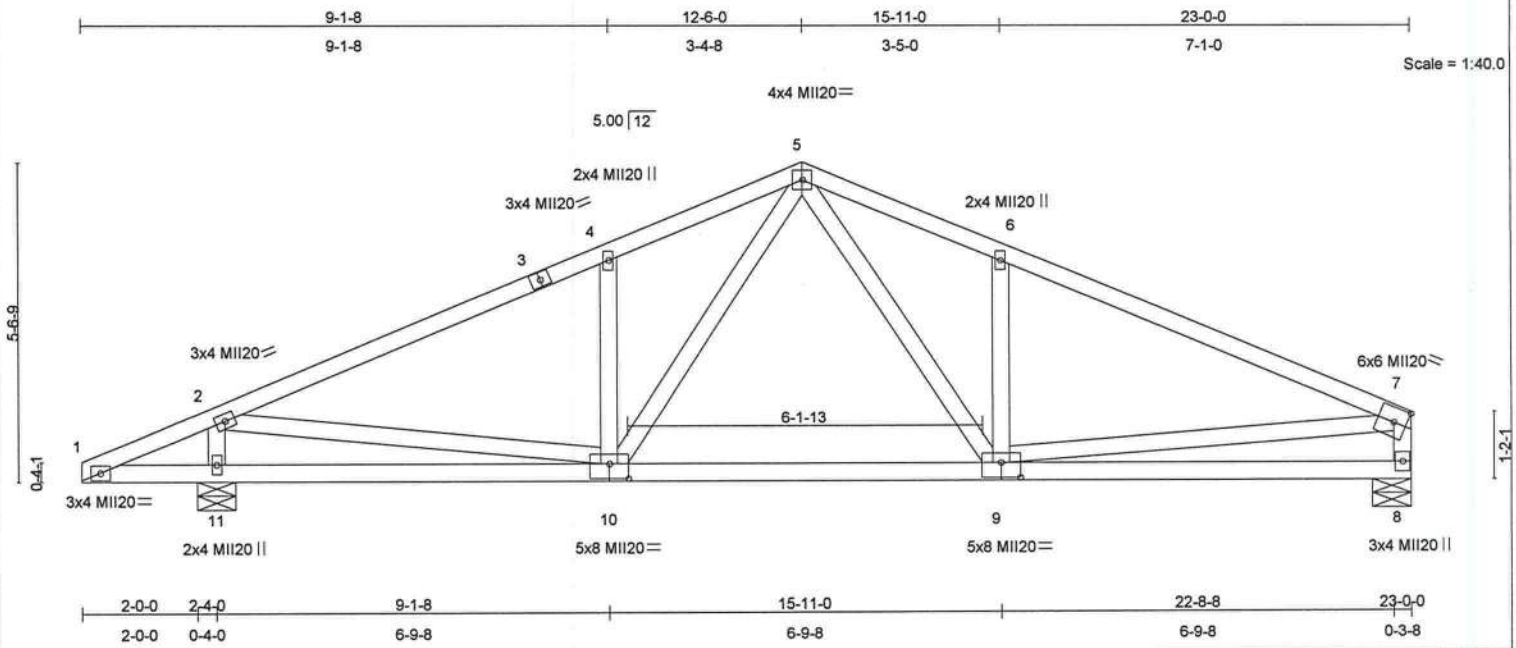


Plate Offsets (X,Y): [9:0-4-0,0-3-0], [10:0-4-0,0-3-0]

| LOADING (psf) | | SPACING | 2-0-0 | CSI | | DEFL | in | (loc) | l/defl | L/d | PLATES | GRIP |
|---|---|---|---|---|---|---|---|---|---|---|---|---|
| TCLL | 20.0 | Plates Increase | 1.25 | TC | 0.99 | Vert(LL) | -0.10 | 9-10 | >999 | 240 | MII20 | 249/190 |
| TCDL | 10.0 | Lumber Increase | 1.25 | BC | 0.42 | Vert(TL) | -0.27 | 9-10 | >915 | 180 | | |
| BCLL | 0.0 | Rep Stress Incr | NO | WB | 0.39 | Horz(TL) | 0.02 | 8 | n/a | n/a | | |
| BCDL | 10.0 | Code FBC2004/TPI2002 | | (Matrix) | | | | | | | Weight: 122 lb | |

**LUMBER**
TOP CHORD 2 X 4 SYP No.2D
BOT CHORD 2 X 4 SYP No.2D
WEBS 2 X 4 SYP No.3

**BRACING**
TOP CHORD Structural wood sheathing directly applied or 5-0-6 oc purlins, except end verticals.
BOT CHORD Rigid ceiling directly applied or 10-0-0 oc bracing.

**REACTIONS** (lb/size) 8=945/0-8-0, 11=1155/0-8-0
Max Horz 11=102(load case 5)
Max Uplift8=-197(load case 6), 11=-323(load case 5)

**FORCES** (lb) - Maximum Compression/Maximum Tension
TOP CHORD 1-2=-77/14, 2-3=-1449/264, 3-4=-1308/277, 4-5=-1422/373, 5-6=-1461/402, 6-7=-1491/305, 7-8=-889/233
BOT CHORD 1-11=-10/63, 10-11=-42/61, 9-10=-145/972, 8-9=-119/356
WEBS 4-10=-340/220, 5-10=-188/568, 5-9=-213/625, 2-11=-1074/363, 2-10=-207/1213, 6-9=-342/223, 7-9=-144/949

**NOTES**
1) Unbalanced roof live loads have been considered for this design.
2) Wind: ASCE 7-98; 110mph (3-second gust); h=18ft; TCDL=5.0psf; BCDL=5.0psf; Category II; Exp C; enclosed; MWFRS interior zone; cantilever left exposed ; Lumber DOL=1.33 plate grip DOL=1.33.
3) This truss has been designed for a 10.0 psf bottom chord live load nonconcurrent with any other live loads.
4) This truss requires plate inspection per the Tooth Count Method when this truss is chosen for quality assurance inspection.
5) Provide mechanical connection (by others) of truss to bearing plate capable of withstanding 197 lb uplift at joint 8 and 323 lb uplift at joint 11.
6) In the LOAD CASE(S) section, loads applied to the face of the truss are noted as front (F) or back (B).

**LOAD CASE(S)** Standard
1) Regular: Lumber Increase=1.25, Plate Increase=1.25
Uniform Loads (plf)
Vert: 1-5=-60, 5-7=-60, 1-10=-20, 9-10=-60(F=-40), 8-9=-20


Guo-Jie Zhang, FL Lic #47744
MiTek Industries, Inc.
1801 Massaro Blvd
Tampa FL 33619
FL Cert.#6634


November 22,2005

# Symbols

**PLATE LOCATION AND ORIENTATION**

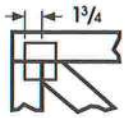


*Center plate on joint unless x,y offsets are indicated. Dimensions are in ft-in-sixteenths. Apply plates to both sides of truss and securely seat.

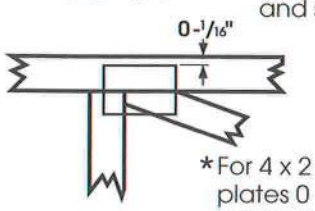


*For 4 x 2 orientation, locate plates 0 - 1/16" from outside edge of truss.

*This symbol indicates the required direction of slots in connector plates.

*** Plate location details available in MiTek 20/20 software or upon request.**

**PLATE SIZE**

4 x 4 — The first dimension is the width perpendicular to slots. Second dimension is the length parallel to slots.

**LATERAL BRACING**

Indicated by symbol shown and/or by text in the bracing section of the output. Use T, I or Eliminator bracing if indicated.

**BEARING**

Indicates location where bearings (supports) occur. Icons vary but reaction section indicates joint number where bearings occur.

**Industry Standards:**

ANSI/TPI1: National Design Specification for Metal Plate Connected Wood Truss Construction.
DSB-89: Design Standard for Bracing.
BCSI1: Building Component Safety Information, Guide to Good Practice for Handling, Installing & Bracing of Metal Plate Connected Wood Trusses.

# Numbering System

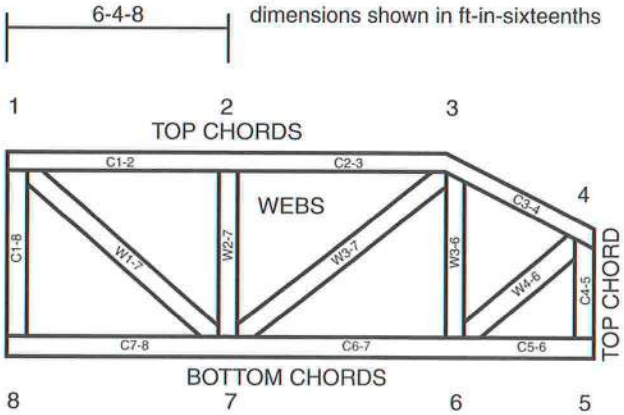


**JOINTS ARE GENERALLY NUMBERED/LETTERED CLOCKWISE AROUND THE TRUSS STARTING AT THE JOINT FARTHEST TO THE LEFT.**

**CHORDS AND WEBS ARE IDENTIFIED BY END JOINT NUMBERS/LETTERS.**

**CONNECTOR PLATE CODE APPROVALS**

| | |
|---|---|
| BOCA | 96-31, 95-43, 96-20-1, 96-67, 84-32 |
| ICBO | 4922, 5243, 5363, 3907 |
| SBCCI | 9667, 9730, 9604B, 9511, 9432A |

MiTek®

TEE-LOK®

# ⚠General Safety Notes

## Failure to Follow Could Cause Property Damage or Personal Injury

1. Additional stability bracing for truss system, e.g. diagonal or X-bracing, is always required. See BCSI1.
2. Never exceed the design loading shown and never stack materials on inadequately braced trusses.
3. Provide copies of this truss design to the building designer, erection supervisor, property owner and all other interested parties.
4. Cut members to bear tightly against each other.
5. Place plates on each face of truss at each joint and embed fully. Knots and wane at joint locations are regulated by ANSI/TPI1.
6. Design assumes trusses will be suitably protected from the environment in accord with ANSI/TPI1.
7. Unless otherwise noted, moisture content of lumber shall not exceed 19% at time of fabrication.
8. Unless expressly noted, this design is not applicable for use with fire retardant or preservative treated lumber.
9. Camber is a non-structural consideration and is the responsibility of truss fabricator. General practice is to camber for dead load deflection.
10. Plate type, size, orientation and location dimensions shown indicate minimum plating requirements.
11. Lumber used shall be of the species and size, and in all respects, equal to or better than that specified.
12. Top chords must be sheathed or purlins provided at spacing shown on design.
13. Bottom chords require lateral bracing at 10 ft. spacing, or less, if no ceiling is installed, unless otherwise noted.
14. Connections not shown are the responsibility of others.
15. Do not cut or alter truss member or plate without prior approval of a professional engineer.
16. Install and load vertically unless indicated otherwise.

| Job | Truss | Truss Type | Qty | Ply | WALKER RES |
|---|---|---|---|---|---|
| WALG | CGT | COMMON | 1 | 1 | T1875025 |
| | | | | | Job Reference (optional) |

SANTA FE TRUSS, HIGH SPRINGS FL., p.colacino — 6.200 s Oct 18 2005 MiTek Industries, Inc. Mon Nov 21 16:21:28 2005 Page 1

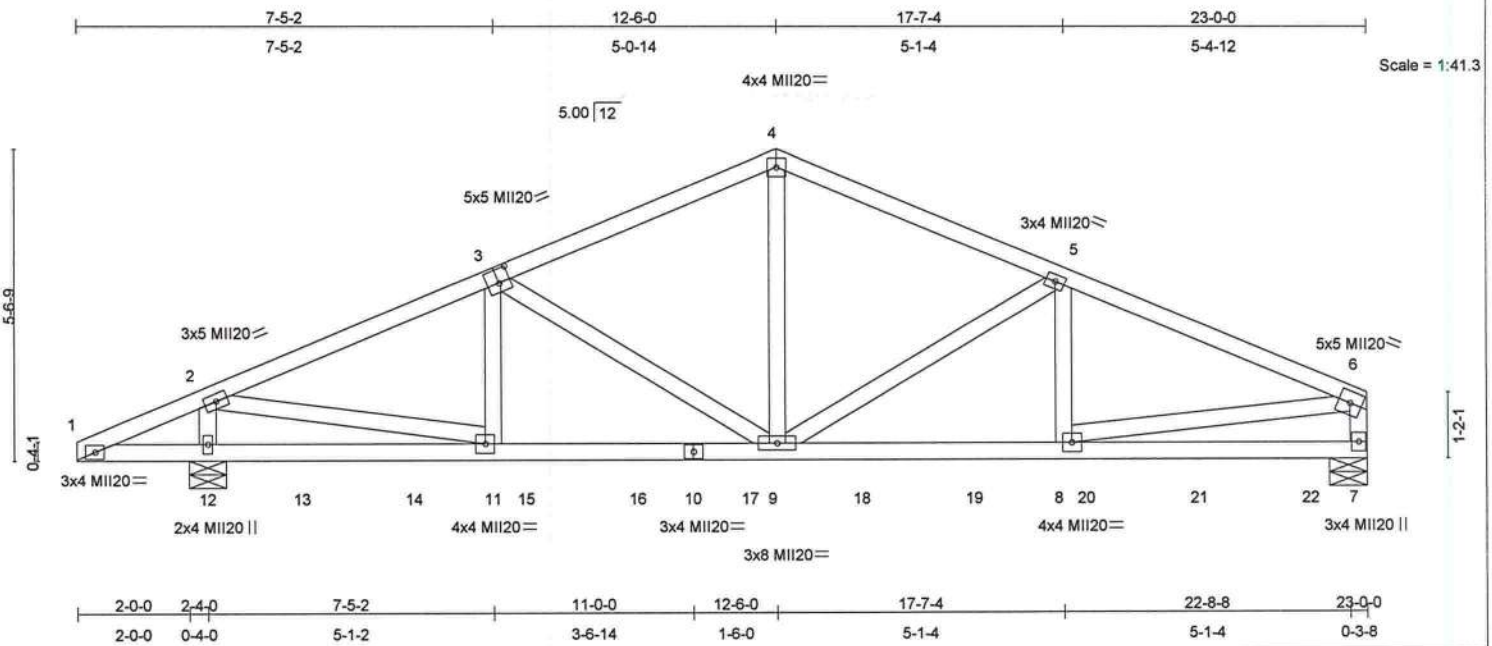


Plate Offsets (X,Y): [1:0-0-0,0-0-0], [2:0-0-0,0-0-0], [3:0-2-8,0-3-0], [4:0-0-0,0-0-0], [5:0-0-0,0-0-0], [6:0-0-0,0-0-0]

| LOADING (psf) | | SPACING 2-0-0 | | CSI | | DEFL | in | (loc) | l/defl | L/d | PLATES | GRIP |
|---|---|---|---|---|---|---|---|---|---|---|---|---|
| TCLL | 20.0 | Plates Increase | 1.25 | TC | 0.73 | Vert(LL) | -0.06 | 8-9 | >999 | 240 | MII20 | 249/190 |
| TCDL | 10.0 | Lumber Increase | 1.25 | BC | 0.50 | Vert(TL) | -0.15 | 8-9 | >999 | 180 | | |
| BCLL | 0.0 | Rep Stress Incr | NO | WB | 0.51 | Horz(TL) | 0.03 | 7 | n/a | n/a | | |
| BCDL | 10.0 | Code FBC2004/TPI2002 | | (Matrix) | | | | | | | Weight: 121 lb | |

**LUMBER**
TOP CHORD 2 X 4 SYP No.2D
BOT CHORD 2 X 4 SYP No.2D
WEBS 2 X 4 SYP No.3

**BRACING**
TOP CHORD Structural wood sheathing directly applied or 4-7-5 oc purlins, except end verticals.
BOT CHORD Rigid ceiling directly applied or 10-0-0 oc bracing.

**REACTIONS** (lb/size) 7=1306/0-8-0, 12=1474/0-8-0
Max Horz 12=102(load case 5)
Max Uplift7=-162(load case 6), 12=-288(load case 5)

**FORCES** (lb) - Maximum Compression/Maximum Tension
TOP CHORD 1-2=-99/10, 2-3=-1816/203, 3-4=-1481/220, 4-5=-1482/206, 5-6=-1903/242, 6-7=-1109/185
BOT CHORD 1-12=0/95, 12-13=-19/83, 13-14=-19/83, 11-14=-19/83, 11-15=-198/1619, 15-16=-198/1619, 10-16=-198/1619, 10-17=-198/1619, 9-17=-198/1619, 9-18=-171/1697, 18-19=-171/1697, 8-19=-171/1697, 8-20=-66/381, 20-21=-66/381, 21-22=-66/381, 7-22=-66/381
WEBS 2-11=-194/1591, 3-11=0/110, 3-9=-412/117, 4-9=-41/778, 5-9=-495/145, 5-8=0/165, 6-8=-107/1337, 2-12=-1239/290

**NOTES**
1) Unbalanced roof live loads have been considered for this design.
2) Wind: ASCE 7-98; 110mph (3-second gust); h=18ft; TCDL=5.0psf; BCDL=5.0psf; Category II; Exp C; enclosed; MWFRS interior zone; cantilever left exposed ; Lumber DOL=1.33 plate grip DOL=1.33.
3) This truss has been designed for a 10.0 psf bottom chord live load nonconcurrent with any other live loads.
4) This truss requires plate inspection per the Tooth Count Method when this truss is chosen for quality assurance inspection.
5) Concentrated loads from layout are not present in Load Case(s): #3 MWFRS Wind Left; #4 MWFRS Wind Right; #5 MWFRS 1st Wind Parallel; #6 MWFRS 2nd Wind Parallel.
6) Provide mechanical connection (by others) of truss to bearing plate capable of withstanding 162 lb uplift at joint 7 and 288 lb uplift at joint 12.
7) Hanger(s) or other connection device(s) shall be provided sufficient to support concentrated load(s) 95 lb down at 4-0-4, 95 lb down at 6-0-4, 95 lb down at 8-0-4, 95 lb down at 10-0-4, 95 lb down at 12-0-4, 95 lb down at 14-0-4, 95 lb down at 16-0-4, 95 lb down at 18-0-4, and 95 lb down at 20-0-4, and 95 lb down at 22-0-4 on bottom chord. The design/selection of such connection device(s) is the responsibility of others.
8) In the LOAD CASE(S) section, loads applied to the face of the truss are noted as front (F) or back (B).

**LOAD CASE(S)** Standard
1) Regular: Lumber Increase=1.25, Plate Increase=1.25
Uniform Loads (plf)
Vert: 1-4=-60, 4-6=-60, 1-7=-20


Guo-Jie Zhang, FL Lic #47744
MiTek Industries, Inc.
1801 Massaro Blvd
Tampa FL 33619
FL Cert.#6634


November 22,2005

Continued on page 2

# Symbols

**PLATE LOCATION AND ORIENTATION**

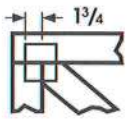


*Center plate on joint unless x,y offsets are indicated. Dimensions are in ft-in-sixteenths. Apply plates to both sides of truss and securely seat.

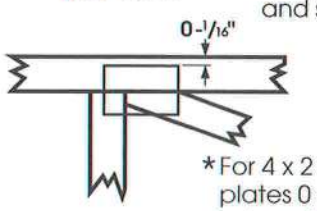


*For 4 x 2 orientation, locate plates 0 - 1/16" from outside edge of truss.

*This symbol indicates the required direction of slots in connector plates.

*** Plate location details available in MiTek 20/20 software or upon request.**

**PLATE SIZE**

4 x 4 — The first dimension is the width perpendicular to slots. Second dimension is the length parallel to slots.

**LATERAL BRACING**

Indicated by symbol shown and/or by text in the bracing section of the output. Use T, I or Eliminator bracing if indicated.

**BEARING**

Indicates location where bearings (supports) occur. Icons vary but reaction section indicates joint number where bearings occur.

**Industry Standards:**

ANSI/TPI1: National Design Specification for Metal Plate Connected Wood Truss Construction.
DSB-89: Design Standard for Bracing.
BCSI1: Building Component Safety Information, Guide to Good Practice for Handling, Installing & Bracing of Metal Plate Connected Wood Trusses.

# Numbering System

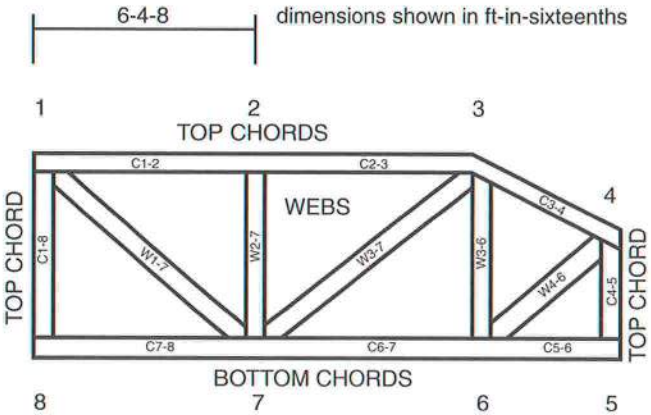


**JOINTS ARE GENERALLY NUMBERED/LETTERED CLOCKWISE AROUND THE TRUSS STARTING AT THE JOINT FARTHEST TO THE LEFT.**

**CHORDS AND WEBS ARE IDENTIFIED BY END JOINT NUMBERS/LETTERS.**

**CONNECTOR PLATE CODE APPROVALS**

| | |
|---|---|
| BOCA | 96-31, 95-43, 96-20-1, 96-67, 84-32 |
| ICBO | 4922, 5243, 5363, 3907 |
| SBCCI | 9667, 9730, 9604B, 9511, 9432A |

MiTek®

TEE-LOK®

# ⚠General Safety Notes

## Failure to Follow Could Cause Property Damage or Personal Injury

1. Additional stability bracing for truss system, e.g. diagonal or X-bracing, is always required. See BCSI1.
2. Never exceed the design loading shown and never stack materials on inadequately braced trusses.
3. Provide copies of this truss design to the building designer, erection supervisor, property owner and all other interested parties.
4. Cut members to bear tightly against each other.
5. Place plates on each face of truss at each joint and embed fully. Knots and wane at joint locations are regulated by ANSI/TPI1.
6. Design assumes trusses will be suitably protected from the environment in accord with ANSI/TPI1.
7. Unless otherwise noted, moisture content of lumber shall not exceed 19% at time of fabrication.
8. Unless expressly noted, this design is not applicable for use with fire retardant or preservative treated lumber.
9. Camber is a non-structural consideration and is the responsibility of truss fabricator. General practice is to camber for dead load deflection.
10. Plate type, size, orientation and location dimensions shown indicate minimum plating requirements.
11. Lumber used shall be of the species and size, and in all respects, equal to or better than that specified.
12. Top chords must be sheathed or purlins provided at spacing shown on design.
13. Bottom chords require lateral bracing at 10 ft. spacing, or less, if no ceiling is installed, unless otherwise noted.
14. Connections not shown are the responsibility of others.
15. Do not cut or alter truss member or plate without prior approval of a professional engineer.
16. Install and load vertically unless indicated otherwise.

**LOAD CASE(S)** Standard

Concentrated Loads (lb)

Vert: 13=-95(B) 14=-95(B) 15=-95(B) 16=-95(B) 17=-95(B) 18=-95(B) 19=-95(B) 20=-95(B) 21=-95(B) 22=-95(B)

# Symbols

**PLATE LOCATION AND ORIENTATION**


*Center plate on joint unless x,y offsets are indicated. Dimensions are in ft-in-sixteenths. Apply plates to both sides of truss and securely seat.

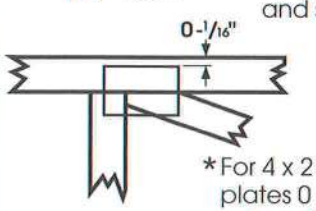


*For 4 x 2 orientation, locate plates 0 - 1/16" from outside edge of truss.

*This symbol indicates the required direction of slots in connector plates.

*** Plate location details available in MiTek 20/20 software or upon request.**

**PLATE SIZE**

4 x 4 — The first dimension is the width perpendicular to slots. Second dimension is the length parallel to slots.

**LATERAL BRACING**

Indicated by symbol shown and/or by text in the bracing section of the output. Use T, I or Eliminator bracing if indicated.

**BEARING**

Indicates location where bearings (supports) occur. Icons vary but reaction section indicates joint number where bearings occur.

**Industry Standards:**

ANSI/TPI1: National Design Specification for Metal Plate Connected Wood Truss Construction.
DSB-89: Design Standard for Bracing.
BCSI1: Building Component Safety Information, Guide to Good Practice for Handling, Installing & Bracing of Metal Plate Connected Wood Trusses.

# Numbering System

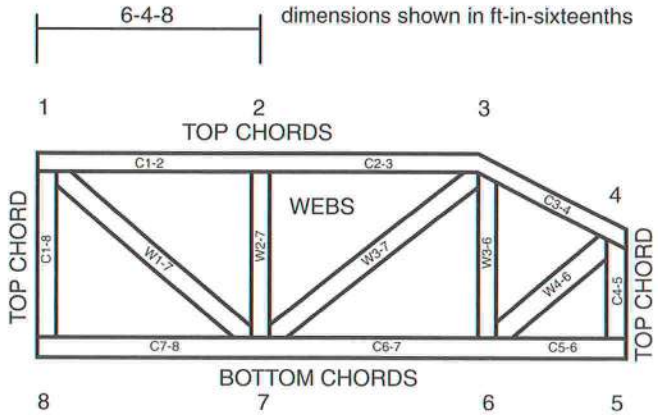


**JOINTS ARE GENERALLY NUMBERED/LETTERED CLOCKWISE AROUND THE TRUSS STARTING AT THE JOINT FARTHEST TO THE LEFT.**

**CHORDS AND WEBS ARE IDENTIFIED BY END JOINT NUMBERS/LETTERS.**

**CONNECTOR PLATE CODE APPROVALS**

| | |
|---|---|
| BOCA | 96-31, 95-43, 96-20-1, 96-67, 84-32 |
| ICBO | 4922, 5243, 5363, 3907 |
| SBCCI | 9667, 9730, 9604B, 9511, 9432A |

MiTek®

TEE-LOK®

# ⚠General Safety Notes

## Failure to Follow Could Cause Property Damage or Personal Injury

1. Additional stability bracing for truss system, e.g. diagonal or X-bracing, is always required. See BCSI1.
2. Never exceed the design loading shown and never stack materials on inadequately braced trusses.
3. Provide copies of this truss design to the building designer, erection supervisor, property owner and all other interested parties.
4. Cut members to bear tightly against each other.
5. Place plates on each face of truss at each joint and embed fully. Knots and wane at joint locations are regulated by ANSI/TPI1.
6. Design assumes trusses will be suitably protected from the environment in accord with ANSI/TPI1.
7. Unless otherwise noted, moisture content of lumber shall not exceed 19% at time of fabrication.
8. Unless expressly noted, this design is not applicable for use with fire retardant or preservative treated lumber.
9. Camber is a non-structural consideration and is the responsibility of truss fabricator. General practice is to camber for dead load deflection.
10. Plate type, size, orientation and location dimensions shown indicate minimum plating requirements.
11. Lumber used shall be of the species and size, and in all respects, equal to or better than that specified.
12. Top chords must be sheathed or purlins provided at spacing shown on design.
13. Bottom chords require lateral bracing at 10 ft. spacing, or less, if no ceiling is installed, unless otherwise noted.
14. Connections not shown are the responsibility of others.
15. Do not cut or alter truss member or plate without prior approval of a professional engineer.
16. Install and load vertically unless indicated otherwise.

| Job | Truss | Truss Type | Qty | Ply | WALKER RES |
|---|---|---|---|---|---|
| WALG | CJ01 | MONO TRUSS | 2 | 1 | T1875026 |
| | | | | | Job Reference (optional) |

SANTA FE TRUSS, HIGH SPRINGS FL., p.colacino

6.200 s Oct 18 2005 MiTek Industries, Inc. Mon Nov 21 16:21:29 2005 Page 1

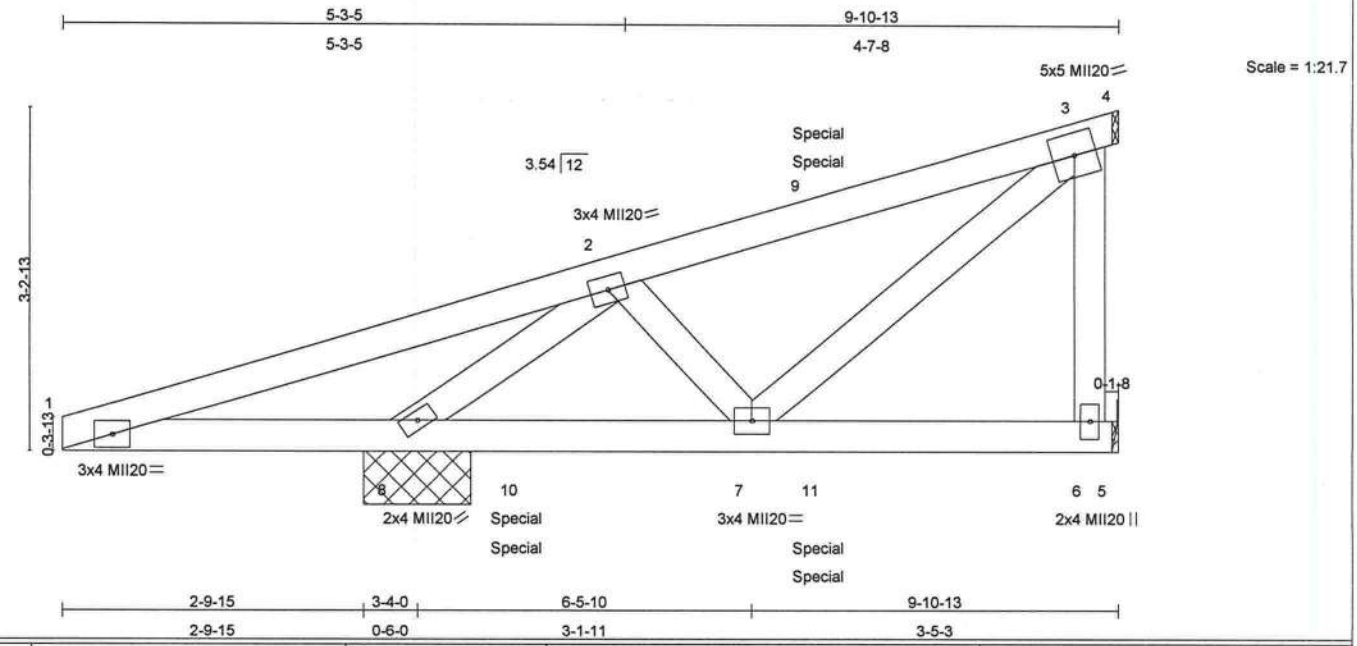


| LOADING (psf) | | SPACING | 2-0-0 | CSI | | DEFL | in | (loc) | l/defl | L/d | PLATES | GRIP |
|---|---|---|---|---|---|---|---|---|---|---|---|---|
| TCLL | 20.0 | Plates Increase | 1.25 | TC | 0.25 | Vert(LL) | -0.01 | 7-8 | >999 | 240 | MII20 | 249/190 |
| TCDL | 10.0 | Lumber Increase | 1.25 | BC | 0.18 | Vert(TL) | 0.01 | 7-8 | >999 | 180 | | |
| BCLL | 0.0 | Rep Stress Incr | NO | WB | 0.13 | Horz(TL) | 0.00 | 5 | n/a | n/a | | |
| BCDL | 10.0 | Code FBC2004/TPI2002 | | (Matrix) | | | | | | | Weight: 46 lb | |

**LUMBER**
TOP CHORD 2 X 4 SYP No.2D
BOT CHORD 2 X 4 SYP No.2D
WEBS 2 X 4 SYP No.3

**BRACING**
TOP CHORD Structural wood sheathing directly applied or 6-0-0 oc purlins, except end verticals.
BOT CHORD Rigid ceiling directly applied or 10-0-0 oc bracing, Except: 6-0-0 oc bracing: 1-8.

**REACTIONS** (lb/size) 5=168/Mechanical, 8=552/1-0-1
Max Horz 8=118(load case 3)
Max Uplift5=-64(load case 3), 8=-280(load case 3)

**FORCES** (lb) - Maximum Compression/Maximum Tension
TOP CHORD 1-2=-271/491, 2-9=-139/45, 3-9=-105/46, 3-4=-2/0, 3-6=-132/80
BOT CHORD 1-8=-427/282, 8-10=-116/120, 7-10=-116/120, 7-11=-14/25, 6-11=-14/25, 5-6=0/0
WEBS 2-7=-30/87, 3-7=-63/102, 2-8=-685/307

**NOTES**
1) Wind: ASCE 7-98; 110mph (3-second gust); h=18ft; TCDL=5.0psf; BCDL=5.0psf; Category II; Exp C; enclosed; MWFRS interior zone; cantilever left exposed ; Lumber DOL=1.33 plate grip DOL=1.33.
2) This truss has been designed for a 10.0 psf bottom chord live load nonconcurrent with any other live loads.
3) This truss requires plate inspection per the Tooth Count Method when this truss is chosen for quality assurance inspection.
4) Refer to girder(s) for truss to truss connections.
5) Provide mechanical connection (by others) of truss to bearing plate capable of withstanding 64 lb uplift at joint 5 and 280 lb uplift at joint 8.
6) Hanger(s) or other connection device(s) shall be provided sufficient to support concentrated load(s) 30 lb up at 7-1-3, and 30 lb up at 7-1-3 on top chord, and 22 lb up at 7-1-3, 22 lb up at 7-1-3, and 22 lb up at 4-3-4, and 22 lb up at 4-3-4 on bottom chord. The design/selection of such connection device(s) is the responsibility of others.
7) In the LOAD CASE(S) section, loads applied to the face of the truss are noted as front (F) or back (B).

**LOAD CASE(S)** Standard
1) Regular: Lumber Increase=1.25, Plate Increase=1.25
Uniform Loads (plf)
Vert: 1-3=-60, 3-4=-20, 1-5=-20
Concentrated Loads (lb)
Vert: 9=61(F=30, B=30)


Guo-Jie Zhang, FL Lic #47744
MiTek Industries, Inc.
1801 Massaro Blvd
Tampa FL 33619
FL Cert.#6634


November 22,2005

# Symbols

**PLATE LOCATION AND ORIENTATION**

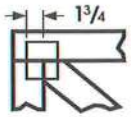


*Center plate on joint unless x,y offsets are indicated. Dimensions are in ft-in-sixteenths. Apply plates to both sides of truss and securely seat.

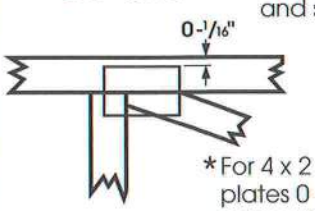


*For 4 x 2 orientation, locate plates 0 - 1/16" from outside edge of truss.

*This symbol indicates the required direction of slots in connector plates.

*** Plate location details available in MiTek 20/20 software or upon request.**

**PLATE SIZE**

4 x 4 — The first dimension is the width perpendicular to slots. Second dimension is the length parallel to slots.

**LATERAL BRACING**

Indicated by symbol shown and/or by text in the bracing section of the output. Use T, I or Eliminator bracing if indicated.

**BEARING**

Indicates location where bearings (supports) occur. Icons vary but reaction section indicates joint number where bearings occur.

**Industry Standards:**

ANSI/TPI1: National Design Specification for Metal Plate Connected Wood Truss Construction.
DSB-89: Design Standard for Bracing.
BCSI1: Building Component Safety Information, Guide to Good Practice for Handling, Installing & Bracing of Metal Plate Connected Wood Trusses.

# Numbering System

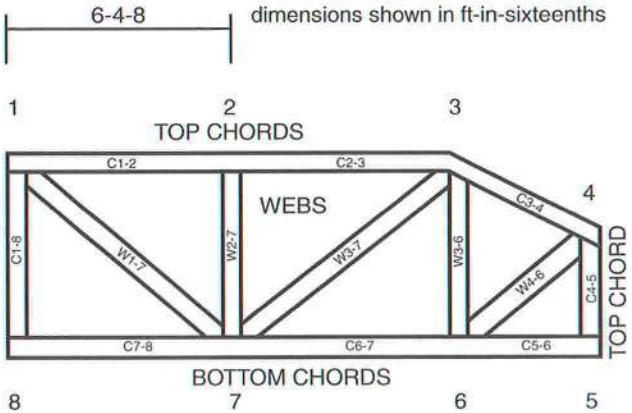


**JOINTS ARE GENERALLY NUMBERED/LETTERED CLOCKWISE AROUND THE TRUSS STARTING AT THE JOINT FARTHEST TO THE LEFT.**

**CHORDS AND WEBS ARE IDENTIFIED BY END JOINT NUMBERS/LETTERS.**

**CONNECTOR PLATE CODE APPROVALS**

| | |
|---|---|
| BOCA | 96-31, 95-43, 96-20-1, 96-67, 84-32 |
| ICBO | 4922, 5243, 5363, 3907 |
| SBCCI | 9667, 9730, 9604B, 9511, 9432A |

MiTek®

TEE-LOK®

# ⚠General Safety Notes

## Failure to Follow Could Cause Property Damage or Personal Injury

1. Additional stability bracing for truss system, e.g. diagonal or X-bracing, is always required. See BCSI1.
2. Never exceed the design loading shown and never stack materials on inadequately braced trusses.
3. Provide copies of this truss design to the building designer, erection supervisor, property owner and all other interested parties.
4. Cut members to bear tightly against each other.
5. Place plates on each face of truss at each joint and embed fully. Knots and wane at joint locations are regulated by ANSI/TPI1.
6. Design assumes trusses will be suitably protected from the environment in accord with ANSI/TPI1.
7. Unless otherwise noted, moisture content of lumber shall not exceed 19% at time of fabrication.
8. Unless expressly noted, this design is not applicable for use with fire retardant or preservative treated lumber.
9. Camber is a non-structural consideration and is the responsibility of truss fabricator. General practice is to camber for dead load deflection.
10. Plate type, size, orientation and location dimensions shown indicate minimum plating requirements.
11. Lumber used shall be of the species and size, and in all respects, equal to or better than that specified.
12. Top chords must be sheathed or purlins provided at spacing shown on design.
13. Bottom chords require lateral bracing at 10 ft. spacing, or less, if no ceiling is installed, unless otherwise noted.
14. Connections not shown are the responsibility of others.
15. Do not cut or alter truss member or plate without prior approval of a professional engineer.
16. Install and load vertically unless indicated otherwise.

| Job | Truss | Truss Type | Qty | Ply | WALKER RES |
|---|---|---|---|---|---|
| WALG | CJ02 | MONO TRUSS | 3 | 1 | T1875027<br>Job Reference (optional) |

SANTA FE TRUSS, HIGH SPRINGS FL., p.colacino — 6.200 s Oct 18 2005 MiTek Industries, Inc. Mon Nov 21 16:21:30 2005 Page 1

Scale = 1:21.7

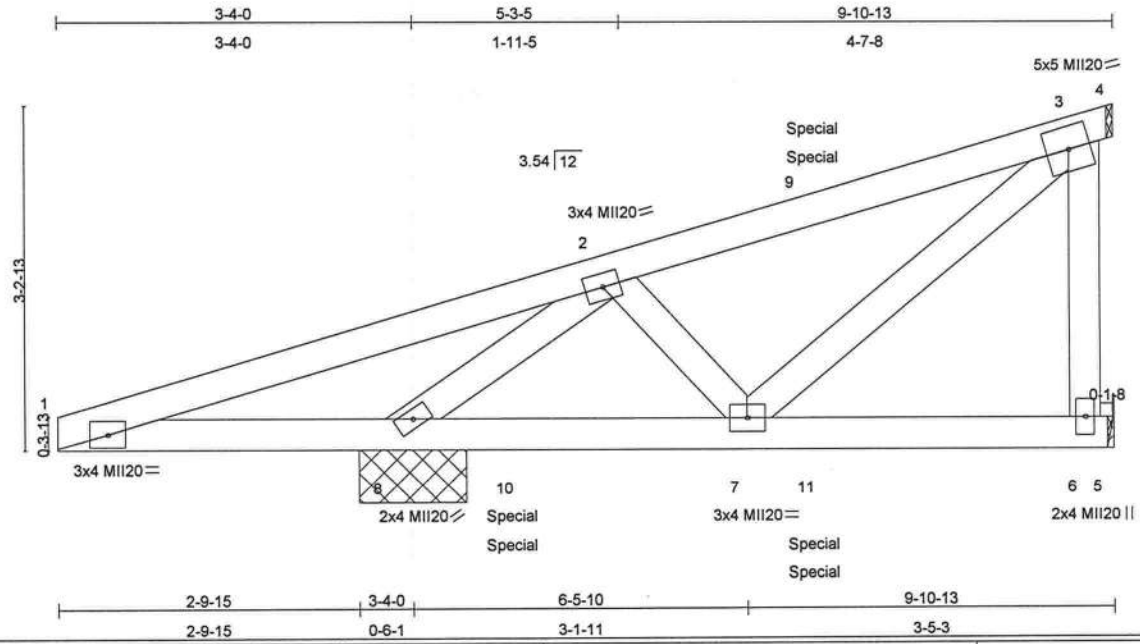


| LOADING (psf) | | SPACING | 2-0-0 | CSI | | DEFL | in | (loc) | l/defl | L/d | PLATES | GRIP |
|---|---|---|---|---|---|---|---|---|---|---|---|---|
| TCLL | 20.0 | Plates Increase | 1.25 | TC | 0.25 | Vert(LL) | -0.01 | 7-8 | >999 | 240 | MII20 | 249/190 |
| TCDL | 10.0 | Lumber Increase | 1.25 | BC | 0.18 | Vert(TL) | 0.01 | 7-8 | >999 | 180 | | |
| BCLL | 0.0 | Rep Stress Incr | NO | WB | 0.13 | Horz(TL) | 0.00 | 5 | n/a | n/a | | |
| BCDL | 10.0 | Code FBC2004/TPI2002 | | (Matrix) | | | | | | | Weight: 46 lb | |

**LUMBER**
TOP CHORD 2 X 4 SYP No.2D
BOT CHORD 2 X 4 SYP No.2D
WEBS 2 X 4 SYP No.3

**BRACING**
TOP CHORD Structural wood sheathing directly applied or 6-0-0 oc purlins, except end verticals.
BOT CHORD Rigid ceiling directly applied or 10-0-0 oc bracing, Except: 6-0-0 oc bracing: 1-8.

**REACTIONS** (lb/size) 5=168/Mechanical, 8=552/1-0-1
Max Horz 8=118(load case 3)
Max Uplift5=-64(load case 3), 8=-280(load case 3)

**FORCES** (lb) - Maximum Compression/Maximum Tension
TOP CHORD 1-2=-271/491, 2-9=-139/45, 3-9=-105/46, 3-4=-2/0, 3-6=-132/80
BOT CHORD 1-8=-427/282, 8-10=-116/120, 7-10=-116/120, 7-11=-14/25, 6-11=-14/25, 5-6=0/0
WEBS 2-7=-30/87, 3-7=-63/102, 2-8=-685/307

**NOTES**
1) Wind: ASCE 7-98; 110mph (3-second gust); h=18ft; TCDL=5.0psf; BCDL=5.0psf; Category II; Exp C; enclosed; MWFRS interior zone; cantilever left exposed ; Lumber DOL=1.33 plate grip DOL=1.33.
2) This truss has been designed for a 10.0 psf bottom chord live load nonconcurrent with any other live loads.
3) This truss requires plate inspection per the Tooth Count Method when this truss is chosen for quality assurance inspection.
4) Refer to girder(s) for truss to truss connections.
5) Provide mechanical connection (by others) of truss to bearing plate capable of withstanding 64 lb uplift at joint 5 and 280 lb uplift at joint 8.
6) Hanger(s) or other connection device(s) shall be provided sufficient to support concentrated load(s) 30 lb up at 7-1-3, and 30 lb up at 7-1-3 on top chord, and 22 lb up at 7-1-3, 22 lb up at 7-1-3, and 22 lb up at 4-3-4, and 22 lb up at 4-3-4 on bottom chord. The design/selection of such connection device(s) is the responsibility of others.
7) In the LOAD CASE(S) section, loads applied to the face of the truss are noted as front (F) or back (B).

**LOAD CASE(S)** Standard
1) Regular: Lumber Increase=1.25, Plate Increase=1.25
Uniform Loads (plf)
Vert: 1-3=-60, 3-4=-20, 1-5=-20
Concentrated Loads (lb)
Vert: 9=61(F=30, B=30)


Guo-Jie Zhang, FL Lic #47744
MiTek Industries, Inc.
1801 Massaro Blvd
Tampa FL 33619
FL Cert.#6634


November 22,2005

# Symbols

**PLATE LOCATION AND ORIENTATION**


*Center plate on joint unless x,y offsets are indicated. Dimensions are in ft-in-sixteenths. Apply plates to both sides of truss and securely seat.

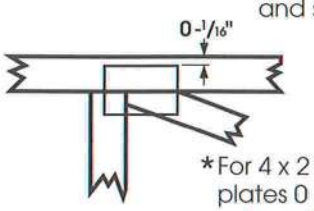


*For 4 x 2 orientation, locate plates 0 - 1/16" from outside edge of truss.

*This symbol indicates the required direction of slots in connector plates.

*** Plate location details available in MiTek 20/20 software or upon request.**

**PLATE SIZE**

4 x 4 — The first dimension is the width perpendicular to slots. Second dimension is the length parallel to slots.

**LATERAL BRACING**

Indicated by symbol shown and/or by text in the bracing section of the output. Use T, I or Eliminator bracing if indicated.

**BEARING**

Indicates location where bearings (supports) occur. Icons vary but reaction section indicates joint number where bearings occur.

**Industry Standards:**

ANSI/TPI1: National Design Specification for Metal Plate Connected Wood Truss Construction.
DSB-89: Design Standard for Bracing.
BCSI1: Building Component Safety Information, Guide to Good Practice for Handling, Installing & Bracing of Metal Plate Connected Wood Trusses.

# Numbering System

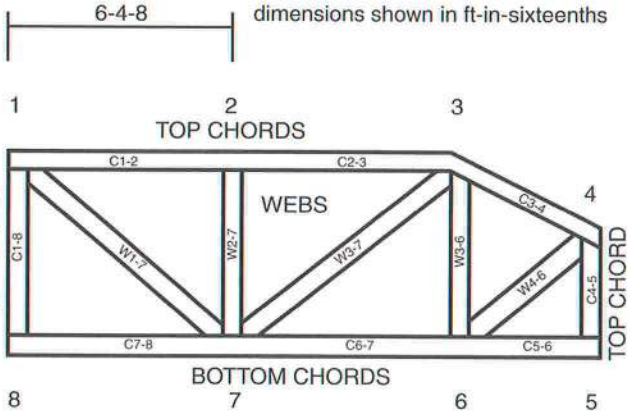


**JOINTS ARE GENERALLY NUMBERED/LETTERED CLOCKWISE AROUND THE TRUSS STARTING AT THE JOINT FARTHEST TO THE LEFT.**

**CHORDS AND WEBS ARE IDENTIFIED BY END JOINT NUMBERS/LETTERS.**

**CONNECTOR PLATE CODE APPROVALS**

| | |
|---|---|
| BOCA | 96-31, 95-43, 96-20-1, 96-67, 84-32 |
| ICBO | 4922, 5243, 5363, 3907 |
| SBCCI | 9667, 9730, 9604B, 9511, 9432A |

MiTek®

TEE-LOK®

# ⚠General Safety Notes

## Failure to Follow Could Cause Property Damage or Personal Injury

1. Additional stability bracing for truss system, e.g. diagonal or X-bracing, is always required. See BCSI1.
2. Never exceed the design loading shown and never stack materials on inadequately braced trusses.
3. Provide copies of this truss design to the building designer, erection supervisor, property owner and all other interested parties.
4. Cut members to bear tightly against each other.
5. Place plates on each face of truss at each joint and embed fully. Knots and wane at joint locations are regulated by ANSI/TPI1.
6. Design assumes trusses will be suitably protected from the environment in accord with ANSI/TPI1.
7. Unless otherwise noted, moisture content of lumber shall not exceed 19% at time of fabrication.
8. Unless expressly noted, this design is not applicable for use with fire retardant or preservative treated lumber.
9. Camber is a non-structural consideration and is the responsibility of truss fabricator. General practice is to camber for dead load deflection.
10. Plate type, size, orientation and location dimensions shown indicate minimum plating requirements.
11. Lumber used shall be of the species and size, and in all respects, equal to or better than that specified.
12. Top chords must be sheathed or purlins provided at spacing shown on design.
13. Bottom chords require lateral bracing at 10 ft. spacing, or less, if no ceiling is installed, unless otherwise noted.
14. Connections not shown are the responsibility of others.
15. Do not cut or alter truss member or plate without prior approval of a professional engineer.
16. Install and load vertically unless indicated otherwise.

| Job | Truss | Truss Type | Qty | Ply | WALKER RES | |
|---|---|---|---|---|---|---|
| WALG | D1 | MONO HIP | 1 | 1 | Job Reference (optional) | T1875028 |

SANTA FE TRUSS, HIGH SPRINGS FL., p.colacino — 6.200 s Oct 18 2005 MiTek Industries, Inc. Mon Nov 21 16:21:30 2005 Page 1

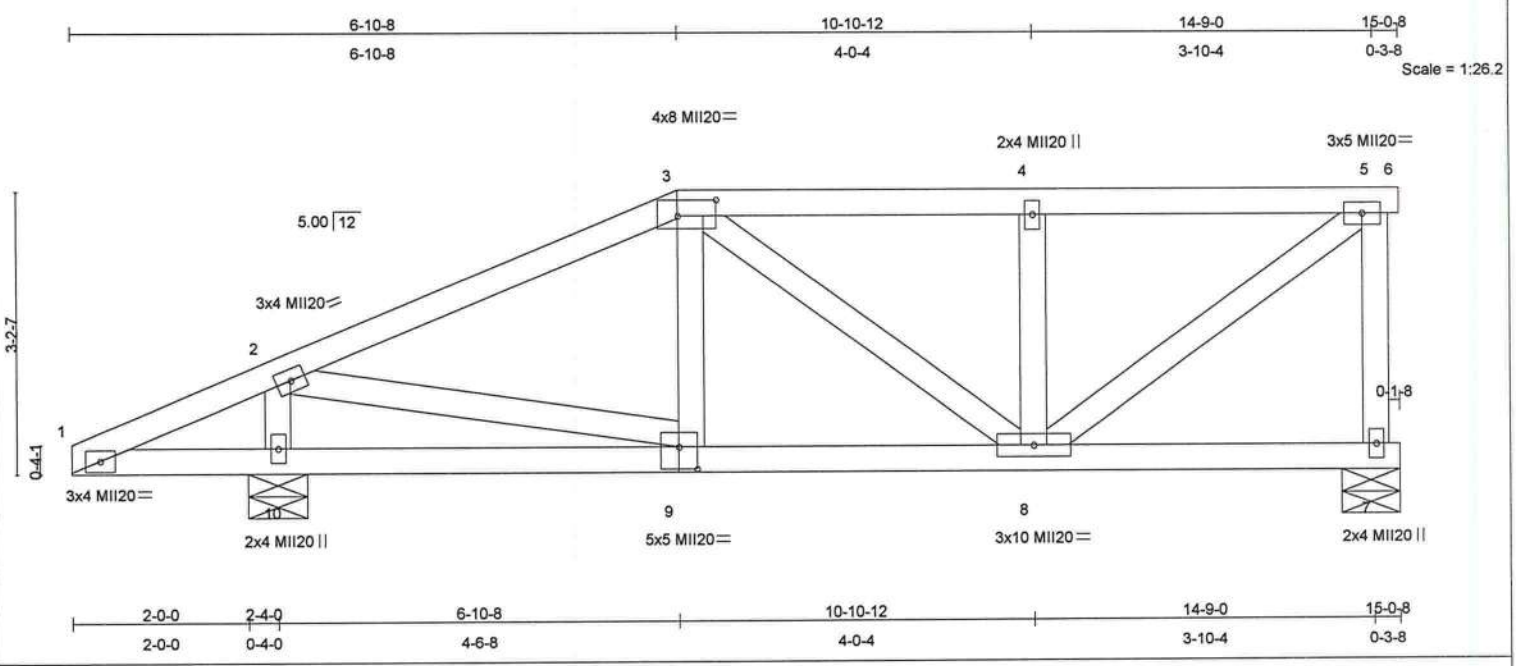


Plate Offsets (X,Y): [3:0-5-4,0-2-4], [9:0-2-8,0-3-0]

| LOADING (psf) | | SPACING | 2-0-0 | CSI | | DEFL | in | (loc) | l/defl | L/d | PLATES | GRIP |
|---|---|---|---|---|---|---|---|---|---|---|---|---|
| TCLL | 20.0 | Plates Increase | 1.25 | TC | 0.28 | Vert(LL) | 0.03 | 8-9 | >999 | 240 | MII20 | 249/190 |
| TCDL | 10.0 | Lumber Increase | 1.25 | BC | 0.28 | Vert(TL) | -0.06 | 8-9 | >999 | 180 | | |
| BCLL | 0.0 | Rep Stress Incr | NO | WB | 0.44 | Horz(TL) | 0.01 | 7 | n/a | n/a | | |
| BCDL | 10.0 | Code FBC2004/TPI2002 | | (Matrix) | | | | | | | Weight: 78 lb | |

**LUMBER**
TOP CHORD 2 X 4 SYP No.2D
BOT CHORD 2 X 4 SYP No.2D
WEBS 2 X 4 SYP No.3

**BRACING**
TOP CHORD Structural wood sheathing directly applied or 5-5-12 oc purlins.
BOT CHORD Rigid ceiling directly applied or 6-0-0 oc bracing.

**REACTIONS** (lb/size) 7=1098/0-8-0, 10=1279/0-8-0
Max Horz 10=118(load case 5)
Max Uplift7=-374(load case 4), 10=-361(load case 5)

**FORCES** (lb) - Maximum Compression/Maximum Tension
TOP CHORD 1-2=-85/128, 2-3=-1384/469, 3-4=-1099/377, 4-5=-1099/378, 5-6=0/0
BOT CHORD 1-10=-77/84, 9-10=-88/0, 8-9=-456/1229, 7-8=0/0
WEBS 3-9=-129/189, 3-8=-161/124, 4-8=-568/319, 5-8=-472/1375, 2-9=-428/1338, 5-7=-1031/405, 2-10=-1081/396

**NOTES**
1) Unbalanced roof live loads have been considered for this design.
2) Wind: ASCE 7-98; 110mph (3-second gust); h=18ft; TCDL=5.0psf; BCDL=5.0psf; Category II; Exp C; enclosed; MWFRS interior zone; cantilever left exposed ; Lumber DOL=1.33 plate grip DOL=1.33.
3) Provide adequate drainage to prevent water ponding.
4) This truss has been designed for a 10.0 psf bottom chord live load nonconcurrent with any other live loads.
5) This truss requires plate inspection per the Tooth Count Method when this truss is chosen for quality assurance inspection.
6) Provide mechanical connection (by others) of truss to bearing plate capable of withstanding 374 lb uplift at joint 7 and 361 lb uplift at joint 10.
7) Girder carries hip end with 0-0-0 right side setback, 6-10-8 left side setback, and 6-10-8 end setback.
8) Hanger(s) or other connection device(s) shall be provided sufficient to support concentrated load(s) 370 lb down and 231 lb up at 6-10-8 on top chord. The design/selection of such connection device(s) is the responsibility of others.
9) In the LOAD CASE(S) section, loads applied to the face of the truss are noted as front (F) or back (B).

**LOAD CASE(S)** Standard
1) Regular: Lumber Increase=1.25, Plate Increase=1.25
Uniform Loads (plf)
Vert: 1-3=-60, 3-5=-123(F=-63), 5-6=-60, 1-7=-41(F=-21)
Concentrated Loads (lb)
Vert: 3=-370(F)


Guo-Jie Zhang, FL Lic #47744
MiTek Industries, Inc.
1801 Massaro Blvd
Tampa FL 33619
FL Cert.#6634


November 22,2005

# Symbols

**PLATE LOCATION AND ORIENTATION**

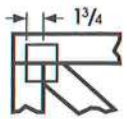


*Center plate on joint unless x,y offsets are indicated. Dimensions are in ft-in-sixteenths. Apply plates to both sides of truss and securely seat.

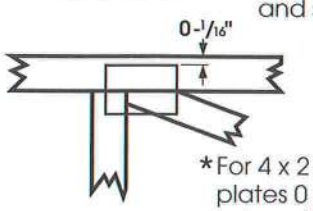


*For 4 x 2 orientation, locate plates 0 - 1/16" from outside edge of truss.

*This symbol indicates the required direction of slots in connector plates.

*** Plate location details available in MiTek 20/20 software or upon request.**

**PLATE SIZE**

4 x 4 — The first dimension is the width perpendicular to slots. Second dimension is the length parallel to slots.

**LATERAL BRACING**

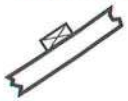

Indicated by symbol shown and/or by text in the bracing section of the output. Use T, I or Eliminator bracing if indicated.

**BEARING**

Indicates location where bearings (supports) occur. Icons vary but reaction section indicates joint number where bearings occur.

**Industry Standards:**

ANSI/TPI1: National Design Specification for Metal Plate Connected Wood Truss Construction.
DSB-89: Design Standard for Bracing.
BCSI1: Building Component Safety Information, Guide to Good Practice for Handling, Installing & Bracing of Metal Plate Connected Wood Trusses.

# Numbering System

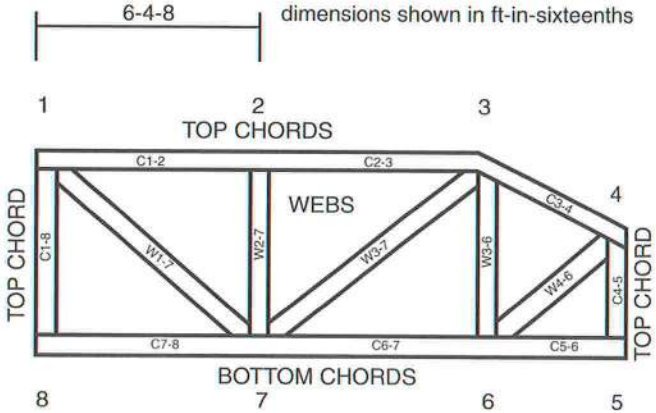


**JOINTS ARE GENERALLY NUMBERED/LETTERED CLOCKWISE AROUND THE TRUSS STARTING AT THE JOINT FARTHEST TO THE LEFT.**

**CHORDS AND WEBS ARE IDENTIFIED BY END JOINT NUMBERS/LETTERS.**

**CONNECTOR PLATE CODE APPROVALS**

| | |
|---|---|
| BOCA | 96-31, 95-43, 96-20-1, 96-67, 84-32 |
| ICBO | 4922, 5243, 5363, 3907 |
| SBCCI | 9667, 9730, 9604B, 9511, 9432A |

MiTek®

TEE-LOK®

# ⚠General Safety Notes

## Failure to Follow Could Cause Property Damage or Personal Injury

1. Additional stability bracing for truss system, e.g. diagonal or X-bracing, is always required. See BCSI1.
2. Never exceed the design loading shown and never stack materials on inadequately braced trusses.
3. Provide copies of this truss design to the building designer, erection supervisor, property owner and all other interested parties.
4. Cut members to bear tightly against each other.
5. Place plates on each face of truss at each joint and embed fully. Knots and wane at joint locations are regulated by ANSI/TPI1.
6. Design assumes trusses will be suitably protected from the environment in accord with ANSI/TPI1.
7. Unless otherwise noted, moisture content of lumber shall not exceed 19% at time of fabrication.
8. Unless expressly noted, this design is not applicable for use with fire retardant or preservative treated lumber.
9. Camber is a non-structural consideration and is the responsibility of truss fabricator. General practice is to camber for dead load deflection.
10. Plate type, size, orientation and location dimensions shown indicate minimum plating requirements.
11. Lumber used shall be of the species and size, and in all respects, equal to or better than that specified.
12. Top chords must be sheathed or purlins provided at spacing shown on design.
13. Bottom chords require lateral bracing at 10 ft. spacing, or less, if no ceiling is installed, unless otherwise noted.
14. Connections not shown are the responsibility of others.
15. Do not cut or alter truss member or plate without prior approval of a professional engineer.
16. Install and load vertically unless indicated otherwise.

| Job | Truss | Truss Type | Qty | Ply | WALKER RES |
|---|---|---|---|---|---|
| WALG | D2 | MONO HIP | 1 | 1 | T1875029 |
| | | | | | Job Reference (optional) |

SANTA FE TRUSS, HIGH SPRINGS FL., p.colacino — 6.200 s Oct 18 2005 MiTek Industries, Inc. Mon Nov 21 16:21:31 2005 Page 1

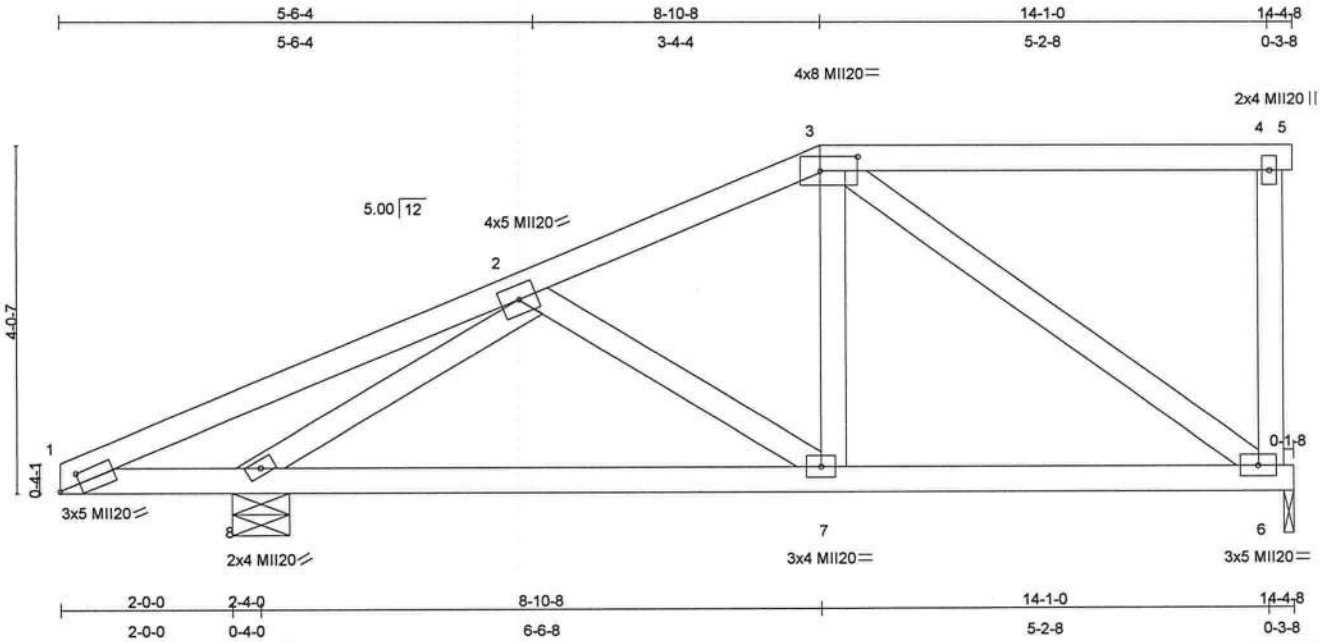


Plate Offsets (X,Y): [1:0-2-15,0-1-8], [2:0-0-0,0-0-0], [3:0-5-4,0-2-0], [4:0-0-0,0-0-0], [6:0-0-0,0-0-0]

| LOADING (psf) | | SPACING | 2-0-0 | CSI | | DEFL | in | (loc) | l/defl | L/d | PLATES | GRIP |
|---|---|---|---|---|---|---|---|---|---|---|---|---|
| TCLL | 20.0 | Plates Increase | 1.25 | TC | 0.24 | Vert(LL) | -0.04 | 7-8 | >999 | 240 | MII20 | 249/190 |
| TCDL | 10.0 | Lumber Increase | 1.25 | BC | 0.30 | Vert(TL) | -0.09 | 7-8 | >999 | 180 | | |
| BCLL | 0.0 | Rep Stress Incr | YES | WB | 0.35 | Horz(TL) | 0.01 | 6 | n/a | n/a | | |
| BCDL | 10.0 | Code FBC2004/TPI2002 | | (Matrix) | | | | | | | Weight: 75 lb | |

**LUMBER**
TOP CHORD 2 X 4 SYP No.2D
BOT CHORD 2 X 4 SYP No.2D
WEBS 2 X 4 SYP No.3

**BRACING**
TOP CHORD Structural wood sheathing directly applied or 6-0-0 oc purlins.
BOT CHORD Rigid ceiling directly applied or 6-0-0 oc bracing.

**REACTIONS** (lb/size) 6=472/0-1-8, 8=662/0-8-0
Max Horz 8=151(load case 5)
Max Uplift6=-125(load case 4), 8=-200(load case 5)

**FORCES** (lb) - Maximum Compression/Maximum Tension
TOP CHORD 1-2=-198/247, 2-3=-478/85, 3-4=-0/0, 4-5=0/0
BOT CHORD 1-8=-173/218, 7-8=-186/473, 6-7=-96/414
WEBS 2-7=-77/122, 3-7=0/264, 3-6=-508/118, 2-8=-786/308, 4-6=-138/73

**NOTES**
1) Unbalanced roof live loads have been considered for this design.
2) Wind: ASCE 7-98; 110mph (3-second gust); h=18ft; TCDL=5.0psf; BCDL=5.0psf; Category II; Exp C; enclosed; MWFRS interior zone; cantilever left exposed ; Lumber DOL=1.33 plate grip DOL=1.33.
3) Provide adequate drainage to prevent water ponding.
4) This truss has been designed for a 10.0 psf bottom chord live load nonconcurrent with any other live loads.
5) This truss requires plate inspection per the Tooth Count Method when this truss is chosen for quality assurance inspection.
6) Provide mechanical connection (by others) of truss to bearing plate at joint(s) 6.
7) Provide mechanical connection (by others) of truss to bearing plate capable of withstanding 125 lb uplift at joint 6 and 200 lb uplift at joint 8.

**LOAD CASE(S)** Standard


Guo-Jie Zhang, FL Lic #47744
MiTek Industries, Inc.
1801 Massaro Blvd
Tampa FL 33619
FL Cert.#6634


November 22,2005

# Symbols

**PLATE LOCATION AND ORIENTATION**


*Center plate on joint unless x,y offsets are indicated. Dimensions are in ft-in-sixteenths. Apply plates to both sides of truss and securely seat.

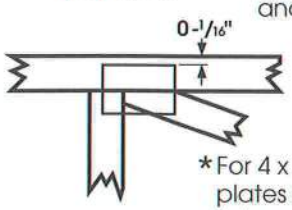


*For 4 x 2 orientation, locate plates 0 - 1/16" from outside edge of truss.

*This symbol indicates the required direction of slots in connector plates.

*** Plate location details available in MiTek 20/20 software or upon request.**

**PLATE SIZE**

4 x 4 — The first dimension is the width perpendicular to slots. Second dimension is the length parallel to slots.

**LATERAL BRACING**

Indicated by symbol shown and/or by text in the bracing section of the output. Use T, I or Eliminator bracing if indicated.

**BEARING**

Indicates location where bearings (supports) occur. Icons vary but reaction section indicates joint number where bearings occur.

**Industry Standards:**

ANSI/TPI1: National Design Specification for Metal Plate Connected Wood Truss Construction.
DSB-89: Design Standard for Bracing.
BCSI1: Building Component Safety Information, Guide to Good Practice for Handling, Installing & Bracing of Metal Plate Connected Wood Trusses.

# Numbering System

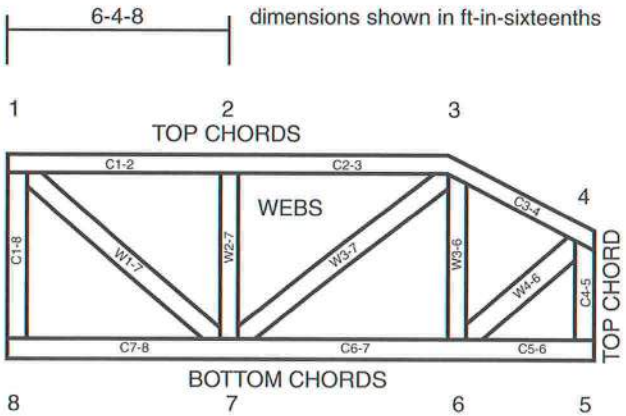


**JOINTS ARE GENERALLY NUMBERED/LETTERED CLOCKWISE AROUND THE TRUSS STARTING AT THE JOINT FARTHEST TO THE LEFT.**

**CHORDS AND WEBS ARE IDENTIFIED BY END JOINT NUMBERS/LETTERS.**

**CONNECTOR PLATE CODE APPROVALS**

| | |
|---|---|
| BOCA | 96-31, 95-43, 96-20-1, 96-67, 84-32 |
| ICBO | 4922, 5243, 5363, 3907 |
| SBCCI | 9667, 9730, 9604B, 9511, 9432A |

MiTek®

TEE-LOK®

# ⚠General Safety Notes

## Failure to Follow Could Cause Property Damage or Personal Injury

1. Additional stability bracing for truss system, e.g. diagonal or X-bracing, is always required. See BCSI1.
2. Never exceed the design loading shown and never stack materials on inadequately braced trusses.
3. Provide copies of this truss design to the building designer, erection supervisor, property owner and all other interested parties.
4. Cut members to bear tightly against each other.
5. Place plates on each face of truss at each joint and embed fully. Knots and wane at joint locations are regulated by ANSI/TPI1.
6. Design assumes trusses will be suitably protected from the environment in accord with ANSI/TPI1.
7. Unless otherwise noted, moisture content of lumber shall not exceed 19% at time of fabrication.
8. Unless expressly noted, this design is not applicable for use with fire retardant or preservative treated lumber.
9. Camber is a non-structural consideration and is the responsibility of truss fabricator. General practice is to camber for dead load deflection.
10. Plate type, size, orientation and location dimensions shown indicate minimum plating requirements.
11. Lumber used shall be of the species and size, and in all respects, equal to or better than that specified.
12. Top chords must be sheathed or purlins provided at spacing shown on design.
13. Bottom chords require lateral bracing at 10 ft. spacing, or less, if no ceiling is installed, unless otherwise noted.
14. Connections not shown are the responsibility of others.
15. Do not cut or alter truss member or plate without prior approval of a professional engineer.
16. Install and load vertically unless indicated otherwise.

| Job | Truss | Truss Type | Qty | Ply | WALKER RES |
|---|---|---|---|---|---|
| WALG | D3 | MONO HIP | 1 | 1 | T1875030 |

Job Reference (optional)

SANTA FE TRUSS, HIGH SPRINGS FL., p.colacino

6.200 s Oct 18 2005 MiTek Industries, Inc. Mon Nov 21 16:21:32 2005 Page 1

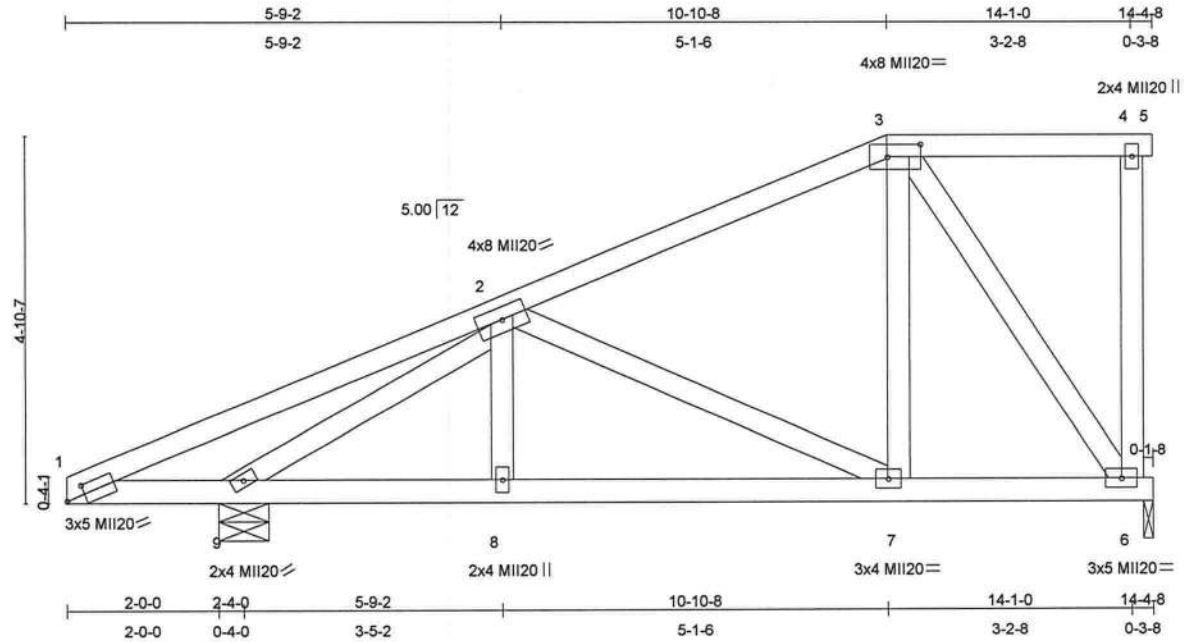


Plate Offsets (X,Y): [1:0-2-15,0-1-8], [2:0-0-0,0-0-0], [3:0-5-4,0-2-0], [4:0-0-0,0-0-0], [6:0-0-0,0-0-0]

| LOADING (psf) | | SPACING | 2-0-0 | CSI | | DEFL | in | (loc) | l/defl | L/d | PLATES | GRIP |
|---|---|---|---|---|---|---|---|---|---|---|---|---|
| TCLL | 20.0 | Plates Increase | 1.25 | TC | 0.22 | Vert(LL) | -0.02 | 7-8 | >999 | 240 | MII20 | 249/190 |
| TCDL | 10.0 | Lumber Increase | 1.25 | BC | 0.25 | Vert(TL) | -0.05 | 7-8 | >999 | 180 | | |
| BCLL | 0.0 | Rep Stress Incr | YES | WB | 0.28 | Horz(TL) | 0.01 | 6 | n/a | n/a | | |
| BCDL | 10.0 | Code FBC2004/TPI2002 | | (Matrix) | | | | | | | Weight: 82 lb | |

**LUMBER**
TOP CHORD 2 X 4 SYP No.2D
BOT CHORD 2 X 4 SYP No.2D
WEBS 2 X 4 SYP No.3

**BRACING**
TOP CHORD Structural wood sheathing directly applied or 6-0-0 oc purlins.
BOT CHORD Rigid ceiling directly applied or 10-0-0 oc bracing, Except:
6-0-0 oc bracing: 1-9.

**REACTIONS** (lb/size) 6=472/0-1-8, 9=662/0-8-0
Max Horz 9=185(load case 5)
Max Uplift6=-120(load case 4), 9=-199(load case 5)

**FORCES** (lb) - Maximum Compression/Maximum Tension
TOP CHORD 1-2=-145/280, 2-3=-350/49, 3-4=-0/0, 4-5=0/0
BOT CHORD 1-9=-195/172, 8-9=-199/524, 7-8=-199/524, 6-7=-76/271
WEBS 2-8=0/176, 2-7=-287/136, 3-7=-13/284, 3-6=-470/132, 2-9=-863/223, 4-6=-86/41

**NOTES**
1) Unbalanced roof live loads have been considered for this design.
2) Wind: ASCE 7-98; 110mph (3-second gust); h=18ft; TCDL=5.0psf; BCDL=5.0psf; Category II; Exp C; enclosed; MWFRS interior zone; cantilever left exposed ; Lumber DOL=1.33 plate grip DOL=1.33.
3) Provide adequate drainage to prevent water ponding.
4) This truss has been designed for a 10.0 psf bottom chord live load nonconcurrent with any other live loads.
5) This truss requires plate inspection per the Tooth Count Method when this truss is chosen for quality assurance inspection.
6) Provide mechanical connection (by others) of truss to bearing plate at joint(s) 6.
7) Provide mechanical connection (by others) of truss to bearing plate capable of withstanding 120 lb uplift at joint 6 and 199 lb uplift at joint 9.

**LOAD CASE(S)** Standard


Guo-Jie Zhang, FL Lic #47744
MiTek Industries, Inc.
1801 Massaro Blvd
Tampa FL 33619
FL Cert.#6634


November 22,2005

# Symbols

**PLATE LOCATION AND ORIENTATION**

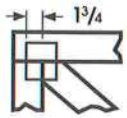


*Center plate on joint unless x,y offsets are indicated. Dimensions are in ft-in-sixteenths. Apply plates to both sides of truss and securely seat.

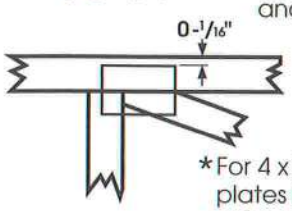


*For 4 x 2 orientation, locate plates 0 - 1/16" from outside edge of truss.

*This symbol indicates the required direction of slots in connector plates.

*** Plate location details available in MiTek 20/20 software or upon request.**

**PLATE SIZE**

4 x 4 — The first dimension is the width perpendicular to slots. Second dimension is the length parallel to slots.

**LATERAL BRACING**

Indicated by symbol shown and/or by text in the bracing section of the output. Use T, I or Eliminator bracing if indicated.

**BEARING**

Indicates location where bearings (supports) occur. Icons vary but reaction section indicates joint number where bearings occur.

**Industry Standards:**

ANSI/TPI1: National Design Specification for Metal Plate Connected Wood Truss Construction.
DSB-89: Design Standard for Bracing.
BCSI1: Building Component Safety Information, Guide to Good Practice for Handling, Installing & Bracing of Metal Plate Connected Wood Trusses.

# Numbering System

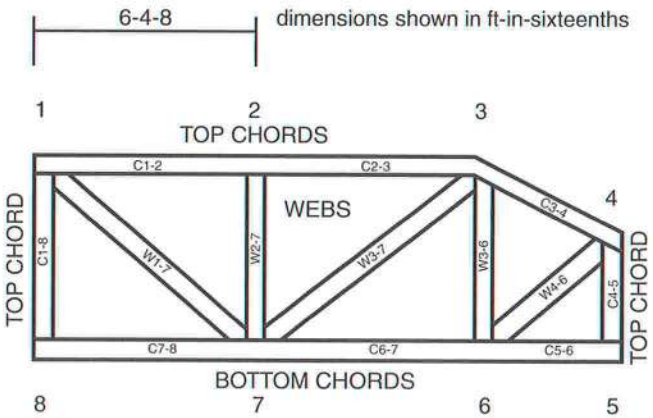


**JOINTS ARE GENERALLY NUMBERED/LETTERED CLOCKWISE AROUND THE TRUSS STARTING AT THE JOINT FARTHEST TO THE LEFT.**

**CHORDS AND WEBS ARE IDENTIFIED BY END JOINT NUMBERS/LETTERS.**

**CONNECTOR PLATE CODE APPROVALS**

| | |
|---|---|
| BOCA | 96-31, 95-43, 96-20-1, 96-67, 84-32 |
| ICBO | 4922, 5243, 5363, 3907 |
| SBCCI | 9667, 9730, 9604B, 9511, 9432A |

MiTek®

TEE-LOK®

# ⚠General Safety Notes

## Failure to Follow Could Cause Property Damage or Personal Injury

1. Additional stability bracing for truss system, e.g. diagonal or X-bracing, is always required. See BCSI1.
2. Never exceed the design loading shown and never stack materials on inadequately braced trusses.
3. Provide copies of this truss design to the building designer, erection supervisor, property owner and all other interested parties.
4. Cut members to bear tightly against each other.
5. Place plates on each face of truss at each joint and embed fully. Knots and wane at joint locations are regulated by ANSI/TPI1.
6. Design assumes trusses will be suitably protected from the environment in accord with ANSI/TPI1.
7. Unless otherwise noted, moisture content of lumber shall not exceed 19% at time of fabrication.
8. Unless expressly noted, this design is not applicable for use with fire retardant or preservative treated lumber.
9. Camber is a non-structural consideration and is the responsibility of truss fabricator. General practice is to camber for dead load deflection.
10. Plate type, size, orientation and location dimensions shown indicate minimum plating requirements.
11. Lumber used shall be of the species and size, and in all respects, equal to or better than that specified.
12. Top chords must be sheathed or purlins provided at spacing shown on design.
13. Bottom chords require lateral bracing at 10 ft. spacing, or less, if no ceiling is installed, unless otherwise noted.
14. Connections not shown are the responsibility of others.
15. Do not cut or alter truss member or plate without prior approval of a professional engineer.
16. Install and load vertically unless indicated otherwise.

| Job | Truss | Truss Type | Qty | Ply | WALKER RES |
|---|---|---|---|---|---|
| WALG | D4 | MONO HIP | 1 | 1 | T1875031 |

Job Reference (optional)

SANTA FE TRUSS, HIGH SPRINGS FL., p.colacino

6.200 s Oct 18 2005 MiTek Industries, Inc. Mon Nov 21 16:21:33 2005 Page 1

Scale = 1:36.4

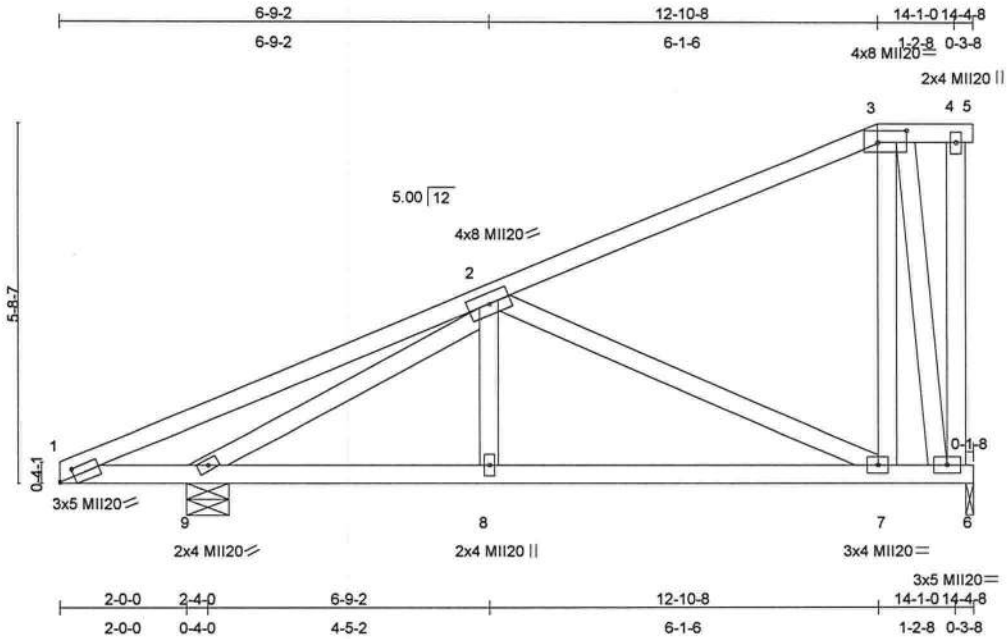


Plate Offsets (X,Y): [1:0-2-15,0-1-8], [2:0-0-0,0-0-0], [3:0-5-8,0-2-4], [4:0-0-0,0-0-0], [6:0-0-0,0-0-0]

| LOADING (psf) | | SPACING | 2-0-0 | CSI | | DEFL | in | (loc) | l/defl | L/d | PLATES | GRIP |
|---|---|---|---|---|---|---|---|---|---|---|---|---|
| TCLL | 20.0 | Plates Increase | 1.25 | TC | 0.30 | Vert(LL) | -0.03 | 7-8 | >999 | 240 | MII20 | 249/190 |
| TCDL | 10.0 | Lumber Increase | 1.25 | BC | 0.34 | Vert(TL) | -0.09 | 7-8 | >999 | 180 | | |
| BCLL | 0.0 | Rep Stress Incr | YES | WB | 0.42 | Horz(TL) | 0.01 | 6 | n/a | n/a | | |
| BCDL | 10.0 | Code FBC2004/TPI2002 | | (Matrix) | | | | | | | Weight: 89 lb | |

**LUMBER**
TOP CHORD 2 X 4 SYP No.2D
BOT CHORD 2 X 4 SYP No.2D
WEBS 2 X 4 SYP No.3

**BRACING**
TOP CHORD Structural wood sheathing directly applied or 6-0-0 oc purlins.
BOT CHORD Rigid ceiling directly applied or 10-0-0 oc bracing, Except:
6-0-0 oc bracing: 1-9.

**REACTIONS** (lb/size) 6=468/0-1-8, 9=671/0-8-0
Max Horz 9=219(load case 5)
Max Uplift6=-142(load case 5), 9=-193(load case 5)

**FORCES** (lb) - Maximum Compression/Maximum Tension
TOP CHORD 1-2=-145/277, 2-3=-233/12, 3-4=-3/3, 4-5=0/0
BOT CHORD 1-9=-181/178, 8-9=-219/553, 7-8=-219/553, 6-7=-49/153
WEBS 2-8=0/223, 2-7=-449/188, 3-7=-23/372, 3-6=-585/193, 2-9=-860/209, 4-6=-57/68

**NOTES**
1) Unbalanced roof live loads have been considered for this design.
2) Wind: ASCE 7-98; 110mph (3-second gust); h=18ft; TCDL=5.0psf; BCDL=5.0psf; Category II; Exp C; enclosed; MWFRS interior zone; cantilever left exposed ; Lumber DOL=1.33 plate grip DOL=1.33.
3) Provide adequate drainage to prevent water ponding.
4) This truss has been designed for a 10.0 psf bottom chord live load nonconcurrent with any other live loads.
5) This truss requires plate inspection per the Tooth Count Method when this truss is chosen for quality assurance inspection.
6) Provide mechanical connection (by others) of truss to bearing plate at joint(s) 6.
7) Provide mechanical connection (by others) of truss to bearing plate capable of withstanding 142 lb uplift at joint 6 and 193 lb uplift at joint 9.

**LOAD CASE(S)** Standard


Guo-Jie Zhang, FL Lic #47744
MiTek Industries, Inc.
1801 Massaro Blvd
Tampa FL 33619
FL Cert.#6634


November 22,2005

# Symbols

**PLATE LOCATION AND ORIENTATION**

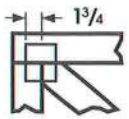


*Center plate on joint unless x,y offsets are indicated. Dimensions are in ft-in-sixteenths. Apply plates to both sides of truss and securely seat.

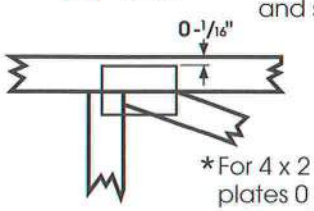


*For 4 x 2 orientation, locate plates 0 - 1/16" from outside edge of truss.

*This symbol indicates the required direction of slots in connector plates.

*** Plate location details available in MiTek 20/20 software or upon request.**

**PLATE SIZE**

4 x 4 — The first dimension is the width perpendicular to slots. Second dimension is the length parallel to slots.

**LATERAL BRACING**

Indicated by symbol shown and/or by text in the bracing section of the output. Use T, I or Eliminator bracing if indicated.

**BEARING**

Indicates location where bearings (supports) occur. Icons vary but reaction section indicates joint number where bearings occur.

**Industry Standards:**

ANSI/TPI1: National Design Specification for Metal Plate Connected Wood Truss Construction.
DSB-89: Design Standard for Bracing.
BCSI1: Building Component Safety Information, Guide to Good Practice for Handling, Installing & Bracing of Metal Plate Connected Wood Trusses.

# Numbering System

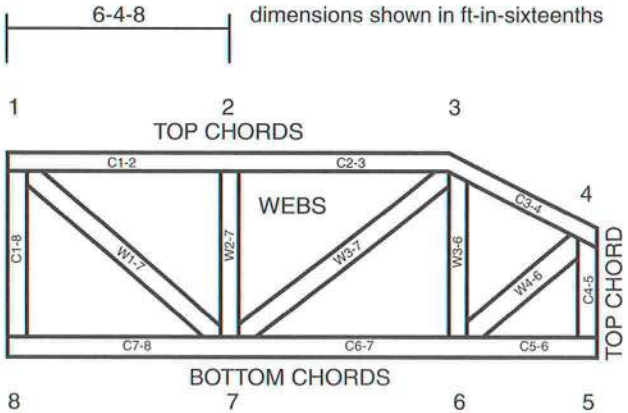


**JOINTS ARE GENERALLY NUMBERED/LETTERED CLOCKWISE AROUND THE TRUSS STARTING AT THE JOINT FARTHEST TO THE LEFT.**

**CHORDS AND WEBS ARE IDENTIFIED BY END JOINT NUMBERS/LETTERS.**

**CONNECTOR PLATE CODE APPROVALS**

| | |
|---|---|
| BOCA | 96-31, 95-43, 96-20-1, 96-67, 84-32 |
| ICBO | 4922, 5243, 5363, 3907 |
| SBCCI | 9667, 9730, 9604B, 9511, 9432A |

MiTek®

TEE-LOK®

# ⚠General Safety Notes

## Failure to Follow Could Cause Property Damage or Personal Injury

1. Additional stability bracing for truss system, e.g. diagonal or X-bracing, is always required. See BCSI1.
2. Never exceed the design loading shown and never stack materials on inadequately braced trusses.
3. Provide copies of this truss design to the building designer, erection supervisor, property owner and all other interested parties.
4. Cut members to bear tightly against each other.
5. Place plates on each face of truss at each joint and embed fully. Knots and wane at joint locations are regulated by ANSI/TPI1.
6. Design assumes trusses will be suitably protected from the environment in accord with ANSI/TPI1.
7. Unless otherwise noted, moisture content of lumber shall not exceed 19% at time of fabrication.
8. Unless expressly noted, this design is not applicable for use with fire retardant or preservative treated lumber.
9. Camber is a non-structural consideration and is the responsibility of truss fabricator. General practice is to camber for dead load deflection.
10. Plate type, size, orientation and location dimensions shown indicate minimum plating requirements.
11. Lumber used shall be of the species and size, and in all respects, equal to or better than that specified.
12. Top chords must be sheathed or purlins provided at spacing shown on design.
13. Bottom chords require lateral bracing at 10 ft. spacing, or less, if no ceiling is installed, unless otherwise noted.
14. Connections not shown are the responsibility of others.
15. Do not cut or alter truss member or plate without prior approval of a professional engineer.
16. Install and load vertically unless indicated otherwise.

| Job | Truss | Truss Type | Qty | Ply | WALKER RES |
|---|---|---|---|---|---|
| WALG | E | COMMON | 3 | 1 | T1875032<br>Job Reference (optional) |

SANTA FE TRUSS, HIGH SPRINGS FL., p.colacino — 6.200 s Oct 18 2005 MiTek Industries, Inc. Mon Nov 21 16:21:34 2005 Page 1

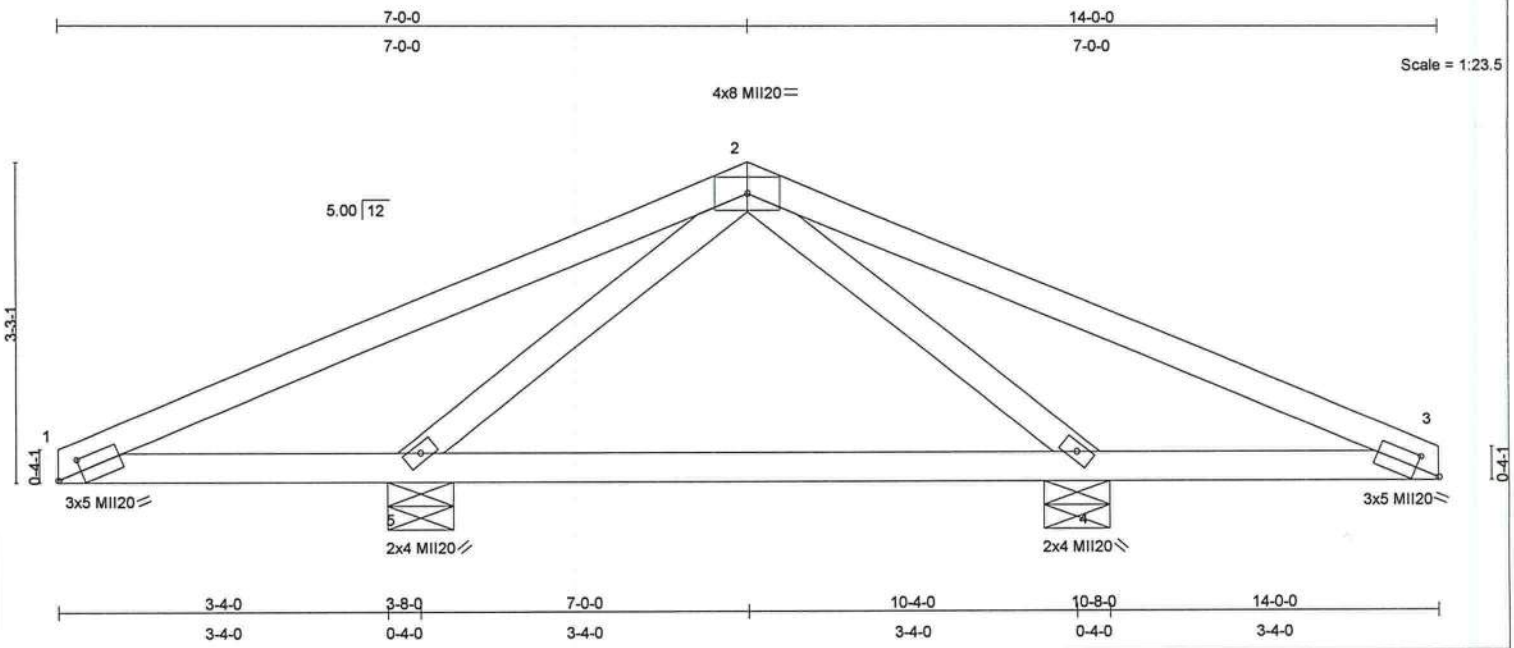


Plate Offsets (X,Y): [1:0-2-15,0-1-8], [3:0-2-15,0-1-8]

| LOADING (psf) | | SPACING | 2-0-0 | CSI | | DEFL | in | (loc) | l/defl | L/d | PLATES | GRIP |
|---|---|---|---|---|---|---|---|---|---|---|---|---|
| TCLL | 20.0 | Plates Increase | 1.25 | TC | 0.41 | Vert(LL) | -0.04 | 4-5 | >999 | 240 | MII20 | 249/190 |
| TCDL | 10.0 | Lumber Increase | 1.25 | BC | 0.34 | Vert(TL) | -0.08 | 4-5 | >999 | 180 | | |
| BCLL | 0.0 | Rep Stress Incr | YES | WB | 0.23 | Horz(TL) | 0.00 | 4 | n/a | n/a | | |
| BCDL | 10.0 | Code FBC2004/TPI2002 | | (Matrix) | | | | | | | Weight: 57 lb | |

**LUMBER**
TOP CHORD 2 X 4 SYP No.2D
BOT CHORD 2 X 4 SYP No.2D
WEBS 2 X 4 SYP No.3

**BRACING**
TOP CHORD Structural wood sheathing directly applied or 10-0-0 oc purlins.
BOT CHORD Rigid ceiling directly applied or 6-0-0 oc bracing.

**REACTIONS** (lb/size) 5=560/0-8-0, 4=560/0-8-0
Max Horz 5=-44(load case 6)
Max Uplift5=-271(load case 5), 4=-271(load case 6)

**FORCES** (lb) - Maximum Compression/Maximum Tension
TOP CHORD 1-2=-290/481, 2-3=-289/481
BOT CHORD 1-5=-368/312, 4-5=-5/92, 3-4=-368/312
WEBS 2-5=-591/357, 2-4=-591/357

**NOTES**
1) Unbalanced roof live loads have been considered for this design.
2) Wind: ASCE 7-98; 110mph (3-second gust); h=18ft; TCDL=5.0psf; BCDL=5.0psf; Category II; Exp C; enclosed; MWFRS interior zone; cantilever left and right exposed ; Lumber DOL=1.33 plate grip DOL=1.33.
3) This truss has been designed for a 10.0 psf bottom chord live load nonconcurrent with any other live loads.
4) This truss requires plate inspection per the Tooth Count Method when this truss is chosen for quality assurance inspection.
5) Provide mechanical connection (by others) of truss to bearing plate capable of withstanding 271 lb uplift at joint 5 and 271 lb uplift at joint 4.

**LOAD CASE(S)** Standard


Guo-Jie Zhang, FL Lic #47744
MiTek Industries, Inc.
1801 Massaro Blvd
Tampa FL 33619
FL Cert.#6634


November 22,2005

# Symbols

**PLATE LOCATION AND ORIENTATION**

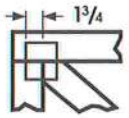


*Center plate on joint unless x,y offsets are indicated. Dimensions are in ft-in-sixteenths. Apply plates to both sides of truss and securely seat.

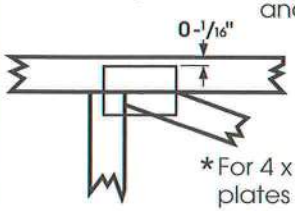


*For 4 x 2 orientation, locate plates 0 - 1/16" from outside edge of truss.

*This symbol indicates the required direction of slots in connector plates.

*** Plate location details available in MiTek 20/20 software or upon request.**

**PLATE SIZE**

4 x 4 — The first dimension is the width perpendicular to slots. Second dimension is the length parallel to slots.

**LATERAL BRACING**

Indicated by symbol shown and/or by text in the bracing section of the output. Use T, I or Eliminator bracing if indicated.

**BEARING**

Indicates location where bearings (supports) occur. Icons vary but reaction section indicates joint number where bearings occur.

**Industry Standards:**

ANSI/TPI1: National Design Specification for Metal Plate Connected Wood Truss Construction.
DSB-89: Design Standard for Bracing.
BCSI1: Building Component Safety Information, Guide to Good Practice for Handling, Installing & Bracing of Metal Plate Connected Wood Trusses.

# Numbering System

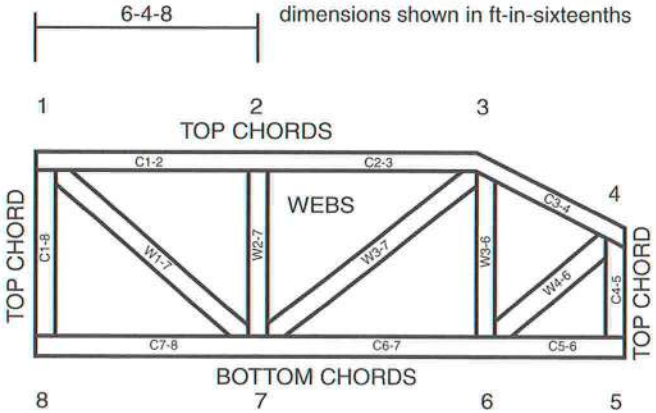


**JOINTS ARE GENERALLY NUMBERED/LETTERED CLOCKWISE AROUND THE TRUSS STARTING AT THE JOINT FARTHEST TO THE LEFT.**

**CHORDS AND WEBS ARE IDENTIFIED BY END JOINT NUMBERS/LETTERS.**

**CONNECTOR PLATE CODE APPROVALS**

| | |
|---|---|
| BOCA | 96-31, 95-43, 96-20-1, 96-67, 84-32 |
| ICBO | 4922, 5243, 5363, 3907 |
| SBCCI | 9667, 9730, 9604B, 9511, 9432A |

MiTek®

TEE-LOK®

# ⚠General Safety Notes

## Failure to Follow Could Cause Property Damage or Personal Injury

1. Additional stability bracing for truss system, e.g. diagonal or X-bracing, is always required. See BCSI1.
2. Never exceed the design loading shown and never stack materials on inadequately braced trusses.
3. Provide copies of this truss design to the building designer, erection supervisor, property owner and all other interested parties.
4. Cut members to bear tightly against each other.
5. Place plates on each face of truss at each joint and embed fully. Knots and wane at joint locations are regulated by ANSI/TPI1.
6. Design assumes trusses will be suitably protected from the environment in accord with ANSI/TPI1.
7. Unless otherwise noted, moisture content of lumber shall not exceed 19% at time of fabrication.
8. Unless expressly noted, this design is not applicable for use with fire retardant or preservative treated lumber.
9. Camber is a non-structural consideration and is the responsibility of truss fabricator. General practice is to camber for dead load deflection.
10. Plate type, size, orientation and location dimensions shown indicate minimum plating requirements.
11. Lumber used shall be of the species and size, and in all respects, equal to or better than that specified.
12. Top chords must be sheathed or purlins provided at spacing shown on design.
13. Bottom chords require lateral bracing at 10 ft. spacing, or less, if no ceiling is installed, unless otherwise noted.
14. Connections not shown are the responsibility of others.
15. Do not cut or alter truss member or plate without prior approval of a professional engineer.
16. Install and load vertically unless indicated otherwise.

| Job | Truss | Truss Type | Qty | Ply | WALKER RES |
|---|---|---|---|---|---|
| WALG | EET | COMMON | 1 | 1 | T1875033 |
| | | | | | Job Reference (optional) |

SANTA FE TRUSS, HIGH SPRINGS FL., p.colacino — 6.200 s Oct 18 2005 MiTek Industries, Inc. Mon Nov 21 16:21:35 2005 Page 1

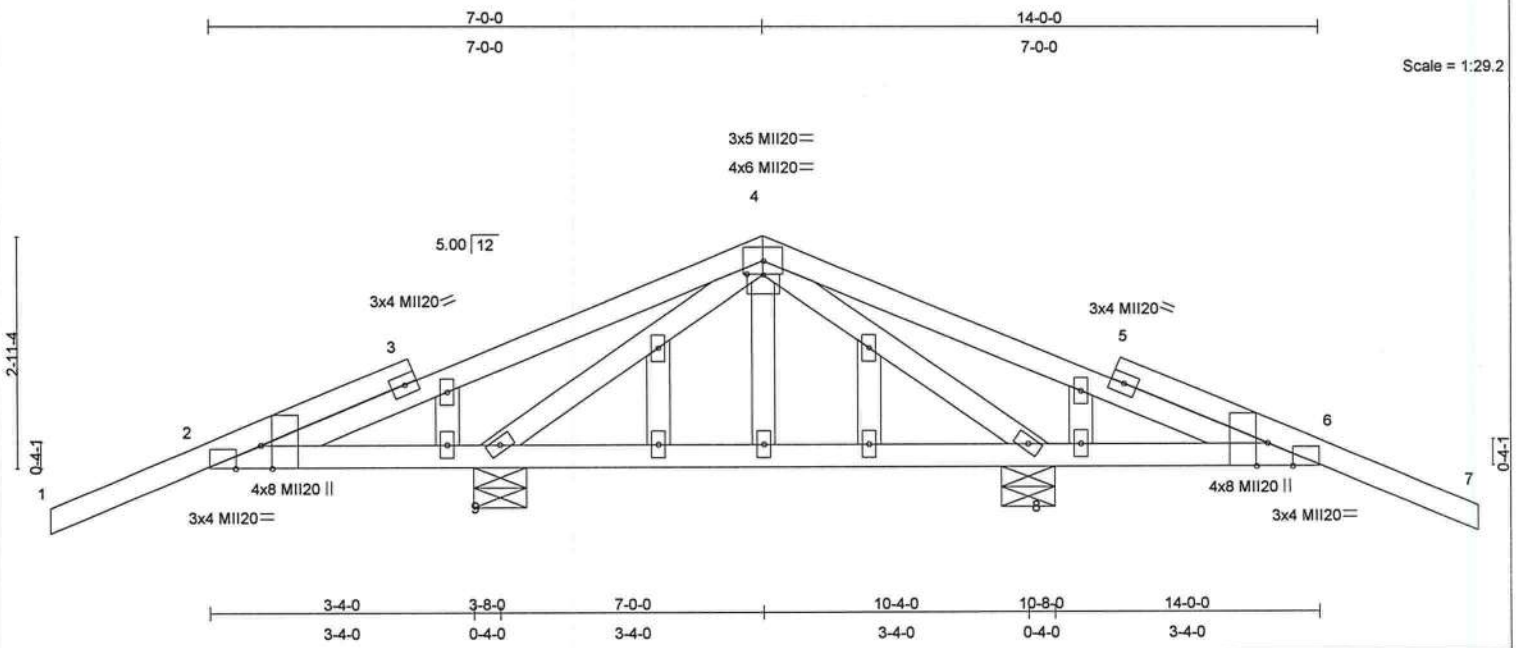


Plate Offsets (X,Y): [2:0-3-8,Edge], [2:0-3-13,Edge], [4:0-2-8,0-0-2], [6:0-3-8,Edge], [6:0-3-13,Edge]

| LOADING (psf) | | SPACING | 2-0-0 | CSI | | DEFL | in | (loc) | l/defl | L/d | PLATES | GRIP |
|---|---|---|---|---|---|---|---|---|---|---|---|---|
| TCLL | 20.0 | Plates Increase | 1.25 | TC | 0.36 | Vert(LL) | -0.04 | 8-9 | >999 | 240 | MII20 | 249/190 |
| TCDL | 10.0 | Lumber Increase | 1.25 | BC | 0.25 | Vert(TL) | -0.09 | 8-9 | >981 | 180 | | |
| BCLL | 0.0 | Rep Stress Incr | YES | WB | 0.33 | Horz(TL) | 0.00 | 8 | n/a | n/a | | |
| BCDL | 10.0 | Code FBC2004/TPI2002 | | (Matrix) | | | | | | | Weight: 78 lb | |

**LUMBER**
TOP CHORD 2 X 4 SYP No.2D
BOT CHORD 2 X 4 SYP No.2D
WEBS 2 X 4 SYP No.3
OTHERS 2 X 4 SYP No.3

**BRACING**
TOP CHORD Structural wood sheathing directly applied or 7-6-6 oc purlins.
BOT CHORD Rigid ceiling directly applied or 6-0-0 oc bracing.

**REACTIONS** (lb/size) 9=680/0-8-0, 8=680/0-8-0
Max Horz 9=-76(load case 6)
Max Uplift9=-439(load case 5), 8=-439(load case 6)
Max Grav 9=729(load case 7), 8=729(load case 8)

**FORCES** (lb) - Maximum Compression/Maximum Tension
TOP CHORD 1-2=0/45, 2-3=-751/855, 3-4=-733/986, 4-5=-733/986, 5-6=-750/855, 6-7=0/45
BOT CHORD 2-9=-850/791, 8-9=-139/209, 6-8=-850/791
WEBS 4-9=-935/726, 4-8=-935/726

**NOTES**
1) Unbalanced roof live loads have been considered for this design.
2) Wind: ASCE 7-98; 110mph (3-second gust); h=18ft; TCDL=5.0psf; BCDL=5.0psf; Category II; Exp C; enclosed; MWFRS interior zone; cantilever left and right exposed ; Lumber DOL=1.33 plate grip DOL=1.33.
3) Truss designed for wind loads in the plane of the truss only. For studs exposed to wind (normal to the face), see MiTek "Standard Gable End Detail"
4) This truss has been designed for a 10.0 psf bottom chord live load nonconcurrent with any other live loads.
5) All plates are 2x4 MII20 unless otherwise indicated.
6) This truss requires plate inspection per the Tooth Count Method when this truss is chosen for quality assurance inspection.
7) Gable studs spaced at 1-4-0 oc.
8) Provide mechanical connection (by others) of truss to bearing plate capable of withstanding 439 lb uplift at joint 9 and 439 lb uplift at joint 8.

**LOAD CASE(S)** Standard


Guo-Jie Zhang, FL Lic #47744
MiTek Industries, Inc.
1801 Massaro Blvd
Tampa FL 33619
FL Cert.#6634


November 22,2005

# Symbols

**PLATE LOCATION AND ORIENTATION**

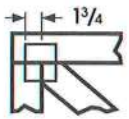


*Center plate on joint unless x,y offsets are indicated. Dimensions are in ft-in-sixteenths. Apply plates to both sides of truss and securely seat.

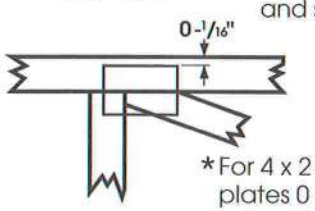


*For 4 x 2 orientation, locate plates 0 - 1/16" from outside edge of truss.

*This symbol indicates the required direction of slots in connector plates.

*** Plate location details available in MiTek 20/20 software or upon request.**

**PLATE SIZE**

4 x 4 — The first dimension is the width perpendicular to slots. Second dimension is the length parallel to slots.

**LATERAL BRACING**

Indicated by symbol shown and/or by text in the bracing section of the output. Use T, I or Eliminator bracing if indicated.

**BEARING**

Indicates location where bearings (supports) occur. Icons vary but reaction section indicates joint number where bearings occur.

**Industry Standards:**

ANSI/TPI1: National Design Specification for Metal Plate Connected Wood Truss Construction.
DSB-89: Design Standard for Bracing.
BCSI1: Building Component Safety Information, Guide to Good Practice for Handling, Installing & Bracing of Metal Plate Connected Wood Trusses.

# Numbering System

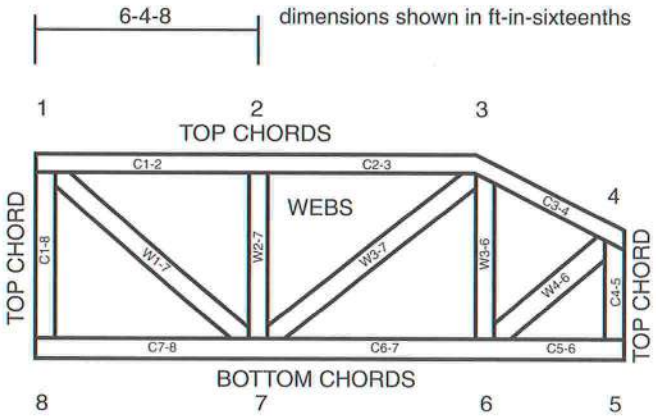


**JOINTS ARE GENERALLY NUMBERED/LETTERED CLOCKWISE AROUND THE TRUSS STARTING AT THE JOINT FARTHEST TO THE LEFT.**

**CHORDS AND WEBS ARE IDENTIFIED BY END JOINT NUMBERS/LETTERS.**

**CONNECTOR PLATE CODE APPROVALS**

| | |
|---|---|
| BOCA | 96-31, 95-43, 96-20-1, 96-67, 84-32 |
| ICBO | 4922, 5243, 5363, 3907 |
| SBCCI | 9667, 9730, 9604B, 9511, 9432A |

MiTek®

TEE-LOK®

# ⚠General Safety Notes

## Failure to Follow Could Cause Property Damage or Personal Injury

1. Additional stability bracing for truss system, e.g. diagonal or X-bracing, is always required. See BCSI1.
2. Never exceed the design loading shown and never stack materials on inadequately braced trusses.
3. Provide copies of this truss design to the building designer, erection supervisor, property owner and all other interested parties.
4. Cut members to bear tightly against each other.
5. Place plates on each face of truss at each joint and embed fully. Knots and wane at joint locations are regulated by ANSI/TPI1.
6. Design assumes trusses will be suitably protected from the environment in accord with ANSI/TPI1.
7. Unless otherwise noted, moisture content of lumber shall not exceed 19% at time of fabrication.
8. Unless expressly noted, this design is not applicable for use with fire retardant or preservative treated lumber.
9. Camber is a non-structural consideration and is the responsibility of truss fabricator. General practice is to camber for dead load deflection.
10. Plate type, size, orientation and location dimensions shown indicate minimum plating requirements.
11. Lumber used shall be of the species and size, and in all respects, equal to or better than that specified.
12. Top chords must be sheathed or purlins provided at spacing shown on design.
13. Bottom chords require lateral bracing at 10 ft. spacing, or less, if no ceiling is installed, unless otherwise noted.
14. Connections not shown are the responsibility of others.
15. Do not cut or alter truss member or plate without prior approval of a professional engineer.
16. Install and load vertically unless indicated otherwise.

| Job | Truss | Truss Type | Qty | Ply | WALKER RES |
|---|---|---|---|---|---|
| WALG | EJ2 | MONO TRUSS | 1 | 1 | T1875034 |

Job Reference (optional)

SANTA FE TRUSS, HIGH SPRINGS FL., p.colacino

6.200 s Oct 18 2005 MiTek Industries, Inc. Mon Nov 21 16:21:35 2005 Page 1

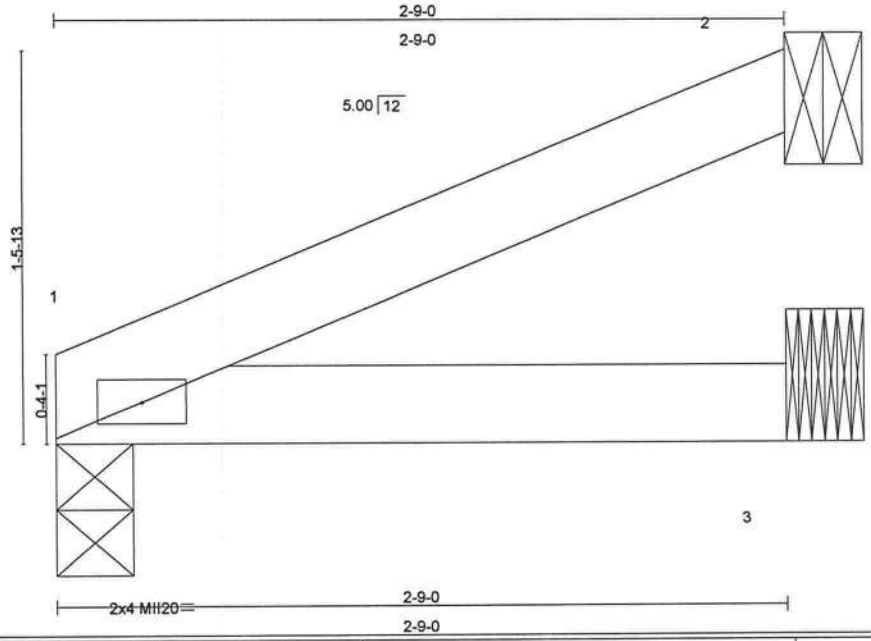


| LOADING (psf) | | SPACING | 2-0-0 | CSI | | DEFL | in | (loc) | l/defl | L/d | PLATES | GRIP |
|---|---|---|---|---|---|---|---|---|---|---|---|---|
| TCLL | 20.0 | Plates Increase | 1.25 | TC | 0.07 | Vert(LL) | -0.00 | 1-3 | >999 | 240 | MII20 | 249/190 |
| TCDL | 10.0 | Lumber Increase | 1.25 | BC | 0.06 | Vert(TL) | -0.01 | 1-3 | >999 | 180 | | |
| BCLL | 0.0 | Rep Stress Incr | YES | WB | 0.00 | Horz(TL) | -0.00 | 2 | n/a | n/a | | |
| BCDL | 10.0 | Code FBC2004/TPI2002 | | (Matrix) | | | | | | | Weight: 9 lb | |

**LUMBER**
TOP CHORD 2 X 4 SYP No.2D
BOT CHORD 2 X 4 SYP No.2D

**BRACING**
TOP CHORD Structural wood sheathing directly applied or 2-9-0 oc purlins.
BOT CHORD Rigid ceiling directly applied or 10-0-0 oc bracing.

**REACTIONS** (lb/size) 1=100/0-3-8, 2=74/Mechanical, 3=26/0-9-0
Max Horz 1=45(load case 5)
Max Uplift1=-14(load case 5), 2=-48(load case 5)
Max Grav 1=100(load case 1), 2=74(load case 1), 3=52(load case 2)

**FORCES** (lb) - Maximum Compression/Maximum Tension
TOP CHORD 1-2=-29/24
BOT CHORD 1-3=0/0

**NOTES**
1) Wind: ASCE 7-98; 110mph (3-second gust); h=18ft; TCDL=5.0psf; BCDL=5.0psf; Category II; Exp C; enclosed; MWFRS interior zone; Lumber DOL=1.33 plate grip DOL=1.33.
2) This truss has been designed for a 10.0 psf bottom chord live load nonconcurrent with any other live loads.
3) This truss requires plate inspection per the Tooth Count Method when this truss is chosen for quality assurance inspection.
4) Refer to girder(s) for truss to truss connections.
5) Provide mechanical connection (by others) of truss to bearing plate capable of withstanding 14 lb uplift at joint 1 and 48 lb uplift at joint 2.

**LOAD CASE(S)** Standard


Guo-Jie Zhang, FL Lic #47744
MiTek Industries, Inc.
1801 Massaro Blvd
Tampa FL 33619
FL Cert.#6634


November 22,2005

# Symbols

**PLATE LOCATION AND ORIENTATION**


*Center plate on joint unless x,y offsets are indicated. Dimensions are in ft-in-sixteenths. Apply plates to both sides of truss and securely seat.

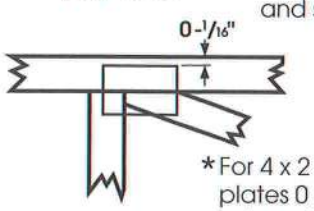


*For 4 x 2 orientation, locate plates 0 - 1/16" from outside edge of truss.

*This symbol indicates the required direction of slots in connector plates.

*** Plate location details available in MiTek 20/20 software or upon request.**

**PLATE SIZE**

4 x 4 — The first dimension is the width perpendicular to slots. Second dimension is the length parallel to slots.

**LATERAL BRACING**

Indicated by symbol shown and/or by text in the bracing section of the output. Use T, I or Eliminator bracing if indicated.

**BEARING**

Indicates location where bearings (supports) occur. Icons vary but reaction section indicates joint number where bearings occur.

**Industry Standards:**

ANSI/TPI1: National Design Specification for Metal Plate Connected Wood Truss Construction.
DSB-89: Design Standard for Bracing.
BCSI1: Building Component Safety Information, Guide to Good Practice for Handling, Installing & Bracing of Metal Plate Connected Wood Trusses.

# Numbering System

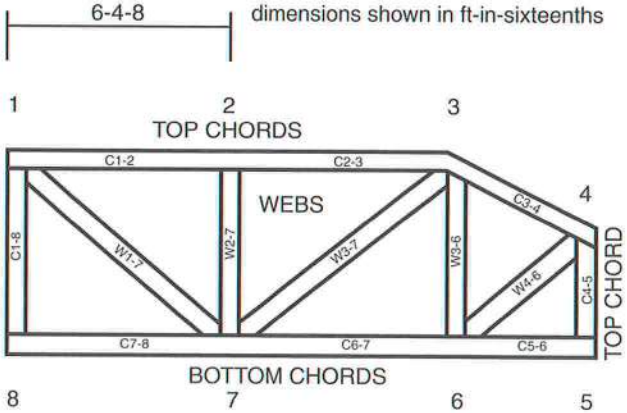


**JOINTS ARE GENERALLY NUMBERED/LETTERED CLOCKWISE AROUND THE TRUSS STARTING AT THE JOINT FARTHEST TO THE LEFT.**

**CHORDS AND WEBS ARE IDENTIFIED BY END JOINT NUMBERS/LETTERS.**

**CONNECTOR PLATE CODE APPROVALS**

| | |
|---|---|
| BOCA | 96-31, 95-43, 96-20-1, 96-67, 84-32 |
| ICBO | 4922, 5243, 5363, 3907 |
| SBCCI | 9667, 9730, 9604B, 9511, 9432A |

MiTek®

TEE-LOK®

# ⚠General Safety Notes

## Failure to Follow Could Cause Property Damage or Personal Injury

1. Additional stability bracing for truss system, e.g. diagonal or X-bracing, is always required. See BCSI1.
2. Never exceed the design loading shown and never stack materials on inadequately braced trusses.
3. Provide copies of this truss design to the building designer, erection supervisor, property owner and all other interested parties.
4. Cut members to bear tightly against each other.
5. Place plates on each face of truss at each joint and embed fully. Knots and wane at joint locations are regulated by ANSI/TPI1.
6. Design assumes trusses will be suitably protected from the environment in accord with ANSI/TPI1.
7. Unless otherwise noted, moisture content of lumber shall not exceed 19% at time of fabrication.
8. Unless expressly noted, this design is not applicable for use with fire retardant or preservative treated lumber.
9. Camber is a non-structural consideration and is the responsibility of truss fabricator. General practice is to camber for dead load deflection.
10. Plate type, size, orientation and location dimensions shown indicate minimum plating requirements.
11. Lumber used shall be of the species and size, and in all respects, equal to or better than that specified.
12. Top chords must be sheathed or purlins provided at spacing shown on design.
13. Bottom chords require lateral bracing at 10 ft. spacing, or less, if no ceiling is installed, unless otherwise noted.
14. Connections not shown are the responsibility of others.
15. Do not cut or alter truss member or plate without prior approval of a professional engineer.
16. Install and load vertically unless indicated otherwise.

| Job | Truss | Truss Type | Qty | Ply | WALKER RES | |
|---|---|---|---|---|---|---|
| WALG | EJ2A | MONO HIP | 1 | 1 | 4x4 MII20 = 2x4 MII20 \|\| Job Reference (optional) | T1875035 |

SANTA FE TRUSS, HIGH SPRINGS FL., p.colacino

6.200 s Oct 18 2005 MiTek Industries, Inc. Mon Nov 21 16:21:36 2005 Page 1

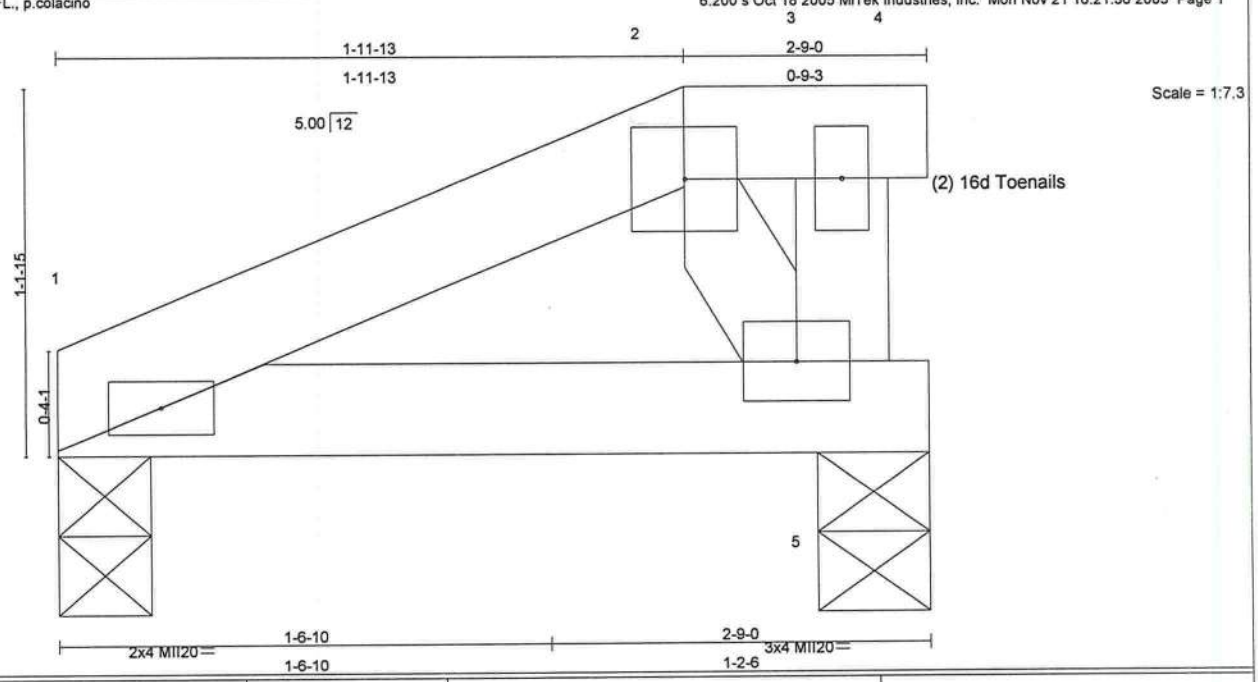


| LOADING (psf) | | SPACING | 2-0-0 | CSI | | DEFL | in | (loc) | l/defl | L/d | PLATES | GRIP |
|---|---|---|---|---|---|---|---|---|---|---|---|---|
| TCLL | 20.0 | Plates Increase | 1.25 | TC | 0.04 | Vert(LL) | -0.00 | 1-5 | >999 | 240 | MII20 | 249/190 |
| TCDL | 10.0 | Lumber Increase | 1.25 | BC | 0.05 | Vert(TL) | -0.00 | 1-5 | >999 | 180 | | |
| BCLL | 0.0 | Rep Stress Incr | YES | WB | 0.01 | Horz(TL) | 0.00 | 5 | n/a | n/a | | |
| BCDL | 10.0 | Code FBC2004/TPI2002 | | (Matrix) | | | | | | | Weight: 10 lb | |

**LUMBER**
TOP CHORD 2 X 4 SYP No.2D
BOT CHORD 2 X 4 SYP No.2D
WEBS 2 X 4 SYP No.3

**BRACING**
TOP CHORD Structural wood sheathing directly applied or 2-9-0 oc purlins.
BOT CHORD Rigid ceiling directly applied or 10-0-0 oc bracing.

**REACTIONS** (lb/size) 1=93/0-3-8, 5=99/0-4-4
Max Horz 1=35(load case 5)
Max Uplift1=-16(load case 5), 5=-28(load case 4)

**FORCES** (lb) - Maximum Compression/Maximum Tension
TOP CHORD 1-2=-53/4, 2-3=-0/0, 3-4=0/0
BOT CHORD 1-5=-18/31
WEBS 2-5=-62/36, 3-5=-22/15

**NOTES**
1) Unbalanced roof live loads have been considered for this design.
2) Wind: ASCE 7-98; 110mph (3-second gust); h=18ft; TCDL=5.0psf; BCDL=5.0psf; Category II; Exp C; enclosed; MWFRS interior zone; Lumber DOL=1.33 plate grip DOL=1.33.
3) Provide adequate drainage to prevent water ponding.
4) This truss has been designed for a 10.0 psf bottom chord live load nonconcurrent with any other live loads.
5) This truss requires plate inspection per the Tooth Count Method when this truss is chosen for quality assurance inspection.
6) Provide mechanical connection (by others) of truss to bearing plate capable of withstanding 16 lb uplift at joint 1 and 28 lb uplift at joint 5.

**LOAD CASE(S)** Standard


Guo-Jie Zhang, FL Lic #47744
MiTek Industries, Inc.
1801 Massaro Blvd
Tampa FL 33619
FL Cert.#6634


November 22,2005

# Symbols

**PLATE LOCATION AND ORIENTATION**

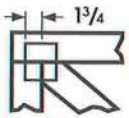


*Center plate on joint unless x,y offsets are indicated. Dimensions are in ft-in-sixteenths. Apply plates to both sides of truss and securely seat.

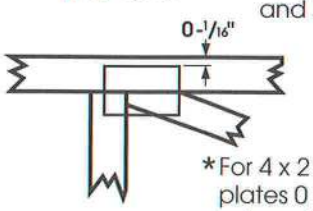


*For 4 x 2 orientation, locate plates 0 - 1/16" from outside edge of truss.

*This symbol indicates the required direction of slots in connector plates.

*** Plate location details available in MiTek 20/20 software or upon request.**

**PLATE SIZE**

4 x 4 — The first dimension is the width perpendicular to slots. Second dimension is the length parallel to slots.

**LATERAL BRACING**

Indicated by symbol shown and/or by text in the bracing section of the output. Use T, I or Eliminator bracing if indicated.

**BEARING**

Indicates location where bearings (supports) occur. Icons vary but reaction section indicates joint number where bearings occur.

**Industry Standards:**

ANSI/TPI1: National Design Specification for Metal Plate Connected Wood Truss Construction.
DSB-89: Design Standard for Bracing.
BCSI1: Building Component Safety Information, Guide to Good Practice for Handling, Installing & Bracing of Metal Plate Connected Wood Trusses.

# Numbering System

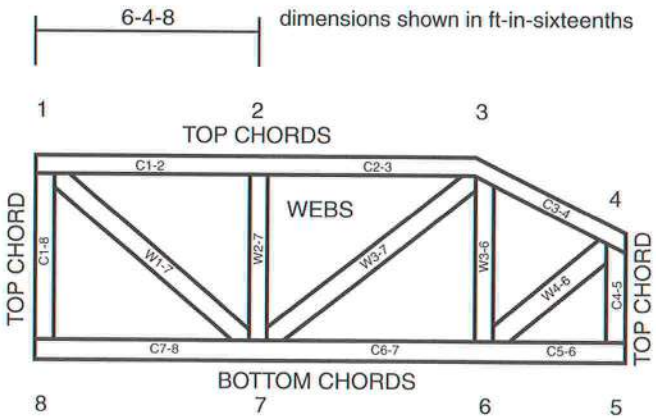


**JOINTS ARE GENERALLY NUMBERED/LETTERED CLOCKWISE AROUND THE TRUSS STARTING AT THE JOINT FARTHEST TO THE LEFT.**

**CHORDS AND WEBS ARE IDENTIFIED BY END JOINT NUMBERS/LETTERS.**

**CONNECTOR PLATE CODE APPROVALS**

| | |
|---|---|
| BOCA | 96-31, 95-43, 96-20-1, 96-67, 84-32 |
| ICBO | 4922, 5243, 5363, 3907 |
| SBCCI | 9667, 9730, 9604B, 9511, 9432A |

MiTek®

TEE-LOK®

# ⚠General Safety Notes

## Failure to Follow Could Cause Property Damage or Personal Injury

1. Additional stability bracing for truss system, e.g. diagonal or X-bracing, is always required. See BCSI1.
2. Never exceed the design loading shown and never stack materials on inadequately braced trusses.
3. Provide copies of this truss design to the building designer, erection supervisor, property owner and all other interested parties.
4. Cut members to bear tightly against each other.
5. Place plates on each face of truss at each joint and embed fully. Knots and wane at joint locations are regulated by ANSI/TPI1.
6. Design assumes trusses will be suitably protected from the environment in accord with ANSI/TPI1.
7. Unless otherwise noted, moisture content of lumber shall not exceed 19% at time of fabrication.
8. Unless expressly noted, this design is not applicable for use with fire retardant or preservative treated lumber.
9. Camber is a non-structural consideration and is the responsibility of truss fabricator. General practice is to camber for dead load deflection.
10. Plate type, size, orientation and location dimensions shown indicate minimum plating requirements.
11. Lumber used shall be of the species and size, and in all respects, equal to or better than that specified.
12. Top chords must be sheathed or purlins provided at spacing shown on design.
13. Bottom chords require lateral bracing at 10 ft. spacing, or less, if no ceiling is installed, unless otherwise noted.
14. Connections not shown are the responsibility of others.
15. Do not cut or alter truss member or plate without prior approval of a professional engineer.
16. Install and load vertically unless indicated otherwise.

| Job | Truss | Truss Type | Qty | Ply | WALKER RES |
|---|---|---|---|---|---|
| WALG | EJ3 | JACK | 10 | 1 | T1875036<br>Job Reference (optional) |

SANTA FE TRUSS, HIGH SPRINGS FL., p.colacino

6.200 s Oct 18 2005 MiTek Industries, Inc. Mon Nov 21 16:21:37 2005 Page 1

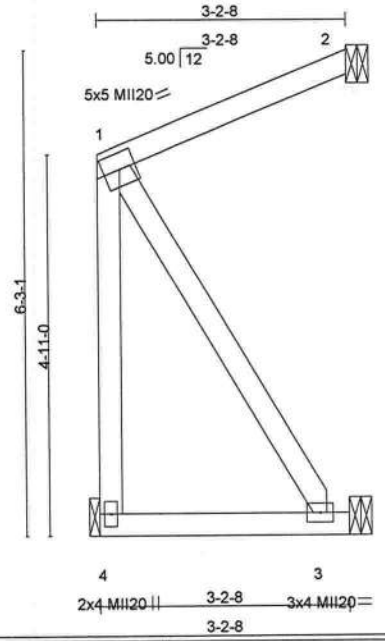


Scale = 1:29.6

| LOADING (psf) | | SPACING | 2-0-0 | CSI | | DEFL | in | (loc) | l/defl | L/d | PLATES | GRIP |
|---|---|---|---|---|---|---|---|---|---|---|---|---|
| TCLL | 20.0 | Plates Increase | 1.25 | TC | 0.10 | Vert(LL) | -0.00 | 3-4 | >999 | 240 | MII20 | 249/190 |
| TCDL | 10.0 | Lumber Increase | 1.25 | BC | 0.06 | Vert(TL) | -0.01 | 3-4 | >999 | 180 | | |
| BCLL | 0.0 | Rep Stress Incr | YES | WB | 0.03 | Horz(TL) | -0.00 | 2 | n/a | n/a | | |
| BCDL | 10.0 | Code FBC2004/TPI2002 | | (Matrix) | | | | | | | Weight: 24 lb | |

**LUMBER**
TOP CHORD 2 X 4 SYP No.2D
BOT CHORD 2 X 4 SYP No.2D
WEBS 2 X 4 SYP No.3

**BRACING**
TOP CHORD Structural wood sheathing directly applied or 3-2-8 oc purlins, except end verticals.
BOT CHORD Rigid ceiling directly applied or 10-0-0 oc bracing.

**REACTIONS** (lb/size) 4=115/Mechanical, 2=87/Mechanical, 3=28/0-3-8
Max Horz 4=49(load case 5)
Max Uplift2=-55(load case 5), 3=-69(load case 5)
Max Grav 4=115(load case 1), 2=87(load case 1), 3=55(load case 2)

**FORCES** (lb) - Maximum Compression/Maximum Tension
TOP CHORD 1-4=-87/0, 1-2=-31/27
BOT CHORD 3-4=-49/0
WEBS 1-3=0/96

**NOTES**
1) Wind: ASCE 7-98; 110mph (3-second gust); h=18ft; TCDL=5.0psf; BCDL=5.0psf; Category II; Exp C; enclosed; MWFRS interior zone; Lumber DOL=1.33 plate grip DOL=1.33.
2) This truss has been designed for a 10.0 psf bottom chord live load nonconcurrent with any other live loads.
3) This truss requires plate inspection per the Tooth Count Method when this truss is chosen for quality assurance inspection.
4) Refer to girder(s) for truss to truss connections.
5) Provide mechanical connection (by others) of truss to bearing plate capable of withstanding 55 lb uplift at joint 2 and 69 lb uplift at joint 3.

**LOAD CASE(S)** Standard


Guo-Jie Zhang, FL Lic #47744
MiTek Industries, Inc.
1801 Massaro Blvd
Tampa FL 33619
FL Cert.#6634


November 22,2005

# Symbols

**PLATE LOCATION AND ORIENTATION**


*Center plate on joint unless x,y offsets are indicated. Dimensions are in ft-in-sixteenths. Apply plates to both sides of truss and securely seat.

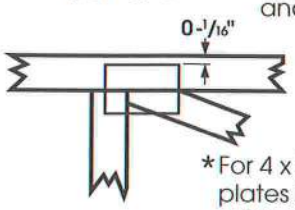


*For 4 x 2 orientation, locate plates 0 - 1/16" from outside edge of truss.

*This symbol indicates the required direction of slots in connector plates.

*** Plate location details available in MiTek 20/20 software or upon request.**

**PLATE SIZE**

4 x 4 — The first dimension is the width perpendicular to slots. Second dimension is the length parallel to slots.

**LATERAL BRACING**

Indicated by symbol shown and/or by text in the bracing section of the output. Use T, I or Eliminator bracing if indicated.

**BEARING**

Indicates location where bearings (supports) occur. Icons vary but reaction section indicates joint number where bearings occur.

**Industry Standards:**

ANSI/TPI1: National Design Specification for Metal Plate Connected Wood Truss Construction.
DSB-89: Design Standard for Bracing.
BCSI1: Building Component Safety Information, Guide to Good Practice for Handling, Installing & Bracing of Metal Plate Connected Wood Trusses.

# Numbering System

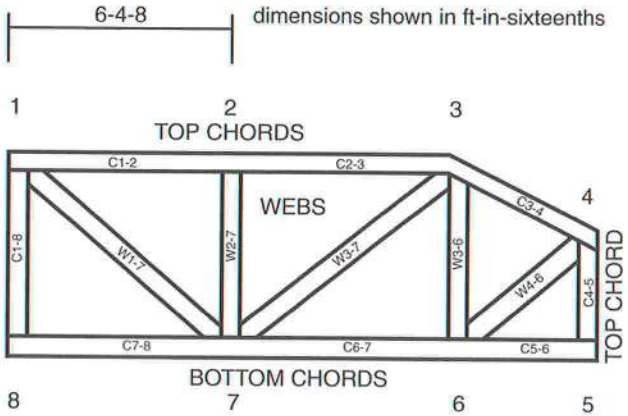


**JOINTS ARE GENERALLY NUMBERED/LETTERED CLOCKWISE AROUND THE TRUSS STARTING AT THE JOINT FARTHEST TO THE LEFT.**

**CHORDS AND WEBS ARE IDENTIFIED BY END JOINT NUMBERS/LETTERS.**

**CONNECTOR PLATE CODE APPROVALS**

| | |
|---|---|
| BOCA | 96-31, 95-43, 96-20-1, 96-67, 84-32 |
| ICBO | 4922, 5243, 5363, 3907 |
| SBCCI | 9667, 9730, 9604B, 9511, 9432A |

MiTek®

TEE-LOK®

# ⚠General Safety Notes

## Failure to Follow Could Cause Property Damage or Personal Injury

1. Additional stability bracing for truss system, e.g. diagonal or X-bracing, is always required. See BCSI1.
2. Never exceed the design loading shown and never stack materials on inadequately braced trusses.
3. Provide copies of this truss design to the building designer, erection supervisor, property owner and all other interested parties.
4. Cut members to bear tightly against each other.
5. Place plates on each face of truss at each joint and embed fully. Knots and wane at joint locations are regulated by ANSI/TPI1.
6. Design assumes trusses will be suitably protected from the environment in accord with ANSI/TPI1.
7. Unless otherwise noted, moisture content of lumber shall not exceed 19% at time of fabrication.
8. Unless expressly noted, this design is not applicable for use with fire retardant or preservative treated lumber.
9. Camber is a non-structural consideration and is the responsibility of truss fabricator. General practice is to camber for dead load deflection.
10. Plate type, size, orientation and location dimensions shown indicate minimum plating requirements.
11. Lumber used shall be of the species and size, and in all respects, equal to or better than that specified.
12. Top chords must be sheathed or purlins provided at spacing shown on design.
13. Bottom chords require lateral bracing at 10 ft. spacing, or less, if no ceiling is installed, unless otherwise noted.
14. Connections not shown are the responsibility of others.
15. Do not cut or alter truss member or plate without prior approval of a professional engineer.
16. Install and load vertically unless indicated otherwise.

| Job | Truss | Truss Type | Qty | Ply | WALKER RES |
|---|---|---|---|---|---|
| WALG | EJ4 | MONO TRUSS | 1 | 1 | T1875037<br>Job Reference (optional) |

SANTA FE TRUSS, HIGH SPRINGS FL., p.colacino — 6.200 s Oct 18 2005 MiTek Industries, Inc. Mon Nov 21 16:21:37 2005 Page 1

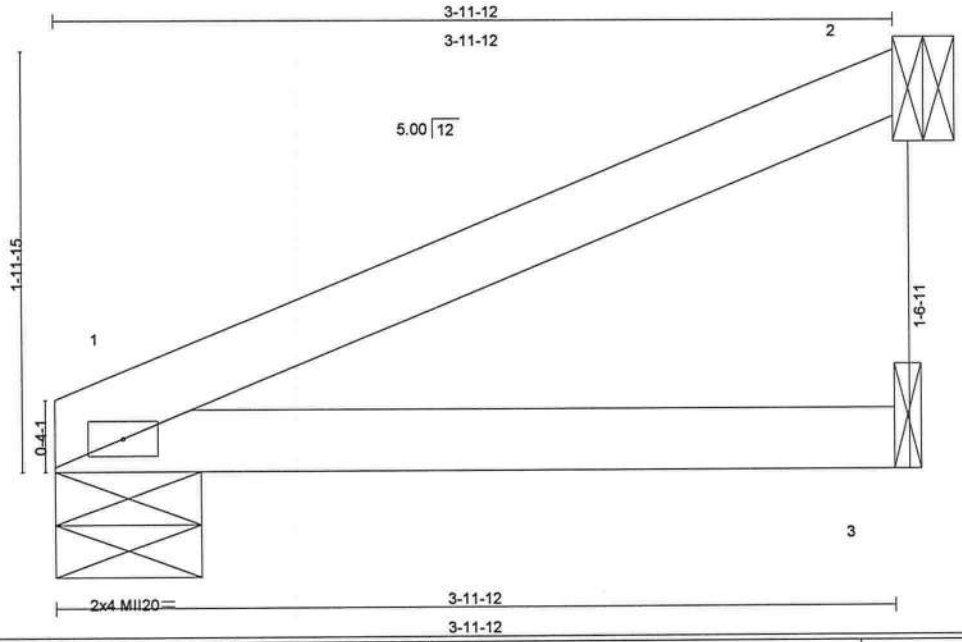


| LOADING (psf) | | SPACING | 2-0-0 | CSI | | DEFL | in | (loc) | l/defl | L/d | PLATES | GRIP |
|---|---|---|---|---|---|---|---|---|---|---|---|---|
| TCLL | 20.0 | Plates Increase | 1.25 | TC | 0.15 | Vert(LL) | -0.01 | 1-3 | >999 | 240 | MII20 | 249/190 |
| TCDL | 10.0 | Lumber Increase | 1.25 | BC | 0.11 | Vert(TL) | -0.02 | 1-3 | >999 | 180 | | |
| BCLL | 0.0 | Rep Stress Incr | YES | WB | 0.00 | Horz(TL) | -0.00 | 2 | n/a | n/a | | |
| BCDL | 10.0 | Code FBC2004/TPI2002 | | (Matrix) | | | | | | | Weight: 13 lb | |

**LUMBER**
TOP CHORD 2 X 4 SYP No.2D
BOT CHORD 2 X 4 SYP No.2D

**BRACING**
TOP CHORD Structural wood sheathing directly applied or 3-11-12 oc purlins.
BOT CHORD Rigid ceiling directly applied or 10-0-0 oc bracing.

**REACTIONS** (lb/size) 1=141/0-8-5, 2=105/Mechanical, 3=36/Mechanical
Max Horz 1=66(load case 5)
Max Uplift1=-20(load case 5), 2=-69(load case 5)
Max Grav 1=141(load case 1), 2=105(load case 1), 3=72(load case 2)

**FORCES** (lb) - Maximum Compression/Maximum Tension
TOP CHORD 1-2=-42/35
BOT CHORD 1-3=0/0

**NOTES**
1) Wind: ASCE 7-98; 110mph (3-second gust); h=18ft; TCDL=5.0psf; BCDL=5.0psf; Category II; Exp C; enclosed; MWFRS interior zone; Lumber DOL=1.33 plate grip DOL=1.33.
2) This truss has been designed for a 10.0 psf bottom chord live load nonconcurrent with any other live loads.
3) This truss requires plate inspection per the Tooth Count Method when this truss is chosen for quality assurance inspection.
4) Refer to girder(s) for truss to truss connections.
5) Provide mechanical connection (by others) of truss to bearing plate capable of withstanding 20 lb uplift at joint 1 and 69 lb uplift at joint 2.

**LOAD CASE(S)** Standard


Guo-Jie Zhang, FL Lic #47744
MiTek Industries, Inc.
1801 Massaro Blvd
Tampa FL 33619
FL Cert.#6634


November 22,2005

# Symbols

**PLATE LOCATION AND ORIENTATION**

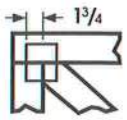


*Center plate on joint unless x,y offsets are indicated. Dimensions are in ft-in-sixteenths. Apply plates to both sides of truss and securely seat.

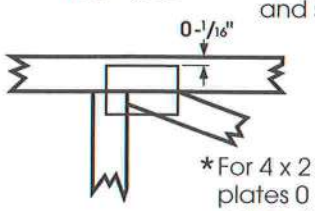


*For 4 x 2 orientation, locate plates 0 - 1/16" from outside edge of truss.

*This symbol indicates the required direction of slots in connector plates.

*** Plate location details available in MiTek 20/20 software or upon request.**

**PLATE SIZE**

4 x 4 — The first dimension is the width perpendicular to slots. Second dimension is the length parallel to slots.

**LATERAL BRACING**

Indicated by symbol shown and/or by text in the bracing section of the output. Use T, I or Eliminator bracing if indicated.

**BEARING**

Indicates location where bearings (supports) occur. Icons vary but reaction section indicates joint number where bearings occur.

**Industry Standards:**

ANSI/TPI1: National Design Specification for Metal Plate Connected Wood Truss Construction.
DSB-89: Design Standard for Bracing.
BCSI1: Building Component Safety Information, Guide to Good Practice for Handling, Installing & Bracing of Metal Plate Connected Wood Trusses.

# Numbering System

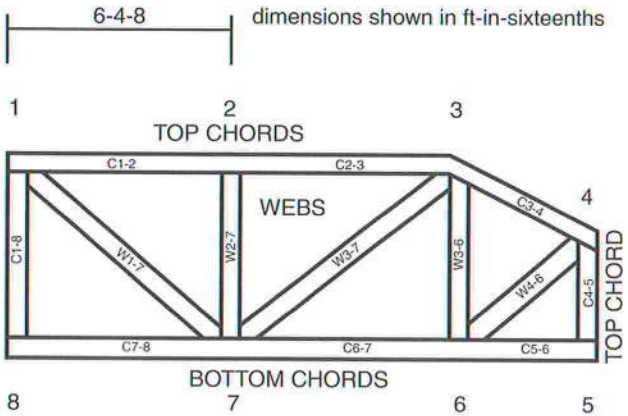


**JOINTS ARE GENERALLY NUMBERED/LETTERED CLOCKWISE AROUND THE TRUSS STARTING AT THE JOINT FARTHEST TO THE LEFT.**

**CHORDS AND WEBS ARE IDENTIFIED BY END JOINT NUMBERS/LETTERS.**

**CONNECTOR PLATE CODE APPROVALS**

| | |
|---|---|
| BOCA | 96-31, 95-43, 96-20-1, 96-67, 84-32 |
| ICBO | 4922, 5243, 5363, 3907 |
| SBCCI | 9667, 9730, 9604B, 9511, 9432A |

MiTek®

TEE-LOK®

# ⚠General Safety Notes

## Failure to Follow Could Cause Property Damage or Personal Injury

1. Additional stability bracing for truss system, e.g. diagonal or X-bracing, is always required. See BCSI1.
2. Never exceed the design loading shown and never stack materials on inadequately braced trusses.
3. Provide copies of this truss design to the building designer, erection supervisor, property owner and all other interested parties.
4. Cut members to bear tightly against each other.
5. Place plates on each face of truss at each joint and embed fully. Knots and wane at joint locations are regulated by ANSI/TPI1.
6. Design assumes trusses will be suitably protected from the environment in accord with ANSI/TPI1.
7. Unless otherwise noted, moisture content of lumber shall not exceed 19% at time of fabrication.
8. Unless expressly noted, this design is not applicable for use with fire retardant or preservative treated lumber.
9. Camber is a non-structural consideration and is the responsibility of truss fabricator. General practice is to camber for dead load deflection.
10. Plate type, size, orientation and location dimensions shown indicate minimum plating requirements.
11. Lumber used shall be of the species and size, and in all respects, equal to or better than that specified.
12. Top chords must be sheathed or purlins provided at spacing shown on design.
13. Bottom chords require lateral bracing at 10 ft. spacing, or less, if no ceiling is installed, unless otherwise noted.
14. Connections not shown are the responsibility of others.
15. Do not cut or alter truss member or plate without prior approval of a professional engineer.
16. Install and load vertically unless indicated otherwise.

| Job | Truss | Truss Type | Qty | Ply | WALKER RES | |
|---|---|---|---|---|---|---|
| WALG | EJ4GT | MONO HIP | 1 | 4x4 MII20 = | Job Reference (optional) 2x4 MII20 \|\| | T1875038 |

SANTA FE TRUSS, HIGH SPRINGS FL., p.colacino — 6.200 s Oct 18 2005 MiTek Industries, Inc. Mon Nov 21 16:21:38 2005 Page 1

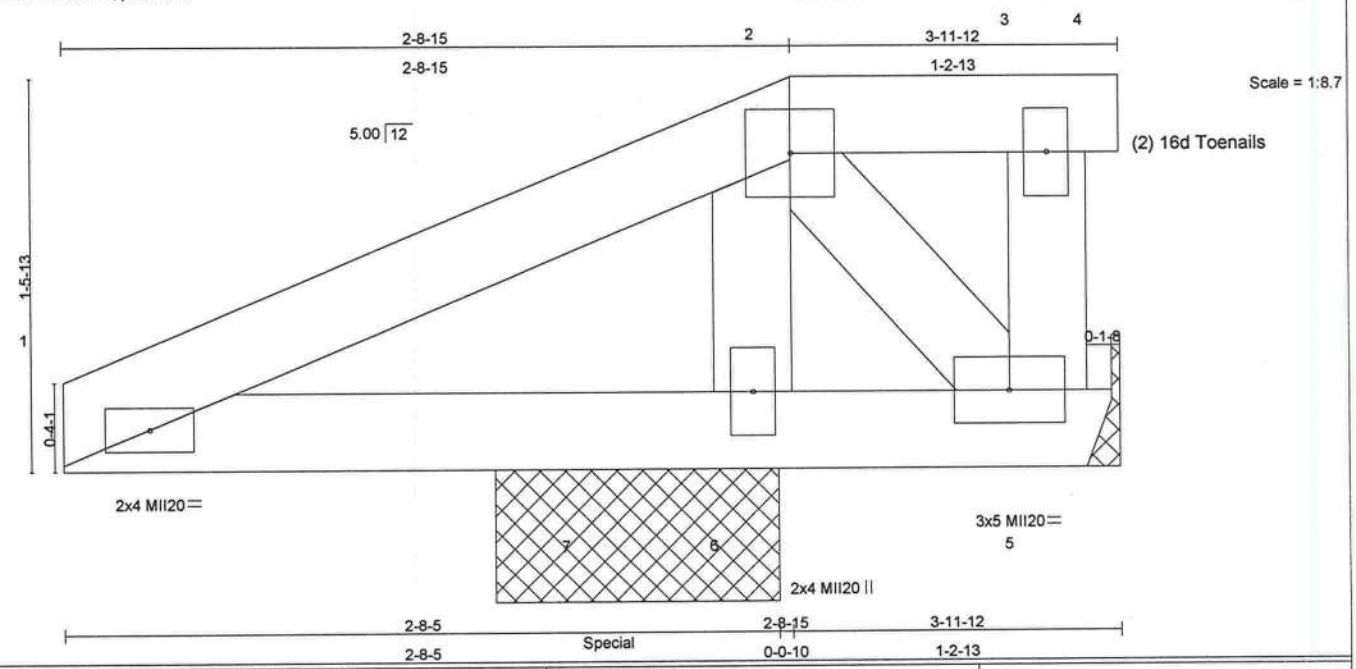


| LOADING (psf) | | SPACING | 2-0-0 | CSI | | DEFL | in | (loc) | l/defl | L/d | PLATES | GRIP |
|---|---|---|---|---|---|---|---|---|---|---|---|---|
| TCLL | 20.0 | Plates Increase | 1.25 | TC | 0.15 | Vert(LL) | 0.00 | 6 | >999 | 240 | MII20 | 249/190 |
| TCDL | 10.0 | Lumber Increase | 1.25 | BC | 0.10 | Vert(TL) | 0.00 | 6 | >999 | 180 | | |
| BCLL | 0.0 | Rep Stress Incr | NO | WB | 0.10 | Horz(TL) | -0.00 | 5 | n/a | n/a | | |
| BCDL | 10.0 | Code FBC2004/TPI2002 | | (Matrix) | | | | | | | Weight: 17 lb | |

**LUMBER**
TOP CHORD 2 X 4 SYP No.2D
BOT CHORD 2 X 4 SYP No.2D
WEBS 2 X 4 SYP No.3

**BRACING**
TOP CHORD Structural wood sheathing directly applied or 3-11-12 oc purlins.
BOT CHORD Rigid ceiling directly applied or 6-0-0 oc bracing.

**REACTIONS** (lb/size) 5=-233/Mechanical, 6=613/1-0-13
Max Horz 6=48(load case 5)
Max Uplift5=-233(load case 1), 6=-323(load case 5)
Max Grav 5=144(load case 5), 6=613(load case 1)

**FORCES** (lb) - Maximum Compression/Maximum Tension
TOP CHORD 1-2=-168/292, 2-3=-0/0, 3-4=0/0
BOT CHORD 1-7=-244/174, 6-7=-244/174, 5-6=-189/97
WEBS 3-5=-35/21, 2-5=-154/300, 2-6=-452/235

**NOTES**
1) Unbalanced roof live loads have been considered for this design.
2) Wind: ASCE 7-98; 110mph (3-second gust); h=18ft; TCDL=5.0psf; BCDL=5.0psf; Category II; Exp C; enclosed; MWFRS interior zone; cantilever left exposed ; Lumber DOL=1.33 plate grip DOL=1.33.
3) Provide adequate drainage to prevent water ponding.
4) This truss has been designed for a 10.0 psf bottom chord live load nonconcurrent with any other live loads.
5) This truss requires plate inspection per the Tooth Count Method when this truss is chosen for quality assurance inspection.
6) Refer to girder(s) for truss to truss connections.
7) Provide mechanical connection (by others) of truss to bearing plate capable of withstanding 233 lb uplift at joint 5 and 323 lb uplift at joint 6.
8) Hanger(s) or other connection device(s) shall be provided sufficient to support concentrated load(s) 78 lb down and 33 lb up at 2-0-8 on bottom chord. The design/selection of such connection device(s) is the responsibility of others.
9) In the LOAD CASE(S) section, loads applied to the face of the truss are noted as front (F) or back (B).

**LOAD CASE(S)** Standard
1) Regular: Lumber Increase=1.25, Plate Increase=1.25
Uniform Loads (plf)
Vert: 1-2=-60, 2-3=-60, 3-4=-20, 1-5=-20
Concentrated Loads (lb)
Vert: 7=-78(B)


Guo-Jie Zhang, FL Lic #47744
MiTek Industries, Inc.
1801 Massaro Blvd
Tampa FL 33619
FL Cert.#6634


November 22,2005

# Symbols

**PLATE LOCATION AND ORIENTATION**

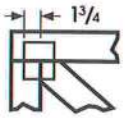


*Center plate on joint unless x,y offsets are indicated. Dimensions are in ft-in-sixteenths. Apply plates to both sides of truss and securely seat.

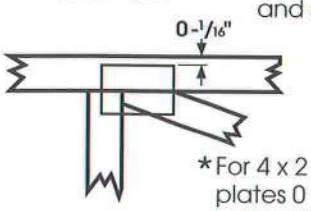


*For 4 x 2 orientation, locate plates 0 - 1/16" from outside edge of truss.

*This symbol indicates the required direction of slots in connector plates.

*** Plate location details available in MiTek 20/20 software or upon request.**

**PLATE SIZE**

4 x 4 — The first dimension is the width perpendicular to slots. Second dimension is the length parallel to slots.

**LATERAL BRACING**

Indicated by symbol shown and/or by text in the bracing section of the output. Use T, I or Eliminator bracing if indicated.

**BEARING**

Indicates location where bearings (supports) occur. Icons vary but reaction section indicates joint number where bearings occur.

**Industry Standards:**

ANSI/TPI1: National Design Specification for Metal Plate Connected Wood Truss Construction.
DSB-89: Design Standard for Bracing.
BCSI1: Building Component Safety Information, Guide to Good Practice for Handling, Installing & Bracing of Metal Plate Connected Wood Trusses.

# Numbering System

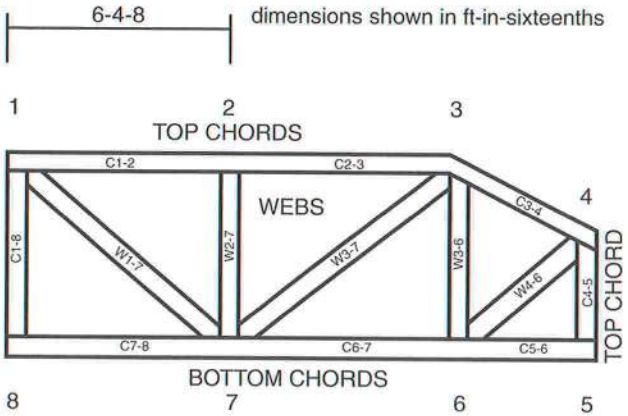


**JOINTS ARE GENERALLY NUMBERED/LETTERED CLOCKWISE AROUND THE TRUSS STARTING AT THE JOINT FARTHEST TO THE LEFT.**

**CHORDS AND WEBS ARE IDENTIFIED BY END JOINT NUMBERS/LETTERS.**

**CONNECTOR PLATE CODE APPROVALS**

| | |
|---|---|
| BOCA | 96-31, 95-43, 96-20-1, 96-67, 84-32 |
| ICBO | 4922, 5243, 5363, 3907 |
| SBCCI | 9667, 9730, 9604B, 9511, 9432A |

MiTek®

TEE-LOK®

# ⚠General Safety Notes

## Failure to Follow Could Cause Property Damage or Personal Injury

1. Additional stability bracing for truss system, e.g. diagonal or X-bracing, is always required. See BCSI1.
2. Never exceed the design loading shown and never stack materials on inadequately braced trusses.
3. Provide copies of this truss design to the building designer, erection supervisor, property owner and all other interested parties.
4. Cut members to bear tightly against each other.
5. Place plates on each face of truss at each joint and embed fully. Knots and wane at joint locations are regulated by ANSI/TPI1.
6. Design assumes trusses will be suitably protected from the environment in accord with ANSI/TPI1.
7. Unless otherwise noted, moisture content of lumber shall not exceed 19% at time of fabrication.
8. Unless expressly noted, this design is not applicable for use with fire retardant or preservative treated lumber.
9. Camber is a non-structural consideration and is the responsibility of truss fabricator. General practice is to camber for dead load deflection.
10. Plate type, size, orientation and location dimensions shown indicate minimum plating requirements.
11. Lumber used shall be of the species and size, and in all respects, equal to or better than that specified.
12. Top chords must be sheathed or purlins provided at spacing shown on design.
13. Bottom chords require lateral bracing at 10 ft. spacing, or less, if no ceiling is installed, unless otherwise noted.
14. Connections not shown are the responsibility of others.
15. Do not cut or alter truss member or plate without prior approval of a professional engineer.
16. Install and load vertically unless indicated otherwise.

| Job | Truss | Truss Type | Qty | Ply | WALKER RES | |
|---|---|---|---|---|---|---|
| WALG | EJ5 | MONO HIP | 1 | 1 | Job Reference (optional) | T1875039 |

SANTA FE TRUSS, HIGH SPRINGS FL., p.colacino

6.200 s Oct 18 2005 MiTek Industries, Inc. Mon Nov 21 16:21:39 2005 Page 1

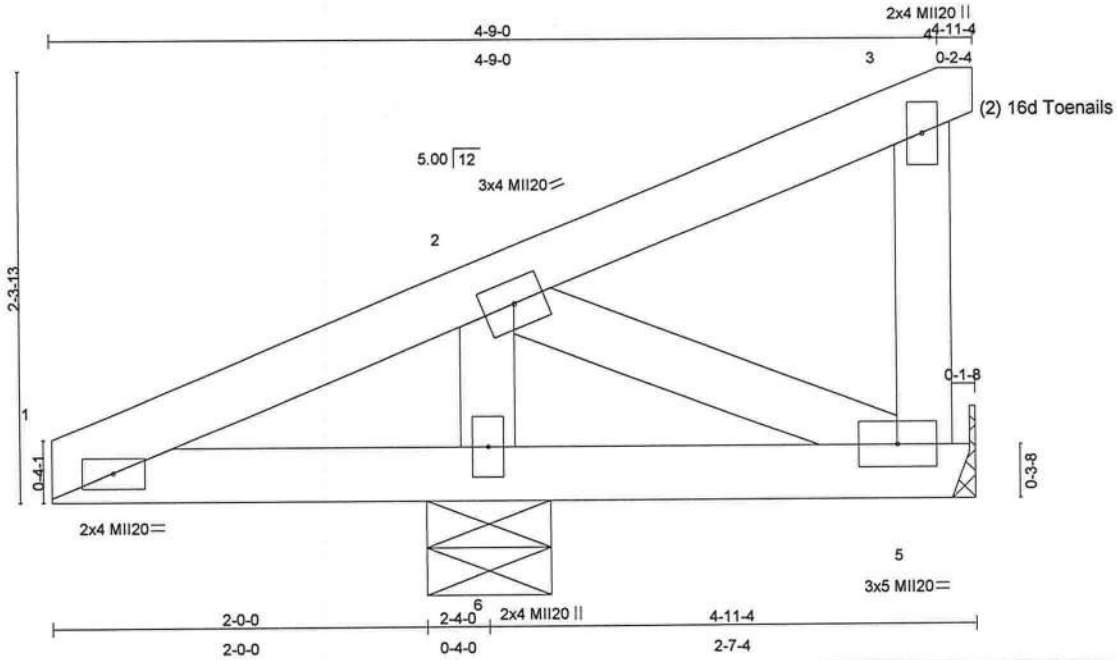


Plate Offsets (X,Y): [1:0-0-0,0-0-0], [2:0-0-0,0-0-0], [3:0-0-0,0-0-0], [5:0-0-0,0-0-0]

| LOADING (psf) | | SPACING | 2-0-0 | CSI | | DEFL | in | (loc) | l/defl | L/d | PLATES | GRIP |
|---|---|---|---|---|---|---|---|---|---|---|---|---|
| TCLL | 20.0 | Plates Increase | 1.25 | TC | 0.11 | Vert(LL) | -0.00 | 6 | >999 | 240 | MII20 | 249/190 |
| TCDL | 10.0 | Lumber Increase | 1.25 | BC | 0.06 | Vert(TL) | -0.00 | 5-6 | >999 | 180 | | |
| BCLL | 0.0 | Rep Stress Incr | YES | WB | 0.05 | Horz(TL) | -0.00 | 5 | n/a | n/a | | |
| BCDL | 10.0 | Code FBC2004/TPI2002 | | (Matrix) | | | | | | | Weight: 22 lb | |

**LUMBER**
TOP CHORD 2 X 4 SYP No.2D
BOT CHORD 2 X 4 SYP No.2D
WEBS 2 X 4 SYP No.3

**BRACING**
TOP CHORD Structural wood sheathing directly applied or 4-11-4 oc purlins.
BOT CHORD Rigid ceiling directly applied or 6-0-0 oc bracing.

**REACTIONS** (lb/size) 5=4/Mechanical, 6=373/0-8-0
Max Horz 6=81(load case 5)
Max Uplift 5=-29(load case 4), 6=-171(load case 5)
Max Grav 5=9(load case 3), 6=373(load case 1)

**FORCES** (lb) - Maximum Compression/Maximum Tension
TOP CHORD 1-2=-121/195, 2-3=-35/14, 3-4=-1/0
BOT CHORD 1-6=-146/123, 5-6=-146/42
WEBS 3-5=-53/33, 2-6=-307/150, 2-5=-46/159

**NOTES**
1) Wind: ASCE 7-98; 110mph (3-second gust); h=18ft; TCDL=5.0psf; BCDL=5.0psf; Category II; Exp C; enclosed; MWFRS interior zone; cantilever left exposed ; Lumber DOL=1.33 plate grip DOL=1.33.
2) This truss has been designed for a 10.0 psf bottom chord live load nonconcurrent with any other live loads.
3) This truss requires plate inspection per the Tooth Count Method when this truss is chosen for quality assurance inspection.
4) Refer to girder(s) for truss to truss connections.
5) Provide mechanical connection (by others) of truss to bearing plate capable of withstanding 29 lb uplift at joint 5 and 171 lb uplift at joint 6.

**LOAD CASE(S)** Standard


Guo-Jie Zhang, FL Lic #47744
MiTek Industries, Inc.
1801 Massaro Blvd
Tampa FL 33619
FL Cert.#6634


November 22,2005

# Symbols

**PLATE LOCATION AND ORIENTATION**


*Center plate on joint unless x,y offsets are indicated. Dimensions are in ft-in-sixteenths. Apply plates to both sides of truss and securely seat.

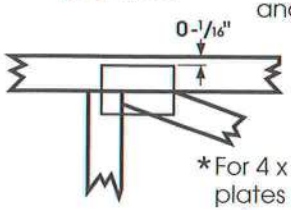


*For 4 x 2 orientation, locate plates 0 - 1/16" from outside edge of truss.

*This symbol indicates the required direction of slots in connector plates.

*** Plate location details available in MiTek 20/20 software or upon request.**

**PLATE SIZE**

4 x 4 — The first dimension is the width perpendicular to slots. Second dimension is the length parallel to slots.

**LATERAL BRACING**

Indicated by symbol shown and/or by text in the bracing section of the output. Use T, I or Eliminator bracing if indicated.

**BEARING**

Indicates location where bearings (supports) occur. Icons vary but reaction section indicates joint number where bearings occur.

**Industry Standards:**

ANSI/TPI1: National Design Specification for Metal Plate Connected Wood Truss Construction.
DSB-89: Design Standard for Bracing.
BCSI1: Building Component Safety Information, Guide to Good Practice for Handling, Installing & Bracing of Metal Plate Connected Wood Trusses.

# Numbering System

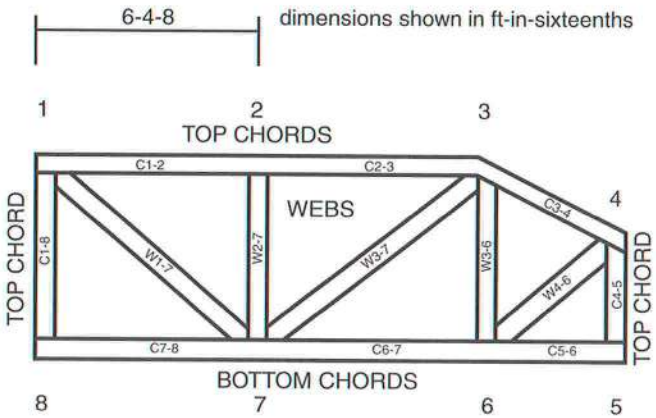


**JOINTS ARE GENERALLY NUMBERED/LETTERED CLOCKWISE AROUND THE TRUSS STARTING AT THE JOINT FARTHEST TO THE LEFT.**

**CHORDS AND WEBS ARE IDENTIFIED BY END JOINT NUMBERS/LETTERS.**

**CONNECTOR PLATE CODE APPROVALS**

| | |
|---|---|
| BOCA | 96-31, 95-43, 96-20-1, 96-67, 84-32 |
| ICBO | 4922, 5243, 5363, 3907 |
| SBCCI | 9667, 9730, 9604B, 9511, 9432A |

MiTek®

TEE-LOK®

# ⚠General Safety Notes

## Failure to Follow Could Cause Property Damage or Personal Injury

1. Additional stability bracing for truss system, e.g. diagonal or X-bracing, is always required. See BCSI1.
2. Never exceed the design loading shown and never stack materials on inadequately braced trusses.
3. Provide copies of this truss design to the building designer, erection supervisor, property owner and all other interested parties.
4. Cut members to bear tightly against each other.
5. Place plates on each face of truss at each joint and embed fully. Knots and wane at joint locations are regulated by ANSI/TPI1.
6. Design assumes trusses will be suitably protected from the environment in accord with ANSI/TPI1.
7. Unless otherwise noted, moisture content of lumber shall not exceed 19% at time of fabrication.
8. Unless expressly noted, this design is not applicable for use with fire retardant or preservative treated lumber.
9. Camber is a non-structural consideration and is the responsibility of truss fabricator. General practice is to camber for dead load deflection.
10. Plate type, size, orientation and location dimensions shown indicate minimum plating requirements.
11. Lumber used shall be of the species and size, and in all respects, equal to or better than that specified.
12. Top chords must be sheathed or purlins provided at spacing shown on design.
13. Bottom chords require lateral bracing at 10 ft. spacing, or less, if no ceiling is installed, unless otherwise noted.
14. Connections not shown are the responsibility of others.
15. Do not cut or alter truss member or plate without prior approval of a professional engineer.
16. Install and load vertically unless indicated otherwise.

| Job | Truss | Truss Type | Qty | Ply | WALKER RES |
|---|---|---|---|---|---|
| WALG | EJ5GT | MONO HIP | 4x4 MII20= | 1 | T1875040 |

Job Reference (optional)

SANTA FE TRUSS, HIGH SPRINGS FL., p.colacino

6.200 s Oct 18 2005 MiTek Industries, Inc. Mon Nov 21 16:21:40 2005 Page 1

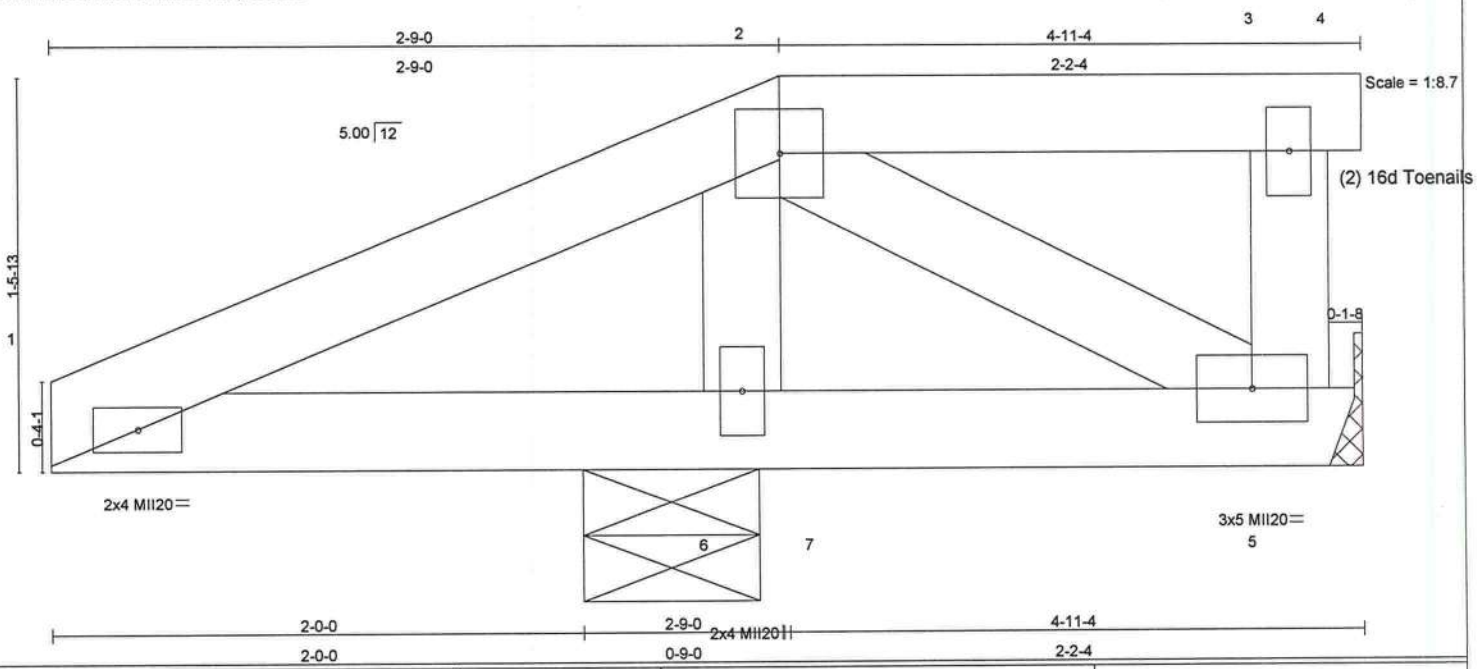


| LOADING (psf) | | SPACING | 2-0-0 | CSI | | DEFL | in | (loc) | l/defl | L/d | PLATES | GRIP |
|---|---|---|---|---|---|---|---|---|---|---|---|---|
| TCLL | 20.0 | Plates Increase | 1.25 | TC | 0.15 | Vert(LL) | 0.00 | 6 | >999 | 240 | MII20 | 249/190 |
| TCDL | 10.0 | Lumber Increase | 1.25 | BC | 0.07 | Vert(TL) | 0.00 | 6 | >999 | 180 | | |
| BCLL | 0.0 | Rep Stress Incr | NO | WB | 0.07 | Horz(TL) | -0.00 | 5 | n/a | n/a | | |
| BCDL | 10.0 | Code FBC2004/TPI2002 | | (Matrix) | | | | | | | Weight: 21 lb | |

**LUMBER**
TOP CHORD 2 X 4 SYP No.2D
BOT CHORD 2 X 4 SYP No.2D
WEBS 2 X 4 SYP No.3

**BRACING**
TOP CHORD Structural wood sheathing directly applied or 4-11-4 oc purlins.
BOT CHORD Rigid ceiling directly applied or 6-0-0 oc bracing.

**REACTIONS** (lb/size) 5=-41/Mechanical, 6=440/0-8-0
Max Horz 6=48(load case 5)
Max Uplift5=-41(load case 1), 6=-244(load case 5)
Max Grav 5=61(load case 5), 6=440(load case 1)

**FORCES** (lb) - Maximum Compression/Maximum Tension
TOP CHORD 1-2=-166/274, 2-3=-0/0, 3-4=0/0
BOT CHORD 1-6=-228/173, 6-7=-183/98, 5-7=-183/98
WEBS 2-5=-115/215, 3-5=-63/36, 2-6=-368/215

**NOTES**
1) Unbalanced roof live loads have been considered for this design.
2) Wind: ASCE 7-98; 110mph (3-second gust); h=18ft; TCDL=5.0psf; BCDL=5.0psf; Category II; Exp C; enclosed; MWFRS interior zone; cantilever left exposed ; Lumber DOL=1.33 plate grip DOL=1.33.
3) Provide adequate drainage to prevent water ponding.
4) This truss has been designed for a 10.0 psf bottom chord live load nonconcurrent with any other live loads.
5) This truss requires plate inspection per the Tooth Count Method when this truss is chosen for quality assurance inspection.
6) Refer to girder(s) for truss to truss connections.
7) Provide mechanical connection (by others) of truss to bearing plate capable of withstanding 41 lb uplift at joint 5 and 244 lb uplift at joint 6.
8) Hanger(s) or other connection device(s) shall be provided sufficient to support concentrated load(s) 14 lb down and 32 lb up at 2-9-0 on top chord, and 12 lb down at 3-0-0 on bottom chord. The design/selection of such connection device(s) is the responsibility of others.
9) In the LOAD CASE(S) section, loads applied to the face of the truss are noted as front (F) or back (B).

**LOAD CASE(S)** Standard
1) Regular: Lumber Increase=1.25, Plate Increase=1.25
Uniform Loads (plf)
Vert: 1-2=-60, 2-3=-60, 3-4=-20, 1-5=-20
Concentrated Loads (lb)
Vert: 2=-14(F) 7=-6(F)


Guo-Jie Zhang, FL Lic #47744
MiTek Industries, Inc.
1801 Massaro Blvd
Tampa FL 33619
FL Cert.#6634


November 22,2005

# Symbols

**PLATE LOCATION AND ORIENTATION**


*Center plate on joint unless x,y offsets are indicated. Dimensions are in ft-in-sixteenths. Apply plates to both sides of truss and securely seat.

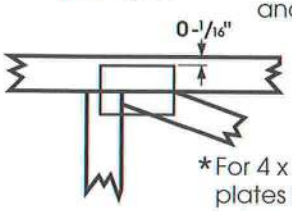


*For 4 x 2 orientation, locate plates 0 - 1/16" from outside edge of truss.

*This symbol indicates the required direction of slots in connector plates.

*** Plate location details available in MiTek 20/20 software or upon request.**

**PLATE SIZE**

4 x 4 — The first dimension is the width perpendicular to slots. Second dimension is the length parallel to slots.

**LATERAL BRACING**

Indicated by symbol shown and/or by text in the bracing section of the output. Use T, I or Eliminator bracing if indicated.

**BEARING**

Indicates location where bearings (supports) occur. Icons vary but reaction section indicates joint number where bearings occur.

**Industry Standards:**

ANSI/TPI1: National Design Specification for Metal Plate Connected Wood Truss Construction.
DSB-89: Design Standard for Bracing.
BCSI1: Building Component Safety Information, Guide to Good Practice for Handling, Installing & Bracing of Metal Plate Connected Wood Trusses.

# Numbering System

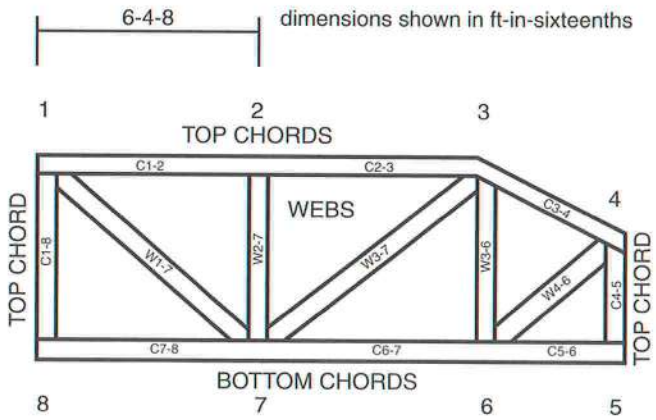


**JOINTS ARE GENERALLY NUMBERED/LETTERED CLOCKWISE AROUND THE TRUSS STARTING AT THE JOINT FARTHEST TO THE LEFT.**

**CHORDS AND WEBS ARE IDENTIFIED BY END JOINT NUMBERS/LETTERS.**

**CONNECTOR PLATE CODE APPROVALS**

| | |
|---|---|
| BOCA | 96-31, 95-43, 96-20-1, 96-67, 84-32 |
| ICBO | 4922, 5243, 5363, 3907 |
| SBCCI | 9667, 9730, 9604B, 9511, 9432A |

MiTek®

TEE-LOK®

# ⚠General Safety Notes

## Failure to Follow Could Cause Property Damage or Personal Injury

1. Additional stability bracing for truss system, e.g. diagonal or X-bracing, is always required. See BCSI1.
2. Never exceed the design loading shown and never stack materials on inadequately braced trusses.
3. Provide copies of this truss design to the building designer, erection supervisor, property owner and all other interested parties.
4. Cut members to bear tightly against each other.
5. Place plates on each face of truss at each joint and embed fully. Knots and wane at joint locations are regulated by ANSI/TPI1.
6. Design assumes trusses will be suitably protected from the environment in accord with ANSI/TPI1.
7. Unless otherwise noted, moisture content of lumber shall not exceed 19% at time of fabrication.
8. Unless expressly noted, this design is not applicable for use with fire retardant or preservative treated lumber.
9. Camber is a non-structural consideration and is the responsibility of truss fabricator. General practice is to camber for dead load deflection.
10. Plate type, size, orientation and location dimensions shown indicate minimum plating requirements.
11. Lumber used shall be of the species and size, and in all respects, equal to or better than that specified.
12. Top chords must be sheathed or purlins provided at spacing shown on design.
13. Bottom chords require lateral bracing at 10 ft. spacing, or less, if no ceiling is installed, unless otherwise noted.
14. Connections not shown are the responsibility of others.
15. Do not cut or alter truss member or plate without prior approval of a professional engineer.
16. Install and load vertically unless indicated otherwise.

| Job | Truss | Truss Type | Qty | Ply | WALKER RES |
|---|---|---|---|---|---|
| WALG | EJ6 | JACK | 2 | 1 | T1875041 |
| | | | | | Job Reference (optional) |

SANTA FE TRUSS, HIGH SPRINGS FL., p.colacino

6.200 s Oct 18 2005 MiTek Industries, Inc. Mon Nov 21 16:21:40 2005 Page 1

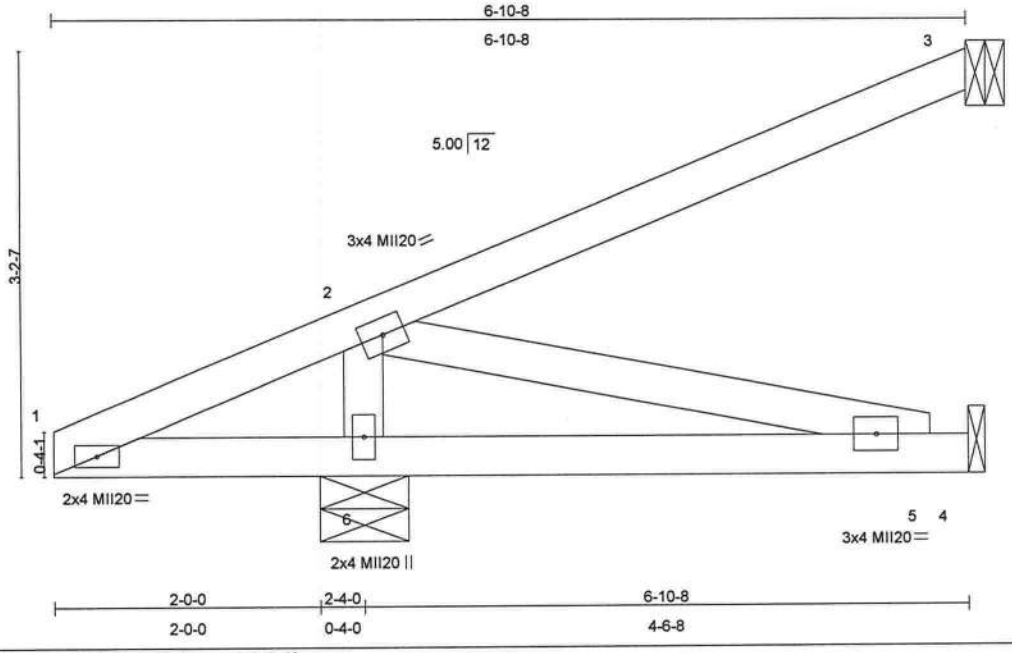


Plate Offsets (X,Y): [1:0-0-0,0-0-0], [2:0-0-0,0-0-0], [5:0-0-0,0-0-0]

| LOADING (psf) | | SPACING | 2-0-0 | CSI | | DEFL | in | (loc) | l/defl | L/d | PLATES | GRIP |
|---|---|---|---|---|---|---|---|---|---|---|---|---|
| TCLL | 20.0 | Plates Increase | 1.25 | TC | 0.20 | Vert(LL) | -0.01 | 5-6 | >999 | 240 | MII20 | 249/190 |
| TCDL | 10.0 | Lumber Increase | 1.25 | BC | 0.13 | Vert(TL) | -0.03 | 5-6 | >999 | 180 | | |
| BCLL | 0.0 | Rep Stress Incr | YES | WB | 0.05 | Horz(TL) | -0.00 | 3 | n/a | n/a | | |
| BCDL | 10.0 | Code FBC2004/TPI2002 | | (Matrix) | | | | | | | Weight: 29 lb | |

**LUMBER**
TOP CHORD 2 X 4 SYP No.2D
BOT CHORD 2 X 4 SYP No.2D
WEBS 2 X 4 SYP No.3

**BRACING**
TOP CHORD Structural wood sheathing directly applied or 6-0-0 oc purlins.
BOT CHORD Rigid ceiling directly applied or 6-0-0 oc bracing.

**REACTIONS** (lb/size) 3=107/Mechanical, 4=21/Mechanical, 6=412/0-8-0
Max Horz 6=115(load case 5)
Max Uplift3=-66(load case 5), 6=-161(load case 5)
Max Grav 3=107(load case 1), 4=61(load case 2), 6=412(load case 1)

**FORCES** (lb) - Maximum Compression/Maximum Tension
TOP CHORD 1-2=-103/119, 2-3=-60/31
BOT CHORD 1-6=-67/101, 5-6=-68/5, 4-5=0/0
WEBS 2-6=-319/164, 2-5=-5/70

**NOTES**
1) Wind: ASCE 7-98; 110mph (3-second gust); h=18ft; TCDL=5.0psf; BCDL=5.0psf; Category II; Exp C; enclosed; MWFRS interior zone; cantilever left exposed ; Lumber DOL=1.33 plate grip DOL=1.33.
2) This truss has been designed for a 10.0 psf bottom chord live load nonconcurrent with any other live loads.
3) This truss requires plate inspection per the Tooth Count Method when this truss is chosen for quality assurance inspection.
4) Refer to girder(s) for truss to truss connections.
5) Provide mechanical connection (by others) of truss to bearing plate capable of withstanding 66 lb uplift at joint 3 and 161 lb uplift at joint 6.

**LOAD CASE(S)** Standard


Guo-Jie Zhang, FL Lic #47744
MiTek Industries, Inc.
1801 Massaro Blvd
Tampa FL 33619
FL Cert.#6634


November 22,2005

# Symbols

**PLATE LOCATION AND ORIENTATION**

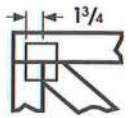


*Center plate on joint unless x,y offsets are indicated. Dimensions are in ft-in-sixteenths. Apply plates to both sides of truss and securely seat.

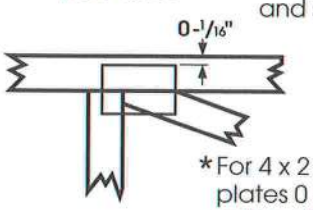


*For 4 x 2 orientation, locate plates 0 - 1/16" from outside edge of truss.

*This symbol indicates the required direction of slots in connector plates.

*** Plate location details available in MiTek 20/20 software or upon request.**

**PLATE SIZE**

4 x 4 — The first dimension is the width perpendicular to slots. Second dimension is the length parallel to slots.

**LATERAL BRACING**

Indicated by symbol shown and/or by text in the bracing section of the output. Use T, I or Eliminator bracing if indicated.

**BEARING**

Indicates location where bearings (supports) occur. Icons vary but reaction section indicates joint number where bearings occur.

**Industry Standards:**

ANSI/TPI1: National Design Specification for Metal Plate Connected Wood Truss Construction.
DSB-89: Design Standard for Bracing.
BCSI1: Building Component Safety Information, Guide to Good Practice for Handling, Installing & Bracing of Metal Plate Connected Wood Trusses.

# Numbering System

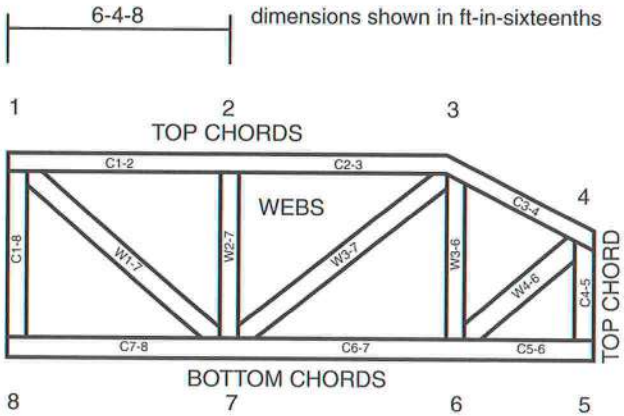


**JOINTS ARE GENERALLY NUMBERED/LETTERED CLOCKWISE AROUND THE TRUSS STARTING AT THE JOINT FARTHEST TO THE LEFT.**

**CHORDS AND WEBS ARE IDENTIFIED BY END JOINT NUMBERS/LETTERS.**

**CONNECTOR PLATE CODE APPROVALS**

| | |
|---|---|
| BOCA | 96-31, 95-43, 96-20-1, 96-67, 84-32 |
| ICBO | 4922, 5243, 5363, 3907 |
| SBCCI | 9667, 9730, 9604B, 9511, 9432A |

MiTek®

TEE-LOK®

# ⚠General Safety Notes

## Failure to Follow Could Cause Property Damage or Personal Injury

1. Additional stability bracing for truss system, e.g. diagonal or X-bracing, is always required. See BCSI1.
2. Never exceed the design loading shown and never stack materials on inadequately braced trusses.
3. Provide copies of this truss design to the building designer, erection supervisor, property owner and all other interested parties.
4. Cut members to bear tightly against each other.
5. Place plates on each face of truss at each joint and embed fully. Knots and wane at joint locations are regulated by ANSI/TPI1.
6. Design assumes trusses will be suitably protected from the environment in accord with ANSI/TPI1.
7. Unless otherwise noted, moisture content of lumber shall not exceed 19% at time of fabrication.
8. Unless expressly noted, this design is not applicable for use with fire retardant or preservative treated lumber.
9. Camber is a non-structural consideration and is the responsibility of truss fabricator. General practice is to camber for dead load deflection.
10. Plate type, size, orientation and location dimensions shown indicate minimum plating requirements.
11. Lumber used shall be of the species and size, and in all respects, equal to or better than that specified.
12. Top chords must be sheathed or purlins provided at spacing shown on design.
13. Bottom chords require lateral bracing at 10 ft. spacing, or less, if no ceiling is installed, unless otherwise noted.
14. Connections not shown are the responsibility of others.
15. Do not cut or alter truss member or plate without prior approval of a professional engineer.
16. Install and load vertically unless indicated otherwise.

| Job | Truss | Truss Type | Qty | Ply | WALKER RES |
|---|---|---|---|---|---|
| WALG | EJ6GT1 | MONO HIP | 1 | 1 | T1875042 |

Job Reference (optional)

SANTA FE TRUSS, HIGH SPRINGS FL., p.colacino

6.200 s Oct 18 2005 MiTek Industries, Inc. Mon Nov 21 16:21:41 2005 Page 1

Scale = 1:16.6

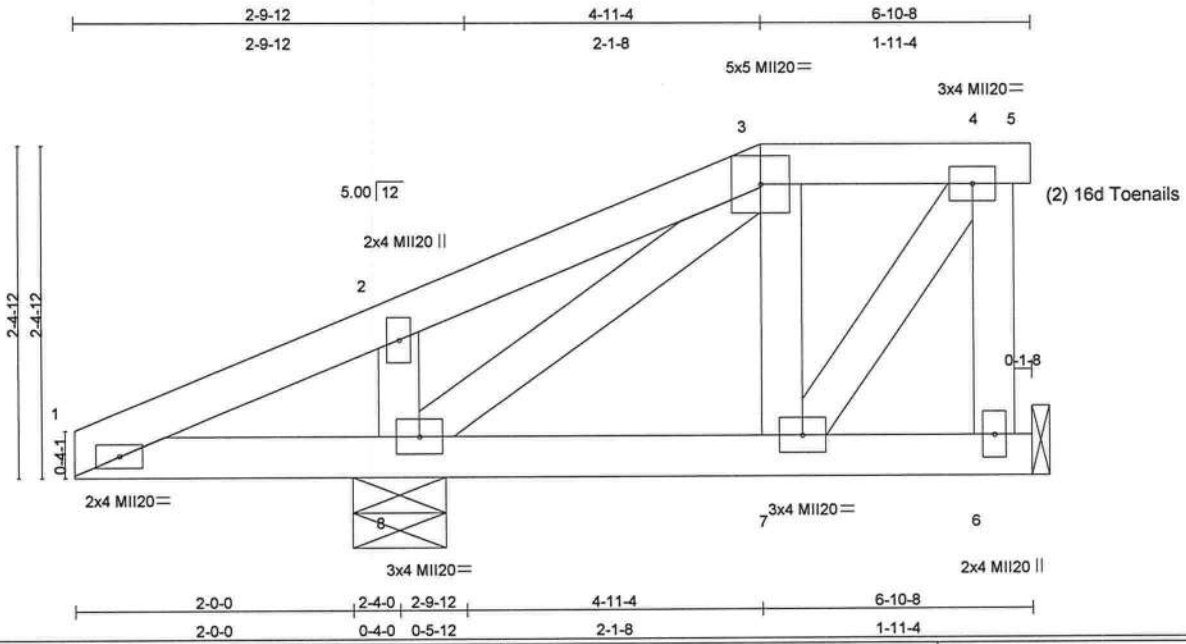


| LOADING (psf) | | SPACING | 2-0-0 | CSI | | DEFL | in | (loc) | l/defl | L/d | PLATES | GRIP |
|---|---|---|---|---|---|---|---|---|---|---|---|---|
| TCLL | 20.0 | Plates Increase | 1.25 | TC | 0.12 | Vert(LL) | -0.00 | 8 | >999 | 240 | MII20 | 249/190 |
| TCDL | 10.0 | Lumber Increase | 1.25 | BC | 0.06 | Vert(TL) | -0.00 | 7-8 | >999 | 180 | | |
| BCLL | 0.0 | Rep Stress Incr | YES | WB | 0.05 | Horz(TL) | 0.00 | 6 | n/a | n/a | | |
| BCDL | 10.0 | Code FBC2004/TPI2002 | | (Matrix) | | | | | | | Weight: 36 lb | |

**LUMBER**
TOP CHORD 2 X 4 SYP No.2D
BOT CHORD 2 X 4 SYP No.2D
WEBS 2 X 4 SYP No.3

**BRACING**
TOP CHORD Structural wood sheathing directly applied or 6-0-0 oc purlins.
BOT CHORD Rigid ceiling directly applied or 6-0-0 oc bracing.

**REACTIONS** (lb/size) 8=408/0-8-0, 6=125/Mechanical
Max Horz 8=85(load case 5)
Max Uplift8=-172(load case 5), 6=-51(load case 4)

**FORCES** (lb) - Maximum Compression/Maximum Tension
TOP CHORD 1-2=-118/185, 2-3=-63/164, 3-4=-40/17, 4-5=0/0
BOT CHORD 1-8=-136/120, 7-8=-20/41, 6-7=0/0
WEBS 3-7=-21/47, 4-7=-28/68, 3-8=-228/48, 4-6=-111/55, 2-8=-194/120

**NOTES**
1) Unbalanced roof live loads have been considered for this design.
2) Wind: ASCE 7-98; 110mph (3-second gust); h=18ft; TCDL=5.0psf; BCDL=5.0psf; Category II; Exp C; enclosed; MWFRS interior zone; cantilever left exposed ; Lumber DOL=1.33 plate grip DOL=1.33.
3) Provide adequate drainage to prevent water ponding.
4) This truss has been designed for a 10.0 psf bottom chord live load nonconcurrent with any other live loads.
5) This truss requires plate inspection per the Tooth Count Method when this truss is chosen for quality assurance inspection.
6) Refer to girder(s) for truss to truss connections.
7) Provide mechanical connection (by others) of truss to bearing plate capable of withstanding 172 lb uplift at joint 8 and 51 lb uplift at joint 6.

**LOAD CASE(S)** Standard


Guo-Jie Zhang, FL Lic #47744
MiTek Industries, Inc.
1801 Massaro Blvd
Tampa FL 33619
FL Cert.#6634


November 22,2005

# Symbols

**PLATE LOCATION AND ORIENTATION**

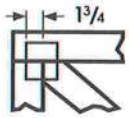


*Center plate on joint unless x,y offsets are indicated. Dimensions are in ft-in-sixteenths. Apply plates to both sides of truss and securely seat.

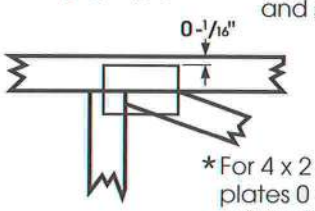


*For 4 x 2 orientation, locate plates 0 - 1/16" from outside edge of truss.

*This symbol indicates the required direction of slots in connector plates.

*** Plate location details available in MiTek 20/20 software or upon request.**

**PLATE SIZE**

4 x 4 — The first dimension is the width perpendicular to slots. Second dimension is the length parallel to slots.

**LATERAL BRACING**

Indicated by symbol shown and/or by text in the bracing section of the output. Use T, I or Eliminator bracing if indicated.

**BEARING**

Indicates location where bearings (supports) occur. Icons vary but reaction section indicates joint number where bearings occur.

**Industry Standards:**

ANSI/TPI1: National Design Specification for Metal Plate Connected Wood Truss Construction.
DSB-89: Design Standard for Bracing.
BCSI1: Building Component Safety Information, Guide to Good Practice for Handling, Installing & Bracing of Metal Plate Connected Wood Trusses.

# Numbering System

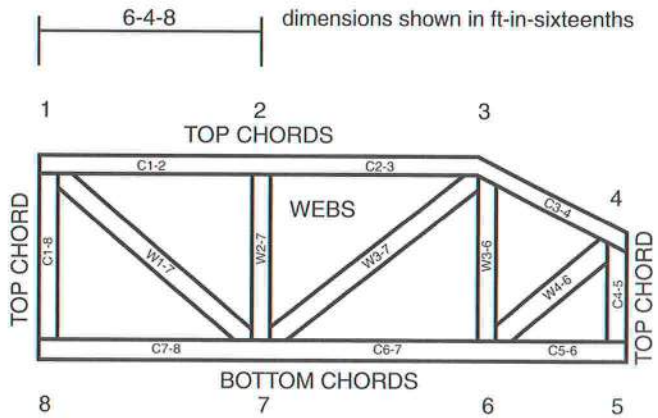


**JOINTS ARE GENERALLY NUMBERED/LETTERED CLOCKWISE AROUND THE TRUSS STARTING AT THE JOINT FARTHEST TO THE LEFT.**

**CHORDS AND WEBS ARE IDENTIFIED BY END JOINT NUMBERS/LETTERS.**

**CONNECTOR PLATE CODE APPROVALS**

| | |
|---|---|
| BOCA | 96-31, 95-43, 96-20-1, 96-67, 84-32 |
| ICBO | 4922, 5243, 5363, 3907 |
| SBCCI | 9667, 9730, 9604B, 9511, 9432A |

MiTek®

TEE-LOK®

# ⚠General Safety Notes

## Failure to Follow Could Cause Property Damage or Personal Injury

1. Additional stability bracing for truss system, e.g. diagonal or X-bracing, is always required. See BCSI1.
2. Never exceed the design loading shown and never stack materials on inadequately braced trusses.
3. Provide copies of this truss design to the building designer, erection supervisor, property owner and all other interested parties.
4. Cut members to bear tightly against each other.
5. Place plates on each face of truss at each joint and embed fully. Knots and wane at joint locations are regulated by ANSI/TPI1.
6. Design assumes trusses will be suitably protected from the environment in accord with ANSI/TPI1.
7. Unless otherwise noted, moisture content of lumber shall not exceed 19% at time of fabrication.
8. Unless expressly noted, this design is not applicable for use with fire retardant or preservative treated lumber.
9. Camber is a non-structural consideration and is the responsibility of truss fabricator. General practice is to camber for dead load deflection.
10. Plate type, size, orientation and location dimensions shown indicate minimum plating requirements.
11. Lumber used shall be of the species and size, and in all respects, equal to or better than that specified.
12. Top chords must be sheathed or purlins provided at spacing shown on design.
13. Bottom chords require lateral bracing at 10 ft. spacing, or less, if no ceiling is installed, unless otherwise noted.
14. Connections not shown are the responsibility of others.
15. Do not cut or alter truss member or plate without prior approval of a professional engineer.
16. Install and load vertically unless indicated otherwise.

| Job | Truss | Truss Type | Qty | Ply | WALKER RES |
|---|---|---|---|---|---|
| WALG | EJ6GT2 | JACK | 1 | 1 | T1875043 |
| | | | | | Job Reference (optional) |

SANTA FE TRUSS, HIGH SPRINGS FL.

6.200 s Oct 18 2005 MiTek Industries, Inc. Tue Nov 22 10:44:13 2005 Page 1

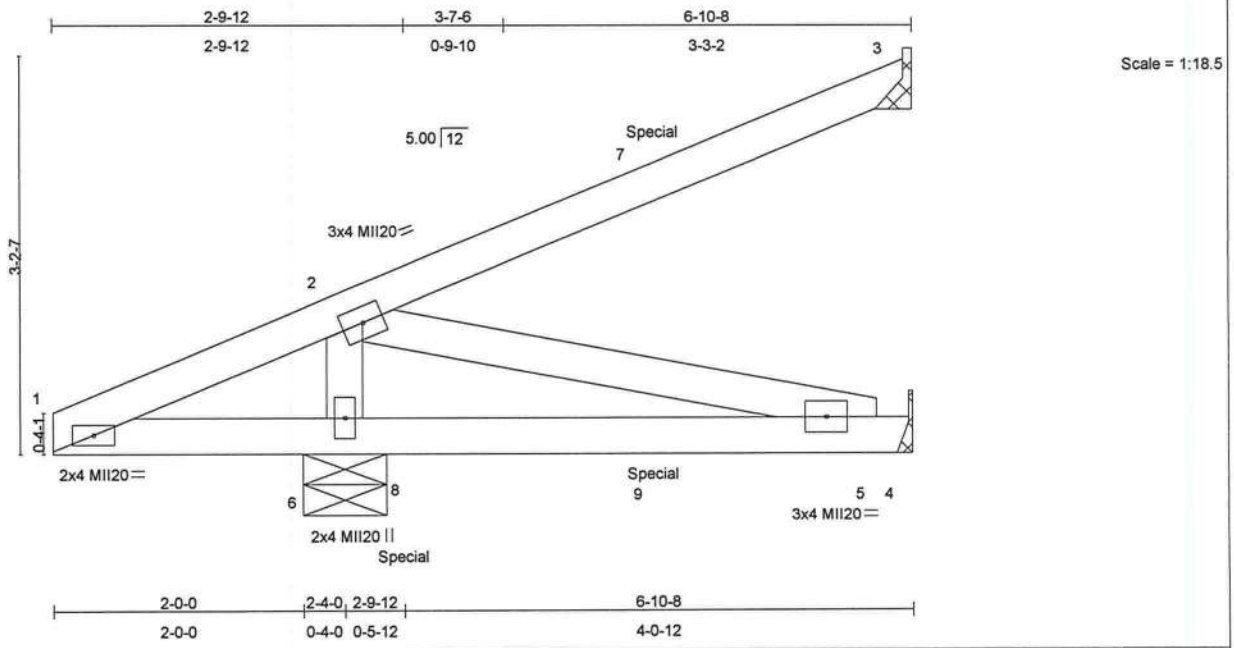


Plate Offsets (X,Y): [1:0-0-0,0-0-0], [2:0-0-0,0-0-0], [5:0-0-0,0-0-0]

| LOADING (psf) | | SPACING | 2-0-0 | CSI | | DEFL | in | (loc) | l/defl | L/d | PLATES | GRIP |
|---|---|---|---|---|---|---|---|---|---|---|---|---|
| TCLL | 20.0 | Plates Increase | 1.25 | TC | 0.26 | Vert(LL) | -0.01 | 5-6 | >999 | 240 | MII20 | 249/190 |
| TCDL | 10.0 | Lumber Increase | 1.25 | BC | 0.17 | Vert(TL) | -0.04 | 5-6 | >999 | 180 | | |
| BCLL | 0.0 | Rep Stress Incr | NO | WB | 0.05 | Horz(TL) | -0.00 | 3 | n/a | n/a | | |
| BCDL | 10.0 | Code FBC2004/TPI2002 | | (Matrix) | | | | | | | Weight: 29 lb | |

**LUMBER**
TOP CHORD 2 X 4 SYP No.2D
BOT CHORD 2 X 4 SYP No.2D
WEBS 2 X 4 SYP No.3

**BRACING**
TOP CHORD Structural wood sheathing directly applied or 6-0-0 oc purlins.
BOT CHORD Rigid ceiling directly applied or 6-0-0 oc bracing.

**REACTIONS** (lb/size) 3=127/Mechanical, 4=33/Mechanical, 6=428/0-8-0
Max Horz 6=115(load case 5)
Max Uplift3=-84(load case 5), 4=-5(load case 4), 6=-200(load case 5)
Max Grav 3=127(load case 1), 4=80(load case 2), 6=428(load case 1)

**FORCES** (lb) - Maximum Compression/Maximum Tension
TOP CHORD 1-2=-80/96, 2-7=-70/0, 3-7=-40/39
BOT CHORD 1-6=-42/77, 6-8=-97/0, 8-9=-97/0, 5-9=-97/0, 4-5=0/0
WEBS 2-5=0/100, 2-6=-336/176

**NOTES**
1) Wind: ASCE 7-98; 110mph (3-second gust); h=18ft; TCDL=5.0psf; BCDL=5.0psf; Category II; Exp C; enclosed; MWFRS interior zone; cantilever left exposed ; Lumber DOL=1.33 plate grip DOL=1.33.
2) This truss has been designed for a 10.0 psf bottom chord live load nonconcurrent with any other live loads.
3) This truss requires plate inspection per the Tooth Count Method when this truss is chosen for quality assurance inspection.
4) Refer to girder(s) for truss to truss connections.
5) Provide mechanical connection (by others) of truss to bearing plate capable of withstanding 84 lb uplift at joint 3, 5 lb uplift at joint 4 and 200 lb uplift at joint 6.
6) Hanger(s) or other connection device(s) shall be provided sufficient to support concentrated load(s) 45 lb down and 53 lb up at 4-9-12 on top chord, and 25 lb up at 2-9-12, and 32 lb down at 4-9-12 on bottom chord. The design/selection of such connection device(s) is the responsibility of others.
7) In the LOAD CASE(S) section, loads applied to the face of the truss are noted as front (F) or back (B).

**LOAD CASE(S)** Standard
1) Regular: Lumber Increase=1.25, Plate Increase=1.25
Uniform Loads (plf)
Vert: 1-3=-60, 1-4=-20
Concentrated Loads (lb)
Vert: 7=-45(F) 8=13(F) 9=-16(F)


Guo-Jie Zhang, FL Lic #47744
MiTek Industries, Inc.
1801 Massaro Blvd
Tampa FL 33619
FL Cert.#6634


November 22,2005

# Symbols

**PLATE LOCATION AND ORIENTATION**

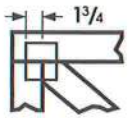


*Center plate on joint unless x,y offsets are indicated. Dimensions are in ft-in-sixteenths. Apply plates to both sides of truss and securely seat.

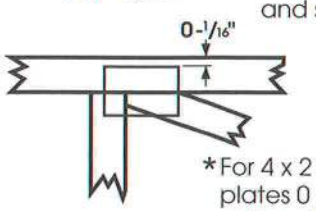


*For 4 x 2 orientation, locate plates 0 - 1/16" from outside edge of truss.

*This symbol indicates the required direction of slots in connector plates.

*** Plate location details available in MiTek 20/20 software or upon request.**

**PLATE SIZE**

4 x 4 — The first dimension is the width perpendicular to slots. Second dimension is the length parallel to slots.

**LATERAL BRACING**

Indicated by symbol shown and/or by text in the bracing section of the output. Use T, I or Eliminator bracing if indicated.

**BEARING**

Indicates location where bearings (supports) occur. Icons vary but reaction section indicates joint number where bearings occur.

**Industry Standards:**

ANSI/TPI1: National Design Specification for Metal Plate Connected Wood Truss Construction.
DSB-89: Design Standard for Bracing.
BCSI1: Building Component Safety Information, Guide to Good Practice for Handling, Installing & Bracing of Metal Plate Connected Wood Trusses.

# Numbering System

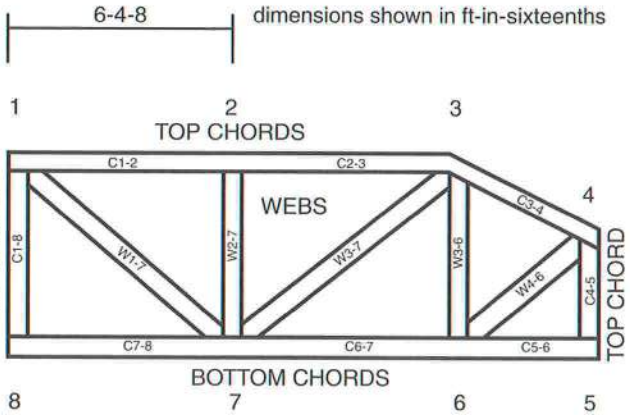


**JOINTS ARE GENERALLY NUMBERED/LETTERED CLOCKWISE AROUND THE TRUSS STARTING AT THE JOINT FARTHEST TO THE LEFT.**

**CHORDS AND WEBS ARE IDENTIFIED BY END JOINT NUMBERS/LETTERS.**

**CONNECTOR PLATE CODE APPROVALS**

| | |
|---|---|
| BOCA | 96-31, 95-43, 96-20-1, 96-67, 84-32 |
| ICBO | 4922, 5243, 5363, 3907 |
| SBCCI | 9667, 9730, 9604B, 9511, 9432A |

MiTek®

TEE-LOK®

# ⚠General Safety Notes

## Failure to Follow Could Cause Property Damage or Personal Injury

1. Additional stability bracing for truss system, e.g. diagonal or X-bracing, is always required. See BCSI1.
2. Never exceed the design loading shown and never stack materials on inadequately braced trusses.
3. Provide copies of this truss design to the building designer, erection supervisor, property owner and all other interested parties.
4. Cut members to bear tightly against each other.
5. Place plates on each face of truss at each joint and embed fully. Knots and wane at joint locations are regulated by ANSI/TPI1.
6. Design assumes trusses will be suitably protected from the environment in accord with ANSI/TPI1.
7. Unless otherwise noted, moisture content of lumber shall not exceed 19% at time of fabrication.
8. Unless expressly noted, this design is not applicable for use with fire retardant or preservative treated lumber.
9. Camber is a non-structural consideration and is the responsibility of truss fabricator. General practice is to camber for dead load deflection.
10. Plate type, size, orientation and location dimensions shown indicate minimum plating requirements.
11. Lumber used shall be of the species and size, and in all respects, equal to or better than that specified.
12. Top chords must be sheathed or purlins provided at spacing shown on design.
13. Bottom chords require lateral bracing at 10 ft. spacing, or less, if no ceiling is installed, unless otherwise noted.
14. Connections not shown are the responsibility of others.
15. Do not cut or alter truss member or plate without prior approval of a professional engineer.
16. Install and load vertically unless indicated otherwise.

| Job | Truss | Truss Type | Qty | Ply | WALKER RES |
|---|---|---|---|---|---|
| WALG | EJ7 | JACK | 31 | 1 | T1875044 |
| | | | | | Job Reference (optional) |

SANTA FE TRUSS, HIGH SPRINGS FL., p.colacino

6.200 s Oct 18 2005 MiTek Industries, Inc. Mon Nov 21 16:21:43 2005 Page 1

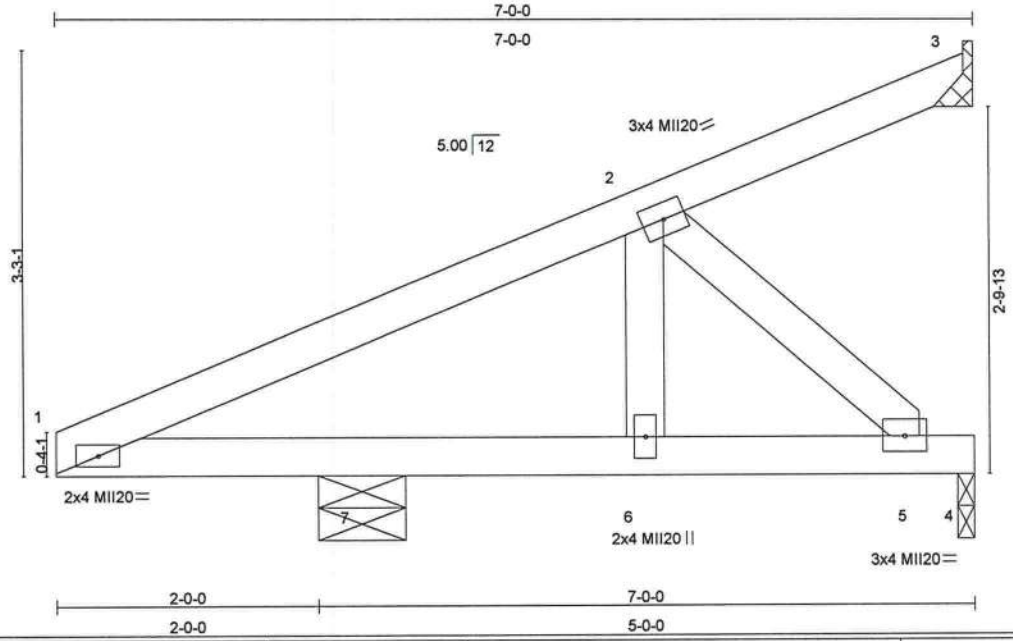


| LOADING (psf) | | SPACING | 2-0-0 | CSI | | DEFL | in | (loc) | l/defl | L/d | PLATES | GRIP |
|---|---|---|---|---|---|---|---|---|---|---|---|---|
| TCLL | 20.0 | Plates Increase | 1.25 | TC | 0.18 | Vert(LL) | 0.03 | 5-6 | >999 | 240 | MII20 | 249/190 |
| TCDL | 10.0 | Lumber Increase | 1.25 | BC | 0.32 | Vert(TL) | -0.06 | 5-6 | >986 | 180 | | |
| BCLL | 0.0 | Rep Stress Incr | YES | WB | 0.05 | Horz(TL) | -0.06 | 3 | n/a | n/a | | |
| BCDL | 10.0 | Code FBC2004/TPI2002 | | (Matrix) | | | | | | | Weight: 28 lb | |

**LUMBER**
TOP CHORD 2 X 4 SYP No.2D
BOT CHORD 2 X 4 SYP SS
WEBS 2 X 4 SYP No.3

**BRACING**
TOP CHORD Structural wood sheathing directly applied or 6-0-0 oc purlins.
BOT CHORD Rigid ceiling directly applied or 10-0-0 oc bracing.

**REACTIONS** (lb/size) 3=25/Mechanical, 4=107/0-1-8, 7=418/0-8-0
Max Horz 7=117(load case 5)
Max Uplift3=-14(load case 5), 4=-36(load case 5), 7=-162(load case 5)

**FORCES** (lb) - Maximum Compression/Maximum Tension
TOP CHORD 1-2=-79/60, 2-3=-45/4
BOT CHORD 1-7=0/99, 6-7=-41/2, 5-6=-41/2, 4-5=0/0
WEBS 2-6=-272/151, 2-5=-3/56

**NOTES**
1) Wind: ASCE 7-98; 110mph (3-second gust); h=18ft; TCDL=5.0psf; BCDL=5.0psf; Category II; Exp C; enclosed; MWFRS interior zone; cantilever left exposed ; Lumber DOL=1.33 plate grip DOL=1.33.
2) This truss has been designed for a 10.0 psf bottom chord live load nonconcurrent with any other live loads.
3) This truss requires plate inspection per the Tooth Count Method when this truss is chosen for quality assurance inspection.
4) Refer to girder(s) for truss to truss connections.
5) Provide mechanical connection (by others) of truss to bearing plate at joint(s) 4.
6) Provide mechanical connection (by others) of truss to bearing plate capable of withstanding 14 lb uplift at joint 3, 36 lb uplift at joint 4 and 162 lb uplift at joint 7.

**LOAD CASE(S)** Standard


Guo-Jie Zhang, FL Lic #47744
MiTek Industries, Inc.
1801 Massaro Blvd
Tampa FL 33619
FL Cert.#6634


November 22,2005

# Symbols

**PLATE LOCATION AND ORIENTATION**

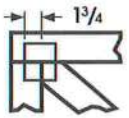


*Center plate on joint unless x,y offsets are indicated. Dimensions are in ft-in-sixteenths. Apply plates to both sides of truss and securely seat.

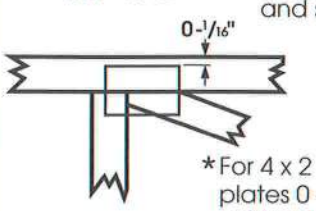


*For 4 x 2 orientation, locate plates 0 - 1/16" from outside edge of truss.

*This symbol indicates the required direction of slots in connector plates.

*** Plate location details available in MiTek 20/20 software or upon request.**

**PLATE SIZE**

4 x 4 — The first dimension is the width perpendicular to slots. Second dimension is the length parallel to slots.

**LATERAL BRACING**

Indicated by symbol shown and/or by text in the bracing section of the output. Use T, I or Eliminator bracing if indicated.

**BEARING**

Indicates location where bearings (supports) occur. Icons vary but reaction section indicates joint number where bearings occur.

**Industry Standards:**

ANSI/TPI1: National Design Specification for Metal Plate Connected Wood Truss Construction.
DSB-89: Design Standard for Bracing.
BCSI1: Building Component Safety Information, Guide to Good Practice for Handling, Installing & Bracing of Metal Plate Connected Wood Trusses.

# Numbering System

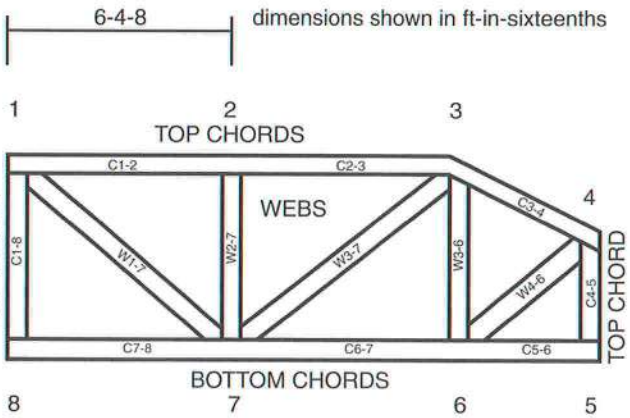


**JOINTS ARE GENERALLY NUMBERED/LETTERED CLOCKWISE AROUND THE TRUSS STARTING AT THE JOINT FARTHEST TO THE LEFT.**

**CHORDS AND WEBS ARE IDENTIFIED BY END JOINT NUMBERS/LETTERS.**

**CONNECTOR PLATE CODE APPROVALS**

| | |
|---|---|
| BOCA | 96-31, 95-43, 96-20-1, 96-67, 84-32 |
| ICBO | 4922, 5243, 5363, 3907 |
| SBCCI | 9667, 9730, 9604B, 9511, 9432A |

MiTek®

TEE-LOK®

# ⚠General Safety Notes

## Failure to Follow Could Cause Property Damage or Personal Injury

1. Additional stability bracing for truss system, e.g. diagonal or X-bracing, is always required. See BCSI1.
2. Never exceed the design loading shown and never stack materials on inadequately braced trusses.
3. Provide copies of this truss design to the building designer, erection supervisor, property owner and all other interested parties.
4. Cut members to bear tightly against each other.
5. Place plates on each face of truss at each joint and embed fully. Knots and wane at joint locations are regulated by ANSI/TPI1.
6. Design assumes trusses will be suitably protected from the environment in accord with ANSI/TPI1.
7. Unless otherwise noted, moisture content of lumber shall not exceed 19% at time of fabrication.
8. Unless expressly noted, this design is not applicable for use with fire retardant or preservative treated lumber.
9. Camber is a non-structural consideration and is the responsibility of truss fabricator. General practice is to camber for dead load deflection.
10. Plate type, size, orientation and location dimensions shown indicate minimum plating requirements.
11. Lumber used shall be of the species and size, and in all respects, equal to or better than that specified.
12. Top chords must be sheathed or purlins provided at spacing shown on design.
13. Bottom chords require lateral bracing at 10 ft. spacing, or less, if no ceiling is installed, unless otherwise noted.
14. Connections not shown are the responsibility of others.
15. Do not cut or alter truss member or plate without prior approval of a professional engineer.
16. Install and load vertically unless indicated otherwise.

| Job | Truss | Truss Type | Qty | Ply | WALKER RES |
|---|---|---|---|---|---|
| WALG | J3 | JACK | 10 | 1 | T1875045 |

Job Reference (optional)

SANTA FE TRUSS, HIGH SPRINGS FL., p.colacino

6.200 s Oct 18 2005 MiTek Industries, Inc. Mon Nov 21 16:21:43 2005 Page 1

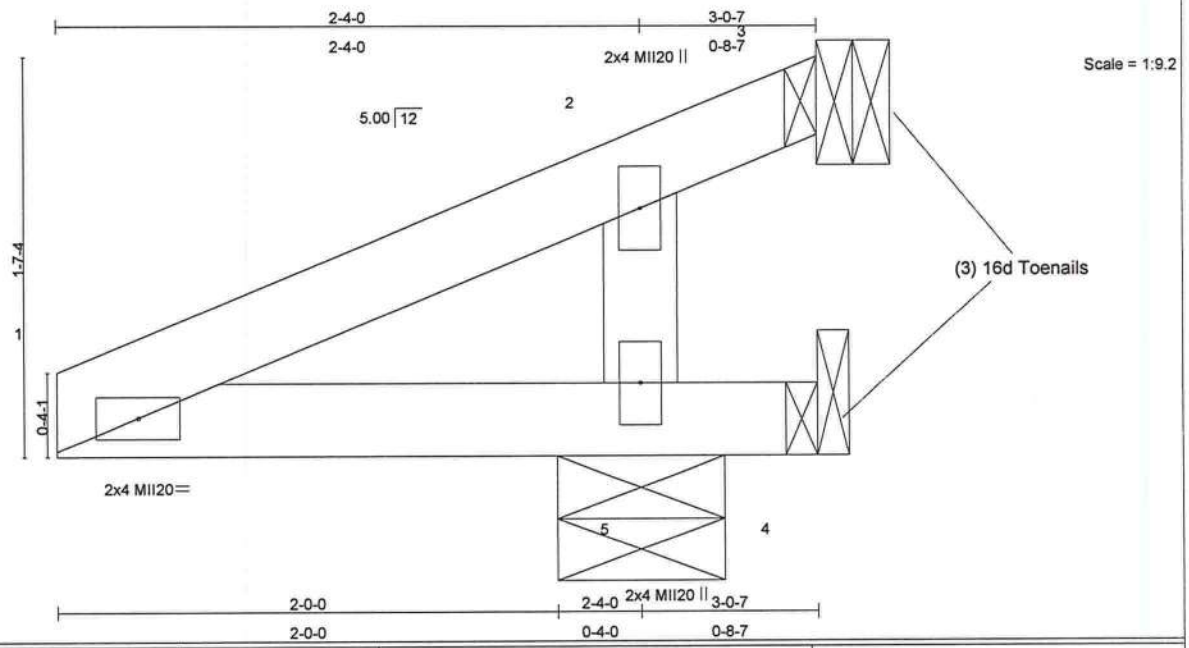


| LOADING (psf) | | SPACING | 2-0-0 | CSI | | DEFL | in | (loc) | l/defl | L/d | PLATES | GRIP |
|---|---|---|---|---|---|---|---|---|---|---|---|---|
| TCLL | 20.0 | Plates Increase | 1.25 | TC | 0.19 | Vert(LL) | 0.00 | 5 | >999 | 240 | MII20 | 249/190 |
| TCDL | 10.0 | Lumber Increase | 1.25 | BC | 0.17 | Vert(TL) | 0.00 | 5 | >999 | 180 | | |
| BCLL | 0.0 | Rep Stress Incr | YES | WB | 0.06 | Horz(TL) | -0.02 | 3 | n/a | n/a | | |
| BCDL | 10.0 | Code FBC2004/TPI2002 | | (Matrix) | | | | | | | Weight: 11 lb | |

**LUMBER**
TOP CHORD 2 X 4 SYP No.2D
BOT CHORD 2 X 4 SYP No.2D
WEBS 2 X 4 SYP No.3

**BRACING**
TOP CHORD Structural wood sheathing directly applied or 3-0-7 oc purlins.
BOT CHORD Rigid ceiling directly applied or 10-0-0 oc bracing.

**REACTIONS** (lb/size) 3=-188/Mechanical, 4=-155/Mechanical, 5=576/0-8-0
Max Horz 5=50(load case 5)
Max Uplift3=-188(load case 1), 4=-155(load case 1), 5=-312(load case 5)
Max Grav 3=93(load case 5), 4=87(load case 5), 5=576(load case 1)

**FORCES** (lb) - Maximum Compression/Maximum Tension
TOP CHORD 1-2=-46/47, 2-3=-85/36
BOT CHORD 1-5=-0/50, 4-5=0/0
WEBS 2-5=-341/183

**NOTES**
1) Wind: ASCE 7-98; 110mph (3-second gust); h=18ft; TCDL=5.0psf; BCDL=5.0psf; Category II; Exp C; enclosed; MWFRS interior zone; cantilever left exposed ; Lumber DOL=1.33 plate grip DOL=1.33.
2) This truss has been designed for a 10.0 psf bottom chord live load nonconcurrent with any other live loads.
3) This truss requires plate inspection per the Tooth Count Method when this truss is chosen for quality assurance inspection.
4) Refer to girder(s) for truss to truss connections.
5) Provide mechanical connection (by others) of truss to bearing plate capable of withstanding 188 lb uplift at joint 3, 155 lb uplift at joint 4 and 312 lb uplift at joint 5.

**LOAD CASE(S)** Standard


Guo-Jie Zhang, FL Lic #47744
MiTek Industries, Inc.
1801 Massaro Blvd
Tampa FL 33619
FL Cert.#6634


November 22,2005

# Symbols

**PLATE LOCATION AND ORIENTATION**

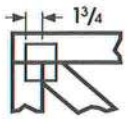


*Center plate on joint unless x,y offsets are indicated. Dimensions are in ft-in-sixteenths. Apply plates to both sides of truss and securely seat.

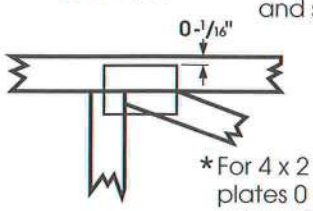


*For 4 x 2 orientation, locate plates 0 - 1/16" from outside edge of truss.

*This symbol indicates the required direction of slots in connector plates.

*** Plate location details available in MiTek 20/20 software or upon request.**

**PLATE SIZE**

4 x 4 — The first dimension is the width perpendicular to slots. Second dimension is the length parallel to slots.

**LATERAL BRACING**

Indicated by symbol shown and/or by text in the bracing section of the output. Use T, I or Eliminator bracing if indicated.

**BEARING**

Indicates location where bearings (supports) occur. Icons vary but reaction section indicates joint number where bearings occur.

**Industry Standards:**

ANSI/TPI1: National Design Specification for Metal Plate Connected Wood Truss Construction.
DSB-89: Design Standard for Bracing.
BCSI1: Building Component Safety Information, Guide to Good Practice for Handling, Installing & Bracing of Metal Plate Connected Wood Trusses.

# Numbering System

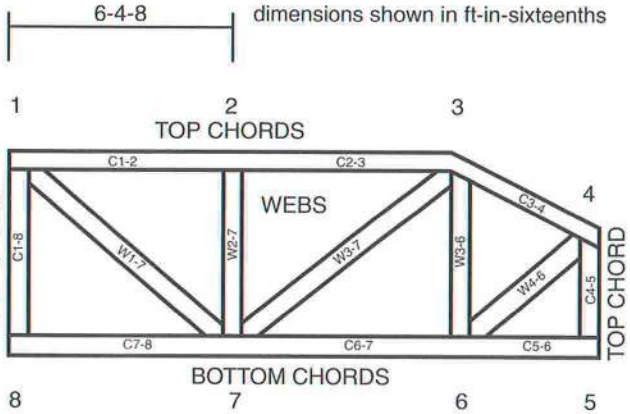


**JOINTS ARE GENERALLY NUMBERED/LETTERED CLOCKWISE AROUND THE TRUSS STARTING AT THE JOINT FARTHEST TO THE LEFT.**

**CHORDS AND WEBS ARE IDENTIFIED BY END JOINT NUMBERS/LETTERS.**

**CONNECTOR PLATE CODE APPROVALS**

| | |
|---|---|
| BOCA | 96-31, 95-43, 96-20-1, 96-67, 84-32 |
| ICBO | 4922, 5243, 5363, 3907 |
| SBCCI | 9667, 9730, 9604B, 9511, 9432A |

MiTek®

TEE-LOK®

# ⚠General Safety Notes

## Failure to Follow Could Cause Property Damage or Personal Injury

1. Additional stability bracing for truss system, e.g. diagonal or X-bracing, is always required. See BCSI1.
2. Never exceed the design loading shown and never stack materials on inadequately braced trusses.
3. Provide copies of this truss design to the building designer, erection supervisor, property owner and all other interested parties.
4. Cut members to bear tightly against each other.
5. Place plates on each face of truss at each joint and embed fully. Knots and wane at joint locations are regulated by ANSI/TPI1.
6. Design assumes trusses will be suitably protected from the environment in accord with ANSI/TPI1.
7. Unless otherwise noted, moisture content of lumber shall not exceed 19% at time of fabrication.
8. Unless expressly noted, this design is not applicable for use with fire retardant or preservative treated lumber.
9. Camber is a non-structural consideration and is the responsibility of truss fabricator. General practice is to camber for dead load deflection.
10. Plate type, size, orientation and location dimensions shown indicate minimum plating requirements.
11. Lumber used shall be of the species and size, and in all respects, equal to or better than that specified.
12. Top chords must be sheathed or purlins provided at spacing shown on design.
13. Bottom chords require lateral bracing at 10 ft. spacing, or less, if no ceiling is installed, unless otherwise noted.
14. Connections not shown are the responsibility of others.
15. Do not cut or alter truss member or plate without prior approval of a professional engineer.
16. Install and load vertically unless indicated otherwise.

| Job | Truss | Truss Type | Qty | Ply | WALKER RES |
|---|---|---|---|---|---|
| WALG | J5 | JACK | 10 | 1 | T1875046 |

Job Reference (optional)

SANTA FE TRUSS, HIGH SPRINGS FL., p.colacino — 6.200 s Oct 18 2005 MiTek Industries, Inc. Mon Nov 21 16:21:44 2005 Page 1

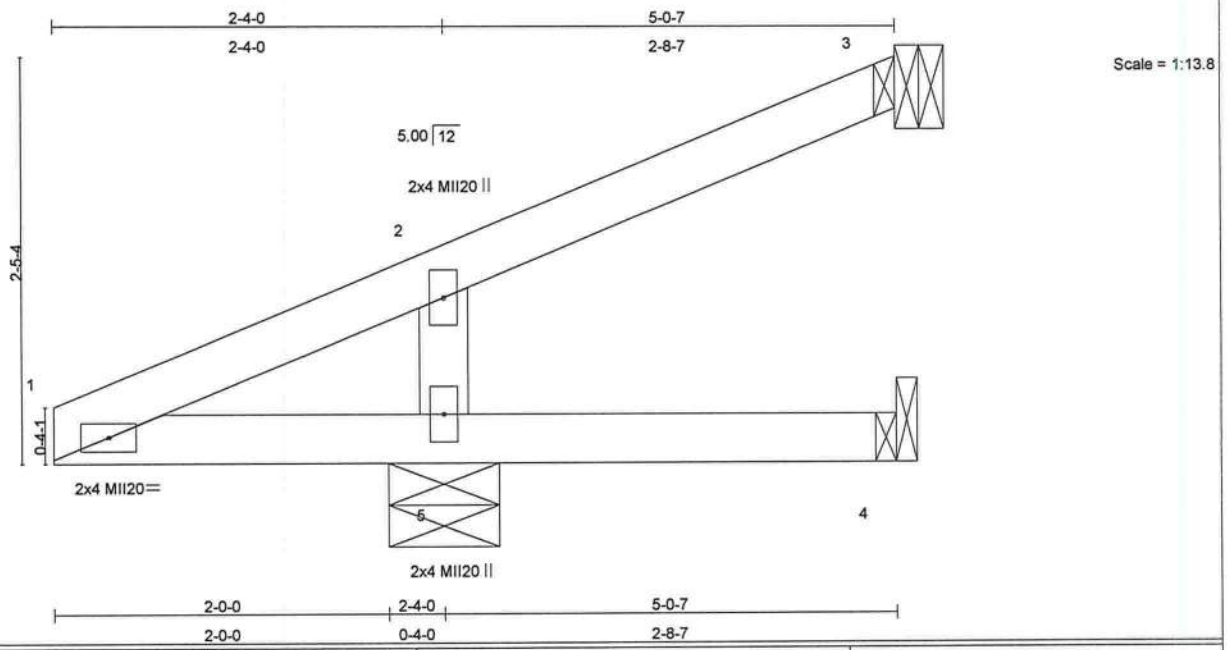


| LOADING (psf) | | SPACING | 2-0-0 | CSI | | DEFL | in | (loc) | l/defl | L/d | PLATES | GRIP |
|---|---|---|---|---|---|---|---|---|---|---|---|---|
| TCLL | 20.0 | Plates Increase | 1.25 | TC | 0.20 | Vert(LL) | 0.00 | 4-5 | >999 | 240 | MII20 | 249/190 |
| TCDL | 10.0 | Lumber Increase | 1.25 | BC | 0.16 | Vert(TL) | 0.01 | 4-5 | >999 | 180 | | |
| BCLL | 0.0 | Rep Stress Incr | YES | WB | 0.04 | Horz(TL) | -0.03 | 3 | n/a | n/a | | |
| BCDL | 10.0 | Code FBC2004/TPI2002 | | (Matrix) | | | | | | | Weight: 17 lb | |

**LUMBER**
TOP CHORD 2 X 4 SYP No.2D
BOT CHORD 2 X 4 SYP No.2D
WEBS 2 X 4 SYP No.3

**BRACING**
TOP CHORD Structural wood sheathing directly applied or 5-0-7 oc purlins.
BOT CHORD Rigid ceiling directly applied or 10-0-0 oc bracing.

**REACTIONS** (lb/size) 3=30/Mechanical, 4=-10/Mechanical, 5=374/0-8-0
Max Horz 5=84(load case 5)
Max Uplift3=-31(load case 4), 4=-10(load case 1), 5=-168(load case 5)
Max Grav 3=30(load case 1), 4=23(load case 5), 5=374(load case 1)

**FORCES** (lb) - Maximum Compression/Maximum Tension
TOP CHORD 1-2=-81/48, 2-3=-48/5
BOT CHORD 1-5=0/84, 4-5=0/0
WEBS 2-5=-245/134

**NOTES**
1) Wind: ASCE 7-98; 110mph (3-second gust); h=18ft; TCDL=5.0psf; BCDL=5.0psf; Category II; Exp C; enclosed; MWFRS interior zone; cantilever left exposed ; Lumber DOL=1.33 plate grip DOL=1.33.
2) This truss has been designed for a 10.0 psf bottom chord live load nonconcurrent with any other live loads.
3) This truss requires plate inspection per the Tooth Count Method when this truss is chosen for quality assurance inspection.
4) Refer to girder(s) for truss to truss connections.
5) Provide mechanical connection (by others) of truss to bearing plate capable of withstanding 31 lb uplift at joint 3, 10 lb uplift at joint 4 and 168 lb uplift at joint 5.

**LOAD CASE(S)** Standard


Guo-Jie Zhang, FL Lic #47744
MiTek Industries, Inc.
1801 Massaro Blvd
Tampa FL 33619
FL Cert.#6634


November 22,2005

# Symbols

**PLATE LOCATION AND ORIENTATION**

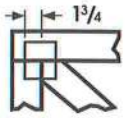


*Center plate on joint unless x,y offsets are indicated. Dimensions are in ft-in-sixteenths. Apply plates to both sides of truss and securely seat.

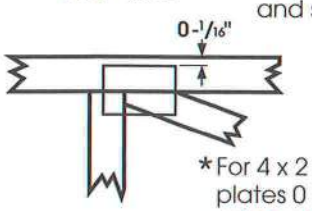


*For 4 x 2 orientation, locate plates 0 - 1/16" from outside edge of truss.

*This symbol indicates the required direction of slots in connector plates.

*** Plate location details available in MiTek 20/20 software or upon request.**

**PLATE SIZE**

4 x 4 — The first dimension is the width perpendicular to slots. Second dimension is the length parallel to slots.

**LATERAL BRACING**

Indicated by symbol shown and/or by text in the bracing section of the output. Use T, I or Eliminator bracing if indicated.

**BEARING**

Indicates location where bearings (supports) occur. Icons vary but reaction section indicates joint number where bearings occur.

**Industry Standards:**

ANSI/TPI1: National Design Specification for Metal Plate Connected Wood Truss Construction.
DSB-89: Design Standard for Bracing.
BCSI1: Building Component Safety Information, Guide to Good Practice for Handling, Installing & Bracing of Metal Plate Connected Wood Trusses.

# Numbering System

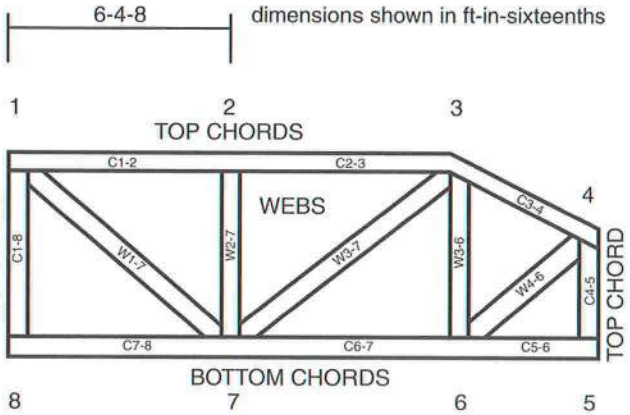


**JOINTS ARE GENERALLY NUMBERED/LETTERED CLOCKWISE AROUND THE TRUSS STARTING AT THE JOINT FARTHEST TO THE LEFT.**

**CHORDS AND WEBS ARE IDENTIFIED BY END JOINT NUMBERS/LETTERS.**

**CONNECTOR PLATE CODE APPROVALS**

| | |
|---|---|
| BOCA | 96-31, 95-43, 96-20-1, 96-67, 84-32 |
| ICBO | 4922, 5243, 5363, 3907 |
| SBCCI | 9667, 9730, 9604B, 9511, 9432A |

MiTek®

TEE-LOK®

# ⚠General Safety Notes

## Failure to Follow Could Cause Property Damage or Personal Injury

1. Additional stability bracing for truss system, e.g. diagonal or X-bracing, is always required. See BCSI1.
2. Never exceed the design loading shown and never stack materials on inadequately braced trusses.
3. Provide copies of this truss design to the building designer, erection supervisor, property owner and all other interested parties.
4. Cut members to bear tightly against each other.
5. Place plates on each face of truss at each joint and embed fully. Knots and wane at joint locations are regulated by ANSI/TPI1.
6. Design assumes trusses will be suitably protected from the environment in accord with ANSI/TPI1.
7. Unless otherwise noted, moisture content of lumber shall not exceed 19% at time of fabrication.
8. Unless expressly noted, this design is not applicable for use with fire retardant or preservative treated lumber.
9. Camber is a non-structural consideration and is the responsibility of truss fabricator. General practice is to camber for dead load deflection.
10. Plate type, size, orientation and location dimensions shown indicate minimum plating requirements.
11. Lumber used shall be of the species and size, and in all respects, equal to or better than that specified.
12. Top chords must be sheathed or purlins provided at spacing shown on design.
13. Bottom chords require lateral bracing at 10 ft. spacing, or less, if no ceiling is installed, unless otherwise noted.
14. Connections not shown are the responsibility of others.
15. Do not cut or alter truss member or plate without prior approval of a professional engineer.
16. Install and load vertically unless indicated otherwise.

**JAMES A. BLAIR, A.I.A. , ARCHITECT, INC.**
Member of American Institute of Architects
AA26000991
5326 Northwest 102nd Place
Gainesville, Florida 32653-9703
Tel 386 462 2497
Fax 386 462 2411
Cell 352 339 3628
jblair35@cox.net

December 14, 2006

Mr. Joe Haltiwanger
Plans Examiner
Columbia County Building Department
135 NE Hernando Avenue
P.O. Box 1529
Lake City, Florida 32056-1529

FAX 386 754 7088

Re: Robert Walker Residence
Building Permit 23995
Truss Repairs

Dear Mr. Haltiwanger:

Some trussed rafters at this jobsite were delivered in damaged condition and/or with defective members.

To correct these deficiencies every damaged trussed rafter member was wrapped on both sides with new 2 x 4's. One entire truss was reinforced in this fashion. All such members were nailed with 20d's @ +- 10" o.c. staggered.

I went to this jobsite yesterday to inspect these repairs. I believe all work is structurally sound. If you would like to have photographs of typical repairs, please send me your email address.

Sincerely,

James A. Blair, AIA

xc: Robert Walker

December 22,2006

Building & Zoning
Columbia County Florida
135 NE Hernando Ave.
Suite B-21
Lake City, Florida 32055

PERMIT # 000023995

Please accept this as an extension letter for the building of my home. We have had numerous delays due to problems with the Truss company as well as the window company.

I am hoping the project will be finalized within the next 90 days. I will keep you notified of my progress.

Yours truly,

Robert G Walker
235 S. W. Signal Court
Ft White, Florida 32038