VENT-FREE

This unit is A.G.A. certified as a heater with 99% heat efficiency
No chimney or flue system required
Wide selection of factory installed options offered

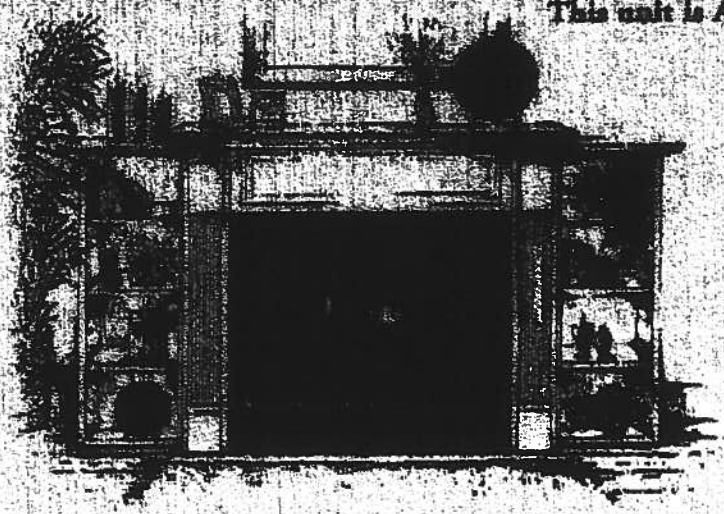

VF-4000

- 14,000 – 25,000 Btu/hr with manual control valve
- 19,500 – 25,000 Btu/hr with millivolt control valve
- Fully assembled and ready to install
- Attractive wood surrounds available
- 15" x 30" fixed or operable screen opening

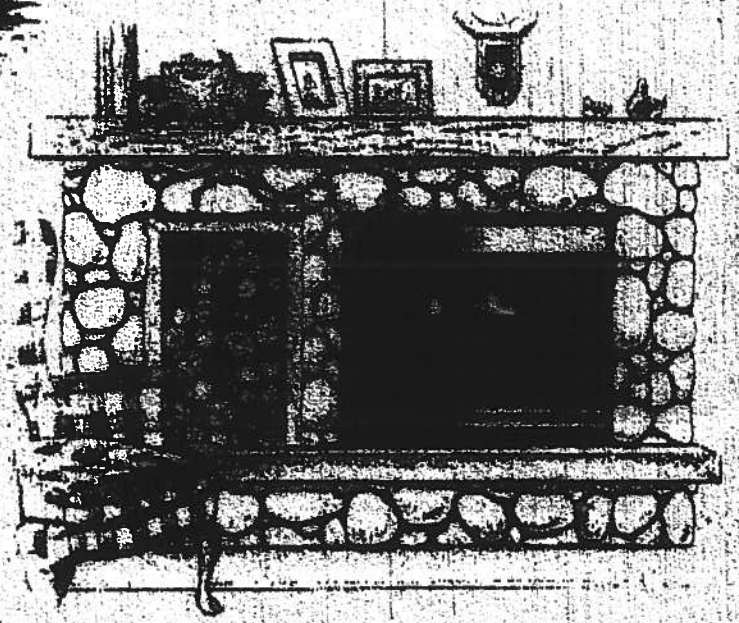

VF-5000

- 25,000 Btu/hr millivolt variable heat output
- 15" X 30" glass or screen viewing area
- Clean burning, safe and easy to install
- Realistic charred oak logs with glowing embers

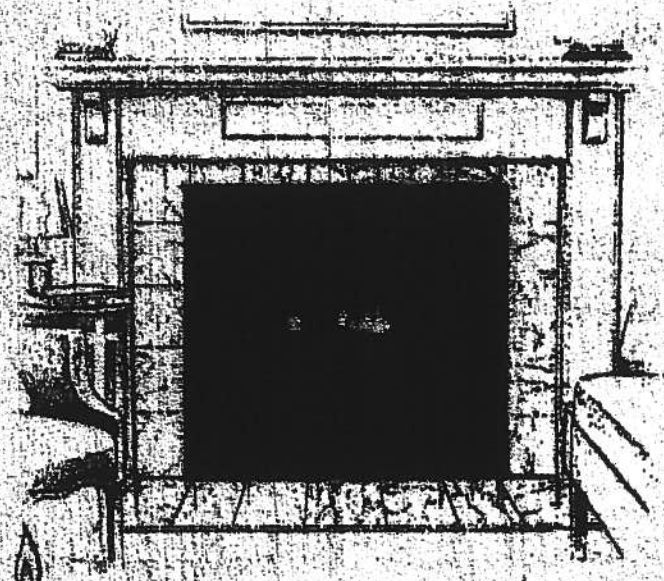

VF-6000

- 32,000 Btu/hr millivolt variable heat output
- Beautiful 20" X 34" glass or screen viewing area
- Will operate during a power failure
- Designed for large rooms

GAS

SUPERIOR

FROM :LAKE CITY INDUSTRIES FAX NO. :+386 758 4735 May. 01 2003 02:50PM P1

[redacted]

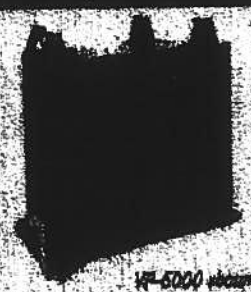

VF-6000 shown

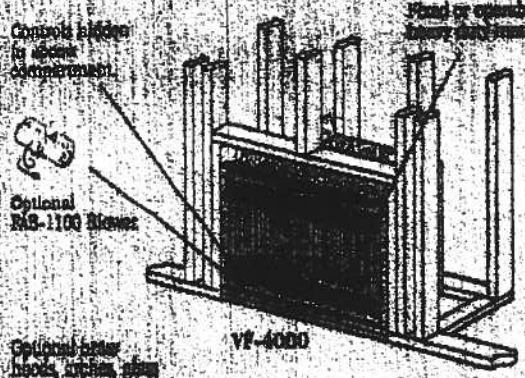

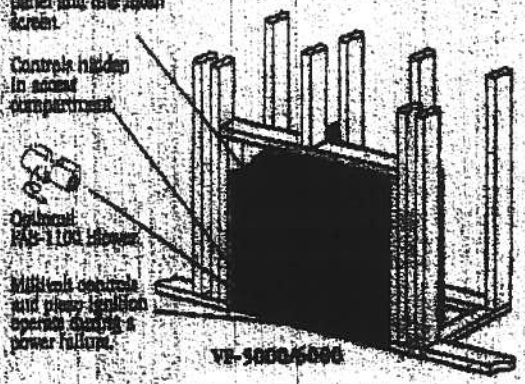

SURROUNDS

The Charleston Poplar Surround is hand crafted using a combination of solid Poplar and Poplar veneer. Using the unique wood type of Poplar allows you the option to paint or stain this elegantly detailed surround. The surround is constructed using easy to assemble cam locks, and available in corner and wall units.

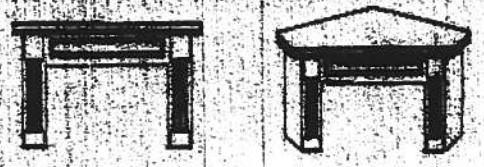

Distributed by:

Refractory tan brick panels

Gas Box liner kit.

Square brass vent kit.

Brass Louver kit (For VF-4 only)

Screen panel kit. (For VF-5 & VF6 only)

Arch kit. (For VF-5 & VF6 only)

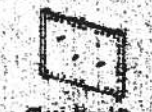

Glass door kit. (For VF-5 & VF6 only)

Brass hood. (For VF-5 & VF6 only)

Wall patch or optional wireless remote available. (For VF-6M, VF-5 & VF-6)

Wall thermostat. (For VF-6M, VF-5 & VF-6)

Front View

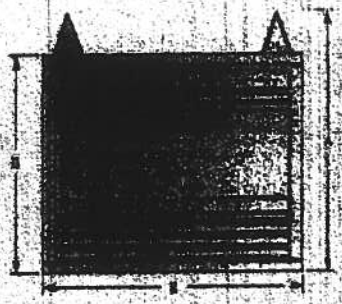

Left Side View

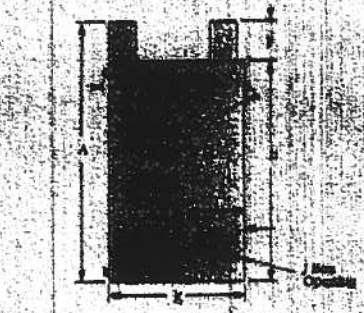

Top View

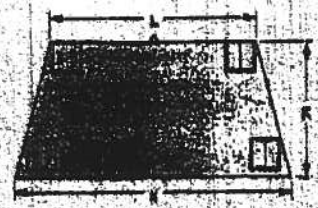

Vent-Free Product Dimensions

	VF-4000/5000C	VF-5000C
		28-3/8"
	35-1/4"	35-3/8"
		30"
		24"
		10"
		5-1/4"
		5-1/4"
		5-1/4"
		5-1/4"
		5"
		28-1/8"
	27"	28-1/8"

Btu Chart

Model	Natural	Propane
VF-4000 standard	14,000 – 25,000	14,000 – 25,000
VF-4000/5000 optional	19,500 – 25,000	19,500 – 25,000
VF-5000	25,000 – 32,000	25,000 – 32,000

Framing Dimensions

Model	Width	Height	Depth
VF-5000/5000	37"	37-1/4"	15-1/2"
VF-4000	41"	42-3/8"	19-1/4"

NOTE: Diagrams and illustrations are not to scale. Product designs, materials, dimensions, specifications, colors and prices subject to change or discontinuation without notice. Built to ANSI Z21.11.2 standard and approved by A.G.A. (report # 1207017).

Consult your distributor for local fireplace code information.

SUPERIOR

www.LenoxHearthProducts.com

Printed in U.S.A. ©2001 Lenox Hearth Products • 1116 West Taft Ave., Orange, CA 92865-4150
Lenox Hearth Products Vent-Free heater and gas appliances includes 10-year limited warranty.

P/N 403464 REV # 2/00

FROM :LAKE CITY INDUSTRIES FAX NO. :+386 758 4735 May. 01 2003 07:51AM P2

The Florida Department of Community Affairs
Building Code Information System

FLORIDA BUILDING CODE

Overview | User Registration | Organization Registration | User Authorization | Organization Search | Organization Accreditation

Select the organization type, status, or name to find an organization

Organization Type: Product Manufacturer

Manufact. Buildings

Approval Status: (ALL)

Organization Name: General American Door - Product Manufacturer

Cancel Search

Result List for Organizations

Displaying 1-1 of 1

Name	City	Contact	Phone	Type	Expire	Status
General American Door	Montgomery	James Campbell	6308593000	Product Manufacturer	01/01/2099	Approved
Org Code: PDM System ID: 3585			Site Link: www.gadco.com			

Displaying 1-1 of 1

REV.	DATE	BY	DESCRIPTION
A-A	11-10-00	DW	SEE E.C.N. 431

NOTES:

1. TESTED TO POSITIVE AND NEGATIVE 20 PSF DESIGN AND POSITIVE AND NEGATIVE 30 PSF TEST PRESSURES PER ASTM E-330
2. MAXIMUM SECTION HEIGHT= 21'
3. SECTION HEIGHTS OF 21.00' AND 19.50' ARE AVAILABLE AND MAY BE USED IN ANY COMBINATION TO ACHIEVE VARIOUS DOOR HEIGHTS.
4. WINDOWS MAY BE INSTALLED IN THE TOP SECTION (AS TESTED WITH 1/8" DSB GLASS OR EQUIVALENT) OR IN THE SECTION IMMEDIATELY BELOW THE TOP SECTION.
5. MINIMUM LENGTH OF ROLLER STEM IS 5½" (7" AS TESTED)
6. THE STRUT PLACEMENT ON DOOR MUST BE CONSISTENT WITH THE DOOR SHOWN.
7. STRUTS SECURED AT ALL LOCATIONS WITH TEK SCREWS.
8. QUANTITY OF SIDE LOCKS CAN BE 0,1, OR 2 AS TESTED.
9. DROP IN TYPE OF INSULATION IS OPTIONAL

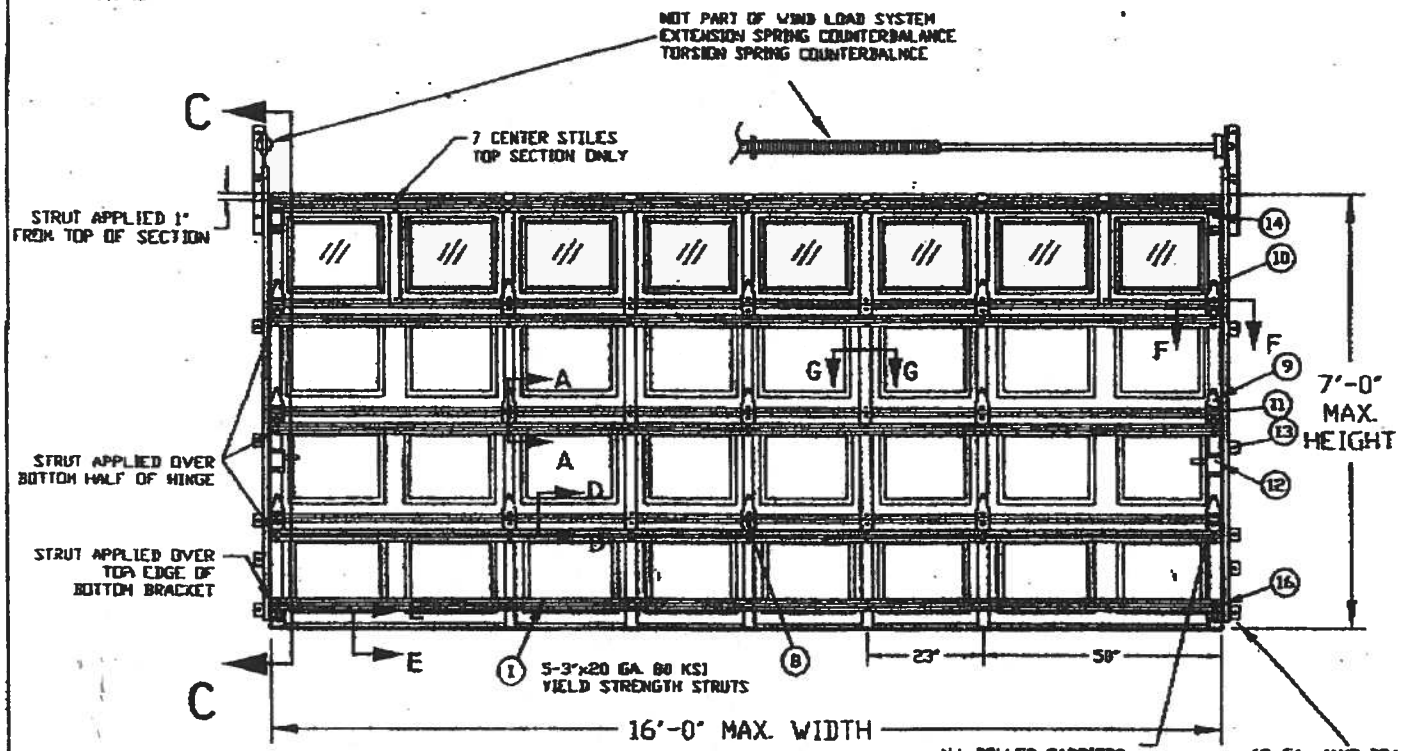

INSIDE ELEVATION

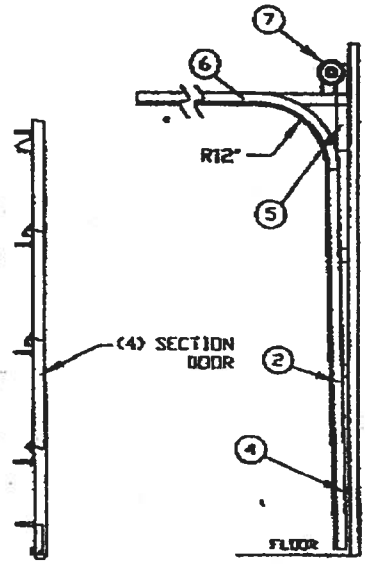

SEC C-C
VERTICAL TRACK, (16 GA.)

12 GA. JAMB BRACKETS, MAXIMUM SPACING = 19-1/2" WITH LOWEST BRACKET APPROX. 3" FROM FLOOR, 2ND BRACKET NEAR THE HORIZONTAL ℄ OF THE BOTTOM SECTION, AND 3RD BRACKET NEAR THE TOP OF THE BOTTOM SECTION

The seal on this drawing only certifies that the product(s) illustrated and described herein represent the configuration(s), dimensions and installation(s) of the door as tested.

SEAL PE No. 024280 PROFESSIONAL ENGINEER NORTH CAROLINA

LISTED SEAL

REPORT No. 2202

TEST REPORTS ON FILE VIDEO 10/19/00 (00293)

DESIGN LOAD +20.0 PSF & -20.0 PSF
TEST LOAD +30.0 PSF & -30.0 PSF

GADCO DOORS
SERIES 7400, EXTERIOR STEEL =.017 MIN (AS TESTED)
SERIES 7825, EXTERIOR STEEL =.019" MIN △
SERIES 7524, EXTERIOR STEEL =.024" MIN △
(TESTED) WITH WINDOWS

MAXIMUM DOOR WIDTH	MAXIMUM DOOR HEIGHT	TYPICAL CTR. STILE SPACING	STRUTS 80 KSI SIZE	STRUTS 80 KSI QTY.	VERTICAL TRACK
16'	7'	23"	3"	5	2 IN.

GENERAL AMERICAN DOOR COMPANY
5050 BASELINE ROAD
MONTGOMERY, IL 60538

SCALE: 1:25 | APPROVED BY: | DRAWN BY: D. WIEDMAN
DATE: 10-20-00 | REVISED: (A) 11-10-00
DESCRIPTION: 16' X 7' MAX. RAISED PANEL STEEL DOOR -WINDLOAD ±20 PSF
PART NUMBER: PAGE 1 OF 2 | DRAWING NUMBER: W13220-1

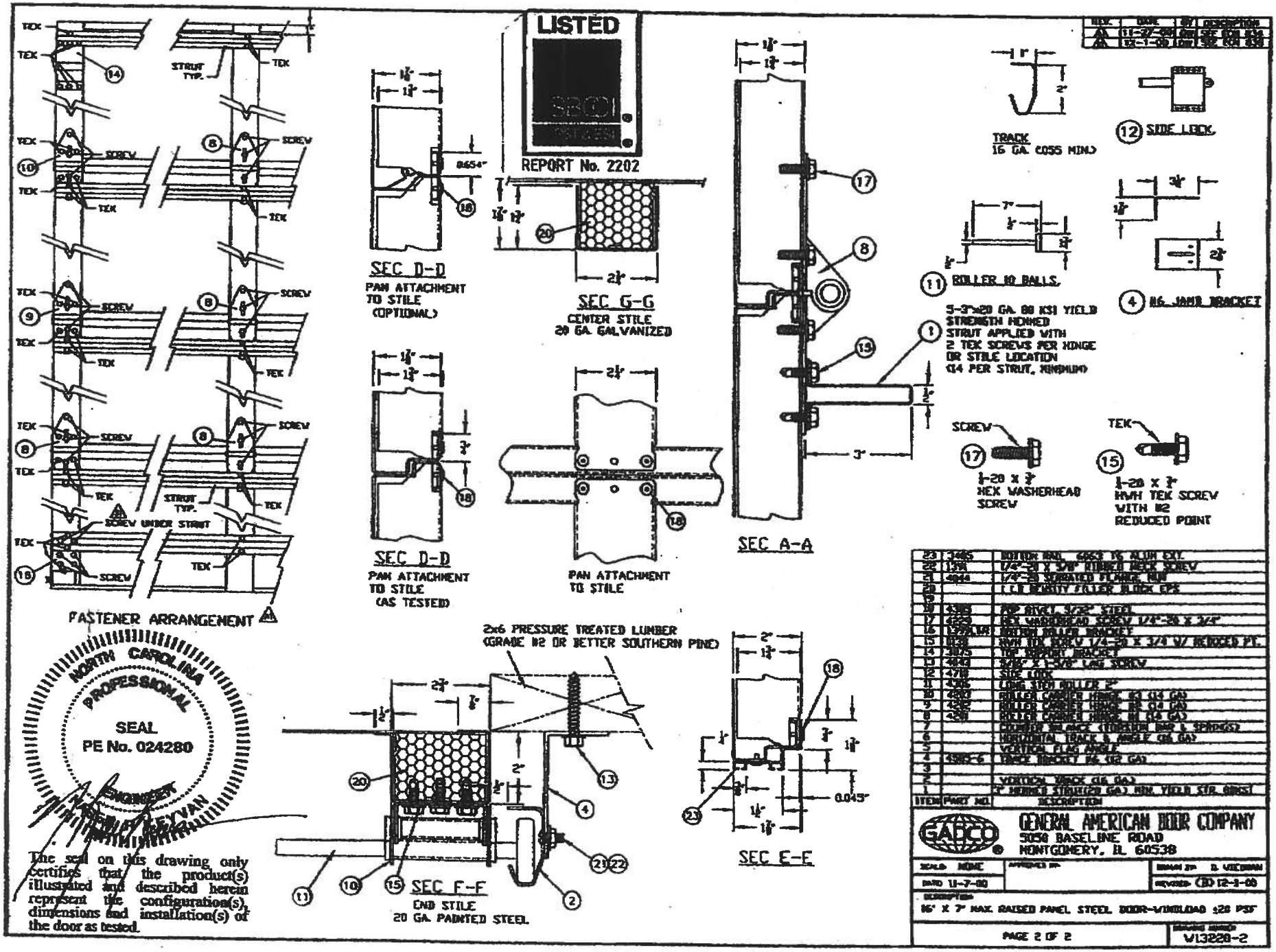
LISTED
REPORT No. 2202
FASTENER ARRANGEMENT
SCREW UNDER STRUT
STRUT TYP.
SEC D-D
PAN ATTACHMENT TO STILE (OPTIONAL)
SEC G-G
CENTER STILE 20 GA. GALVANIZED
SEC D-D
PAN ATTACHMENT TO STILE (AS TESTED)
PAN ATTACHMENT TO STILE
SEC A-A
TRACK 16 GA. (055 MIN.)
SIDE LOCK
ROLLER 10 BALLS
#6 JAMB BRACKET
5-3"x20 GA. 80 KSI YIELD STRENGTH HONED STRUT APPLIED WITH 2 TEK SCREWS PER HINGE OR STILE LOCATION (14 PER STRUT, MINIMUM)
SCREW
1/4-20 X 3/4 HEX WASHERHEAD SCREW
TEK
1/4-20 X 3/4 HVH TEK SCREW WITH #2 REDUCED POINT
2x6 PRESSURE TREATED LUMBER (GRADE #2 OR BETTER SOUTHERN PINE)
SEC F-F
END STILE 20 GA. PAINTED STEEL
SEC E-E
NORTH CAROLINA PROFESSIONAL SEAL PE No. 024280
ENGINEER
The seal on this drawing only certifies that the product(s) illustrated and described herein represent the configuration(s), dimensions and installation(s) of the door as tested.
GADCO
GENERAL AMERICAN DOOR COMPANY
3050 BASELINE ROAD
MONTGOMERY, IL 60538
SCALE NONE
DATE 11-7-00
DRAWN BY B. VIEDMAN
REVISED 12-1-00
16' X 7' MAX. RAISED PANEL STEEL DOOR-WINDLOAD ±28 PSF
PAGE 2 OF 2
W13228-2

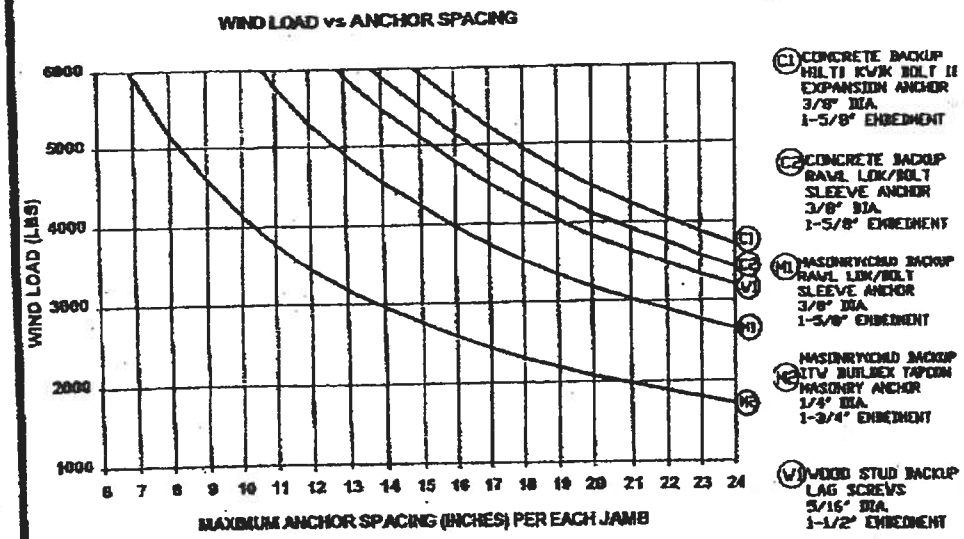

DESIGN LOAD $\frac{(LBS)}{FT^2}$ X GARAGE DOOR AREA(WIDTH-FT X HEIGHT-FT) = WIND LOAD(LBS)

EXAMPLE

$\frac{30\ LBS}{FT^2}$ X (16 FT WIDE X 8 FT HIGH) = 3840 LBS

- C1 USE 22" SPACING
- C2 USE 21" SPACING
- W1 USE 19" SPACING
- M1 USE 16" SPACING
- M2 USE 10" SPACING

SEE NOTE 11 FOR ADDITIONAL REQUIRED 2X6 WOOD JAMB ANCHORS

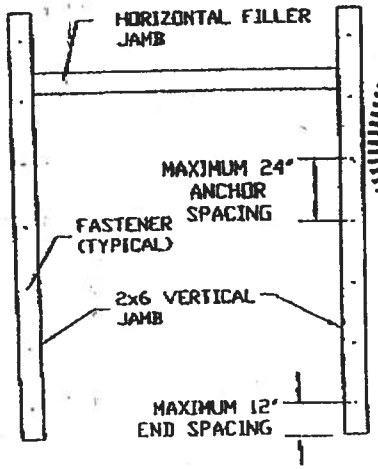

NORTH CAROLINA PROFESSIONAL SEAL PE No. 024280 ENGINEER NASER R KEYVAN

3/8/2002

NASER R KEYVAN LICENSE NO. 53774 STATE OF FLORIDA PROFESSIONAL ENGINEER

2x6 JAMB TO SUPPORTING STRUCTURE ATTACHMENT

2x6 PRESSURE TREATED (GRADE #2 OR BETTER SOUTHERN PINE) WOOD JAMB SHALL BE ANCHORED TO BUILDING WOOD FRAME, GROUTED AND REINFORCED CONCRETE MASONRY UNIT (CMU) WALLS OR COLUMNS, OR REINFORCED CONCRETE COLUMNS.

NOTES:

1) ALL DOOR OPENING SURROUNDING STRUCTURE TO BE DESIGNED BY REGISTERED ENGINEER OR ARCHITECT WITH DUE CONSIDERATION GIVEN TO INSTALLATIONS USING CENTER "HURRICANE" POSTS.

2) ALL DOOR OPENING STRUCTURE AND FASTENERS TO COMPLY WITH ALL APPLICABLE CODES INCLUDING SBCCI "STANDARD FOR HURRICANE RESISTANT RESIDENTIAL CONSTRUCTION SSTD 10," CURRENT EDITION.

3) ALL FASTENERS TO BE INSTALLED IN STRICT ACCORDANCE WITH MANUFACTURER'S SPECIFICATIONS, INSTRUCTIONS AND RECOMMENDATIONS.

4) WOOD FRAME BUILDINGS: STUDS AT EACH SIDE OF DOOR OPENING SHALL BE PROPERLY DESIGNED, CONNECTED, ANCHORED AND SHALL CONSIST OF A MINIMUM OF THREE (3) LAMINATIONS OF 2X6 PRESSURE TREATED SOUTHERN PINE (#2 GRADE OR BETTER) WALL STUDS CONTINUOUS FROM FOOTING TO DOUBLE TOP PLATE.

5) REINFORCED CMU OR CONCRETE: 2X6 WOOD JAMB SHALL BE ANCHORED TO SOLIDLY GROUTED AND REINFORCED CONCRETE MASONRY UNIT (CMU) WALLS OR COLUMNS, OR REINFORCED CONCRETE COLUMNS. ANCHOR SPACING AND EMBEDMENT IS BASED ON CONCRETE MASONRY UNITS COMPLYING WITH ASTM C90 WITH A MINIMUM NET AREA COMPRESSIVE STRENGTH OF 2150 PSI; GROUT WITH A MINIMUM COMPRESSIVE STRENGTH OF 2000 PSI; REINFORCED CONCRETE COLUMNS WITH A MINIMUM COMPRESSIVE STRENGTH OF 2500 PSI.

6) EMBEDMENTS LISTED ARE THE MINIMUM ALLOWABLE EMBEDMENTS.

7) ANCHORS FOR CONCRETE AND CONCRETE MASONRY UNITS (CMU) SHALL HAVE A MINIMUM 3" EDGE DISTANCE FROM ALL EDGES OF CONCRETE OR CONCRETE MASONRY UNITS. ANCHORS FOR CONCRETE AND CMU SHALL HAVE A MINIMUM SPACING OF 3-3/4"

8) LAG SCREWS SHALL BE CENTERED IN ONE OF THE 1-1/2" DIMENSION FACES OF THE TRIPLE 2X6 WALL STUDS.

9) WASHERS ARE REQUIRED ON ALL FASTENERS.

10) THE WIND LOAD VS. ANCHOR SPACING CHART IS FOR A MAXIMUM DOOR SIZE OF 18' X 8' AT A MAXIMUM 42 PSF DESIGN WIND LOAD.

11) FOR THE UPPER THREE INDIVIDUAL STEEL JAMB BRACKETS, BRACKETS SHALL BE CENTERED BETWEEN THE TWO CLOSEST 2X6 WOOD JAMB ANCHORS. IF THE STEEL JAMB BRACKET IS NOT CENTERED BETWEEN THE TWO CLOSEST 2X6 WOOD JAMB ANCHORS, ADD AN ADDITIONAL 2X6 WOOD JAMB ANCHOR NEAR THAT STEEL BRACKET TO INSURE THAT THE LOAD FROM THE STEEL BRACKET IS EQUALLY TRANSFERRED TO TWO WOOD JAMB ANCHORS.

GADCO®
GENERAL AMERICAN DOOR COMPANY
5050 BASELINE ROAD
MONTGOMERY, IL 60538

SCALE NONE	APPROVED BY	DRAWN BY DV
DATE 8-30-99		REVISED
DESCRIPTION JAMB TO STRUCTURE ATTACHMENT FOR WIND LOADED GARAGE DOORS		
	MASTER DRAWING NUMBER A10560	DRAWING NUMBER

with quick setting asphalt adhesive cement immediately upon installation. Spots of cement must be equivalent in size to a $.25 piece and applied to shingles with a 5 in. exposure, use 6 fasteners per shingle. See Section 3 for the Mansard Fastening Pattern.

8. RE-ROOFING

Before re-roofing, be certain to inspect the roof decks. All plywood shall meet the requirements listed in Section 1.

Nail down or remove curled or broken shingles from the existing roof. Replace all missing shingles with new ones to provide a smooth base. Shingles that are buckled usually indicate warped decking or protruding nails. Hammer down all protruding nails or remove them and refasten in a new location. Remove all drip edge metal and replace with new.

If re-roofing over an existing roof where new flashing is required to protect against ice dams (freeze/thaw cycle of water and/or the backup of water in frozen or clogged gutters), remove the old roofing to a point at least 24 in. beyond the interior wall line and apply TAMKO's Moisture Guard Plus® waterproofing underlayment. Contact TAMKO's Technical Services Department for more information.

The nesting procedure described below is the preferred method for re-roofing over square tab strip shingles with a 5 in. exposure.

Starter Course: Begin by using TAMKO Shingle Starter or by cutting shingles into 5 x 36 inch strips. This is done by removing the 5 in. tabs from the bottom and approximately 2 in. from the top of the shingles so that the remaining portion is the same width as the exposure of the old shingles. Apply the starter piece so that the self-sealing adhesive lies along the eaves and is even with the existing roof. The starter strip should be wide enough to overhang the eaves and carry water into the gutter. Remove 3 in. from the length of the first starter shingle to ensure that the joints from the old roof do not align with the new.

First Course: Cut off approximately 2 in. from the bottom edge of the shingles so that the shingles fit beneath the existing third course and align with the edge of the starter strip. Start the first course with a full 36 in. long shingle and fasten according to the instructions printed in Section 3.

Second and Succeeding Courses: According to the off-set application method you choose to use, remove the appropriate length from the rake end of the first shingle in each succeeding course. Place the top edge of the new shingle against the butt edge of the old shingles in the courses above. The full width shingle used on the second course will reduce the exposure of the first course to 3 in. The remaining courses will automatically have a 5 in. exposure.

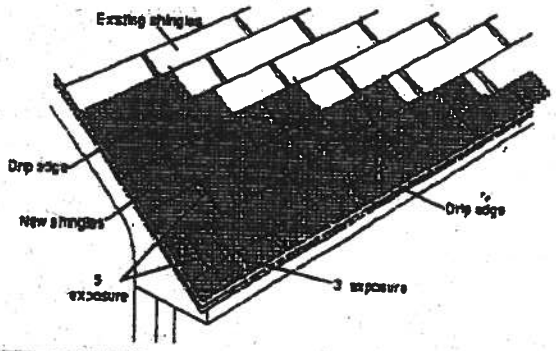

9. VALLEY APPLICATION

Over the shingle underlayment, center a 36 in. wide sheet of TAMKO Nail-Fast® or a minimum 50 lb. roll roofing in the valley. Nail the felt only where necessary to hold it in place and then only nail the outside edges.

IMPORTANT: PRIOR TO INSTALLATION WARM SHINGLES TO PREVENT DAMAGE WHICH CAN OCCUR WHILE BENDING SHINGLES TO FORM VALLEY.

- Apply the first course of shingles along the eaves of one of the intersecting roof planes and across the valley.

Note: For proper flow of water over the trimmed shingle, always start applying the shingles on the roof plane that has the lower slope or less height.

- Extend the end shingle at least 12 in. onto the adjoining roof. Apply succeeding courses in the same manner, extending them across the valley and onto the adjoining roof.
- Do not trim if the shingle length exceeds 12 in. Lengths should vary.
- Press the shingles lightly into the valley.
- Use normal shingle fastening methods.

Note: No fastener should be within 6 in. of the valley centerline, and two fasteners should be placed at the end of each shingle crossing the valley.

- To the adjoining roof plane, apply one row of shingles extending it over previously applied shingles and trim a minimum of 2 in. back from the centerline of the valley.

Note: For a neater installation, snap a chalkline over the shingles for guidance.

- Clip the upper corner of each shingle at a 45-degree angle and embed the end of the shingle in a 3 in. wide strip of asphalt plastic cement. This will prevent water from penetrating between the courses by directing it into the valley.

- ***CAUTION:*** *Adhesive must be applied in smooth, thin, even layers.*

Excessive use of adhesive will cause blistering to this product.

TAMKO assumes no responsibility for blistering.

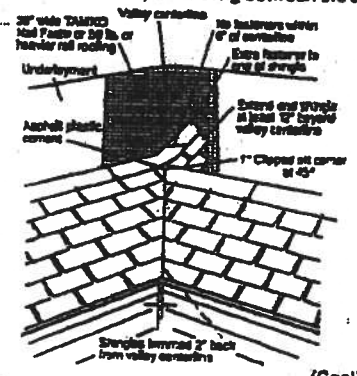

(Continued)

TAMKO®
ROOFING PRODUCTS

FEB - 4 RECD

January 31, 2002

TO: OUR FLORIDA CUSTOMERS:

Effective February 1, 2002, the following TAMKO shingles, as manufactured at TAMKO's Tuscaloosa, Alabama, facility, comply with ASTM D-3161, Type I modified to 110 mph. Testing was conducted using four nails per shingle. These shingles also comply with Florida Building Code TAS 100 for wind driven rain.

- Glass-Seal AR
- Elite Glass-Seal AR
- ASTM Heritage 30 AR (formerly ASTM Heritage 25 AR)
- Heritage 40 AR (formerly Heritage 30 AR)
- Heritage 50 AR (formerly Heritage 40 AR)

All testing was performed by Florida State certified independent labs.

Please direct all questions to TAMKO's Technical Services Department at 1-800-641-4691.

TAMKO Roofing Products, Inc.

CORPORATE HEADQUARTERS
220 W. FOURTH STREET P.O. BOX 1404 JOPLIN, MO 64802-1404 800-641-4691 FAX 800-641-1925

TAMKO
ROOFING PRODUCTS

Application Instructions For Heritage® 25 Series Shingles

SPECIFICATIONS (APPROX.)	
Length	37"
Width	12"
Bundles per Sq.	3
Shingles per Sq.	78
Shingles per Bundle	26
Coverage per Sq. (Sq. Ft.)	100
Exposure	5"

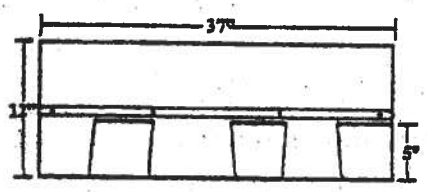

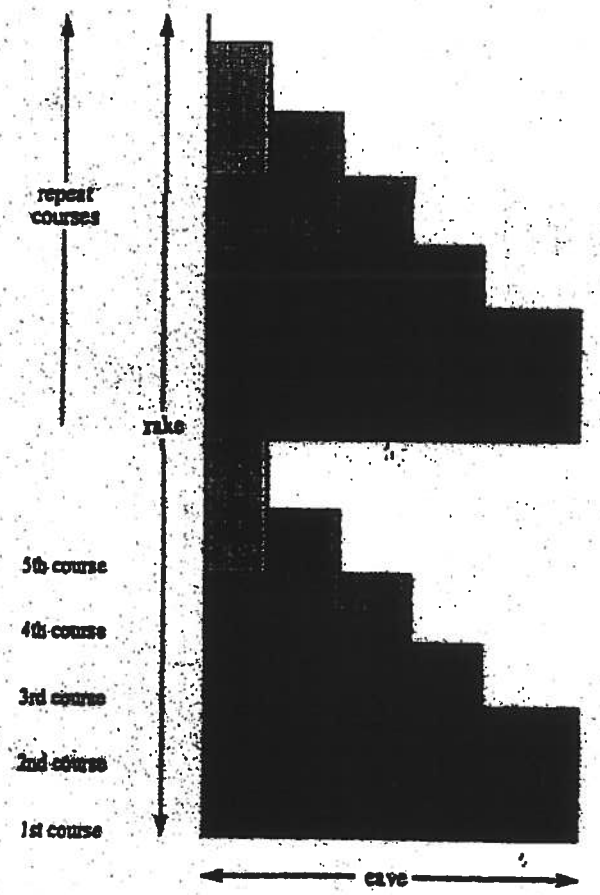

The 4 cuts in the first 10 courses:

In the first 10 courses, there are 4 cuts and no waste.

When you reach the other side of the roof, whatever has to be trimmed off can be used in the field of roofing.

For additional application information consult the application instructions printed on the product package.

NOTE: These application instructions apply only to Heritage 25 and Heritage 25 AR shingles.

TAMKO
ROOFING PRODUCTS

Application Instructions for

• Glass-Seal • Elite Glass-Seal®
• Glass-Seal AR • Elite Glass-Seal® AR

THREE-TAB ASPHALT SHINGLES

THESE ARE THE MANUFACTURER'S APPLICATION INSTRUCTIONS FOR THE ROOFING CONDITIONS DESCRIBED. TAMKO ROOFING PRODUCTS, INC. ASSUMES NO RESPONSIBILITY FOR LEAKS OR OTHER ROOFING DEFECTS RESULTING FROM FAILURE TO FOLLOW THE MANUFACTURER'S INSTRUCTIONS.
THIS PRODUCT IS COVERED BY A LIMITED WARRANTY, THE TERMS OF WHICH ARE PRINTED ON THE WRAPPER.
IN COLD WEATHER (BELOW 40°F), CARE MUST BE TAKEN TO AVOID DAMAGE TO THE EDGES AND CORNERS OF THE SHINGLES.

IMPORTANT: It is not necessary to remove the plastic strip from the back of the shingles.

1. ROOF DECK

These shingles are for application to roof decks capable of receiving and retaining fasteners, and to inclines of not less than 2 in. per foot. For roofs having pitches 2 in. per foot to less than 4 in. per foot, refer to special instructions titled "Low Slope Application". Shingles must be applied properly. TAMKO assumes no responsibility for leaks or defects resulting from improper application, or failure to properly prepare the surface to be roofed over.

NEW ROOF DECK CONSTRUCTION: Roof deck must be smooth, dry and free from warped surfaces. It is recommended that metal drip edges be installed at eaves and rakes.

PLYWOOD: All plywood shall be exterior grade as defined by the American Plywood Association. Plywood shall be a minimum of 3/8 in. thickness and applied in accordance with the recommendations of the American Plywood Association.

SHEATHING BOARDS: Boards shall be well-seasoned tongue-and-groove boards and not over 6 in. nominal width. Boards shall be a 1 in. nominal minimum thickness. Boards shall be properly spaced and nailed.

2. VENTILATION

Inadequate ventilation of attic spaces can cause accumulation of moisture in winter months and a build up of heat in the summer. These conditions can lead to:

1. Vapor Condensation
2. Buckling of shingles due to deck movement.
3. Rotting of wood members.
4. Premature failure of roof.

To insure adequate ventilation and circulation of air, place louvers of sufficient size high in the gable ends and/or install continuous ridge and soffit vents.
FHA minimum property standards require one square foot of net free ventilation area to each 150 square feet of space to be vented, or one square foot per 300 square feet if a vapor barrier is installed on the warm side of the ceiling or if at least one half of the ventilation is provided near the ridge. If the ventilation openings are screened, the total area should be doubled.

IT IS PARTICULARLY IMPORTANT TO PROVIDE ADEQUATE VENTILATION.

3. FASTENING

NAILS: TAMKO recommends the use of nails as the preferred method of application.
WIND CAUTION: Extreme wind velocities can damage these shingles after application when proper sealing of the shingles does not occur. This can especially be a problem if the shingles are applied in cooler months or in areas on the roof that do not receive direct sunlight. These conditions may impede the sealing of the adhesive strips on the shingles. The inability to seal down may be compounded by prolonged cold weather conditions and/or blowing dust. In these situations, hand sealing of the shingles is recommended. Shingles must also be fastened according to the fastening instructions described below.

Correct placement of the fasteners is critical to the performance of the shingle. If the fasteners are not placed as shown in the diagram and described below, TAMKO will not be responsible for any shingles blown off or displaced. TAMKO will not be responsible for damage to shingles caused by winds or gusts exceeding gale force. Gale force shall be the standard as defined by the U.S. Weather Bureau.

FASTENING PATTERNS: Fasteners must be placed above or below the factory applied sealant in an area between 5-1/2" and 6-3/4" from the butt edge of the shingle. Fasteners should be located horizontally according to the diagram below. Do not nail into the sealant. TAMKO recommends nailing below the sealant whenever possible for greater wind resistance.

1) Standard Fastening Pattern. (For use on decks with slopes 2 in. per foot to 21 in. per foot.) One fastener 1 in. back from each end and one 12 in. back from each end of the shingle for a total of 4 fasteners. (See standard fastening pattern illustrated below).

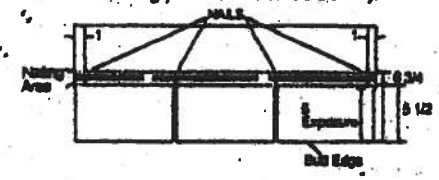

2) Mansard or High Wind Fastening Pattern. (For use on decks with slopes greater than 21 in. per foot.) One fastener 1 in. back from each end and one fastener 10-1/2 in. back from each end and one fastener 13-1/2 in. back from each end for a total of 6 fastener per shingle. (See Mansard fastening pattern illustrated below.)

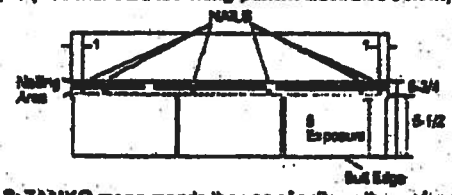

NAILS: TAMKO recommends the use of nails as the preferred method of application. Standard type roofing nails should be used. Nail shanks should be made of minimum 12-gauge wire, and a minimum head diameter of 3/8 in. Nails should be long enough to penetrate 3/4 in.

(Continued)

I

AAMA/NWWDA 101/I.S.2-97
TEST REPORT SUMMARY

Rendered to:

MI HOME PRODUCTS, INC.

SERIES/MODEL: 650 Fin
TYPE: Aluminum Single Hung Window

Title of Test	Results
Rating	H-R40 52 x 72
Overall Design Pressure	+45.0 psf -47.2 psf
Operating Force	11 lb max.
Air Infiltration	0.13 cfm/ft²
Water Resistance	6.00 psf
Structural Test Pressure	+67.5 psf -70.8 psf
Deglazing	Passed
Forced Entry Resistance	Grade 10

Reference should be made to Report No. 01-41134.01 dated 03/26/02 for complete test specimen description and data.

For ARCHITECTURAL TESTING, INC.

Mark A. Hess, Technician

MAH:nlb

Allen M. Reeves
1 APRIL 2002

ALLEN M. REEVES
CERTIFICATE
NO. 11254
STATE OF
FLORIDA
PROFESSIONAL ENGINEER

II

Architectural Testing

AAMA/NWWDA 101/I.S.2-97 TEST REPORT

Rendered to

MI HOME PRODUCTS, INC.
650 West Market Street
P.O. Box 370
Gratz, Pennsylvania 17030-0370

Report No: 01-41134.01
Test Date: 03/07/02
Report Date: 03/26/02
Expiration Date: 03/07/06

Project Summary: Architectural Testing, Inc. (ATI) was contracted by MI Home Products, Inc. to perform tests on Series/Model 650 Fin, aluminum single hung window at their facility located in Elizabethville, Pennsylvania. The samples tested successfully met the performance requirements for a H-R40 52 x 72 rating.

Test Specification: The test specimen was evaluated in accordance with AAMA/NWWDA 101/I.S.2-97, *Voluntary Specifications for Aluminum, Vinyl (PVC) and Wood Windows and Glass Doors.*

Test Specimen Description:

Series/Model: 650 Fin

Type: Aluminum Single Hung Window

Overall Size: 4' 4-1/4" wide by 6' 0-3/8" high

Active Sash Size: 4' 1-3/4" wide by 3' 0-5/8" high

Daylight Opening Size: 3' 11-3/8" wide by 2' 9-1/2" high

Screen Size: 4' 0-1/4" wide by 2' 11-1/8" high

Finish: All aluminum was white.

Glazing Details: The active and fixed lites utilized 5/8" thick, sealed insulating glass constructed from two sheets of 1/8" thick, clear annealed glass and a metal reinforced butyl spacer system. The active sash was channel glazed utilizing a flexible vinyl wrap-around gasket. The fixed lite was interior glazed against double-sided adhesive foam tape and secured with PVC snap-in glazing beads.

130 Derry Court
York, PA 17402-9405
phone: 717.764.7700
fax: 717.764.4129
www.archtest.com

Allan M. Reeves
1 APRIL 2002

REEVES
No. 15354
STATE OF FLORIDA
PROFESSIONAL ENGINEER

III

Test Specimen Description: (Continued)

Weatherstripping:

Description	Quantity	Location
0.230" high by 0.270" backed polypile with center fin	1 Row	Fixed meeting rail
0.250" high by 0.187" backed polypile with center fin	2 Rows	Active sash stiles
1/2" x 1/2" dust plug	4 Pieces	Active sash, top and bottom of stiles
1/4" foam-filled vinyl bulb seal	1 Row	Active sash, bottom rail

Frame Construction: The frame was constructed of extruded aluminum with coped, butted, and sealed corners fastened with two #8 x 1" screws through the head and sill into each jamb screw boss. End caps were utilized on the ends of the fixed meeting rail and secured with two 1-1/4" screws per cap. Meeting rail was secured to the frame utilizing two 1-1/4" screws.

Sash Construction: The sash was constructed of extruded aluminum with coped, butted, and sealed corners fastened with two #8 x 1-1/2" screws through the rails into each jamb screw boss.

Screen Construction: The screen was constructed from roll-formed aluminum with keyed corners. The fiberglass mesh was secured with a flexible spline.

Hardware:

Description	Quantity	Location
Metal cam lock with keeper		Midspan, active meeting rail with keeper adjacent on fixed meeting rail
Plastic tilt latch	2	Active sash, meeting rail ends
Metal tilt pin	2	Active sash, bottom rail ends
Balance assembly	2	One in each jamb
Screen plunger	2	4" from rail ends on top rail

ALLEN N. REEVES
CERTIFICATE NO. 19364
STATE OF FLORIDA
PROFESSIONAL ENGINEER

Allen N. Reeves
1 APRIL 2002

IV

Test Specimen Description: (Continued)

Drainage: Sloped sill

Reinforcement: No reinforcement was utilized.

Installation: The test specimen was installed into a 2 x 8 #2 Spruce-Pine-Fir wood test buck with #8 x 1-5/8" drywall screws every 8" on center around the nail fin. Polyurethane was used as a sealant under the nail fin and around the exterior perimeter.

Test Results:

The results are tabulated as follows:

Paragraph	Title of Test - Test Method	Results	Allowed
2.2.1.6.1	Operating Force	11 lbs	30 lbs max
	Air Infiltration (ASTM E 283-91) @ 1.57 psf (25 mph)	0.13 cfm/ft^2	0.3 cfm/ft^2 max

Note #1: The tested specimen meets the performance levels specified in AAMA/NWWDA 101/I.S. 2-97 for air infiltration.

	Water Resistance (ASTM E 547-00) (with and without screen) WTP = 2.86 psf	No leakage	No leakage
2.1.4.1	Uniform Load Deflection (ASTM E 330-97) (Measurements reported were taken on the meeting rail) (Loads were held for 33 seconds)		
	@ 25.9 psf (positive)	0.42"*	0.26" max.
	@ 34.7 psf (negative)	0.43"*	0.26" max.

**Exceeds L/175 for deflection, but passes all other test requirements.*

2.1.4.2	Uniform Load Structural (ASTM E 330-97) (Measurements reported were taken on the meeting rail) (Loads were held for 10 seconds)		
	@ 38.9 psf (positive)	0.02"	0.18" max.
	@ 52.1 psf (negative)	0.02"	0.18" max.

Allen N. Reeves
1 APRIL 2002

ALLEN N. REEVES
CERTIFICATE
NO. 1835
STATE OF
FLORIDA
PROFESSIONAL ENGINEER

V

Test Specimen Description: (Continued)

Paragraph	Title of Test - Test Method	Results	Allowed
2.2.1.6.2	Deglazing Test (ASTM E 987)		
	In operating direction at 70 lbs		
	Meeting rail	0.12"/25%	0.50"/100%
	Bottom rail	0.12"/25%	0.50"/100%
	In remaining direction at 50 lbs		
	Left stile	0.06"/12%	0.50"/100%
	Right stile	0.06"/12%	0.50"/100%
	Forced Entry Resistance (ASTM F 588-97)		
	Type: A		
	Grade: 10		
	Lock Manipulation Test	No entry	No entry
	Tests A1 through A5	No entry	No entry
	Test A7	No entry	No entry
	Lock Manipulation Test	No entry	No entry
Optional Performance			
4.3	Water Resistance (ASTM E 547-00)		
	(with and without screen)		
	WTP = 6.00 psf	No leakage	No leakage
	Uniform Load Deflection (ASTM E 330-97)		
	(Measurements reported were taken on the meeting rail)		
	(Loads were held for 33 seconds)		
	@ 45.0 psf (positive)	0.47"*	0.26" max.
	@ 47.2 psf (negative)	0.46"*	0.26" max.

**Exceeds L/175 for deflection, but passes all other test requirements.*

	Uniform Load Structural (ASTM E 330-97)		
	(Measurements reported were taken on the meeting rail)		
	(Loads were held for 10 seconds)		
	@ 67.5 psf (positive)	0.05"	0.18" max.
	@ 70.8 psf (negative)	0.05"	0.18" max.

Allen N. Reeves
1 APRIL 2002

ALLEN N. REEVES
CERTIFICATE
No. 18354
STATE OF
FLORIDA
PROFESSIONAL ENGINEER

VI

Detailed drawings, representative samples of the test specimen, and a copy of this report will be retained by ATI for a period of four years. The above results were secured by using the designated test methods and they indicate compliance with the performance requirements of the above referenced specification. This report does not constitute certification of this product, which may only be granted by the certification program administrator.

For ARCHITECTURAL TESTING, INC:

Mark A. Hess
Technician

Allen N. Reeves, P.E.
Director - Engineering Services
1 APRIL 2002

MAH:nlb
01-41134.01

ALLEN N. REEVES
CERTIFICATE
NO. 1[illegible]
STATE OF
FLORIDA
PROFESSIONAL ENGINEER

650-AS1 A

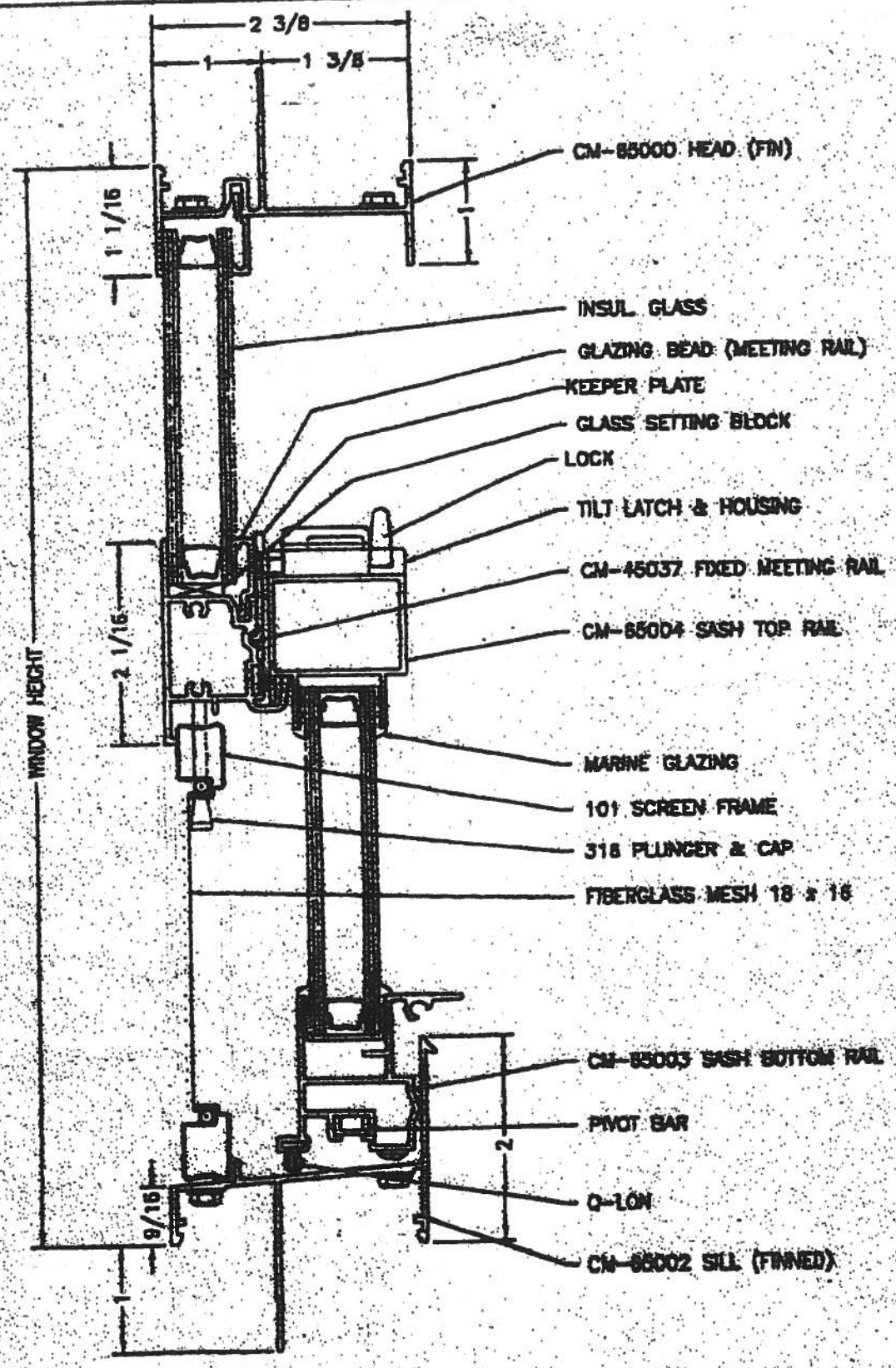

MI HOME PRODUCTS
650 NEW BARRET STREET • GROTZ, PA • 17000-0370

TITLE 650 SH FIN MAIN FRAME VERTICAL CROSS SECTION

Y.L.R.	4-7-82	FILL	650-AS1	A

650-AS2 | B

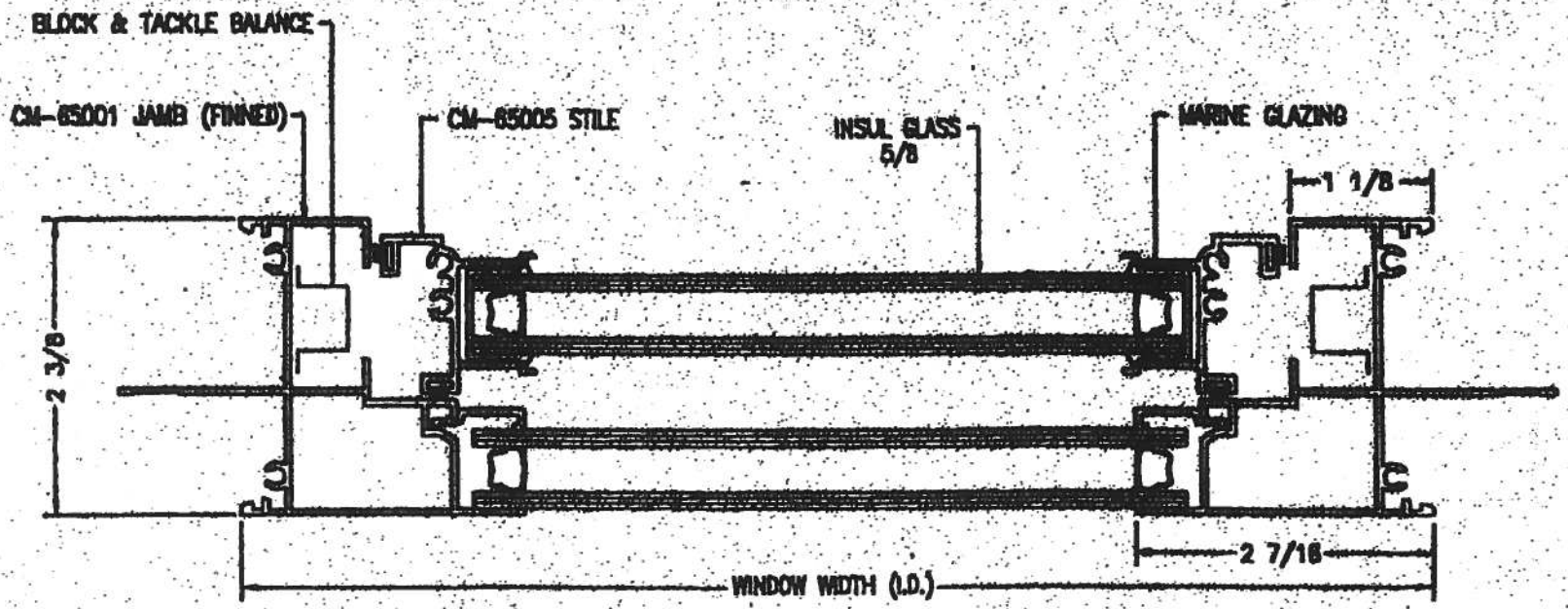

MI HOME PRODUCTS

TITLE 650 SH FIN MAIN FRAME INSULATED GLASS HORIZONTAL CROSS SECTION

D.A.R.	4-7-02	FULL	650-AS2	B

XX
Glazed Outswing Unit

[redacted]

WOOD-EDGE STEEL DOORS

APPROVED ARRANGEMENT:

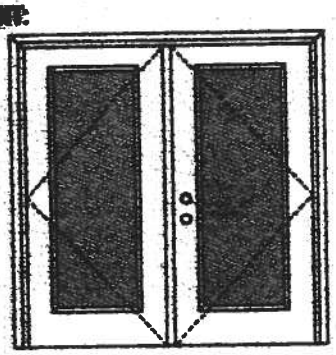

Note:
Units of other sizes are covered by this report as long as the panels used do not exceed 3'0" x 6'8".

Double Door
Maximum unit size = 6'0" x 6'8"

Design Pressure
+40.5/-40.5
Limited water unless special threshold design is used.

Large Missile Impact Resistance
Hurricane protective system (shutters) is REQUIRED.

Actual design pressure and impact resistant requirements for a specific building design and geographic location is determined by ASCE 7-national, state or local building codes specify the edition required.

MINIMUM ASSEMBLY DETAIL:

Compliance requires that minimum assembly details have been followed – see MAD-WL-MA0012-02 and MAD-WL-MA0041-02.

MINIMUM INSTALLATION DETAIL:

Compliance requires that minimum installation details have been followed – see MID-WL-MA0002-02.

APPROVED DOOR STYLES:

1/4 GLASS:

100 Series

133, 135 Series

136 Series

600 Series

822 Series

1/2 GLASS:

105 Series*

106, 109 Series*

129 Series*

280 Series*

12 M., 28 M., 34 M. Series*

107 Series*

108 Series

304 Series

*This glass kit may also be used in the following door styles: 5-panel; 5-panel with scroll; Eyebrow 5-panel; Eyebrow 5-panel with scroll.

Johnson EntrySystems

March 29, 2002
Our continuing program of product improvement makes specifications, design and product data subject to change without notice.

PREMDOR Collection Premium Quality Doors

Exclusively from Masonite®
Masonite International Corporation

GLASS INSERT IN DOOR OR SIDELITE PANEL

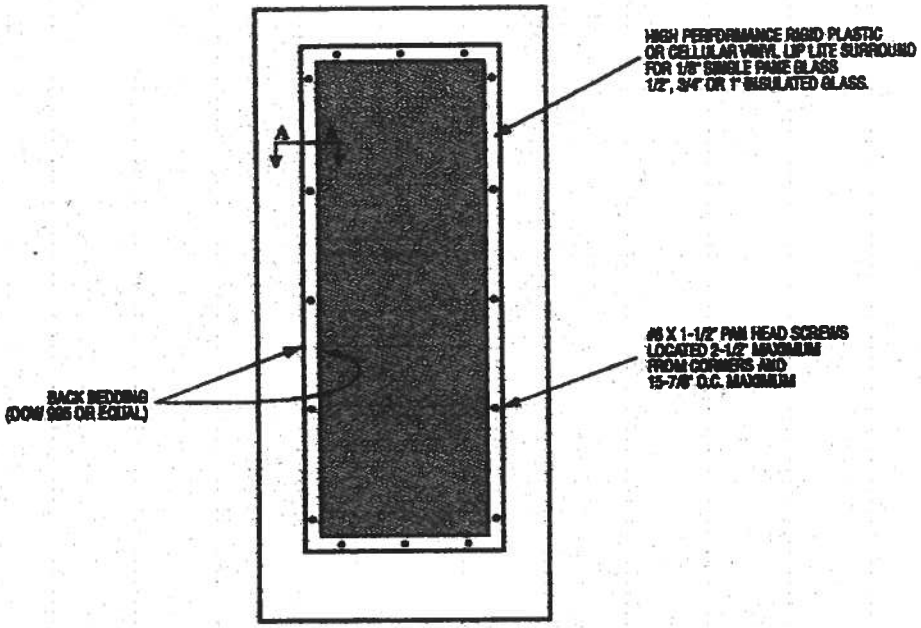

SECTION A-A
TYPICAL RIGID PLASTIC LIP LITE SURROUND

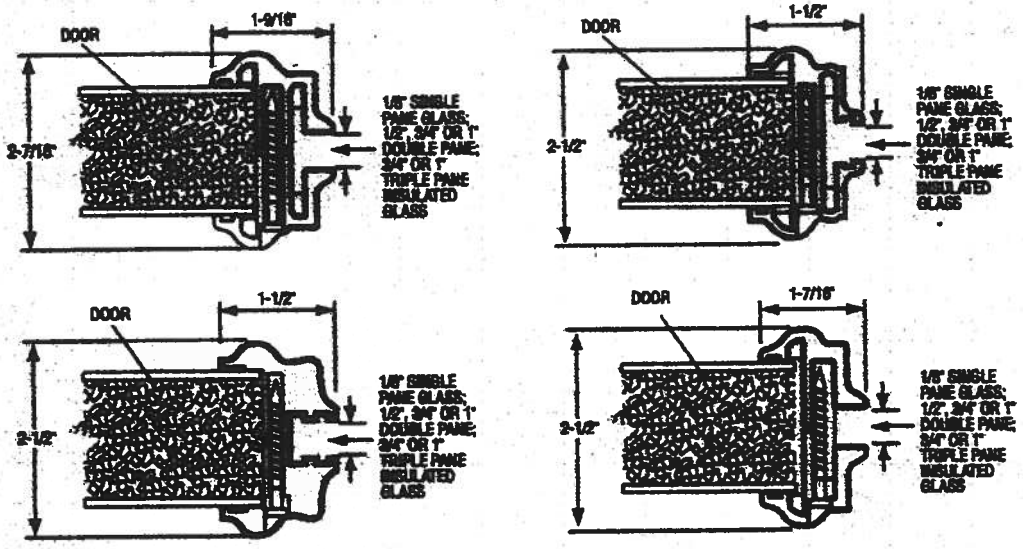

XX
Glazed Outswing Unit

[redacted]

WOOD-EDGE STEEL DOORS

APPROVED DOOR STYLES:

3/4 GLASS:

FULL GLASS:

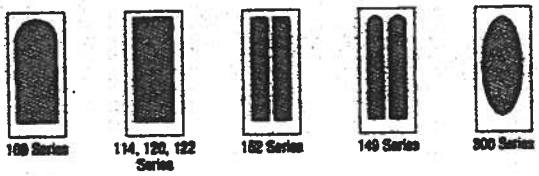

CERTIFIED TEST REPORTS:

NCTL 210-1897-7, 8, 9, 10, 11, 12; NCTL 210-1864-5, 6, 7, 8; NCTL 210-2178-1, 2, 3

Certifying Engineer and License Number: Barry D. Portney, P.E. / 16258.

Unit Tested in Accordance with Miami-Dade BCCO PA202.

Evaluation report NCTL-210-2794-1

Door panels constructed from 26-gauge 0.017" thick steel skins. Both stiles constructed from wood. Top end rails constructed of 0.041" steel. Bottom end rails constructed of 0.021" steel. Interior cavity of slab filled with rigid polyurethane foam core. Slab glazed with insulated glass mounted in a rigid plastic lip lite surround.

Frame constructed of wood with an extruded aluminum bumper threshold.

PRODUCT COMPLIANCE LABELING:

TESTED IN
ACCORDANCE WITH
MIAMI-DADE BCCO PA202

COMPANY NAME
CITY, STATE

To the best of my knowledge and ability the above side-hinged exterior door unit conforms to the requirements of the 2001 Florida Building Code, Chapter 17 (Structural Tests and Inspections).

Kurt L Balthazor

State of Florida, Professional Engineer
Kurt Balthazor, P.E. – License Number 56533

Johnson
EntrySystems

March 29, 2002
Our continuing program of product improvement makes specifications, design and product detail subject to change without notice.

PREMDOR Collection Premium Quality Doors

Exclusively from Masonite®
Masonite International Corporation

XX
Unit

OUTSWING UNITS WITH DOUBLE DOOR

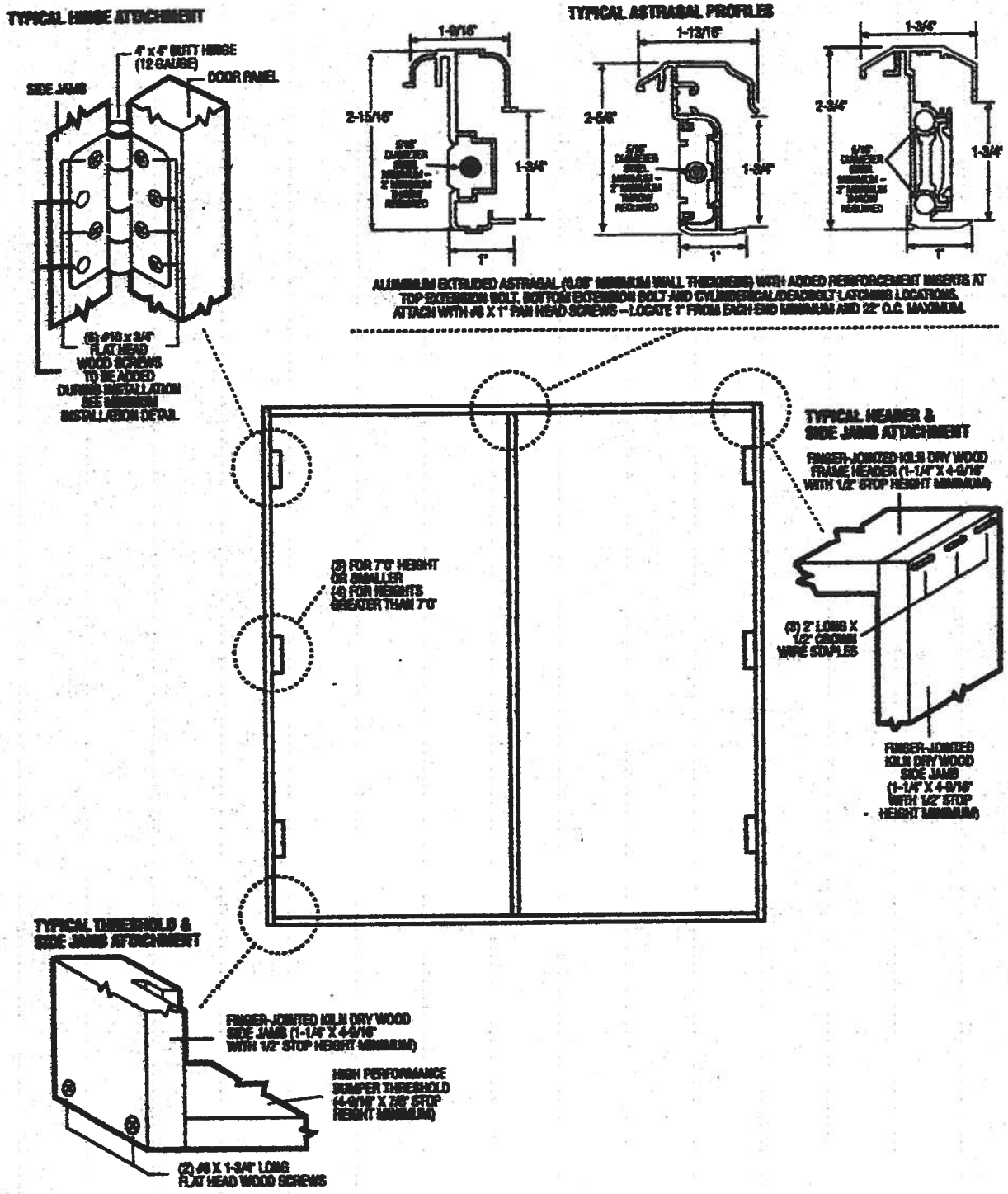

March 29, 2002
Our continuing program of product improvement makes specifications, design and product detail subject to change without notice.

PREMDOR Collection Premium Quality Doors
Exclusively from Masonite
Masonite International Corporation

XX
Unit

[redacted]

DOUBLE DOOR

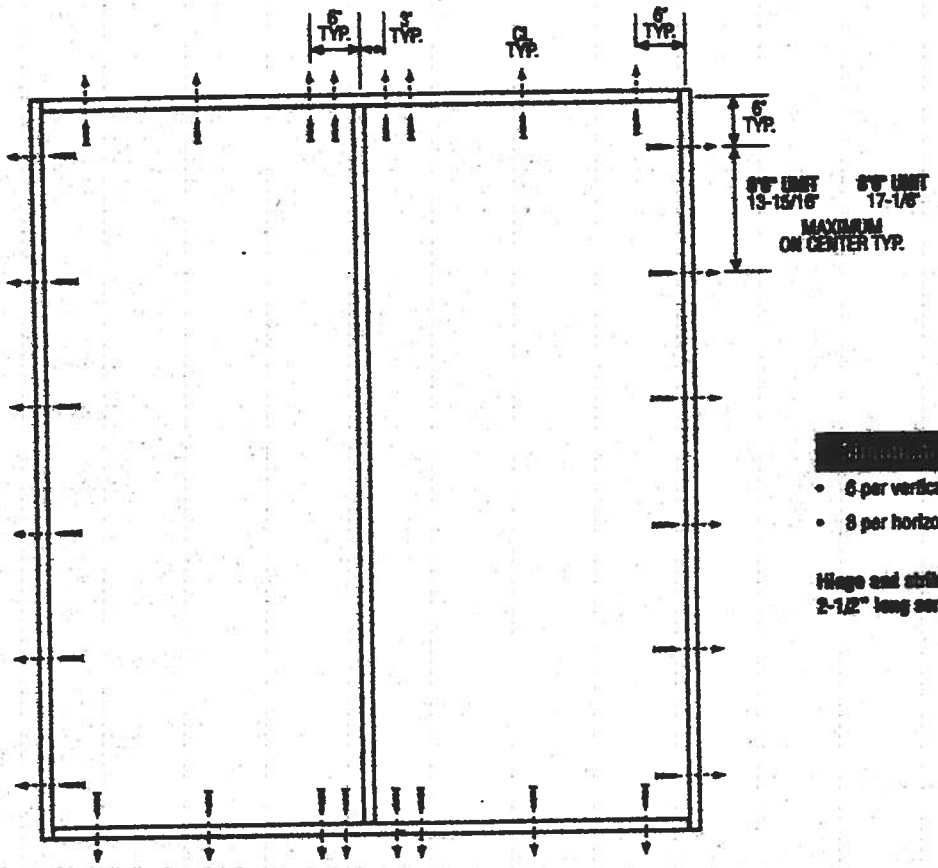

[redacted]

- 6 per vertical framing member
- 8 per horizontal framing member

Hinge and strike plates require two 2-1/2" long screws per location.

Latching Hardware:

- Compliance requires that GRADE 2 or better (ANSI/BHMA A156.2) cylinderical and deadlock hardware be installed.

Notes:

1. Anchor calculations have been carried out with the lowest (least) fastener rating from the different fasteners being considered for use. Fasteners analyzed for this unit include #8 and #10 wood screws or 3/16" Tapcons.
2. The wood screw single shear design values come from Table 11.3A of ANSI/AF & PA NDS for southern pine lumber with a side member thickness of 1-1/4" and achievement of minimum embedment. The 3/16" Tapcon single shear design values come from the ITW and ELCO Dade Country approvals respectively, each with minimum 1-1/4" embedment.
3. Wood bucks by others, must be anchored properly to transfer loads to the structure.

PREMDOR Premium Quality Doors
Exclusively from Masonite
Masonite International Corporation

March 29, 2002
Our continuing program of product improvement makes specifications, design and product detail subject to change without notice.

Residential System Sizing Calculation

Summary

Spec House

Lake City, FL 32025-

Project Title:
Adams Framing & Const. - Lot 10 Hollybrook

Code Only
Professional Version
Climate: North

11/24/2006

Location for weather data: Gainesville - Defaults: Latitude(29) Altitude(152 ft.) Temp Range(M)
Humidity data: Interior RH (50%) Outdoor wet bulb (77F) Humidity difference(54gr.)

Winter design temperature	33	F	Summer design temperature	92	F
Winter setpoint	70	F	Summer setpoint	75	F
Winter temperature difference	37	F	Summer temperature difference	17	F
Total heating load calculation	**33490**	**Btuh**	**Total cooling load calculation**	**39282**	**Btuh**
Submitted heating capacity	% of calc	Btuh	Submitted cooling capacity	% of calc	Btuh
Total (Electric Heat Pump)	119.4	40000	Sensible (SHR = 0.75)	92.8	30000
Heat Pump + Auxiliary(0.0kW)	119.4	40000	Latent	143.5	10000
			Total (Electric Heat Pump)	101.8	40000

WINTER CALCULATIONS

Winter Heating Load (for 1691 sqft)

Load component			Load	
Window total	235	sqft	11057	Btuh
Wall total	1295	sqft	4252	Btuh
Door total	40	sqft	518	Btuh
Ceiling total	1750	sqft	2062	Btuh
Floor total	190	sqft	8295	Btuh
Infiltration	180	cfm	7306	Btuh
Duct loss			0	Btuh
Subtotal			**33490**	**Btuh**
Ventilation	0	cfm	0	Btuh
TOTAL HEAT LOSS			**33490**	**Btuh**

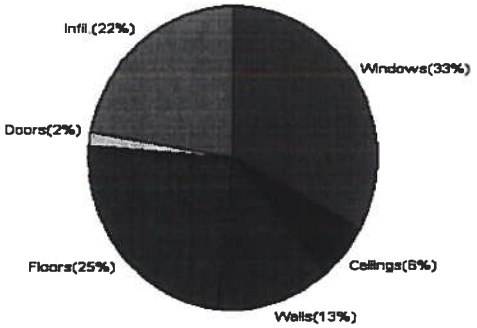

SUMMER CALCULATIONS

Summer Cooling Load (for 1691 sqft)

Load component			Load	
Window total	235	sqft	19720	Btuh
Wall total	1295	sqft	2587	Btuh
Door total	40	sqft	392	Btuh
Ceiling total	1750	sqft	2898	Btuh
Floor total			0	Btuh
Infiltration	158	cfm	2937	Btuh
Internal gain			3780	Btuh
Duct gain			0	Btuh
Sens. Ventilation	0	cfm	0	Btuh
Total sensible gain			**32315**	**Btuh**
Latent gain(ducts)			0	Btuh
Latent gain(infiltration)			5768	Btuh
Latent gain(ventilation)			0	Btuh
Latent gain(internal/occupants/other)			1200	Btuh
Total latent gain			**6968**	**Btuh**
TOTAL HEAT GAIN			**39282**	**Btuh**

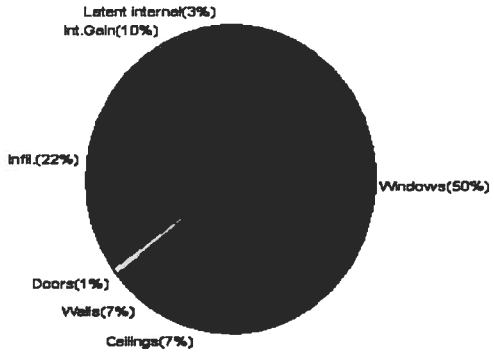

For Florida residences only

EnergyGauge® System Sizing
PREPARED BY: _____
DATE: 11-24-06

System Sizing Calculations - Winter

Residential Load - Whole House Component Details

Spec House
Lake City, FL 32025-

Project Title:
Adams Framing & Const. - Lot 10 Hollybrook

Code Only
Professional Version
Climate: North

Reference City: Gainesville (Defaults) Winter Temperature Difference: 37.0 F

11/24/2006

Component Loads for Whole House

Window	Panes/SHGC/Frame/U	Orientation	Area(sqft) X	HTM=	Load
1	1, Clear, Metal, 1.27	W	16.0	47.0	752 Btuh
2	1, Clear, Metal, 1.27	W	12.0	47.0	564 Btuh
3	1, Clear, Metal, 1.27	W	15.0	47.0	705 Btuh
4	1, Clear, Metal, 1.27	W	20.0	47.0	940 Btuh
5	1, Clear, Metal, 1.27	W	45.0	47.0	2115 Btuh
6	1, Clear, Metal, 1.27	N	4.0	47.0	188 Btuh
7	1, Clear, Metal, 1.27	N	15.0	47.0	705 Btuh
8	1, Clear, Metal, 1.27	E	75.0	47.0	3524 Btuh
9	1, Clear, Metal, 1.27	E	13.3	47.0	625 Btuh
10	1, Clear, Metal, 1.27	S	20.0	47.0	940 Btuh
	Window Total		235(sqft)		11057 Btuh
Walls	Type	R-Value	Area X	HTM=	Load
1	Frame - Wood - Ext(0.09)	13.0	1099	3.3	3608 Btuh
2	Frame - Wood - Adj(0.09)	13.0	196	3.3	644 Btuh
	Wall Total		1295		4252 Btuh
Doors	Type		Area X	HTM=	Load
1	Insulated - Adjacent		20	12.9	259 Btuh
2	Insulated - Exterior		20	12.9	259 Btuh
	Door Total		40		518Btuh
Ceilings	Type/Color/Surface	R-Value	Area X	HTM=	Load
1	Vented Attic/D/Shin)	30.0	1750	1.2	2062 Btuh
	Ceiling Total		1750		2062Btuh
Floors	Type	R-Value	Size X	HTM=	Load
1	Slab On Grade	0	190.0 ft(p)	43.7	8295 Btuh
	Floor Total		190		8295 Btuh
			Zone Envelope Subtotal:		26184 Btuh
Infiltration	Type	ACH X	Zone Volume	CFM=	
	Natural	0.80	13528	180.4	7306 Btuh
Ductload	Proposed leak free, R6.0, Supply(Attic), Return(Attic)			(DLM of 0.00)	0 Btuh
Zone #1			**Sensible Zone Subtotal**		**33490 Btuh**

Manual J Winter Calculations

Residential Load - Component Details (continued)

Spec House
Lake City, FL 32025-

Project Title:
Adams Framing & Const. - Lot 10 Hollybrook

Code Only
Professional Version
Climate: North

11/24/2006

WHOLE HOUSE TOTALS

	Subtotal Sensible	33490 Btuh
	Ventilation Sensible	0 Btuh
	Total Btuh Loss	33490 Btuh

Key: Window types (SHGC - Shading coefficient of glass as SHGC numerical value or as clear or tint)
(Frame types - metal, wood or insulated metal)
(U - Window U-Factor or 'DEF' for default)
(HTM - ManualJ Heat Transfer Multiplier)
Key: Floor size (perimeter(p) for slab-on-grade or area for all other floor types)

For Florida residences only

System Sizing Calculations - Winter

Residential Load - Room by Room Component Details

Spec House
Lake City, FL 32025-

Project Title:
Adams Framing & Const. - Lot 10 Hollybrook

Code Only
Professional Version
Climate: North

Reference City: Gainesville (Defaults) Winter Temperature Difference: 37.0 F

11/24/2006

Component Loads for Zone #1: Main

Window	Panes/SHGC/Frame/U	Orientation	Area(sqft) X	HTM=	Load
1	1, Clear, Metal, 1.27	W	16.0	47.0	752 Btuh
2	1, Clear, Metal, 1.27	W	12.0	47.0	564 Btuh
3	1, Clear, Metal, 1.27	W	15.0	47.0	705 Btuh
4	1, Clear, Metal, 1.27	W	20.0	47.0	940 Btuh
5	1, Clear, Metal, 1.27	W	45.0	47.0	2115 Btuh
6	1, Clear, Metal, 1.27	N	4.0	47.0	188 Btuh
7	1, Clear, Metal, 1.27	N	15.0	47.0	705 Btuh
8	1, Clear, Metal, 1.27	E	75.0	47.0	3524 Btuh
9	1, Clear, Metal, 1.27	E	13.3	47.0	625 Btuh
10	1, Clear, Metal, 1.27	S	20.0	47.0	940 Btuh
	Window Total		235(sqft)		11057 Btuh
Walls	Type	R-Value	Area X	HTM=	Load
1	Frame - Wood - Ext(0.09)	13.0	1099	3.3	3608 Btuh
2	Frame - Wood - Adj(0.09)	13.0	196	3.3	644 Btuh
	Wall Total		1295		4252 Btuh
Doors	Type		Area X	HTM=	Load
1	Insulated - Adjacent		20	12.9	259 Btuh
2	Insulated - Exterior		20	12.9	259 Btuh
	Door Total		40		518Btuh
Ceilings	Type/Color/Surface	R-Value	Area X	HTM=	Load
1	Vented Attic/D/Shin)	30.0	1750	1.2	2062 Btuh
	Ceiling Total		1750		2062Btuh
Floors	Type	R-Value	Size X	HTM=	Load
1	Slab On Grade	0	190.0 ft(p)	43.7	8295 Btuh
	Floor Total		190		8295 Btuh
			Zone Envelope Subtotal:		26184 Btuh
Infiltration	Type	ACH X	Zone Volume	CFM=	
	Natural	0.80	13528	180.4	7306 Btuh
Ductload	Proposed leak free, R6.0, Supply(Attic), Return(Attic)			(DLM of 0.00)	0 Btuh
Zone #1			**Sensible Zone Subtotal**		**33490 Btuh**

Manual J Winter Calculations

Residential Load - Component Details (continued)

Spec House
Lake City, FL 32025-

Project Title:
Adams Framing & Const. - Lot 10 Hollybrook

Code Only
Professional Version
Climate: North

11/24/2006

WHOLE HOUSE TOTALS

	Subtotal Sensible	33490 Btuh
	Ventilation Sensible	0 Btuh
	Total Btuh Loss	33490 Btuh

Key: Window types (SHGC - Shading coefficient of glass as SHGC numerical value or as clear or tint)
(Frame types - metal, wood or insulated metal)
(U - Window U-Factor or 'DEF' for default)
(HTM - ManualJ Heat Transfer Multiplier)
Key: Floor size (perimeter(p) for slab-on-grade or area for all other floor types)

For Florida residences only

System Sizing Calculations - Summer

Residential Load - Whole House Component Details

Spec House
Lake City, FL 32025-

Project Title:
Adams Framing & Const. - Lot 10 Hollybrook

Code Only
Professional Version
Climate: North

Reference City: Gainesville (Defaults) Summer Temperature Difference: 17.0 F 11/24/2006

Component Loads for Whole House

Window	Type* Pn/SHGC/U/InSh/ExSh/IS	Ornt	Overhang Len	Overhang Hgt	Window Area(sqft) Gross	Shaded	Unshaded	HTM Shaded	HTM Unshaded	Load
1	1, Clear, 1.27, None,N,N	W	1.5ft	8ft.	16.0	0.0	16.0	37	94	1505 Btuh
2	1, Clear, 1.27, None,N,N	W	1.5ft	8ft.	12.0	0.0	12.0	37	94	1129 Btuh
3	1, Clear, 1.27, None,N,N	W	11.5f	8ft.	15.0	15.0	0.0	37	94	562 Btuh
4	1, Clear, 1.27, None,N,N	W	11.5f	8ft.	20.0	20.0	0.0	37	94	749 Btuh
5	1, Clear, 1.27, None,N,N	W	1.5ft	8ft.	45.0	0.0	45.0	37	94	4232 Btuh
6	1, Clear, 1.27, None,N,N	N	1.5ft	8ft.	4.0	0.0	4.0	37	37	150 Btuh
7	1, Clear, 1.27, None,N,N	N	1.5ft	8ft.	15.0	0.0	15.0	37	37	562 Btuh
8	1, Clear, 1.27, None,N,N	E	1.5ft	8ft.	75.0	0.0	75.0	37	94	7053 Btuh
9	1, Clear, 1.27, None,N,N	E	8.5ft	10ft.	13.3	7.4	5.9	37	94	831 Btuh
10	1, Clear, 1.27, None,N,N	S	1.5ft	8ft.	20.0	20.0	0.0	37	43	749 Btuh
	Excursion									2199 Btuh
	Window Total				235 (sqft)					19720 Btuh

Walls	Type	R-Value/U-Value	Area(sqft)	HTM	Load
1	Frame - Wood - Ext	13.0/0.09	1098.7	2.1	2292 Btuh
2	Frame - Wood - Adj	13.0/0.09	196.0	1.5	296 Btuh
	Wall Total		1295 (sqft)		2587 Btuh

Doors	Type	Area (sqft)	HTM	Load
1	Insulated - Adjacent	20.0	9.8	196 Btuh
2	Insulated - Exterior	20.0	9.8	196 Btuh
	Door Total	40 (sqft)		392 Btuh

Ceilings	Type/Color/Surface	R-Value	Area(sqft)	HTM	Load
1	Vented Attic/DarkShingle	30.0	1750.0	1.7	2898 Btuh
	Ceiling Total		1750 (sqft)		2898 Btuh

Floors	Type	R-Value	Size	HTM	Load
1	Slab On Grade	0.0	190 (ft(p))	0.0	0 Btuh
	Floor Total		190.0 (sqft)		0 Btuh

				Zone Envelope Subtotal:	25597 Btuh

Infiltration	Type	ACH	Volume(cuft)	CFM=	Load
	SensibleNatural	0.70	13528	157.8	2937 Btuh

Internal gain	Occupants	Btuh/occupant		Appliance		Load
	6	X	230	+	2400	3780 Btuh

Duct load	Proposed leak free, R6.0, Supply(Attic), Return(Attic)	DGM = 0.00	0.0 Btuh
		Sensible Zone Load	**32315 Btuh**

Manual J Summer Calculations

Residential Load - Component Details (continued)

Spec House

Lake City, FL 32025-

Project Title:
Adams Framing & Const. - Lot 10 Hollybrook

Code Only
Professional Version
Climate: North

11/24/2006

WHOLE HOUSE TOTALS

	Sensible Envelope Load All Zones	**32315**	**Btuh**
	Sensible Duct Load	0	Btuh
	Total Sensible Zone Loads	**32315**	**Btuh**
	Sensible ventilation	0	Btuh
	Blower	0	Btuh
Whole House	**Total sensible gain**	**32315**	**Btuh**
Totals for Cooling	Latent infiltration gain (for 54 gr. humidity difference)	5768	Btuh
	Latent ventilation gain	0	Btuh
	Latent duct gain	0	Btuh
	Latent occupant gain (6 people @ 200 Btuh per person)	1200	Btuh
	Latent other gain	0	Btuh
	Latent total gain	**6968**	**Btuh**
	TOTAL GAIN	**39282**	**Btuh**

*Key: Window types (Pn - Number of panes of glass)
(SHGC - Shading coefficient of glass as SHGC numerical value or as clear or tint)
(U - Window U-Factor or 'DEF' for default)
(InSh - Interior shading device: none(N), Blinds(B), Draperies(D) or Roller Shades(R))
(ExSh - Exterior shading device: none(N) or numerical value)
(BS - Insect screen: none(N), Full(F) or Half(H))
(Ornt - compass orientation)

For Florida residences only

System Sizing Calculations - Summer

Residential Load - Room by Room Component Details

Spec House
Lake City, FL 32025-

Project Title:
Adams Framing & Const. - Lot 10 Hollybrook

Code Only
Professional Version
Climate: North

Reference City: Gainesville (Defaults) Summer Temperature Difference: 17.0 F 11/24/2006

Component Loads for Zone #1: Main

Window	Type* Pn/SHGC/U/InSh/ExSh/IS	Ornt	Overhang Len	Overhang Hgt	Window Area(sqft) Gross	Shaded	Unshaded	HTM Shaded	HTM Unshaded	Load
1	1, Clear, 1.27, None,N,N	W	1.5ft	8ft.	16.0	0.0	16.0	37	94	1505 Btuh
2	1, Clear, 1.27, None,N,N	W	1.5ft	8ft.	12.0	0.0	12.0	37	94	1129 Btuh
3	1, Clear, 1.27, None,N,N	W	11.5f	8ft.	15.0	15.0	0.0	37	94	562 Btuh
4	1, Clear, 1.27, None,N,N	W	11.5f	8ft.	20.0	20.0	0.0	37	94	749 Btuh
5	1, Clear, 1.27, None,N,N	W	1.5ft	8ft.	45.0	0.0	45.0	37	94	4232 Btuh
6	1, Clear, 1.27, None,N,N	N	1.5ft	8ft.	4.0	0.0	4.0	37	37	150 Btuh
7	1, Clear, 1.27, None,N,N	N	1.5ft	8ft.	15.0	0.0	15.0	37	37	562 Btuh
8	1, Clear, 1.27, None,N,N	E	1.5ft	8ft.	75.0	0.0	75.0	37	94	7053 Btuh
9	1, Clear, 1.27, None,N,N	E	8.5ft	10ft.	13.3	7.4	5.9	37	94	831 Btuh
10	1, Clear, 1.27, None,N,N	S	1.5ft	8ft.	20.0	20.0	0.0	37	43	749 Btuh
	Excursion									2199 Btuh
	Window Total				235 (sqft)					19720 Btuh

Walls	Type	R-Value/U-Value	Area(sqft)	HTM	Load
1	Frame - Wood - Ext	13.0/0.09	1098.7	2.1	2292 Btuh
2	Frame - Wood - Adj	13.0/0.09	196.0	1.5	296 Btuh
	Wall Total		1295 (sqft)		2587 Btuh

Doors	Type	Area (sqft)	HTM	Load
1	Insulated - Adjacent	20.0	9.8	196 Btuh
2	Insulated - Exterior	20.0	9.8	196 Btuh
	Door Total	40 (sqft)		392 Btuh

Ceilings	Type/Color/Surface	R-Value	Area(sqft)	HTM	Load
1	Vented Attic/DarkShingle	30.0	1750.0	1.7	2898 Btuh
	Ceiling Total		1750 (sqft)		2898 Btuh

Floors	Type	R-Value	Size	HTM	Load
1	Slab On Grade	0.0	190 (ft(p))	0.0	0 Btuh
	Floor Total		190.0 (sqft)		0 Btuh

			Zone Envelope Subtotal:		25597 Btuh

Infiltration	Type	ACH	Volume(cuft)	CFM=	Load
	SensibleNatural	0.70	13528	157.8	2937 Btuh

Internal gain	Occupants	Btuh/occupant		Appliance	Load
	6	X 230	+	2400	3780 Btuh

Duct load	Proposed leak free, R6.0, Supply(Attic), Return(Attic)	DGM = 0.00	0.0 Btuh
		Sensible Zone Load	**32315 Btuh**

Manual J Summer Calculations

Residential Load - Component Details (continued)

Spec House
Lake City, FL 32025-

Project Title:
Adams Framing & Const. - Lot 10 Hollybrook

Code Only
Professional Version
Climate: North

11/24/2006

WHOLE HOUSE TOTALS

Whole House Totals for Cooling	**Sensible Envelope Load All Zones**	**32315**	**Btuh**
	Sensible Duct Load	0	Btuh
	Total Sensible Zone Loads	**32315**	**Btuh**
	Sensible ventilation	0	Btuh
	Blower	0	Btuh
	Total sensible gain	**32315**	**Btuh**
	Latent infiltration gain (for 54 gr. humidity difference)	5768	Btuh
	Latent ventilation gain	0	Btuh
	Latent duct gain	0	Btuh
	Latent occupant gain (6 people @ 200 Btuh per person)	1200	Btuh
	Latent other gain	0	Btuh
	Latent total gain	**6968**	**Btuh**
	TOTAL GAIN	**39282**	**Btuh**

*Key: Window types (Pn - Number of panes of glass)
(SHGC - Shading coefficient of glass as SHGC numerical value or as clear or tint)
(U - Window U-Factor or 'DEF' for default)
(InSh - Interior shading device: none(N), Blinds(B), Draperies(D) or Roller Shades(R))
(ExSh - Exterior shading device: none(N) or numerical value)
(BS - Insect screen: none(N), Full(F) or Half(H))
(Ornt - compass orientation)

For Florida residences only

Residential Window Diversity

MidSummer

Spec House

Lake City, FL 32025-

Project Title:
Adams Framing & Const. - Lot 10 Hollybrook

Code Only
Professional Version
Climate: North

11/24/2006

Weather data for: Gainesville - Defaults

Summer design temperature	92	F	Average window load for July	14460 Btu
Summer setpoint	75	F	Peak window load for July	20996 Btu
Summer temperature difference	17	F	Excusion limit(130% of Ave.)	18798 Btu
Latitude	29	North	Window excursion (July)	2199 Btuh

WINDOW Average and Peak Loads

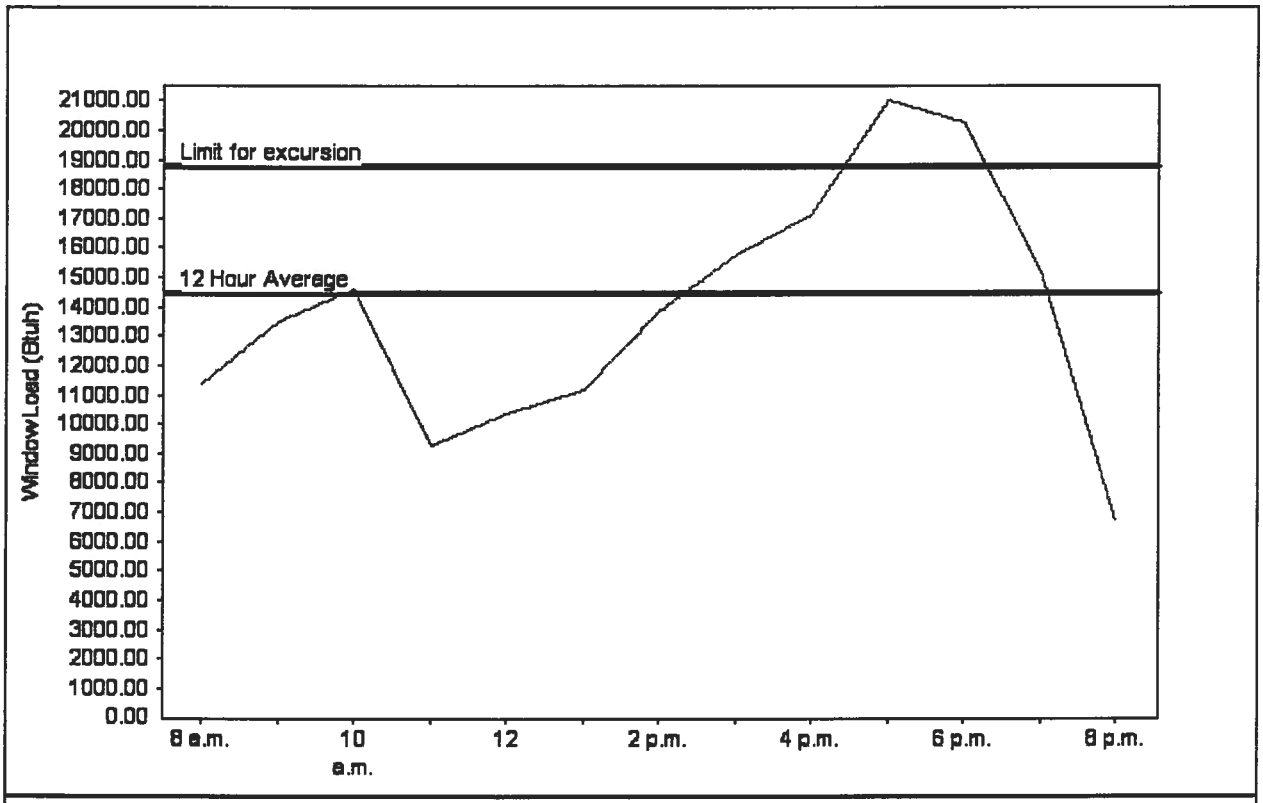

Total July Window Load(Radiation and conduction)

Warning: This application has glass areas that produce relatively large heat gains for part of the day. Variable air volume devices may be required to overcome spikes in solar gain for one or more rooms. A zoned system may be required or some rooms may require zone control.

EnergyGauge® System Sizing for Florida residences only
PREPARED BY: _____
DATE: _____

Project Information for:	L218890		
Builder:	ADAM'S FRAMING	Date:	12/6/2006
Lot:	LOT 10 HOLLY BROOK	Start Number:	**1196**
Subdivision:	N/A	SEI Ref:	L218890
County or City:	COLUMBIA COUNTY		
Truss Page Count:	42		

Truss Design Load Information (UNO) Design Program: MiTek

Gravity		**Wind**		**Building Code:**	**FBC2004**
Roof (psf):	**42**	Wind Standard:	**ASCE 7-02**		
Floor (psf):	55	Wind Speed (mph):	**110**		

Note: See individual truss drawings for special loading conditions

Building Designer, responsible for Structural Engineering: (See attached)

PAPKA, ADAM R. CBC1253409
Address: P.O. BOX 1921
LAKE CITY, FL 32056 Designer: **131**

Truss Design Engineer: Thomas, E. Miller, P.E., 56877 - Byron K. Anderson, PE FL 60987
Company: Structural Engineering and Inspections, Inc. EB 9196
Address 16105 N. Florida Ave, Ste B, Lutz, FL 33549 Phone: 813-849-5769

Notes:

1. Truss Design Engineer is responsible for the individual trusses as components only.
2. Determination as to the suitability and use of these truss components for the structure is the responsibility of the Building Designer of Record, as defined in ANSI/TPI
3. The seal date shown on the individual truss component drawings must match the seal date on this index sheet.
4. Trusses designed for veritcal loads only, unless noted otherwise.
5. Where hangers are shown, Carried Member hanger capacity per Simpson C-2006 (SYP/Full Nailing Value) as an individual component. Building Designer shall verify the suitablity and use of Carrying Member hanger capacity.

#	Truss ID	Dwg. #	Seal Date	#	Truss ID	Dwg. #	Seal Date
1	CJ1	1206061196	12/6/2006	41	T27	1206061156	12/6/2006
2	CJ3	1206061195	12/6/2006	42	T28	1206061155	12/6/2006
3	CJ3T	1206061194	12/6/2006				
4	CJ5	1206061193	12/6/2006				
5	CJ5T	1206061192	12/6/2006				
6	EJ7	1206061191	12/6/2006				
7	EJ7A	1206061190	12/6/2006				
8	EJ7B	1206061189	12/6/2006				
9	EJ7C	1206061188	12/6/2006				
10	EJ7T	1206061187	12/6/2006				
11	HJ9	1206061186	12/6/2006				
12	HJ9T	1206061185	12/6/2006				
13	PB01	1206061184	12/6/2006				
14	T01	1206061183	12/6/2006				
15	T02	1206061182	12/6/2006				
16	T03	1206061181	12/6/2006				
17	T04	1206061180	12/6/2006				
18	T05	1206061179	12/6/2006				
19	T05	1206061178	12/6/2006				
20	T06	1206061177	12/6/2006				
21	T07	1206061176	12/6/2006				
22	T08	1206061175	12/6/2006				
23	T09	1206061174	12/6/2006				
24	T10	1206061173	12/6/2006				
25	T11	1206061172	12/6/2006				
26	T12	1206061171	12/6/2006				
27	T13	1206061170	12/6/2006				
28	T14	1206061169	12/6/2006				
29	T15	1206061168	12/6/2006				
30	T16	1206061167	12/6/2006				
31	T17	1206061166	12/6/2006				
32	T18	1206061165	12/6/2006				
33	T19	1206061164	12/6/2006				
34	T20	1206061163	12/6/2006				
35	T21	1206061162	12/6/2006				
36	T22	1206061161	12/6/2006				
37	T23	1206061160	12/6/2006				
38	T24	1206061159	12/6/2006				
39	T25	1206061158	12/6/2006				
40	T26	1206061157	12/6/2006				

DEC 0 6 2006

Public Services

Search for a Licensee
Apply for a License
View Application Status
Apply to Retake Exam
Find Exam Information
File a Complaint
AB&T Delinquent Invoice & Activity List Search

User Services

Renew a License
Change License Status
Maintain Account
Change My Address
View Messages
Change My PIN
View Continuing Ed

Term Glossary
Online Help

Licensee Details

Licensee Information

Name:	**PAPKA, ADAM RUSSELL (Primary Name)**
	ADAM S FRAMING AND CONSTRUCTION LLC (DBA Name)
Main Address:	**PO BOX 1921**
	LAKE CITY Florida 32056
County:	**COLUMBIA**
License Mailing:	
LicenseLocation:	

License Information

License Type:	**Certified Building Contractor**
Rank:	**Cert Building**
License Number:	**CBC1253409**
Status:	**Current,Active**
Licensure Date:	**09/26/2005**
Expires:	**08/31/2008**

Special Qualifications	**Qualification Effective**
Qualified Business License Required	**09/26/2005**

View Related License Information

View License Complaint

DECEMBER 06, 2006 TRUSS DESIGN ENGINEER:
THOMAS E. MILLER PE 56877, BYRON K. ANDERSON PE 60987
STRUCTURAL ENGINEERING AND INSPECTIONS, INC. EB 9196
16105 N. FLORIDA AVE. STE B, LUTZ, FL 33549

Job	Truss	Truss Type	Qty	Ply	LOT 10 HOLLY BROOK Dwg #1206061196
L218890	CJ1	JACK	6	1	Job Reference (optional)

Builders FirstSource, Lake City, Fl 32055 — 6.300 s Apr 19 2006 MiTek Industries, Inc. Mon Dec 04 13:19:24 2006 Page 1

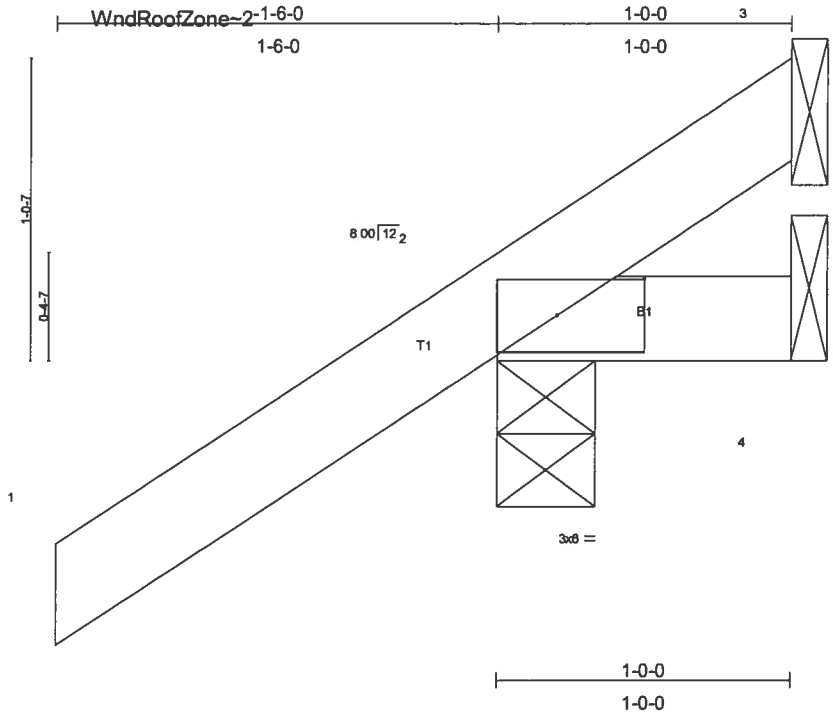

Plate Offsets (X,Y): [2:0-3-9,0-1-8]

LOADING (psf)		SPACING	2-0-0	CSI		DEFL	in	(loc)	l/defl	L/d	PLATES	GRIP
TCLL	20.0	Plates Increase	1.25	TC	0.16	Vert(LL)	-0.00	2	>999	240	MT20	244/190
TCDL	7.0	Lumber Increase	1.25	BC	0.01	Vert(TL)	-0.00	2	>999	180		
BCLL	10.0	Rep Stress Incr	YES	WB	0.00	Horz(TL)	0.00	3	n/a	n/a		
BCDL	5.0	Code FBC2004/TPI2002		(Matrix)							Weight: 6 lb	

LUMBER
TOP CHORD 2 X 4 SYP No.2
BOT CHORD 2 X 4 SYP No.2

BRACING
TOP CHORD Structural wood sheathing directly applied or 1-0-0 oc purlins.
BOT CHORD Rigid ceiling directly applied or 10-0-0 oc bracing.

REACTIONS (lb/size) 2=189/0-4-0, 4=14/Mechanical, 3=-41/Mechanical
Max Horz 2=94(load case 5)
Max Uplift2=-201(load case 5), 4=-11(load case 3), 3=-41(load case 1)
Max Grav 2=189(load case 1), 4=14(load case 1), 3=70(load case 5)

FORCES (lb) - Maximum Compression/Maximum Tension
TOP CHORD 1-2=0/44, 2-3=-55/48
BOT CHORD 2-4=0/0

JOINT STRESS INDEX
2 = 0.12

NOTES
1) Wind: ASCE 7-02; 110mph (3-second gust); h=20ft; TCDL=4.2psf; BCDL=3.0psf; Category II; Exp B; enclosed; MWFRS gable end zone and C-C Exterior(2) zone; porch left and right exposed; Lumber DOL=1.60 plate grip DOL=1.60. This truss is designed for C-C for members and forces, and for MWFRS for reactions specified.
2) All bearings are assumed to be SYP No.2 crushing capacity of 565.00 psi
3) Refer to girder(s) for truss to truss connections.
4) Provide mechanical connection (by others) of truss to bearing plate capable of withstanding 201 lb uplift at joint 2, 11 lb uplift at joint 4 and 41 lb uplift at joint 3.

LOAD CASE(S) Standard

DECEMBER 06, 2006 TRUSS DESIGN ENGINEER:
THOMAS E. MILLER PE 56877, BYRON K. ANDERSON PE 60987
STRUCTURAL ENGINEERING AND INSPECTIONS, INC. EB 9196
16105 N. FLORIDA AVE. STE B, LUTZ, FL 33549

Job	Truss	Truss Type	Qty	Ply	LOT 10 HOLLY BROOK Dwg #1206061195
L218890	CJ3	JACK	4	1	Job Reference (optional)

Builders FirstSource, Lake City, Fl 32055 — 6.300 s Apr 19 2006 MiTek Industries, Inc. Mon Dec 04 13:19:49 2006 Page 1

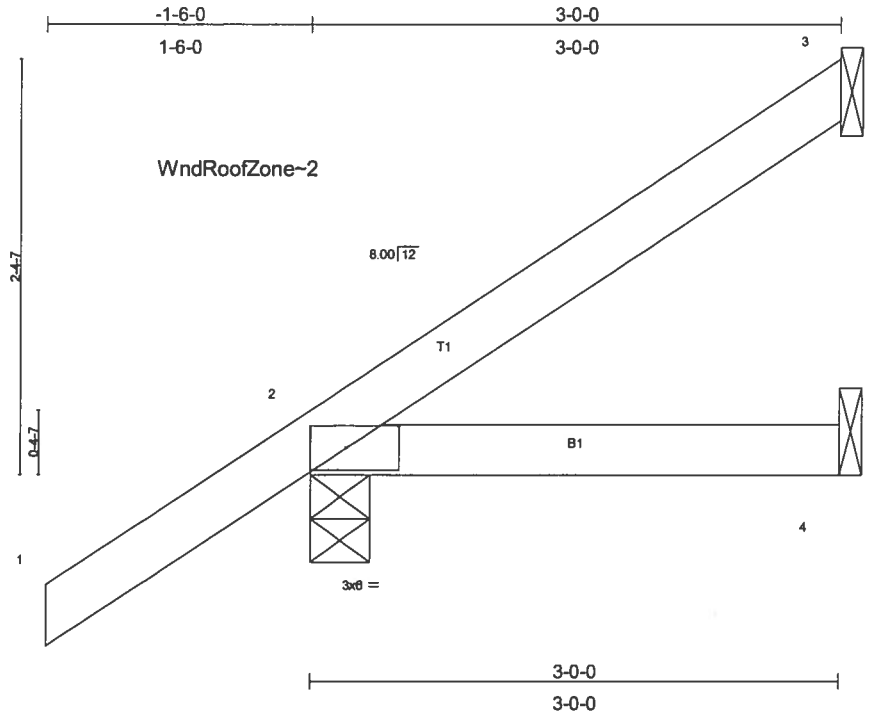

Plate Offsets (X,Y): [2:0-3-9,0-1-8]

LOADING (psf)		SPACING	2-0-0	CSI		DEFL	in	(loc)	l/defl	L/d	PLATES	GRIP
TCLL	20.0	Plates Increase	1.25	TC	0.18	Vert(LL)	0.01	2-4	>999	240	MT20	244/190
TCDL	7.0	Lumber Increase	1.25	BC	0.08	Vert(TL)	-0.01	2-4	>999	180		
BCLL	10.0	Rep Stress Incr	YES	WB	0.00	Horz(TL)	-0.00	3	n/a	n/a		
BCDL	5.0	Code FBC2004/TPI2002		(Matrix)							Weight: 13 lb	

LUMBER
TOP CHORD 2 X 4 SYP No.2
BOT CHORD 2 X 4 SYP No.2

BRACING
TOP CHORD Structural wood sheathing directly applied or 3-0-0 oc purlins.
BOT CHORD Rigid ceiling directly applied or 10-0-0 oc bracing.

REACTIONS (lb/size) 3=48/Mechanical, 2=233/0-4-0, 4=42/Mechanical
Max Horz 2=154(load case 5)
Max Uplift3=-47(load case 5), 2=-177(load case 5), 4=-33(load case 3)

FORCES (lb) - Maximum Compression/Maximum Tension
TOP CHORD 1-2=0/45, 2-3=-60/19
BOT CHORD 2-4=0/0

JOINT STRESS INDEX
2 = 0.12

NOTES
1) Wind: ASCE 7-02; 110mph (3-second gust); h=20ft; TCDL=4.2psf; BCDL=3.0psf; Category II; Exp B; enclosed; MWFRS gable end zone and C-C Exterior(2) zone; porch left and right exposed; Lumber DOL=1.60 plate grip DOL=1.60. This truss is designed for C-C for members and forces, and for MWFRS for reactions specified.
2) All bearings are assumed to be SYP No.2 crushing capacity of 565.00 psi
3) Refer to girder(s) for truss to truss connections.
4) Provide mechanical connection (by others) of truss to bearing plate capable of withstanding 47 lb uplift at joint 3, 177 lb uplift at joint 2 and 33 lb uplift at joint 4.

LOAD CASE(S) Standard

DECEMBER 06, 2006 TRUSS DESIGN ENGINEER:
THOMAS E. MILLER PE 56877, BYRON K. ANDERSON PE 60987
STRUCTURAL ENGINEERING AND INSPECTIONS, INC. EB 9196
16105 N. FLORIDA AVE. STE B, LUTZ, FL 33549

Job	Truss	Truss Type	Qty	Ply	LOT 10 HOLLY BROOK
L218890	CJ3T	SPECIAL	2	1	Job Reference (optional)

Dwg #1206061194

Builders FirstSource, Lake City, Fl 32055 — 6.300 s Apr 19 2006 MiTek Industries, Inc. Mon Dec 04 13:21:26 2006 Page 1

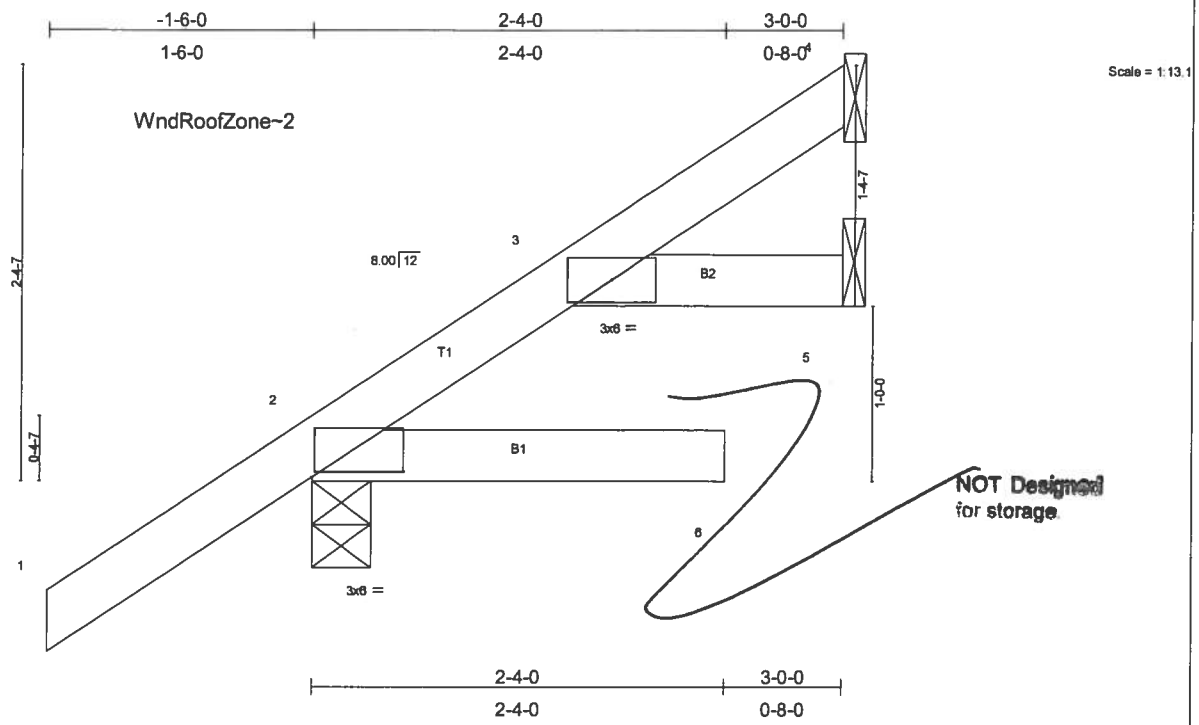

Plate Offsets (X,Y): [2:0-6-3,0-0-6]

LOADING (psf)		SPACING	2-0-0	CSI		DEFL	in	(loc)	l/defl	L/d	PLATES	GRIP
TCLL	20.0	Plates Increase	1.25	TC	0.20	Vert(LL)	-0.03	6	>999	240	MT20	244/190
TCDL	7.0	Lumber Increase	1.25	BC	0.13	Vert(TL)	-0.05	6	>613	180		
BCLL	10.0	Rep Stress Incr	YES	WB	0.00	Horz(TL)	0.01	5	n/a	n/a		
BCDL	5.0	Code FBC2004/TPI2002		(Matrix)							Weight: 14 lb	

LUMBER
TOP CHORD 2 X 4 SYP No.2
BOT CHORD 2 X 4 SYP No.2

BRACING
TOP CHORD Structural wood sheathing directly applied or 3-0-0 oc purlins.
BOT CHORD Rigid ceiling directly applied or 10-0-0 oc bracing.

REACTIONS (lb/size) 4=84/Mechanical, 2=243/0-4-0, 5=22/Mechanical
Max Horz 2=154(load case 5)
Max Uplift4=-40(load case 5), 2=-141(load case 5)

FORCES (lb) - Maximum Compression/Maximum Tension
TOP CHORD 1-2=0/45, 2-3=-49/10, 3-4=-32/43
BOT CHORD 2-6=0/0, 3-5=0/0

JOINT STRESS INDEX
2 = 0.62 and 3 = 0.01

NOTES
1) Wind: ASCE 7-02; 110mph (3-second gust); h=20ft; TCDL=4.2psf; BCDL=3.0psf; Category II; Exp B; enclosed; MWFRS gable end zone and C-C Exterior(2) zone; Lumber DOL=1.60 plate grip DOL=1.60. This truss is designed for C-C for members and forces, and for MWFRS for reactions specified.
2) All bearings are assumed to be SYP No.2 crushing capacity of 565.00 psi
3) Refer to girder(s) for truss to truss connections.
4) Provide mechanical connection (by others) of truss to bearing plate capable of withstanding 40 lb uplift at joint 4 and 141 lb uplift at joint 2.

LOAD CASE(S) Standard

DECEMBER 06, 2006 TRUSS DESIGN ENGINEER:
THOMAS E. MILLER PE 56877, BYRON K. ANDERSON PE 60987
STRUCTURAL ENGINEERING AND INSPECTIONS, INC. EB 9196
16105 N. FLORIDA AVE. STE B, LUTZ, FL 33549

Job	Truss	Truss Type	Qty	Ply	LOT 10 HOLLS BROOK Dwg #1206061193
L218890	CJ5	JACK	4	1	Job Reference (optional)

Builders FirstSource, Lake City, Fl 32055 — 6.300 s Apr 19 2006 MiTek Industries, Inc. Mon Dec 04 13:21:13 2006 Page 1

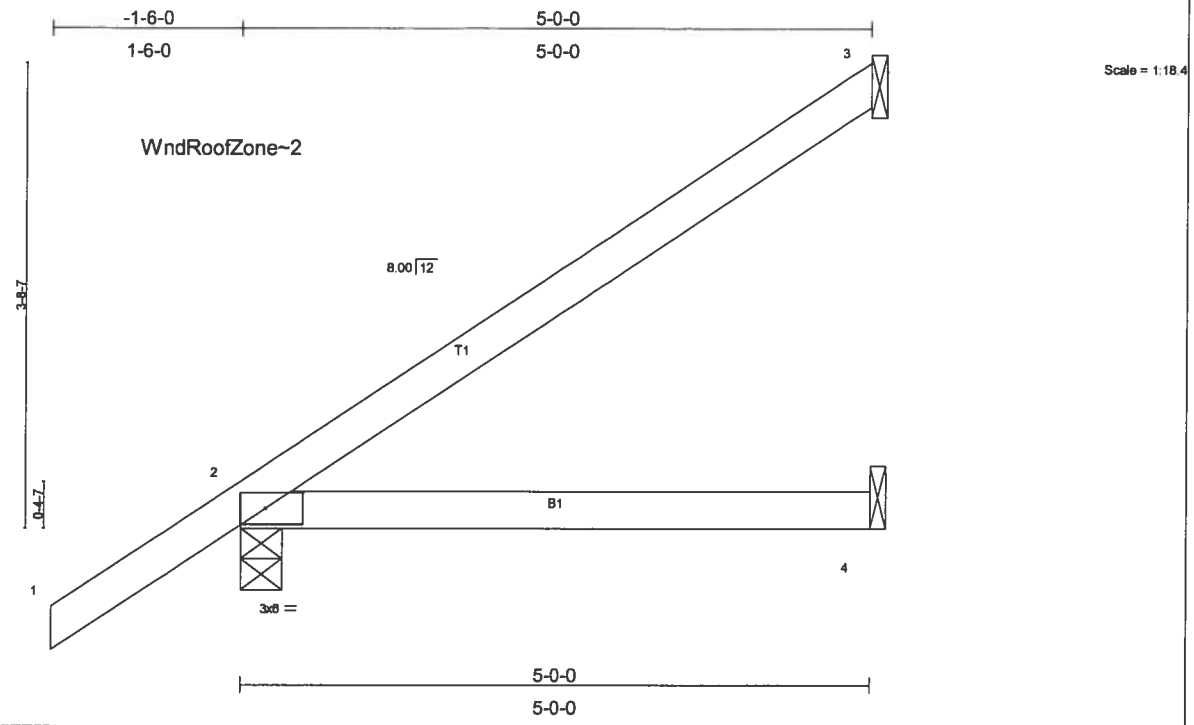

Plate Offsets (X,Y): [2.0-3-9,0-1-8]

LOADING (psf)		SPACING	2-0-0	CSI		DEFL	in	(loc)	l/defl	L/d	PLATES	GRIP
TCLL	20.0	Plates Increase	1.25	TC	0.22	Vert(LL)	0.09	2-4	>671	240	MT20	244/190
TCDL	7.0	Lumber Increase	1.25	BC	0.24	Vert(TL)	0.07	2-4	>784	180		
BCLL	10.0	Rep Stress Incr	YES	WB	0.00	Horz(TL)	-0.00	3	n/a	n/a		
BCDL	5.0	Code FBC2004/TPI2002		(Matrix)							Weight: 19 lb	

LUMBER
TOP CHORD 2 X 4 SYP No.2
BOT CHORD 2 X 4 SYP No.2

BRACING
TOP CHORD Structural wood sheathing directly applied or 5-0-0 oc purlins.
BOT CHORD Rigid ceiling directly applied or 10-0-0 oc bracing.

REACTIONS (lb/size) 3=113/Mechanical, 2=306/0-4-0, 4=72/Mechanical
Max Horz 2=215(load case 5)
Max Uplift3=-122(load case 5), 2=-198(load case 5), 4=-56(load case 3)

FORCES (lb) - Maximum Compression/Maximum Tension
TOP CHORD 1-2=0/45, 2-3=-100/50
BOT CHORD 2-4=0/0

JOINT STRESS INDEX
2 = 0.15

NOTES
1) Wind: ASCE 7-02; 110mph (3-second gust); h=20ft; TCDL=4.2psf; BCDL=3.0psf; Category II; Exp B; enclosed; MWFRS gable end zone and C-C Exterior(2) zone; porch left and right exposed; Lumber DOL=1.60 plate grip DOL=1.60. This truss is designed for C-C for members and forces, and for MWFRS for reactions specified.
2) All bearings are assumed to be SYP No.2 crushing capacity of 565.00 psi
3) Refer to girder(s) for truss to truss connections.
4) Provide mechanical connection (by others) of truss to bearing plate capable of withstanding 122 lb uplift at joint 3, 198 lb uplift at joint 2 and 56 lb uplift at joint 4.

LOAD CASE(S) Standard

DECEMBER 06, 2006 TRUSS DESIGN ENGINEER:
THOMAS E. MILLER PE 56877, BYRON K. ANDERSON PE 60987
STRUCTURAL ENGINEERING AND INSPECTIONS, INC. EB 9196
16105 N. FLORIDA AVE. STE B, LUTZ, FL 33549

Job	Truss	Truss Type	Qty	Ply	LOT 10 HOLLY BROOK Dwg #1206061192
L218890	CJ5T	SPECIAL	2	1	Job Reference (optional)

Builders FirstSource, Lake City, Fl 32055 — 6.300 s Apr 19 2006 MiTek Industries, Inc. Mon Dec 04 13:22:26 2006 Page 1

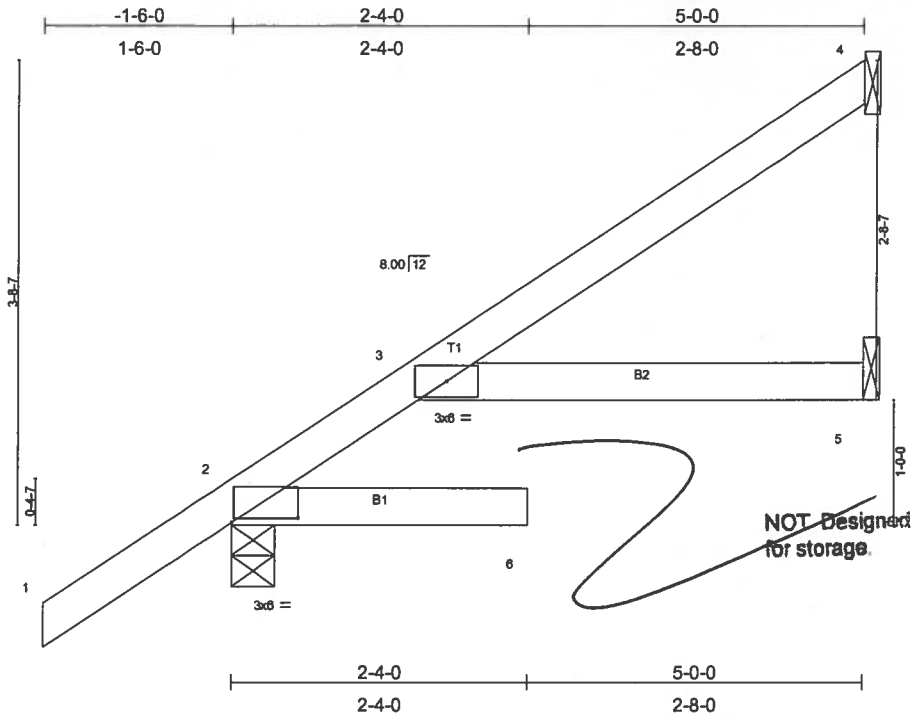

Plate Offsets (X,Y): [2:0-6-3,0-0-6]

LOADING (psf)		SPACING	2-0-0	CSI		DEFL	in	(loc)	l/defl	L/d	PLATES	GRIP
TCLL	20.0	Plates Increase	1.25	TC	0.34	Vert(LL)	-0.12	6	>460	240	MT20	244/190
TCDL	7.0	Lumber Increase	1.25	BC	0.13	Vert(TL)	-0.21	6	>277	180		
BCLL	10.0	Rep Stress Incr	YES	WB	0.00	Horz(TL)	0.07	5	n/a	n/a		
BCDL	5.0	Code FBC2004/TPI2002		(Matrix)							Weight: 21 lb	

LUMBER
TOP CHORD 2 X 4 SYP No.2
BOT CHORD 2 X 4 SYP No.2

BRACING
TOP CHORD Structural wood sheathing directly applied or 5-0-0 oc purlins.
BOT CHORD Rigid ceiling directly applied or 10-0-0 oc bracing.

REACTIONS (lb/size) 4=142/Mechanical, 2=323/0-4-0, 5=52/Mechanical
Max Horz 2=215(load case 5)
Max Uplift4=-116(load case 5), 2=-135(load case 5)

FORCES (lb) - Maximum Compression/Maximum Tension
TOP CHORD 1-2=0/45, 2-3=-98/2, 3-4=-79/69
BOT CHORD 2-6=0/0, 3-5=0/0

JOINT STRESS INDEX
2 = 0.65 and 3 = 0.03

NOTES
1) Wind: ASCE 7-02; 110mph (3-second gust); h=20ft; TCDL=4.2psf; BCDL=3.0psf; Category II; Exp B; enclosed; MWFRS gable end zone and C-C Interior(1) zone; Lumber DOL=1.60 plate grip DOL=1.60. This truss is designed for C-C for members and forces, and for MWFRS for reactions specified.
2) All bearings are assumed to be SYP No.2 crushing capacity of 565.00 psi
3) Refer to girder(s) for truss to truss connections.
4) Provide mechanical connection (by others) of truss to bearing plate capable of withstanding 116 lb uplift at joint 4 and 135 lb uplift at joint 2.

LOAD CASE(S) Standard

DECEMBER 06, 2006 TRUSS DESIGN ENGINEER:
THOMAS E. MILLER PE 56877, BYRON K. ANDERSON PE 60987
STRUCTURAL ENGINEERING AND INSPECTIONS, INC. EB 9196
16105 N. FLORIDA AVE. STE B, LUTZ, FL 33549

Job	Truss	Truss Type	Qty	Ply	LOT 10 HOLLS BROOK Dwg #1206061191
L218890	EJ7	MONO TRUSS	19	1	Job Reference (optional)

Builders FirstSource, Lake City, Fl 32055 — 6.300 s Apr 19 2006 MiTek Industries, Inc. Mon Dec 04 14:13:28 2006 Page 1

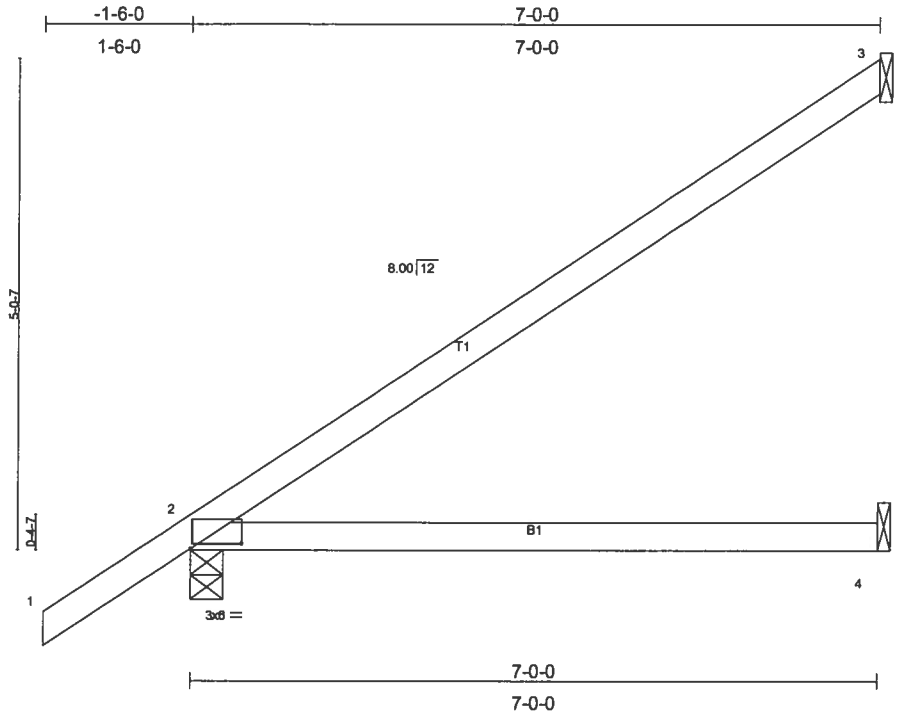

Plate Offsets (X,Y): [2:0-6-3,0-0-10]

LOADING (psf)		SPACING	2-0-0	CSI		DEFL	in	(loc)	l/defl	L/d	PLATES	GRIP
TCLL	20.0	Plates Increase	1.25	TC	0.45	Vert(LL)	0.32	2-4	>254	240	MT20	244/190
TCDL	7.0	Lumber Increase	1.25	BC	0.44	Vert(TL)	0.27	2-4	>305	180		
BCLL	10.0	Rep Stress Incr	YES	WB	0.00	Horz(TL)	-0.00	3	n/a	n/a		
BCDL	5.0	Code FBC2004/TPI2002		(Matrix)							Weight: 26 lb	

LUMBER
TOP CHORD 2 X 4 SYP No.2
BOT CHORD 2 X 4 SYP No.2

BRACING
TOP CHORD Structural wood sheathing directly applied or 6-0-0 oc purlins.
BOT CHORD Rigid ceiling directly applied or 10-0-0 oc bracing.

REACTIONS (lb/size) 3=164/Mechanical, 2=385/0-4-0, 4=109/Mechanical
Max Horz 2=277(load case 5)
Max Uplift3=-174(load case 5), 2=-227(load case 5), 4=-76(load case 5)

FORCES (lb) - Maximum Compression/Maximum Tension
TOP CHORD 1-2=0/45, 2-3=-131/73
BOT CHORD 2-4=0/0

JOINT STRESS INDEX
2 = 0.66

NOTES
1) Wind: ASCE 7-02; 110mph (3-second gust); h=20ft; TCDL=4.2psf; BCDL=3.0psf; Category II; Exp B; enclosed; MWFRS gable end zone and C-C Interior(1) zone; porch left and right exposed; Lumber DOL=1.60 plate grip DOL=1.60. This truss is designed for C-C for members and forces, and for MWFRS for reactions specified.
2) All bearings are assumed to be SYP No.2 crushing capacity of 565.00 psi
3) Refer to girder(s) for truss to truss connections.
4) Provide mechanical connection (by others) of truss to bearing plate capable of withstanding 174 lb uplift at joint 3, 227 lb uplift at joint 2 and 76 lb uplift at joint 4.

LOAD CASE(S) Standard

DECEMBER 06, 2006 TRUSS DESIGN ENGINEER:
THOMAS E. MILLER PE 56877, BYRON K. ANDERSON PE 60987
STRUCTURAL ENGINEERING AND INSPECTIONS, INC. EB 9196
16105 N. FLORIDA AVE. STE B, LUTZ, FL 33549

Job	Truss	Truss Type	Qty	Ply	LOT 10 HOLLY BROOK
L218890	EJ7A	MONO HIP	2	1	Job Reference (optional)

Dwg #1206061190

Builders FirstSource, Lake City, Fl 32055 — 6.300 s Apr 19 2006 MiTek Industries, Inc. Mon Dec 04 13:29:34 2006 Page 1

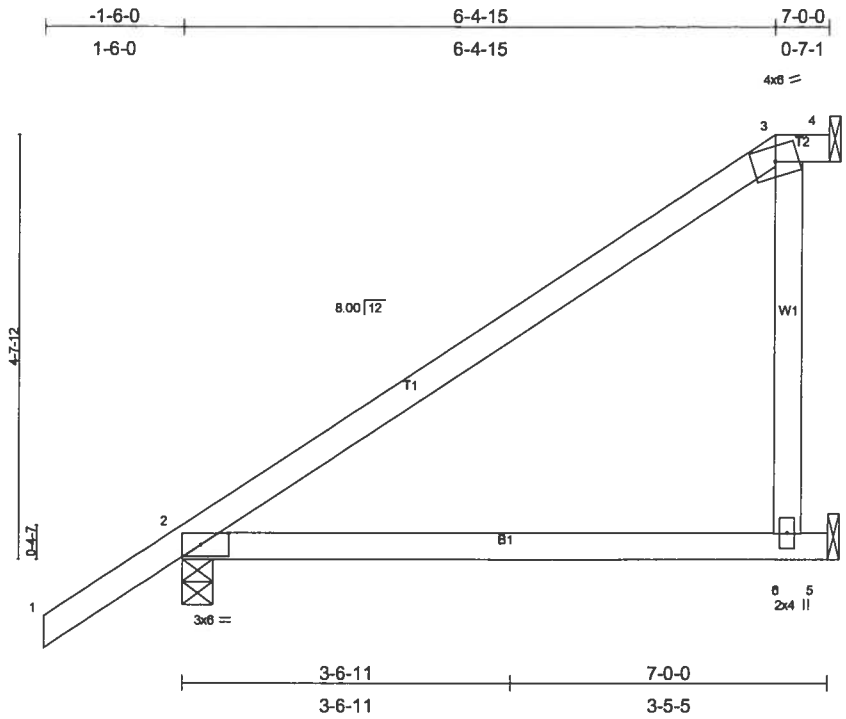

Plate Offsets (X,Y): [2:0-3-9,0-1-8]

LOADING (psf)		SPACING	2-0-0	CSI		DEFL	in	(loc)	l/defl	L/d	PLATES	GRIP
TCLL	20.0	Plates Increase	1.25	TC	0.38	Vert(LL)	-0.15	2-6	>532	240	MT20	244/190
TCDL	7.0	Lumber Increase	1.25	BC	0.42	Vert(TL)	-0.25	2-6	>325	180		
BCLL	10.0	Rep Stress Incr	YES	WB	0.10	Horz(TL)	0.03	4	n/a	n/a		
BCDL	5.0	Code FBC2004/TPI2002		(Matrix)							Weight: 32 lb	

LUMBER
TOP CHORD 2 X 4 SYP No.2
BOT CHORD 2 X 4 SYP No.2
WEBS 2 X 4 SYP No.3

BRACING
TOP CHORD Structural wood sheathing directly applied or 6-0-0 oc purlins.
BOT CHORD Rigid ceiling directly applied or 10-0-0 oc bracing.

REACTIONS (lb/size) 4=-74/Mechanical, 2=385/0-4-0, 5=347/Mechanical
Max Horz 2=262(load case 5)
Max Uplift4=-74(load case 1), 2=-152(load case 5), 5=-350(load case 5)
Max Grav 4=201(load case 5), 2=385(load case 1), 5=347(load case 1)

FORCES (lb) - Maximum Compression/Maximum Tension
TOP CHORD 1-2=0/45, 2-3=-117/65, 3-4=-3/6
BOT CHORD 2-6=-13/9, 5-6=0/0
WEBS 3-6=-262/384

JOINT STRESS INDEX
2 = 0.45, 3 = 0.50 and 6 = 0.22

NOTES
1) Unbalanced roof live loads have been considered for this design.
2) Wind: ASCE 7-02; 110mph (3-second gust); h=20ft; TCDL=4.2psf; BCDL=3.0psf; Category II; Exp B; enclosed; MWFRS gable end zone and C-C Interior(1) zone; Lumber DOL=1.60 plate grip DOL=1.60. This truss is designed for C-C for members and forces, and for MWFRS for reactions specified.
3) Provide adequate drainage to prevent water ponding.
4) All bearings are assumed to be SYP No.2 crushing capacity of 565.00 psi
5) Refer to girder(s) for truss to truss connections.
6) Provide mechanical connection (by others) of truss to bearing plate capable of withstanding 74 lb uplift at joint 4, 152 lb uplift at joint 2 and 350 lb uplift at joint 5.

LOAD CASE(S) Standard

DECEMBER 06, 2006 TRUSS DESIGN ENGINEER:
THOMAS E. MILLER PE 56877, BYRON K. ANDERSON PE 60987
STRUCTURAL ENGINEERING AND INSPECTIONS, INC. EB 9196
16105 N. FLORIDA AVE. STE B, LUTZ, FL 33549

Job	Truss	Truss Type	Qty	Ply	LOT 10 HOLLY BROOK Dwg #1206061189
L218890	EJ7B	MONO HIP	2	1	Job Reference (optional)

Builders FirstSource, Lake City, Fl 32055 — 6.300 s Apr 19 2006 MiTek Industries, Inc. Mon Dec 04 13:30:08 2006 Page 1

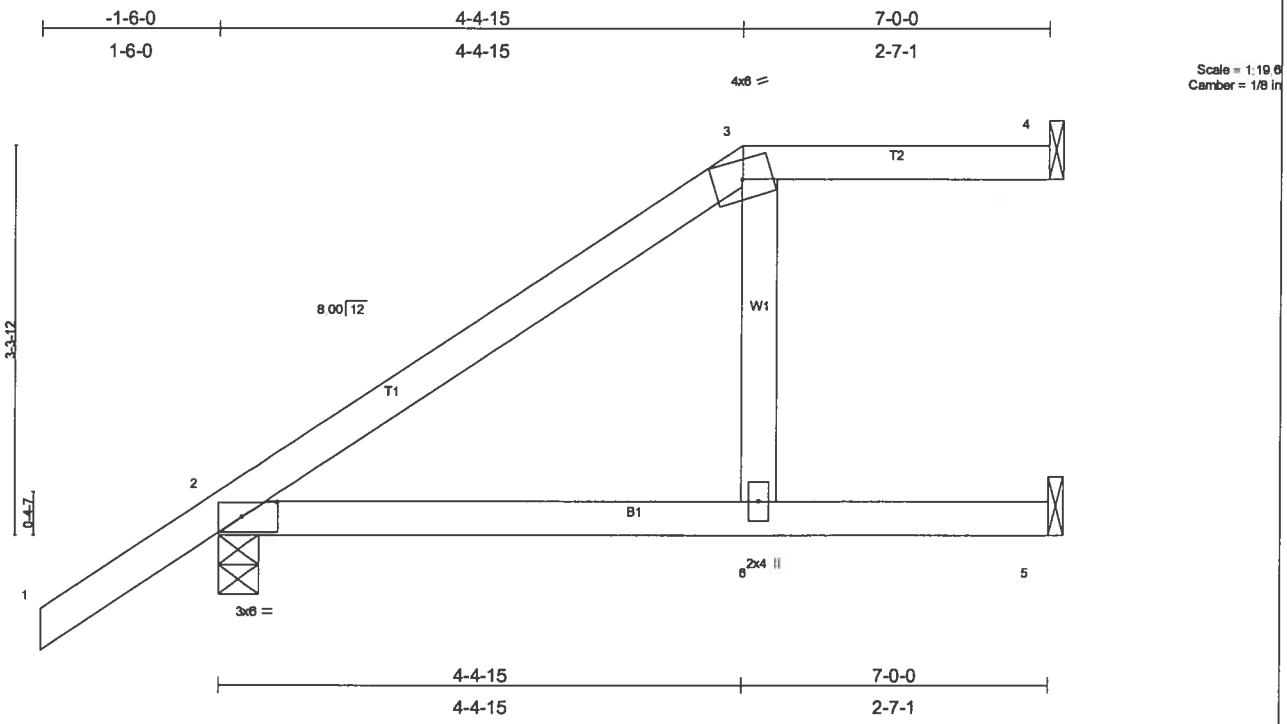

Plate Offsets (X,Y): [2:0-3-9,0-1-8]

LOADING (psf)		SPACING	2-0-0	CSI		DEFL	in	(loc)	l/defl	L/d	PLATES	GRIP
TCLL	20.0	Plates Increase	1.25	TC	0.37	Vert(LL)	-0.16	2-6	>506	240	MT20	244/190
TCDL	7.0	Lumber Increase	1.25	BC	0.47	Vert(TL)	-0.26	2-6	>313	180		
BCLL	10.0	Rep Stress Incr	YES	WB	0.03	Horz(TL)	0.16	4	n/a	n/a		
BCDL	5.0	Code FBC2004/TPI2002		(Matrix)							Weight: 29 lb	

LUMBER
TOP CHORD 2 X 4 SYP No.2
BOT CHORD 2 X 4 SYP No.2
WEBS 2 X 4 SYP No.3

BRACING
TOP CHORD Structural wood sheathing directly applied or 6-0-0 oc purlins.
BOT CHORD Rigid ceiling directly applied or 10-0-0 oc bracing.

REACTIONS (lb/size) 4=134/Mechanical, 2=385/0-4-0, 5=139/Mechanical
Max Horz 2=200(load case 5)
Max Uplift4=-61(load case 4), 2=-179(load case 5), 5=-48(load case 5)

FORCES (lb) - Maximum Compression/Maximum Tension
TOP CHORD 1-2=0/45, 2-3=-100/19, 3-4=-0/1
BOT CHORD 2-6=-5/3, 5-6=0/0
WEBS 3-6=-62/105

JOINT STRESS INDEX
2 = 0.28, 3 = 0.65 and 6 = 0.06

NOTES
1) Unbalanced roof live loads have been considered for this design.
2) Wind: ASCE 7-02; 110mph (3-second gust); h=20ft; TCDL=4.2psf; BCDL=3.0psf; Category II; Exp B; enclosed; MWFRS gable end zone and C-C Interior(1) zone; Lumber DOL=1.60 plate grip DOL=1.60. This truss is designed for C-C for members and forces, and for MWFRS for reactions specified.
3) Provide adequate drainage to prevent water ponding.
4) All bearings are assumed to be SYP No.2 crushing capacity of 565.00 psi
5) Refer to girder(s) for truss to truss connections.
6) Provide mechanical connection (by others) of truss to bearing plate capable of withstanding 61 lb uplift at joint 4, 179 lb uplift at joint 2 and 48 lb uplift at joint 5.

LOAD CASE(S) Standard

DECEMBER 06, 2006 TRUSS DESIGN ENGINEER:
THOMAS E. MILLER PE 56877, BYRON K. ANDERSON PE 60987
STRUCTURAL ENGINEERING AND INSPECTIONS, INC. EB 9196
16105 N. FLORIDA AVE. STE B, LUTZ, FL 33549

Job	Truss	Truss Type	Qty	Ply	LOT 10 HOLLY BROOK Dwg #1206061188
L218890	EJ7C	GABLE	2	1	Job Reference (optional)

Builders FirstSource, Lake City, Fl 32055 — 6.300 s Apr 19 2006 MiTek Industries, Inc. Mon Dec 04 15:49:59 2006 Page 1

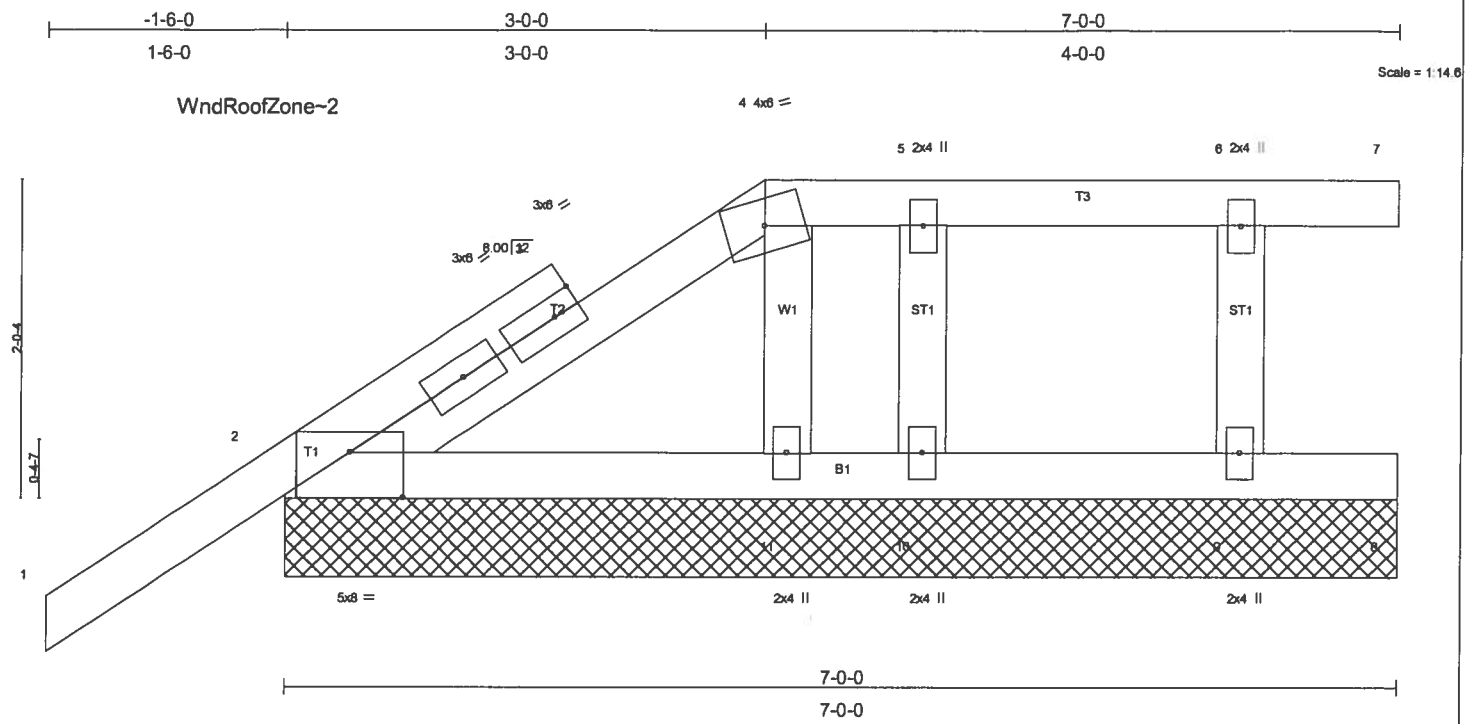

Plate Offsets (X,Y): [2:0-4-0,0-3-7]

LOADING (psf)		SPACING	2-0-0	CSI		DEFL	in	(loc)	l/defl	L/d	PLATES	GRIP
TCLL	20.0	Plates Increase	1.25	TC	0.22	Vert(LL)	-0.00	1	n/r	120	MT20	244/190
TCDL	7.0	Lumber Increase	1.25	BC	0.04	Vert(TL)	-0.01	1	n/r	90		
BCLL	10.0	Rep Stress Incr	NO	WB	0.04	Horz(TL)	-0.00	7	n/a	n/a		
BCDL	5.0	Code FBC2004/TPI2002		(Matrix)							Weight: 33 lb	

LUMBER
TOP CHORD 2 X 4 SYP No.2
BOT CHORD 2 X 4 SYP No.2
WEBS 2 X 4 SYP No.3
OTHERS 2 X 4 SYP No.3

BRACING
TOP CHORD Structural wood sheathing directly applied or 6-0-0 oc purlins.
BOT CHORD Rigid ceiling directly applied or 10-0-0 oc bracing.

REACTIONS (lb/size) 2=330/7-0-0, 7=20/7-0-0, 8=5/7-0-0, 10=134/7-0-0, 9=213/7-0-0, 11=247/7-0-0
Max Horz 2=141(load case 5)
Max Uplift2=-183(load case 5), 7=-15(load case 3), 10=-114(load case 3), 9=-96(load case 3), 11=-68(load case 5)
Max Grav 2=330(load case 1), 7=20(load case 10), 8=5(load case 10), 10=150(load case 10), 9=213(load case 1), 11=247(load case 1)

FORCES (lb) - Maximum Compression/Maximum Tension
TOP CHORD 1-2=-10/70, 2-3=-82/14, 3-4=-36/49, 4-5=-1/1, 5-6=0/0, 6-7=0/0
BOT CHORD 2-11=-10/14, 10-11=0/0, 9-10=0/0, 8-9=0/0
WEBS 5-10=-129/119, 6-9=-156/142, 4-11=-168/118

JOINT STRESS INDEX
2 = 0.54, 3 = 0.00, 3 = 0.22, 3 = 0.22, 4 = 0.16, 5 = 0.07, 6 = 0.08, 9 = 0.08, 10 = 0.07 and 11 = 0.07

NOTES
1) Unbalanced roof live loads have been considered for this design.
2) Wind: ASCE 7-02; 110mph (3-second gust); h=20ft; TCDL=4.2psf; BCDL=3.0psf; Category II; Exp B; enclosed; MWFRS gable end zone and C-C Exterior(2) zone; Lumber DOL=1.60 plate grip DOL=1.60. This truss is designed for C-C for members and forces, and for MWFRS for reactions specified.
3) Truss designed for wind loads in the plane of the truss only. For studs exposed to wind (normal to the face), see MiTek "Standard Gable End Detail"
4) Provide adequate drainage to prevent water ponding.
5) Gable requires continuous bottom chord bearing.
6) Gable studs spaced at 2-0-0 oc.
7) All bearings are assumed to be SYP No.2 crushing capacity of 565.00 psi
8) Provide mechanical connection (by others) of truss to bearing plate capable of withstanding 183 lb uplift at joint 2, 15 lb uplift at joint 7, 114 lb uplift at joint 10, 96 lb uplift at joint 9 and 68 lb uplift at joint 11.
9) In the LOAD CASE(S) section, loads applied to the face of the truss are noted as front (F) or back (B).

LOAD CASE(S) Standard
1) Regular: Lumber Increase=1.25, Plate Increase=1.25
Uniform Loads (plf)
Vert: 1-4=-87(F=-33), 4-7=-87(F=-33), 2-8=-30

DECEMBER 06, 2006 TRUSS DESIGN ENGINEER:
THOMAS E. MILLER PE 56877, BYRON K. ANDERSON PE 60987
STRUCTURAL ENGINEERING AND INSPECTIONS, INC. EB 9196
16105 N. FLORIDA AVE. STE B, LUTZ, FL 33549

Job	Truss	Truss Type	Qty	Ply	LOT 10 HOLLSBROOK Dwg #1206061187
L218890	EJ7T	SPECIAL	4	1	Job Reference (optional)

Builders FirstSource, Lake City, Fl 32055 — 6.300 s Apr 19 2006 MiTek Industries, Inc. Mon Dec 04 13:37:54 2006 Page 1

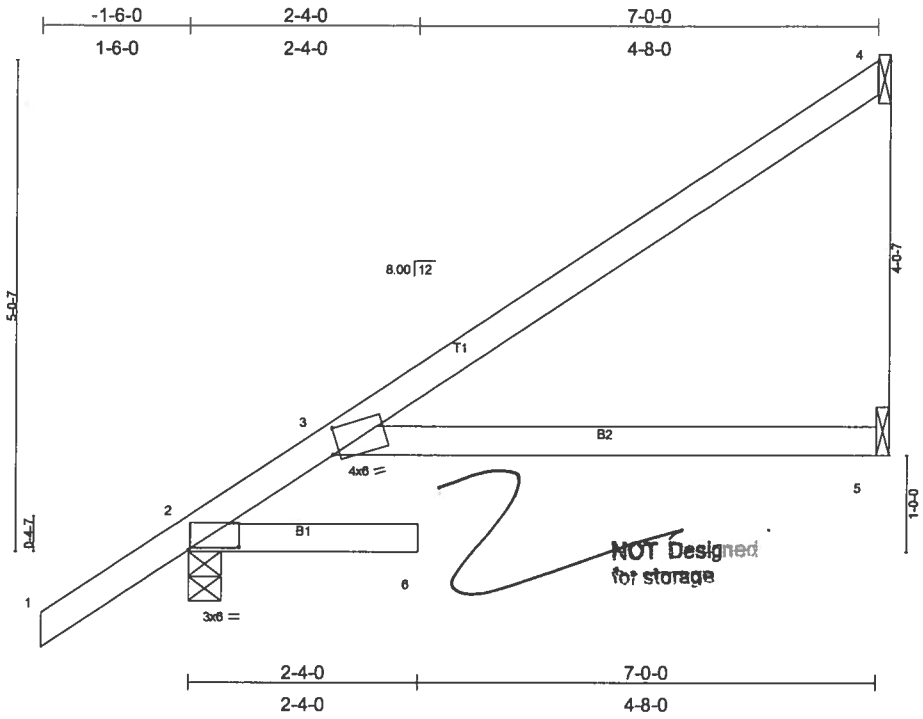

Plate Offsets (X,Y): [2:0-6-3,0-0-6], [3:0-0-12,0-3-3]

LOADING (psf)		SPACING	2-0-0	CSI		DEFL	in	(loc)	l/defl	L/d	PLATES	GRIP
TCLL	20.0	Plates Increase	1.25	TC	0.50	Vert(LL)	-0.22	6	>371	240	MT20	244/190
TCDL	7.0	Lumber Increase	1.25	BC	0.46	Vert(TL)	-0.36	6	>226	180		
BCLL	10.0	Rep Stress Incr	YES	WB	0.00	Horz(TL)	0.14	5	n/a	n/a		
BCDL	5.0	Code FBC2004/TPI2002		(Matrix)							Weight: 27 lb	

LUMBER
TOP CHORD 2 X 4 SYP No.2
BOT CHORD 2 X 4 SYP No.2

BRACING
TOP CHORD Structural wood sheathing directly applied or 6-0-0 oc purlins.
BOT CHORD Rigid ceiling directly applied or 10-0-0 oc bracing.

REACTIONS (lb/size) 4=160/Mechanical, 2=405/0-4-0, 5=120/Mechanical
Max Horz 2=277(load case 5)
Max Uplift4=-146(load case 5), 2=-138(load case 5), 5=-19(load case 5)

FORCES (lb) - Maximum Compression/Maximum Tension
TOP CHORD 1-2=0/45, 2-3=-148/0, 3-4=-107/73
BOT CHORD 2-6=0/0, 3-5=0/0

JOINT STRESS INDEX
2 = 0.68 and 3 = 0.82

NOTES
1) Wind: ASCE 7-02; 110mph (3-second gust); h=20ft; TCDL=4.2psf; BCDL=3.0psf; Category II; Exp B; enclosed; MWFRS gable end zone and C-C Interior(1) zone; Lumber DOL=1.60 plate grip DOL=1.60. This truss is designed for C-C for members and forces, and for MWFRS for reactions specified.
2) All bearings are assumed to be SYP No.2 crushing capacity of 565.00 psi
3) Refer to girder(s) for truss to truss connections.
4) Provide mechanical connection (by others) of truss to bearing plate capable of withstanding 146 lb uplift at joint 4, 138 lb uplift at joint 2 and 19 lb uplift at joint 5.

LOAD CASE(S) Standard

DECEMBER 06, 2006 TRUSS DESIGN ENGINEER:
THOMAS E. MILLER PE 56877, BYRON K. ANDERSON PE 60987
STRUCTURAL ENGINEERING AND INSPECTIONS, INC. EB 9196
16105 N. FLORIDA AVE. STE B, LUTZ, FL 33549

Job	Truss	Truss Type	Qty	Ply	LOT 10 HOLLY BROOK Dwg #1206061186
L218890	HJ9	MONO TRUSS	2	1	Job Reference (optional)

Builders FirstSource, Lake City, Fl 32055 — 6.300 s Apr 19 2006 MiTek Industries, Inc. Mon Dec 04 13:39:56 2006 Page 1

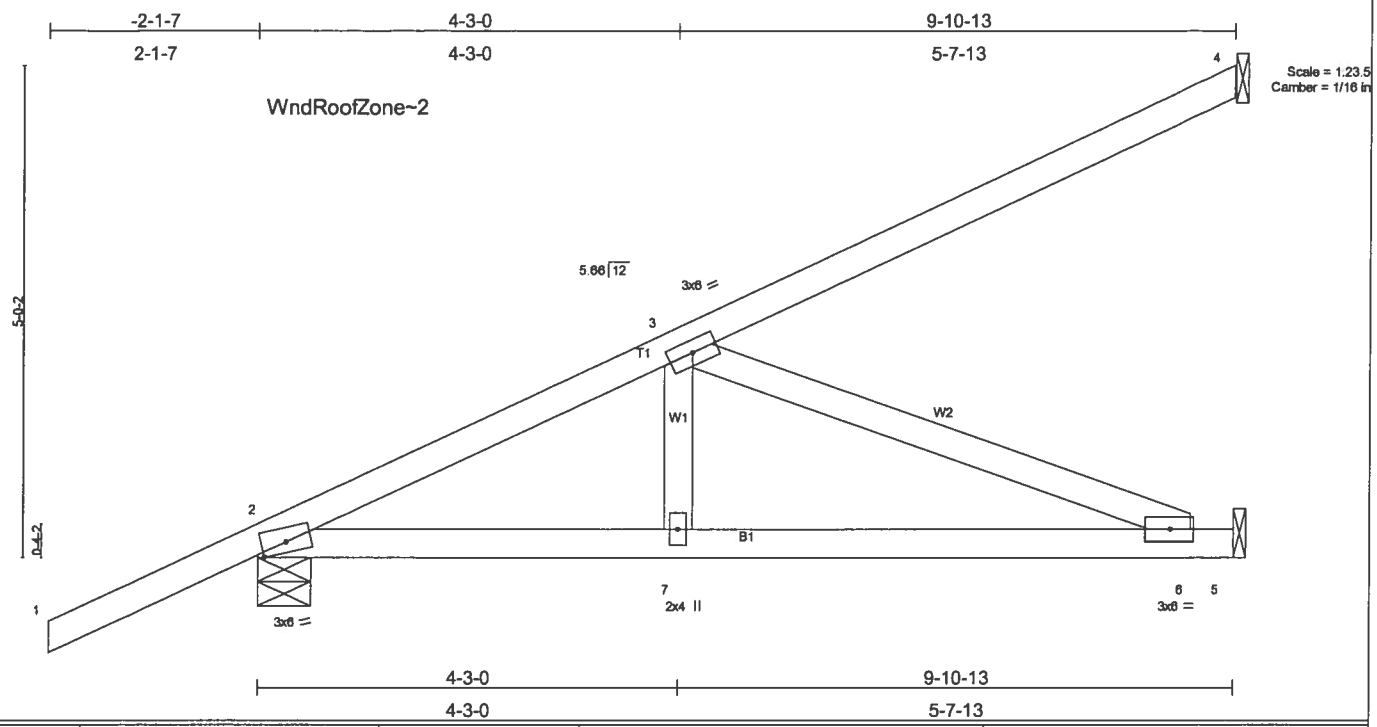

LOADING (psf)		SPACING	2-0-0	CSI		DEFL	in	(loc)	l/defl	L/d	PLATES	GRIP
TCLL	20.0	Plates Increase	1.25	TC	0.60	Vert(LL)	-0.10	6-7	>999	240	MT20	244/190
TCDL	7.0	Lumber Increase	1.25	BC	0.58	Vert(TL)	-0.17	6-7	>673	180		
BCLL	10.0	Rep Stress Incr	NO	WB	0.41	Horz(TL)	0.01	5	n/a	n/a		
BCDL	5.0	Code FBC2004/TPI2002		(Matrix)							Weight: 45 lb	

LUMBER
TOP CHORD 2 X 4 SYP No.2
BOT CHORD 2 X 4 SYP No.2
WEBS 2 X 4 SYP No.3

BRACING
TOP CHORD Structural wood sheathing directly applied or 6-0-0 oc purlins.
BOT CHORD Rigid ceiling directly applied or 8-5-0 oc bracing.

REACTIONS (lb/size) 4=266/Mechanical, 2=488/0-6-7, 5=387/Mechanical
Max Horz 2=343(load case 4)
Max Uplift4=-267(load case 4), 2=-306(load case 4), 5=-215(load case 4)

FORCES (lb) - Maximum Compression/Maximum Tension
TOP CHORD 1-2=0/48, 2-3=-741/249, 3-4=-149/83
BOT CHORD 2-7=-502/656, 6-7=-502/656, 5-6=0/0
WEBS 3-7=-96/210, 3-6=-705/539

JOINT STRESS INDEX
2 = 0.86, 3 = 0.23, 6 = 0.19 and 7 = 0.15

NOTES
1) Wind: ASCE 7-02; 110mph (3-second gust); h=20ft; TCDL=4.2psf; BCDL=3.0psf; Category II; Exp B; enclosed; MWFRS gable end zone; porch left and right exposed; Lumber DOL=1.60 plate grip DOL=1.60.
2) All bearings are assumed to be SYP No.2 crushing capacity of 565.00 psi
3) Refer to girder(s) for truss to truss connections.
4) Provide mechanical connection (by others) of truss to bearing plate capable of withstanding 267 lb uplift at joint 4, 306 lb uplift at joint 2 and 215 lb uplift at joint 5.
5) In the LOAD CASE(S) section, loads applied to the face of the truss are noted as front (F) or back (B).

LOAD CASE(S) Standard
1) Regular: Lumber Increase=1.25, Plate Increase=1.25
Uniform Loads (plf)
Vert: 1-2=-54
Trapezoidal Loads (plf)
Vert: 2=-4(F=25, B=25)-to-4=-134(F=-40, B=-40), 2=0(F=15, B=15)-to-5=-74(F=-22, B=-22)

DECEMBER 06, 2006 TRUSS DESIGN ENGINEER:
THOMAS E. MILLER PE 56877, BYRON K. ANDERSON PE 60987
STRUCTURAL ENGINEERING AND INSPECTIONS, INC. EB 9196
16105 N. FLORIDA AVE. STE B, LUTZ, FL 33549

Job	Truss	Truss Type	Qty	Ply	LOT 10 HOLLS BROOK Dwg #1206061185
L218890	HJ9T	SPECIAL	1	1	Job Reference (optional)

Builders FirstSource, Lake City, Fl 32055 — 6.300 s Apr 19 2006 MiTek Industries, Inc. Mon Dec 04 13:43:01 2006 Page 1

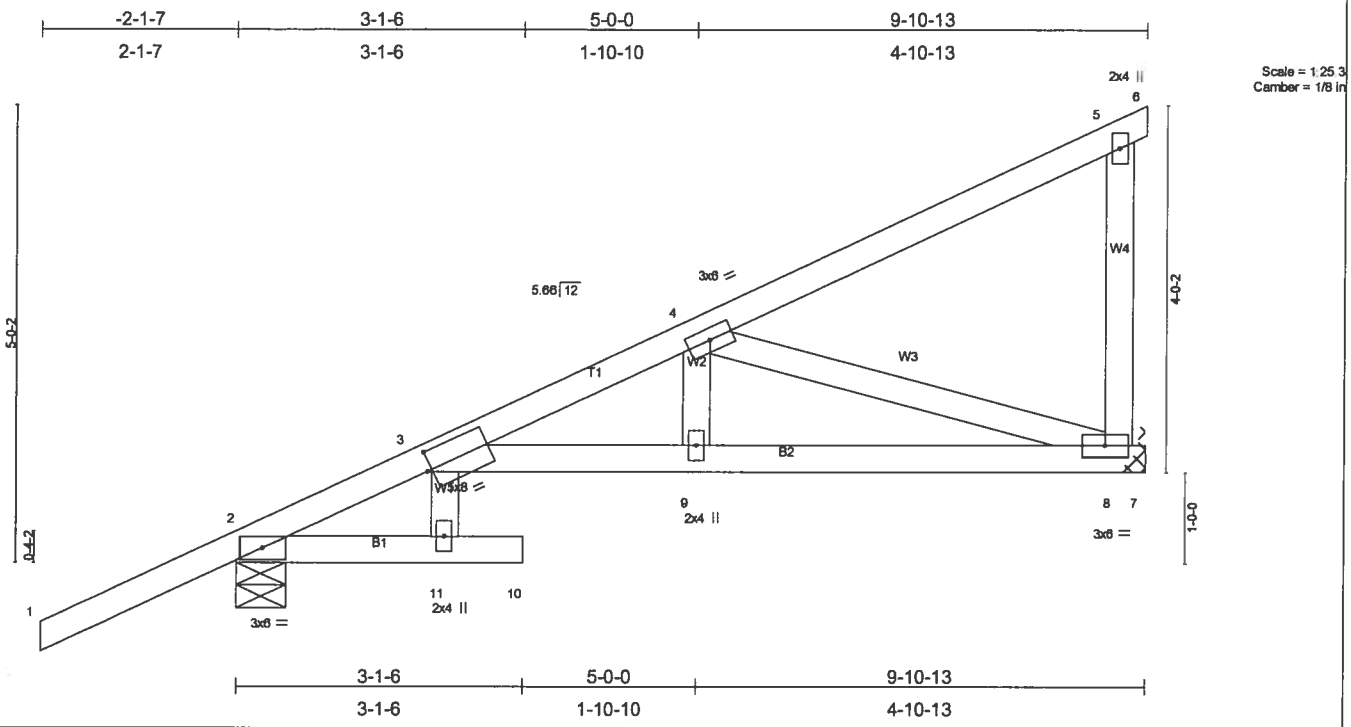

Plate Offsets (X,Y): [3:0-0-10,0-2-8]

LOADING (psf)		SPACING	2-0-0	CSI		DEFL	in	(loc)	l/defl	L/d	PLATES	GRIP
TCLL	20.0	Plates Increase	1.25	TC	0.69	Vert(LL)	-0.17	10	>656	240	MT20	244/190
TCDL	7.0	Lumber Increase	1.25	BC	0.66	Vert(TL)	-0.28	10	>401	180		
BCLL	10.0	Rep Stress Incr	NO	WB	0.34	Horz(TL)	0.11	8	n/a	n/a		
BCDL	5.0	Code FBC2004/TPI2002		(Matrix)							Weight: 51 lb	

LUMBER
TOP CHORD 2 X 4 SYP No.1D
BOT CHORD 2 X 4 SYP No.2
WEBS 2 X 4 SYP No.3

BRACING
TOP CHORD Structural wood sheathing directly applied or 6-0-0 oc purlins.
BOT CHORD Rigid ceiling directly applied or 10-0-0 oc bracing, Except:
6-0-0 oc bracing: 2-11.

REACTIONS (lb/size) 2=562/0-6-7, 8=397/Mechanical
Max Horz 2=278(load case 4)
Max Uplift2=-243(load case 4), 8=-188(load case 4)

FORCES (lb) - Maximum Compression/Maximum Tension
TOP CHORD 1-2=0/48, 2-3=-197/0, 3-4=-844/198, 4-5=-65/30, 5-6=-2/0
BOT CHORD 2-11=-19/0, 10-11=0/0, 3-9=-334/783, 8-9=-334/783, 7-8=0/0
WEBS 4-9=0/242, 4-8=-818/349, 5-8=-100/101, 3-11=0/88

JOINT STRESS INDEX
2 = 0.50, 3 = 0.82, 4 = 0.22, 5 = 0.05, 8 = 0.23, 9 = 0.18 and 11 = 0.06

NOTES
1) Wind: ASCE 7-02; 110mph (3-second gust); h=20ft; TCDL=4.2psf; BCDL=3.0psf; Category II; Exp B; enclosed; MWFRS gable end zone; Lumber DOL=1.60 plate grip DOL=1.60.
2) All bearings are assumed to be SYP No.2 crushing capacity of 565.00 psi
3) Refer to girder(s) for truss to truss connections.
4) Provide mechanical connection (by others) of truss to bearing plate capable of withstanding 243 lb uplift at joint 2 and 188 lb uplift at joint 8.

LOAD CASE(S) Standard

DECEMBER 06, 2006 TRUSS DESIGN ENGINEER:
THOMAS E. MILLER PE 56877, BYRON K. ANDERSON PE 60987
STRUCTURAL ENGINEERING AND INSPECTIONS, INC. EB 9196
16105 N. FLORIDA AVE. STE B, LUTZ, FL 33549

Job	Truss	Truss Type	Qty	Ply	LOT 10 HOLLY BROOK Dwg #1206061184
L218890	PB01	VALLEY	2	1	Job Reference (optional)

Builders FirstSource, Lake City, Fl 32055 — 6.300 s Apr 19 2006 MiTek Industries, Inc. Mon Dec 04 13:44:12 2006 Page 1

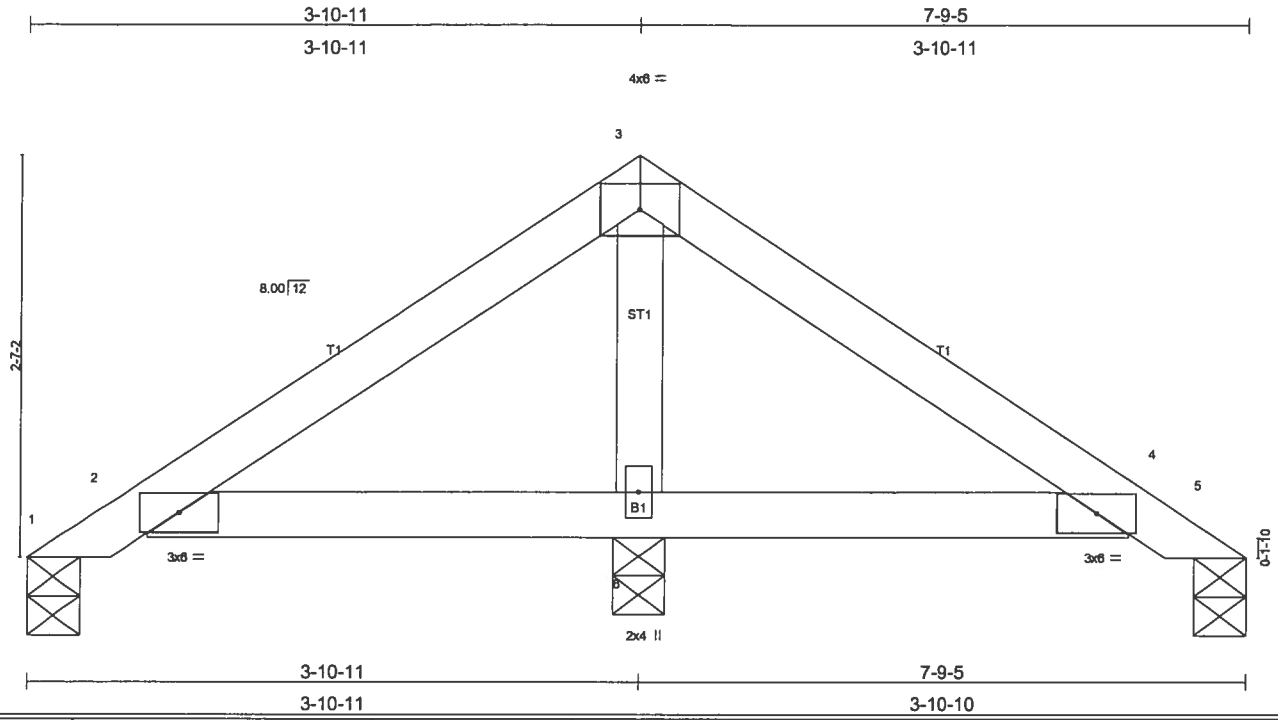

LOADING (psf)		SPACING	2-0-0	CSI		DEFL	in	(loc)	l/defl	L/d	PLATES	GRIP
TCLL	20.0	Plates Increase	1.25	TC	0.12	Vert(LL)	-0.01	4-6	>999	240	MT20	244/190
TCDL	7.0	Lumber Increase	1.25	BC	0.10	Vert(TL)	-0.01	4-6	>999	180		
BCLL	10.0	Rep Stress Incr	YES	WB	0.07	Horz(TL)	0.00	5	n/a	n/a		
BCDL	5.0	Code FBC2004/TPI2002		(Matrix)							Weight: 26 lb	

LUMBER
TOP CHORD 2 X 4 SYP No.2
BOT CHORD 2 X 4 SYP No.2
OTHERS 2 X 4 SYP No.3

BRACING
TOP CHORD Structural wood sheathing directly applied or 6-0-0 oc purlins.
BOT CHORD Rigid ceiling directly applied or 6-0-0 oc bracing.

REACTIONS (lb/size) 1=41/0-4-0, 5=41/0-4-0, 6=522/0-4-0
Max Horz 1=86(load case 4)
Max Uplift1=-12(load case 6), 5=-35(load case 3), 6=-173(load case 5)
Max Grav 1=66(load case 9), 5=66(load case 10), 6=522(load case 1)

FORCES (lb) - Maximum Compression/Maximum Tension
TOP CHORD 1-2=-75/78, 2-3=-72/213, 3-4=-58/213, 4-5=-31/22
BOT CHORD 2-6=-129/98, 4-6=-129/98
WEBS 3-6=-379/176

JOINT STRESS INDEX
2 = 0.23, 3 = 0.28, 4 = 0.23 and 6 = 0.14

NOTES
1) Unbalanced roof live loads have been considered for this design.
2) Wind: ASCE 7-02; 110mph (3-second gust); h=20ft; TCDL=4.2psf; BCDL=3.0psf; Category II; Exp B; enclosed; MWFRS gable end zone and C-C Interior(1) zone; Lumber DOL=1.60 plate grip DOL=1.60. This truss is designed for C-C for members and forces, and for MWFRS for reactions specified.
3) All bearings are assumed to be SYP No.2 crushing capacity of 565.00 psi
4) Bearing at joint(s) 1, 5 considers parallel to grain value using ANSI/TPI 1 angle to grain formula. Building designer should verify capacity of bearing surface.
5) Provide mechanical connection (by others) of truss to bearing plate capable of withstanding 12 lb uplift at joint 1, 35 lb uplift at joint 5 and 173 lb uplift at joint 6.
6) SEE MiTek STANDARD PIGGYBACK TRUSS CONNECTION DETAIL FOR CONNECTION TO BASE TRUSS

LOAD CASE(S) Standard

DECEMBER 06, 2006 TRUSS DESIGN ENGINEER:
THOMAS E. MILLER PE 56877, BYRON K. ANDERSON PE 60987
STRUCTURAL ENGINEERING AND INSPECTIONS, INC. EB 9196
16105 N. FLORIDA AVE. STE B, LUTZ, FL 33549

Job	Truss	Truss Type	Qty	Ply	LOT 10 HOLLY BROOK Dwg #1206061183
L218890	T01	SCISSOR	1	1	Job Reference (optional)

Builders FirstSource, Lake City, Fl 32055 — 6.300 s Apr 19 2006 MiTek Industries, Inc. Mon Dec 04 13:47:22 2006 Page 1

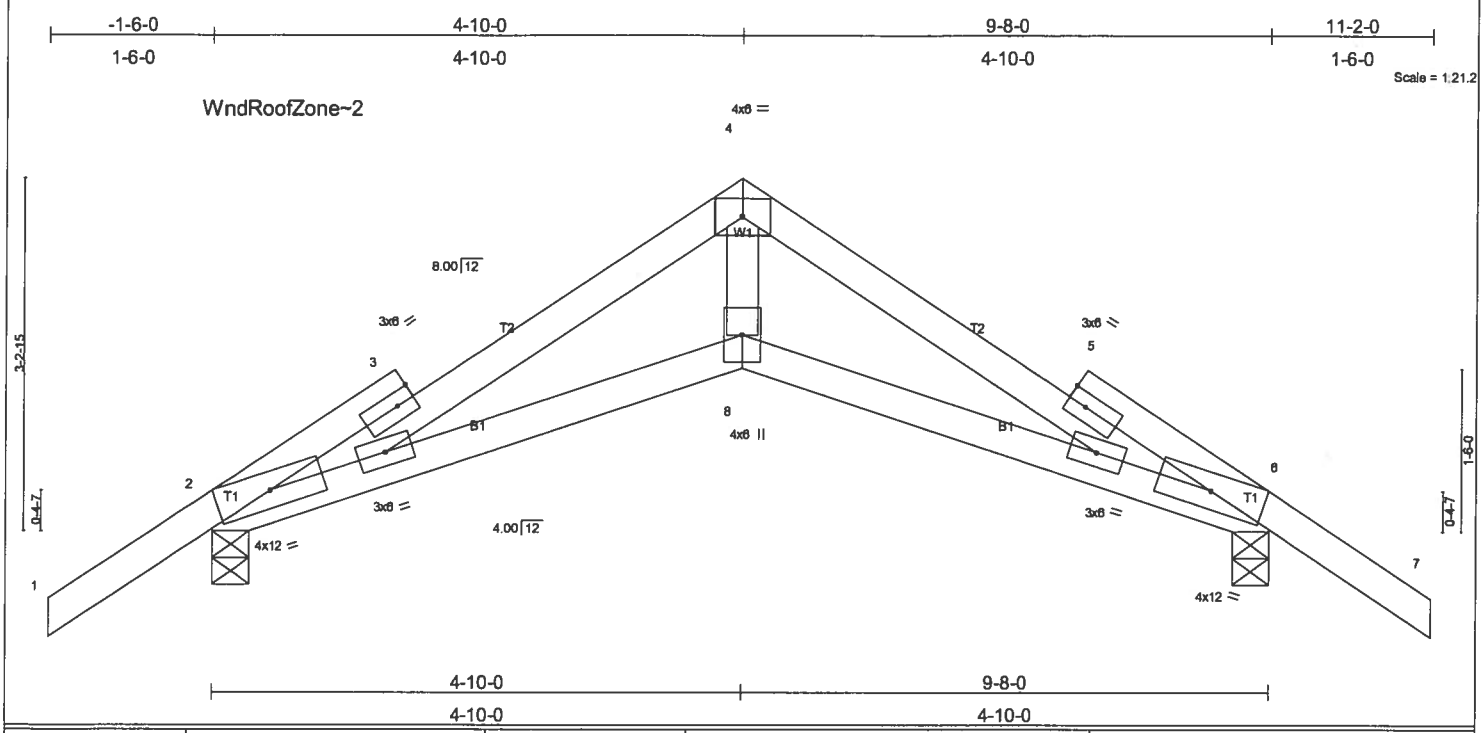

LOADING (psf)		SPACING	2-0-0	CSI		DEFL	in	(loc)	l/defl	L/d	PLATES	GRIP
TCLL	20.0	Plates Increase	1.25	TC	0.28	Vert(LL)	-0.05	6-8	>999	240	MT20	244/190
TCDL	7.0	Lumber Increase	1.25	BC	0.33	Vert(TL)	-0.08	6-8	>999	180		
BCLL	10.0	Rep Stress Incr	NO	WB	0.26	Horz(TL)	0.07	6	n/a	n/a		
BCDL	5.0	Code FBC2004/TPI2002		(Matrix)							Weight: 44 lb	

LUMBER
TOP CHORD 2 X 4 SYP No.2
BOT CHORD 2 X 4 SYP No.2
WEBS 2 X 4 SYP No.3

BRACING
TOP CHORD Structural wood sheathing directly applied or 5-5-11 oc purlins.
BOT CHORD Rigid ceiling directly applied or 10-0-0 oc bracing.

REACTIONS (lb/size) 2=691/0-4-0, 6=691/0-4-0
Max Horz 2=108(load case 4)
Max Uplift2=-305(load case 5), 6=-305(load case 6)

FORCES (lb) - Maximum Compression/Maximum Tension
TOP CHORD 1-2=-3/69, 2-3=-1248/261, 3-4=-1167/258, 4-5=-1167/276, 5-6=-1248/279, 6-7=-3/69
BOT CHORD 2-8=-180/1049, 6-8=-180/1049
WEBS 4-8=-93/809

JOINT STRESS INDEX
2 = 0.67, 2 = 0.00, 3 = 0.00, 3 = 0.37, 4 = 0.47, 5 = 0.00, 5 = 0.37, 6 = 0.67, 6 = 0.00 and 8 = 0.64

NOTES
1) Unbalanced roof live loads have been considered for this design.
2) Wind: ASCE 7-02; 110mph (3-second gust); h=20ft; TCDL=4.2psf; BCDL=3.0psf; Category II; Exp B; enclosed; MWFRS gable end zone and C-C Exterior(2) zone; Lumber DOL=1.60 plate grip DOL=1.60. This truss is designed for C-C for members and forces, and for MWFRS for reactions specified.
3) All bearings are assumed to be SYP No.2 crushing capacity of 565.00 psi
4) Bearing at joint(s) 2, 6 considers parallel to grain value using ANSI/TPI 1 angle to grain formula. Building designer should verify capacity of bearing surface.
5) Provide mechanical connection (by others) of truss to bearing plate capable of withstanding 305 lb uplift at joint 2 and 305 lb uplift at joint 6.
6) In the LOAD CASE(S) section, loads applied to the face of the truss are noted as front (F) or back (B).

LOAD CASE(S) Standard
1) Regular: Lumber Increase=1.25, Plate Increase=1.25
Uniform Loads (plf)
Vert: 1-4=-87(F=-33), 4-7=-87(F=-33), 2-8=-30, 6-8=-30

DECEMBER 06, 2006 TRUSS DESIGN ENGINEER:
THOMAS E. MILLER PE 56877, BYRON K. ANDERSON PE 60987
STRUCTURAL ENGINEERING AND INSPECTIONS, INC. EB 9196
16105 N. FLORIDA AVE. STE B, LUTZ, FL 33549

Job	Truss	Truss Type	Qty	Ply	LOT 10 HOLLY BROOK Dwg #1206061182
L218890	T02	GABLE	1	1	Job Reference (optional)

Builders FirstSource, Lake City, Fl 32055 — 6.300 s Apr 19 2006 MiTek Industries, Inc. Mon Dec 04 13:56:45 2006 Page 1

-1-6-0	4-10-3	9-2-0	13-6-9	18-4-0	19-10-0
1-6-0	4-10-3	4-3-13	4-4-9	4-9-7	1-6-0

Scale = 1:36.2

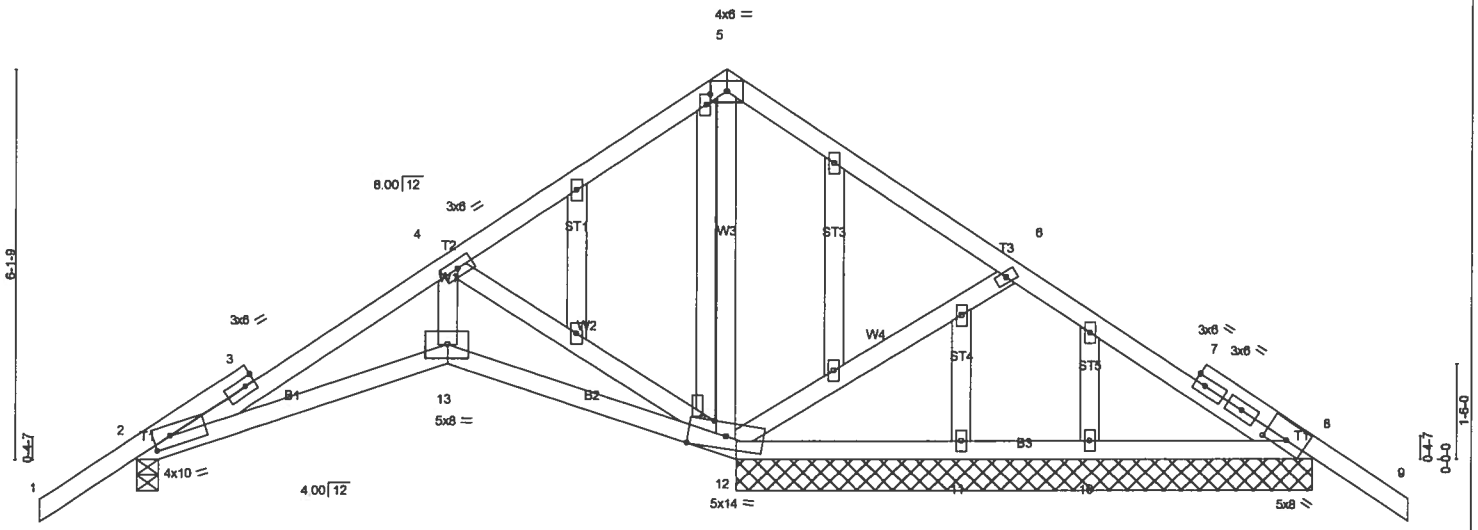

4-10-0	9-4-0	18-4-0
4-10-0	4-6-0	9-0-0

Plate Offsets (X,Y): [2:0-3-4,0-2-0], [8:0-4-5,0-1-12], [12:0-0-14,0-2-4], [16:0-2-0,0-0-12]

LOADING (psf)		SPACING	2-0-0	CSI		DEFL	in	(loc)	l/defl	L/d	PLATES	GRIP
TCLL	20.0	Plates Increase	1.25	TC	0.31	Vert(LL)	0.05	2-13	>999	240	MT20	244/190
TCDL	7.0	Lumber Increase	1.25	BC	0.19	Vert(TL)	-0.04	2-13	>999	180		
BCLL	10.0	Rep Stress Incr	NO	WB	0.48	Horz(TL)	0.02	12	n/a	n/a		
BCDL	5.0	Code FBC2004/TPI2002		(Matrix)							Weight: 118 lb	

LUMBER
TOP CHORD 2 X 4 SYP No.2
BOT CHORD 2 X 4 SYP No.2
WEBS 2 X 4 SYP No.3
OTHERS 2 X 4 SYP No.3

BRACING
TOP CHORD Structural wood sheathing directly applied or 6-0-0 oc purlins.
BOT CHORD Rigid ceiling directly applied or 6-0-0 oc bracing.

REACTIONS (lb/size) 2=402/0-4-0, 8=335/9-0-0, 12=1449/9-0-0, 11=63/9-0-0, 10=114/9-0-0
Max Horz 2=210(load case 4)
Max Uplift2=-234(load case 6), 8=-243(load case 6), 12=-590(load case 6), 10=-6(load case 6)
Max Grav 2=418(load case 9), 8=404(load case 10), 12=1449(load case 1), 11=72(load case 9), 10=118(load case 10)

FORCES (lb) - Maximum Compression/Maximum Tension
TOP CHORD 1-2=-1/64, 2-3=-255/163, 3-4=-167/167, 4-5=-245/537, 5-6=-249/540, 6-7=-223/275, 7-8=-224/222, 8-9=-3/70
BOT CHORD 2-13=-170/231, 12-13=-165/227, 11-12=-182/252, 10-11=-181/252, 8-10=-181/252
WEBS 4-13=-355/234, 4-12=-573/546, 5-12=-860/433, 6-12=-390/299

JOINT STRESS INDEX
2 = 0.31, 3 = 0.00, 3 = 0.27, 4 = 0.43, 5 = 0.61, 6 = 0.34, 7 = 0.00, 7 = 0.30, 7 = 0.30, 8 = 0.59, 10 = 0.34, 11 = 0.34, 12 = 0.68, 12 = 0.62, 13 = 0.78, 14 = 0.34, 15 = 0.34, 16 = 0.38, 17 = 0.34, 18 = 0.34, 19 = 0.34 and 20 = 0.34

NOTES
1) Unbalanced roof live loads have been considered for this design.
2) Wind: ASCE 7-02; 110mph (3-second gust); h=20ft; TCDL=4.2psf; BCDL=3.0psf; Category II; Exp B; enclosed; MWFRS gable end zone and C-C Interior(1) zone; porch right exposed; Lumber DOL=1.60 plate grip DOL=1.60. This truss is designed for C-C for members and forces, and for MWFRS for reactions specified.
3) Truss designed for wind loads in the plane of the truss only. For studs exposed to wind (normal to the face), see MiTek "Standard Gable End Detail"
4) All plates are 2x4 MT20 unless otherwise indicated.
5) Gable studs spaced at 2-0-0 oc.
6) All bearings are assumed to be SYP No.2 crushing capacity of 565.00 psi
7) Bearing at joint(s) 2 considers parallel to grain value using ANSI/TPI 1 angle to grain formula. Building designer should verify capacity of bearing surface.
8) Provide mechanical connection (by others) of truss to bearing plate capable of withstanding 234 lb uplift at joint 2, 243 lb uplift at joint 8, 590 lb uplift at joint 12 and 6 lb uplift at joint 10.
9) In the LOAD CASE(S) section, loads applied to the face of the truss are noted as front (F) or back (B).

LOAD CASE(S) Standard
1) Regular: Lumber Increase=1.25, Plate Increase=1.25
Uniform Loads (plf)
Vert: 1-4=-81(F=-27), 4-5=-87(F=-33), 5-9=-87(F=-33), 2-13=-30, 12-13=-30, 8-12=-30

DECEMBER 06, 2006 TRUSS DESIGN ENGINEER:
THOMAS E. MILLER PE 56877, BYRON K. ANDERSON PE 60987
STRUCTURAL ENGINEERING AND INSPECTIONS, INC. EB 9196
16105 N. FLORIDA AVE. STE B, LUTZ, FL 33549

Job	Truss	Truss Type	Qty	Ply	LOT 10 HOLLY BROOK Dwg #1206061181
L218890	T03	SPECIAL	3	1	Job Reference (optional)

Builders FirstSource, Lake City, Fl 32055 — 6.300 s Apr 19 2006 MiTek Industries, Inc. Mon Dec 04 13:56:09 2006 Page 1

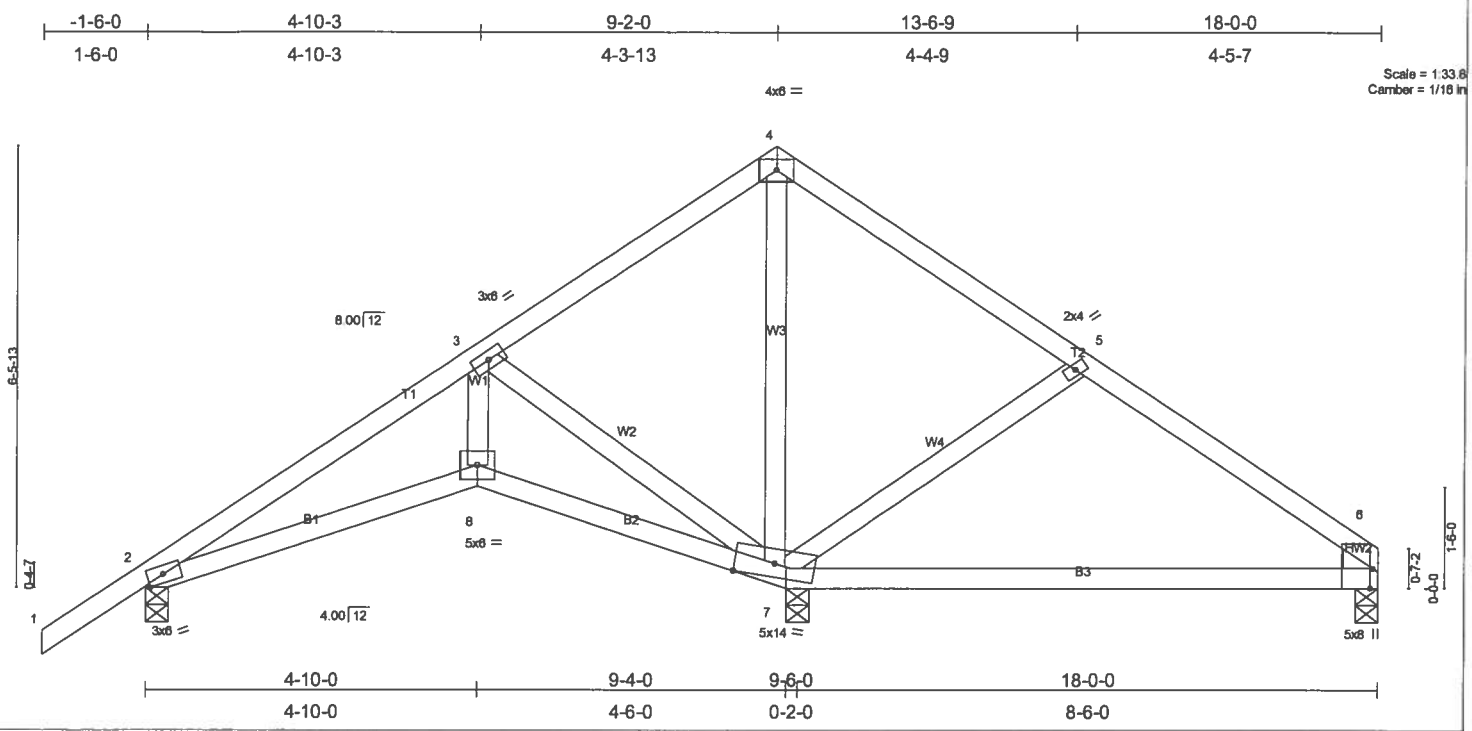

Plate Offsets (X,Y): [2:0-2-13,Edge], [6:0-3-8,Edge]

LOADING (psf)		SPACING	2-0-0	CSI		DEFL	in	(loc)	l/defl	L/d	PLATES	GRIP
TCLL	20.0	Plates Increase	1.25	TC	0.54	Vert(LL)	0.36	6-7	>287	240	MT20	244/190
TCDL	7.0	Lumber Increase	1.25	BC	0.40	Vert(TL)	0.31	6-7	>337	180		
BCLL	10.0	Rep Stress Incr	YES	WB	0.31	Horz(TL)	0.01	7	n/a	n/a		
BCDL	5.0	Code FBC2004/TPI2002		(Matrix)							Weight: 90 lb	

LUMBER
TOP CHORD 2 X 4 SYP No.2
BOT CHORD 2 X 4 SYP No.2
WEBS 2 X 4 SYP No.3
WEDGE
Right: 2 X 4 SYP No.3

BRACING
TOP CHORD Structural wood sheathing directly applied or 6-0-0 oc purlins.
BOT CHORD Rigid ceiling directly applied or 6-0-0 oc bracing.

REACTIONS (lb/size) 2=323/0-4-0, 7=1046/0-4-0, 6=205/0-4-0
Max Horz 2=234(load case 4)
Max Uplift2=-170(load case 5), 7=-444(load case 5), 6=-247(load case 3)
Max Grav 2=331(load case 9), 7=1046(load case 1), 6=269(load case 10)

FORCES (lb) - Maximum Compression/Maximum Tension
TOP CHORD 1-2=0/43, 2-3=-249/23, 3-4=-108/284, 4-5=-57/283, 5-6=-175/229
BOT CHORD 2-8=-132/250, 7-8=-122/254, 6-7=-147/126
WEBS 3-8=-15/229, 3-7=-409/187, 4-7=-465/124, 5-7=-271/274

JOINT STRESS INDEX
2 = 0.21, 3 = 0.43, 4 = 0.33, 5 = 0.34, 6 = 0.58, 6 = 0.00, 7 = 0.69 and 8 = 0.46

NOTES
1) Unbalanced roof live loads have been considered for this design.
2) Wind: ASCE 7-02; 110mph (3-second gust); h=20ft; TCDL=4.2psf; BCDL=3.0psf; Category II; Exp B; enclosed; MWFRS gable end zone and C-C Interior(1) zone; porch right exposed; Lumber DOL=1.60 plate grip DOL=1.60. This truss is designed for C-C for members and forces, and for MWFRS for reactions specified.
3) All bearings are assumed to be SYP No.2 crushing capacity of 565.00 psi
4) Bearing at joint(s) 2 considers parallel to grain value using ANSI/TPI 1 angle to grain formula. Building designer should verify capacity of bearing surface.
5) Provide mechanical connection (by others) of truss to bearing plate capable of withstanding 170 lb uplift at joint 2, 444 lb uplift at joint 7 and 247 lb uplift at joint 6.

LOAD CASE(S) Standard

DECEMBER 06, 2006 TRUSS DESIGN ENGINEER:
THOMAS E. MILLER PE 56877, BYRON K. ANDERSON PE 60987
STRUCTURAL ENGINEERING AND INSPECTIONS, INC. EB 9196
16105 N. FLORIDA AVE. STE B, LUTZ, FL 33549

Job	Truss	Truss Type	Qty	Ply	LOT 10 HOLLS BROOK Dwg #1206061180
L218890	T04	COMMON	1	2	Job Reference (optional)

Builders FirstSource, Lake City, Fl 32055 — 6.300 s Apr 19 2006 MiTek Industries, Inc. Mon Dec 04 14:11:44 2006 Page 1

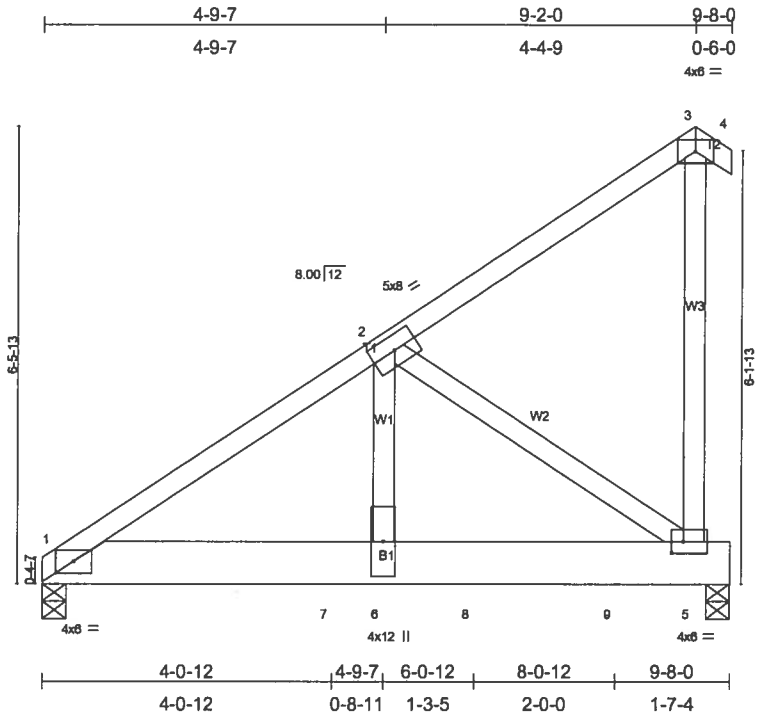

Plate Offsets (X,Y): [5:0-2-0,0-2-0]

LOADING (psf)		SPACING	2-0-0	CSI		DEFL	in	(loc)	l/defl	L/d	PLATES	GRIP
TCLL	20.0	Plates Increase	1.25	TC	0.16	Vert(LL)	-0.03	1-6	>999	240	MT20	244/190
TCDL	7.0	Lumber Increase	1.25	BC	0.24	Vert(TL)	-0.05	1-6	>999	180		
BCLL	10.0	Rep Stress Incr	NO	WB	0.66	Horz(TL)	0.01	5	n/a	n/a		
BCDL	5.0	Code FBC2004/TPI2002		(Matrix)							Weight: 134 lb	

LUMBER
TOP CHORD 2 X 4 SYP No.2
BOT CHORD 2 X 8 SYP 2400F 2.0E
WEBS 2 X 4 SYP No.3

BRACING
TOP CHORD Structural wood sheathing directly applied or 6-0-0 oc purlins.
BOT CHORD Rigid ceiling directly applied or 10-0-0 oc bracing.

REACTIONS (lb/size) 1=2556/0-4-0, 5=3467/0-4-0
Max Horz 1=260(load case 4)
Max Uplift1=-883(load case 4), 5=-1402(load case 4)

FORCES (lb) - Maximum Compression/Maximum Tension
TOP CHORD 1-2=-3906/1330, 2-3=-76/42, 3-4=0/15
BOT CHORD 1-7=-1291/3197, 6-7=-1291/3197, 6-8=-1291/3197, 8-9=-1291/3197, 5-9=-1291/3197
WEBS 2-6=-1475/4111, 3-5=-126/113, 2-5=-3911/1579

JOINT STRESS INDEX
1 = 0.63, 2 = 0.70, 3 = 0.02, 5 = 0.62 and 6 = 0.50

NOTES
1) 2-ply truss to be connected together with 10d (0.131"x3") nails as follows:
Top chords connected as follows: 2 X 4 - 1 row at 0-9-0 oc.
Bottom chords connected as follows: 2 X 8 - 2 rows at 0-4-0 oc.
Webs connected as follows: 2 X 4 - 1 row at 0-9-0 oc.
2) All loads are considered equally applied to all plies, except if noted as front (F) or back (B) face in the LOAD CASE(S) section. Ply to ply connections have been provided to distribute only loads noted as (F) or (B), unless otherwise indicated.
3) Unbalanced roof live loads have been considered for this design.
4) Wind: ASCE 7-02; 110mph (3-second gust); h=20ft; TCDL=4.2psf; BCDL=3.0psf; Category II; Exp B; enclosed; MWFRS gable end zone; Lumber DOL=1.60 plate grip DOL=1.60.
5) All bearings are assumed to be SYP No.2 crushing capacity of 565.00 psi
6) Provide mechanical connection (by others) of truss to bearing plate capable of withstanding 883 lb uplift at joint 1 and 1402 lb uplift at joint 5.
7) Hanger(s) or other connection device(s) shall be provided sufficient to support concentrated load(s) 2852 lb down and 1077 lb up at 4-0-12, and 1206 lb down and 455 lb up at 6-0-12, and 1182 lb down and 446 lb up at 8-0-12 on bottom chord. The design/selection of such connection device(s) is the responsibility of others.

LOAD CASE(S) Standard
1) Regular: Lumber Increase=1.25, Plate Increase=1.25
Uniform Loads (plf)
Vert: 1-3=-54, 3-4=-54, 1-5=-30
Concentrated Loads (lb)
Vert: 7=-2852(F) 8=-1206(F) 9=-1182(F)

DECEMBER 06, 2006 TRUSS DESIGN ENGINEER:
THOMAS E. MILLER PE 56877, BYRON K. ANDERSON PE 60987
STRUCTURAL ENGINEERING AND INSPECTIONS, INC. EB 9196
16105 N. FLORIDA AVE. STE B, LUTZ, FL 33549

Job	Truss	Truss Type	Qty	Ply	LOT 10 HOLLY BROOK
L218890	T05	SPECIAL	1	2	Job Reference (optional)

Dwg #1206061179

Builders FirstSource, Lake City, Fl 32055 — 6.300 s Apr 19 2006 MiTek Industries, Inc. Mon Dec 04 14:06:22 2006 Page 1

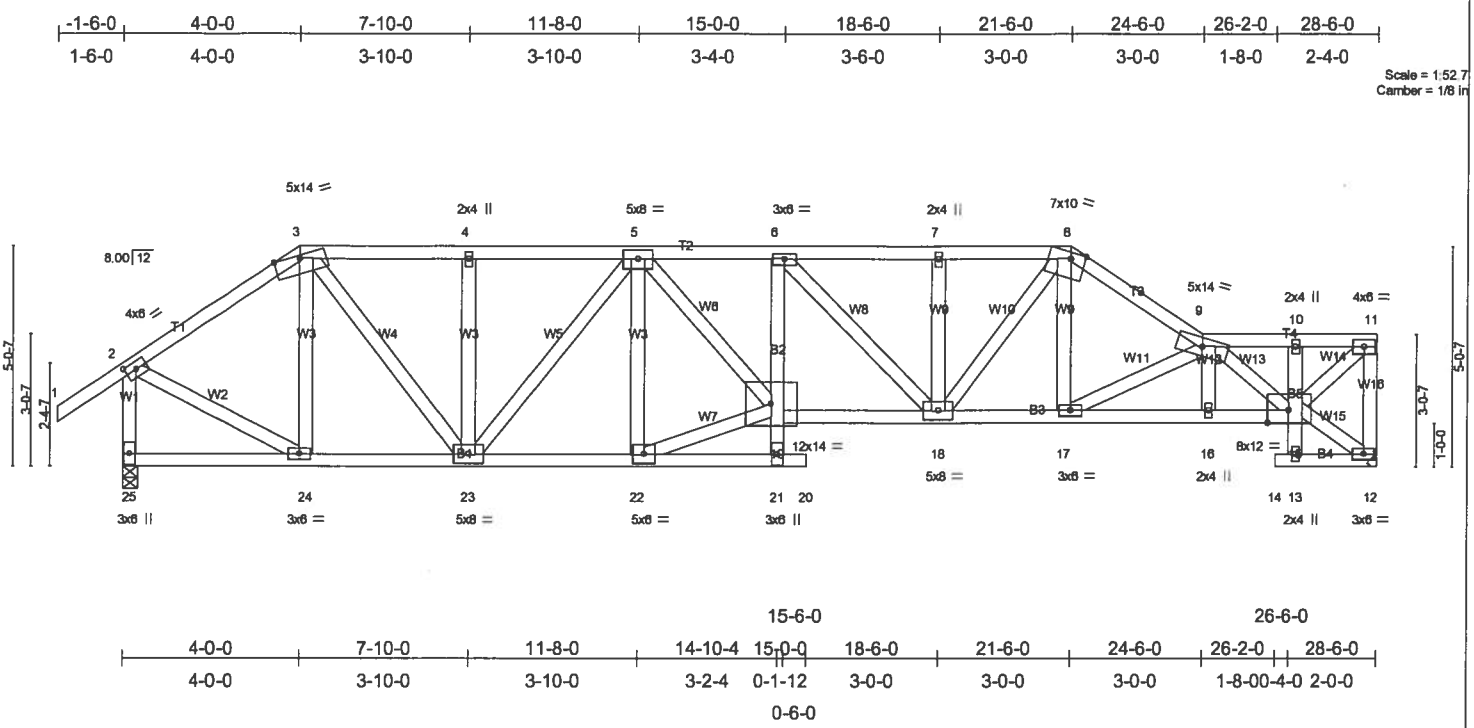

Plate Offsets (X,Y): [2:0-2-14,0-2-0], [8:0-4-0,Edge]

LOADING (psf)		SPACING	2-0-0	CSI		DEFL	in	(loc)	l/defl	L/d	PLATES	GRIP
TCLL	20.0	Plates Increase	1.25	TC	0.41	Vert(LL)	0.23	20	>999	240	MT20	244/190
TCDL	7.0	Lumber Increase	1.25	BC	0.84	Vert(TL)	-0.34	20	>982	180		
BCLL	10.0	Rep Stress Incr	NO	WB	0.46	Horz(TL)	0.17	12	n/a	n/a		
BCDL	5.0	Code FBC2004/TPI2002		(Matrix)							Weight: 404 lb	

LUMBER
TOP CHORD 2 X 4 SYP No.2
BOT CHORD 2 X 4 SYP No.2 *Except*
B1 2 X 4 SYP No.1D, B5 2 X 4 SYP No.3
WEBS 2 X 4 SYP No.3 *Except*
W7 2 X 4 SYP No.2, W6 2 X 4 SYP No.2, W14 2 X 4 SYP No.2

BRACING
TOP CHORD Structural wood sheathing directly applied or 4-10-11 oc purlins, except end verticals.
BOT CHORD Rigid ceiling directly applied or 6-4-7 oc bracing.

REACTIONS (lb/size) 12=2852/Mechanical, 25=3204/0-4-0
Max Horz 25=548(load case 4)
Max Uplift12=-1510(load case 3), 25=-1774(load case 3)

FORCES (lb) - Maximum Compression/Maximum Tension
TOP CHORD 1-2=0/49, 2-3=-2917/1734, 3-4=-3929/2498, 4-5=-3928/2499, 5-6=-7248/4405, 6-7=-6016/3521, 7-8=-6017/3521, 8-9=-5656/3149, 9-10=-2807/1495, 10-11=-2627/1398, 11-12=-2752/1473, 2-25=-3068/1788
BOT CHORD 24-25=-585/87, 23-24=-1708/2288, 22-23=-3236/5029, 21-22=-212/344, 20-21=0/0, 19-21=-813/1227, 6-19=-720/1011, 18-19=-4494/7325, 17-18=-2625/4753, 16-17=-3139/5834, 15-16=-3131/5830, 13-15=0/22, 10-15=-130/127, 13-14=0/0, 12-13=-66/122
WEBS 3-24=-942/705, 3-23=-1553/2627, 4-23=-438/476, 5-23=-1759/1008, 5-22=-1563/1211, 19-22=-3230/5003, 5-19=-1974/3321, 6-18=-1892/1420, 7-18=-320/216, 8-18=-1404/2070, 8-17=-508/1201, 9-17=-1287/609, 9-16=-51/94, 9-15=-3883/2129, 12-15=-100/55, 11-15=-1971/3704, 2-24=-1365/2531

JOINT STRESS INDEX
2 = 0.70, 3 = 0.53, 4 = 0.34, 5 = 0.80, 6 = 0.55, 7 = 0.34, 8 = 0.78, 9 = 0.81, 10 = 0.73, 11 = 0.80, 12 = 0.45, 13 = 0.34, 15 = 0.73, 16 = 0.34, 17 = 0.39, 18 = 0.51, 19 = 0.88, 21 = 0.39, 22 = 0.81, 23 = 0.64, 24 = 0.73 and 25 = 0.32

NOTES
1) 2-ply truss to be connected together with 10d (0.131"x3") nails as follows:
Top chords connected as follows: 2 X 4 - 1 row at 0-9-0 oc.
Bottom chords connected as follows: 2 X 4 - 1 row at 0-9-0 oc.
Webs connected as follows: 2 X 4 - 1 row at 0-9-0 oc.
2) All loads are considered equally applied to all plies, except if noted as front (F) or back (B) face in the LOAD CASE(S) section. Ply to ply connections have been provided to distribute only loads noted as (F) or (B), unless otherwise indicated.
3) Unbalanced roof live loads have been considered for this design.
4) Wind: ASCE 7-02; 110mph (3-second gust); h=20ft; TCDL=4.2psf; BCDL=3.0psf; Category II; Exp B; enclosed; MWFRS gable end zone; end vertical left exposed; Lumber DOL=1.60 plate grip DOL=1.60.
5) Provide adequate drainage to prevent water ponding.
6) All bearings are assumed to be SYP No.2 crushing capacity of 565.00 psi
7) Refer to girder(s) for truss to truss connections.
8) Provide mechanical connection (by others) of truss to bearing plate capable of withstanding 1510 lb uplift at joint 12 and 1774 lb uplift at joint 25.
9) Girder carries tie-in span(s): 4-9-12 from 15-0-0 to 21-6-0; 4-5-4 from 15-0-0 to 21-6-0
10) Girder carries hip end with 13-6-0 right side setback, 0-0-0 left side setback, and 7-0-0 end setback.
11) Hanger(s) or other connection device(s) shall be provided sufficient to support concentrated load(s) 397 lb down and 188 lb up at 21-6-0, and 1040 lb down and 792 lb up at 14-10-4 on bottom chord. The design/selection of such connection device(s) is the responsibility of others.

LOAD CASE(S) Standard
1) Regular: Lumber Increase=1.25, Plate Increase=1.25

Continued on page 2

DECEMBER 06, 2006 TRUSS DESIGN ENGINEER:
THOMAS E. MILLER PE 56877, BYRON K. ANDERSON PE 60987
STRUCTURAL ENGINEERING AND INSPECTIONS, INC. EB 9196
16105 N. FLORIDA AVE. STE B, LUTZ, FL 33549

LOAD CASE(S) Standard

Uniform Loads (plf)

Vert: 1-2=-54, 2-3=-118(F=-64), 3-6=-118(F=-64), 6-8=-107(F=-53), 8-9=-54, 9-11=-54, 21-25=-65(F=-35), 20-21=-75(F=-45), 17-19=-75(F=-45), 15-17=-30, 13-14=-30, 12-13=-30

Concentrated Loads (lb)

Vert: 21=-1040(F) 17=-397(F)

Job	Truss	Truss Type	Qty	Ply	LOT 10 HOLLY BROOK Dwg #1206061177
L218890	T06	SPECIAL	1	1	Job Reference (optional)

Builders FirstSource, Lake City, Fl 32055 — 6.300 s Apr 19 2006 MiTek Industries, Inc. Mon Dec 04 14:08:07 2006 Page 1

-1-6-0	6-0-0	10-9-0	15-0-0	19-6-0	22-6-0	26-2-0	28-6-0
1-6-0	6-0-0	4-9-0	4-3-0	4-6-0	3-0-0	3-8-0	2-4-0

Scale = 1:52.7
Camber = 1/8 in

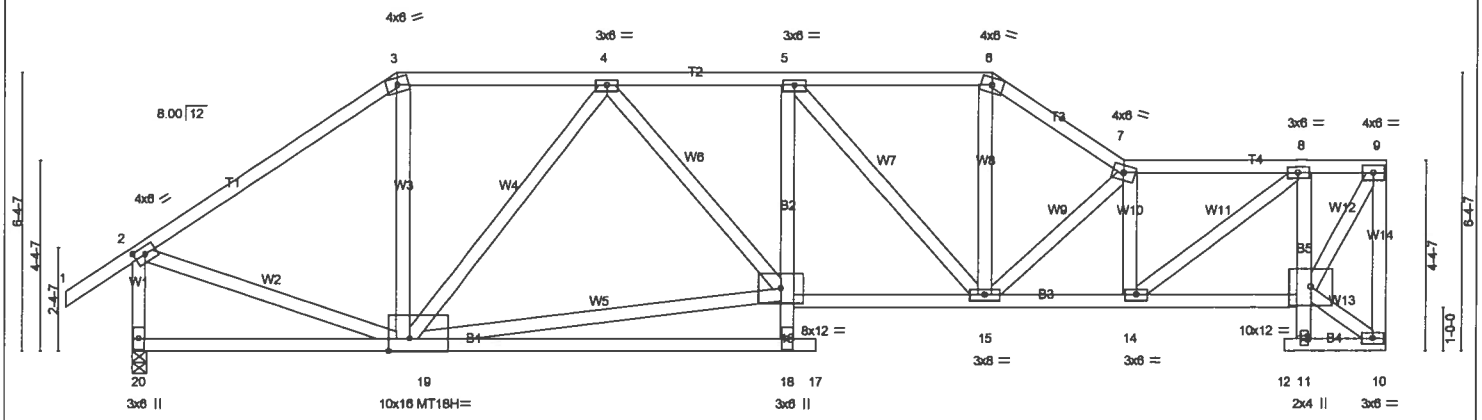

28-6-0

6-0-0	15-0-0	15-6-0	19-6-0	22-6-0	26-2-0	26-6-0
6-0-0	9-0-0	0-6-0	4-0-0	3-0-0	3-8-0	0-4-0 2-0-0

Plate Offsets (X,Y): [2:0-2-14,0-2-0], [19:0-5-12,Edge]

LOADING (psf)		SPACING	2-0-0	CSI		DEFL	in	(loc)	l/defl	L/d	PLATES	GRIP
TCLL	20.0	Plates Increase	1.25	TC	0.45	Vert(LL)	-0.14	18-19	>999	240	MT20	244/190
TCDL	7.0	Lumber Increase	1.25	BC	0.65	Vert(TL)	-0.23	18-19	>999	180	MT18H	244/190
BCLL	10.0	Rep Stress Incr	YES	WB	0.78	Horz(TL)	0.09	10	n/a	n/a		
BCDL	5.0	Code FBC2004/TPI2002		(Matrix)							Weight: 205 lb	

LUMBER
TOP CHORD 2 X 4 SYP No.2
BOT CHORD 2 X 4 SYP No.2 *Except*
B2 2 X 4 SYP No.3, B5 2 X 4 SYP No.3
WEBS 2 X 4 SYP No.3

BRACING
TOP CHORD Structural wood sheathing directly applied or 4-7-1 oc purlins, except end verticals.
BOT CHORD Rigid ceiling directly applied or 10-0-0 oc bracing, Except:
7-6-10 oc bracing: 15-16
8-1-7 oc bracing: 14-15.

REACTIONS (lb/size) 10=1206/Mechanical, 20=1286/0-4-0
Max Horz 20=238(load case 5)
Max Uplift10=-436(load case 4), 20=-396(load case 5)

FORCES (lb) - Maximum Compression/Maximum Tension
TOP CHORD 1-2=0/49, 2-3=-1259/453, 3-4=-1007/433, 4-5=-1715/682, 5-6=-1477/523, 6-7=-1781/615, 7-8=-1782/596, 8-9=-682/247, 9-10=-1162/424, 2-20=-1197/434
BOT CHORD 19-20=-236/117, 18-19=-35/230, 17-18=0/0, 16-18=0/149, 5-16=0/111, 15-16=-698/1736, 14-15=-611/1818, 13-14=-271/741, 11-13=0/30, 8-13=-971/421, 11-12=0/0, 10-11=-24/21
WEBS 3-19=-123/418, 4-19=-755/416, 16-19=-596/1192, 4-16=-150/485, 5-15=-461/261, 6-15=-251/737, 7-15=-507/168, 7-14=-774/299, 8-14=-414/1320, 10-13=-11/25, 9-13=-472/1297, 2-19=-347/941

JOINT STRESS INDEX
2 = 0.75, 3 = 0.53, 4 = 0.41, 5 = 0.39, 6 = 0.46, 7 = 0.54, 8 = 0.78, 9 = 0.73, 10 = 0.38, 11 = 0.34, 13 = 0.41, 14 = 0.78, 15 = 0.57, 16 = 0.86, 18 = 0.70, 19 = 0.40 and 20 = 0.31

NOTES
1) Unbalanced roof live loads have been considered for this design.
2) Wind: ASCE 7-02; 110mph (3-second gust); h=20ft; TCDL=4.2psf; BCDL=3.0psf; Category II; Exp B; enclosed; MWFRS gable end zone and C-C Interior(1) zone; end vertical left exposed; Lumber DOL=1.60 plate grip DOL=1.60. This truss is designed for C-C for members and forces, and for MWFRS for reactions specified.
3) Provide adequate drainage to prevent water ponding.
4) All plates are MT20 plates unless otherwise indicated.
5) All bearings are assumed to be SYP No.2 crushing capacity of 565.00 psi
6) Refer to girder(s) for truss to truss connections.
7) Provide mechanical connection (by others) of truss to bearing plate capable of withstanding 436 lb uplift at joint 10 and 396 lb uplift at joint 20.

LOAD CASE(S) Standard

DECEMBER 06, 2006 TRUSS DESIGN ENGINEER:
THOMAS E. MILLER PE 56877, BYRON K. ANDERSON PE 60987
STRUCTURAL ENGINEERING AND INSPECTIONS, INC. EB 9196
16105 N. FLORIDA AVE. STE B, LUTZ, FL 33549

Job	Truss	Truss Type	Qty	Ply	LOT 10 HOLLY BROOK Dwg #1206061176
L218890	T07	SPECIAL	1	1	Job Reference (optional)

Builders FirstSource, Lake City, Fl 32055 — 6.300 s Apr 19 2006 MiTek Industries, Inc. Mon Dec 04 14:08:32 2006 Page 1

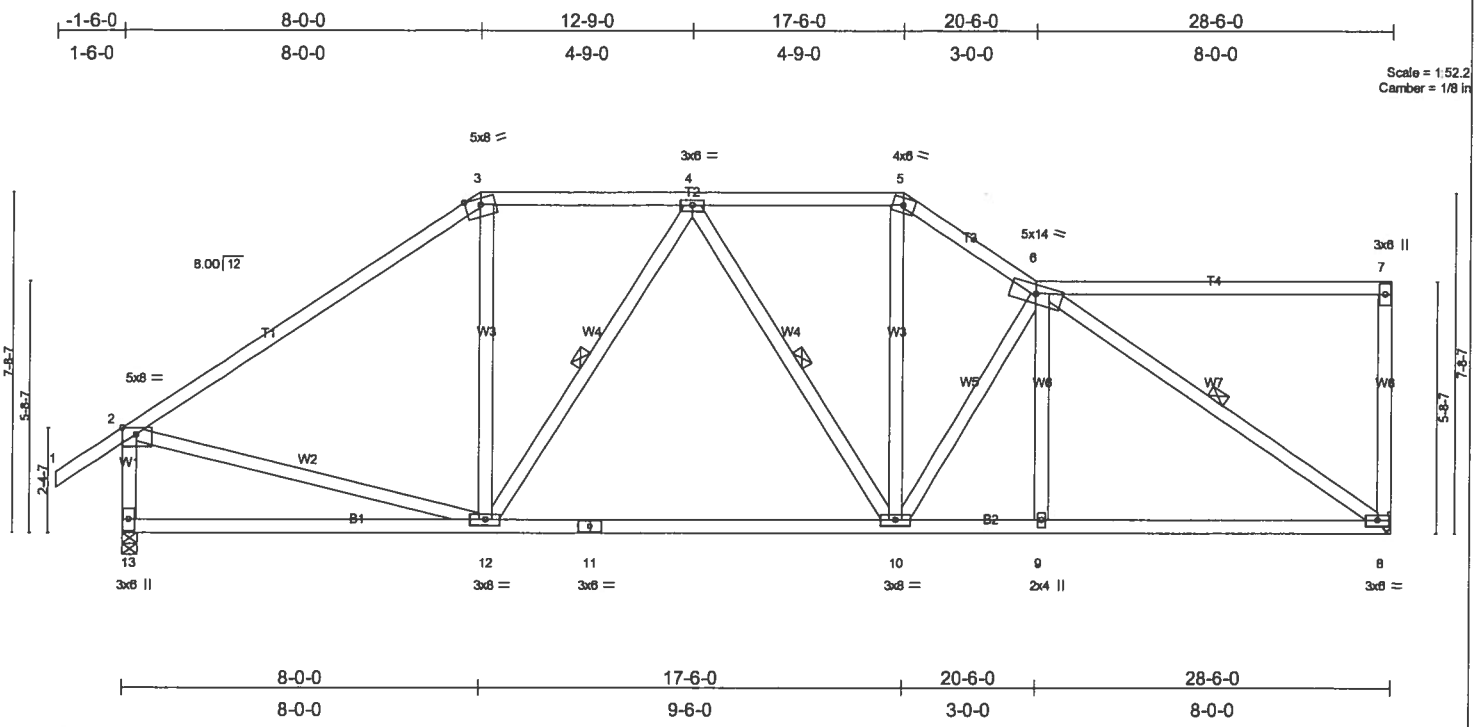

Plate Offsets (X,Y): [2:0-3-8,Edge]

LOADING (psf)		SPACING	2-0-0	CSI		DEFL	in	(loc)	l/defl	L/d	PLATES	GRIP
TCLL	20.0	Plates Increase	1.25	TC	0.81	Vert(LL)	-0.18	10-12	>999	240	MT20	244/190
TCDL	7.0	Lumber Increase	1.25	BC	0.52	Vert(TL)	-0.30	10-12	>999	180		
BCLL	10.0	Rep Stress Incr	YES	WB	0.63	Horz(TL)	0.04	8	n/a	n/a		
BCDL	5.0	Code FBC2004/TPI2002		(Matrix)							Weight: 190 lb	

LUMBER
TOP CHORD 2 X 4 SYP No.2
BOT CHORD 2 X 4 SYP No.2
WEBS 2 X 4 SYP No.3

BRACING
TOP CHORD Structural wood sheathing directly applied or 4-10-1 oc purlins, except end verticals.
BOT CHORD Rigid ceiling directly applied or 9-3-4 oc bracing.
WEBS 1 Row at midpt 4-12, 4-10, 6-8

REACTIONS (lb/size) 8=1182/Mechanical, 13=1276/0-4-0
Max Horz 13=249(load case 5)
Max Uplift8=-450(load case 4), 13=-409(load case 5)

FORCES (lb) - Maximum Compression/Maximum Tension
TOP CHORD 1-2=0/49, 2-3=-1276/390, 3-4=-965/390, 4-5=-1097/399, 5-6=-1378/481, 6-7=-69/33, 7-8=-213/177, 2-13=-1164/427
BOT CHORD 12-13=-331/158, 11-12=-456/1100, 10-11=-456/1100, 9-10=-452/1291, 8-9=-451/1295
WEBS 3-12=-107/373, 4-12=-351/273, 4-10=-101/145, 5-10=-227/566, 6-10=-415/159, 6-9=0/142, 6-8=-1488/507, 2-12=-271/830

JOINT STRESS INDEX
2 = 0.74, 3 = 0.65, 4 = 0.44, 5 = 0.37, 6 = 0.68, 7 = 0.62, 8 = 0.77, 9 = 0.34, 10 = 0.60, 11 = 0.47, 12 = 0.76 and 13 = 0.46

NOTES
1) Unbalanced roof live loads have been considered for this design.
2) Wind: ASCE 7-02; 110mph (3-second gust); h=20ft; TCDL=4.2psf; BCDL=3.0psf; Category II; Exp B; enclosed; MWFRS gable end zone and C-C Interior(1) zone; Lumber DOL=1.60 plate grip DOL=1.60. This truss is designed for C-C for members and forces, and for MWFRS for reactions specified.
3) Provide adequate drainage to prevent water ponding.
4) All bearings are assumed to be SYP No.2 crushing capacity of 565.00 psi
5) Refer to girder(s) for truss to truss connections.
6) Provide mechanical connection (by others) of truss to bearing plate capable of withstanding 450 lb uplift at joint 8 and 409 lb uplift at joint 13.

LOAD CASE(S) Standard

DECEMBER 06, 2006 TRUSS DESIGN ENGINEER:
THOMAS E. MILLER PE 56877, BYRON K. ANDERSON PE 60987
STRUCTURAL ENGINEERING AND INSPECTIONS, INC. EB 9196
16105 N. FLORIDA AVE. STE B, LUTZ, FL 33549

Job	Truss	Truss Type	Qty	Ply	LOT 10 HOLLY BROOK Dwg #1206061175
L218890	T08	SPECIAL	1	1	Job Reference (optional)

Builders FirstSource, Lake City, Fl 32055 — 6.300 s Apr 19 2006 MiTek Industries, Inc. Mon Dec 04 14:14:27 2006 Page 1

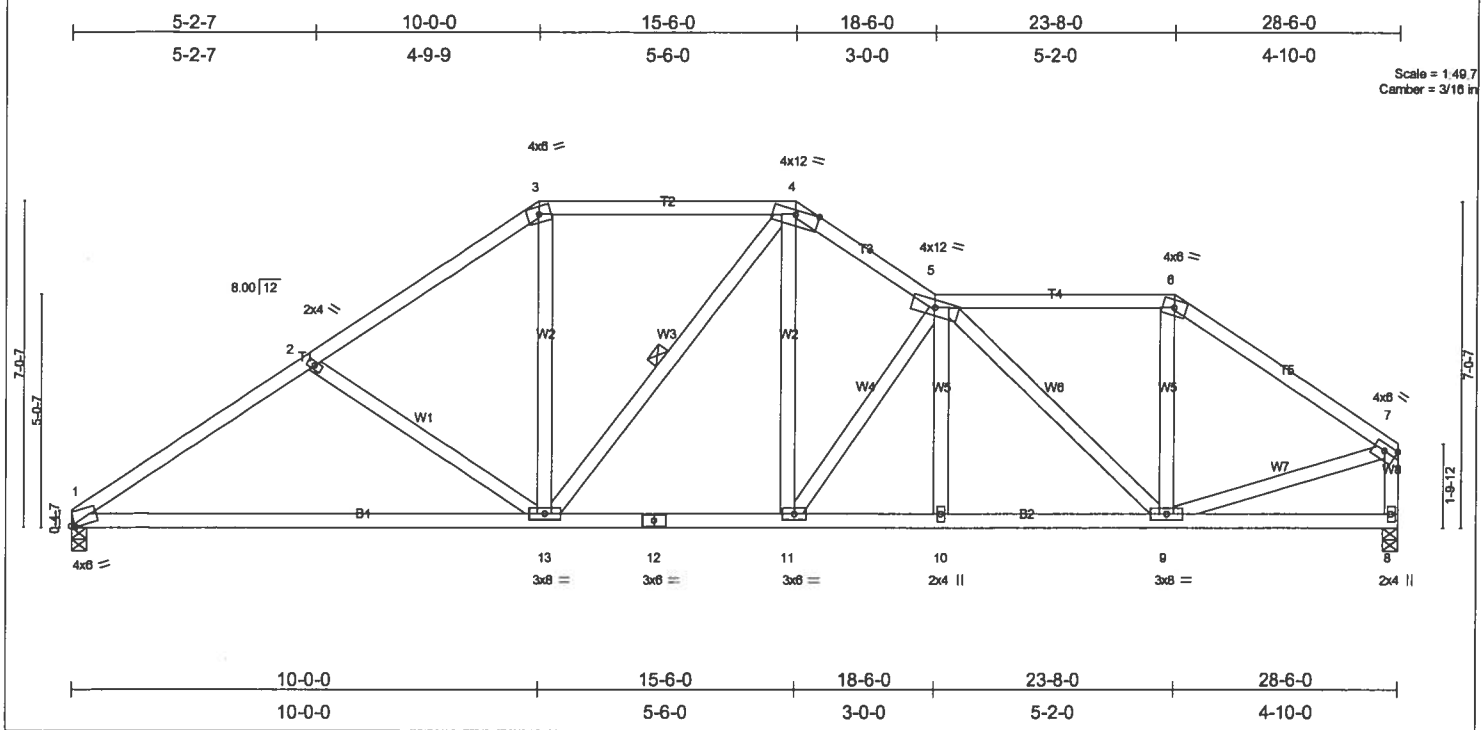

Plate Offsets (X,Y): [1:0-1-1,Edge], [7:Edge,0-1-12]

LOADING (psf)		SPACING	2-0-0	CSI		DEFL	in	(loc)	l/defl	L/d	PLATES	GRIP
TCLL	20.0	Plates Increase	1.25	TC	0.39	Vert(LL)	-0.26	1-13	>999	240	MT20	244/190
TCDL	7.0	Lumber Increase	1.25	BC	0.65	Vert(TL)	-0.45	1-13	>758	180		
BCLL	10.0	Rep Stress Incr	YES	WB	0.64	Horz(TL)	0.06	8	n/a	n/a		
BCDL	5.0	Code FBC2004/TPI2002		(Matrix)							Weight: 171 lb	

LUMBER
TOP CHORD 2 X 4 SYP No.2
BOT CHORD 2 X 4 SYP No.2
WEBS 2 X 4 SYP No.3

BRACING
TOP CHORD Structural wood sheathing directly applied or 4-2-11 oc purlins, except end verticals.
BOT CHORD Rigid ceiling directly applied or 8-9-2 oc bracing.
WEBS 1 Row at midpt 4-13

REACTIONS (lb/size) 1=1184/0-4-0, 8=1184/0-4-0
Max Horz 1=228(load case 4)
Max Uplift1=-351(load case 5), 8=-379(load case 6)

FORCES (lb) - Maximum Compression/Maximum Tension
TOP CHORD 1-2=-1718/534, 2-3=-1488/471, 3-4=-1183/448, 4-5=-1514/532, 5-6=-1037/422, 6-7=-1298/427, 7-8=-1109/388
BOT CHORD 1-13=-500/1384, 12-13=-363/1245, 11-12=-363/1245, 10-11=-442/1620, 9-10=-441/1624, 8-9=-57/91
WEBS 2-13=-261/263, 3-13=-121/506, 4-13=-201/173, 4-11=-253/654, 5-11=-703/324, 5-10=0/131, 5-9=-806/259, 6-9=-55/394, 7-9=-303/983

JOINT STRESS INDEX
1 = 0.81, 2 = 0.34, 3 = 0.50, 4 = 0.62, 5 = 0.47, 6 = 0.49, 7 = 0.67, 8 = 0.78, 9 = 0.90, 10 = 0.34, 11 = 0.43, 12 = 0.46 and 13 = 0.58

NOTES
1) Unbalanced roof live loads have been considered for this design.
2) Wind: ASCE 7-02; 110mph (3-second gust); h=20ft; TCDL=4.2psf; BCDL=3.0psf; Category II; Exp B; enclosed; MWFRS gable end zone and C-C Interior(1) zone; Lumber DOL=1.60 plate grip DOL=1.60. This truss is designed for C-C for members and forces, and for MWFRS for reactions specified.
3) Provide adequate drainage to prevent water ponding.
4) All bearings are assumed to be SYP No.2 crushing capacity of 565.00 psi
5) Provide mechanical connection (by others) of truss to bearing plate capable of withstanding 351 lb uplift at joint 1 and 379 lb uplift at joint 8.

LOAD CASE(S) Standard

DECEMBER 06, 2006 TRUSS DESIGN ENGINEER:
THOMAS E. MILLER PE 56877, BYRON K. ANDERSON PE 60987
STRUCTURAL ENGINEERING AND INSPECTIONS, INC. EB 9196
16105 N. FLORIDA AVE. STE B, LUTZ, FL 33549

Job	Truss	Truss Type	Qty	Ply	LOT 10 HOLLY BROOK
L218890	T09	SPECIAL	1	1	Job Reference (optional)

Dwg #1206061174

Builders FirstSource, Lake City, Fl 32055 — 6.300 s Apr 19 2006 MiTek Industries, Inc. Mon Dec 04 14:14:50 2006 Page 1

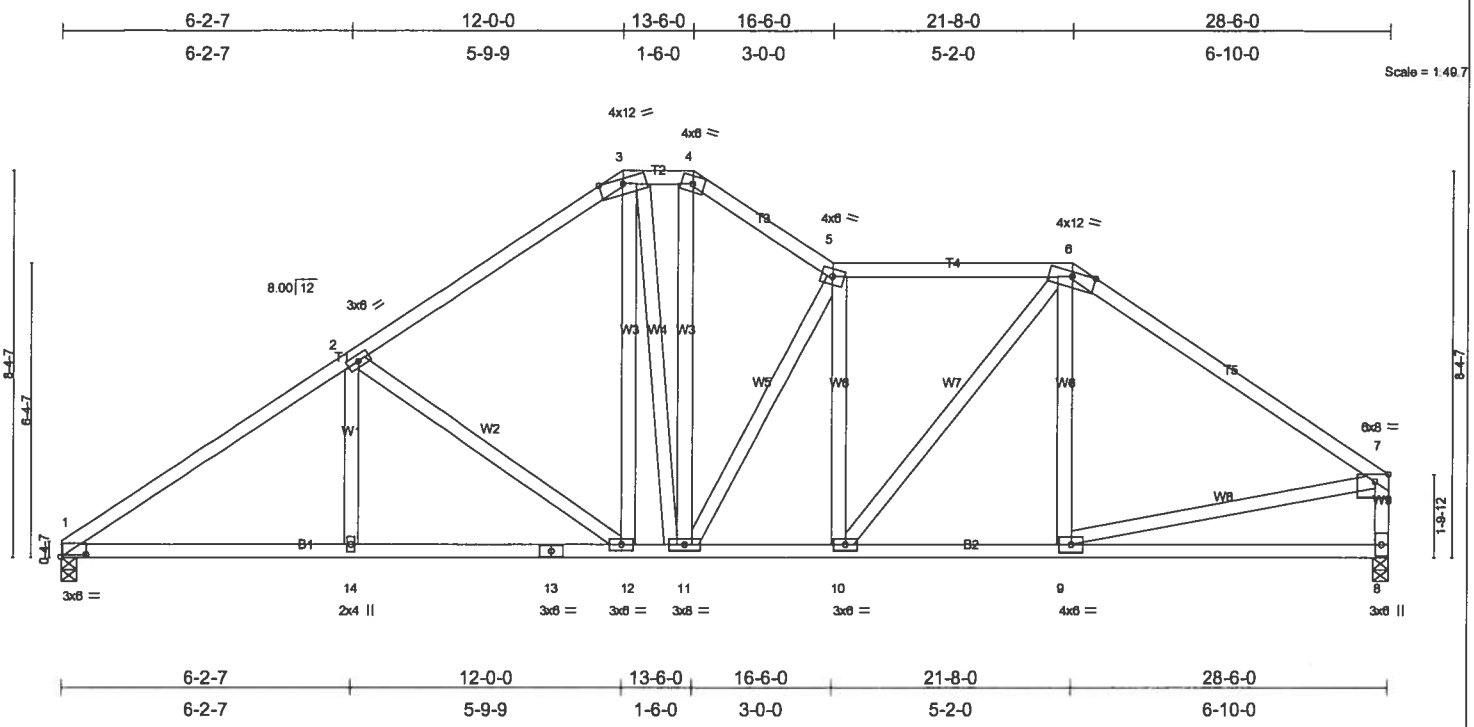

Plate Offsets (X,Y): [1:0-6-7,0-0-10], [7:0-3-8,Edge]

LOADING (psf)		SPACING	2-0-0	CSI		DEFL	in	(loc)	l/defl	L/d	PLATES	GRIP
TCLL	20.0	Plates Increase	1.25	TC	0.66	Vert(LL)	-0.09	12-14	>999	240	MT20	244/190
TCDL	7.0	Lumber Increase	1.25	BC	0.46	Vert(TL)	-0.14	12-14	>999	180		
BCLL	10.0	Rep Stress Incr	YES	WB	0.57	Horz(TL)	0.05	8	n/a	n/a		
BCDL	5.0	Code FBC2004/TPI2002		(Matrix)							Weight: 193 lb	

LUMBER
TOP CHORD 2 X 4 SYP No.2
BOT CHORD 2 X 4 SYP No.2
WEBS 2 X 4 SYP No.3

BRACING
TOP CHORD Structural wood sheathing directly applied or 4-5-1 oc purlins, except end verticals.
BOT CHORD Rigid ceiling directly applied or 8-6-15 oc bracing.

REACTIONS (lb/size) 1=1184/0-4-0, 8=1184/0-4-0
Max Horz 1=273(load case 4)
Max Uplift1=-363(load case 5), 8=-389(load case 6)

FORCES (lb) - Maximum Compression/Maximum Tension
TOP CHORD 1-2=-1801/533, 2-3=-1322/483, 3-4=-1038/463, 4-5=-1281/504, 5-6=-1346/524, 6-7=-1356/456, 7-8=-1075/404
BOT CHORD 1-14=-501/1414, 13-14=-501/1414, 12-13=-501/1414, 11-12=-267/1026, 10-11=-334/1352, 9-10=-260/1043, 8-9=-124/203
WEBS 2-14=0/220, 2-12=-491/316, 3-12=-127/396, 3-11=-181/209, 4-11=-274/597, 5-11=-706/347, 5-10=-256/170, 6-10=-184/475, 6-9=-13/95, 7-9=-261/863

JOINT STRESS INDEX
1 = 0.77, 2 = 0.43, 3 = 0.60, 4 = 0.32, 5 = 0.57, 6 = 0.94, 7 = 0.50, 8 = 0.45, 9 = 0.40, 10 = 0.40, 11 = 0.61, 12 = 0.35, 13 = 0.54 and 14 = 0.34

NOTES
1) Unbalanced roof live loads have been considered for this design.
2) Wind: ASCE 7-02; 110mph (3-second gust); h=20ft; TCDL=4.2psf; BCDL=3.0psf; Category II; Exp B; enclosed; MWFRS gable end zone and C-C Interior(1) zone; Lumber DOL=1.60 plate grip DOL=1.60. This truss is designed for C-C for members and forces, and for MWFRS for reactions specified.
3) Provide adequate drainage to prevent water ponding.
4) All bearings are assumed to be SYP No.2 crushing capacity of 565.00 psi
5) Provide mechanical connection (by others) of truss to bearing plate capable of withstanding 363 lb uplift at joint 1 and 389 lb uplift at joint 8.

LOAD CASE(S) Standard

DECEMBER 06, 2006 TRUSS DESIGN ENGINEER:
THOMAS E. MILLER PE 56877, BYRON K. ANDERSON PE 60987
STRUCTURAL ENGINEERING AND INSPECTIONS, INC. EB 9196
16105 N. FLORIDA AVE. STE B, LUTZ, FL 33549

Job	Truss	Truss Type	Qty	Ply	LOT 10 HOLLY BROOK
L218890	T10	SPECIAL	1	1	Job Reference (optional)

Dwg #1206061173

Builders FirstSource, Lake City, Fl 32055 — 6.300 s Apr 19 2006 MiTek Industries, Inc. Mon Dec 04 14:16:15 2006 Page 1

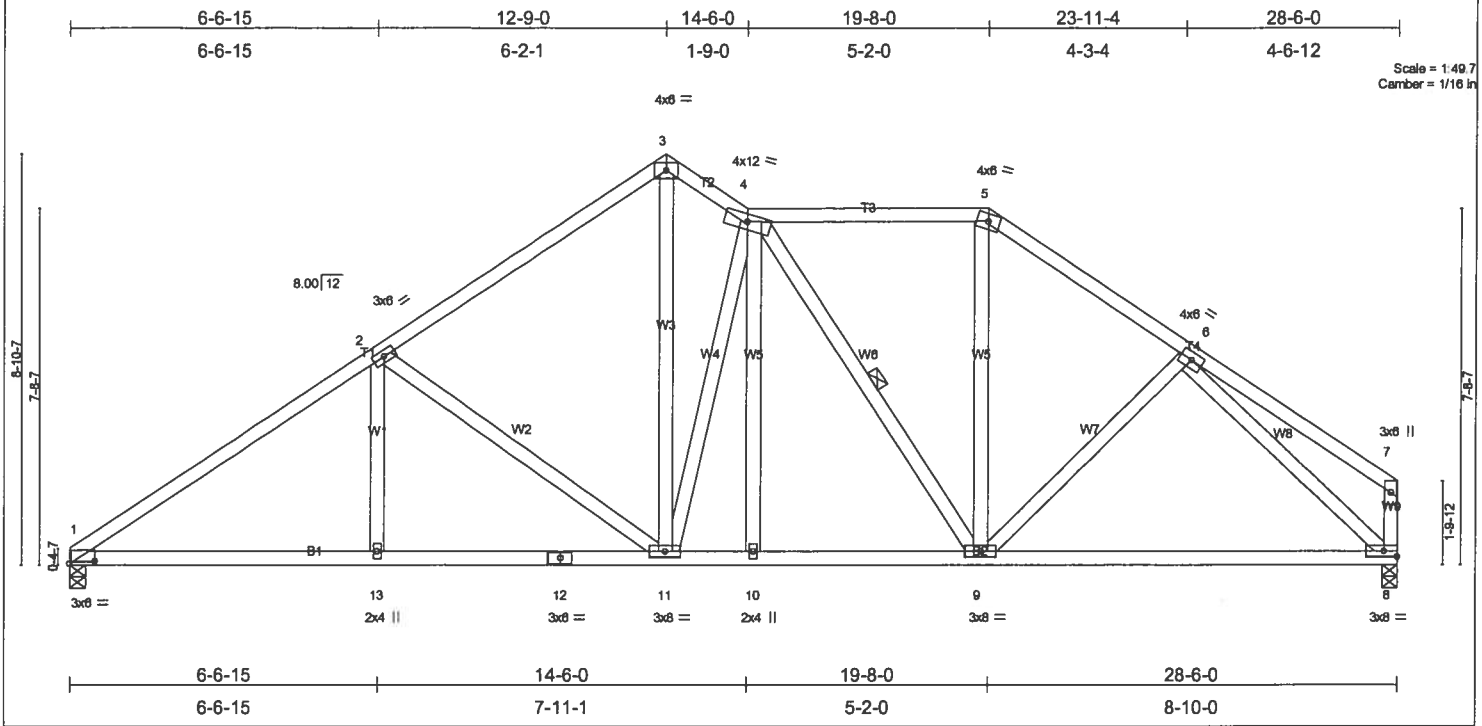

Plate Offsets (X,Y): [1:0-6-7,0-0-10]

LOADING (psf)		SPACING	2-0-0	CSI		DEFL	in	(loc)	l/defl	L/d	PLATES	GRIP
TCLL	20.0	Plates Increase	1.25	TC	0.66	Vert(LL)	-0.12	8-9	>999	240	MT20	244/190
TCDL	7.0	Lumber Increase	1.25	BC	0.48	Vert(TL)	-0.21	8-9	>999	180		
BCLL	10.0	Rep Stress Incr	YES	WB	0.74	Horz(TL)	0.05	8	n/a	n/a		
BCDL	5.0	Code FBC2004/TPI2002		(Matrix)							Weight: 186 lb	

LUMBER
TOP CHORD 2 X 4 SYP No.2
BOT CHORD 2 X 4 SYP No.2
WEBS 2 X 4 SYP No.3

BRACING
TOP CHORD Structural wood sheathing directly applied or 4-4-8 oc purlins, except end verticals.
BOT CHORD Rigid ceiling directly applied or 8-6-2 oc bracing.
WEBS 1 Row at midpt 4-9

REACTIONS (lb/size) 1=1184/0-4-0, 8=1184/0-4-0
Max Horz 1=291(load case 4)
Max Uplift1=-367(load case 5), 8=-392(load case 6)

FORCES (lb) - Maximum Compression/Maximum Tension
TOP CHORD 1-2=-1785/534, 2-3=-1286/495, 3-4=-1169/505, 4-5=-1007/470, 5-6=-1258/491, 6-7=-308/120, 7-8=-261/139
BOT CHORD 1-13=-502/1398, 12-13=-502/1398, 11-12=-502/1398, 10-11=-275/1130, 9-10=-275/1131, 8-9=-296/954
WEBS 2-13=0/230, 2-11=-513/331, 3-11=-415/1042, 4-10=0/32, 4-9=-228/158, 5-9=-100/373, 6-9=-117/134, 6-8=-1091/386, 4-11=-647/343

JOINT STRESS INDEX
1 = 0.76, 2 = 0.43, 3 = 0.55, 4 = 0.51, 5 = 0.49, 6 = 0.31, 7 = 0.37, 8 = 0.66, 9 = 0.59, 10 = 0.34, 11 = 0.69, 12 = 0.55 and 13 = 0.34

NOTES
1) Unbalanced roof live loads have been considered for this design.
2) Wind: ASCE 7-02; 110mph (3-second gust); h=20ft; TCDL=4.2psf; BCDL=3.0psf; Category II; Exp B; enclosed; MWFRS gable end zone and C-C Interior(1) zone; Lumber DOL=1.60 plate grip DOL=1.60. This truss is designed for C-C for members and forces, and for MWFRS for reactions specified.
3) Provide adequate drainage to prevent water ponding.
4) All bearings are assumed to be SYP No.2 crushing capacity of 565.00 psi
5) Provide mechanical connection (by others) of truss to bearing plate capable of withstanding 367 lb uplift at joint 1 and 392 lb uplift at joint 8.

LOAD CASE(S) Standard

DECEMBER 06, 2006 TRUSS DESIGN ENGINEER:
THOMAS E. MILLER PE 56877, BYRON K. ANDERSON PE 60987
STRUCTURAL ENGINEERING AND INSPECTIONS, INC. EB 9196
16105 N. FLORIDA AVE. STE B, LUTZ, FL 33549

Job	Truss	Truss Type	Qty	Ply	LOT 10 HOLLY BROOK Dwg #1206061172
L218890	T11	HIP	1	1	Job Reference (optional)

Builders FirstSource, Lake City, Fl 32055 — 6.300 s Apr 19 2006 MiTek Industries, Inc. Mon Dec 04 14:16:54 2006 Page 1

6-8-7	13-0-0	17-8-0	22-11-4	28-6-0
6-8-7	6-3-9	4-8-0	5-3-4	5-6-12

Scale = 1:49.1
Camber = 1/16 in

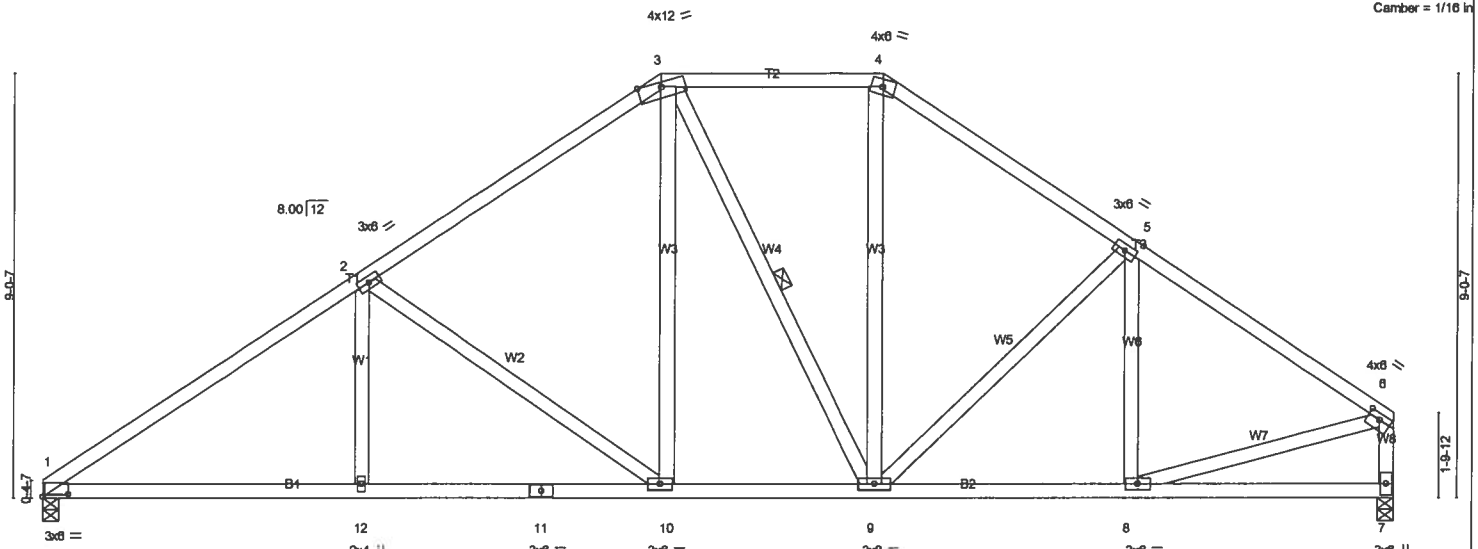

6-8-7	13-0-0	17-8-0	22-11-4	28-6-0
6-8-7	6-3-9	4-8-0	5-3-4	5-6-12

Plate Offsets (X,Y): [1:0-6-7,0-0-10], [6:0-3-0,0-1-8]

LOADING (psf)		SPACING	2-0-0	CSI		DEFL	in	(loc)	l/defl	L/d	PLATES	GRIP
TCLL	20.0	Plates Increase	1.25	TC	0.44	Vert(LL)	-0.10	1-12	>999	240	MT20	244/190
TCDL	7.0	Lumber Increase	1.25	BC	0.50	Vert(TL)	-0.16	1-12	>999	180		
BCLL	10.0	Rep Stress Incr	YES	WB	0.57	Horz(TL)	0.05	7	n/a	n/a		
BCDL	5.0	Code FBC2004/TPI2002		(Matrix)							Weight: 177 lb	

LUMBER
TOP CHORD 2 X 4 SYP No.2
BOT CHORD 2 X 4 SYP No.2
WEBS 2 X 4 SYP No.3

BRACING
TOP CHORD Structural wood sheathing directly applied or 4-4-6 oc purlins, except end verticals.
BOT CHORD Rigid ceiling directly applied or 8-5-13 oc bracing.
WEBS 1 Row at midpt 3-9

REACTIONS (lb/size) 1=1184/0-4-0, 7=1184/0-4-0
Max Horz 1=297(load case 4)
Max Uplift1=-368(load case 5), 7=-354(load case 6)

FORCES (lb) - Maximum Compression/Maximum Tension
TOP CHORD 1-2=-1782/535, 2-3=-1262/451, 3-4=-922/428, 4-5=-1183/436, 5-6=-1322/404, 6-7=-1099/364
BOT CHORD 1-12=-504/1395, 11-12=-504/1395, 10-11=-504/1395, 9-10=-260/971, 8-9=-249/1033, 7-8=-73/130
WEBS 2-12=0/238, 2-10=-528/345, 3-10=-158/453, 3-9=-213/176, 4-9=-140/354, 5-9=-190/207, 5-8=-106/100, 6-8=-211/941

JOINT STRESS INDEX
1 = 0.76, 2 = 0.43, 3 = 0.72, 4 = 0.43, 5 = 0.43, 6 = 0.80, 7 = 0.31, 8 = 0.53, 9 = 0.62, 10 = 0.35, 11 = 0.58 and 12 = 0.34

NOTES
1) Unbalanced roof live loads have been considered for this design.
2) Wind: ASCE 7-02; 110mph (3-second gust); h=20ft; TCDL=4.2psf; BCDL=3.0psf; Category II; Exp B; enclosed; MWFRS gable end zone and C-C Interior(1) zone; Lumber DOL=1.60 plate grip DOL=1.60. This truss is designed for C-C for members and forces, and for MWFRS for reactions specified.
3) Provide adequate drainage to prevent water ponding.
4) All bearings are assumed to be SYP No.2 crushing capacity of 565.00 psi
5) Provide mechanical connection (by others) of truss to bearing plate capable of withstanding 368 lb uplift at joint 1 and 354 lb uplift at joint 7.

LOAD CASE(S) Standard

DECEMBER 06, 2006 TRUSS DESIGN ENGINEER:
THOMAS E. MILLER PE 56877, BYRON K. ANDERSON PE 60987
STRUCTURAL ENGINEERING AND INSPECTIONS, INC. EB 9196
16105 N. FLORIDA AVE. STE B, LUTZ, FL 33549

Job	Truss	Truss Type	Qty	Ply	LOT 10 HOLLY BROOK Dwg #1206061171
L218890	T12	SPECIAL	1	1	Job Reference (optional)

Builders FirstSource, Lake City, Fl 32055 — 6.300 s Apr 19 2006 MiTek Industries, Inc. Mon Dec 04 14:17:41 2006 Page 1

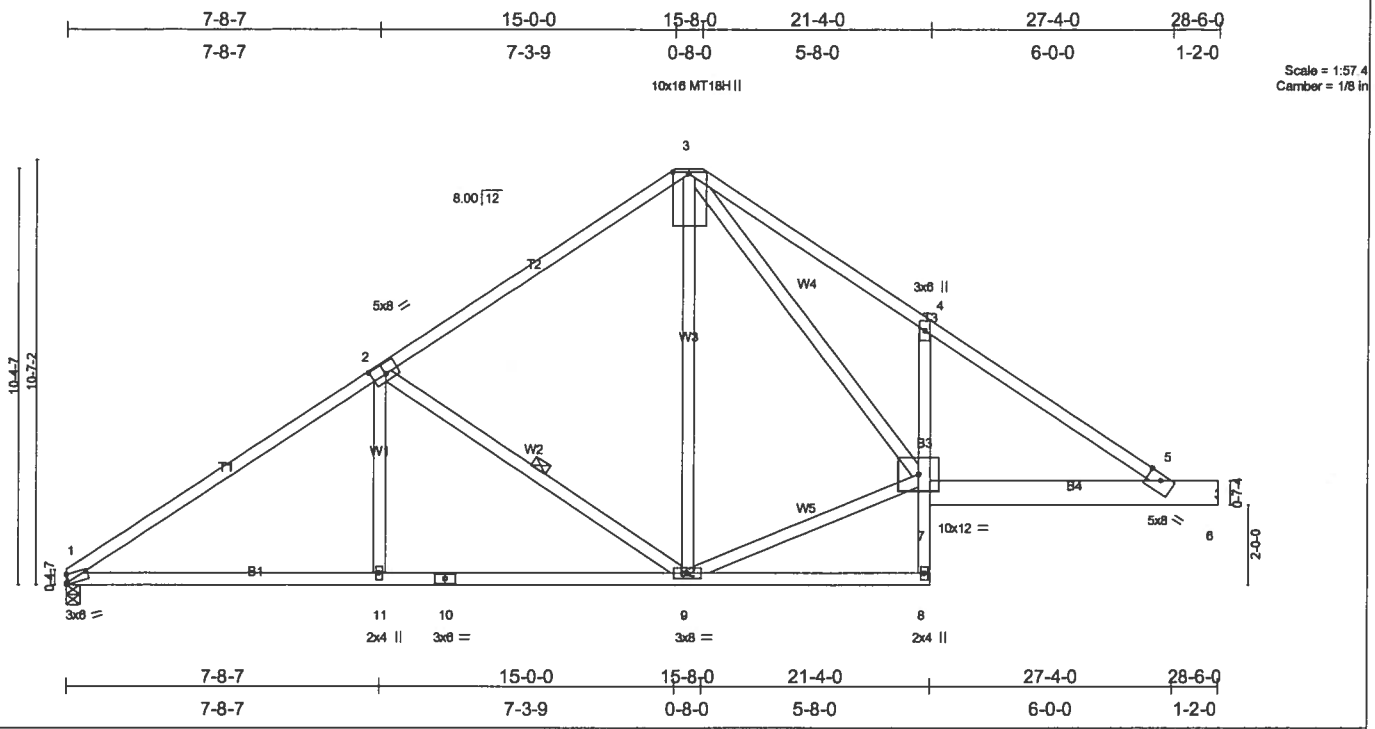

Plate Offsets (X,Y): [1:Edge,0-2-10], [2:0-4-0,0-3-0], [3:0-0-8,0-4-12]

LOADING (psf)		SPACING	2-0-0	CSI		DEFL	in	(loc)	l/defl	L/d	PLATES	GRIP
TCLL	20.0	Plates Increase	1.25	TC	0.43	Vert(LL)	-0.17	1-11	>999	240	MT20	244/190
TCDL	7.0	Lumber Increase	1.25	BC	0.59	Vert(TL)	-0.27	1-11	>999	180	MT18H	244/190
BCLL	10.0	Rep Stress Incr	YES	WB	0.89	Horz(TL)	0.07	6	n/a	n/a		
BCDL	5.0	Code FBC2004/TPI2002		(Matrix)							Weight: 170 lb	

LUMBER
TOP CHORD 2 X 4 SYP No.2
BOT CHORD 2 X 4 SYP No.2 *Except*
B3 2 X 4 SYP No.3, B4 2 X 8 SYP 2400F 2.0E
WEBS 2 X 4 SYP No.3

BRACING
TOP CHORD Structural wood sheathing directly applied or 4-0-4 oc purlins.
BOT CHORD Rigid ceiling directly applied or 8-1-7 oc bracing.
WEBS 1 Row at midpt 2-9

REACTIONS (lb/size) 1=1183/0-4-0, 6=1163/Mechanical
Max Horz 1=348(load case 4)
Max Uplift1=-375(load case 5), 6=-327(load case 6)

FORCES (lb) - Maximum Compression/Maximum Tension
TOP CHORD 1-2=-1742/532, 2-3=-1128/455, 3-4=-2073/836, 4-5=-2155/660
BOT CHORD 1-11=-526/1354, 10-11=-527/1351, 9-10=-527/1351, 8-9=-4/39, 7-8=0/79, 4-7=-302/332, 5-7=-472/1729, 5-6=0/0
WEBS 2-11=0/274, 2-9=-635/407, 7-9=-204/870, 3-7=-551/1363, 3-9=-99/295

JOINT STRESS INDEX
1 = 0.92, 2 = 0.66, 3 = 0.90, 4 = 0.28, 5 = 0.45, 7 = 0.63, 8 = 0.75, 9 = 0.81, 10 = 0.50 and 11 = 0.34

NOTES
1) Unbalanced roof live loads have been considered for this design.
2) Wind: ASCE 7-02; 110mph (3-second gust); h=20ft; TCDL=4.2psf; BCDL=3.0psf; Category II; Exp B; enclosed; MWFRS gable end zone and C-C Interior(1) zone; Lumber DOL=1.60 plate grip DOL=1.60. This truss is designed for C-C for members and forces, and for MWFRS for reactions specified.
3) All plates are MT20 plates unless otherwise indicated.
4) The following joint(s) require plate inspection per the Tooth Count Method when this truss is chosen for quality assurance inspection: 3.
5) All bearings are assumed to be SYP No.2 crushing capacity of 565.00 psi
6) Refer to girder(s) for truss to truss connections.
7) Provide mechanical connection (by others) of truss to bearing plate capable of withstanding 375 lb uplift at joint 1 and 327 lb uplift at joint 6.

LOAD CASE(S) Standard

DECEMBER 06, 2006 TRUSS DESIGN ENGINEER:
THOMAS E. MILLER PE 56877, BYRON K. ANDERSON PE 60987
STRUCTURAL ENGINEERING AND INSPECTIONS, INC. EB 9196
16105 N. FLORIDA AVE. STE B, LUTZ, FL 33549

Job	Truss*	Truss Type	Qty	Ply	LOT 10 HOLLS BROOK Dwg #1206061170
L218890	T13	SPECIAL	5	1	Job Reference (optional)

Builders FirstSource, Lake City, Fl 32055 — 6.300 s Apr 19 2006 MiTek Industries, Inc. Mon Dec 04 14:24:14 2006 Page 1

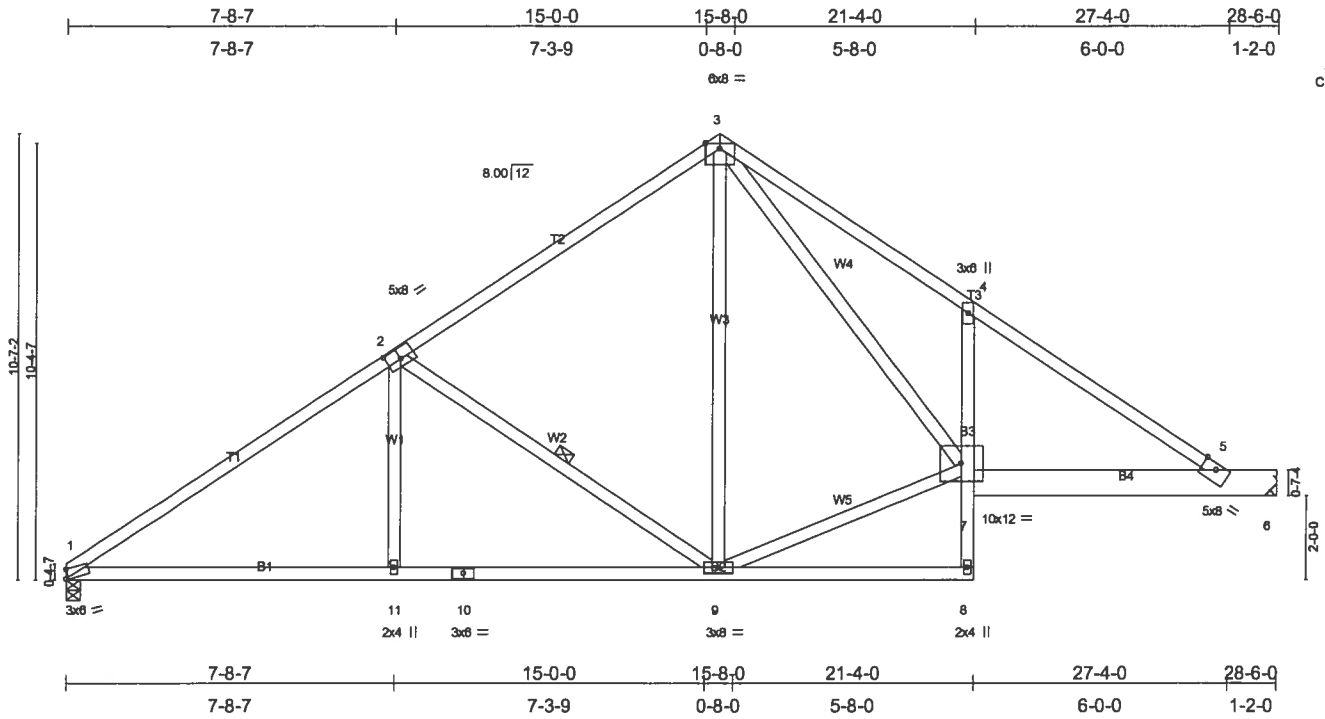

Plate Offsets (X,Y): [1:Edge,0-2-10], [2:0-4-0,0-3-0]

LOADING (psf)		SPACING	2-0-0	CSI		DEFL	in	(loc)	l/defl	L/d	PLATES	GRIP
TCLL	20.0	Plates Increase	1.25	TC	0.43	Vert(LL)	-0.17	1-11	>999	240	MT20	244/190
TCDL	7.0	Lumber Increase	1.25	BC	0.59	Vert(TL)	-0.27	1-11	>999	180		
BCLL	10.0	Rep Stress Incr	YES	WB	0.89	Horz(TL)	0.07	6	n/a	n/a		
BCDL	5.0	Code FBC2004/TPI2002		(Matrix)							Weight: 170 lb	

LUMBER
TOP CHORD 2 X 4 SYP No.2
BOT CHORD 2 X 4 SYP No.2 *Except*
B3 2 X 4 SYP No.3, B4 2 X 8 SYP 2400F 2.0E
WEBS 2 X 4 SYP No.3

BRACING
TOP CHORD Structural wood sheathing directly applied or 4-0-4 oc purlins.
BOT CHORD Rigid ceiling directly applied or 8-1-7 oc bracing.
WEBS 1 Row at midpt 2-9

REACTIONS (lb/size) 1=1183/0-4-0, 6=1163/Mechanical
Max Horz 1=348(load case 4)
Max Uplift1=-375(load case 5), 6=-327(load case 6)

FORCES (lb) - Maximum Compression/Maximum Tension
TOP CHORD 1-2=-1742/532, 2-3=-1128/455, 3-4=-2073/836, 4-5=-2155/660
BOT CHORD 1-11=-526/1354, 10-11=-527/1351, 9-10=-527/1351, 8-9=-4/39, 7-8=0/79, 4-7=-302/332, 5-7=-472/1729, 5-6=0/0
WEBS 2-11=0/274, 2-9=-635/407, 7-9=-204/870, 3-7=-551/1363, 3-9=-99/295

JOINT STRESS INDEX
1 = 0.92, 2 = 0.66, 3 = 0.71, 4 = 0.28, 5 = 0.45, 7 = 0.63, 8 = 0.75, 9 = 0.81, 10 = 0.50 and 11 = 0.34

NOTES
1) Unbalanced roof live loads have been considered for this design.
2) Wind: ASCE 7-02; 110mph (3-second gust); h=20ft; TCDL=4.2psf; BCDL=3.0psf; Category II; Exp B; enclosed; MWFRS gable end zone and C-C Interior(1) zone; Lumber DOL=1.60 plate grip DOL=1.60. This truss is designed for C-C for members and forces, and for MWFRS for reactions specified.
3) All bearings are assumed to be SYP No.2 crushing capacity of 565.00 psi
4) Refer to girder(s) for truss to truss connections.
5) Provide mechanical connection (by others) of truss to bearing plate capable of withstanding 375 lb uplift at joint 1 and 327 lb uplift at joint 6.

LOAD CASE(S) Standard

DECEMBER 06, 2006 TRUSS DESIGN ENGINEER:
THOMAS E. MILLER PE 56877, BYRON K. ANDERSON PE 60987
STRUCTURAL ENGINEERING AND INSPECTIONS, INC. EB 9196
16105 N. FLORIDA AVE. STE B, LUTZ, FL 33549

Job	Truss	Truss Type	Qty	Ply	LOT 10 HOLLY BROOK Dwg #1206061169
L218890	T14	MONO HIP	1	1	Job Reference (optional)

Builders FirstSource, Lake City, Fl 32055 — 6.300 s Apr 19 2006 MiTek Industries, Inc. Mon Dec 04 14:30:30 2006 Page 1

-1-6-0	4-0-0	8-10-10	13-7-9	18-4-7	23-1-6	28-0-0
1-6-0	4-0-0	4-10-10	4-8-14	4-8-14	4-8-14	4-10-10

Scale = 1:50.6
Camber = 1/8 in

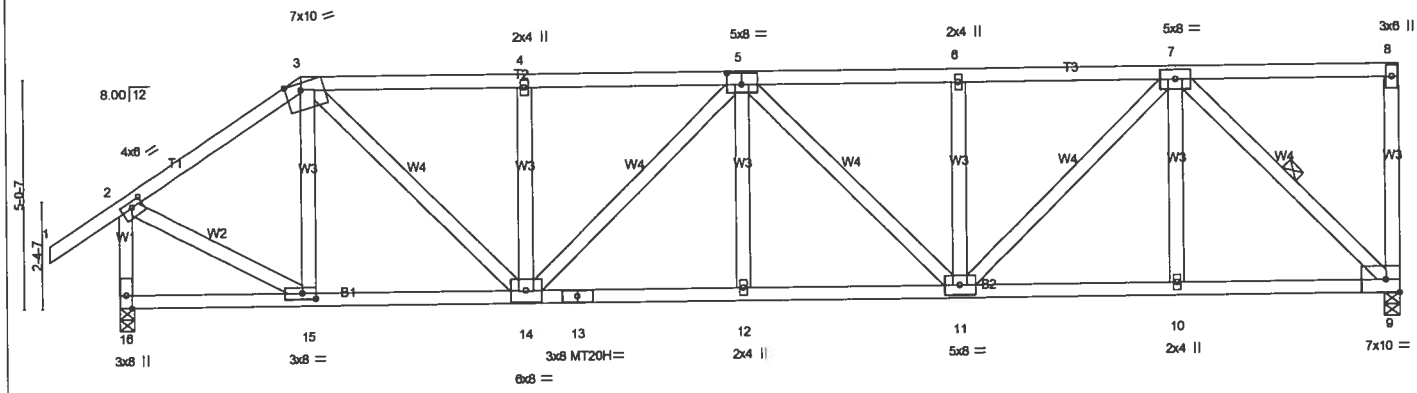

4-0-0	8-10-10	13-7-9	18-4-7	23-1-6	28-0-0
4-0-0	4-10-10	4-8-14	4-8-14	4-8-14	4-10-10

Plate Offsets (X,Y): [2:0-3-0,0-1-8], [3:0-4-0,Edge], [5:0-4-0,0-3-0], [15:0-3-8,0-1-8]

LOADING (psf)		SPACING	2-0-0	CSI		DEFL	in	(loc)	l/defl	L/d	PLATES	GRIP
TCLL	20.0	Plates Increase	1.25	TC	0.66	Vert(LL)	0.21	12	>999	240	MT20	244/190
TCDL	7.0	Lumber Increase	1.25	BC	0.86	Vert(TL)	-0.32	11-12	>999	180	MT20H	187/143
BCLL	10.0	Rep Stress Incr	NO	WB	0.94	Horz(TL)	0.11	9	n/a	n/a		
BCDL	5.0	Code FBC2004/TPI2002		(Matrix)							Weight: 183 lb	

LUMBER
TOP CHORD 2 X 4 SYP No.2
BOT CHORD 2 X 4 SYP No.2
WEBS 2 X 4 SYP No.3

BRACING
TOP CHORD Structural wood sheathing directly applied or 3-2-6 oc purlins, except end verticals.
BOT CHORD Rigid ceiling directly applied or 4-1-1 oc bracing.
WEBS 1 Row at midpt 7-9

REACTIONS (lb/size) 9=2531/0-4-0, 16=2625/0-4-0
Max Horz 16=480(load case 4)
Max Uplift9=-1607(load case 2), 16=-1388(load case 3)

FORCES (lb) - Maximum Compression/Maximum Tension
TOP CHORD 1-2=0/49, 2-3=-2347/1357, 3-4=-3253/2102, 4-5=-3252/2103, 5-6=-3389/2160, 6-7=-3389/2160, 7-8=-54/34, 8-9=-260/274, 2-16=-2500/1403
BOT CHORD 15-16=-497/67, 14-15=-1262/1832, 13-14=-2404/3753, 12-13=-2404/3753, 11-12=-2404/3753, 10-11=-1379/2167, 9-10=-1379/2167
WEBS 3-15=-669/591, 3-14=-1232/1977, 4-14=-562/619, 5-14=-708/427, 5-12=0/307, 5-11=-514/357, 6-11=-548/595, 7-11=-1105/1729, 7-10=0/309, 7-9=-2990/1903, 2-15=-1106/2027

JOINT STRESS INDEX
2 = 0.83, 3 = 0.63, 4 = 0.36, 5 = 0.61, 6 = 0.34, 7 = 0.82, 8 = 0.42, 9 = 0.50, 10 = 0.34, 11 = 0.82, 12 = 0.34, 13 = 0.90, 14 = 0.73, 15 = 0.85 and 16 = 0.49

NOTES
1) Wind: ASCE 7-02; 110mph (3-second gust); h=20ft; TCDL=4.2psf; BCDL=3.0psf; Category II; Exp B; enclosed; MWFRS gable end zone; end vertical left exposed; Lumber DOL=1.60 plate grip DOL=1.60.
2) Provide adequate drainage to prevent water ponding.
3) All plates are MT20 plates unless otherwise indicated.
4) All bearings are assumed to be SYP No.2 crushing capacity of 565.00 psi
5) Provide mechanical connection (by others) of truss to bearing plate capable of withstanding 1607 lb uplift at joint 9 and 1388 lb uplift at joint 16.
6) Girder carries hip end with 0-0-0 right side setback, 0-0-0 left side setback, and 7-0-0 end setback.
7) In the LOAD CASE(S) section, loads applied to the face of the truss are noted as front (F) or back (B).

LOAD CASE(S) Standard
1) Regular: Lumber Increase=1.25, Plate Increase=1.25
Uniform Loads (plf)
Vert: 1-2=-54, 2-3=-118(F=-64), 3-8=-118(F=-64), 9-16=-65(F=-35)

DECEMBER 06, 2006 TRUSS DESIGN ENGINEER:
THOMAS E. MILLER PE 56877, BYRON K. ANDERSON PE 60987
STRUCTURAL ENGINEERING AND INSPECTIONS, INC. EB 9196
16105 N. FLORIDA AVE. STE B, LUTZ, FL 33549

Job	Truss	Truss Type	Qty	Ply	LOT 10 HOLLY BROOK
L218890	T15	MONO HIP	1	1	Job Reference (optional)

Dwg #1206061168

Builders FirstSource, Lake City, Fl 32055 — 6.300 s Apr 19 2006 MiTek Industries, Inc. Mon Dec 04 14:30:51 2006 Page 1

-1-6-0	6-0-0	13-4-9	20-7-7	28-0-0
1-6-0	6-0-0	7-4-9	7-2-13	7-4-9

Scale = 1:50 6

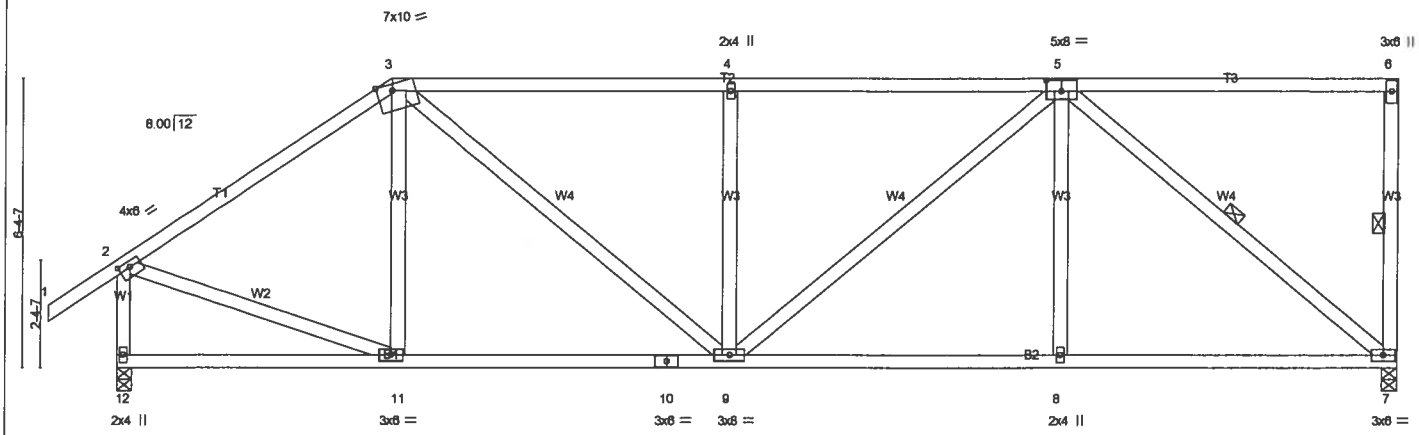

6-0-0	13-4-9	20-7-7	28-0-0
6-0-0	7-4-9	7-2-13	7-4-9

Plate Offsets (X,Y): [2:0-3-0,0-1-8], [3:0-4-0,Edge], [5:0-4-0,0-3-0]

LOADING (psf)		SPACING	2-0-0	CSI		DEFL	in	(loc)	l/defl	L/d	PLATES	GRIP
TCLL	20.0	Plates Increase	1.25	TC	0.55	Vert(LL)	-0.09	9-11	>999	240	MT20	244/190
TCDL	7.0	Lumber Increase	1.25	BC	0.36	Vert(TL)	-0.15	9-11	>999	180		
BCLL	10.0	Rep Stress Incr	YES	WB	0.58	Horz(TL)	0.04	7	n/a	n/a		
BCDL	5.0	Code FBC2004/TPI2002		(Matrix)							Weight: 175 lb	

LUMBER
TOP CHORD 2 X 4 SYP No.2
BOT CHORD 2 X 4 SYP No.2
WEBS 2 X 4 SYP No.3

BRACING
TOP CHORD Structural wood sheathing directly applied or 5-0-7 oc purlins, except end verticals.
BOT CHORD Rigid ceiling directly applied or 9-1-12 oc bracing.
WEBS 1 Row at midpt 6-7, 5-7

REACTIONS (lb/size) 7=1161/0-4-0, 12=1255/0-4-0
Max Horz 12=302(load case 5)
Max Uplift7=-513(load case 3), 12=-381(load case 5)

FORCES (lb) - Maximum Compression/Maximum Tension
TOP CHORD 1-2=0/49, 2-3=-1205/396, 3-4=-1377/567, 4-5=-1377/567, 5-6=-42/20, 6-7=-181/151, 2-12=-1172/420
BOT CHORD 11-12=-296/72, 10-11=-373/932, 9-10=-373/932, 8-9=-468/1083, 7-8=-468/1083
WEBS 3-11=-110/171, 3-9=-359/576, 4-9=-394/354, 5-9=-157/384, 5-8=0/220, 5-7=-1359/585, 2-11=-389/929

JOINT STRESS INDEX
2 = 0.79, 3 = 0.60, 4 = 0.34, 5 = 0.45, 6 = 0.43, 7 = 0.56, 8 = 0.34, 9 = 0.57, 10 = 0.31, 11 = 0.52 and 12 = 0.83

NOTES
1) Wind: ASCE 7-02; 110mph (3-second gust); h=20ft; TCDL=4.2psf; BCDL=3.0psf; Category II; Exp B; enclosed; MWFRS gable end zone and C-C Interior(1) zone; end vertical left exposed; Lumber DOL=1.60 plate grip DOL=1.60. This truss is designed for C-C for members and forces, and for MWFRS for reactions specified.
2) Provide adequate drainage to prevent water ponding.
3) All bearings are assumed to be SYP No.2 crushing capacity of 565.00 psi
4) Provide mechanical connection (by others) of truss to bearing plate capable of withstanding 513 lb uplift at joint 7 and 381 lb uplift at joint 12.

LOAD CASE(S) Standard

DECEMBER 06, 2006 TRUSS DESIGN ENGINEER:
THOMAS E. MILLER PE 56877, BYRON K. ANDERSON PE 60987
STRUCTURAL ENGINEERING AND INSPECTIONS, INC. EB 9196
16105 N. FLORIDA AVE. STE B, LUTZ, FL 33549

Job	Truss	Truss Type	Qty	Ply	LOT 10 HOLLY BROOK Dwg #1206061167
L218890	T16	HIP	1	1	Job Reference (optional)

Builders FirstSource, Lake City, Fl 32055 — 6.300 s Apr 19 2006 MiTek Industries, Inc. Mon Dec 04 14:31:04 2006 Page 1

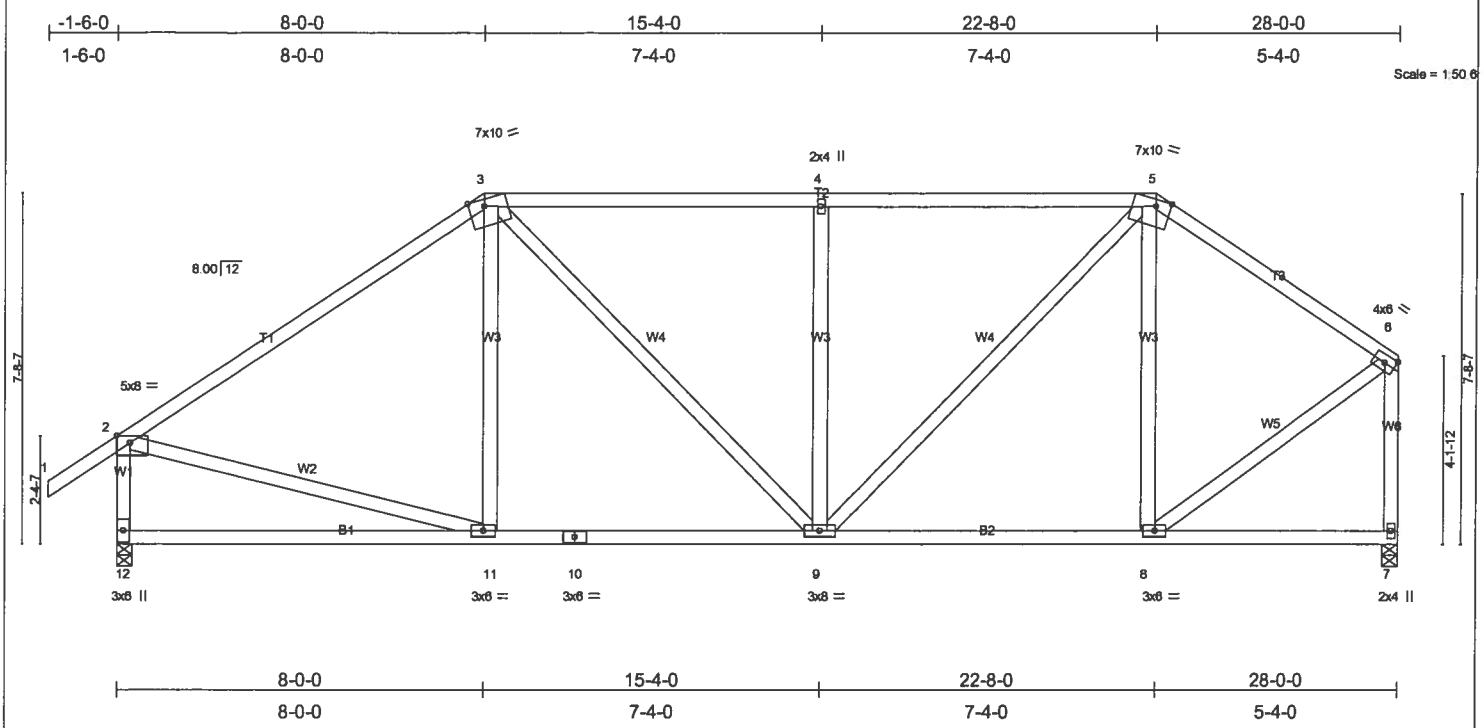

Plate Offsets (X,Y): [2:0-3-8,Edge], [3:0-4-0,Edge], [5:0-4-0,Edge]

LOADING (psf)		SPACING	2-0-0	CSI		DEFL	in	(loc)	l/defl	L/d	PLATES	GRIP
TCLL	20.0	Plates Increase	1.25	TC	0.73	Vert(LL)	-0.08	11-12	>999	240	MT20	244/190
TCDL	7.0	Lumber Increase	1.25	BC	0.35	Vert(TL)	-0.13	11-12	>999	180		
BCLL	10.0	Rep Stress Incr	YES	WB	0.66	Horz(TL)	0.02	7	n/a	n/a		
BCDL	5.0	Code FBC2004/TPI2002		(Matrix)							Weight: 181 lb	

LUMBER
TOP CHORD 2 X 4 SYP No.2
BOT CHORD 2 X 4 SYP No.2
WEBS 2 X 4 SYP No.3

BRACING
TOP CHORD Structural wood sheathing directly applied or 5-2-12 oc purlins, except end verticals.
BOT CHORD Rigid ceiling directly applied or 9-6-9 oc bracing.

REACTIONS (lb/size) 12=1255/0-4-0, 7=1161/0-4-0
Max Horz 12=262(load case 4)
Max Uplift12=-410(load case 5), 7=-351(load case 3)

FORCES (lb) - Maximum Compression/Maximum Tension
TOP CHORD 1-2=0/49, 2-3=-1242/427, 3-4=-1122/484, 4-5=-1122/484, 5-6=-919/318, 2-12=-1133/432, 6-7=-1092/361
BOT CHORD 11-12=-305/205, 10-11=-436/935, 9-10=-436/935, 8-9=-247/705, 7-8=-24/29
WEBS 3-11=0/138, 3-9=-283/353, 4-9=-420/378, 5-9=-354/630, 5-8=-306/236, 2-11=-360/801, 6-8=-336/848

JOINT STRESS INDEX
2 = 0.75, 3 = 0.77, 4 = 0.34, 5 = 0.58, 6 = 0.77, 7 = 0.60, 8 = 0.50, 9 = 0.63, 10 = 0.33, 11 = 0.45 and 12 = 0.52

NOTES
1) Unbalanced roof live loads have been considered for this design.
2) Wind: ASCE 7-02; 110mph (3-second gust); h=20ft; TCDL=4.2psf; BCDL=3.0psf; Category II; Exp B; enclosed; MWFRS gable end zone and C-C Interior(1) zone; end vertical left exposed; Lumber DOL=1.60 plate grip DOL=1.60. This truss is designed for C-C for members and forces, and for MWFRS for reactions specified.
3) Provide adequate drainage to prevent water ponding.
4) All bearings are assumed to be SYP No.2 crushing capacity of 565.00 psi
5) Provide mechanical connection (by others) of truss to bearing plate capable of withstanding 410 lb uplift at joint 12 and 351 lb uplift at joint 7.

LOAD CASE(S) Standard

DECEMBER 06, 2006 TRUSS DESIGN ENGINEER:
THOMAS E. MILLER PE 56877, BYRON K. ANDERSON PE 60987
STRUCTURAL ENGINEERING AND INSPECTIONS, INC. EB 9196
16105 N. FLORIDA AVE. STE B, LUTZ, FL 33549

Job	Truss	Truss Type	Qty	Ply	LOT 10 HOLLY BROOK
L218890	T17	HIP	1	1	Job Reference (optional)

Dwg #1206061166

Builders FirstSource, Lake City, Fl 32055 — 6.300 s Apr 19 2006 MiTek Industries, Inc. Mon Dec 04 14:31:40 2006 Page 1

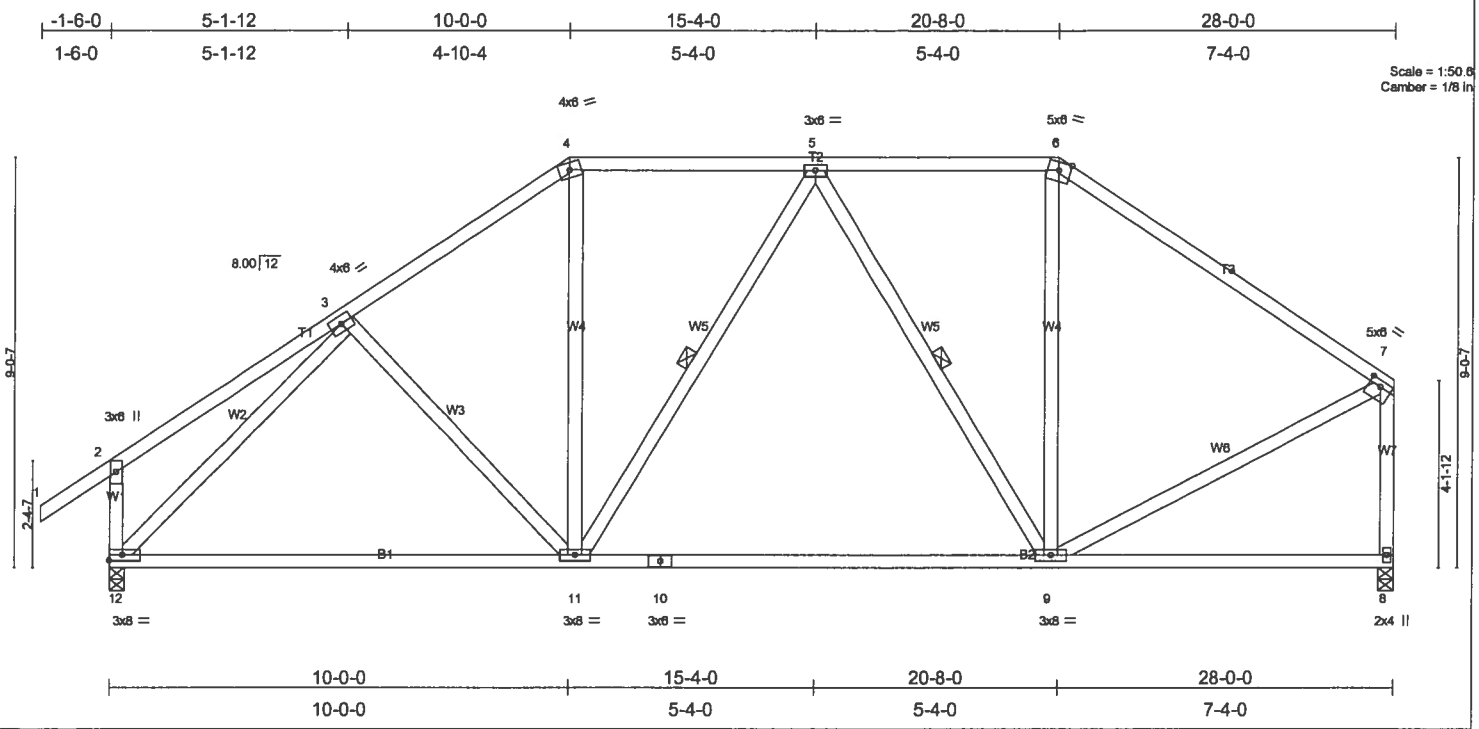

Plate Offsets (X,Y): [7:0-3-0,0-1-8]

LOADING (psf)		SPACING	2-0-0	CSI		DEFL	in	(loc)	l/defl	L/d	PLATES	GRIP
TCLL	20.0	Plates Increase	1.25	TC	0.73	Vert(LL)	-0.18	9-11	>999	240	MT20	244/190
TCDL	7.0	Lumber Increase	1.25	BC	0.52	Vert(TL)	-0.32	9-11	>999	180		
BCLL	10.0	Rep Stress Incr	YES	WB	0.89	Horz(TL)	0.03	8	n/a	n/a		
BCDL	5.0	Code FBC2004/TPI2002		(Matrix)							Weight: 187 lb	

LUMBER
TOP CHORD 2 X 4 SYP No.2
BOT CHORD 2 X 4 SYP No.2
WEBS 2 X 4 SYP No.3

BRACING
TOP CHORD Structural wood sheathing directly applied or 6-0-0 oc purlins, except end verticals.
BOT CHORD Rigid ceiling directly applied or 9-10-2 oc bracing.
WEBS 1 Row at midpt 5-11, 5-9

REACTIONS (lb/size) 12=1039/0-4-0, 8=894/0-4-0
Max Horz 12=259(load case 4)
Max Uplift12=-385(load case 5), 8=-284(load case 6)

FORCES (lb) - Maximum Compression/Maximum Tension
TOP CHORD 1-2=0/49, 2-3=-169/137, 3-4=-1039/365, 4-5=-814/370, 5-6=-649/312, 6-7=-799/277, 2-12=-191/236, 7-8=-804/296
BOT CHORD 11-12=-407/732, 10-11=-370/817, 9-10=-370/817, 8-9=-44/33
WEBS 3-11=-156/169, 4-11=-37/284, 5-11=-81/225, 5-9=-331/319, 6-9=-94/236, 3-12=-953/243, 7-9=-271/698

JOINT STRESS INDEX
2 = 0.40, 3 = 0.28, 4 = 0.47, 5 = 0.44, 6 = 0.69, 7 = 0.87, 8 = 0.75, 9 = 0.66, 10 = 0.34, 11 = 0.60 and 12 = 0.64

NOTES
1) Unbalanced roof live loads have been considered for this design.
2) Wind: ASCE 7-02; 110mph (3-second gust); h=20ft; TCDL=4.2psf; BCDL=3.0psf; Category II; Exp B; enclosed; MWFRS gable end zone and C-C Interior(1) zone; Lumber DOL=1.60 plate grip DOL=1.60. This truss is designed for C-C for members and forces, and for MWFRS for reactions specified.
3) Provide adequate drainage to prevent water ponding.
4) All bearings are assumed to be SYP No.2 crushing capacity of 565.00 psi
5) Provide mechanical connection (by others) of truss to bearing plate capable of withstanding 385 lb uplift at joint 12 and 284 lb uplift at joint 8.

LOAD CASE(S) Standard

DECEMBER 06, 2006 TRUSS DESIGN ENGINEER:
THOMAS E. MILLER PE 56877, BYRON K. ANDERSON PE 60987
STRUCTURAL ENGINEERING AND INSPECTIONS, INC. EB 9196
16105 N. FLORIDA AVE. STE B, LUTZ, FL 33549

Job	Truss	Truss Type	Qty	Ply	LOT 10 HOLLY BROOK Dwg #1206061165
TEMP	T18	SPECIAL	1	1	Job Reference (optional)

Builders FirstSource, Lake City, Fl 32055 — 6.300 s Apr 19 2006 MiTek Industries, Inc. Mon Dec 04 14:33:00 2006 Page 1

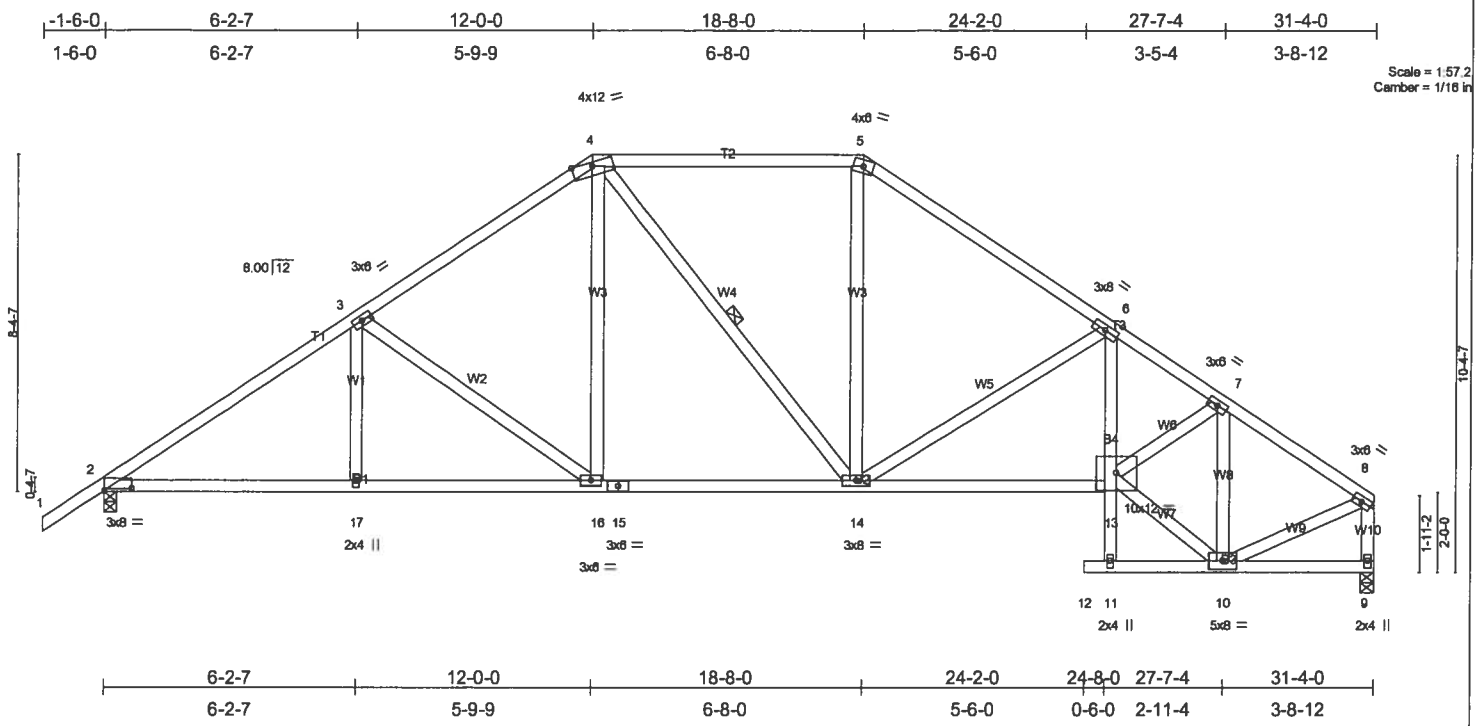

Plate Offsets (X,Y): [2:0-8-3,0-0-14]

LOADING (psf)		SPACING	2-0-0	CSI		DEFL	in	(loc)	l/defl	L/d	PLATES	GRIP
TCLL	20.0	Plates Increase	1.25	TC	0.29	Vert(LL)	-0.12	13-14	>999	240	MT20	244/190
TCDL	7.0	Lumber Increase	1.25	BC	0.47	Vert(TL)	-0.20	13-14	>999	180		
BCLL	10.0	Rep Stress Incr	YES	WB	0.70	Horz(TL)	0.12	9	n/a	n/a		
BCDL	5.0	Code FBC2004/TPI2002		(Matrix)							Weight: 200 lb	

LUMBER
TOP CHORD 2 X 4 SYP No.2
BOT CHORD 2 X 4 SYP No.2 *Except*
B4 2 X 4 SYP No.3
WEBS 2 X 4 SYP No.3

BRACING
TOP CHORD Structural wood sheathing directly applied or 4-2-1 oc purlins, except end verticals.
BOT CHORD Rigid ceiling directly applied or 9-1-12 oc bracing.
WEBS 1 Row at midpt 4-14

REACTIONS (lb/size) 2=1399/0-4-0, 9=1316/0-4-0
Max Horz 2=303(load case 4)
Max Uplift2=-490(load case 5), 9=-396(load case 6)

FORCES (lb) - Maximum Compression/Maximum Tension
TOP CHORD 1-2=0/45, 2-3=-1992/558, 3-4=-1540/500, 4-5=-1253/508, 5-6=-1582/512, 6-7=-2224/673, 7-8=-1297/401, 8-9=-1249/398
BOT CHORD 2-17=-462/1566, 16-17=-462/1566, 15-16=-336/1216, 14-15=-336/1216, 13-14=-437/1862, 11-13=0/70, 6-13=-102/525, 11-12=0/0, 10-11=-25/22, 9-10=-41/76
WEBS 3-17=0/201, 3-16=-438/289, 4-16=-128/430, 4-14=-175/185, 5-14=-112/468, 6-14=-724/372, 10-13=-314/1295, 7-13=-180/951, 7-10=-1192/344, 8-10=-252/1053

JOINT STRESS INDEX
2 = 0.74, 3 = 0.43, 4 = 0.96, 5 = 0.75, 6 = 0.70, 7 = 0.65, 8 = 0.78, 9 = 0.68, 10 = 0.61, 11 = 0.34, 13 = 0.66, 14 = 0.57, 15 = 0.49, 16 = 0.35 and 17 = 0.34

NOTES
1) Unbalanced roof live loads have been considered for this design.
2) Wind: ASCE 7-02; 110mph (3-second gust); h=20ft; TCDL=4.2psf; BCDL=3.0psf; Category II; Exp B; enclosed; MWFRS gable end zone and C-C Interior(1) zone; Lumber DOL=1.60 plate grip DOL=1.60. This truss is designed for C-C for members and forces, and for MWFRS for reactions specified.
3) Provide adequate drainage to prevent water ponding.
4) All bearings are assumed to be SYP No.2 crushing capacity of 565.00 psi
5) Provide mechanical connection (by others) of truss to bearing plate capable of withstanding 490 lb uplift at joint 2 and 396 lb uplift at joint 9.

LOAD CASE(S) Standard

DECEMBER 06, 2006 TRUSS DESIGN ENGINEER:
THOMAS E. MILLER PE 56877, BYRON K. ANDERSON PE 60987
STRUCTURAL ENGINEERING AND INSPECTIONS, INC. EB 9196
16105 N. FLORIDA AVE. STE B, LUTZ, FL 33549

Job	Truss	Truss Type	Qty	Ply	LOT 10 HOLLY BROOK
L218890	T19	SPECIAL	1	1	Job Reference (optional)

Doc #1206061164

Builders FirstSource, Lake City, Fl 32055 — 6.300 s Apr 19 2006 MiTek Industries, Inc. Mon Dec 04 15:09:01 2006 Page 1

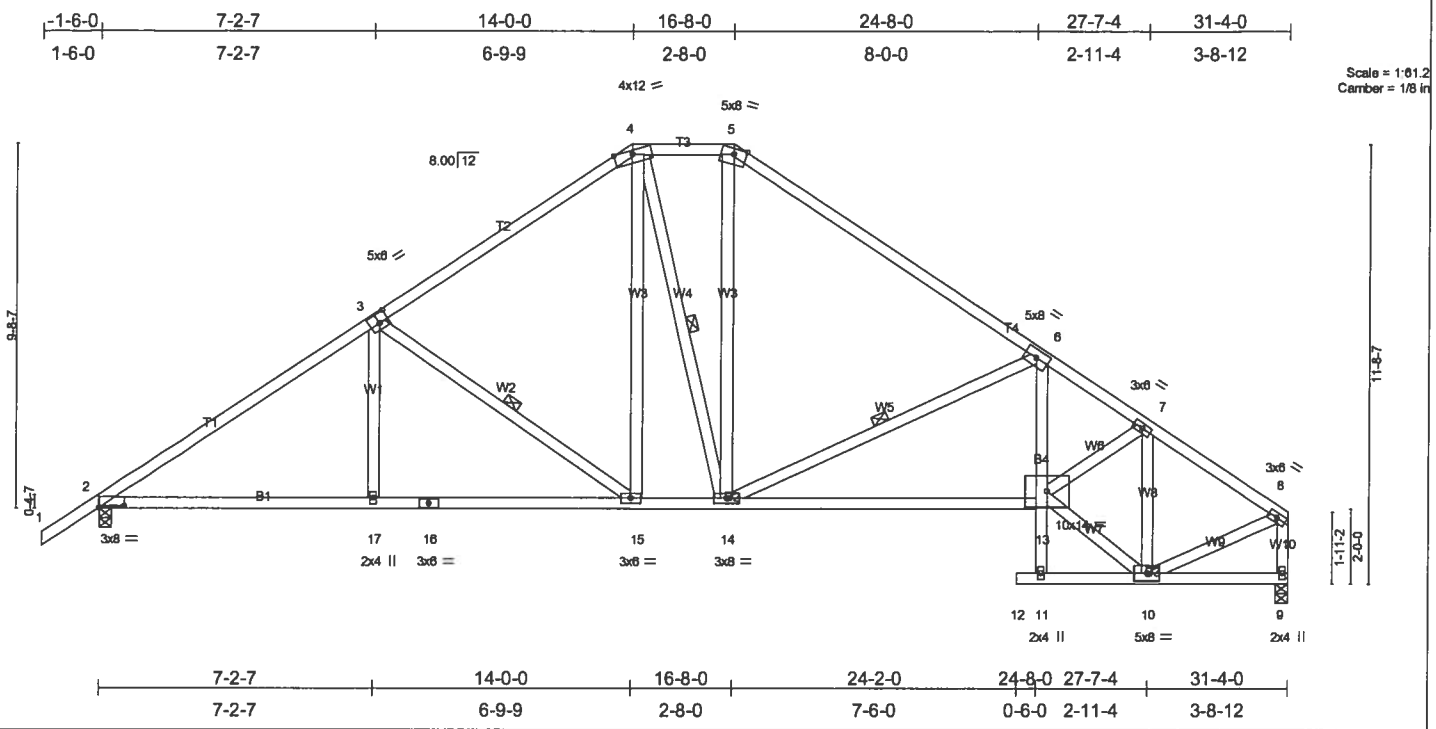

Plate Offsets (X,Y): [2:0-8-3,0-0-10], [3:0-3-0,0-3-0]

LOADING (psf)		SPACING	2-0-0	CSI		DEFL	in	(loc)	l/defl	L/d	PLATES	GRIP
TCLL	20.0	Plates Increase	1.25	TC	0.47	Vert(LL)	-0.18	13-14	>999	240	MT20	244/190
TCDL	7.0	Lumber Increase	1.25	BC	0.68	Vert(TL)	-0.30	13-14	>999	180		
BCLL	10.0	Rep Stress Incr	YES	WB	0.42	Horz(TL)	0.13	9	n/a	n/a		
BCDL	5.0	Code FBC2004/TPI2002		(Matrix)							Weight: 210 lb	

LUMBER
TOP CHORD 2 X 4 SYP No.2
BOT CHORD 2 X 4 SYP No.2 *Except*
B4 2 X 4 SYP No.3
WEBS 2 X 4 SYP No.3

BRACING
TOP CHORD Structural wood sheathing directly applied or 3-11-13 oc purlins, except end verticals.
BOT CHORD Rigid ceiling directly applied or 6-0-0 oc bracing.
WEBS 1 Row at midpt 3-15, 4-14, 6-14

REACTIONS (lb/size) 2=1399/0-4-0, 9=1316/0-4-0
Max Horz 2=349(load case 4)
Max Uplift2=-501(load case 5), 9=-406(load case 6)

FORCES (lb) - Maximum Compression/Maximum Tension
TOP CHORD 1-2=0/45, 2-3=-1965/567, 3-4=-1407/509, 4-5=-1115/514, 5-6=-1458/494, 6-7=-2232/691, 7-8=-1296/410, 8-9=-1250/408
BOT CHORD 2-17=-467/1539, 16-17=-468/1535, 15-16=-468/1535, 14-15=-197/1082, 13-14=-489/1929, 11-13=-2/66, 6-13=-69/534, 11-12=0/0, 10-11=-41/4, 9-10=-46/80
WEBS 3-17=0/253, 3-15=-565/353, 4-15=-176/414, 4-14=-241/290, 5-14=-129/469, 6-14=-903/467, 10-13=-299/1312, 7-13=-209/990, 7-10=-1196/339, 8-10=-251/1045

JOINT STRESS INDEX
2 = 0.86, 3 = 0.82, 4 = 0.70, 5 = 0.75, 6 = 0.83, 7 = 0.67, 8 = 0.82, 9 = 0.69, 10 = 0.61, 11 = 0.34, 13 = 0.86, 14 = 0.69, 15 = 0.35, 16 = 0.54 and 17 = 0.34

NOTES
1) Unbalanced roof live loads have been considered for this design.
2) Wind: ASCE 7-02; 110mph (3-second gust); h=20ft; TCDL=4.2psf; BCDL=3.0psf; Category II; Exp B; enclosed; MWFRS gable end zone and C-C Interior(1) zone; Lumber DOL=1.60 plate grip DOL=1.60. This truss is designed for C-C for members and forces, and for MWFRS for reactions specified.
3) Provide adequate drainage to prevent water ponding.
4) All bearings are assumed to be SYP No.2 crushing capacity of 565.00 psi
5) Provide mechanical connection (by others) of truss to bearing plate capable of withstanding 501 lb uplift at joint 2 and 406 lb uplift at joint 9.

LOAD CASE(S) Standard

DECEMBER 06, 2006 TRUSS DESIGN ENGINEER:
THOMAS E. MILLER PE 56877, BYRON K. ANDERSON PE 60987
STRUCTURAL ENGINEERING AND INSPECTIONS, INC. EB 9196
16105 N. FLORIDA AVE. STE B, LUTZ, FL 33549

Job	Truss	Truss Type	Qty	Ply	LOT 10 HOLLY BROOK Dwg #1206061163
L218890	T20	SPECIAL	2	1	Job Reference (optional)

Builders FirstSource, Lake City, Fl 32055 — 6.300 s Apr 19 2006 MiTek Industries, Inc. Mon Dec 04 15:09:51 2006 Page 1

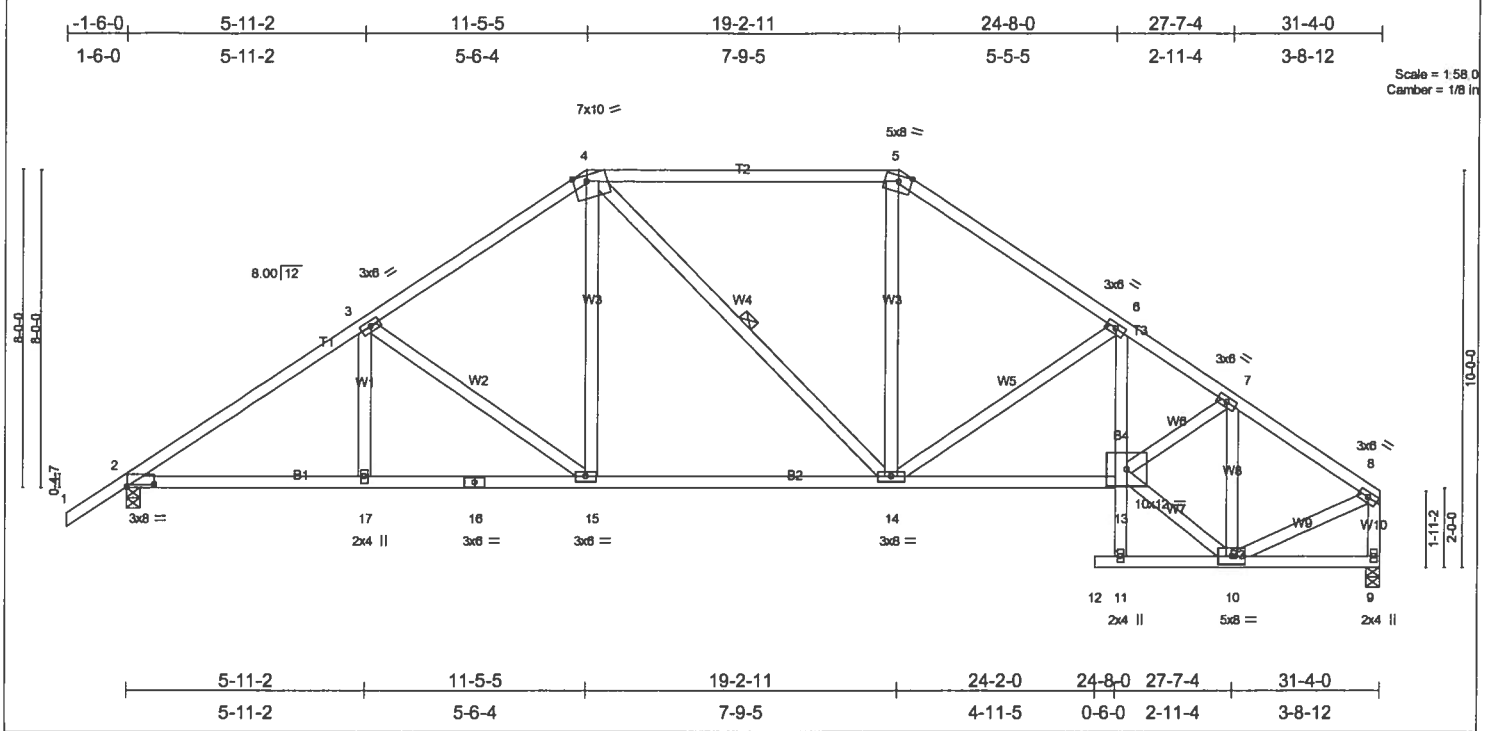

Plate Offsets (X,Y): [2:0-8-3,0-0-14], [4:0-4-0,Edge]

LOADING (psf)		SPACING	2-0-0	CSI		DEFL	in	(loc)	l/defl	L/d	PLATES	GRIP
TCLL	20.0	Plates Increase	1.25	TC	0.48	Vert(LL)	-0.14	14-15	>999	240	MT20	244/190
TCDL	7.0	Lumber Increase	1.25	BC	0.49	Vert(TL)	-0.24	14-15	>999	180		
BCLL	10.0	Rep Stress Incr	YES	WB	0.55	Horz(TL)	0.12	9	n/a	n/a		
BCDL	5.0	Code FBC2004/TPI2002		(Matrix)							Weight: 198 lb	

LUMBER
TOP CHORD 2 X 4 SYP No.2
BOT CHORD 2 X 4 SYP No.2 *Except*
B4 2 X 4 SYP No.3
WEBS 2 X 4 SYP No.3

BRACING
TOP CHORD Structural wood sheathing directly applied or 4-2-13 oc purlins, except end verticals, and 2-0-0 oc purlins (5-0-14 max.): 4-5.
BOT CHORD Rigid ceiling directly applied or 8-11-3 oc bracing.
WEBS 1 Row at midpt 4-14

REACTIONS (lb/size) 2=1399/0-4-0, 9=1316/0-4-0
Max Horz 2=290(load case 4)
Max Uplift2=-487(load case 5), 9=-392(load case 6)

FORCES (lb) - Maximum Compression/Maximum Tension
TOP CHORD 1-2=0/45, 2-3=-1995/554, 3-4=-1581/505, 4-5=-1302/509, 5-6=-1622/518, 6-7=-2218/666, 7-8=-1297/398, 8-9=-1249/395
BOT CHORD 2-17=-485/1570, 16-17=-485/1570, 15-16=-485/1570, 14-15=-376/1261, 13-14=-421/1837, 11-13=0/71, 6-13=-113/516, 11-12=0/0, 10-11=-20/28, 9-10=-40/75
WEBS 3-17=0/181, 3-15=-388/267, 4-15=-112/424, 4-14=-171/181, 5-14=-100/470, 6-14=-656/341, 10-13=-318/1288, 7-13=-176/937, 7-10=-1191/345, 8-10=-252/1056

JOINT STRESS INDEX
2 = 0.74, 3 = 0.43, 4 = 0.68, 5 = 0.75, 6 = 0.69, 7 = 0.64, 8 = 0.76, 9 = 0.68, 10 = 0.60, 11 = 0.38, 13 = 0.64, 14 = 0.57, 15 = 0.35, 16 = 0.57 and 17 = 0.34

NOTES
1) Unbalanced roof live loads have been considered for this design.
2) Wind: ASCE 7-02; 110mph (3-second gust); h=20ft; TCDL=4.2psf; BCDL=3.0psf; Category II; Exp B; enclosed; MWFRS gable end zone and C-C Interior(1) zone; Lumber DOL=1.60 plate grip DOL=1.60. This truss is designed for C-C for members and forces, and for MWFRS for reactions specified.
3) Provide adequate drainage to prevent water ponding.
4) All bearings are assumed to be SYP No.2 crushing capacity of 565.00 psi
5) Provide mechanical connection (by others) of truss to bearing plate capable of withstanding 487 lb uplift at joint 2 and 392 lb uplift at joint 9.
6) Design assumes 4x2 (flat orientation) purlins at oc spacing indicated, fastened to truss TC w/ 2-10d nails.

LOAD CASE(S) Standard

DECEMBER 06, 2006 TRUSS DESIGN ENGINEER:
THOMAS E. MILLER PE 56877, BYRON K. ANDERSON PE 60987
STRUCTURAL ENGINEERING AND INSPECTIONS, INC. EB 9196
16105 N. FLORIDA AVE. STE B, LUTZ, FL 33549

Job	Truss	Truss Type	Qty	Ply	LOT 10 HOLLY BROOK Dwg #1206061162
L218890	T21	HIP	1	1	Job Reference (optional)

Builders FirstSource, Lake City, Fl 32055 — 6.300 s Apr 19 2006 MiTek Industries, Inc. Mon Dec 04 15:10:26 2006 Page 1

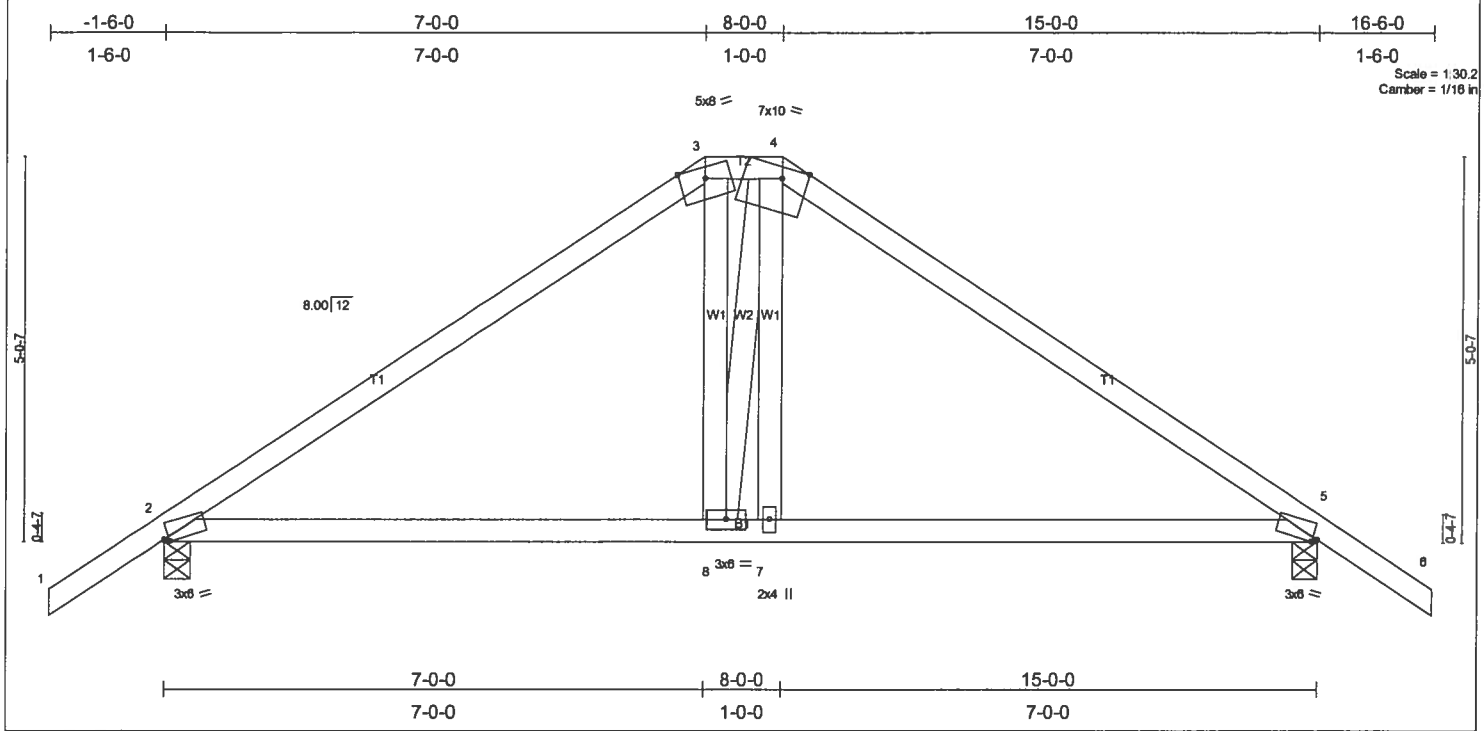

Plate Offsets (X,Y): [2:0-0-12,Edge], [4:0-4-0,Edge], [5:0-0-12,Edge]

LOADING (psf)		SPACING	2-0-0	CSI		DEFL	in	(loc)	l/defl	L/d	PLATES	GRIP
TCLL	20.0	Plates Increase	1.25	TC	0.54	Vert(LL)	0.14	5-7	>999	240	MT20	244/190
TCDL	7.0	Lumber Increase	1.25	BC	0.60	Vert(TL)	-0.17	5-7	>999	180		
BCLL	10.0	Rep Stress Incr	NO	WB	0.31	Horz(TL)	0.03	5	n/a	n/a		
BCDL	5.0	Code FBC2004/TPI2002		(Matrix)							Weight: 75 lb	

LUMBER
TOP CHORD 2 X 4 SYP No.2
BOT CHORD 2 X 4 SYP No.2
WEBS 2 X 4 SYP No.3

BRACING
TOP CHORD Structural wood sheathing directly applied or 4-4-3 oc purlins.
BOT CHORD Rigid ceiling directly applied or 6-3-5 oc bracing.

REACTIONS (lb/size) 2=1289/0-4-0, 5=1289/0-4-0
Max Horz 2=-169(load case 2)
Max Uplift2=-924(load case 4), 5=-924(load case 5)

FORCES (lb) - Maximum Compression/Maximum Tension
TOP CHORD 1-2=0/45, 2-3=-1772/1200, 3-4=-1400/1088, 4-5=-1763/1193, 5-6=0/45
BOT CHORD 2-8=-934/1380, 7-8=-888/1391, 5-7=-873/1371
WEBS 3-8=-779/881, 4-8=-384/305, 4-7=-535/672

JOINT STRESS INDEX
2 = 0.77, 3 = 0.67, 4 = 0.63, 5 = 0.77, 7 = 0.49 and 8 = 0.58

NOTES
1) Unbalanced roof live loads have been considered for this design.
2) Wind: ASCE 7-02; 110mph (3-second gust); h=20ft; TCDL=4.2psf; BCDL=3.0psf; Category II; Exp B; enclosed; MWFRS gable end zone; porch left and right exposed; Lumber DOL=1.60 plate grip DOL=1.60.
3) Provide adequate drainage to prevent water ponding.
4) All bearings are assumed to be SYP No.2 crushing capacity of 565.00 psi
5) Provide mechanical connection (by others) of truss to bearing plate capable of withstanding 924 lb uplift at joint 2 and 924 lb uplift at joint 5.
6) Girder carries hip end with 7-0-0 end setback.
7) Hanger(s) or other connection device(s) shall be provided sufficient to support concentrated load(s) 539 lb down and 410 lb up at 8-0-0, and 539 lb down and 410 lb up at 7-0-0 on bottom chord. The design/selection of such connection device(s) is the responsibility of others.
8) In the LOAD CASE(S) section, loads applied to the face of the truss are noted as front (F) or back (B).

LOAD CASE(S) Standard
1) Regular: Lumber Increase=1.25, Plate Increase=1.25
Uniform Loads (plf)
Vert: 1-3=-54, 3-4=-117(F=-63), 4-6=-54, 2-8=-30, 7-8=-65(F=-35), 5-7=-30
Concentrated Loads (lb)
Vert: 8=-539(F) 7=-539(F)

DECEMBER 06, 2006 TRUSS DESIGN ENGINEER:
THOMAS E. MILLER PE 56877, BYRON K. ANDERSON PE 60987
STRUCTURAL ENGINEERING AND INSPECTIONS, INC. EB 9196
16105 N. FLORIDA AVE. STE B, LUTZ, FL 33549

Job	Truss	Truss Type	Qty	Ply	LOT 10 HOLLY BROOK
L218890	T22	COMMON	1	1	Job Reference (optional)

Dwg #1206061161

Builders FirstSource, Lake City, Fl 32055 — 6.300 s Apr 19 2006 MiTek Industries, Inc. Mon Dec 04 15:10:38 2006 Page 1

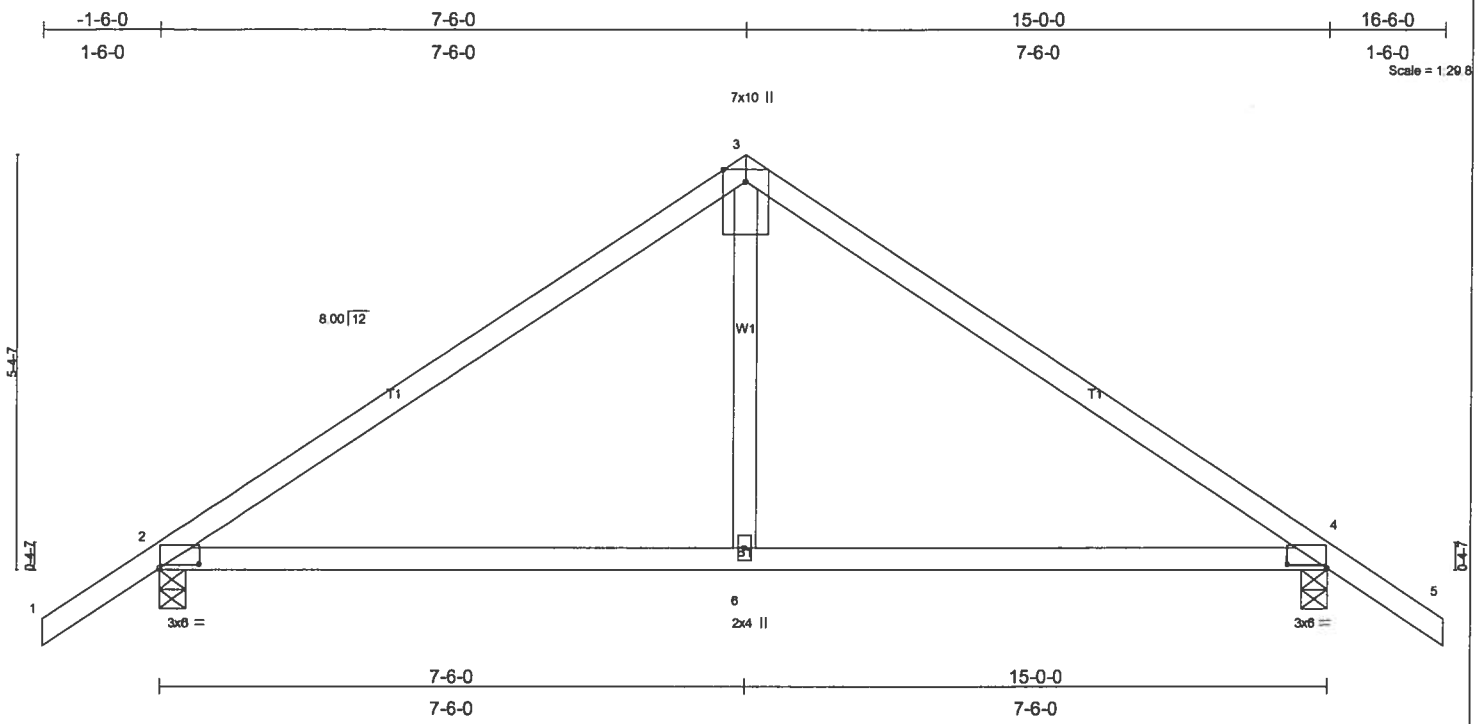

Plate Offsets (X,Y): [2:0-6-3,0-0-10], [4:0-6-3,0-0-10]

LOADING (psf)		SPACING	2-0-0	CSI		DEFL	in	(loc)	l/defl	L/d	PLATES	GRIP
TCLL	20.0	Plates Increase	1.25	TC	0.40	Vert(LL)	0.18	2-6	>958	240	MT20	244/190
TCDL	7.0	Lumber Increase	1.25	BC	0.49	Vert(TL)	-0.16	2-6	>999	180		
BCLL	10.0	Rep Stress Incr	YES	WB	0.21	Horz(TL)	0.01	4	n/a	n/a		
BCDL	5.0	Code FBC2004/TPI2002		(Matrix)							Weight: 62 lb	

LUMBER
TOP CHORD 2 X 4 SYP No.2
BOT CHORD 2 X 4 SYP No.2
WEBS 2 X 4 SYP No.3

BRACING
TOP CHORD Structural wood sheathing directly applied or 6-0-0 oc purlins.
BOT CHORD Rigid ceiling directly applied or 9-6-9 oc bracing.

REACTIONS (lb/size) 2=706/0-4-0, 4=706/0-4-0
Max Horz 2=-180(load case 3)
Max Uplift2=-477(load case 5), 4=-477(load case 6)

FORCES (lb) - Maximum Compression/Maximum Tension
TOP CHORD 1-2=0/45, 2-3=-746/649, 3-4=-746/649, 4-5=0/45
BOT CHORD 2-6=-377/535, 4-6=-377/535
WEBS 3-6=-465/285

JOINT STRESS INDEX
2 = 0.69, 3 = 0.90, 4 = 0.69 and 6 = 0.21

NOTES
1) Unbalanced roof live loads have been considered for this design.
2) Wind: ASCE 7-02; 110mph (3-second gust); h=20ft; TCDL=4.2psf; BCDL=3.0psf; Category II; Exp B; enclosed; MWFRS gable end zone and C-C Interior(1) zone; porch left and right exposed; Lumber DOL=1.60 plate grip DOL=1.60. This truss is designed for C-C for members and forces, and for MWFRS for reactions specified.
3) All bearings are assumed to be SYP No.2 crushing capacity of 565.00 psi
4) Provide mechanical connection (by others) of truss to bearing plate capable of withstanding 477 lb uplift at joint 2 and 477 lb uplift at joint 4.

LOAD CASE(S) Standard

DECEMBER 06, 2006 TRUSS DESIGN ENGINEER:
THOMAS E. MILLER PE 56877, BYRON K. ANDERSON PE 60987
STRUCTURAL ENGINEERING AND INSPECTIONS, INC. EB 9196
16105 N. FLORIDA AVE. STE B, LUTZ, FL 33549

Job	Truss	Truss Type	Qty	Ply	LOT 10 HOLLS BROOK
L218890	T23	GABLE	1	1	Job Reference (optional)

Dwg #1206061160

Builders FirstSource, Lake City, Fl 32055 — 6.300 s Apr 19 2006 MiTek Industries, Inc. Mon Dec 04 15:12:31 2006 Page 1

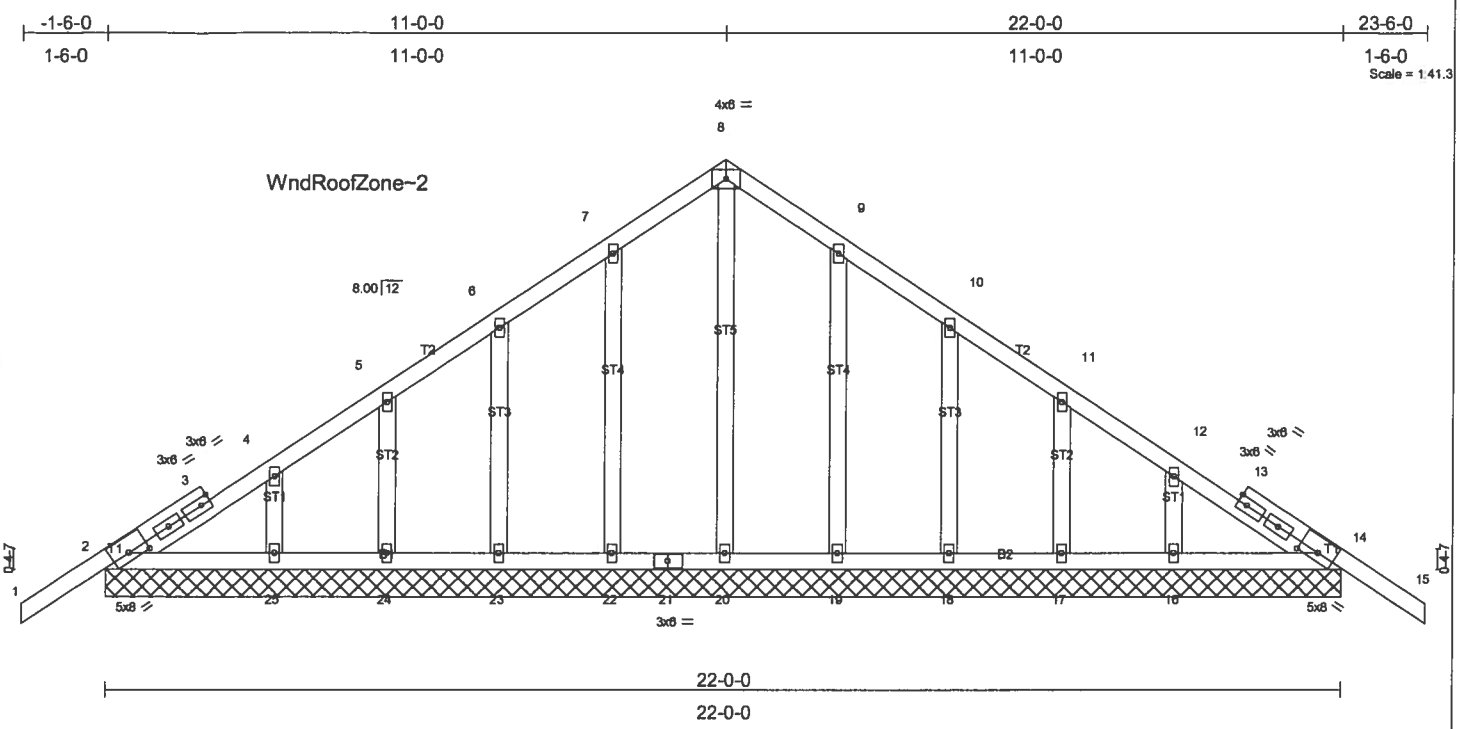

Plate Offsets (X,Y): [2:0-4-5,0-1-12], [14:0-4-5,0-1-12]

LOADING (psf)		SPACING	2-0-0	CSI		DEFL	in	(loc)	l/defl	L/d	PLATES	GRIP
TCLL	20.0	Plates Increase	1.25	TC	0.22	Vert(LL)	-0.01	15	n/r	120	MT20	244/190
TCDL	7.0	Lumber Increase	1.25	BC	0.04	Vert(TL)	-0.01	15	n/r	90		
BCLL	10.0	Rep Stress Incr	NO	WB	0.13	Horz(TL)	0.01	14	n/a	n/a		
BCDL	5.0	Code FBC2004/TPI2002		(Matrix)							Weight: 134 lb	

LUMBER
TOP CHORD 2 X 4 SYP No.2
BOT CHORD 2 X 4 SYP No.2
OTHERS 2 X 4 SYP No.3

BRACING
TOP CHORD Structural wood sheathing directly applied or 6-0-0 oc purlins.
BOT CHORD Rigid ceiling directly applied or 10-0-0 oc bracing.

REACTIONS (lb/size) 2=329/22-0-0, 14=329/22-0-0, 20=212/22-0-0, 22=233/22-0-0, 23=238/22-0-0, 24=218/22-0-0, 25=294/22-0-0, 19=233/22-0-0, 18=238/22-0-0, 17=218/22-0-0, 16=294/22-0-0
Max Horz 2=-249(load case 3)
Max Uplift2=-129(load case 5), 14=-153(load case 6), 22=-120(load case 5), 23=-132(load case 5), 24=-135(load case 5), 25=-108(load case 5), 19=-117(load case 6), 18=-133(load case 6), 17=-133(load case 6), 16=-114(load case 6)
Max Grav 2=329(load case 1), 14=329(load case 1), 20=212(load case 1), 22=237(load case 9), 23=238(load case 1), 24=218(load case 9), 25=294(load case 1), 19=237(load case 10), 18=238(load case 1), 17=218(load case 10), 16=294(load case 1)

FORCES (lb) - Maximum Compression/Maximum Tension
TOP CHORD 1-2=-3/70, 2-3=-190/149, 3-4=-188/152, 4-5=-145/146, 5-6=-95/140, 6-7=-70/170, 7-8=-69/212, 8-9=-69/208, 9-10=-70/146, 10-11=-68/74, 11-12=-73/51, 12-13=-100/63, 13-14=-101/60, 14-15=-3/70
BOT CHORD 2-25=-35/184, 24-25=-35/184, 23-24=-35/184, 22-23=-35/184, 21-22=-35/184, 20-21=-35/184, 19-20=-35/184, 18-19=-35/184, 17-18=-35/184, 16-17=-35/184, 14-16=-35/184
WEBS 8-20=-151/4, 7-22=-178/132, 6-23=-176/145, 5-24=-166/143, 4-25=-214/131, 9-19=-178/129, 10-18=-176/146, 11-17=-166/142, 12-16=-214/136

JOINT STRESS INDEX
2 = 0.41, 3 = 0.00, 3 = 0.21, 3 = 0.22, 4 = 0.34, 5 = 0.34, 6 = 0.34, 7 = 0.34, 8 = 0.28, 9 = 0.34, 10 = 0.34, 11 = 0.34, 12 = 0.34, 13 = 0.00, 13 = 0.22, 13 = 0.21, 14 = 0.41, 16 = 0.34, 17 = 0.34, 18 = 0.34, 19 = 0.34, 20 = 0.34, 21 = 0.15, 22 = 0.34, 23 = 0.34, 24 = 0.34 and 25 = 0.34

NOTES
1) Unbalanced roof live loads have been considered for this design.
2) Wind: ASCE 7-02; 110mph (3-second gust); h=20ft; TCDL=4.2psf; BCDL=3.0psf; Category II; Exp B; enclosed; MWFRS gable end zone and C-C Exterior(2) zone; Lumber DOL=1.60 plate grip DOL=1.60. This truss is designed for C-C for members and forces, and for MWFRS for reactions specified.
3) Truss designed for wind loads in the plane of the truss only. For studs exposed to wind (normal to the face), see MiTek "Standard Gable End Detail"
4) All plates are 2x4 MT20 unless otherwise indicated.
5) Gable requires continuous bottom chord bearing.
6) Gable studs spaced at 2-0-0 oc.
7) All bearings are assumed to be SYP No.2 crushing capacity of 565.00 psi
8) Provide mechanical connection (by others) of truss to bearing plate capable of withstanding 129 lb uplift at joint 2, 153 lb uplift at joint 14, 120 lb uplift at joint 22, 132 lb uplift at joint 23, 135 lb uplift at joint 24, 108 lb uplift at joint 25, 117 lb uplift at joint 19, 133 lb uplift at joint 18, 133 lb uplift at joint 17 and 114 lb uplift at joint 16.
9) In the LOAD CASE(S) section, loads applied to the face of the truss are noted as front (F) or back (B).

LOAD CASE(S) Standard
1) Regular: Lumber Increase=1.25, Plate Increase=1.25
Uniform Loads (plf)
Vert: 1-8=-87(F=-33), 8-15=-87(F=-33), 2-14=-30

DECEMBER 06, 2006 TRUSS DESIGN ENGINEER:
THOMAS E. MILLER PE 56877, BYRON K. ANDERSON PE 60987
STRUCTURAL ENGINEERING AND INSPECTIONS, INC. EB 9196
16105 N. FLORIDA AVE. STE B, LUTZ, FL 33549

Job	Truss	Truss Type	Qty	Ply	LOT 10 HOLLY BROOK Dwg #1206061159
L218890	T24	COMMON	10	1	Job Reference (optional)

Builders FirstSource, Lake City, Fl 32055 — 6.300 s Apr 19 2006 MiTek Industries, Inc. Mon Dec 04 15:12:56 2006 Page 1

-1-6-0	5-8-7	11-0-0	16-3-9	22-0-0	23-6-0
1-6-0	5-8-7	5-3-9	5-3-9	5-8-7	1-6-0

Scale = 1:41.3
Camber = 1/8 in

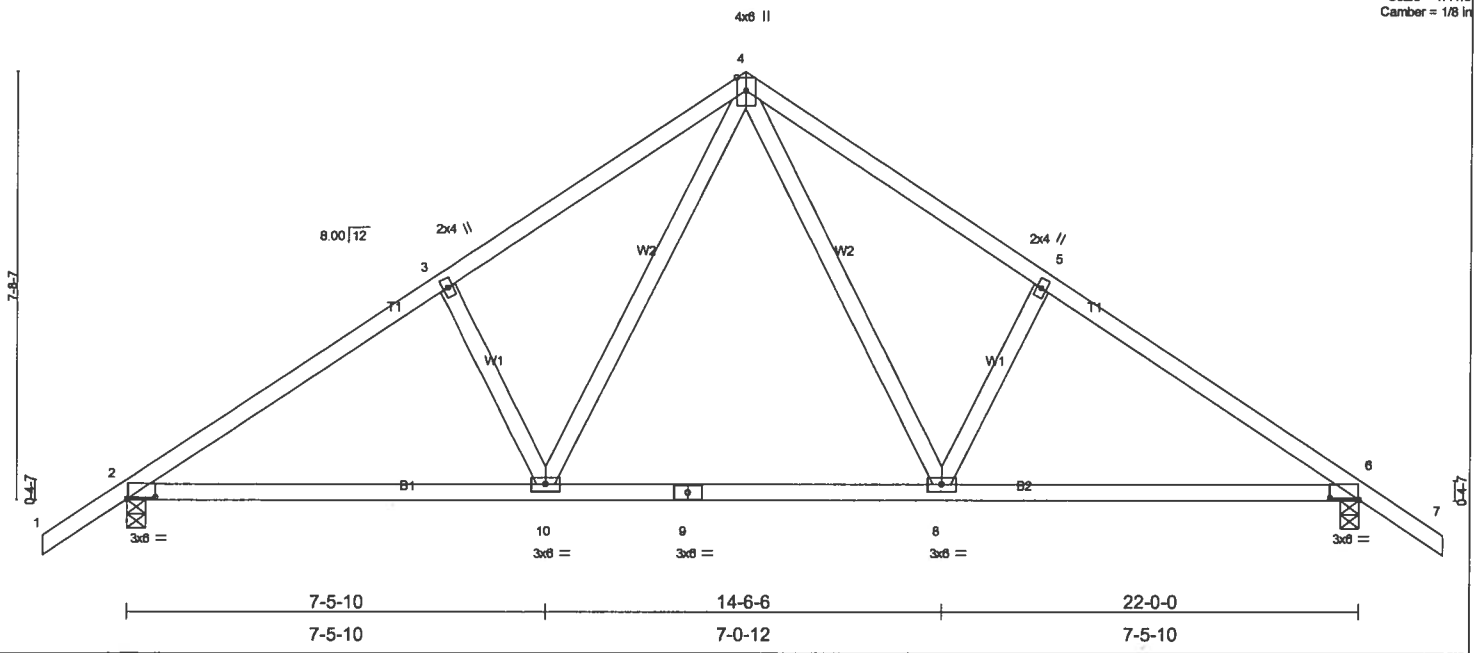

Plate Offsets (X,Y): [2:0-6-3,0-0-6], [6:0-6-3,0-0-6]

LOADING (psf)		SPACING	2-0-0	CSI		DEFL	in	(loc)	l/defl	L/d	PLATES	GRIP
TCLL	20.0	Plates Increase	1.25	TC	0.25	Vert(LL)	-0.19	8-10	>999	240	MT20	244/190
TCDL	7.0	Lumber Increase	1.25	BC	0.79	Vert(TL)	-0.30	8-10	>853	180		
BCLL	10.0	Rep Stress Incr	NO	WB	0.35	Horz(TL)	0.04	6	n/a	n/a		
BCDL	5.0	Code FBC2004/TPI2002		(Matrix)							Weight: 113 lb	

LUMBER
TOP CHORD 2 X 4 SYP No.2
BOT CHORD 2 X 4 SYP No.2
WEBS 2 X 4 SYP No.3

BRACING
TOP CHORD Structural wood sheathing directly applied or 4-9-6 oc purlins.
BOT CHORD Rigid ceiling directly applied or 9-10-10 oc bracing.

REACTIONS (lb/size) 2=1177/0-4-0, 6=1177/0-4-0
Max Horz 2=261(load case 4)
Max Uplift2=-452(load case 5), 6=-452(load case 6)

FORCES (lb) - Maximum Compression/Maximum Tension
TOP CHORD 1-2=0/45, 2-3=-1613/511, 3-4=-1477/575, 4-5=-1477/575, 5-6=-1613/511, 6-7=0/45
BOT CHORD 2-10=-399/1260, 9-10=-160/861, 8-9=-160/861, 6-8=-313/1260
WEBS 3-10=-241/259, 4-10=-294/715, 4-8=-294/715, 5-8=-241/259

JOINT STRESS INDEX
2 = 0.75, 3 = 0.34, 4 = 0.49, 5 = 0.34, 6 = 0.75, 8 = 0.60, 9 = 0.71 and 10 = 0.60

NOTES
1) Unbalanced roof live loads have been considered for this design.
2) Wind: ASCE 7-02; 110mph (3-second gust); h=20ft; TCDL=4.2psf; BCDL=3.0psf; Category II; Exp B; enclosed; MWFRS gable end zone and C-C Interior(1) zone; Lumber DOL=1.60 plate grip DOL=1.60. This truss is designed for C-C for members and forces, and for MWFRS for reactions specified.
3) All bearings are assumed to be SYP No.2 crushing capacity of 565.00 psi
4) Provide mechanical connection (by others) of truss to bearing plate capable of withstanding 452 lb uplift at joint 2 and 452 lb uplift at joint 6.
5) In the LOAD CASE(S) section, loads applied to the face of the truss are noted as front (F) or back (B).

LOAD CASE(S) Standard
1) Regular: Lumber Increase=1.25, Plate Increase=1.25
Uniform Loads (plf)
Vert: 1-4=-54, 4-7=-54, 2-10=-30, 8-10=-80(F=-50), 6-8=-30

DECEMBER 06, 2006 TRUSS DESIGN ENGINEER:
THOMAS E. MILLER PE 56877, BYRON K. ANDERSON PE 60987
STRUCTURAL ENGINEERING AND INSPECTIONS, INC. EB 9196
16105 N. FLORIDA AVE. STE B, LUTZ, FL 33549

Job	Truss	Truss Type	Qty	Ply	LOT 10 HOLLS BROOK
L218890	T25	COMMON	2	1	Job Reference (optional)

Dwg #1206061158

Builders FirstSource, Lake City, Fl 32055

6.300 s Apr 19 2006 MiTek Industries, Inc. Mon Dec 04 15:14:03 2006 Page 1

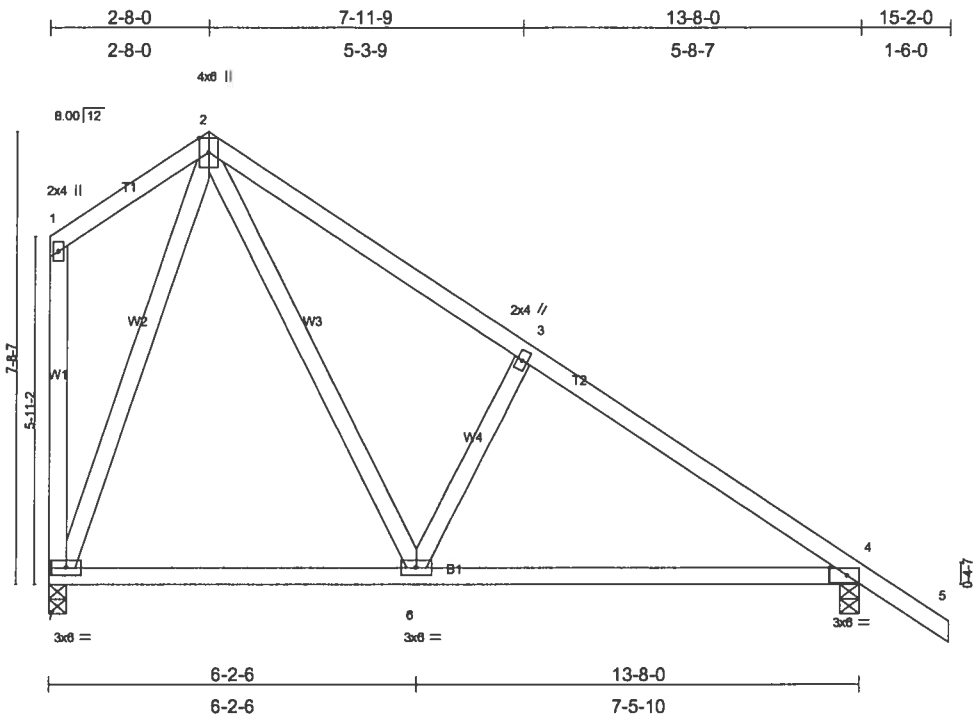

Plate Offsets (X,Y): [4:0-3-9,0-1-8]

LOADING (psf)		SPACING	2-0-0	CSI		DEFL	in	(loc)	l/defl	L/d	PLATES	GRIP
TCLL	20.0	Plates Increase	1.25	TC	0.22	Vert(LL)	-0.07	4-6	>999	240	MT20	244/190
TCDL	7.0	Lumber Increase	1.25	BC	0.28	Vert(TL)	-0.13	4-6	>999	180		
BCLL	10.0	Rep Stress Incr	YES	WB	0.49	Horz(TL)	0.01	4	n/a	n/a		
BCDL	5.0	Code FBC2004/TPI2002		(Matrix)							Weight: 85 lb	

LUMBER
TOP CHORD 2 X 4 SYP No.2
BOT CHORD 2 X 4 SYP No.2
WEBS 2 X 4 SYP No.3

BRACING
TOP CHORD Structural wood sheathing directly applied or 6-0-0 oc purlins, except end verticals.
BOT CHORD Rigid ceiling directly applied or 10-0-0 oc bracing.

REACTIONS (lb/size) 4=656/0-4-0, 7=555/0-3-8
Max Horz 7=-348(load case 6)
Max Uplift4=-242(load case 6), 7=-239(load case 6)

FORCES (lb) - Maximum Compression/Maximum Tension
TOP CHORD 1-2=-52/41, 2-3=-549/202, 3-4=-678/136, 4-5=0/45, 1-7=-76/52
BOT CHORD 6-7=-24/265, 4-6=-2/498
WEBS 2-6=-228/524, 3-6=-268/275, 2-7=-458/264

JOINT STRESS INDEX
1 = 0.26, 2 = 0.48, 3 = 0.16, 4 = 0.64, 6 = 0.44 and 7 = 0.36

NOTES
1) Unbalanced roof live loads have been considered for this design.
2) Wind: ASCE 7-02; 110mph (3-second gust); h=20ft; TCDL=4.2psf; BCDL=3.0psf; Category II; Exp B; enclosed; MWFRS gable end zone and C-C Interior(1) zone; Lumber DOL=1.60 plate grip DOL=1.60. This truss is designed for C-C for members and forces, and for MWFRS for reactions specified.
3) All bearings are assumed to be SYP No.2 crushing capacity of 565.00 psi
4) Provide mechanical connection (by others) of truss to bearing plate capable of withstanding 242 lb uplift at joint 4 and 239 lb uplift at joint 7.

LOAD CASE(S) Standard

DECEMBER 06, 2006 TRUSS DESIGN ENGINEER:
THOMAS E. MILLER PE 56877, BYRON K. ANDERSON PE 60987
STRUCTURAL ENGINEERING AND INSPECTIONS, INC. EB 9196
16105 N. FLORIDA AVE. STE B, LUTZ, FL 33549

Job	Truss	Truss Type	Qty	Ply	LOT 10 HOLLY BROOK Dwg #1206061157
L218890	T26	GABLE	1	1	Job Reference (optional)

Builders FirstSource, Lake City, Fl 32055 — 6.300 s Apr 19 2006 MiTek Industries, Inc. Mon Dec 04 15:16:09 2006 Page 1

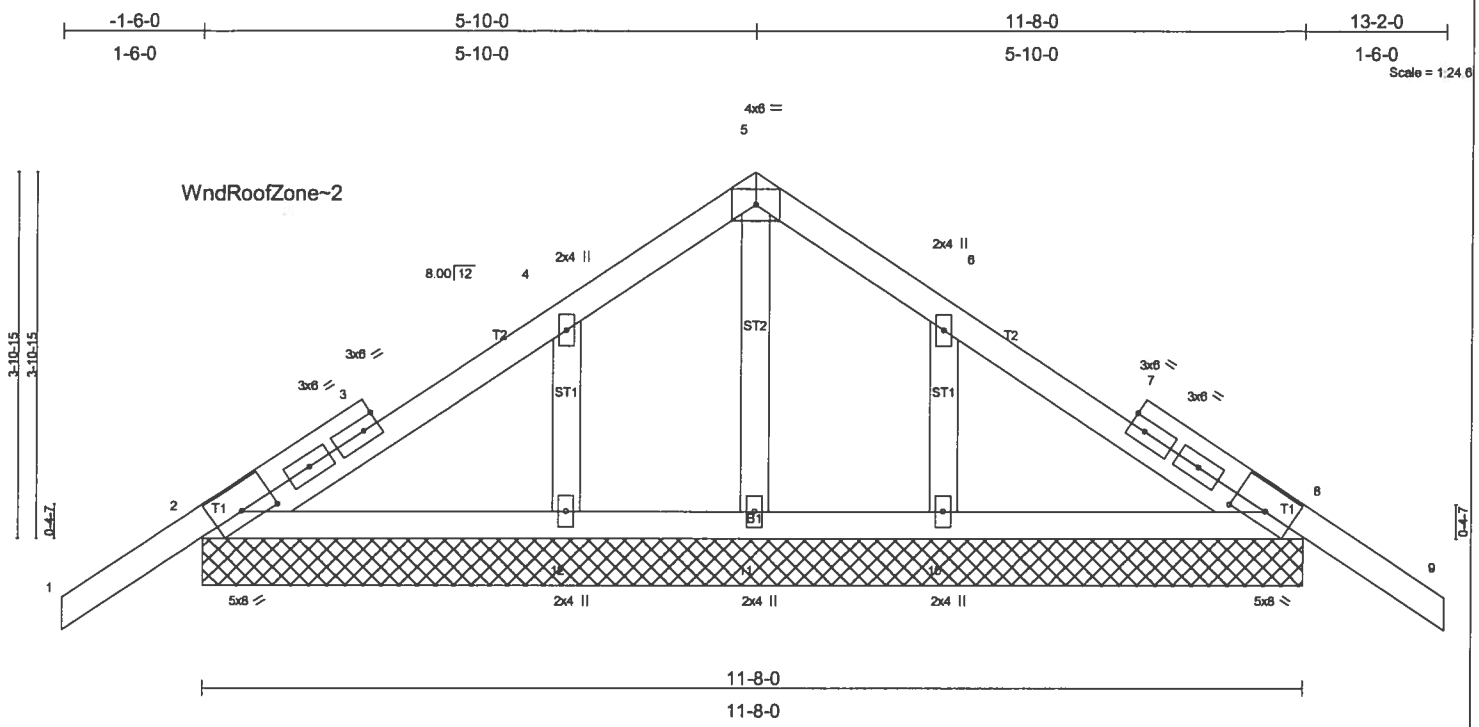

Plate Offsets (X,Y): [2:0-4-5,0-1-12], [8:0-4-5,0-1-12]

LOADING (psf)		SPACING	2-0-0	CSI		DEFL	in	(loc)	l/defl	L/d	PLATES	GRIP
TCLL	20.0	Plates Increase	1.25	TC	0.22	Vert(LL)	-0.00	9	n/r	120	MT20	244/190
TCDL	7.0	Lumber Increase	1.25	BC	0.08	Vert(TL)	-0.00	9	n/r	90		
BCLL	10.0	Rep Stress Incr	NO	WB	0.05	Horz(TL)	0.00	8	n/a	n/a		
BCDL	5.0	Code FBC2004/TPI2002		(Matrix)							Weight: 60 lb	

LUMBER
TOP CHORD 2 X 4 SYP No.2
BOT CHORD 2 X 4 SYP No.2
OTHERS 2 X 4 SYP No.3

BRACING
TOP CHORD Structural wood sheathing directly applied or 10-0-0 oc purlins.
BOT CHORD Rigid ceiling directly applied or 6-0-0 oc bracing.

REACTIONS (lb/size) 2=313/11-8-0, 8=313/11-8-0, 11=204/11-8-0, 12=398/11-8-0, 10=398/11-8-0
Max Horz 2=130(load case 4)
Max Uplift2=-167(load case 5), 8=-183(load case 6), 11=-12(load case 5), 12=-179(load case 5), 10=-182(load case 6)
Max Grav 2=319(load case 9), 8=319(load case 10), 11=204(load case 1), 12=400(load case 9), 10=400(load case 10)

FORCES (lb) - Maximum Compression/Maximum Tension
TOP CHORD 1-2=-3/70, 2-3=-80/72, 3-4=-77/165, 4-5=-7/105, 5-6=-6/105, 6-7=-42/165, 7-8=-37/72, 8-9=-3/70
BOT CHORD 2-12=-64/150, 11-12=-64/150, 10-11=-64/150, 8-10=-64/150
WEBS 5-11=-187/23, 4-12=-285/195, 6-10=-284/197

JOINT STRESS INDEX
2 = 0.40, 3 = 0.00, 3 = 0.24, 3 = 0.25, 4 = 0.14, 5 = 0.06, 6 = 0.14, 7 = 0.00, 7 = 0.25, 7 = 0.24, 8 = 0.40, 10 = 0.11, 11 = 0.07 and 12 = 0.11

NOTES
1) Unbalanced roof live loads have been considered for this design.
2) Wind: ASCE 7-02; 110mph (3-second gust); h=20ft; TCDL=4.2psf; BCDL=3.0psf; Category II; Exp B; enclosed; MWFRS gable end zone and C-C Exterior(2) zone; Lumber DOL=1.60 plate grip DOL=1.60. This truss is designed for C-C for members and forces, and for MWFRS for reactions specified.
3) Truss designed for wind loads in the plane of the truss only. For studs exposed to wind (normal to the face), see MiTek "Standard Gable End Detail"
4) Gable requires continuous bottom chord bearing.
5) Gable studs spaced at 2-0-0 oc.
6) All bearings are assumed to be SYP No.2 crushing capacity of 565.00 psi
7) Provide mechanical connection (by others) of truss to bearing plate capable of withstanding 167 lb uplift at joint 2, 183 lb uplift at joint 8, 12 lb uplift at joint 11, 179 lb uplift at joint 12 and 182 lb uplift at joint 10.
8) In the LOAD CASE(S) section, loads applied to the face of the truss are noted as front (F) or back (B).

LOAD CASE(S) Standard
1) Regular: Lumber Increase=1.25, Plate Increase=1.25
Uniform Loads (plf)
Vert: 1-5=-87(F=-33), 5-9=-87(F=-33), 2-8=-30

DECEMBER 06, 2006 TRUSS DESIGN ENGINEER:
THOMAS E. MILLER PE 56877, BYRON K. ANDERSON PE 60987
STRUCTURAL ENGINEERING AND INSPECTIONS, INC. EB 9196
16105 N. FLORIDA AVE. STE B, LUTZ, FL 33549

Job	Trus$	Truss Type	Qty	Ply	LOT 10 HOLLY BROOK Dwg #1206061156
L218890	T27	COMMON	2	1	Job Reference (optional)

Builders FirstSource, Lake City, Fl 32055 — 6.300 s Apr 19 2006 MiTek Industries, Inc. Mon Dec 04 15:16:35 2006 Page 1

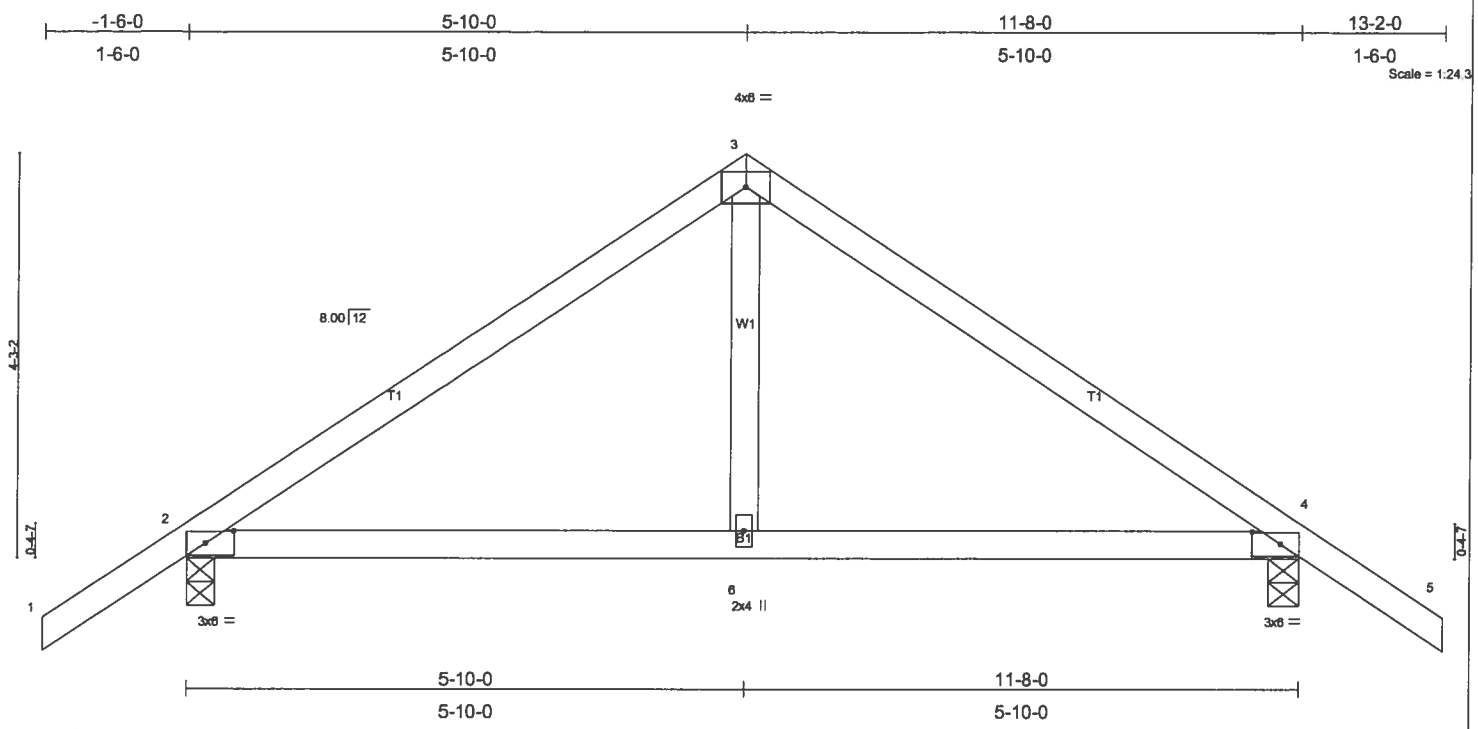

Plate Offsets (X,Y): [2:0-3-9,0-1-8], [4:0-3-9,0-1-8]

LOADING (psf)		SPACING	2-0-0	CSI		DEFL	in	(loc)	l/defl	L/d	PLATES	GRIP
TCLL	20.0	Plates Increase	1.25	TC	0.23	Vert(LL)	-0.04	2-6	>999	240	MT20	244/190
TCDL	7.0	Lumber Increase	1.25	BC	0.28	Vert(TL)	-0.06	2-6	>999	180		
BCLL	10.0	Rep Stress Incr	YES	WB	0.07	Horz(TL)	0.01	4	n/a	n/a		
BCDL	5.0	Code FBC2004/TPI2002		(Matrix)							Weight: 50 lb	

LUMBER
TOP CHORD 2 X 4 SYP No.2
BOT CHORD 2 X 4 SYP No.2
WEBS 2 X 4 SYP No.3

BRACING
TOP CHORD Structural wood sheathing directly applied or 6-0-0 oc purlins.
BOT CHORD Rigid ceiling directly applied or 10-0-0 oc bracing.

REACTIONS (lb/size) 2=566/0-3-8, 4=567/0-4-0
Max Horz 2=142(load case 4)
Max Uplift2=-249(load case 5), 4=-250(load case 6)

FORCES (lb) - Maximum Compression/Maximum Tension
TOP CHORD 1-2=0/44, 2-3=-562/167, 3-4=-563/168, 4-5=0/45
BOT CHORD 2-6=-45/399, 4-6=-45/399
WEBS 3-6=0/211

JOINT STRESS INDEX
2 = 0.45, 3 = 0.50, 4 = 0.45 and 6 = 0.15

NOTES
1) Unbalanced roof live loads have been considered for this design.
2) Wind: ASCE 7-02; 110mph (3-second gust); h=20ft; TCDL=4.2psf; BCDL=3.0psf; Category II; Exp B; enclosed; MWFRS gable end zone and C-C Interior(1) zone; Lumber DOL=1.60 plate grip DOL=1.60. This truss is designed for C-C for members and forces, and for MWFRS for reactions specified.
3) All bearings are assumed to be SYP No.2 crushing capacity of 565.00 psi
4) Provide mechanical connection (by others) of truss to bearing plate capable of withstanding 249 lb uplift at joint 2 and 250 lb uplift at joint 4.

LOAD CASE(S) Standard

DECEMBER 06, 2006 TRUSS DESIGN ENGINEER:
THOMAS E. MILLER PE 56877, BYRON K. ANDERSON PE 60987
STRUCTURAL ENGINEERING AND INSPECTIONS, INC. EB 9196
16105 N. FLORIDA AVE. STE B, LUTZ, FL 33549

Job	Truss	Truss Type	Qty	Ply	LOT 10 HOLLY BROOK Dwg. #1206061155
L218890	T28	COMMON	1	2	Job Reference (optional)

Builders FirstSource, Lake City, Fl 32055 — 6.300 s Apr 19 2006 MiTek Industries, Inc. Mon Dec 04 15:28:42 2006 Page 1

-1-6-0	3-1-7	5-10-0	8-6-9	11-8-0	13-2-0
1-6-0	3-1-7	2-8-9	2-8-9	3-1-7	1-6-0

Scale = 1:24.3

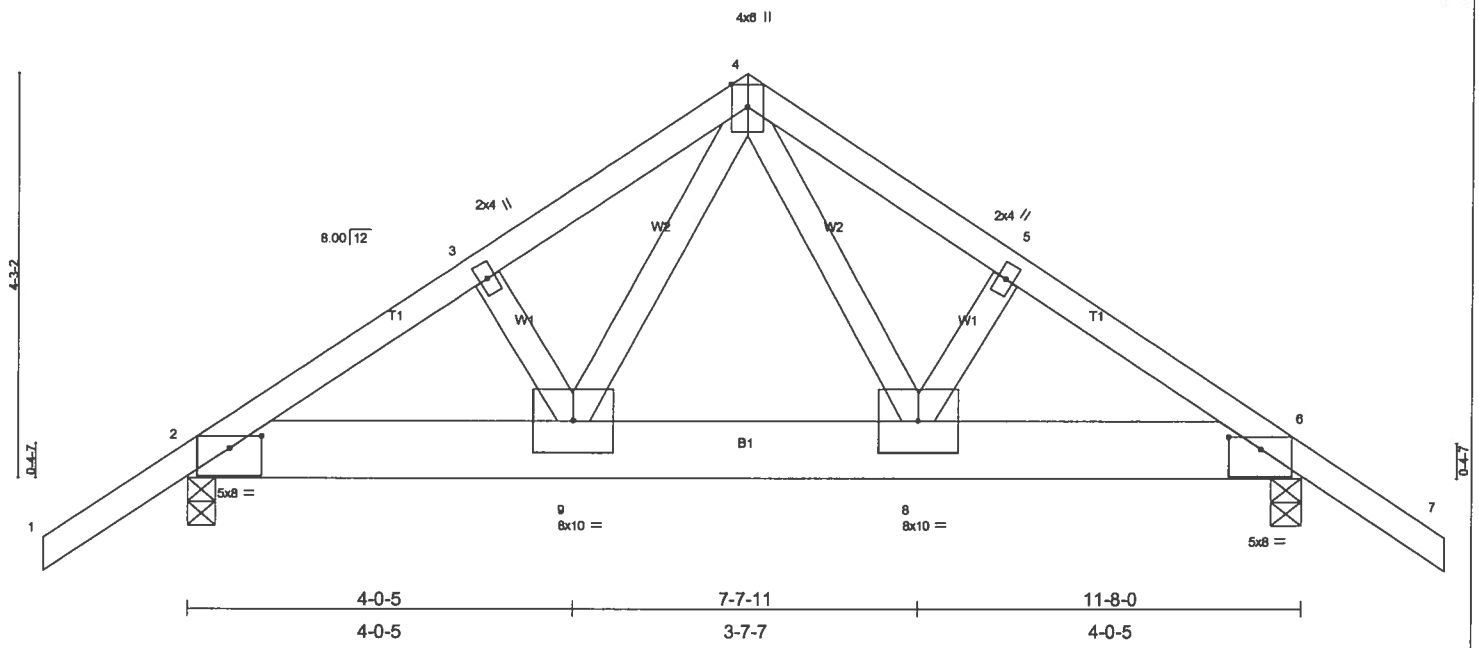

Plate Offsets (X,Y): [2:0-4-0,0-1-9], [6:0-4-0,0-1-8]

LOADING (psf)		SPACING	2-0-0	CSI		DEFL	in	(loc)	l/defl	L/d	PLATES	GRIP
TCLL	20.0	Plates Increase	1.25	TC	0.17	Vert(LL)	-0.04	8-9	>999	240	MT20	244/190
TCDL	7.0	Lumber Increase	1.25	BC	0.19	Vert(TL)	-0.07	8-9	>999	180		
BCLL	10.0	Rep Stress Incr	NO	WB	0.41	Horz(TL)	0.01	6	n/a	n/a		
BCDL	5.0	Code FBC2004/TPI2002		(Matrix)							Weight: 158 lb	

LUMBER
TOP CHORD 2 X 4 SYP No.2
BOT CHORD 2 X 8 SYP 2400F 2.0E
WEBS 2 X 4 SYP No.3

BRACING
TOP CHORD Structural wood sheathing directly applied or 6-0-0 oc purlins.
BOT CHORD Rigid ceiling directly applied or 10-0-0 oc bracing.

REACTIONS (lb/size) 2=3690/0-3-8, 6=3692/0-4-0
Max Horz 2=137(load case 3)
Max Uplift2=-1474(load case 4), 6=-1475(load case 5)

FORCES (lb) - Maximum Compression/Maximum Tension
TOP CHORD 1-2=0/50, 2-3=-4458/1671, 3-4=-4381/1693, 4-5=-4367/1688, 5-6=-4445/1666, 6-7=0/50
BOT CHORD 2-9=-1355/3680, 8-9=-876/2536, 6-8=-1318/3661
WEBS 3-9=-95/122, 4-9=-983/2561, 4-8=-973/2533, 5-8=-78/115

JOINT STRESS INDEX
2 = 0.59, 3 = 0.03, 4 = 0.64, 5 = 0.03, 6 = 0.59, 8 = 0.29 and 9 = 0.29

NOTES
1) 2-ply truss to be connected together with 10d (0.131"x3") nails as follows:
Top chords connected as follows: 2 X 4 - 1 row at 0-9-0 oc.
Bottom chords connected as follows: 2 X 8 - 2 rows at 0-7-0 oc.
Webs connected as follows: 2 X 4 - 1 row at 0-9-0 oc.
2) All loads are considered equally applied to all plies, except if noted as front (F) or back (B) face in the LOAD CASE(S) section. Ply to ply connections have been provided to distribute only loads noted as (F) or (B), unless otherwise indicated.
3) Unbalanced roof live loads have been considered for this design.
4) Wind: ASCE 7-02; 110mph (3-second gust); h=20ft; TCDL=4.2psf; BCDL=3.0psf; Category II; Exp B; enclosed; MWFRS gable end zone; Lumber DOL=1.60 plate grip DOL=1.60.
5) All bearings are assumed to be SYP No.2 crushing capacity of 565.00 psi
6) Provide mechanical connection (by others) of truss to bearing plate capable of withstanding 1474 lb uplift at joint 2 and 1475 lb uplift at joint 6.
7) Girder carries tie-in span(s): 28-6-0 from 0-0-0 to 11-8-0

LOAD CASE(S) Standard
1) Regular: Lumber Increase=1.25, Plate Increase=1.25
Uniform Loads (plf)
Vert: 1-4=-54, 4-7=-54, 2-6=-580(F=-550)

DECEMBER 06, 2006 TRUSS DESIGN ENGINEER:
THOMAS E. MILLER PE 56877, BYRON K. ANDERSON PE 60987
STRUCTURAL ENGINEERING AND INSPECTIONS, INC. EB 9196
16105 N. FLORIDA AVE. STE B, LUTZ, FL 33549

LATERAL TOE-NAIL DETAIL

ST-TOENAIL

MiTek Industries, Chesterfield, MO

NOTES:
1. TOE-NAILS SHALL BE DRIVEN AT AN ANGLE OF 30 DEGREES WITH THE MEMBER AND STARTED 1/3 THE LENGTH OF THE NAIL FROM THE MEMBER END AS SHOWN.
2. THE END DISTANCE, EDGE DISTANCE, AND SPACING OF NAILS SHALL BE SUCH AS TO AVOID UNUSUAL SPLITTING OF THE WOOD.
3. ALLOWABLE VALUE SHALL BE THE LESSER VALUE OF THE BOTTOM CHORD SPECIES FOR MEMBERS OF DIFFERENT SPECIES.

TOE-NAIL SINGLE SHEAR VALUES PER NDS 2001 (lb/nail)

	DIAM.	SYP
3.5" LONG	.131	83.3
	.135	89.6
	.162	118.3
3.25" LONG	.128	80.5
	.131	83.3
	.148	102.1
3.0" LONG	.120	70.5
	.128	80.5
	.131	83.3
	.148	102.1

VALUES SHOWN ARE CAPACITY PER TOE-NAIL.
APPLICABLE DURATION OF LOAD INCREASES MAY BE APPLIED.

SQUARE CUT

SIDE VIEW
(2x4, 2x6)
3 NAILS

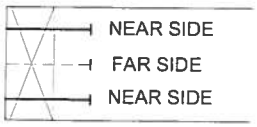

SIDE VIEW
(2x3)
2 NAILS

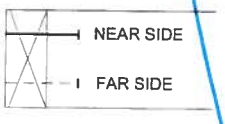

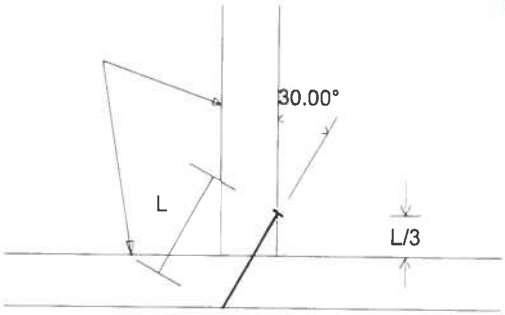

45 DEGREE ANGLE BEVEL CUT

This detail may only be applied to Pre-engineered truss drawings signed and sealed by Structural Engineering and Inspections Inc.

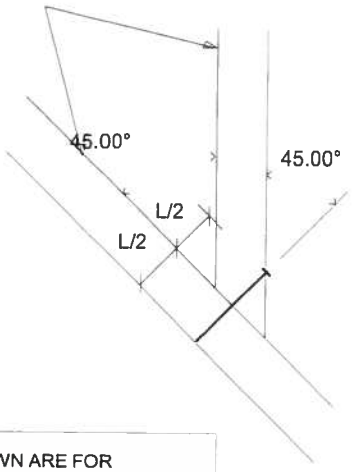

SIDE VIEW
(2x3, 2x4)
2 NAILS

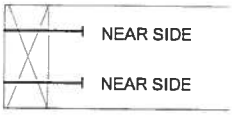

SIDE VIEW
(2x6)
3 NAILS

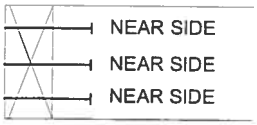

VIEWS SHOWN ARE FOR ILLUSTRATION PURPOSES ONLY

DEC 0 6 2006

The seal on this drawing indicates acceptance of professional engineering responsibility solely for the truss component design shown. The suitability and use of this component for any particular building design is the responsibility of the building designer.

Symbols

PLATE LOCATION AND ORIENTATION

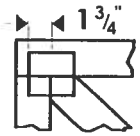

*Center plate on joint unless x, y offsets are indicated. Dimensions are in ft-in-sixteenths. Apply plates to both sides of truss and securely seat.

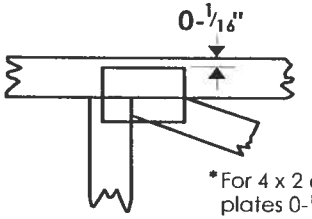

*For 4 x 2 orientation, locate plates 0-1/16" from outside edge of truss.

*This symbol indicates the required direction of slots in connector plates.

***Plate location details available in MiTek 20/20 software or upon request.**

PLATE SIZE

4 x 4 — The first dimension is the width perpendicular to slots. Second dimension is the length parallel to slots.

LATERAL BRACING

Indicated by symbol shown and/or by text in the bracing section of the output. Use T, I or Eliminator bracing if indicated.

BEARING

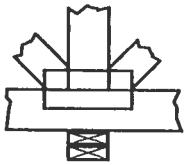

Indicates location where bearings (supports) occur. Icons vary but reaction section indicates joint number where bearings occur.

Industry Standards:

ANSI/TPI1: National Design Specification for Metal Plate Connected Wood Truss Construction.
DSB-89: Design Standard for Bracing.
BCSI1: Building Component Safety Information, Guide to Good Practice for Handling, Installing & Bracing of Metal Plate Connected Wood Trusses.

Numbering System

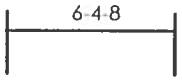

dimensions shown in ft-in-sixteenths

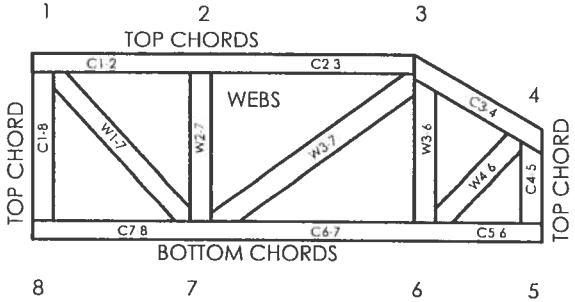

JOINTS ARE GENERALLY NUMBERED/LETTERED CLOCKWISE AROUND THE TRUSS STARTING AT THE JOINT FARTHEST TO THE LEFT.

CHORDS AND WEBS ARE IDENTIFIED BY END JOINT NUMBERS/LETTERS.

CONNECTOR PLATE CODE APPROVALS

BOCA	96-31, 95-43, 96-20-1, 96-67, 84-32
ICBO	4922, 5243, 5363, 3907
SBCCI	9667, 9730, 9604B, 9511, 9432A

MiTek®

TEE-LOK®

MiTek Engineering Reference Sheet: MII-7473

General Safety Notes

Failure to Follow Could Cause Property Damage or Personal Injury

1. Additional stability bracing for truss system, e.g. diagonal or X-bracing, is always required. See BCSI1.
2. Never exceed the design loading shown and never stack materials on inadequately braced trusses.
3. Provide copies of this truss design to the building designer, erection supervisor, property owner and all other interested parties.
4. Cut members to bear tightly against each other.
5. Place plates on each face of truss at each joint and embed fully. Knots and wane at joint locations are regulated by ANSI/TPI1.
6. Design assumes trusses will be suitably protected from the environment in accord with ANSI/TPI1.
7. Unless otherwise noted, moisture content of lumber shall not exceed 19% at time of fabrication.
8. Unless expressly noted, this design is not applicable for use with fire retardant or preservative treated lumber.
9. Camber is a non-structural consideration and is the responsibility of truss fabricator. General practice is to camber for dead load deflection.
10. Plate type, size, orientation and location dimensions shown indicate minimum plating requirements.
11. Lumber used shall be of the species and size, and in all respects, equal to or better than that specified.
12. Top chords must be sheathed or purlins provided at spacing shown on design.
13. Bottom chords require lateral bracing at 10 ft. spacing, or less, if no ceiling is installed, unless otherwise noted.
14. Connections not shown are the responsibility of others.
15. Do not cut or alter truss member or plate without prior approval of a professional engineer.
16. Install and load vertically unless indicated otherwise.

© 2004 MiTek®

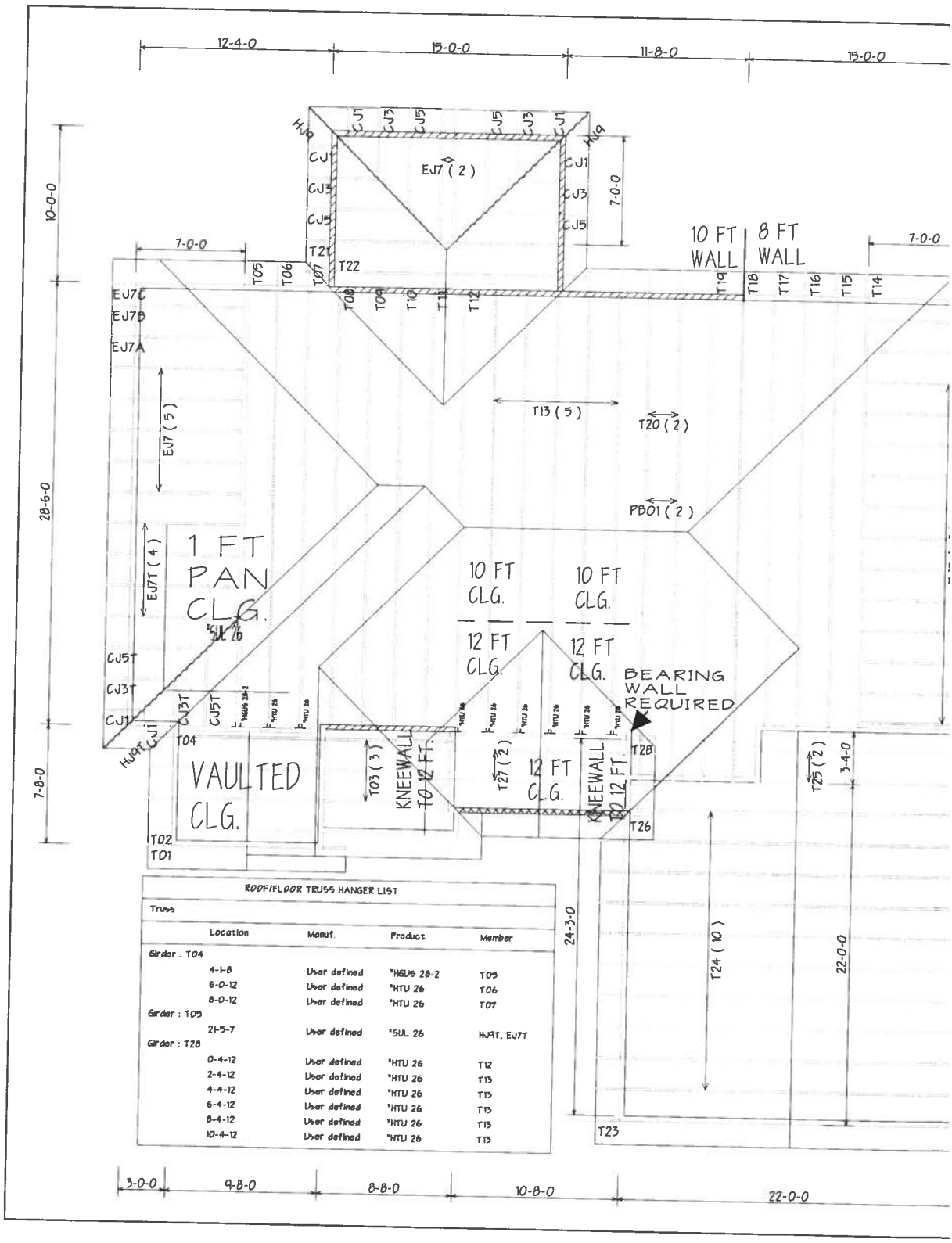

ROOF/FLOOR TRUSS HANGER LIST

Truss

Location	Manuf.	Product	Member
Girder : T04			
4-1-8	User defined	*HGUS 28-2	T05
6-0-12	User defined	*HTU 26	T06
8-0-12	User defined	*HTU 26	T07
Girder : T05			
21-5-7	User defined	*SUL 26	HJ9T, EJ7T
Girder : T28			
0-4-12	User defined	*HTU 26	T12
2-4-12	User defined	*HTU 26	T13
4-4-12	User defined	*HTU 26	T13
6-4-12	User defined	*HTU 26	T13
8-4-12	User defined	*HTU 26	T13
10-4-12	User defined	*HTU 26	T13