BEG NE COR OF SE1/4 OF NW1/4, RU
W R/W OF SW NURSERY RD, SE ALONG
NW 486.74 FT TO SE R/W OF BRANFO

CREAMER LINDA M/BROWN AMY M
P O BOX 1625
LAKE CITY, FL 32056

2025

15-4S-16-03015-000

COLUMBIA COUNTY PROPERTY

BUILDING CHARACTERISTICS

ELEMENT	CD	CONSTRUCTION
Exterior Wall	19	COMMON BRK 100
Roof Structur	03	GABLE/HIP 100
Roof Cover	12	MODULAR MT 100
Interior Wall	05	DRYWALL 100
Interior Floo	14	CARPET 90
Interior Floo	08	SHT VINYL 10
Air Condition	03	CENTRAL 100
Heating Type	04	AIR DUCTED 100
Bedrooms		3 100
Bathrooms		1 100
Frame	01	NONE 100
Stories	1.	1. 100
Architectual	05	CONV 100
Units		0 100
Condition Adj	03	03 100
Kitchen Adjus	01	01 100
Quality	05	05
DOR CODE	0117	SFRES/OFFICE
MAP NUM		MKT AREA 06
NEIGHBORHOOD/LOC	15416.00	1.00/

AREA TYPE	TOTAL GROSS AREA	PCT OF BASE	YEAR	TOT ADJ AREA	SUBAREA MARKET VALUE
BAS	1,189	100		1,189	95,594
FCP	396	25		99	7,959
FOP	80	30		24	1,930
TOTALS	1,665			1,312	105,483

MARKET ADJUSTMENTS

TYPE	MDL	EFF. AREA	TOT ADJ PTS	EFF. BASE RATE	REPL. COST NEW	AYB	EYB	ECON	FNCT		NORM	% COND
0100	01	1,312	117.8000	123.69	162,281	1969	1969	0	0	0	35.00	65.00

1 SINGLE FAM – 0% - 0 Heated Area: 1189 HX Base Yr

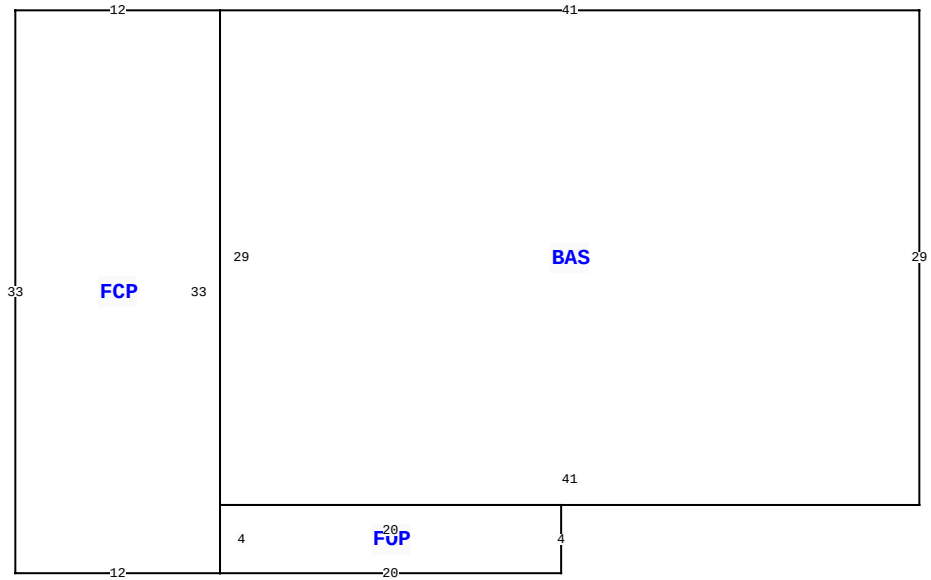

3309 SW STATE ROAD 247 , LAKE CITY

BLD DATE		LGL DATE	
XF DATE		LAND DATE	
INC DATE		AG DATE	

VALUATION SUMMARY

VALUATION BY	STANDARD
Tax Group: 3	Tax Dist:
BUILDING MARKET VALUE	226,567
TOTAL MARKET OB/XF VALUE	25,659
TOTAL LAND VALUE - MARKET	26,000
TOTAL MARKET VALUE	278,226
SOH/AGL Deduction	0
ASSESSED VALUE	278,226
TOTAL EXEMPTION VALUE	0
BASE TAXABLE VALUE	278,226
TOTAL JUST VALUE	278,226
NCON VALUE	0
INCOME VALUE	
PREVIOUS YEAR MKT VALUE	278,226

PERMIT NUM	DESCRIPTION	AMT	ISSUED
35533	MAINT/ALTR	155	07/11/2017
23087	ADDN COMM	321	05/02/2005

SALES DATA

OFF RECORD Number	DATE	TYPE INST	Q U /	V I /	RSN CD	SALE PRICE
1341/2454	8/02/2017	PR	U	I	11	0
GRANTOR: AMY M BROWN AS PR FOR						
GRANTEE: AMY BROWN, ANGELA A						
1327/1341	12/02/2016	PR	U	I	11	0
GRANTOR: AMY M BROWN AS PR FOR						
GRANTEE: AMY BROWN, ANGELA A						

EXTRA FEATURES

LN	OB/XF CODE	DESCRIPTION	BLD	CAP	L	W	UNITS	UT	Adj R	ADJ UNIT PRICE	ORIG COND	YEAR ON	YEAR ACTUAL	Q	% COND	OB/XF MKT VALUE	NOTES
1	0166	CONC,PAVMT	0	0	0	0	1.00	UT	0.00	0.00	100	0	0	3	100	750	
2	0294	SHED WOOD/	0	0	12	16	192.00	UT	7.50	7.50	70	2002	2002	3	70	1,008	
3	0040	BARN,POLE	0	0	48	36	1,728.00	UT	2.50	2.50	70	2002	2002	3	70	3,024	
4	0294	SHED WOOD/	0	0	22	21	462.00	UT	7.50	7.50	50	2002	2002	3	50	1,733	
5	0294	SHED WOOD/	0	0	22	24	528.00	UT	7.50	7.50	50	2002	2002	3	50	1,980	
6	0252	LEAN-TO W/	0	0	10	14	140.00	UT	2.00	2.00	50	2002	2002	3	50	140	
7	0040	BARN,POLE	0	0	0	0	3,528.00	UT	3.00	3.00	100	2006	2006	3	100	10,584	
8	0140	CLFENCE 6	0	0	0	0	980.00	UT	8.00	8.00	50	2006	2006	3	50	3,920	
9	0166	CONC,PAVMT	0	0	0	0	1,008.00	UT	2.50	2.50	100	2006	2006	3	100	2,520	

BUILDING NOTES

BUILDING DIMENSIONS

BAS= W41 FCP= W12 S33 E12 N33$ S29 FOP= S4 E20 N4 W20$ E41 N29$.

LAND DESCRIPTION

TOTAL OB/XF 25,659

LN	USE CODE	CLS	LAND USE DESCRIPTION	CAP	RD	LOC ZONE	FRONT	DEPTH	TOT LND UTS	UNIT TYPE	DT	DPTH FACT	% COND	TOT ADJ	UNIT PRICE	ADJ UNIT PRICE	LAND VALUE	OTHER ADJUSTMENTS AND NOTES	YEAR	DENSITY	DECL	FRZ	YR	CONSRV
1	0111	C	SFR/COMMERCI	0		00	0.00	0.00	3.25	AC		1.00	1.00	1.00	8,000.00	8,000.00	26,000							

REVIEW DATE 04/25/2019 BY KR Total Acres: 3.25 Total Land Value: 26,000 Market: 0 Agricultural: 0 Common: 26,000 PRINTED 02/12/2025 BY SYS

BEG NE COR OF SE1/4 OF NW1/4, RU
W R/W OF SW NURSERY RD, SE ALONG
NW 486.74 FT TO SE R/W OF BRANFO

CREAMER LINDA M/BROWN AMY M
P O BOX 1625
LAKE CITY, FL 32056

2025

15-4S-16-03015-000

COLUMBIA COUNTY PROPERTY

BUILDING CHARACTERISTICS

ELEMENT	CD	CONSTRUCTION
Exterior Wall	25	MOD METAL 100
Roof Structur	10	STEEL FRME 100
Roof Cover	12	MODULAR MT 100
Interior Wall	01	MINIMUM 100
Interior Floo	03	CONC FINSH 100
Ceiling	03	PART.FIN. 100
Air Condition	01	NONE 100
Heating Type	01	NONE 100
Fixtures		0 100
Frame	05	STEEL 100
Story Height		12 100
RMS		9 100
Stories	1.	1. 100
Units		0 100
Condition Adj	03	03 100
Quality	05	05
DOR CODE	0117	SFRES/OFFICE
MAP NUM		MKT AREA 06
NEIGHBORHOOD/LOC	15416.00	1.00/

AREA TYPE	TOTAL GROSS AREA	PCT OF BASE	YEAR	TOT ADJ AREA	SUBAREA MARKET VALUE
AOF	120	110		132	1,888
AOF	1,700	110		1,870	26,749
AOF	2,840	110		3,124	44,686
BAS	1,050	100		1,050	15,019
BAS	2,106	100		2,106	30,124
CAN	54	30		16	229
CAN	558	30		167	2,389
TOTALS	8,428			8,465	121,084

MARKET ADJUSTMENTS

TYPE	MDL	EFF. AREA	TOT ADJ PTS	EFF. BASE RATE	REPL. COST NEW	AYB	EYB	ECON	FNCT		NORM	% COND
8700	04	8,465	66.2112	23.84	201,806	1979	1979	0	0	0	40.00	60.00

2 PREF M B A – 0% - 0 Heated Area: 7816 HX Base Yr

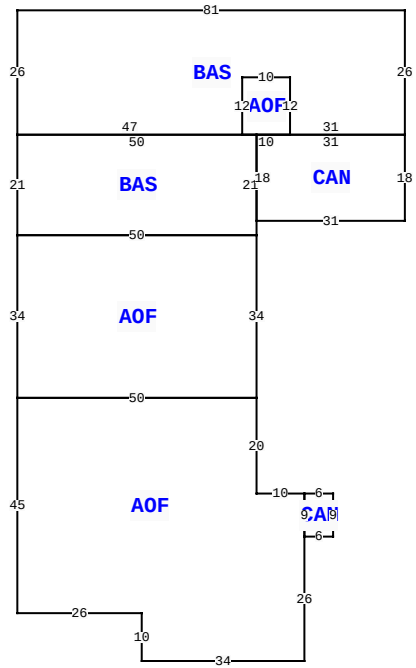

3309 SW STATE ROAD 247 , LAKE CITY

BLD DATE		LGL DATE	
XF DATE		LAND DATE	
INC DATE		AG DATE	

VALUATION SUMMARY

VALUATION BY	STANDARD
Tax Group: 3	Tax Dist:
BUILDING MARKET VALUE	226,567
TOTAL MARKET OB/XF VALUE	25,659
TOTAL LAND VALUE - MARKET	26,000
TOTAL MARKET VALUE	278,226
SOH/AGL Deduction	0
ASSESSED VALUE	278,226
TOTAL EXEMPTION VALUE	0
BASE TAXABLE VALUE	278,226
TOTAL JUST VALUE	278,226
NCON VALUE	0
INCOME VALUE	
PREVIOUS YEAR MKT VALUE	278,226

PERMIT NUM	DESCRIPTION	AMT	ISSUED

SALES DATA

OFF RECORD Number	DATE	TYPE INST	Q U /	V I /	RSN CD	SALE PRICE
1341/2454	8/02/2017	PR	U	I	11	0
GRANTOR: AMY M BROWN AS PR FOR						
GRANTEE: AMY BROWN, ANGELA A						
1327/1341	12/02/2016	PR	U	I	11	0
GRANTOR: AMY M BROWN AS PR FOR						
GRANTEE: AMY BROWN, ANGELA A						

BUILDING NOTES

BUILDING DIMENSIONS

BAS= W81 S26 BAS= S21 AOF= S34 AOF= S45 E26 S10 E34 N26 CAN= E6 N9 W6 S9$ N9 W10 N20 W50$ E50 N34 W50$ E50 N21 W50$ E47 AOF= N12 E10 S12 W10$ E3 CAN= S18 E31 N18 W31$ E31 N26$.

EXTRA FEATURES

L N	OB/XF CODE	DESCRIPTION	BLD	CAP	L	W	UNITS	UT	Adj R	ADJ UNIT PRICE	ORIG COND	YEAR ON	YEAR ACTUAL	Q	% COND	OB/XF MKT VALUE	NOTES

LAND DESCRIPTION

TOTAL OB/XF 0

L N	USE CODE	CLS	LAND USE DESCRIPTION	CAP	R D	LOC ZONE	FRONT	DEPTH	TOT LND UTS	UNIT TYPE	D T	DPTH FACT	% COND	TOT ADJ	UNIT PRICE	ADJ UNIT PRICE	LAND VALUE	OTHER ADJUSTMENTS AND NOTES	YEAR	DENSITY	DECL	FRZ	YR	CONSRV

REVIEW DATE 04/25/2019 BY KR Total Acres: 3.25 Total Land Value: 26,000 Market: 0 Agricultural: 0 Common: 26,000 PRINTED 02/12/2025 BY SYS