DATE 1/22/2005

Columbia County Building Permit

This Permit Expires One Year From the Date of Issue

PERMIT
000023881

APPLICANT KERRI CLARK PHONE 754-5678

ADDRESS PO BOX 2861 LAKE CITY FL 32056

OWNER ROBERT & JAN MANLEY PHONE 752-3840

ADDRESS 196 NW HARRIS LOOP LAKE CITY FL 32055

CONTRACTOR JL DUPREE CONSTRUCTION PHONE 754-5678

LOCATION OF PROPERTY 90 W, R COMMERCE, R EGRET, L HARRIS LAKE DR, R HARRIS LOOP, 3RD ON RIGHT

TYPE DEVELOPMENT ADDITION TO SFD ESTIMATED COST OF CONSTRUCTION 52450.00

HEATED FLOOR AREA 1049.00 TOTAL AREA 1049.00 HEIGHT 26.40 STORIES 2

FOUNDATION CONCRTE WALLS FRAMED ROOF PITCH 4/12 FLOOR SLAB

LAND USE & ZONING RSF-2 MAX. HEIGHT 35

Minimum Set Back Requirments: STREET-FRONT 25.00 REAR 15.00 SIDE 10.00

NO. EX.D.U. 1 FLOOD ZONE A DEVELOPMENT PERMIT NO.

PARCEL ID 26-3S-16-02308-054 SUBDIVISION FAIRWAY VIEW

LOT 14 BLOCK A PHASE UNIT 2 TOTAL ACRES .51

Culvert Permit No.	Culvert Waiver	Contractor's License Number	Applicant/Owner/Contractor
		CGC060631	Kerri L. Clark

Driveway Connection	Septic Tank Number	LU & Zoning checked by	Approved for Issuance	New Resident
EXISTING	05-0960-N	BK	JH	N

COMMENTS: ADDITION TO AN EXISTING STRUCTURE & DOES NOT MEET THE DEFINITION OF SUBSTANTIAL IMPROVEMENT SECTION 8.1

Check # or Cash 10682

FOR BUILDING & ZONING DEPARTMENT ONLY

Temporary Power _____ date/app. by
Foundation _____ date/app. by
Monolithic _____ date/app. by (footer/Slab)
Under slab rough-in plumbing _____ date/app. by
Slab _____ date/app. by
Sheathing/Nailing _____ date/app. by
Framing _____ date/app. by
Rough-in plumbing above slab and below wood floor _____ date/app. by
Electrical rough-in _____ date/app. by
Heat & Air Duct _____ date/app. by
Peri. beam (Lintel) _____ date/app. by
Permanent power _____ date/app. by
C.O. Final _____ date/app. by
Culvert _____ date/app. by
M/H tie downs, blocking, electricity and plumbing _____ date/app. by
Pool _____ date/app. by
Reconnection _____ date/app. by
Pump pole _____ date/app. by
Utility Pole _____ date/app. by
M/H Pole _____ date/app. by
Travel Trailer _____ date/app. by
Re-roof _____ date/app. by

BUILDING PERMIT FEE $ 265.00 CERTIFICATION FEE $ 5.25 SURCHARGE FEE $ 5.25

MISC. FEES $ .00 ZONING CERT. FEE $ 50.00 FIRE FEE $ .00 WASTE FEE $

FLOOD DEVELOPMENT FEE $ FLOOD ZONE FEE $ 25.00 CULVERT FEE $ **TOTAL FEE** 350.50

INSPECTORS OFFICE J.H. CLERKS OFFICE CH

NOTICE: IN ADDITION TO THE REQUIREMENTS OF THIS PERMIT, THERE MAY BE ADDITIONAL RESTRICTIONS APPLICABLE TO THIS PROPERTY THAT MAY BE FOUND IN THE PUBLIC RECORDS OF THIS COUNTY. AND THERE MAY BE ADDITIONAL PERMITS REQUIRED FROM OTHER GOVERNMENTAL ENTITIES SUCH AS WATER MANAGEMENT DISTRICTS, STATE AGENCIES, OR FEDERAL AGENCIES.

"WARNING TO OWNER: YOUR FAILURE TO RECORD A NOTICE OF COMMENCEMENT MAY RESULT IN YOUR PAYING TWICE FOR IMPROVEMENTS TO YOUR PROPERTY. IF YOU INTEND TO OBTAIN FINANCING, CONSULT WITH YOUR LENDER OR AN ATTORNEY BEFORE RECORDING YOUR NOTICE OF COMMENCEMENT."

This Permit Must Be Prominently Posted on Premises During Construction

PLEASE NOTIFY THE COLUMBIA COUNTY BUILDING DEPARTMENT AT LEAST 24 HOURS IN ADVANCE OF EACH INSPECTION, IN ORDER THAT IT MAY BE MADE WITHOUT DELAY OR INCONVIENCE, PHONE 758-1008. THIS PERMIT IS NOT VALID UNLESS THE WORK AUTHORIZED BY IT IS COMMENCED WITHIN 6 MONTHS AFTER ISSUANCE.

The Issuance of this Permit Does Not Waive Compliance by Permittee with Deed Restrictions.

app for addition

350.50

Columbia County Building Permit Application

For Office Use Only Application # _____ Date Received _____ By _____ Permit# 23881
Application Approved By – Zoning Official BLK Date 18.11.05 Plans Examiner OKSTH Date 11-18-05
Flood Zone A Development Permit N/A Zoning RSF-2 Land use Plan map Category RES LOW DENS
Comments Existing Structure Does not meet definition of Substantial Improvement Section 8.1

Kerri Clark

Applicants Name J.L. DuPree Construction Phone 754-5678
Address P.O. Box 2861 Lake City Fla. 32056
Owners Name Robert & Jan Manley Phone 752-3840
911 Address 196 N.W.Harris Loop Lake City Fla. 32055
Contractors Name J.L. DuPree Construction Phone 754-5678
Address P.O. Box 2861 Lake City Fla. 32056
Fee Simple Owner Name & Address _____
Bonding Co. Name & Address _____
Architect/Engineer Name & Address; Freeman Design Group 305 E. Duval St.
Mortgage Lenders Name & Address _____
Property ID Number 26-35-16-02308-054 Estimated Cost of Construction $53,117.00
Subdivision Name FAIRWAY VIEW Lot 14 Block _____ Unit 2-A Phase _____
Driving Directions 90 West Turn right on Commerce, Turn right on Egret, Turn left on Harris Lake Drive, Turn right on Harris Loop, 3rd house on right.

Type of Construction Residential Construction Number of existing dwellings on property 1
Total Acreage 5165 Lot Size _____ Do You need A Culvert Permit or Culvert Waiver or Have an existing Drive
Actual Distance of structure from property lines – Front N/A Side N/A Side N/A Rear N/A
Total Building Height 26'-4" Number of stories 2 Heated floor area 1049 roof pitch 4/12

Application is hereby made to obtain a permit to do work and installations as indicated. I certify that no work or installation has commenced prior to the issuance of a permit and that all work be performed to meet the standards of all laws regulating construction in this jurisdiction. Total 1049

OWNERS AFFIDAVIT: I hereby certify that all the foregoing information is accurate and all work will be done in compliance with all applicable laws and regulating construction and zoning.

WARNING TO OWNER: YOUR FAILURE TO RECORD A NOTICE OF COMMENCMENT MAY RESULT IN YOU PAYING TWICE FOR IMPROVEMENTS TO YOUR PROPERTY. IF YOU INTEND TO OBTAIN FINANCING, CONSULT WITH YOUR LENDER OR ATTORNEY BEFORE RECORDING YOUR NOTICE OF COMMENCEMENT.

_____
Owner Builder or Agent (includingContractor)

_____
Contractor Signature
Contractors License Number _____
Competency Card Number _____

STATE OF FLORIDA
COUNTY OF COLUMBIA

Sworn to (or affirmed) and subscribed before me
This _____ day of _____ 20_____
Personally known _____ or Produced Identification

NOTARY STAMP/ SEAL

Kerri L. Clark
Notary Signature

Kerri L Clark
My Commission DD373744
Expires November 21, 2008

APPRAISAL REPORT

OF

196 NW Harrris Loop
Lake City, FL 32055

PREPARED FOR

J. L. DuPree Construction
3000 E. US Hwy 90
Lake City, FL 32055

AS OF

Sept. 3, 2004

PREPARED BY

Shubert Appraisal Services
Dennis Y. Shubert
Lake City, Florida 32025

Shubert Appraisal Services

APPRAISAL AND REPORT IDENTIFICATION

File No. 05-0138

Borrower N/A

Property Address 196 NW Harrris Loop

City Lake City County Columbia State FL Zip Code 32055

Lender/Client J. L. DuPree Construction Address 3000 E. US Hwy 90, Lake City, FL 32055

This Appraisal conforms to one of the following definitions:

[X] Complete Appraisal
The act or process of estimating value, or an opinion of value, performed without invoking the Departure rule.

[ ] Limited Appraisal
The act or process of estimating value, or an opinion of value, performed under and resulting from invoking the Departure Rule.

This Report is one of the following types:

[ ] Self Contained
A written report prepared under Standards Rule 2-2(A) of a Complete or Limited Appraisal performed under Standard 1.

[X] Summary
A written report prepared under Standards Rule 2-2(B) of a Complete or Limited Appraisal performed under Standard 1.

[ ] Restricted
A written report prepared under Standards Rule 2-2(C) of a Complete or Limited Appraisal performed under Standard 1 for client use only.

Comments on Standards Rule 2-3

I certify that, to the best of my knowledge and belief:

- The statements of fact contained in this report are true and correct.
- The reported analyses, opinions, and conclusions are limited only by the reported assumptions and limiting conditions, and are my personal, impartial, and unbiased professional analyses, opinions and conclusions.
- I have no (or the specified) present or prospective interest in the property that is the subject of this report, and no (or the specified) personal interest with respect to the parties involved.
- I have no bias with respect to the property that is the subject of this report or the parties involved with this assignment.
- My engagement in this assignment was not contingent upon developing or reporting predetermined results.
- My compensation for completing this assignments is not contingent upon the development or reporting of a predetermined value or direction in value that favors the cause of the client, the amount of the value opinion, the attainment of a stipulated result, or the occurrence of a subsequent event directly related to the intended use of this appraisal.
- My analyses, opinion and conclusions were developed and this report has been prepared, in conformity with the Uniform Standards of Professional Appraisal Practice.
- I have (or have not) made a personal inspection of the property that is the subject of this report.
- No one provided significant real property appraisal assistance to the person signing this certification. (If there are exceptions, the name of each individual providing significant real property appraisal assistance must be stated.)

Comments on Appraisal and Report Identification

Note any departures from Standards Rules 1-3, 1-4, plus any USPAP-related issues requiring disclosure:

The appraisal report is prepared for the sole and exclusive use of the lender, J. L. DuPree Construction, to assist with internal decision making. The appraiser is not a home inspector. This report should not be relied upon to disclose any conditions present in the subject property. The appraisal report does not guarantee the property is free of defects. A professional home inspection is recommended.

Dennis Y. Shubert has completed the continuing education requirements for the State of Florida.

The value stated in this report is a retrospective value for market conditions as of September 3, 2004.

Date of Inspection: numerous dates with the last date being November 8, 2005
Effective Date of Value: September 3, 2004
Date of Report: November 10, 2005

APPRAISER:

Signature:
Name: Dennis Y. Shubert
Date Signed: November 10, 2005
State Certification #: St.Cert.Res.REA RD3131
or State License #:
State: FL
Expiration Date of Certification or License: 11/30/06

SUPERVISORY APPRAISER (only if required)

Signature:
Name:
Date Signed:
State Certification #:
or State License #:
State:
Expiration Date of Certification or License:
[ ] Did [ ] Did Not Inspect Property

UNIFORM RESIDENTIAL APPRAISAL REPORT

File No. 05-0138

SUBJECT

Property Description

Property Address: 196 NW Harrris Loop | City: Lake City | State: FL | Zip Code: 32055
Legal Description: Lot 14, Fairway View S/D, Unit 2-A | County: Columbia
Assessor's Parcel No. 26-3s-16-02308-054 | Tax Year: N/A | R.E. Taxes $ | Special Assessments $
Borrower: N/A | Current Owner: Robert & Margaret Manley | Occupant: [ ] Owner [ ] Tenant [X] Vacant
Property rights appraised: [X] Fee Simple [ ] Leasehold | Project Type: [ ] PUD [ ] Condominium (HUD/VA only) | HOA$ /Mo.
Neighborhood or Project Name: Southern Oaks Country Club | Map Reference: County | Census Tract: 9906
Sale Price $: N/A | Date of Sale | Description and $ amount of loan charges/concessions to be paid by seller
Lender/Client: J. L. DuPree Construction | Address: 3000 E. US Hwy 90, Lake City, FL 32055
Appraiser: Dennis Y. Shubert | Address: 906 SE Division Avenue Lake City, Florida 32025

NEIGHBORHOOD

Location	[ ] Urban	[X] Suburban	[ ] Rural	**Predominant occupancy**	**Single family housing** PRICE $(000)	AGE (yrs)	**Present land use %**	**Land use change**
Built up	[ ] Over 75%	[X] 25-75%	[ ] Under 25%	[X] Owner	100 Low	5	One family 70	[X] Not likely [ ] Likely
Growth rate	[ ] Rapid	[X] Stable	[ ] Slow	[ ] Tenant	300 High	25	2-4 family	[ ] In process
Property values	[ ] Increasing	[X] Stable	[ ] Declining	[X] Vacant (0-5%)	Predominant		Multi-family	To:
Demand/supply	[ ] Shortage	[X] In balance	[ ] Over supply	[ ] Vacant (over 5%)	175	10	Commercial	
Marketing time	[ ] Under 3 mos.	[X] 3-6 mos.	[ ] Over 6 mos.				Vacant 30	

Note: race and the racial composition of the neighborhood are not appraisal factors.

Neighborhood boundaries and characteristics: See attached addenda.

Factors that affect the marketability of the properties in the neighborhood (proximity to employment and amenities, employment stability, appeal to market, etc.):
No adverse factors were noted to affect the marketability of the subject property within its neighborhood location. Proximity to employment centers, schools, and shopping areas is considered to be typical for suburban areas of Columbia County.

Market conditions in the subject neighborhood (including support for the above conclusions related to the trend of property values, demand/supply, and marketing time -- such as data on competitive properties for sale in the neighborhood, description of the prevalence of sales and financing concessions, etc.):
Market conditions within the neighborhood area appear to be stable with no measurable increase or decrease in value noted over the past 12 months. Financing is available from a variety of sources including both conventional lending institutions and governmental agencies.

PUD

Project Information for PUDs (If applicable -- Is the developer/builder in control of the Home Owner's Association (HOA)? [ ] Yes [ ] No
Approximate total number of units in the subject project _____ Approximate total number of units for sale in the subject project _____
Describe common elements and recreational facilities:

SITE

Dimensions: 150' +- x 150' +-
Site area: .52 Ac. +- | Corner Lot [ ] Yes [X] No
Specific zoning classification and description: RSF-1, Residential Single Family
Zoning compliance: [X] Legal [ ] Legal nonconforming (Grandfathered use) [ ] Illegal [ ] No Zoning
Highest & best use as improved: [X] Present use [ ] Other use (explain)

Utilities	Public	Other	Off-site Improvements	Type	Public	Private
Electricity	[X]		Street	Asphalt	[X]	[ ]
Gas	[ ]		Curb/gutter		[ ]	[ ]
Water	[X]		Sidewalk		[ ]	[ ]
Sanitary sewer	[ ]	Septic/Typical	Street lights		[ ]	[ ]
Storm sewer	[ ]		Alley		[ ]	[ ]

Topography	Level
Size	Average
Shape	Approximately Square
Drainage	Appears Adequate
View	Good-Golf Course& Lake
Landscaping	Good
Driveway Surface	Concrete
Apparent easements	None Noted
FEMA Special Flood Hazard Area	[ ] Yes [X] No
FEMA Zone	X
Map Date	1-6-88
FEMA Map No.	120070 0175 B

Comments (apparent adverse easements, encroachments, special assessments, slide areas, illegal or legal nonconforming zoning use, etc.): See Attached Addenda

DESCRIPTION OF IMPROVEMENTS

GENERAL DESCRIPTION		EXTERIOR DESCRIPTION		FOUNDATION		BASEMENT		INSULATION		
No. of Units	1	Foundation	CCB-G	Slab	100%	Area Sq. Ft.	0	Roof		[ ]
No. of Stories	1.0	Exterior Walls	Brick-G	Crawl Space	N/A	% Finished	N/A	Ceiling	Avg	[X]
Type (Det./Att.)	Detached	Roof Surfaces	F/S-G	Basement	N/A	Ceiling	N/A	Walls	Avg	[X]
Design (Style)	Ranch	Gutters & Dwnspts.	No	Sump Pump	N/A	Walls	N/A	Floor		[ ]
Existing/Proposed	Existing	Window Type	Alm I/SH-A	Dampness	N/A	Floor	N/A	None		[ ]
Age (Yrs.)	23 Yrs+-	Storm/Screens	Screens-A	Settlement	N/A	Outside Entry	N/A	Unknown		[ ]
Effective Age (Yrs.)	10 Yrs+-	Manufactured House	No	Infestation	N/A					

ROOMS	Foyer	Living	Dining	Kitchen	Den	Family Rm.	Rec. Rm.	Bedrooms	# Baths	Laundry	Other	Area Sq. Ft.
Basement												0
Level 1		1	1	1	1	FLRoom		3	2.50	X		2,119
Level 2												0
												0

Finished area **above** grade contains: 8 Rooms; 3 Bedroom(s); 2.50 Bath(s); 2,119 Square Feet of Gross Living Area

INTERIOR	Materials/Condition	HEATING		KITCHEN EQUIP.		ATTIC		AMENITIES			CAR STORAGE	
Floors	Cpt/CTile/Hdwd-G	Type	Cent.HP	Refrigerator	[X]	None	[ ]	Fireplace(s) #	2	[X]	None	[ ]
Walls	DW-G	Fuel	Elec.	Range/Oven	[X]	Stairs	[ ]	Patio	2-C'crete	[X]	Garage	# of cars
Trim/Finish	Wood-G	Condition	Good	Disposal	[ ]	Drop Stair	[X]	Deck		[ ]	Attached	G-2
Bath Floor	CTile-G	COOLING		Dishwasher	[X]	Scuttle	[X]	Porch	Front	[X]	Detached	
Bath Wainscot	CTile-G	Central	Yes	Fan/Hood	[X]	Floor	[ ]	Fence		[ ]	Built-In	
Doors	Wood-G	Other		Microwave	[X]	Heated	[ ]	Pool		[ ]	Carport	
		Condition	Good	Washer/Dryer	[ ]	Finished	[ ]			[ ]	Driveway	C'crete

COMMENTS

Additional features (special energy efficient items, etc.): Heat Pump, Sprinkler System, Circular Drive

Condition of the improvements, depreciation (physical, functional, and external), repairs needed, quality of construction, remodeling/additions, etc.: The subject improvement is a brick home originally constructed in 1980 with a functional floor plan, assumed to have been in good condition and quality of construction is considered to be good. No functional or external inadequacies were noted.

Adverse environmental conditions (such as, but not limited to, hazardous wastes, toxic substances, etc.) present in the improvements, on the site, or in the immediate vicinity of the subject property.: There are no known or apparent adverse environmental conditions that would negatively impact on the value of the property.

Shubert Appraisal Services

File No. 05-0138

Valuation Section

UNIFORM RESIDENTIAL APPRAISAL REPORT

COST APPROACH

ESTIMATED SITE VALUE		= $	70,000
ESTIMATED REPRODUCTION COST-NEW-OF IMPROVEMENTS:			
Dwelling 2,119 Sq. Ft. @ $		= $	0
Bsmt 0 Sq. Ft. @ $		=	0
		=	
Garage/Carport 484 Sq. Ft. @ $		=	0
Total Estimated Cost New		= $	0
Less Physical 20	Functional	External	
Depreciation 0	0	0	= $ 0
Depreciated Value of Improvements		= $	0
"As is" Value of Site Improvements		= $	
INDICATED VALUE BY COST APPROACH		= $	70,000

Comments on Cost Approach (such as, source of cost estimate, site value, square foot calculation and for HUD, VA and FmHA, the estimated remaining economic life of the property): Estimated reproduction cost obtained from Marshall & Swift Residential Handbook and compared to local contractors estimates. Site values based on sales of residential home sites located within similar neighborhood areas.

Est. Remaining Econ. Life: 40 yrs

SALES COMPARISON ANALYSIS

ITEM	SUBJECT	COMPARABLE NO. 1		COMPARABLE NO. 2		COMPARABLE NO. 3	
Address	196 NW Harrris Loop Lake City	436 NW Frontier Drive Lake City		265 Harris Lake Drive Lake City		378 NW Springhollow Blvd. Lake City	
Proximity to Subject		1/4 Mile +-		1/2 Mile +-		1 Mile +-	
Sales Price	$ N/A		$ 199,900		$ 227,500		$ 180,000
Price/Gross Liv. Area	$ 0.00	$ 91.61		$ 76.06		$ 87.38	
Data and/or Verification Source		MLS,Inspection,Realtor		MLS,Inspection,Realtor		MLS,Inspection,Realtor	
VALUE ADJUSTMENTS	DESCRIPTION	DESCRIPTION	+(-)$ Adjustment	DESCRIPTION	+(-)$ Adjustment	DESCRIPTION	+(-)$ Adjustment
Sales or Financing Concessions		N/A		N/A		N/A	
Date of Sale/Time		8/18/03		10/11/04		9/3/04	
Location	Suburban S/D	Suburban S/D		Suburban S/D		Suburban S/D	
Leasehold/ Fee Simple	Fee	Fee		Fee		Fee	
Site	.52 Ac. +-	.30 Ac. +-		.93 Ac.		1.01 Ac. +-	
View	Good-Golf&Lake	Inferior-Golf	+30,000	Good-Similar		Inferior-Creek	+40,000
Design and Appeal	Ranch	Ranch-Avg		Ranch		SplitLevel-A	
Quality of Construction	Brick-G	Brick-G		Brick-G		Frame-A	
Age	23 Yrs+-	3 Yrs+-	-10,000	28 Yrs+-	+2,500	26 Yrs +-	+1,500
Condition	Good	Good		Good		Good	
Above Grade Room Count (Total / Bdrms / Baths)	8 / 3 / 2.50	6 / 3 / 2.50		7 / 3 / 2.50		7 / 3 / 2.50	
Gross Living Area	2,119 Sq. Ft.	2,182 Sq. Ft.	-1,600	2,991 Sq. Ft.	-21,800	2,060 Sq. Ft.	+1,500
Basement & Finished Rooms Below Grade	0	N/A		N/A		N/A	
Functional Utility	Average	Average		Average		Average	
Heating/Cooling	CH&A	CH&A		CH&A		CH&A	
Energy Efficient Items	HP, Insul.Wind.	Similar		Similar		Similar	
Garage/Carport	G-2	G-2		G-2 W/Stg		G-2	
Porch, Patio, Deck, Fireplace(s), etc.	Patio,Porch 2 Fireplaces	EP,ScnPch F/P	+3,000	EP, Patio SpklrSys, F/P	+3,000	Deck F/P	+4,000
Fence, Pool, etc.	Circle Drive	None	+1,000	None	+1,000	Workshop	-3,000
Kitchen Equip.	Complete	Similar		Similar		Similar	
Net Adj. (total)		[X] + [ ] - $	22,400	[ ] + [X] - $	-15,300	[X] + [ ] - $	44,000
Adjusted Sales Price of Comparable		Net=11% Gross=23% $	222,300	Net=-7% Gross=12% $	212,200	Net=24% Gross=28% $	224,000

Comments on Sales Comparison (including the subject property's compatibility to the neighborhood, etc.): See Attached Addenda

ITEM	SUBJECT	COMPARABLE NO. 1	COMPARABLE NO. 2	COMPARABLE NO. 3
Date, Price and Data Source, for prior sales within year of appraisal	N/A	N/A	December 2003, $195,000 MLS, Public Records	N/A

Analysis of any current agreement of sale, option, or listing of the subject property and analysis of any prior sales of subject and comparables within one year of the date of appraisal.
See Attached Addenda

INDICATED VALUE BY SALES COMPARISON APPROACH $ 220,000

INDICATED VALUE BY INCOME APPROACH (If Applicable) Estimated Market Rent $ N/A /Mo.x Gross Rent Multiplier =$

RECONCILIATION

This appraisal is made [X] "as is" [ ] subject to the repairs, alterations, inspections or conditions listed below [ ] subject to completion per plans and specifications.

Conditions of Appraisal: See attached Appr. Cert. & Statement of Limiting Conditions. Income approach not used because the subject property is not typically income producing.

Final Reconciliation: See Attached Addenda

The purpose of this appraisal is to estimate the market value of the real property that is subject to this report, based on the above conditions and the certification, contingent and limiting conditions, and market value definition that are stated in the attached Freddie Mac Form 439/Fannie Mae Form 1004B (Revised 6-93).

I (WE) ESTIMATE THE MARKET VALUE, AS DEFINED, OF THE REAL PROPERTY THAT IS THE SUBJECT OF THIS REPORT, AS OF Sept. 3, 2004 **(WHICH IS THE DATE OF INSPECTION AND THE EFFECTIVE DATE OF THIS REPORT) TO BE $** 220,000

APPRAISER:		SUPERVISORY APPRAISER (ONLY IF REQUIRED):	
Signature		Signature	[ ] Did [ ] Did Not Inspect Property
Name	Dennis Y. Shubert	Name	
Date Report Signed	November 10, 2005	Date Report Signed	
State Certification #	St.Cert.Res.REA RD3131 State FL	State Certification #	State
Or State License #	State	Or State License #	State

Borrower N/A
Property Address 196 NW Harrris Loop
City Lake City County Columbia State FL Zip Code 32055
Lender/Client J. L. DuPree Construction Address 3000 E. US Hwy 90, Lake City, FL 32055

NEIGHBORHOOD BOUNDARIES AND CHARACTERISTICS

The subject has a suburban location just west of Lake City, FL. It is more specifically located within a restricted development around Southern Oaks Country Club f/k/a Lake City Country Club. This area consist of a variety of sizes, ages and styles of homes with both golf frontage lots and interior lots The subject is located in a subdivision known as Fairway View. Neighborhood boundaries are believed to encompass those areas south of CSX Railroad, east of I-75, north of US 90 and west of Lake Harris. This area is restricted to site built residential improvements. The subject conforms well to its neighborhood surroundings.

HIGHEST AND BEST USE

Base on the current zoning and land use regulations and surrounding property uses, I have estimated the highest and best use for the subject property to be for continued residential use.

SITE COMMENTS

The subject site is a typical homesite in this subdivision area. There are no adverse easements and encroachments affecting the subject. Public sewer is not available to the subject. According to FEMA Flood Map Panel 120070 0175 B dated 1/6/88, a portion the subject property appears to be within flood hazard area "A".

SALES COMPARISON COMMENTS

Every effort was made to select comparable sales that would require the least amount of overall gross and net adjustments. The sales selected were the most comparable and best indicators of value as of the date of value for the subject. This appraisal is for a retrospective value. The appraiser was instructed to appraise the subject property's market value prior to damages sustained during flooding associated with hurricanes which passed through the area in September 2004 and therefore the data of value is September 3, 2004. The subject is a brick home located on the 6th fairway at Southern Oaks Country Club. Those homes located along the 4th, 5th, and 6th holes also have a view of Harris Lake. This location is considered superior to other golf course lots within the development. Sale #2 has a similar location along the 4th fairway. This Sale closed after the date of value but was under contract before the date of value and was considered in this report due to its similar location on the golf course with a view of Harris Lake. Sales #1 & #3 required upward adjustments for their inferior view when compared to the subject. Sale #1 is also located on the golf course and Sale #3 is located in a near by competing subdivision and fronts along a small creek. Although site areas varied slightly, all were single lots within their developments and were considered to have similar utility. Any adjustments for site are incorporated within the view adjustment on the adjustment grid. All three Sales required adjustments for their differences in effective ages when compared to the subject. All other adjustments were based on their contribution value when compared to the subject. GLA adjustments were made at $25 per square foot. All sales are closed transactions.

ANALYSIS OF CURRENT AGREEMENT

The subject was under contract for $210,000 which is supported by the data presented. The sale did not become final due to flooding. The subject is currently being repaired and remodeled. The current owners are adding a second story along the west end of the home as represented in the photographs. Sale #2 also has a recorded sale in December 2003 for $195,000. There have been no sales of the subject or other comparable sales within 36 months of this report.

FINAL RECONCILIATION

In this instance, the Sales Comparison Approach is given the greatest weight because it is the most relied on in valuing properties similar to the subject and reflects the actions of buyers and sellers. The Cost Approach was not developed and is not deemed applicable due to the difficulty in extracting accrued depreciation from available market data. The value stated in this report is a retrospective value and as stated previously, the appraiser's assignment was to estimate market value prior to storms and flooding associated with Hurricane Frances which came through Lake City on Labor Day weekend 2004. I have chosen a date of value of Friday September 3, 2004.

Shubert Appraisal Services
SKETCH ADDENDUM

File No. 05-0138

Borrower N/A
Property Address 196 NW Harrris Loop
City Lake City County Columbia State FL Zip Code 32055
Lender/Client J. L. DuPree Construction Address 3000 E. US Hwy 90, Lake City, FL 32055

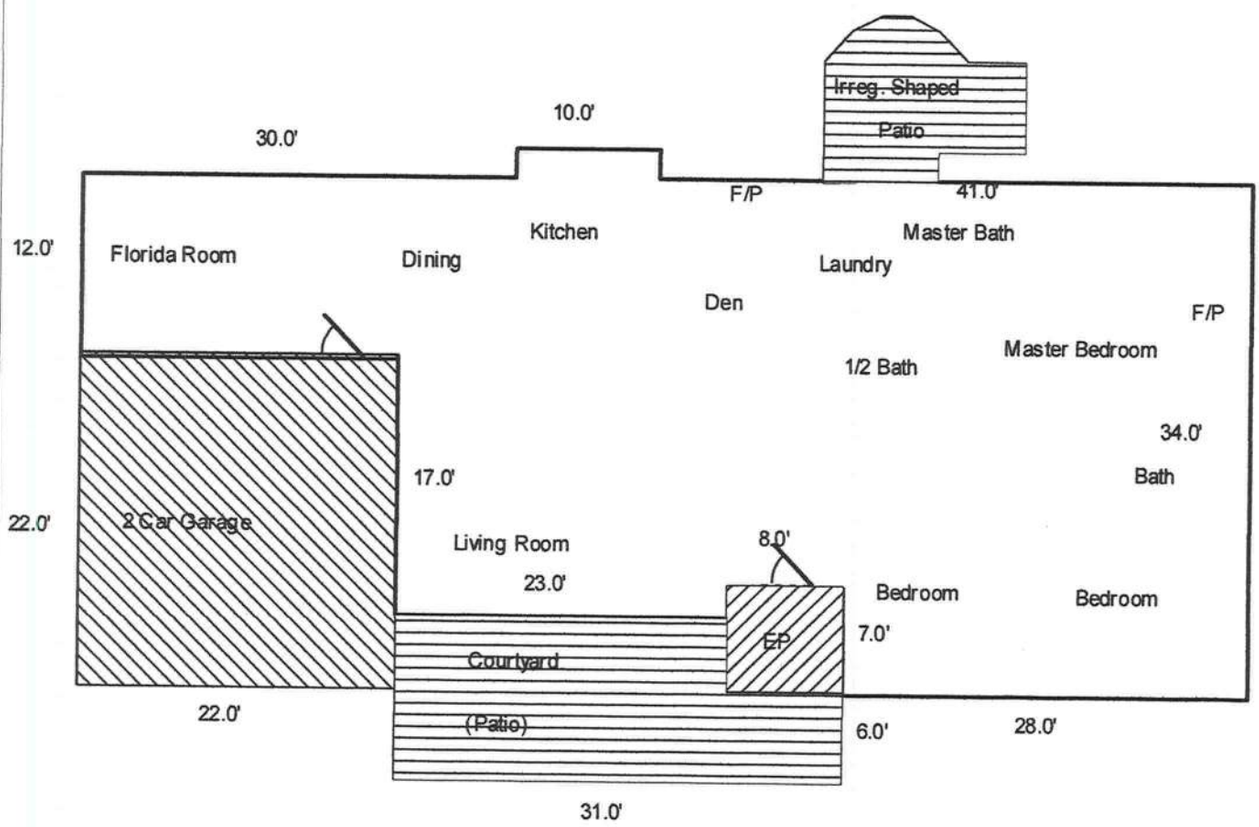

Shubert Appraisal Services

SKETCH ADDENDUM

File No. 05-0138

Borrower N/A

Property Address 196 NW Harrris Loop

City Lake City County Columbia State FL Zip Code 32055

Lender/Client J. L. DuPree Construction Address 3000 E. US Hwy 90, Lake City, FL 32055

SKETCH CALCULATIONS	Perimeter	Area
Living Area		
First Floor		
A1 : 10.0 x 2.0 =		20.0
A2 : 81.0 x 12.0 =		972.0
A3 : 23.0 x 2.0 =		46.0
A4 : 59.0 x 15.0 =		885.0
A5 : 28.0 x 7.0 =		196.0
		2119.0
Total Living Area		**2119.0**
Garage Area		
Attached Garage		
A6 : 22.0 x 22.0 =		484.0
		484.0
Total Garage Area		**484.0**
Porch Area		
Porch		
A7 : 8.0 x 7.0 =		56.0
		56.0
Total Porch Area		**56.0**
Patio/Deck Area		
2-Patio		
A8 : 14.0 x 6.0 =		84.0
A9 : 8.0 x 2.0 =		16.0
A10 : 0.5 x 2.0x1.0 =		1.0
A11 : 0.5 x 2.0x1.0 =		1.0
A12 : 2.0 x 1.0 =		2.0
A13 : 0.5 x 2.0x2.0 =		2.0
A14 : 0.5 x 2.0x2.0 =		2.0
A15 : 6.0 x 2.0 =		12.0
		120.0
Patio		
A16 : 23.0 x 5.0 =		115.0
A17 : 31.0 x 6.0 =		186.0
		301.0
Total Patio/Deck Area		**421.0**

Shubert Appraisal Services

SUBJECT PHOTO ADDENDUM

File No. 05-0138

Borrower N/A

Property Address 196 NW Harrris Loop

City Lake City County Columbia State FL Zip Code 32055

Lender/Client J. L. DuPree Construction Address 3000 E. US Hwy 90, Lake City, FL 32055

FRONT OF SUBJECT PROPERTY
196 NW Harrris Loop
Lake City

REAR OF SUBJECT PROPERTY

STREET SCENE

Shubert Appraisal Services

SUBJECT PHOTO ADDENDUM

File No. 05-0138

Borrower	N/A						
Property Address	196 NW Harrris Loop						
City	Lake City	County	Columbia	State	FL	Zip Code	32055
Lender/Client	J. L. DuPree Construction		Address	3000 E. US Hwy 90, Lake City, FL 32055			

View of 6th fairway & Harris Lake

Shubert Appraisal Services
COMPARABLES 1-2-3

File No. 05-0138

Borrower	N/A						
Property Address	196 NW Harrris Loop						
City	Lake City	County	Columbia	State	FL	Zip Code	32055
Lender/Client	J. L. DuPree Construction		Address	3000 E. US Hwy 90, Lake City, FL 32055			

COMPARABLE SALE # 1
436 NW Frontier Drive
Lake City

COMPARABLE SALE # 2
265 Harris Lake Drive
Lake City

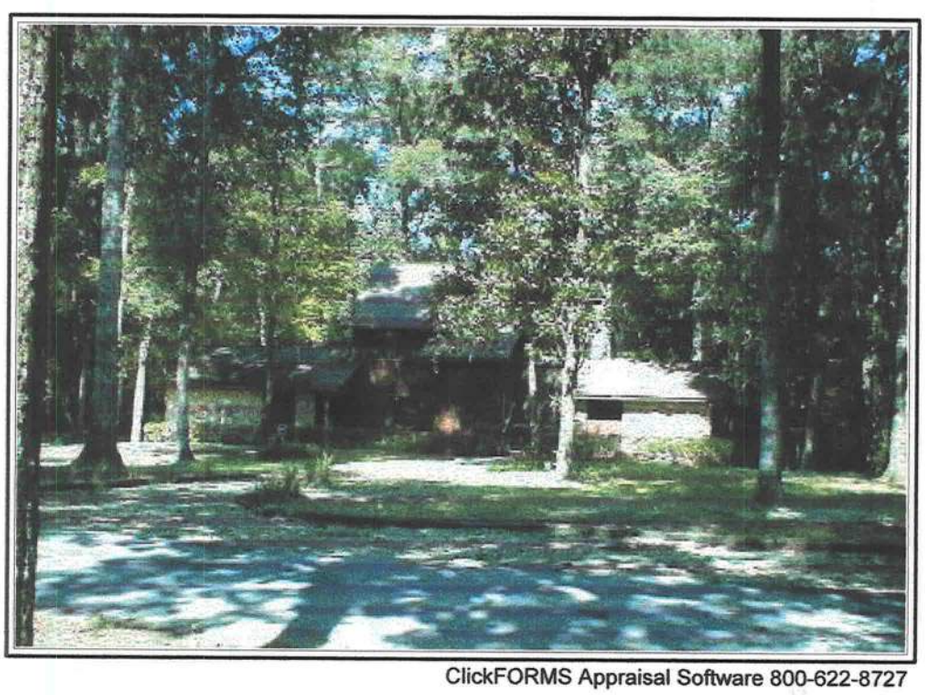

COMPARABLE SALE # 3
378 NW Springhollow Blvd.
Lake City

Shubert Appraisal Services

LOCATION MAP ADDENDUM

File No. 05-0138

Borrower N/A

Property Address 196 NW Harrris Loop

City Lake City County Columbia State FL Zip Code 32055

Lender/Client J. L. DuPree Construction Address 3000 E. US Hwy 90, Lake City, FL 32055

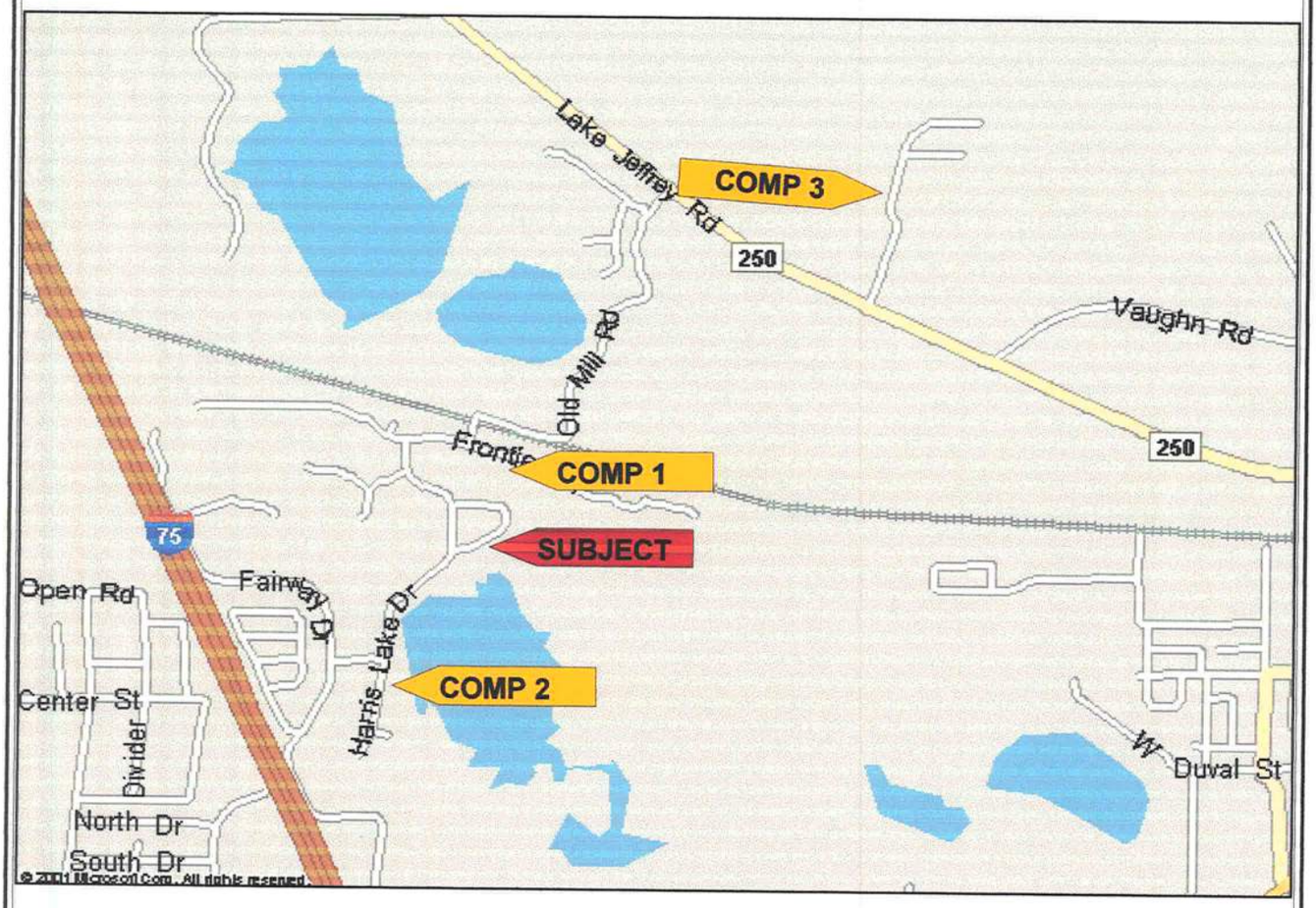

Shubert Appraisal Services

FLOOD MAP ADDENDUM

File No. 05-0138

Borrower N/A

Property Address 196 NW Harrris Loop

City Lake City County Columbia State FL Zip Code 32055

Lender/Client J. L. DuPree Construction Address 3000 E. US Hwy 90, Lake City, FL 32055

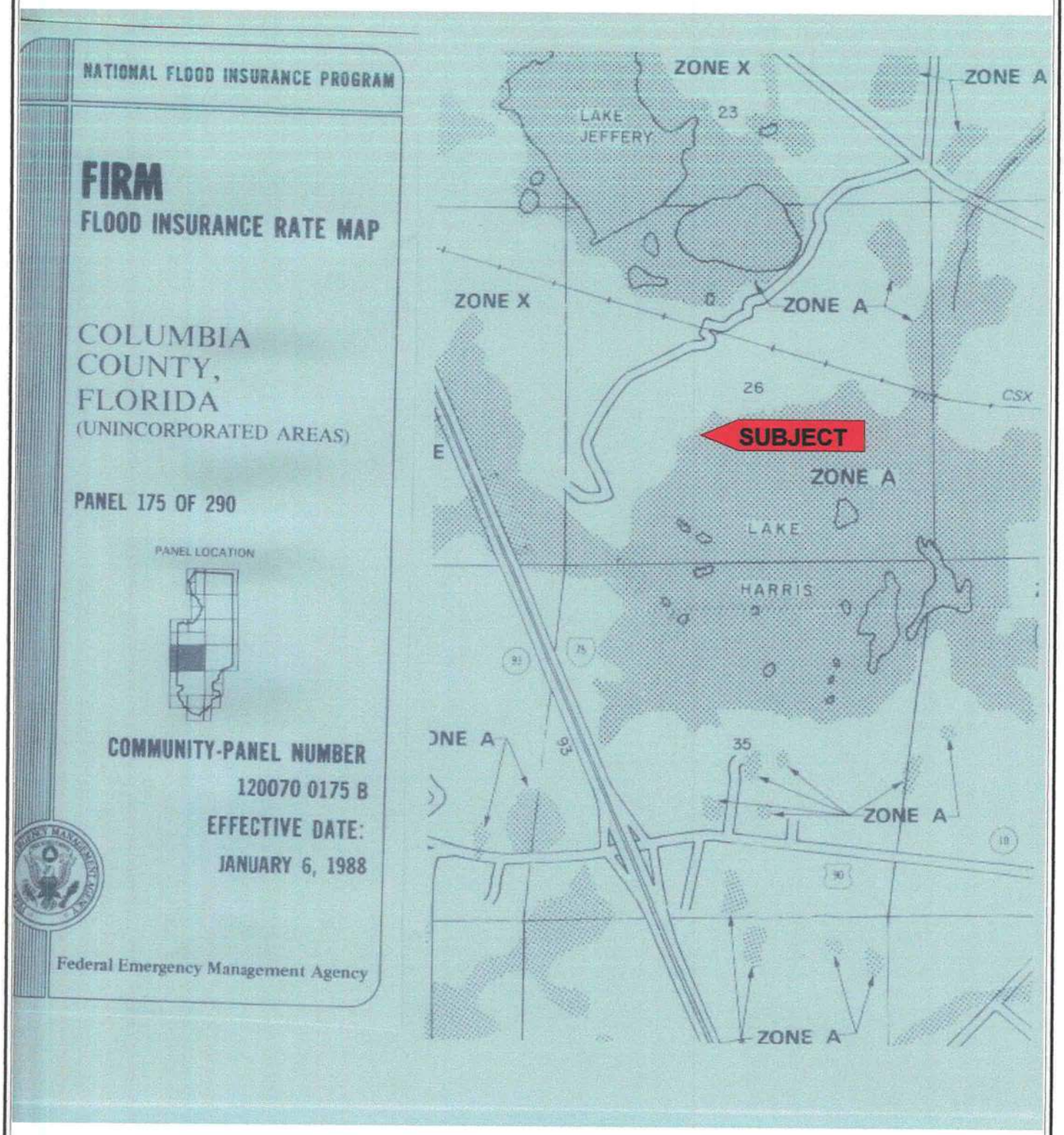

DEFINITION OF MARKET VALUE: The most probable price which a property should bring in a competitive and open market under all conditions requisite to a fair sale, the buyer and seller, each acting prudently, knowledgeably and assuming the price is not affected by undue stimulus. Implicit in this definition is the consummation of a sale as of a specified date and the passing of title from seller to buyer under conditions whereby: (1) buyer and seller are typically motivated; (2) both parties are well informed or well advised, and each acting in what he considers his own best interest; (3) a reasonable time is allowed for exposure in the open market; (4) payment is made in terms of cash in U. S. dollars or in terms of financial arrangements comparable thereto; and (5) the price represents the normal consideration for the property sold unaffected by special or creative financing or sales concessions* granted by anyone associated with the sale.

*Adjustments to the comparables must be made for special or creative financing or sales concessions. No adjustments are necessary for those costs which are normally paid by sellers as a result of tradition or law in a market; these costs are readily identifiable since the seller pays these costs in virtually all sales transactions. Special or creative financing adjustments can be made to the comparable property by comparisons to financing terms offered by a third party institutional lender that is not already involved in the property or transaction. Any adjustment should not be calculated on a mechanical dollar for dollar cost of the financing or concession but the dollar amount of any adjustment should approximate the market's reaction to the financing or concessions based on the appraiser's judgment.

STATEMENT OF LIMITING CONDITIONS

CONTINGENT AND LIMITING CONDITIONS: The appraiser's certification that appears in the appraisal report is subject to the following conditions:

1. The appraiser will not be responsible for matters of a legal nature that affect either the property being appraised or the title to it. The appraiser assumes that the title is good and marketable and, therefore, will not render any opinions about the title. The property is appraised on the basis of it being under responsible ownership.

2. The appraiser has provided a sketch in the appraisal report to show approximate dimensions of the improvements and the sketch is included only to assist the reader of the report in visualizing the property and understanding the appraiser's determination of its size.

3. The appraiser has examined the available flood maps that are provided by the Federal Emergency Management Agency (or other data sources) and has noted in the appraisal report whether the subject site is located in an identified Special Flood Hazard Area. Because the appraiser is not a surveyor, he or she makes no guarantees, express or implied, regarding this determination.

4. The appraiser will not give testimony or appear in court because he or she made an appraisal of the property in question, unless specific arrangements to do so have been made beforehand.

5. The appraiser has estimated the value of the land in the cost approach at its highest and best use and the improvements at their contributory value. These separate valuations of the land and improvements must not be used in conjunction with any other appraisal and are invalid if they are so used.

6. The appraiser has noted in the appraisal report any adverse conditions (such as, needed repairs, depreciation, the presence of hazard wastes, toxic substances, etc.) observed during the inspection of the subject property or that he or she became aware of during the normal research involved in performing the appraisal. Unless otherwise stated in the appraisal report, the appraiser has no knowledge of any hidden or unapparent conditions of the property or adverse environmental conditions (including the presence of hazardous wastes, toxic substances, etc.) that would make the property more or less valuable, and has assumed that there are no such conditions and makes no guarantees or warranties, express or implied, regarding the condition of the property. The appraiser will not be responsible for any such conditions that do exist or for any engineering or testing that might be required to discover whether such conditions exist. Because the appraiser is not an expert in the field of environmental hazards, the appraisal report must not be considered as an environmental assessment of the property.

7. The appraiser obtained the information, estimates, and opinions that were expressed in the appraisal report from sources that he or she considers to be reliable and believes them to be true and correct. The appraiser does not assume responsibility for the accuracy of such items that were furnished by other parties.

8. The appraiser will not disclose the contents of the appraisal report except as provided for in the Uniform Standards of Professional Appraisal Practice.

9. The appraiser has based his or her appraisal report and valuation conclusion for an appraisal that is subject to satisfactory completion, repairs, or alterations on the assumption that completion of the improvements will be performed in a workmanlike manner.

10. The appraiser must provide his or her prior written consent before the lender/client specified in the appraisal report can distribute the appraisal report (including conclusions about the property value, the appraiser's identity and professional designations, and references to any professional appraisal organizations or the firm with which the appraiser is associated) to anyone other than the borrower; the mortgage or its successors and assigns; the mortgage insurer; consultants; professional appraisal organizations; any state or federally approved financial institution; or any department, agency, or instrumentality of the United States or any state or the District of Columbia; except that the lender/client may distribute the property description section of the report only to data collection or reporting service(s) without having to obtain the appraiser's prior written consent. The appraiser's written consent and approval must also be obtained before the appraisal can be conveyed by anyone to the public through advertising, public relations, news, sales, or other media.

Shubert Appraisal Services

USPAP COMPLIANCE ADDENDUM

File No. 05-0138

APPRAISER'S CERTIFICATION:
The following Certification statements are in addition to and may supercede the signed Appraiser's Certification attached to this appraisal report. This Appraiser's Certification is compliant with the current edition of the Uniform Standards of Professional Appraisal Practice.

I certify that, to the best of my knowledge and belief:

The statements of fact contained in this report are true and correct.

The reported analyses, opinions, and conclusions are limited only by the reported assumptions and limiting conditions and are my personal, impartial, and unbiased professional analyses, opinions, and conclusions.

I have no present or prospective interest in the property that is the subject of this report and no personal interest with respect to the parties involved.

I have no bias with respect to the property that is the subject of this report or to the parties invoved with this assignment.

My engagement in this assignment was not contingent upon developing or reporting predetermined results.

My compensation for completing this assignement is not contingent upon the development or reporting of a predetermined value or direction in value that favors the cause of the client, the amount of the value opinion, the attainment of a stipulated result, or the occurrence of a subsequent event directly related to the intended use of this appraisal.

My analyses, opinions, and conclusions were developed, and this report has been prepared, in conformity with the Uniform Standards of Professional Appraisal Practice.

I [X] have [ ] have not made a personal inspection of the property that is the subject of this report. (If more than one person signs this certification, the certification must clearly specify which individuals did and which individuals did not make a personal inspection of the appraised property.)

No one provided significant real property appraisal assistance to the person signing this certification. (If there are exceptions, the name of each individual providing significant real property appraisal assistance must be stated.)

PURPOSE, INTENDED USE, AND INTENDED USER OF THE APPRAISAL:
The purpose of the appraisal is to estimate the market value of the subject property, as defined in this report, as of the effective date of this report. The intended use of the appraisal is to assist the client and any other intended users in the underwriting, approval, and funding of the mortgage loan. The intended users of this report are the stated client and any other institutions involved in the underwriting , approval, and funding of the mortgage loan. No one else, including the purchaser and seller, should rely on the estimate of value or any other conclusions contained in this appraisal report.

ANALYSIS AND REPORT FORM:
The appraisal is based on the information gathered by the appraiser from public records, other identified sources, inspection of the subject property and neighborhood, and selection of comparable sales, listings, and/or rentals within the subject market area.

The original source of the comparable data described in the Data Source section of the market grid along with the source of confirmation provided, where available, the original source is presented first. The sources and data are considered reliable. When conflicting information was provided, source deemed most reliable has been used. Data believed to be unreliable was not included in the report or used as a basis for the value conclusion. The extent of the analysis to this assignment is stated in the Appraiser's Certification included above and attached to this report.

DEFINITION OF INSPECTION:
The term "Inspection", as used in this report, is not the same level of inspection that is required for a "Professional Home Inspection". The appraiser does not fully inspect the electrical system, plumbing systems, mechanical systems, foundation system, floor structure, or subfloor. The appraiser is not an expert in construction materials and the purpose of the appraisal is to make an economic evaluation of the subject property. If the client needs a more detailed inspection of the property, a home inspection, by a Professional Home Inspector, is suggested.

DIGITAL SIGNATURES:
The signature(s) affixed to this report, and certification, were applied by the original appraiser(s) or supervisory appraiser and represent their acknowledgements of the facts, opinions and conclusions found in the report. Each appraiser(s) applied his or her signature electronically using a password encrypted method. Hence these signatures have more safeguards and carry the same validity as the individual's hand applied signature. If the report has a hand-applied signature, this comment does not apply.

OPINION OF MARKET VALUE VS ESTIMATE OF MARKET VALUE:
The current Uniform Standards of Professional Appraisal Practice defines the market value conclusion as an opinion of market value and not an estimate of market value.

THREE YEAR SALES HISTORY FOR THE SUBJECT PROPERTY:
The appraiser has complied with Standards Rule 1-5b and 2-2b (ix) requiring the appraiser to analyze and report all sales of the subject property that occurred within the three (3) years prior to the effective date of the appraisal. If this information was available to the appraiser(s), it is reported in the subject column of Sales Comparison Analysis section of the appraisal report.

EXPOSURE PERIOD:
By studying the sales of similar comparable residential properties with value ranges as identified in the Neighborhood section of this report and discussions with individuals knowledgeable of current neighborhood trends in the subject area, the appraiser feels that the exposure time for the subject property is equal to the indicated Marketing Time identified in the Neighborhood section of this appraisal report.

Signature		Signature	[ ] Did [ ] Did Not Inspect Property
Name Dennis Y. Shubert		Name	
Date Report Signed November 10, 2005		Date Report Signed	
State Certification # St.Cert.Res.REA RD3131	State FL	State Certification #	State
Or State License #	State	Or State License #	State

STATE OF FLORIDA
DEPARTMENT OF HEALTH

APPLICATION FOR ONSITE SEWAGE DISPOSAL SYSTEM CONSTRUCTION PERMIT

Permit Application Number 05-0960N

PART II - SITE PLAN

Scale: Each block represents 5 feet and 1 inch = 50 feet.

.5A

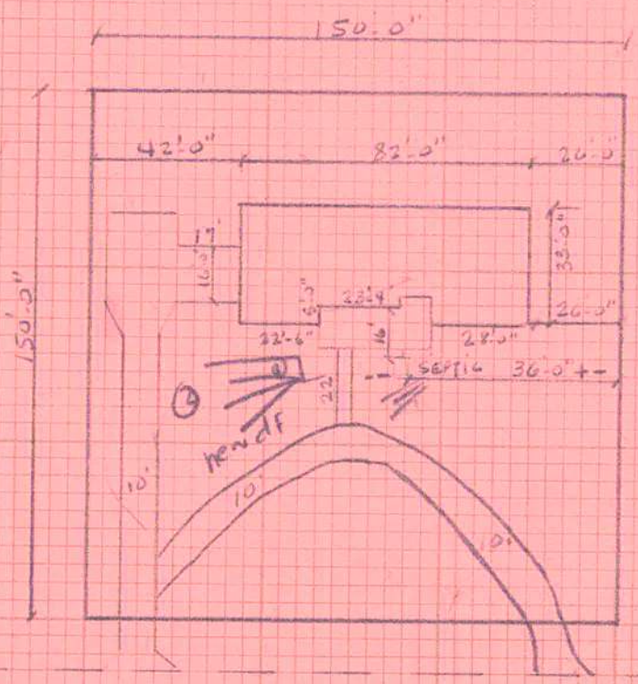

Notes: PUBLIC WATER

Site Plan submitted by: Lamar Dutree (Signature) Agent (Title)

Plan Approved X Not Approved ____ Date 9/14/05

By Sallie Gradly. EST. COLUMBIA County Health Department

ALL CHANGES MUST BE APPROVED BY THE COUNTY HEALTH DEPARTMENT

AGREEMENT AND RELEASE

The undersigned, Robert Manley Margaret Manley (herein "Owner"), whose mailing address is 1305 S Atlantic #510 Cocoa Beach FL 32931, hereby executes this Agreement and Release to induce COLUMBIA COUNTY, FLORIDA to issue a building or other development permit on Owner's property as described below as follows:

FAIRWAY VIEW UNIT 2-A, Lot 14

Owner has made application to COLUMBIA COUNTY, FLORIDA for a building permit or other development permit for the property. Owner is aware and has been advised that the property has flooded in the past and may be subject to flooding in the future. Owner release COLUMBIA COUNTY, FLORIDA and COLUMBIA COUNTY shall not be liable to Owner or any other parties as a result of flooding conditions which have or may occur on Owner's property or damage to improvements on Owner's property. This is with the understanding that COLUMBIA COUNTY takes no unlawful actions which substantially contributes to flooding contributes to flooding conditions on Owner's property.

Owner agrees that if Owner in the future transfers any interest in the property to any other third party, Owner will provided said future transferee with a copy of this agreement, and advise said future transferee of the fact that Owner's property has flooded in the past and the circumstances surrounding the flooding; and further that COLUMBIA COUNTY is not liable to Owner or any future transferee for any damages suffered as a result of these flood conditions.

Owner and any future transferee of the property will at all times comply with the Columbia County Comprehensive Plan and Land Development Regulations regarding any development upon the property.

Owner acknowledges this Agreement and Release will be recorded among the public records of Columbia County.

Dated this 18 Day of Novembre 2005.

Signed, sealed and delivered
in the presence of:

Witness

Print or Type Name

Witness

Print or Type Name

Margaret Manley
OWNER

Margaret Manley
Print or Type Name

Robert A. Manley
CO-OWNER

Robert A. Manley
Print or Type Name

COLUMBIA COUNTY, FLORIDA

By: _____
Name: _____
Title: _____

STATE OF FLORIDA
COUNTY OF COLUMBIA

The foregoing instrument was acknowledged before me this 18th Day of November, 2005 by Margaret Robert Manley Who is personally known to me or who has produced a Driver's license as identification.

Kerri L. Clark
Notary Public, State of Florida

(NOTARIAL SEAL)

My Commission Expires:
November 21, 2008

Scanner

7 Pages

Project Summary
Entire House
Glenn I. Jones,Inc.

Job:
Date: Apr 16, 2005
By: gij jr

552 NW Hilton Ave., Lake City, FL 32055 Phone: 386-752-5389 Fax: 386-755-3401 Email: glenn@bizsea.rr.com Web: glennijonesinc.com

Project Information

For: Manley addition

Notes: JL DuPree Const.

Design Information

Weather: Gainesville, FL, US

Winter Design Conditions

Outside db	33	°F
Inside db	70	°F
Design TD	37	°F

Summer Design Conditions

Outside db	92	°F
Inside db	75	°F
Design TD	17	°F
Daily range	M	
Relative humidity	50	%
Moisture difference	52	gr/lb

Heating Summary

Structure	27893	Btuh
Ducts	1395	cfm
Central vent (0 cfm)	0	Btuh
Humidification	0	Btuh
Piping	0	Btuh
Equipment load	29288	Btuh

Sensible Cooling Equipment Load Sizing

Structure	16341	Btuh
Ducts	1634	Btuh
Central vent (144 cfm)	0	Btuh
Blower	0	Btuh
Use manufacturer's data	n	
Rate/swing multiplier	0.97	
Equipment sensible load	17435	Btuh

Infiltration

Method	Simplified
Construction quality	Average
Fireplaces	0

	Heating	Cooling
Area (ft²)	2477	2477
Volume (ft³)	24770	24770
Air changes/hour	0.70	0.40
Equiv. AVF (cfm)	289	165

Latent Cooling Equipment Load Sizing

Structure	7169	Btuh
Ducts	0	Btuh
Central vent (144 cfm)	0	Btuh
Equipment latent load	7169	Btuh
Equipment total load	24604	Btuh
Req. total capacity at 0.70 SHR	2.1	ton

Heating Equipment Summary

Make	n/a
Trade	n/a
Model	n/a

Efficiency	n/a	
Heating input		
Heating output	0	Btuh
Temperature rise	0	°F
Actual air flow	0	cfm
Air flow factor	0.000	cfm/Btuh
Static pressure	0.00	in H2O
Space thermostat	n/a	

Cooling Equipment Summary

Make	n/a
Trade	n/a
Cond	n/a
Coil	n/a

Efficiency	n/a	
Sensible cooling	0	Btuh
Latent cooling	0	Btuh
Total cooling	0	Btuh
Actual air flow	0	cfm
Air flow factor	0.000	cfm/Btuh
Static pressure	0.00	in H2O
Load sensible heat ratio	0.00	

Printout certified by ACCA to meet all requirements of Manual J 7th Ed.

FORM 600A-2001

FLORIDA ENERGY EFFICIENCY CODE FOR BUILDING CONSTRUCTION

Florida Department of Community Affairs

Residential Whole Building Performance Method A

Project Name:	**manley addition**	Builder:	
Address:		Permitting Office:	
City, State:	,	Permit Number:	
Owner:		Jurisdiction Number:	
Climate Zone:	**North**		

1. New construction or existing		Addition	
2. Single family or multi-family		Single family	
3. Number of units, if multi-family		1	
4. Number of Bedrooms		2	
5. Is this a worst case?		No	
6. Conditioned floor area (ft²)		2477 ft²	
7. Glass area & type	Single Pane	Double Pane	
a. Clear glass, default U-factor	0.0 ft²	87.0 ft²	
b. Default tint	0.0 ft²	0.0 ft²	
c. Labeled U or SHGC	0.0 ft²	0.0 ft²	
8. Floor types			
a. Raised Wood, Post or Pier		ft²	
b. N/A			
c. N/A			
9. Wall types			
a. Frame, Wood, Exterior		R=13.0, 2818.1 ft²	
b. N/A			
c. N/A			
d. N/A			
e. N/A			
10. Ceiling types			
a. Under Attic		R=30.0, 1272.6 ft²	
b. N/A			
c. N/A			
11. Ducts			
a. Sup: Unc. Ret: Unc. AH: Interior		Sup. R=6.0, 40.0 ft	
b. N/A			

12. Cooling systems		
a. Central Unit	Cap: 23.5 kBtu/hr	
	SEER: 12.00	
b. N/A		
c. N/A		
13. Heating systems		
a. Electric Heat Pump	Cap: 18.3 kBtu/hr	
	HSPF: 7.80	
b. N/A		
c. N/A		
14. Hot water systems		
a. N/A		
b. N/A		
c. Conservation credits		
(HR-Heat recovery, Solar		
DHP-Dedicated heat pump)		
15. HVAC credits	MZ-C,	
(CF-Ceiling fan, CV-Cross ventilation,		
HF-Whole house fan,		
PT-Programmable Thermostat,		
MZ-C-Multizone cooling,		
MZ-H-Multizone heating)		

Glass/Floor Area: 0.04 | Total as-built points: 21815 | Total base points: 27010 | PASS

I hereby certify that the plans and specifications covered by this calculation are in compliance with the Florida Energy Code.

PREPARED BY: Glenn Jones Jr.

DATE: 10/3/05

I hereby certify that this building, as designed, is in compliance with the Florida Energy Code.

OWNER/AGENT: _____

DATE: _____

Review of the plans and specifications covered by this calculation indicates compliance with the Florida Energy Code. Before construction is completed this building will be inspected for compliance with Section 553.908 Florida Statutes.

GREAT SEAL OF THE STATE OF FLORIDA — IN GOD WE TRUST

BUILDING OFFICIAL: _____

DATE: _____

FORM 600A-2001

SUMMER CALCULATIONS

Residential Whole Building Performance Method A - Details

ADDRESS: , , , PERMIT #:

BASE				AS-BUILT							
GLASS TYPES .18 X Conditioned Floor Area	X BSPM	= Points		Type/SC	Overhang Ornt	Len	Hgt	Area X	SPM X	SOF	= Points
.18	2477.0	20.04	8935.0	Double, Clear	W	2.0	6.0	25.0	38.52	0.85	820.6
				Double, Clear	S	2.0	5.0	12.0	35.87	0.72	311.4
				Double, Clear	E	2.0	6.0	50.0	42.06	0.85	1789.1
				As-Built Total:				**87.0**			**2921.1**
WALL TYPES	Area X	BSPM =	Points	Type		R-Value		Area X	SPM	=	Points
Adjacent	0.0	0.00	0.0	Frame, Wood, Exterior		13.0		2818.1	1.50		4227.2
Exterior	2818.1	1.70	4790.8								
Base Total:	**2818.1**		**4790.8**	**As-Built Total:**				**2818.1**			**4227.2**
DOOR TYPES	Area X	BSPM =	Points	Type				Area X	SPM	=	Points
Adjacent	0.0	0.00	0.0								
Exterior	0.0	0.00	0.0								
Base Total:	**0.0**		**0.0**	**As-Built Total:**				**0.0**			**0.0**
CEILING TYPES	Area X	BSPM =	Points	Type		R-Value		Area X	SPM X SCM =		Points
Under Attic	1272.6	1 73	2201.6	Under Attic		30.0		1272.6	1.73 X 1 00		2201.6
Base Total:	**1272.6**		**2201.6**	**As-Built Total:**				**1272.6**			**2201.6**
FLOOR TYPES	Area X	BSPM =	Points	Type		R-Value		Area X	SPM	=	Points
Slab	0.0(p)	0.0	0 0	Raised Wood, Post or Pier		0.0		1272.0	2.80		3565.4
Raised	1272.0	-3.99	-5075.3								
Base Total:			**-5075.3**	**As-Built Total:**				**1272.0**			**3565.4**
INFILTRATION	Area X	BSPM =	Points					Area X	SPM	=	Points
	2477.0	10.21	25290.2					2477.0	10.21		25290.2
Summer Base Points:			**36142.3**	**Summer As-Built Points:**							**38205.4**
Total Summer Points	X System Multiplier	=	Cooling Points	Total Component	X Cap Ratio	X Duct Multiplier (DM x DSM x AHU)	X System Multiplier		X Credit Multiplier	=	Cooling Points
36142.3	**0.4266**		**15418.3**	38205.4 **38205.4**	1 000 **1.00**	(1.090 x 1 147 x 0 91) **1.138**	0.284 **0.284**		0.950 **0.950**		11744.5 **11744.5**

FORM 600A-2001

WINTER CALCULATIONS

Residential Whole Building Performance Method A - Details

ADDRESS: , , , PERMIT #:

BASE				AS-BUILT							
GLASS TYPES .18 X Conditioned Floor Area	X BWPM	= Points		Type/SC	Overhang Ornt	Len	Hgt	Area X	WPM X	WOF	= Points
.18	2477.0	12.74	5680.3	Double, Clear	W	2.0	6.0	25.0	20.73	1.04	539.9
				Double, Clear	S	2.0	5.0	12.0	13.30	1.40	223.4
				Double, Clear	E	2.0	6.0	50.0	18.79	1.06	995.5
				As-Built Total:				**87.0**			**1758.9**
WALL TYPES	Area X	BWPM =	Points	Type			R-Value	Area X	WPM	=	Points
Adjacent	0.0	0.00	0.0	Frame, Wood, Exterior			13.0	2818.1	3.40		9581.5
Exterior	2818.1	3.70	10427.0								
Base Total:	**2818.1**		**10427.0**	**As-Built Total:**				**2818.1**			**9581.5**
DOOR TYPES	Area X	BWPM =	Points	Type				Area X	WPM	=	Points
Adjacent	0.0	0.00	0.0								
Exterior	0.0	0.00	0.0								
Base Total:	**0.0**		**0.0**	**As-Built Total:**				**0.0**			**0.0**
CEILING TYPES	Area X	BWPM =	Points	Type			R-Value	Area X	WPM X	WCM =	Points
Under Attic	1272.6	2.05	2608.8	Under Attic			30.0	1272.6	2.05 X 1.00		2608.8
Base Total:	**1272.6**		**2608.8**	**As-Built Total:**				**1272.6**			**2608.8**
FLOOR TYPES	Area X	BWPM =	Points	Type			R-Value	Area X	WPM	=	Points
Slab	0.0(p)	0.0	0.0	Raised Wood, Post or Pier			0.0	1272.0	5.76		7333.1
Raised	1272.0	0.96	1221.1								
Base Total:			**1221.1**	**As-Built Total:**				**1272.0**			**7333.1**
INFILTRATION	Area X	BWPM =	Points					Area X	WPM	=	Points
	2477.0	-0.59	-1461.4					2477.0	-0.59		-1461.4
Winter Base Points:			**18475.7**	**Winter As-Built Points:**							**19820.9**
Total Winter Points	X System Multiplier	= Heating Points		Total Component	X Cap Ratio	X Duct Multiplier (DM x DSM x AHU)		X System Multiplier	X Credit Multiplier	= Heating Points	
18475.7	**0.6274**	**11591.7**		19820.9 **19820.9**	1.000 **1.00**	(1.069 x 1.169 x 0.93) **1.162**		0.437 **0.437**	1.000 **1.000**	10070.7 **10070.7**	

FORM 600A-2001

WATER HEATING & CODE COMPLIANCE STATUS

Residential Whole Building Performance Method A - Details

ADDRESS: ,,, PERMIT #:

BASE					AS-BUILT							
WATER HEATING												
Number of Bedrooms	X	Multiplier	=	Total	Tank Volume	EF	Number of Bedrooms	X	Tank Ratio	X Multiplier	X Credit Multiplier	= Total
2		2746.00		0.0			2		1.00	2746.00	1.00	5492.0
					As-Built Total:							**0.0**

CODE COMPLIANCE STATUS

BASE								AS-BUILT							
Cooling Points	+	Heating Points	+	Hot Water Points	=	Total Points		Cooling Points	+	Heating Points	+	Hot Water Points	=	Total Points	
15418		**11592**		**0**		**27010**		**11745**		**10071**		**0**		**21815**	

PASS

FORM 600A-2001

Code Compliance Checklist

Residential Whole Building Performance Method A - Details

ADDRESS: , , , PERMIT #:

6A-21 INFILTRATION REDUCTION COMPLIANCE CHECKLIST

COMPONENTS	SECTION	REQUIREMENTS FOR EACH PRACTICE	CHECK
Exterior Windows & Doors	606.1.ABC.1.1	Maximum:.3 cfm/sq.ft. window area; .5 cfm/sq.ft. door area.	
Exterior & Adjacent Walls	606.1.ABC.1.2.1	Caulk, gasket, weatherstrip or seal between: windows/doors & frames, surrounding wall; foundation & wall sole or sill plate; joints between exterior wall panels at corners; utility penetrations; between wall panels & top/bottom plates; between walls and floor. EXCEPTION: Frame walls where a continuous infiltration barrier is installed that extends from, and is sealed to, the foundation to the top plate.	
Floors	606.1.ABC.1.2.2	Penetrations/openings >1/8" sealed unless backed by truss or joint members. EXCEPTION: Frame floors where a continuous infiltration barrier is installed that is sealed to the perimeter, penetrations and seams.	
Ceilings	606.1.ABC.1.2.3	Between walls & ceilings; penetrations of ceiling plane of top floor; around shafts, chases, soffits, chimneys, cabinets sealed to continuous air barrier; gaps in gyp board & top plate; attic access. EXCEPTION: Frame ceilings where a continuous infiltration barrier is installed that is sealed at the perimeter, at penetrations and seams.	
Recessed Lighting Fixtures	606.1.ABC.1.2.4	Type IC rated with no penetrations, sealed; or Type IC or non-IC rated, installed inside a sealed box with 1/2" clearance & 3" from insulation; or Type IC rated with < 2.0 cfm from conditioned space, tested.	
Multi-story Houses	606.1.ABC.1.2.5	Air barrier on perimeter of floor cavity between floors.	
Additional Infiltration reqts	606.1.ABC.1.3	Exhaust fans vented to outdoors, dampers; combustion space heaters comply with NFPA, have combustion air.	

6A-22 OTHER PRESCRIPTIVE MEASURES (must be met or exceeded by all residences.)

COMPONENTS	SECTION	REQUIREMENTS	CHECK
Water Heaters	612.1	Comply with efficiency requirements in Table 6-12. Switch or clearly marked circuit breaker (electric) or cutoff (gas) must be provided. External or built-in heat trap required.	
Swimming Pools & Spas	612.1	Spas & heated pools must have covers (except solar heated). Non-commercial pools must have a pump timer Gas spa & pool heaters must have a minimum thermal efficiency of 78%.	
Shower heads	612.1	Water flow must be restricted to no more than 2.5 gallons per minute at 80 PSIG.	
Air Distribution Systems	610.1	All ducts, fittings, mechanical equipment and plenum chambers shall be mechanically attached, sealed, insulated, and installed in accordance with the criteria of Section 610. Ducts in unconditioned attics: R-6 min. insulation.	
HVAC Controls	607.1	Separate readily accessible manual or automatic thermostat for each system.	
Insulation	604.1, 602.1	Ceilings-Min. R-19. Common walls-Frame R-11 or CBS R-3 both sides. Common ceiling & floors R-11.	

ENERGY PERFORMANCE LEVEL (EPL) DISPLAY CARD

ESTIMATED ENERGY PERFORMANCE SCORE* = 86.4

The higher the score, the more efficient the home.

1. New construction or existing		Addition	
2. Single family or multi-family		Single family	
3. Number of units, if multi-family		1	
4. Number of Bedrooms		2	
5. Is this a worst case?		No	
6. Conditioned floor area (ft²)		2477 ft²	
7. Glass area & type	Single Pane	Double Pane	
a. Clear - single pane	0.0 ft²	87.0 ft²	
b. Clear - double pane	0.0 ft²	0.0 ft²	
c. Tint/other SHGC - single pane	0.0 ft²	0.0 ft²	
d. Tint/other SHGC - double pane			
8. Floor types			
a. Raised Wood, Post or Pier		R=0.0, 1272.0ft²	
b. N/A			
c. N/A			
9. Wall types			
a. Frame, Wood, Exterior		R=13.0, 2818.1 ft²	
b. N/A			
c. N/A			
d. N/A			
e. N/A			
10. Ceiling types			
a. Under Attic		R=30.0, 1272.6 ft²	
b. N/A			
c. N/A			
11. Ducts			
a. Sup: Unc. Ret: Unc. AH: Interior		Sup. R=6.0, 40.0 ft	
b. N/A			

12. Cooling systems		
a. Central Unit	Cap: 23.5 kBtu/hr	
	SEER: 12.00	
b. N/A		
c. N/A		
13. Heating systems		
a. Electric Heat Pump	Cap: 18.3 kBtu/hr	
	HSPF: 7.80	
b. N/A		
c. N/A		
14. Hot water systems		
a. N/A		
b. N/A		
c. Conservation credits (HR-Heat recovery, Solar DHP-Dedicated heat pump)		
15. HVAC credits (CF-Ceiling fan, CV-Cross ventilation, HF-Whole house fan, PT-Programmable Thermostat, MZ-C-Multizone cooling, MZ-H-Multizone heating)	MZ-C,	

I certify that this home has complied with the Florida Energy Efficiency Code For Building Construction through the above energy saving features which will be installed (or exceeded) in this home before final inspection. Otherwise, a new EPL Display Card will be completed based on installed Code compliant features.

Builder Signature: _____ Date: _____

Address of New Home: _____ City/FL Zip: _____

**NOTE: The home's estimated energy performance score is only available through the FLA/RES computer program. This is not a Building Energy Rating. If your score is 80 or greater (or 86 for a US EPA/DOE EnergyStar™ designation), your home may qualify for energy efficiency mortgage (EEM) incentives if you obtain a Florida Energy Gauge Rating. Contact the Energy Gauge Hotline at 321/638-1492 or see the Energy Gauge web site at www.fsec.ucf.edu for information and a list of certified Raters. For information about Florida's Energy Efficiency Code For Building Construction, contact the Department of Community Affairs at 850/487-1824.*

For Permit only

J.L DuPree Construction Services, Inc.
P.O Box 2861
Lake City, Florida 32054
(386) 754-5678 Fax: (386) 754-5431

OWNER: MANLEY
ADDRESS:

PHONE:
DATE:

	ITEM	PRICE	SUBCONTRACTOR/SUPPLIER
01019a	ARCHITECT/PLANS	N/A	
01019d	PERMITS	N/A	
01019e	SURVEY	—	
01019f	APPRAISAL	—	
01510	TEMP UTILITIES	—	
01523	SANITARY FACILITIES	300.00	70x4 - 280 + 19.60
01600	EQUIPMENT RENTAL	N/A	
01740	TRASH REMOVAL / CLEAN UP	2800.00	
		—	
02102	CLEARING AND GRUBBING	—	
02210	SITEWORK	—	
02223	BACKFILLING / FILL DIRT	—	
02230	SOIL COMPACTION	—	
02281	TERMITE CONTROL	—	
02540	SEPTIC TANK SYSTEMS	N/A	
02600	PAVING & SURFACING	N/A	
02630	SIDEWALK / DRIVEWAY / BERMS	N/A	
02800	LANDSCAPING / SOD	N/A	
02811	LANDSCAPE IRRIGATION	N/A	
03000	FOOTER LABOR	N/A	
03100	CONCRETE FORMWORK LABOR	N/A	
03100a	FOUNDATION PIER / LAY-OUT LABOR	N/A	
03100b	CONCRETE PREP / PLACEMENT LABOR	N/A	
03210	STEEL BAR/ WELDED WIRE / ANCHOR BOLTS	N/A	
03310	CONCRETE	N/A	
03360	SPECIAL PLACED CONCRETE PUMPED	—	
04100	MORTAR / MASONRY SAND	—	
04200	UNIT MASONRY BRICK LABOR	—	
04210	MASONRY BRICK	—	
04220	CONCRETE MASONRY BLOCK	—	
04400	STONE LABOR	—	
05000	METALS		
06100	FRAMING STRUCTURAL / SHEATHING	7298.00	
06112	FRAMING SHEATHING LABOR	7558.00	KENT GILLIAM
06190	WOOD TRUSSES + FLOOR SYSTEM	5502.00	Haulark
06200	FINISH CARPENTRY LABOR	1560.00	
06220	MILL WORK / INTERIOR TRIM	1782.00	
06411	WOOD CABINETS / VANITIES	4500.00	
06090	NAILS / FASTENERS / ANCHORS	—	
		—	
07190	VAPOR BARRIER / HOUSEWRAP / PLASTICS	—	
07213	BATT / BLANKET INSULATION	3082.00	
07217	BLOWN INSULATION	—	
07311	ASPHALT / FIBERGLASS SHINGLES	1356.00	
07311a	SHINGLE LABOR	936.00	
07460	CLADDING / SIDING	2603.00	
07466	FASCIA / SOFFIT	1344.00	
07610	SHEET METAL ROOFING	—	
07610a	SHEET METAL ROOFING LABOR	—	
07620	SHEET METAL FLASHING / TRIM	—	
07631	GUTTERS / DOWNSPOUTS	—	
07700	FLASHING	370.00	
07800	ROOF ACCESSORIES	164.00	
08100	METAL DOORS AND FRAMES	1427.00	
08100a	DOORS AND FRAMES LABOR	300.00	
08211	FLUSH / MASONITE DOOR UNITS	942.00	
08350	FOLDING DOORS BI-FOLD	859.00	
08360	SECTIONAL OVERHEAD DOOR	880.00	
08360a	SECTIONAL OVERHEAD DOOR OPERATOR	—	
08400	ENTRANCE / STOREFRONTS	—	
08520	ALUMINUM WINDOWS	1608.00	

47,171.00

J.L DuPree Construction Services, Inc.
P.O Box 2861
Lake City, Florida 32054
(386) 754-5678 Fax: (386) 754-5431

08520a	ALUMINUM WINDOWS INSTALLED	—	
08700	HARDWARE AND SPECIALTIES	—	
08710	DOOR HARDWARE	458.00	
08830	MIRROR GLASS	365.00	
		—	
09000	ALTERNATIVES - ACROCRETE	3162.00	
09000a	ACROCRETE BANDS / TRIM		
09000b	ACROCRETE LABOR		
09100	LATH AND STUCCO	—	
09250	GYPSUM WALL BOARD	8414.00	
09311	CERAMIC TILE	2929.00	
09660	VINYL BASE	—	
09682	CARPET / VINYL	3560.00	
09900	PAINTING	4500.00	
		—	
10305	MANUFACTURED FIREPLACE	—	
10670	STORAGE / SHELVING	326.00	
10800	TOILET AND BATH ACCESSORIES	185.00	
		—	
11000	APPLIANCES	—	
		—	
12500	WINDOW TREATMENTS / SILLS	—	
		—	
15200	WATER SUPPLY	—	
15400	PLUMBING	5850.00	
15540	HEAT / AIR CONDITIONING	4692.00	
		—	
16010	ELECTRICAL	4790.00	
16240	EXHAUST EQUIPMENT	—	
16500	LIGHTING	1000.00	
	SECURITY	—	
	COMMUNICATION	—	

TOTAL COST ESTIMATE: 87,382.00 for permitting
ALLOWANCE- OVER HEAD / PROFIT: _____

TOTAL: _____

TOTAL HEATED AREA _____
CARPORT / GARAGE _____
STORAGE / UTILITY _____
PORCH _____
TOTAL SQ. FT. _____

NAME OF CONTRACTOR: _____
SIGNATURE _____

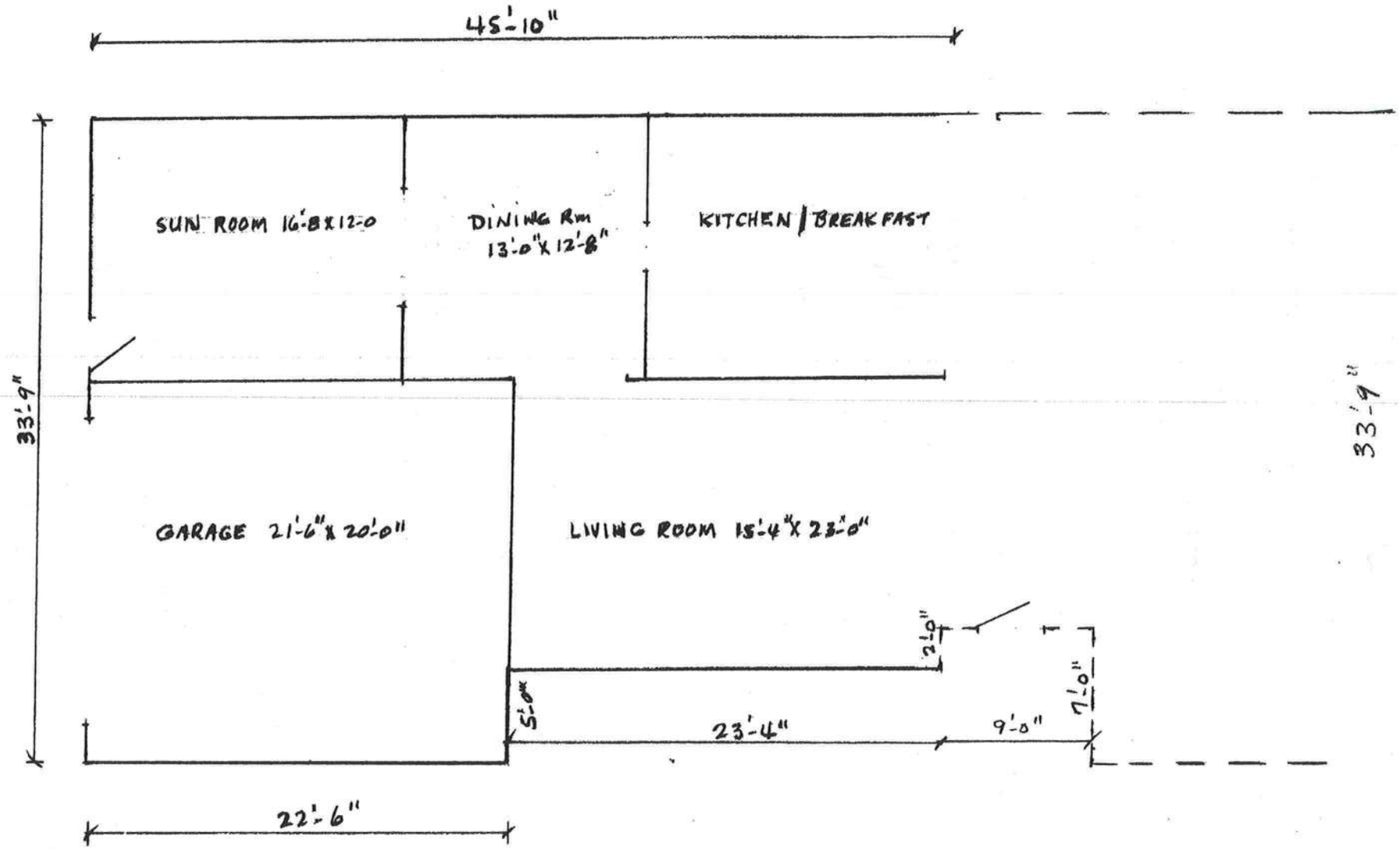

ROBERT & JAN MANLEY

EXISTING NOT INCLUDER IN NEW PLANS

90'

COLUMBIA COUNTY BUILDING DEPARTMENT
CHECKLIST FOR PERMITTING

Application #_____

_____ **Notarized completed Building Permit Application**
Notes:

_____ **If an Owner Builder, signed Disclosure Statement**
Notes:

_____ **Recorded Deed or a Notarized Affidavit (form from the Building Dept.)**
Notes:

_____ **Approved and Signed Site Plan from Environmental Health on the septic**
Notes:

_____ **Site plan with actual distances of the structure to each property line**
Notes:

_____ **911 Address form, Contact 386.752.8787 for an appointment**
Notes:

_____ **Residential or Commercial Checklist completed**
Notes:

_____ **Driving directions including all road names**
Notes:

_____ **Well information (on plans or letter from the well driller)**
Notes:

_____ **Before the 1st inspection Recorded Notice of Commencement signed by owner**
Notes:

_____ **2 sets of plans (blueprints)**
Notes:

_____ **2 sets of sealed truss engineering**
Notes:

_____ **2 sets of energy code & manual J**
Notes:

_____ **2 sets of engineering packets including specs on windows, doors, roof and etc.**
Notes:

Spanmore

7 Pages

Project Summary
Entire House
Glenn I. Jones,Inc.

Job:
Date: Apr 16, 2005
By: gij jr

552 NW Hilton Ave., Lake City, FL 32055 Phone: 386-752-5389 Fax: 386-755-3401 Email: glenn@bizsearr.com Web: glennjonesinc.com

Project Information

For: Manley addition

Notes: JL DuPree Const.

Design Information

Weather: Gainesville, FL, US

Winter Design Conditions

Outside db	33	°F
Inside db	70	°F
Design TD	37	°F

Summer Design Conditions

Outside db	92	°F
Inside db	75	°F
Design TD	17	°F
Daily range	M	
Relative humidity	50	%
Moisture difference	52	gr/lb

Heating Summary

Structure	27893	Btuh
Ducts	1395	cfm
Central vent (0 cfm)	0	Btuh
Humidification	0	Btuh
Piping	0	Btuh
Equipment load	29288	Btuh

Sensible Cooling Equipment Load Sizing

Structure	16341	Btuh
Ducts	1634	Btuh
Central vent (144 cfm)	0	Btuh
Blower	0	Btuh
Use manufacturer's data	n	
Rate/swing multiplier	0.97	
Equipment sensible load	17435	Btuh

Infiltration

Method	Simplified
Construction quality	Average
Fireplaces	0

	Heating	Cooling
Area (ft²)	2477	2477
Volume (ft³)	24770	24770
Air changes/hour	0.70	0.40
Equiv. AVF (cfm)	289	165

Latent Cooling Equipment Load Sizing

Structure	7169	Btuh
Ducts	0	Btuh
Central vent (144 cfm)	0	Btuh
Equipment latent load	7169	Btuh
Equipment total load	24604	Btuh
Req. total capacity at 0.70 SHR	2.1	ton

Heating Equipment Summary

Make	n/a
Trade	n/a
Model	n/a
Efficiency	n/a
Heating input	
Heating output	0 Btuh
Temperature rise	0 °F
Actual air flow	0 cfm
Air flow factor	0.000 cfm/Btuh
Static pressure	0.00 in H2O
Space thermostat	n/a

Cooling Equipment Summary

Make	n/a
Trade	n/a
Cond	n/a
Coil	n/a
Efficiency	n/a
Sensible cooling	0 Btuh
Latent cooling	0 Btuh
Total cooling	0 Btuh
Actual air flow	0 cfm
Air flow factor	0.000 cfm/Btuh
Static pressure	0.00 in H2O
Load sensible heat ratio	0.00

Printout certified by ACCA to meet all requirements of Manual J 7th Ed.

FORM 600A-2001

FLORIDA ENERGY EFFICIENCY CODE FOR BUILDING CONSTRUCTION

Florida Department of Community Affairs

Residential Whole Building Performance Method A

Project Name:	**manley addition**	Builder:	
Address:		Permitting Office:	
City, State:	,	Permit Number:	
Owner:		Jurisdiction Number:	
Climate Zone:	**North**		

1. New construction or existing		Addition	
2. Single family or multi-family		Single family	
3. Number of units, if multi-family		1	
4. Number of Bedrooms		2	
5. Is this a worst case?		No	
6. Conditioned floor area (ft²)		2477 ft²	
7. Glass area & type	Single Pane	Double Pane	
a. Clear glass, default U-factor	0.0 ft²	87.0 ft²	
b. Default tint	0.0 ft²	0.0 ft²	
c. Labeled U or SHGC	0.0 ft²	0.0 ft²	
8. Floor types			
a. Raised Wood, Post or Pier		ft²	
b. N/A			
c. N/A			
9. Wall types			
a. Frame, Wood, Exterior		R=13.0, 2818.1 ft²	
b. N/A			
c. N/A			
d. N/A			
e. N/A			
10. Ceiling types			
a. Under Attic		R=30.0, 1272.6 ft²	
b. N/A			
c. N/A			
11. Ducts			
a. Sup: Unc. Ret: Unc. AH: Interior		Sup. R=6.0, 40.0 ft	
b. N/A			

12. Cooling systems		
a. Central Unit	Cap: 23.5 kBtu/hr	
	SEER: 12.00	
b. N/A		
c. N/A		
13. Heating systems		
a. Electric Heat Pump	Cap: 18.3 kBtu/hr	
	HSPF: 7.80	
b. N/A		
c. N/A		
14. Hot water systems		
a. N/A		
b. N/A		
c. Conservation credits (HR-Heat recovery, Solar DHP-Dedicated heat pump)		
15. HVAC credits (CF-Ceiling fan, CV-Cross ventilation, HF-Whole house fan, PT-Programmable Thermostat, MZ-C-Multizone cooling, MZ-H-Multizone heating)	MZ-C,	

Glass/Floor Area: 0.04

Total as-built points: 21815

Total base points: 27010

PASS

I hereby certify that the plans and specifications covered by this calculation are in compliance with the Florida Energy Code.

PREPARED BY: Glenn Jones Jr.

DATE: 10/3/05

I hereby certify that this building, as designed, is in compliance with the Florida Energy Code.

OWNER/AGENT: _____

DATE: _____

Review of the plans and specifications covered by this calculation indicates compliance with the Florida Energy Code. Before construction is completed this building will be inspected for compliance with Section 553.908 Florida Statutes.

GREAT SEAL OF THE STATE OF FLORIDA — IN GOD WE TRUST

BUILDING OFFICIAL: _____

DATE: _____

FORM 600A-2001

SUMMER CALCULATIONS

Residential Whole Building Performance Method A - Details

ADDRESS: , , , PERMIT #:

BASE				AS-BUILT							
GLASS TYPES .18 X Conditioned Floor Area	X BSPM	= Points		Type/SC	Overhang Ornt	Len	Hgt	Area X	SPM X	SOF =	Points
.18	2477.0	20.04	8935.0	Double, Clear	W	2.0	6.0	25.0	38.52	0.85	820.6
				Double, Clear	S	2.0	5.0	12.0	35.87	0.72	311.4
				Double, Clear	E	2.0	6.0	50.0	42.06	0.85	1789.1
				As-Built Total:				87.0			2921.1
WALL TYPES	Area X	BSPM =	Points	Type		R-Value		Area X	SPM =		Points
Adjacent	0.0	0.00	0.0	Frame, Wood, Exterior		13.0		2818.1	1.50		4227.2
Exterior	2818.1	1.70	4790.8								
Base Total:	2818.1		4790.8	**As-Built Total:**				2818.1			4227.2
DOOR TYPES	Area X	BSPM =	Points	Type				Area X	SPM =		Points
Adjacent	0.0	0.00	0.0								
Exterior	0.0	0.00	0.0								
Base Total:	0.0		0.0	**As-Built Total:**				0.0			0.0
CEILING TYPES	Area X	BSPM =	Points	Type		R-Value		Area X	SPM X SCM =		Points
Under Attic	1272.6	1 73	2201.6	Under Attic		30.0		1272.6	1.73 X 1 00		2201.6
Base Total:	1272.6		2201.6	**As-Built Total:**				1272.6			2201.6
FLOOR TYPES	Area X	BSPM =	Points	Type		R-Value		Area X	SPM =		Points
Slab	0.0(p)	0.0	0 0	Raised Wood, Post or Pier		0.0		1272.0	2.80		3565.4
Raised	1272.0	-3.99	-5075.3								
Base Total:			-5075.3	**As-Built Total:**				1272.0			3565.4
INFILTRATION	Area X	BSPM =	Points					Area X	SPM =		Points
	2477.0	10.21	25290.2					2477.0	10.21		25290.2
Summer Base Points:			36142.3	**Summer As-Built Points:**							38205.4
Total Summer Points	X System Multiplier	= Cooling Points		Total Component	X Cap Ratio	X Duct Multiplier (DM x DSM x AHU)	X System Multiplier	X Credit Multiplier	= Cooling Points		
36142.3	0.4266	15418.3		38205.4 / 38205.4	1 000 / 1.00	(1.090 x 1 147 x 0 91) / 1.138	0.284 / 0.284	0.950 / 0.950	11744.5 / 11744.5		

FORM 600A-2001

WINTER CALCULATIONS

Residential Whole Building Performance Method A - Details

ADDRESS: , , , PERMIT #:

BASE

GLASS TYPES .18 X Conditioned Floor Area	X BWPM	= Points
.18 2477.0	12.74	5680.3

WALL TYPES	Area	X BWPM	= Points
Adjacent	0.0	0.00	0.0
Exterior	2818.1	3.70	10427.0
Base Total:	2818.1		10427.0

DOOR TYPES	Area	X BWPM	= Points
Adjacent	0.0	0.00	0.0
Exterior	0.0	0.00	0.0
Base Total:	0.0		0.0

CEILING TYPES	Area	X BWPM	= Points
Under Attic	1272.6	2.05	2608.8
Base Total:	1272.6		2608.8

FLOOR TYPES	Area	X BWPM	= Points
Slab	0.0(p)	0.0	0.0
Raised	1272.0	0.96	1221.1
Base Total:			1221.1

INFILTRATION	Area	X BWPM	= Points
	2477.0	-0.59	-1461.4

Winter Base Points: 18475.7

Total Winter Points	X System Multiplier	= Heating Points
18475.7	0.6274	11591.7

AS-BUILT

Type/SC	Overhang Ornt	Len	Hgt	Area	X WPM	X WOF	= Points
Double, Clear	W	2.0	6.0	25.0	20.73	1.04	539.9
Double, Clear	S	2.0	5.0	12.0	13.30	1.40	223.4
Double, Clear	E	2.0	6.0	50.0	18.79	1.06	995.5
As-Built Total:				87.0			1758.9

Type	R-Value	Area	X WPM	= Points
Frame, Wood, Exterior	13.0	2818.1	3.40	9581.5
As-Built Total:		2818.1		9581.5

Type	Area	X WPM	= Points
As-Built Total:	0.0		0.0

Type	R-Value	Area	X WPM X WCM	= Points
Under Attic	30.0	1272.6	2.05 X 1.00	2608.8
As-Built Total:		1272.6		2608.8

Type	R-Value	Area	X WPM	= Points
Raised Wood, Post or Pier	0.0	1272.0	5.76	7333.1
As-Built Total:		1272.0		7333.1

Area	X WPM	= Points
2477.0	-0.59	-1461.4

Winter As-Built Points: 19820.9

Total Component	X Cap Ratio	X Duct Multiplier (DM x DSM x AHU)	X System Multiplier	X Credit Multiplier	= Heating Points
19820.9	1.000	(1.069 x 1.169 x 0.93)	0.437	1.000	10070.7
19820.9	1.00	1.162	0.437	1.000	10070.7

FORM 600A-2001

WATER HEATING & CODE COMPLIANCE STATUS

Residential Whole Building Performance Method A - Details

ADDRESS: ,,, PERMIT #:

BASE				AS-BUILT							
WATER HEATING											
Number of Bedrooms	X	Multiplier	= Total	Tank Volume	EF	Number of Bedrooms	X Tank Ratio	X Multiplier	X Credit Multiplier	= Total	
2		2746.00	0.0			2	1.00	2746.00	1.00	5492.0	
				As-Built Total:						**0.0**	

CODE COMPLIANCE STATUS

BASE				AS-BUILT			
Cooling Points +	Heating Points +	Hot Water Points =	Total Points	Cooling Points +	Heating Points +	Hot Water Points =	Total Points
15418	**11592**	**0**	**27010**	**11745**	**10071**	**0**	**21815**

PASS

FORM 600A-2001

Code Compliance Checklist

Residential Whole Building Performance Method A - Details

ADDRESS: , , , PERMIT #:

6A-21 INFILTRATION REDUCTION COMPLIANCE CHECKLIST

COMPONENTS	SECTION	REQUIREMENTS FOR EACH PRACTICE	CHECK
Exterior Windows & Doors	606.1.ABC.1.1	Maximum:.3 cfm/sq.ft. window area; .5 cfm/sq.ft. door area.	
Exterior & Adjacent Walls	606.1.ABC.1.2.1	Caulk, gasket, weatherstrip or seal between: windows/doors & frames, surrounding wall; foundation & wall sole or sill plate; joints between exterior wall panels at corners; utility penetrations; between wall panels & top/bottom plates; between walls and floor. EXCEPTION: Frame walls where a continuous infiltration barrier is installed that extends from, and is sealed to, the foundation to the top plate.	
Floors	606.1.ABC.1.2.2	Penetrations/openings >1/8" sealed unless backed by truss or joint members. EXCEPTION: Frame floors where a continuous infiltration barrier is installed that is sealed to the perimeter, penetrations and seams.	
Ceilings	606.1.ABC.1.2.3	Between walls & ceilings; penetrations of ceiling plane of top floor; around shafts, chases, soffits, chimneys, cabinets sealed to continuous air barrier; gaps in gyp board & top plate; attic access. EXCEPTION: Frame ceilings where a continuous infiltration barrier is installed that is sealed at the perimeter, at penetrations and seams.	
Recessed Lighting Fixtures	606.1.ABC.1.2.4	Type IC rated with no penetrations, sealed; or Type IC or non-IC rated, installed inside a sealed box with 1/2" clearance & 3" from insulation; or Type IC rated with < 2.0 cfm from conditioned space, tested.	
Multi-story Houses	606.1.ABC.1.2.5	Air barrier on perimeter of floor cavity between floors.	
Additional Infiltration reqts	606.1.ABC.1.3	Exhaust fans vented to outdoors, dampers; combustion space heaters comply with NFPA, have combustion air.	

6A-22 OTHER PRESCRIPTIVE MEASURES (must be met or exceeded by all residences.)

COMPONENTS	SECTION	REQUIREMENTS	CHECK
Water Heaters	612.1	Comply with efficiency requirements in Table 6-12. Switch or clearly marked circuit breaker (electric) or cutoff (gas) must be provided. External or built-in heat trap required.	
Swimming Pools & Spas	612.1	Spas & heated pools must have covers (except solar heated). Non-commercial pools must have a pump timer Gas spa & pool heaters must have a minimum thermal efficiency of 78%.	
Shower heads	612.1	Water flow must be restricted to no more than 2.5 gallons per minute at 80 PSIG.	
Air Distribution Systems	610.1	All ducts, fittings, mechanical equipment and plenum chambers shall be mechanically attached, sealed, insulated, and installed in accordance with the criteria of Section 610. Ducts in unconditioned attics: R-6 min. insulation.	
HVAC Controls	607.1	Separate readily accessible manual or automatic thermostat for each system.	
Insulation	604.1, 602.1	Ceilings-Min. R-19. Common walls-Frame R-11 or CBS R-3 both sides. Common ceiling & floors R-11.	

ENERGY PERFORMANCE LEVEL (EPL) DISPLAY CARD

ESTIMATED ENERGY PERFORMANCE SCORE* = 86.4

The higher the score, the more efficient the home.

1. New construction or existing		Addition	
2. Single family or multi-family		Single family	
3. Number of units, if multi-family		1	
4. Number of Bedrooms		2	
5. Is this a worst case?		No	
6. Conditioned floor area (ft²)		2477 ft²	
7. Glass area & type	Single Pane	Double Pane	
a. Clear - single pane	0.0 ft²	87.0 ft²	
b. Clear - double pane	0.0 ft²	0.0 ft²	
c. Tint/other SHGC - single pane	0.0 ft²	0.0 ft²	
d. Tint/other SHGC - double pane			
8. Floor types			
a. Raised Wood, Post or Pier		R=0.0, 1272.0ft²	
b. N/A			
c. N/A			
9. Wall types			
a. Frame, Wood, Exterior		R=13.0, 2818.1 ft²	
b. N/A			
c. N/A			
d. N/A			
e. N/A			
10. Ceiling types			
a. Under Attic		R=30.0, 1272.6 ft²	
b. N/A			
c. N/A			
11. Ducts			
a. Sup: Unc. Ret: Unc. AH: Interior		Sup. R=6.0, 40.0 ft	
b. N/A			

12. Cooling systems		
a. Central Unit	Cap: 23.5 kBtu/hr	
	SEER: 12.00	
b. N/A		
c. N/A		
13. Heating systems		
a. Electric Heat Pump	Cap: 18.3 kBtu/hr	
	HSPF: 7.80	
b. N/A		
c. N/A		
14. Hot water systems		
a. N/A		
b. N/A		
c. Conservation credits (HR-Heat recovery, Solar DHP-Dedicated heat pump)		
15. HVAC credits (CF-Ceiling fan, CV-Cross ventilation, HF-Whole house fan, PT-Programmable Thermostat, MZ-C-Multizone cooling, MZ-H-Multizone heating)	MZ-C,	

I certify that this home has complied with the Florida Energy Efficiency Code For Building Construction through the above energy saving features which will be installed (or exceeded) in this home before final inspection. Otherwise, a new EPL Display Card will be completed based on installed Code compliant features.

Builder Signature: _____ Date: _____

Address of New Home: _____ City/FL Zip: _____

**NOTE: The home's estimated energy performance score is only available through the FLA/RES computer program. This is not a Building Energy Rating. If your score is 80 or greater (or 86 for a US EPA/DOE EnergyStar™ designation), your home may qualify for energy efficiency mortgage (EEM) incentives if you obtain a Florida Energy Gauge Rating. Contact the Energy Gauge Hotline at 321/638-1492 or see the Energy Gauge web site at www.fsec.ucf.edu for information and a list of certified Raters. For information about Florida's Energy Efficiency Code For Building Construction, contact the Department of Community Affairs at 850/488-7928.*

Alpine Engineered Products, Inc.

1950 Marley Drive Haines City, FL 33844
Florida Engineering Certificate of Authorization Number: 567
Florida Certificate of Product Approval # FL1999
 Document ID:1SQB215-Z1208150937

Truss Fabricator: W.B. Howland
Job Identification: 2272-/Manley Addition /J.L. DUPREE -- LAKE CITY, FL
Truss Count: 27
Model Code: Florida Building Code 2001
Truss Criteria: ANSI/TPI-2002(STD)/FBC
Engineering Software: Alpine Software,Versions 7.12, 7.11.
Structural Engineer of Record:
Address:
Minimum Design Loads: Roof - 40.0 PSF @ 1.25 Duration
Floor - N/A
Wind - 110 MPH ASCE 7-98 -Closed

Seal Date: 09/08/2005

-Truss Design Engineer-
Denise Rutledge
Florida License Number: 58752
1950 Marley Drive
Haines City, FL 33844

Notes:

1. Determination as to the suitability of these truss components for the structure is the responsibility of the building designer/engineer of record, as defined in ANSI/TPI 1-1995 Section 2.2
2. The drawing date shown on this index sheet must match the date shown on the individual truss component drawing.
3. As shown on attached drawings; the drawing number is preceded by: HCUSR215

Details: BRCLBSUB-A11030EC-GBLLETIN

#	Ref Description	Drawing#	Date
1	70201--A1HG (2-PLY)	05251295	09/08/05
2	70202--A2	05251281	09/08/05
3	70203--A3	05251282	09/08/05
4	70204--A4	05251283	09/08/05
5	70205--A5	05251284	09/08/05
6	70206--A7	05251285	09/08/05
7	70207--A8	05251286	09/08/05
8	70208--A9	05251287	09/08/05
9	70209--A10	05251288	09/08/05
10	70210--A11	05251289	09/08/05
11	70211--A12HG (2-PLY)	05251307	09/08/05
12	70212--B1GE	05251296	09/08/05
13	70213--J1A	05251297	09/08/05
14	70214--J1	05251298	09/08/05
15	70215--J1B	05251290	09/08/05
16	70216--J3	05251291	09/08/05
17	70217--J3A	05251292	09/08/05
18	70218--J3B	05251299	09/08/05
19	70219--J5	05251300	09/08/05
20	70220--J5A	05251301	09/08/05
21	70221--J5B	05251302	09/08/05
22	70222--J7	05251303	09/08/05
23	70223--J7A	05251304	09/08/05
24	70224--J7B	05251293	09/08/05
25	70225--J7C	05251294	09/08/05
26	70226--JH7	05251305	09/08/05
27	70227--JH7A	05251306	09/08/05

Top chord 2x4 SP #2 N :T2, T3 2x6 SP #2 N:
Bot chord 2x6 SP #2 N :B3, B4 2x6 SP SS:
Webs 2x4 SP #2 N

110 mph wind, 30.00 ft mean hgt, ASCE 7-98, CLOSED bldg, Located anywhere in roof, CAT II, EXP B, wind TC DL=5.0 psf, wind BC DL=5.0 psf.

In lieu of structural panels use purlins to brace all flat TC @ 24" OC.

Deflection meets L/240 live and L/180 total load.

The overall height of this truss excluding overhang is 3-10-3.

2 COMPLETE TRUSSES REQUIRED

Nailing Schedule: (0.131"x3"_Gun_nails)
Top Chord: 1 Row @12.00" o.c.
Bot Chord: 1 Row @12.00" o.c.
Webs : 1 Row @ 4" o.c.
Use equal spacing between rows and stagger nails in each row to avoid splitting.

#1 hip supports 7-0-0 jacks W/2 panel TC and no end vert.

Plates sized for a minimum of 3.00 sq.in./piece.

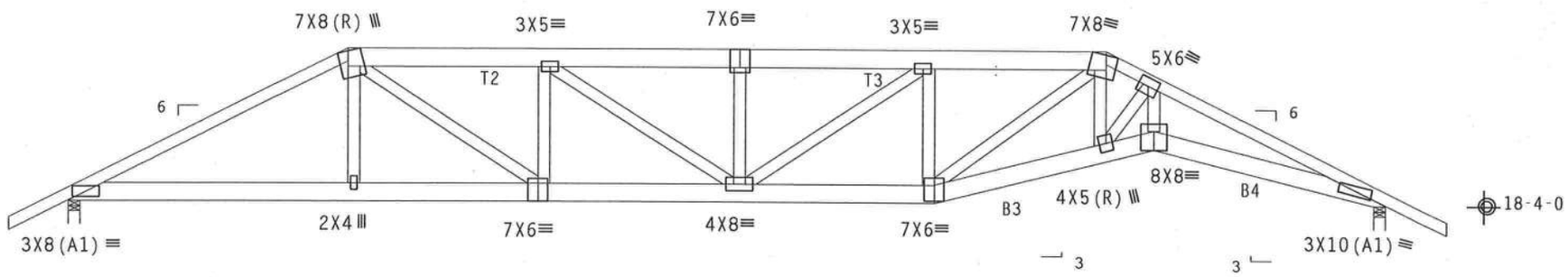

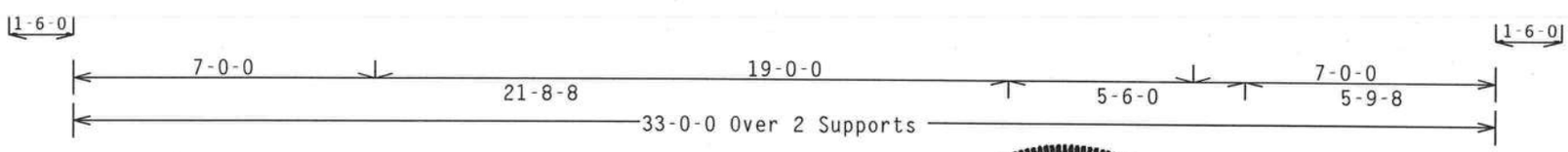

R=2826 U=565 W=3.5"

R=2826 U=565 W=3.5"

PLT TYP. Wave\R

Design Crit: TPI-2002(STD)/FBC

7.12.0213.02 QTY: R/-/5/-/-/R/-

Scale =.25"/Ft.

WARNING TRUSSES REQUIRE EXTREME CARE IN FABRICATION, HANDLING, SHIPPING, INSTALLING AND BRACING. REFER TO BCSI 1-03 (BUILDING COMPONENT SAFETY INFORMATION), PUBLISHED BY TPI (TRUSS PLATE INSTITUTE, 583 D'ONOFRIO DR., SUITE 200, MADISON, WI 53719) AND WTCA (WOOD TRUSS COUNCIL OF AMERICA, 6300 ENTERPRISE LN. MADISON, WI 53719) FOR SAFETY PRACTICES PRIOR TO PERFORMING THESE FUNCTIONS. UNLESS OTHERWISE INDICATED, TOP CHORD SHALL HAVE PROPERLY ATTACHED STRUCTURAL PANELS AND BOTTOM CHORD SHALL HAVE A PROPERLY ATTACHED RIGID CEILING.

IMPORTANTFURNISH A COPY OF THIS DESIGN TO THE INSTALLATION CONTRACTOR. ALPINE ENGINEERED PRODUCTS, INC. SHALL NOT BE RESPONSIBLE FOR ANY DEVIATION FROM THIS DESIGN; ANY FAILURE TO BUILD THE TRUSS IN CONFORMANCE WITH TPI; OR FABRICATING, HANDLING, SHIPPING, INSTALLING & BRACING OF TRUSSES. DESIGN CONFORMS WITH APPLICABLE PROVISIONS OF NDS (NATIONAL DESIGN SPEC, BY AF&PA) AND TPI. ALPINE CONNECTOR PLATES ARE MADE OF 20/18/16GA (W,H/S/K) ASTM A653 GRADE 40/60 (W, K/H,S) GALV. STEEL. APPLY PLATES TO EACH FACE OF TRUSS AND, UNLESS OTHERWISE LOCATED ON THIS DESIGN, POSITION PER DRAWINGS 160A-2. ANY INSPECTION OF PLATES FOLLOWED BY (I) SHALL BE PER ANNEX A3 OF TPI1-2002 SEC.3. A SEAL ON THIS DRAWING INDICATES ACCEPTANCE OF PROFESSIONAL ENGINEERING RESPONSIBILITY SOLELY FOR THE TRUSS COMPONENT DESIGN SHOWN. THE SUITABILITY AND USE OF THIS COMPONENT FOR ANY BUILDING IS THE RESPONSIBILITY OF THE BUILDING DESIGNER PER ANSI/TPI 1 SEC. 2.

DENISE RUTLEDGE LICENSE No. 58752 STATE OF FLORIDA PROFESSIONAL ENGINEER

TOT LL	20.0 PSF	REF R215-- 70201
TOT DL	10.0 PSF	DATE 09/08/05
BC DL	10.0 PSF	DRW HCUSR215 05251295
BC LL	0.0 PSF	HC-ENG EC/ADR
TOT.LD.	40.0 PSF	SEQN- 96294
DUR.FAC.	1.25	FROM CDM
SPACING	24.0"	JREF- 1SQB215_Z12

ALPINE
Alpine Engineered Products, Inc
1950 Marley Drive
Haines City, FL 33844
FL Certificate of Authorization # 567

(2272-/Manley Addition /J.L. DUPREE -- LAKE CITY, FL - A2)

Top chord 2x4 SP #2 N
Bot chord 2x4 SP #2 N
Webs 2x4 SP #2 N

Calculated horizontal deflection is 0.13" due to live load and 0.14" due to dead load.

Deflection meets L/240 live and L/180 total load.

The overall height of this truss excluding overhang is 4-10-3.

110 mph wind, 30.00 ft mean hgt, ASCE 7-98, CLOSED bldg, not located within 4.50 ft from roof edge, CAT II, EXP B, wind TC DL=5.0 psf, wind BC DL=5.0 psf.

In lieu of structural panels use purlins to brace all flat TC @ 24" OC.

Plates sized for a minimum of 3.00 sq.in./piece.

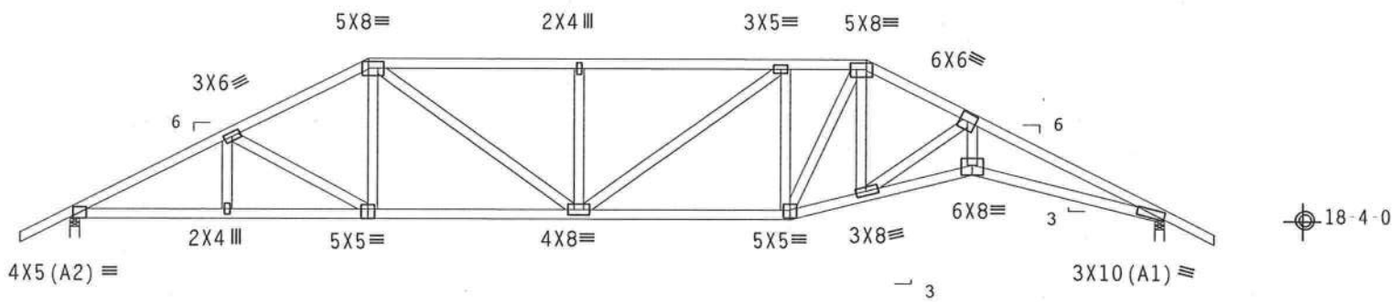

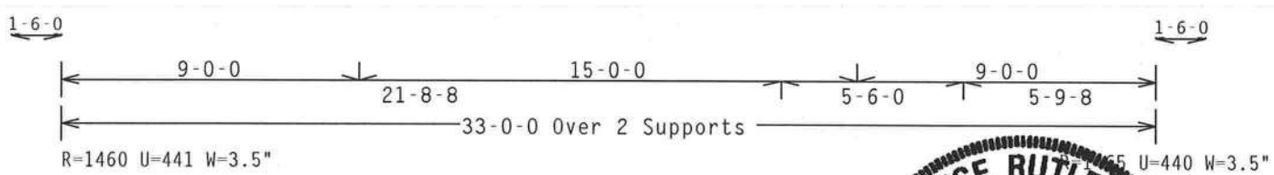

PLT TYP. Wave\R Design Crit: TPI-2002(STD)/FBC 7.12.0218.02 QTY:1 L/-/5/-/-/R/- Scale =.1875"/Ft.

ALPINE

Alpine Engineered Products, Inc.
1950 Marley Drive
Haines City, FL 33844
FL Certificate of Authorization # 567

WARNING TRUSSES REQUIRE EXTREME CARE IN FABRICATION, HANDLING, SHIPPING, INSTALLING AND BRACING. REFER TO BCSI 1-03 (BUILDING COMPONENT SAFETY INFORMATION), PUBLISHED BY TPI (TRUSS PLATE INSTITUTE, 583 D'ONOFRIO DR., SUITE 200, MADISON, WI 53719) AND WTCA (WOOD TRUSS COUNCIL OF AMERICA, 6300 ENTERPRISE LN, MADISON, WI 53719) FOR SAFETY PRACTICES PRIOR TO PERFORMING THESE FUNCTIONS. UNLESS OTHERWISE INDICATED, TOP CHORD SHALL HAVE PROPERLY ATTACHED STRUCTURAL PANELS AND BOTTOM CHORD SHALL HAVE A PROPERLY ATTACHED RIGID CEILING.

IMPORTANT FURNISH A COPY OF THIS DESIGN TO THE INSTALLATION CONTRACTOR. ALPINE ENGINEERED PRODUCTS, INC. SHALL NOT BE RESPONSIBLE FOR ANY DEVIATION FROM THIS DESIGN; ANY FAILURE TO BUILD THE TRUSS IN CONFORMANCE WITH TPI; OR FABRICATING, HANDLING, SHIPPING, INSTALLING & BRACING OF TRUSSES. DESIGN CONFORMS WITH APPLICABLE PROVISIONS OF NDS (NATIONAL DESIGN SPEC, BY AF&PA) AND TPI. ALPINE CONNECTOR PLATES ARE MADE OF 20/18/16GA (W,H/S/K) ASTM A653 GRADE 40/60 (W, K/H,S) GALV. STEEL. APPLY PLATES TO EACH FACE OF TRUSS AND, UNLESS OTHERWISE LOCATED ON THIS DESIGN, POSITION PER DRAWINGS 160A-Z. ANY INSPECTION OF PLATES FOLLOWED BY (I) SHALL BE PER ANNEX A3 OF TPI1-2002 SEC.3. A SEAL ON THIS DRAWING INDICATES ACCEPTANCE OF PROFESSIONAL ENGINEERING RESPONSIBILITY SOLELY FOR THE TRUSS COMPONENT DESIGN SHOWN. THE SUITABILITY AND USE OF THIS COMPONENT FOR ANY BUILDING IS THE RESPONSIBILITY OF THE BUILDING DESIGNER PER ANSI/TPI 1 SEC. 2.

DENISE RUTLEDGE LICENSE No. 58752 STATE OF FLORIDA PROFESSIONAL ENGINEER

TC LL	20.0 PSF	REF R215-- 70202
TC DL	10.0 PSF	DATE 09/08/05
BC DL	10.0 PSF	DRW HCUSR215 05251281
BC LL	0.0 PSF	HC-ENG EC/ADR *
TOT.LD.	40.0 PSF	SEQN- 96290
DUR.FAC.	1.25	FROM CDM
SPACING	24.0"	JREF- 1SQB215_Z12

(2272-/Manley Addition /J.L. DUPREE -- LAKE CITY, FL - A3)

Top chord 2x4 SP #2 N
Bot chord 2x4 SP #2 N :B4 2x4 SP #2 Dense:
Webs 2x4 SP #2 N

Calculated horizontal deflection is 0.14" due to live load and 0.14" due to dead load.

Deflection meets L/240 live and L/180 total load.

Plates sized for a minimum of 3.00 sq.in./piece.

110 mph wind, 30.00 ft mean hgt, ASCE 7-98, CLOSED bldg, not located within 4.50 ft from roof edge, CAT II, EXP B, wind TC DL=5.0 psf, wind BC DL=5.0 psf.

(A) Continuous lateral bracing equally spaced on member.

In lieu of structural panels use purlins to brace all flat TC @ 24" OC.

The overall height of this truss excluding overhang is 5-10-3.

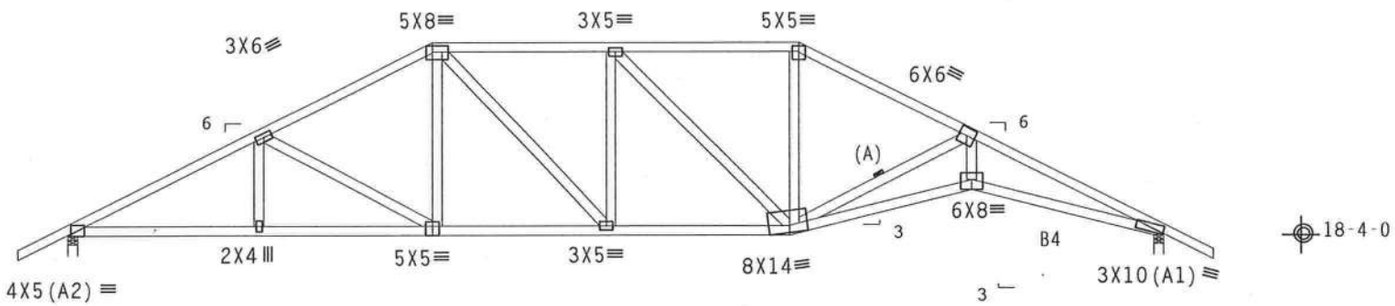

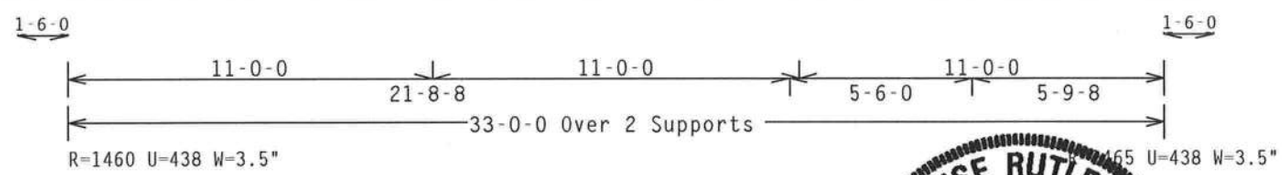

PLT TYP. Wave\R Design Crit: TPI-2002(STD)/FBC 7.1[illegible].0228.02 QTY:1 FL/-/5/-/-/R/- Scale =.1875"/Ft.

ALPINE
Alpine Engineered Products, Inc.
1950 Marley Drive
Haines City, FL 33844
FL Certificate of Authorization # 567

WARNING TRUSSES REQUIRE EXTREME CARE IN FABRICATION, HANDLING, SHIPPING, INSTALLING AND BRACING. REFER TO BCSI 1-03 (BUILDING COMPONENT SAFETY INFORMATION), PUBLISHED BY TPI (TRUSS PLATE INSTITUTE, 583 D'ONOFRIO DR., SUITE 200, MADISON, WI 53719) AND WTCA (WOOD TRUSS COUNCIL OF AMERICA, 6300 ENTERPRISE LN, MADISON, WI 53719) FOR SAFETY PRACTICES PRIOR TO PERFORMING THESE FUNCTIONS. UNLESS OTHERWISE INDICATED, TOP CHORD SHALL HAVE PROPERLY ATTACHED STRUCTURAL PANELS AND BOTTOM CHORD SHALL HAVE A PROPERLY ATTACHED RIGID CEILING.

IMPORTANT FURNISH A COPY OF THIS DESIGN TO THE INSTALLATION CONTRACTOR. ALPINE ENGINEERED PRODUCTS, INC. SHALL NOT BE RESPONSIBLE FOR ANY DEVIATION FROM THIS DESIGN; ANY FAILURE TO BUILD THE TRUSS IN CONFORMANCE WITH TPI; OR FABRICATING, HANDLING, SHIPPING, INSTALLING & BRACING OF TRUSSES. DESIGN CONFORMS WITH APPLICABLE PROVISIONS OF NDS (NATIONAL DESIGN SPEC, BY AF&PA) AND TPI. ALPINE CONNECTOR PLATES ARE MADE OF 20/18/16GA (W,H/S/K) ASTM A653 GRADE 40/60 (W, K/H,S) GALV. STEEL. APPLY PLATES TO EACH FACE OF TRUSS AND, UNLESS OTHERWISE LOCATED ON THIS DESIGN, POSITION PER DRAWINGS 160A-Z. ANY INSPECTION OF PLATES FOLLOWED BY (1) SHALL BE PER ANNEX A3 OF TPI1-2002 SEC.3. A SEAL ON THIS DRAWING INDICATES ACCEPTANCE OF PROFESSIONAL ENGINEERING RESPONSIBILITY SOLELY FOR THE TRUSS COMPONENT DESIGN SHOWN. THE SUITABILITY AND USE OF THIS COMPONENT FOR ANY BUILDING IS THE RESPONSIBILITY OF THE BUILDING DESIGNER PER ANSI/TPI 1 SEC. 2.

DENISE RUTLEDGE LICENSE No. 58752 STATE OF FLORIDA PROFESSIONAL ENGINEER
Sep 08 '05

TC LL	20.0 PSF	REF	R215-- 70203
TC DL	10.0 PSF	DATE	09/08/05
BC DL	10.0 PSF	DRW	HCUSR215 05251282
BC LL	0.0 PSF	HC-ENG	EC/ADR *
TOT.LD.	40.0 PSF	SEQN-	96286
DUR.FAC.	1.25	FROM	CDM
SPACING	24.0"	JREF-	1SQB215_Z12

(2272-/Manley Addition /J.L. DUPREE -- LAKE CITY, FL - A4)

Top chord 2x4 SP #2 N
Bot chord 2x4 SP #2 N :B4 2x4 SP #2 Dense:
Webs 2x4 SP #2 N

Calculated horizontal deflection is 0.14" due to live load and 0.14" due to dead load.

Deflection meets L/240 live and L/180 total load.

Plates sized for a minimum of 3.00 sq.in./piece.

110 mph wind, 30.00 ft mean hgt, ASCE 7-98, CLOSED bldg, not located within 4.50 ft from roof edge, CAT II, EXP B, wind TC DL=5.0 psf, wind BC DL=5.0 psf.

(A) Continuous lateral bracing equally spaced on member.

In lieu of structural panels use purlins to brace all flat TC @ 24" OC.

The overall height of this truss excluding overhang is 6-10-3.

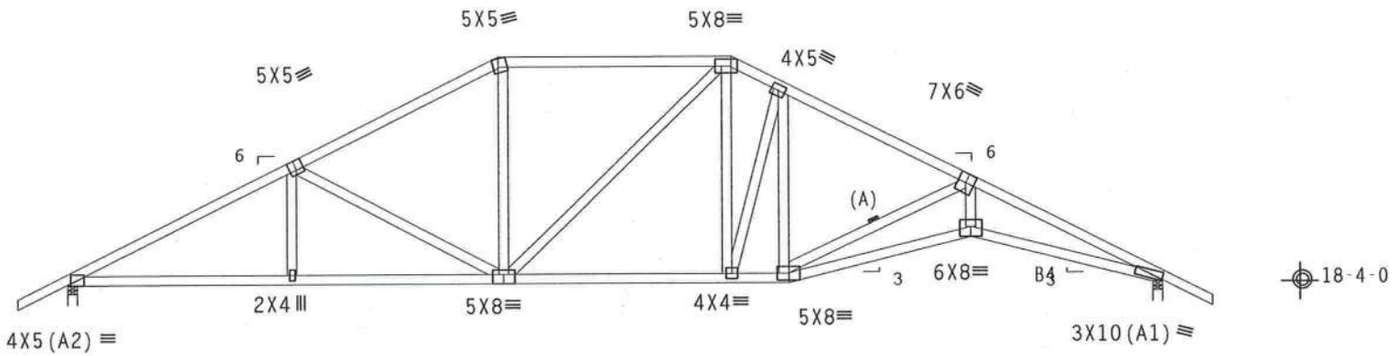

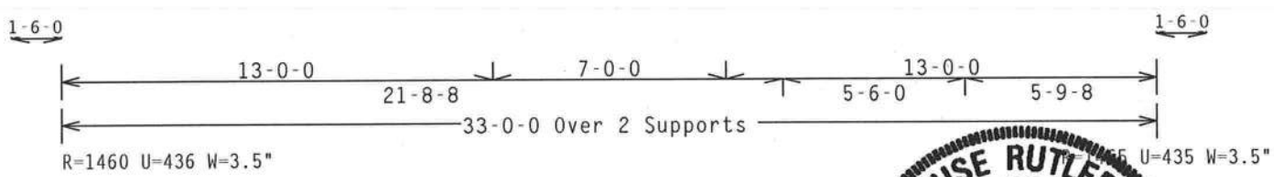

PLT TYP. Wave\R Design Crit: TPI-2002(STD)/FBC 7.1[illegible].021[illegible]8.02[illegible] QTY:1 [illegible]L/-/5/-/-/R/- Scale =.1875"/Ft.

ALPINE

Alpine Engineered Products, Inc.
1950 Marley Drive
Haines City, FL 33844
FL Certificate of Authorization # 567

WARNING TRUSSES REQUIRE EXTREME CARE IN FABRICATION, HANDLING, SHIPPING, INSTALLING AND BRACING. REFER TO BCSI 1-03 (BUILDING COMPONENT SAFETY INFORMATION), PUBLISHED BY TPI (TRUSS PLATE INSTITUTE, 583 D'ONOFRIO DR., SUITE 200, MADISON, WI 53719) AND WTCA (WOOD TRUSS COUNCIL OF AMERICA, 6300 ENTERPRISE LN, MADISON, WI 53719) FOR SAFETY PRACTICES PRIOR TO PERFORMING THESE FUNCTIONS. UNLESS OTHERWISE INDICATED, TOP CHORD SHALL HAVE PROPERLY ATTACHED STRUCTURAL PANELS AND BOTTOM CHORD SHALL HAVE A PROPERLY ATTACHED RIGID CEILING.

IMPORTANT FURNISH A COPY OF THIS DESIGN TO THE INSTALLATION CONTRACTOR. ALPINE ENGINEERED PRODUCTS, INC. SHALL NOT BE RESPONSIBLE FOR ANY DEVIATION FROM THIS DESIGN; ANY FAILURE TO BUILD THE TRUSS IN CONFORMANCE WITH TPI1; OR FABRICATING, HANDLING, SHIPPING, INSTALLING & BRACING OF TRUSSES. DESIGN CONFORMS WITH APPLICABLE PROVISIONS OF NDS (NATIONAL DESIGN SPEC, BY AF&PA) AND TPI. ALPINE CONNECTOR PLATES ARE MADE OF 20/18/16GA (W,H/S/K) ASTM A653 GRADE 40/60 (W, K/H,S) GALV. STEEL. APPLY PLATES TO EACH FACE OF TRUSS AND, UNLESS OTHERWISE LOCATED ON THIS DESIGN, POSITION PER DRAWINGS 160A-Z. ANY INSPECTION OF PLATES FOLLOWED BY (1) SHALL BE PER ANNEX A3 OF TPI1-2002 SEC.3. A SEAL ON THIS DRAWING INDICATES ACCEPTANCE OF PROFESSIONAL ENGINEERING RESPONSIBILITY SOLELY FOR THE TRUSS COMPONENT DESIGN SHOWN. THE SUITABILITY AND USE OF THIS COMPONENT FOR ANY BUILDING IS THE RESPONSIBILITY OF THE BUILDING DESIGNER PER ANSI/TPI 1 SEC. 2.

DENISE RUTLEDGE LICENSE No. 58752 STATE OF FLORIDA PROFESSIONAL ENGINEER

TC LL	20.0 PSF	REF R215-- 70204
TC DL	10.0 PSF	DATE 09/08/05
BC DL	10.0 PSF	DRW HCUSR215 05251283
BC LL	0.0 PSF	HC-ENG EC/ADR *
TOT.LD.	40.0 PSF	SEQN- 96281
DUR.FAC.	1.25	FROM CDM
SPACING	24.0"	JREF- 1SQB215_Z12

(2272-/Manley Addition /J.L. DUPREE -- LAKE CITY, FL - A5)

Top chord 2x4 SP #2 N
Bot chord 2x4 SP #2 N :B4 2x4 SP #2 Dense:
Webs 2x4 SP #2 N

Calculated horizontal deflection is 0.14" due to live load and 0.14" due to dead load.

Deflection meets L/240 live and L/180 total load.

Plates sized for a minimum of 3.00 sq.in./piece.

110 mph wind, 30.00 ft mean hgt, ASCE 7-98, CLOSED bldg, not located within 4.50 ft from roof edge, CAT II, EXP B, wind TC DL=5.0 psf, wind BC DL=5.0 psf.

(A) Continuous lateral bracing equally spaced on member.

In lieu of structural panels use purlins to brace all flat TC @ 24" OC.

The overall height of this truss excluding overhang is 7-10-3.

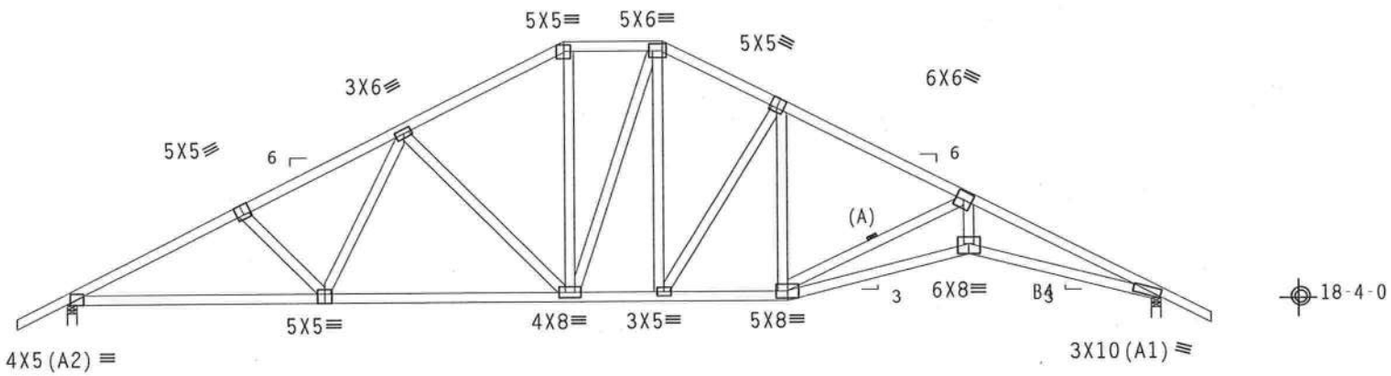

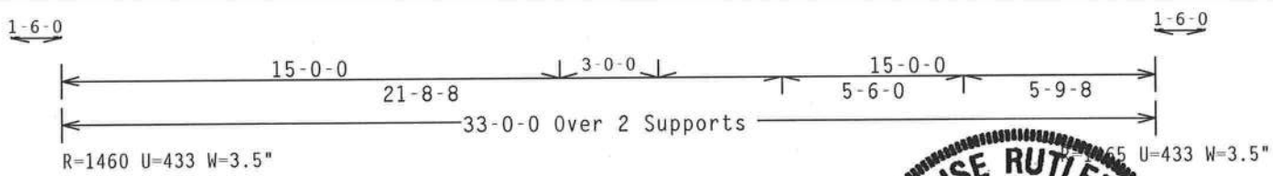

PLT TYP. Wave\R Design Crit: TPI-2002(STD)/FBC 7.1[illegible].0218.02[illegible] 2TY:1 L/-/5/-/-/R/- Scale =.1875"/Ft.

ALPINE
Alpine Engineered Products, Inc.
1950 Marley Drive
Haines City, FL 33844
FL Certificate of Authorization # 567

WARNING TRUSSES REQUIRE EXTREME CARE IN FABRICATION, HANDLING, SHIPPING, INSTALLING AND BRACING. REFER TO BCSI 1-03 (BUILDING COMPONENT SAFETY INFORMATION), PUBLISHED BY TPI (TRUSS PLATE INSTITUTE, 583 D'ONOFRIO DR., SUITE 200, MADISON, WI 53719) AND WTCA (WOOD TRUSS COUNCIL OF AMERICA, 6300 ENTERPRISE LN, MADISON, WI 53719) FOR SAFETY PRACTICES PRIOR TO PERFORMING THESE FUNCTIONS. UNLESS OTHERWISE INDICATED, TOP CHORD SHALL HAVE PROPERLY ATTACHED STRUCTURAL PANELS AND BOTTOM CHORD SHALL HAVE A PROPERLY ATTACHED RIGID CEILING.

IMPORTANT FURNISH A COPY OF THIS DESIGN TO THE INSTALLATION CONTRACTOR. ALPINE ENGINEERED PRODUCTS, INC. SHALL NOT BE RESPONSIBLE FOR ANY DEVIATION FROM THIS DESIGN; ANY FAILURE TO BUILD THE TRUSS IN CONFORMANCE WITH TPI; OR FABRICATING, HANDLING, SHIPPING, INSTALLING & BRACING OF TRUSSES. DESIGN CONFORMS WITH APPLICABLE PROVISIONS OF NDS (NATIONAL DESIGN SPEC. BY AF&PA) AND TPI. ALPINE CONNECTOR PLATES ARE MADE OF 20/18/16GA (W,H/S/K) ASTM A653 GRADE 40/60 (W, K/H,S) GALV. STEEL. APPLY PLATES TO EACH FACE OF TRUSS AND, UNLESS OTHERWISE LOCATED ON THIS DESIGN, POSITION PER DRAWINGS 160A-Z. ANY INSPECTION OF PLATES FOLLOWED BY (1) SHALL BE PER ANNEX A3 OF TPI1-2002 SEC.3. A SEAL ON THIS DRAWING INDICATES ACCEPTANCE OF PROFESSIONAL ENGINEERING RESPONSIBILITY SOLELY FOR THE TRUSS COMPONENT DESIGN SHOWN. THE SUITABILITY AND USE OF THIS COMPONENT FOR ANY BUILDING IS THE RESPONSIBILITY OF THE BUILDING DESIGNER PER ANSI/TPI 1 SEC. 2.

DENISE RUTLEDGE LICENSE No. 58752 STATE OF FLORIDA PROFESSIONAL ENGINEER

TC LL	20.0 PSF	REF	R215-- 70205
TC DL	10.0 PSF	DATE	09/08/05
BC DL	10.0 PSF	DRW	HCUSR215 05251284
BC LL	0.0 PSF	HC-ENG	EC/ADR *
TOT.LD.	40.0 PSF	SEQN-	96277
DUR.FAC.	1.25	FROM	CDM
SPACING	24.0"	JREF-	1SQB215_Z12

(2272-/Manley Addition /J.L. DUPREE -- LAKE CITY, FL - A7)

Top chord 2x4 SP #2 N
Bot chord 2x4 SP #2 N :B4 2x4 SP #2 Dense:
Webs 2x4 SP #2 N

Calculated horizontal deflection is 0.14" due to live load and 0.14" due to dead load.

Plates sized for a minimum of 3.00 sq.in./piece.

110 mph wind, 30.00 ft mean hgt, ASCE 7-98, CLOSED bldg, not located within 4.50 ft from roof edge, CAT II, EXP B, wind TC DL=5.0 psf, wind BC DL=5.0 psf.

(A) Continuous lateral bracing equally spaced on member.

Deflection meets L/240 live and L/180 total load.

The overall height of this truss excluding overhang is 8-7-3.

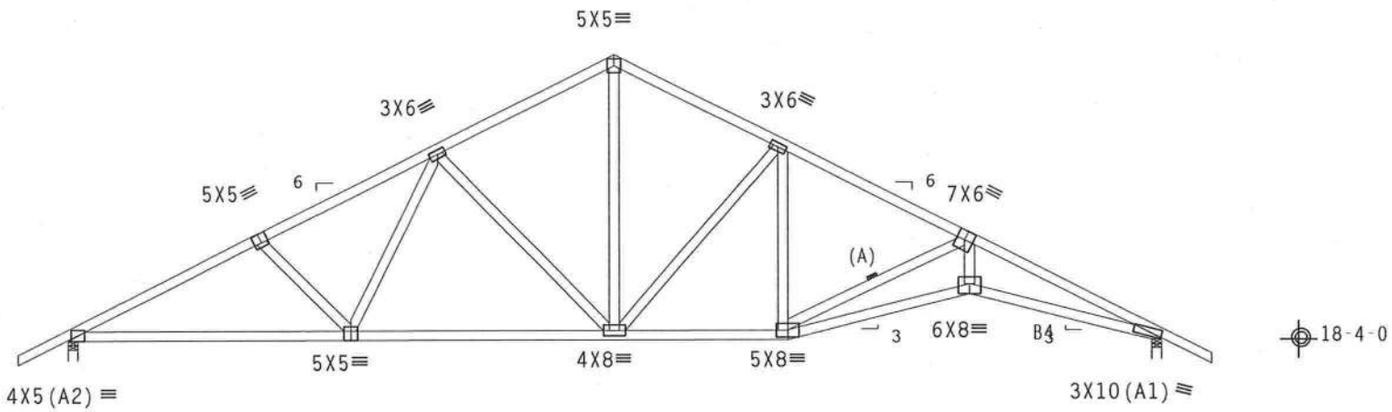

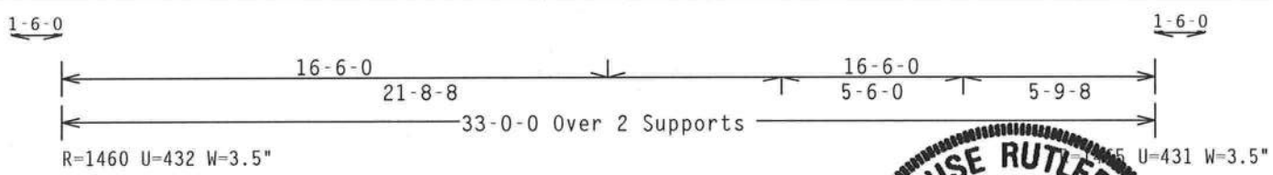

PLT TYP. Wave\R Design Crit: TPI-2002(STD)/FBC 7.1[illegible].0218.0[illegible] QTY:3 L/-/5/-/-/R/- Scale =.1875"/Ft.

DENISE RUTLEDGE LICENSE No. 58752 STATE OF FLORIDA PROFESSIONAL ENGINEER
Sep 08 '05

TC LL	20.0 PSF	REF R215-- 70206
TC DL	10.0 PSF	DATE 09/08/05
BC DL	10.0 PSF	DRW HCUSR215 05251285
BC LL	0.0 PSF	HC-ENG EC/ADR *
TOT.LD.	40.0 PSF	SEQN- 96273
DUR.FAC.	1.25	FROM CDM
SPACING	24.0"	JREF- 1SQB215_Z12

WARNING TRUSSES REQUIRE EXTREME CARE IN FABRICATION, HANDLING, SHIPPING, INSTALLING AND BRACING. REFER TO BCSI 1-03 (BUILDING COMPONENT SAFETY INFORMATION), PUBLISHED BY TPI (TRUSS PLATE INSTITUTE, 583 D'ONOFRIO DR., SUITE 200, MADISON, WI 53719) AND WTCA (WOOD TRUSS COUNCIL OF AMERICA, 6300 ENTERPRISE LN, MADISON, WI 53719) FOR SAFETY PRACTICES PRIOR TO PERFORMING THESE FUNCTIONS. UNLESS OTHERWISE INDICATED, TOP CHORD SHALL HAVE PROPERLY ATTACHED STRUCTURAL PANELS AND BOTTOM CHORD SHALL HAVE A PROPERLY ATTACHED RIGID CEILING.

IMPORTANT FURNISH A COPY OF THIS DESIGN TO THE INSTALLATION CONTRACTOR. ALPINE ENGINEERED PRODUCTS, INC. SHALL NOT BE RESPONSIBLE FOR ANY DEVIATION FROM THIS DESIGN; ANY FAILURE TO BUILD THE TRUSS IN CONFORMANCE WITH TPI; OR FABRICATING, HANDLING, SHIPPING, INSTALLING & BRACING OF TRUSSES. DESIGN CONFORMS WITH APPLICABLE PROVISIONS OF NDS (NATIONAL DESIGN SPEC, BY AF&PA) AND TPI. ALPINE CONNECTOR PLATES ARE MADE OF 20/18/16GA (W.H/S/K) ASTM A653 GRADE 40/60 (W. K/H.S) GALV. STEEL. APPLY PLATES TO EACH FACE OF TRUSS AND, UNLESS OTHERWISE LOCATED ON THIS DESIGN, POSITION PER DRAWINGS 160A-Z. ANY INSPECTION OF PLATES FOLLOWED BY (I) SHALL BE PER ANNEX A3 OF TPI1-2002 SEC.3. A SEAL ON THIS DRAWING INDICATES ACCEPTANCE OF PROFESSIONAL ENGINEERING RESPONSIBILITY SOLELY FOR THE TRUSS COMPONENT DESIGN SHOWN. THE SUITABILITY AND USE OF THIS COMPONENT FOR ANY BUILDING IS THE RESPONSIBILITY OF THE BUILDING DESIGNER PER ANSI/TPI 1 SEC. 2.

ALPINE
Alpine Engineered Products, Inc
1950 Marley Drive
Haines City, FL 33844
FL Certificate of Authorization # 567

(2272 /Manley Addition /J.L. DUPREE -- LAKE CITY, FL - A8)

Top chord 2x4 SP #2 N
Bot chord 2x4 SP #2 N
Webs 2x4 SP #2 N

In lieu of structural panels use purlins to brace all flat TC @ 24" OC.

The overall height of this truss excluding overhang is 7-10-3.

110 mph wind, 30.00 ft mean hgt, ASCE 7-98, CLOSED bldg, not located within 4.50 ft from roof edge, CAT II, EXP B, wind TC DL=5.0 psf, wind BC DL=5.0 psf.

Deflection meets L/240 live and L/180 total load.

Plates sized for a minimum of 3.00 sq.in./piece.

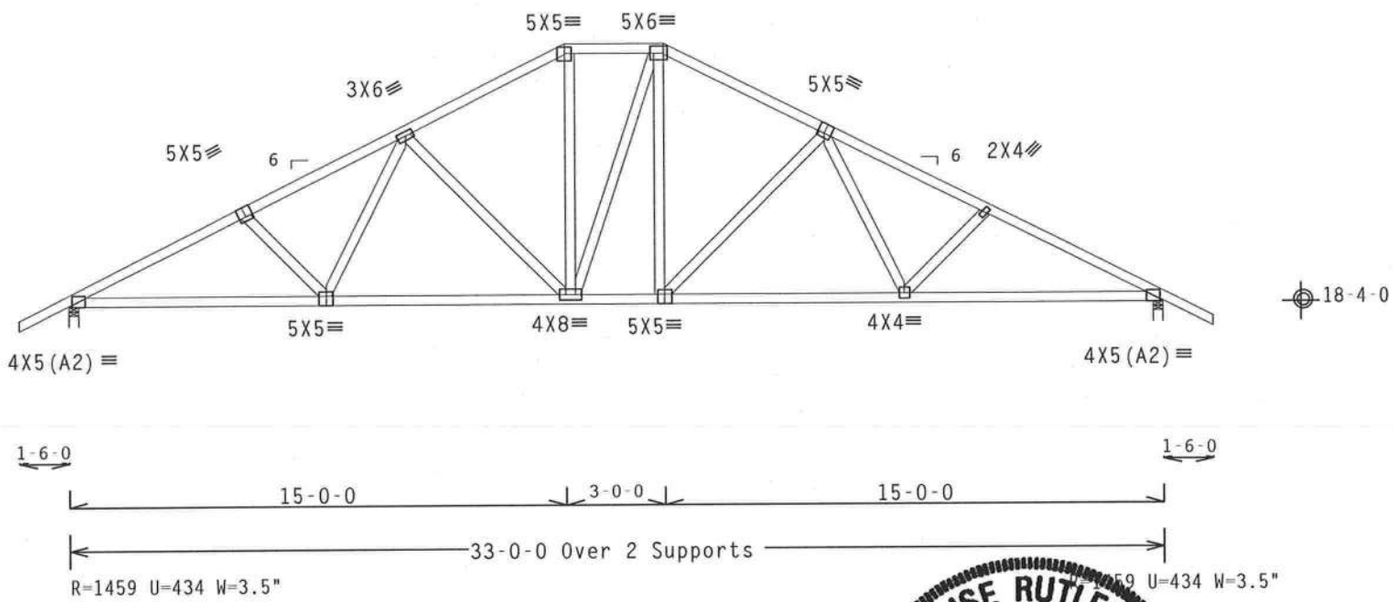

PLT TYP. Wave\R Design Crit: TPI-2002(STD)/FBC 7.12.0218.02 QTY:1 L/-/5/-/-/R/- Scale =.1875"/Ft.

ALPINE
Alpine Engineered Products, Inc.
1950 Marley Drive
Haines City, FL 33844
FL Certificate of Authorization # 567

WARNING TRUSSES REQUIRE EXTREME CARE IN FABRICATION, HANDLING, SHIPPING, INSTALLING AND BRACING. REFER TO BCSI 1-03 (BUILDING COMPONENT SAFETY INFORMATION), PUBLISHED BY TPI (TRUSS PLATE INSTITUTE, 583 D'ONOFRIO DR., SUITE 200, MADISON, WI 53719) AND WTCA (WOOD TRUSS COUNCIL OF AMERICA, 6300 ENTERPRISE LN, MADISON, WI 53719) FOR SAFETY PRACTICES PRIOR TO PERFORMING THESE FUNCTIONS. UNLESS OTHERWISE INDICATED, TOP CHORD SHALL HAVE PROPERLY ATTACHED STRUCTURAL PANELS AND BOTTOM CHORD SHALL HAVE A PROPERLY ATTACHED RIGID CEILING.

IMPORTANT FURNISH A COPY OF THIS DESIGN TO THE INSTALLATION CONTRACTOR. ALPINE ENGINEERED PRODUCTS, INC. SHALL NOT BE RESPONSIBLE FOR ANY DEVIATION FROM THIS DESIGN; ANY FAILURE TO BUILD THE TRUSS IN CONFORMANCE WITH TPI; OR FABRICATING, HANDLING, SHIPPING, INSTALLING & BRACING OF TRUSSES. DESIGN CONFORMS WITH APPLICABLE PROVISIONS OF NDS (NATIONAL DESIGN SPEC. BY AF&PA) AND TPI. ALPINE CONNECTOR PLATES ARE MADE OF 20/18/16GA (W,H/S/K) ASTM A653 GRADE 40/60 (W, K/H,S) GALV. STEEL. APPLY PLATES TO EACH FACE OF TRUSS AND, UNLESS OTHERWISE LOCATED ON THIS DESIGN, POSITION PER DRAWINGS 160A-Z. ANY INSPECTION OF PLATES FOLLOWED BY (1) SHALL BE PER ANNEX A3 OF TPI1-2002 SEC.3. A SEAL ON THIS DRAWING INDICATES ACCEPTANCE OF PROFESSIONAL ENGINEERING RESPONSIBILITY SOLELY FOR THE TRUSS COMPONENT DESIGN SHOWN. THE SUITABILITY AND USE OF THIS COMPONENT FOR ANY BUILDING IS THE RESPONSIBILITY OF THE BUILDING DESIGNER PER ANSI/TPI 1 SEC. 2.

DENISE RUTLEDGE LICENSE No. 58752 STATE OF FLORIDA PROFESSIONAL ENGINEER

TC LL	20.0 PSF	REF	R215-- 70207
TC DL	10.0 PSF	DATE	09/08/05
BC DL	10.0 PSF	DRW	HCUSR215 05251286
BC LL	0.0 PSF	HC-ENG	EC/ADR *
TOT.LD.	40.0 PSF	SEQN-	96269
DUR.FAC.	1.25	FROM	CDM
SPACING	24.0"	JREF-	1SQB215_Z12

Top chord 2x4 SP #2 N
Bot chord 2x4 SP #2 N
Webs 2x4 SP #2 N

In lieu of structural panels use purlins to brace all flat TC @ 24" OC.

The overall height of this truss excluding overhang is 6-10-3.

110 mph wind, 30.00 ft mean hgt, ASCE 7-98, CLOSED bldg, not located within 4.50 ft from roof edge, CAT II, EXP B, wind TC DL=5.0 psf, wind BC DL=5.0 psf.

Deflection meets L/240 live and L/180 total load.

Plates sized for a minimum of 3.00 sq.in./piece.

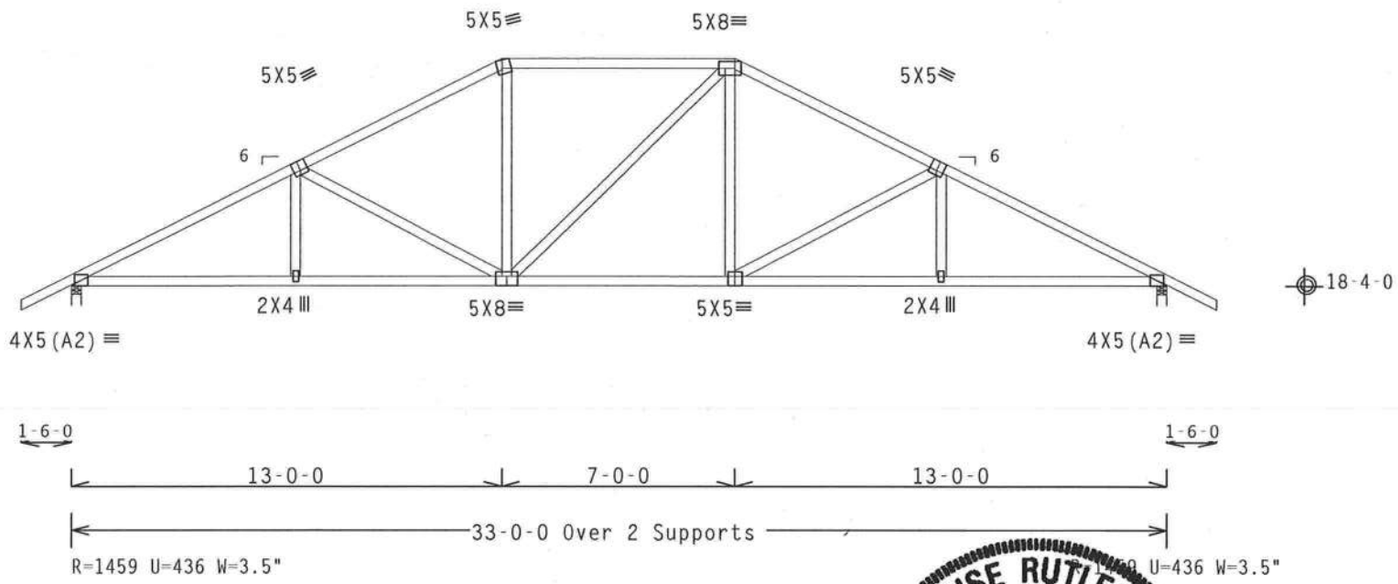

PLT TYP. Wave\R Design Crit: TPI-2002(STD)/FBC 7.12.0219.02 QTY: 1 R/-/5/-/-/R/- Scale =.1875"/Ft.

ALPINE

Alpine Engineered Products, Inc
1950 Marley Drive
Haines City, FL 33844
FL Certificate of Authorization # 567

WARNING TRUSSES REQUIRE EXTREME CARE IN FABRICATION, HANDLING, SHIPPING, INSTALLING AND BRACING. REFER TO BCSI 1-03 (BUILDING COMPONENT SAFETY INFORMATION), PUBLISHED BY TPI (TRUSS PLATE INSTITUTE, 583 D'ONOFRIO DR., SUITE 200, MADISON, WI 53719) AND WTCA (WOOD TRUSS COUNCIL OF AMERICA, 6300 ENTERPRISE LN, MADISON, WI 53719) FOR SAFETY PRACTICES PRIOR TO PERFORMING THESE FUNCTIONS. UNLESS OTHERWISE INDICATED, TOP CHORD SHALL HAVE PROPERLY ATTACHED STRUCTURAL PANELS AND BOTTOM CHORD SHALL HAVE A PROPERLY ATTACHED RIGID CEILING.

IMPORTANT FURNISH A COPY OF THIS DESIGN TO THE INSTALLATION CONTRACTOR. ALPINE ENGINEERED PRODUCTS, INC. SHALL NOT BE RESPONSIBLE FOR ANY DEVIATION FROM THIS DESIGN; ANY FAILURE TO BUILD THE TRUSS IN CONFORMANCE WITH TPI; OR FABRICATING, HANDLING, SHIPPING, INSTALLING & BRACING OF TRUSSES. DESIGN CONFORMS WITH APPLICABLE PROVISIONS OF NDS (NATIONAL DESIGN SPEC. BY AF&PA) AND TPI. ALPINE CONNECTOR PLATES ARE MADE OF 20/18/16GA (W,H/S/K) ASTM A653 GRADE 40/60 (W, K/H,S) GALV. STEEL. APPLY PLATES TO EACH FACE OF TRUSS AND, UNLESS OTHERWISE LOCATED ON THIS DESIGN, POSITION PER DRAWINGS 160A-Z. ANY INSPECTION OF PLATES FOLLOWED BY (I) SHALL BE PER ANNEX A3 OF TPI1-2002 SEC.3. A SEAL ON THIS DRAWING INDICATES ACCEPTANCE OF PROFESSIONAL ENGINEERING RESPONSIBILITY SOLELY FOR THE TRUSS COMPONENT DESIGN SHOWN. THE SUITABILITY AND USE OF THIS COMPONENT FOR ANY BUILDING IS THE RESPONSIBILITY OF THE BUILDING DESIGNER PER ANSI/TPI 1 SEC. 2.

DENISE RUTLEDGE LICENSE No. 58752 STATE OF FLORIDA PROFESSIONAL ENGINEER

TC LL	20.0 PSF	REF R215-- 70208
TC DL	10.0 PSF	DATE 09/08/05
BC DL	10.0 PSF	DRW HCUSR215 05251287
BC LL	0.0 PSF	HC-ENG EC/ADR *
TOT.LD.	40.0 PSF	SEQN- 96265
DUR.FAC.	1.25	FROM CDM
SPACING	24.0"	JREF- 1SQB215_Z12

(2272-/Manley Addition /J.L. DUPREE -- LAKE CITY, FL - A10)

Top chord 2x4 SP #2 N
Bot chord 2x4 SP #2 N
Webs 2x4 SP #2 N

In lieu of structural panels use purlins to brace all flat TC @ 24" OC.

The overall height of this truss excluding overhang is 5-10-3.

110 mph wind, 30.00 ft mean hgt, ASCE 7-98, CLOSED bldg, not located within 4.50 ft from roof edge, CAT II, EXP B, wind TC DL=5.0 psf, wind BC DL=5.0 psf.

Deflection meets L/240 live and L/180 total load.

Plates sized for a minimum of 3.00 sq.in./piece.

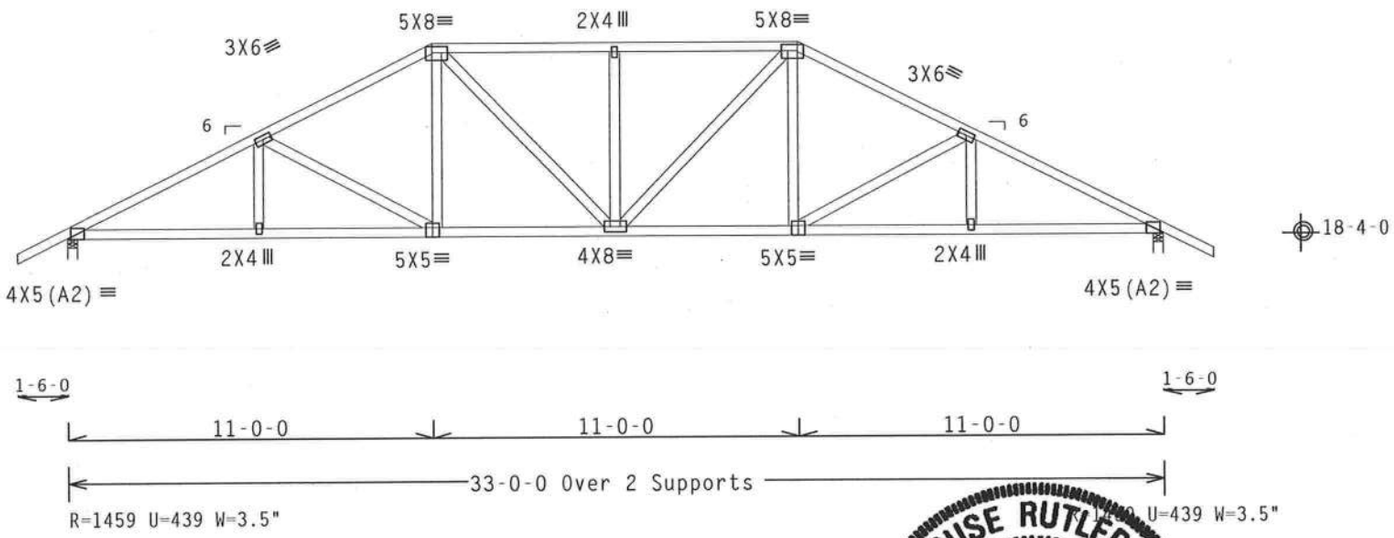

PLT TYP. Wave\R Design Crit: TPI-2002(STD)/FBC 7.12.0218.02 TY: /-/5/-/-/R/- Scale =.1875"/Ft.

ALPINE
Alpine Engineered Products, Inc.
1950 Marley Drive
Haines City, FL 33844
FL Certificate of Authorization # 567

WARNING TRUSSES REQUIRE EXTREME CARE IN FABRICATION, HANDLING, SHIPPING, INSTALLING AND BRACING. REFER TO BCSI 1-03 (BUILDING COMPONENT SAFETY INFORMATION), PUBLISHED BY TPI (TRUSS PLATE INSTITUTE, 583 D'ONOFRIO DR., SUITE 200, MADISON, WI 53719) AND WTCA (WOOD TRUSS COUNCIL OF AMERICA, 6300 ENTERPRISE LN, MADISON, WI 53719) FOR SAFETY PRACTICES PRIOR TO PERFORMING THESE FUNCTIONS. UNLESS OTHERWISE INDICATED, TOP CHORD SHALL HAVE PROPERLY ATTACHED STRUCTURAL PANELS AND BOTTOM CHORD SHALL HAVE A PROPERLY ATTACHED RIGID CEILING.

IMPORTANT FURNISH A COPY OF THIS DESIGN TO THE INSTALLATION CONTRACTOR. ALPINE ENGINEERED PRODUCTS, INC. SHALL NOT BE RESPONSIBLE FOR ANY DEVIATION FROM THIS DESIGN; ANY FAILURE TO BUILD THE TRUSS IN CONFORMANCE WITH TPI1; OR FABRICATING, HANDLING, SHIPPING, INSTALLING & BRACING OF TRUSSES. DESIGN CONFORMS WITH APPLICABLE PROVISIONS OF NDS (NATIONAL DESIGN SPEC, BY AF&PA) AND TPI. ALPINE CONNECTOR PLATES ARE MADE OF 20/18/16GA (W,H/S/K) ASTM A653 GRADE 40/60 (W, K/H,S) GALV. STEEL. APPLY PLATES TO EACH FACE OF TRUSS AND, UNLESS OTHERWISE LOCATED ON THIS DESIGN, POSITION PER DRAWINGS 160A-Z. ANY INSPECTION OF PLATES FOLLOWED BY (1) SHALL BE PER ANNEX A3 OF TPI1-2002 SEC.3. A SEAL ON THIS DRAWING INDICATES ACCEPTANCE OF PROFESSIONAL ENGINEERING RESPONSIBILITY SOLELY FOR THE TRUSS COMPONENT DESIGN SHOWN. THE SUITABILITY AND USE OF THIS COMPONENT FOR ANY BUILDING IS THE RESPONSIBILITY OF THE BUILDING DESIGNER PER ANSI/TPI 1 SEC. 2.

DENISE RUTLEDGE LICENSE No. 58752 STATE OF FLORIDA PROFESSIONAL ENGINEER

Sep 08 2005

TC LL	20.0 PSF	REF	R215-- 70209
TC DL	10.0 PSF	DATE	09/08/05
BC DL	10.0 PSF	DRW	HCUSR215 05251288
BC LL	0.0 PSF	HC-ENG	EC/ADR *
TOT.LD.	40.0 PSF	SEQN-	96261
DUR.FAC.	1.25	FROM	CDM
SPACING	24.0"	JREF-	1SQB215_Z12

Top chord 2x4 SP #2 N
Bot chord 2x4 SP #2 N
Webs 2x4 SP #2 N

In lieu of structural panels use purlins to brace all flat TC @ 24" OC.

The overall height of this truss excluding overhang is 4-10-3.

110 mph wind, 30.00 ft mean hgt, ASCE 7-98, CLOSED bldg, not located within 4.50 ft from roof edge, CAT II, EXP B, wind TC DL=5.0 psf, wind BC DL=5.0 psf.

Deflection meets L/240 live and L/180 total load.

Plates sized for a minimum of 3.00 sq.in./piece.

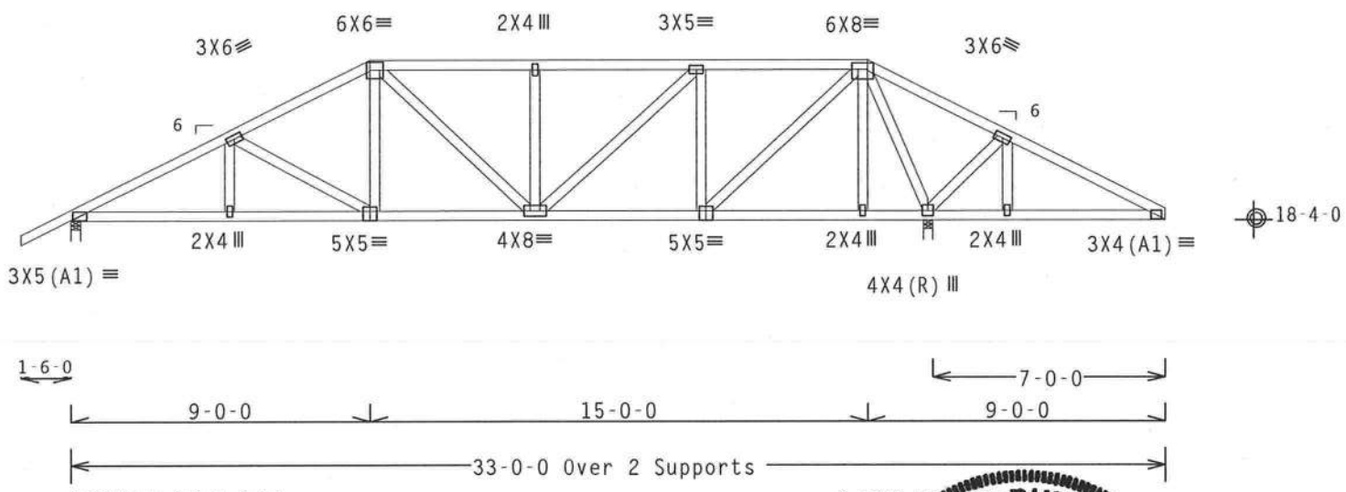

PLT TYP. Wave\R Design Crit: TPI-2002(STD)/FBC 7.1[illegible].0218.0[illegible] QTY:1 FL/-/5/-/-/R/- Scale =.1875"/Ft.

ALPINE
Alpine Engineered Products, Inc
1950 Marley Drive
Haines City, FL 33844
FL Certificate of Authorization # 567

WARNING TRUSSES REQUIRE EXTREME CARE IN FABRICATION, HANDLING, SHIPPING, INSTALLING AND BRACING. REFER TO BCSI 1-03 (BUILDING COMPONENT SAFETY INFORMATION), PUBLISHED BY TPI (TRUSS PLATE INSTITUTE, 583 D'ONOFRIO DR., SUITE 200, MADISON, WI 53719) AND WTCA (WOOD TRUSS COUNCIL OF AMERICA, 6300 ENTERPRISE LN, MADISON, WI 53719) FOR SAFETY PRACTICES PRIOR TO PERFORMING THESE FUNCTIONS. UNLESS OTHERWISE INDICATED, TOP CHORD SHALL HAVE PROPERLY ATTACHED STRUCTURAL PANELS AND BOTTOM CHORD SHALL HAVE A PROPERLY ATTACHED RIGID CEILING.

IMPORTANT FURNISH A COPY OF THIS DESIGN TO THE INSTALLATION CONTRACTOR. ALPINE ENGINEERED PRODUCTS, INC. SHALL NOT BE RESPONSIBLE FOR ANY DEVIATION FROM THIS DESIGN; ANY FAILURE TO BUILD THE TRUSS IN CONFORMANCE WITH TPI; OR FABRICATING, HANDLING, SHIPPING, INSTALLING & BRACING OF TRUSSES. DESIGN CONFORMS WITH APPLICABLE PROVISIONS OF NDS (NATIONAL DESIGN SPEC, BY AF&PA) AND TPI. ALPINE CONNECTOR PLATES ARE MADE OF 20/18/16GA (W,H/S/K) ASTM A653 GRADE 40/60 (W, K/H,S) GALV. STEEL. APPLY PLATES TO EACH FACE OF TRUSS AND, UNLESS OTHERWISE LOCATED ON THIS DESIGN, POSITION PER DRAWINGS 160A-Z. ANY INSPECTION OF PLATES FOLLOWED BY (1) SHALL BE PER ANNEX A3 OF TPI1-2002 SEC.3. A SEAL ON THIS DRAWING INDICATES ACCEPTANCE OF PROFESSIONAL ENGINEERING RESPONSIBILITY SOLELY FOR THE TRUSS COMPONENT DESIGN SHOWN. THE SUITABILITY AND USE OF THIS COMPONENT FOR ANY BUILDING IS THE RESPONSIBILITY OF THE BUILDING DESIGNER PER ANSI/TPI 1 SEC. 2.

DENISE RUTLEDGE
LICENSE
No. 58752
STATE OF FLORIDA
PROFESSIONAL ENGINEER
Sep 08, 05

TC LL	20.0 PSF	REF R215-- 70210
TC DL	10.0 PSF	DATE 09/08/05
BC DL	10.0 PSF	DRW HCUSR215 05251289
BC LL	0.0 PSF	HC-ENG EC/ADR *
TOT.LD.	40.0 PSF	SEQN- 96257
DUR.FAC.	1.25	FROM CDM
SPACING	24.0"	JREF- 1SQB215_Z12

(2272-/Manley Addition /J.L. DUPREE -- LAKE CITY, FL - A12HG (2-PLY))

THIS DWG PREPARED FROM COMPUTER INPUT (LOADS & DIMENSIONS) SUBMITTED BY TRUSS MFR.

Top chord 2x4 SP #2 N :T2, T3 2x6 SP #2 N:
Bot chord 2x6 SP #2 N
Webs 2x4 SP #2 N

110 mph wind, 20.06 ft mean hgt, ASCE 7-98, CLOSED bldg, Located anywhere in roof, CAT II, EXP B, wind TC DL=5.0 psf, wind BC DL=5.0 psf.

In lieu of structural panels use purlins to brace all flat TC @ 24" OC.

Deflection meets L/240 live and L/180 total load.

The overall height of this truss excluding overhang is 3-10-3.

2 COMPLETE TRUSSES REQUIRED

Nailing Schedule: (0.131"x3"_Gun_nails)
Top Chord: 1 Row @12.00" o.c.
Bot Chord: 1 Row @12.00" o.c.
Webs : 1 Row @ 4" o.c.
Use equal spacing between rows and stagger nails in each row to avoid splitting.

#1 hip supports 7-0-0 jacks W/2 panel TC and no end vert.

Plates sized for a minimum of 3.00 sq.in./piece.

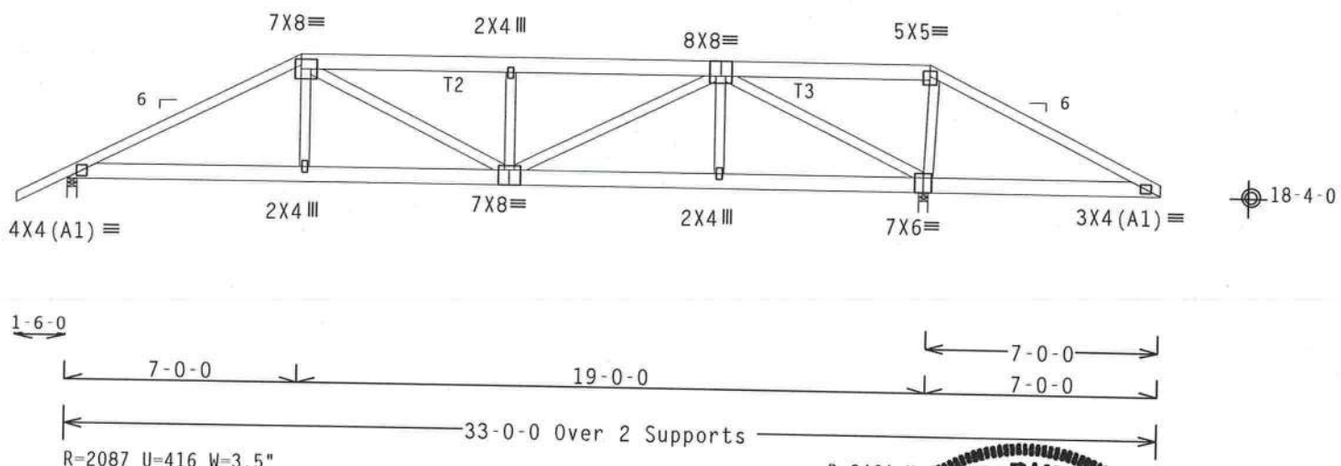

PLT TYP. Wave\R

Design Crit: TPI-2002(STD)/FBC

7.12.0218.02 TY: /-/5/-/-/R/-

Scale =.1875"/Ft.

WARNING TRUSSES REQUIRE EXTREME CARE IN FABRICATION, HANDLING, SHIPPING, INSTALLING AND BRACING. REFER TO BCSI 1-03 (BUILDING COMPONENT SAFETY INFORMATION), PUBLISHED BY TPI (TRUSS PLATE INSTITUTE, 583 D'ONOFRIO DR., SUITE 200, MADISON, WI 53719) AND WTCA (WOOD TRUSS COUNCIL OF AMERICA, 6300 ENTERPRISE LN, MADISON, WI 53719) FOR SAFETY PRACTICES PRIOR TO PERFORMING THESE FUNCTIONS. UNLESS OTHERWISE INDICATED, TOP CHORD SHALL HAVE PROPERLY ATTACHED STRUCTURAL PANELS AND BOTTOM CHORD SHALL HAVE A PROPERLY ATTACHED RIGID CEILING.

IMPORTANT FURNISH A COPY OF THIS DESIGN TO THE INSTALLATION CONTRACTOR. ALPINE ENGINEERED PRODUCTS, INC. SHALL NOT BE RESPONSIBLE FOR ANY DEVIATION FROM THIS DESIGN; ANY FAILURE TO BUILD THE TRUSS IN CONFORMANCE WITH TPI; OR FABRICATING, HANDLING, SHIPPING, INSTALLING & BRACING OF TRUSSES. DESIGN CONFORMS WITH APPLICABLE PROVISIONS OF NDS (NATIONAL DESIGN SPEC, BY AF&PA) AND TPI. ALPINE CONNECTOR PLATES ARE MADE OF 20/18/16GA (W,H/S/K) ASTM A653 GRADE 40/60 (W, K/H,S) GALV. STEEL. APPLY PLATES TO EACH FACE OF TRUSS AND, UNLESS OTHERWISE LOCATED ON THIS DESIGN, POSITION PER DRAWINGS 160A-Z. ANY INSPECTION OF PLATES FOLLOWED BY (1) SHALL BE PER ANNEX A3 OF TPI1-2002 SEC.3. A SEAL ON THIS DRAWING INDICATES ACCEPTANCE OF PROFESSIONAL ENGINEERING RESPONSIBILITY SOLELY FOR THE TRUSS COMPONENT DESIGN SHOWN. THE SUITABILITY AND USE OF THIS COMPONENT FOR ANY BUILDING IS THE RESPONSIBILITY OF THE BUILDING DESIGNER PER ANSI/TPI 1 SEC. 2.

ALPINE

Alpine Engineered Products, Inc.
1950 Marley Drive
Haines City, FL 33844
FL Certificate of Authorization # 567

DENISE RUTLEDGE LICENSE No. 58752 STATE OF FLORIDA PROFESSIONAL ENGINEER

Sep 09, 2005

TC LL	20.0 PSF	REF R215-- 70211
TC DL	10.0 PSF	DATE 09/08/05
BC DL	10.0 PSF	DRW HCUSR215 05251307
BC LL	0.0 PSF	HC-ENG EC/ADR
TOT.LD.	40.0 PSF	SEQN- 96253
DUR.FAC.	1.25	FROM CDM
SPACING	24.0"	JREF 1S0R215-710

(2272-/Manley Addition /J.L. DUPREE -- LAKE CITY, FL - B1GE)

Top chord 2x4 SP #2 N
Bot chord 2x4 SP #2 N
Webs 2x4 SP #2 N

Gable end supports 8" max rake overhang.

Deflection meets L/240 live and L/180 total load.

The overall height of this truss excluding overhang is 2-8-10.

THE BUILDING DESIGNER IS RESPONSIBLE FOR THE DESIGN OF THE ROOF AND CEILING DIAPHRAGMS, GABLE END SHEAR WALLS, AND SUPPORTING SHEAR WALLS. SHEAR WALLS MUST PROVIDE CONTINUOUS LATERAL RESTRAINT TO THE GABLE END. ALL CONNECTIONS TO BE DESIGNED BY THE BUILDING DESIGNER.

SEE DWGS A11030EC0901 FOR ADDITIONAL REQUIREMENTS.

+ MEMBER TO BE LATERALLY BRACED FOR HORIZONTAL WIND LOADS. BRACING SYSTEM TO BE DESIGNED AND FURNISHED BY OTHERS.

110 mph wind, 30.00 ft mean hgt, ASCE 7-98, CLOSED bldg, Located anywhere in roof, CAT II, EXP B, wind TC DL=5.0 psf, wind BC DL=5.0 psf.

See DWGS A11030EC1103 & GBLLETIN0405 for more requirements.

Plates sized for a minimum of 3.00 sq.in./piece.

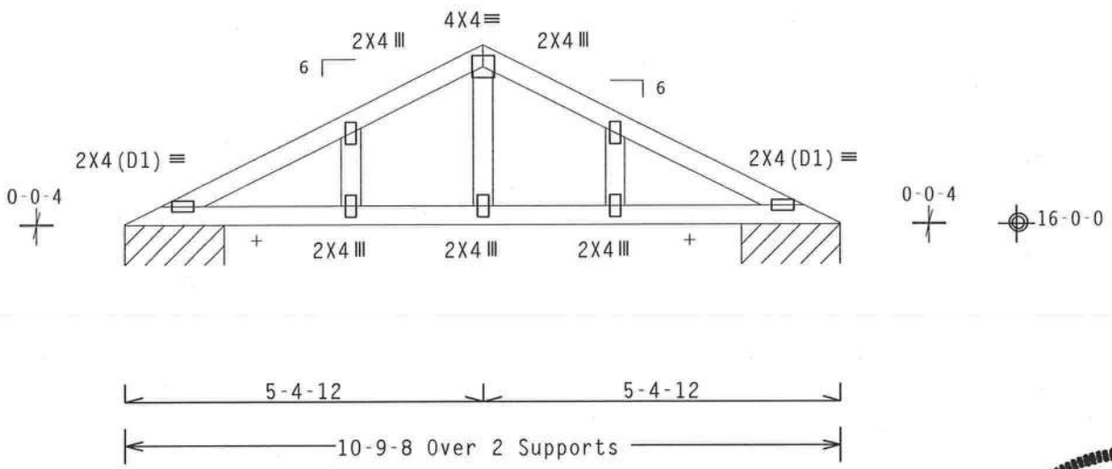

PLT TYP. Wave\R Design Crit: TPI-2002(STD)/FBC 7.11.0115.21 TY: L/-/5/-/-/R/- Scale =.375"/Ft.

DENISE RUTLEDGE LICENSE No. 58752 STATE OF FLORIDA PROFESSIONAL ENGINEER

TC LL	20.0 PSF	REF R215-- 70212
TC DL	10.0 PSF	DATE 09/08/05
BC DL	10.0 PSF	DRW HCUSR215 05251296
BC LL	0.0 PSF	HC-ENG EC/ADR
TOT.LD.	40.0 PSF	SEQN- 67580
DUR.FAC.	1.25	FROM CDM
SPACING	24.0"	JREF- 1SQB215_Z12

WARNING TRUSSES REQUIRE EXTREME CARE IN FABRICATION, HANDLING, SHIPPING, INSTALLING AND BRACING. REFER TO BCSI 1-03 (BUILDING COMPONENT SAFETY INFORMATION), PUBLISHED BY TPI (TRUSS PLATE INSTITUTE, 583 D'ONOFRIO DR., SUITE 200, MADISON, WI 53719) AND WTCA (WOOD TRUSS COUNCIL OF AMERICA, 6300 ENTERPRISE LN, MADISON, WI 53719) FOR SAFETY PRACTICES PRIOR TO PERFORMING THESE FUNCTIONS. UNLESS OTHERWISE INDICATED, TOP CHORD SHALL HAVE PROPERLY ATTACHED STRUCTURAL PANELS AND BOTTOM CHORD SHALL HAVE A PROPERLY ATTACHED RIGID CEILING.

IMPORTANT FURNISH A COPY OF THIS DESIGN TO THE INSTALLATION CONTRACTOR. ALPINE ENGINEERED PRODUCTS, INC. SHALL NOT BE RESPONSIBLE FOR ANY DEVIATION FROM THIS DESIGN; ANY FAILURE TO BUILD THE TRUSS IN CONFORMANCE WITH TPI1; OR FABRICATING, HANDLING, SHIPPING, INSTALLING & BRACING OF TRUSSES. DESIGN CONFORMS WITH APPLICABLE PROVISIONS OF NDS (NATIONAL DESIGN SPEC. BY AF&PA) AND TPI. ALPINE CONNECTOR PLATES ARE MADE OF 20/18/16GA (W,H/S/K) ASTM A653 GRADE 40/60 (W, K/H,S) GALV. STEEL. APPLY PLATES TO EACH FACE OF TRUSS AND, UNLESS OTHERWISE LOCATED ON THIS DESIGN, POSITION PER DRAWINGS 160A-Z. ANY INSPECTION OF PLATES FOLLOWED BY (1) SHALL BE PER ANNEX A3 OF TPI1-2002 SEC.3. A SEAL ON THIS DRAWING INDICATES ACCEPTANCE OF PROFESSIONAL ENGINEERING RESPONSIBILITY SOLELY FOR THE TRUSS COMPONENT DESIGN SHOWN. THE SUITABILITY AND USE OF THIS COMPONENT FOR ANY BUILDING IS THE RESPONSIBILITY OF THE BUILDING DESIGNER PER ANSI/TPI 1 SEC. 2.

ALPINE
Alpine Engineered Products, Inc.
1950 Marley Drive
Haines City, FL 33844
FL Certificate of Authorization # 567

Top chord 2x4 SP #2 N
Bot chord 2x4 SP #2 N

Deflection meets L/240 live and L/180 total load.

Shim all supports to solid bearing.

110 mph wind, 30.00 ft mean hgt, ASCE 7-98, CLOSED bldg, Located anywhere in roof, CAT II, EXP B, wind TC DL=5.0 psf, wind BC DL=5.0 psf.

Plates sized for a minimum of 3.00 sq.in./piece.

The overall height of this truss excluding overhang is 0-10-3.

R=-41 U=180

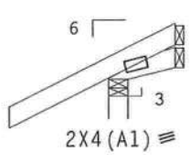

0-8-1

18-10-4
18-6-2
18-4-0

R=-30 U=180

1-6-0

1-0-0
1-0-0 Over 3 Supports

R=254 U=180 W=3.5"

PLT TYP. Wave\R Design Crit: TPI-2002(STD)/FBC 7.12.0218.02 QTY:2 L/-/5/-/-/R/- Scale =.375"/Ft.

WARNING TRUSSES REQUIRE EXTREME CARE IN FABRICATION, HANDLING, SHIPPING, INSTALLING AND BRACING. REFER TO BCSI 1-03 (BUILDING COMPONENT SAFETY INFORMATION), PUBLISHED BY TPI (TRUSS PLATE INSTITUTE, 583 D'ONOFRIO DR., SUITE 200, MADISON, WI 53719) AND WTCA (WOOD TRUSS COUNCIL OF AMERICA, 6300 ENTERPRISE LN, MADISON, WI 53719) FOR SAFETY PRACTICES PRIOR TO PERFORMING THESE FUNCTIONS. UNLESS OTHERWISE INDICATED, TOP CHORD SHALL HAVE PROPERLY ATTACHED STRUCTURAL PANELS AND BOTTOM CHORD SHALL HAVE A PROPERLY ATTACHED RIGID CEILING.

IMPORTANT FURNISH A COPY OF THIS DESIGN TO THE INSTALLATION CONTRACTOR. ALPINE ENGINEERED PRODUCTS, INC. SHALL NOT BE RESPONSIBLE FOR ANY DEVIATION FROM THIS DESIGN; ANY FAILURE TO BUILD THE TRUSS IN CONFORMANCE WITH TPI; OR FABRICATING, HANDLING, SHIPPING, INSTALLING & BRACING OF TRUSSES. DESIGN CONFORMS WITH APPLICABLE PROVISIONS OF NDS (NATIONAL DESIGN SPEC, BY AF&PA) AND TPI. ALPINE CONNECTOR PLATES ARE MADE OF 20/18/16GA (W,H/S/K) ASTM A653 GRADE 40/60 (W, K/H,S) GALV. STEEL. APPLY PLATES TO EACH FACE OF TRUSS AND, UNLESS OTHERWISE LOCATED ON THIS DESIGN, POSITION PER DRAWINGS 160A-2. ANY INSPECTION OF PLATES FOLLOWED BY (I) SHALL BE PER ANNEX A3 OF TPI1-2002 SEC.3. A SEAL ON THIS DRAWING INDICATES ACCEPTANCE OF PROFESSIONAL ENGINEERING RESPONSIBILITY SOLELY FOR THE TRUSS COMPONENT DESIGN SHOWN. THE SUITABILITY AND USE OF THIS COMPONENT FOR ANY BUILDING IS THE RESPONSIBILITY OF THE BUILDING DESIGNER PER ANSI/TPI 1 SEC. 2.

ALPINE
Alpine Engineered Products, Inc
1950 Marley Drive
Haines City, FL 33844
FL Certificate of Authorization # 567

DENISE RUTLEDGE LICENSE No. 58752 STATE OF FLORIDA PROFESSIONAL ENGINEER

TC LL	20.0 PSF	REF R215-- 70213
TC DL	10.0 PSF	DATE 09/08/05
BC DL	10.0 PSF	DRW HCUSR215 05251297
BC LL	0.0 PSF	HC-ENG EC/ADR
TOT.LD.	40.0 PSF	SEQN- 96226
DUR.FAC.	1.25	FROM CDM
SPACING	24.0"	JREF- 1SQB215_Z12

(2272-/Manley Addition /J.L. DUPREE -- LAKE CITY, FL - J1)

Top chord 2x4 SP #2 N
Bot chord 2x4 SP #2 N

Deflection meets L/240 live and L/180 total load.

The overall height of this truss excluding overhang is 0-10-3.

110 mph wind, 30.00 ft mean hgt, ASCE 7-98, CLOSED bldg, Located anywhere in roof, CAT II, EXP B, wind TC DL=5.0 psf, wind BC DL=5.0 psf.

Plates sized for a minimum of 3.00 sq.in./piece.

R=-53 U=180

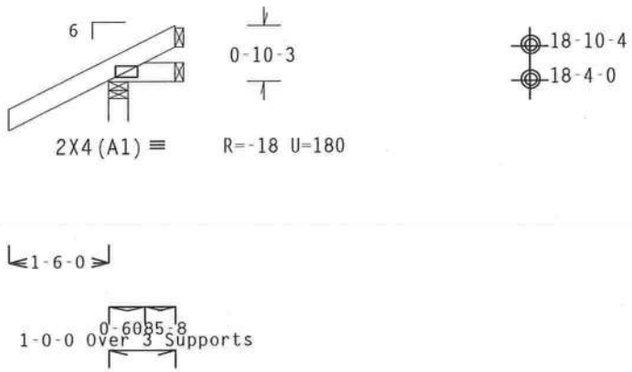

PLT TYP. Wave\R Design Crit: TPI-2002(STD)/FBC 7.11.011 5.21 QTY:7 L/-/5/-/-/R/- Scale =.375"/Ft.

WARNING TRUSSES REQUIRE EXTREME CARE IN FABRICATION, HANDLING, SHIPPING, INSTALLING AND BRACING. REFER TO BCSI 1-03 (BUILDING COMPONENT SAFETY INFORMATION), PUBLISHED BY TPI (TRUSS PLATE INSTITUTE, 583 D'ONOFRIO DR., SUITE 200, MADISON, WI 53719) AND WTCA (WOOD TRUSS COUNCIL OF AMERICA, 6300 ENTERPRISE LN, MADISON, WI 53719) FOR SAFETY PRACTICES PRIOR TO PERFORMING THESE FUNCTIONS. UNLESS OTHERWISE INDICATED, TOP CHORD SHALL HAVE PROPERLY ATTACHED STRUCTURAL PANELS AND BOTTOM CHORD SHALL HAVE A PROPERLY ATTACHED RIGID CEILING.

IMPORTANT FURNISH A COPY OF THIS DESIGN TO THE INSTALLATION CONTRACTOR. ALPINE ENGINEERED PRODUCTS, INC. SHALL NOT BE RESPONSIBLE FOR ANY DEVIATION FROM THIS DESIGN; ANY FAILURE TO BUILD THE TRUSS IN CONFORMANCE WITH TPI: OR FABRICATING, HANDLING, SHIPPING, INSTALLING & BRACING OF TRUSSES. DESIGN CONFORMS WITH APPLICABLE PROVISIONS OF NDS (NATIONAL DESIGN SPEC, BY AF&PA) AND TPI. ALPINE CONNECTOR PLATES ARE MADE OF 20/18/16GA (W,H/S/K) ASTM A653 GRADE 40/60 (W, K/H,S) GALV. STEEL. APPLY PLATES TO EACH FACE OF TRUSS AND, UNLESS OTHERWISE LOCATED ON THIS DESIGN, POSITION PER DRAWINGS 160A-Z. ANY INSPECTION OF PLATES FOLLOWED BY (I) SHALL BE PER ANNEX A3 OF TPI1-2002 SEC.3. A SEAL ON THIS DRAWING INDICATES ACCEPTANCE OF PROFESSIONAL ENGINEERING RESPONSIBILITY SOLELY FOR THE TRUSS COMPONENT DESIGN SHOWN. THE SUITABILITY AND USE OF THIS COMPONENT FOR ANY BUILDING IS THE RESPONSIBILITY OF THE BUILDING DESIGNER PER ANSI/TPI 1 SEC. 2.

DENISE RUTLEDGE LICENSE No. 58752 STATE OF FLORIDA PROFESSIONAL ENGINEER

TC LL	20.0 PSF	REF R215-- 70214
TC DL	10.0 PSF	DATE 09/08/05
BC DL	10.0 PSF	DRW HCUSR215 05251298
BC LL	0.0 PSF	HC-ENG EC/ADR
TOT.LD.	40.0 PSF	SEQN- 67583
DUR.FAC.	1.25	FROM CDM
SPACING	24.0"	JREF- 1SQB215_Z12

ALPINE
Alpine Engineered Products, Inc
1950 Marley Drive
Haines City, FL 33844
FL Certificate of Authorization # 567

(2272-/Manley Addition /J.L. DUPREE -- LAKE CITY, FL - J1B)

Top chord 2x4 SP #2 N
Bot chord 2x4 SP #2 N

Deflection meets L/240 live and L/180 total load.

The overall height of this truss excluding overhang is 0-10-3.

110 mph wind, 30.00 ft mean hgt, ASCE 7-98, CLOSED bldg, Located anywhere in roof, CAT II, EXP B, wind TC DL=5.0 psf, wind BC DL=5.0 psf.

Plates sized for a minimum of 3.00 sq.in./piece.

R=23 U=180

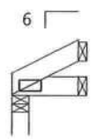

0-10-3

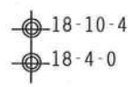

2X4(A1) ≡

R=13 U=180

1-0-0 Over 3 Supports

R=47 U=180 W=3"

PLT TYP. Wave\R Design Crit: TPI-2002(STD)/FBC 7.1[illegible].01[illegible]6.21 QTY:1 FL/-/5/-/-/R/- Scale =.375"/Ft.

ALPINE

Alpine Engineered Products, Inc.
1950 Marley Drive
Haines City, FL 33844
FL Certificate of Authorization # 567

WARNING TRUSSES REQUIRE EXTREME CARE IN FABRICATION, HANDLING, SHIPPING, INSTALLING AND BRACING. REFER TO BCSI 1-03 (BUILDING COMPONENT SAFETY INFORMATION), PUBLISHED BY TPI (TRUSS PLATE INSTITUTE, 583 D'ONOFRIO DR., SUITE 200, MADISON, WI 53719) AND WTCA (WOOD TRUSS COUNCIL OF AMERICA, 6300 ENTERPRISE LN, MADISON, WI 53719) FOR SAFETY PRACTICES PRIOR TO PERFORMING THESE FUNCTIONS. UNLESS OTHERWISE INDICATED, TOP CHORD SHALL HAVE PROPERLY ATTACHED STRUCTURAL PANELS AND BOTTOM CHORD SHALL HAVE A PROPERLY ATTACHED RIGID CEILING.

IMPORTANT FURNISH A COPY OF THIS DESIGN TO THE INSTALLATION CONTRACTOR. ALPINE ENGINEERED PRODUCTS, INC. SHALL NOT BE RESPONSIBLE FOR ANY DEVIATION FROM THIS DESIGN; ANY FAILURE TO BUILD THE TRUSS IN CONFORMANCE WITH TPI; OR FABRICATING, HANDLING, SHIPPING, INSTALLING & BRACING OF TRUSSES. DESIGN CONFORMS WITH APPLICABLE PROVISIONS OF NDS (NATIONAL DESIGN SPEC, BY AF&PA) AND TPI. ALPINE CONNECTOR PLATES ARE MADE OF 20/18/16GA (W,H/S/K) ASTM A653 GRADE 40/60 (W, K/H,S) GALV. STEEL. APPLY PLATES TO EACH FACE OF TRUSS AND, UNLESS OTHERWISE LOCATED ON THIS DESIGN, POSITION PER DRAWINGS 160A-Z. ANY INSPECTION OF PLATES FOLLOWED BY (1) SHALL BE PER ANNEX A3 OF TPI1-2002 SEC.3. A SEAL ON THIS DRAWING INDICATES ACCEPTANCE OF PROFESSIONAL ENGINEERING RESPONSIBILITY SOLELY FOR THE TRUSS COMPONENT DESIGN SHOWN. THE SUITABILITY AND USE OF THIS COMPONENT FOR ANY BUILDING IS THE RESPONSIBILITY OF THE BUILDING DESIGNER PER ANSI/TPI 1 SEC. 2.

DENISE RUTLEDGE LICENSE No. 58752 STATE OF FLORIDA PROFESSIONAL ENGINEER

TC LL	20.0 PSF	REF R215-- 70215
TC DL	10.0 PSF	DATE 09/08/05
BC DL	10.0 PSF	DRW HCUSR215 05251290
BC LL	0.0 PSF	HC-ENG EC/ADR *
TOT.LD.	40.0 PSF	SEQN- 67649
DUR.FAC.	1.25	FROM CDM
SPACING	24.0"	JREF- 1SQB215_Z12

(2272-/Manley Addition /J.L. DUPREE -- LAKE CITY, FL - J3)

Top chord 2x4 SP #2 N
Bot chord 2x4 SP #2 N

Deflection meets L/240 live and L/180 total load.

The overall height of this truss excluding overhang is 1-10-3.

110 mph wind, 30.00 ft mean hgt, ASCE 7-98, CLOSED bldg, Located anywhere in roof, CAT II, EXP B, wind TC DL=5.0 psf, wind BC DL=5.0 psf.

Plates sized for a minimum of 3.00 sq.in./piece.

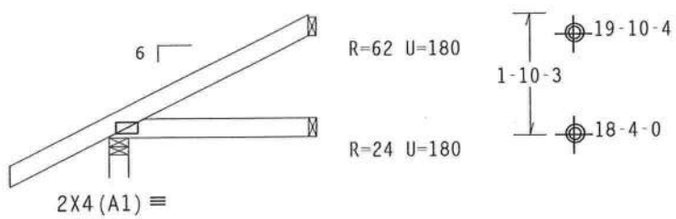

1-6-0

3-0-0 Over 3 Supports

R=262 U=180 W=3.5"

PLT TYP. Wave\R Design Crit: TPI-2002(STD)/FBC 7.1.0.016.2 QTY:3 FL/-/5/-/-/R/- Scale =.375"/Ft.

ALPINE

Alpine Engineered Products, Inc.
1950 Marley Drive
Haines City, FL 33844
FL Certificate of Authorization # 567

WARNING TRUSSES REQUIRE EXTREME CARE IN FABRICATION, HANDLING, SHIPPING, INSTALLING AND BRACING. REFER TO BCSI 1-03 (BUILDING COMPONENT SAFETY INFORMATION), PUBLISHED BY TPI (TRUSS PLATE INSTITUTE, 583 D'ONOFRIO DR., SUITE 200, MADISON, WI 53719) AND WTCA (WOOD TRUSS COUNCIL OF AMERICA, 6300 ENTERPRISE LN, MADISON, WI 53719) FOR SAFETY PRACTICES PRIOR TO PERFORMING THESE FUNCTIONS. UNLESS OTHERWISE INDICATED, TOP CHORD SHALL HAVE PROPERLY ATTACHED STRUCTURAL PANELS AND BOTTOM CHORD SHALL HAVE A PROPERLY ATTACHED RIGID CEILING.

IMPORTANT FURNISH A COPY OF THIS DESIGN TO THE INSTALLATION CONTRACTOR. ALPINE ENGINEERED PRODUCTS, INC. SHALL NOT BE RESPONSIBLE FOR ANY DEVIATION FROM THIS DESIGN; ANY FAILURE TO BUILD THE TRUSS IN CONFORMANCE WITH TPI; OR FABRICATING, HANDLING, SHIPPING, INSTALLING & BRACING OF TRUSSES. DESIGN CONFORMS WITH APPLICABLE PROVISIONS OF NDS (NATIONAL DESIGN SPEC. BY AF&PA) AND TPI. ALPINE CONNECTOR PLATES ARE MADE OF 20/18/16GA (W,H/S/K) ASTM A653 GRADE 40/60 (W, K/H,S) GALV. STEEL. APPLY PLATES TO EACH FACE OF TRUSS AND, UNLESS OTHERWISE LOCATED ON THIS DESIGN, POSITION PER DRAWINGS 160A-Z. ANY INSPECTION OF PLATES FOLLOWED BY (1) SHALL BE PER ANNEX A3 OF TPI1-2002 SEC.3. A SEAL ON THIS DRAWING INDICATES ACCEPTANCE OF PROFESSIONAL ENGINEERING RESPONSIBILITY SOLELY FOR THE TRUSS COMPONENT DESIGN SHOWN. THE SUITABILITY AND USE OF THIS COMPONENT FOR ANY BUILDING IS THE RESPONSIBILITY OF THE BUILDING DESIGNER PER ANSI/TPI 1 SEC. 2.

DENISE RUTLEDGE
LICENSE
No. 58752
STATE OF
FLORIDA
PROFESSIONAL ENGINEER

TC LL	20.0 PSF	REF	R215-- 70216
TC DL	10.0 PSF	DATE	09/08/05
BC DL	10.0 PSF	DRW	HCUSR215 05251291
BC LL	0.0 PSF	HC-ENG	EC/ADR *
TOT.LD.	40.0 PSF	SEQN-	67590
DUR.FAC.	1.25	FROM	CDM
SPACING	24.0"	JREF-	1SQB215_Z12

Top chord 2x4 SP #2 N
Bot chord 2x4 SP #2 N

Deflection meets L/240 live and L/180 total load.

Shim all supports to solid bearing.

110 mph wind, 30.00 ft mean hgt, ASCE 7-98, CLOSED bldg, Located anywhere in roof, CAT II, EXP B, wind TC DL=5.0 psf, wind BC DL=5.0 psf.

Plates sized for a minimum of 3.00 sq.in./piece.

The overall height of this truss excluding overhang is 1-10-3.

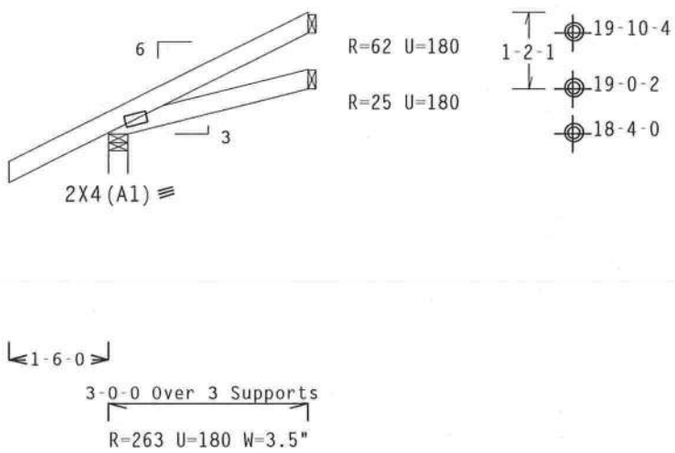

PLT TYP. Wave\R Design Crit: TPI-2002(STD)/FBC 7.12.0218.02 QTY:2 /-/5/-/-/R/- Scale =.375"/Ft.

ALPINE

Alpine Engineered Products, Inc
1950 Marley Drive
Haines City, FL 33844
FL Certificate of Authorization # 567

WARNING TRUSSES REQUIRE EXTREME CARE IN FABRICATION, HANDLING, SHIPPING, INSTALLING AND BRACING. REFER TO BCSI 1-03 (BUILDING COMPONENT SAFETY INFORMATION), PUBLISHED BY TPI (TRUSS PLATE INSTITUTE, 583 D'ONOFRIO DR., SUITE 200, MADISON, WI 53719) AND WTCA (WOOD TRUSS COUNCIL OF AMERICA, 6300 ENTERPRISE LN, MADISON, WI 53719) FOR SAFETY PRACTICES PRIOR TO PERFORMING THESE FUNCTIONS. UNLESS OTHERWISE INDICATED, TOP CHORD SHALL HAVE PROPERLY ATTACHED STRUCTURAL PANELS AND BOTTOM CHORD SHALL HAVE A PROPERLY ATTACHED RIGID CEILING.

IMPORTANT FURNISH A COPY OF THIS DESIGN TO THE INSTALLATION CONTRACTOR. ALPINE ENGINEERED PRODUCTS, INC. SHALL NOT BE RESPONSIBLE FOR ANY DEVIATION FROM THIS DESIGN; ANY FAILURE TO BUILD THE TRUSS IN CONFORMANCE WITH TPI; OR FABRICATING, HANDLING, SHIPPING, INSTALLING & BRACING OF TRUSSES. DESIGN CONFORMS WITH APPLICABLE PROVISIONS OF NDS (NATIONAL DESIGN SPEC, BY AF&PA) AND TPI. ALPINE CONNECTOR PLATES ARE MADE OF 20/18/16GA (W.H/S/K) ASTM A653 GRADE 40/60 (W. K/H.S) GALV. STEEL. APPLY PLATES TO EACH FACE OF TRUSS AND, UNLESS OTHERWISE LOCATED ON THIS DESIGN, POSITION PER DRAWINGS 160A-Z. ANY INSPECTION OF PLATES FOLLOWED BY (I) SHALL BE PER ANNEX A3 OF TPI1-2002 SEC.3. A SEAL ON THIS DRAWING INDICATES ACCEPTANCE OF PROFESSIONAL ENGINEERING RESPONSIBILITY SOLELY FOR THE TRUSS COMPONENT DESIGN SHOWN. THE SUITABILITY AND USE OF THIS COMPONENT FOR ANY BUILDING IS THE RESPONSIBILITY OF THE BUILDING DESIGNER PER ANSI/TPI 1 SEC. 2.

DENISE RUTLEDGE LICENSE No. 58752 STATE OF FLORIDA PROFESSIONAL ENGINEER

TC LL	20.0 PSF	REF R215-- 70217
TC DL	10.0 PSF	DATE 09/08/05
BC DL	10.0 PSF	DRW HCUSR215 05251292
BC LL	0.0 PSF	HC-ENG EC/ADR *
TOT.LD.	40.0 PSF	SEQN- 96230
DUR.FAC.	1.25	FROM CDM
SPACING	24.0"	JREF- 1SQB215_Z12

(2272-/Manley Addition /J.L. DUPREE -- LAKE CITY, FL - J3B)

Top chord 2x4 SP #2 N
Bot chord 2x4 SP #2 N

Deflection meets L/240 live and L/180 total load.

The overall height of this truss excluding overhang is 1-10-3.

110 mph wind, 30.00 ft mean hgt, ASCE 7-98, CLOSED bldg, Located anywhere in roof, CAT II, EXP B, wind TC DL=5.0 psf, wind BC DL=5.0 psf.

Plates sized for a minimum of 3.00 sq.in./piece.

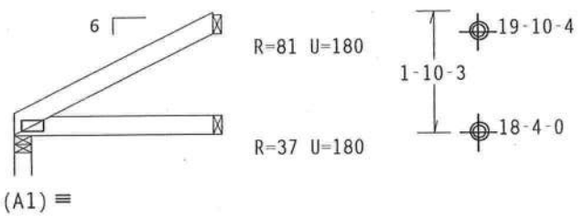

PLT TYP. Wave\R Design Crit: TPI-2002(STD)/FBC 7.1.01.6.2 QTY:1 L/-/5/-/-/R/- Scale =.375"/Ft.

ALPINE
Alpine Engineered Products, Inc.
1950 Marley Drive
Haines City, FL 33844
FL Certificate of Authorization # 567

WARNING TRUSSES REQUIRE EXTREME CARE IN FABRICATION, HANDLING, SHIPPING, INSTALLING AND BRACING. REFER TO BCSI 1-03 (BUILDING COMPONENT SAFETY INFORMATION), PUBLISHED BY TPI (TRUSS PLATE INSTITUTE, 583 D'ONOFRIO DR., SUITE 200, MADISON, WI 53719) AND WTCA (WOOD TRUSS COUNCIL OF AMERICA, 6300 ENTERPRISE LN, MADISON, WI 53719) FOR SAFETY PRACTICES PRIOR TO PERFORMING THESE FUNCTIONS. UNLESS OTHERWISE INDICATED, TOP CHORD SHALL HAVE PROPERLY ATTACHED STRUCTURAL PANELS AND BOTTOM CHORD SHALL HAVE A PROPERLY ATTACHED RIGID CEILING.

IMPORTANT FURNISH A COPY OF THIS DESIGN TO THE INSTALLATION CONTRACTOR. ALPINE ENGINEERED PRODUCTS, INC. SHALL NOT BE RESPONSIBLE FOR ANY DEVIATION FROM THIS DESIGN; ANY FAILURE TO BUILD THE TRUSS IN CONFORMANCE WITH TPI; OR FABRICATING, HANDLING, SHIPPING, INSTALLING & BRACING OF TRUSSES. DESIGN CONFORMS WITH APPLICABLE PROVISIONS OF NDS (NATIONAL DESIGN SPEC. BY AF&PA) AND TPI. ALPINE CONNECTOR PLATES ARE MADE OF 20/18/16GA (W,H/S/K) ASTM A653 GRADE 40/60 (W, K/H,S) GALV. STEEL. APPLY PLATES TO EACH FACE OF TRUSS AND, UNLESS OTHERWISE LOCATED ON THIS DESIGN, POSITION PER DRAWINGS 160A-Z. ANY INSPECTION OF PLATES FOLLOWED BY (1) SHALL BE PER ANNEX A3 OF TPI1-2002 SEC.3. A SEAL ON THIS DRAWING INDICATES ACCEPTANCE OF PROFESSIONAL ENGINEERING RESPONSIBILITY SOLELY FOR THE TRUSS COMPONENT DESIGN SHOWN. THE SUITABILITY AND USE OF THIS COMPONENT FOR ANY BUILDING IS THE RESPONSIBILITY OF THE BUILDING DESIGNER PER ANSI/TPI 1 SEC. 2.

DENISE RUTLEDGE LICENSE No. 58752 STATE OF FLORIDA PROFESSIONAL ENGINEER
Sep 08 '05

TC LL	20.0 PSF	REF	R215-- 70218
TC DL	10.0 PSF	DATE	09/08/05
BC DL	10.0 PSF	DRW	HCUSR215 05251299
BC LL	0.0 PSF	HC-ENG	EC/ADR
TOT.LD.	40.0 PSF	SEQN-	67646
DUR.FAC.	1.25	FROM	CDM
SPACING	24.0"	JREF-	1SQB215_Z12

(2272-/Manley Addition /J.L. DUPREE -- LAKE CITY, FL - J5)

Top chord 2x4 SP #2 N
Bot chord 2x4 SP #2 N

Deflection meets L/240 live and L/180 total load.

The overall height of this truss excluding overhang is 2-10-3.

110 mph wind, 30.00 ft mean hgt, ASCE 7-98, CLOSED bldg, not located within 4.50 ft from roof edge, CAT II, EXP B, wind TC DL=5.0 psf, wind BC DL=5.0 psf.

Plates sized for a minimum of 3.00 sq.in./piece.

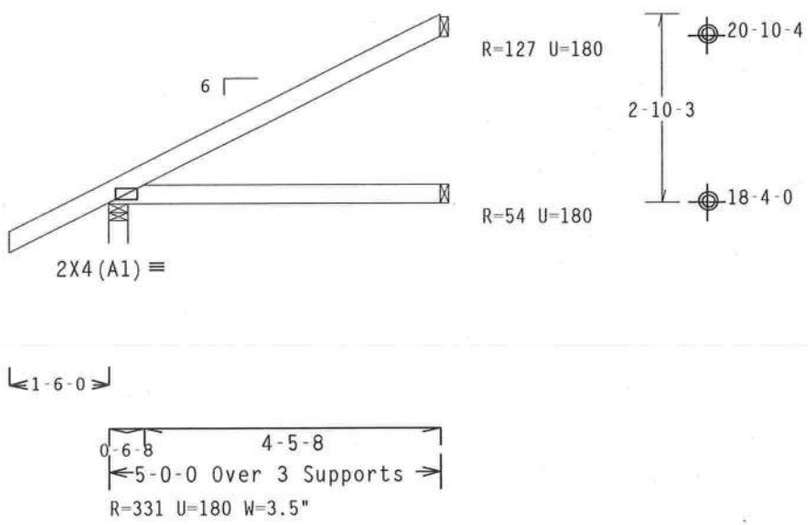

PLT TYP. Wave\R Design Crit: TPI-2002(STD)/FBC 7.1.01 6.2 QTY:3 L/-/5/-/-/R/- Scale =.375"/Ft.

ALPINE
Alpine Engineered Products, Inc.
1950 Marley Drive
Haines City, FL 33844
FL Certificate of Authorization # 567

WARNING TRUSSES REQUIRE EXTREME CARE IN FABRICATION, HANDLING, SHIPPING, INSTALLING AND BRACING. REFER TO BCSI 1-03 (BUILDING COMPONENT SAFETY INFORMATION), PUBLISHED BY TPI (TRUSS PLATE INSTITUTE, 583 D'ONOFRIO DR., SUITE 200, MADISON, WI 53719) AND WTCA (WOOD TRUSS COUNCIL OF AMERICA, 6300 ENTERPRISE LN, MADISON, WI 53719) FOR SAFETY PRACTICES PRIOR TO PERFORMING THESE FUNCTIONS. UNLESS OTHERWISE INDICATED, TOP CHORD SHALL HAVE PROPERLY ATTACHED STRUCTURAL PANELS AND BOTTOM CHORD SHALL HAVE A PROPERLY ATTACHED RIGID CEILING.

IMPORTANT FURNISH A COPY OF THIS DESIGN TO THE INSTALLATION CONTRACTOR. ALPINE ENGINEERED PRODUCTS, INC. SHALL NOT BE RESPONSIBLE FOR ANY DEVIATION FROM THIS DESIGN; ANY FAILURE TO BUILD THE TRUSS IN CONFORMANCE WITH TPI; OR FABRICATING, HANDLING, SHIPPING, INSTALLING & BRACING OF TRUSSES. DESIGN CONFORMS WITH APPLICABLE PROVISIONS OF NDS (NATIONAL DESIGN SPEC. BY AF&PA) AND TPI. ALPINE CONNECTOR PLATES ARE MADE OF 20/18/16GA (W.H/S/K) ASTM A653 GRADE 40/60 (W. K/H.S) GALV. STEEL. APPLY PLATES TO EACH FACE OF TRUSS AND, UNLESS OTHERWISE LOCATED ON THIS DESIGN, POSITION PER DRAWINGS 160A-Z. ANY INSPECTION OF PLATES FOLLOWED BY (I) SHALL BE PER ANNEX A3 OF TPI1-2002 SEC.3. A SEAL ON THIS DRAWING INDICATES ACCEPTANCE OF PROFESSIONAL ENGINEERING RESPONSIBILITY SOLELY FOR THE TRUSS COMPONENT DESIGN SHOWN. THE SUITABILITY AND USE OF THIS COMPONENT FOR ANY BUILDING IS THE RESPONSIBILITY OF THE BUILDING DESIGNER PER ANSI/TPI 1 SEC. 2.

DENISE RUTLEDGE LICENSE No. 58752 STATE OF FLORIDA PROFESSIONAL ENGINEER

TC LL	20.0 PSF	REF	R215-- 70219
TC DL	10.0 PSF	DATE	09/08/05
BC DL	10.0 PSF	DRW	HCUSR215 05251300
BC LL	0.0 PSF	HC-ENG	EC/ADR
TOT.LD.	40.0 PSF	SEQN-	67593
DUR.FAC.	1.25	FROM	CDM
SPACING	24.0"	JREF-	1SQB215_Z12

(2272-/Manley Addition /J.L. DUPREE -- LAKE CITY, FL - J5A)

Top chord 2x4 SP #2 N
Bot chord 2x4 SP #2 N

Deflection meets L/240 live and L/180 total load.

Shim all supports to solid bearing.

110 mph wind, 30.00 ft mean hgt, ASCE 7-98, CLOSED bldg, not located within 4.50 ft from roof edge, CAT II, EXP B, wind TC DL=5.0 psf, wind BC DL=5.0 psf.

Plates sized for a minimum of 3.00 sq.in./piece.

The overall height of this truss excluding overhang is 2-10-3.

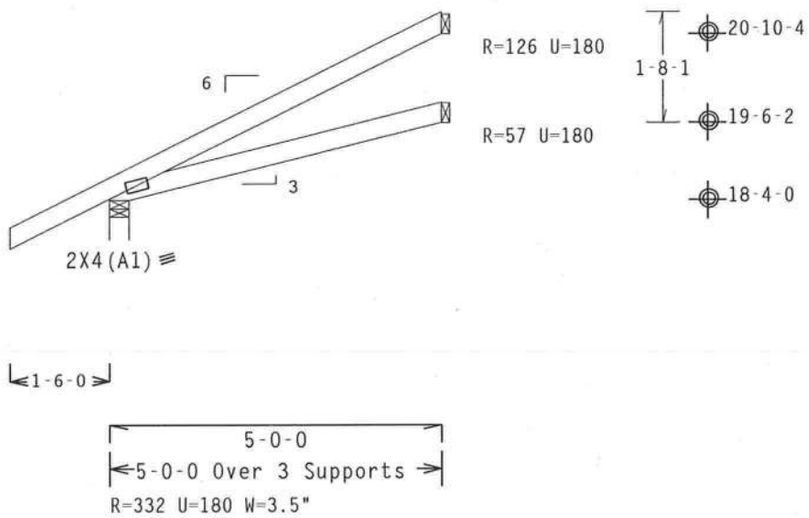

PLT TYP. Wave\R Design Crit: TPI-2002(STD)/FBC 7.1[illegible].02[illegible]8.02 QTY 2 L/-/5/-/-/R/- Scale =.375"/Ft.

ALPINE

Alpine Engineered Products, Inc.
1950 Marley Drive
Haines City, FL 33844
FL Certificate of Authorization # 567

WARNING TRUSSES REQUIRE EXTREME CARE IN FABRICATION, HANDLING, SHIPPING, INSTALLING AND BRACING. REFER TO BCSI 1-03 (BUILDING COMPONENT SAFETY INFORMATION), PUBLISHED BY TPI (TRUSS PLATE INSTITUTE, 583 D'ONOFRIO DR., SUITE 200, MADISON, WI 53719) AND WTCA (WOOD TRUSS COUNCIL OF AMERICA, 6300 ENTERPRISE LN, MADISON, WI 53719) FOR SAFETY PRACTICES PRIOR TO PERFORMING THESE FUNCTIONS. UNLESS OTHERWISE INDICATED, TOP CHORD SHALL HAVE PROPERLY ATTACHED STRUCTURAL PANELS AND BOTTOM CHORD SHALL HAVE A PROPERLY ATTACHED RIGID CEILING.

IMPORTANTFURNISH A COPY OF THIS DESIGN TO THE INSTALLATION CONTRACTOR. ALPINE ENGINEERED PRODUCTS, INC. SHALL NOT BE RESPONSIBLE FOR ANY DEVIATION FROM THIS DESIGN; ANY FAILURE TO BUILD THE TRUSS IN CONFORMANCE WITH TPI; OR FABRICATING, HANDLING, SHIPPING, INSTALLING & BRACING OF TRUSSES. DESIGN CONFORMS WITH APPLICABLE PROVISIONS OF NDS (NATIONAL DESIGN SPEC. BY AF&PA) AND TPI. ALPINE CONNECTOR PLATES ARE MADE OF 20/18/16GA (W,H/S/K) ASTM A653 GRADE 40/60 (W, K/H,S) GALV. STEEL. APPLY PLATES TO EACH FACE OF TRUSS AND, UNLESS OTHERWISE LOCATED ON THIS DESIGN, POSITION PER DRAWINGS 160A-Z. ANY INSPECTION OF PLATES FOLLOWED BY (I) SHALL BE PER ANNEX A3 OF TPI1-2002 SEC.3. A SEAL ON THIS DRAWING INDICATES ACCEPTANCE OF PROFESSIONAL ENGINEERING RESPONSIBILITY SOLELY FOR THE TRUSS COMPONENT DESIGN SHOWN. THE SUITABILITY AND USE OF THIS COMPONENT FOR ANY BUILDING IS THE RESPONSIBILITY OF THE BUILDING DESIGNER PER ANSI/TPI 1 SEC. 2.

DENISE RUTLEDGE LICENSE No. 58752 STATE OF FLORIDA PROFESSIONAL ENGINEER
Sep 08 '05

TC LL	20.0 PSF	REF	R215-- 70220
TC DL	10.0 PSF	DATE	09/08/05
BC DL	10.0 PSF	DRW	HCUSR215 05251301
BC LL	0.0 PSF	HC-ENG	EC/ADR
TOT.LD.	40.0 PSF	SEQN-	96233
DUR.FAC.	1.25	FROM	CDM
SPACING	24.0"	JREF-	1SQB215_Z12

(2272-/Manley Addition /J.L. DUPREE -- LAKE CITY, FL - J5B)

Top chord 2x4 SP #2 N
Bot chord 2x4 SP #2 N

Deflection meets L/240 live and L/180 total load.

The overall height of this truss excluding overhang is 2-10-3.

110 mph wind, 30.00 ft mean hgt, ASCE 7-98, CLOSED bldg, not located within 4.50 ft from roof edge, CAT II, EXP B, wind TC DL=5.0 psf, wind BC DL=5.0 psf.

Plates sized for a minimum of 3.00 sq.in./piece.

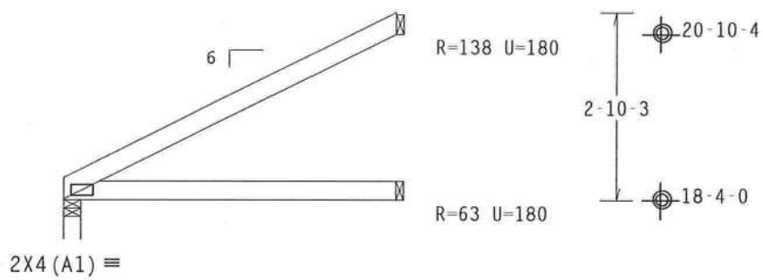

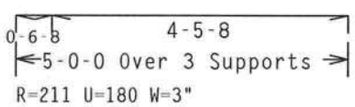

PLT TYP. Wave\R Design Crit: TPI-2002(STD)/FBC 7.1 0115.21 QTY:1 L/-/5/-/-/R/- Scale =.375"/Ft.

WARNING TRUSSES REQUIRE EXTREME CARE IN FABRICATION, HANDLING, SHIPPING, INSTALLING AND BRACING. REFER TO BCSI 1-03 (BUILDING COMPONENT SAFETY INFORMATION), PUBLISHED BY TPI (TRUSS PLATE INSTITUTE, 583 D'ONOFRIO DR., SUITE 200, MADISON, WI 53719) AND WTCA (WOOD TRUSS COUNCIL OF AMERICA, 6300 ENTERPRISE LN, MADISON, WI 53719) FOR SAFETY PRACTICES PRIOR TO PERFORMING THESE FUNCTIONS. UNLESS OTHERWISE INDICATED, TOP CHORD SHALL HAVE PROPERLY ATTACHED STRUCTURAL PANELS AND BOTTOM CHORD SHALL HAVE A PROPERLY ATTACHED RIGID CEILING.

IMPORTANT FURNISH A COPY OF THIS DESIGN TO THE INSTALLATION CONTRACTOR. ALPINE ENGINEERED PRODUCTS, INC. SHALL NOT BE RESPONSIBLE FOR ANY DEVIATION FROM THIS DESIGN; ANY FAILURE TO BUILD THE TRUSS IN CONFORMANCE WITH TPI; OR FABRICATING, HANDLING, SHIPPING, INSTALLING & BRACING OF TRUSSES. DESIGN CONFORMS WITH APPLICABLE PROVISIONS OF NDS (NATIONAL DESIGN SPEC, BY AF&PA) AND TPI. ALPINE CONNECTOR PLATES ARE MADE OF 20/18/16GA (W,H/S/K) ASTM A653 GRADE 40/60 (W, K/H,S) GALV. STEEL. APPLY PLATES TO EACH FACE OF TRUSS AND, UNLESS OTHERWISE LOCATED ON THIS DESIGN, POSITION PER DRAWINGS 160A-Z. ANY INSPECTION OF PLATES FOLLOWED BY (1) SHALL BE PER ANNEX A3 OF TPI1-2002 SEC.3. A SEAL ON THIS DRAWING INDICATES ACCEPTANCE OF PROFESSIONAL ENGINEERING RESPONSIBILITY SOLELY FOR THE TRUSS COMPONENT DESIGN SHOWN. THE SUITABILITY AND USE OF THIS COMPONENT FOR ANY BUILDING IS THE RESPONSIBILITY OF THE BUILDING DESIGNER PER ANSI/TPI 1 SEC. 2.

ALPINE

Alpine Engineered Products, Inc.
1950 Marley Drive
Haines City, FL 33844
FL Certificate of Authorization # 567

DENISE RUTLEDGE
LICENSE
No. 58752
STATE OF
FLORIDA
PROFESSIONAL ENGINEER

TC LL	20.0 PSF	REF	R215-- 70221
TC DL	10.0 PSF	DATE	09/08/05
BC DL	10.0 PSF	DRW	HCUSR215 05251302
BC LL	0.0 PSF	HC-ENG	EC/ADR
TOT.LD.	40.0 PSF	SEQN-	67643
DUR.FAC.	1.25	FROM	CDM
SPACING	24.0"	JREF-	1SQB215_Z12

(2272-/Manley Addition /J.L. DUPREE -- LAKE CITY, FL - J7)

Top chord 2x4 SP #2 N
Bot chord 2x4 SP #2 N

Deflection meets L/240 live and L/180 total load.

The overall height of this truss excluding overhang is 3-10-3.

110 mph wind, 30.00 ft mean hgt, ASCE 7-98, CLOSED bldg, not located within 4.50 ft from roof edge, CAT II, EXP B, wind TC DL=5.0 psf, wind BC DL=5.0 psf.

Plates sized for a minimum of 3.00 sq.in./piece.

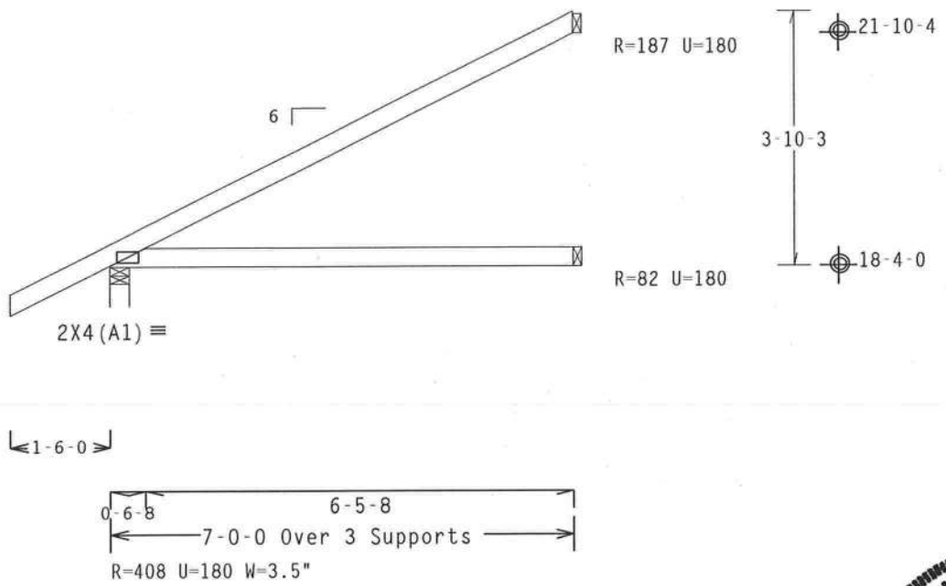

PLT TYP. Wave\R Design Crit: TPI-2002(STD)/FBC 7.11.0116.21 QTY:14 L/-/5/-/-/R/- Scale =.375"/Ft.

WARNING TRUSSES REQUIRE EXTREME CARE IN FABRICATION, HANDLING, SHIPPING, INSTALLING AND BRACING. REFER TO BCSI 1-03 (BUILDING COMPONENT SAFETY INFORMATION), PUBLISHED BY TPI (TRUSS PLATE INSTITUTE, 583 D'ONOFRIO DR., SUITE 200, MADISON, WI 53719) AND WTCA (WOOD TRUSS COUNCIL OF AMERICA, 6300 ENTERPRISE LN, MADISON, WI 53719) FOR SAFETY PRACTICES PRIOR TO PERFORMING THESE FUNCTIONS. UNLESS OTHERWISE INDICATED, TOP CHORD SHALL HAVE PROPERLY ATTACHED STRUCTURAL PANELS AND BOTTOM CHORD SHALL HAVE A PROPERLY ATTACHED RIGID CEILING.

IMPORTANT FURNISH A COPY OF THIS DESIGN TO THE INSTALLATION CONTRACTOR. ALPINE ENGINEERED PRODUCTS, INC. SHALL NOT BE RESPONSIBLE FOR ANY DEVIATION FROM THIS DESIGN; ANY FAILURE TO BUILD THE TRUSS IN CONFORMANCE WITH TPI; OR FABRICATING, HANDLING, SHIPPING, INSTALLING & BRACING OF TRUSSES. DESIGN CONFORMS WITH APPLICABLE PROVISIONS OF NDS (NATIONAL DESIGN SPEC, BY AF&PA) AND TPI. ALPINE CONNECTOR PLATES ARE MADE OF 20/18/16GA (W,H/S/K) ASTM A653 GRADE 40/60 (W, K/H,S) GALV. STEEL. APPLY PLATES TO EACH FACE OF TRUSS AND, UNLESS OTHERWISE LOCATED ON THIS DESIGN, POSITION PER DRAWINGS 160A-Z. ANY INSPECTION OF PLATES FOLLOWED BY (1) SHALL BE PER ANNEX A3 OF TPI1-2002 SEC.3. A SEAL ON THIS DRAWING INDICATES ACCEPTANCE OF PROFESSIONAL ENGINEERING RESPONSIBILITY SOLELY FOR THE TRUSS COMPONENT DESIGN SHOWN. THE SUITABILITY AND USE OF THIS COMPONENT FOR ANY BUILDING IS THE RESPONSIBILITY OF THE BUILDING DESIGNER PER ANSI/TPI 1 SEC. 2.

ALPINE
Alpine Engineered Products, Inc.
1950 Marley Drive
Haines City, FL 33844
FL Certificate of Authorization # 567

DENISE RUTLEDGE LICENSE No. 58752 STATE OF FLORIDA PROFESSIONAL ENGINEER
Sep 08 '05

TC LL	20.0	PSF	REF R215-- 70222
TC DL	10.0	PSF	DATE 09/08/05
BC DL	10.0	PSF	DRW HCUSR215 05251303
BC LL	0.0	PSF	HC-ENG EC/ADR
TOT.LD.	40.0	PSF	SEQN- 67596
DUR.FAC.	1.25		FROM CDM
SPACING	24.0"		JREF- 1SQB215_Z12

(2272-/Manley Addition /J.L. DUPREE -- LAKE CITY, FL - J7A)

Top chord 2x4 SP #2 N
Bot chord 2x4 SP #2 N
Webs 2x4 SP #2 N

Deflection meets L/240 live and L/180 total load.

Shim all supports to solid bearing.

110 mph wind, 30.00 ft mean hgt, ASCE 7-98, CLOSED bldg, not located within 4.50 ft from roof edge, CAT II, EXP B, wind TC DL=5.0 psf, wind BC DL=5.0 psf.

Plates sized for a minimum of 3.00 sq.in./piece.

The overall height of this truss excluding overhang is 3-10-3.

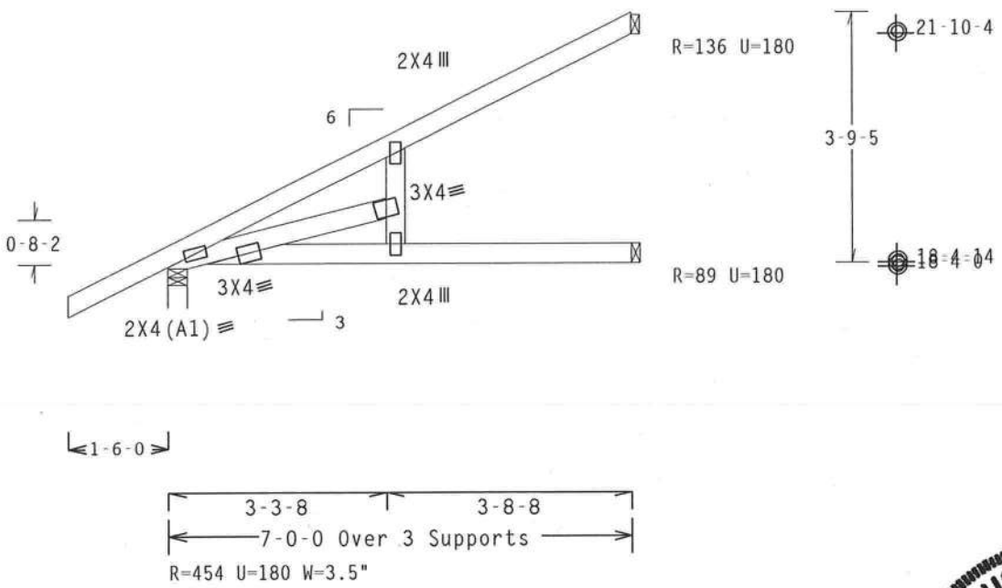

PLT TYP. Wave\R Design Crit: TPI-2002(STD)/FBC 7.1[illegible].0218.0[illegible] QTY 1 [illegible]L/-/5/-/-/R/- Scale =.375"/Ft.

ALPINE
Alpine Engineered Products, Inc.
1950 Marley Drive
Haines City, FL 33844
FL Certificate of Authorization # 567

WARNING TRUSSES REQUIRE EXTREME CARE IN FABRICATION, HANDLING, SHIPPING, INSTALLING AND BRACING. REFER TO BCSI 1-03 (BUILDING COMPONENT SAFETY INFORMATION), PUBLISHED BY TPI (TRUSS PLATE INSTITUTE, 583 D'ONOFRIO DR., SUITE 200, MADISON, WI 53719) AND WTCA (WOOD TRUSS COUNCIL OF AMERICA, 6300 ENTERPRISE LN, MADISON, WI 53719) FOR SAFETY PRACTICES PRIOR TO PERFORMING THESE FUNCTIONS. UNLESS OTHERWISE INDICATED, TOP CHORD SHALL HAVE PROPERLY ATTACHED STRUCTURAL PANELS AND BOTTOM CHORD SHALL HAVE A PROPERLY ATTACHED RIGID CEILING.

IMPORTANT FURNISH A COPY OF THIS DESIGN TO THE INSTALLATION CONTRACTOR. ALPINE ENGINEERED PRODUCTS, INC. SHALL NOT BE RESPONSIBLE FOR ANY DEVIATION FROM THIS DESIGN; ANY FAILURE TO BUILD THE TRUSS IN CONFORMANCE WITH TPI; OR FABRICATING, HANDLING, SHIPPING, INSTALLING & BRACING OF TRUSSES. DESIGN CONFORMS WITH APPLICABLE PROVISIONS OF NDS (NATIONAL DESIGN SPEC. BY AF&PA) AND TPI. ALPINE CONNECTOR PLATES ARE MADE OF 20/18/16GA (W,H/S/K) ASTM A653 GRADE 40/60 (W, K/H,S) GALV. STEEL. APPLY PLATES TO EACH FACE OF TRUSS AND, UNLESS OTHERWISE LOCATED ON THIS DESIGN, POSITION PER DRAWINGS 160A-Z. ANY INSPECTION OF PLATES FOLLOWED BY (1) SHALL BE PER ANNEX A3 OF TPI1-2002 SEC.3. A SEAL ON THIS DRAWING INDICATES ACCEPTANCE OF PROFESSIONAL ENGINEERING RESPONSIBILITY SOLELY FOR THE TRUSS COMPONENT DESIGN SHOWN. THE SUITABILITY AND USE OF THIS COMPONENT FOR ANY BUILDING IS THE RESPONSIBILITY OF THE BUILDING DESIGNER PER ANSI/TPI 1 SEC. 2.

DENISE RUTLEDGE LICENSE No. 58752 STATE OF FLORIDA PROFESSIONAL ENGINEER

TC LL	20.0	PSF	REF R215-- 70223
TC DL	10.0	PSF	DATE 09/08/05
BC DL	10.0	PSF	DRW HCUSR215 05251304
BC LL	0.0	PSF	HC-ENG EC/ADR
TOT.LD.	40.0	PSF	SEQN- 96248
DUR.FAC.	1.25		FROM CDM
SPACING	24.0"		JREF- 1SQB215_Z12