Alpine Engineered Products, Inc.

1950 Marley Drive Haines City, FL 33844 (863) 422-8685
Florida Engineering Certificate of Authorization Number: 567
 Document ID:1S2Q215-Z1015095745

Truss Fabricator: W.B. Howland
Job Identification: 9132-BRYAN ZECHER - SPEC HOUSE (-)
Truss Count: 54
Model Code: Florida Building Code
Truss Criteria: ANSI/TPI
Engineering Software: Alpine Software,Version .
Structural Engineer of Record:
Address:
Truss Design Loads: Roof - 40 PSF @ 1.25 Duration
Floor - N/A
Wind - 110 MPH (ASCE 7-98)

Notes:

1. Determination as to the suitability of these truss components for the structure is the responsibility of the building designer/engineer of record, as defined in ANSI/TPI 1-1995 Section 2.2
2. The seal date shown on the individual truss component drawings must match the seal date on this index sheet.
3. As shown on attached drawings; the drawing number is preceded by: HCUSR215

Seal Date: 05/15/2003

-Truss Design Engineer-
Manuel Martinez
Florida License Number: 47182
1950 Marley Drive
Haines City, FL 33844

Details: CNBRGBLK-BRCLBSUB-A11015EC-GBLLETIN

#	Ref Description	Drawing#
1	37418--H7A	03134068
2	37419--H9A	03134069
3	37420--H11A	03134070
4	37421--H13A	03134071
5	37422--H15A	03134072
6	37423--H17A	03134073
7	37424--A1	03134074
8	37425--A2	03134075
9	37426--A3	03134076
10	37427--A4	03134077
11	37428--A5	03134078
12	37429--H7B	03134079
13	37430--H9B	03134080
14	37431--B1	03134081
15	37432--H7C	03134082
16	37433--H9C	03134083
17	37434--CG	03134084
18	37435--H7D	03134085
19	37436--H9D	03134086
20	37437--DG	03134087
21	37438--HJ7	03134088
22	37439--HJK	03134089
23	37440--EJ7	03134090
24	37441--J7C	03134091
25	37442--JK1	03134092
26	37443--JK2	03134093
27	37444--JK3	03134094
28	37445--J7KK	03134095
29	37446--JK4	03134096
30	37447--HJKK	03134097
31	37448--J5	03134098
32	37449--J5K	03134099
33	37450--HJA	03134100
34	37451--J3KK	03134101
35	37452--J3K	03134102
36	37453--J2KK	03134103
37	37454--J1KK	03134104
38	37455--J3	03134105
39	37456--J1	03134106
40	37457--J1K	03134107
41	37458--J1KK	03134108
42	37459--H7K	03134109
43	37460--H9K	03134110
44	37461--H11K	03134111
45	37462--H13K	03134112
46	37463--H15K	03134113
47	37464--K1	03134114
48	37465--K2	03134115
49	37466--K3	03134116
50	37467--K4	03134117
51	37468--K5	03134118
52	37469--K6	03134119
53	37470--R1-GE	03134120
54	37471--R2	03134121

Top chord 2x4 SP #2 N :T2 2x6 SP #2 N:
:T3 2x6 SP #2 Dense:
Bot chord 2x6 SP #2 Dense :B2 2x6 SP #1 Dense:
:B3 2x6 SP #2 N:
Webs 2x4 SP #2 N :W14 2x4 SP #2 Dense:

BEARING BLOCKS: NAIL TYPE: 0.131x3.0_g_nails

BRG	X-LOC	#BLOCKS	LENGTH/BLK	#NAILS/BLK	WALL PLATE
2	32.708'	1	12"	7	MATCH TRUSS

BEARING BLOCK TO BE SAME SPECIES, SIZE & GRADE AS BOTTOM CHORD.
REFER TO DRAWING CNBRGBLK1299 FOR ADDITIONAL INFORMATION.

110 mph wind, 15.00 ft mean hgt, ASCE 7-98, CLOSED bldg, not located within 4.50 ft from roof edge, CAT II, EXP B, wind TC DL=5.0 psf, wind BC DL=5.0 psf.

In lieu of structural panels use purlins to brace all flat TC @ 24" OC.

The overall height of this truss excluding overhang is 3-10-3.

SPECIAL LOADS
------(LUMBER DUR.FAC.=1.25 / PLATE DUR.FAC.=1.25)
TC - From 60 PLF at -1.50 to 60 PLF at 33.00
BC - From 4 PLF at -1.50 to 4 PLF at 0.00
BC - From 20 PLF at 0.00 to 20 PLF at 33.00
TC - 237 LB Conc. Load at 3.06
TC - 179 LB Conc. Load at 5.06, 7.06, 9.06, 11.06, 13.06 15.06, 17.06, 19.06, 21.06, 23.06, 25.06, 27.06, 29.06, 31.06
BC - 87 LB Conc. Load at 3.06
BC - 74 LB Conc. Load at 5.06, 7.06, 9.06, 11.06, 13.06 15.06, 17.06, 19.06, 21.06, 23.06, 25.06, 27.06, 29.06, 31.06

Deflection meets L/360 live and L/240 total load.

Plates sized for a minimum of 3.00 sq.in./piece.

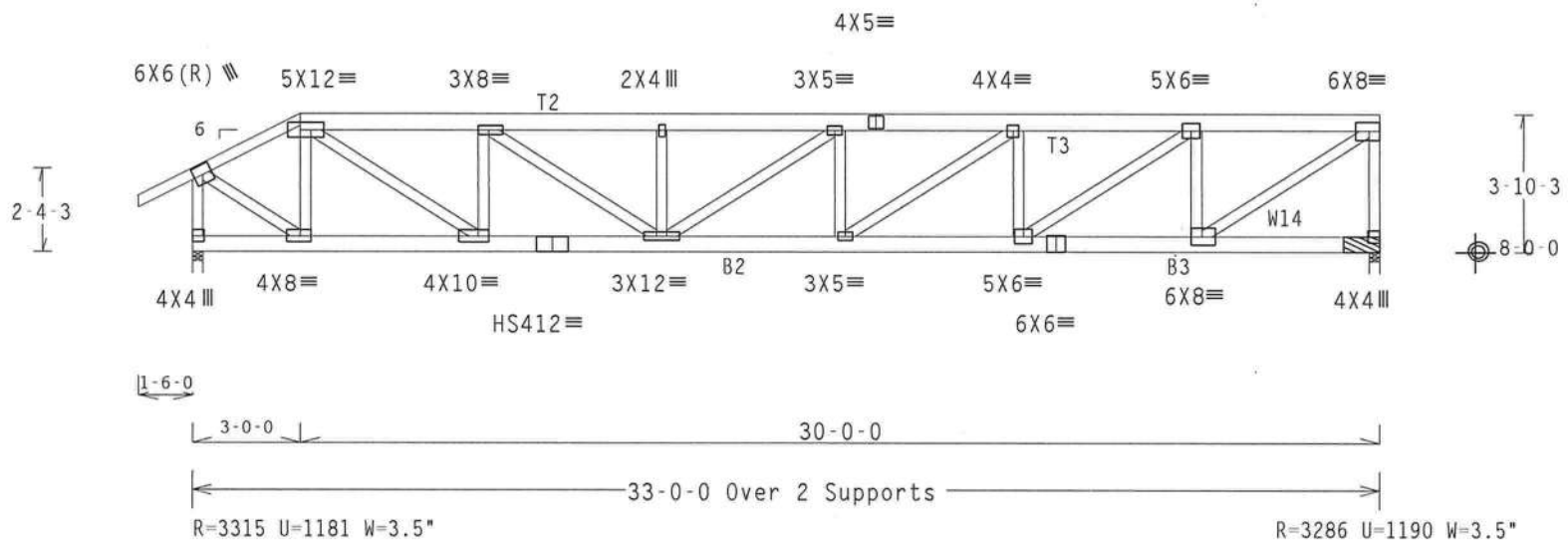

PLT TYP. 20 Gauge HS,
Wave TPI 95\R

Design Crit: TPI(STD)/FLBC 6.10 FL/-/5/-/-/R/- Scale =.1875"/Ft.

ALPINE
Alpine Engineered Products, Inc.
Haines City, FL 33844
FL Certificate of Authorization # 567

**WARNING* TRUSSES REQUIRE EXTREME CARE IN FABRICATION, HANDLING, SHIPPING, INSTALLING AND BRACING. REFER TO HIB-91 (HANDLING INSTALLING AND BRACING), PUBLISHED BY TPI (TRUSS PLATE INSTITUTE, 583 D'ONOFRIO DR., SUITE 200, MADISON, WI 53719). FOR SAFETY PRACTICES PRIOR TO PERFORMING THESE FUNCTIONS. UNLESS OTHERWISE INDICATED, TOP CHORD SHALL HAVE PROPERLY ATTACHED STRUCTURAL PANELS, BOTTOM CHORD SHALL HAVE A PROPERLY ATTACHED RIGID CEILING.
IMPORTANT FURNISH A COPY OF THIS DESIGN TO THE INSTALLATION CONTRACTOR. ALPINE ENGINEERED PRODUCTS, INC. SHALL NOT BE RESPONSIBLE FOR ANY DEVIATION FROM THIS DESIGN; ANY FAILURE TO BUILD THE TRUSSES IN CONFORMANCE WITH TPI; OR FABRICATING, HANDLING, SHIPPING, INSTALLING AND BRACING OF TRUSSES. THIS DESIGN CONFORMS WITH APPLICABLE PROVISIONS OF NDS (NATIONAL DESIGN SPEC. BY AF&PA) AND TPI. ALPINE CONNECTOR PLATES ARE MADE OF 20/16GA (W,HS/K) ASTM A653 (W, K/HS) GALV. STEEL. APPLY PLATES TO EACH FACE OF TRUSS AND UNLESS OTHERWISE LOCATED ON THIS DESIGN, POSITION PER DRAWINGS 160A-Z. ANY INSPECTION OF PLATES FOLLOWED BY (I) SHALL BE ANNEX A3 OF TPI 1-2002 SEC. 3. A SEAL ON THIS DRAWING INDICATES ACCEPTANCE OF PROFESSIONAL ENGINEERING RESPONSIBILITY SOLELY FOR THE TRUSS COMPONENT DESIGN SHOWN. THE SUITABILITY AND USE OF THIS COMPONENT FOR ANY BUILDING IS THE RESPONSIBILITY OF THE BUILDING DESIGNER, PER ANSI/TPI 1 SEC. 2.

MANUEL MARTINEZ
CERTIFICATE
No. 47182
STATE OF
FLORIDA
PROFESSIONAL ENGINEER

TC LL	20.0 PSF	REF	R215 -37418
TC DL	10.0 PSF	DATE	05/14/03
BC DL	10.0 PSF	DRW	HCUSR215 03134068
BC LL	0.0 PSF	HC-ENG	CR/MMA
TOT.LD.	40.0 PSF	SEQN-	37189
DUR.FAC.	1.25	FROM	JP
SPACING	24.0"	JREF-	1S2Q215 Z10

Top chord 2x4 SP #2 N
Bot chord 2x4 SP #2 N
Webs 2x4 SP #2 N

Deflection meets L/360 live and L/240 total load.

The overall height of this truss excluding overhang is 6-10-3.

110 mph wind, 11.60 ft mean hgt, ASCE 7-98, CLOSED bldg, not located within 4.50 ft from roof edge, CAT II, EXP B, wind TC DL=5.0 psf, wind BC DL=5.0 psf.

In lieu of structural panels use purlins to brace all flat TC @ 24" OC.

Plates sized for a minimum of 3.00 sq.in./piece.

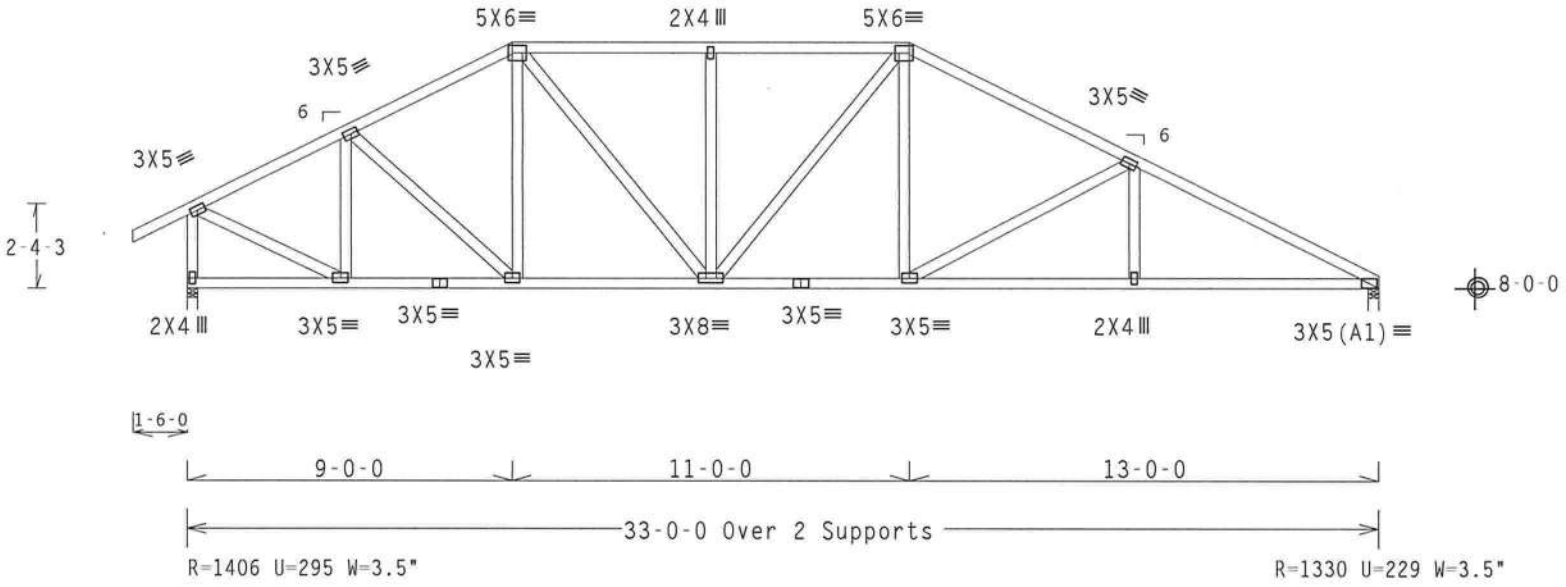

PLT TYP. Wave TPI 95\R Design Crit: TPI(STD)/FLBC 6.10 FL/-/5/-/-/R/- Scale =.1875"/Ft.

ALPINE

Alpine Engineered Products, Inc.
Haines City, FL 33844
FL Certificate of Authorization # 5677

**WARNING* TRUSSES REQUIRE EXTREME CARE IN FABRICATION, HANDLING, SHIPPING, INSTALLING AND BRACING. REFER TO HIB-91 (HANDLING INSTALLING AND BRACING), PUBLISHED BY TPI (TRUSS PLATE INSTITUTE, 583 D'ONOFRIO DR., SUITE 200, MADISON, WI 53719). FOR SAFETY PRACTICES PRIOR TO PERFORMING THESE FUNCTIONS. UNLESS OTHERWISE INDICATED, TOP CHORD SHALL HAVE PROPERLY ATTACHED STRUCTURAL PANELS, BOTTOM CHORD SHALL HAVE A PROPERLY ATTACHED RIGID CEILING.
IMPORTANT FURNISH A COPY OF THIS DESIGN TO THE INSTALLATION CONTRACTOR. ALPINE ENGINEERED PRODUCTS, INC. SHALL NOT BE RESPONSIBLE FOR ANY DEVIATION FROM THIS DESIGN; ANY FAILURE TO BUILD THE TRUSSES IN CONFORMANCE WITH TPI; OR FABRICATING, HANDLING, SHIPPING, INSTALLING AND BRACING OF TRUSSES. THIS DESIGN CONFORMS WITH APPLICABLE PROVISIONS OF NDS (NATIONAL DESIGN SPEC. BY AF&PA) AND TPI. ALPINE CONNECTOR PLATES ARE MADE OF 20/16GA (W.HS/K) ASTM 653 (W, K/HS) GALV. STEEL. APPLY PLATES TO EACH FACE OF TRUSS AND UNLESS OTHERWISE LOCATED ON THE DESIGN, POSITION PER DRAWINGS 160A-Z. ANY INSPECTION OF PLATES FOLLOWED BY (I) SHALL BE IN ANNEX A3 OF TPI 1-2002 SEC. 3. A SEAL ON THIS DRAWING INDICATES ACCEPTANCE OF PROFESSIONAL ENGINEERING RESPONSIBILITY SOLELY FOR THE TRUSS COMPONENT DESIGN SHOWN. THE SUITABILITY AND USE OF THIS COMPONENT FOR ANY BUILDING IS THE RESPONSIBILITY OF THE BUILDING DESIGNER. PER ANSI/TPI 1 SEC. 2.

MANUEL MARTINEZ
CERTIFICATE
No. 47182
STATE OF FLORIDA
PROFESSIONAL ENGINEER
May 03

TC LL	20.0 PSF	REF	R215 -37421
TC DL	10.0 PSF	DATE	05/14/03
BC DL	10.0 PSF	DRW	HCUSR215 03134071
BC LL	0.0 PSF	HC-ENG	CR/MMA *
TOT.LD.	40.0 PSF	SEQN-	37207
DUR.FAC.	1.25	FROM	JP
SPACING	24.0"	JREF-	1S20215 710

Top chord 2x4 SP #2 N
Bot chord 2x4 SP #2 N
Webs 2x4 SP #2 N

110 mph wind, 13.22 ft mean hgt, ASCE 7-98, CLOSED bldg, not located within 4.50 ft from roof edge, CAT II, EXP B, wind TC DL=5.0 psf, wind BC DL=5.0 psf.

Left end vertical not exposed to wind pressure.

Plates sized for a minimum of 3.00 sq.in./piece.

In lieu of structural panels use purlins to brace all flat TC @ 24" OC.

Deflection meets L/360 live and L/240 total load.

The overall height of this truss excluding overhang is 6-10-3.

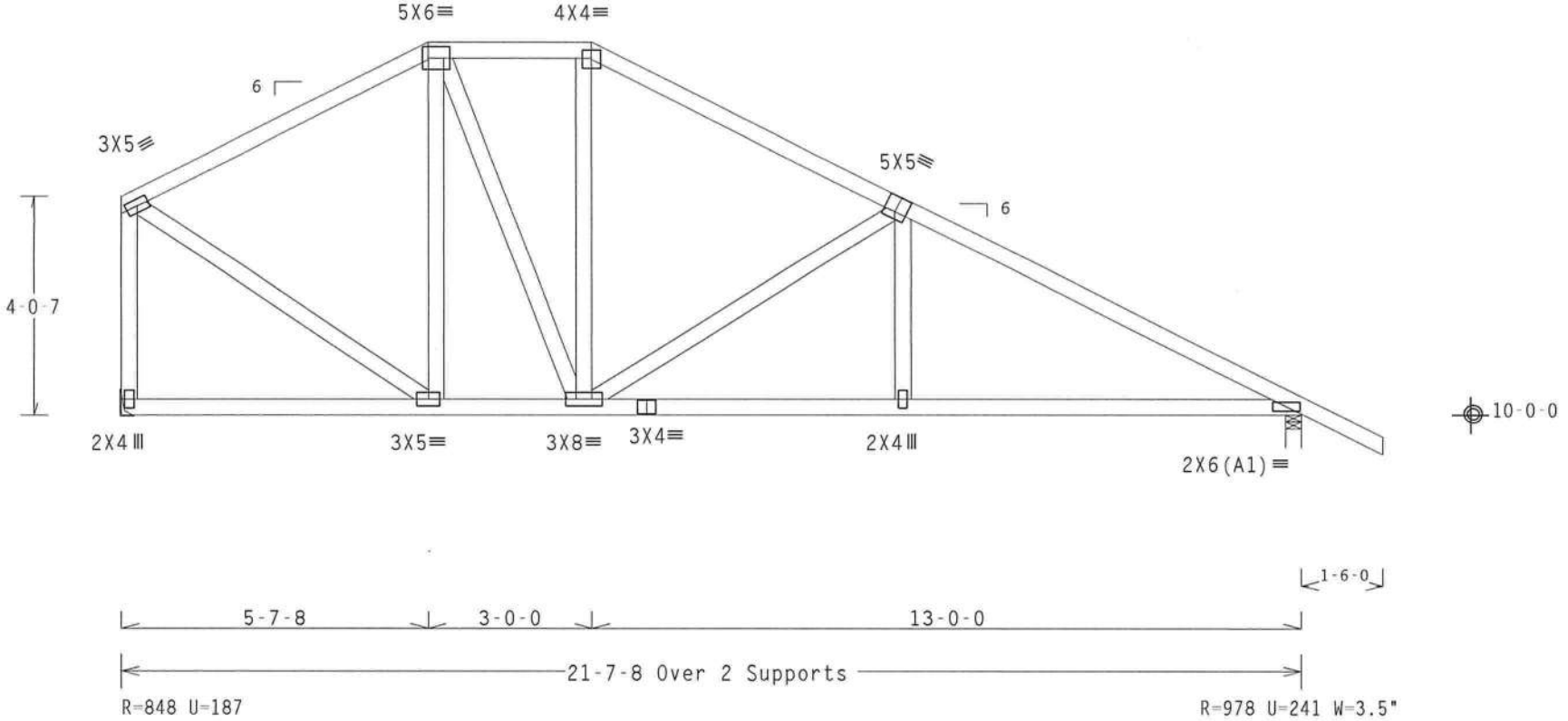

PLT TYP. Wave TPI 95\R Design Crit: TPI(STD)/FLBC 6.10 FL/-/5/-/-/R/- Scale =.3125"/Ft.

ALPINE
Alpine Engineered Products, Inc.
Haines City, FL 33844
FL Certificate of Authorization # 5[illegible]

**WARNING* TRUSSES REQUIRE EXTREME CARE IN FABRICATION, HANDLING, SHIPPING, INSTALLING AND BRACING. REFER TO HIB-91 (HANDLING INSTALLING AND BRACING), PUBLISHED BY TPI (TRUSS PLATE INSTITUTE, 583 D'ONOFRIO DR., SUITE 200, MADISON, WI 53719). FOR SAFETY PRACTICES PRIOR TO PERFORMING THESE FUNCTIONS. UNLESS OTHERWISE INDICATED, TOP CHORD SHALL HAVE PROPERLY ATTACHED STRUCTURAL PANELS, BOTTOM CHORD SHALL HAVE A PROPERLY ATTACHED RIGID CEILING.
IMPORTANT FURNISH A COPY OF THIS DESIGN TO THE INSTALLATION CONTRACTOR. ALPINE ENGINEERED PRODUCTS, INC. SHALL NOT BE RESPONSIBLE FOR ANY DEVIATION FROM THIS DESIGN; ANY FAILURE TO BUILD THE TRUSSES IN CONFORMANCE WITH TPI; OR FABRICATING, HANDLING, SHIPPING, INSTALLING AND BRACING OF TRUSSES. THIS DESIGN CONFORMS WITH APPLICABLE PROVISIONS OF NDS (NATIONAL DESIGN SPEC, BY AF&PA) AND TPI. ALPINE CONNECTOR PLATES ARE MADE OF 20/16GA (W,HS/K) ASTM 653 (W, K/HS) GALV. STEEL. APPLY PLATES TO EACH FACE OF TRUSS AND UNLESS OTHERWISE LOCATED ON THIS DESIGN, POSITION PER DRAWINGS 160A-Z. ANY INSPECTION OF PLATES FOLLOWED BY (I) SHALL BE IN ANNEX A3 OF TPI 1-2002 SEC. 3. A SEAL ON THIS DRAWING INDICATES ACCEPTANCE OF PROFESSIONAL ENGINEERING RESPONSIBILITY SOLELY FOR THE TRUSS COMPONENT DESIGN SHOWN. THE SUITABILITY AND USE OF THIS COMPONENT FOR ANY BUILDING IS THE RESPONSIBILITY OF THE BUILDING DESIGNER, PER ANSI/TPI 1 SEC. 2.

MANUEL MARTINEZ
CERTIFICATE
No. 47182
STATE OF FLORIDA
PROFESSIONAL ENGINEER
May 14, 03

TC LL	20.0 PSF	REF R215 -37426
TC DL	10.0 PSF	DATE 05/14/03
BC DL	10.0 PSF	DRW HCUSR215 03134076
BC LL	0.0 PSF	HC-ENG CR/MMA
TOT.LD.	40.0 PSF	SEQN- 37151
DUR.FAC.	1.25	FROM JP
SPACING	24.0"	JREF- 1S20215 Z10

Top chord 2x4 SP #2 N
Bot chord 2x4 SP #2 N
Webs 2x4 SP #2 N

Left end vertical not exposed to wind pressure.

Deflection meets L/360 live and L/240 total load.

Plates sized for a minimum of 3.00 sq.in./piece.

110 mph wind, 13.97 ft mean hgt, ASCE 7-98, CLOSED bldg, not located within 4.50 ft from roof edge, CAT II, EXP B, wind TC DL=5.0 psf, wind BC DL=5.0 psf.

The overall height of this truss excluding overhang is 7-7-3.

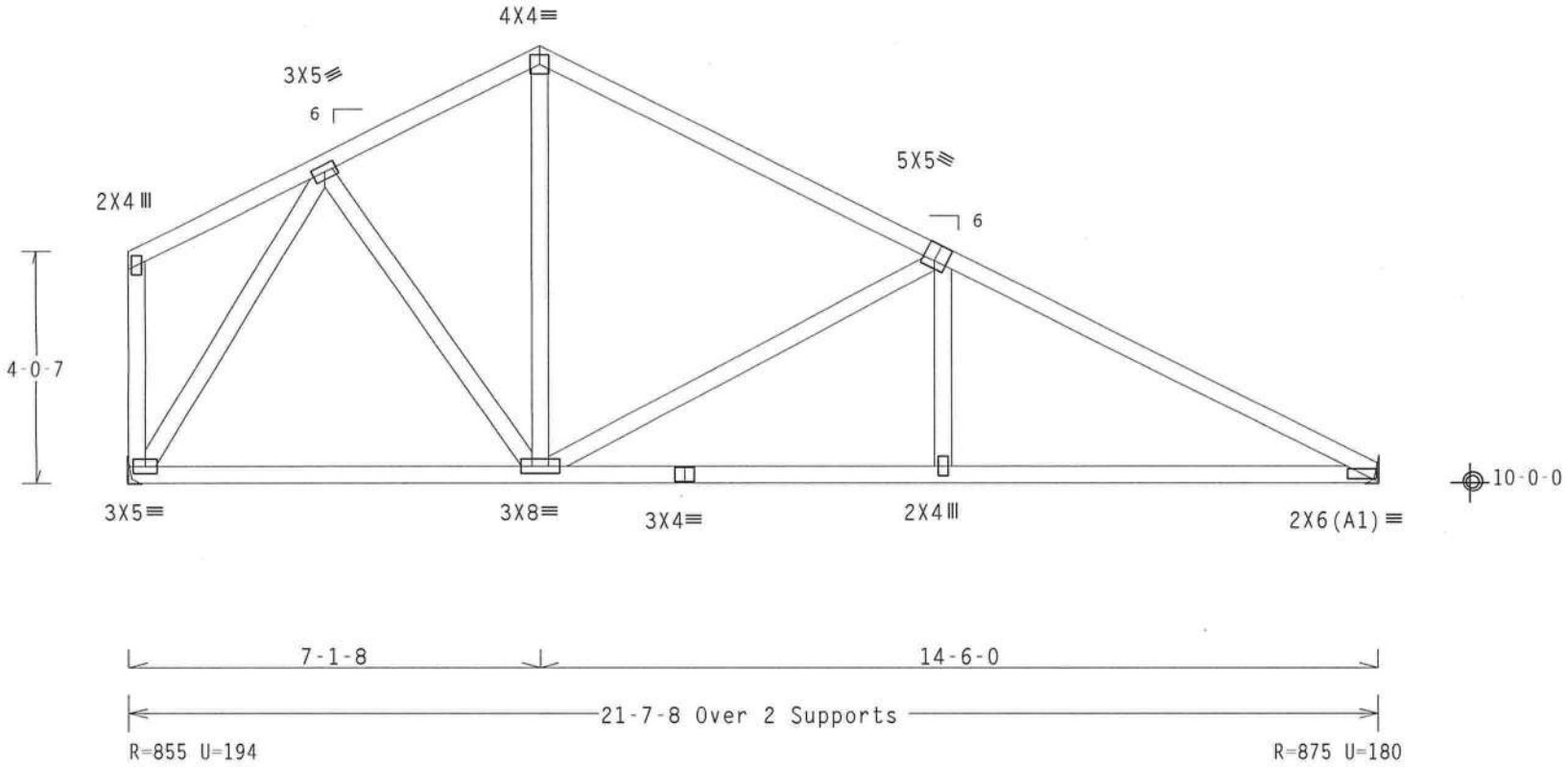

PLT TYP. Wave TPI 95\R Design Crit: TPI(STD)/FLBC 6.10 FL/-/5/-/-/R/- Scale =.3125"/Ft.

ALPINE

Alpine Engineered Products, Inc.
Haines City, FL 33844
FL Certificate of Authorization # 6[illegible]

**WARNING* TRUSSES REQUIRE EXTREME CARE IN FABRICATION, HANDLING, SHIPPING, INSTALLING AND BRACING. REFER TO HIB-91 (HANDLING INSTALLING AND BRACING), PUBLISHED BY TPI (TRUSS PLATE INSTITUTE, 583 D'ONOFRIO DR., SUITE 200, MADISON, WI 53719). FOR SAFETY PRACTICES PRIOR TO PERFORMING THESE FUNCTIONS. UNLESS OTHERWISE INDICATED, TOP CHORD SHALL HAVE PROPERLY ATTACHED STRUCTURAL PANELS, BOTTOM CHORD SHALL HAVE A PROPERLY ATTACHED RIGID CEILING.
IMPORTANT FURNISH A COPY OF THIS DESIGN TO THE INSTALLATION CONTRACTOR. ALPINE ENGINEERED PRODUCTS, INC. SHALL NOT BE RESPONSIBLE FOR ANY DEVIATION FROM THIS DESIGN; ANY FAILURE TO BUILD THE TRUSSES IN CONFORMANCE WITH TPI; OR FABRICATING, HANDLING, SHIPPING, INSTALLING AND BRACING OF TRUSSES. THIS DESIGN CONFORMS WITH APPLICABLE PROVISIONS OF NDS (NATIONAL DESIGN SPEC, BY AF&PA) AND TPI. ALPINE CONNECTOR PLATES ARE MADE OF 20/16GA (W,HS/K) ASTM [illegible] (W, K/HS) GALV. STEEL. APPLY PLATES TO EACH FACE OF TRUSS AND UNLESS OTHERWISE LOCATED ON THIS DESIGN, POSITION PER DRAWINGS 160A-Z. ANY INSPECTION OF PLATES FOLLOWED BY (I) SHALL BE PER ANNEX A3 OF TPI 1-2002 SEC. 3. A SEAL ON THIS DRAWING INDICATES ACCEPTANCE OF PROFESSIONAL ENGINEERING RESPONSIBILITY SOLELY FOR THE TRUSS COMPONENT DESIGN SHOWN. THE SUITABILITY AND USE OF THIS COMPONENT FOR ANY BUILDING IS THE RESPONSIBILITY OF THE BUILDING DESIGNER, PER ANSI/TPI 1 SEC. 3.

MANUEL MARTINEZ
CERTIFICATE
No. 47182
STATE OF FLORIDA
PROFESSIONAL ENGINEER
May [illegible] 03

TC LL	20.0 PSF	REF R215 -37425
TC DL	10.0 PSF	DATE 05/14/03
BC DL	10.0 PSF	DRW HCUSR215 03134075
BC LL	0.0 PSF	HC-ENG CR/MMA
TOT.LD.	40.0 PSF	SEQN- 37161
DUR.FAC.	1.25	FROM JP
SPACING	24.0"	JREF- 1S20215 710

(9152-BRIAN ZECHER - SPEC HOUSE - H9A)

Top chord 2x4 SP #2 N
Bot chord 2x4 SP #2 N
Webs 2x4 SP #2 N

Deflection meets L/360 live and L/240 total load.

The overall height of this truss excluding overhang is 4-10-3.

110 mph wind, 11.22 ft mean hgt, ASCE 7-98, CLOSED bldg, not located within 4.50 ft from roof edge, CAT II, EXP B, wind TC DL=5.0 psf, wind BC DL=5.0 psf.

In lieu of structural panels use purlins to brace all flat TC @ 24" OC.

Plates sized for a minimum of 3.00 sq.in./piece.

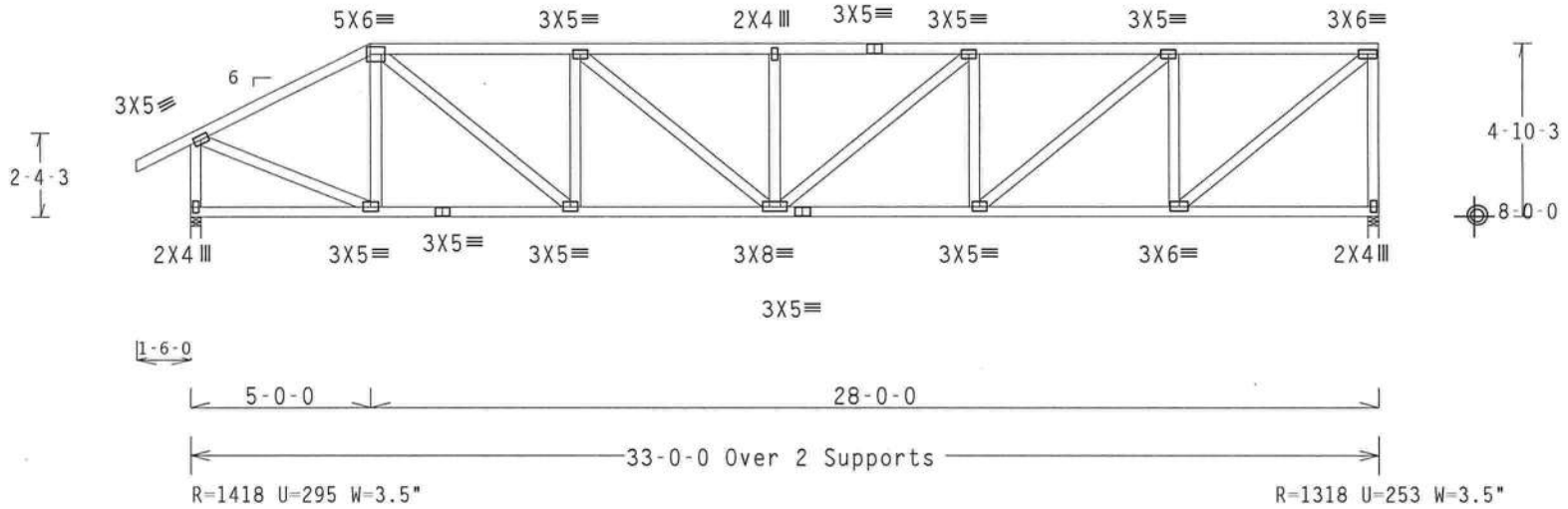

PLT TYP. Wave TPI 95\R Design Crit: TPI(STD)/FLBC 6.10 FL/-/5/-/-/R/- Scale =.1875"/Ft.

ALPINE

Alpine Engineered Products, Inc.
Haines City, FL 33844
FL Certificate of Authorization # 567

**WARNING* TRUSSES REQUIRE EXTREME CARE IN FABRICATION, HANDLING, SHIPPING, INSTALLING AND BRACING. REFER TO HIB-91 (HANDLING INSTALLING AND BRACING), PUBLISHED BY TPI (TRUSS PLATE INSTITUTE, 583 D'ONOFRIO DR., SUITE 200, MADISON, WI 53719). FOR SAFETY PRACTICES PRIOR TO PERFORMING THESE FUNCTIONS. UNLESS OTHERWISE INDICATED, TOP CHORD SHALL HAVE PROPERLY ATTACHED STRUCTURAL PANELS, BOTTOM CHORD SHALL HAVE A PROPERLY ATTACHED RIGID CEILING.
IMPORTANT FURNISH A COPY OF THIS DESIGN TO THE INSTALLATION CONTRACTOR. ALPINE ENGINEERED PRODUCTS, INC. SHALL NOT BE RESPONSIBLE FOR ANY DEVIATION FROM THIS DESIGN; ANY FAILURE TO BUILD THE TRUSSES IN CONFORMANCE WITH TPI; OR FABRICATING, HANDLING, SHIPPING, INSTALLING AND BRACING OF TRUSSES. THIS DESIGN CONFORMS WITH APPLICABLE PROVISIONS OF NDS (NATIONAL DESIGN SPEC. BY AF&PA) AND TPI. ALPINE CONNECTOR PLATES ARE MADE OF 20/16GA (W,HS/K) ASTM A653 (W, K/HS) GALV. STEEL. APPLY PLATES TO EACH FACE OF TRUSS AND UNLESS OTHERWISE LOCATED ON THIS DESIGN, POSITION PER DRAWINGS 160A-Z. ANY INSPECTION OF PLATES FOLLOWED BY (I) SHALL BE PER ANNEX A3 OF TPI 1-2002 SEC. 3. A SEAL ON THIS DRAWING INDICATES ACCEPTANCE OF PROFESSIONAL ENGINEERING RESPONSIBILITY SOLELY FOR THE TRUSS COMPONENT DESIGN SHOWN. THE SUITABILITY AND USE OF THIS COMPONENT FOR ANY BUILDING IS THE RESPONSIBILITY OF THE BUILDING DESIGNER, PER ANSI/TPI 1 SEC. 2.

MANUEL MARTINEZ
CERTIFICATE
No. 47182
STATE OF FLORIDA
PROFESSIONAL ENGINEER

TC LL	20.0 PSF	REF	R215 -37419
TC DL	10.0 PSF	DATE	05/14/03
BC DL	10.0 PSF	DRW	HCUSR215 03134069
BC LL	0.0 PSF	HC-ENG	CR/MMA *
TOT.LD.	40.0 PSF	SEQN-	37193
DUR.FAC.	1.25	FROM	JP
SPACING	24.0"	JREF-	1S2Q215_Z10

Top chord 2x4 SP #2 N
Bot chord 2x4 SP #2 N
Webs 2x4 SP #2 N

Deflection meets L/360 live and L/240 total load.

The overall height of this truss excluding overhang is 5-10-3.

110 mph wind, 11.10 ft mean hgt, ASCE 7-98, CLOSED bldg, not located within 4.50 ft from roof edge, CAT II, EXP B, wind TC DL=5.0 psf, wind BC DL=5.0 psf.

In lieu of structural panels use purlins to brace all flat TC @ 24" OC.

Plates sized for a minimum of 3.00 sq.in./piece.

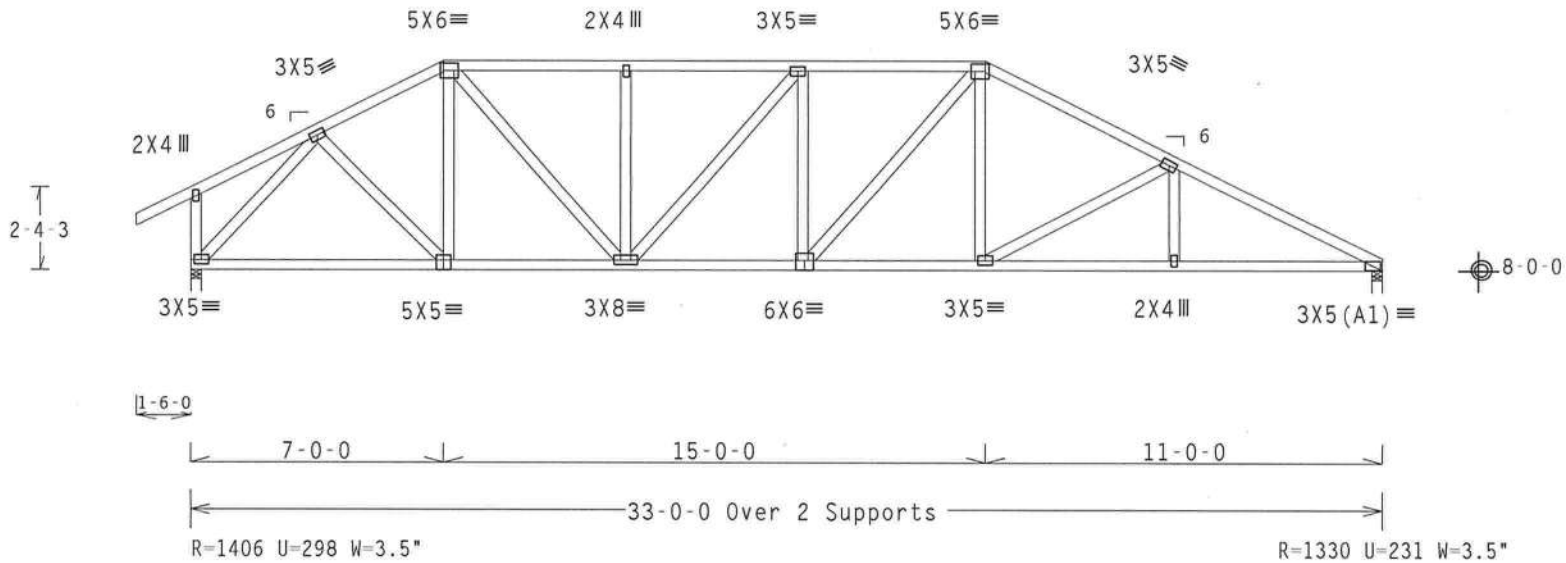

PLT TYP. Wave TPI 95\R Design Crit: TPI(STD)/FLBC 6.10 FL/-/5/-/-/R/- Scale =.1875"/Ft.

ALPINE

Alpine Engineered Products, Inc.
Haines City, FL 33844
FL Certificate of Authorization # 567

**WARNING* TRUSSES REQUIRE EXTREME CARE IN FABRICATION, HANDLING, SHIPPING, INSTALLING AND BRACING. REFER TO HIB-91 (HANDLING INSTALLING AND BRACING), PUBLISHED BY TPI (TRUSS PLATE INSTITUTE, 583 D'ONOFRIO DR., SUITE 200, MADISON, WI 53719). FOR SAFETY PRACTICES PRIOR TO PERFORMING THESE FUNCTIONS. UNLESS OTHERWISE INDICATED, TOP CHORD SHALL HAVE PROPERLY ATTACHED STRUCTURAL PANELS, BOTTOM CHORD SHALL HAVE A PROPERLY ATTACHED RIGID CEILING.
IMPORTANT FURNISH A COPY OF THIS DESIGN TO THE INSTALLATION CONTRACTOR. ALPINE ENGINEERED PRODUCTS, INC. SHALL NOT BE RESPONSIBLE FOR ANY DEVIATION FROM THIS DESIGN; ANY FAILURE TO BUILD THE TRUSSES IN CONFORMANCE WITH TPI; OR FABRICATING, HANDLING, SHIPPING, INSTALLING AND BRACING OF TRUSSES. THIS DESIGN CONFORMS WITH APPLICABLE PROVISIONS OF NDS (NATIONAL DESIGN SPEC. BY AF&PA) AND TPI. ALPINE CONNECTOR PLATES ARE MADE OF 20/16GA (W,HS/K) ASTM A653 (W, K/HS) GALV. STEEL. APPLY PLATES TO EACH FACE OF TRUSS AND UNLESS OTHERWISE LOCATED ON THE DESIGN, POSITION PER DRAWINGS 160A-Z. ANY INSPECTION OF PLATES FOLLOWED BY (I) SHALL BE ANNEX A3 OF TPI 1-2002 SEC. 3. A SEAL ON THIS DRAWING INDICATES ACCEPTANCE OF PROFESSIONAL ENGINEERING RESPONSIBILITY SOLELY FOR THE TRUSS COMPONENT DESIGN SHOWN. THE SUITABILITY AND USE OF THIS COMPONENT FOR ANY BUILDING IS THE RESPONSIBILITY OF THE BUILDING DESIGNER. PER ANSI/TPI 1 SEC. 2.

MANUEL MARTINEZ
CERTIFICATE
No. 47182
STATE OF FLORIDA
PROFESSIONAL ENGINEER
May 1 03

TC LL	20.0 PSF	REF	R215 -37420
TC DL	10.0 PSF	DATE	05/14/03
BC DL	10.0 PSF	DRW	HCUSR215 03134070
BC LL	0.0 PSF	HC-ENG	CR/MMA *
TOT.LD.	40.0 PSF	SEQN-	37200
DUR.FAC.	1.25	FROM	JP
SPACING	24.0"	JREF-	1S2Q215_Z10

Top chord 2x4 SP #2 N
Bot chord 2x4 SP #2 N
Webs 2x4 SP #2 N

Deflection meets L/360 live and L/240 total load.

The overall height of this truss excluding overhang is 7-7-3.

110 mph wind, 12.97 ft mean hgt, ASCE 7-98, CLOSED bldg, not located within 4.50 ft from roof edge, CAT II, EXP B, wind TC DL=5.0 psf, wind BC DL=5.0 psf.

Plates sized for a minimum of 3.00 sq.in./piece.

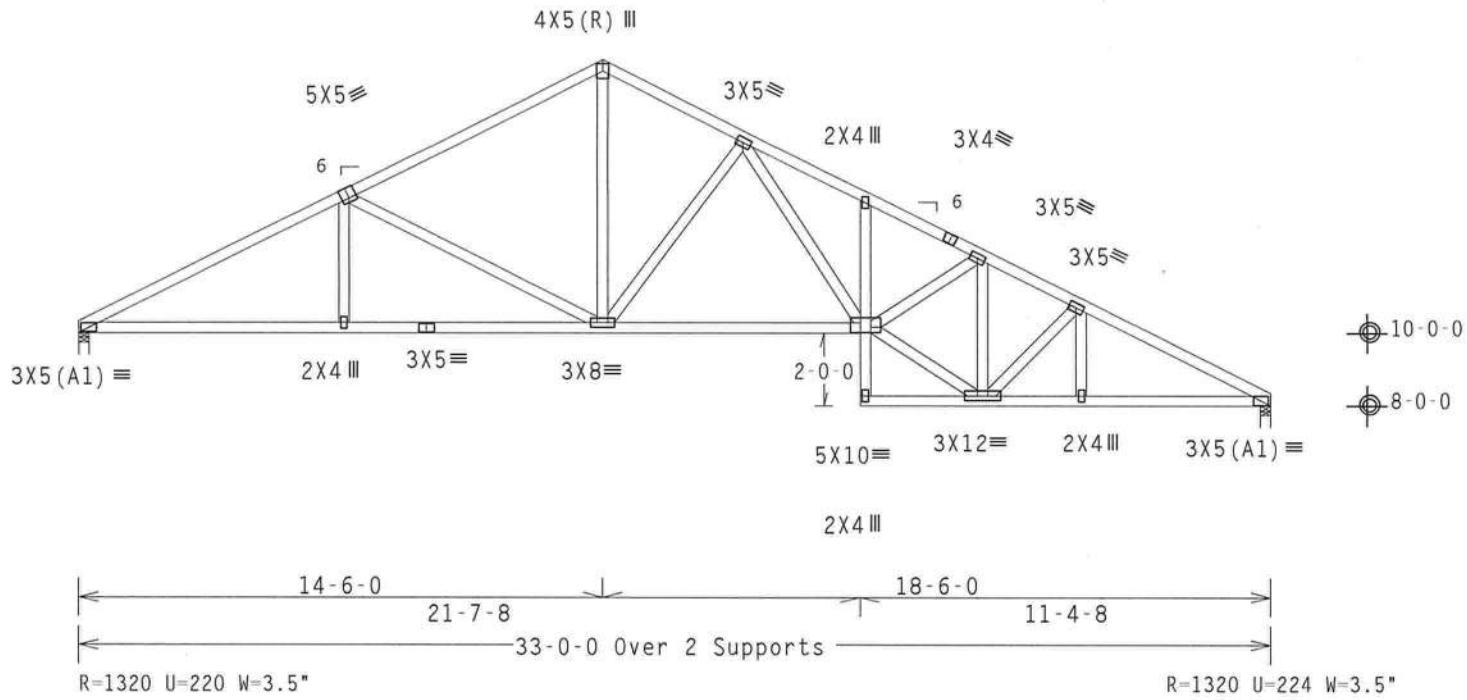

PLT TYP. Wave TPI 95\R Design Crit: TPI(STD)/FLBC 6.10 FL/-/5/-/-/R/- Scale =.1875"/Ft.

ALPINE

Alpine Engineered Products, Inc.
Haines City, FL 33844
FL Certificate of Authorization # 567

**WARNING* TRUSSES REQUIRE EXTREME CARE IN FABRICATION, HANDLING, SHIPPING, INSTALLING AND BRACING. REFER TO HIB-91 (HANDLING INSTALLING AND BRACING), PUBLISHED BY TPI (TRUSS PLATE INSTITUTE, 583 D'ONOFRIO DR., SUITE 200, MADISON, WI 53719). FOR SAFETY PRACTICES PRIOR TO PERFORMING THESE FUNCTIONS. UNLESS OTHERWISE INDICATED, TOP CHORD SHALL HAVE PROPERLY ATTACHED STRUCTURAL PANELS, BOTTOM CHORD SHALL HAVE A PROPERLY ATTACHED RIGID CEILING.
IMPORTANT FURNISH A COPY OF THIS DESIGN TO THE INSTALLATION CONTRACTOR. ALPINE ENGINEERED PRODUCTS, INC. SHALL NOT BE RESPONSIBLE FOR ANY DEVIATION FROM THIS DESIGN; ANY FAILURE TO BUILD THE TRUSSES IN CONFORMANCE WITH TPI; OR FABRICATING, HANDLING, SHIPPING, INSTALLING AND BRACING OF TRUSSES. THIS DESIGN CONFORMS WITH APPLICABLE PROVISIONS OF NDS (NATIONAL DESIGN SPEC. BY AF&PA) AND TPI. ALPINE CONNECTOR PLATES ARE MADE OF 20/16GA (W.HS/K) ASTM 653 (W. K/HS) GALV. STEEL. APPLY PLATES TO EACH FACE OF TRUSS AND UNLESS OTHERWISE LOCATED ON THIS DESIGN, POSITION PER DRAWINGS 160A-Z. ANY INSPECTION OF PLATES FOLLOWED BY (I) SHALL BE PER ANNEX A3 OF TPI 1-2002 SEC. 3. A SEAL ON THIS DRAWING INDICATES ACCEPTANCE OF PROFESSIONAL ENGINEERING RESPONSIBILITY SOLELY FOR THE TRUSS COMPONENT DESIGN SHOWN. THE SUITABILITY AND USE OF THIS COMPONENT FOR ANY BUILDING IS THE RESPONSIBILITY OF THE BUILDING DESIGNER, PER ANSI/TPI 1 SEC. 2.

MANUEL MARTINEZ
CERTIFICATE
No. 47182
STATE OF FLORIDA
PROFESSIONAL ENGINEER

TC LL	20.0 PSF	REF	R215 -37424
TC DL	10.0 PSF	DATE	05/14/03
BC DL	10.0 PSF	DRW	HCUSR215 03134074
BC LL	0.0 PSF	HC-ENG	CR/MMA *
TOT.LD.	40.0 PSF	SEQN-	75072
DUR.FAC.	1.25	FROM	JP
SPACING	24.0"	JREF-	1S20215 Z10

Top chord 2x4 SP #2 N
Bot chord 2x4 SP #2 N
Webs 2x4 SP #2 N

(A) Continuous lateral bracing equally spaced on member.

In lieu of structural panels use purlins to brace all flat TC @ 24" OC.

The overall height of this truss excluding overhang is 6-10-3.

110 mph wind, 13.60 ft mean hgt, ASCE 7-98, CLOSED bldg, not located within 4.50 ft from roof edge, CAT II, EXP B, wind TC DL=5.0 psf, wind BC DL=5.0 psf.

Right end vertical not exposed to wind pressure.

Deflection meets L/360 live and L/240 total load.

Plates sized for a minimum of 3.00 sq.in./piece.

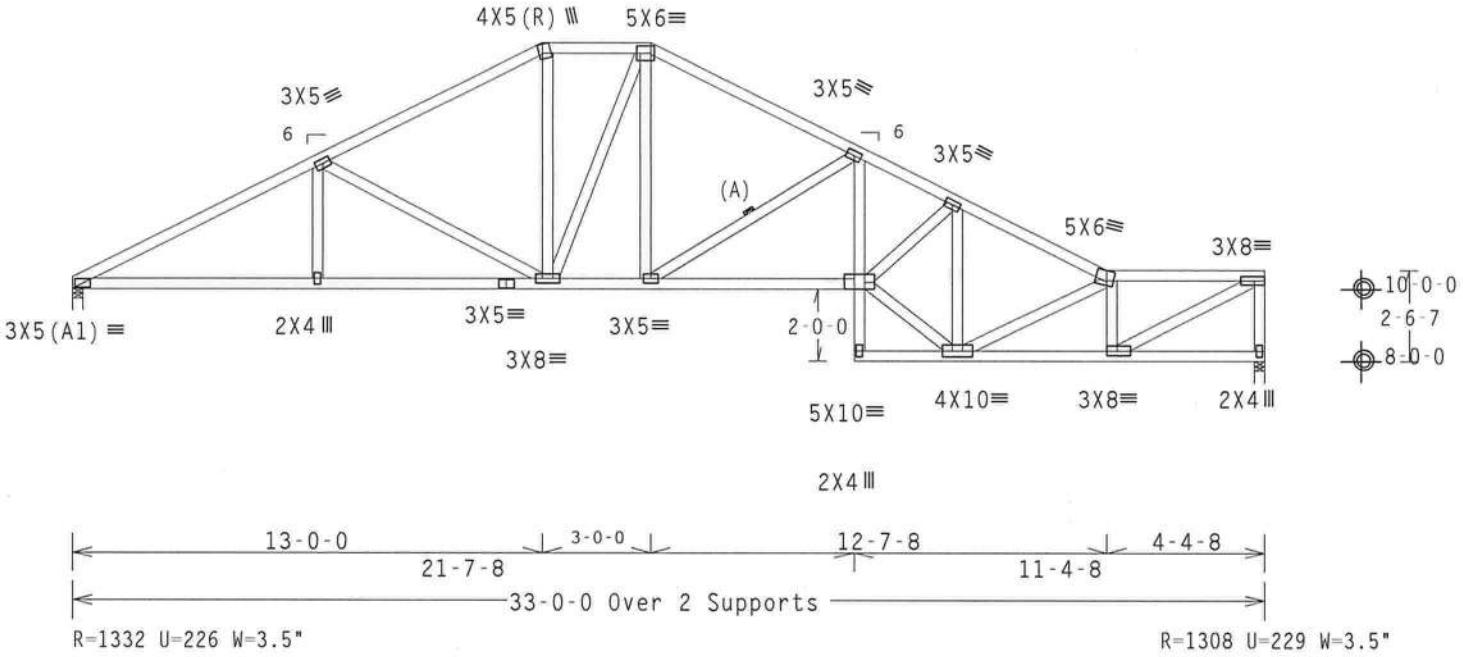

PLT TYP. Wave TPI 95\R Design Crit: TPI(STD)/FLBC 6.10 FL/-/5/-/-/R/- Scale =.1875"/Ft.

ALPINE
Alpine Engineered Products, Inc.
Haines City, FL 33844
FL Certificate of Authorization # 567

**WARNING* TRUSSES REQUIRE EXTREME CARE IN FABRICATION, HANDLING, SHIPPING, INSTALLING AND BRACING. REFER TO HIB-91 (HANDLING INSTALLING AND BRACING), PUBLISHED BY TPI (TRUSS PLATE INSTITUTE, 583 D'ONOFRIO DR., SUITE 200, MADISON, WI 53719). FOR SAFETY PRACTICES PRIOR TO PERFORMING THESE FUNCTIONS. UNLESS OTHERWISE INDICATED, TOP CHORD SHALL HAVE PROPERLY ATTACHED STRUCTURAL PANELS. BOTTOM CHORD SHALL HAVE A PROPERLY ATTACHED RIGID CEILING.
IMPORTANT FURNISH A COPY OF THIS DESIGN TO THE INSTALLATION CONTRACTOR. ALPINE ENGINEERED PRODUCTS, INC. SHALL NOT BE RESPONSIBLE FOR ANY DEVIATION FROM THIS DESIGN; ANY FAILURE TO BUILD THE TRUSSES IN CONFORMANCE WITH TPI; OR FABRICATING, HANDLING, SHIPPING, INSTALLING AND BRACING OF TRUSSES. THIS DESIGN CONFORMS WITH APPLICABLE PROVISIONS OF NDS (NATIONAL DESIGN SPEC. BY AF&PA) AND TPI. ALPINE CONNECTOR PLATES ARE MADE OF 20/16GA (W.HS/K) ASTM A653 (W, K/HS) GALV. STEEL. APPLY PLATES TO EACH FACE OF TRUSS AND UNLESS OTHERWISE LOCATED ON THIS DESIGN, POSITION PER DRAWINGS 160A-Z. ANY INSPECTION OF PLATES FOLLOWED BY (I) SHALL BE PER ANNEX A3 OF TPI 1-2002 SEC. 3. A SEAL ON THIS DRAWING INDICATES ACCEPTANCE OF PROFESSIONAL ENGINEERING RESPONSIBILITY SOLELY FOR THE TRUSS COMPONENT DESIGN SHOWN. THE SUITABILITY AND USE OF THIS COMPONENT FOR ANY BUILDING IS THE RESPONSIBILITY OF THE BUILDING DESIGNER, PER ANSI/TPI 1 SEC. 2.

MANUEL MARTINEZ CERTIFICATE No. 47182 STATE OF FLORIDA PROFESSIONAL ENGINEER
May 16, 2003

TC LL	20.0 PSF	REF R215 -37423
TC DL	10.0 PSF	DATE 05/14/03
BC DL	10.0 PSF	DRW HCUSR215 03134073
BC LL	0.0 PSF	HC-ENG CR/MMA *
TOT.LD.	40.0 PSF	SEQN- 75059
DUR.FAC.	1.25	FROM JP
SPACING	24.0"	JREF- 1S20215 Z10

Top chord 2x4 SP #2 N
Bot chord 2x4 SP #2 N
Webs 2x4 SP #2 N

In lieu of structural panels use purlins to brace all flat TC @ 24" OC.

Plates sized for a minimum of 3.00 sq.in./piece.

110 mph wind, 13.10 ft mean hgt, ASCE 7-98, CLOSED bldg, not located within 4.50 ft from roof edge, CAT II, EXP B, wind TC DL=5.0 psf, wind BC DL=5.0 psf.

Right end vertical not exposed to wind pressure.

Deflection meets L/360 live and L/240 total load.

The overall height of this truss excluding overhang is 5-10-3.

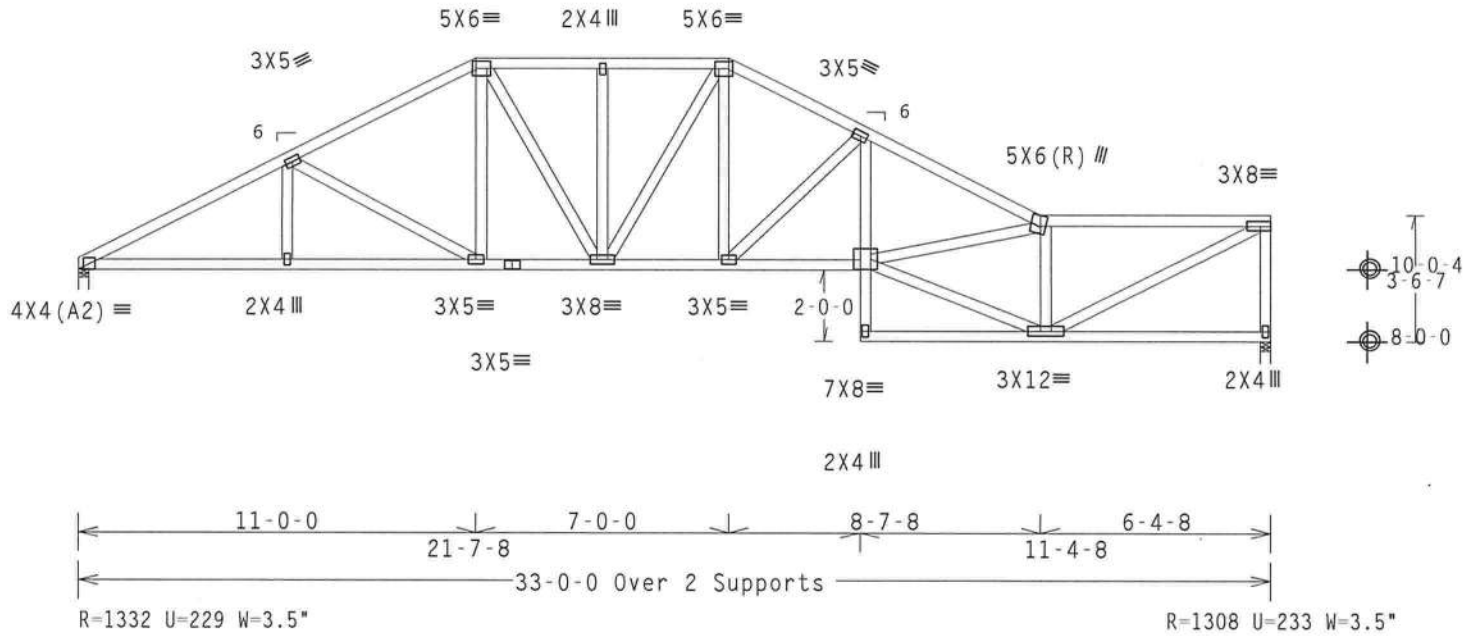

PLT TYP. Wave TPI 95\R Design Crit: TPI(STD)/FLBC 6.10 FL/-/5/-/-/R/- Scale =.1875"/Ft.

ALPINE
Alpine Engineered Products, Inc.
Haines City, FL 33844
FL Certificate of Authorization # 5677

**WARNING* TRUSSES REQUIRE EXTREME CARE IN FABRICATION, HANDLING, SHIPPING, INSTALLING AND BRACING. REFER TO HIB-91 (HANDLING INSTALLING AND BRACING), PUBLISHED BY TPI (TRUSS PLATE INSTITUTE, 583 D'ONOFRIO DR., SUITE 200, MADISON, WI 53719). FOR SAFETY PRACTICES PRIOR TO PERFORMING THESE FUNCTIONS. UNLESS OTHERWISE INDICATED, TOP CHORD SHALL HAVE PROPERLY ATTACHED STRUCTURAL PANELS, BOTTOM CHORD SHALL HAVE A PROPERLY ATTACHED RIGID CEILING.
IMPORTANT FURNISH A COPY OF THIS DESIGN TO THE INSTALLATION CONTRACTOR. ALPINE ENGINEERED PRODUCTS, INC. SHALL NOT BE RESPONSIBLE FOR ANY DEVIATION FROM THIS DESIGN; ANY FAILURE TO BUILD THE TRUSSES IN CONFORMANCE WITH TPI; OR FABRICATING, HANDLING, SHIPPING, INSTALLING AND BRACING OF TRUSSES. THIS DESIGN CONFORMS WITH APPLICABLE PROVISIONS OF NDS (NATIONAL DESIGN SPEC. BY AF&PA) AND TPI. ALPINE CONNECTOR PLATES ARE MADE OF 20/16GA (W,HS/K) ASTM 653 (W, K/HS) GALV. STEEL. APPLY PLATES TO EACH FACE OF TRUSS AND UNLESS OTHERWISE LOCATED ON THE DESIGN, POSITION PER DRAWINGS 160A-Z. ANY INSPECTION OF PLATES FOLLOWED BY (I) SHALL BE PER ANNEX A3 OF TPI 1-2002 SEC. 3. A SEAL ON THIS DRAWING INDICATES ACCEPTANCE OF PROFESSIONAL ENGINEERING RESPONSIBILITY SOLELY FOR THE TRUSS COMPONENT DESIGN SHOWN. THE SUITABILITY AND USE OF THIS COMPONENT FOR ANY BUILDING IS THE RESPONSIBILITY OF THE BUILDING DESIGNER, PER ANSI/TPI 1 SEC. 2.

MANUEL MARTINEZ
CERTIFICATE
No. 47182
STATE OF FLORIDA
PROFESSIONAL ENGINEER

TC LL	20.0 PSF	REF	R215 -37422
TC DL	10.0 PSF	DATE	05/14/03
BC DL	10.0 PSF	DRW	HCUSR215 03134072
BC LL	0.0 PSF	HC-ENG	CR/MMA
TOT.LD.	40.0 PSF	SEQN-	37214
DUR.FAC.	1.25	FROM	JP
SPACING	24.0"	JREF-	1S20215 710

Top chord 2x4 SP #2 N :T2 2x6 SP #2 N:
Bot chord 2x6 SP #2 N
Webs 2x4 SP #2 N

In lieu of structural panels use purlins to brace all flat TC @ 24" OC.

Plates sized for a minimum of 3.00 sq.in./piece.

110 mph wind, 15.00 ft mean hgt, ASCE 7-98, CLOSED bldg, Located anywhere in roof, CAT II, EXP B, wind TC DL=5.0 psf, wind BC DL=5.0 psf.

#1 hip supports 7-0-0 jacks with no webs.

Deflection meets L/360 live and L/240 total load.

The overall height of this truss excluding overhang is 3-10-3.

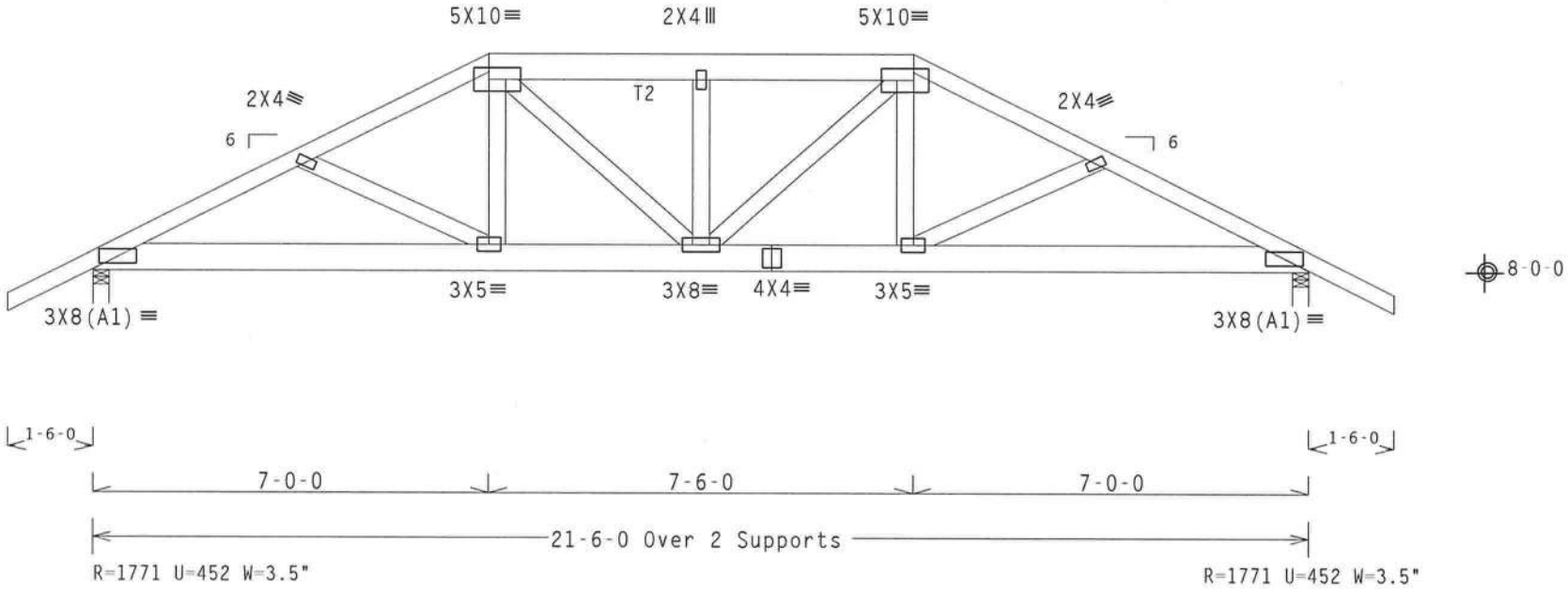

PLT TYP. Wave TPI 95\R Design Crit: TPI(STD)/FLBC 6.10 1 FL/-/5/-/-/R/- Scale =.3125"/Ft.

ALPINE

Alpine Engineered Products, Inc.
Haines City, FL 33844
FL Certificate of Authorization # 5677

**WARNING* TRUSSES REQUIRE EXTREME CARE IN FABRICATION, HANDLING, SHIPPING, INSTALLING AND BRACING. REFER TO HIB-91 (HANDLING INSTALLING AND BRACING), PUBLISHED BY TPI (TRUSS PLATE INSTITUTE, 583 D'ONOFRIO DR., SUITE 200, MADISON, WI 53719), FOR SAFETY PRACTICES PRIOR TO PERFORMING THESE FUNCTIONS. UNLESS OTHERWISE INDICATED, TOP CHORD SHALL HAVE PROPERLY ATTACHED STRUCTURAL PANELS, BOTTOM CHORD SHALL HAVE A PROPERLY ATTACHED RIGID CEILING.
IMPORTANT FURNISH A COPY OF THIS DESIGN TO THE INSTALLATION CONTRACTOR. ALPINE ENGINEERED PRODUCTS, INC. SHALL NOT BE RESPONSIBLE FOR ANY DEVIATION FROM THIS DESIGN; ANY FAILURE TO BUILD THE TRUSSES IN CONFORMANCE WITH TPI; OR FABRICATING, HANDLING, SHIPPING, INSTALLING AND BRACING OF TRUSSES. THIS DESIGN CONFORMS WITH APPLICABLE PROVISIONS OF NDS (NATIONAL DESIGN SPEC. BY AF&PA) AND TPI. ALPINE CONNECTOR PLATES ARE MADE OF 20/16GA (W,HS/K) ASTM 653 (W, K/HS) GALV. STEEL. APPLY PLATES TO EACH FACE OF TRUSS AND UNLESS OTHERWISE LOCATED ON THE DESIGN, POSITION PER DRAWINGS 160A-Z. ANY INSPECTION OF PLATES FOLLOWED BY (I) SHALL BE PER ANNEX A3 OF TPI 1-2002 SEC. 3. A SEAL ON THIS DRAWING INDICATES ACCEPTANCE OF PROFESSIONAL ENGINEERING RESPONSIBILITY SOLELY FOR THE TRUSS COMPONENT DESIGN SHOWN. THE SUITABILITY AND USE OF THIS COMPONENT FOR ANY BUILDING IS THE RESPONSIBILITY OF THE BUILDING DESIGNER, PER ANSI/TPI 1 SEC. 2.

MANUEL MARTINEZ
CERTIFICATE
No. 47182
STATE OF FLORIDA
PROFESSIONAL ENGINEER

TC LL	20.0 PSF	REF	R215 -37429
TC DL	10.0 PSF	DATE	05/14/03
BC DL	10.0 PSF	DRW	HCUSR215 03134079
BC LL	0.0 PSF	HC-ENG	CR/MMA
TOT.LD.	40.0 PSF	SEQN-	37011
DUR.FAC.	1.25	FROM	JP
SPACING	24.0"	JREF-	1S20215 710

Top chord 2x4 SP #2 N
Bot chord 2x4 SP #2 N
Webs 2x4 SP #2 N

Deflection meets L/360 live and L/240 total load.

The overall height of this truss excluding overhang is 5-8-11.

110 mph wind, 10.66 ft mean hgt, ASCE 7-98, CLOSED bldg, not located within 4.50 ft from roof edge, CAT II, EXP B, wind TC DL=5.0 psf, wind BC DL=5.0 psf.

Plates sized for a minimum of 3.00 sq.in./piece.

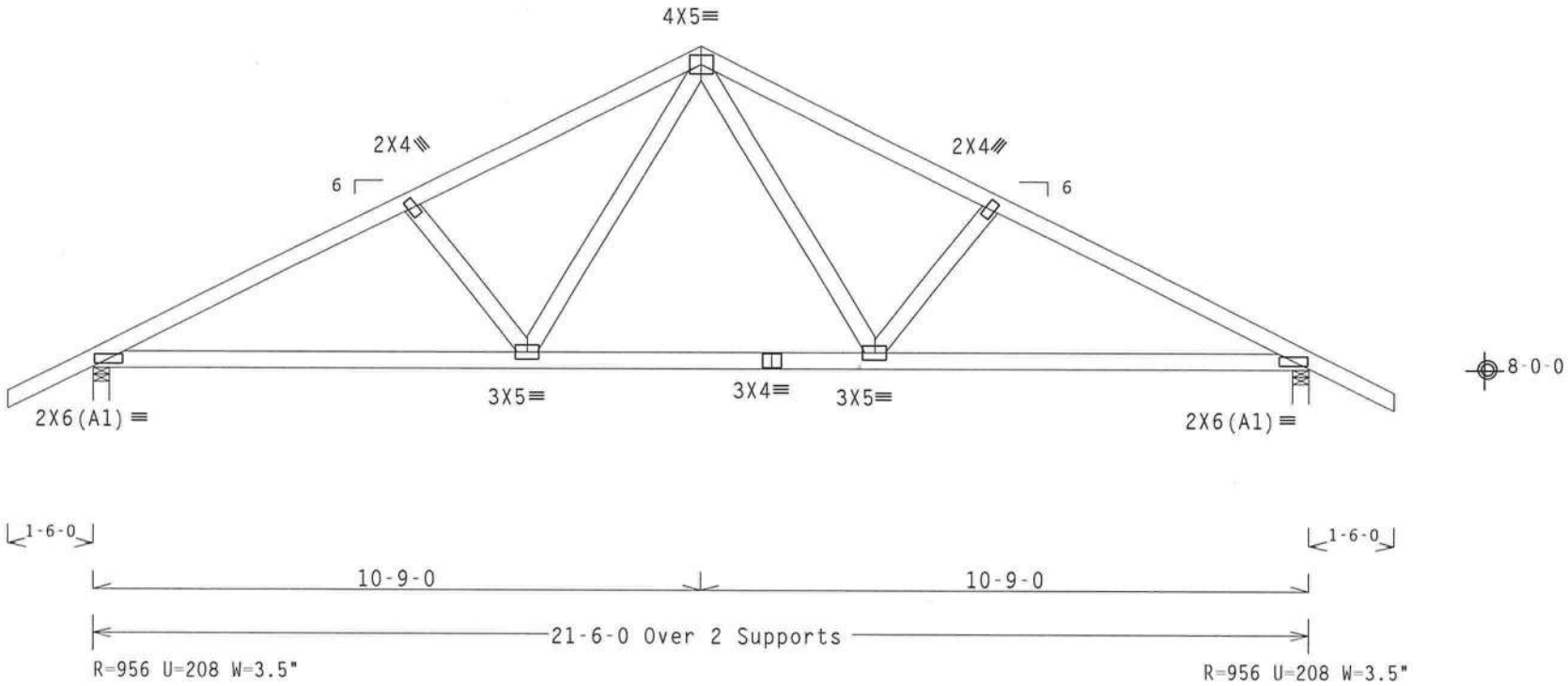

PLT TYP. Wave TPI 95\R Design Crit: TPI(STD)/FLBC 6.10 FL/-/5/-/-/R/- Scale =.3125"/Ft.

ALPINE

Alpine Engineered Products, Inc.
Haines City, FL 33844
FL Certificate of Authorization # 567

**WARNING* TRUSSES REQUIRE EXTREME CARE IN FABRICATION, HANDLING, SHIPPING, INSTALLING A BRACING. REFER TO HIB-91 (HANDLING INSTALLING AND BRACING), PUBLISHED BY TPI (TRUSS PL INSTITUTE, 583 D'ONOFRIO DR., SUITE 200, MADISON, WI 53719). FOR SAFETY PRACTICES PRIO PERFORMING THESE FUNCTIONS. UNLESS OTHERWISE INDICATED, TOP CHORD SHALL HAVE PROPERLY ATTA STRUCTURAL PANELS, BOTTOM CHORD SHALL HAVE A PROPERLY ATTACHED RIGID CEILING.
IMPORTANT FURNISH A COPY OF THIS DESIGN TO THE INSTALLATION CONTRACTOR. ALPINE ENGIN PRODUCTS, INC. SHALL NOT BE RESPONSIBLE FOR ANY DEVIATION FROM THIS DESIGN; ANY FAILU BUILD THE TRUSSES IN CONFORMANCE WITH TPI; OR FABRICATING, HANDLING, SHIPPING, INSTALLING AND BRACING OF TRUSSES. THIS DESIGN CONFORMS WITH APPLICABLE PROVISIONS OF NDS (NATIONAL DE SPEC, BY AF&PA) AND TPI. ALPINE CONNECTOR PLATES ARE MADE OF 20/16GA (W,HS/K) ASTM (W, K/HS) GALV. STEEL. APPLY PLATES TO EACH FACE OF TRUSS AND UNLESS OTHERWISE LOCATED ON T DESIGN. POSITION PER DRAWINGS 160A-Z. ANY INSPECTION OF PLATES FOLLOWED BY (I) SHALL BE ANNEX A3 OF TPI 1-2002 SEC. 3. A SEAL ON THIS DRAWING INDICATES ACCEPTANCE OF PROFESSIONA ENGINEERING RESPONSIBILITY SOLELY FOR THE TRUSS COMPONENT DESIGN SHOWN. THE SUITABILITY AND USE OF THIS COMPONENT FOR ANY BUILDING IS THE RESPONSIBILITY OF THE BUILDING DESIGNER, PER ANSI/TPI 1 SEC. 2.

MANUEL MARTINEZ CERTIFICATE No. 47182 STATE OF FLORIDA PROFESSIONAL ENGINEER

TC LL	20.0 PSF	REF R215 -37431
TC DL	10.0 PSF	DATE 05/14/03
BC DL	10.0 PSF	DRW HCUSR215 03134081
BC LL	0.0 PSF	HC-ENG CR/MMA *
TOT.LD.	40.0 PSF	SEQN- 37024
DUR.FAC.	1.25	FROM JP
SPACING	24.0"	JREF- 1S20215 710

Top chord 2x4 SP #2 N
Bot chord 2x4 SP #2 N
Webs 2x4 SP #2 N

In lieu of structural panels use purlins to brace all flat TC @ 24" OC.

The overall height of this truss excluding overhang is 4-10-3.

110 mph wind, 12.60 ft mean hgt, ASCE 7-98, CLOSED bldg, not located within 4.50 ft from roof edge, CAT II, EXP B, wind TC DL=5.0 psf, wind BC DL=5.0 psf.

Deflection meets L/360 live and L/240 total load.

Plates sized for a minimum of 3.00 sq.in./piece.

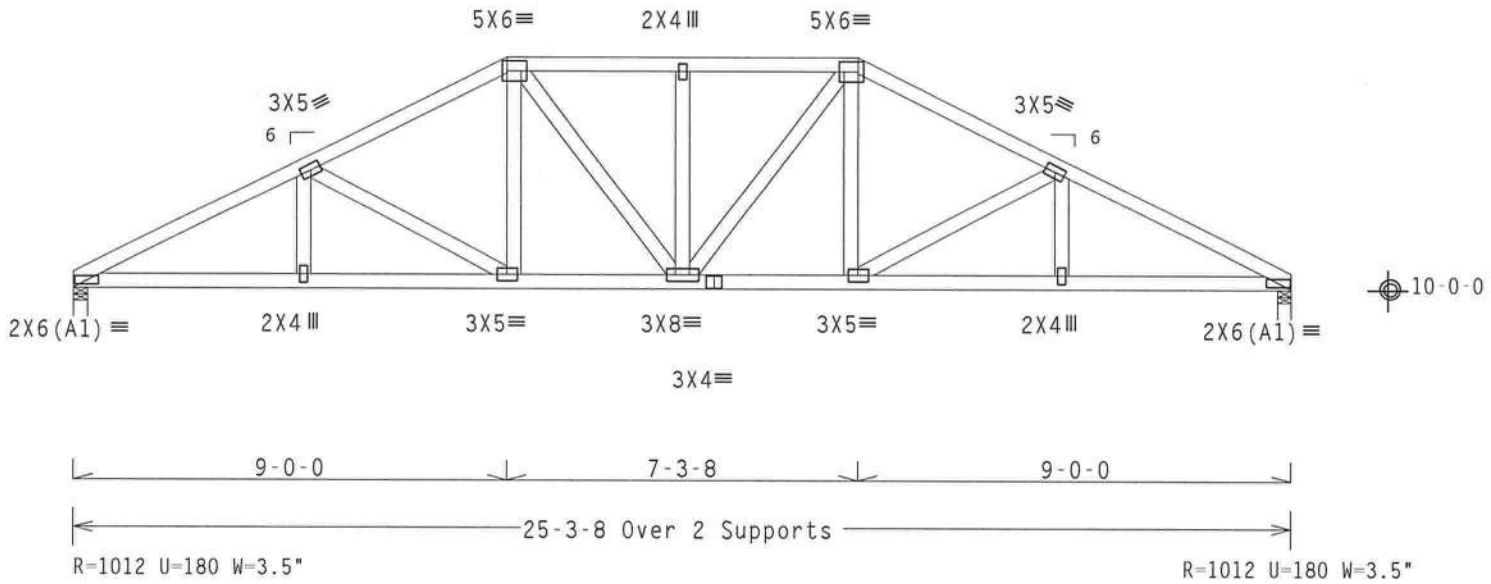

PLT TYP. Wave TPI 95\R Design Crit: TPI(STD)/FLBC 6.10 Fr 1 FL/-/5/-/-/R/- Scale =.25"/Ft.

ALPINE

Alpine Engineered Products, Inc.
Haines City, FL 33844
FL Certificate of Authorization # 567

**WARNING* TRUSSES REQUIRE EXTREME CARE IN FABRICATION, HANDLING, SHIPPING, INSTALLING AND BRACING. REFER TO HIB-91 (HANDLING INSTALLING AND BRACING), PUBLISHED BY TPI (TRUSS PLATE INSTITUTE, 583 D'ONOFRIO DR., SUITE 200, MADISON, WI 53719). FOR SAFETY PRACTICES PRIOR TO PERFORMING THESE FUNCTIONS. UNLESS OTHERWISE INDICATED, TOP CHORD SHALL HAVE PROPERLY ATTACHED STRUCTURAL PANELS, BOTTOM CHORD SHALL HAVE A PROPERLY ATTACHED RIGID CEILING.
IMPORTANT FURNISH A COPY OF THIS DESIGN TO THE INSTALLATION CONTRACTOR. ALPINE ENGINEERED PRODUCTS, INC. SHALL NOT BE RESPONSIBLE FOR ANY DEVIATION FROM THIS DESIGN; ANY FAILURE TO BUILD THE TRUSSES IN CONFORMANCE WITH TPI; OR FABRICATING, HANDLING, SHIPPING, INSTALLING AND BRACING OF TRUSSES. THIS DESIGN CONFORMS WITH APPLICABLE PROVISIONS OF NDS (NATIONAL DESIGN SPEC. BY AF&PA) AND TPI. ALPINE CONNECTOR PLATES ARE MADE OF 20/16GA (W.HS/K) ASTM A653 (W, K/HS) GALV. STEEL. APPLY PLATES TO EACH FACE OF TRUSS AND UNLESS OTHERWISE LOCATED ON THIS DESIGN, POSITION PER DRAWINGS 160A-Z. ANY INSPECTION OF PLATES FOLLOWED BY (I) SHALL BE PER ANNEX A3 OF TPI 1-2002 SEC. 3. A SEAL ON THIS DRAWING INDICATES ACCEPTANCE OF PROFESSIONAL ENGINEERING RESPONSIBILITY SOLELY FOR THE TRUSS COMPONENT DESIGN SHOWN. THE SUITABILITY AND USE OF THIS COMPONENT FOR ANY BUILDING IS THE RESPONSIBILITY OF THE BUILDING DESIGNER, PER ANSI/TPI 1 SEC. 2.

MANUEL MARTINEZ
CERTIFICATE
No. 47182
STATE OF FLORIDA
PROFESSIONAL ENGINEER
May 15 '03

TC LL	20.0 PSF	REF	R215 -37433
TC DL	10.0 PSF	DATE	05/14/03
BC DL	10.0 PSF	DRW	HCUSR215 03134083
BC LL	0.0 PSF	HC-ENG	CR/MMA *
TOT.LD.	40.0 PSF	SEQN-	37172
DUR.FAC.	1.25	FROM	JP
SPACING	24.0"	JREF-	1S20215 Z10

Top chord 2x4 SP #2 N
Bot chord 2x8 SP #1 Dense
Webs 2x4 SP #2 N

SPECIAL LOADS
------(LUMBER DUR.FAC.=1.25 / PLATE DUR.FAC.=1.25)
TC - From 60 PLF at 0.00 to 60 PLF at 25.29
BC - From 20 PLF at 0.00 to 20 PLF at 25.29
BC - 855 LB Conc. Load at 1.56, 3.56, 5.56, 7.56, 9.56
11.56, 13.56, 15.56, 17.56, 19.56
BC - 848 LB Conc. Load at 21.56, 23.56, 24.94

110 mph wind, 15.00 ft mean hgt, ASCE 7-98, CLOSED bldg, not located within 4.50 ft from roof edge, CAT II, EXP B, wind TC DL=5.0 psf, wind BC DL=5.0 psf.

In lieu of structural panels use purlins to brace all flat TC @ 24" OC.

Plates sized for a minimum of 3.00 sq.in./piece.

2 COMPLETE TRUSSES REQUIRED

NAILING SCHEDULE: (0.131x3.0_g_nails)
TOP CHORD: 1 ROW @ 12" o.c.
BOT CHORD: 1 ROW @ 4" o.c.
WEBS : 1 ROW @ 4" o.c.
USE EQUAL SPACING BETWEEN ROWS AND STAGGER NAILS IN EACH ROW TO AVOID SPLITTING.

BEARING BLOCKS: NAIL TYPE: 0.131x3.0_g_nails

BRG	X-LOC	#BLOCKS	LENGTH/BLK	#NAILS/BLK	WALL PLATE
2	25.000'	1	12"	4	MATCH TRUSS

BEARING BLOCK TO BE SAME SPECIES, SIZE & GRADE AS BOTTOM CHORD.
REFER TO DRAWING CNBRGBLK1299 FOR ADDITIONAL INFORMATION.

Deflection meets L/360 live and L/240 total load.

The overall height of this truss excluding overhang is 5-10-15.

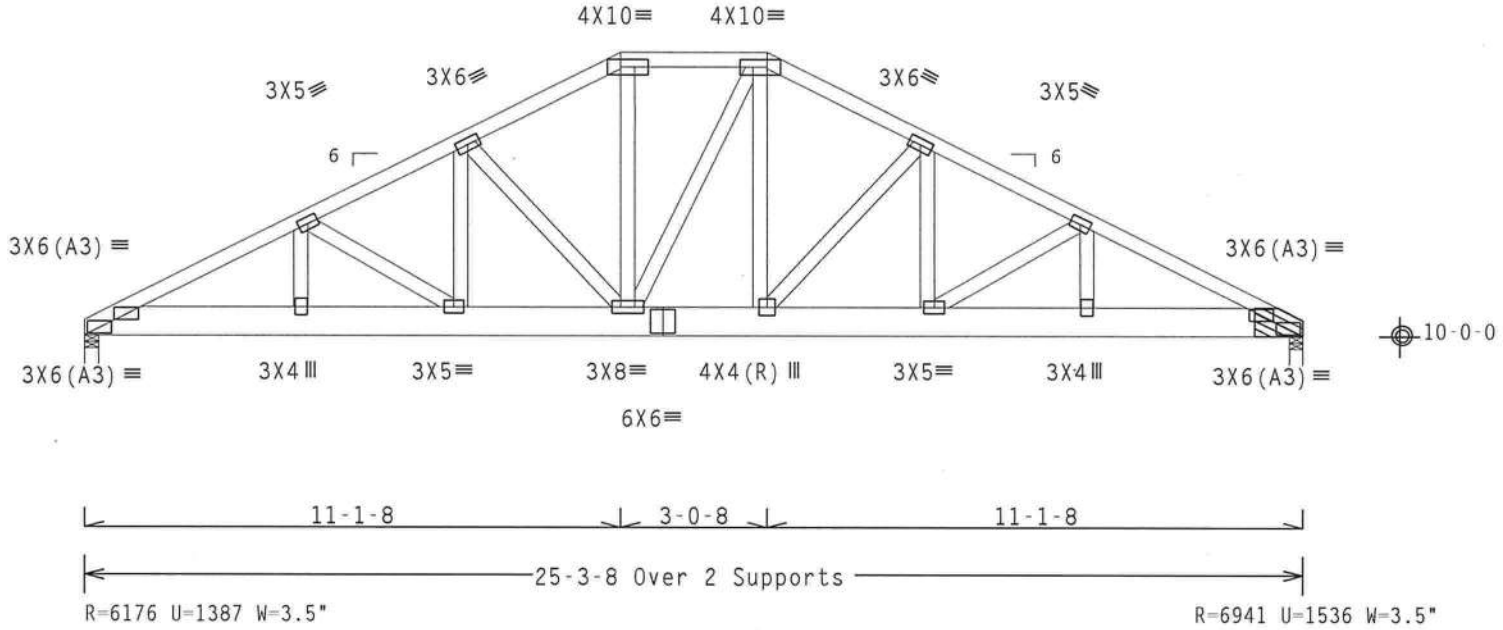

PLT TYP. Wave TPI 95\R Design Crit: TPI(STD)/FLBC 6.10 FL/-/5/-/-/R/- Scale =.25"/Ft.

ALPINE
Alpine Engineered Products, Inc.
Haines City, FL 33844
FL Certificate of Authorization # 567

**WARNING* TRUSSES REQUIRE EXTREME CARE IN FABRICATION, HANDLING, SHIPPING, INSTALLING AND BRACING. REFER TO HIB-91 (HANDLING INSTALLING AND BRACING), PUBLISHED BY TPI (TRUSS PLATE INSTITUTE, 583 D'ONOFRIO DR., SUITE 200, MADISON, WI 53719). FOR SAFETY PRACTICES PRIOR TO PERFORMING THESE FUNCTIONS. UNLESS OTHERWISE INDICATED, TOP CHORD SHALL HAVE PROPERLY ATTACHED STRUCTURAL PANELS, BOTTOM CHORD SHALL HAVE A PROPERLY ATTACHED RIGID CEILING.
IMPORTANT FURNISH A COPY OF THIS DESIGN TO THE INSTALLATION CONTRACTOR. ALPINE ENGINEERED PRODUCTS, INC. SHALL NOT BE RESPONSIBLE FOR ANY DEVIATION FROM THIS DESIGN; ANY FAILURE TO BUILD THE TRUSSES IN CONFORMANCE WITH TPI; OR FABRICATING, HANDLING, SHIPPING, INSTALLING AND BRACING OF TRUSSES. THIS DESIGN CONFORMS WITH APPLICABLE PROVISIONS OF NDS (NATIONAL DESIGN SPEC, BY AF&PA) AND TPI. ALPINE CONNECTOR PLATES ARE MADE OF 20/16GA (W.HS/K) ASTM A653 (W. K/HS) GALV. STEEL. APPLY PLATES TO EACH FACE OF TRUSS AND UNLESS OTHERWISE LOCATED ON THIS DESIGN, POSITION PER DRAWINGS 160A-Z. ANY INSPECTION OF PLATES FOLLOWED BY (I) SHALL BE PER ANNEX A3 OF TPI 1-2002 SEC. 3. A SEAL ON THIS DRAWING INDICATES ACCEPTANCE OF PROFESSIONAL ENGINEERING RESPONSIBILITY SOLELY FOR THE TRUSS COMPONENT DESIGN SHOWN. THE SUITABILITY AND USE OF THIS COMPONENT FOR ANY BUILDING IS THE RESPONSIBILITY OF THE BUILDING DESIGNER, PER ANSI/TPI 1 SEC. 2.

MANUEL MARTINEZ
CERTIFICATE
No. 47182
STATE OF FLORIDA
PROFESSIONAL ENGINEER

TC LL	20.0 PSF	REF R215 -37434
TC DL	10.0 PSF	DATE 05/14/03
BC DL	10.0 PSF	DRW HCUSR215 03134084
BC LL	0.0 PSF	HC-ENG CR/MMA
TOT.LD.	40.0 PSF	SEQN- 37178
DUR.FAC.	1.25	FROM JP
SPACING	24.0"	JREF- 1S20215 710

Top chord 2x4 SP #2 N :T2 2x6 SP #2 N:
Bot chord 2x6 SP #2 N
Webs 2x4 SP #2 N

In lieu of structural panels use purlins to brace all flat TC @ 24" OC.

Deflection meets L/360 live and L/240 total load.

Plates sized for a minimum of 3.00 sq.in./piece.

110 mph wind, 15.00 ft mean hgt, ASCE 7-98, CLOSED bldg, Located anywhere in roof, CAT II, EXP B, wind TC DL=5.0 psf, wind BC DL=5.0 psf.

#1 hip supports 7-0-0 jacks with no webs.

Left side jacks have 7-0-0 setback with 0-0-0 cant and 1-6-0 overhang.
End jacks have 7-0-0 setback with 0-0-0 cant and 1-6-0 overhang.
Right side jacks have 7-0-0 setback with 0-0-0 cant and 1-6-0 overhang.

The overall height of this truss excluding overhang is 3-10-3.

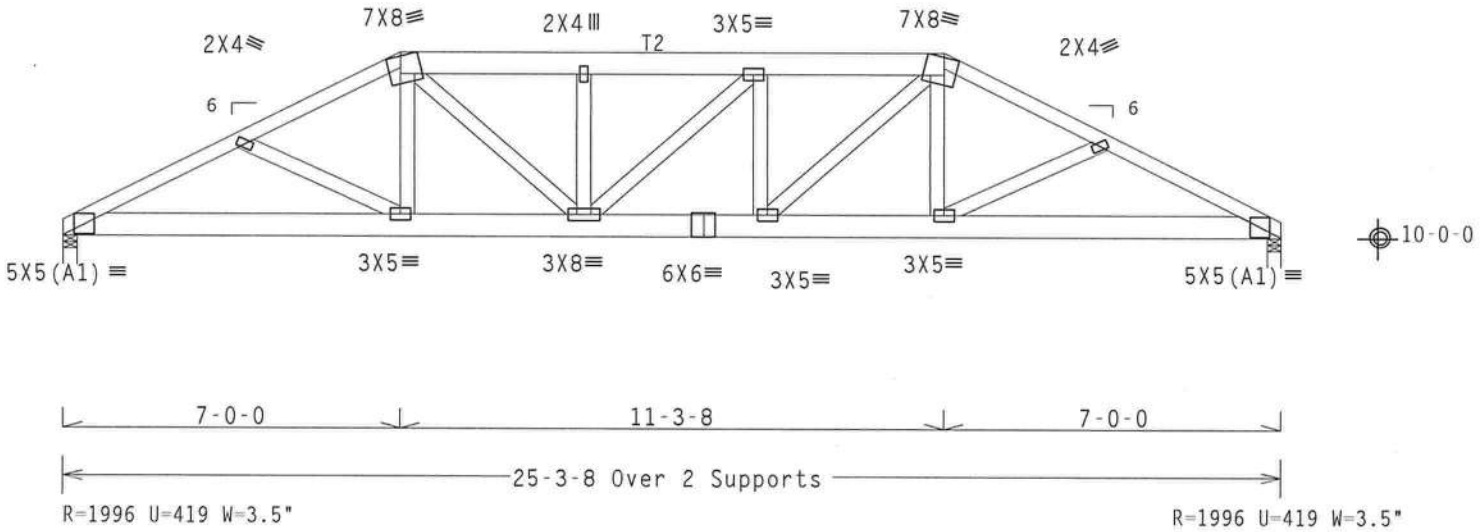

PLT TYP. Wave TPI 95\R Design Crit: TPI(STD)/FLBC 6.10 [illegible] FL/-/5/-/-/R/- Scale =.25"/Ft.

ALPINE

Alpine Engineered Products, Inc.
Haines City, FL 33844
FL Certificate of Authorization # 567

**WARNING* TRUSSES REQUIRE EXTREME CARE IN FABRICATION, HANDLING, SHIPPING, INSTALLING A[illegible] BRACING. REFER TO HIB-91 (HANDLING INSTALLING AND BRACING), PUBLISHED BY TPI (TRUSS PL[illegible] INSTITUTE, 583 D'ONOFRIO DR., SUITE 200, MADISON, WI 53719). FOR SAFETY PRACTICES PRIO[illegible] PERFORMING THESE FUNCTIONS. UNLESS OTHERWISE INDICATED, TOP CHORD SHALL HAVE PROPERLY ATT[illegible]ED STRUCTURAL PANELS, BOTTOM CHORD SHALL HAVE A PROPERLY ATTACHED RIGID CEILING.
IMPORTANT FURNISH A COPY OF THIS DESIGN TO THE INSTALLATION CONTRACTOR. ALPINE ENGIN[illegible]RED PRODUCTS, INC. SHALL NOT BE RESPONSIBLE FOR ANY DEVIATION FROM THIS DESIGN; ANY FAILU[illegible] BUILD THE TRUSSES IN CONFORMANCE WITH TPI; OR FABRICATING, HANDLING, SHIPPING, INSTALLIN[illegible] AND BRACING OF TRUSSES. THIS DESIGN CONFORMS WITH APPLICABLE PROVISIONS OF NDS (NATIONAL D[illegible]IGN SPEC. BY AF&PA) AND TPI. ALPINE CONNECTOR PLATES ARE MADE OF 20/16GA (W.HS/K) ASTM [illegible] (W, K/HS) GALV. STEEL. APPLY PLATES TO EACH FACE OF TRUSS AND UNLESS OTHERWISE LOCATED ON [illegible] DESIGN. POSITION PER DRAWINGS 160A-Z. ANY INSPECTION OF PLATES FOLLOWED BY (I) SHALL BE [illegible] ANNEX A3 OF TPI 1-2002 SEC. 3. A SEAL ON THIS DRAWING INDICATES ACCEPTANCE OF PROFESSION[illegible] ENGINEERING RESPONSIBILITY SOLELY FOR THE TRUSS COMPONENT DESIGN SHOWN. THE SUITABILITY AND USE OF THIS COMPONENT FOR ANY BUILDING IS THE RESPONSIBILITY OF THE BUILDING DESIGNER, PER ANSI/TPI 1 SEC. 2.

MANUEL MARTINEZ CERTIFICATE No. 47182 STATE OF FLORIDA PROFESSIONAL ENGINEER

TC LL	20.0 PSF	REF R215 -37432
TC DL	10.0 PSF	DATE 05/14/03
BC DL	10.0 PSF	DRW HCUSR215 03134082
BC LL	0.0 PSF	HC-ENG CR/MMA
TOT.LD.	40.0 PSF	SEQN- 37167
DUR.FAC.	1.25	FROM JP
SPACING	24.0"	JREF- 1S20215 710

Top chord 2x4 SP #2 N
Bot chord 2x4 SP #2 N
Webs 2x4 SP #2 N

Left end vertical not exposed to wind pressure.

In lieu of structural panels use purlins to brace all flat TC @ 24" OC.

Deflection meets L/360 live and L/240 total load.

The overall height of this truss excluding overhang is 5-1-15.

110 mph wind, 12.38 ft mean hgt, ASCE 7-98, CLOSED bldg, not located within 4.50 ft from roof edge, CAT II, EXP B, wind TC DL=5.0 psf, wind BC DL=5.0 psf.

Plates sized for a minimum of 3.00 sq.in./piece.

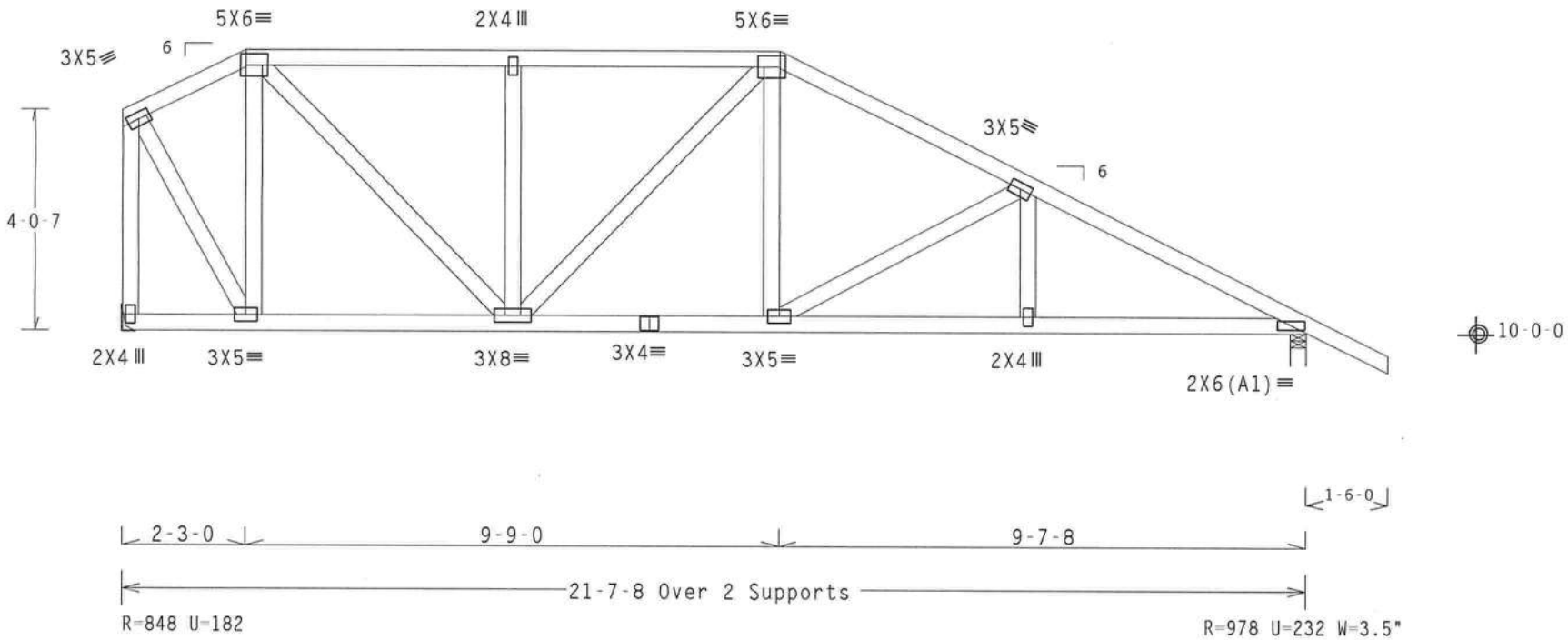

PLT TYP. Wave TPI 95\R Design Crit: TPI(STD)/FLBC 6.10 FL/-/5/-/-/R/- Scale =.3125"/Ft.

ALPINE

Alpine Engineered Products, Inc.
Haines City, FL 33844
FL Certificate of Authorization # 567

**WARNING* TRUSSES REQUIRE EXTREME CARE IN FABRICATION, HANDLING, SHIPPING, INSTALLING A BRACING. REFER TO HIB-91 (HANDLING INSTALLING AND BRACING), PUBLISHED BY TPI (TRUSS PL INSTITUTE, 583 D'ONOFRIO DR., SUITE 200, MADISON, WI 53719). FOR SAFETY PRACTICES PRIO PERFORMING THESE FUNCTIONS. UNLESS OTHERWISE INDICATED, TOP CHORD SHALL HAVE PROPERLY ATTA STRUCTURAL PANELS, BOTTOM CHORD SHALL HAVE A PROPERLY ATTACHED RIGID CEILING.
IMPORTANT FURNISH A COPY OF THIS DESIGN TO THE INSTALLATION CONTRACTOR. ALPINE ENGIN PRODUCTS, INC. SHALL NOT BE RESPONSIBLE FOR ANY DEVIATION FROM THIS DESIGN; ANY FAILU BUILD THE TRUSSES IN CONFORMANCE WITH TPI; OR FABRICATING, HANDLING, SHIPPING, INSTALLING AND BRACING OF TRUSSES. THIS DESIGN CONFORMS WITH APPLICABLE PROVISIONS OF NDS (NATIONAL DE SPEC. BY AF&PA) AND TPI. ALPINE CONNECTOR PLATES ARE MADE OF 20/16GA (W,HS/K) ASTM A653 (W, K/HS) GALV. STEEL. APPLY PLATES TO EACH FACE OF TRUSS AND UNLESS OTHERWISE LOCATED ON T DESIGN. POSITION PER DRAWINGS 160A-Z. ANY INSPECTION OF PLATES FOLLOWED BY (I) SHALL BE P ANNEX A3 OF TPI 1-2002 SEC. 3. A SEAL ON THIS DRAWING INDICATES ACCEPTANCE OF PROFESSIONA ENGINEERING RESPONSIBILITY SOLELY FOR THE TRUSS COMPONENT DESIGN SHOWN. THE SUITABILITY AND USE OF THIS COMPONENT FOR ANY BUILDING IS THE RESPONSIBILITY OF THE BUILDING DESIGNER, PER ANSI/TPI 1 SEC. 2.

MANUEL MARTINEZ
CERTIFICATE
No. 47182
STATE OF
FLORIDA
PROFESSIONAL ENGINEER

TC LL	20.0 PSF	REF R215 -37428
TC DL	10.0 PSF	DATE 05/14/03
BC DL	10.0 PSF	DRW HCUSR215 03134078
BC LL	0.0 PSF	HC-ENG CR/MMA
TOT.LD.	40.0 PSF	SEQN- 37136
DUR.FAC.	1.25	FROM JP
SPACING	24.0"	JREF- 1S20215 710

Top chord 2x4 SP #2 N
Bot chord 2x4 SP #2 N
Webs 2x4 SP #2 N
:Lt Wedge 2x8 SP #1 Dense::Rt Wedge 2x8 SP #1 Dense:

Deflection meets L/360 live and L/240 total load.

Plates sized for a minimum of 3.00 sq.in./piece.

110 mph wind, 10.22 ft mean hgt, ASCE 7-98, CLOSED bldg, not located within 4.50 ft from roof edge, CAT II, EXP B, wind TC DL=5.0 psf, wind BC DL=5.0 psf.

In lieu of structural panels use purlins to brace all flat TC @ 24" OC.

The overall height of this truss excluding overhang is 4-10-3.

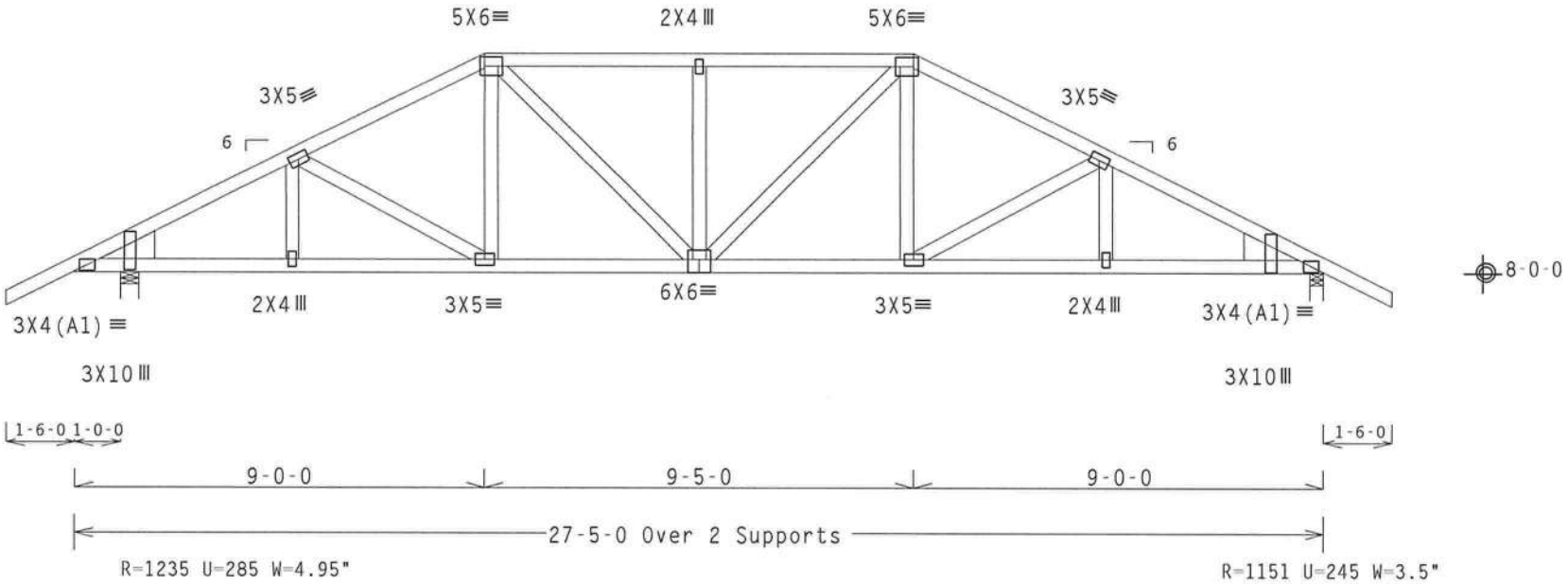

PLT TYP. Wave TPI 95\R Design Crit: TPI(STD)/FLBC 6.10 FL/-/5/-/-/R/- Scale =.25"/Ft.

ALPINE
Alpine Engineered Products, Inc.
Haines City, FL 33844
FL Certificate of Authorization # 5677

**WARNING* TRUSSES REQUIRE EXTREME CARE IN FABRICATING, HANDLING, SHIPPING, INSTALLING AND BRACING. REFER TO HIB-91 (HANDLING INSTALLING AND BRACING), PUBLISHED BY TPI (TRUSS PLATE INSTITUTE, 583 D'ONOFRIO DR., SUITE 200, MADISON, WI 53719). FOR SAFETY PRACTICES PRIOR TO PERFORMING THESE FUNCTIONS. UNLESS OTHERWISE INDICATED, TOP CHORD SHALL HAVE PROPERLY ATTACHED STRUCTURAL PANELS, BOTTOM CHORD SHALL HAVE A PROPERLY ATTACHED RIGID CEILING.
IMPORTANT FURNISH A COPY OF THIS DESIGN TO THE INSTALLATION CONTRACTOR. ALPINE ENGINEERED PRODUCTS, INC. SHALL NOT BE RESPONSIBLE FOR ANY DEVIATION FROM THIS DESIGN; ANY FAILURE TO BUILD THE TRUSSES IN CONFORMANCE WITH TPI; OR FABRICATING, HANDLING, SHIPPING, INSTALLING AND BRACING OF TRUSSES. THIS DESIGN CONFORMS WITH APPLICABLE PROVISIONS OF NDS (NATIONAL DESIGN SPEC. BY AF&PA) AND TPI. ALPINE CONNECTOR PLATES ARE MADE OF 20/16GA (W,HS/K) ASTM 653 (W, K/HS) GALV. STEEL. APPLY PLATES TO EACH FACE OF TRUSS AND UNLESS OTHERWISE LOCATED ON THIS DESIGN, POSITION PER DRAWINGS 160A-Z. ANY INSPECTION OF PLATES FOLLOWED BY (I) SHALL BE IN ANNEX A3 OF TPI 1-2002 SEC. 3. A SEAL ON THIS DRAWING INDICATES ACCEPTANCE OF PROFESSIONAL ENGINEERING RESPONSIBILITY SOLELY FOR THE TRUSS COMPONENT DESIGN SHOWN. THE SUITABILITY AND USE OF THIS COMPONENT FOR ANY BUILDING IS THE RESPONSIBILITY OF THE BUILDING DESIGNER, PER ANSI/TPI 1 SEC. 2.

MANUEL MARTINEZ
CERTIFICATE
No. 47182
STATE OF FLORIDA
PROFESSIONAL ENGINEER
May 03

TC LL	20.0 PSF	REF	R215 -37436
TC DL	10.0 PSF	DATE	05/14/03
BC DL	10.0 PSF	DRW	HCUSR215 03134086
BC LL	0.0 PSF	HC-ENG	CR/MMA
TOT.LD.	40.0 PSF	SEQN-	37127
DUR.FAC.	1.25	FROM	JP
SPACING	24.0"	JREF-	1S20215 710

Top chord 2x4 SP #2 N
Bot chord 2x4 SP #2 N
Webs 2x4 SP #2 N

Left end vertical not exposed to wind pressure.

In lieu of structural panels use purlins to brace all flat TC @ 24" OC.

Deflection meets L/360 live and L/240 total load.

110 mph wind, 12.72 ft mean hgt, ASCE 7-98, CLOSED bldg, not located within 4.50 ft from roof edge, CAT II, EXP B, wind TC DL=5.0 psf, wind BC DL=5.0 psf.

Plates sized for a minimum of 3.00 sq.in./piece.

The overall height of this truss excluding overhang is 5-10-3.

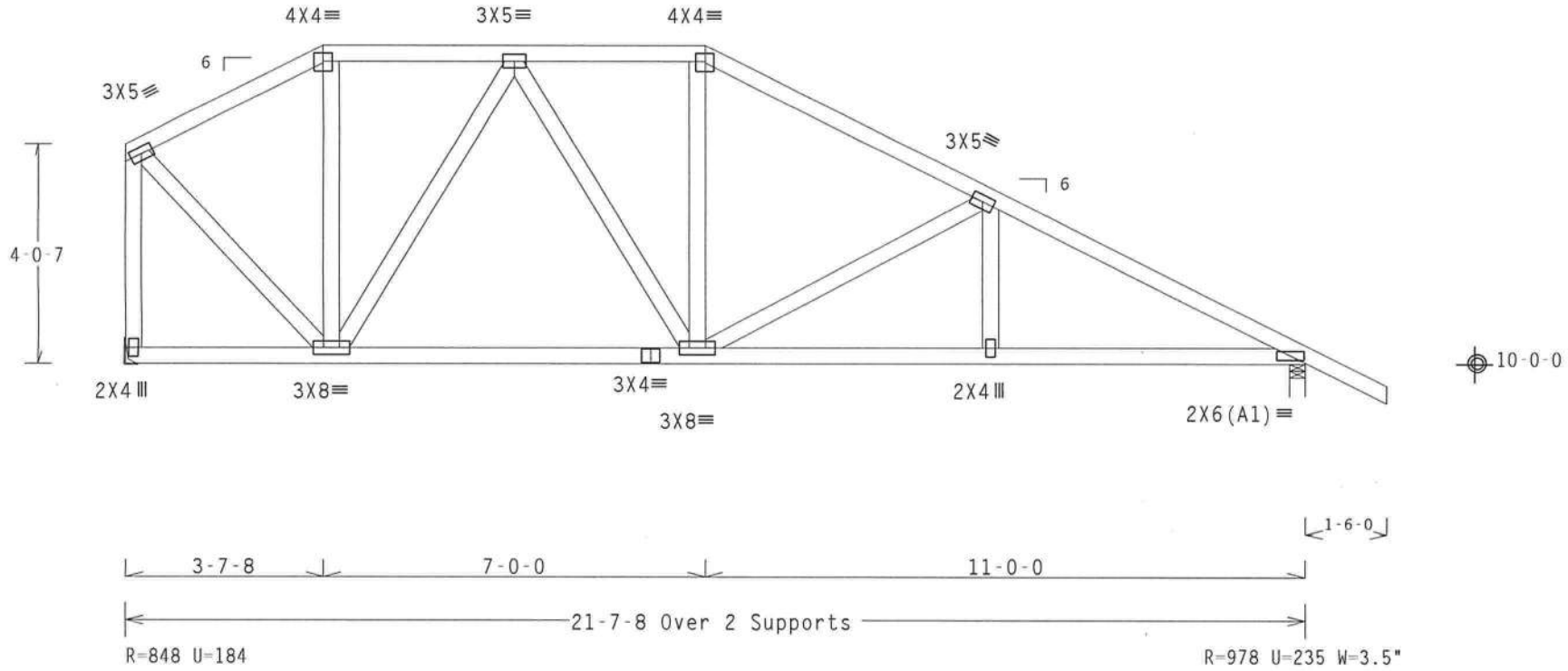

PLT TYP. Wave TPI 95\R Design Crit: TPI(STD)/FLBC 6.10 1 FL/-/5/-/-/R/- Scale =.3125"/Ft.

ALPINE

Alpine Engineered Products, Inc.
Haines City, FL 33844
FL Certificate of Authorization # 567

**WARNING* TRUSSES REQUIRE EXTREME CARE IN FABRICATION, HANDLING, SHIPPING, INSTALLING AND BRACING. REFER TO HIB-91 (HANDLING INSTALLING AND BRACING), PUBLISHED BY TPI (TRUSS PLATE INSTITUTE, 583 D'ONOFRIO DR., SUITE 200, MADISON, WI 53719). FOR SAFETY PRACTICES PRIOR TO PERFORMING THESE FUNCTIONS. UNLESS OTHERWISE INDICATED, TOP CHORD SHALL HAVE PROPERLY ATTACHED STRUCTURAL PANELS, BOTTOM CHORD SHALL HAVE A PROPERLY ATTACHED RIGID CEILING.
IMPORTANT FURNISH A COPY OF THIS DESIGN TO THE INSTALLATION CONTRACTOR. ALPINE ENGINEERED PRODUCTS, INC. SHALL NOT BE RESPONSIBLE FOR ANY DEVIATION FROM THIS DESIGN; ANY FAILURE TO BUILD THE TRUSSES IN CONFORMANCE WITH TPI; OR FABRICATING, HANDLING, SHIPPING, INSTALLING AND BRACING OF TRUSSES. THIS DESIGN CONFORMS WITH APPLICABLE PROVISIONS OF NDS (NATIONAL DESIGN SPEC. BY AF&PA) AND TPI. ALPINE CONNECTOR PLATES ARE MADE OF 20/16GA (W,HS/K) ASTM 653 (W, K/HS) GALV. STEEL. APPLY PLATES TO EACH FACE OF TRUSS AND UNLESS OTHERWISE LOCATED ON THIS DESIGN, POSITION PER DRAWINGS 160A-Z. ANY INSPECTION OF PLATES FOLLOWED BY (I) SHALL BE PER ANNEX A3 OF TPI 1-2002 SEC. 3. A SEAL ON THIS DRAWING INDICATES ACCEPTANCE OF PROFESSIONAL ENGINEERING RESPONSIBILITY SOLELY FOR THE TRUSS COMPONENT DESIGN SHOWN. THE SUITABILITY AND USE OF THIS COMPONENT FOR ANY BUILDING IS THE RESPONSIBILITY OF THE BUILDING DESIGNER, PER ANSI/TPI 1 SEC. 2.

MANUEL MARTINEZ CERTIFICATE No. 47182 STATE OF FLORIDA PROFESSIONAL ENGINEER

TC LL	20.0 PSF	REF	R215 -37427
TC DL	10.0 PSF	DATE	05/14/03
BC DL	10.0 PSF	DRW	HCUSR215 03134077
BC LL	0.0 PSF	HC-ENG	CR/MMA
TOT.LD.	40.0 PSF	SEQN-	37143
DUR.FAC.	1.25	FROM	JP
SPACING	24.0"	JREF-	1S20215 Z10

Top chord 2x4 SP #2 N
Bot chord 2x4 SP #2 N
Webs 2x4 SP #2 N

In lieu of structural panels use purlins to brace all flat TC @ 24" OC.

The overall height of this truss excluding overhang is 4-10-3.

110 mph wind, 10.22 ft mean hgt, ASCE 7-98, CLOSED bldg, not located within 4.50 ft from roof edge, CAT II, EXP B, wind TC DL=5.0 psf, wind BC DL=5.0 psf.

Deflection meets L/360 live and L/240 total load.

Plates sized for a minimum of 3.00 sq.in./piece.

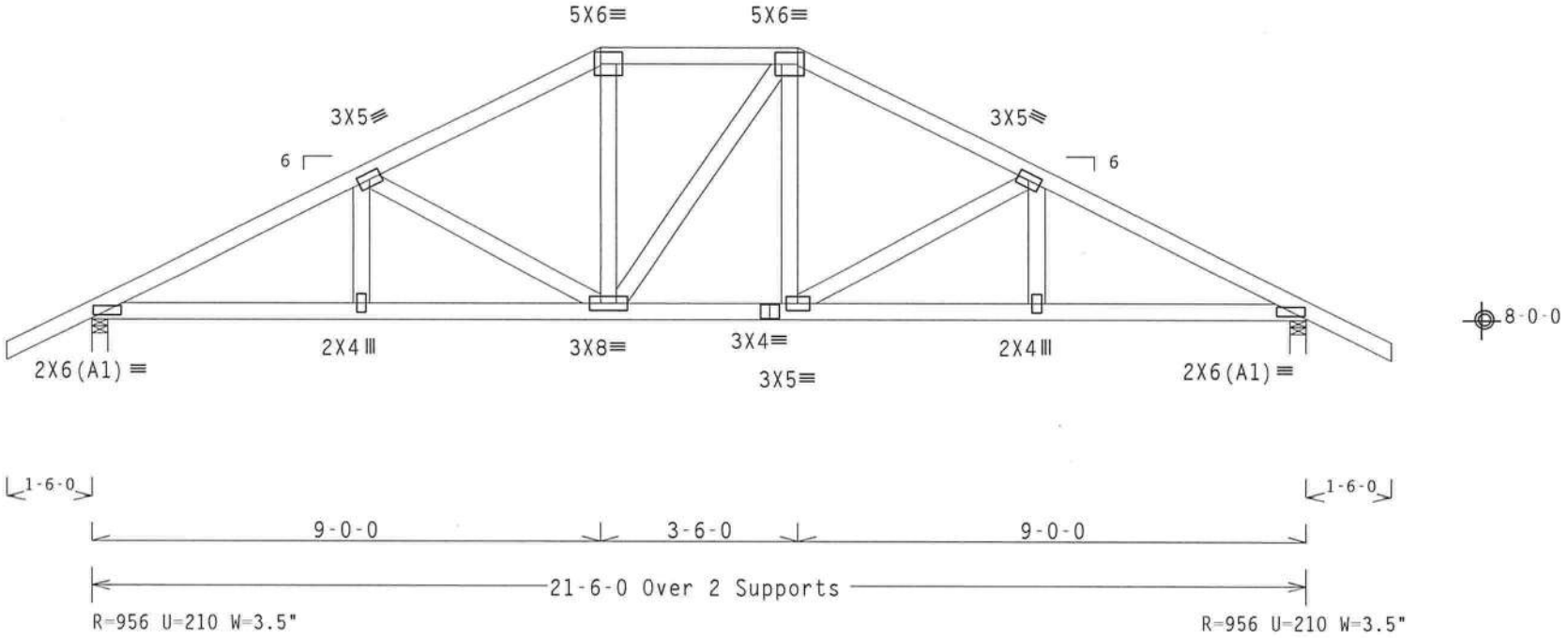

PLT TYP. Wave TPI 95\R Design Crit: TPI(STD)/FLBC 6.10 FL/-/5/-/-/R/- Scale =.3125"/Ft.

ALPINE

Alpine Engineered Products, Inc.
Haines City, FL 33844
FL Certificate of Authorization # 567

**WARNING* TRUSSES REQUIRE EXTREME CARE IN FABRICATION, HANDLING, SHIPPING, INSTALLING AND BRACING. REFER TO HIB-91 (HANDLING INSTALLING AND BRACING), PUBLISHED BY TPI (TRUSS PLATE INSTITUTE, 583 D'ONOFRIO DR., SUITE 200, MADISON, WI 53719). FOR SAFETY PRACTICES PRIOR TO PERFORMING THESE FUNCTIONS. UNLESS OTHERWISE INDICATED, TOP CHORD SHALL HAVE PROPERLY ATTACHED STRUCTURAL PANELS, BOTTOM CHORD SHALL HAVE A PROPERLY ATTACHED RIGID CEILING.
IMPORTANT FURNISH A COPY OF THIS DESIGN TO THE INSTALLATION CONTRACTOR. ALPINE ENGINEERED PRODUCTS, INC. SHALL NOT BE RESPONSIBLE FOR ANY DEVIATION FROM THIS DESIGN; ANY FAILURE TO BUILD THE TRUSSES IN CONFORMANCE WITH TPI: OR FABRICATING, HANDLING, SHIPPING, INSTALLING AND BRACING OF TRUSSES. THIS DESIGN CONFORMS WITH APPLICABLE PROVISIONS OF NDS (NATIONAL DESIGN SPEC, BY AF&PA) AND TPI. ALPINE CONNECTOR PLATES ARE MADE OF 20/16GA (W.HS/K) ASTM A653 (W, K/HS) GALV. STEEL. APPLY PLATES TO EACH FACE OF TRUSS AND UNLESS OTHERWISE LOCATED ON THIS DESIGN, POSITION PER DRAWINGS 160A-Z. ANY INSPECTION OF PLATES FOLLOWED BY (1) SHALL BE PER ANNEX A3 OF TPI 1-2002 SEC. 3. A SEAL ON THIS DRAWING INDICATES ACCEPTANCE OF PROFESSIONAL ENGINEERING RESPONSIBILITY SOLELY FOR THE TRUSS COMPONENT DESIGN SHOWN. THE SUITABILITY AND USE OF THIS COMPONENT FOR ANY BUILDING IS THE RESPONSIBILITY OF THE BUILDING DESIGNER, PER ANSI/TPI 1 SEC. 2.

MANUEL MARTINEZ CERTIFICATE No. 47182 STATE OF FLORIDA PROFESSIONAL ENGINEER

TC LL	20.0 PSF	REF	R215 -37430
TC DL	10.0 PSF	DATE	05/14/03
BC DL	10.0 PSF	DRW	HCUSR215 03134080
BC LL	0.0 PSF	HC-ENG	CR/MMA *
TOT.LD.	40.0 PSF	SEQN-	37016
DUR.FAC.	1.25	FROM	JP
SPACING	24.0"	JREF-	1S20215 Z10

Top chord 2x4 SP #2 N
Bot chord 2x4 SP #2 N
Webs 2x4 SP #2 N

In lieu of structural panels use purlins to brace all flat TC @ 24" OC.

The overall height of this truss excluding overhang is 5-3-7.

110 mph wind, 10.44 ft mean hgt, ASCE 7-98, CLOSED bldg, not located within 4.50 ft from roof edge, CAT II, EXP B, wind TC DL=5.0 psf, wind BC DL=5.0 psf.

Deflection meets L/360 live and L/240 total load.

Plates sized for a minimum of 3.00 sq.in./piece.

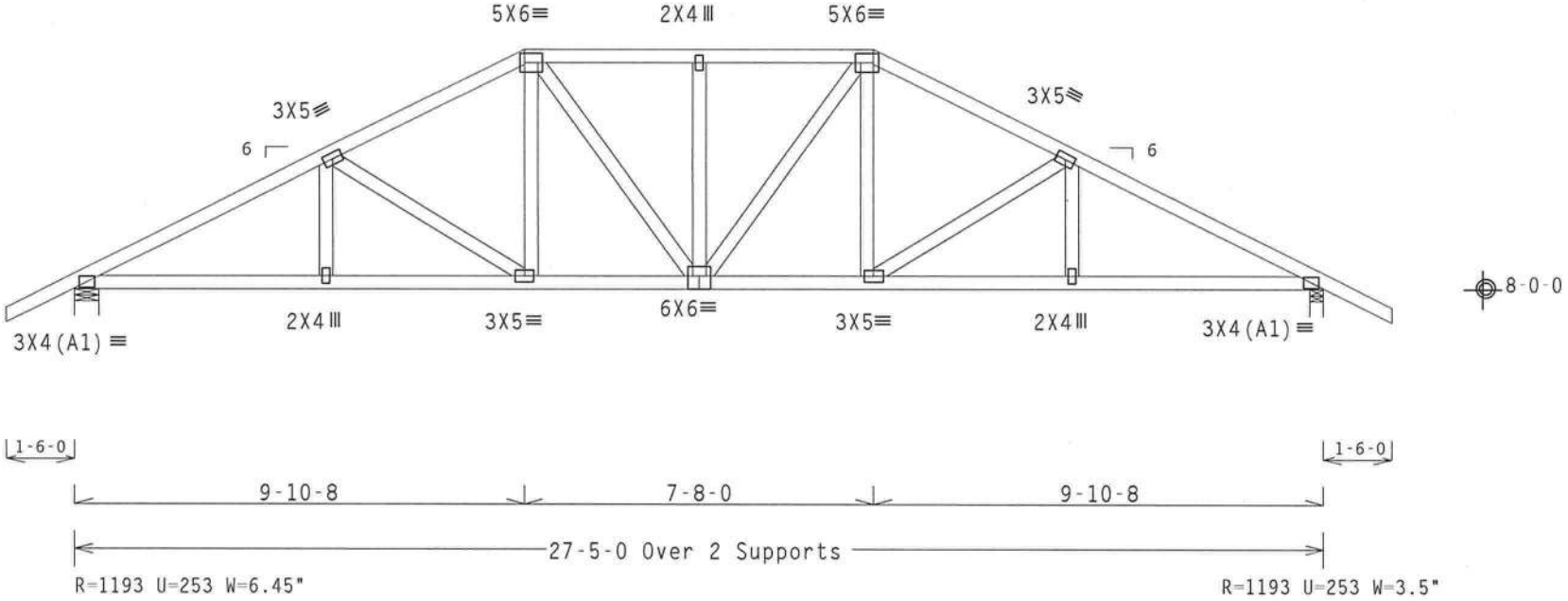

PLT TYP. Wave TPI 95\R Design Crit: TPI(STD)/FLBC 6.10 FL/-/5/-/-/R/- Scale =.25"/Ft.

Alpine Engineered Products, Inc.
Haines City, FL 33844
FL Certificate of Authorization # 567

**WARNING* TRUSSES REQUIRE EXTREME CARE IN FABRICATION, HANDLING, SHIPPING, INSTALLING A BRACING. REFER TO HIB-91 (HANDLING INSTALLING AND BRACING), PUBLISHED BY TPI (TRUSS PL INSTITUTE, 583 D'ONOFRIO DR., SUITE 200, MADISON, WI 53719). FOR SAFETY PRACTICES PRIO PERFORMING THESE FUNCTIONS. UNLESS OTHERWISE INDICATED, TOP CHORD SHALL HAVE PROPERLY ATT STRUCTURAL PANELS, BOTTOM CHORD SHALL HAVE A PROPERLY ATTACHED RIGID CEILING.
IMPORTANT FURNISH A COPY OF THIS DESIGN TO THE INSTALLATION CONTRACTOR. ALPINE ENGIN PRODUCTS, INC. SHALL NOT BE RESPONSIBLE FOR ANY DEVIATION FROM THIS DESIGN; ANY FAILU BUILD THE TRUSSES IN CONFORMANCE WITH TPI: OR FABRICATING, HANDLING, SHIPPING, INSTALLIN AND BRACING OF TRUSSES. THIS DESIGN CONFORMS WITH APPLICABLE PROVISIONS OF NDS (NATIONAL D SPEC. BY AF&PA) AND TPI. ALPINE CONNECTOR PLATES ARE MADE OF 20/16GA (W,HS/K) ASTM (W, K/HS) GALV. STEEL. APPLY PLATES TO EACH FACE OF TRUSS AND UNLESS OTHERWISE LOCATED ON DESIGN, POSITION PER DRAWINGS 160A-Z. ANY INSPECTION OF PLATES FOLLOWED BY (I) SHALL BE ANNEX A3 OF TPI 1-2002 SEC. 3. A SEAL ON THIS DRAWING INDICATES ACCEPTANCE OF PROFESSIONA ENGINEERING RESPONSIBILITY SOLELY FOR THE TRUSS COMPONENT DESIGN SHOWN. THE SUITABILITY AND USE OF THIS COMPONENT FOR ANY BUILDING IS THE RESPONSIBILITY OF THE BUILDING DESIGNER, PER ANSI/TPI 1 SEC. 2.

MANUEL MARTINEZ
CERTIFICATE
No. 47182
STATE OF FLORIDA
PROFESSIONAL ENGINEER

TC LL	20.0 PSF	REF	R215 -37437
TC DL	10.0 PSF	DATE	05/14/03
BC DL	10.0 PSF	DRW	HCUSR215 03134087
BC LL	0.0 PSF	HC-ENG	CR/MMA *
TOT.LD.	40.0 PSF	SEQN-	75077
DUR.FAC.	1.25	FROM	JP
SPACING	24.0"	JREF-	1S20215 Z10

Top chord 2x4 SP #2 N
Bot chord 2x4 SP #2 N
Webs 2x4 SP #2 N

Hipjack supports 7-0-0 setback jacks with no webs.

Plates sized for a minimum of 3.00 sq.in./piece.

110 mph wind, 15.00 ft mean hgt, ASCE 7-98, CLOSED bldg, Located anywhere in roof, CAT II, EXP B, wind TC DL=5.0 psf, wind BC DL=5.0 psf.

Deflection meets L/360 live and L/240 total load.

The overall height of this truss excluding overhang is 3-9-14.

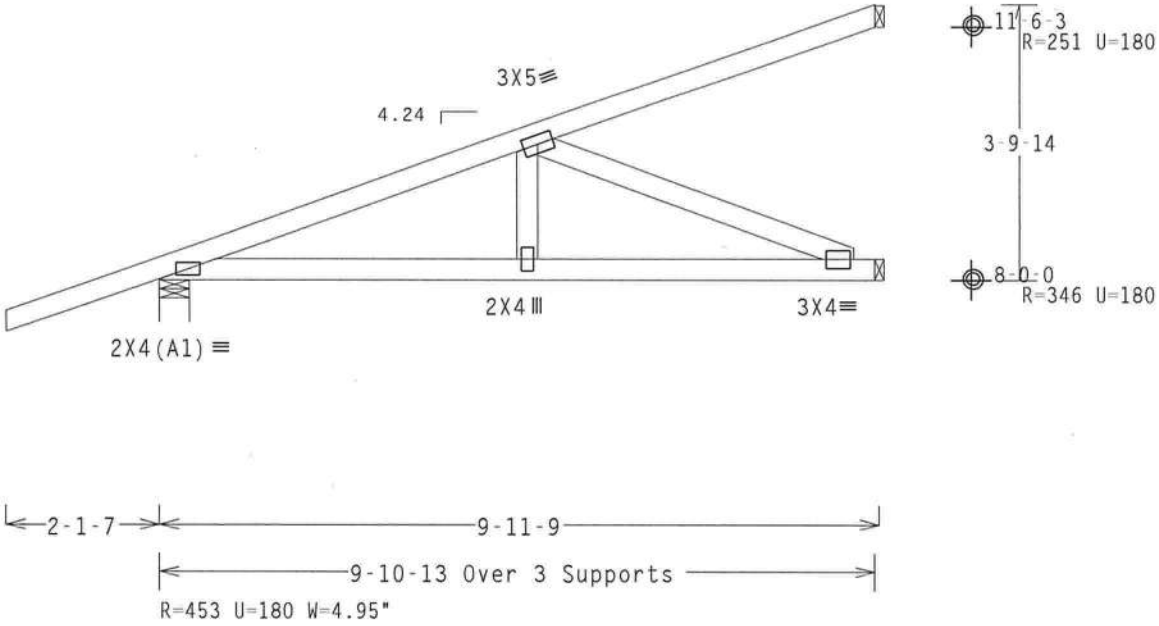

PLT TYP. Wave TPI 95\R Design Crit: TPI(STD)/FLBC 6.10 FL/-/5/-/-/R/- Scale =.375"/Ft.

ALPINE

Alpine Engineered Products, Inc.
Haines City, FL 33844
FL Certificate of Authorization # 567

**WARNING* TRUSSES REQUIRE EXTREME CARE IN FABRICATION, HANDLING, SHIPPING, INSTALLING AND BRACING. REFER TO HIB-91 (HANDLING INSTALLING AND BRACING), PUBLISHED BY TPI (TRUSS PLATE INSTITUTE, 583 D'ONOFRIO DR., SUITE 200, MADISON, WI 53719). FOR SAFETY PRACTICES PRIOR TO PERFORMING THESE FUNCTIONS. UNLESS OTHERWISE INDICATED, TOP CHORD SHALL HAVE PROPERLY ATTACHED STRUCTURAL PANELS, BOTTOM CHORD SHALL HAVE A PROPERLY ATTACHED RIGID CEILING.
IMPORTANT FURNISH A COPY OF THIS DESIGN TO THE INSTALLATION CONTRACTOR. ALPINE ENGINEERED PRODUCTS, INC. SHALL NOT BE RESPONSIBLE FOR ANY DEVIATION FROM THIS DESIGN; ANY FAILURE TO BUILD THE TRUSSES IN CONFORMANCE WITH TPI; OR FABRICATING, HANDLING, SHIPPING, INSTALLING AND BRACING OF TRUSSES. THIS DESIGN CONFORMS WITH APPLICABLE PROVISIONS OF NDS (NATIONAL DESIGN SPEC. BY AF&PA) AND TPI. ALPINE CONNECTOR PLATES ARE MADE OF 20/16GA (W,HS/K) ASTM 653 (W, K/HS) GALV. STEEL. APPLY PLATES TO EACH FACE OF TRUSS AND UNLESS OTHERWISE LOCATED ON DESIGN. POSITION PER DRAWINGS 160A-Z. ANY INSPECTION OF PLATES FOLLOWED BY (I) SHALL BE PER ANNEX A3 OF TPI 1-2002 SEC. 3. A SEAL ON THIS DRAWING INDICATES ACCEPTANCE OF PROFESSIONAL ENGINEERING RESPONSIBILITY SOLELY FOR THE TRUSS COMPONENT DESIGN SHOWN. THE SUITABILITY AND USE OF THIS COMPONENT FOR ANY BUILDING IS THE RESPONSIBILITY OF THE BUILDING DESIGNER, PER ANSI/TPI 1 SEC. 2.

MANUEL MARTINEZ CERTIFICATE No. 47182 STATE OF FLORIDA PROFESSIONAL ENGINEER

TC LL	20.0 PSF	REF	R215 -37438
TC DL	10.0 PSF	DATE	05/14/03
BC DL	10.0 PSF	DRW	HCUSR215 03134088
BC LL	0.0 PSF	HC-ENG	CR/MMA
TOT.LD.	40.0 PSF	SEQN-	36999
DUR.FAC.	1.25	FROM	JP
SPACING	24.0"	JREF-	1S20215 710

Top chord 2x4 SP #2 N :T2 2x6 SP #2 N:
Bot chord 2x6 SP #2 N
Webs 2x4 SP #2 N

In lieu of structural panels use purlins to brace all flat TC @ 24" OC.

Deflection meets L/360 live and L/240 total load.

Plates sized for a minimum of 3.00 sq.in./piece.

110 mph wind, 15.00 ft mean hgt, ASCE 7-98, CLOSED bldg, Located anywhere in roof, CAT II, EXP B, wind TC DL=5.0 psf, wind BC DL=5.0 psf.

#1 hip supports 7-0-0 jacks with no webs.

Left side jacks have 7-0-0 setback with 0-0-0 cant and 1-6-0 overhang.
End jacks have 7-0-0 setback with 0-0-0 cant and 1-6-0 overhang.
Right side jacks have 7-0-0 setback with 0-0-0 cant and 1-6-0 overhang.

The overall height of this truss excluding overhang is 3-10-3.

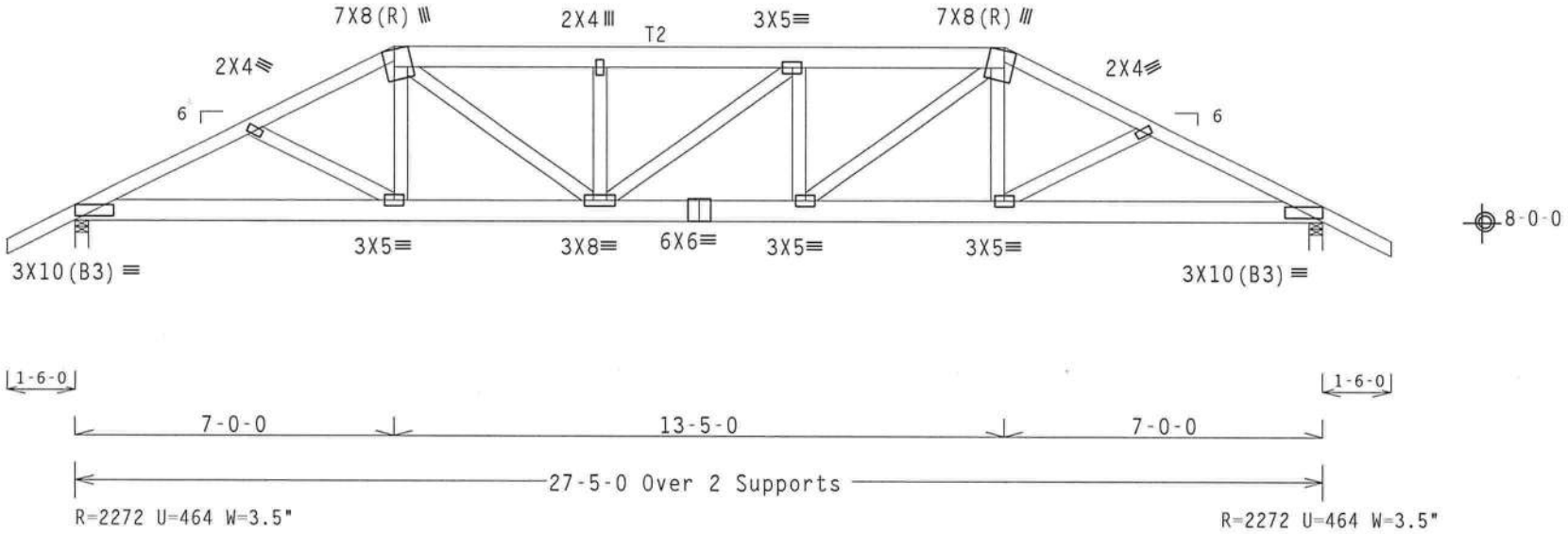

PLT TYP. Wave TPI 95\R Design Crit: TPI(STD)/FLBC 6.10 FL/-/5/-/-/R/- Scale =.25"/Ft.

ALPINE
Alpine Engineered Products, Inc.
Haines City, FL 33844
FL Certificate of Authorization # 567

**WARNING* TRUSSES REQUIRE EXTREME CARE IN FABRICATION, HANDLING, SHIPPING, INSTALLING A BRACING. REFER TO HIB-91 (HANDLING INSTALLING AND BRACING), PUBLISHED BY TPI (TRUSS PL INSTITUTE, 583 D'ONOFRIO DR., SUITE 200, MADISON, WI 53719), FOR SAFETY PRACTICES PRIO PERFORMING THESE FUNCTIONS. UNLESS OTHERWISE INDICATED, TOP CHORD SHALL HAVE PROPERLY ATTA STRUCTURAL PANELS, BOTTOM CHORD SHALL HAVE A PROPERLY ATTACHED RIGID CEILING.
IMPORTANT FURNISH A COPY OF THIS DESIGN TO THE INSTALLATION CONTRACTOR. ALPINE ENGIN RED PRODUCTS, INC. SHALL NOT BE RESPONSIBLE FOR ANY DEVIATION FROM THIS DESIGN; ANY FAILU BUILD THE TRUSSES IN CONFORMANCE WITH TPI; OR FABRICATING, HANDLING, SHIPPING, INSTALLING AND BRACING OF TRUSSES. THIS DESIGN CONFORMS WITH APPLICABLE PROVISIONS OF NDS (NATIONAL DE GN SPEC, BY AF&PA) AND TPI. ALPINE CONNECTOR PLATES ARE MADE OF 20/16GA (W,HS/K) ASTM (W, K/HS) GALV. STEEL. APPLY PLATES TO EACH FACE OF TRUSS AND UNLESS OTHERWISE LOCATED ON T DESIGN. POSITION PER DRAWINGS 160A-Z. ANY INSPECTION OF PLATES FOLLOWED BY (I) SHALL BE ANNEX A3 OF TPI 1-2002 SEC. 3. A SEAL ON THIS DRAWING INDICATES ACCEPTANCE OF PROFESSIONA ENGINEERING RESPONSIBILITY SOLELY FOR THE TRUSS COMPONENT DESIGN SHOWN. THE SUITABILITY AND USE OF THIS COMPONENT FOR ANY BUILDING IS THE RESPONSIBILITY OF THE BUILDING DESIGNER, PER ANSI/TPI 1 SEC. 2.

MANUEL MARTINEZ
CERTIFICATE
No. 47182
STATE OF
FLORIDA
PROFESSIONAL ENGINEER

TC LL	20.0 PSF	REF R215 -37435
TC DL	10.0 PSF	DATE 05/14/03
BC DL	10.0 PSF	DRW HCUSR215 03134085
BC LL	0.0 PSF	HC-ENG CR/MMA
TOT.LD.	40.0 PSF	SEQN- 37120
DUR.FAC.	1.25	FROM JP
SPACING	24.0"	JREF- 1S20215 710

Top chord 2x4 SP #2 N
Bot chord 2x4 SP #2 N
Webs 2x4 SP #2 N

Hipjack supports 6-11-8 setback jacks with no webs.

Plates sized for a minimum of 3.00 sq.in./piece.

The overall height of this truss excluding overhang is 3-9-14.

110 mph wind, 15.00 ft mean hgt, ASCE 7-98, CLOSED bldg, Located anywhere in roof, CAT II, EXP B, wind TC DL=5.0 psf, wind BC DL=5.0 psf.

Deflection meets L/360 live and L/240 total load.

Shim all supports to solid bearing.

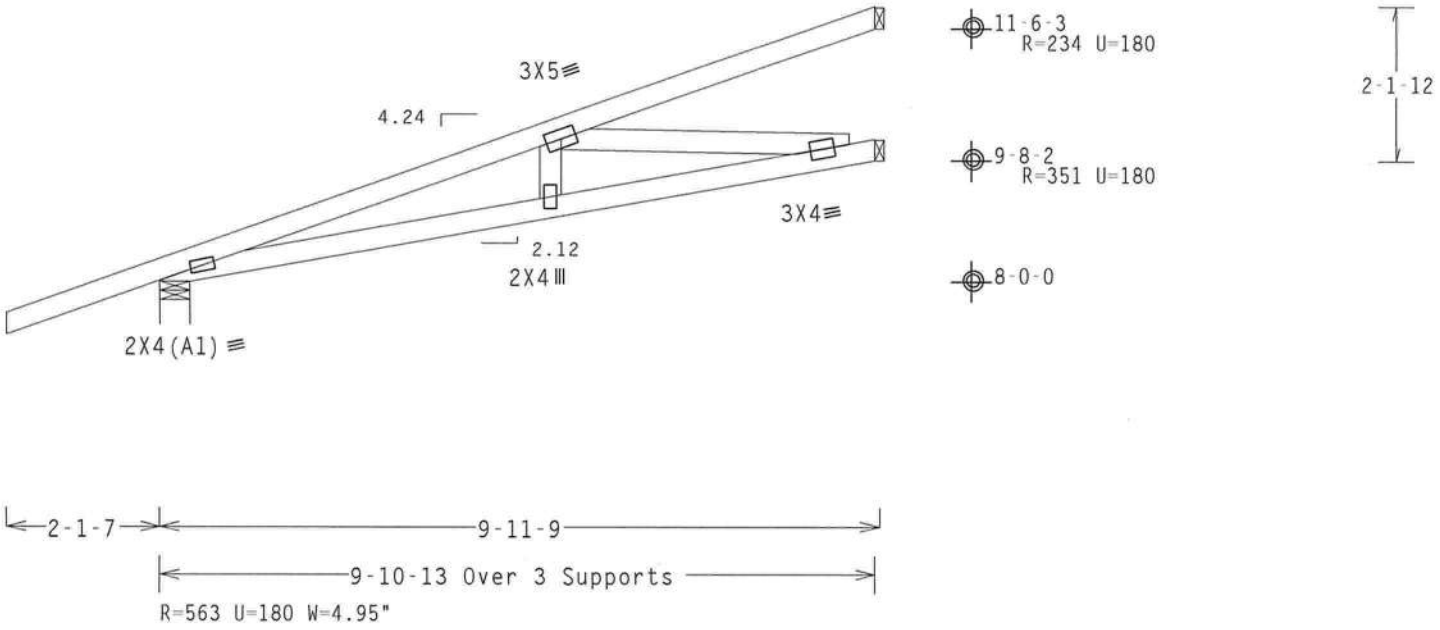

PLT TYP. Wave TPI 95\R Design Crit: TPI(STD)/FLBC 6.10 1 FL/-/5/-/-/R/- Scale =.375"/Ft.

ALPINE

Alpine Engineered Products, Inc.
Haines City, FL 33844
FL Certificate of Authorization # 567

**WARNING* TRUSSES REQUIRE EXTREME CARE IN FABRICATION, HANDLING, SHIPPING, INSTALLING AND BRACING. REFER TO HIB-91 (HANDLING INSTALLING AND BRACING), PUBLISHED BY TPI (TRUSS PLATE INSTITUTE, 583 D'ONOFRIO DR., SUITE 200, MADISON, WI 53719). FOR SAFETY PRACTICES PRIOR TO PERFORMING THESE FUNCTIONS. UNLESS OTHERWISE INDICATED, TOP CHORD SHALL HAVE PROPERLY ATTACHED STRUCTURAL PANELS, BOTTOM CHORD SHALL HAVE A PROPERLY ATTACHED RIGID CEILING.
IMPORTANT FURNISH A COPY OF THIS DESIGN TO THE INSTALLATION CONTRACTOR. ALPINE ENGINEERED PRODUCTS, INC. SHALL NOT BE RESPONSIBLE FOR ANY DEVIATION FROM THIS DESIGN; ANY FAILURE TO BUILD THE TRUSSES IN CONFORMANCE WITH TPI; OR FABRICATING, HANDLING, SHIPPING, INSTALLING AND BRACING OF TRUSSES. THIS DESIGN CONFORMS WITH APPLICABLE PROVISIONS OF NDS (NATIONAL DESIGN SPEC. BY AF&PA) AND TPI. ALPINE CONNECTOR PLATES ARE MADE OF 20/16GA (W.HS/K) ASTM 653 (W. K/HS) GALV. STEEL. APPLY PLATES TO EACH FACE OF TRUSS AND UNLESS OTHERWISE LOCATED ON THIS DESIGN, POSITION PER DRAWINGS 160A-Z. ANY INSPECTION OF PLATES FOLLOWED BY (I) SHALL BE ANNEX A3 OF TPI 1-2002 SEC. 3. A SEAL ON THIS DRAWING INDICATES ACCEPTANCE OF PROFESSIONAL ENGINEERING RESPONSIBILITY SOLELY FOR THE TRUSS COMPONENT DESIGN SHOWN. THE SUITABILITY AND USE OF THIS COMPONENT FOR ANY BUILDING IS THE RESPONSIBILITY OF THE BUILDING DESIGNER. PER ANSI/TPI 1 SEC. 2.

MANUEL MARTINEZ
CERTIFICATE
No. 47182
STATE OF FLORIDA
PROFESSIONAL ENGINEER

TC LL	20.0 PSF	REF	R215 -37439
TC DL	10.0 PSF	DATE	05/14/03
BC DL	10.0 PSF	DRW	HCUSR215 03134089
BC LL	0.0 PSF	HC-ENG	CR/MMA
TOT.LD.	40.0 PSF	SEQN-	36991
DUR.FAC.	1.25	FROM	JP
SPACING	24.0"	JREF-	1S20215 710

Top chord 2x4 SP #2 N
Bot chord 2x4 SP #2 N

Deflection meets L/360 live and L/240 total load.

The overall height of this truss excluding overhang is 3-10-3.

110 mph wind, 9.72 ft mean hgt, ASCE 7-98, CLOSED bldg, not located within 4.50 ft from roof edge, CAT II, EXP B, wind TC DL=5.0 psf, wind BC DL=5.0 psf.

Plates sized for a minimum of 3.00 sq.in./piece.

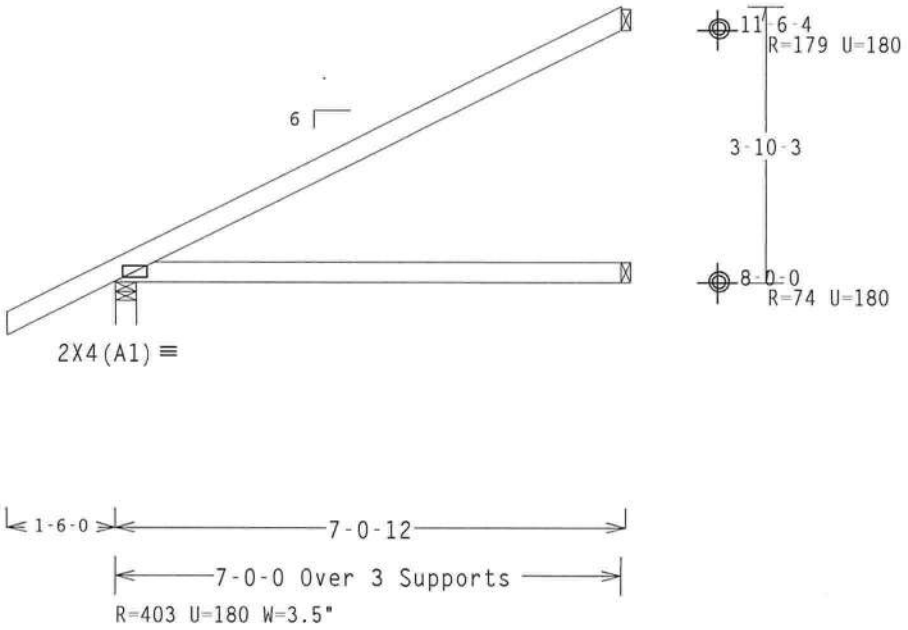

PLT TYP. Wave TPI 95\R Design Crit: TPI(STD)/FLBC 6.10 32 FL/-/5/-/-/R/- Scale =.375"/Ft.

ALPINE

Alpine Engineered Products, Inc.
Haines City, FL 33844
FL Certificate of Authorization # 5673

**WARNING* TRUSSES REQUIRE EXTREME CARE IN FABRICATION, HANDLING, SHIPPING, INSTALLING AND BRACING. REFER TO HIB-91 (HANDLING INSTALLING AND BRACING), PUBLISHED BY TPI (TRUSS PLATE INSTITUTE, 583 D'ONOFRIO DR., SUITE 200, MADISON, WI 53719). FOR SAFETY PRACTICES PRIOR TO PERFORMING THESE FUNCTIONS. UNLESS OTHERWISE INDICATED, TOP CHORD SHALL HAVE PROPERLY ATTACHED STRUCTURAL PANELS, BOTTOM CHORD SHALL HAVE A PROPERLY ATTACHED RIGID CEILING.
IMPORTANT FURNISH A COPY OF THIS DESIGN TO THE INSTALLATION CONTRACTOR. ALPINE ENGINEERED PRODUCTS, INC. SHALL NOT BE RESPONSIBLE FOR ANY DEVIATION FROM THIS DESIGN; ANY FAILURE TO BUILD THE TRUSSES IN CONFORMANCE WITH TPI; OR FABRICATING, HANDLING, SHIPPING, INSTALLING AND BRACING OF TRUSSES. THIS DESIGN CONFORMS WITH APPLICABLE PROVISIONS OF NDS (NATIONAL DESIGN SPEC. BY AF&PA) AND TPI. ALPINE CONNECTOR PLATES ARE MADE OF 20/16GA (W.HS/K) ASTM A653 (W, K/HS) GALV. STEEL. APPLY PLATES TO EACH FACE OF TRUSS AND UNLESS OTHERWISE LOCATED ON THIS DESIGN, POSITION PER DRAWINGS 160A-Z. ANY INSPECTION OF PLATES FOLLOWED BY (I) SHALL BE PER ANNEX A3 OF TPI 1-2002 SEC. 3. A SEAL ON THIS DRAWING INDICATES ACCEPTANCE OF PROFESSIONAL ENGINEERING RESPONSIBILITY SOLELY FOR THE TRUSS COMPONENT DESIGN SHOWN. THE SUITABILITY AND USE OF THIS COMPONENT FOR ANY BUILDING IS THE RESPONSIBILITY OF THE BUILDING DESIGNER, PER ANSI/TPI 1 SEC. 2.

MANUEL MARTINEZ CERTIFICATE No. 47182 STATE OF FLORIDA PROFESSIONAL ENGINEER

TC LL	20.0 PSF	REF	R215 -37440
TC DL	10.0 PSF	DATE	05/14/03
BC DL	10.0 PSF	DRW	HCUSR215 03134090
BC LL	0.0 PSF	HC-ENG	CR/MMA
TOT.LD.	40.0 PSF	SEQN-	75008
DUR.FAC.	1.25	FROM	JP
SPACING	24.0"	JREF-	1S20215 710

Top chord 2x4 SP #2 N
Bot chord 2x4 SP #2 N
Webs 2x4 SP #2 N

Plates sized for a minimum of 3.00 sq.in./piece.

DEFLECTION MEETS L/360 LIVE AND L/240 TOTAL LOAD.

110 mph wind, 12.10 ft mean hgt, ASCE 7-98, CLOSED bldg, not located within 4.50 ft from roof edge, CAT II, EXP B, wind TC DL=5.0 psf, wind BC DL=5.0 psf.

The overall height of this truss excluding overhang is 3-10-3.

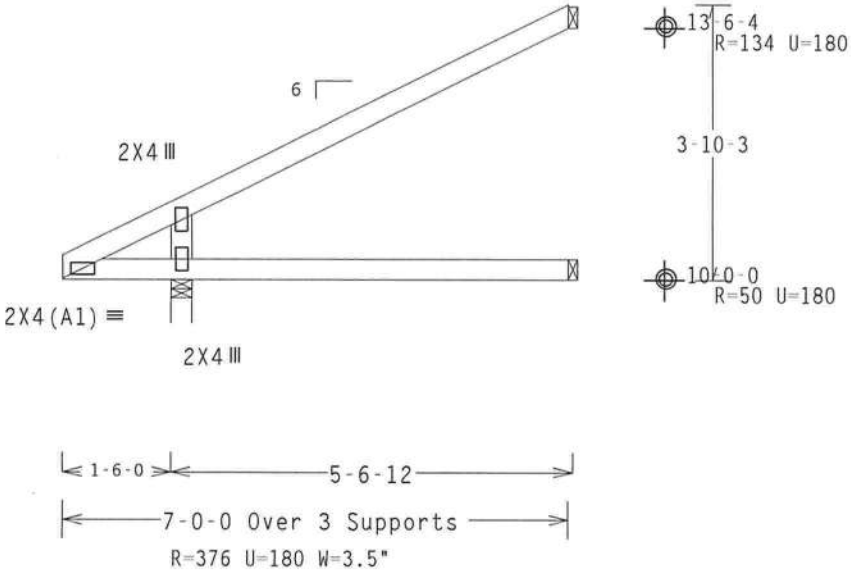

PLT TYP. Wave TPI 95\R Design Crit: TPI(STD)/FLBC 6.10 FL/-/5/-/-/R/- Scale =.375"/Ft.

ALPINE
Alpine Engineered Products, Inc.
Haines City, FL 33844
FL Certificate of Authorization # 567

**WARNING* TRUSSES REQUIRE EXTREME CARE IN FABRICATION, HANDLING, SHIPPING, INSTALLING A BRACING. REFER TO HIB-91 (HANDLING INSTALLING AND BRACING). PUBLISHED BY TPI (TRUSS PL INSTITUTE, 583 D'ONOFRIO DR., SUITE 200, MADISON, WI 53719). FOR SAFETY PRACTICES PRIO PERFORMING THESE FUNCTIONS. UNLESS OTHERWISE INDICATED, TOP CHORD SHALL HAVE PROPERLY ATT ED STRUCTURAL PANELS, BOTTOM CHORD SHALL HAVE A PROPERLY ATTACHED RIGID CEILING.
IMPORTANT FURNISH A COPY OF THIS DESIGN TO THE INSTALLATION CONTRACTOR. ALPINE ENGIN RED PRODUCTS, INC. SHALL NOT BE RESPONSIBLE FOR ANY DEVIATION FROM THIS DESIGN; ANY FAILU BUILD THE TRUSSES IN CONFORMANCE WITH TPI; OR FABRICATING, HANDLING, SHIPPING, INSTALLING AND BRACING OF TRUSSES. THIS DESIGN CONFORMS WITH APPLICABLE PROVISIONS OF NDS (NATIONAL DE GN SPEC. BY AF&PA) AND TPI. ALPINE CONNECTOR PLATES ARE MADE OF 20/16GA (W,HS/K) ASTM 5 (W, K/HS) GALV. STEEL. APPLY PLATES TO EACH FACE OF TRUSS AND UNLESS OTHERWISE LOCATED ON T DESIGN, POSITION PER DRAWINGS 160A-Z. ANY INSPECTION OF PLATES FOLLOWED BY (I) SHALL BE P ANNEX A3 OF TPI 1-2002 SEC. 3. A SEAL ON THIS DRAWING INDICATES ACCEPTANCE OF PROFESSIONA ENGINEERING RESPONSIBILITY SOLELY FOR THE TRUSS COMPONENT DESIGN SHOWN. THE SUITABILITY AND USE OF THIS COMPONENT FOR ANY BUILDING IS THE RESPONSIBILITY OF THE BUILDING DESIGNER, PER ANSI/TPI 1 SEC. 2.

MANUEL MARTINEZ
CERTIFICATE
No. 47182
STATE OF
FLORIDA
PROFESSIONAL ENGINEER

TC LL	20.0 PSF	REF	R215 -37441
TC DL	10.0 PSF	DATE	05/14/03
BC DL	10.0 PSF	DRW	HCUSR215 03134091
BC LL	0.0 PSF	HC-ENG	CR/MMA
TOT.LD.	40.0 PSF	SEQN-	75024
DUR.FAC.	1.25	FROM	JP
SPACING	24.0"	JREF-	1S20215 710

Top chord 2x4 SP #2 N
Bot chord 2x4 SP #2 N
Webs 2x4 SP #2 N

Deflection meets L/360 live and L/240 total load.

Shim all supports to solid bearing.

110 mph wind, 9.72 ft mean hgt, ASCE 7-98, CLOSED bldg, not located within 4.50 ft from roof edge, CAT II, EXP B, wind TC DL=5.0 psf, wind BC DL=5.0 psf.

Plates sized for a minimum of 3.00 sq.in./piece.

The overall height of this truss excluding overhang is 3-10-3.

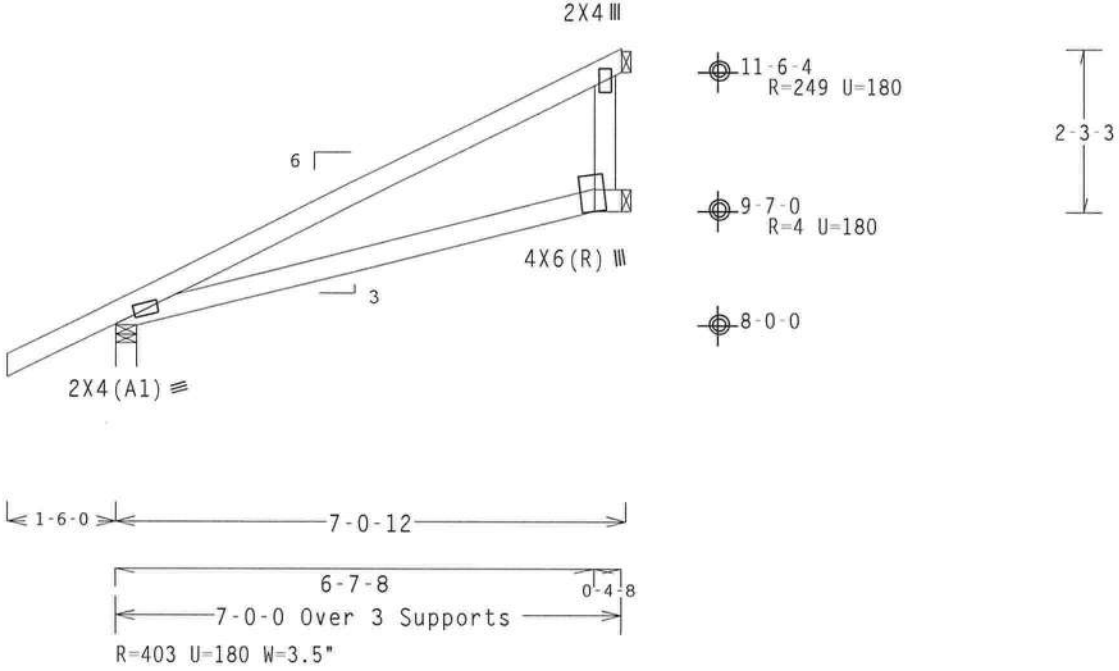

PLT TYP. Wave TPI 95\R Design Crit: TPI(STD)/FLBC 6.10 FL/-/5/-/-/R/- Scale =.375"/Ft.

ALPINE

Alpine Engineered Products, Inc.
Haines City, FL 33844
FL Certificate of Authorization # 567

**WARNING* TRUSSES REQUIRE EXTREME CARE IN FABRICATION, HANDLING, SHIPPING, INSTALLING AND BRACING. REFER TO HIB-91 (HANDLING INSTALLING AND BRACING), PUBLISHED BY TPI (TRUSS PLATE INSTITUTE, 583 D'ONOFRIO DR., SUITE 200, MADISON, WI 53719). FOR SAFETY PRACTICES PRIOR TO PERFORMING THESE FUNCTIONS. UNLESS OTHERWISE INDICATED, TOP CHORD SHALL HAVE PROPERLY ATTACHED STRUCTURAL PANELS, BOTTOM CHORD SHALL HAVE A PROPERLY ATTACHED RIGID CEILING.
IMPORTANT FURNISH A COPY OF THIS DESIGN TO THE INSTALLATION CONTRACTOR. ALPINE ENGINEERED PRODUCTS, INC. SHALL NOT BE RESPONSIBLE FOR ANY DEVIATION FROM THIS DESIGN; ANY FAILURE TO BUILD THE TRUSSES IN CONFORMANCE WITH TPI; OR FABRICATING, HANDLING, SHIPPING, INSTALLING AND BRACING OF TRUSSES. THIS DESIGN CONFORMS WITH APPLICABLE PROVISIONS OF NDS (NATIONAL DESIGN SPEC, BY AF&PA) AND TPI. ALPINE CONNECTOR PLATES ARE MADE OF 20/16GA (W.HS/K) ASTM A653 (W, K/HS) GALV. STEEL. APPLY PLATES TO EACH FACE OF TRUSS AND UNLESS OTHERWISE LOCATED ON THIS DESIGN, POSITION PER DRAWINGS 160A-Z. ANY INSPECTION OF PLATES FOLLOWED BY (I) SHALL BE PER ANNEX A3 OF TPI 1-2002 SEC. 3. A SEAL ON THIS DRAWING INDICATES ACCEPTANCE OF PROFESSIONAL ENGINEERING RESPONSIBILITY SOLELY FOR THE TRUSS COMPONENT DESIGN SHOWN. THE SUITABILITY AND USE OF THIS COMPONENT FOR ANY BUILDING IS THE RESPONSIBILITY OF THE BUILDING DESIGNER, PER ANSI/TPI 1 SEC. 2.

MANUEL MARTINEZ
CERTIFICATE
No. 47182
STATE OF FLORIDA
PROFESSIONAL ENGINEER

TC LL	20.0 PSF	REF	R215 -37442
TC DL	10.0 PSF	DATE	05/14/03
BC DL	10.0 PSF	DRW	HCUSR215 03134092
BC LL	0.0 PSF	HC-ENG	CR/MMA
TOT.LD.	40.0 PSF	SEQN-	75035
DUR.FAC.	1.25	FROM	JP
SPACING	24.0"	JREF-	1S20215 Z10

Top chord 2x4 SP #2 N
Bot chord 2x4 SP #2 N
Webs 2x4 SP #2 N

Deflection meets L/360 live and L/240 total load.

Shim all supports to solid bearing.

110 mph wind, 9.72 ft mean hgt, ASCE 7-98, CLOSED bldg, not located within 4.50 ft from roof edge, CAT II, EXP B, wind TC DL=5.0 psf, wind BC DL=5.0 psf.

Plates sized for a minimum of 3.00 sq.in./piece.

The overall height of this truss excluding overhang is 3-10-3.

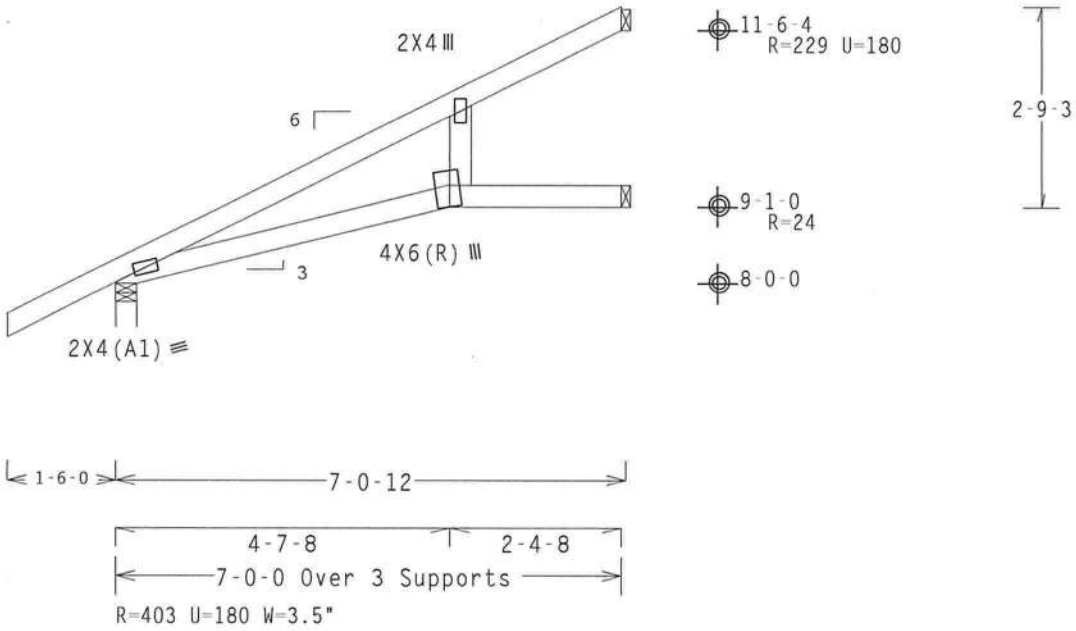

PLT TYP. Wave TPI 95\R Design Crit: TPI(STD)/FLBC 6.10 FL/-/5/-/-/R/- Scale =.375"/Ft.

ALPINE

Alpine Engineered Products, Inc.
Haines City, FL 33844
FL Certificate of Authorization # 567

**WARNING* TRUSSES REQUIRE EXTREME CARE IN FABRICATION, HANDLING, SHIPPING, INSTALLING AND BRACING. REFER TO HIB-91 (HANDLING INSTALLING AND BRACING), PUBLISHED BY TPI (TRUSS PLATE INSTITUTE, 583 D'ONOFRIO DR., SUITE 200, MADISON, WI 53719). FOR SAFETY PRACTICES PRIOR TO PERFORMING THESE FUNCTIONS. UNLESS OTHERWISE INDICATED, TOP CHORD SHALL HAVE PROPERLY ATTACHED STRUCTURAL PANELS, BOTTOM CHORD SHALL HAVE A PROPERLY ATTACHED RIGID CEILING.
IMPORTANT FURNISH A COPY OF THIS DESIGN TO THE INSTALLATION CONTRACTOR. ALPINE ENGINEERED PRODUCTS, INC. SHALL NOT BE RESPONSIBLE FOR ANY DEVIATION FROM THIS DESIGN; ANY FAILURE TO BUILD THE TRUSSES IN CONFORMANCE WITH TPI; OR FABRICATING, HANDLING, SHIPPING, INSTALLING AND BRACING OF TRUSSES. THIS DESIGN CONFORMS WITH APPLICABLE PROVISIONS OF NDS (NATIONAL DESIGN SPEC. BY AF&PA) AND TPI. ALPINE CONNECTOR PLATES ARE MADE OF 20/16GA (W,HS/K) ASTM 653 (W, K/HS) GALV. STEEL. APPLY PLATES TO EACH FACE OF TRUSS AND UNLESS OTHERWISE LOCATED ON THE DESIGN, POSITION PER DRAWINGS 160A-Z. ANY INSPECTION OF PLATES FOLLOWED BY (I) SHALL BE PER ANNEX A3 OF TPI 1-2002 SEC. 3. A SEAL ON THIS DRAWING INDICATES ACCEPTANCE OF PROFESSIONAL ENGINEERING RESPONSIBILITY SOLELY FOR THE TRUSS COMPONENT DESIGN SHOWN. THE SUITABILITY AND USE OF THIS COMPONENT FOR ANY BUILDING IS THE RESPONSIBILITY OF THE BUILDING DESIGNER, PER ANSI/TPI 1 SEC. 2.

MANUEL MARTINEZ
CERTIFICATE
No. 47182
STATE OF FLORIDA
PROFESSIONAL ENGINEER

TC LL	20.0 PSF	REF R215 -37443
TC DL	10.0 PSF	DATE 05/14/03
BC DL	10.0 PSF	DRW HCUSR215 03134093
BC LL	0.0 PSF	HC-ENG CR/MMA
TOT.LD.	40.0 PSF	SEQN- 75039
DUR.FAC.	1.25	FROM JP
SPACING	24.0"	JREF- 1S20215 710

Top chord 2x4 SP #2 N
Bot chord 2x4 SP #2 N
Webs 2x4 SP #2 N

Deflection meets L/360 live and L/240 total load.

Shim all supports to solid bearing.

110 mph wind, 9.72 ft mean hgt, ASCE 7-98, CLOSED bldg, not located within 4.50 ft from roof edge, CAT II, EXP B, wind TC DL=5.0 psf, wind BC DL=5.0 psf.

Plates sized for a minimum of 3.00 sq.in./piece.

The overall height of this truss excluding overhang is 3-10-3.

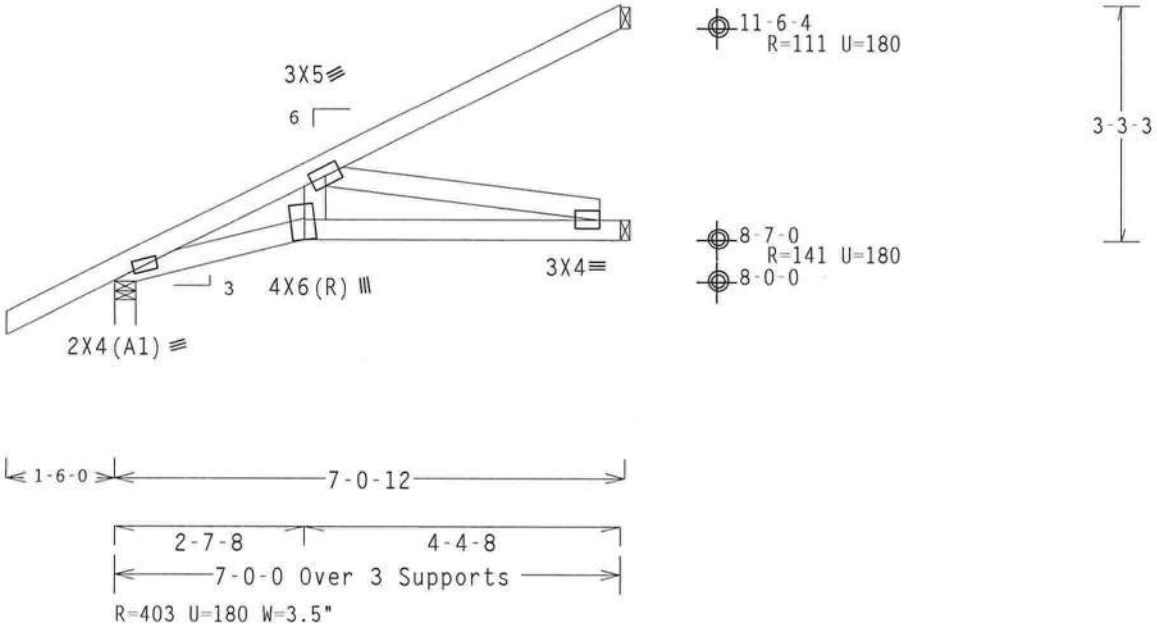

PLT TYP. Wave TPI 95\R Design Crit: TPI(STD)/FLBC 6.10 FL/-/5/-/-/R/- Scale =.375"/Ft.

ALPINE

Alpine Engineered Products, Inc.
Haines City, FL 33844
FL Certificate of Authorization # 5637

**WARNING* TRUSSES REQUIRE EXTREME CARE IN FABRICATION, HANDLING, SHIPPING, INSTALLING AND BRACING. REFER TO HIB-91 (HANDLING INSTALLING AND BRACING), PUBLISHED BY TPI (TRUSS PLATE INSTITUTE, 583 D'ONOFRIO DR., SUITE 200, MADISON, WI 53719), FOR SAFETY PRACTICES PRIOR TO PERFORMING THESE FUNCTIONS. UNLESS OTHERWISE INDICATED, TOP CHORD SHALL HAVE PROPERLY ATTACHED STRUCTURAL PANELS, BOTTOM CHORD SHALL HAVE A PROPERLY ATTACHED RIGID CEILING.
IMPORTANT FURNISH A COPY OF THIS DESIGN TO THE INSTALLATION CONTRACTOR. ALPINE ENGINEERED PRODUCTS, INC. SHALL NOT BE RESPONSIBLE FOR ANY DEVIATION FROM THIS DESIGN; ANY FAILURE TO BUILD THE TRUSSES IN CONFORMANCE WITH TPI; OR FABRICATING, HANDLING, SHIPPING, INSTALLING AND BRACING OF TRUSSES. THIS DESIGN CONFORMS WITH APPLICABLE PROVISIONS OF NDS (NATIONAL DESIGN SPEC. BY AF&PA) AND TPI. ALPINE CONNECTOR PLATES ARE MADE OF 20/16GA (W,HS/K) ASTM 653 (W, K/HS) GALV. STEEL. APPLY PLATES TO EACH FACE OF TRUSS AND UNLESS OTHERWISE LOCATED ON THIS DESIGN, POSITION PER DRAWINGS 160A-Z. ANY INSPECTION OF PLATES FOLLOWED BY (I) SHALL BE PER ANNEX A3 OF TPI 1-2002 SEC. 3. A SEAL ON THIS DRAWING INDICATES ACCEPTANCE OF PROFESSIONAL ENGINEERING RESPONSIBILITY SOLELY FOR THE TRUSS COMPONENT DESIGN SHOWN. THE SUITABILITY AND USE OF THIS COMPONENT FOR ANY BUILDING IS THE RESPONSIBILITY OF THE BUILDING DESIGNER, PER ANSI/TPI 1 SEC. 2.

MANUEL MARTINEZ
CERTIFICATE
No. 47182
STATE OF FLORIDA
PROFESSIONAL ENGINEER

TC LL	20.0 PSF	REF	R215 -37444
TC DL	10.0 PSF	DATE	05/14/03
BC DL	10.0 PSF	DRW	HCUSR215 03134094
BC LL	0.0 PSF	HC-ENG	CR/MMA
TOT.LD.	40.0 PSF	SEQN-	75043
DUR.FAC.	1.25	FROM	JP
SPACING	24.0"	JREF-	1S20215 710

Top chord 2x4 SP #2 N
Bot chord 2x4 SP #2 N
Webs 2x4 SP #2 N

DEFLECTION MEETS L/240 LIVE AND L/180 TOTAL LOAD.

110 mph wind, 9.72 ft mean hgt, ASCE 7-98, CLOSED bldg, Located anywhere in roof, CAT II, EXP B, wind TC DL=5.0 psf, wind BC DL=5.0 psf.

Plates sized for a minimum of 3.00 sq.in./piece.

The overall height of this truss excluding overhang is 3-10-3.

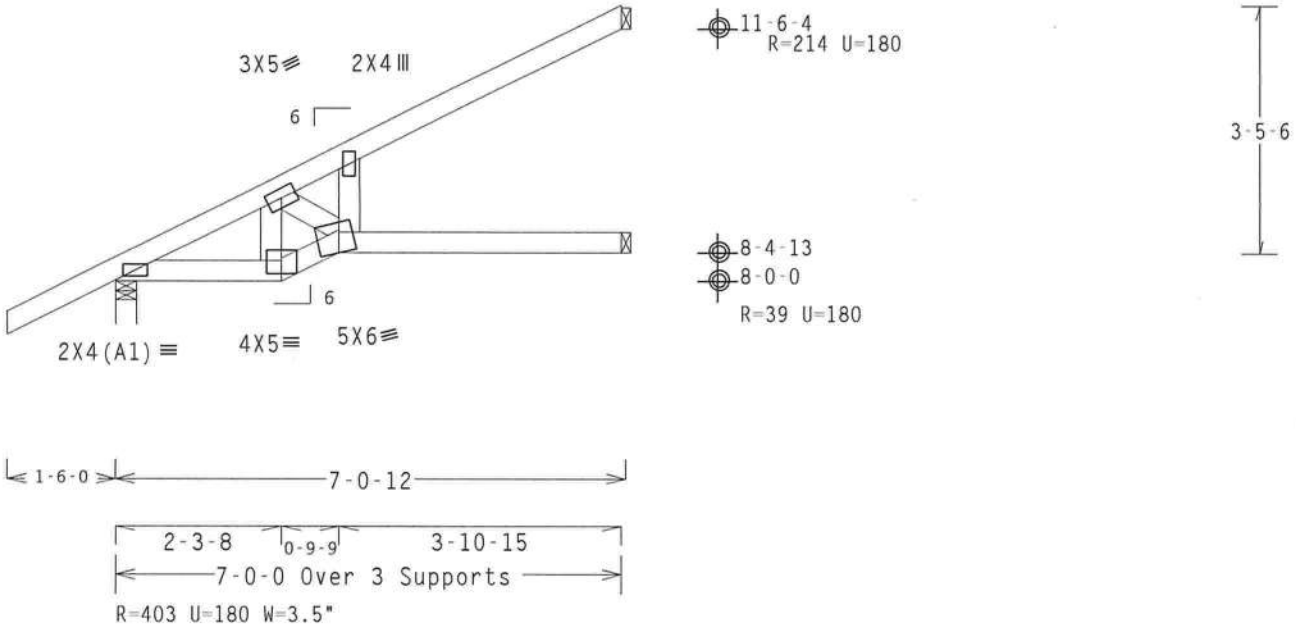

PLT TYP. Wave TPI 95\R Design Crit: TPI(STD)/FLBC 6.10 FL/-/5/-/-/R/- Scale =.375"/Ft.

ALPINE

Alpine Engineered Products, Inc.
Haines City, FL 33844
FL Certificate of Authorization # 567

**WARNING* TRUSSES REQUIRE EXTREME CARE IN FABRICATION, HANDLING, SHIPPING, INSTALLING AND BRACING. REFER TO HIB-91 (HANDLING INSTALLING AND BRACING). PUBLISHED BY TPI (TRUSS PLATE INSTITUTE, 583 D'ONOFRIO DR., SUITE 200, MADISON, WI 53719). FOR SAFETY PRACTICES PRIOR TO PERFORMING THESE FUNCTIONS. UNLESS OTHERWISE INDICATED, TOP CHORD SHALL HAVE PROPERLY ATTACHED STRUCTURAL PANELS, BOTTOM CHORD SHALL HAVE A PROPERLY ATTACHED RIGID CEILING.
IMPORTANT FURNISH A COPY OF THIS DESIGN TO THE INSTALLATION CONTRACTOR. ALPINE ENGINEERED PRODUCTS, INC. SHALL NOT BE RESPONSIBLE FOR ANY DEVIATION FROM THIS DESIGN; ANY FAILURE TO BUILD THE TRUSSES IN CONFORMANCE WITH TPI; OR FABRICATING, HANDLING, SHIPPING, INSTALLING AND BRACING OF TRUSSES. THIS DESIGN CONFORMS WITH APPLICABLE PROVISIONS OF NDS (NATIONAL DESIGN SPEC. BY AF&PA) AND TPI. ALPINE CONNECTOR PLATES ARE MADE OF 20/16GA (W,HS/K) ASTM A653 (W, K/HS) GALV. STEEL. APPLY PLATES TO EACH FACE OF TRUSS AND UNLESS OTHERWISE LOCATED ON THE DESIGN, POSITION PER DRAWINGS 160A-Z. ANY INSPECTION OF PLATES FOLLOWED BY (I) SHALL BE PER ANNEX A3 OF TPI 1-2002 SEC. 3. A SEAL ON THIS DRAWING INDICATES ACCEPTANCE OF PROFESSIONAL ENGINEERING RESPONSIBILITY SOLELY FOR THE TRUSS COMPONENT DESIGN SHOWN. THE SUITABILITY AND USE OF THIS COMPONENT FOR ANY BUILDING IS THE RESPONSIBILITY OF THE BUILDING DESIGNER, PER ANSI/TPI 1 SEC. 2.

MANUEL MARTINEZ
CERTIFICATE
No. 47182
STATE OF FLORIDA
PROFESSIONAL ENGINEER
May 14, 2003

TC LL	20.0 PSF	REF	R215 -37445
TC DL	10.0 PSF	DATE	05/14/03
BC DL	10.0 PSF	DRW	HCUSR215 03134095
BC LL	0.0 PSF	HC-ENG	CR/MMA
TOT.LD.	40.0 PSF	SEQN-	37047
DUR.FAC.	1.25	FROM	JP
SPACING	24.0"	JREF-	1S20215 710

Top chord 2x4 SP #2 N
Bot chord 2x4 SP #2 N
Webs 2x4 SP #2 N

Deflection meets L/360 live and L/240 total load.

Shim all supports to solid bearing.

110 mph wind, 9.72 ft mean hgt, ASCE 7-98, CLOSED bldg, not located within 4.50 ft from roof edge, CAT II, EXP B, wind TC DL=5.0 psf, wind BC DL=5.0 psf.

Plates sized for a minimum of 3.00 sq.in./piece.

The overall height of this truss excluding overhang is 3-10-3.

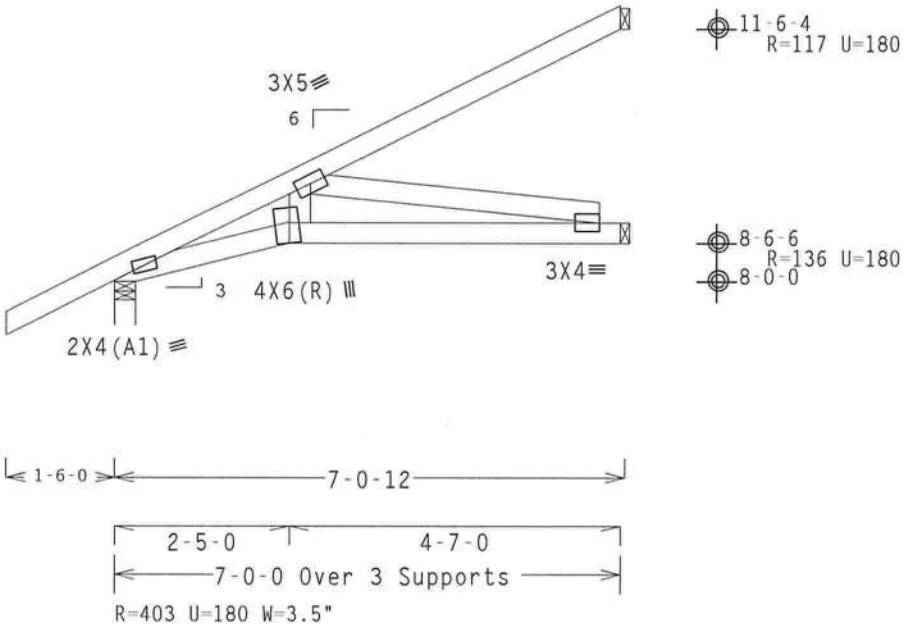

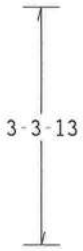

PLT TYP. Wave TPI 95\R Design Crit: TPI(STD)/FLBC 6.10 FL/-/5/-/-/R/- Scale =.375"/Ft.

ALPINE

Alpine Engineered Products, Inc.
Haines City, FL 33844
FL Certificate of Authorization # 567

**WARNING* TRUSSES REQUIRE EXTREME CARE IN FABRICATION, HANDLING, SHIPPING, INSTALLING AND BRACING. REFER TO HIB-91 (HANDLING INSTALLING AND BRACING), PUBLISHED BY TPI (TRUSS PLATE INSTITUTE, 583 D'ONOFRIO DR., SUITE 200, MADISON, WI 53719), FOR SAFETY PRACTICES PRIOR TO PERFORMING THESE FUNCTIONS. UNLESS OTHERWISE INDICATED, TOP CHORD SHALL HAVE PROPERLY ATTACHED STRUCTURAL PANELS, BOTTOM CHORD SHALL HAVE A PROPERLY ATTACHED RIGID CEILING.
IMPORTANT FURNISH A COPY OF THIS DESIGN TO THE INSTALLATION CONTRACTOR. ALPINE ENGINEERED PRODUCTS, INC. SHALL NOT BE RESPONSIBLE FOR ANY DEVIATION FROM THIS DESIGN; ANY FAILURE TO BUILD THE TRUSSES IN CONFORMANCE WITH TPI; OR FABRICATING, HANDLING, SHIPPING, INSTALLING AND BRACING OF TRUSSES. THIS DESIGN CONFORMS WITH APPLICABLE PROVISIONS OF NDS (NATIONAL DESIGN SPEC. BY AF&PA) AND TPI. ALPINE CONNECTOR PLATES ARE MADE OF 20/16GA (W.HS/K) ASTM A653 (W, K/HS) GALV. STEEL. APPLY PLATES TO EACH FACE OF TRUSS AND UNLESS OTHERWISE LOCATED ON THIS DESIGN, POSITION PER DRAWINGS 160A-Z. ANY INSPECTION OF PLATES FOLLOWED BY (I) SHALL BE PER ANNEX A3 OF TPI 1-2002 SEC. 3. A SEAL ON THIS DRAWING INDICATES ACCEPTANCE OF PROFESSIONAL ENGINEERING RESPONSIBILITY SOLELY FOR THE TRUSS COMPONENT DESIGN SHOWN. THE SUITABILITY AND USE OF THIS COMPONENT FOR ANY BUILDING IS THE RESPONSIBILITY OF THE BUILDING DESIGNER, PER ANSI/TPI 1 SEC. 2.

MANUEL MARTINEZ CERTIFICATE No. 47182 STATE OF FLORIDA PROFESSIONAL ENGINEER

TC LL	20.0 PSF	REF R215 -37446
TC DL	10.0 PSF	DATE 05/14/03
BC DL	10.0 PSF	DRW HCUSR215 03134096
BC LL	0.0 PSF	HC-ENG CR/MMA
TOT.LD.	40.0 PSF	SEQN- 75046
DUR.FAC.	1.25	FROM JP
SPACING	24.0"	JREF- 1S20215 710

Top chord 2x4 SP #2 N
Bot chord 2x4 SP #2 N
Webs 2x4 SP #2 N

Deflection meets L/360 live and L/240 total load.

Shim all supports to solid bearing.

110 mph wind, 15.00 ft mean hgt, ASCE 7-98, CLOSED bldg, Located anywhere in roof, CAT II, EXP B, wind TC DL=5.0 psf, wind BC DL=5.0 psf.

Hipjack supports 3-10-8 setback jacks with no webs.

Plates sized for a minimum of 3.00 sq.in./piece.

The overall height of this truss excluding overhang is 4-3-5.

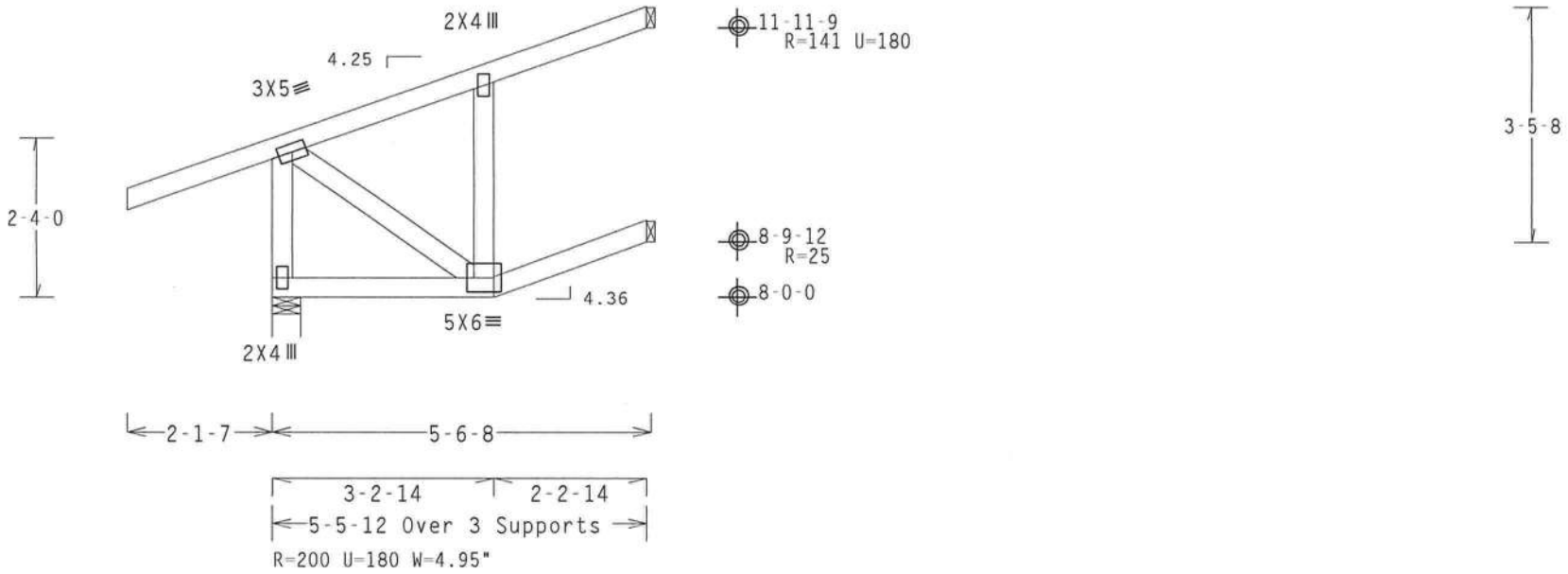

PLT TYP. Wave TPI 95\R Design Crit: TPI(STD)/FLBC 6.10 FL/-/5/-/-/R/- Scale =.375"/Ft.

ALPINE

Alpine Engineered Products, Inc.
Haines City, FL 33844
FL Certificate of Authorization # 5677

**WARNING* TRUSSES REQUIRE EXTREME CARE IN FABRICATION, HANDLING, SHIPPING, INSTALLING A BRACING. REFER TO HIB-91 (HANDLING INSTALLING AND BRACING), PUBLISHED BY TPI (TRUSS PL INSTITUTE, 583 D'ONOFRIO DR., SUITE 200, MADISON, WI 53719). FOR SAFETY PRACTICES PRIO PERFORMING THESE FUNCTIONS. UNLESS OTHERWISE INDICATED, TOP CHORD SHALL HAVE PROPERLY ATT HED STRUCTURAL PANELS, BOTTOM CHORD SHALL HAVE A PROPERLY ATTACHED RIGID CEILING.
IMPORTANT FURNISH A COPY OF THIS DESIGN TO THE INSTALLATION CONTRACTOR. ALPINE ENGIN RED PRODUCTS, INC. SHALL NOT BE RESPONSIBLE FOR ANY DEVIATION FROM THIS DESIGN; ANY FAILU BUILD THE TRUSSES IN CONFORMANCE WITH TPI; OR FABRICATING, HANDLING, SHIPPING, INSTALLIN AND BRACING OF TRUSSES. THIS DESIGN CONFORMS WITH APPLICABLE PROVISIONS OF NDS (NATIONAL D IGN SPEC. BY AF&PA) AND TPI. ALPINE CONNECTOR PLATES ARE MADE OF 20/16GA (W,HS/K) ASTM (W, K/HS) GALV. STEEL. APPLY PLATES TO EACH FACE OF TRUSS AND UNLESS OTHERWISE LOCATED ON DESIGN, POSITION PER DRAWINGS 160A-Z. ANY INSPECTION OF PLATES FOLLOWED BY (I) SHALL BE ANNEX A3 OF TPI 1-2002 SEC. 3. A SEAL ON THIS DRAWING INDICATES ACCEPTANCE OF PROFESSION ENGINEERING RESPONSIBILITY SOLELY FOR THE TRUSS COMPONENT DESIGN SHOWN. THE SUITABILITY AN USE OF THIS COMPONENT FOR ANY BUILDING IS THE RESPONSIBILITY OF THE BUILDING DESIGNER, PER ANSI/TPI 1 SEC. 2.

MANUEL MARTINEZ
CERTIFICATE
No. 47182
STATE OF FLORIDA
PROFESSIONAL ENGINEER

TC LL	20.0 PSF	REF	R215 -37447
TC DL	10.0 PSF	DATE	05/14/03
BC DL	10.0 PSF	DRW	HCUSR215 03134097
BC LL	0.0 PSF	HC-ENG	CR/MMA
TOT.LD.	40.0 PSF	SEQN-	37063
DUR.FAC.	1.25	FROM	JP
SPACING	24.0"	JREF-	1S20215 710

Top chord 2x4 SP #2 N
Bot chord 2x4 SP #2 N

Deflection meets L/360 live and L/240 total load.

The overall height of this truss excluding overhang is 2-10-3.

110 mph wind, 9.22 ft mean hgt, ASCE 7-98, CLOSED bldg, Located anywhere in roof, CAT II, EXP B, wind TC DL=5.0 psf, wind BC DL=5.0 psf.

Plates sized for a minimum of 3.00 sq.in./piece.

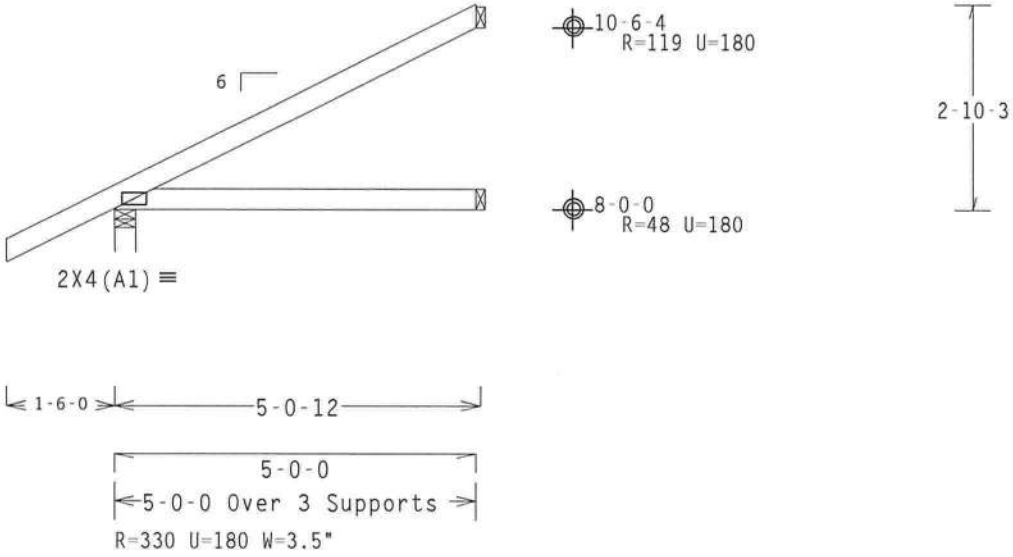

PLT TYP. Wave TPI 95\R Design Crit: TPI(STD)/FLBC 6.10 14 FL/-/5/-/-/R/- Scale =.375"/Ft.

ALPINE

Alpine Engineered Products, Inc.
Haines City, FL 33844
FL Certificate of Authorization # 567

**WARNING* TRUSSES REQUIRE EXTREME CARE IN FABRICATION, HANDLING, SHIPPING, INSTALLING AND BRACING. REFER TO HIB-91 (HANDLING INSTALLING AND BRACING), PUBLISHED BY TPI (TRUSS PLATE INSTITUTE, 583 D'ONOFRIO DR., SUITE 200, MADISON, WI 53719). FOR SAFETY PRACTICES PRIOR TO PERFORMING THESE FUNCTIONS. UNLESS OTHERWISE INDICATED, TOP CHORD SHALL HAVE PROPERLY ATTACHED STRUCTURAL PANELS, BOTTOM CHORD SHALL HAVE A PROPERLY ATTACHED RIGID CEILING.
IMPORTANT FURNISH A COPY OF THIS DESIGN TO THE INSTALLATION CONTRACTOR. ALPINE ENGINEERED PRODUCTS, INC. SHALL NOT BE RESPONSIBLE FOR ANY DEVIATION FROM THIS DESIGN; ANY FAILURE TO BUILD THE TRUSSES IN CONFORMANCE WITH TPI; OR FABRICATING, HANDLING, SHIPPING, INSTALLING AND BRACING OF TRUSSES. THIS DESIGN CONFORMS WITH APPLICABLE PROVISIONS OF NDS (NATIONAL DESIGN SPEC. BY AF&PA) AND TPI. ALPINE CONNECTOR PLATES ARE MADE OF 20/16GA (W.HS/K) ASTM 653 (W. K/HS) GALV. STEEL. APPLY PLATES TO EACH FACE OF TRUSS AND UNLESS OTHERWISE LOCATED ON THIS DESIGN, POSITION PER DRAWINGS 160A-Z. ANY INSPECTION OF PLATES FOLLOWED BY (I) SHALL BE ANNEX A3 OF TPI 1-2002 SEC. 3. A SEAL ON THIS DRAWING INDICATES ACCEPTANCE OF PROFESSIONAL ENGINEERING RESPONSIBILITY SOLELY FOR THE TRUSS COMPONENT DESIGN SHOWN. THE SUITABILITY AND USE OF THIS COMPONENT FOR ANY BUILDING IS THE RESPONSIBILITY OF THE BUILDING DESIGNER, PER ANSI/TPI 1 SEC. 2.

MANUEL MARTINEZ CERTIFICATE No. 47182 STATE OF FLORIDA PROFESSIONAL ENGINEER

TC LL	20.0 PSF	REF	R215 -37448
TC DL	10.0 PSF	DATE	05/14/03
BC DL	10.0 PSF	DRW	HCUSR215 03134098
BC LL	0.0 PSF	HC-ENG	CR/MMA
TOT.LD.	40.0 PSF	SEQN-	75014
DUR.FAC.	1.25	FROM	JP
SPACING	24.0"	JREF-	1S20215 710

Top chord 2x4 SP #2 N
Bot chord 2x4 SP #2 N
Webs 2x4 SP #2 N

Plates sized for a minimum of 3.00 sq.in./piece.

The overall height of this truss excluding overhang is 4-2-14.

110 mph wind, 10.92 ft mean hgt, ASCE 7-98, CLOSED bldg, Located anywhere in roof, CAT II, EXP B, wind TC DL=5.0 psf, wind BC DL=5.0 psf.

Deflection meets L/360 live and L/240 total load.

Shim all supports to solid bearing.

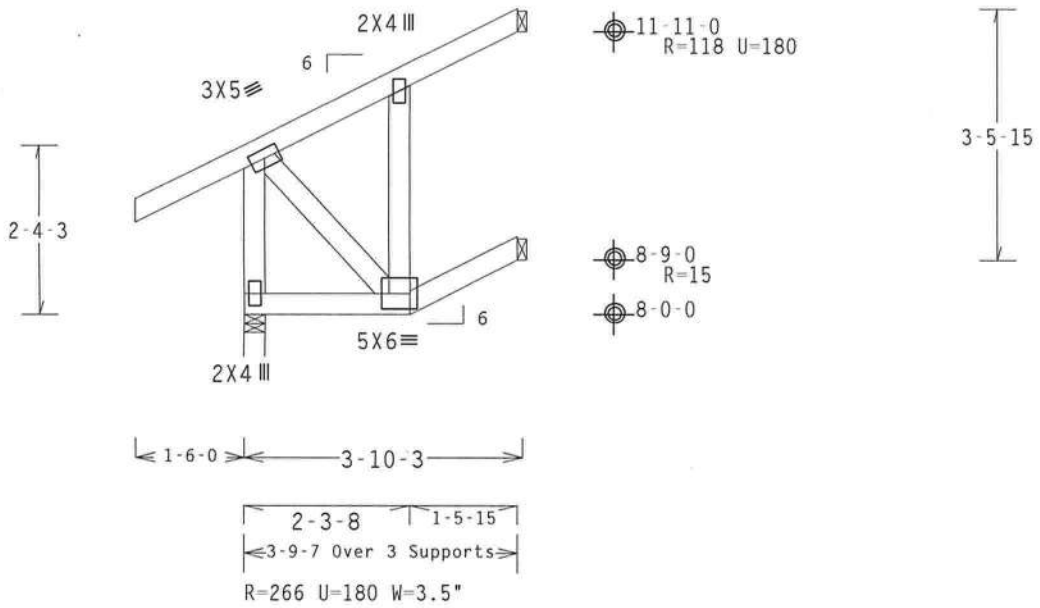

PLT TYP. Wave TPI 95\R Design Crit: TPI(STD)/FLBC 6.10 FL/-/5/-/-/R/- Scale =.375"/Ft.

ALPINE
Alpine Engineered Products, Inc.
Haines City, FL 33844
FL Certificate of Authorization # 5673

**WARNING* TRUSSES REQUIRE EXTREME CARE IN FABRICATION, HANDLING, SHIPPING, INSTALLING AND BRACING. REFER TO HIB-91 (HANDLING INSTALLING AND BRACING), PUBLISHED BY TPI (TRUSS PLATE INSTITUTE, 583 D'ONOFRIO DR., SUITE 200, MADISON, WI 53719). FOR SAFETY PRACTICES PRIOR TO PERFORMING THESE FUNCTIONS. UNLESS OTHERWISE INDICATED, TOP CHORD SHALL HAVE PROPERLY ATTACHED STRUCTURAL PANELS, BOTTOM CHORD SHALL HAVE A PROPERLY ATTACHED RIGID CEILING.
IMPORTANT FURNISH A COPY OF THIS DESIGN TO THE INSTALLATION CONTRACTOR. ALPINE ENGINEERED PRODUCTS, INC. SHALL NOT BE RESPONSIBLE FOR ANY DEVIATION FROM THIS DESIGN; ANY FAILURE TO BUILD THE TRUSSES IN CONFORMANCE WITH TPI; OR FABRICATING, HANDLING, SHIPPING, INSTALLING AND BRACING OF TRUSSES. THIS DESIGN CONFORMS WITH APPLICABLE PROVISIONS OF NDS (NATIONAL DESIGN SPEC. BY AF&PA) AND TPI. ALPINE CONNECTOR PLATES ARE MADE OF 20/16GA (W,HS/K) ASTM A653 (W, K/HS) GALV. STEEL. APPLY PLATES TO EACH FACE OF TRUSS AND UNLESS OTHERWISE LOCATED ON THIS DESIGN, POSITION PER DRAWINGS 160A-Z. ANY INSPECTION OF PLATES FOLLOWED BY (I) SHALL BE PER ANNEX A3 OF TPI 1-2002 SEC. 3. A SEAL ON THIS DRAWING INDICATES ACCEPTANCE OF PROFESSIONAL ENGINEERING RESPONSIBILITY SOLELY FOR THE TRUSS COMPONENT DESIGN SHOWN. THE SUITABILITY AND USE OF THIS COMPONENT FOR ANY BUILDING IS THE RESPONSIBILITY OF THE BUILDING DESIGNER, PER ANSI/TPI 1 SEC. 2.

MANUEL MARTINEZ
CERTIFICATE
No. 47182
STATE OF FLORIDA
PROFESSIONAL ENGINEER

TC LL	20.0 PSF	REF R215 -37454
TC DL	10.0 PSF	DATE 05/14/03
BC DL	10.0 PSF	DRW HCUSR215 03134104
BC LL	0.0 PSF	HC-ENG CR/MMA
TOT.LD.	40.0 PSF	SEQN- 37056
DUR.FAC.	1.25	FROM JP
SPACING	24.0"	JREF- 1S20215 710

Top chord 2x4 SP #2 N
Bot chord 2x4 SP #2 N

Deflection meets L/360 live and L/240 total load.

Shim all supports to solid bearing.

110 mph wind, 9.22 ft mean hgt, ASCE 7-98, CLOSED bldg, not located within 4.50 ft from roof edge, CAT II, EXP B, wind TC DL=5.0 psf, wind BC DL=5.0 psf.

Plates sized for a minimum of 3.00 sq.in./piece.

The overall height of this truss excluding overhang is 2-10-3.

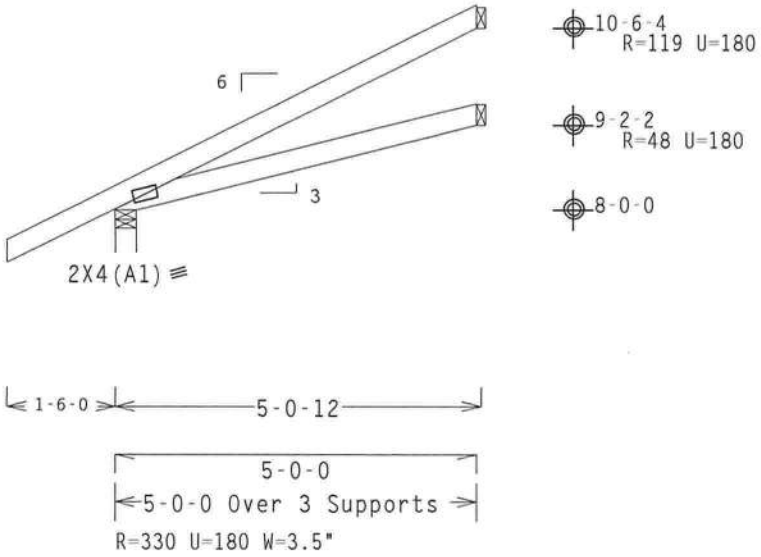

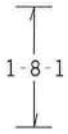

PLT TYP. Wave TPI 95\R Design Crit: TPI(STD)/FLBC 6.10 2 FL/-/5/-/-/R/- Scale =.375"/Ft.

ALPINE

Alpine Engineered Products, Inc.
Haines City, FL 33844
FL Certificate of Authorization # 5677

**WARNING* TRUSSES REQUIRE EXTREME CARE IN FABRICATION, HANDLING, SHIPPING, INSTALLING AND BRACING. REFER TO HIB-91 (HANDLING INSTALLING AND BRACING), PUBLISHED BY TPI (TRUSS PLATE INSTITUTE, 583 D'ONOFRIO DR., SUITE 200, MADISON, WI 53719). FOR SAFETY PRACTICES PRIOR TO PERFORMING THESE FUNCTIONS. UNLESS OTHERWISE INDICATED, TOP CHORD SHALL HAVE PROPERLY ATTACHED STRUCTURAL PANELS, BOTTOM CHORD SHALL HAVE A PROPERLY ATTACHED RIGID CEILING.
IMPORTANT FURNISH A COPY OF THIS DESIGN TO THE INSTALLATION CONTRACTOR. ALPINE ENGINEERED PRODUCTS, INC. SHALL NOT BE RESPONSIBLE FOR ANY DEVIATION FROM THIS DESIGN; ANY FAILURE TO BUILD THE TRUSSES IN CONFORMANCE WITH TPI; OR FABRICATING, HANDLING, SHIPPING, INSTALLING AND BRACING OF TRUSSES. THIS DESIGN CONFORMS WITH APPLICABLE PROVISIONS OF NDS (NATIONAL DESIGN SPEC, BY AF&PA) AND TPI. ALPINE CONNECTOR PLATES ARE MADE OF 20/16GA (W,HS/K) ASTM 653 (W, K/HS) GALV. STEEL. APPLY PLATES TO EACH FACE OF TRUSS AND UNLESS OTHERWISE LOCATED ON THE DESIGN, POSITION PER DRAWINGS 160A-Z. ANY INSPECTION OF PLATES FOLLOWED BY (I) SHALL BE IN ANNEX A3 OF TPI 1-2002 SEC. 3. A SEAL ON THIS DRAWING INDICATES ACCEPTANCE OF PROFESSIONAL ENGINEERING RESPONSIBILITY SOLELY FOR THE TRUSS COMPONENT DESIGN SHOWN. THE SUITABILITY AND USE OF THIS COMPONENT FOR ANY BUILDING IS THE RESPONSIBILITY OF THE BUILDING DESIGNER, PER ANSI/TPI 1 SEC. 2.

MANUEL MARTINEZ CERTIFICATE No. 47182 STATE OF FLORIDA PROFESSIONAL ENGINEER

TC LL	20.0 PSF	REF R215 -37449
TC DL	10.0 PSF	DATE 05/14/03
BC DL	10.0 PSF	DRW HCUSR215 03134099
BC LL	0.0 PSF	HC-ENG CR/MMA
TOT.LD.	40.0 PSF	SEQN- 75032
DUR.FAC.	1.25	FROM JP
SPACING	24.0"	JREF- 1S20215.710

Top chord 2x4 SP #2 N
Bot chord 2x4 SP #2 N
Webs 2x4 SP #2 N

Deflection meets L/360 live and L/240 total load.

The overall height of this truss excluding overhang is 3-9-14.

110 mph wind, 15.00 ft mean hgt, ASCE 7-98, CLOSED bldg, Located anywhere in roof, CAT II, EXP B, wind TC DL=5.0 psf, wind BC DL=5.0 psf.

Hipjack supports 3-0-0 setback jacks with no webs.

Plates sized for a minimum of 3.00 sq.in./piece.

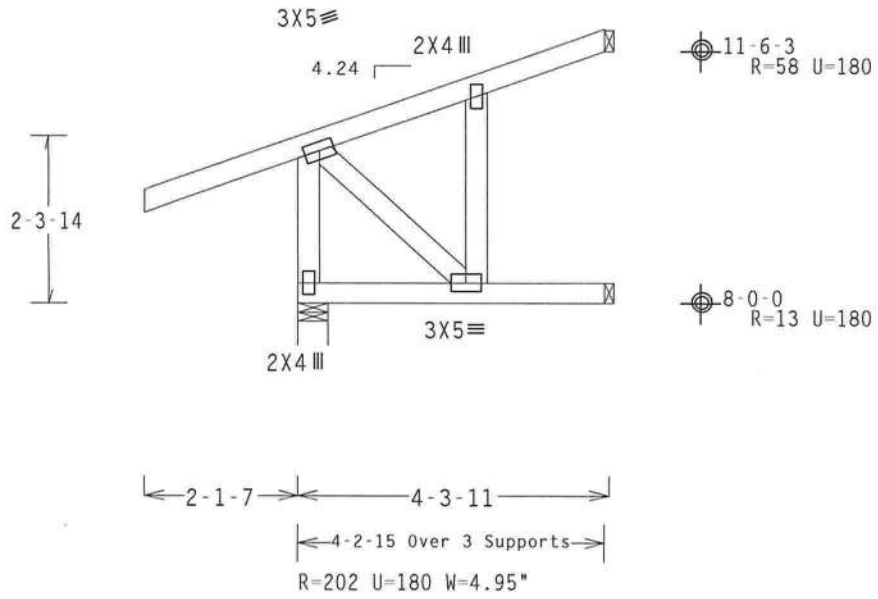

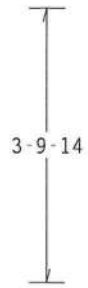

PLT TYP. Wave TPI 95\R Design Crit: TPI(STD)/FLBC 6.10 01/1 FL/-/5/-/-/R/- Scale =.375"/Ft.

ALPINE

Alpine Engineered Products, Inc.
Haines City, FL 33844
FL Certificate of Authorization # 5677

**WARNING* TRUSSES REQUIRE EXTREME CARE IN FABRICATION, HANDLING, SHIPPING, INSTALLING A BRACING. REFER TO HIB-91 (HANDLING INSTALLING AND BRACING). PUBLISHED BY TPI (TRUSS PL INSTITUTE. 583 D'ONOFRIO DR., SUITE 200, MADISON, WI 53719). FOR SAFETY PRACTICES PRIO PERFORMING THESE FUNCTIONS. UNLESS OTHERWISE INDICATED, TOP CHORD SHALL HAVE PROPERLY ATT HED STRUCTURAL PANELS, BOTTOM CHORD SHALL HAVE A PROPERLY ATTACHED RIGID CEILING.
IMPORTANT FURNISH A COPY OF THIS DESIGN TO THE INSTALLATION CONTRACTOR. ALPINE ENGIN ERED PRODUCTS, INC. SHALL NOT BE RESPONSIBLE FOR ANY DEVIATION FROM THIS DESIGN; ANY FAILU E TO BUILD THE TRUSSES IN CONFORMANCE WITH TPI; OR FABRICATING, HANDLING, SHIPPING, INSTALLIN AND BRACING OF TRUSSES. THIS DESIGN CONFORMS WITH APPLICABLE PROVISIONS OF NDS (NATIONAL D IGN SPEC. BY AF&PA) AND TPI. ALPINE CONNECTOR PLATES ARE MADE OF 20/16GA (W.HS/K) ASTM (W, K/HS) GALV. STEEL. APPLY PLATES TO EACH FACE OF TRUSS AND UNLESS OTHERWISE LOCATED ON DESIGN, POSITION PER DRAWINGS 160A-Z. ANY INSPECTION OF PLATES FOLLOWED BY (I) SHALL BE ANNEX A3 OF TPI 1-2002 SEC. 3. A SEAL ON THIS DRAWING INDICATES ACCEPTANCE OF PROFESSION ENGINEERING RESPONSIBILITY SOLELY FOR THE TRUSS COMPONENT DESIGN SHOWN. THE SUITABILITY AN USE OF THIS COMPONENT FOR ANY BUILDING IS THE RESPONSIBILITY OF THE BUILDING DESIGNER, PER ANSI/TPI 1 SEC. 2.

MANUEL MARTINEZ
CERTIFICATE
No. 47182
STATE OF FLORIDA
PROFESSIONAL ENGINEER

TC LL	20.0 PSF	REF	R215 -37450
TC DL	10.0 PSF	DATE	05/14/03
BC DL	10.0 PSF	DRW	HCUSR215 03134100
BC LL	0.0 PSF	HC-ENG	CR/MMA
TOT.LD.	40.0 PSF	SEQN-	37183
DUR.FAC.	1.25	FROM	JP
SPACING	24.0"	JREF-	1S20215 710

Top chord 2x4 SP #2 N
Bot chord 2x4 SP #2 N
Webs 2x4 SP #2 N

Shim all supports to solid bearing.

DEFLECTION MEETS L/240 LIVE AND L/180 TOTAL LOAD.

110 mph wind, 10.72 ft mean hgt, ASCE 7-98, CLOSED bldg, Located anywhere in roof, CAT II, EXP B, wind TC DL=5.0 psf, wind BC DL=5.0 psf.

Plates sized for a minimum of 3.00 sq.in./piece.

The overall height of this truss excluding overhang is 3-10-3.

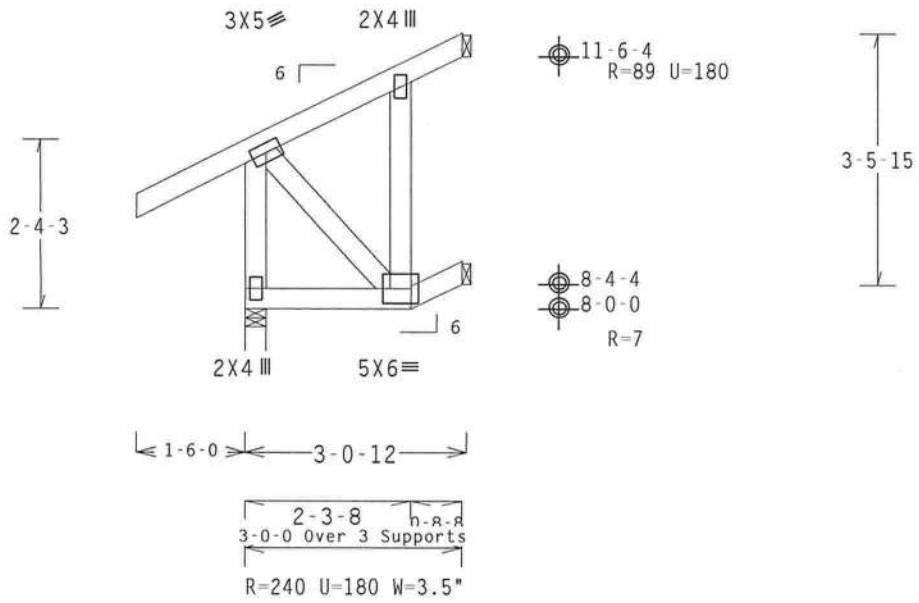

PLT TYP. Wave TPI 95\R Design Crit: TPI(STD)/FLBC 6.10 01 1 FL/-/5/-/-/R/- Scale =.375"/Ft.

ALPINE

Alpine Engineered Products, Inc.
Haines City, FL 33844
FL Certificate of Authorization # 567

**WARNING* TRUSSES REQUIRE EXTREME CARE IN FABRICATION, HANDLING, SHIPPING, INSTALLING AND BRACING. REFER TO HIB-91 (HANDLING INSTALLING AND BRACING), PUBLISHED BY TPI (TRUSS PLATE INSTITUTE, 583 D'ONOFRIO DR., SUITE 200, MADISON, WI 53719). FOR SAFETY PRACTICES PRIOR TO PERFORMING THESE FUNCTIONS. UNLESS OTHERWISE INDICATED, TOP CHORD SHALL HAVE PROPERLY ATTACHED STRUCTURAL PANELS, BOTTOM CHORD SHALL HAVE A PROPERLY ATTACHED RIGID CEILING.
IMPORTANT FURNISH A COPY OF THIS DESIGN TO THE INSTALLATION CONTRACTOR. ALPINE ENGINEERED PRODUCTS, INC. SHALL NOT BE RESPONSIBLE FOR ANY DEVIATION FROM THIS DESIGN; ANY FAILURE TO BUILD THE TRUSSES IN CONFORMANCE WITH TPI; OR FABRICATING, HANDLING, SHIPPING, INSTALLING AND BRACING OF TRUSSES. THIS DESIGN CONFORMS WITH APPLICABLE PROVISIONS OF NDS (NATIONAL DESIGN SPEC. BY AF&PA) AND TPI. ALPINE CONNECTOR PLATES ARE MADE OF 20/16GA (W,HS/K) ASTM 653 (W, K/HS) GALV. STEEL. APPLY PLATES TO EACH FACE OF TRUSS AND UNLESS OTHERWISE LOCATED ON THIS DESIGN, POSITION PER DRAWINGS 160A-Z. ANY INSPECTION OF PLATES FOLLOWED BY (I) SHALL BE PER ANNEX A3 OF TPI 1-2002 SEC. 3. A SEAL ON THIS DRAWING INDICATES ACCEPTANCE OF PROFESSIONAL ENGINEERING RESPONSIBILITY SOLELY FOR THE TRUSS COMPONENT DESIGN SHOWN. THE SUITABILITY AND USE OF THIS COMPONENT FOR ANY BUILDING IS THE RESPONSIBILITY OF THE BUILDING DESIGNER, PER ANSI/TPI 1 SEC. 2.

MANUEL MARTINEZ
CERTIFICATE
No. 47182
STATE OF
FLORIDA
PROFESSIONAL ENGINEER

TC LL	20.0 PSF	REF	R215 -37451
TC DL	10.0 PSF	DATE	05/14/03
BC DL	10.0 PSF	DRW	HCUSR215 03134101
BC LL	0.0 PSF	HC-ENG	CR/MMA
TOT.LD.	40.0 PSF	SEQN-	37053
DUR.FAC.	1.25	FROM	JP
SPACING	24.0"	JREF-	1S20215 710

Top chord 2x4 SP #2 N
Bot chord 2x4 SP #2 N

Plates sized for a minimum of 3.00 sq.in./piece.

The overall height of this truss excluding overhang is 1-10-3.

DEFLECTION MEETS L/360 LIVE AND L/240 TOTAL LOAD.

110 mph wind, 8.72 ft mean hgt, ASCE 7-98, CLOSED bldg, Located anywhere in roof, CAT II, EXP B, wind TC DL=5.0 psf, wind BC DL=5.0 psf.

Shim all supports to solid bearing.

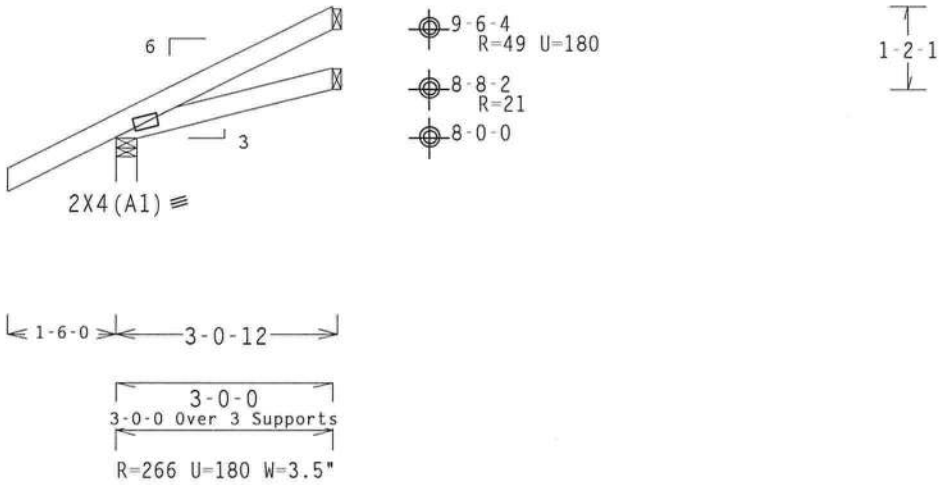

PLT TYP. Wave TPI 95\R Design Crit: TPI(STD)/FLBC 6.10 FL/-/5/-/-/R/- Scale =.375"/Ft.

ALPINE

Alpine Engineered Products, Inc.
Haines City, FL 33844
FL Certificate of Authorization # 5[illegible]

**WARNING* TRUSSES REQUIRE EXTREME CARE IN FABRICATION, HANDLING, SHIPPING, INSTALLING [illegible] BRACING. REFER TO HIB-91 (HANDLING INSTALLING AND BRACING), PUBLISHED BY TPI (TRUSS PL[illegible] INSTITUTE, 583 D'ONOFRIO DR., SUITE 200, MADISON, WI 53719). FOR SAFETY PRACTICES PRIO[illegible] TO PERFORMING THESE FUNCTIONS. UNLESS OTHERWISE INDICATED, TOP CHORD SHALL HAVE PROPERLY ATT[illegible]ED STRUCTURAL PANELS, BOTTOM CHORD SHALL HAVE A PROPERLY ATTACHED RIGID CEILING.
IMPORTANT FURNISH A COPY OF THIS DESIGN TO THE INSTALLATION CONTRACTOR. ALPINE ENGIN[illegible]RED PRODUCTS, INC. SHALL NOT BE RESPONSIBLE FOR ANY DEVIATION FROM THIS DESIGN; ANY FAILU[illegible] BUILD THE TRUSSES IN CONFORMANCE WITH TPI; OR FABRICATING, HANDLING, SHIPPING, INSTALLIN[illegible] AND BRACING OF TRUSSES. THIS DESIGN CONFORMS WITH APPLICABLE PROVISIONS OF NDS (NATIONAL DE[illegible] SPEC. BY AF&PA) AND TPI. ALPINE CONNECTOR PLATES ARE MADE OF 20/16GA (W.HS/K) ASTM [illegible] (W. K/HS) GALV. STEEL. APPLY PLATES TO EACH FACE OF TRUSS AND UNLESS OTHERWISE LOCATED ON T[illegible] DESIGN. POSITION PER DRAWINGS 160A-Z. ANY INSPECTION OF PLATES FOLLOWED BY (I) SHALL BE P[illegible] ANNEX A3 OF TPI 1-2002 SEC. 3. A SEAL ON THIS DRAWING INDICATES ACCEPTANCE OF PROFESSIONA[illegible] ENGINEERING RESPONSIBILITY SOLELY FOR THE TRUSS COMPONENT DESIGN SHOWN. THE SUITABILITY AND USE OF THIS COMPONENT FOR ANY BUILDING IS THE RESPONSIBILITY OF THE BUILDING DESIGNER, PER ANSI/TPI 1 SEC. 2.

MANUEL MARTINEZ
CERTIFICATE
No. 47182
STATE OF
FLORIDA
PROFESSIONAL ENGINEER

TC LL	20.0 PSF	REF	R215 -37452
TC DL	10.0 PSF	DATE	05/14/03
BC DL	10.0 PSF	DRW	HCUSR215 03134102
BC LL	0.0 PSF	HC-ENG	CR/MMA
TOT.LD.	40.0 PSF	SEQN-	75030
DUR.FAC.	1.25	FROM	JP
SPACING	24.0"	JREF-	1S20215 Z10

Top chord 2x4 SP #2 N
Bot chord 2x4 SP #2 N
Webs 2x4 SP #2 N

Plates sized for a minimum of 3.00 sq.in./piece.

110 mph wind, 10.94 ft mean hgt, ASCE 7-98, CLOSED bldg, Located anywhere in roof, CAT II, EXP B, wind TC DL=5.0 psf, wind BC DL=5.0 psf.

Deflection meets L/360 live and L/240 total load.

The overall height of this truss excluding overhang is 4-3-7.

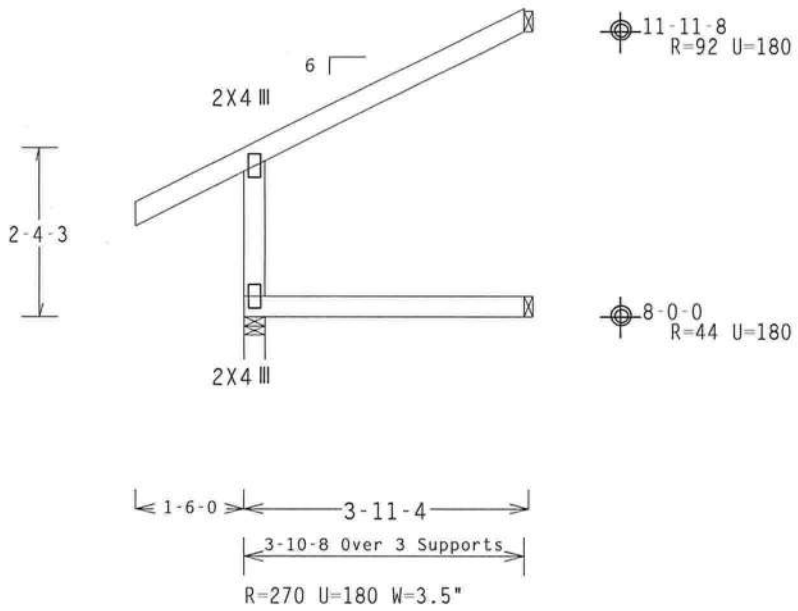

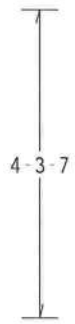

PLT TYP. Wave TPI 95\R Design Crit: TPI(STD)/FLBC 6.10 FL/-/5/-/-/R/- Scale =.375"/Ft.

ALPINE

Alpine Engineered Products, Inc.
Haines City, FL 33844
FL Certificate of Authorization # 567

**WARNING* TRUSSES REQUIRE EXTREME CARE IN FABRICATION, HANDLING, SHIPPING, INSTALLING A BRACING. REFER TO HIB-91 (HANDLING INSTALLING AND BRACING), PUBLISHED BY TPI (TRUSS PL INSTITUTE, 583 D'ONOFRIO DR., SUITE 200, MADISON, WI 53719). FOR SAFETY PRACTICES PRIO PERFORMING THESE FUNCTIONS. UNLESS OTHERWISE INDICATED, TOP CHORD SHALL HAVE PROPERLY ATTA ED STRUCTURAL PANELS, BOTTOM CHORD SHALL HAVE A PROPERLY ATTACHED RIGID CEILING.
IMPORTANT FURNISH A COPY OF THIS DESIGN TO THE INSTALLATION CONTRACTOR. ALPINE ENGIN RED PRODUCTS, INC. SHALL NOT BE RESPONSIBLE FOR ANY DEVIATION FROM THIS DESIGN; ANY FAILU BUILD THE TRUSSES IN CONFORMANCE WITH TPI; OR FABRICATING, HANDLING, SHIPPING, INSTALLING AND BRACING OF TRUSSES. THIS DESIGN CONFORMS WITH APPLICABLE PROVISIONS OF NDS (NATIONAL DESIGN SPEC. BY AF&PA) AND TPI. ALPINE CONNECTOR PLATES ARE MADE OF 20/16GA (W.HS/K) ASTM 55 (W, K/HS) GALV. STEEL. APPLY PLATES TO EACH FACE OF TRUSS AND UNLESS OTHERWISE LOCATED ON T DESIGN. POSITION PER DRAWINGS 160A-Z. ANY INSPECTION OF PLATES FOLLOWED BY (I) SHALL BE P ANNEX A3 OF TPI 1-2002 SEC. 3. A SEAL ON THIS DRAWING INDICATES ACCEPTANCE OF PROFESSIONA ENGINEERING RESPONSIBILITY SOLELY FOR THE TRUSS COMPONENT DESIGN SHOWN. THE SUITABILITY AND USE OF THIS COMPONENT FOR ANY BUILDING IS THE RESPONSIBILITY OF THE BUILDING DESIGNER, PER ANSI/TPI 1 SEC. 2.

MANUEL MARTINEZ CERTIFICATE No. 47182 STATE OF FLORIDA PROFESSIONAL ENGINEER

May

TC LL	20.0 PSF	REF R215 -37453
TC DL	10.0 PSF	DATE 05/14/03
BC DL	10.0 PSF	DRW HCUSR215 03134103
BC LL	0.0 PSF	HC-ENG CR/MMA
TOT.LD.	40.0 PSF	SEQN- 37060
DUR.FAC.	1.25	FROM JP
SPACING	24.0"	JREF- 1S20215 Z10

Top chord 2x4 SP #2 N
Bot chord 2x4 SP #2 N

Plates sized for a minimum of 3.00 sq.in./piece.

DEFLECTION MEETS L/360 LIVE AND L/240 TOTAL LOAD.

110 mph wind, 8.72 ft mean hgt, ASCE 7-98, CLOSED bldg, Located anywhere in roof, CAT II, EXP B, wind TC DL=5.0 psf, wind BC DL=5.0 psf.

The overall height of this truss excluding overhang is 1-10-3.

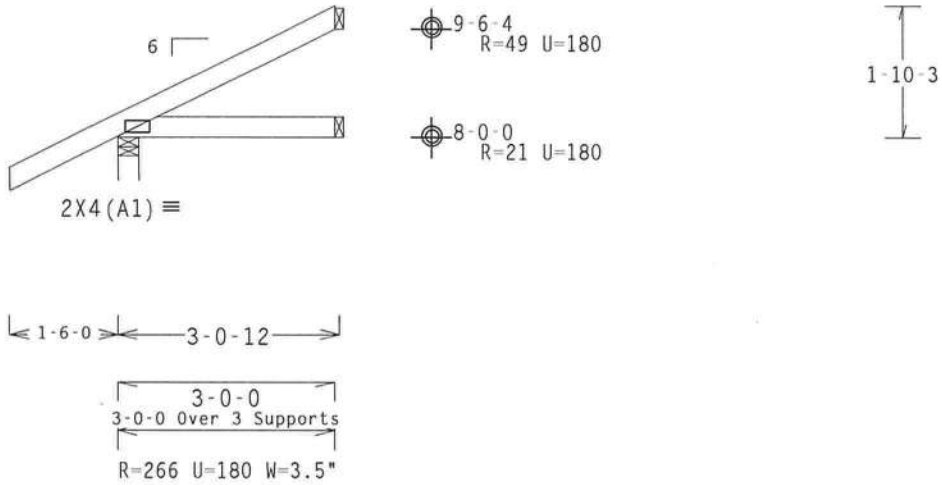

PLT TYP. Wave TPI 95\R Design Crit: TPI(STD)/FLBC 6.10 12 FL/-/5/-/-/R/- Scale =.375"/Ft.

ALPINE

Alpine Engineered Products, Inc.
Haines City, FL 33844
FL Certificate of Authorization # 567

**WARNING* TRUSSES REQUIRE EXTREME CARE IN FABRICATION, HANDLING, SHIPPING, INSTALLING BRACING. REFER TO HIB-91 (HANDLING INSTALLING AND BRACING), PUBLISHED BY TPI (TRUSS PLATE INSTITUTE, 583 D'ONOFRIO DR., SUITE 200, MADISON, WI 53719). FOR SAFETY PRACTICES PRIOR TO PERFORMING THESE FUNCTIONS. UNLESS OTHERWISE INDICATED, TOP CHORD SHALL HAVE PROPERLY ATTACHED STRUCTURAL PANELS, BOTTOM CHORD SHALL HAVE A PROPERLY ATTACHED RIGID CEILING.
IMPORTANT FURNISH A COPY OF THIS DESIGN TO THE INSTALLATION CONTRACTOR. ALPINE ENGINEERED PRODUCTS, INC. SHALL NOT BE RESPONSIBLE FOR ANY DEVIATION FROM THIS DESIGN; ANY FAILURE TO BUILD THE TRUSSES IN CONFORMANCE WITH TPI; OR FABRICATING, HANDLING, SHIPPING, INSTALLING AND BRACING OF TRUSSES. THIS DESIGN CONFORMS WITH APPLICABLE PROVISIONS OF NDS (NATIONAL DESIGN SPEC. BY AF&PA) AND TPI. ALPINE CONNECTOR PLATES ARE MADE OF 20/16GA (W,HS/K) ASTM 653 (W, K/HS) GALV. STEEL. APPLY PLATES TO EACH FACE OF TRUSS AND UNLESS OTHERWISE LOCATED ON THE DESIGN, POSITION PER DRAWINGS 160A-Z. ANY INSPECTION OF PLATES FOLLOWED BY (I) SHALL BE PER ANNEX A3 OF TPI 1-2002 SEC. 3. A SEAL ON THIS DRAWING INDICATES ACCEPTANCE OF PROFESSIONAL ENGINEERING RESPONSIBILITY SOLELY FOR THE TRUSS COMPONENT DESIGN SHOWN. THE SUITABILITY AND USE OF THIS COMPONENT FOR ANY BUILDING IS THE RESPONSIBILITY OF THE BUILDING DESIGNER, PER ANSI/TPI 1 SEC. 2.

MANUEL MARTINEZ
CERTIFICATE
No. 47182
STATE OF FLORIDA
PROFESSIONAL ENGINEER

TC LL	20.0 PSF	REF R215 -37455
TC DL	10.0 PSF	DATE 05/14/03
BC DL	10.0 PSF	DRW HCUSR215 03134105
BC LL	0.0 PSF	HC-ENG CR/MMA
TOT.LD.	40.0 PSF	SEQN- 75019
DUR.FAC.	1.25	FROM JP
SPACING	24.0"	JREF- 1S20215 710

Top chord 2x4 SP #2 N
Bot chord 2x4 SP #2 N

Plates sized for a minimum of 3.00 sq.in./piece.

DEFLECTION MEETS L/360 LIVE AND L/240 TOTAL LOAD.

110 mph wind, 8.22 ft mean hgt, ASCE 7-98, CLOSED bldg, Located anywhere in roof, CAT II, EXP B, wind TC DL=5.0 psf, wind BC DL=5.0 psf.

The overall height of this truss excluding overhang is 0-10-3.

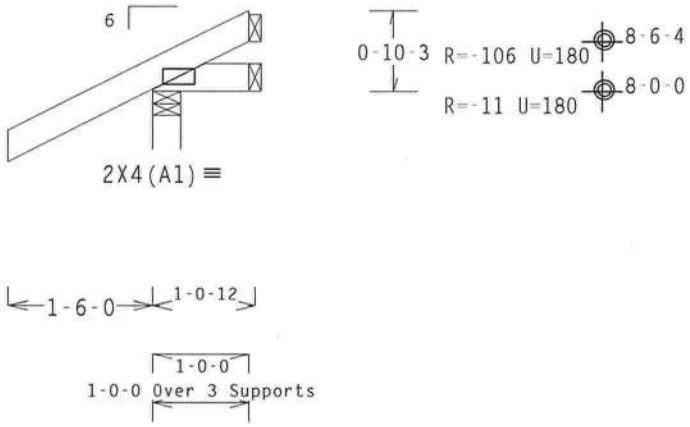

R=294 U=180 W=3.5"

PLT TYP. Wave TPI 95\R Design Crit: TPI(STD)/FLBC 6.10 12 FL/-/5/-/-/R/- Scale =.5"/Ft.

ALPINE

Alpine Engineered Products, Inc.
Haines City, FL 33844
FL Certificate of Authorization # 5

**WARNING* TRUSSES REQUIRE EXTREME CARE IN FABRICATION, HANDLING, SHIPPING, INSTALLING AND BRACING. REFER TO HIB-91 (HANDLING INSTALLING AND BRACING), PUBLISHED BY TPI (TRUSS PLATE INSTITUTE, 583 D'ONOFRIO DR., SUITE 200, MADISON, WI 53719). FOR SAFETY PRACTICES PRIOR TO PERFORMING THESE FUNCTIONS. UNLESS OTHERWISE INDICATED, TOP CHORD SHALL HAVE PROPERLY ATTACHED STRUCTURAL PANELS, BOTTOM CHORD SHALL HAVE A PROPERLY ATTACHED RIGID CEILING.
IMPORTANT FURNISH A COPY OF THIS DESIGN TO THE INSTALLATION CONTRACTOR. ALPINE ENGINEERED PRODUCTS, INC. SHALL NOT BE RESPONSIBLE FOR ANY DEVIATION FROM THIS DESIGN; ANY FAILURE TO BUILD THE TRUSSES IN CONFORMANCE WITH TPI; OR FABRICATING, HANDLING, SHIPPING, INSTALLING AND BRACING OF TRUSSES. THIS DESIGN CONFORMS WITH APPLICABLE PROVISIONS OF NDS (NATIONAL DESIGN SPEC, BY AF&PA) AND TPI. ALPINE CONNECTOR PLATES ARE MADE OF 20/16GA (W,HS/K) ASTM 653 (W, K/HS) GALV. STEEL. APPLY PLATES TO EACH FACE OF TRUSS AND UNLESS OTHERWISE LOCATED ON THIS DESIGN. POSITION PER DRAWINGS 160A-Z. ANY INSPECTION OF PLATES FOLLOWED BY (I) SHALL BE PER ANNEX A3 OF TPI 1-2002 SEC. 3. A SEAL ON THIS DRAWING INDICATES ACCEPTANCE OF PROFESSIONAL ENGINEERING RESPONSIBILITY SOLELY FOR THE TRUSS COMPONENT DESIGN SHOWN. THE SUITABILITY AND USE OF THIS COMPONENT FOR ANY BUILDING IS THE RESPONSIBILITY OF THE BUILDING DESIGNER, PER ANSI/TPI 1 SEC. 3.

MANUEL MARTINEZ CERTIFICATE No. 47182 STATE OF FLORIDA PROFESSIONAL ENGINEER

TC LL	20.0 PSF	REF R215 -37456
TC DL	10.0 PSF	DATE 05/14/03
BC DL	10.0 PSF	DRW HCUSR215 03134106
BC LL	0.0 PSF	HC-ENG CR/MMA
TOT.LD.	40.0 PSF	SEQN- 75021
DUR.FAC.	1.25	FROM JP
SPACING	24.0"	JREF- 1S20215 710

Top chord 2x4 SP #2 N
Bot chord 2x4 SP #2 N
Webs 2x4 SP #2 N

The overall height of this truss excluding overhang is 2-10-3.

DEFLECTION MEETS L/360 LIVE AND L/240 TOTAL LOAD.

110 mph wind, 10.22 ft mean hgt, ASCE 7-98, CLOSED bldg, Located anywhere in roof, CAT II, EXP B, wind TC DL=5.0 psf, wind BC DL=5.0 psf.

Plates sized for a minimum of 3.00 sq.in./piece.

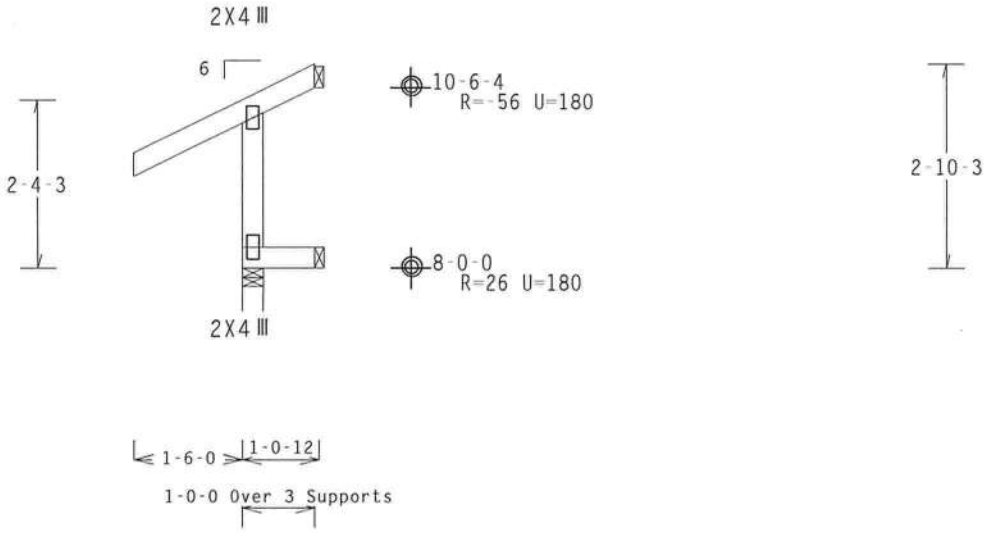

PLT TYP. Wave TPI 95\R Design Crit: TPI(STD)/FLBC 6.10 FL/-/5/-/-/R/- Scale =.375"/Ft.

ALPINE

Alpine Engineered Products, Inc.
Haines City, FL 33844
FL Certificate of Authorization # 567

**WARNING* TRUSSES REQUIRE EXTREME CARE IN FABRICATION, HANDLING, SHIPPING, INSTALLING A BRACING. REFER TO HIB-91 (HANDLING INSTALLING AND BRACING), PUBLISHED BY TPI (TRUSS PL INSTITUTE, 583 D'ONOFRIO DR., SUITE 200, MADISON, WI 53719). FOR SAFETY PRACTICES PRIO PERFORMING THESE FUNCTIONS. UNLESS OTHERWISE INDICATED, TOP CHORD SHALL HAVE PROPERLY ATTA STRUCTURAL PANELS, BOTTOM CHORD SHALL HAVE A PROPERLY ATTACHED RIGID CEILING.
IMPORTANT FURNISH A COPY OF THIS DESIGN TO THE INSTALLATION CONTRACTOR. ALPINE ENGIN PRODUCTS, INC. SHALL NOT BE RESPONSIBLE FOR ANY DEVIATION FROM THIS DESIGN; ANY FAILU BUILD THE TRUSSES IN CONFORMANCE WITH TPI; OR FABRICATING, HANDLING, SHIPPING, INSTALLIN BRACING OF TRUSSES. THIS DESIGN CONFORMS WITH APPLICABLE PROVISIONS OF NDS (NATIONAL D SPEC. BY AF&PA) AND TPI. ALPINE CONNECTOR PLATES ARE MADE OF 20/16GA (W,HS/K) ASTM (W, K/HS) GALV. STEEL. APPLY PLATES TO EACH FACE OF TRUSS AND UNLESS OTHERWISE LOCATED ON DESIGN. POSITION PER DRAWINGS 160A-Z. ANY INSPECTION OF PLATES FOLLOWED BY (I) SHALL BE ANNEX A3 OF TPI 1-2002 SEC. 3. A SEAL ON THIS DRAWING INDICATES ACCEPTANCE OF PROFESSIONA ENGINEERING RESPONSIBILITY SOLELY FOR THE TRUSS COMPONENT DESIGN SHOWN. THE SUITABILITY AND USE OF THIS COMPONENT FOR ANY BUILDING IS THE RESPONSIBILITY OF THE BUILDING DESIGNER, PER ANSI/TPI 1 SEC. 2.

MANUEL MARTINEZ
CERTIFICATE
No. 47182
STATE OF FLORIDA
PROFESSIONAL ENGINEER

TC LL	20.0 PSF	REF	R215 -37458
TC DL	10.0 PSF	DATE	05/14/03
BC DL	10.0 PSF	DRW	HCUSR215 03134108
BC LL	0.0 PSF	HC-ENG	CR/MMA
TOT.LD.	40.0 PSF	SEQN-	37050
DUR.FAC.	1.25	FROM	JP
SPACING	24.0"	JREF-	1S20215 710

Top chord 2x4 SP #2 N
Bot chord 2x4 SP #2 N

Plates sized for a minimum of 3.00 sq.in./piece.

The overall height of this truss excluding overhang is 0-10-3.

DEFLECTION MEETS L/360 LIVE AND L/240 TOTAL LOAD.

110 mph wind, 8.22 ft mean hgt, ASCE 7-98, CLOSED bldg, Located anywhere in roof, CAT II, EXP B, wind TC DL=5.0 psf, wind BC DL=5.0 psf.

Shim all supports to solid bearing.

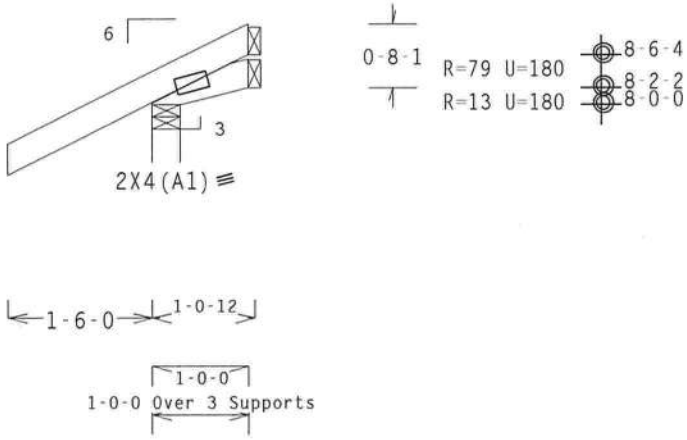

PLT TYP. Wave TPI 95\R Design Crit: TPI(STD)/FLBC 6.10 FL/-/5/-/-/R/- Scale =.5"/Ft.

ALPINE

Alpine Engineered Products, Inc.
Haines City, FL 33844
FL Certificate of Authorization # 5677

**WARNING* TRUSSES REQUIRE EXTREME CARE IN FABRICATION, HANDLING, SHIPPING, INSTALLING AND BRACING. REFER TO HIB-91 (HANDLING INSTALLING AND BRACING), PUBLISHED BY TPI (TRUSS INSTITUTE, 583 D'ONOFRIO DR., SUITE 200, MADISON, WI 53719). FOR SAFETY PRACTICES PRIOR TO PERFORMING THESE FUNCTIONS. UNLESS OTHERWISE INDICATED, TOP CHORD SHALL HAVE PROPERLY ATTACHED STRUCTURAL PANELS, BOTTOM CHORD SHALL HAVE A PROPERLY ATTACHED RIGID CEILING.
IMPORTANT FURNISH A COPY OF THIS DESIGN TO THE INSTALLATION CONTRACTOR. ALPINE ENGINEERED PRODUCTS, INC. SHALL NOT BE RESPONSIBLE FOR ANY DEVIATION FROM THIS DESIGN; ANY FAILURE TO BUILD THE TRUSSES IN CONFORMANCE WITH TPI; OR FABRICATING, HANDLING, SHIPPING, INSTALLING AND BRACING OF TRUSSES. THIS DESIGN CONFORMS WITH APPLICABLE PROVISIONS OF NDS (NATIONAL DESIGN SPEC. BY AF&PA) AND TPI. ALPINE CONNECTOR PLATES ARE MADE OF 20/16GA (W.HS/K) ASTM A653 (W. K/HS) GALV. STEEL. APPLY PLATES TO EACH FACE OF TRUSS AND UNLESS OTHERWISE LOCATED ON THIS DESIGN, POSITION PER DRAWINGS 160A-Z. ANY INSPECTION OF PLATES FOLLOWED BY (I) SHALL BE PER ANNEX A3 OF TPI 1-2002 SEC. 3. A SEAL ON THIS DRAWING INDICATES ACCEPTANCE OF PROFESSIONAL ENGINEERING RESPONSIBILITY SOLELY FOR THE TRUSS COMPONENT DESIGN SHOWN. THE SUITABILITY AND USE OF THIS COMPONENT FOR ANY BUILDING IS THE RESPONSIBILITY OF THE BUILDING DESIGNER, PER ANSI/TPI 1 SEC. 2.

MANUEL MARTINEZ
CERTIFICATE
No. 47182
STATE OF FLORIDA
PROFESSIONAL ENGINEER
MAY 15 '03

TC LL	20.0 PSF	REF	R215 -37457
TC DL	10.0 PSF	DATE	05/14/03
BC DL	10.0 PSF	DRW	HCUSR215 03134107
BC LL	0.0 PSF	HC-ENG	CR/MMA
TOT.LD.	40.0 PSF	SEQN-	75027
DUR.FAC.	1.25	FROM	JP
SPACING	24.0"	JREF-	1S2Q215 Z10

(9192 BRIAN ZECHER SPEC HOUSE H7K) THIS END PREPARED FOR CONTRACTOR IMPUT (LOADS & DIMENSIONS) SUBMITTED BY TRUSS MFR.

Top chord 2x4 SP #2 N
Bot chord 2x4 SP #2 N
Webs 2x4 SP #2 N
:Rt Bearing Leg 2x4 SP #2 N:

110 mph wind, 15.00 ft mean hgt, ASCE 7-98, CLOSED bldg, Located anywhere in roof, CAT II, EXP B, wind TC DL=5.0 psf, wind BC DL=5.0 psf.

In lieu of structural panels use purlins to brace all flat TC @ 24" OC.

Deflection meets L/360 live and L/240 total load.

The overall height of this truss excluding overhang is 3-10-3.

2 COMPLETE TRUSSES REQUIRED

NAILING SCHEDULE: (0.131x3.0_g_nails)
TOP CHORD: 1 ROW @ 12" o.c.
BOT CHORD: 1 ROW @ 12" o.c.
WEBS : 1 ROW @ 4" o.c.
USE EQUAL SPACING BETWEEN ROWS AND STAGGER NAILS IN EACH ROW TO AVOID SPLITTING.

Right end vertical not exposed to wind pressure.

#1 hip supports 7-0-0 jacks W/2 panel TC and no end vert.

Plates sized for a minimum of 3.00 sq.in./piece.

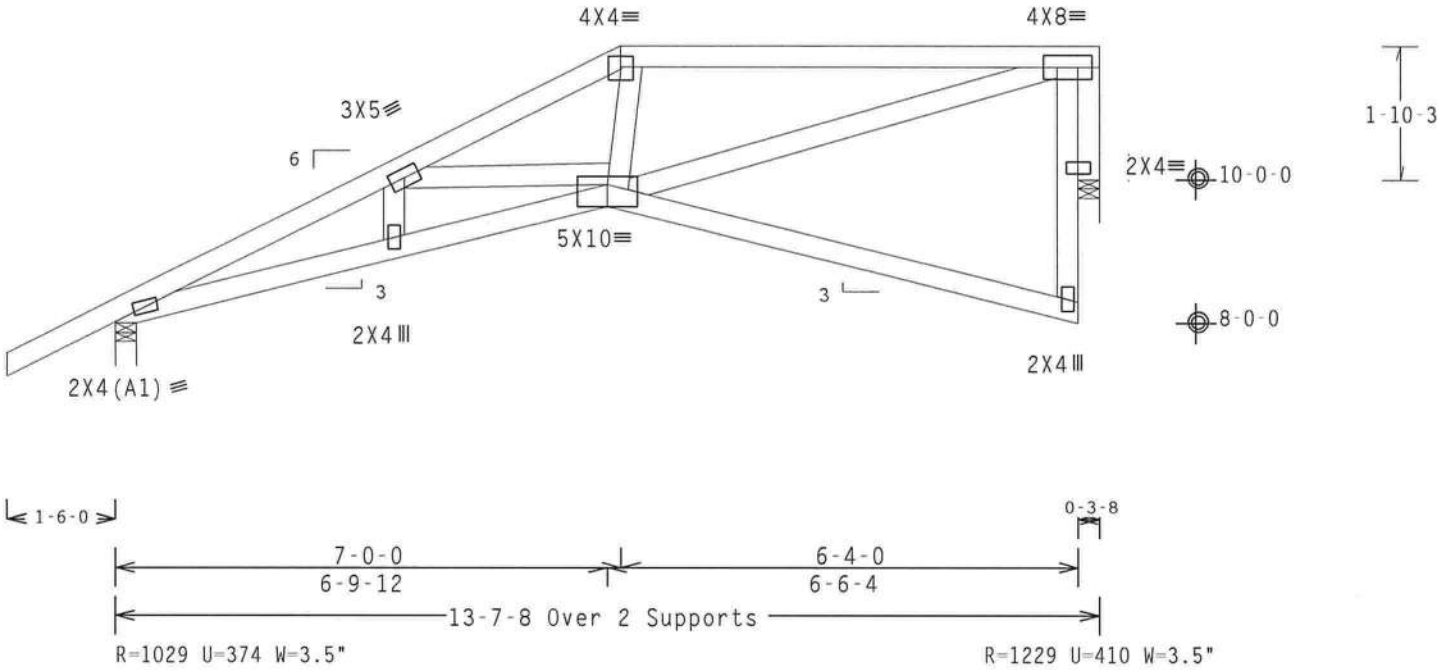

PLT TYP. Wave TPI 95\R Design Crit: TPI(STD)/FLBC 6.10 FL/-/5/-/-/R/- Scale =.375"/Ft.

ALPINE
Alpine Engineered Products, Inc.
Haines City, FL 33844
FL Certificate of Authorization # 567

**WARNING* TRUSSES REQUIRE EXTREME CARE IN FABRICATION, HANDLING, SHIPPING, INSTALLING AND BRACING. REFER TO HIB-91 (HANDLING INSTALLING AND BRACING), PUBLISHED BY TPI (TRUSS PLATE INSTITUTE, 583 D'ONOFRIO DR., SUITE 200, MADISON, WI 53719). FOR SAFETY PRACTICES PRIOR TO PERFORMING THESE FUNCTIONS. UNLESS OTHERWISE INDICATED, TOP CHORD SHALL HAVE PROPERLY ATTACHED STRUCTURAL PANELS, BOTTOM CHORD SHALL HAVE A PROPERLY ATTACHED RIGID CEILING.
IMPORTANT FURNISH A COPY OF THIS DESIGN TO THE INSTALLATION CONTRACTOR. ALPINE ENGINEERED PRODUCTS, INC. SHALL NOT BE RESPONSIBLE FOR ANY DEVIATION FROM THIS DESIGN; ANY FAILURE TO BUILD THE TRUSSES IN CONFORMANCE WITH TPI; OR FABRICATING, HANDLING, SHIPPING, INSTALLING AND BRACING OF TRUSSES. THIS DESIGN CONFORMS WITH APPLICABLE PROVISIONS OF NDS (NATIONAL DESIGN SPEC. BY AF&PA) AND TPI. ALPINE CONNECTOR PLATES ARE MADE OF 20/16GA (W.HS/K) ASTM A653 (W. K/HS) GALV. STEEL. APPLY PLATES TO EACH FACE OF TRUSS AND UNLESS OTHERWISE LOCATED ON THIS DESIGN, POSITION PER DRAWINGS 160A-Z. ANY INSPECTION OF PLATES FOLLOWED BY (1) SHALL BE IN ANNEX A3 OF TPI 1-2002 SEC. 3. A SEAL ON THIS DRAWING INDICATES ACCEPTANCE OF PROFESSIONAL ENGINEERING RESPONSIBILITY SOLELY FOR THE TRUSS COMPONENT DESIGN SHOWN. THE SUITABILITY AND USE OF THIS COMPONENT FOR ANY BUILDING IS THE RESPONSIBILITY OF THE BUILDING DESIGNER, PER ANSI/TPI 1 SEC. 2.

MANUEL MARTINEZ
CERTIFICATE
No. 47182
STATE OF FLORIDA
PROFESSIONAL ENGINEER
MAY 15 '03

TC LL	20.0 PSF	REF	R215 -37459
TC DL	10.0 PSF	DATE	05/14/03
BC DL	10.0 PSF	DRW	HCUSR215 03134109
BC LL	0.0 PSF	HC-ENG	CR/MMA
TOT.LD.	40.0 PSF	SEQN-	37029
DUR.FAC.	1.25	FROM	JP
SPACING	24.0"	JREF-	1S20215 Z10

#2 N
SP #2 N
.x4 SP #2 N
.ng Leg 2x4 SP #2 N:

In lieu of structural panels use purlins to brace all flat TC @ 24" OC.

Plates sized for a minimum of 3.00 sq.in./piece.

110 mph wind, 10.22 ft mean hgt, ASCE 7-98, CLOSED bldg, not located within 4.50 ft from roof edge, CAT II, EXP B, wind TC DL=5.0 psf, wind BC DL=5.0 psf.

Right end vertical not exposed to wind pressure.

Deflection meets L/360 live and L/240 total load.

The overall height of this truss excluding overhang is 4-10-3.

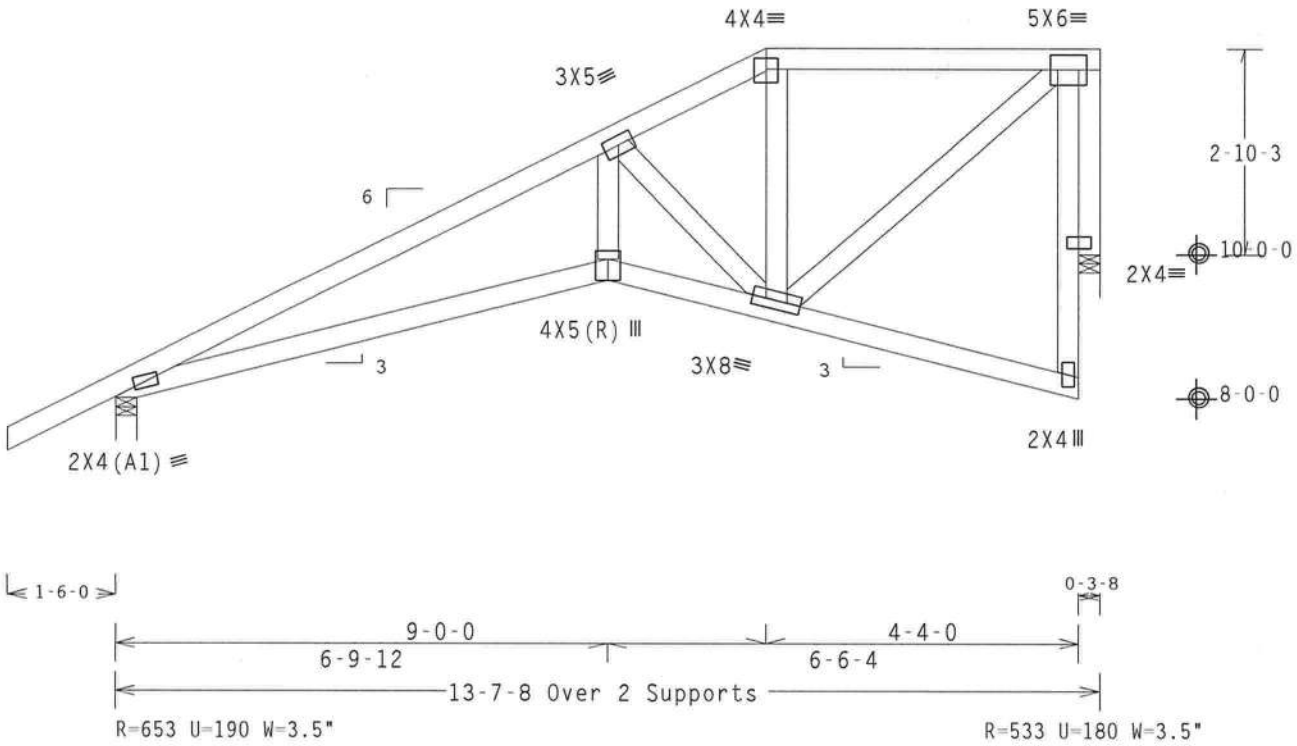

PLT TYP. Wave TPI 95\R Design Crit: TPI(STD)/FLBC 6.10 1 FL/-/5/-/-/R/- Scale =.375"/Ft.

ALPINE

Alpine Engineered Products, Inc.
Haines City, FL 33844
FL Certificate of Authorization # 5

**WARNING* TRUSSES REQUIRE EXTREME CARE IN FABRICATION, HANDLING, SHIPPING, INSTALLING AND BRACING. REFER TO HIB-91 (HANDLING INSTALLING AND BRACING), PUBLISHED BY TPI (TRUSS PLATE INSTITUTE, 583 D'ONOFRIO DR., SUITE 200, MADISON, WI 53719). FOR SAFETY PRACTICES PRIOR TO PERFORMING THESE FUNCTIONS. UNLESS OTHERWISE INDICATED, TOP CHORD SHALL HAVE PROPERLY ATTACHED STRUCTURAL PANELS, BOTTOM CHORD SHALL HAVE A PROPERLY ATTACHED RIGID CEILING.
IMPORTANT FURNISH A COPY OF THIS DESIGN TO THE INSTALLATION CONTRACTOR. ALPINE ENGINEERED PRODUCTS, INC. SHALL NOT BE RESPONSIBLE FOR ANY DEVIATION FROM THIS DESIGN; ANY FAILURE TO BUILD THE TRUSSES IN CONFORMANCE WITH TPI; OR FABRICATING, HANDLING, SHIPPING, INSTALLING AND BRACING OF TRUSSES. THIS DESIGN CONFORMS WITH APPLICABLE PROVISIONS OF NDS (NATIONAL DESIGN SPEC. BY AF&PA) AND TPI. ALPINE CONNECTOR PLATES ARE MADE OF 20/16GA (W.HS/K) ASTM 653 (W, K/HS) GALV. STEEL. APPLY PLATES TO EACH FACE OF TRUSS AND UNLESS OTHERWISE LOCATED ON THE DESIGN, POSITION PER DRAWINGS 160A-Z. ANY INSPECTION OF PLATES FOLLOWED BY (I) SHALL BE ANNEX A3 OF TPI 1-2002 SEC. 3. A SEAL ON THIS DRAWING INDICATES ACCEPTANCE OF PROFESSIONAL ENGINEERING RESPONSIBILITY SOLELY FOR THE TRUSS COMPONENT DESIGN SHOWN. THE SUITABILITY AND USE OF THIS COMPONENT FOR ANY BUILDING IS THE RESPONSIBILITY OF THE BUILDING DESIGNER, PER ANSI/TPI 1 SEC. 2.

MANUEL MARTINEZ
CERTIFICATE
No. 47182
STATE OF FLORIDA
PROFESSIONAL ENGINEER

TC LL	20.0 PSF	REF R215 -37460
TC DL	10.0 PSF	DATE 05/14/03
BC DL	10.0 PSF	DRW HCUSR215 03134110
BC LL	0.0 PSF	HC-ENG CR/MMA
TOT.LD.	40.0 PSF	SEQN- 37032
DUR.FAC.	1.25	FROM JP
SPACING	24.0"	JREF- 1S20215 710

Top chord 2x4 SP #2 N
Bot chord 2x4 SP #2 N
Webs 2x4 SP #2 N
:Rt Bearing Leg 2x4 SP #2 N:

In lieu of structural panels use purlins to brace all flat TC @ 24" OC.

Plates sized for a minimum of 3.00 sq.in./piece.

110 mph wind, 10.72 ft mean hgt, ASCE 7-98, CLOSED bldg, not located within 4.50 ft from roof edge, CAT II, EXP B, wind TC DL=5.0 psf, wind BC DL=5.0 psf.

Right end vertical not exposed to wind pressure.

Deflection meets L/360 live and L/240 total load.

The overall height of this truss excluding overhang is 5-10-3.

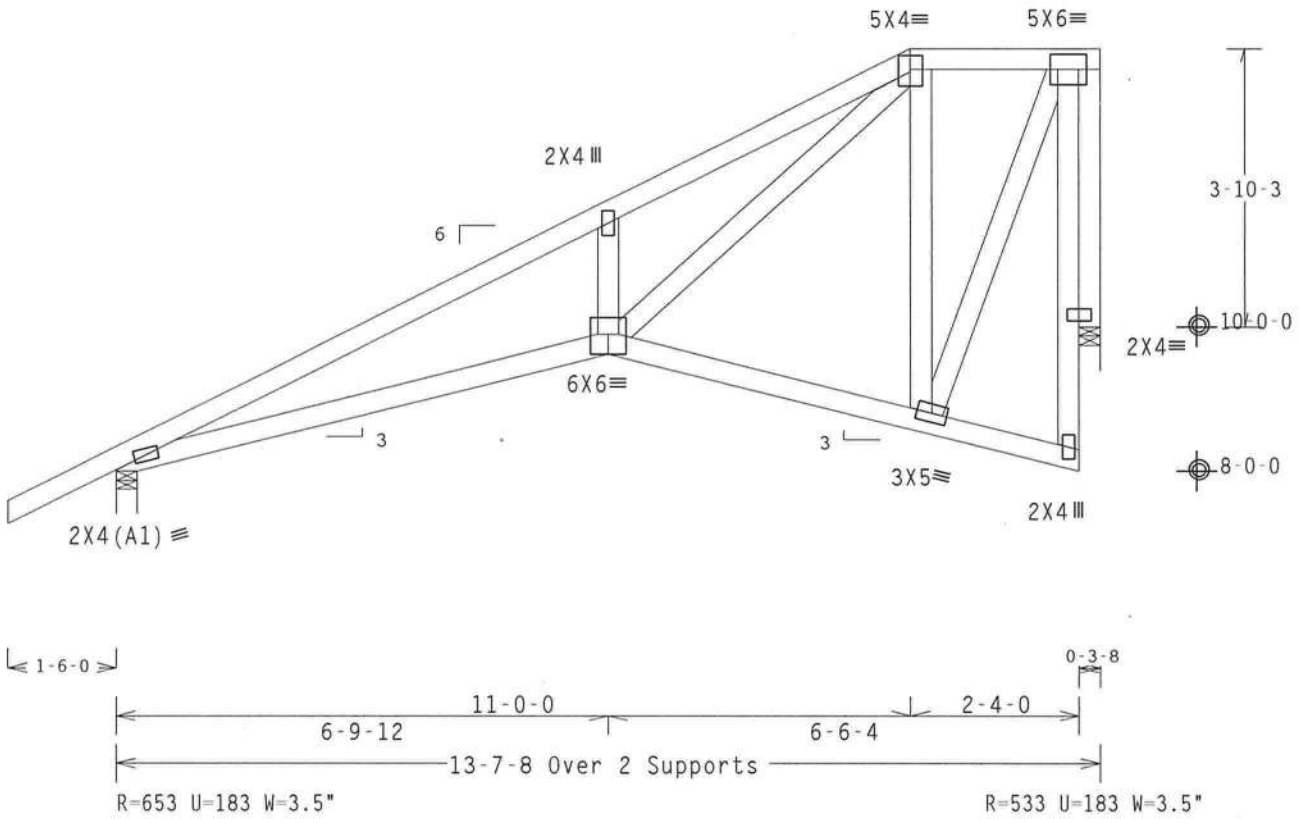

PLT TYP. Wave TPI 95\R Design Crit: TPI(STD)/FLBC 6.10 FL/-/5/-/-/R/- Scale =.375"/Ft.

ALPINE
Alpine Engineered Products, Inc.
Haines City, FL 33844
FL Certificate of Authorization # 5677

**WARNING* TRUSSES REQUIRE EXTREME CARE IN FABRICATION, HANDLING, SHIPPING, INSTALLING AND BRACING. REFER TO HIB-91 (HANDLING INSTALLING AND BRACING), PUBLISHED BY TPI (TRUSS PLATE INSTITUTE, 583 D'ONOFRIO DR., SUITE 200, MADISON, WI 53719). FOR SAFETY PRACTICES PRIOR TO PERFORMING THESE FUNCTIONS. UNLESS OTHERWISE INDICATED, TOP CHORD SHALL HAVE PROPERLY ATTACHED STRUCTURAL PANELS, BOTTOM CHORD SHALL HAVE A PROPERLY ATTACHED RIGID CEILING.
IMPORTANT FURNISH A COPY OF THIS DESIGN TO THE INSTALLATION CONTRACTOR. ALPINE ENGINEERED PRODUCTS, INC. SHALL NOT BE RESPONSIBLE FOR ANY DEVIATION FROM THIS DESIGN; ANY FAILURE TO BUILD THE TRUSSES IN CONFORMANCE WITH TPI; OR FABRICATING, HANDLING, SHIPPING, INSTALLING AND BRACING OF TRUSSES. THIS DESIGN CONFORMS WITH APPLICABLE PROVISIONS OF NDS (NATIONAL DESIGN SPEC, BY AF&PA) AND TPI. ALPINE CONNECTOR PLATES ARE MADE OF 20/16GA (W,HS/K) ASTM 653 (W, K/HS) GALV. STEEL. APPLY PLATES TO EACH FACE OF TRUSS AND UNLESS OTHERWISE LOCATED ON DESIGN. POSITION PER DRAWINGS 160A-Z. ANY INSPECTION OF PLATES FOLLOWED BY (I) SHALL BE IN ANNEX A3 OF TPI 1-2002 SEC. 3. A SEAL ON THIS DRAWING INDICATES ACCEPTANCE OF PROFESSIONAL ENGINEERING RESPONSIBILITY SOLELY FOR THE TRUSS COMPONENT DESIGN SHOWN. THE SUITABILITY AND USE OF THIS COMPONENT FOR ANY BUILDING IS THE RESPONSIBILITY OF THE BUILDING DESIGNER, PER ANSI/TPI 1 SEC. 2.

MANUEL MARTINEZ
CERTIFICATE
No. 47182
STATE OF FLORIDA
PROFESSIONAL ENGINEER

TC LL	20.0 PSF	REF	R215 -37461
TC DL	10.0 PSF	DATE	05/14/03
BC DL	10.0 PSF	DRW	HCUSR215 03134111
BC LL	0.0 PSF	HC-ENG	CR/MMA
TOT.LD.	40.0 PSF	SEQN-	37035
DUR.FAC.	1.25	FROM	JP
SPACING	24.0"	JREF-	1S20215 710

Top chord 2x4 SP #2 N
Bot chord 2x4 SP #2 N
Webs 2x4 SP #2 N
:Rt Bearing Leg 2x4 SP #2 N:

(A) 1x4 #3 or better "T" brace. 80% length of web member. Attach with 8d nails @ 6" OC.

Plates sized for a minimum of 3.00 sq.in./piece.

The overall height of this truss excluding overhang is 6-10-3.

110 mph wind, 11.22 ft mean hgt, ASCE 7-98, CLOSED bldg, not located within 4.50 ft from roof edge, CAT II, EXP B, wind TC DL=5.0 psf, wind BC DL=5.0 psf.

Right end vertical not exposed to wind pressure.

Deflection meets L/360 live and L/240 total load.

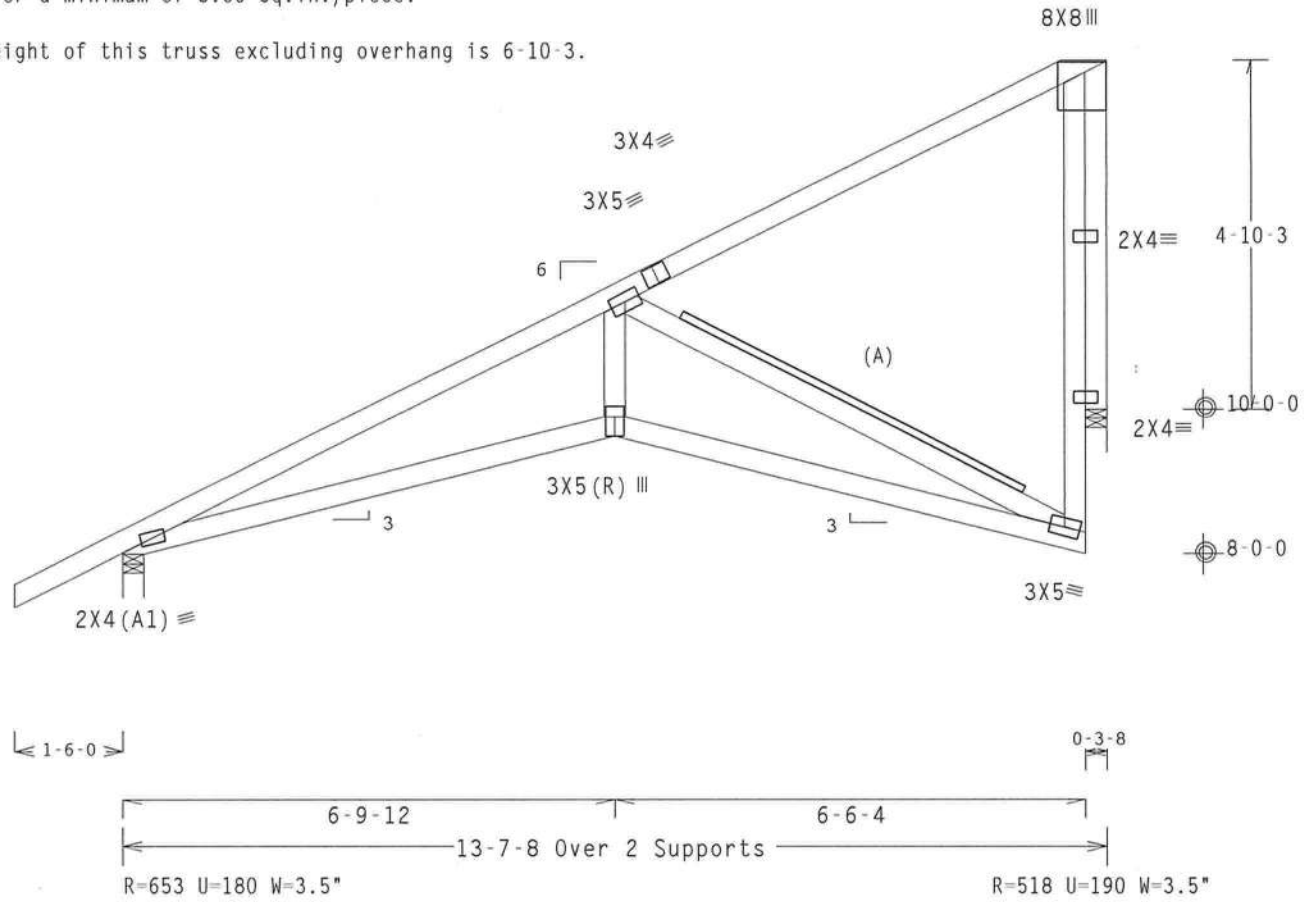

PLT TYP. Wave TPI 95\R Design Crit: TPI(STD)/FLBC 6.10 1 FL/-/5/-/-/R/- Scale =.375"/Ft.

ALPINE
Alpine Engineered Products, Inc.
Haines City, FL 33844

**WARNING* TRUSSES REQUIRE EXTREME CARE IN FABRICATION, HANDLING, SHIPPING, INSTALLING AND BRACING. REFER TO HIB-91 (HANDLING INSTALLING AND BRACING), PUBLISHED BY TPI (TRUSS PLATE INSTITUTE, 583 D'ONOFRIO DR., SUITE 200, MADISON, WI 53719). FOR SAFETY PRACTICES PRIOR TO PERFORMING THESE FUNCTIONS. UNLESS OTHERWISE INDICATED, TOP CHORD SHALL HAVE PROPERLY ATTACHED STRUCTURAL PANELS, BOTTOM CHORD SHALL HAVE A PROPERLY ATTACHED RIGID CEILING.
IMPORTANT FURNISH A COPY OF THIS DESIGN TO THE INSTALLATION CONTRACTOR. ALPINE ENGINEERED PRODUCTS, INC. SHALL NOT BE RESPONSIBLE FOR ANY DEVIATION FROM THIS DESIGN; ANY FAILURE TO BUILD THE TRUSSES IN CONFORMANCE WITH TPI; OR FABRICATING, HANDLING, SHIPPING, INSTALLING AND BRACING OF TRUSSES. THIS DESIGN CONFORMS WITH APPLICABLE PROVISIONS OF NDS (NATIONAL DESIGN SPEC, BY AF&PA) AND TPI. ALPINE CONNECTOR PLATES ARE MADE OF 20/16GA (W,HS/K) ASTM 653 (W, K/HS) GALV. STEEL. APPLY PLATES TO EACH FACE OF TRUSS AND UNLESS OTHERWISE LOCATED ON THIS DESIGN. POSITION PER DRAWINGS 160A-Z. ANY INSPECTION OF PLATES FOLLOWED BY (I) SHALL BE PER ANNEX A3 OF TPI 1-2002 SEC. 3. A SEAL ON THIS DRAWING INDICATES ACCEPTANCE OF PROFESSIONAL ENGINEERING RESPONSIBILITY SOLELY FOR THE TRUSS COMPONENT DESIGN SHOWN. THE SUITABILITY AND USE OF THIS COMPONENT FOR ANY BUILDING IS THE RESPONSIBILITY OF THE BUILDING DESIGNER, PER ANSI/TPI 1 SEC. 2.

MANUEL MARTINEZ CERTIFICATE No. 47182 STATE OF FLORIDA PROFESSIONAL ENGINEER

TC LL	20.0 PSF	REF	R215 -37462
TC DL	10.0 PSF	DATE	05/14/03
BC DL	10.0 PSF	DRW	HCUSR215 03134112
BC LL	0.0 PSF	HC-ENG	CR/MMA
TOT.LD.	40.0 PSF	SEQN-	37040
DUR.FAC.	1.25	FROM	JP
SPACING	24.0"	JREF-	1S20215 710

Top chord 2x4 SP #2 N
Bot chord 2x4 SP #2 N
Webs 2x4 SP #2 N
:Rt Bearing Leg 2x4 SP #2 N:

(A) 1x4 #3 or better "T" brace. 80% length of web member. Attach with 8d nails @ 6" OC.

Plates sized for a minimum of 3.00 sq.in./piece.

The overall height of this truss excluding overhang is 7-1-15.

110 mph wind, 11.38 ft mean hgt, ASCE 7-98, CLOSED bldg, not located within 4.50 ft from roof edge, CAT II, EXP B, wind TC DL=5.0 psf, wind BC DL=5.0 psf.

Right end vertical not exposed to wind pressure.

Deflection meets L/360 live and L/240 total load.

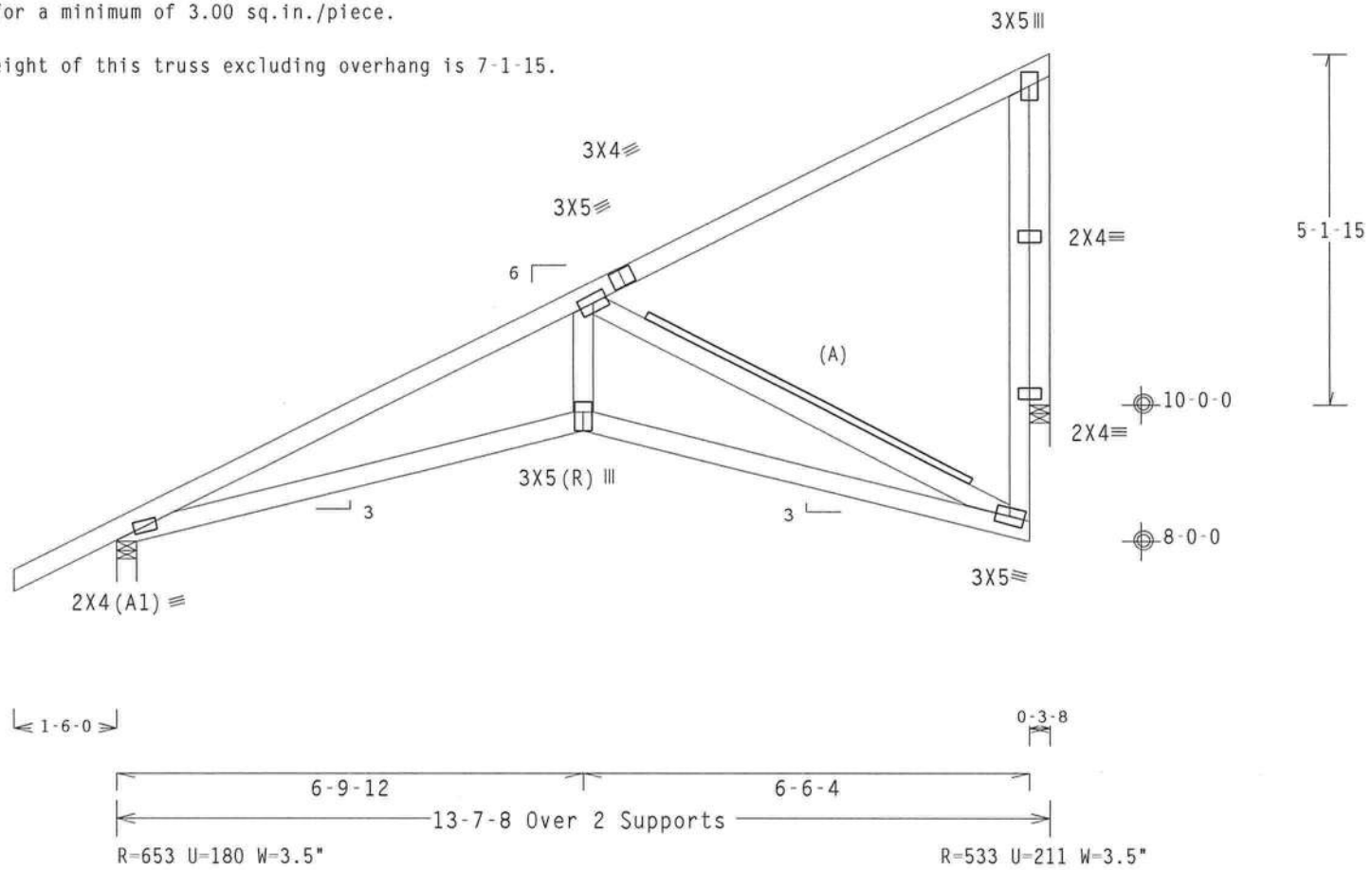

PLT TYP. Wave TPI 95\R Design Crit: TPI(STD)/FLBC 6.10 FL/-/5/-/-/R/- Scale =.375"/Ft.

ALPINE

Alpine Engineered Products, Inc.
Haines City, FL 33844
FL Certificate of Authorization # 5673

**WARNING* TRUSSES REQUIRE EXTREME CARE IN FABRICATION, HANDLING, SHIPPING, INSTALLING A BRACING. REFER TO HIB-91 (HANDLING INSTALLING AND BRACING), PUBLISHED BY TPI (TRUSS PL INSTITUTE, 583 D'ONOFRIO DR., SUITE 200, MADISON, WI 53719). FOR SAFETY PRACTICES PRIO PERFORMING THESE FUNCTIONS. UNLESS OTHERWISE INDICATED, TOP CHORD SHALL HAVE PROPERLY ATTA STRUCTURAL PANELS, BOTTOM CHORD SHALL HAVE A PROPERLY ATTACHED RIGID CEILING.
IMPORTANT FURNISH A COPY OF THIS DESIGN TO THE INSTALLATION CONTRACTOR. ALPINE ENGIN RED PRODUCTS, INC. SHALL NOT BE RESPONSIBLE FOR ANY DEVIATION FROM THIS DESIGN; ANY FAILU BUILD THE TRUSSES IN CONFORMANCE WITH TPI; OR FABRICATING, HANDLING, SHIPPING, INSTALLIN AND BRACING OF TRUSSES. THIS DESIGN CONFORMS WITH APPLICABLE PROVISIONS OF NDS (NATIONAL D IGN SPEC. BY AF&PA) AND TPI. ALPINE CONNECTOR PLATES ARE MADE OF 20/16GA (W,HS/K) ASTM (W, K/HS) GALV. STEEL. APPLY PLATES TO EACH FACE OF TRUSS AND UNLESS OTHERWISE LOCATED ON DESIGN. POSITION PER DRAWINGS 160A-Z. ANY INSPECTION OF PLATES FOLLOWED BY (I) SHALL BE ANNEX A3 OF TPI 1-2002 SEC. 3. A SEAL ON THIS DRAWING INDICATES ACCEPTANCE OF PROFESSION ENGINEERING RESPONSIBILITY SOLELY FOR THE TRUSS COMPONENT DESIGN SHOWN. THE SUITABILITY AN USE OF THIS COMPONENT FOR ANY BUILDING IS THE RESPONSIBILITY OF THE BUILDING DESIGNER, PER ANSI/TPI 1 SEC. 2.

MANUEL MARTINEZ
CERTIFICATE
No. 47182
STATE OF FLORIDA
PROFESSIONAL ENGINEER

TC LL	20.0 PSF	REF R215 -37463
TC DL	10.0 PSF	DATE 05/14/03
BC DL	10.0 PSF	DRW HCUSR215 03134113
BC LL	0.0 PSF	HC-ENG CR/MMA
TOT.LD.	40.0 PSF	SEQN- 37043
DUR.FAC.	1.25	FROM JP
SPACING	24.0"	JREF- 1S20215 Z10

Top chord 2x4 SP #2 N
Bot chord 2x4 SP #2 N
Webs 2x4 SP #2 N
:Rt Bearing Leg 2x4 SP #2 N:

Deflection meets L/360 live and L/240 total load.

The overall height of this truss excluding overhang is 7-1-15.

110 mph wind, 11.38 ft mean hgt, ASCE 7-98, CLOSED bldg, not located within 4.50 ft from roof edge, CAT II, EXP B, wind TC DL=5.0 psf, wind BC DL=5.0 psf.

Right end vertical not exposed to wind pressure.

Plates sized for a minimum of 3.00 sq.in./piece.

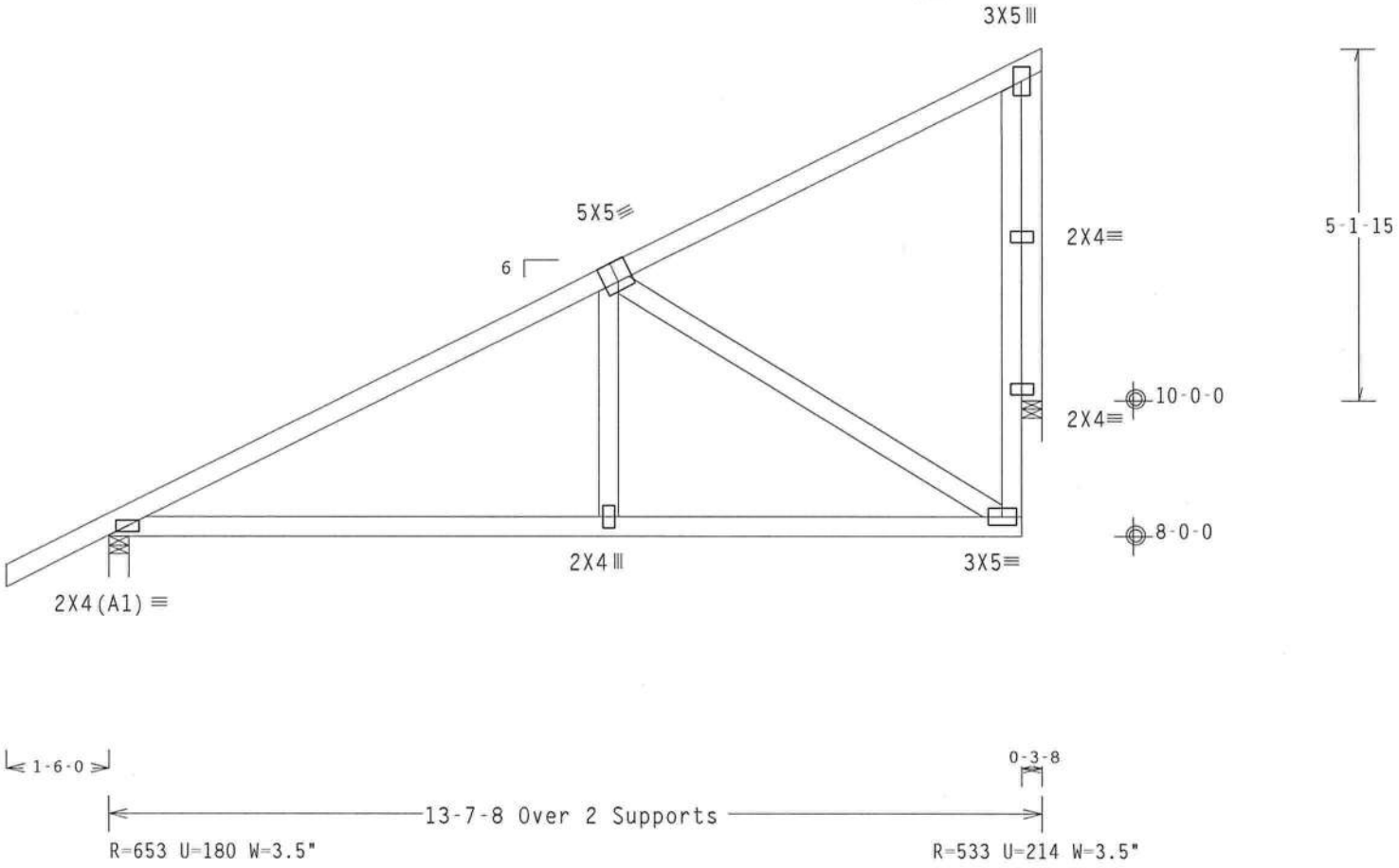

PLT TYP. Wave TPI 95\R Design Crit: TPI(STD)/FLBC 6.10 FL/-/5/-/-/R/- Scale =.375"/Ft.

ALPINE

Alpine Engineered Products, Inc.
Haines City, FL 33844
FL Certificate of Authorization # 5677

**WARNING* TRUSSES REQUIRE EXTREME CARE IN FABRICATION, HANDLING, SHIPPING, INSTALLING AND BRACING. REFER TO HIB-91 (HANDLING INSTALLING AND BRACING), PUBLISHED BY TPI (TRUSS PLATE INSTITUTE, 583 D'ONOFRIO DR., SUITE 200, MADISON, WI 53719). FOR SAFETY PRACTICES PRIOR TO PERFORMING THESE FUNCTIONS. UNLESS OTHERWISE INDICATED, TOP CHORD SHALL HAVE PROPERLY ATTACHED STRUCTURAL PANELS, BOTTOM CHORD SHALL HAVE A PROPERLY ATTACHED RIGID CEILING.
IMPORTANT FURNISH A COPY OF THIS DESIGN TO THE INSTALLATION CONTRACTOR. ALPINE ENGINEERED PRODUCTS, INC. SHALL NOT BE RESPONSIBLE FOR ANY DEVIATION FROM THIS DESIGN; ANY FAILURE TO BUILD THE TRUSSES IN CONFORMANCE WITH TPI; OR FABRICATING, HANDLING, SHIPPING, INSTALLING AND BRACING OF TRUSSES. THIS DESIGN CONFORMS WITH APPLICABLE PROVISIONS OF NDS (NATIONAL DESIGN SPEC. BY AF&PA) AND TPI. ALPINE CONNECTOR PLATES ARE MADE OF 20/16GA (W,HS/K) ASTM A653 (W, K/HS) GALV. STEEL. APPLY PLATES TO EACH FACE OF TRUSS AND UNLESS OTHERWISE LOCATED ON THIS DESIGN, POSITION PER DRAWINGS 160A-Z. ANY INSPECTION OF PLATES FOLLOWED BY (I) SHALL BE PER ANNEX A3 OF TPI 1-2002 SEC. 3. A SEAL ON THIS DRAWING INDICATES ACCEPTANCE OF PROFESSIONAL ENGINEERING RESPONSIBILITY SOLELY FOR THE TRUSS COMPONENT DESIGN SHOWN. THE SUITABILITY AND USE OF THIS COMPONENT FOR ANY BUILDING IS THE RESPONSIBILITY OF THE BUILDING DESIGNER, PER ANSI/TPI 1 SEC. 2.

MANUEL MARTINEZ CERTIFICATE No. 47182 STATE OF FLORIDA PROFESSIONAL ENGINEER

TC LL	20.0 PSF	REF R215 -37464
TC DL	10.0 PSF	DATE 05/14/03
BC DL	10.0 PSF	DRW HCUSR215 03134114
BC LL	0.0 PSF	HC-ENG CR/MMA
TOT.LD.	40.0 PSF	SEQN- 37116
DUR.FAC.	1.25	FROM JP
SPACING	24.0"	JREF- 1S20215 Z10

Top chord 2x4 SP #2 N
Bot chord 2x4 SP #2 N
Webs 2x4 SP #2 N
:Rt Bearing Leg 2x4 SP #2 N:

Deflection meets L/360 live and L/240 total load.

The overall height of this truss excluding overhang is 7-1-15.

110 mph wind, 11.38 ft mean hgt, ASCE 7-98, CLOSED bldg, not located within 4.50 ft from roof edge, CAT II, EXP B, wind TC DL=5.0 psf, wind BC DL=5.0 psf.

Right end vertical not exposed to wind pressure.

Plates sized for a minimum of 3.00 sq.in./piece.

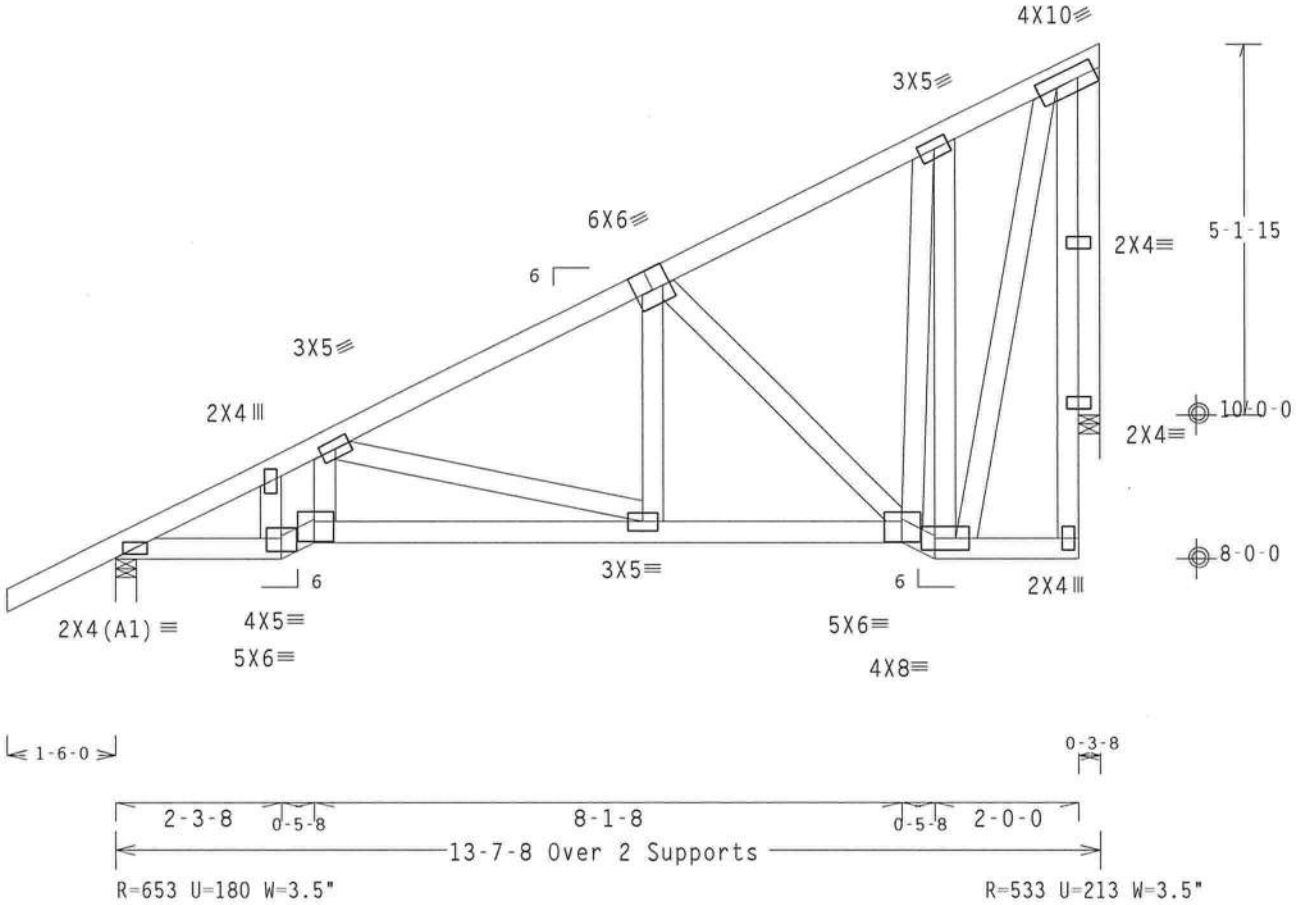

PLT TYP. Wave TPI 95\R Design Crit: TPI(STD)/FLBC 6.10 FL/-/5/-/-/R/- Scale =.375"/Ft.

ALPINE
Alpine Engineered Products, Inc.
Haines City, FL 33844
FL Certificate of Authorization # 5673

**WARNING* TRUSSES REQUIRE EXTREME CARE IN FABRICATION, HANDLING, SHIPPING, INSTALLING AND BRACING. REFER TO HIB-91 (HANDLING INSTALLING AND BRACING), PUBLISHED BY TPI (TRUSS PLATE INSTITUTE, 583 D'ONOFRIO DR., SUITE 200, MADISON, WI 53719). FOR SAFETY PRACTICES PRIOR TO PERFORMING THESE FUNCTIONS. UNLESS OTHERWISE INDICATED, TOP CHORD SHALL HAVE PROPERLY ATTACHED STRUCTURAL PANELS, BOTTOM CHORD SHALL HAVE A PROPERLY ATTACHED RIGID CEILING.
IMPORTANT FURNISH A COPY OF THIS DESIGN TO THE INSTALLATION CONTRACTOR. ALPINE ENGINEERED PRODUCTS, INC. SHALL NOT BE RESPONSIBLE FOR ANY DEVIATION FROM THIS DESIGN; ANY FAILURE TO BUILD THE TRUSSES IN CONFORMANCE WITH TPI; OR FABRICATING, HANDLING, SHIPPING, INSTALLING AND BRACING OF TRUSSES. THIS DESIGN CONFORMS WITH APPLICABLE PROVISIONS OF NDS (NATIONAL DESIGN SPEC. BY AF&PA) AND TPI. ALPINE CONNECTOR PLATES ARE MADE OF 20/16GA (W,HS/K) ASTM 653 (W, K/HS) GALV. STEEL. APPLY PLATES TO EACH FACE OF TRUSS AND UNLESS OTHERWISE LOCATED ON THIS DESIGN, POSITION PER DRAWINGS 160A-Z. ANY INSPECTION OF PLATES FOLLOWED BY (I) SHALL BE PER ANNEX A3 OF TPI 1-2002 SEC. 3. A SEAL ON THIS DRAWING INDICATES ACCEPTANCE OF PROFESSIONAL ENGINEERING RESPONSIBILITY SOLELY FOR THE TRUSS COMPONENT DESIGN SHOWN. THE SUITABILITY AND USE OF THIS COMPONENT FOR ANY BUILDING IS THE RESPONSIBILITY OF THE BUILDING DESIGNER, PER ANSI/TPI 1 SEC. 2.

MANUEL MARTINEZ
CERTIFICATE
No. 47182
STATE OF FLORIDA
PROFESSIONAL ENGINEER

TC LL	20.0 PSF	REF	R215 -37465
TC DL	10.0 PSF	DATE	05/14/03
BC DL	10.0 PSF	DRW	HCUSR215 03134115
BC LL	0.0 PSF	HC-ENG	CR/MMA
TOT.LD.	40.0 PSF	SEQN-	37105
DUR.FAC.	1.25	FROM	JP
SPACING	24.0"	JREF-	1S20215 Z10

Top chord 2x4 SP #2 N :T2 2x4 SP SS:
Bot chord 2x4 SP #2 N
Webs 2x4 SP #2 N
:Rt Bearing Leg 2x4 SP #2 N:

Deflection meets L/360 live and L/240 total load.

The overall height of this truss excluding overhang is 7-1-15.

110 mph wind, 11.38 ft mean hgt, ASCE 7-98, CLOSED bldg, not located within 4.50 ft from roof edge, CAT II, EXP B, wind TC DL=5.0 psf, wind BC DL=5.0 psf.

Right end vertical not exposed to wind pressure.

Plates sized for a minimum of 3.00 sq.in./piece.

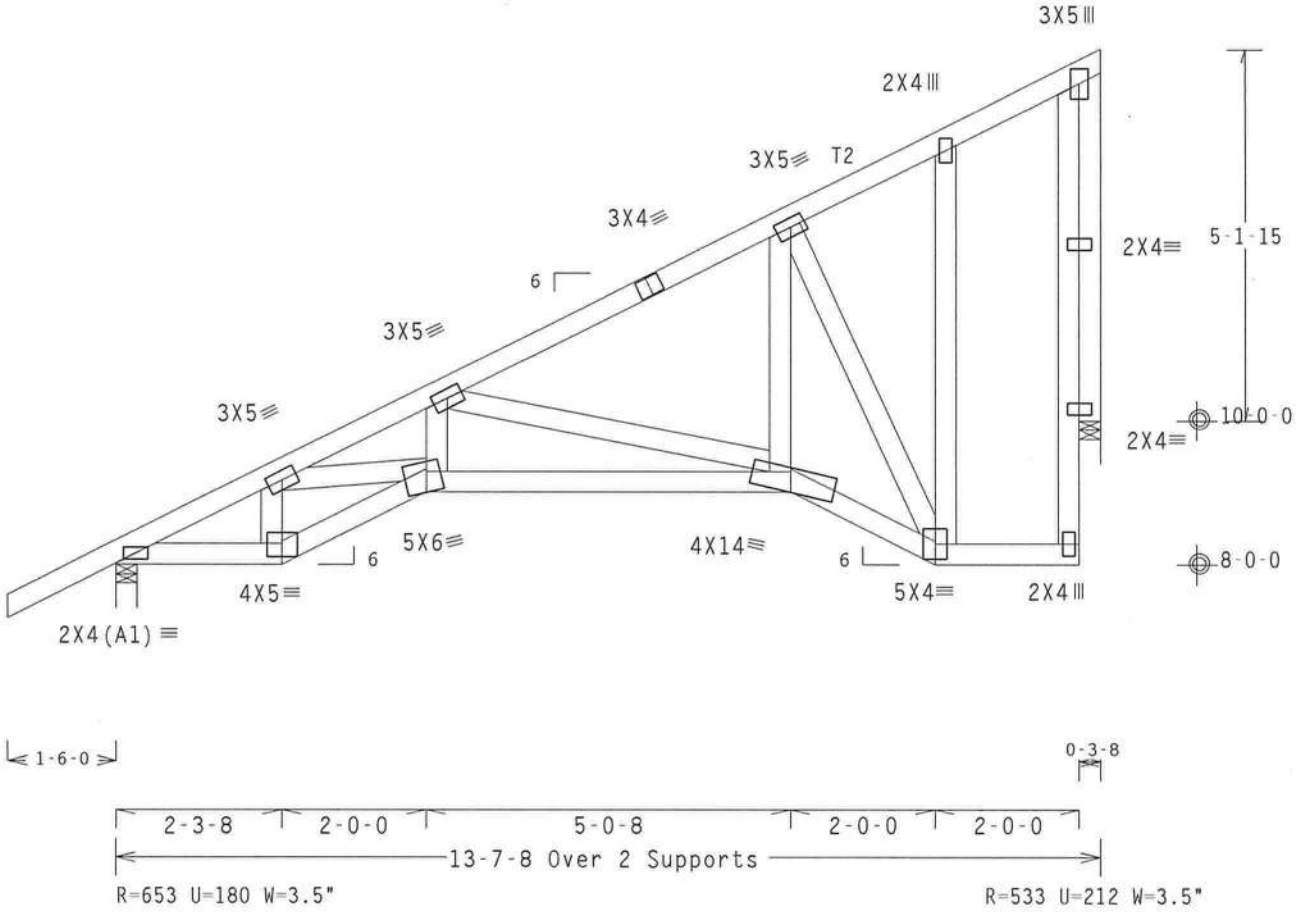

PLT TYP. Wave TPI 95\R Design Crit: TPI(STD)/FLBC 6.10 2 FL/-/5/-/-/R/- Scale =.375"/Ft.

ALPINE

Alpine Engineered Products, Inc.
Haines City, FL 33844
FL Certificate of Authorization # 5

**WARNING* TRUSSES REQUIRE EXTREME CARE IN FABRICATION, HANDLING, SHIPPING, INSTALLING AND BRACING. REFER TO HIB-91 (HANDLING INSTALLING AND BRACING), PUBLISHED BY TPI (TRUSS PLATE INSTITUTE, 583 D'ONOFRIO DR., SUITE 200, MADISON, WI 53719). FOR SAFETY PRACTICES PRIOR TO PERFORMING THESE FUNCTIONS. UNLESS OTHERWISE INDICATED, TOP CHORD SHALL HAVE PROPERLY ATTACHED STRUCTURAL PANELS, BOTTOM CHORD SHALL HAVE A PROPERLY ATTACHED RIGID CEILING.
IMPORTANT FURNISH A COPY OF THIS DESIGN TO THE INSTALLATION CONTRACTOR. ALPINE ENGINEERED PRODUCTS, INC. SHALL NOT BE RESPONSIBLE FOR ANY DEVIATION FROM THIS DESIGN; ANY FAILURE TO BUILD THE TRUSSES IN CONFORMANCE WITH TPI; OR FABRICATING, HANDLING, SHIPPING, INSTALLING AND BRACING OF TRUSSES. THIS DESIGN CONFORMS WITH APPLICABLE PROVISIONS OF NDS (NATIONAL DESIGN SPEC, BY AF&PA) AND TPI. ALPINE CONNECTOR PLATES ARE MADE OF 20/16GA (W,HS/K) ASTM 653 (W, K/HS) GALV. STEEL. APPLY PLATES TO EACH FACE OF TRUSS AND UNLESS OTHERWISE LOCATED ON THIS DESIGN, POSITION PER DRAWINGS 160A-Z. ANY INSPECTION OF PLATES FOLLOWED BY (I) SHALL BE PER ANNEX A3 OF TPI 1-2002 SEC. 3. A SEAL ON THIS DRAWING INDICATES ACCEPTANCE OF PROFESSIONAL ENGINEERING RESPONSIBILITY SOLELY FOR THE TRUSS COMPONENT DESIGN SHOWN. THE SUITABILITY AND USE OF THIS COMPONENT FOR ANY BUILDING IS THE RESPONSIBILITY OF THE BUILDING DESIGNER, PER ANSI/TPI 1 SEC. 3.

MANUEL MARTINEZ
CERTIFICATE
No. 47182
STATE OF FLORIDA
PROFESSIONAL ENGINEER

TC LL	20.0 PSF	REF	R215 -37466
TC DL	10.0 PSF	DATE	05/14/03
BC DL	10.0 PSF	DRW	HCUSR215 03134116
BC LL	0.0 PSF	HC-ENG	CR/MMA
TOT.LD.	40.0 PSF	SEQN-	37084
DUR.FAC.	1.25	FROM	JP
SPACING	24.0"	JREF-	1S20215 710

Top chord 2x4 SP #2 N
Bot chord 2x4 SP #2 N
Webs 2x4 SP #2 N
:Rt Bearing Leg 2x4 SP #2 N:

In lieu of structural panels use purlins to brace all flat TC @ 24" OC.

Plates sized for a minimum of 3.00 sq.in./piece.

110 mph wind, 10.94 ft mean hgt, ASCE 7-98, CLOSED bldg, not located within 4.50 ft from roof edge, CAT II, EXP B, wind TC DL=5.0 psf, wind BC DL=5.0 psf.

Right end vertical not exposed to wind pressure.

Deflection meets L/360 live and L/240 total load.

The overall height of this truss excluding overhang is 6-3-7.

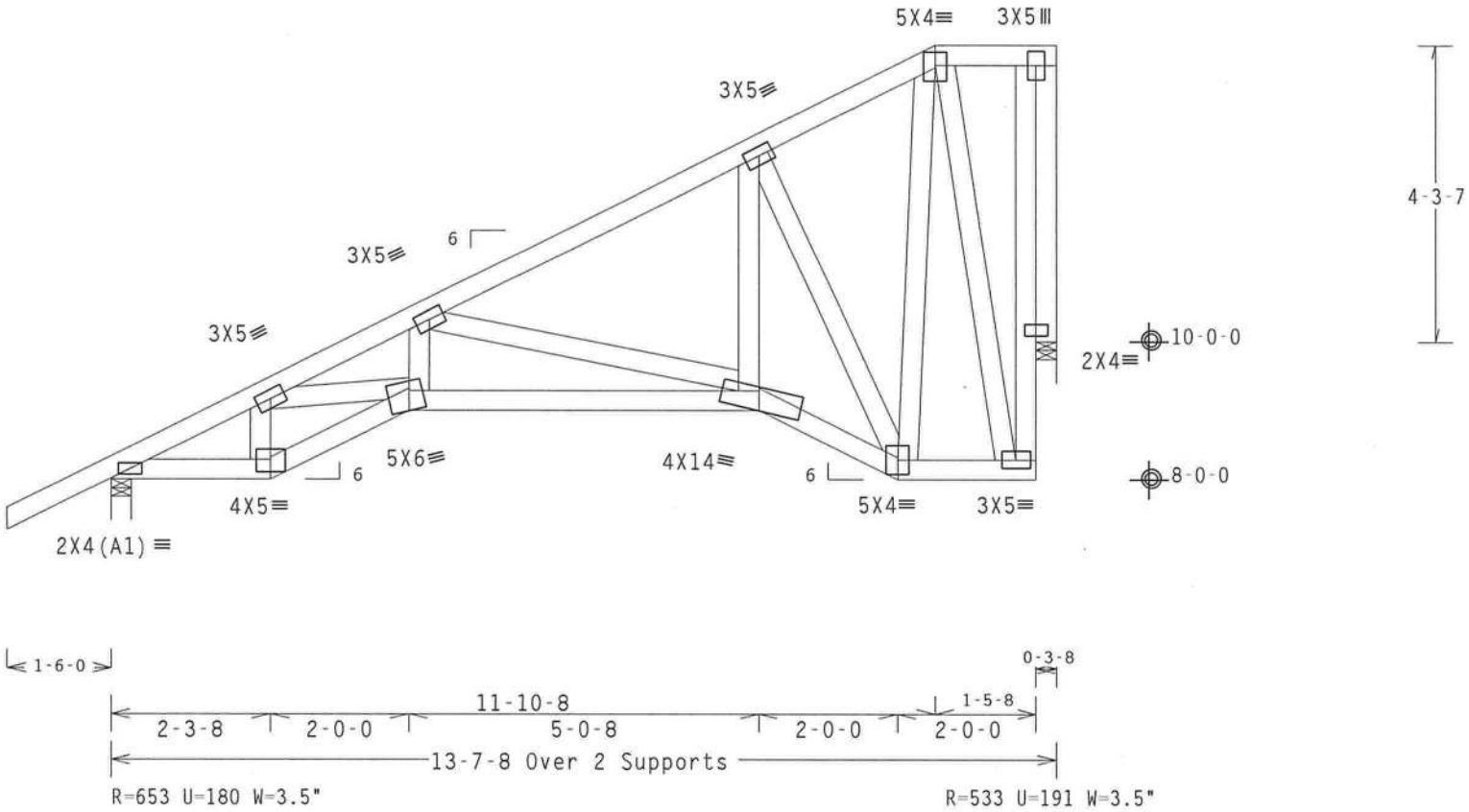

PLT TYP. Wave TPI 95\R Design Crit: TPI(STD)/FLBC 6.10 FL/-/5/-/-/R/- Scale =.375"/Ft.

ALPINE

Alpine Engineered Products, Inc.
Haines City, FL 33844
FL Certificate of Authorization # 5[illegible]

**WARNING* TRUSSES REQUIRE EXTREME CARE IN FABRICATION, HANDLING, SHIPPING, INSTALLING AND BRACING. REFER TO HIB-91 (HANDLING INSTALLING AND BRACING), PUBLISHED BY TPI (TRUSS PLATE INSTITUTE, 583 D'ONOFRIO DR., SUITE 200, MADISON, WI 53719). FOR SAFETY PRACTICES PRIOR TO PERFORMING THESE FUNCTIONS. UNLESS OTHERWISE INDICATED, TOP CHORD SHALL HAVE PROPERLY ATTACHED STRUCTURAL PANELS, BOTTOM CHORD SHALL HAVE A PROPERLY ATTACHED RIGID CEILING.
IMPORTANT FURNISH A COPY OF THIS DESIGN TO THE INSTALLATION CONTRACTOR. ALPINE ENGINEERED PRODUCTS, INC. SHALL NOT BE RESPONSIBLE FOR ANY DEVIATION FROM THIS DESIGN; ANY FAILURE TO BUILD THE TRUSSES IN CONFORMANCE WITH TPI; OR FABRICATING, HANDLING, SHIPPING, INSTALLING AND BRACING OF TRUSSES. THIS DESIGN CONFORMS WITH APPLICABLE PROVISIONS OF NDS (NATIONAL DESIGN SPEC. BY AF&PA) AND TPI. ALPINE CONNECTOR PLATES ARE MADE OF 20/16GA (W,HS/K) ASTM [illegible] (W, K/HS) GALV. STEEL. APPLY PLATES TO EACH FACE OF TRUSS AND UNLESS OTHERWISE LOCATED ON [illegible] DESIGN. POSITION PER DRAWINGS 160A-Z. ANY INSPECTION OF PLATES FOLLOWED BY (I) SHALL BE [illegible] ANNEX A3 OF TPI 1-2002 SEC. 3. A SEAL ON THIS DRAWING INDICATES ACCEPTANCE OF PROFESSIONAL ENGINEERING RESPONSIBILITY SOLELY FOR THE TRUSS COMPONENT DESIGN SHOWN. THE SUITABILITY AND USE OF THIS COMPONENT FOR ANY BUILDING IS THE RESPONSIBILITY OF THE BUILDING DESIGNER, PER ANSI/TPI 1 SEC. 2.

MANUEL MARTINEZ CERTIFICATE No. 47182 STATE OF FLORIDA PROFESSIONAL ENGINEER

TC LL	20.0 PSF	REF R215 -37467
TC DL	10.0 PSF	DATE 05/14/03
BC DL	10.0 PSF	DRW HCUSR215 03134117
BC LL	0.0 PSF	HC-ENG CR/MMA
TOT.LD.	40.0 PSF	SEQN- 37078
DUR.FAC.	1.25	FROM JP
SPACING	24.0"	JREF- 1S20215 710

Top chord 2x4 SP #2 N
Bot chord 2x4 SP #2 N
Webs 2x4 SP #2 N
:Rt Bearing Leg 2x4 SP #2 N:

In lieu of structural panels use purlins to brace all flat TC @ 24" OC.

Plates sized for a minimum of 3.00 sq.in./piece.

110 mph wind, 10.44 ft mean hgt, ASCE 7-98, CLOSED bldg, not located within 4.50 ft from roof edge, CAT II, EXP B, wind TC DL=5.0 psf, wind BC DL=5.0 psf.

Right end vertical not exposed to wind pressure.

Deflection meets L/360 live and L/240 total load.

The overall height of this truss excluding overhang is 5-3-7.

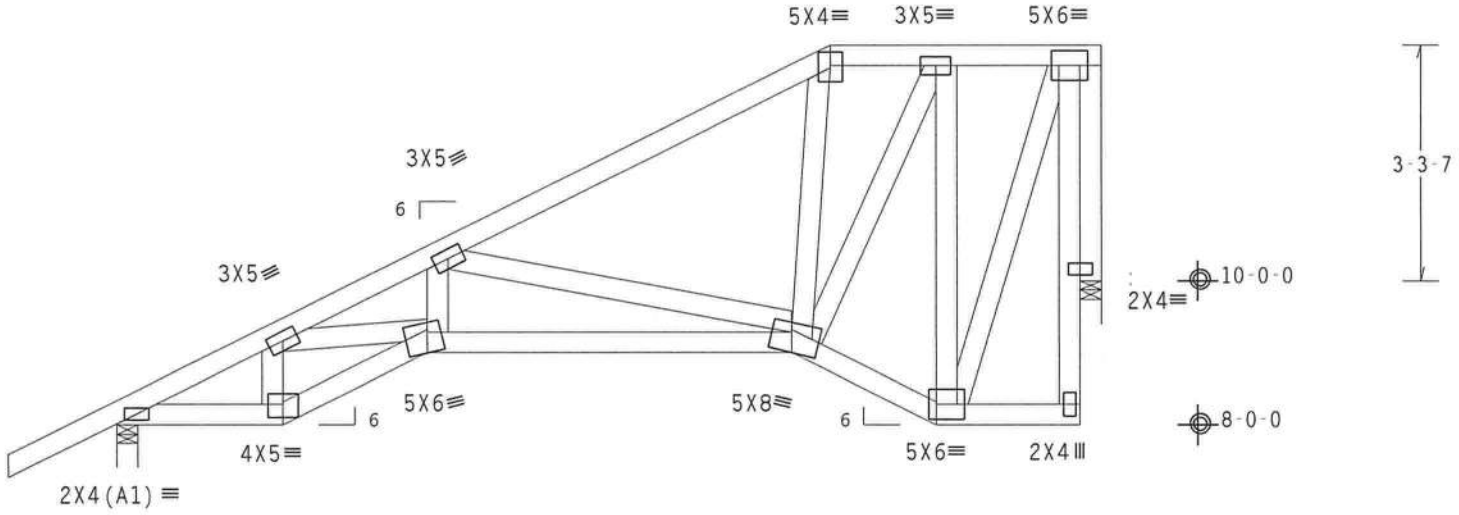

PLT TYP. Wave TPI 95\R Design Crit: TPI(STD)/FLBC 6.10 1 FL/-/5/-/-/R/- Scale =.375"/Ft.

ALPINE
Alpine Engineered Products, Inc.
Haines City, FL 33844
FL Certificate of Authorization # 5677

**WARNING* TRUSSES REQUIRE EXTREME CARE IN FABRICATION, HANDLING, SHIPPING, INSTALLING AND BRACING. REFER TO HIB-91 (HANDLING INSTALLING AND BRACING), PUBLISHED BY TPI (TRUSS PLATE INSTITUTE, 583 D'ONOFRIO DR., SUITE 200, MADISON, WI 53719). FOR SAFETY PRACTICES PRIOR TO PERFORMING THESE FUNCTIONS. UNLESS OTHERWISE INDICATED, TOP CHORD SHALL HAVE PROPERLY ATTACHED STRUCTURAL PANELS, BOTTOM CHORD SHALL HAVE A PROPERLY ATTACHED RIGID CEILING.
IMPORTANT FURNISH A COPY OF THIS DESIGN TO THE INSTALLATION CONTRACTOR. ALPINE ENGINEERED PRODUCTS, INC. SHALL NOT BE RESPONSIBLE FOR ANY DEVIATION FROM THIS DESIGN; ANY FAILURE TO BUILD THE TRUSSES IN CONFORMANCE WITH TPI; OR FABRICATING, HANDLING, SHIPPING, INSTALLING AND BRACING OF TRUSSES. THIS DESIGN CONFORMS WITH APPLICABLE PROVISIONS OF NDS (NATIONAL DESIGN SPEC. BY AF&PA) AND TPI. ALPINE CONNECTOR PLATES ARE MADE OF 20/16GA (W.HS/K) ASTM 653 (W, K/HS) GALV. STEEL. APPLY PLATES TO EACH FACE OF TRUSS AND UNLESS OTHERWISE LOCATED ON THIS DESIGN, POSITION PER DRAWINGS 160A-Z. ANY INSPECTION OF PLATES FOLLOWED BY (I) SHALL BE PER ANNEX A3 OF TPI 1-2002 SEC. 3. A SEAL ON THIS DRAWING INDICATES ACCEPTANCE OF PROFESSIONAL ENGINEERING RESPONSIBILITY SOLELY FOR THE TRUSS COMPONENT DESIGN SHOWN. THE SUITABILITY AND USE OF THIS COMPONENT FOR ANY BUILDING IS THE RESPONSIBILITY OF THE BUILDING DESIGNER, PER ANSI/TPI 1 SEC. 2.

MANUEL MARTINEZ CERTIFICATE No. 47182 STATE OF FLORIDA PROFESSIONAL ENGINEER

TC LL	20.0 PSF	REF	R215 -37468
TC DL	10.0 PSF	DATE	05/14/03
BC DL	10.0 PSF	DRW	HCUSR215 03134118
BC LL	0.0 PSF	HC-ENG	CR/MMA
TOT.LD.	40.0 PSF	SEQN-	37074
DUR.FAC.	1.25	FROM	JP
SPACING	24.0"	JREF-	1S20215 710

Top chord 2x4 SP #2 N :T2 2x6 SP #2 N:
Bot chord 2x6 SP #2 N
Webs 2x4 SP #2 N
:Rt Bearing Leg 2x4 SP #2 N:

In lieu of structural panels use purlins to brace all flat TC @ 24" OC.

Deflection meets L/360 live and L/240 total load.

The overall height of this truss excluding overhang is 4-3-7.

110 mph wind, 15.00 ft mean hgt, ASCE 7-98, CLOSED bldg, Located anywhere in roof, CAT II, EXP B, wind TC DL=5.0 psf, wind BC DL=5.0 psf.

Right end vertical not exposed to wind pressure.

#1 hip supports 7-10-8 jacks W/2 panel TC and no end vert.

Plates sized for a minimum of 3.00 sq.in./piece.

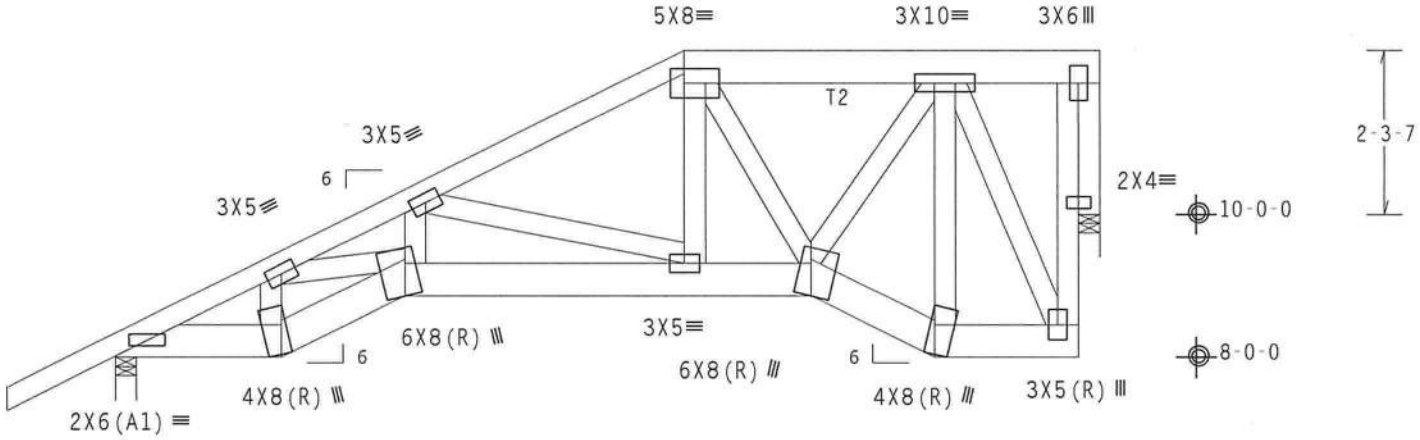

PLT TYP. Wave TPI 95\R Design Crit: TPI(STD)/FLBC 6.10 1 FL/-/5/-/-/R/- Scale =.375"/Ft.

ALPINE

Alpine Engineered Products, Inc.
Haines City, FL 33844
FL Certificate of Authorization # 5677

**WARNING* TRUSSES REQUIRE EXTREME CARE IN FABRICATION, HANDLING, SHIPPING, INSTALLING AND BRACING. REFER TO HIB-91 (HANDLING INSTALLING AND BRACING), PUBLISHED BY TPI (TRUSS PLATE INSTITUTE, 583 D'ONOFRIO DR., SUITE 200, MADISON, WI 53719). FOR SAFETY PRACTICES PRIOR TO PERFORMING THESE FUNCTIONS. UNLESS OTHERWISE INDICATED, TOP CHORD SHALL HAVE PROPERLY ATTACHED STRUCTURAL PANELS, BOTTOM CHORD SHALL HAVE A PROPERLY ATTACHED RIGID CEILING.
IMPORTANT FURNISH A COPY OF THIS DESIGN TO THE INSTALLATION CONTRACTOR. ALPINE ENGINEERED PRODUCTS, INC. SHALL NOT BE RESPONSIBLE FOR ANY DEVIATION FROM THIS DESIGN; ANY FAILURE TO BUILD THE TRUSSES IN CONFORMANCE WITH TPI; OR FABRICATING, HANDLING, SHIPPING, INSTALLING AND BRACING OF TRUSSES. THIS DESIGN CONFORMS WITH APPLICABLE PROVISIONS OF NDS (NATIONAL DESIGN SPEC. BY AF&PA) AND TPI. ALPINE CONNECTOR PLATES ARE MADE OF 20/16GA (W,HS/K) ASTM 653 (W, K/HS) GALV. STEEL. APPLY PLATES TO EACH FACE OF TRUSS AND UNLESS OTHERWISE LOCATED ON THIS DESIGN, POSITION PER DRAWINGS 160A-Z. ANY INSPECTION OF PLATES FOLLOWED BY (I) SHALL BE PER ANNEX A3 OF TPI 1-2002 SEC. 3. A SEAL ON THIS DRAWING INDICATES ACCEPTANCE OF PROFESSIONAL ENGINEERING RESPONSIBILITY SOLELY FOR THE TRUSS COMPONENT DESIGN SHOWN. THE SUITABILITY AND USE OF THIS COMPONENT FOR ANY BUILDING IS THE RESPONSIBILITY OF THE BUILDING DESIGNER, PER ANSI/TPI 1 SEC. 2.

MANUEL MARTINEZ
CERTIFICATE
No. 47182
STATE OF FLORIDA
PROFESSIONAL ENGINEER

TC LL	20.0 PSF	REF	R215 -37469
TC DL	10.0 PSF	DATE	05/14/03
BC DL	10.0 PSF	DRW	HCUSR215 03134119
BC LL	0.0 PSF	HC-ENG	CR/MMA
TOT.LD.	40.0 PSF	SEQN-	37070
DUR.FAC.	1.25	FROM	JP
SPACING	24.0"	JREF-	1S20215 710

Top chord 2x4 SP #2 N
Bot chord 2x4 SP #2 N
Webs 2x4 SP #2 N
:Lt Wedge 2x8 SP #1 Dense::Rt Wedge 2x8 SP #1 Dense:

SPECIAL LOADS
------(LUMBER DUR.FAC.=1.25 / PLATE DUR.FAC.=1.25)
TC - From 114 PLF at 0.00 to 114 PLF at 7.00
BC - From 20 PLF at 0.00 to 20 PLF at 7.00

THE BUILDING DESIGNER IS RESPONSIBLE FOR THE DESIGN OF THE ROOF AND CEILING DIAPHRAGMS, GABLE END SHEAR WALLS, AND SUPPORTING SHEAR WALLS. SHEAR WALLS MUST PROVIDE CONTINUOUS LATERAL RESTRAINT TO THE GABLE END. ALL CONNECTIONS TO BE DESIGNED BY THE BUILDING DESIGNER. THIS TRUSS IS DESIGNED TO CARRY IN PLANE LOAD ONLY. ANY LATERAL LOAD FROM WIND MUST BE TRANSFERED TO THE ROOF AND CEILING DIAPHRAGMS.

110 mph wind, 12.43 ft mean hgt, ASCE 7-98, CLOSED bldg, Located anywhere in roof, CAT II, EXP B, wind TC DL=5.0 psf, wind BC DL=5.0 psf.

See DWGS A11015EC0901 & GBLLETIN1001 for more requirements.

Deflection meets L/360 live and L/240 total load.

Plates sized for a minimum of 3.00 sq.in./piece.

The overall height of this truss excluding overhang is 4-2-3.

+ MEMBER TO BE LATERALLY BRACED FOR HORIZONTAL WIND LOADS. BRACING SYSTEM TO BE DESIGNED AND FURNISHED BY OTHERS.

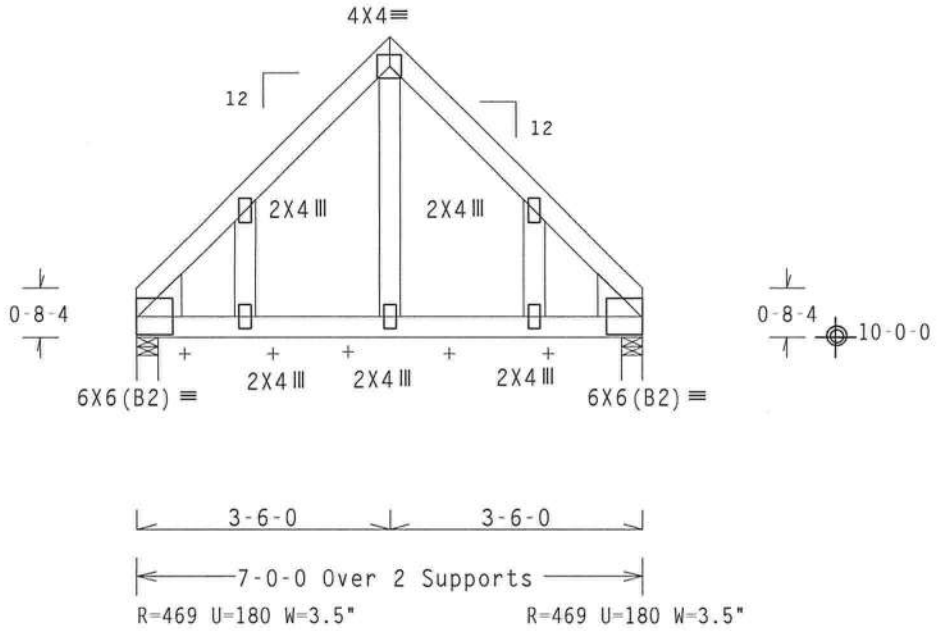

PLT TYP. Wave TPI 95\R Design Crit: TPI(STD)/FLBC 6.10.[illegible]1 FL/-/5/-/-/R/- Scale =.375"/Ft.

ALPINE
Alpine Engineered Products, Inc.
Haines City, FL 33844
FL Certificate of Authorization # 5[illegible]

**WARNING* TRUSSES REQUIRE EXTREME CARE IN FABRICATION, HANDLING, SHIPPING, INSTALLING AND BRACING. REFER TO HIB-91 (HANDLING INSTALLING AND BRACING), PUBLISHED BY TPI (TRUSS PLATE INSTITUTE, 583 D'ONOFRIO DR., SUITE 200, MADISON, WI 53719). FOR SAFETY PRACTICES PRIOR TO PERFORMING THESE FUNCTIONS. UNLESS OTHERWISE INDICATED, TOP CHORD SHALL HAVE PROPERLY ATTACHED STRUCTURAL PANELS, BOTTOM CHORD SHALL HAVE A PROPERLY ATTACHED RIGID CEILING.
IMPORTANT FURNISH A COPY OF THIS DESIGN TO THE INSTALLATION CONTRACTOR. ALPINE ENGINEERED PRODUCTS, INC. SHALL NOT BE RESPONSIBLE FOR ANY DEVIATION FROM THIS DESIGN; ANY FAILURE TO BUILD THE TRUSSES IN CONFORMANCE WITH TPI; OR FABRICATING, HANDLING, SHIPPING, INSTALLING AND BRACING OF TRUSSES. THIS DESIGN CONFORMS WITH APPLICABLE PROVISIONS OF NDS (NATIONAL DESIGN SPEC. BY AF&PA) AND TPI. ALPINE CONNECTOR PLATES ARE MADE OF 20/16GA (W,HS/K) ASTM 653 (W, K/HS) GALV. STEEL. APPLY PLATES TO EACH FACE OF TRUSS AND UNLESS OTHERWISE LOCATED ON THIS DESIGN. POSITION PER DRAWINGS 160A-Z. ANY INSPECTION OF PLATES FOLLOWED BY (I) SHALL BE PER ANNEX A3 OF TPI 1-2002 SEC. 3. A SEAL ON THIS DRAWING INDICATES ACCEPTANCE OF PROFESSIONAL ENGINEERING RESPONSIBILITY SOLELY FOR THE TRUSS COMPONENT DESIGN SHOWN. THE SUITABILITY AND USE OF THIS COMPONENT FOR ANY BUILDING IS THE RESPONSIBILITY OF THE BUILDING DESIGNER, PER ANSI/TPI 1 SEC. 2.

MANUEL MARTINEZ CERTIFICATE No. 47182 STATE OF FLORIDA PROFESSIONAL ENGINEER

TC LL	20.0 PSF	REF	R215 -37470
TC DL	10.0 PSF	DATE	05/14/03
BC DL	10.0 PSF	DRW	HCUSR215 03134120
BC LL	0.0 PSF	HC-ENG	CR/MMA
TOT.LD.	40.0 PSF	SEQN-	37006
DUR.FAC.	1.25	FROM	JP
SPACING	24.0"	JREF-	1S20215 Z10

Top chord 2x4 SP #2 N
Bot chord 2x4 SP #2 N
Webs 2x4 SP #2 N

Deflection meets L/360 live and L/240 total load.

The overall height of this truss excluding overhang is 4-7-3.

110 mph wind, 12.10 ft mean hgt, ASCE 7-98, CLOSED bldg, Located anywhere in roof, CAT II, EXP B, wind TC DL=5.0 psf, wind BC DL=5.0 psf.

Plates sized for a minimum of 3.00 sq.in./piece.

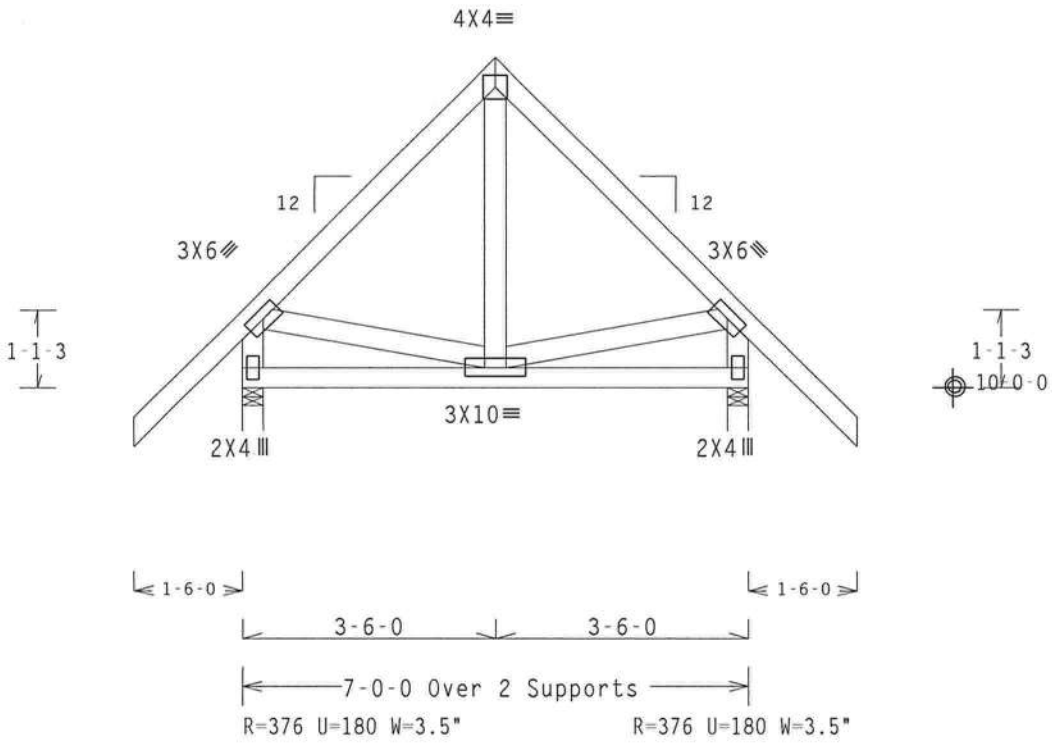

PLT TYP. Wave TPI 95\R Design Crit: TPI(STD)/FLBC 6.10 FL/-/5/-/-/R/- Scale =.375"/Ft.

ALPINE

Alpine Engineered Products, Inc.
Haines City, FL 33844
FL Certificate of Authorization # 5677

**WARNING* TRUSSES REQUIRE EXTREME CARE IN FABRICATION, HANDLING, SHIPPING, INSTALLING AND BRACING. REFER TO HIB-91 (HANDLING INSTALLING AND BRACING), PUBLISHED BY TPI (TRUSS PLATE INSTITUTE, 583 D'ONOFRIO DR., SUITE 200, MADISON, WI 53719). FOR SAFETY PRACTICES PRIOR TO PERFORMING THESE FUNCTIONS. UNLESS OTHERWISE INDICATED, TOP CHORD SHALL HAVE PROPERLY ATTACHED STRUCTURAL PANELS, BOTTOM CHORD SHALL HAVE A PROPERLY ATTACHED RIGID CEILING.
IMPORTANT FURNISH A COPY OF THIS DESIGN TO THE INSTALLATION CONTRACTOR. ALPINE ENGINEERED PRODUCTS, INC. SHALL NOT BE RESPONSIBLE FOR ANY DEVIATION FROM THIS DESIGN; ANY FAILURE TO BUILD THE TRUSSES IN CONFORMANCE WITH TPI; OR FABRICATING, HANDLING, SHIPPING, INSTALLING AND BRACING OF TRUSSES. THIS DESIGN CONFORMS WITH APPLICABLE PROVISIONS OF NDS (NATIONAL DESIGN SPEC, BY AF&PA) AND TPI. ALPINE CONNECTOR PLATES ARE MADE OF 20/16GA (W,HS/K) ASTM [illegible] (W, K/HS) GALV. STEEL. APPLY PLATES TO EACH FACE OF TRUSS AND UNLESS OTHERWISE LOCATED ON THIS DESIGN, POSITION PER DRAWINGS 160A-Z. ANY INSPECTION OF PLATES FOLLOWED BY (I) SHALL BE [illegible] ANNEX A3 OF TPI 1-2002 SEC. 3. A SEAL ON THIS DRAWING INDICATES ACCEPTANCE OF PROFESSIONAL ENGINEERING RESPONSIBILITY SOLELY FOR THE TRUSS COMPONENT DESIGN SHOWN. THE SUITABILITY AND USE OF THIS COMPONENT FOR ANY BUILDING IS THE RESPONSIBILITY OF THE BUILDING DESIGNER, PER ANSI/TPI 1 SEC. 2.

MANUEL MARTINEZ
CERTIFICATE
No. 47182
STATE OF FLORIDA
PROFESSIONAL ENGINEER

TC LL	20.0 PSF	REF	R215 -37471
TC DL	10.0 PSF	DATE	05/14/03
BC DL	10.0 PSF	DRW	HCUSR215 03134121
BC LL	0.0 PSF	HC-ENG	CR/MMA *
TOT.LD.	40.0 PSF	SEQN-	37002
DUR.FAC.	1.25	FROM	JP
SPACING	24.0"	JREF-	1S20215 Z10

BEARING BLOCK NAIL SPACING DETAIL

MINIMUM SPACING FOR SINGLE BEARING BLOCK IS SHOWN. DOUBLE NAIL SPACINGS AND STAGGER NAILING FOR TWO BLOCKS. GREATER SPACING MAY BE REQUIRED TO AVOID SPLITTING.

A – EDGE DISTANCE AND SPACING BETWEEN STAGGERED ROWS OF NAILS (6 NAIL DIAMETERS)
B – SPACING OF NAILS IN A ROW (12 NAIL DIAMETERS)
C – END DISTANCE (15 NAIL DIAMETERS)

IF NAIL HOLES ARE PREBORED, SOME SPACING MAY BE REDUCED BY THE AMOUNTS GIVEN BELOW:
* SPACING MAY BE REDUCED BY 50%
** SPACING MAY BE REDUCED BY 33%

BEARING BLOCK TO BE SAME SPECIES, SIZE AND GRADE AS BOTTOM CHORD.

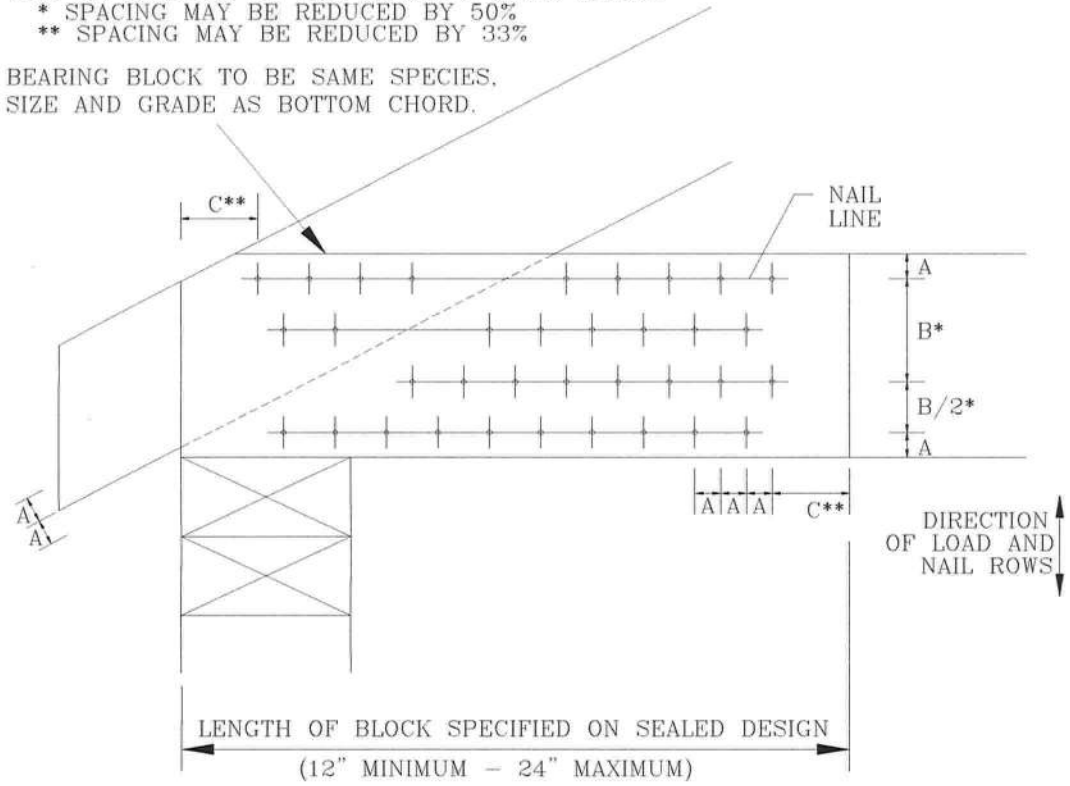

MAXIMUM NUMBER OF NAIL LINES PARALLEL TO GRAIN

NAIL TYPE	CHORD SIZE 2X4	2X6	2X8	2X10	2X12
8d BOX (0.113"X2.5")	3	6	9	12	15
10d BOX (0.128"X3")	3	5	7	10	12
12d BOX (0.128"X3.25")	3	5	7	10	12
16d BOX (0.135"X3.5")	3	5	7	10	12
20d BOX (0.148"X4")	2	4	5	6	8
8d COMMON (0.131"X2.5")	3	5	7	10	12
10d COMMON (0.148"X3")	2	4	6	8	10
12d COMMON (0.148"X3.25")	2	4	6	8	10
16d COMMON (0.162"X3.5")	2	4	6	8	10
0.120"X2.5" GUN	3	6	8	11	14
0.131"X2.5" GUN	3	5	7	10	12
0.120"X3.0" GUN	3	6	8	11	14
0.131"x3.0" GUN	3	5	7	10	12

MINIMUM NAIL SPACING DISTANCES

NAIL TYPE	DISTANCES A	B*	C**
8d BOX (0.113"X2.5")	3/4"	1 3/8"	1 3/4"
10d BOX (0.128"X3")	7/8"	1 5/8"	2"
12d BOX (0.128"X3.25")	7/8"	1 5/8"	2"
16d BOX (0.135"X3.5")	7/8"	1 5/8"	2 1/8"
20d BOX (0.148"X4")	1"	1 7/8"	2 1/4"
8d COMMON (0.131"X2.5")	7/8"	1 5/8"	2"
10d COMMON (0.148"X3")	1"	1 7/8"	2 1/4"
12d COMMON (0.148"X3.25")	1"	1 7/8"	2 1/4"
16d COMMON (0.162"X3.5")	1'	2"	2 1/2"
0.120"X2.5" GUN	3/4"	1 1/2"	1 7/8"
0.131"X2.5" GUN	7/8"	1 5/8"	2"
0.120"X3.0" GUN	3/4"	1 1/2"	1 7/8"
0.131"x3.0" GUN	7/8"	1 5/8"	2"

THIS DRAWING REPLACES DRAWING B139 AND CNBRGBLK0699

ALPINE

ALPINE ENGINEERED PRODUCTS, INC.
POMPANO BEACH, FLORIDA

WARNING TRUSSES REQUIRE EXTREME CARE IN FABRICATING, HANDLING, SHIPPING, INSTALLING AND BRACING. REFER TO HIB-91 (HANDLING INSTALLING AND BRACING), PUBLISHED BY TPI (TRUSS PLATE INSTITUTE, 583 D'ONOFRIO DR., SUITE 200, MADISON, WI. 53719) FOR SAFETY PRACTICES PRIOR TO PERFORMING THESE FUNCTIONS. UNLESS OTHERWISE INDICATED, TOP CHORD SHALL HAVE PROPERLY ATTACHED STRUCTURAL PANELS AND BOTTOM CHORD SHALL HAVE A PROPERLY ATTACHED RIGID CEILING.
IMPORTANT FURNISH COPY OF THIS DESIGN TO INSTALLATION CONTRACTOR. ALPINE ENGINEERED PRODUCTS, INC., SHALL NOT BE RESPONSIBLE FOR ANY DEVIATION FROM THIS DESIGN; ANY FAILURE TO BUILD THE TRUSS IN CONFORMANCE WITH TPI; OR FABRICATING, HANDLING, SHIPPING, INSTALLING & BRACING OF TRUSSES. DESIGN CONFORMS WITH APPLICABLE PROVISIONS OF NDS (NATIONAL DESIGN SPEC. BY AF&PA) AND TPI. ALPINE CONNECTOR PLATES ARE MADE OF 20/16GA(W,HS/K) ASTM A653 GR40/60(W,K/HS) GALV. STEEL. APPLY PLATES TO EACH FACE OF TRUSS AND, UNLESS OTHERWISE LOCATED ON THIS DESIGN, POSITION PER DRAWINGS 160A-Z. ANY INSPECTION OF PLATES FOLLOWED BY (1) SHALL BE PER ANNEX A3 OF TPI 1-2002 SEC. 3. A SEAL ON THIS DRAWING INDICATES ACCEPTANCE OF PROFESSIONAL ENGINEERING RESPONSIBILITY SOLELY FOR THE TRUSS COMPONENT DESIGN SHOWN. THE SUITABILITY AND USE OF THIS COMPONENT FOR ANY BUILDING IS THE RESPONSIBILITY OF THE BUILDING DESIGNER, PER ANSI/TPI 1 SEC. 2.

MANUEL MARTINEZ
CERTIFICATE
No. 47182
STATE OF FLORIDA
PROFESSIONAL ENGINEER

REF	BEARING BLOCK
DATE	02/18/03
DRWG	CNBRGBLK0203
-ENG	SJP/KAR

CLB WEB BRACE SUBSTITUTION

THIS DETAIL IS TO BE USED WHEN CONTINUOUS LATERAL BRACING (CLB) IS SPECIFIED ON AN ALPINE TRUSS DESIGN BUT AN ALTERNATIVE WEB BRACING METHOD IS DESIRED.

NOTES:

THIS DETAIL IS ONLY APPLICABLE FOR CHANGING THE SPECIFIED CLB SHOWN ON SINGLE PLY SEALED DESIGNS TO T-BRACING OR SCAB BRACING.

ALTERNATIVE BRACING SPECIFIED IN CHART BELOW MAY BE CONSERVATIVE. FOR MINIMUM ALTERNATIVE BRACING, RE-RUN DESIGN WITH APPROPRIATE BRACING.

WEB MEMBER SIZE	SPECIFIED CLB BRACING	ALTERNATIVE BRACING T OR L-BRACE	ALTERNATIVE BRACING SCAB BRACE
2X3 OR 2X4	1 ROW	2X4	1-2X4
2X3 OR 2X4	2 ROWS	2X6	2-2X4
2X6	1 ROW	2X4	1-2X6
2X6	2 ROWS	2X6	2-2X4(*)
2X8	1 ROW	2X6	1-2X8
2X8	2 ROWS	2X6	2-2X6(*)

T-BRACE, L-BRACE AND SCAB BRACE TO BE SAME SPECIES AND GRADE OR BETTER THAN WEB MEMBER UNLESS SPECIFIED OTHERWISE ON ENGINEER'S SEALED DESIGN.

(*) CENTER SCAB ON WIDE FACE OF WEB. APPLY (1) SCAB TO EACH FACE OF WEB.

T-BRACING OR L-BRACING:

APPLY TO EITHER SIDE OF WEB NARROW FACE

ATTACH WITH 16d NAILS AT 6" O.C.

BRACE IS A MINIMUM 80% OF WEB MEMBER LENGTH

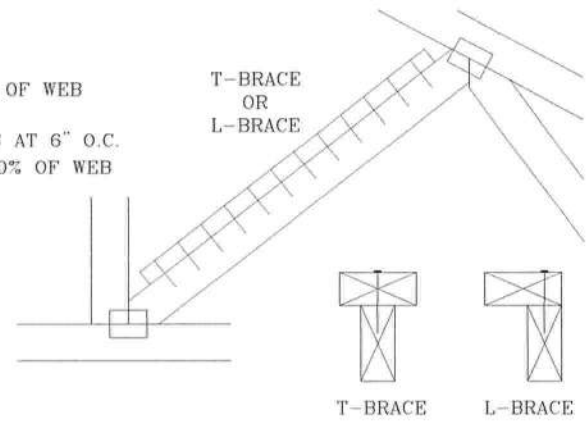

SCAB BRACING:

APPLY SCAB(S) TO WIDE FACE OF WEB.

NO MORE THAN (1) SCAB PER FACE.

ATTACH WITH 10d NAILS AT 6" O.C.

BRACE IS A MINIMUM 80% OF WEB MEMBER LENGTH

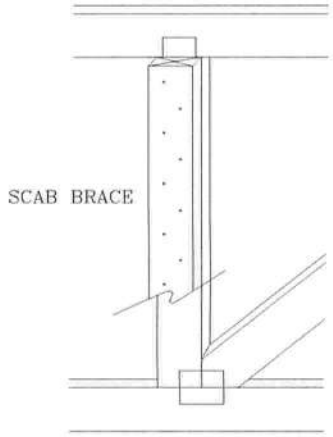

THIS DRAWING REPLACES DRAWING 579,640

ALPINE

ALPINE ENGINEERED PRODUCTS, INC.
POMPANO BEACH, FLORIDA

WARNING TRUSSES REQUIRE EXTREME CARE IN FABRICATING, HANDLING, SHIPPING, INSTALLING AND BRACING. REFER TO HIB-91 (HANDLING INSTALLING AND BRACING), PUBLISHED BY TPI (TRUSS PLATE INSTITUTE, 583 D'ONOFRIO DR., SUITE 200, MADISON, WI 53719) FOR SAFETY PRACTICES PRIOR TO PERFORMING THESE FUNCTIONS. UNLESS OTHERWISE INDICATED, TOP CHORD SHALL HAVE PROPERLY ATTACHED STRUCTURAL PANELS AND BOTTOM CHORD SHALL HAVE A PROPERLY ATTACHED RIGID CEILING.
IMPORTANT FURNISH COPY OF THIS DESIGN TO INSTALLATION CONTRACTOR. ALPINE ENGINEERED PRODUCTS, INC., SHALL NOT BE RESPONSIBLE FOR ANY DEVIATION FROM THIS DESIGN; ANY FAILURE TO BUILD THE TRUSS IN CONFORMANCE WITH TPI; OR FABRICATING, HANDLING, SHIPPING, INSTALLING & BRACING OF TRUSSES. DESIGN CONFORMS WITH APPLICABLE PROVISIONS OF NDS (NATIONAL DESIGN SPEC. BY AF&PA) AND TPI. ALPINE CONNECTOR PLATES ARE MADE OF 20/16GA(W,HS/K) ASTM A653 GR40/60(W,K/HS) GALV. STEEL. APPLY PLATES TO EACH FACE OF TRUSS AND, UNLESS OTHERWISE LOCATED ON THIS DESIGN, POSITION PER DRAWINGS 160A-Z. ANY INSPECTION OF PLATES FOLLOWED BY (I) SHALL BE PER ANNEX A3 OF TPI 1-2002 SEC. 3. A SEAL ON THIS DRAWING INDICATES ACCEPTANCE OF PROFESSIONAL ENGINEERING RESPONSIBILITY SOLELY FOR THE TRUSS COMPONENT DESIGN SHOWN. THE SUITABILITY AND USE OF THIS COMPONENT FOR ANY BUILDING IS THE RESPONSIBILITY OF THE BUILDING DESIGNER, PER ANSI/TPI 1 SEC. 2.

MANUEL MARTINEZ
CERTIFICATE
No. 47182
STATE OF FLORIDA
PROFESSIONAL ENGINEER

TC LL	PSF	REF CLB SUBST.
TC DL	PSF	DATE 02/18/03
BC DL	PSF	DRWG BRCLBSUB0203
BC LL	PSF	-ENG MLH/KAR
TOT. LD.	PSF	
DUR. FAC.		
SPACING		

ASCE 7-98: 110 MPH WIND SPEED, 15' MEAN HEIGHT, ENCLOSED, I = 1.00, EXPOSURE C

MAX GABLE VERTICAL LENGTH

2X4 GABLE VERTICAL SPACING	SPECIES	GRADE \ BRACE	NO BRACES	(1) 1X4 "L" BRACE * GROUP A	(1) 1X4 "L" BRACE * GROUP B	(1) 2X4 "L" BRACE * GROUP A	(1) 2X4 "L" BRACE * GROUP B	(2) 2X4 "L" BRACE ** GROUP A	(2) 2X4 "L" BRACE ** GROUP B	(1) 2X6 "L" BRACE * GROUP A	(1) 2X6 "L" BRACE * GROUP B	(2) 2X6 "L" BRACE ** GROUP A	(2) 2X6 "L" BRACE ** GROUP B
24" O.C.	SPF HF	#1 / #2	3' 10"	6' 8"	6' 10"	7' 11"	8' 1"	9' 5"	9' 8"	12' 5"	12' 9"	14' 0"	14' 0"
		#3	3' 9"	6' 0"	6' 0"	7' 11"	7' 11"	9' 5"	9' 5"	12' 4"	12' 4"	14' 0"	14' 0"
		STUD	3' 9"	6' 0"	6' 0"	7' 11"	7' 11"	9' 5"	9' 5"	12' 3"	12' 3"	14' 0"	14' 0"
		STANDARD	3' 9"	5' 2"	5' 2"	6' 9"	6' 9"	9' 1"	9' 1"	10' 7"	10' 7"	14' 0"	14' 0"
	SP DFL	#1	4' 3"	6' 8"	7' 2"	7' 11"	8' 6"	9' 5"	10' 2"	12' 5"	13' 5"	14' 0"	14' 0"
		#2	4' 2"	6' 8"	7' 2"	7' 11"	8' 6"	9' 5"	10' 2"	12' 5"	13' 5"	14' 0"	14' 0"
		#3	4' 0"	6' 2"	6' 2"	7' 11"	8' 1"	9' 5"	9' 11"	12' 5"	12' 8"	14' 0"	14' 0"
		STUD	4' 0"	6' 1"	6' 1"	7' 11"	8' 0"	9' 5"	9' 11"	12' 5"	12' 6"	14' 0"	14' 0"
		STANDARD	3' 10"	5' 3"	5' 3"	6' 11"	6' 11"	9' 4"	9' 4"	10' 10"	10' 10"	14' 0"	14' 0"
16" O.C.	SPF HF	#1 / #2	4' 5"	7' 8"	7' 10"	9' 1"	9' 4"	10' 10"	11' 1"	14' 0"	14' 0"	14' 0"	14' 0"
		#3	4' 4"	7' 4"	7' 4"	9' 1"	9' 1"	10' 10"	10' 10"	14' 0"	14' 0"	14' 0"	14' 0"
		STUD	4' 4"	7' 4"	7' 4"	9' 1"	9' 1"	10' 10"	10' 10"	14' 0"	14' 0"	14' 0"	14' 0"
		STANDARD	4' 4"	6' 4"	6' 4"	8' 4"	8' 4"	10' 10"	10' 10"	12' 11"	12' 11"	14' 0"	14' 0"
	SP DFL	#1	4' 10"	7' 8"	8' 3"	9' 1"	9' 9"	10' 10"	11' 8"	14' 0"	14' 0"	14' 0"	14' 0"
		#2	4' 9"	7' 8"	8' 3"	9' 1"	9' 9"	10' 10"	11' 8"	14' 0"	14' 0"	14' 0"	14' 0"
		#3	4' 6"	7' 7"	7' 7"	9' 1"	9' 6"	10' 10"	11' 4"	14' 0"	14' 0"	14' 0"	14' 0"
		STUD	4' 6"	7' 6"	7' 6"	9' 1"	9' 6"	10' 10"	11' 4"	14' 0"	14' 0"	14' 0"	14' 0"
		STANDARD	4' 5"	6' 5"	6' 5"	8' 6"	8' 6"	10' 10"	11' 1"	13' 3"	13' 3"	14' 0"	14' 0"
12" O.C.	SPF HF	#1 / #2	4' 11"	8' 5"	8' 8"	10' 0"	10' 3"	11' 11"	12' 3"	14' 0"	14' 0"	14' 0"	14' 0"
		#3	4' 9"	8' 5"	8' 5"	10' 0"	10' 0"	11' 11"	11' 11"	14' 0"	14' 0"	14' 0"	14' 0"
		STUD	4' 9"	8' 5"	8' 5"	10' 0"	10' 0"	11' 11"	11' 11"	14' 0"	14' 0"	14' 0"	14' 0"
		STANDARD	4' 9"	7' 3"	7' 3"	9' 7"	9' 7"	11' 11"	11' 11"	14' 0"	14' 0"	14' 0"	14' 0"
	SP DFL	#1	5' 4"	8' 5"	9' 1"	10' 0"	10' 9"	11' 11"	12' 10"	14' 0"	14' 0"	14' 0"	14' 0"
		#2	5' 3"	8' 5"	9' 1"	10' 0"	10' 9"	11' 11"	12' 10"	14' 0"	14' 0"	14' 0"	14' 0"
		#3	5' 0"	8' 5"	8' 5"	10' 0"	10' 6"	11' 11"	12' 6"	14' 0"	14' 0"	14' 0"	14' 0"
		STUD	5' 0"	8' 5"	8' 7"	10' 0"	10' 6"	11' 11"	12' 6"	14' 0"	14' 0"	14' 0"	14' 0"
		STANDARD	4' 11"	7' 5"	7' 5"	9' 10"	9' 10"	11' 11"	12' 3"	14' 0"	14' 0"	14' 0"	14' 0"

BRACING GROUP SPECIES AND GRADES:

GROUP A:

SPRUCE-PINE-FIR

#1 / #2	STANDARD
#3	STUD

HEM-FIR

#2	STUD
#3	STANDARD

DOUGLAS FIR-LARCH

#3
STUD
STANDARD

SOUTHERN PINE

#3
STUD
STANDARD

GROUP B:

HEM-FIR

#1 & BTR
#1

SOUTHERN PINE

#1
#2

DOUGLAS FIR-LARCH

#1
#2

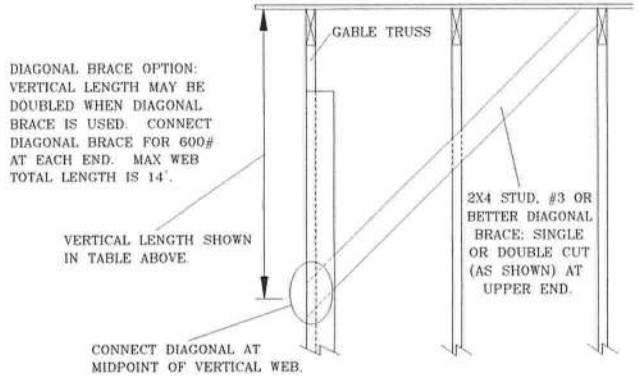

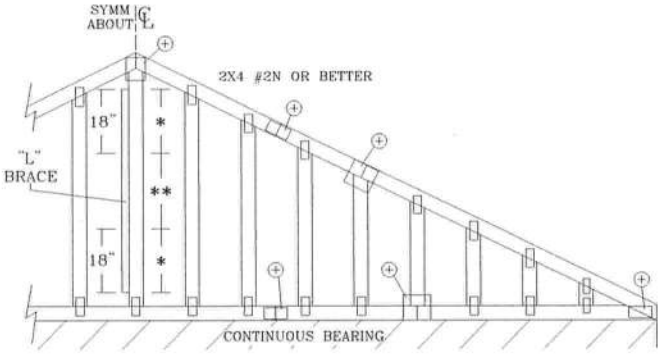

REFER TO CHART ABOVE FOR MAX GABLE VERTICAL LENGTH.

GABLE TRUSS DETAIL NOTES:

LIVE LOAD DEFLECTION CRITERIA IS L/240.

PROVIDE UPLIFT CONNECTIONS FOR 80 PLF OVER CONTINUOUS BEARING (5 PSF TC DEAD LOAD).

GABLE END SUPPORTS LOAD FROM 4' 0" OUTLOOKERS WITH 2' 0" OVERHANG, OR 12" PLYWOOD OVERHANG.

ATTACH EACH "L" BRACE WITH 10d NAILS.
* FOR (1) "L" BRACE: SPACE NAILS AT 2" O.C. IN 18" END ZONES AND 4" O.C. BETWEEN ZONES.
** FOR (2) "L" BRACES: SPACE NAILS AT 3" O.C. IN 18" END ZONES AND 6" O.C. BETWEEN ZONES.

"L" BRACING MUST BE A MINIMUM OF 80% OF WEB MEMBER LENGTH.

GABLE VERTICAL PLATE SIZES

VERTICAL LENGTH	NO SPLICE
LESS THAN 4' 0"	1X4 OR 2X3
GREATER THAN 4' 0", BUT LESS THAN 11' 6"	2X4
GREATER THAN 11' 6"	2.5X4

\+ REFER TO COMMON TRUSS DESIGN FOR PEAK, SPLICE, AND HEEL PLATES.

ALPINE

ALPINE ENGINEERED PRODUCTS, INC.
POMPANO BEACH, FLORIDA

WARNING TRUSSES REQUIRE EXTREME CARE IN FABRICATING, HANDLING, SHIPPING, INSTALLING AND BRACING. REFER TO HIB-91 (HANDLING INSTALLING AND BRACING), PUBLISHED BY TPI (TRUSS PLATE INSTITUTE, 583 D'ONOFRIO DR., SUITE 200, MADISON, WI. 53719) FOR SAFETY PRACTICES PRIOR TO PERFORMING THESE FUNCTIONS. UNLESS OTHERWISE INDICATED, TOP CHORD SHALL HAVE PROPERLY ATTACHED STRUCTURAL PANELS AND BOTTOM CHORD SHALL HAVE A PROPERLY ATTACHED RIGID CEILING.
IMPORTANT FURNISH COPY OF THIS DESIGN TO INSTALLATION CONTRACTOR. ALPINE ENGINEERED PRODUCTS, INC., SHALL NOT BE RESPONSIBLE FOR ANY DEVIATION FROM THIS DESIGN; ANY FAILURE TO BUILD THE TRUSS IN CONFORMANCE WITH TPI; OR FABRICATING, HANDLING, SHIPPING, INSTALLING & BRACING OF TRUSSES. DESIGN CONFORMS WITH APPLICABLE PROVISIONS OF NDS (NATIONAL DESIGN SPEC. BY AF&PA) AND TPI. ALPINE CONNECTOR PLATES ARE MADE OF 20/16GA(W,HS/K) ASTM A653 GR40/60(W,K/HS) GALV. STEEL. APPLY PLATES TO EACH FACE OF TRUSS AND, UNLESS OTHERWISE LOCATED ON THIS DESIGN, POSITION PER DRAWINGS 160A-Z. ANY INSPECTION OF PLATES FOLLOWED BY (1) SHALL BE PER ANNEX A3 OF TPI 1-2002 SEC. 3. A SEAL ON THIS DRAWING INDICATES ACCEPTANCE OF PROFESSIONAL ENGINEERING RESPONSIBILITY SOLELY FOR THE TRUSS COMPONENT DESIGN SHOWN. THE SUITABILITY AND USE OF THIS COMPONENT FOR ANY BUILDING IS THE RESPONSIBILITY OF THE BUILDING DESIGNER, PER ANSI/TPI 1 SEC. 2.

MANUEL MARTINEZ
CERTIFICATE
No. 47182
STATE OF FLORIDA
PROFESSIONAL ENGINEER

MAX. TOT. LD. 60 PSF

MAX. SPACING 24.0"

REF	ASCE7-98-GAB11015
DATE	02/18/03
DRWG	A11015EC0203
-ENG	

GABLE DETAIL
FOR LET-IN VERTICALS

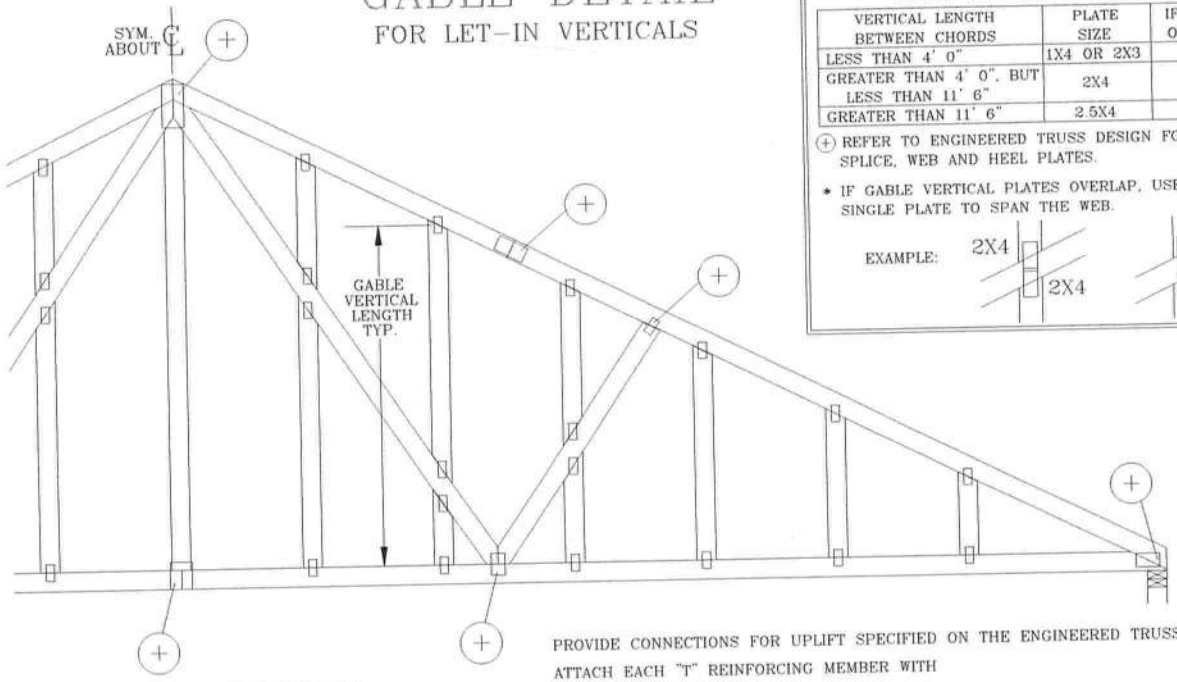

GABLE VERTICAL PLATE SIZES		
VERTICAL LENGTH BETWEEN CHORDS	PLATE SIZE	IF PLATES OVERLAP*
LESS THAN 4' 0"	1X4 OR 2X3	2X8
GREATER THAN 4' 0", BUT LESS THAN 11' 6"	2X4	2X8
GREATER THAN 11' 6"	2.5X4	2.5X8

(+) REFER TO ENGINEERED TRUSS DESIGN FOR PEAK, SPLICE, WEB AND HEEL PLATES.

* IF GABLE VERTICAL PLATES OVERLAP, USE A SINGLE PLATE TO SPAN THE WEB.

EXAMPLE:

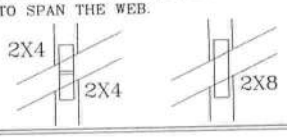

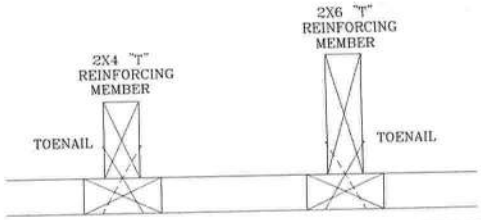

TO CONVERT FROM "L" TO "T" REINFORCING MEMBERS, MULTIPLY "T" FACTOR BY LENGTH (BASED ON GABLE VERTICAL SPECIES, GRADE AND SPACING) FOR (1) 2X4 "L" BRACE, GROUP A, OBTAINED FROM THE APPROPRIATE ALPINE GABLE DETAIL FOR ASCE OR SBCCI WIND LOAD.

MAXIMUM ALLOWABLE "T" REINFORCED GABLE VERTICAL LENGTH IS 14' FROM TOP TO BOTTOM CHORD.

WEB LENGTH INCREASE W/ "T" BRACE

WIND SPEED AND MRH	"T" REINF. MBR. SIZE	SBCCI	ASCE
110 MPH 15 FT	2x4	10 %	10 %
	2x6	40 %	50 %
110 MPH 30 FT	2x4	10 %	10 %
	2x6	50 %	50 %
100 MPH 15 FT	2x4	10 %	10 %
	2x6	30 %	50 %
100 MPH 30 FT	2x4	10 %	10 %
	2x6	40 %	40 %
90 MPH 15 FT	2x4	20 %	10 %
	2x6	20 %	40 %
90 MPH 30 FT	2x4	10 %	10 %
	2x6	30 %	50 %
80 MPH 15 FT	2x4	10 %	20 %
	2x6	10 %	30 %
80 MPH 30 FT	2x4	20 %	10 %
	2x6	20 %	40 %
70 MPH 15 FT	2x4	0 %	20 %
	2x6	0 %	20 %
70 MPH 30 FT	2x4	10 %	20 %
	2x6	10 %	30 %

EXAMPLE:
ASCE WIND SPEED = 100 MPH
MEAN ROOF HEIGHT = 30 FT
GABLE VERTICAL = 24" O.C. SP #3
"T" REINFORCING MEMBER SIZE = 2X4
"T" BRACE INCREASE (FROM ABOVE) = 10% = 1.10
(1) 2X4 "L" BRACE LENGTH = 6' 7"
MAXIMUM "T" REINFORCED GABLE VERTICAL LENGTH
1.10 x 6' 7" = 7' 3"

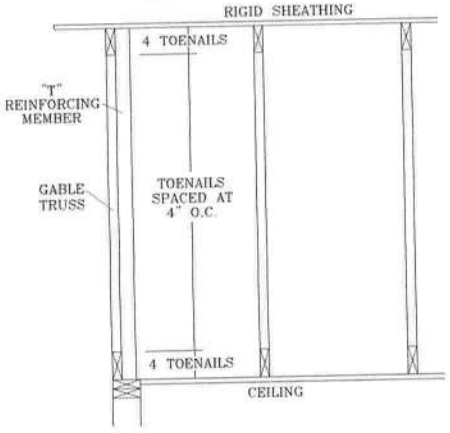

PROVIDE CONNECTIONS FOR UPLIFT SPECIFIED ON THE ENGINEERED TRUSS DESIGN.

ATTACH EACH "T" REINFORCING MEMBER WITH
- HAND DRIVEN NAILS:
  10d COMMON TOENAILS AT 4" O.C. PLUS (4) 16d COMMON TOENAILS IN TOP AND BOTTOM CHORD.
- GUN DRIVEN NAILS – 0.131" X 3":
  TOENAILS AT 4" O.C. PLUS (4) TOENAILS IN TOP AND BOTTOM CHORD.

THIS DETAIL TO BE USED WITH THE APPROPRIATE ALPINE GABLE DETAIL FOR ASCE OR SBCCI WIND LOAD.
- ASCE 7-93 GABLE DETAIL DRAWINGS
  A11015EN0699, A10015EN0699, A09015EN0699, A08015EN0699, A07015EN0699
  A11030EN0699, A10030EN0699, A09030EN0699, A08030EN0699, A07030EN0699
- ASCE 7-98 GABLE DETAIL DRAWINGS
  A13015EC0901, A12015EC0901, A11015EC0901, A10015EC0901, A08515EC0901
  A13030EC0901, A12030EC0901, A11030EC0901, A10030EC0901, A08530EC0901
- SBCCI GABLE DETAIL DRAWINGS
  S11015EN0699, S10015EN0699, S09015EN0699, S08015EN0699, S07015EN0699
  S11030EN0699, S10030EN0699, S09030EN0699, S08030EN0699, S07030EN0699

SEE APPROPRIATE ALPINE GABLE DETAIL (ASCE OR SBCCI WIND LOAD) FOR MAXIMUM UNREINFORCED GABLE VERTICAL LENGTH.

THIS DRAWING REPLACES DRAWINGS GAB98117 876,719 & HC26294035

ALPINE
ALPINE ENGINEERED PRODUCTS, INC.
POMPANO BEACH, FLORIDA

WARNING TRUSSES REQUIRE EXTREME CARE IN FABRICATING, HANDLING, SHIPPING, INSTALLING AND BRACING. REFER TO HIB-91 (HANDLING INSTALLING AND BRACING), PUBLISHED BY TPI (TRUSS PLATE INSTITUTE, 583 D'ONOFRIO DR., SUITE 200, MADISON, WI 53719) FOR SAFETY PRACTICES PRIOR TO PERFORMING THESE FUNCTIONS. UNLESS OTHERWISE INDICATED, TOP CHORD SHALL HAVE PROPERLY ATTACHED STRUCTURAL PANELS AND BOTTOM CHORD SHALL HAVE A PROPERLY ATTACHED RIGID CEILING.
IMPORTANT FURNISH COPY OF THIS DESIGN TO INSTALLATION CONTRACTOR. ALPINE ENGINEERED PRODUCTS, INC., SHALL NOT BE RESPONSIBLE FOR ANY DEVIATION FROM THIS DESIGN; ANY FAILURE TO BUILD THE TRUSS IN CONFORMANCE WITH TPI; OR FABRICATING, HANDLING, SHIPPING, INSTALLING & BRACING OF TRUSSES. DESIGN CONFORMS WITH APPLICABLE PROVISIONS OF NDS (NATIONAL DESIGN SPEC. BY AF&PA) AND TPI. ALPINE CONNECTOR PLATES ARE MADE OF 20/16GA(W,HS/K) ASTM A653 GR40/60(W,K/HS) GALV. STEEL. APPLY PLATES TO EACH FACE OF TRUSS AND, UNLESS OTHERWISE LOCATED ON THIS DESIGN, POSITION PER DRAWINGS 160A-Z. ANY INSPECTION OF PLATES FOLLOWED BY (I) SHALL BE PER ANNEX A3 OF TPI 1-2002 SEC. 3. A SEAL ON THIS DRAWING INDICATES ACCEPTANCE OF PROFESSIONAL ENGINEERING RESPONSIBILITY SOLELY FOR THE TRUSS COMPONENT DESIGN SHOWN. THE SUITABILITY AND USE OF THIS COMPONENT FOR ANY BUILDING IS THE RESPONSIBILITY OF THE BUILDING DESIGNER, PER ANSI/TPI 1 SEC. 2.

MANUEL MARTINEZ
CERTIFICATE No. 47182
STATE OF FLORIDA
PROFESSIONAL ENGINEER

MAX. TOT. LD. 60 PSF
DUR. INC. ANY
MAX. SPACING 24.0"

REF	LET-IN VERT
DATE	02/18/03
DRWG	GBLLETIN0203
-ENG	DLJ/KAR