DATE 05/08/2006

Columbia County Building Permit

This Permit Expires One Year From the Date of Issue

PERMIT
000024480

APPLICANT J. RUSSELL NORTH PHONE 386.752.6806

ADDRESS 187 NW FOREST MEADOWS AVENUE LAKE CITY FL 32055

OWNER RICHARD HYNES PHONE 386.454.9322

ADDRESS 166 SW SMYRNA PLACE FT. WHITE FL 32038

CONTRACTOR J. RUSSELL NORTH PHONE 386.752.6806

LOCATION OF PROPERTY 47-S TO C-240,TL TO OLD WIRE ROAD,TR TO LANDRUM,TL TO BUCKHEAD,TR TO SMYRNA AND THE LOT IS ON THE R.

TYPE DEVELOPMENT SFD/UTILITY ESTIMATED COST OF CONSTRUCTION 73850.00

HEATED FLOOR AREA 1477.00 TOTAL AREA 2027.00 HEIGHT 18.00 STORIES 1

FOUNDATION CONC WALLS FRAMED ROOF PITCH 6'12 FLOOR CONC

LAND USE & ZONING A-3 MAX. HEIGHT 35

Minimum Set Back Requirments: STREET-FRONT 30.00 REAR 25.00 SIDE 25.00

NO. EX.D.U. 0 FLOOD ZONE XPS DEVELOPMENT PERMIT NO.

PARCEL ID 25-5S-16-03716-120 SUBDIVISION BUCKHEADS

LOT 20 BLOCK PHASE UNIT TOTAL ACRES 10.00

Culvert Permit No.	Culvert Waiver	Contractor's License Number	Applicant/Owner/Contractor
		CGC010421	Russell North

Driveway Connection	Septic Tank Number	LU & Zoning checked by	Approved for Issuance	New Resident
PRIVATE	06-0383-N	BLK	JTH	N

COMMENTS: NOC ON FILE. 1 FOOT ABOVE ROAD.

Check # or Cash 4371

FOR BUILDING & ZONING DEPARTMENT ONLY

(footer/Slab)

Temporary Power _____ date/app. by Foundation _____ date/app. by Monolithic _____ date/app. by

Under slab rough-in plumbing _____ date/app. by Slab _____ date/app. by Sheathing/Nailing _____ date/app. by

Framing _____ date/app. by Rough-in plumbing above slab and below wood floor _____ date/app. by

Electrical rough-in _____ date/app. by Heat & Air Duct _____ date/app. by Peri. beam (Lintel) _____ date/app. by

Permanent power _____ date/app. by C.O. Final _____ date/app. by Culvert _____ date/app. by

M/H tie downs, blocking, electricity and plumbing _____ date/app. by Pool _____ date/app. by

Reconnection _____ date/app. by Pump pole _____ date/app. by Utility Pole _____ date/app. by

M/H Pole _____ date/app. by Travel Trailer _____ date/app. by Re-roof _____ date/app. by

BUILDING PERMIT FEE $ 370.00 CERTIFICATION FEE $ 10.13 SURCHARGE FEE $ 10.13

MISC. FEES $ 0.00 ZONING CERT. FEE $ 50.00 FIRE FEE $ 0.00 WASTE FEE $

FLOOD DEVELOPMENT FEE $ FLOOD ZONE FEE $ 25.00 CULVERT FEE $ **TOTAL FEE** 465.26

INSPECTORS OFFICE _____ CLERKS OFFICE CH

NOTICE: IN ADDITION TO THE REQUIREMENTS OF THIS PERMIT, THERE MAY BE ADDITIONAL RESTRICTIONS APPLICABLE TO THIS PROPERTY THAT MAY BE FOUND IN THE PUBLIC RECORDS OF THIS COUNTY. AND THERE MAY BE ADDITIONAL PERMITS REQUIRED FROM OTHER GOVERNMENTAL ENTITIES SUCH AS WATER MANAGEMENT DISTRICTS, STATE AGENCIES, OR FEDERAL AGENCIES.

"WARNING TO OWNER: YOUR FAILURE TO RECORD A NOTICE OF COMMENCEMENT MAY RESULT IN YOUR PAYING TWICE FOR IMPROVEMENTS TO YOUR PROPERTY. IF YOU INTEND TO OBTAIN FINANCING, CONSULT WITH YOUR LENDER OR AN ATTORNEY BEFORE RECORDING YOUR NOTICE OF COMMENCEMENT."

This Permit Must Be Prominently Posted on Premises During Construction

PLEASE NOTIFY THE COLUMBIA COUNTY BUILDING DEPARTMENT AT LEAST 24 HOURS IN ADVANCE OF EACH INSPECTION, IN ORDER THAT IT MAY BE MADE WITHOUT DELAY OR INCONVIENCE, PHONE 758-1008. THIS PERMIT IS NOT VALID UNLESS THE WORK AUTHORIZED BY IT IS COMMENCED WITHIN 6 MONTHS AFTER ISSUANCE.

The Issuance of this Permit Does Not Waive Compliance by Permittee with Deed Restrictions.

WARRANTY DEED
INDIVID. TO INDIVID.
Return to Gilchrist Title Services, Inc.
This Instrument Prepared by: Holly Randolph
Address: 204 E. Wade St.
Trenton FL 32693

Inst:2005024022 Date:09/28/2005 Time:13:28
Doc Stamp-Deed : 637.00
DC,P.DeWitt Cason,Columbia County B:1059 P:2729

Property Appraisers Parcel Identification Number(s):
R03716-120 2005-1801

This **Warranty Deed** Made the 16th day of **September** A.D. **2005** by **Scott A. Bachman and Claudine Bachman, husband and wife** hereinafter called the grantor, to **Richard John Hynes, a married person and Richard Hynes and Barbara Hynes, husband and wife, as joint tenants with right of survivorship** whose post office address is **P.O. Box 2127, High Springs, FL 32655** hereinafter called the grantee:

(Wherever used herein the terms "grantor" and "grantee" include all the parties to this instrument and the heirs, legal representatives and assigns of individuals, and the successors and assigns of corporations)

Witnesseth: That the grantor, for and in consideration of the sum of **$10.00** and other valuable considerations, receipt whereof is hereby acknowledged, hereby grants, bargains, sells, aliens, remises, releases, conveys and confirms unto the grantee all that certain land situate in **COLUMBIA** County, State of **Florida**, viz:

SEE ATTACHED EXHIBIT A

Subject To covenants, conditions, restrictions, reservations, limitations, easements and agreements of record, if any; taxes and assessments for the year **2005** and subsequent years; and to all applicable zoning ordinances and/or restrictions and prohibitions imposed by governmental authorities, if any,

Together, with all the tenements, hereditament and appurtenances thereto belonging or in anywise appertaining.

To Have and to Hold, the same in fee simple forever.

And the grantor hereby covenants with said grantee that the grantor is lawfully seized of said land in fee simple; that the grantor has good right and lawful authority to sell and convey said land, and hereby warrants the title to said land and will defend the same against the lawful claims of all persons.

In Witness Whereof, the said grantor has signed and sealed these presents the day and year first above written.

Signed, sealed and delivered in the presence of:

Michelle Moore
Witness:
Printed Name: Michelle Moore

Kathy A. Myers
Witness:
Printed Name: Kathy A Myers

Linda Abbott
Witness:
Printed Name: Linda Abbott

Witness:
Printed Name: Philip Silver

Scott A. Bachman
Signature **Scott A. Bachman**

P.O. Address: **3735 Tranquility Drive**
Melbourne, FL 32934

Claudine Bachman
Signature **Claudine Bachman**

P.O. Address: **3735 Tranquility Drive**
Melbourne, FL 32934

STATE OF **FLORIDA**
COUNTY OF Brevard

The foregoing instrument was acknowledged before me this 16th day of **September, 2005** by **Scott A. Bachman and Claudine Bachman,** who produced Florida Driver's Lic as identification and who did not take an oath.

JANETHE D TEWS
Notary Public - State of Florida
My Commission Expires Feb 20, 2006
Commission # DD 094068

Notary Public, State and County Aforesaid

Notary Signature

Inst:2005024022 Date:09/28/2005 Time:13:28
Doc Stamp-Deed : 637.00
_____DC,P.DeWitt Cason,Columbia County B:1059 P:2730

EXHIBIT A

Lot No. 20 – BUCKHEAD WOODS (Unrecorded)

Commence at the SW corner of Section 25, Township 5 South, Range 16 East, COLUMBIA County, Florida and run S 89°36'44" E, along the South line of said Section 25, a distance of 1481.07 feet to the Point of Beginning; thence N 00°53'29" E, parallel to the East line of the West ½ of the Southeast ¼ of said Section 25, a distance of 1037.05 feet to a point on the Southerly line of Buckhead Woods Road (a private road); thence S 89°54'17" E, along said Southerly line, 420.06 feet; thence S 00°53'29" W, parallel to the East line of the West ½ of the Southeast ¼ , a distance of 1039.20 feet to a point on the South line of said Section 25; thence N 89°36'44" W, along said South line, 420.04 feet to the Point of Beginning, all lying and being in COLUMBIA County, Florida.

SUBJECT TO a power line easement over and across the North 25.00 feet thereof.

ALSO:

TOGETHER WITH AND SUBJECT TO easements as described in O.R. Book 801, Page 68; O.R. Book 805, Page 225; O.R. Book 817, Page 996 and O.R. Book 821, Page 494.

3)

THIS INSTRUMENT WAS PREPARED BY:
FIRST FEDERAL SAVINGS BANK OF FLORIDA
4705 WEST U.S. HIGHWAY 90
P.O. BOX 2029
LAKE CITY, FLORIDA 32056

CLERK CIRCUIT COURT COLUMBIA COUNTY, FLORIDA

STATE OF FLORIDA, COUNTY OF COLUMBIA
I HEREBY CERTIFY, that the above and foregoing is a true copy of the original filed in this office.
P. DeWITT CASON, CLERK OF COURTS
By Bonnie Deu Deputy Clerk
Date April 5, 2006

PERMIT NO._____ TAX FOLIO NO._____

NOTICE OF COMMENCEMENT

STATE OF FLORIDA
COUNTY OF Columbia

The undersigned hereby gives notice that improvement will be made to certain real property, and in accordance with Chapter 713, Florida Statutes, the following information is provided in this Notice of Commencement.

1. Description of property: SEE EXHIBIT "A" ATTACHED HERETO

2. General description of improvement: **Construction of Dwelling**

3. Owner information:
   a. Name and address: RICHARD JOHN HYNES, RICHARD HYNES and BARBARA HYNES
   7219 NE 21st Place, High Springs, FL 32643

   b. Interest in property: **Fee Simple**

   c. Name and address of fee simple title holder (if other than Owner): **NONE**

4. Contractor (name and address): RUSSELL NORTH CONSTRUCTION
   347 NW Streamside Court, Lake City, FL 32055

5. Surety:
   a. Name and address: _____

   Inst:2006008296 Date:04/05/2006 Time:13:28
   DC,P.DeWitt Cason,Columbia County B:1079 P:1771

   b. Amount of bond: _____

6. Lender: **FIRST FEDERAL SAVINGS BANK OF FLORIDA**
   4705 WEST U.S. HIGHWAY 90
   P. O. BOX 2029
   LAKE CITY, FLORIDA 32056

7. Persons within the State of Florida designated by Owner upon whom notices or other document may be served as provided by Section 713.13 (1) (a) 7., Florida Statutes: NONE

8. In addition to himself, Owner designates **PAULA HACKER of FIRST FEDERAL SAVINGS BANK OF FLORIDA, 4705 West U.S. Highway 90 / P. O. Box 2029, Lake City, Florida 32056** to receive a copy of the Lienor's Notice as provided in Section 713.13 (1) (b), Florida Statutes.

9. Expiration date of notice of commencement (the expiration date is 1 year from the date of recording unless a different date is specified).

Borrower Name

Richard Hynes, Barbara O. Hy
Co-Borrower Name

The foregoing instrument was acknowledged before me this 30th day of March, 2006, by Richard J. Hynes, Richard Hynes & Barbara*, who is personally known to me or who has produced driver's license for identification.

* O. Hynes

Notary Public
My Commission Expires:

TERRY MCDAVID
MY COMMISSION # DD 500788
EXPIRES: January 16, 2010
Bonded Thru Notary Public Underwriters

EXHIBIT "A"

LOT 20 OF BUCKHEAD WOODS, UNRECORDED:

COMMENCE AT THE SW CORNER OF SECTION 25, TOWNSHIP 5 SOUTH, RANGE 16 EAST, COLUMBIA COUNTY, FLORIDA AND RUN S 89°36'44" E, ALONG THE SOUTH LINE OF SAID SECTION 25, A DISTANCE OF 1481.07 FEET TO THE POINT OF BEGINNING; THENCE N 00°53'29" E, PARALLEL TO THE EAST LINE OF THE WEST 1/2 OF THE SOUTHEAST 1/4 OF SAID SECTION 25, A DISTANCE OF 1037.05 FEET TO A POINT ON THE SOUTHERLY LINE OF BUCKHEAD WOODS ROAD (A PRIVATE ROAD); THENCE S 89°54'17" E, ALONG SAID SOUTHERLY LINE, 420.06 FEET; THENCE S 00°53'29" W, PARALLEL TO THE EAST LINE OF THE WEST 1/2 OF THE SOUTHEAST 1/4, A DISTANCE OF 1039.20 FEET TO A POINT ON THE SOUTH LINE OF SAID SECTION 25; THENCE N 89°36'44" W, ALONG SAID SOUTH LINE, 420.04 FEET TO THE POINT OF BEGINNING, ALL LYING BEING COLUMBIA COUNTY, FLORIDA.

TOGETHER WITH and SUBJECT TO Easements as described in OR Book 801, Page 68, OR Book 805, Page 225, OR Book 817, Page 996 and OR Book 821 Page 494, all of the public records of Columbia County, Florida.

Inst:2006008296 Date:04/05/2006 Time:13:28
_____DC,P.DeWitt Cason,Columbia County B:1079 P:1772

Columbia County Building Permit Application

Revised 9-23-04

For Office Use Only Application # 06-04-92 Date Received 4/27/06 By LH Permit # 1069/ 24480

Application Approved by - Zoning Official BLK Date 04.05.06 Plans Examiner DEJH Date 5-5-06

Flood Zone X Per Surveyor Development Permit N/A Zoning A-3 Land Use Plan Map Category A-3

Comments

Applicants Name J. Russell North Fax 758-4570 Phone 386-454-9322

Address 187 NW Forest Meadows Ave Lake City 32055

Owners Name Richard Hynes Phone 386-454-9322

911 Address 166 Symra Pl. Ft. White, Fl 32038

Contractors Name Russell North Phone 752-6806

Address 187 N.W. Forest Meadows Av.

Fee Simple Owner Name & Address Richard Hynes (See above)

Bonding Co. Name & Address

Architect/Engineer Name & Address Mark Disoway

Mortgage Lenders Name & Address First Federal

Circle the correct power company - FL Power & Light - Clay Elec. - Suwannee Valley Elec. - Progressive Energy

Property ID Number 25-5S-16E-03716-120 Estimated Cost of Construction $100,000

Subdivision Name Buckhead Woods Unrec. Lot 20 Block ____ Unit ____ Phase ____

Driving Directions SR 47 South, TL on County Rd 240, TR on old Ulric Rd., TL on Landrum, TR on Buckhead, TL on Smyrna Place, Lot on Rt.

Type of Construction Single Family Number of Existing Dwellings on Property 0

Total Acreage 10 Lot Size 10 Do you need a - Culvert Permit or Culvert Waiver or Have an Existing Drive

Actual Distance of Structure from Property Lines - Front 220 Side 210' Side 160' Rear 910'

Total Building Height 18' Number of Stories 1 Heated Floor Area 1477 Roof Pitch 6/12

Porch 222 GARAGE 328 TOTAL 2,027

Application is hereby made to obtain a permit to do work and installations as indicated. I certify that no work or installation has commenced prior to the issuance of a permit and that all work be performed to meet the standards of all laws regulating construction in this jurisdiction.

OWNERS AFFIDAVIT: I hereby certify that all the foregoing information is accurate and all work will be done in compliance with all applicable laws and regulating construction and zoning.

WARNING TO OWNER: YOUR FAILURE TO RECORD A NOTICE OF COMMENCMENT MAY RESULT IN YOU PAYING TWICE FOR IMPROVEMENTS TO YOUR PROPERTY. IF YOU INTEND TO OBTAIN FINANCING, CONSULT WITH YOUR LENDER OR ATTORNEY BEFORE RECORDING YOUR NOTICE OF COMMENCEMENT.

Russell North
Owner Builder or Agent (Including Contractor)

Russell North
Contractor Signature

Contractors License Number CGC010421

Competency Card Number

NOTARY STAMP/SEAL Notary Public State of Florida Eloise Reynolds My Commission DD447190 Expires 07/04/2009

STATE OF FLORIDA
COUNTY OF COLUMBIA

Sworn to (or affirmed) and subscribed before me this 18th day of April 20 06.

Personally known ✓ or Produced Identification ____

Eloise Reynolds
Notary Signature

Columbia County Property Appraiser

DB Last Updated: 4/6/2006

2006 Proposed Values

Parcel: 25-5S-16-03716-120

Tax Record | Property Card | Interactive GIS Map | Print

Owner & Property Info

Search Result: 1 of 1

Owner's Name	HYNES RICHARD JOHN & (JTWRS)
Site Address	BUCKHEAD WOODS
Mailing Address	RICHARD & BARBARA HYNES P O BOX 2127 HIGH SPRINGS, FL 32655
Description	AKA LOT 20 BUCKHEAD WOODS UNR: COMM SW CORNER RUN E1481.07 TO POB, N 1037.05 FT TO A PTWD 1059-2729 JTWRS. RUN E ALONG R/W 420.06 FT, S TO POB, N 1037.05 FT TO A PT POB. ORB 819-227, DC PATSY 1039.20 FT, W 420.04 FT TO COMM SW CORNER RUN E1481.07 ON S R/W BUCKHEAD WOODS RD, HAYES 1023-1187, WD 1023-1188, AKA LOT 20 BUCKHEAD WOODS UNR:

Use Desc. (code)	NO AG ACRE (009900)
Neighborhood	25516.01
Tax District	3
UD Codes	MKTA02
Market Area	02
Total Land Area	10.010 ACRES

Property & Assessment Values

Mkt Land Value	cnt: (1)	$64,064.00
Ag Land Value	cnt: (0)	$0.00
Building Value	cnt: (0)	$0.00
XFOB Value	cnt: (0)	$0.00
Total Appraised Value		$64,064.00

Just Value	$64,064.00
Class Value	$0.00
Assessed Value	$64,064.00
Exempt Value	$0.00
Total Taxable Value	$64,064.00

Sales History

Sale Date	Book/Page	Inst. Type	Sale VImp	Sale Qual	Sale RCode	Sale Price
9/16/2005	1059/2729	WD	V	Q		$91,000.00
7/30/2004	1023/1188	WD	V	Q		$58,000.00
3/7/1996	819/227	WD	V	Q		$23,500.00

Building Characteristics

Bldg Item	Bldg Desc	Year Blt	Ext. Walls	Heated S.F.	Actual S.F.	Bldg Value
NONE						

Extra Features & Out Buildings

Code	Desc	Year Blt	Value	Units	Dims	Condition (% Good)
NONE						

Land Breakdown

Lnd Code	Desc	Units	Adjustments	Eff Rate	Lnd Value
009900	AC NON-AG (MKT)	10.010 AC	1.00/1.00/1.00/1.00	$6,400.00	$64,064.00

Columbia County Property Appraiser

DB Last Updated: 4/6/2006

Columbia County Property Appraiser

J. Doyle Crews, CFA - Lake City, Florida - 386-758-1083

PARCEL: 25-5S-16-03716-120 - NO AG ACRE (009900)

AKA LOT 20 BUCKHEAD WOODS UNR: COMM SW CORNER RUN E1481.07 TO POB, N 1037.05 FT TO A PT

Name:	HYNES RICHARD JOHN & (JTWRS)	LandVal	$64,064.00
Site:	BUCKHEAD WOODS	BldgVal	$0.00
	RICHARD & BARBARA HYNES	ApprVal	$64,064.00
Mail:	P O BOX 2127	JustVal	$64,064.00
	HIGH SPRINGS, FL 32655	Assd	$64,064.00
Sales Info	9/16/2005 $91,000.00 V / Q	Exmpt	$0.00
	7/30/2004 $58,000.00 V / Q	Taxable	$64,064.00
	3/7/1996 $23,500.00 V / Q		

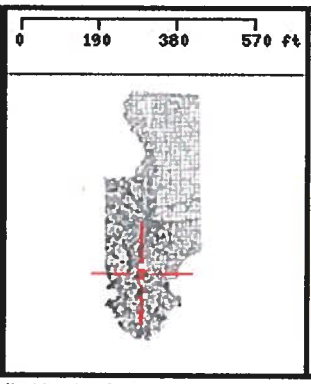

This information, GIS Map Updated: 4/6/2006, was derived from data which was compiled by the Columbia County Property Appraiser Office solely for the governmental purpose of property assessment. This information should not be relied upon by anyone as a determination of the ownership of property or market value. No warranties, expressed or implied, are provided for the accuracy of the data herein, it's use, or it's interpretation. Although it is periodically updated, this information may not reflect the data currently on file in the Property Appraiser's office. The assessed values are NOT certified values and therefore are subject to change before being finalized for ad valorem assessment purposes.

Application for Onsite Sewage Disposal System Construction Permit. Part II Site Plan

Permit Application Number: 060383N

ALL CHANGES MUST BE APPROVED BY THE COUNTY HEALTH UNIT

HYNES/CR 05-3474

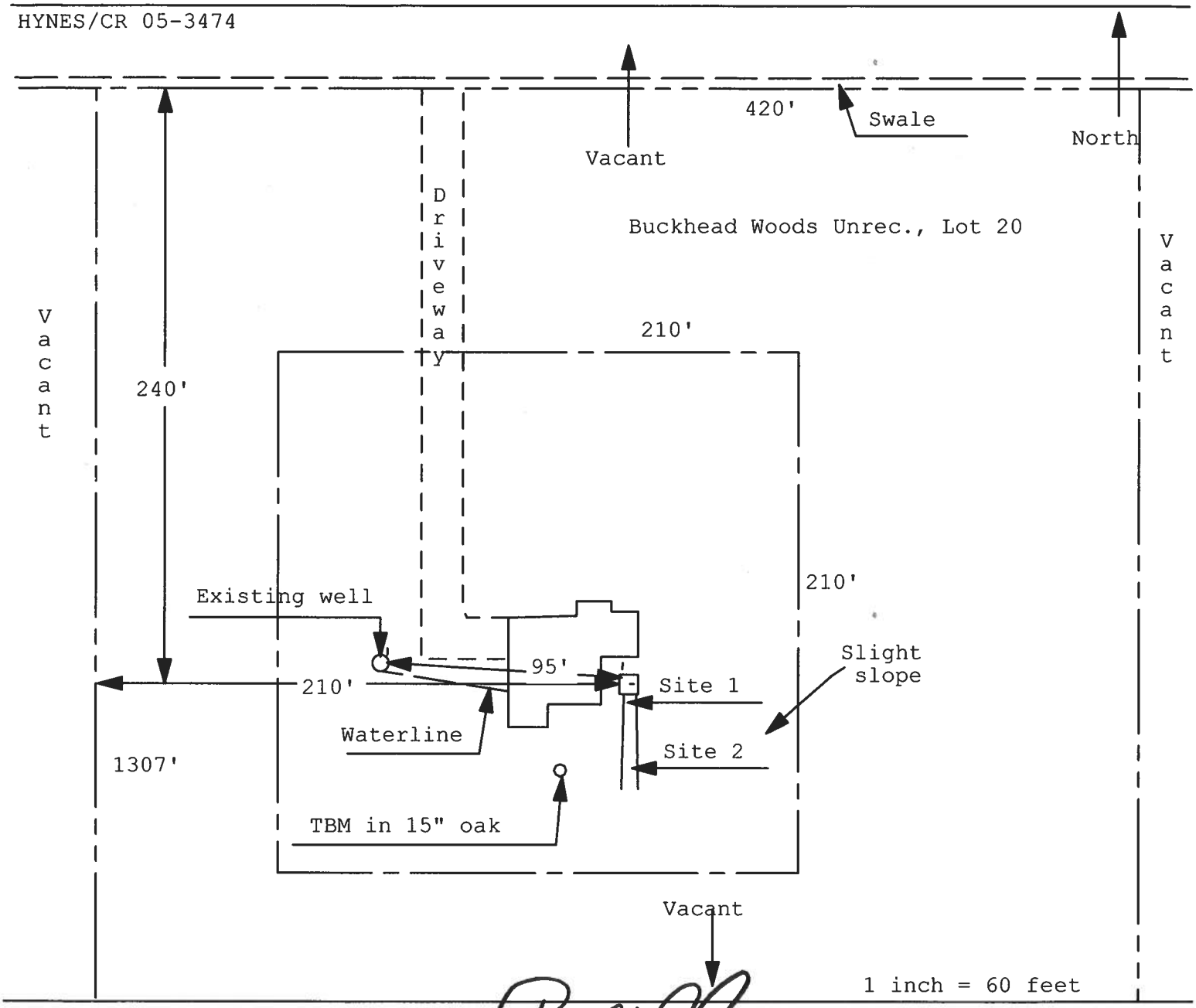

Site Plan Submitted By Paul [illegible] **Date** 4/14/06

Plan Approved ✓ **Not Approved** _____ **Date** 4/24/06

By [illegible] Columbia **CPHU**

Notes: _____

COLUMBIA COUNTY 9-1-1 ADDRESSING

P. O. Box 1787, Lake City, FL 32056-1787
PHONE: (386) 758-1125 * FAX: (386) 758-1365 * Email: ron_croft@columbiacountyfla.com

Addressing Maintenance

To maintain the Countywide Addressing Policy you must make application for a 9-1-1 Address at the time you apply for a building permit. The established standards for assigning and posting numbers to all principal buildings, dwellings, businesses and industries are contained in Columbia County Ordinance 2001-9. The addressing system is to enable Emergency Service Agencies to locate you in an emergency, and to assist the United States Postal Service and the public in the timely and efficient provision of services to residents and businesses of Columbia County.

DATE REQUESTED: 4/6/2006 **DATE ISSUED:** 4/12/2006

ENHANCED 9-1-1 ADDRESS:

166 SW SMYRNA PL

FORT WHITE FL 32038

PROPERTY APPRAISER PARCEL NUMBER:

25-5S-16-03716-120

Remarks:

LOT 20 BUCKHEAD WOODS UNR S/D

Address Issued By: _____

Columbia County 9-1-1 Addressing / GIS Department

NOTICE: THIS ADDRESS WAS ISSUED BASED ON LOCATION INFORMATION RECEIVED FROM THE REQUESTER. SHOULD, AT A LATER DATE, THE LOCATION INFORMATION BE FOUND TO BE IN ERROR, THIS ADDRESS IS SUBJECT TO CHANGE.

COLUMBIA COUNTY
9-1-1 ADDRESSING
APPROVED

FORM 600A-2004 EnergyGauge® 4.1

FLORIDA ENERGY EFFICIENCY CODE FOR BUILDING CONSTRUCTION

Florida Department of Community Affairs

Residential Whole Building Performance Method A

Project Name:	**604132NorthRussellHynes,RichardResidence**	Builder:	
Address:	**Lot: Lot 2, Sub: Buckhead Estate, Plat:**	Permitting Office:	Columbia
City, State:	**, FL**	Permit Number:	24980
Owner:	**Hynes Richard**	Jurisdiction Number:	221000
Climate Zone:	**North**		

1. New construction or existing	New	
2. Single family or multi-family	Single family	
3. Number of units, if multi-family	1	
4. Number of Bedrooms	3	
5. Is this a worst case?	No	
6. Conditioned floor area (ft²)	1477 ft²	
7. Glass type[1] and area: (Label reqd. by 13-104.4.5 if not default)		
a. U-factor: (or Single or Double DEFAULT) 7a.	Description Area (Dble Default) 85.0 ft²	
b. SHGC: (or Clear or Tint DEFAULT) 7b.	(Clear) 85.0 ft²	
8. Floor types		
a. Slab-On-Grade Edge Insulation	R=0.0, 214.0(p) ft	
b. N/A		
c. N/A		
9. Wall types		
a. Frame, Wood, Exterior	R=13.0, 1347.0 ft²	
b. Frame, Wood, Adjacent	R=13.0, 188.0 ft²	
c. N/A		
d. N/A		
e. N/A		
10. Ceiling types		
a. Under Attic	R=30.0, 1477.0 ft²	
b. N/A		
c. N/A		
11. Ducts		
a. Sup: Unc. Ret: Unc. AH: Interior	Sup. R=6.0, 150.0 ft	
b. N/A		
12. Cooling systems		
a. Central Unit	Cap: 32.0 kBtu/hr	
	SEER: 10.00	
b. N/A		
c. N/A		
13. Heating systems		
a. Electric Heat Pump	Cap: 32.0 kBtu/hr	
	HSPF: 7.00	
b. N/A		
c. N/A		
14. Hot water systems		
a. Electric Resistance	Cap: 40.0 gallons	
	EF: 0.93	
b. N/A		
c. Conservation credits (HR-Heat recovery, Solar DHP-Dedicated heat pump)		
15. HVAC credits (CF-Ceiling fan, CV-Cross ventilation, HF-Whole house fan, PT-Programmable Thermostat, MZ-C-Multizone cooling, MZ-H-Multizone heating)		

Glass/Floor Area: 0.06

Total as-built points: 20789
Total base points: 24116

PASS

I hereby certify that the plans and specifications covered by this calculation are in compliance with the Florida Energy Code.

PREPARED BY: Ben Jones

DATE: 4-18-06

I hereby certify that this building, as designed, is in compliance with the Florida Energy Code.

OWNER/AGENT: _____

DATE: _____

Review of the plans and specifications covered by this calculation indicates compliance with the Florida Energy Code. Before construction is completed this building will be inspected for compliance with Section 553.908 Florida Statutes.

GREAT SEAL OF THE STATE OF FLORIDA — IN GOD WE TRUST

BUILDING OFFICIAL: _____

DATE: _____

1 Predominant glass type. For actual glass type and areas, see Summer & Winter Glass output on pages 2&4.

SUMMER CALCULATIONS

Residential Whole Building Performance Method A - Details

ADDRESS: **Lot: Lot 2, Sub: Buckhead Estate, Plat: , , FL,** PERMIT #:

BASE

GLASS TYPES

.18 X	Conditioned Floor Area	X BSPM	= Points
.18	1477.0	20.04	5327.8

AS-BUILT

Type/SC	Overhang Ornt	Len	Hgt	Area X	SPM X	SOF	= Points
Double, Clear	N	9.0	7.0	20.0	19.20	0.67	258.3
Double, Clear	W	23.0	7.0	20.0	38.52	0.37	288.6
Double, Clear	N	1.5	5.5	15.0	19.20	0.93	267.3
Double, Clear	E	1.5	5.5	15.0	42.06	0.90	565.5
Double, Clear	S	1.5	5.5	15.0	35.87	0.83	447.7
As-Built Total:				**85.0**			**1827.5**

WALL TYPES	Area X	BSPM	= Points
Adjacent	188.0	0.70	131.6
Exterior	1347.0	1.70	2289.9
Base Total:	**1535.0**		**2421.5**

Type	R-Value	Area X	SPM	= Points
Frame, Wood, Exterior	13.0	1347.0	1.50	2020.5
Frame, Wood, Adjacent	13.0	188.0	0.60	112.8
As-Built Total:		**1535.0**		**2133.3**

DOOR TYPES	Area X	BSPM	= Points
Adjacent	20.0	1.60	32.0
Exterior	60.0	4.10	246.0
Base Total:	**80.0**		**278.0**

Type	Area X	SPM	= Points
Exterior Insulated	40.0	4.10	164.0
Exterior Insulated	20.0	4.10	82.0
Adjacent Insulated	20.0	1.60	32.0
As-Built Total:	**80.0**		**278.0**

CEILING TYPES	Area X	BSPM	= Points
Under Attic	1477.0	1.73	2555.2
Base Total:	**1477.0**		**2555.2**

Type	R-Value	Area X	SPM X SCM	= Points
Under Attic	30.0	1477.0	1.73 X 1.00	2555.2
As-Built Total:		**1477.0**		**2555.2**

FLOOR TYPES	Area X	BSPM	= Points
Slab	214.0(p)	-37.0	-7918.0
Raised	0.0	0.00	0.0
Base Total:			**-7918.0**

Type	R-Value	Area X	SPM	= Points
Slab-On-Grade Edge Insulation	0.0	214.0(p	-41.20	-8816.8
As-Built Total:		**214.0**		**-8816.8**

INFILTRATION	Area X	BSPM	= Points
	1477.0	10.21	15080.2

	Area X	SPM	= Points
	1477.0	10.21	15080.2

SUMMER CALCULATIONS

Residential Whole Building Performance Method A - Details

ADDRESS: **Lot: Lot 2, Sub: Buckhead Estate, Plat: , , FL,** PERMIT #:

BASE				AS-BUILT							
Summer Base Points: 17744.7				**Summer As-Built Points:**							**13057.3**
Total Summer Points	X System Multiplier	=	Cooling Points	Total Component (System - Points)	X Cap Ratio	X Duct Multiplier (DM x DSM x AHU)	X System Multiplier	X Credit Multiplier	= Cooling Points		
				(sys 1: Central Unit 32000 btuh ,SEER/EFF(10.0) Ducts:Unc(S),Unc(R),Int(AH),R6.0(INS)							
				13057	1.00	(1.09 x 1.147 x 0.91)	0.341	1.000	5070.2		
17744.7	**0.4266**		**7569.9**	**13057.3**	**1.00**	**1.138**	**0.341**	**1.000**	**5070.2**		

WINTER CALCULATIONS

Residential Whole Building Performance Method A - Details

ADDRESS: **Lot: Lot 2, Sub: Buckhead Estate, Plat: , , FL,** PERMIT #:

BASE				AS-BUILT							
GLASS TYPES .18 X Conditioned Floor Area		X BWPM	= Points	Type/SC	Overhang Ornt	Len	Hgt	Area X	WPM X	WOF	= Points
.18	1477.0	12.74	3387.1	Double, Clear	N	9.0	7.0	20.0	24.58	1.02	502.0
				Double, Clear	W	23.0	7.0	20.0	20.73	1.24	513.1
				Double, Clear	N	1.5	5.5	15.0	24.58	1.00	369.8
				Double, Clear	E	1.5	5.5	15.0	18.79	1.04	293.5
				Double, Clear	S	1.5	5.5	15.0	13.30	1.15	228.8
				As-Built Total:				**85.0**			**1907.2**
WALL TYPES	Area X	BWPM	= Points	Type		R-Value		Area X	WPM	=	Points
Adjacent	188.0	3.60	676.8	Frame, Wood, Exterior		13.0		1347.0	3.40		4579.8
Exterior	1347.0	3.70	4983.9	Frame, Wood, Adjacent		13.0		188.0	3.30		620.4
Base Total:	**1535.0**		**5660.7**	**As-Built Total:**				**1535.0**			**5200.2**
DOOR TYPES	Area X	BWPM	= Points	Type				Area X	WPM	=	Points
Adjacent	20.0	8.00	160.0	Exterior Insulated				40.0	8.40		336.0
Exterior	60.0	8.40	504.0	Exterior Insulated				20.0	8.40		168.0
				Adjacent Insulated				20.0	8.00		160.0
Base Total:	**80.0**		**664.0**	**As-Built Total:**				**80.0**			**664.0**
CEILING TYPES	Area X	BWPM	= Points	Type		R-Value		Area X	WPM X	WCM =	Points
Under Attic	1477.0	2.05	3027.8	Under Attic		30.0		1477.0	2.05 X	1.00	3027.8
Base Total:	**1477.0**		**3027.8**	**As-Built Total:**				**1477.0**			**3027.8**
FLOOR TYPES	Area X	BWPM	= Points	Type		R-Value		Area X	WPM	=	Points
Slab	214.0(p)	8.9	1904.6	Slab-On-Grade Edge Insulation		0.0		214.0(p	18.80		4023.2
Raised	0.0	0.00	0.0								
Base Total:			**1904.6**	**As-Built Total:**				**214.0**			**4023.2**
INFILTRATION	Area X	BWPM	= Points					Area X	WPM	=	Points
	1477.0	-0.59	-871.4					1477.0	-0.59		-871.4

WINTER CALCULATIONS

Residential Whole Building Performance Method A - Details

ADDRESS: **Lot: Lot 2, Sub: Buckhead Estate, Plat: , , FL,** PERMIT #:

BASE				AS-BUILT							
Winter Base Points:			**13772.8**	**Winter As-Built Points:**							**13951.1**
Total Winter Points	X System Multiplier	= Heating Points		Total Component (System - Points)	X Cap Ratio	X Duct Multiplier (DM x DSM x AHU)	X System Multiplier	X Credit Multiplier	= Heating Points		
				(sys 1: Electric Heat Pump 32000 btuh ,EFF(7.0) Ducts:Unc(S),Unc(R),Int(AH),R6.0							
				13951.1	1.000	(1.069 x 1.169 x 0.93)	0.487	1.000	7898.4		
13772.8	**0.6274**	**8641.0**		**13951.1**	**1.00**	**1.162**	**0.487**	**1.000**	**7898.4**		

WATER HEATING & CODE COMPLIANCE STATUS

Residential Whole Building Performance Method A - Details

ADDRESS: **Lot: Lot 2, Sub: Buckhead Estate, Plat: , , FL,** PERMIT #:

BASE				AS-BUILT							
WATER HEATING											
Number of Bedrooms	X	Multiplier	= Total	Tank Volume	EF	Number of Bedrooms	X	Tank Ratio	X Multiplier	X Credit Multiplier	= Total
3		2635.00	7905.0	40.0	0.93	3		1.00	2606.67	1.00	7820.0
				As-Built Total:							**7820.0**

CODE COMPLIANCE STATUS

BASE				AS-BUILT			
Cooling Points +	Heating Points +	Hot Water Points =	Total Points	Cooling Points +	Heating Points +	Hot Water Points =	Total Points
7570	**8641**	**7905**	**24116**	**5070**	**7898**	**7820**	**20789**

PASS

Code Compliance Checklist

Residential Whole Building Performance Method A - Details

ADDRESS: **Lot: Lot 2, Sub: Buckhead Estate, Plat: , , FL,** PERMIT #:

6A-21 INFILTRATION REDUCTION COMPLIANCE CHECKLIST

COMPONENTS	SECTION	REQUIREMENTS FOR EACH PRACTICE	CHECK
Exterior Windows & Doors	606.1.ABC.1.1	Maximum:.3 cfm/sq.ft. window area; .5 cfm/sq.ft. door area.	
Exterior & Adjacent Walls	606.1.ABC.1.2.1	Caulk, gasket, weatherstrip or seal between: windows/doors & frames, surrounding wall; foundation & wall sole or sill plate; joints between exterior wall panels at corners; utility penetrations; between wall panels & top/bottom plates; between walls and floor. EXCEPTION: Frame walls where a continuous infiltration barrier is installed that extends from, and is sealed to, the foundation to the top plate.	
Floors	606.1.ABC.1.2.2	Penetrations/openings >1/8" sealed unless backed by truss or joint members. EXCEPTION: Frame floors where a continuous infiltration barrier is installed that is sealed to the perimeter, penetrations and seams.	
Ceilings	606.1.ABC.1.2.3	Between walls & ceilings; penetrations of ceiling plane of top floor; around shafts, chases, soffits, chimneys, cabinets sealed to continuous air barrier; gaps in gyp board & top plate; attic access. EXCEPTION: Frame ceilings where a continuous infiltration barrier is installed that is sealed at the perimeter, at penetrations and seams.	
Recessed Lighting Fixtures	606.1.ABC.1.2.4	Type IC rated with no penetrations, sealed; or Type IC or non-IC rated, installed inside a sealed box with 1/2" clearance & 3" from insulation; or Type IC rated with < 2.0 cfm from conditioned space, tested.	
Multi-story Houses	606.1.ABC.1.2.5	Air barrier on perimeter of floor cavity between floors.	
Additional Infiltration reqts	606.1.ABC.1.3	Exhaust fans vented to outdoors, dampers; combustion space heaters comply with NFPA, have combustion air.	

6A-22 OTHER PRESCRIPTIVE MEASURES (must be met or exceeded by all residences.)

COMPONENTS	SECTION	REQUIREMENTS	CHECK
Water Heaters	612.1	Comply with efficiency requirements in Table 612.1.ABC.3.2. Switch or clearly marked circuit breaker (electric) or cutoff (gas) must be provided. External or built-in heat trap required.	
Swimming Pools & Spas	612.1	Spas & heated pools must have covers (except solar heated). Non-commercial pools must have a pump timer. Gas spa & pool heaters must have a minimum thermal efficiency of 78%.	
Shower heads	612.1	Water flow must be restricted to no more than 2.5 gallons per minute at 80 PSIG.	
Air Distribution Systems	610.1	All ducts, fittings, mechanical equipment and plenum chambers shall be mechanically attached, sealed, insulated, and installed in accordance with the criteria of Section 610. Ducts in unconditioned attics: R-6 min. insulation.	
HVAC Controls	607.1	Separate readily accessible manual or automatic thermostat for each system.	
Insulation	604.1, 602.1	Ceilings-Min. R-19. Common walls-Frame R-11 or CBS R-3 both sides. Common ceiling & floors R-11.	

ENERGY PERFORMANCE LEVEL (EPL) DISPLAY CARD

ESTIMATED ENERGY PERFORMANCE SCORE* = 85.7

The higher the score, the more efficient the home.

Hynes Richard, Lot: Lot 2, Sub: Buckhead Estate, Plat: , , FL,

1.	New construction or existing	New	
2.	Single family or multi-family	Single family	
3.	Number of units, if multi-family	1	
4.	Number of Bedrooms	3	
5.	Is this a worst case?	No	
6.	Conditioned floor area (ft²)	1477 ft²	
7.	Glass type[1] and area: (Label reqd. by 13-104.4.5 if not default)		
a.	U-factor: (or Single or Double DEFAULT) 7a.	Description Area (Dble Default) 85.0 ft²	
b.	SHGC: (or Clear or Tint DEFAULT) 7b.	(Clear) 85.0 ft²	
8.	Floor types		
a.	Slab-On-Grade Edge Insulation	R=0.0, 214.0(p) ft	
b.	N/A		
c.	N/A		
9.	Wall types		
a.	Frame, Wood, Exterior	R=13.0, 1347.0 ft²	
b.	Frame, Wood, Adjacent	R=13.0, 188.0 ft²	
c.	N/A		
d.	N/A		
e.	N/A		
10.	Ceiling types		
a.	Under Attic	R=30.0, 1477.0 ft²	
b.	N/A		
c.	N/A		
11.	Ducts		
a.	Sup: Unc. Ret: Unc. AH: Interior	Sup. R=6.0, 150.0 ft	
b.	N/A		
12.	Cooling systems		
a.	Central Unit	Cap: 32.0 kBtu/hr	
		SEER: 10.00	
b.	N/A		
c.	N/A		
13.	Heating systems		
a.	Electric Heat Pump	Cap: 32.0 kBtu/hr	
		HSPF: 7.00	
b.	N/A		
c.	N/A		
14.	Hot water systems		
a.	Electric Resistance	Cap: 40.0 gallons	
		EF: 0.93	
b.	N/A		
c.	Conservation credits (HR-Heat recovery, Solar DHP-Dedicated heat pump)		
15.	HVAC credits (CF-Ceiling fan, CV-Cross ventilation, HF-Whole house fan, PT-Programmable Thermostat, MZ-C-Multizone cooling, MZ-H-Multizone heating)		

I certify that this home has complied with the Florida Energy Efficiency Code For Building Construction through the above energy saving features which will be installed (or exceeded) in this home before final inspection. Otherwise, a new EPL Display Card will be completed based on installed Code compliant features.

Builder Signature: _____ Date: _____

Address of New Home: _____ City/FL Zip: _____

**NOTE: The home's estimated energy performance score is only available through the FLA/RES computer program. This is not a Building Energy Rating. If your score is 80 or greater (or 86 for a US EPA/DOE EnergyStar™ designation), your home may qualify for energy efficiency mortgage (EEM) incentives if you obtain a Florida Energy Gauge Rating. Contact the Energy Gauge Hotline at 321/638-1492 or see the Energy Gauge web site at www.fsec.ucf.edu for information and a list of certified Raters. For information about Florida's Energy Efficiency Code For Building Construction, contact the Department of Community Affairs at 850/487-1824.*

1 Predominant glass type. For actual glass type and areas, see Summer & Winter Glass output on pages 2&4.

AAMA/NWWDA 101/I.S.2-97
TEST REPORT SUMMARY

Rendered to:

MI HOME PRODUCTS, INC.

SERIES/MODEL: 650
TYPE: Aluminum Picture Window

Title of Test	Results
Rating	F-R45 60 x 80
Overall Design Pressure	+45.0 psf -47.2 psf
Air Infiltration	0.04 cfm/ft^2
Water Resistance	8.25 psf
Structural Test Pressure	+67.5 psf -70.8 psf
Forced Entry Resistance	Grade 10

Reference should be made to Report No. 01-41135.01 dated 03/26/02 for complete test specimen description and data.

For ARCHITECTURAL TESTING, INC.

Mark A. Hess

Mark A. Hess, Technician

MAH:nlb

Allen N. Reeves
1 APRIL 2002

ALLEN N. REEVES
CERTIFICATE
NO. 17594
STATE OF
FLORIDA
PROFESSIONAL ENGINEER

Architectural Testing

AAMA/NWWDA 101/I.S.2-97 TEST REPORT

Rendered to

MI HOME PRODUCTS, INC.
650 West Market Street
P.O. Box 370
Gratz, Pennsylvania 17030-0370

Report No: 01-41135.01
Test Date: 03/07/02
Report Date: 03/26/02
Expiration Date: 03/07/06

Project Summary: Architectural Testing, Inc. (ATI) was contracted by MI Home Products, Inc. to perform tests on Series/Model 650, aluminum picture window at their facility located in Elizabethville, Pennsylvania. The samples tested successfully met the performance requirements for a F-R45 60 x 80 rating.

Test Specification: The test specimen was evaluated in accordance with AAMA/NWWDA 101/I.S.2-97, *Voluntary Specifications for Aluminum, Vinyl (PVC) and Wood Windows and Glass Doors.*

Test Specimen Description

Series/Model: 650

Type: Aluminum Picture Window

Overall Size: 5' 0" wide by 6' 8" high

Daylight Opening Size: 4' 9-1/4" wide by 6' 5-1/4" high

Finish All aluminum was white.

Glazing Details: The test specimen utilized 7/8" thick, sealed insulating glass constructed from two sheets of 3/16" thick, clear annealed glass and a metal reinforced butyl spacer system. The glass was interior glazed against double-sided adhesive foam tape and secured with aluminum snap-in glazing beads.

130 Derry Court
York, PA 17402-9405
phone: 717.764.7700
fax: 717.764.4129
www.archtest.com

Allen M. Reeves
1 APR 12 2002

ALLEN M. REEVES
CERTIFICATE NO. 11994
STATE OF FLORIDA
PROFESSIONAL ENGINEER

Test Specimen Description: (Continued)

Frame Construction: The frame was constructed of extruded aluminum with coped, butted, and sealed corners fastened with two #8 x 1" screws through the head and sill into each jamb screw boss.

Reinforcement: No reinforcement was utilized.

Installation: The test specimen was installed into a 2 x 8 #2 Spruce-Pine-Fir wood test buck. #8 x 2-1/2" installation screws were utilized 18" on center around the interior perimeter. Polyurethane was utilized to seal the exterior.

Test Results:

The results are tabulated as follows:

Paragraph	Title of Test - Test Method	Results	Allowed
	Air Infiltration (ASTM E 283-91)		
	@ 1.57 psf (25 mph)	0.04 cfm/ft^2	0.3 cfm/ft^2 max.

Note #1: The tested specimen meets the performance levels specified in AAMA/NWWDA 101/I.S. 2-97 for air infiltration.

	Water Resistance (ASTM E 547-00)		
	WTP = 2.86 psf	No leakage	No leakage
2.1.4.1	Uniform Load Deflection (ASTM E 330-97)		
	(Measurements reported were taken on the jamb)		
	(Loads were held for 33 seconds)		
	@ 25.9 psf (positive)	0.01"	0.41" max.
	@ 34.7 psf (negative)	0.01"	0.41" max.
2.1.4.2	Uniform Load Structural (ASTM E 330-97)		
	(Measurements reported were taken on the jamb)		
	(Loads were held for 10 seconds)		
	@ 38.9 psf (positive)	0.0"	0.29" max.
	@ 52.1 psf (negative)	0.01"	0.29" max.

ALLEN H. REEVES
LICENSE
NO. 12334
STATE OF
FLORIDA
PROFESSIONAL ENGINEER

Allen H. Reeves
1 APRIL 2002

Test Results: (Continued)

Paragraph	Title of Test - Test Method	Results	Allowed
	Forced Entry Resistance (ASTM F 588-97)		
	Type: D Grade: 10		
	Hand and Tool Manipulation Test	No entry	No entry
Optional Performance			
4.3	Water Resistance (ASTM E 547-00) WTP = 8.25 psf	No leakage	No leakage
	Uniform Load Deflection (ASTM E 330-97) (Measurements reported were taken on the jamb) (Loads were held for 33 seconds)		
	@ 45.0 psf (positive)	0.02"	0.41" max.
	@ 47.2 psf (negative)	0.02"	0.41" max.
	Uniform Load Structural (ASTM E 330-97) (Measurements reported were taken on the jamb) (Loads were held for 10 seconds)		
	@ 67.5 psf (positive)	0.01"	0.29" max.
	@ 70.8 psf (negative)	0.02"	0.29" max.

Detailed drawings, representative samples of the test specimen, and a copy of this report will be retained by ATI for a period of four years. The above results were secured by using the designated test methods and they indicate compliance with the performance requirements of the above referenced specification. This report does not constitute certification of this product, which may only be granted by the certification program administrator.

For ARCHITECTURAL TESTING, INC:

Mark A. Hess
Technician

MAH:nlb
01-41135.01

Allen N. Reeves, P.E.
Director - Engineering Services
1 APRIL 2002

ALLEN N. REEVES
CERTIFICATE
NO. 13364
STATE OF
FLORIDA
PROFESSIONAL ENGINEER

OXO
Glazed Inswing Unit

COP-WL-JH4144-02

WOOD-EDGE STEEL DOORS

APPROVED ARRANGEMENT:

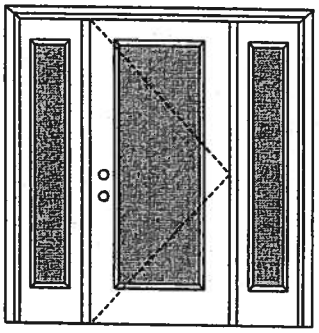

Warnock Hersey

Test Data Review Certificate #3026447A and COP/Test Report Validation Matrix #3026447A-001 provides additional information - available from the ITS/WH website (www.etlsemko.com), the Masonite website (www.masonite.com) or the Masonite technical center.

Note:
Units of other sizes are covered by this report as long as the panels used do not exceed 3'0" x 6'8".

Single Door with 2 Sidelites
Maximum unit size = 9'0" x 6'8"

Design Pressure

+40.5/-40.5

Limited water unless special threshold design is used.

Large Missile Impact Resistance

Hurricane protective system (shutters) is REQUIRED.

Actual design pressure and impact resistant requirements for a specific building design and geographic location is determined by ASCE 7-national, state or local building codes specify the edition required.

MINIMUM ASSEMBLY DETAIL:

Compliance requires that minimum assembly details have been followed – see MAD-WL-MA0004-02 or MAD-WL-MA0007-02 and MAD-WL-MA0041-02.

MINIMUM INSTALLATION DETAIL:

Compliance requires that minimum installation details have been followed – see MID-WL-MA0004-02.

APPROVED DOOR STYLES:

1/4 GLASS:

100 Series

133, 135 Series

136 Series

680 Series

822 Series

1/2 GLASS:

105 Series*

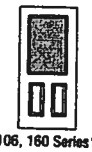
106, 160 Series*

129 Series*

200 Series*

12 R/L, 23 R/L, 24 R/L Series*

107 Series*

108 Series

304 Series

*This glass kit may also be used in the following door styles: 5-panel; 5-panel with scroll; Eyebrow 5-panel; Eyebrow 5-panel with scroll.

Johnson™ EntrySystems

June 17, 2002
Our continuing program of product improvement makes specifications, design and product detail subject to change without notice.

PREMDOR® Collection Premium Quality Doors

Exclusively from Masonite®
Masonite International Corporation

OXO
Glazed Inswing Unit

COP-WL-JH4144-02

WOOD-EDGE STEEL DOORS

APPROVED DOOR STYLES:

3/4 GLASS:

404 Series

410 Series

450 Series

FULL GLASS:

109 Series

114, 120, 122 Series

152 Series

149 Series

300 Series

APPROVED SIDELITE STYLES:

680 Series

129 Series

200 Series

12R, 12L, 23R, 23L, 24R, 24L Series

450 Series

152 Series

149 Series

109 Series

120, 122 Series

300 Series

CERTIFIED TEST REPORTS:

NCTL 210-1897-7, 8, 9, 10, 11, 12; NCTL 210-1861-4, 5, 6, 10, 11, 12; NCTL 210-2185-1, 2, 3

Certifying Engineer and License Number: Barry D. Portney, P.E. / 16258.

Unit Tested in Accordance with Miami-Dade BCCO PA202.

Evaluation report NCTL-210-2794-1

Door panels constructed from 26-gauge 0.017" thick steel skins. Both stiles constructed from wood. Top end rails constructed of 0.041" steel. Bottom end rails constructed of 0.021" steel. Interior cavity of slab filled with rigid polyurethane foam core. Slab and sidelite panels glazed with insulated glass mounted in a rigid plastic lip lite surround.

Frame constructed of wood with an extruded aluminum threshold.

PRODUCT COMPLIANCE LABELING:

TESTED IN
ACCORDANCE WITH
MIAMI-DADE BCCO PA202

COMPANY NAME
CITY, STATE

To the best of my knowledge and ability the above side-hinged exterior door unit conforms to the requirements of the 2001 Florida Building Code, Chapter 17 (Structural Tests and Inspections).

Kurt L Balthazor

State of Florida, Professional Engineer
Kurt Balthazor, P.E. – License Number 56533

Warnock Hersey

Test Data Review Certificate #3026447A and COP/Test Report Validation Matrix #3026447A-001 provides additional information - available from the ITS/WH website (www.etisemko.com), the Masonite website (www.masonite.com) or the Masonite technical center.

Johnson™ EntrySystems

June 17, 2002
Our continuing program of product improvement makes specifications, design and product detail subject to change without notice.

PREMDOR Collection Premium Quality Doors

Exclusively from Masonite®
Masonite International Corporation

XX
Glazed Inswing Unit

COP-WL-JH4142-02

WOOD-EDGE STEEL DOORS

APPROVED ARRANGEMENT:

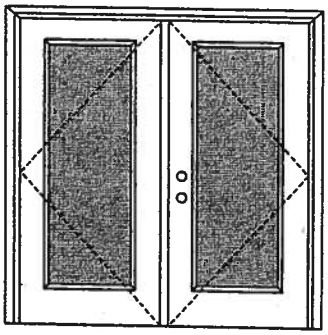

Double Door
Maximum unit size = 6'0" x 6'8"

Warnock Hersey

Test Data Review Certificate #3026447A and COP/Test Report Validation Matrix #3026447A-001 provides additional information - available from the ITS/WH website (www.etlsemko.com), the Masonite website (www.masonite.com) or the Masonite technical center.

Note:
Units of other sizes are covered by this report as long as the panels used do not exceed 3'0" x 6'8".

Design Pressure
+40.5/-40.5
Limited water unless special threshold design is used.

Large Missile Impact Resistance
Hurricane protective system (shutters) is REQUIRED.

Actual design pressure and impact resistant requirements for a specific building design and geographic location is determined by ASCE 7-national, state or local building codes specify the edition required.

MINIMUM ASSEMBLY DETAIL:

Compliance requires that minimum assembly details have been followed – see MAD-WL-MA0002-02 and MAD-WL-MA0041-02.

MINIMUM INSTALLATION DETAIL:

Compliance requires that minimum installation details have been followed – see MID-WL-MA0002-02.

APPROVED DOOR STYLES:

1/4 GLASS:

100 Series

133, 135 Series

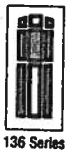
136 Series

680 Series

822 Series

1/2 GLASS:

105 Series*

106, 160 Series*

129 Series*

200 Series*

12 R/L, 23 R/L, 24 R/L Series*

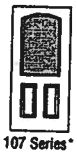
107 Series*

108 Series

304 Series

*This glass kit may also be used in the following door styles: 5-panel; 5-panel with scroll; Eyebrow 5-panel; Eyebrow 5-panel with scroll.

Johnson™ EntrySystems

June 17, 2002
Our continuing program of product improvement makes specifications, design and product detail subject to change without notice.

PREMDOR Collection Premium Quality Doors
Exclusively from Masonite
Masonite International Corporation

XX
Glazed Inswing Unit

COP-WL-JH4142-02

WOOD-EDGE STEEL DOORS

APPROVED DOOR STYLES:

3/4 GLASS:

404 Series

410 Series

450 Series

FULL GLASS:

109 Series

114, 120, 122 Series

152 Series

149 Series

300 Series

CERTIFIED TEST REPORTS:

NCTL 210-1897-7, 8, 9, 10, 11, 12; NCTL 210-1861-4, 5, 6, 10, 11, 12; NCTL 210-2185-1, 2, 3

Certifying Engineer and License Number: Barry D. Portney, P.E. / 16258.

Unit Tested in Accordance with Miami-Dade BCCO PA202.

Evaluation report NCTL-210-2794-1

Door panels constructed from 26-gauge 0.017" thick steel skins. Both stiles constructed from wood. Top end rails constructed of 0.041" steel. Bottom end rails constructed of 0.021" steel. Interior cavity of slab filled with rigid polyurethane foam core. Slab glazed with insulated glass mounted in a rigid plastic lip lite surround.

Frame constructed of wood with an extruded aluminum threshold.

PRODUCT COMPLIANCE LABELING:

TESTED IN
ACCORDANCE WITH
MIAMI-DADE BCCO PA202

COMPANY NAME
CITY, STATE

To the best of my knowledge and ability the above side-hinged exterior door unit conforms to the requirements of the 2001 Florida Building Code, Chapter 17 (Structural Tests and Inspections).

Kurt L Balthazor

State of Florida, Professional Engineer
Kurt Balthazor, P.E. – License Number 56533

Warnock Hersey

Test Data Review Certificate #3026447A and COP/Test Report Validation Matrix #3026447A-001 provides additional information - available from the ITS/WH website (www.etisemko.com), the Masonite website (www.masonite.com) or the Masonite technical center.

Johnson™ EntrySystems

June 17, 2002
Our continuing program of product improvement makes specifications, design and product detail subject to change without notice.

PREMDOR Collection Premium Quality Doors

Exclusively from Masonite®
Masonite International Corporation

X
Opaque Inswing Unit

COP-WL-JH4101-02

WOOD-EDGE STEEL DOORS

APPROVED ARRANGEMENT:

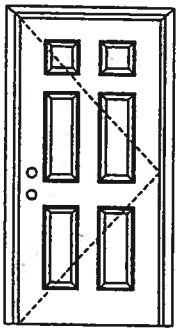

Note:
Units of other sizes are covered by this report as long as the panel used does not exceed 3'0" x 6'8".

Warnock Hersey

Test Data Review Certificate #3026447A and COP/Test Report Validation Matrix #3026447A-001 provides additional information - available from the ITS/WH website (www.etlsemko.com), the Masonite website (www.masonite.com) or the Masonite technical center.

Single Door
Maximum unit size = 3'0" x 6'8"

Design Pressure
+66.0/-66.0
limited water unless special threshold design is used.

Large Missile Impact Resistance
Hurricane protective system (shutters) is NOT REQUIRED.

Actual design pressure and impact resistant requirements for a specific building design and geographic location is determined by ASCE 7-national, state or local building codes specify the edition required.

MINIMUM ASSEMBLY DETAIL:

Compliance requires that minimum assembly details have been followed – see MAD-WL-MA0001-02.

MINIMUM INSTALLATION DETAIL:

Compliance requires that minimum installation details have been followed – see MID-WL-MA0001-02.

APPROVED DOOR STYLES:

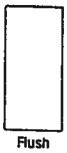
Flush

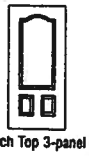
Arch Top 3-panel

3-panel

6-panel

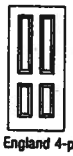
New England 4-panel

Eyebrow 4-panel

8-panel

9-panel

15-panel

5-panel

5-panel with scroll

Eyebrow 5-panel

Eyebrow 5-panel with scroll

Johnson™ EntrySystems

June 17, 2002
Our continuing program of product improvement makes specifications, design and product detail subject to change without notice.

PREMDOR® Collection Premium Quality Doors

Exclusively from Masonite®
Masonite International Corporation

Y
Opaque Inswing Unit

COP-WL-JH4101-02

WOOD-EDGE STEEL DOORS

CERTIFIED TEST REPORTS:

NCTL 210-2185-1, 2, 3

Certifying Engineer and License Number: Barry D. Portney, P.E. / 16258.

Unit Tested in Accordance with Miami-Dade BCCO PA201, PA202 and PA203.

Door panels constructed from 26-gauge 0.017" thick steel skins. Both stiles constructed from wood. Top end rails constructed of 0.041" steel. Bottom end rails constructed of 0.021" steel. Interior cavity of slab filled with rigid polyurethane foam core.

Frame constructed of wood with an extruded aluminum threshold.

PRODUCT COMPLIANCE LABELING:

TESTED IN ACCORDANCE WITH
MIAMI-DADE BCCO
PA201, PA202 & PA203

COMPANY NAME
CITY, STATE

To the best of my knowledge and ability the above side-hinged exterior door unit conforms to the requirements of the 2001 Florida Building Code, Chapter 17 (Structural Tests and Inspections).

Kurt L Balthazor

State of Florida, Professional Engineer
Kurt Balthazor, P.E. – License Number 56533

Warnock Hersey

Test Data Review Certificate #3026447A and COP/Test Report Validation Matrix #3026447A-001 provides additional information - available from the ITS/WH website (www.etisemko.com), the Masonite website (www.masonite.com) or the Masonite technical center.

Johnson™ EntrySystems

June 17, 2002
Our continuing program of product improvement makes specifications, design and product detail subject to change without notice.

PREMDOR® Collection Premium Quality Doors

Exclusively from Masonite®
Masonite International Corporation

Residential System Sizing Calculation

Summary

Hynes Richard

, FL

Project Title:
604132NorthRussellHynes,RichardResidence

Class 3 Rating
Registration No. 0
Climate: North

4/18/2006

Location for weather data: Gainesville - Defaults: Latitude(29) Altitude(152 ft.) Temp Range(M)
Humidity data: Interior RH (50%) Outdoor wet bulb (77F) Humidity difference(54gr.)

Winter design temperature	33	F	Summer design temperature	92	F
Winter setpoint	70	F	Summer setpoint	75	F
Winter temperature difference	37	F	Summer temperature difference	17	F
Total heating load calculation	**27395**	**Btuh**	**Total cooling load calculation**	**17333**	**Btuh**
Submitted heating capacity	% of calc	Btuh	Submitted cooling capacity	% of calc	Btuh
Total (Electric Heat Pump)	116.8	32000	Sensible (SHR = 0.75)	190.4	24000
Heat Pump + Auxiliary(0.0kW)	116.8	32000	Latent	169.3	8000
			Total (Electric Heat Pump)	184.6	32000

WINTER CALCULATIONS

Winter Heating Load (for 1477 sqft)

Load component			Load	
Window total	85	sqft	2736	Btuh
Wall total	1535	sqft	5041	Btuh
Door total	80	sqft	1036	Btuh
Ceiling total	1477	sqft	1740	Btuh
Floor total	214	sqft	9343	Btuh
Infiltration	185	cfm	7498	Btuh
Duct loss			0	Btuh
Subtotal			**27395**	**Btuh**
Ventilation	0	cfm	0	Btuh
TOTAL HEAT LOSS			**27395**	**Btuh**

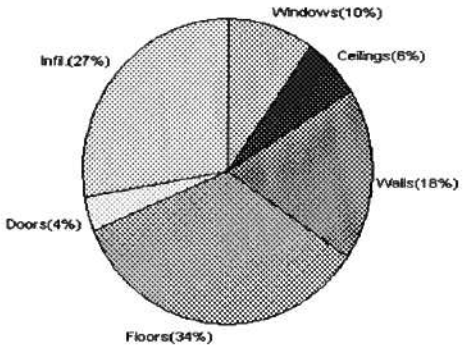

SUMMER CALCULATIONS

Summer Cooling Load (for 1477 sqft)

Load component			Load	
Window total	85	sqft	3107	Btuh
Wall total	1535	sqft	3093	Btuh
Door total	80	sqft	784	Btuh
Ceiling total	1477	sqft	2446	Btuh
Floor total			0	Btuh
Infiltration	96	cfm	1796	Btuh
Internal gain			1380	Btuh
Duct gain			0	Btuh
Sens. Ventilation	0	cfm	0	Btuh
Total sensible gain			**12606**	**Btuh**
Latent gain(ducts)			0	Btuh
Latent gain(infiltration)			3527	Btuh
Latent gain(ventilation)			0	Btuh
Latent gain(internal/occupants/other)			1200	Btuh
Total latent gain			**4727**	**Btuh**
TOTAL HEAT GAIN			**17333**	**Btuh**

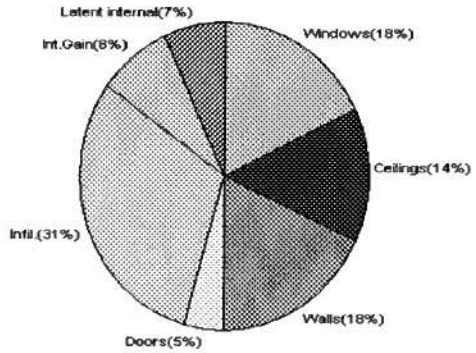

For Florida residences only

EnergyGauge® System Sizing
PREPARED BY: Glen Spaulding
DATE: 4-18-06

System Sizing Calculations - Winter

Residential Load - Whole House Component Details

Hynes Richard
, FL

Project Title:
604132NorthRussellHynes,RichardResidence

Class 3 Rating
Registration No. 0
Climate: North

Reference City: Gainesville (Defaults) Winter Temperature Difference: 37.0 F

4/18/2006

Component Loads for Whole House

Window	Panes/SHGC/Frame/U	Orientation	Area(sqft) X	HTM=	Load
1	2, Clear, Metal, 0.87	N	20.0	32.2	644 Btuh
2	2, Clear, Metal, 0.87	W	20.0	32.2	644 Btuh
3	2, Clear, Metal, 0.87	N	15.0	32.2	483 Btuh
4	2, Clear, Metal, 0.87	E	15.0	32.2	483 Btuh
5	2, Clear, Metal, 0.87	S	15.0	32.2	483 Btuh
	Window Total		85(sqft)		2736 Btuh
Walls	Type	R-Value	Area X	HTM=	Load
1	Frame - Wood - Ext(0.09)	13.0	1347	3.3	4424 Btuh
2	Frame - Wood - Adj(0.09)	13.0	188	3.3	617 Btuh
	Wall Total		1535		5041 Btuh
Doors	Type		Area X	HTM=	Load
1	Insulated - Adjacent		20	12.9	259 Btuh
2	Insulated - Exterior		20	12.9	259 Btuh
3	Insulated - Exterior		40	12.9	518 Btuh
	Door Total		80		1036Btuh
Ceilings	Type/Color/Surface	R-Value	Area X	HTM=	Load
1	Vented Attic/D/Shin)	30.0	1477	1.2	1740 Btuh
	Ceiling Total		1477		1740Btuh
Floors	Type	R-Value	Size X	HTM=	Load
1	Slab On Grade	0	214.0 ft(p)	43.7	9343 Btuh
	Floor Total		214		9343 Btuh
			Zone Envelope Subtotal:		19897 Btuh
Infiltration	Type	ACH X	Zone Volume	CFM=	
	Natural	0.94	11816	185.1	7498 Btuh
Ductload	Unsealed, R6.0, Supply(Attic), Return(Attic)			(DLM of 0.00)	0 Btuh
Zone #1			**Sensible Zone Subtotal**		**27395 Btuh**

WHOLE HOUSE TOTALS

	Subtotal Sensible	27395 Btuh
	Ventilation Sensible	0 Btuh
	Total Btuh Loss	27395 Btuh

Manual J Winter Calculations

Residential Load - Component Details (continued)

Hynes Richard

, FL

Project Title:
604132NorthRussellHynes,RichardResidence

Class 3 Rating
Registration No. 0
Climate: North

Key: Window types (SHGC - Shading coefficient of glass as SHGC numerical value or as clea
(Frame types - metal, wood or insulated metal)
(U - Window U-Factor or 'DEF' for default)
(HTM - ManualJ Heat Transfer Multiplier)

Key: Floor size (perimeter(p) for slab-on-grade or area for all other floor types)

For Florida residences only

System Sizing Calculations - Winter

Residential Load - Room by Room Component Details

Hynes Richard
, FL

Project Title:
604132NorthRussellHynes,RichardResidence

Class 3 Rating
Registration No. 0
Climate: North

Reference City: Gainesville (Defaults) Winter Temperature Difference: 37.0 F

4/18/2006

Component Loads for Zone #1: Main

Window	Panes/SHGC/Frame/U	Orientation	Area(sqft) X	HTM=	Load
1	2, Clear, Metal, 0.87	N	20.0	32.2	644 Btuh
2	2, Clear, Metal, 0.87	W	20.0	32.2	644 Btuh
3	2, Clear, Metal, 0.87	N	15.0	32.2	483 Btuh
4	2, Clear, Metal, 0.87	E	15.0	32.2	483 Btuh
5	2, Clear, Metal, 0.87	S	15.0	32.2	483 Btuh
	Window Total		85(sqft)		2736 Btuh
Walls	Type	R-Value	Area X	HTM=	Load
1	Frame - Wood - Ext(0.09)	13.0	1347	3.3	4424 Btuh
2	Frame - Wood - Adj(0.09)	13.0	188	3.3	617 Btuh
	Wall Total		1535		5041 Btuh
Doors	Type		Area X	HTM=	Load
1	Insulated - Adjacent		20	12.9	259 Btuh
2	Insulated - Exterior		20	12.9	259 Btuh
3	Insulated - Exterior		40	12.9	518 Btuh
	Door Total		80		1036Btuh
Ceilings	Type/Color/Surface	R-Value	Area X	HTM=	Load
1	Vented Attic/D/Shin)	30.0	1477	1.2	1740 Btuh
	Ceiling Total		1477		1740Btuh
Floors	Type	R-Value	Size X	HTM=	Load
1	Slab On Grade	0	214.0 ft(p)	43.7	9343 Btuh
	Floor Total		214		9343 Btuh
			Zone Envelope Subtotal:		19897 Btuh
Infiltration	Type	ACH X	Zone Volume	CFM=	
	Natural	0.94	11816	185.1	7498 Btuh
Ductload	Unsealed, R6.0, Supply(Attic), Return(Attic)			(DLM of 0.00)	0 Btuh
Zone #1			**Sensible Zone Subtotal**		**27395 Btuh**

WHOLE HOUSE TOTALS

	Subtotal Sensible	27395 Btuh
	Ventilation Sensible	0 Btuh
	Total Btuh Loss	27395 Btuh

Manual J Winter Calculations

Residential Load - Component Details (continued)

Hynes Richard

, FL

Project Title:
604132NorthRussellHynes,RichardResidence

Class 3 Rating
Registration No. 0
Climate: North

Key: Window types (SHGC - Shading coefficient of glass as SHGC numerical value or as clear
(Frame types - metal, wood or insulated metal)
(U - Window U-Factor or 'DEF' for default)
(HTM - ManualJ Heat Transfer Multiplier)

Key: Floor size (perimeter(p) for slab-on-grade or area for all other floor types)

For Florida residences only

System Sizing Calculations - Summer

Residential Load - Whole House Component Details

Hynes Richard
, FL

Project Title:
604132NorthRussellHynes,RichardResidence

Class 3 Rating
Registration No. 0
Climate: North

Reference City: Gainesville (Defaults) Summer Temperature Difference: 17.0 F 4/18/2006

Component Loads for Whole House

Window	Type* Pn/SHGC/U/InSh/ExSh/IS	Ornt	Overhang Len	Overhang Hgt	Window Area(sqft) Gross	Shaded	Unshaded	HTM Shaded	HTM Unshaded	Load
1	2, Clear, 0.87, None,N,N	N	9ft.	7ft.	20.0	0.0	20.0	29	29	579 Btuh
2	2, Clear, 0.87, None,N,N	W	23ft.	7ft.	20.0	20.0	0.0	29	80	579 Btuh
3	2, Clear, 0.87, None,N,N	N	1.5ft.	5.5ft.	15.0	0.0	15.0	29	29	434 Btuh
4	2, Clear, 0.87, None,N,N	E	1.5ft.	5.5ft.	15.0	2.2	12.8	29	80	1080 Btuh
5	2, Clear, 0.87, None,N,N	S	1.5ft.	5.5ft.	15.0	15.0	0.0	29	34	434 Btuh
	Window Total				85 (sqft)					3107 Btuh

Walls	Type	R-Value/U-Value	Area(sqft)	HTM	Load
1	Frame - Wood - Ext	13.0/0.09	1347.0	2.1	2810 Btuh
2	Frame - Wood - Adj	13.0/0.09	188.0	1.5	284 Btuh
	Wall Total		1535 (sqft)		3093 Btuh

Doors	Type	Area (sqft)	HTM	Load
1	Insulated - Adjacent	20.0	9.8	196 Btuh
2	Insulated - Exterior	20.0	9.8	196 Btuh
3	Insulated - Exterior	40.0	9.8	392 Btuh
	Door Total	80 (sqft)		784 Btuh

Ceilings	Type/Color/Surface	R-Value	Area(sqft)	HTM	Load
1	Vented Attic/DarkShingle	30.0	1477.0	1.7	2446 Btuh
	Ceiling Total		1477 (sqft)		2446 Btuh

Floors	Type	R-Value	Size	HTM	Load
1	Slab On Grade	0.0	214 (ft(p))	0.0	0 Btuh
	Floor Total		214.0 (sqft)		0 Btuh

	Zone Envelope Subtotal:	9430 Btuh

Infiltration	Type	ACH	Volume(cuft)	CFM=	Load
	SensibleNatural	0.49	11816	96.5	1796 Btuh

Internal gain	Occupants	Btuh/occupant	Appliance	Load
	6	X 230 +	0	1380 Btuh

Duct load	Unsealed, R6.0, Supply(Attic), Return(Attic) DGM = 0.00	0.0 Btuh
	Sensible Zone Load	**12606 Btuh**

Manual J Summer Calculations

Residential Load - Component Details (continued)

Hynes Richard
, FL

Project Title:
604132NorthRussellHynes,RichardResidence

Class 3 Rating
Registration No. 0
Climate: North

4/18/2006

WHOLE HOUSE TOTALS

Whole House Totals for Cooling	**Sensible Envelope Load All Zones**	**12606 Btuh**
	Sensible Duct Load	0 Btuh
	Total Sensible Zone Loads	**12606 Btuh**
	Sensible ventilation	0 Btuh
	Blower	0 Btuh
	Total sensible gain	**12606 Btuh**
	Latent infiltration gain (for 54 gr. humidity difference)	3527 Btuh
	Latent ventilation gain	0 Btuh
	Latent duct gain	0 Btuh
	Latent occupant gain (6 people @ 200 Btuh per person)	1200 Btuh
	Latent other gain	0 Btuh
	Latent total gain	**4727 Btuh**
	TOTAL GAIN	**17333 Btuh**

*Key: Window types (Pn - Number of panes of glass)
(SHGC - Shading coefficient of glass as SHGC numerical value or as clear or tint)
(U - Window U-Factor or 'DEF' for default)
(InSh - Interior shading device: none(N), Blinds(B), Draperies(D) or Roller Shades(R))
(ExSh - Exterior shading device: none(N) or numerical value)
(BS - Insect screen: none(N), Full(F) or Half(H))
(Ornt - compass orientation)

For Florida residences only

System Sizing Calculations - Summer

Residential Load - Room by Room Component Details

Hynes Richard
, FL

Project Title:
604132NorthRussellHynes,RichardResidence

Class 3 Rating
Registration No. 0
Climate: North

Reference City: Gainesville (Defaults) Summer Temperature Difference: 17.0 F 4/18/2006

Component Loads for Zone #1: Main

Window	Type* Pn/SHGC/U/InSh/ExSh/IS	Ornt	Overhang Len	Overhang Hgt	Window Area(sqft) Gross	Shaded	Unshaded	HTM Shaded	HTM Unshaded	Load
1	2, Clear, 0.87, None,N,N	N	9ft.	7ft.	20.0	0.0	20.0	29	29	579 Btuh
2	2, Clear, 0.87, None,N,N	W	23ft.	7ft.	20.0	20.0	0.0	29	80	579 Btuh
3	2, Clear, 0.87, None,N,N	N	1.5ft.	5.5ft.	15.0	0.0	15.0	29	29	434 Btuh
4	2, Clear, 0.87, None,N,N	E	1.5ft.	5.5ft.	15.0	2.2	12.8	29	80	1080 Btuh
5	2, Clear, 0.87, None,N,N	S	1.5ft.	5.5ft.	15.0	15.0	0.0	29	34	434 Btuh
	Window Total				85 (sqft)					3107 Btuh

Walls	Type	R-Value/U-Value	Area(sqft)	HTM	Load
1	Frame - Wood - Ext	13.0/0.09	1347.0	2.1	2810 Btuh
2	Frame - Wood - Adj	13.0/0.09	188.0	1.5	284 Btuh
	Wall Total		1535 (sqft)		3093 Btuh

Doors	Type	Area (sqft)	HTM	Load
1	Insulated - Adjacent	20.0	9.8	196 Btuh
2	Insulated - Exterior	20.0	9.8	196 Btuh
3	Insulated - Exterior	40.0	9.8	392 Btuh
	Door Total	80 (sqft)		784 Btuh

Ceilings	Type/Color/Surface	R-Value	Area(sqft)	HTM	Load
1	Vented Attic/DarkShingle	30.0	1477.0	1.7	2446 Btuh
	Ceiling Total		1477 (sqft)		2446 Btuh

Floors	Type	R-Value	Size	HTM	Load
1	Slab On Grade	0.0	214 (ft(p))	0.0	0 Btuh
	Floor Total		214.0 (sqft)		0 Btuh

	Zone Envelope Subtotal:	9430 Btuh

Infiltration	Type	ACH	Volume(cuft)	CFM=	Load
	SensibleNatural	0.49	11816	96.5	1796 Btuh

Internal gain	Occupants	Btuh/occupant		Appliance	Load
	6	X 230	+	0	1380 Btuh

Duct load	Unsealed, R6.0, Supply(Attic), Return(Attic)	DGM = 0.00	0.0 Btuh
		Sensible Zone Load	**12606 Btuh**

Manual J Summer Calculations

Residential Load - Component Details (continued)

Hynes Richard
, FL

Project Title:
604132NorthRussellHynes,RichardResidence

Class 3 Rating
Registration No. 0
Climate: North

4/18/2006

WHOLE HOUSE TOTALS

	Sensible Envelope Load All Zones	**12606**	**Btuh**
	Sensible Duct Load	0	Btuh
	Total Sensible Zone Loads	**12606**	**Btuh**
	Sensible ventilation	0	Btuh
	Blower	0	Btuh
Whole House	**Total sensible gain**	**12606**	**Btuh**
Totals for Cooling	Latent infiltration gain (for 54 gr. humidity difference)	3527	Btuh
	Latent ventilation gain	0	Btuh
	Latent duct gain	0	Btuh
	Latent occupant gain (6 people @ 200 Btuh per person)	1200	Btuh
	Latent other gain	0	Btuh
	Latent total gain	**4727**	**Btuh**
	TOTAL GAIN	**17333**	**Btuh**

*Key: Window types (Pn - Number of panes of glass)
(SHGC - Shading coefficient of glass as SHGC numerical value or as clear or tint)
(U - Window U-Factor or 'DEF' for default)
(InSh - Interior shading device: none(N), Blinds(B), Draperies(D) or Roller Shades(R))
(ExSh - Exterior shading device: none(N) or numerical value)
(BS - Insect screen: none(N), Full(F) or Half(H))
(Ornt - compass orientation)

For Florida residences only

Residential Window Diversity

MidSummer

Hynes Richard

, FL

Project Title:
604132NorthRussellHynes,RichardResidence

Class 3 Rating
Registration No. 0
Climate: North

4/18/2006

Weather data for: Gainesville - Defaults

Summer design temperature	92 F	Average window load for July	3325 Btuh
Summer setpoint	75 F	Peak window load for July	4669 Btuh
Summer temperature difference	17 F	Excusion limit(130% of Ave.)	4322 Btuh
Latitude	29 North	Window excursion (July)	347 Btuh

WINDOW Average and Peak Loads

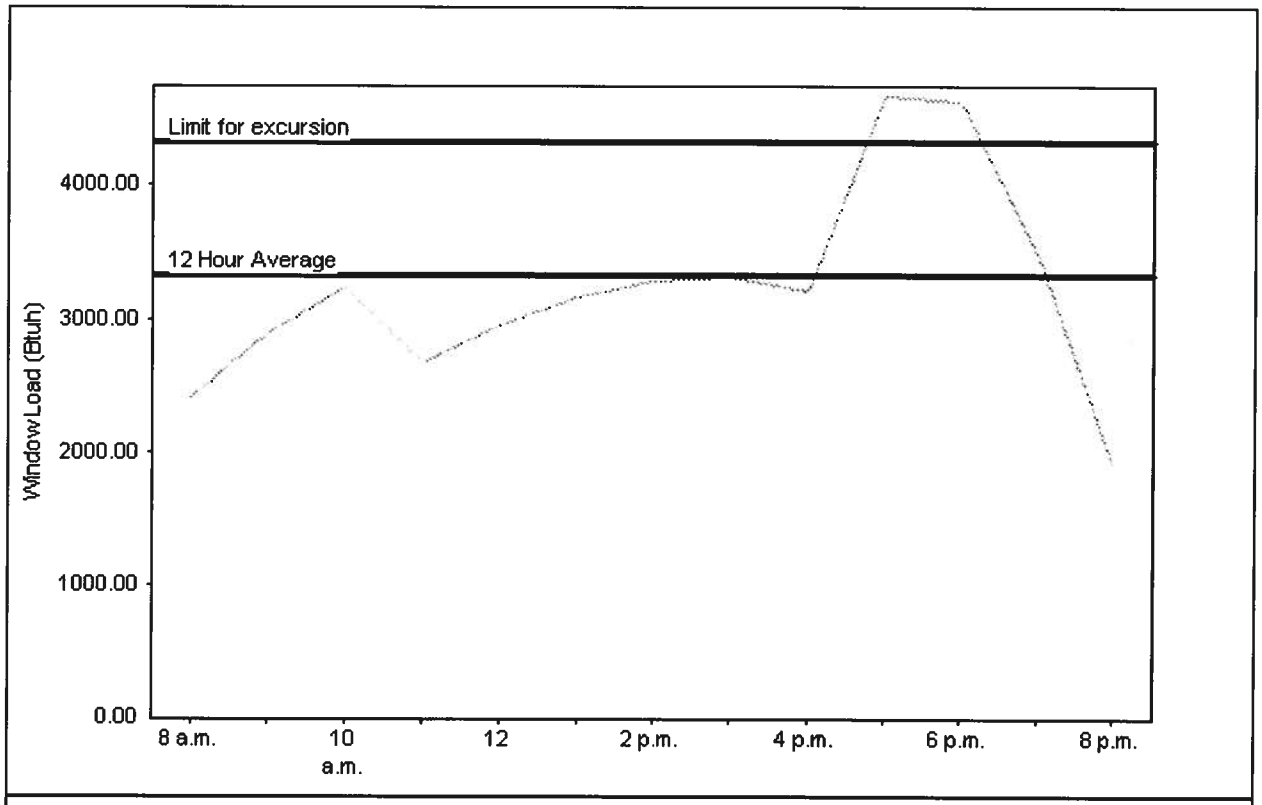

Total July Window Load(Radiation and conduction)

Warning: This application has glass areas that produce relatively large heat gains for part of the day. Variable air volume devices may be required to overcome spikes in solar gain for one or more rooms. A zoned system may be required or some rooms may require zone control.

EnergyGauge® System Sizing for Florida residences only
PREPARED BY: Ben Gaston
DATE: 4-18-06

From: The Columbia County Building & Zoning Department
Plan Review
135 NE Hernando Av.
P.O. Box 1529
Lake City Florida 32056-1529

Reference to a building permit application Number: **0604-92**

Russell North Contractor, Owner Richard Hynes 166 Symra Place

On the date of May 3, 2006 application 0604-92 and plans for construction of a single family dwelling were reviewed and the following information or alteration to the plans will be required to continue processing this application. If you should have any question please contact the above address, or contact phone number (386) 758-1163 or fax any information to (386) 754-7088.

Please include application number 0604-92 when making reference to this application.

1. Please provide for compliance with the FRC-2004 section R322.1.1

All new single-family houses, duplexes, triplexes, condominiums and townhouses shall provide at least one bathroom, located with maximum possible privacy, where bathrooms are provided on habitable grade levels, with a door that has a 29-inch (737 mm) clear opening. However, if only a toilet room is provided at grade level, such toilet rooms shall have a clear opening of not less than 29 inches (737 mm).

2. Please show compliance with the FRC-2004 sections R309 Garage: R309.1

   A: Opening protection: Openings from a private garage directly into a room used for sleeping purposes shall not be permitted. Other openings between the garage and residence shall be equipped with solid wood doors not less than 13/8 inches (35 mm) in thickness, solid or honeycomb core steel doors not less than 13/8 inches (35 mm) thick, or 20-minute fire-rated doors.

   B: R309.1.1 Duct penetration. Ducts in the garage and ducts penetrating the walls or ceilings separating the dwelling from the garage shall be constructed of a minimum No. 26 gage (0.48 mm) sheet steel or other approved material and shall have no openings into the garage.

   C: R309.2 Separation required. The garage shall be separated from the residence and its attic area by not less than ½-inch (12.7 mm) gypsum board applied to the garage side. Garages beneath habitable rooms shall be separated from all habitable rooms above by not less than 5/8-inch (15.9 mm) Type X gypsum board or equivalent. Where the separation is a floor-ceiling assembly, the structure supporting the separation shall also be protected by not less than ½-inch (12.7 mm) gypsum board or equivalent.

3. For the garage area show the method of protecting the appliances as required by the Florida Mechanical Code, Sections: 303.4 Protection from damage: Appliances shall not be installed in a location where subject to mechanical damage unless protected by approved barriers.

4. Show on the electrical plans as required by the National Electrical Code article 210.12 that all branch circuits supplying outlets installed within a bedroom shall be protected by Arc-Fault interrupter devices.
5. The electrical plan shows the location of the electrical service please provide the total amperage rating overcurrent protection device. This device shall be installed on the exterior of structures to serve as a disconnecting means. Conductors used from the exterior disconnecting means to a panel or sub panel shall have four-wire conductors, of which one conductor shall be used as an equipment ground.
6. Please show compliance the FRC -2004 sections R313.1 Smoke alarms.

Smoke alarms shall be installed in the following locations:

1. In each sleeping room.
2. Outside each separate sleeping area in the immediate vicinity of the bedrooms.
3. On each additional story of the dwelling, including basements but not including crawl spaces and uninhabitable attics. In dwellings or dwelling units with split levels and without an intervening door between the adjacent levels, a smoke alarm installed on the upper level shall suffice for the adjacent lower level provided that the lower level is less than one full story below the upper level.

When more than one smoke alarm is required to be installed within an individual dwelling unit the alarm devices shall be interconnected in such a manner that the actuation of one alarm will activate all of the alarms in the

individual unit. The alarm shall be clearly audible in all bedrooms over background noise levels with all intervening doors closed.

All smoke alarms shall be listed and installed in accordance with the provisions of this code and the household fire warning equipment provisions of NFPA 72.

7.

Thank you,

Joe Haltiwanger
Plan Examiner
Columbia County Building Department

Notice of Treatment 12113

Applicator: Florida Pest Control & Chemical Co. (www.flapest .com)
Address: Bayline
City LC Phone 7521703

Site Location: Subdivision N/A
Lot # 20 Block# Permit # 24480
Address 166 sw Smyrna Pl

Product used	Active Ingredient	% Concentration
☐ Premise	Imidacloprid	0.1%
☐ Termidor	Fipronil	0.12%
☑ Bora-Care	Disodium Octaborate Tetrahydrate	23.0%

Type treatment: ☐ Soil ☑ Wood

Area Treated	Square feet	Linear feet	Gallons Applied
Dwelling	2027	585	4

As per Florida Building Code 104.2.6 – If soil chemical barrier method for termite prevention is used, final exterior treatment shall be completed prior to final building approval.

If this notice is for the final exterior treatment, initial this line _____.

8/16/06	0830	F254
Date	Time	Print Technician's Name

Remarks: _____

Applicator - White **Permit File** - Canary **Permit Holder** - Pink

10/05 ©

CERTIFICATE OF

OCCUPANCY

COLUMBIA COUNTY, FLORIDA

Department of Building and Zoning Inspection

This Certificate of Occupancy is issued to the below named permit holder for the building and premises at the below named location, and certifies that the work has been completed in accordance with the Columbia County Building Code.

Parcel Number 25-5S-16-03716-120 **Building permit No.** 000024480

Use Classification SFD/UTILITY **Fire:** 107.90

Permit Holder J. RUSSELL NORTH **Waste:** 167.50

Owner of Building RICHARD HYNES **Total:** 275.40

Location: 166 SW SMYRNA PLACE

Date: 12/12/2006

Harry Dicks

Building Inspector

POST IN A CONSPICUOUS PLACE
(Business Places Only)

A BOUNDARY SURVEY IN SECTION 25, TOWNSHIP 5 SOUTH, RANGE 16 EAST, COLUMBIA COUNTY, FLORIDA.

SITE PLAN

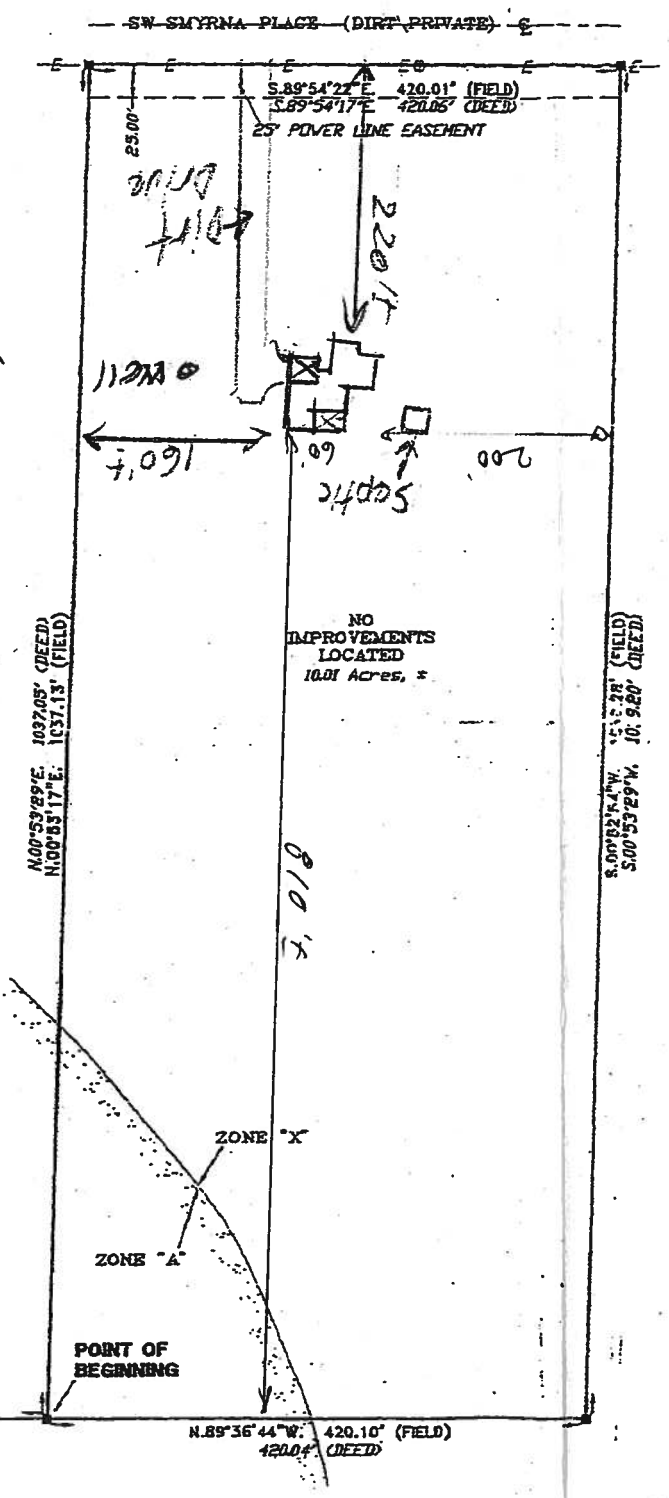

NOTE: ALL PROPERTY CORNERS LOCATED ARE IDENTIFIED AS DONALD F. LEE, P.L.S. 3628.

POINT OF COMMENCEMENT
SW CORNER
OF SECTION 25,
TOWNSHIP 5 SOUTH,
RANGE 16 EAST

SCALE: 1" = 100'

SYMBOL LEGEND

- 4"X4" CONCRETE MONUMENT FOUND
- 4"X4" CONCRETE MONUMENT SET
- IRON PIPE FOUND
- IRON PIN AND CAP SET
- POWER POLE
- WATER METER
- CENTERLINE
- WELL
- SATELLITE DISH
- TELEPHONE BOX
- ELECTRIC LINES
- WIRE FENCE
- CHAIN LINK FENCE
- WOODEN FENCE

DESCRIPTION:
LOT NO. 20, BUCKHEAD WOODS (UNRECORDED)
COMMENCE AT THE SOUTHWEST CORNER OF SECTION 25, TOWNSHIP 5 SOUTH, RANGE 16 EAST, COLUMBIA COUNTY, FLORIDA AND RUN S.89°36'44"E., ALONG THE SOUTH LINE OF SAID SECTION 25 A DISTANCE OF 1481.87 FEET TO THE POINT OF BEGINNING; THENCE N.00°53'29"E., PARALLEL TO THE EAST LINE OF THE WEST 1/2 OF THE SOUTHEAST 1/4 OF SAID SECTION 25, A DISTANCE OF 1037.05 FEET TO A POINT ON THE SOUTHERLY LINE OF BUCKHEAD WOODS ROAD (A PRIVATE ROAD); THENCE S.89°54'17"E., ALONG SAID SOUTHERLY LINE, 420.06 FEET; THENCE S.00°53'29"W., PARALLEL TO THE EAST LINE OF THE WEST 1/2 OF THE SOUTHEAST 1/4 A DISTANCE OF 1039.28 FEET TO A POINT ON THE SOUTH LINE OF SAID SECTION 25; THENCE N.89°36'44"W., ALONG SAID SOUTH LINE, 420.04 FEET TO THE POINT OF BEGINNING. COLUMBIA COUNTY, FLORIDA.

SUBJECT TO A POWER LINE EASEMENT OVER AND ACROSS THE NORTH 25.00 FEET THEREOF.

ALSO:
TOGETHER WITH AND SUBJECT TO EASEMENTS AS DESCRIBED IN O.R. BOOK 801, PAGES 68, O.R. BOOK 805, PAGE 225, O.R. BOOK 917, PAGE 995 & O.R. BOOK 821, PAGE 494.

SURVEYOR'S NOTES:
1. BOUNDARY BASED ON MONUMENTATION FOUND.
2. BEARINGS ARE BASED ON A DEED OF RECORD AS HANDED THIS OFFICE.
3. SOME PORTIONS OF THIS PARCEL ARE IN ZONE "A" AND MAY BE SUBJECT TO FLOODING. HOWEVER, NO BASE FLOOD ELEVATION HAS BEEN DETERMINED FOR ZONE "A". SOME PORTIONS OF THIS PARCEL ARE IN ZONE "X" AND ARE DETERMINED TO BE OUTSIDE THE 500 YEAR FLOOD PLAIN AS PER FLOOD INSURANCE RATE MAP, DATED 6 JAN. 1988 COMMUNITY PANEL NO. 120070 0225 B. HOWEVER, THE FLOOD INSURANCE RATE MAPS ARE SUBJECT TO CHANGE.
4. THE IMPROVEMENTS, IF ANY, INDICATED ON THIS SURVEY DRAWING ARE AS LOCATED ON DATE OF FIELD SURVEY AS SHOWN HEREON.
5. IF THEY EXIST, NO UNDERGROUND ENCROACHMENTS AND/OR UTILITIES WERE LOCATED FOR THIS SURVEY EXCEPT AS SHOWN HEREON.
6. THIS SURVEY WAS COMPLETED WITHOUT THE BENEFIT OF A TITLE COMMITMENT OR A TITLE POLICY.

CERTIFIED TO:

VICEY ELIZABETH CLARY-PATTERSON & STEPHEN PATTERSON
HOLDEN, RAPPENECKER & EUBANK, P.A.
FIRST AMERICAN TITLE INSURANCE COMPANY

FIELD BOOK: 266 PAGE(S): 33

SURVEYOR'S CERTIFICATION

I HEREBY CERTIFY THAT THIS SURVEY WAS MADE UNDER MY RESPONSIBLE CHARGE AND MEETS THE MINIMUM TECHNICAL STANDARDS AS SET FORTH BY THE FLORIDA BOARD OF PROFESSIONAL SURVEYORS AND MAPPERS IN CHAPTER 61G17-6, FLORIDA ADMINISTRATIVE CODE, PURSUANT TO SECTION 472.027, FLORIDA STATUTES.

03/29/04 — FIELD SURVEY DATE
03/31/01 — DRAWING DATE

L. SCOTT BRITT, PSM
CERTIFICATION # 5757

NOTE: UNLESS IT BEARS THE SIGNATURE AND THE ORIGINAL RAISED SEAL OF A FLORIDA LICENSED SURVEYOR AND MAPPER THIS DRAWING, SKETCH, PLAT OR MAP IS FOR INFORMATIONAL PURPOSES ONLY AND IS NOT VALID.

BRITT SURVEYING
LAND SURVEYORS AND MAPPERS
830 WEST DUVAL STREET
LAKE CITY, FLORIDA 32055
TELEPHONE: (386) 752-7163 FAX: (386) 752-5573

WORK ORDER # L-14758A

Alpine Engineered Products, Inc.

1950 Marley Drive Haines City, FL 33844
Florida Engineering Certificate of Authorization Number: 567
Florida Certificate of Product Approval # FL1999
 Document ID:1SVS487-Z0524135910

Truss Fabricator: Anderson Truss Company
Job Identification: 6-126--Russell North Constructio Hynes -- , **
Truss Count: 32
Model Code: Florida Building Code 2004
Truss Criteria: ANSI/TPI-2002(STD)/FBC
Engineering Software: Alpine Software,Version 7.24.
Structural Engineer of Record: The identity of the structural EOR did not exist as of
Address: the seal date per section 61G15-31.003(5a) of the FAC
Minimum Design Loads: Roof - 40.0 PSF @ 1.25 Duration
Floor - N/A
Wind - 110 MPH ASCE 7-02 -Closed

Seal Date: 03/24/2006

-Truss Design Engineer-
Arthur R. Fisher
Florida License Number: 59687
1950 Marley Drive
Haines City, FL 33844

Notes:

1. Determination as to the suitability of these truss components for the structure is the responsibility of the building designer/engineer of record, as defined in ANSI/TPI 1
2. The drawing date shown on this index sheet must match the date shown on the individual truss component drawing.
3. As shown on attached drawings; the drawing number is preceded by: HCUSR487

Details: BRCLBSUB-

#	Ref Description	Drawing#	Date
1	09854--A1	06083031	03/24/06
2	09855--A2	06083025	03/24/06
3	09856--A3	06083046	03/24/06
4	09857--A4	06083047	03/24/06
5	09858--A5	06083032	03/24/06
6	09859--B1	06083033	03/24/06
7	09860--B2	06083034	03/24/06
8	09861--B3	06083035	03/24/06
9	09862--B4	06083036	03/24/06
10	09863--B5	06083037	03/24/06
11	09864--B6	06083038	03/24/06
12	09865--B7	06083039	03/24/06
13	09866--B8	06083040	03/24/06
14	09867--C1	06083041	03/24/06
15	09868--C2	06083042	03/24/06
16	09869--C3G	06083050	03/24/06
17	09870--C4	06083048	03/24/06
18	09871--C5G	06083045	03/24/06
19	09872--D1	06083044	03/24/06
20	09873--D2G	06083049	03/24/06
21	09874--D3	06083026	03/24/06
22	09875--D4	06083027	03/24/06
23	09876--HJ7	06083011	03/24/06
24	09877--EJ7	06083030	03/24/06
25	09878--EJA	06083029	03/24/06
26	09879--MAG	06083028	03/24/06
27	09880--J5	06083051	03/24/06
28	09881--J5D	06083043	03/24/06
29	09882--J3	06083052	03/24/06
30	09883--J1	06083053	03/24/06
31	09884--K1	06083054	03/24/06
32	09885--K2	06083055	03/24/06

752-6806
397-3075

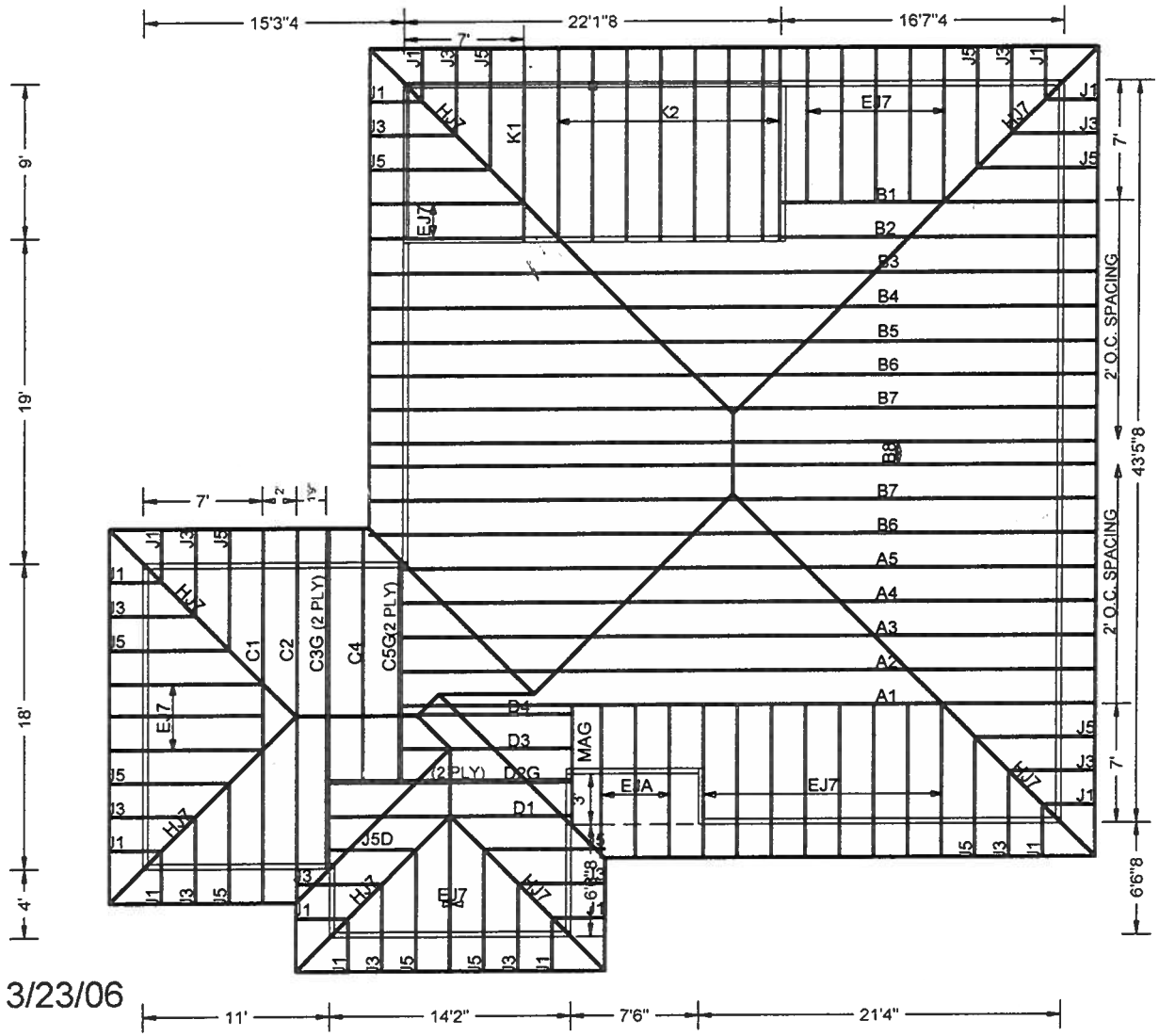

3/23/06

#6-126 RUSSELL NORTH CONSTRUCTION - HYNES

Scale: 3/32" = 1'

(6-126--Russell North Constructio Hynes - , - - A1)

Top chord 2x4 SP #2 Dense :T2, T3 2x6 SP #1 Dense:
Bot chord 2x8 SP #1 Dense
Webs 2x4 SP #3 :W13 2x4 SP #2 Dense:

SPECIAL LOADS
------(LUMBER DUR.FAC.=1.25 / PLATE DUR.FAC.=1.25)

TC - From	62 PLF	at	-2.00 to	62 PLF	at	7.00
TC - From	122 PLF	at	7.00 to	122 PLF	at	21.00
TC - From	62 PLF	at	21.00 to	62 PLF	at	38.73
BC - From	4 PLF	at	-2.00 to	4 PLF	at	0.00
BC - From	20 PLF	at	0.00 to	20 PLF	at	7.00
BC - From	49 PLF	at	7.00 to	49 PLF	at	21.00
BC - From	20 PLF	at	21.00 to	20 PLF	at	38.73
TC -	189 LB Conc. Load at 7.00					
BC -	416 LB Conc. Load at 7.00					
BC -	-93 LB Conc. Load at 23.06, 25.06, 27.06					
BC -	562 LB Conc. Load at 29.06					

Provide connection for concentrated load(s) shown.

110 mph wind, 15.00 ft mean hgt, ASCE 7-02, CLOSED bldg, Located anywhere in roof, CAT II, EXP B, wind TC DL=5.0 psf, wind BC DL=5.0 psf.

Right end vertical not exposed to wind pressure.

(A) #3 or better scab brace. Same size & 80% length of web member. Attach with 10d Box or Gun (0.128"x3",min.)nails @ 6" OC.

In lieu of structural panels or rigid ceiling use purlins to brace TC @ 24" OC, BC @ 24" OC.

Deflection meets L/360 live and L/240 total load. Creep increase factor for dead load is 1.50.

(1) 2x4X2-6-0 SP #2 Dense Top chord scab centered 0-2-6 from left end. Attach to one face of chord with (2) rows of 12d_Box_or_Gun_(0.128"x3.25",_min.)_nails @ 6" O.C., staggered 3".

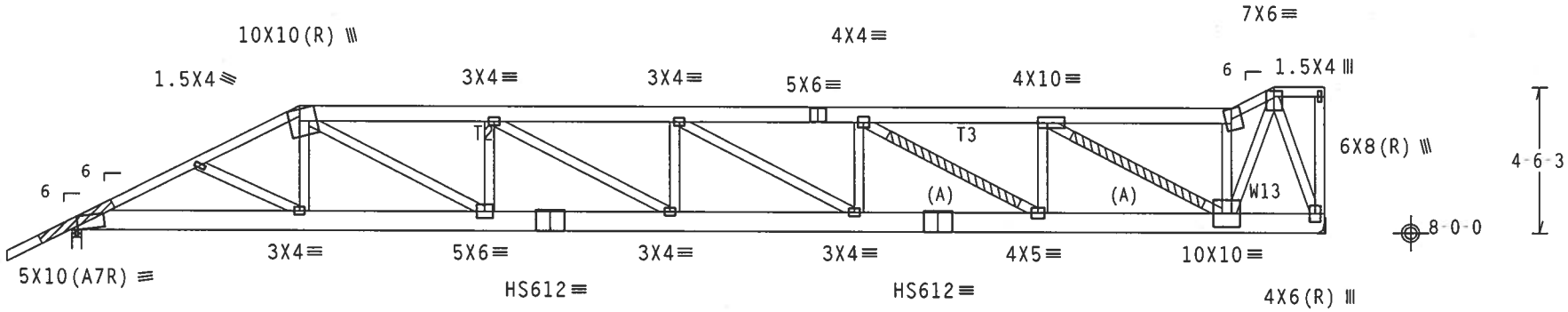

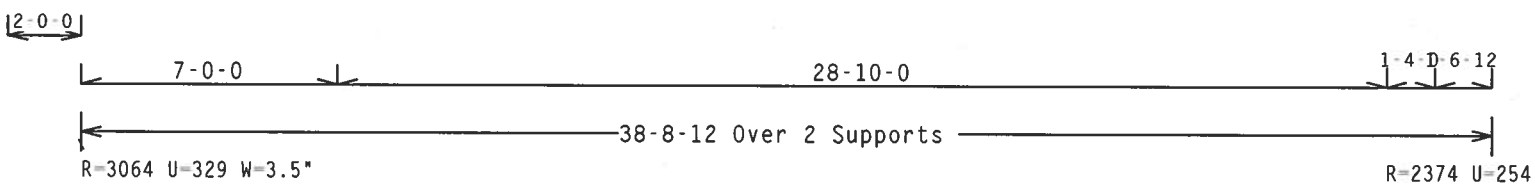

Design Crit: TPI-2002(STD)/FBC

PLT TYP. 20 Gauge HS,Wave Cq/RT=1.00(1.25)/10(0) 7.24.12 QTY:1 FL/-/4/-/-/R/- Scale =.1875"/Ft.

ALPINE
Alpine Engineered Products, Inc.
1950 Marley Drive
Haines City, FL 33844
FL Certificate of Authorization # 567

WARNING TRUSSES REQUIRE EXTREME CARE IN FABRICATION, HANDLING, SHIPPING, INSTALLING AND BRACING. REFER TO BCSI 1-03 (BUILDING COMPONENT SAFETY INFORMATION), PUBLISHED BY TPI (TRUSS PLATE INSTITUTE, 583 D'ONOFRIO DR., SUITE 200, MADISON, WI 53719) AND WTCA (WOOD TRUSS COUNCIL OF AMERICA, 6300 ENTERPRISE LN, MADISON, WI 53719) FOR SAFETY PRACTICES PRIOR TO PERFORMING THESE FUNCTIONS. UNLESS OTHERWISE INDICATED, TOP CHORD SHALL HAVE PROPERLY ATTACHED STRUCTURAL PANELS AND BOTTOM CHORD SHALL HAVE A PROPERLY ATTACHED RIGID CEILING.

IMPORTANTFURNISH A COPY OF THIS DESIGN TO THE INSTALLATION CONTRACTOR. ALPINE ENGINEERED PRODUCTS, INC. SHALL NOT BE RESPONSIBLE FOR ANY DEVIATION FROM THIS DESIGN; ANY FAILURE TO BUILD THE TRUSS IN CONFORMANCE WITH TPI; OR FABRICATING, HANDLING, SHIPPING, INSTALLING & BRACING OF TRUSSES. DESIGN CONFORMS WITH APPLICABLE PROVISIONS OF NDS (NATIONAL DESIGN SPEC. BY AF&PA) AND TPI. ALPINE CONNECTOR PLATES ARE MADE OF 20/18/16GA (W,H/S/K) ASTM A653 GRADE 40/60 (W, K/H,S) GALV. STEEL. APPLY PLATES TO EACH FACE OF TRUSS AND, UNLESS OTHERWISE LOCATED ON THIS DESIGN. POSITION PER DRAWINGS 160A-Z. ANY INSPECTION OF PLATES FOLLOWED BY (1) SHALL BE PER ANNEX A3 OF TPI1-2002 SEC.3. A SEAL ON THIS DRAWING INDICATES ACCEPTANCE OF PROFESSIONAL ENGINEERING RESPONSIBILITY SOLELY FOR THE TRUSS COMPONENT DESIGN SHOWN. THE SUITABILITY AND USE OF THIS COMPONENT FOR ANY BUILDING IS THE RESPONSIBILITY OF THE BUILDING DESIGNER PER ANSI/TPI 1 SEC. 2.

ARTHUR R. FISHER
LICENSE
No.59687
STATE OF FLORIDA
PROFESSIONAL ENGINEER
Mar 24 '06

TC LL	20.0 PSF	REF	R487-- 9854
TC DL	10.0 PSF	DATE	03/24/06
BC DL	10.0 PSF	DRW	HCUSR487 06083031
BC LL	0.0 PSF	HC-ENG	TCE/AF
TOT.LD.	40.0 PSF	SEQN-	12868 REV
DUR.FAC.	1.25		
SPACING	SEE ABOVE	JREF-	1SVS487_Z05

Top chord 2x4 SP #2 Dense
Bot chord 2x4 SP #2 Dense
Webs 2x4 SP #3

In lieu of structural panels or rigid ceiling use purlins to brace TC @ 24" OC, BC @ 24" OC.

110 mph wind, 15.00 ft mean hgt, ASCE 7-02, CLOSED bldg, not located within 4.50 ft from roof edge, CAT II, EXP B, wind TC DL=5.0 psf, wind BC DL=5.0 psf.

Deflection meets L/360 live and L/240 total load. Creep increase factor for dead load is 1.50.

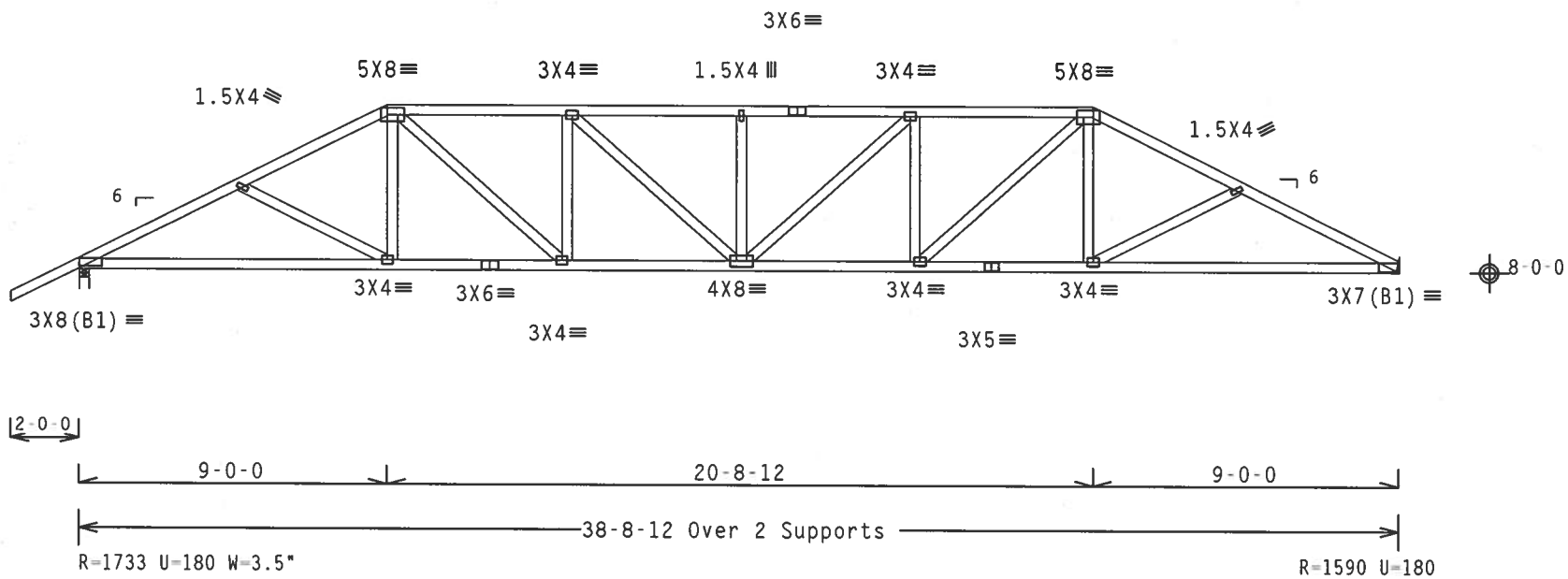

Design Crit: TPI-2002(STD)/FBC
Cq/RT=1.00(1.25)/10(0) 7.24.1 QTY:1 FL/-/4/-/-/R/-

PLT TYP. Wave

Scale =.1875"/Ft.

ALPINE
Alpine Engineered Products, Inc.
1950 Marley Drive
Haines City, FL 33844
FL Certificate of Authorization # 567

WARNING TRUSSES REQUIRE EXTREME CARE IN FABRICATION, HANDLING, SHIPPING, INSTALLING AND BRACING. REFER TO BCSI 1-03 (BUILDING COMPONENT SAFETY INFORMATION), PUBLISHED BY TPI (TRUSS PLATE INSTITUTE, 583 D'ONOFRIO DR., SUITE 200, MADISON, WI 53719) AND WTCA (WOOD TRUSS COUNCIL OF AMERICA, 6300 ENTERPRISE LN, MADISON, WI 53719) FOR SAFETY PRACTICES PRIOR TO PERFORMING THESE FUNCTIONS. UNLESS OTHERWISE INDICATED, TOP CHORD SHALL HAVE PROPERLY ATTACHED STRUCTURAL PANELS AND BOTTOM CHORD SHALL HAVE A PROPERLY ATTACHED RIGID CEILING.

IMPORTANT FURNISH A COPY OF THIS DESIGN TO THE INSTALLATION CONTRACTOR. ALPINE ENGINEERED PRODUCTS, INC. SHALL NOT BE RESPONSIBLE FOR ANY DEVIATION FROM THIS DESIGN; ANY FAILURE TO BUILD THE TRUSS IN CONFORMANCE WITH TPI; OR FABRICATING, HANDLING, SHIPPING, INSTALLING & BRACING OF TRUSSES. DESIGN CONFORMS WITH APPLICABLE PROVISIONS OF NDS (NATIONAL DESIGN SPEC. BY AF&PA) AND TPI. ALPINE CONNECTOR PLATES ARE MADE OF 20/18/16GA (W,H/S/K) ASTM A653 GRADE 40/60 (W, K/H,S) GALV. STEEL. APPLY PLATES TO EACH FACE OF TRUSS AND, UNLESS OTHERWISE LOCATED ON THIS DESIGN, POSITION PER DRAWINGS 160A-Z. ANY INSPECTION OF PLATES FOLLOWED BY (1) SHALL BE PER ANNEX A3 OF TPI1-2002 SEC.3. A SEAL ON THIS DRAWING INDICATES ACCEPTANCE OF PROFESSIONAL ENGINEERING RESPONSIBILITY SOLELY FOR THE TRUSS COMPONENT DESIGN SHOWN. THE SUITABILITY AND USE OF THIS COMPONENT FOR ANY BUILDING IS THE RESPONSIBILITY OF THE BUILDING DESIGNER PER ANSI/TPI 1 SEC. 2.

ARTHUR R. FISHER
LICENSE
No. 59687
STATE OF FLORIDA
PROFESSIONAL ENGINEER
Mar 24 '06

TC LL	20.0 PSF	REF R487-- 9855
TC DL	10.0 PSF	DATE 03/24/06
BC DL	10.0 PSF	DRW HCUSR487 06083025
BC LL	0.0 PSF	HC-ENG TCE/AF
TOT.LD.	40.0 PSF	SEQN- 5103
DUR.FAC.	1.25	
SPACING	24.0"	JREF- 1SVS487_Z05

(6-126--Russell North Constructio Hynes -- , -- A3)

Top chord 2x4 SP #2 Dense
Bot chord 2x4 SP #2 Dense
Webs 2x4 SP #3

In lieu of structural panels or rigid ceiling use purlins to brace TC @ 24" OC, BC @ 24" OC.

110 mph wind, 15.00 ft mean hgt, ASCE 7-02, CLOSED bldg, not located within 4.50 ft from roof edge, CAT II, EXP B, wind TC DL=5.0 psf, wind BC DL=5.0 psf.

Deflection meets L/360 live and L/240 total load. Creep increase factor for dead load is 1.50.

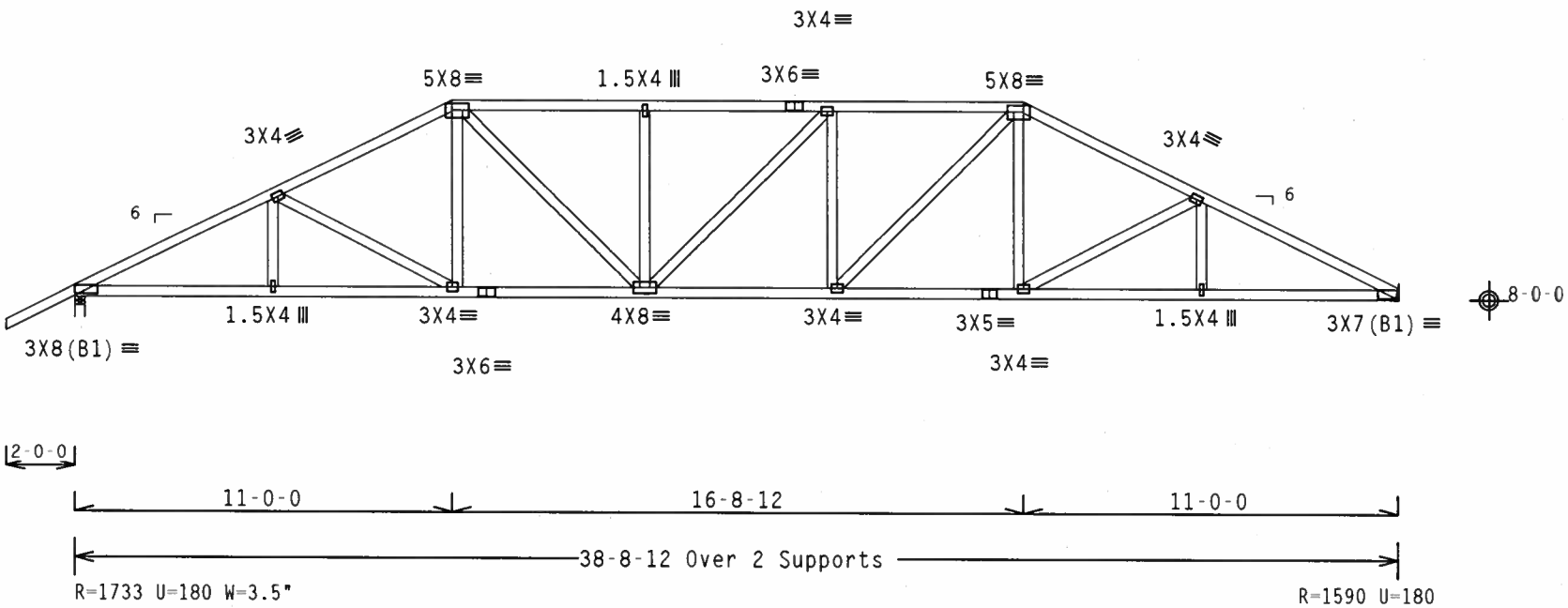

Design Crit: TPI-2002(STD)/FBC
Cq/RT=1.00(1.25)/10(0) 7.24.[illegible] QTY:1 FL/-/4/-/-/R/-

PLT TYP. Wave

Scale =.1875"/Ft.

ALPINE
Alpine Engineered Products, Inc.
1950 Marley Drive
Haines City, FL 33844
FL Certificate of Authorization # 567

WARNING TRUSSES REQUIRE EXTREME CARE IN FABRICATION, HANDLING, SHIPPING, INSTALLING AND BRACING. REFER TO BCSI 1-03 (BUILDING COMPONENT SAFETY INFORMATION), PUBLISHED BY TPI (TRUSS PLATE INSTITUTE, 583 D'ONOFRIO DR., SUITE 200, MADISON, WI 53719) AND WTCA (WOOD TRUSS COUNCIL OF AMERICA, 6300 ENTERPRISE LN, MADISON, WI 53719) FOR SAFETY PRACTICES PRIOR TO PERFORMING THESE FUNCTIONS. UNLESS OTHERWISE INDICATED, TOP CHORD SHALL HAVE PROPERLY ATTACHED STRUCTURAL PANELS AND BOTTOM CHORD SHALL HAVE A PROPERLY ATTACHED RIGID CEILING.

IMPORTANT FURNISH A COPY OF THIS DESIGN TO THE INSTALLATION CONTRACTOR. ALPINE ENGINEERED PRODUCTS, INC. SHALL NOT BE RESPONSIBLE FOR ANY DEVIATION FROM THIS DESIGN; ANY FAILURE TO BUILD THE TRUSS IN CONFORMANCE WITH TPI; OR FABRICATING, HANDLING, SHIPPING, INSTALLING & BRACING OF TRUSSES. DESIGN CONFORMS WITH APPLICABLE PROVISIONS OF NDS (NATIONAL DESIGN SPEC. BY AF&PA) AND TPI. ALPINE CONNECTOR PLATES ARE MADE OF 20/18/16GA (W,H/S/K) ASTM A653 GRADE 40/60 (W, K/H,S) GALV. STEEL. APPLY PLATES TO EACH FACE OF TRUSS AND, UNLESS OTHERWISE LOCATED ON THIS DESIGN, POSITION PER DRAWINGS 160A-Z. ANY INSPECTION OF PLATES FOLLOWED BY (1) SHALL BE PER ANNEX A3 OF TPI1-2002 SEC.3. A SEAL ON THIS DRAWING INDICATES ACCEPTANCE OF PROFESSIONAL ENGINEERING RESPONSIBILITY SOLELY FOR THE TRUSS COMPONENT DESIGN SHOWN. THE SUITABILITY AND USE OF THIS COMPONENT FOR ANY BUILDING IS THE RESPONSIBILITY OF THE BUILDING DESIGNER PER ANSI/TPI 1 SEC. 2.

ARTHUR R. FISHER
LICENSE
No.59687
STATE OF FLORIDA
PROFESSIONAL ENGINEER
Mar 2[illegible] '06

TC LL	20.0 PSF	REF	R487-- 9856
TC DL	10.0 PSF	DATE	03/24/06
BC DL	10.0 PSF	DRW	HCUSR487 06083046
BC LL	0.0 PSF	HC-ENG	TCE/AF
TOT.LD.	40.0 PSF	SEQN-	5109
DUR.FAC.	1.25		
SPACING	24.0"	JREF-	1SVS487_Z05

(6-126--Russell North Constructio Hynes - , - A4)

Top chord 2x4 SP #2 Dense
Bot chord 2x4 SP #2 Dense
Webs 2x4 SP #3

In lieu of structural panels or rigid ceiling use purlins to brace TC @ 24" OC, BC @ 24" OC.

110 mph wind, 15.00 ft mean hgt, ASCE 7-02, CLOSED bldg, not located within 4.50 ft from roof edge, CAT II, EXP B, wind TC DL=5.0 psf, wind BC DL=5.0 psf.

Deflection meets L/360 live and L/240 total load. Creep increase factor for dead load is 1.50.

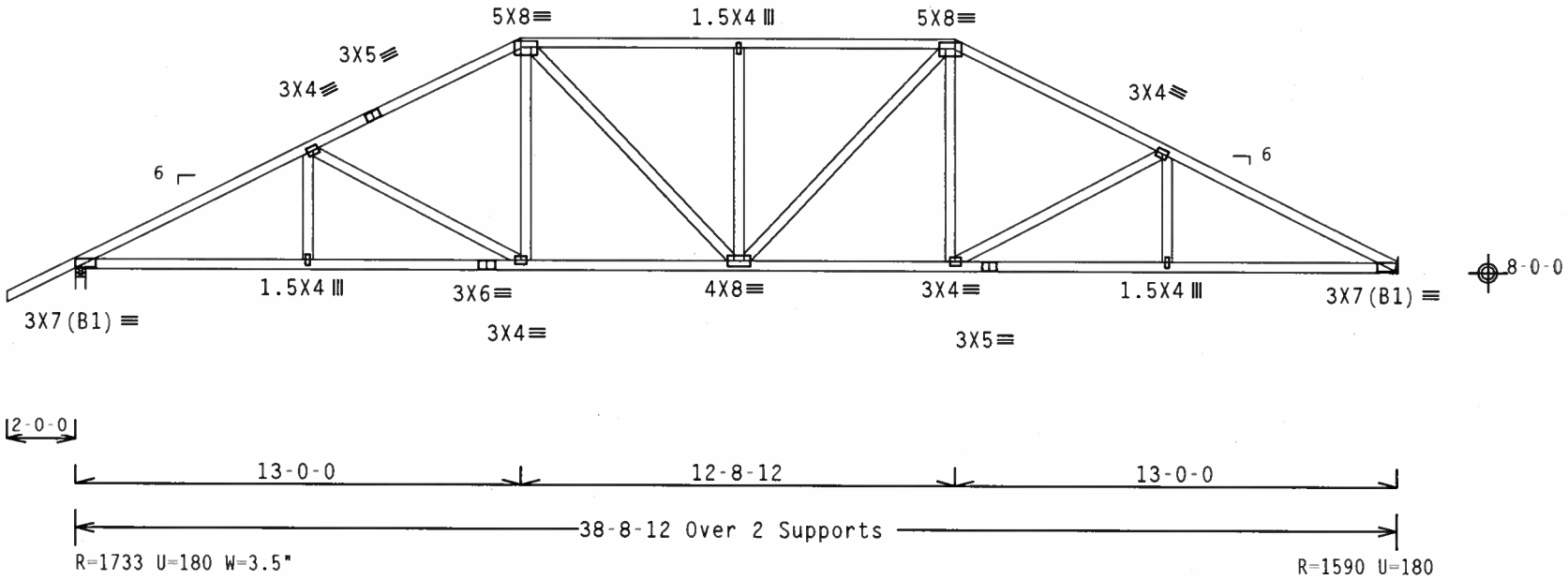

Design Crit: TPI-2002(STD)/FBC
Cq/RT=1.00(1.25)/10(0) 7.24.1 QTY:1 FL/-/4/-/-/R/-

PLT TYP. Wave

Scale =.1875"/Ft.

ALPINE
Alpine Engineered Products, Inc.
1950 Marley Drive
Haines City, FL 33844
FL Certificate of Authorization # 567

WARNING TRUSSES REQUIRE EXTREME CARE IN FABRICATION, HANDLING, SHIPPING, INSTALLING AND BRACING. REFER TO BCSI 1-03 (BUILDING COMPONENT SAFETY INFORMATION), PUBLISHED BY TPI (TRUSS PLATE INSTITUTE, 583 D'ONOFRIO DR., SUITE 200, MADISON, WI 53719) AND WTCA (WOOD TRUSS COUNCIL OF AMERICA, 6300 ENTERPRISE LN, MADISON, WI 53719) FOR SAFETY PRACTICES PRIOR TO PERFORMING THESE FUNCTIONS. UNLESS OTHERWISE INDICATED, TOP CHORD SHALL HAVE PROPERLY ATTACHED STRUCTURAL PANELS AND BOTTOM CHORD SHALL HAVE A PROPERLY ATTACHED RIGID CEILING.

IMPORTANTFURNISH A COPY OF THIS DESIGN TO THE INSTALLATION CONTRACTOR. ALPINE ENGINEERED PRODUCTS, INC. SHALL NOT BE RESPONSIBLE FOR ANY DEVIATION FROM THIS DESIGN; ANY FAILURE TO BUILD THE TRUSS IN CONFORMANCE WITH TPI; OR FABRICATING, HANDLING, SHIPPING, INSTALLING & BRACING OF TRUSSES. DESIGN CONFORMS WITH APPLICABLE PROVISIONS OF NDS (NATIONAL DESIGN SPEC. BY AF&PA) AND TPI. ALPINE CONNECTOR PLATES ARE MADE OF 20/18/16GA (W,H/S/K) ASTM A653 GRADE 40/60 (W, K/H,S) GALV. STEEL. APPLY PLATES TO EACH FACE OF TRUSS AND, UNLESS OTHERWISE LOCATED ON THIS DESIGN, POSITION PER DRAWINGS 160A-Z. ANY INSPECTION OF PLATES FOLLOWED BY (1) SHALL BE PER ANNEX A3 OF TPI1-2002 SEC.3. A SEAL ON THIS DRAWING INDICATES ACCEPTANCE OF PROFESSIONAL ENGINEERING RESPONSIBILITY SOLELY FOR THE TRUSS COMPONENT DESIGN SHOWN. THE SUITABILITY AND USE OF THIS COMPONENT FOR ANY BUILDING IS THE RESPONSIBILITY OF THE BUILDING DESIGNER PER ANSI/TPI 1 SEC. 2.

ARTHUR R. FISHER
LICENSE
No. 59687
STATE OF FLORIDA
PROFESSIONAL ENGINEER

Mar 24 '06

TC LL	20.0 PSF	REF	R487-- 9857
TC DL	10.0 PSF	DATE	03/24/06
BC DL	10.0 PSF	DRW	HCUSR487 06083047
BC LL	0.0 PSF	HC-ENG	TCE/AF
TOT.LD.	40.0 PSF	SEQN-	5118
DUR.FAC.	1.25		
SPACING	24.0"	JREF-	1SVS487_Z05

(6-126--Russell North Constructio Hynes - . - A5)

Top chord 2x4 SP #2 Dense
Bot chord 2x4 SP #2 Dense
Webs 2x4 SP #3

(A) 1x4 #3 or better "T" brace. 80% length of web member. Attach with 8d Box or Gun (0.113"x2.5",min.)nails @ 6" OC.

Deflection meets L/360 live and L/240 total load. Creep increase factor for dead load is 1.50.

110 mph wind, 15.00 ft mean hgt, ASCE 7-02, CLOSED bldg, not located within 4.50 ft from roof edge, CAT II, EXP B, wind TC DL=5.0 psf, wind BC DL=5.0 psf.

In lieu of structural panels or rigid ceiling use purlins to brace TC @ 24" OC, BC @ 24" OC.

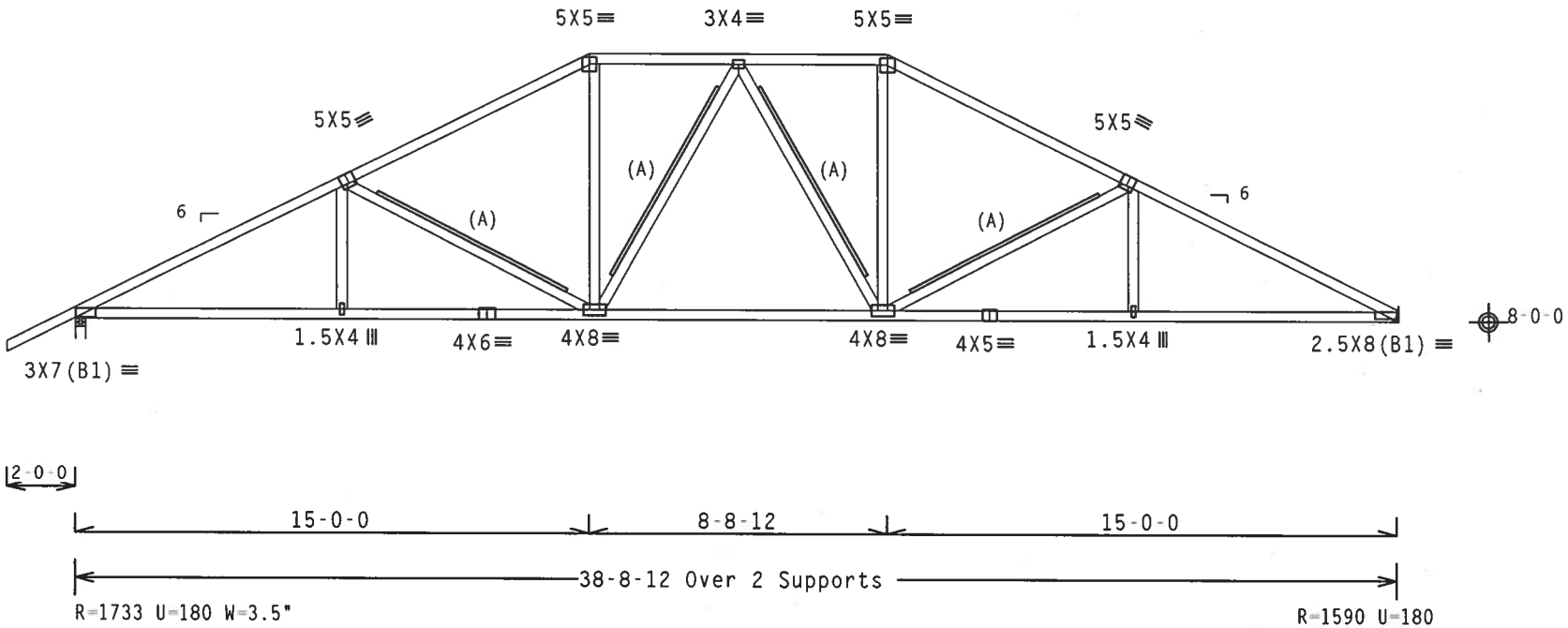

Design Crit: TPI-2002(STD)/FBC

PLT TYP. Wave

Cq/RT=1.00(1.25)/10(0) 7.24.1 QTY:1 FL/-/4/-/-/R/- Scale =.1875"/Ft.

ALPINE

Alpine Engineered Products, Inc.
1950 Marley Drive
Haines City, FL 33844
FL Certificate of Authorization # 567

WARNING TRUSSES REQUIRE EXTREME CARE IN FABRICATION, HANDLING, SHIPPING, INSTALLING AND BRACING. REFER TO BCSI 1-03 (BUILDING COMPONENT SAFETY INFORMATION), PUBLISHED BY TPI (TRUSS PLATE INSTITUTE, 583 D'ONOFRIO DR., SUITE 200, MADISON, WI 53719) AND WTCA (WOOD TRUSS COUNCIL OF AMERICA, 6300 ENTERPRISE LN, MADISON, WI 53719) FOR SAFETY PRACTICES PRIOR TO PERFORMING THESE FUNCTIONS. UNLESS OTHERWISE INDICATED, TOP CHORD SHALL HAVE PROPERLY ATTACHED STRUCTURAL PANELS AND BOTTOM CHORD SHALL HAVE A PROPERLY ATTACHED RIGID CEILING.

IMPORTANT FURNISH A COPY OF THIS DESIGN TO THE INSTALLATION CONTRACTOR. ALPINE ENGINEERED PRODUCTS, INC. SHALL NOT BE RESPONSIBLE FOR ANY DEVIATION FROM THIS DESIGN; ANY FAILURE TO BUILD THE TRUSS IN CONFORMANCE WITH TPI; OR FABRICATING, HANDLING, SHIPPING, INSTALLING & BRACING OF TRUSSES. DESIGN CONFORMS WITH APPLICABLE PROVISIONS OF NDS (NATIONAL DESIGN SPEC. BY AF&PA) AND TPI. ALPINE CONNECTOR PLATES ARE MADE OF 20/18/16GA (W.H/S/K) ASTM A653 GRADE 40/60 (W. K/H.S) GALV. STEEL. APPLY PLATES TO EACH FACE OF TRUSS AND, UNLESS OTHERWISE LOCATED ON THIS DESIGN, POSITION PER DRAWINGS 160A-Z. ANY INSPECTION OF PLATES FOLLOWED BY (1) SHALL BE PER ANNEX A3 OF TPI1-2002 SEC.3. A SEAL ON THIS DRAWING INDICATES ACCEPTANCE OF PROFESSIONAL ENGINEERING RESPONSIBILITY SOLELY FOR THE TRUSS COMPONENT DESIGN SHOWN. THE SUITABILITY AND USE OF THIS COMPONENT FOR ANY BUILDING IS THE RESPONSIBILITY OF THE BUILDING DESIGNER PER ANSI/TPI 1 SEC. 2.

ARTHUR R. FISHER
LICENSE
No.59687
STATE OF FLORIDA
PROFESSIONAL ENGINEER

Mar 24 '06

TC LL	20.0 PSF	REF	R487-- 9858
TC DL	10.0 PSF	DATE	03/24/06
BC DL	10.0 PSF	DRW	HCUSR487 06083032
BC LL	0.0 PSF	HC-ENG	TCE/AF
TOT.LD.	40.0 PSF	SEQN-	5126
DUR.FAC.	1.25		
SPACING	24.0"	JREF-	1SVS487_Z05

(6-126--Russell North Constructio Hynes -- , -- - B1)

Top chord 2x4 SP #2 Dense
Bot chord 2x4 SP #2 Dense
Webs 2x4 SP #3

In lieu of structural panels or rigid ceiling use purlins to brace TC @ 24" OC, BC @ 24" OC.

Left side jacks have 7-0-0 setback with 0-0-0 cant and 2-0-0 overhang. End jacks have 7-0-0 setback with 0-0-0 cant and 2-0-0 overhang. Right side jacks have 0-0-0 setback with 0-0-0 cant and 0-0-0 overhang.

110 mph wind, 15.00 ft mean hgt, ASCE 7-02, CLOSED bldg, Located anywhere in roof, CAT II, EXP B, wind TC DL=5.0 psf, wind BC DL=5.0 psf.

Right end vertical not exposed to wind pressure.

#1 hip supports 7-0-0 jacks with no webs.

Deflection meets L/360 live and L/240 total load. Creep increase factor for dead load is 1.50.

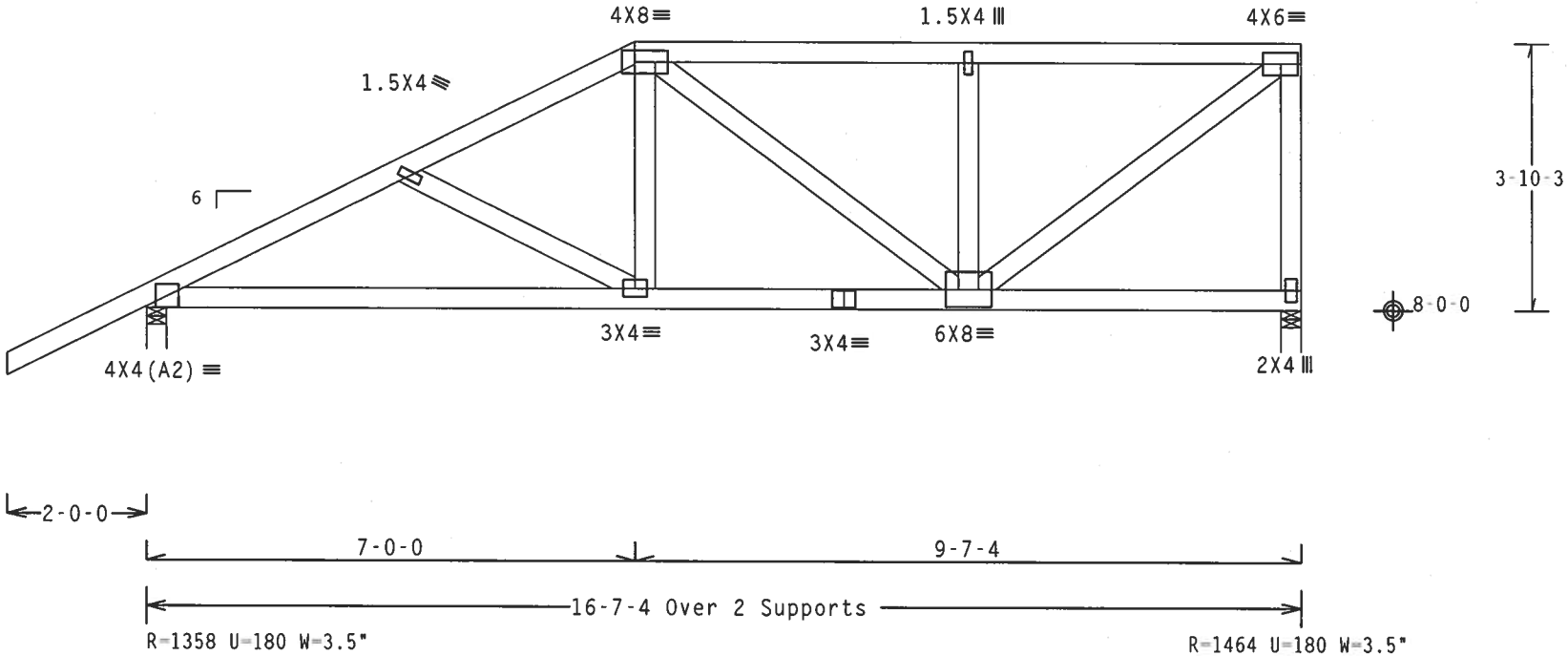

Design Crit: TPI-2002(STD)/FBC

PLT TYP. Wave Cq/RT=1.00(1.25)/10(0) 7.24.1 QTY:1 FL/-/4/-/-/R/- Scale =.375"/Ft.

ALPINE
Alpine Engineered Products, Inc.
1950 Marley Drive
Haines City, FL 33844
FL Certificate of Authorization # 567

WARNING TRUSSES REQUIRE EXTREME CARE IN FABRICATION, HANDLING, SHIPPING, INSTALLING AND BRACING. REFER TO BCSI 1-03 (BUILDING COMPONENT SAFETY INFORMATION), PUBLISHED BY TPI (TRUSS PLATE INSTITUTE, 583 D'ONOFRIO DR., SUITE 200, MADISON, WI 53719) AND WTCA (WOOD TRUSS COUNCIL OF AMERICA, 6300 ENTERPRISE LN, MADISON, WI 53719) FOR SAFETY PRACTICES PRIOR TO PERFORMING THESE FUNCTIONS. UNLESS OTHERWISE INDICATED, TOP CHORD SHALL HAVE PROPERLY ATTACHED STRUCTURAL PANELS AND BOTTOM CHORD SHALL HAVE A PROPERLY ATTACHED RIGID CEILING.

IMPORTANTFURNISH A COPY OF THIS DESIGN TO THE INSTALLATION CONTRACTOR. ALPINE ENGINEERED PRODUCTS, INC. SHALL NOT BE RESPONSIBLE FOR ANY DEVIATION FROM THIS DESIGN; ANY FAILURE TO BUILD THE TRUSS IN CONFORMANCE WITH TPI; OR FABRICATING, HANDLING, SHIPPING, INSTALLING & BRACING OF TRUSSES. DESIGN CONFORMS WITH APPLICABLE PROVISIONS OF NDS (NATIONAL DESIGN SPEC. BY AF&PA) AND TPI. ALPINE CONNECTOR PLATES ARE MADE OF 20/18/16GA (W.H/S/K) ASTM A653 GRADE 40/60 (W. K/H.S) GALV. STEEL. APPLY PLATES TO EACH FACE OF TRUSS AND, UNLESS OTHERWISE LOCATED ON THIS DESIGN. POSITION PER DRAWINGS 160A-Z. ANY INSPECTION OF PLATES FOLLOWED BY (1) SHALL BE PER ANNEX A3 OF TPI1-2002 SEC.3. A SEAL ON THIS DRAWING INDICATES ACCEPTANCE OF PROFESSIONAL ENGINEERING RESPONSIBILITY SOLELY FOR THE TRUSS COMPONENT DESIGN SHOWN. THE SUITABILITY AND USE OF THIS COMPONENT FOR ANY BUILDING IS THE RESPONSIBILITY OF THE BUILDING DESIGNER PER ANSI/TPI 1 SEC. 2.

ARTHUR A. FISHER
LICENSE
No.59687
STATE OF FLORIDA
PROFESSIONAL ENGINEER
Mar 24 '06

TC LL	20.0 PSF	REF	R487-- 9859
TC DL	10.0 PSF	DATE	03/24/06
BC DL	10.0 PSF	DRW	HCUSR487 06083033
BC LL	0.0 PSF	HC-ENG	TCE/AF
TOT.LD.	40.0 PSF	SEQN-	5240
DUR.FAC.	1.25		
SPACING	SEE ABOVE	JREF-	1SVS487_Z05

(6-126--Russell North Constructio Hynes - - , - - B2)

Top chord 2x4 SP #2 Dense
Bot chord 2x4 SP #2 Dense
Webs 2x4 SP #3

In lieu of structural panels or rigid ceiling use purlins to brace TC @ 24" OC, BC @ 24" OC.

110 mph wind, 15.00 ft mean hgt, ASCE 7-02, CLOSED bldg, not located within 4.50 ft from roof edge, CAT II, EXP B, wind TC DL=5.0 psf, wind BC DL=5.0 psf.

Right end vertical not exposed to wind pressure.

Deflection meets L/360 live and L/240 total load. Creep increase factor for dead load is 1.50.

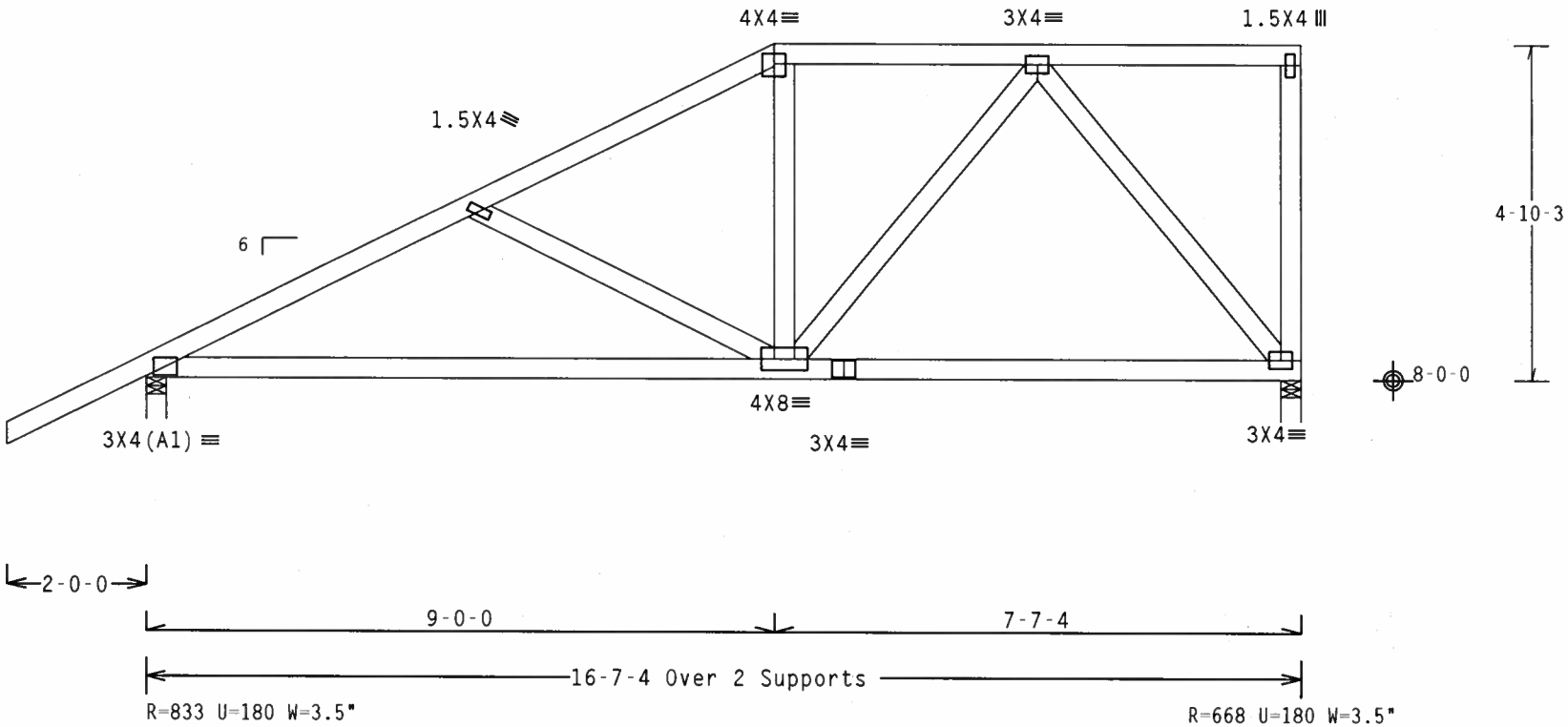

Design Crit: TPI-2002(STD)/FBC
Cq/RT=1.00(1.25)/10(0) 7.24.1 QTY:1 FL/-/4/-/-/R/-

PLT TYP. Wave

Scale =.375"/Ft.

ALPINE
Alpine Engineered Products, Inc.
1950 Marley Drive
Haines City, FL 33844
FL Certificate of Authorization # 567

WARNING TRUSSES REQUIRE EXTREME CARE IN FABRICATION, HANDLING, SHIPPING, INSTALLING AND BRACING. REFER TO BCSI 1-03 (BUILDING COMPONENT SAFETY INFORMATION), PUBLISHED BY TPI (TRUSS PLATE INSTITUTE, 583 D'ONOFRIO DR., SUITE 200, MADISON, WI 53719) AND WTCA (WOOD TRUSS COUNCIL OF AMERICA, 6300 ENTERPRISE LN, MADISON, WI 53719) FOR SAFETY PRACTICES PRIOR TO PERFORMING THESE FUNCTIONS. UNLESS OTHERWISE INDICATED, TOP CHORD SHALL HAVE PROPERLY ATTACHED STRUCTURAL PANELS AND BOTTOM CHORD SHALL HAVE A PROPERLY ATTACHED RIGID CEILING.

IMPORTANT FURNISH A COPY OF THIS DESIGN TO THE INSTALLATION CONTRACTOR. ALPINE ENGINEERED PRODUCTS, INC. SHALL NOT BE RESPONSIBLE FOR ANY DEVIATION FROM THIS DESIGN; ANY FAILURE TO BUILD THE TRUSS IN CONFORMANCE WITH TPI; OR FABRICATING, HANDLING, SHIPPING, INSTALLING & BRACING OF TRUSSES. DESIGN CONFORMS WITH APPLICABLE PROVISIONS OF NDS (NATIONAL DESIGN SPEC. BY AF&PA) AND TPI. ALPINE CONNECTOR PLATES ARE MADE OF 20/18/16GA (W,H/S/K) ASTM A653 GRADE 40/60 (W, K/H,S) GALV. STEEL. APPLY PLATES TO EACH FACE OF TRUSS AND, UNLESS OTHERWISE LOCATED ON THIS DESIGN, POSITION PER DRAWINGS 160A-Z. ANY INSPECTION OF PLATES FOLLOWED BY (1) SHALL BE PER ANNEX A3 OF TPI1-2002 SEC.3. A SEAL ON THIS DRAWING INDICATES ACCEPTANCE OF PROFESSIONAL ENGINEERING RESPONSIBILITY SOLELY FOR THE TRUSS COMPONENT DESIGN SHOWN. THE SUITABILITY AND USE OF THIS COMPONENT FOR ANY BUILDING IS THE RESPONSIBILITY OF THE BUILDING DESIGNER PER ANSI/TPI 1 SEC. 2.

ARTHUR R. FISHER
LICENSE
No.59687
STATE OF FLORIDA
PROFESSIONAL ENGINEER

Mar 24 '06

TC LL	20.0 PSF	REF	R487-- 9860
TC DL	10.0 PSF	DATE	03/24/06
BC DL	10.0 PSF	DRW	HCUSR487 06083034
BC LL	0.0 PSF	HC-ENG	TCE/AF *
TOT.LD.	40.0 PSF	SEQN-	5233
DUR.FAC.	1.25		
SPACING	24.0"	JREF-	1SVS487_Z05

(6-126--Russell North Constructio Hynes - , - B3)

Top chord 2x4 SP #2 Dense
Bot chord 2x4 SP #2 Dense
Webs 2x4 SP #3

In lieu of structural panels or rigid ceiling use purlins to brace TC @ 24" OC, BC @ 24" OC.

110 mph wind, 15.00 ft mean hgt, ASCE 7-02, CLOSED bldg, not located within 4.50 ft from roof edge, CAT II, EXP B, wind TC DL=5.0 psf, wind BC DL=5.0 psf.

Deflection meets L/360 live and L/240 total load. Creep increase factor for dead load is 1.50.

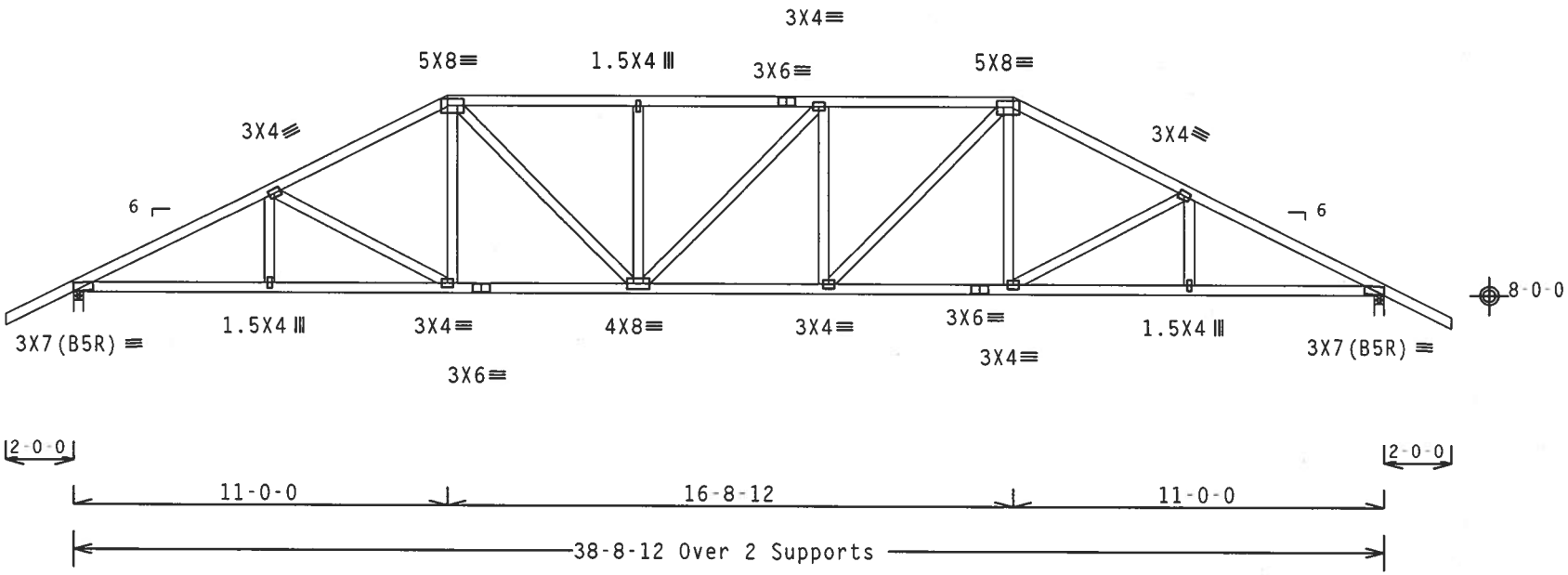

R=1729 U=180 W=3.5"

R=1719 U=180 W=3.5"

Design Crit: TPI-2002(STD)/FBC

PLT TYP. Wave

Cq/RT=1.00(1.25)/10(0) 7.24.1 QTY:1 FL/-/4/-/-/R/- Scale =.1875"/Ft.

ALPINE

Alpine Engineered Products, Inc.
1950 Marley Drive
Haines City, FL 33844
FL Certificate of Authorization # 567

WARNING TRUSSES REQUIRE EXTREME CARE IN FABRICATION, HANDLING, SHIPPING, INSTALLING AND BRACING. REFER TO BCSI 1-03 (BUILDING COMPONENT SAFETY INFORMATION), PUBLISHED BY TPI (TRUSS PLATE INSTITUTE, 583 D'ONOFRIO DR., SUITE 200, MADISON, WI 53719) AND WTCA (WOOD TRUSS COUNCIL OF AMERICA, 6300 ENTERPRISE LN, MADISON, WI 53719) FOR SAFETY PRACTICES PRIOR TO PERFORMING THESE FUNCTIONS. UNLESS OTHERWISE INDICATED, TOP CHORD SHALL HAVE PROPERLY ATTACHED STRUCTURAL PANELS AND BOTTOM CHORD SHALL HAVE A PROPERLY ATTACHED RIGID CEILING.

IMPORTANT FURNISH A COPY OF THIS DESIGN TO THE INSTALLATION CONTRACTOR. ALPINE ENGINEERED PRODUCTS, INC. SHALL NOT BE RESPONSIBLE FOR ANY DEVIATION FROM THIS DESIGN; ANY FAILURE TO BUILD THE TRUSS IN CONFORMANCE WITH TPI; OR FABRICATING, HANDLING, SHIPPING, INSTALLING & BRACING OF TRUSSES. DESIGN CONFORMS WITH APPLICABLE PROVISIONS OF NDS (NATIONAL DESIGN SPEC. BY AF&PA) AND TPI. ALPINE CONNECTOR PLATES ARE MADE OF 20/18/16GA (W,H/S/K) ASTM A653 GRADE 40/60 (W, K/H,S) GALV. STEEL. APPLY PLATES TO EACH FACE OF TRUSS AND, UNLESS OTHERWISE LOCATED ON THIS DESIGN, POSITION PER DRAWINGS 160A-Z. ANY INSPECTION OF PLATES FOLLOWED BY (1) SHALL BE PER ANNEX A3 OF TPI1-2002 SEC.3. A SEAL ON THIS DRAWING INDICATES ACCEPTANCE OF PROFESSIONAL ENGINEERING RESPONSIBILITY SOLELY FOR THE TRUSS COMPONENT DESIGN SHOWN. THE SUITABILITY AND USE OF THIS COMPONENT FOR ANY BUILDING IS THE RESPONSIBILITY OF THE BUILDING DESIGNER PER ANSI/TPI 1 SEC. 2.

ARTHUR R. FISHER
LICENSE
No. 59687
STATE OF FLORIDA
PROFESSIONAL ENGINEER

Mar 24, 06

TC LL	20.0 PSF	REF	R487-- 9861
TC DL	10.0 PSF	DATE	03/24/06
BC DL	10.0 PSF	DRW	HCUSR487 06083035
BC LL	0.0 PSF	HC-ENG	TCE/AF *
TOT.LD.	40.0 PSF	SEQN-	5227
DUR.FAC.	1.25		
SPACING	24.0"	JREF-	1SVS487_Z05

(6-126--Russell North Constructio Hynes - , - B4)

Top chord 2x4 SP #2 Dense
Bot chord 2x4 SP #2 Dense
Webs 2x4 SP #3

In lieu of structural panels or rigid ceiling use purlins to brace TC @ 24" OC, BC @ 24" OC.

110 mph wind, 15.00 ft mean hgt, ASCE 7-02, CLOSED bldg, not located within 4.50 ft from roof edge, CAT II, EXP B, wind TC DL=5.0 psf, wind BC DL=5.0 psf.

Deflection meets L/360 live and L/240 total load. Creep increase factor for dead load is 1.50.

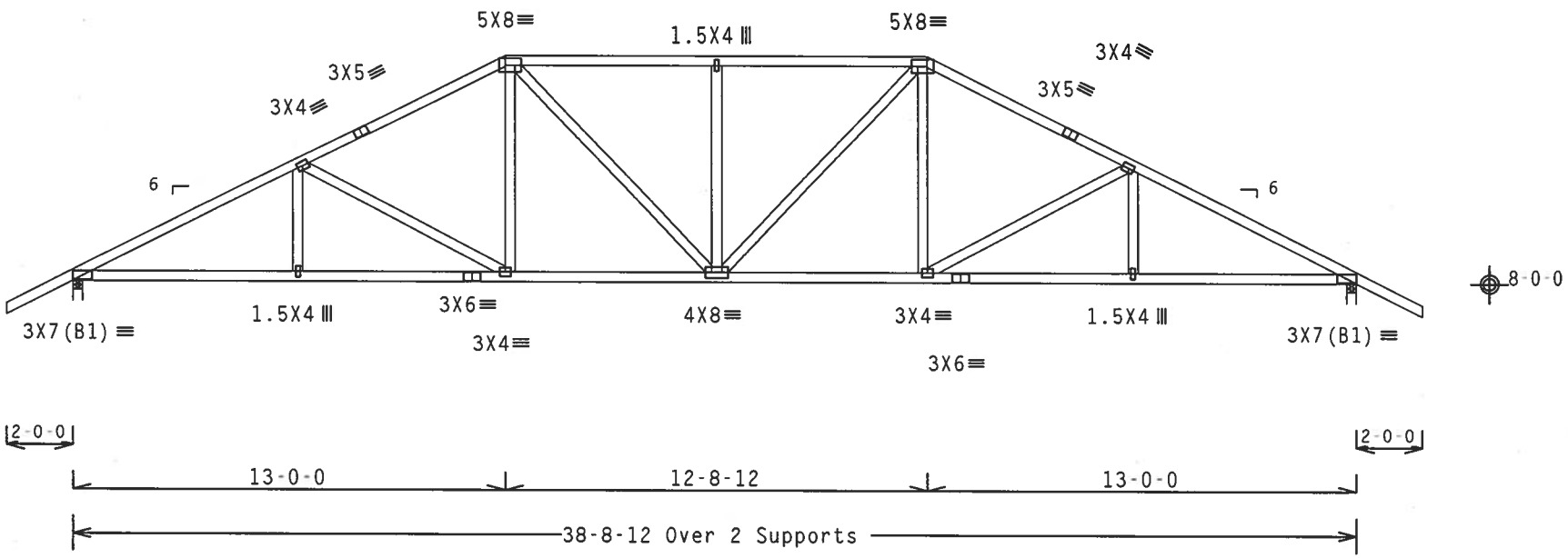

R=1729 U=180 W=3.5"

R=1719 U=180 W=3.5"

Design Crit: TPI-2002(STD)/FBC

PLT TYP. Wave

Cq/RT=1.00(1.25)/10(0) 7.24.1 QTY:1 FL/-/4/-/-/R/- Scale =.1875"/Ft.

ALPINE

Alpine Engineered Products, Inc.
1950 Marley Drive
Haines City, FL 33844
FL Certificate of Authorization # 567

WARNING TRUSSES REQUIRE EXTREME CARE IN FABRICATION, HANDLING, SHIPPING, INSTALLING AND BRACING. REFER TO BCSI 1-03 (BUILDING COMPONENT SAFETY INFORMATION), PUBLISHED BY TPI (TRUSS PLATE INSTITUTE, 583 D'ONOFRIO DR., SUITE 200, MADISON, WI 53719) AND WTCA (WOOD TRUSS COUNCIL OF AMERICA, 6300 ENTERPRISE LN, MADISON, WI 53719) FOR SAFETY PRACTICES PRIOR TO PERFORMING THESE FUNCTIONS. UNLESS OTHERWISE INDICATED, TOP CHORD SHALL HAVE PROPERLY ATTACHED STRUCTURAL PANELS AND BOTTOM CHORD SHALL HAVE A PROPERLY ATTACHED RIGID CEILING.

IMPORTANTFURNISH A COPY OF THIS DESIGN TO THE INSTALLATION CONTRACTOR. ALPINE ENGINEERED PRODUCTS, INC. SHALL NOT BE RESPONSIBLE FOR ANY DEVIATION FROM THIS DESIGN; ANY FAILURE TO BUILD THE TRUSS IN CONFORMANCE WITH TPI; OR FABRICATING, HANDLING, SHIPPING, INSTALLING & BRACING OF TRUSSES. DESIGN CONFORMS WITH APPLICABLE PROVISIONS OF NDS (NATIONAL DESIGN SPEC. BY AF&PA) AND TPI. ALPINE CONNECTOR PLATES ARE MADE OF 20/18/16GA (W.H/S/K) ASTM A653 GRADE 40/60 (W, K/H,S) GALV. STEEL. APPLY PLATES TO EACH FACE OF TRUSS AND, UNLESS OTHERWISE LOCATED ON THIS DESIGN, POSITION PER DRAWINGS 160A-Z. ANY INSPECTION OF PLATES FOLLOWED BY (1) SHALL BE PER ANNEX A3 OF TPI1-2002 SEC.3. A SEAL ON THIS DRAWING INDICATES ACCEPTANCE OF PROFESSIONAL ENGINEERING RESPONSIBILITY SOLELY FOR THE TRUSS COMPONENT DESIGN SHOWN. THE SUITABILITY AND USE OF THIS COMPONENT FOR ANY BUILDING IS THE RESPONSIBILITY OF THE BUILDING DESIGNER PER ANSI/TPI 1 SEC. 2.

ARTHUR R. FISHER
LICENSE
No. 39687
STATE OF FLORIDA
PROFESSIONAL ENGINEER

Mar 24 '06

TC LL	20.0 PSF	REF	R487-- 9862
TC DL	10.0 PSF	DATE	03/24/06
BC DL	10.0 PSF	DRW	HCUSR487 06083036
BC LL	0.0 PSF	HC-ENG	TCE/AF *
TOT.LD.	40.0 PSF	SEQN-	5221
DUR.FAC.	1.25		
SPACING	24.0"	JREF-	1SVS487_Z05

(6-126--Russell North Constructio Hynes - - , - - B5)

Top chord 2x4 SP #2 Dense
Bot chord 2x4 SP #2 Dense
Webs 2x4 SP #3

(A) 1x4 #3 or better "T" brace. 80% length of web member. Attach with 8d Box or Gun (0.113"x2.5",min.)nails @ 6" OC.

Deflection meets L/360 live and L/240 total load. Creep increase factor for dead load is 1.50.

110 mph wind, 15.00 ft mean hgt, ASCE 7-02, CLOSED bldg, not located within 4.50 ft from roof edge, CAT II, EXP B, wind TC DL=5.0 psf, wind BC DL=5.0 psf.

In lieu of structural panels or rigid ceiling use purlins to brace TC @ 24" OC, BC @ 24" OC.

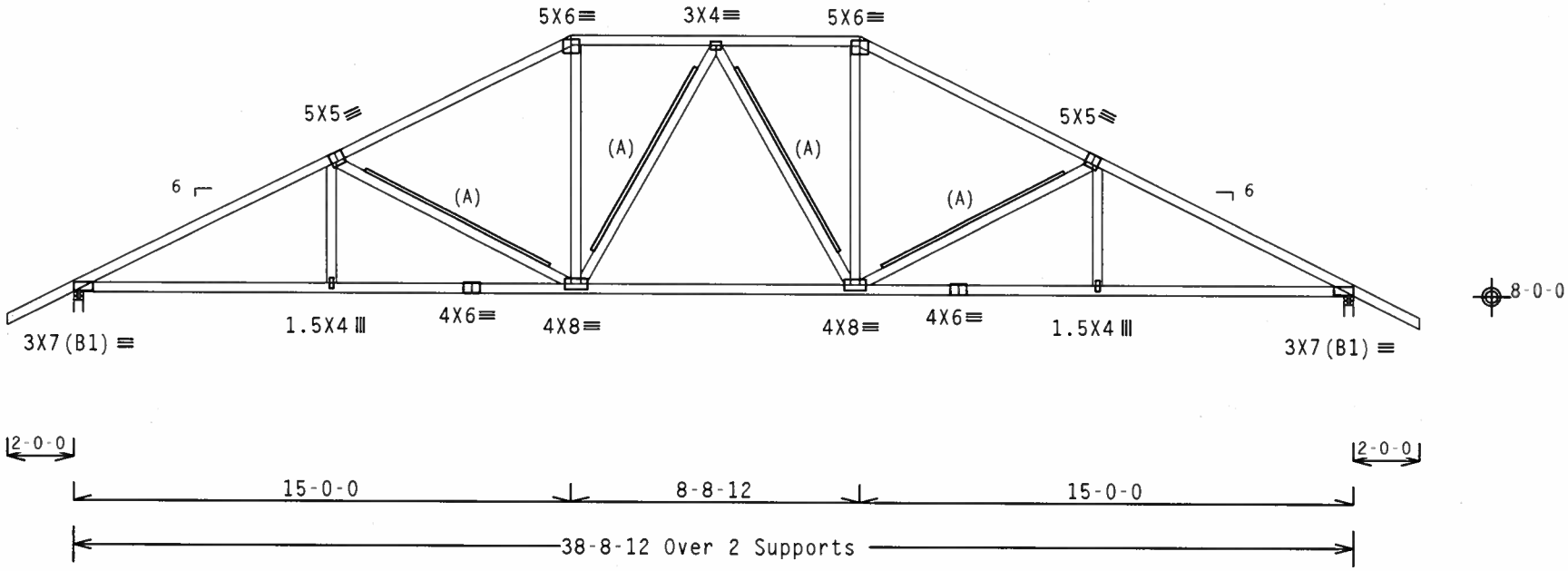

Design Crit: TPI-2002(STD)/FBC
Cq/RT=1.00(1.25)/10(0) 7.24.1 [illegible] DAY:1 FL/-/4/-/-/R/-

PLT TYP. Wave

Scale =.1875"/Ft.

ALPINE
Alpine Engineered Products, Inc.
1950 Marley Drive
Haines City, FL 33844
FL Certificate of Authorization # 567

WARNING TRUSSES REQUIRE EXTREME CARE IN FABRICATION, HANDLING, SHIPPING, INSTALLING AND BRACING. REFER TO BCSI 1-03 (BUILDING COMPONENT SAFETY INFORMATION), PUBLISHED BY TPI (TRUSS PLATE INSTITUTE, 583 D'ONOFRIO DR., SUITE 200, MADISON, WI 53719) AND WTCA (WOOD TRUSS COUNCIL OF AMERICA, 6300 ENTERPRISE LN, MADISON, WI 53719) FOR SAFETY PRACTICES PRIOR TO PERFORMING THESE FUNCTIONS. UNLESS OTHERWISE INDICATED, TOP CHORD SHALL HAVE PROPERLY ATTACHED STRUCTURAL PANELS AND BOTTOM CHORD SHALL HAVE A PROPERLY ATTACHED RIGID CEILING.

IMPORTANT FURNISH A COPY OF THIS DESIGN TO THE INSTALLATION CONTRACTOR. ALPINE ENGINEERED PRODUCTS, INC. SHALL NOT BE RESPONSIBLE FOR ANY DEVIATION FROM THIS DESIGN; ANY FAILURE TO BUILD THE TRUSS IN CONFORMANCE WITH TPI; OR FABRICATING, HANDLING, SHIPPING, INSTALLING & BRACING OF TRUSSES. DESIGN CONFORMS WITH APPLICABLE PROVISIONS OF NDS (NATIONAL DESIGN SPEC, BY AF&PA) AND TPI. ALPINE CONNECTOR PLATES ARE MADE OF 20/18/16GA (W,H/S/K) ASTM A653 GRADE 40/60 (W, K/H,S) GALV. STEEL. APPLY PLATES TO EACH FACE OF TRUSS AND, UNLESS OTHERWISE LOCATED ON THIS DESIGN, POSITION PER DRAWINGS 160A-Z. ANY INSPECTION OF PLATES FOLLOWED BY (1) SHALL BE PER ANNEX A3 OF TPI1-2002 SEC.3. A SEAL ON THIS DRAWING INDICATES ACCEPTANCE OF PROFESSIONAL ENGINEERING RESPONSIBILITY SOLELY FOR THE TRUSS COMPONENT DESIGN SHOWN. THE SUITABILITY AND USE OF THIS COMPONENT FOR ANY BUILDING IS THE RESPONSIBILITY OF THE BUILDING DESIGNER PER ANSI/TPI 1 SEC. 2.

ARTHUR R. FISHER LICENSE No.59687 STATE OF FLORIDA PROFESSIONAL ENGINEER

Mar 24 '06

TC LL	20.0 PSF	REF R487-- 9863
TC DL	10.0 PSF	DATE 03/24/06
BC DL	10.0 PSF	DRW HCUSR487 06083037
BC LL	0.0 PSF	HC-ENG TCE/AF *
TOT.LD.	40.0 PSF	SEQN- 5214
DUR.FAC.	1.25	
SPACING	24.0"	JREF- 1SVS487_Z05

(6-126--Russell North Constructio Hynes - . - B6)

Top chord 2x4 SP #2 Dense
Bot chord 2x4 SP #2 Dense
Webs 2x4 SP #3

(A) 1x4 #3 or better "T" brace. 80% length of web member. Attach with 8d Box or Gun (0.113"x2.5",min.)nails @ 6" OC.

Deflection meets L/360 live and L/240 total load. Creep increase factor for dead load is 1.50.

110 mph wind, 15.00 ft mean hgt, ASCE 7-02, CLOSED bldg, not located within 4.50 ft from roof edge, CAT II, EXP B, wind TC DL=5.0 psf, wind BC DL=5.0 psf.

In lieu of structural panels or rigid ceiling use purlins to brace TC @ 24" OC, BC @ 24" OC.

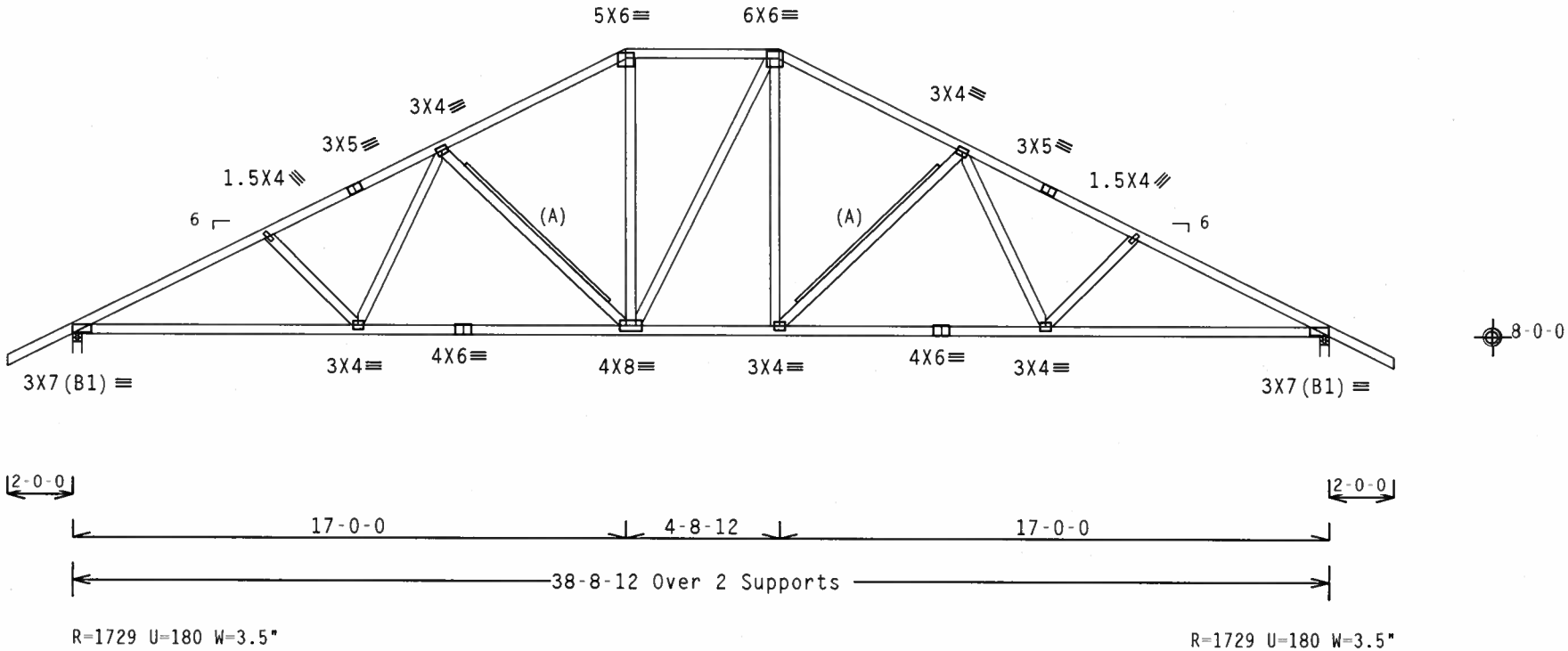

Design Crit: TPI-2002(STD)/FBC
Cq/RT=1.00(1.25)/10(0) 7.24.1 [illegible] QTY:1 FL/-/4/-/-/R/-

PLT TYP. Wave

Scale =.1875"/Ft.

ALPINE
Alpine Engineered Products, Inc.
1950 Marley Drive
Haines City, FL 33844
FL Certificate of Authorization # 567

WARNING TRUSSES REQUIRE EXTREME CARE IN FABRICATION, HANDLING, SHIPPING, INSTALLING AND BRACING. REFER TO BCSI 1-03 (BUILDING COMPONENT SAFETY INFORMATION), PUBLISHED BY TPI (TRUSS PLATE INSTITUTE, 583 D'ONOFRIO DR., SUITE 200, MADISON, WI 53719) AND WTCA (WOOD TRUSS COUNCIL OF AMERICA, 6300 ENTERPRISE LN. MADISON, WI 53719) FOR SAFETY PRACTICES PRIOR TO PERFORMING THESE FUNCTIONS. UNLESS OTHERWISE INDICATED, TOP CHORD SHALL HAVE PROPERLY ATTACHED STRUCTURAL PANELS AND BOTTOM CHORD SHALL HAVE A PROPERLY ATTACHED RIGID CEILING.

IMPORTANT FURNISH A COPY OF THIS DESIGN TO THE INSTALLATION CONTRACTOR. ALPINE ENGINEERED PRODUCTS, INC. SHALL NOT BE RESPONSIBLE FOR ANY DEVIATION FROM THIS DESIGN; ANY FAILURE TO BUILD THE TRUSS IN CONFORMANCE WITH TPI; OR FABRICATING, HANDLING, SHIPPING, INSTALLING & BRACING OF TRUSSES. DESIGN CONFORMS WITH APPLICABLE PROVISIONS OF NDS (NATIONAL DESIGN SPEC. BY AF&PA) AND TPI. ALPINE CONNECTOR PLATES ARE MADE OF 20/18/16GA (W,H/S/K) ASTM A653 GRADE 40/60 (W, K/H,S) GALV. STEEL. APPLY PLATES TO EACH FACE OF TRUSS AND, UNLESS OTHERWISE LOCATED ON THIS DESIGN, POSITION PER DRAWINGS 160A-Z. ANY INSPECTION OF PLATES FOLLOWED BY (1) SHALL BE PER ANNEX A3 OF TPI1-2002 SEC.3. A SEAL ON THIS DRAWING INDICATES ACCEPTANCE OF PROFESSIONAL ENGINEERING RESPONSIBILITY SOLELY FOR THE TRUSS COMPONENT DESIGN SHOWN. THE SUITABILITY AND USE OF THIS COMPONENT FOR ANY BUILDING IS THE RESPONSIBILITY OF THE BUILDING DESIGNER PER ANSI/TPI 1 SEC. 2.

ARTHUR R. FISHER LICENSE No.59687 STATE OF FLORIDA PROFESSIONAL ENGINEER

Mar 24 '06

TC LL	20.0 PSF	REF R487-- 9864
TC DL	10.0 PSF	DATE 03/24/06
BC DL	10.0 PSF	DRW HCUSR487 06083038
BC LL	0.0 PSF	HC-ENG TCE/AF *
TOT.LD.	40.0 PSF	SEQN- 5196
DUR.FAC.	1.25	
SPACING	24.0"	JREF- 1SVS487_Z05

(6-126--Russell North Constructio Hynes - , B7)

Top chord 2x4 SP #2 Dense
Bot chord 2x4 SP #2 Dense
Webs 2x4 SP #3

(A) Continuous lateral bracing equally spaced on member.

Deflection meets L/360 live and L/240 total load. Creep increase factor for dead load is 1.50.

110 mph wind, 15.00 ft mean hgt, ASCE 7-02, CLOSED bldg, not located within 4.50 ft from roof edge, CAT II, EXP B, wind TC DL=5.0 psf, wind BC DL=5.0 psf.

In lieu of structural panels or rigid ceiling use purlins to brace TC @ 24" OC, BC @ 24" OC.

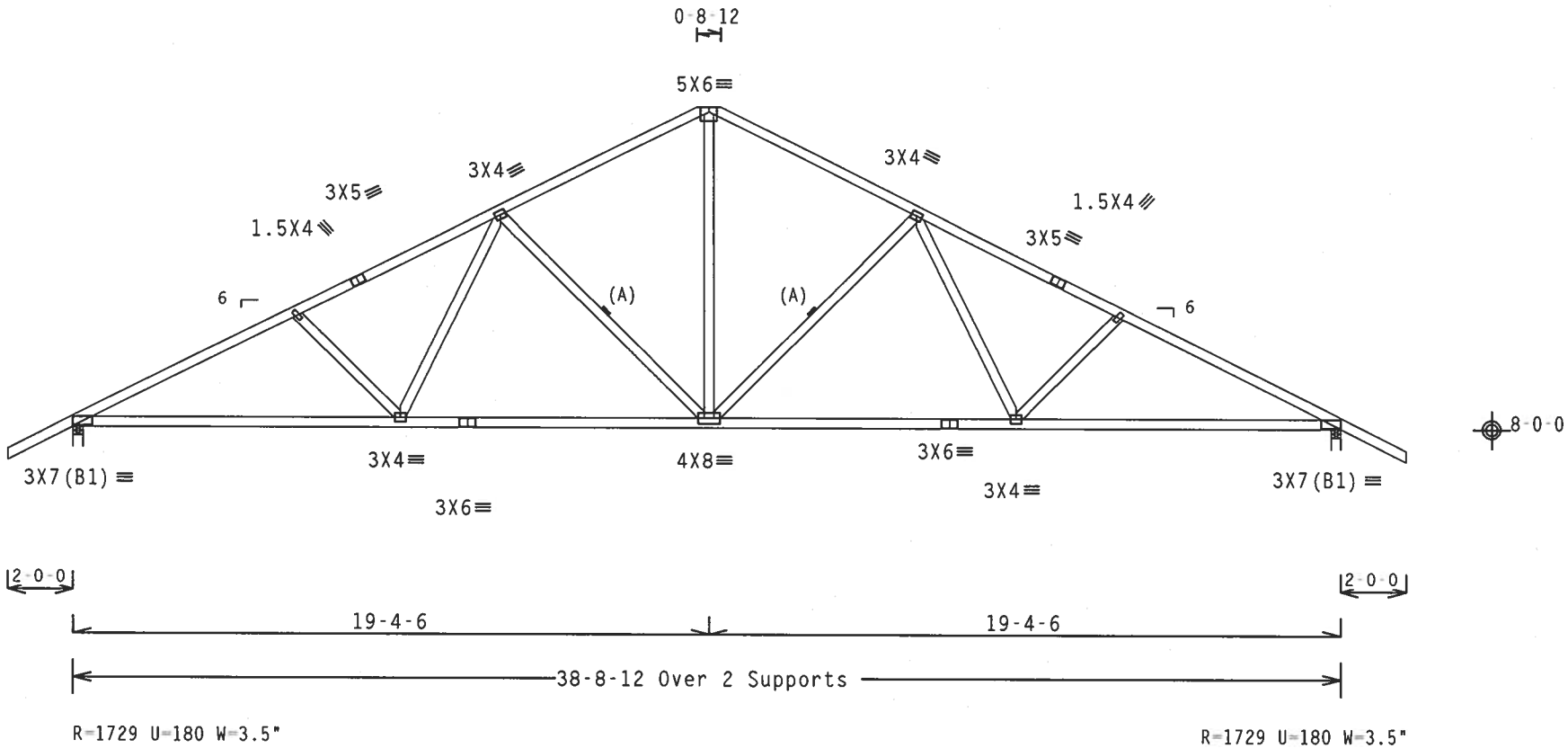

Design Crit: TPI-2002(STD)/FBC
Cq/RT=1.00(1.25)/10(0) 7.24.1 QTY:1 FL/-/4/-/-/R/- Scale =.1875"/Ft.

PLT TYP. Wave

ALPINE
Alpine Engineered Products, Inc.
1950 Marley Drive
Haines City, FL 33844
FL Certificate of Authorization # 567

WARNING TRUSSES REQUIRE EXTREME CARE IN FABRICATION, HANDLING, SHIPPING, INSTALLING AND BRACING. REFER TO BCSI 1-03 (BUILDING COMPONENT SAFETY INFORMATION), PUBLISHED BY TPI (TRUSS PLATE INSTITUTE, 583 D'ONOFRIO DR., SUITE 200, MADISON, WI 53719) AND WTCA (WOOD TRUSS COUNCIL OF AMERICA, 6300 ENTERPRISE LN, MADISON, WI 53719) FOR SAFETY PRACTICES PRIOR TO PERFORMING THESE FUNCTIONS. UNLESS OTHERWISE INDICATED, TOP CHORD SHALL HAVE PROPERLY ATTACHED STRUCTURAL PANELS AND BOTTOM CHORD SHALL HAVE A PROPERLY ATTACHED RIGID CEILING.

IMPORTANTFURNISH A COPY OF THIS DESIGN TO THE INSTALLATION CONTRACTOR. ALPINE ENGINEERED PRODUCTS, INC. SHALL NOT BE RESPONSIBLE FOR ANY DEVIATION FROM THIS DESIGN; ANY FAILURE TO BUILD THE TRUSS IN CONFORMANCE WITH TPI; OR FABRICATING, HANDLING, SHIPPING, INSTALLING & BRACING OF TRUSSES. DESIGN CONFORMS WITH APPLICABLE PROVISIONS OF NDS (NATIONAL DESIGN SPEC, BY AF&PA) AND TPI. ALPINE CONNECTOR PLATES ARE MADE OF 20/18/16GA (W,H/S/K) ASTM A653 GRADE 40/60 (W, K/H,S) GALV. STEEL. APPLY PLATES TO EACH FACE OF TRUSS AND, UNLESS OTHERWISE LOCATED ON THIS DESIGN, POSITION PER DRAWINGS 160A-Z. ANY INSPECTION OF PLATES FOLLOWED BY (1) SHALL BE PER ANNEX A3 OF TPI1-2002 SEC.3. A SEAL ON THIS DRAWING INDICATES ACCEPTANCE OF PROFESSIONAL ENGINEERING RESPONSIBILITY SOLELY FOR THE TRUSS COMPONENT DESIGN SHOWN. THE SUITABILITY AND USE OF THIS COMPONENT FOR ANY BUILDING IS THE RESPONSIBILITY OF THE BUILDING DESIGNER PER ANSI/TPI 1 SEC. 2.

ARTHUR R. FISHER LICENSE No. 59687 STATE OF FLORIDA PROFESSIONAL ENGINEER

Mar 24 '06

TC LL	20.0 PSF	REF	R487-- 9865
TC DL	10.0 PSF	DATE	03/24/06
BC DL	10.0 PSF	DRW	HCUSR487 06083039
BC LL	0.0 PSF	HC-ENG	TCE/AF *
TOT.LD.	40.0 PSF	SEQN-	5204
DUR.FAC.	1.25		
SPACING	24.0"	JREF-	1SVS487_Z05

(6-126--Russell North Constructio Hynes - , B8)

Top chord 2x4 SP #2 Dense
Bot chord 2x4 SP #2 Dense
Webs 2x4 SP #3

(A) Continuous lateral bracing equally spaced on member.

Deflection meets L/360 live and L/240 total load. Creep increase factor for dead load is 1.50.

110 mph wind, 15.00 ft mean hgt, ASCE 7-02, CLOSED bldg, not located within 4.50 ft from roof edge, CAT II, EXP B, wind TC DL=5.0 psf, wind BC DL=5.0 psf.

In lieu of structural panels or rigid ceiling use purlins to brace TC @ 24" OC, BC @ 24" OC.

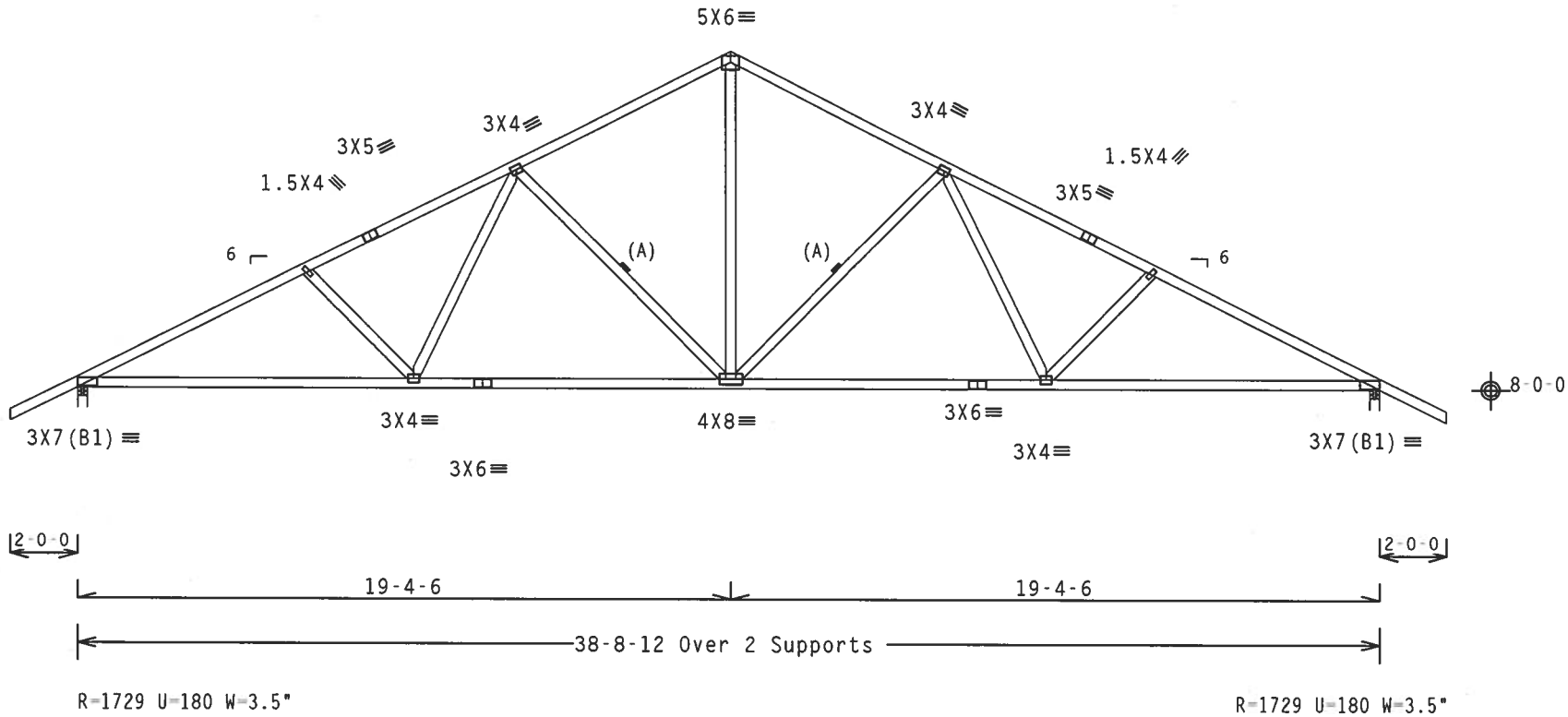

Design Crit: TPI-2002(STD)/FBC
Cq/RT=1.00(1.25)/10(0) 7.24.12 QTY:1 FL/-/4/-/-/R/-

PLT TYP. Wave

Scale =.1875"/Ft.

ALPINE
Alpine Engineered Products, Inc.
1950 Marley Drive
Haines City, FL 33844
FL Certificate of Authorization # 567

WARNING TRUSSES REQUIRE EXTREME CARE IN FABRICATION, HANDLING, SHIPPING, INSTALLING AND BRACING. REFER TO BCSI 1-03 (BUILDING COMPONENT SAFETY INFORMATION), PUBLISHED BY TPI (TRUSS PLATE INSTITUTE, 583 D'ONOFRIO DR., SUITE 200, MADISON, WI 53719) AND WTCA (WOOD TRUSS COUNCIL OF AMERICA, 6300 ENTERPRISE LN, MADISON, WI 53719) FOR SAFETY PRACTICES PRIOR TO PERFORMING THESE FUNCTIONS. UNLESS OTHERWISE INDICATED, TOP CHORD SHALL HAVE PROPERLY ATTACHED STRUCTURAL PANELS AND BOTTOM CHORD SHALL HAVE A PROPERLY ATTACHED RIGID CEILING.

IMPORTANTFURNISH A COPY OF THIS DESIGN TO THE INSTALLATION CONTRACTOR. ALPINE ENGINEERED PRODUCTS, INC. SHALL NOT BE RESPONSIBLE FOR ANY DEVIATION FROM THIS DESIGN; ANY FAILURE TO BUILD THE TRUSS IN CONFORMANCE WITH TPI; OR FABRICATING, HANDLING, SHIPPING, INSTALLING & BRACING OF TRUSSES. DESIGN CONFORMS WITH APPLICABLE PROVISIONS OF NDS (NATIONAL DESIGN SPEC. BY AF&PA) AND TPI. ALPINE CONNECTOR PLATES ARE MADE OF 20/18/16GA (W,H/S/K) ASTM A653 GRADE 40/60 (W, K/H,S) GALV. STEEL. APPLY PLATES TO EACH FACE OF TRUSS AND, UNLESS OTHERWISE LOCATED ON THIS DESIGN, POSITION PER DRAWINGS 160A-Z. ANY INSPECTION OF PLATES FOLLOWED BY (1) SHALL BE PER ANNEX A3 OF TPI1-2002 SEC.3. A SEAL ON THIS DRAWING INDICATES ACCEPTANCE OF PROFESSIONAL ENGINEERING RESPONSIBILITY SOLELY FOR THE TRUSS COMPONENT DESIGN SHOWN. THE SUITABILITY AND USE OF THIS COMPONENT FOR ANY BUILDING IS THE RESPONSIBILITY OF THE BUILDING DESIGNER PER ANSI/TPI 1 SEC. 2.

ARTHUR R. FISHER LICENSE No.59687 STATE OF FLORIDA PROFESSIONAL ENGINEER
Mar 24 '06

TC LL	20.0 PSF	REF	R487-- 9866
TC DL	10.0 PSF	DATE	03/24/06
BC DL	10.0 PSF	DRW	HCUSR487 06083040
BC LL	0.0 PSF	HC-ENG	TCE/AF *
TOT.LD.	40.0 PSF	SEQN-	5208
DUR.FAC.	1.25		
SPACING	24.0"	JREF-	1SVS487_Z05

(6-126--Russell North Constructio Hynes - . - C1)

Top chord 2x4 SP #2 Dense
Bot chord 2x4 SP #2 Dense
Webs 2x4 SP #3

In lieu of structural panels or rigid ceiling use purlins to brace TC @ 24" OC, BC @ 24" OC.

110 mph wind, 15.00 ft mean hgt, ASCE 7-02, CLOSED bldg, Located anywhere in roof, CAT II, EXP B, wind TC DL=5.0 psf, wind BC DL=5.0 psf.

#1 hip supports 7-0-0 jacks with no webs.

Deflection meets L/360 live and L/240 total load. Creep increase factor for dead load is 1.50.

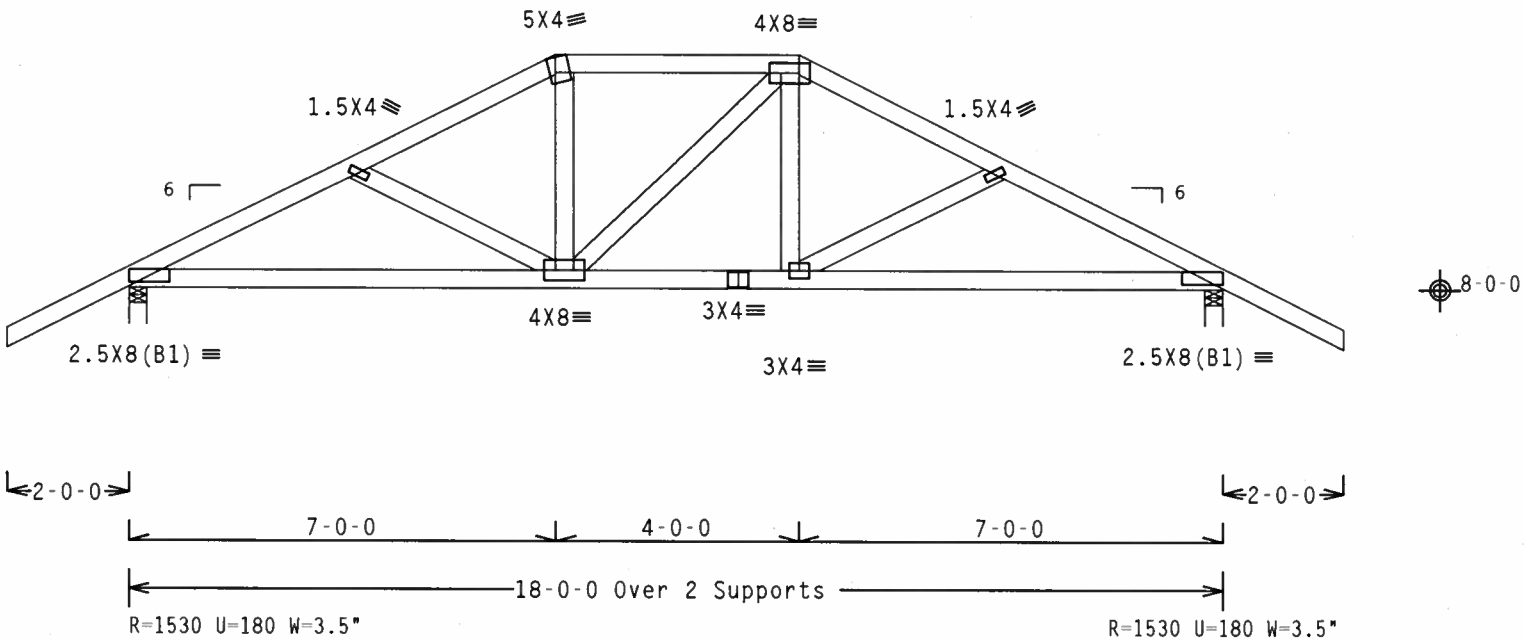

Design Crit: TPI-2002(STD)/FBC

PLT TYP. Wave — Cq/RT=1.00(1.25)/10(0) 7.24.1 — QTY:1 — FL/-/4/-/-/R/- — Scale =.3125"/Ft.

ALPINE
Alpine Engineered Products, Inc.
1950 Marley Drive
Haines City, FL 33844
FL Certificate of Authorization # 567

WARNING TRUSSES REQUIRE EXTREME CARE IN FABRICATION, HANDLING, SHIPPING, INSTALLING AND BRACING. REFER TO BCSI 1-03 (BUILDING COMPONENT SAFETY INFORMATION), PUBLISHED BY TPI (TRUSS PLATE INSTITUTE, 583 D'ONOFRIO DR., SUITE 200, MADISON, WI 53719) AND WTCA (WOOD TRUSS COUNCIL OF AMERICA, 6300 ENTERPRISE LN, MADISON, WI 53719) FOR SAFETY PRACTICES PRIOR TO PERFORMING THESE FUNCTIONS. UNLESS OTHERWISE INDICATED, TOP CHORD SHALL HAVE PROPERLY ATTACHED STRUCTURAL PANELS AND BOTTOM CHORD SHALL HAVE A PROPERLY ATTACHED RIGID CEILING.

IMPORTANT FURNISH A COPY OF THIS DESIGN TO THE INSTALLATION CONTRACTOR. ALPINE ENGINEERED PRODUCTS, INC. SHALL NOT BE RESPONSIBLE FOR ANY DEVIATION FROM THIS DESIGN; ANY FAILURE TO BUILD THE TRUSS IN CONFORMANCE WITH TPI; OR FABRICATING, HANDLING, SHIPPING, INSTALLING & BRACING OF TRUSSES. DESIGN CONFORMS WITH APPLICABLE PROVISIONS OF NDS (NATIONAL DESIGN SPEC. BY AF&PA) AND TPI. ALPINE CONNECTOR PLATES ARE MADE OF 20/18/16GA (W,H/S/K) ASTM A653 GRADE 40/60 (W, K/H,S) GALV. STEEL. APPLY PLATES TO EACH FACE OF TRUSS AND, UNLESS OTHERWISE LOCATED ON THIS DESIGN, POSITION PER DRAWINGS 160A-Z. ANY INSPECTION OF PLATES FOLLOWED BY (1) SHALL BE PER ANNEX A3 OF TPI1-2002 SEC.3. A SEAL ON THIS DRAWING INDICATES ACCEPTANCE OF PROFESSIONAL ENGINEERING RESPONSIBILITY SOLELY FOR THE TRUSS COMPONENT DESIGN SHOWN. THE SUITABILITY AND USE OF THIS COMPONENT FOR ANY BUILDING IS THE RESPONSIBILITY OF THE BUILDING DESIGNER PER ANSI/TPI 1 SEC. 2.

ARTHUR R. FISHER LICENSE No.59687 STATE OF FLORIDA PROFESSIONAL ENGINEER
Mar 24 '06

TC LL	20.0 PSF	REF	R487-- 9867
TC DL	10.0 PSF	DATE	03/24/06
BC DL	10.0 PSF	DRW	HCUSR487 06083041
BC LL	0.0 PSF	HC-ENG	TCE/AF
TOT.LD.	40.0 PSF	SEQN-	5029
DUR.FAC.	1.25		
SPACING	SEE ABOVE	JREF-	1SVS487_Z05

(6-126--Russell North Constructio Hynes -- , -- - C2)

Top chord 2x4 SP #2 Dense
Bot chord 2x4 SP #2 Dense
Webs 2x4 SP #3

In lieu of structural panels or rigid ceiling use purlins to brace TC @ 24" OC, BC @ 24" OC.

110 mph wind, 15.00 ft mean hgt, ASCE 7-02, CLOSED bldg, not located within 4.50 ft from roof edge, CAT II, EXP B, wind TC DL=5.0 psf, wind BC DL=5.0 psf.

Deflection meets L/360 live and L/240 total load. Creep increase factor for dead load is 1.50.

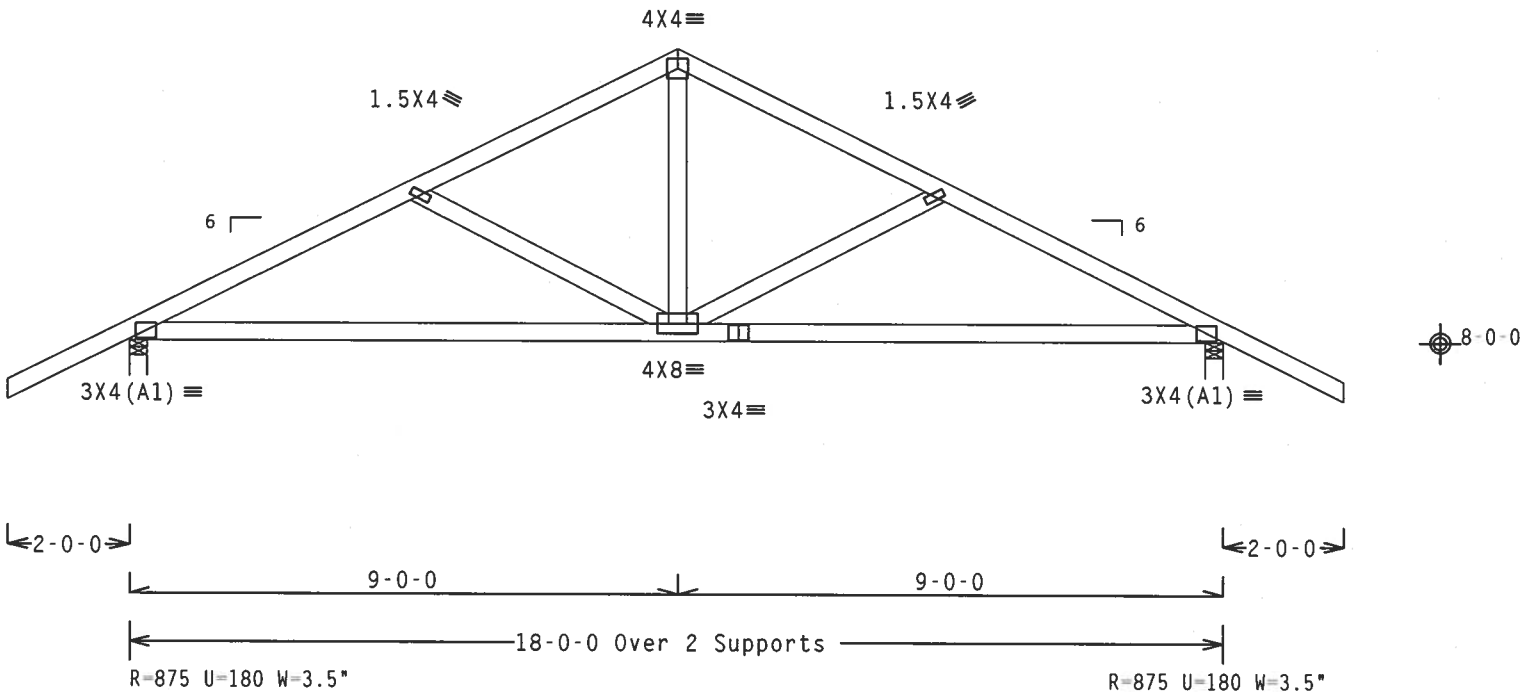

Design Crit: TPI-2002(STD)/FBC
PLT TYP. Wave
Cq/RT=1.00(1.25)/10(0) 7.24.1 TY:1 FL/-/4/-/-/R/- Scale =.3125"/Ft.

ALPINE
Alpine Engineered Products, Inc.
1950 Marley Drive
Haines City, FL 33844
FL Certificate of Authorization # 567

WARNING TRUSSES REQUIRE EXTREME CARE IN FABRICATION, HANDLING, SHIPPING, INSTALLING AND BRACING. REFER TO BCSI 1-03 (BUILDING COMPONENT SAFETY INFORMATION), PUBLISHED BY TPI (TRUSS PLATE INSTITUTE, 583 D'ONOFRIO DR., SUITE 200, MADISON, WI 53719) AND WTCA (WOOD TRUSS COUNCIL OF AMERICA, 6300 ENTERPRISE LN, MADISON, WI 53719) FOR SAFETY PRACTICES PRIOR TO PERFORMING THESE FUNCTIONS. UNLESS OTHERWISE INDICATED, TOP CHORD SHALL HAVE PROPERLY ATTACHED STRUCTURAL PANELS AND BOTTOM CHORD SHALL HAVE A PROPERLY ATTACHED RIGID CEILING.

IMPORTANT FURNISH A COPY OF THIS DESIGN TO THE INSTALLATION CONTRACTOR. ALPINE ENGINEERED PRODUCTS, INC. SHALL NOT BE RESPONSIBLE FOR ANY DEVIATION FROM THIS DESIGN; ANY FAILURE TO BUILD THE TRUSS IN CONFORMANCE WITH TPI; OR FABRICATING, HANDLING, SHIPPING, INSTALLING & BRACING OF TRUSSES. DESIGN CONFORMS WITH APPLICABLE PROVISIONS OF NDS (NATIONAL DESIGN SPEC. BY AF&PA) AND TPI. ALPINE CONNECTOR PLATES ARE MADE OF 20/18/16GA (W,H/S/K) ASTM A653 GRADE 40/60 (W, K/H,S) GALV. STEEL. APPLY PLATES TO EACH FACE OF TRUSS AND, UNLESS OTHERWISE LOCATED ON THIS DESIGN, POSITION PER DRAWINGS 160A Z. ANY INSPECTION OF PLATES FOLLOWED BY (1) SHALL BE PER ANNEX A3 OF TPI1-2002 SEC.3. A SEAL ON THIS DRAWING INDICATES ACCEPTANCE OF PROFESSIONAL ENGINEERING RESPONSIBILITY SOLELY FOR THE TRUSS COMPONENT DESIGN SHOWN. THE SUITABILITY AND USE OF THIS COMPONENT FOR ANY BUILDING IS THE RESPONSIBILITY OF THE BUILDING DESIGNER PER ANSI/TPI 1 SEC. 2.

ARTHUR R. FISHER LICENSE No.59687 STATE OF FLORIDA PROFESSIONAL ENGINEER
Mar 24 '06

TC LL	20.0 PSF	REF	R487-- 9868
TC DL	10.0 PSF	DATE	03/24/06
BC DL	10.0 PSF	DRW	HCUSR487 06083042
BC LL	0.0 PSF	HC-ENG	TCE/AF *
TOT.LD.	40.0 PSF	SEQN-	5022
DUR.FAC.	1.25		
SPACING	24.0"	JREF-	1SVS487_Z05

(6-126--Russell North Constructio Hynes - , -- C3G)

Top chord 2x4 SP #2 Dense
Bot chord 2x8 SP #1 Dense
Webs 2x4 SP #3

In lieu of structural panels or rigid ceiling use purlins to brace TC @ 24" OC, BC @ 24" OC.

SPECIAL LOADS
------(LUMBER DUR.FAC.=1.25 / PLATE DUR.FAC.=1.25)
TC - From 62 PLF at -2.00 to 62 PLF at 18.00
BC - From 4 PLF at -2.00 to 4 PLF at 0.00
BC - From 20 PLF at 0.00 to 20 PLF at 18.00
BC - 4069 LB Conc. Load at 12.88
BC - 1062 LB Conc. Load at 14.94
BC - 211 LB Conc. Load at 16.91

Provide connection for concentrated load(s) shown.

2 COMPLETE TRUSSES REQUIRED

Nailing Schedule: (12d_Box_or_Gun_(0.128"x3.25",_min.)_nails)
Top Chord: 1 Row @12.00" o.c.
Bot Chord: 1 Row @ 5.00" o.c.
Webs : 1 Row @ 4" o.c.
Use equal spacing between rows and stagger nails in each row to avoid splitting.

110 mph wind, 15.00 ft mean hgt, ASCE 7-02, CLOSED bldg, not located within 4.50 ft from roof edge, CAT II, EXP B, wind TC DL=5.0 psf, wind BC DL=5.0 psf.

Deflection meets L/360 live and L/240 total load. Creep increase factor for dead load is 1.50.

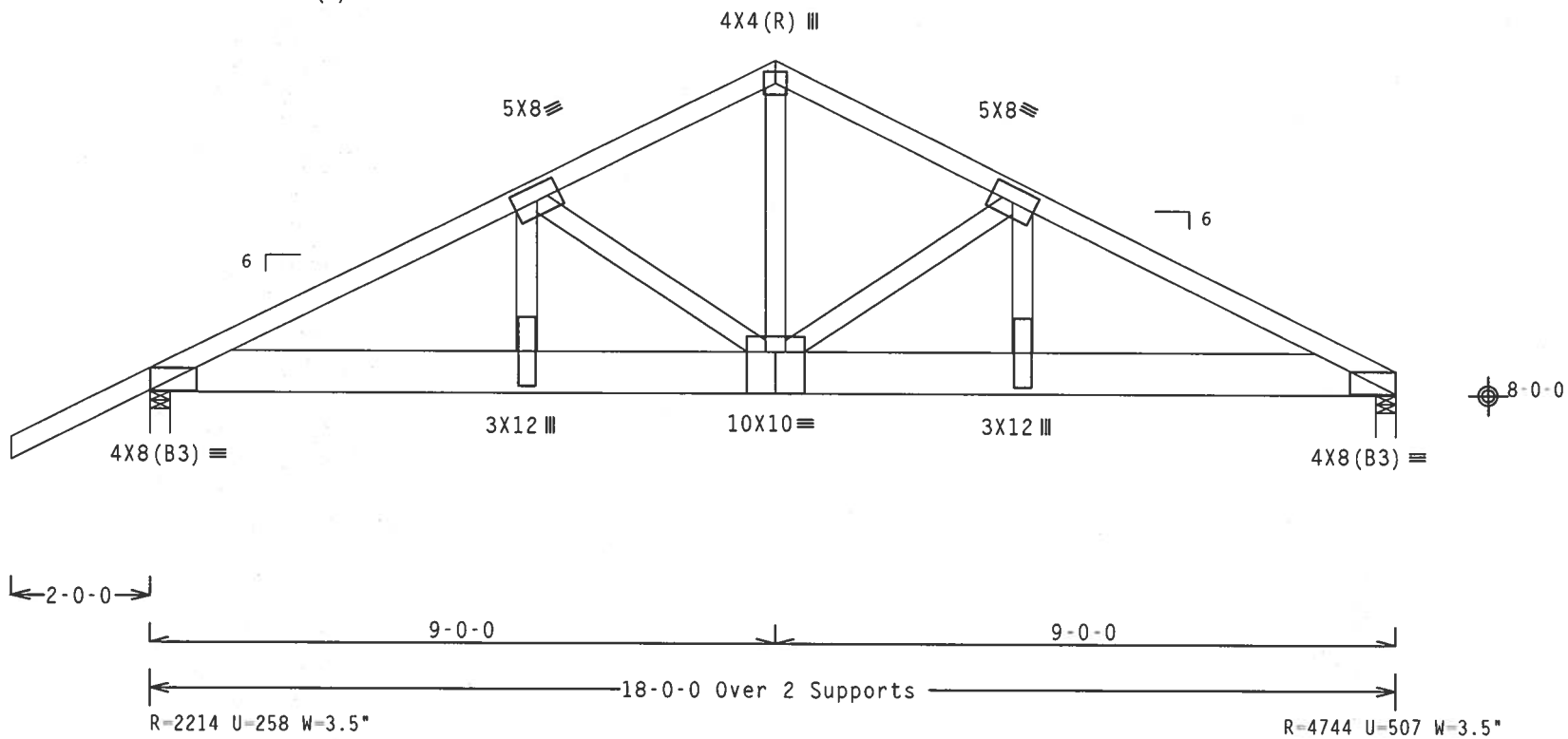

Design Crit: TPI-2002(STD)/FBC
PLT TYP. Wave Cq/RT=1.00(1.25)/10(0) 7.24.1 QTY:1 FL/-/4/-/-/R/- Scale =.375"/Ft.

ALPINE
Alpine Engineered Products, Inc.
1950 Marley Drive
Haines City, FL 33844
FL Certificate of Authorization # 567

WARNING TRUSSES REQUIRE EXTREME CARE IN FABRICATION, HANDLING, SHIPPING, INSTALLING AND BRACING. REFER TO BCSI 1-03 (BUILDING COMPONENT SAFETY INFORMATION), PUBLISHED BY TPI (TRUSS PLATE INSTITUTE, 583 D'ONOFRIO DR., SUITE 200, MADISON, WI 53719) AND WTCA (WOOD TRUSS COUNCIL OF AMERICA, 6300 ENTERPRISE LN, MADISON, WI 53719) FOR SAFETY PRACTICES PRIOR TO PERFORMING THESE FUNCTIONS. UNLESS OTHERWISE INDICATED, TOP CHORD SHALL HAVE PROPERLY ATTACHED STRUCTURAL PANELS AND BOTTOM CHORD SHALL HAVE A PROPERLY ATTACHED RIGID CEILING.

IMPORTANTFURNISH A COPY OF THIS DESIGN TO THE INSTALLATION CONTRACTOR. ALPINE ENGINEERED PRODUCTS, INC. SHALL NOT BE RESPONSIBLE FOR ANY DEVIATION FROM THIS DESIGN; ANY FAILURE TO BUILD THE TRUSS IN CONFORMANCE WITH TPI; OR FABRICATING, HANDLING, SHIPPING, INSTALLING & BRACING OF TRUSSES. DESIGN CONFORMS WITH APPLICABLE PROVISIONS OF NDS (NATIONAL DESIGN SPEC. BY AF&PA) AND TPI. ALPINE CONNECTOR PLATES ARE MADE OF 20/18/16GA (W,H/S/K) ASTM A653 GRADE 40/60 (W, K/H,S) GALV. STEEL. APPLY PLATES TO EACH FACE OF TRUSS AND, UNLESS OTHERWISE LOCATED ON THIS DESIGN, POSITION PER DRAWINGS 160A-Z. ANY INSPECTION OF PLATES FOLLOWED BY (1) SHALL BE PER ANNEX A3 OF TPI1-2002 SEC.3. A SEAL ON THIS DRAWING INDICATES ACCEPTANCE OF PROFESSIONAL ENGINEERING RESPONSIBILITY SOLELY FOR THE TRUSS COMPONENT DESIGN SHOWN. THE SUITABILITY AND USE OF THIS COMPONENT FOR ANY BUILDING IS THE RESPONSIBILITY OF THE BUILDING DESIGNER PER ANSI/TPI 1 SEC. 2.

ARTHUR R. FISHER LICENSE No. 59687 STATE OF FLORIDA PROFESSIONAL ENGINEER
Mar 2 06

TC LL	20.0 PSF	REF	R487-- 9869
TC DL	10.0 PSF	DATE	03/24/06
BC DL	10.0 PSF	DRW	HCUSR487 06083050
BC LL	0.0 PSF	HC-ENG	TCE/AF
TOT.LD.	40.0 PSF	SEQN-	12880 REV
DUR.FAC.	1.25		
SPACING	SEE ABOVE	JREF-	1SVS487_Z05

(6-126--Russell North Constructio Hymes , C4)

Top chord 2x4 SP #2 Dense
Bot chord 2x4 SP #2 Dense
Webs 2x4 SP #3

In lieu of structural panels or rigid ceiling use purlins to brace TC @ 24" OC, BC @ 24" OC.

110 mph wind, 15.00 ft mean hgt, ASCE 7-02, CLOSED bldg, not located within 4.50 ft from roof edge, CAT II, EXP B, wind TC DL=5.0 psf, wind BC DL=5.0 psf.

Right end vertical not exposed to wind pressure.

Deflection meets L/360 live and L/240 total load. Creep increase factor for dead load is 1.50.

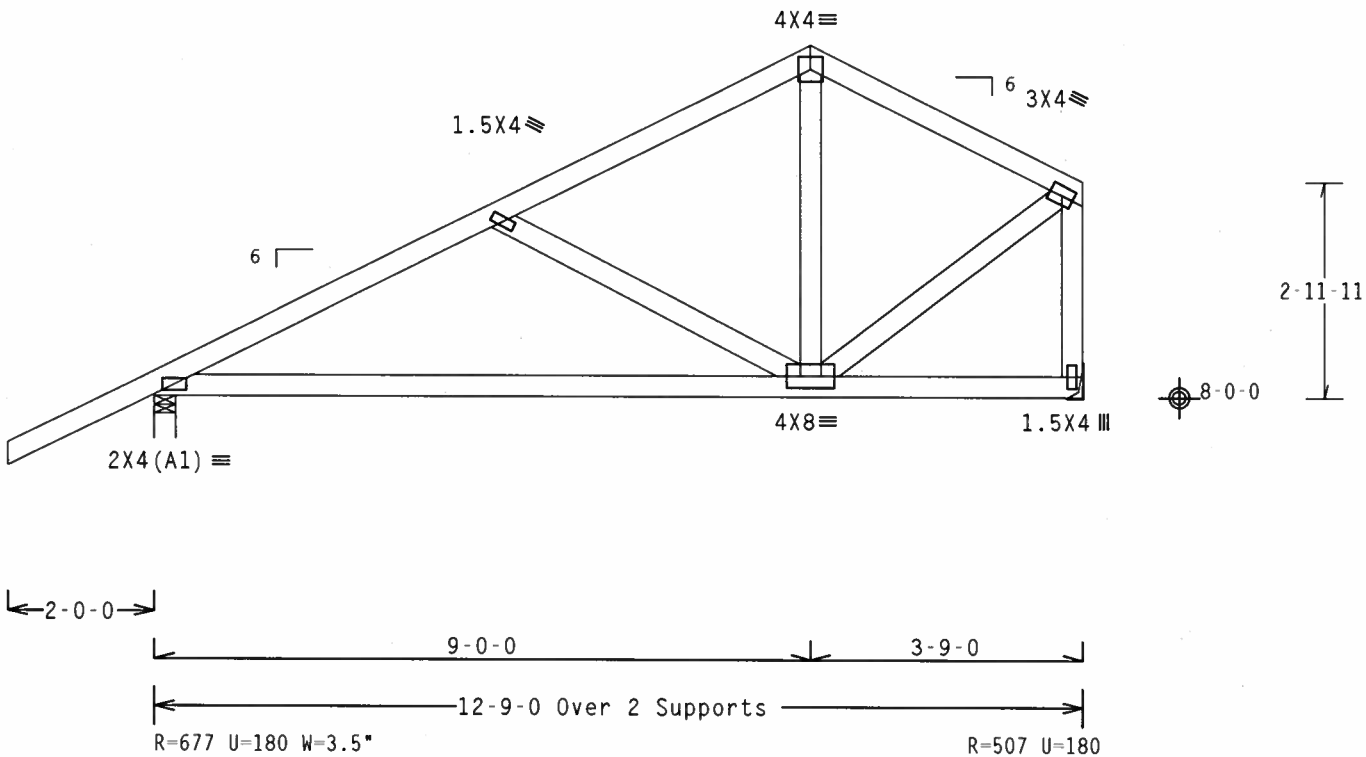

Design Crit: TPI-2002(STD)/FBC

PLT TYP. Wave Cq/RT=1.00(1.25)/10(0) 7.24.1 TY:1 FL/-/4/-/-/R/- Scale =.375"/Ft.

ALPINE
Alpine Engineered Products, Inc.
1950 Marley Drive
Haines City, FL 33844
FL Certificate of Authorization # 567

WARNING TRUSSES REQUIRE EXTREME CARE IN FABRICATION, HANDLING, SHIPPING, INSTALLING AND BRACING. REFER TO BCSI 1-03 (BUILDING COMPONENT SAFETY INFORMATION), PUBLISHED BY TPI (TRUSS PLATE INSTITUTE, 583 D'ONOFRIO DR., SUITE 200, MADISON, WI 53719) AND WTCA (WOOD TRUSS COUNCIL OF AMERICA, 6300 ENTERPRISE LN, MADISON, WI 53719) FOR SAFETY PRACTICES PRIOR TO PERFORMING THESE FUNCTIONS. UNLESS OTHERWISE INDICATED, TOP CHORD SHALL HAVE PROPERLY ATTACHED STRUCTURAL PANELS AND BOTTOM CHORD SHALL HAVE A PROPERLY ATTACHED RIGID CEILING.

IMPORTANTFURNISH A COPY OF THIS DESIGN TO THE INSTALLATION CONTRACTOR. ALPINE ENGINEERED PRODUCTS, INC. SHALL NOT BE RESPONSIBLE FOR ANY DEVIATION FROM THIS DESIGN; ANY FAILURE TO BUILD THE TRUSS IN CONFORMANCE WITH TPI; OR FABRICATING, HANDLING, SHIPPING, INSTALLING & BRACING OF TRUSSES. DESIGN CONFORMS WITH APPLICABLE PROVISIONS OF NDS (NATIONAL DESIGN SPEC. BY AF&PA) AND TPI. ALPINE CONNECTOR PLATES ARE MADE OF 20/18/16GA (W,H/S/K) ASTM A653 GRADE 40/60 (W, K/H,S) GALV. STEEL. APPLY PLATES TO EACH FACE OF TRUSS AND, UNLESS OTHERWISE LOCATED ON THIS DESIGN, POSITION PER DRAWINGS 160A-Z. ANY INSPECTION OF PLATES FOLLOWED BY (1) SHALL BE PER ANNEX A3 OF TPI1-2002 SEC.3. A SEAL ON THIS DRAWING INDICATES ACCEPTANCE OF PROFESSIONAL ENGINEERING RESPONSIBILITY SOLELY FOR THE TRUSS COMPONENT DESIGN SHOWN. THE SUITABILITY AND USE OF THIS COMPONENT FOR ANY BUILDING IS THE RESPONSIBILITY OF THE BUILDING DESIGNER PER ANSI/TPI 1 SEC. 2.

ARTHUR R. FISHER LICENSE No 59687 STATE OF FLORIDA PROFESSIONAL ENGINEER
Mar 24 '06

TC LL	20.0 PSF	REF	R487-- 9870
TC DL	10.0 PSF	DATE	03/24/06
BC DL	10.0 PSF	DRW	HCUSR487 06083048
BC LL	0.0 PSF	HC-ENG	TCE/AF
TOT.LD.	40.0 PSF	SEQN-	5035
DUR.FAC.	1.25		
SPACING	24.0"	JREF-	1SVS487_Z05

(6-126--Russell North Constructio Hymes - , C5G)

Top chord 2x4 SP #2 Dense
Bot chord 2x8 SP #1 Dense
Webs 2x4 SP #3

SPECIAL LOADS
------(LUMBER DUR.FAC.=1.25 / PLATE DUR.FAC.=1.25)
TC - From 62 PLF at 0.00 to 62 PLF at 12.75
BC - From 20 PLF at 0.00 to 20 PLF at 12.75
PLB- 1590 LB Conc. Load at (0.40,8.26)
PLB- 1590 LB Conc. Load at (2.40,8.04)
PLB- 1590 LB Conc. Load at (4.40,8.04)
PLB- 1590 LB Conc. Load at (6.40,8.04)
PLB- 2374 LB Conc. Load at (8.40,8.04)
PLB- 402 LB Conc. Load at (8.94,8.04)
PLB- 402 LB Conc. Load at (10.94,8.04)

Provide connection for concentrated load(s) shown.

2 COMPLETE TRUSSES REQUIRED

Nailing Schedule: (12d_Box_or_Gun_(0.128"x3.25",_min.)_nails)
Top Chord: 1 Row @12.00" o.c.
Bot Chord: 2 Rows @ 4.50" o.c. (Each Row)
Webs : 1 Row @ 4" o.c.
Use equal spacing between rows and stagger nails in each row to avoid splitting.

110 mph wind, 15.00 ft mean hgt, ASCE 7-02, CLOSED bldg, Located anywhere in roof, CAT II, EXP B, wind TC DL=5.0 psf, wind BC DL=5.0 psf.

Right end vertical not exposed to wind pressure.

In lieu of structural panels or rigid ceiling use purlins to brace TC @ 24" OC, BC @ 24" OC.

Deflection meets L/360 live and L/240 total load. Creep increase factor for dead load is 1.50.

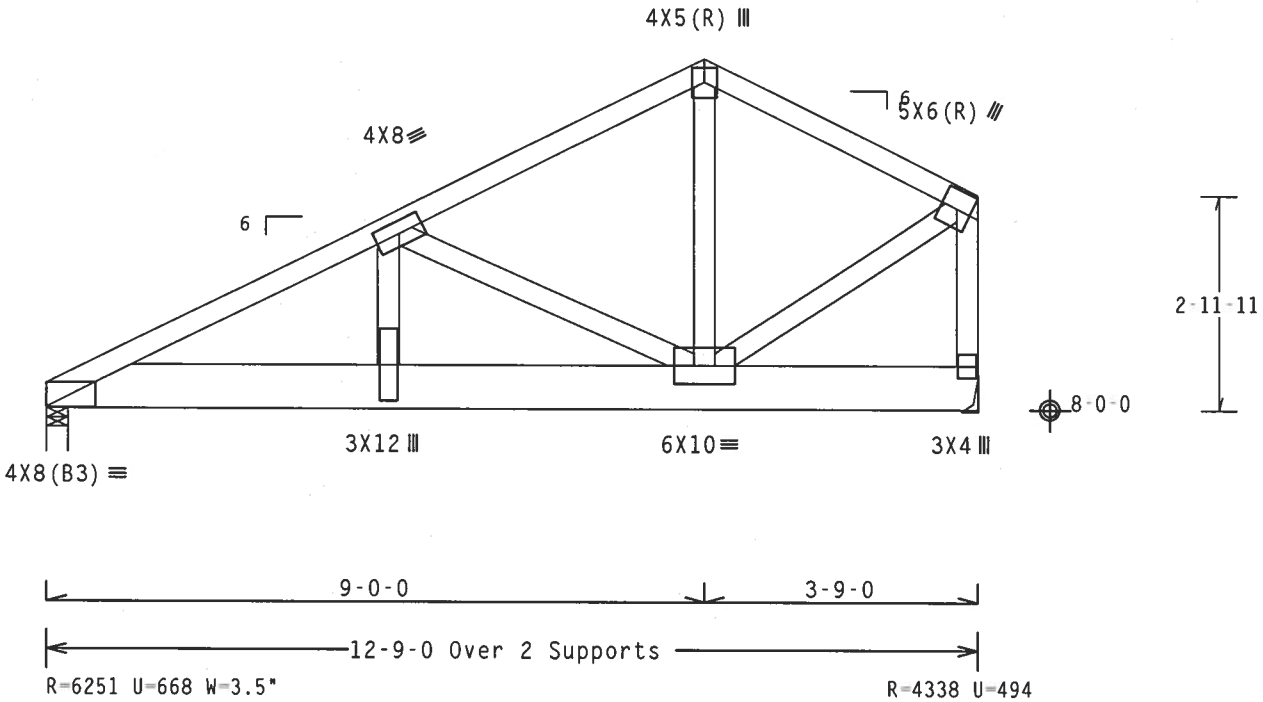

Design Crit: TPI-2002(STD)/FBC
PLT TYP. Wave Cg/RT=1.00(1.25)/10(0) 7.24.1 QTY:1 FL/-/4/-/-/R/- Scale =.375"/Ft.

ALPINE
Alpine Engineered Products, Inc.
1950 Marley Drive
Haines City, FL 33844
FL Certificate of Authorization # 567

WARNING TRUSSES REQUIRE EXTREME CARE IN FABRICATION, HANDLING, SHIPPING, INSTALLING AND BRACING. REFER TO BCSI 1-03 (BUILDING COMPONENT SAFETY INFORMATION), PUBLISHED BY TPI (TRUSS PLATE INSTITUTE, 583 D'ONOFRIO DR., SUITE 200, MADISON, WI 53719) AND WTCA (WOOD TRUSS COUNCIL OF AMERICA, 6300 ENTERPRISE LN, MADISON, WI 53719) FOR SAFETY PRACTICES PRIOR TO PERFORMING THESE FUNCTIONS. UNLESS OTHERWISE INDICATED, TOP CHORD SHALL HAVE PROPERLY ATTACHED STRUCTURAL PANELS AND BOTTOM CHORD SHALL HAVE A PROPERLY ATTACHED RIGID CEILING.

IMPORTANT FURNISH A COPY OF THIS DESIGN TO THE INSTALLATION CONTRACTOR. ALPINE ENGINEERED PRODUCTS, INC. SHALL NOT BE RESPONSIBLE FOR ANY DEVIATION FROM THIS DESIGN; ANY FAILURE TO BUILD THE TRUSS IN CONFORMANCE WITH TPI; OR FABRICATING, HANDLING, SHIPPING, INSTALLING & BRACING OF TRUSSES. DESIGN CONFORMS WITH APPLICABLE PROVISIONS OF NDS (NATIONAL DESIGN SPEC. BY AF&PA) AND TPI. ALPINE CONNECTOR PLATES ARE MADE OF 20/18/16GA (W,H/S/K) ASTM A653 GRADE 40/60 (W, K/H,S) GALV. STEEL. APPLY PLATES TO EACH FACE OF TRUSS AND, UNLESS OTHERWISE LOCATED ON THIS DESIGN, POSITION PER DRAWINGS 160A-Z. ANY INSPECTION OF PLATES FOLLOWED BY (1) SHALL BE PER ANNEX A3 OF TPI1-2002 SEC.3. A SEAL ON THIS DRAWING INDICATES ACCEPTANCE OF PROFESSIONAL ENGINEERING RESPONSIBILITY SOLELY FOR THE TRUSS COMPONENT DESIGN SHOWN. THE SUITABILITY AND USE OF THIS COMPONENT FOR ANY BUILDING IS THE RESPONSIBILITY OF THE BUILDING DESIGNER PER ANSI/TPI 1 SEC. 2.

ARTHUR R. FISHER LICENSE No. 59687 STATE OF FLORIDA PROFESSIONAL ENGINEER
Mar 24 '06

TC LL	20.0 PSF	REF	R487-- 9871
TC DL	10.0 PSF	DATE	03/24/06
BC DL	10.0 PSF	DRW	HCUSR487 06083045
BC LL	0.0 PSF	HC-ENG	TCE/AF
TOT.LD.	40.0 PSF	SEQN-	12872 REV
DUR.FAC.	1.25		
SPACING	SEE ABOVE	JREF-	1SVS487_Z05

(6-126--Russell North Constructio Hynes - - , - D1)

Top chord 2x4 SP #2 Dense
Bot chord 2x4 SP #2 Dense
Webs 2x4 SP #3

In lieu of structural panels or rigid ceiling use purlins to brace TC @ 24" OC, BC @ 24" OC.

Deflection meets L/360 live and L/240 total load. Creep increase factor for dead load is 1.50.

110 mph wind, 15.00 ft mean hgt, ASCE 7-02, CLOSED bldg, Located anywhere in roof, CAT II, EXP B, wind TC DL=5.0 psf, wind BC DL=5.0 psf.

#1 hip supports 7-0-0 jacks with no webs.

Left side jacks have 7-0-0 setback with 0-0-0 cant and 2-0-0 overhang. End jacks have 7-0-0 setback with 0-0-0 cant and 2-0-0 overhang. Right side jacks have 7-0-0 setback with 0-0-0 cant and 2-0-0 overhang.

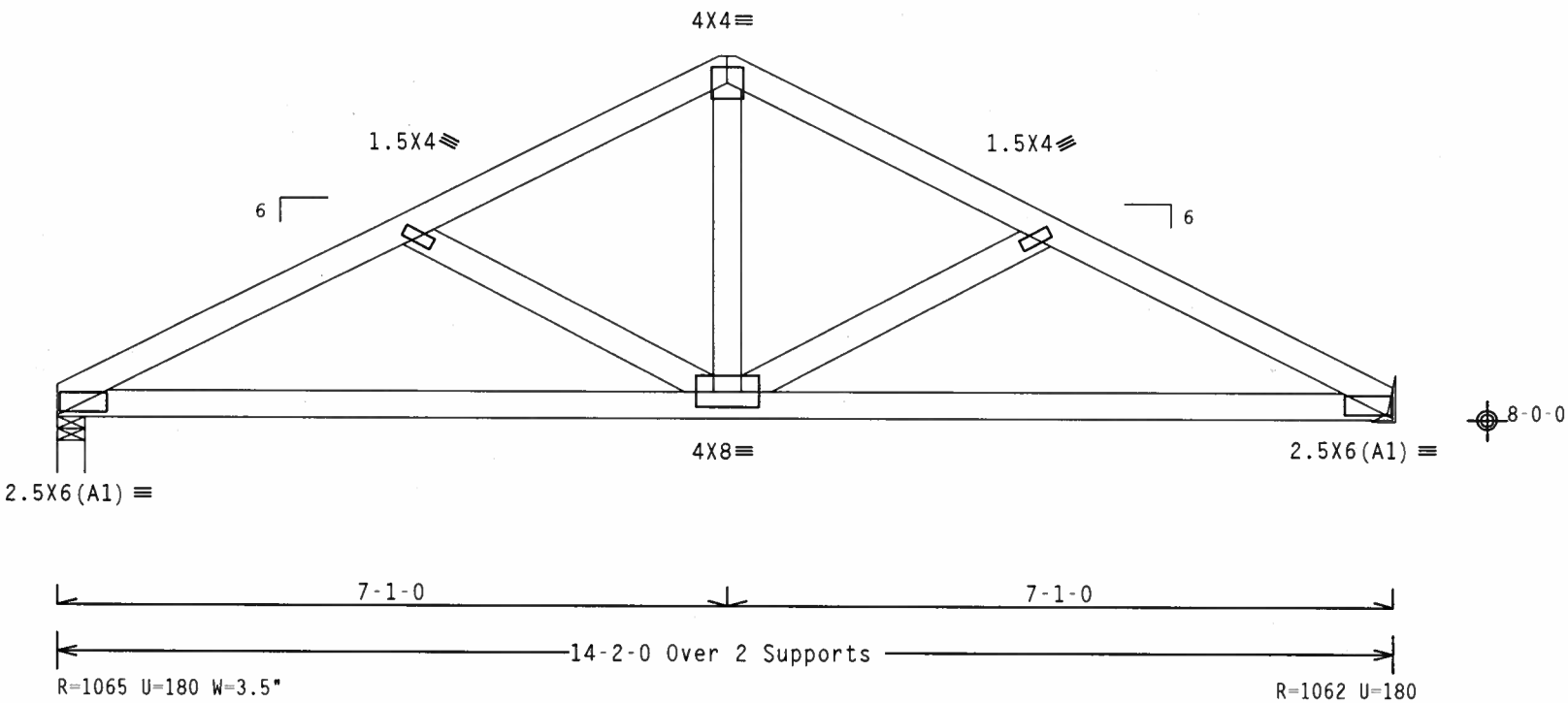

Design Crit: TPI-2002(STD)/FBC
PLT TYP. Wave
Cq/RT=1.00(1.25)/10(0) 7.24.1 TY:1 FL/-/4/-/-/R/- Scale =.5"/Ft.

ALPINE
Alpine Engineered Products, Inc.
1950 Marley Drive
Haines City, FL 33844
FL Certificate of Authorization # 567

WARNING TRUSSES REQUIRE EXTREME CARE IN FABRICATION, HANDLING, SHIPPING, INSTALLING AND BRACING. REFER TO BCSI 1-03 (BUILDING COMPONENT SAFETY INFORMATION), PUBLISHED BY TPI (TRUSS PLATE INSTITUTE, 583 D'ONOFRIO DR., SUITE 200, MADISON, WI 53719) AND WTCA (WOOD TRUSS COUNCIL OF AMERICA, 6300 ENTERPRISE LN, MADISON, WI 53719) FOR SAFETY PRACTICES PRIOR TO PERFORMING THESE FUNCTIONS. UNLESS OTHERWISE INDICATED, TOP CHORD SHALL HAVE PROPERLY ATTACHED STRUCTURAL PANELS AND BOTTOM CHORD SHALL HAVE A PROPERLY ATTACHED RIGID CEILING.

IMPORTANTFURNISH A COPY OF THIS DESIGN TO THE INSTALLATION CONTRACTOR. ALPINE ENGINEERED PRODUCTS, INC. SHALL NOT BE RESPONSIBLE FOR ANY DEVIATION FROM THIS DESIGN; ANY FAILURE TO BUILD THE TRUSS IN CONFORMANCE WITH TPI; OR FABRICATING, HANDLING, SHIPPING, INSTALLING & BRACING OF TRUSSES. DESIGN CONFORMS WITH APPLICABLE PROVISIONS OF NDS (NATIONAL DESIGN SPEC, BY AF&PA) AND TPI. ALPINE CONNECTOR PLATES ARE MADE OF 20/18/16GA (W,H/S/K) ASTM A653 GRADE 40/60 (W, K/H,S) GALV. STEEL. APPLY PLATES TO EACH FACE OF TRUSS AND, UNLESS OTHERWISE LOCATED ON THIS DESIGN, POSITION PER DRAWINGS 160A-Z. ANY INSPECTION OF PLATES FOLLOWED BY (1) SHALL BE PER ANNEX A3 OF TPI1-2002 SEC.3. A SEAL ON THIS DRAWING INDICATES ACCEPTANCE OF PROFESSIONAL ENGINEERING RESPONSIBILITY SOLELY FOR THE TRUSS COMPONENT DESIGN SHOWN. THE SUITABILITY AND USE OF THIS COMPONENT FOR ANY BUILDING IS THE RESPONSIBILITY OF THE BUILDING DESIGNER PER ANSI/TPI 1 SEC. 2.

ARTHUR R. FISHER
LICENSE
No. 59687
STATE OF FLORIDA
PROFESSIONAL ENGINEER
Mar 24 '06

TC LL	20.0 PSF	REF	R487-- 9872
TC DL	10.0 PSF	DATE	03/24/06
BC DL	10.0 PSF	DRW	HCUSR487 06083044
BC LL	0.0 PSF	HC-ENG	TCE/AF
TOT.LD.	40.0 PSF	SEQN-	5174
DUR.FAC.	1.25		
SPACING	SEE ABOVE	JREF-	1SVS487_Z05

(6-126--Russell North Constructio Hynes -- , -- D2G)

Top chord 2x4 SP #2 Dense
Bot chord 2x8 SP #1 Dense
Webs 2x4 SP #3 :W7 2x4 SP #2 Dense:

In lieu of structural panels or rigid ceiling use purlins to brace TC @ 24" OC, BC @ 24" OC.

SPECIAL LOADS
------(LUMBER DUR.FAC.=1.25 / PLATE DUR.FAC.=1.25)

TC - From	62 PLF	at 0.00	to	62 PLF	at 7.08
TC - From	62 PLF	at 7.08	to	62 PLF	at 9.17
TC - From	62 PLF	at 9.17	to	62 PLF	at 14.17
BC - From	20 PLF	at 0.00	to	20 PLF	at 14.17

BC - 4338 LB Conc. Load at 10.02
BC - 507 LB Conc. Load at 12.23

Provide connection for concentrated load(s) shown.

2 COMPLETE TRUSSES REQUIRED

Nailing Schedule: (12d_Box_or_Gun_(0.128"x3.25"_min.)_nails)
Top Chord: 1 Row @12.00" o.c.
Bot Chord: 1 Row @ 4.25" o.c.
Webs : 1 Row @ 4" o.c.
Use equal spacing between rows and stagger nails in each row to avoid splitting.

110 mph wind, 15.00 ft mean hgt, ASCE 7-02, CLOSED bldg, not located within 4.50 ft from roof edge, CAT II, EXP B, wind TC DL=5.0 psf, wind BC DL=5.0 psf.

Right end vertical not exposed to wind pressure.

Deflection meets L/360 live and L/240 total load. Creep increase factor for dead load is 1.50.

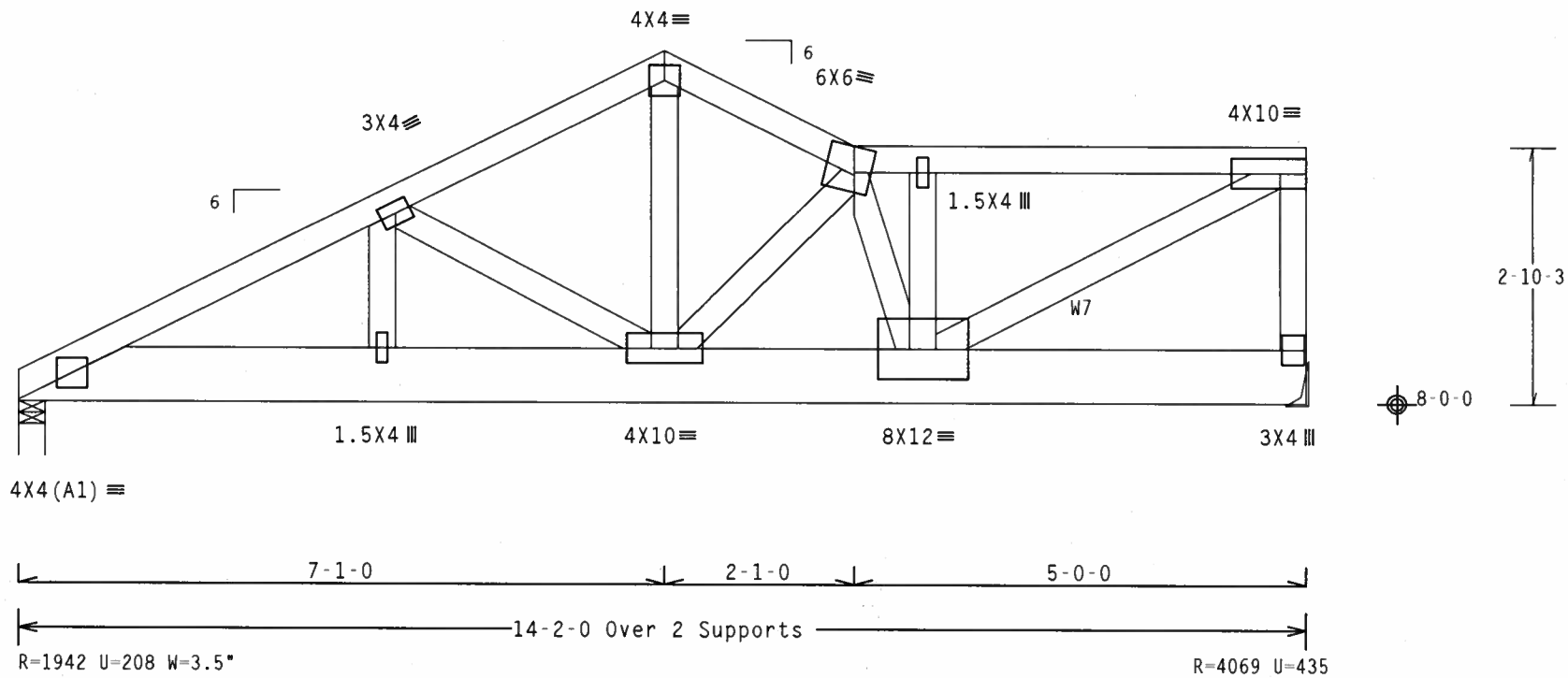

Design Crit: TPI-2002(STD)/FBC
PLT TYP. Wave Cq/RT=1.00(1.25)/10(0) 7.24.12 [illegible] Y:1 FL/-/4/-/-/R/- Scale =.5"/Ft.

ALPINE
Alpine Engineered Products, Inc.
1950 Marley Drive
Haines City, FL 33844
FL Certificate of Authorization # 567

WARNING TRUSSES REQUIRE EXTREME CARE IN FABRICATION, HANDLING, SHIPPING, INSTALLING AND BRACING. REFER TO BCSI 1-03 (BUILDING COMPONENT SAFETY INFORMATION), PUBLISHED BY TPI (TRUSS PLATE INSTITUTE, 583 D'ONOFRIO DR., SUITE 200, MADISON, WI 53719) AND WTCA (WOOD TRUSS COUNCIL OF AMERICA, 6300 ENTERPRISE LN, MADISON, WI 53719) FOR SAFETY PRACTICES PRIOR TO PERFORMING THESE FUNCTIONS. UNLESS OTHERWISE INDICATED, TOP CHORD SHALL HAVE PROPERLY ATTACHED STRUCTURAL PANELS AND BOTTOM CHORD SHALL HAVE A PROPERLY ATTACHED RIGID CEILING.

IMPORTANT FURNISH A COPY OF THIS DESIGN TO THE INSTALLATION CONTRACTOR. ALPINE ENGINEERED PRODUCTS, INC. SHALL NOT BE RESPONSIBLE FOR ANY DEVIATION FROM THIS DESIGN; ANY FAILURE TO BUILD THE TRUSS IN CONFORMANCE WITH TPI; OR FABRICATING, HANDLING, SHIPPING, INSTALLING & BRACING OF TRUSSES. DESIGN CONFORMS WITH APPLICABLE PROVISIONS OF NDS (NATIONAL DESIGN SPEC, BY AF&PA) AND TPI. ALPINE CONNECTOR PLATES ARE MADE OF 20/18/16GA (W,H/S/K) ASTM A653 GRADE 40/60 (W, K/H,S) GALV. STEEL. APPLY PLATES TO EACH FACE OF TRUSS AND, UNLESS OTHERWISE LOCATED ON THIS DESIGN, POSITION PER DRAWINGS 160A-Z. ANY INSPECTION OF PLATES FOLLOWED BY (1) SHALL BE PER ANNEX A3 OF TPI1-2002 SEC.3. A SEAL ON THIS DRAWING INDICATES ACCEPTANCE OF PROFESSIONAL ENGINEERING RESPONSIBILITY SOLELY FOR THE TRUSS COMPONENT DESIGN SHOWN. THE SUITABILITY AND USE OF THIS COMPONENT FOR ANY BUILDING IS THE RESPONSIBILITY OF THE BUILDING DESIGNER PER ANSI/TPI 1 SEC. 2.

ARTHUR R. FISHER LICENSE No.59687 STATE OF FLORIDA PROFESSIONAL ENGINEER
Mar 24 '06

TC LL	20.0 PSF	REF	R487-- 9873
TC DL	10.0 PSF	DATE	03/24/06
BC DL	10.0 PSF	DRW	HCUSR487 06083049
BC LL	0.0 PSF	HC-ENG	TCE/AF
TOT.LD.	40.0 PSF	SEQN-	12876 REV
DUR.FAC.	1.25		
SPACING	SEE ABOVE	JREF-	1SVS487_Z05

(6-126-Russell North constructio Hynes D3)

Top chord 2x4 SP #2 Dense
Bot chord 2x4 SP #2 Dense
Webs 2x4 SP #3

In lieu of structural panels or rigid ceiling use purlins to brace TC @ 24" OC, BC @ 24" OC.

110 mph wind, 15.00 ft mean hgt, ASCE 7-02, CLOSED bldg, not located within 4.50 ft from roof edge, CAT II, EXP B, wind TC DL=5.0 psf, wind BC DL=5.0 psf.

Right end vertical not exposed to wind pressure.

Deflection meets L/360 live and L/240 total load. Creep increase factor for dead load is 1.50.

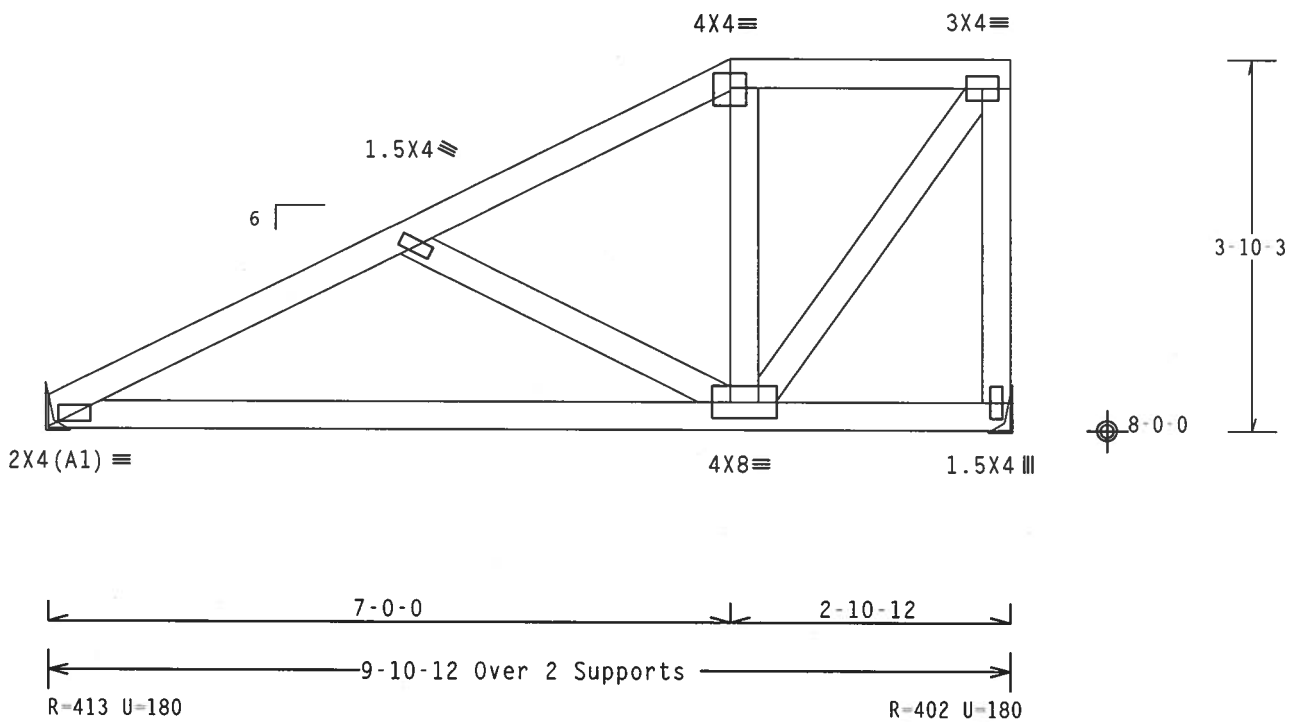

Design Crit: TPI-2002(STD)/FBC
Cq/RT=1.00(1.25)/10(0) 7.24.12 QTY:1 FL/-/4/-/-/R/-

PLT TYP. Wave

Scale =.5"/Ft.

ALPINE
Alpine Engineered Products, Inc.
1950 Marley Drive
Haines City, FL 33844
FL Certificate of Authorization # 567

WARNING TRUSSES REQUIRE EXTREME CARE IN FABRICATION, HANDLING, SHIPPING, INSTALLING AND BRACING. REFER TO BCSI 1-03 (BUILDING COMPONENT SAFETY INFORMATION), PUBLISHED BY TPI (TRUSS PLATE INSTITUTE, 583 D'ONOFRIO DR., SUITE 200, MADISON, WI 53719) AND WTCA (WOOD TRUSS COUNCIL OF AMERICA, 6300 ENTERPRISE LN, MADISON, WI 53719) FOR SAFETY PRACTICES PRIOR TO PERFORMING THESE FUNCTIONS. UNLESS OTHERWISE INDICATED, TOP CHORD SHALL HAVE PROPERLY ATTACHED STRUCTURAL PANELS AND BOTTOM CHORD SHALL HAVE A PROPERLY ATTACHED RIGID CEILING.

IMPORTANT FURNISH A COPY OF THIS DESIGN TO THE INSTALLATION CONTRACTOR. ALPINE ENGINEERED PRODUCTS, INC. SHALL NOT BE RESPONSIBLE FOR ANY DEVIATION FROM THIS DESIGN; ANY FAILURE TO BUILD THE TRUSS IN CONFORMANCE WITH TPI; OR FABRICATING, HANDLING, SHIPPING, INSTALLING & BRACING OF TRUSSES. DESIGN CONFORMS WITH APPLICABLE PROVISIONS OF NDS (NATIONAL DESIGN SPEC. BY AF&PA) AND TPI. ALPINE CONNECTOR PLATES ARE MADE OF 20/18/16GA (W,H/S/K) ASTM A653 GRADE 40/60 (W, K/H,S) GALV. STEEL. APPLY PLATES TO EACH FACE OF TRUSS AND, UNLESS OTHERWISE LOCATED ON THIS DESIGN, POSITION PER DRAWINGS 160A-Z. ANY INSPECTION OF PLATES FOLLOWED BY (1) SHALL BE PER ANNEX A3 OF TPI1-2002 SEC.3. A SEAL ON THIS DRAWING INDICATES ACCEPTANCE OF PROFESSIONAL ENGINEERING RESPONSIBILITY SOLELY FOR THE TRUSS COMPONENT DESIGN SHOWN. THE SUITABILITY AND USE OF THIS COMPONENT FOR ANY BUILDING IS THE RESPONSIBILITY OF THE BUILDING DESIGNER PER ANSI/TPI 1 SEC. 2.

ARTHUR R. FISHER LICENSE No.59687 STATE OF FLORIDA PROFESSIONAL ENGINEER
Mar 24 '06

TC LL	20.0 PSF	REF	R487-- 9874
TC DL	10.0 PSF	DATE	03/24/06
BC DL	10.0 PSF	DRW	HCUSR487 06083026
BC LL	0.0 PSF	HC-ENG	TCE/AF *
TOT.LD.	40.0 PSF	SEQN-	4995
DUR.FAC.	1.25		
SPACING	24.0"	JREF-	1SVS487_Z05

(6-126--Russell North constructio Hymes - . D4)

Top chord 2x4 SP #2 Dense
Bot chord 2x4 SP #2 Dense
Webs 2x4 SP #3

In lieu of structural panels or rigid ceiling use purlins to brace TC @ 24" OC, BC @ 24" OC.

110 mph wind, 15.00 ft mean hgt, ASCE 7-02, CLOSED bldg, not located within 4.50 ft from roof edge, CAT II, EXP B, wind TC DL=5.0 psf, wind BC DL=5.0 psf.

Right end vertical not exposed to wind pressure.

Deflection meets L/360 live and L/240 total load. Creep increase factor for dead load is 1.50.

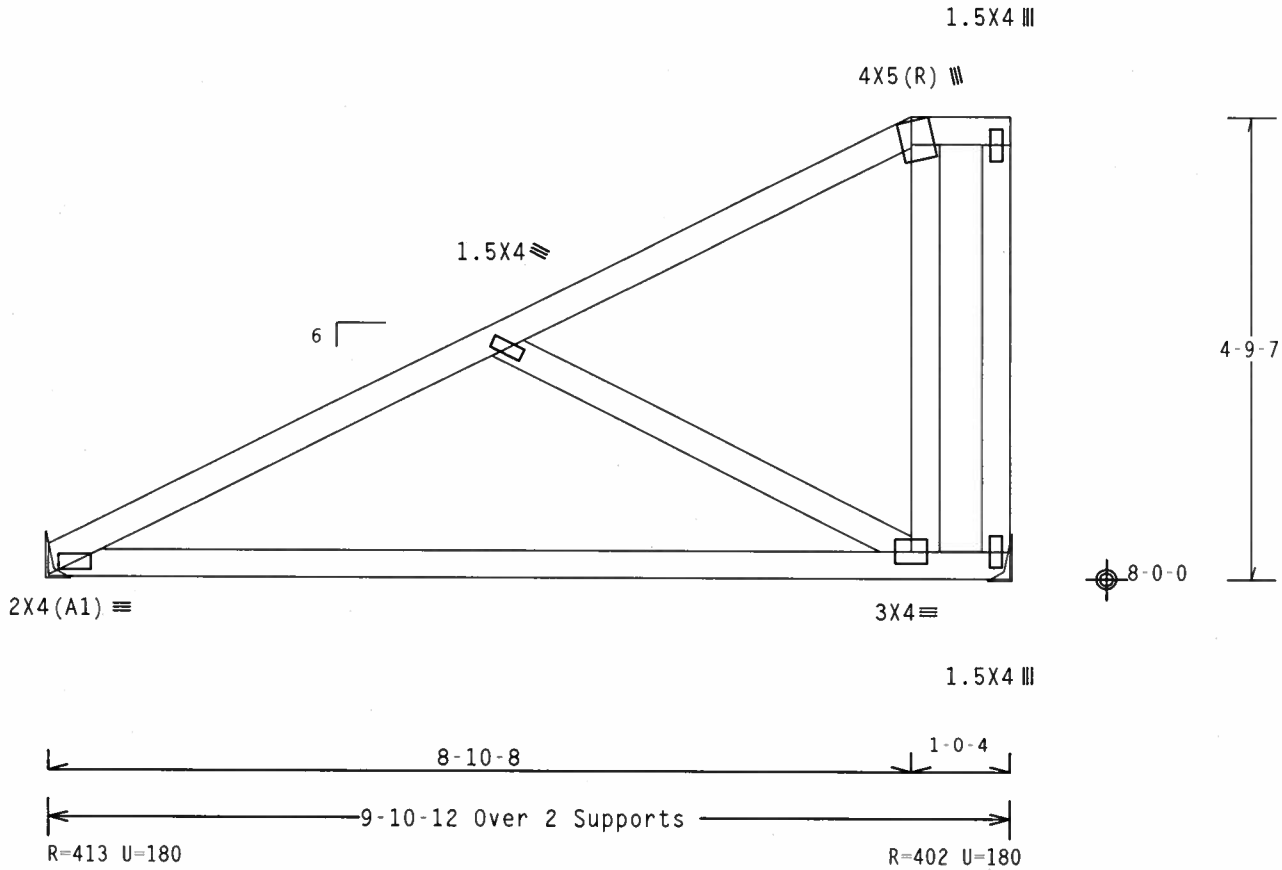

Design Crit: TPI-2002(STD)/FBC
Cq/RT=1.00(1.25)/10(0) 7.24.12 QTY:1 FL/-/4/-/-/R/- Scale =.5"/Ft.

PLT TYP. Wave

ALPINE
Alpine Engineered Products, Inc.
1950 Marley Drive
Haines City, FL 33844
FL Certificate of Authorization # 567

WARNING TRUSSES REQUIRE EXTREME CARE IN FABRICATION, HANDLING, SHIPPING, INSTALLING AND BRACING. REFER TO BCSI 1-03 (BUILDING COMPONENT SAFETY INFORMATION), PUBLISHED BY TPI (TRUSS PLATE INSTITUTE, 583 D'ONOFRIO DR., SUITE 200, MADISON, WI 53719) AND WTCA (WOOD TRUSS COUNCIL OF AMERICA, 6300 ENTERPRISE LN, MADISON, WI 53719) FOR SAFETY PRACTICES PRIOR TO PERFORMING THESE FUNCTIONS. UNLESS OTHERWISE INDICATED, TOP CHORD SHALL HAVE PROPERLY ATTACHED STRUCTURAL PANELS AND BOTTOM CHORD SHALL HAVE A PROPERLY ATTACHED RIGID CEILING.

IMPORTANT FURNISH A COPY OF THIS DESIGN TO THE INSTALLATION CONTRACTOR. ALPINE ENGINEERED PRODUCTS, INC. SHALL NOT BE RESPONSIBLE FOR ANY DEVIATION FROM THIS DESIGN; ANY FAILURE TO BUILD THE TRUSS IN CONFORMANCE WITH TPI; OR FABRICATING, HANDLING, SHIPPING, INSTALLING & BRACING OF TRUSSES. DESIGN CONFORMS WITH APPLICABLE PROVISIONS OF NDS (NATIONAL DESIGN SPEC. BY AF&PA) AND TPI. ALPINE CONNECTOR PLATES ARE MADE OF 20/18/16GA (W,H/S/K) ASTM A653 GRADE 40/60 (W, K/H,S) GALV. STEEL. APPLY PLATES TO EACH FACE OF TRUSS AND, UNLESS OTHERWISE LOCATED ON THIS DESIGN, POSITION PER DRAWINGS 160A-Z. ANY INSPECTION OF PLATES FOLLOWED BY (1) SHALL BE PER ANNEX A3 OF TPI1-2002 SEC.3. A SEAL ON THIS DRAWING INDICATES ACCEPTANCE OF PROFESSIONAL ENGINEERING RESPONSIBILITY SOLELY FOR THE TRUSS COMPONENT DESIGN SHOWN. THE SUITABILITY AND USE OF THIS COMPONENT FOR ANY BUILDING IS THE RESPONSIBILITY OF THE BUILDING DESIGNER PER ANSI/TPI 1 SEC. 2.

ARTHUR R. FISHER LICENSE No. 59687 STATE OF FLORIDA PROFESSIONAL ENGINEER

Mar 24 '06

TC LL	20.0 PSF	REF R487-- 9875
TC DL	10.0 PSF	DATE 03/24/06
BC DL	10.0 PSF	DRW HCUSR487 06083027
BC LL	0.0 PSF	HC-ENG TCE/AF *
TOT.LD.	40.0 PSF	SEQN- 5006
DUR.FAC.	1.25	
SPACING	24.0"	JREF- 1SVS487_Z05

Top chord 2x4 SP #2 Dense
Bot chord 2x4 SP #2 Dense
Webs 2x4 SP #3

In lieu of structural panels or rigid ceiling use purlins to brace TC @ 24" OC, BC @ 24" OC.

Provide (2) 16d common nails(0.162"x3.5"), toe nailed at Top chord.
Provide (3) 16d common nails(0.162"x3.5"), toe nailed at Bot chord.

110 mph wind, 15.00 ft mean hgt, ASCE 7-02, CLOSED bldg, Located anywhere in roof, CAT II, EXP B, wind TC DL=5.0 psf, wind BC DL=5.0 psf.

Hipjack supports 7-0-0 setback jacks with no webs.

Deflection meets L/360 live and L/240 total load. Creep increase factor for dead load is 1.50.

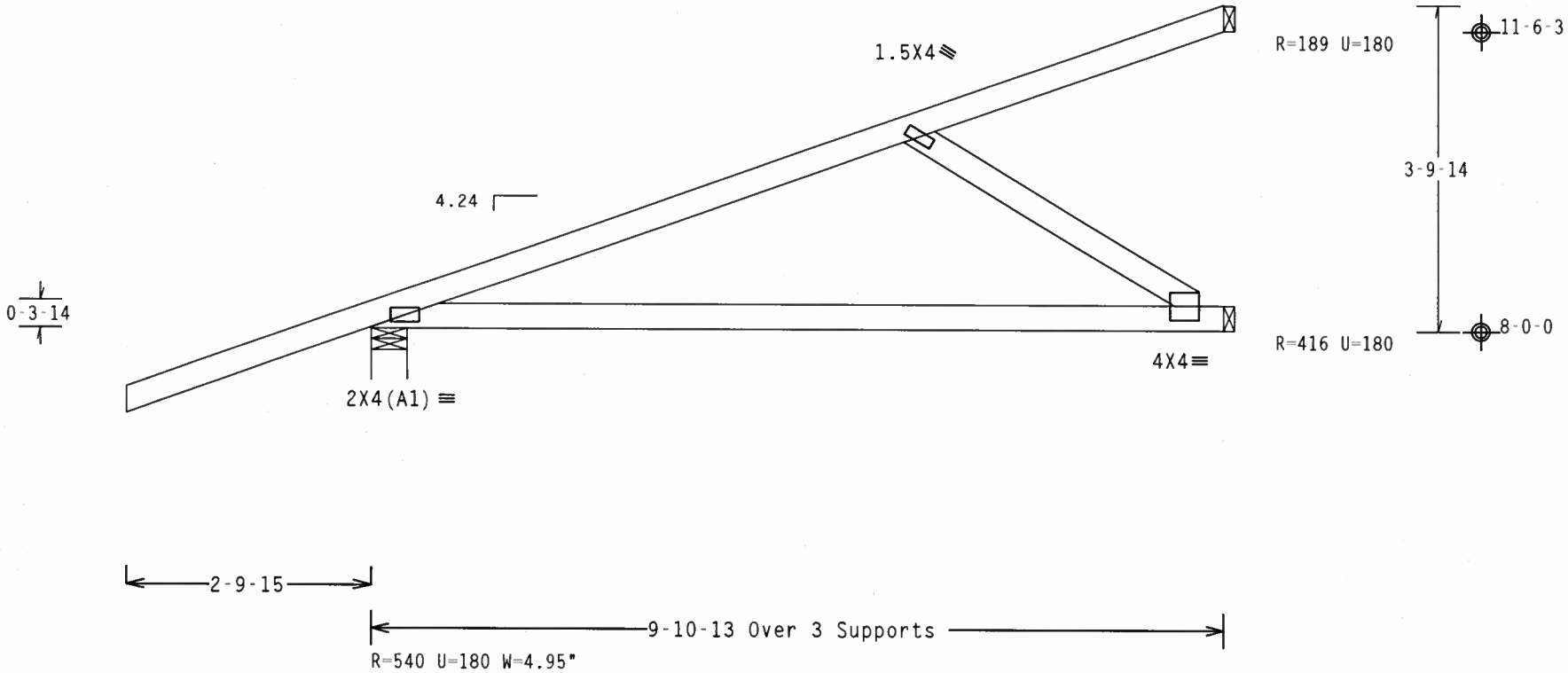

Design Crit: TPI-2002(STD)/FBC
Cq/RT=1.00(1.25)/10(0) 7.24.1

PLT TYP. Wave

QTY:1 FL/-/4/-/-/R/- Scale =.5"/Ft.

ALPINE
Alpine Engineered Products, Inc.
1950 Marley Drive
Haines City, FL 33844
FL Certificate of Authorization # 567

WARNING TRUSSES REQUIRE EXTREME CARE IN FABRICATION, HANDLING, SHIPPING, INSTALLING AND BRACING. REFER TO BCSI 1-03 (BUILDING COMPONENT SAFETY INFORMATION), PUBLISHED BY TPI (TRUSS PLATE INSTITUTE, 583 D'ONOFRIO DR., SUITE 200, MADISON, WI 53719) AND WTCA (WOOD TRUSS COUNCIL OF AMERICA, 6300 ENTERPRISE LN, MADISON, WI 53719) FOR SAFETY PRACTICES PRIOR TO PERFORMING THESE FUNCTIONS. UNLESS OTHERWISE INDICATED, TOP CHORD SHALL HAVE PROPERLY ATTACHED STRUCTURAL PANELS AND BOTTOM CHORD SHALL HAVE A PROPERLY ATTACHED RIGID CEILING.

IMPORTANT FURNISH A COPY OF THIS DESIGN TO THE INSTALLATION CONTRACTOR. ALPINE ENGINEERED PRODUCTS, INC. SHALL NOT BE RESPONSIBLE FOR ANY DEVIATION FROM THIS DESIGN: ANY FAILURE TO BUILD THE TRUSS IN CONFORMANCE WITH TPI: OR FABRICATING, HANDLING, SHIPPING, INSTALLING & BRACING OF TRUSSES. DESIGN CONFORMS WITH APPLICABLE PROVISIONS OF NDS (NATIONAL DESIGN SPEC. BY AF&PA) AND TPI. ALPINE CONNECTOR PLATES ARE MADE OF 20/18/16GA (W.H/S/K) ASTM A653 GRADE 40/60 (W, K/H,S) GALV. STEEL. APPLY PLATES TO EACH FACE OF TRUSS AND, UNLESS OTHERWISE LOCATED ON THIS DESIGN, POSITION PER DRAWINGS 160A-Z. ANY INSPECTION OF PLATES FOLLOWED BY (I) SHALL BE PER ANNEX A3 OF TPI1-2002 SEC.3. A SEAL ON THIS DRAWING INDICATES ACCEPTANCE OF PROFESSIONAL ENGINEERING RESPONSIBILITY SOLELY FOR THE TRUSS COMPONENT DESIGN SHOWN. THE SUITABILITY AND USE OF THIS COMPONENT FOR ANY BUILDING IS THE RESPONSIBILITY OF THE BUILDING DESIGNER PER ANSI/TPI 1 SEC. 2.

ARTHUR R. FISHER
LICENSE
No. 59687
STATE OF FLORIDA
PROFESSIONAL ENGINEER

Mar 24 '06

TC LL	20.0 PSF	REF	R487-- 9876
TC DL	10.0 PSF	DATE	03/24/06
BC DL	10.0 PSF	DRW	HCUSR487 06083011
BC LL	0.0 PSF	HC-ENG	JB/AF
TOT.LD.	40.0 PSF	SEQN-	2126
DUR.FAC.	1.25		
SPACING	24.0"	JREF-	1SVS487_Z05

(6-126--Russell North Constructio Hymes - - , - - - EJ7)

Top chord 2x4 SP #2 Dense
Bot chord 2x4 SP #2 Dense

In lieu of structural panels or rigid ceiling use purlins to brace TC @ 24" OC, BC @ 24" OC.

Provide (2) 16d common nails(0.162"x3.5"), toe nailed at Top chord.
Provide (2) 16d common nails(0.162"x3.5"), toe nailed at Bot chord.

110 mph wind, 15.00 ft mean hgt, ASCE 7-02, CLOSED bldg, not located within 4.50 ft from roof edge, CAT II, EXP B, wind TC DL=5.0 psf, wind BC DL=5.0 psf.

Deflection meets L/360 live and L/240 total load. Creep increase factor for dead load is 1.50.

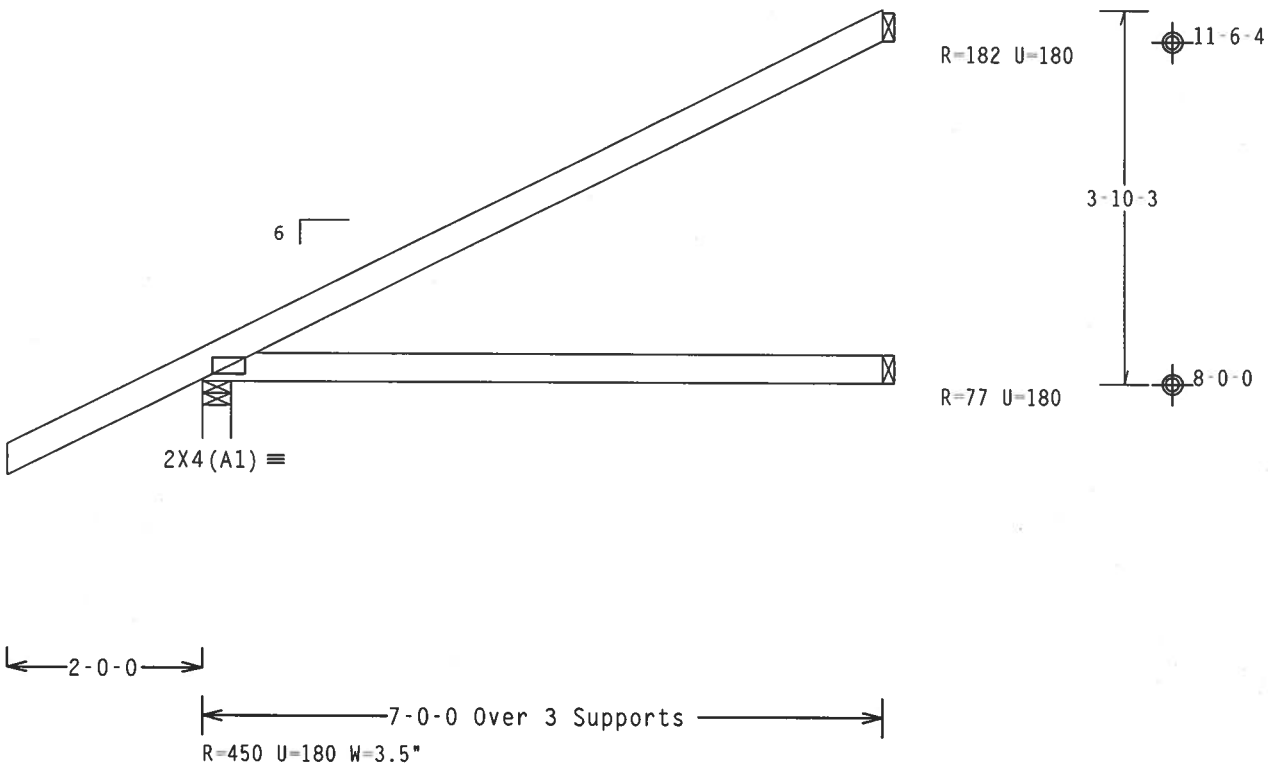

Design Crit: TPI-2002(STD)/FBC

PLT TYP. Wave Cq/RT=1.00(1.25)/10(0) 7.24.1 QTY:1 FL/-/4/-/-/R/- Scale =.5"/Ft.

ALPINE
Alpine Engineered Products, Inc.
1950 Marley Drive
Haines City, FL 33844
FL Certificate of Authorization # 567

WARNING TRUSSES REQUIRE EXTREME CARE IN FABRICATION, HANDLING, SHIPPING, INSTALLING AND BRACING. REFER TO BCSI 1-03 (BUILDING COMPONENT SAFETY INFORMATION), PUBLISHED BY TPI (TRUSS PLATE INSTITUTE, 583 D'ONOFRIO DR., SUITE 200, MADISON, WI 53719) AND WTCA (WOOD TRUSS COUNCIL OF AMERICA, 6300 ENTERPRISE LN. MADISON, WI 53719) FOR SAFETY PRACTICES PRIOR TO PERFORMING THESE FUNCTIONS. UNLESS OTHERWISE INDICATED, TOP CHORD SHALL HAVE PROPERLY ATTACHED STRUCTURAL PANELS AND BOTTOM CHORD SHALL HAVE A PROPERLY ATTACHED RIGID CEILING.

IMPORTANT FURNISH A COPY OF THIS DESIGN TO THE INSTALLATION CONTRACTOR. ALPINE ENGINEERED PRODUCTS, INC. SHALL NOT BE RESPONSIBLE FOR ANY DEVIATION FROM THIS DESIGN; ANY FAILURE TO BUILD THE TRUSS IN CONFORMANCE WITH TPI; OR FABRICATING, HANDLING, SHIPPING, INSTALLING & BRACING OF TRUSSES. DESIGN CONFORMS WITH APPLICABLE PROVISIONS OF NDS (NATIONAL DESIGN SPEC. BY AF&PA) AND TPI. ALPINE CONNECTOR PLATES ARE MADE OF 20/18/16GA (W,H/S/K) ASTM A653 GRADE 40/60 (W, K/H,S) GALV. STEEL. APPLY PLATES TO EACH FACE OF TRUSS AND, UNLESS OTHERWISE LOCATED ON THIS DESIGN, POSITION PER DRAWINGS 160A-Z. ANY INSPECTION OF PLATES FOLLOWED BY (1) SHALL BE PER ANNEX A3 OF TPI1-2002 SEC.3. A SEAL ON THIS DRAWING INDICATES ACCEPTANCE OF PROFESSIONAL ENGINEERING RESPONSIBILITY SOLELY FOR THE TRUSS COMPONENT DESIGN SHOWN. THE SUITABILITY AND USE OF THIS COMPONENT FOR ANY BUILDING IS THE RESPONSIBILITY OF THE BUILDING DESIGNER PER ANSI/TPI 1 SEC. 2.

ARTHUR R. FISHER LICENSE No.59687 STATE OF FLORIDA PROFESSIONAL ENGINEER
Mar 24 '06

TC LL	20.0 PSF	REF	R487-- 9877
TC DL	10.0 PSF	DATE	03/24/06
BC DL	10.0 PSF	DRW	HCUSR487 06083030
BC LL	0.0 PSF	HC-ENG	TCE/AF *
TOT.LD.	40.0 PSF	SEQN-	4972
DUR.FAC.	1.25		
SPACING	24.0"	JREF-	1SVS487_Z05

(6-126--Russell North Constructio Hynes -- , ** -- EJA)

Top chord 2x4 SP #2 Dense
Bot chord 2x4 SP #2 Dense
Webs 2x4 SP #3

In lieu of structural panels or rigid ceiling use purlins to brace TC @ 24" OC, BC @ 24" OC.

110 mph wind, 15.00 ft mean hgt, ASCE 7-02, CLOSED bldg, not located within 4.50 ft from roof edge, CAT II, EXP B, wind TC DL=5.0 psf, wind BC DL=5.0 psf.

Right end vertical not exposed to wind pressure.

Deflection meets L/360 live and L/240 total load. Creep increase factor for dead load is 1.50.

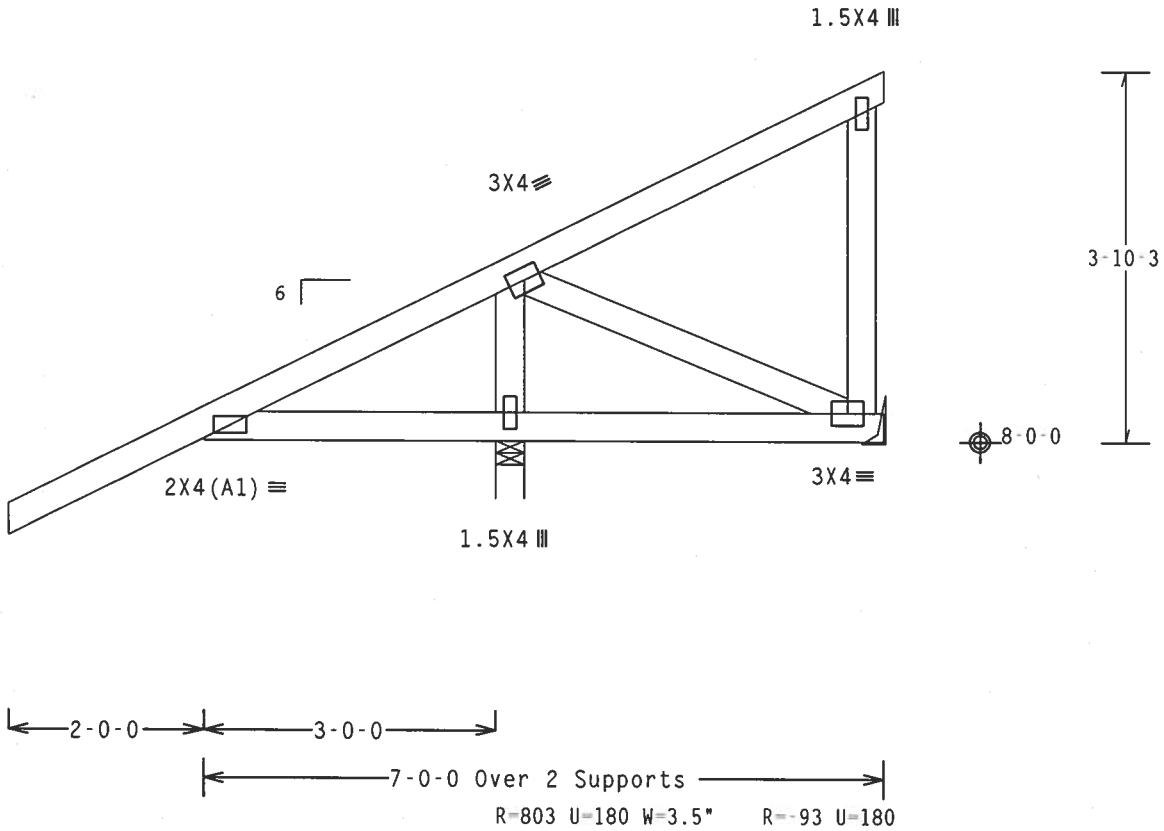

Design Crit: TPI-2002(STD)/FBC

PLT TYP. Wave

Cq/RT=1.00(1.25)/10(0) 7.24.12 QTY:1 FL/-/4/-/-/R/- Scale =.5"/Ft.

ALPINE

Alpine Engineered Products, Inc.
1950 Marley Drive
Haines City, FL 33844
FL Certificate of Authorization # 567

WARNING TRUSSES REQUIRE EXTREME CARE IN FABRICATION, HANDLING, SHIPPING, INSTALLING AND BRACING. REFER TO BCSI 1-03 (BUILDING COMPONENT SAFETY INFORMATION), PUBLISHED BY TPI (TRUSS PLATE INSTITUTE, 583 D'ONOFRIO DR., SUITE 200, MADISON, WI 53719) AND WTCA (WOOD TRUSS COUNCIL OF AMERICA, 6300 ENTERPRISE LN. MADISON, WI 53719) FOR SAFETY PRACTICES PRIOR TO PERFORMING THESE FUNCTIONS. UNLESS OTHERWISE INDICATED, TOP CHORD SHALL HAVE PROPERLY ATTACHED STRUCTURAL PANELS AND BOTTOM CHORD SHALL HAVE A PROPERLY ATTACHED RIGID CEILING.

IMPORTANT FURNISH A COPY OF THIS DESIGN TO THE INSTALLATION CONTRACTOR. ALPINE ENGINEERED PRODUCTS, INC. SHALL NOT BE RESPONSIBLE FOR ANY DEVIATION FROM THIS DESIGN; ANY FAILURE TO BUILD THE TRUSS IN CONFORMANCE WITH TPI; OR FABRICATING, HANDLING, SHIPPING, INSTALLING & BRACING OF TRUSSES. DESIGN CONFORMS WITH APPLICABLE PROVISIONS OF NDS (NATIONAL DESIGN SPEC. BY AF&PA) AND TPI. ALPINE CONNECTOR PLATES ARE MADE OF 20/18/16GA (W,H/S/K) ASTM A653 GRADE 40/60 (W, K/H,S) GALV. STEEL. APPLY PLATES TO EACH FACE OF TRUSS AND, UNLESS OTHERWISE LOCATED ON THIS DESIGN, POSITION PER DRAWINGS 160A Z. ANY INSPECTION OF PLATES FOLLOWED BY (1) SHALL BE PER ANNEX A3 OF TPI1-2002 SEC.3. A SEAL ON THIS DRAWING INDICATES ACCEPTANCE OF PROFESSIONAL ENGINEERING RESPONSIBILITY SOLELY FOR THE TRUSS COMPONENT DESIGN SHOWN. THE SUITABILITY AND USE OF THIS COMPONENT FOR ANY BUILDING IS THE RESPONSIBILITY OF THE BUILDING DESIGNER PER ANSI/TPI 1 SEC. 2.

ARTHUR R. FISHER
LICENSE
No. 59687
STATE OF FLORIDA
PROFESSIONAL ENGINEER
Mar 24, 06

TC LL	20.0 PSF	REF	R487-- 9878
TC DL	10.0 PSF	DATE	03/24/06
BC DL	10.0 PSF	DRW	HCUSR487 06083029
BC LL	0.0 PSF	HC-ENG	TCE/AF
TOT.LD.	40.0 PSF	SEQN-	5068
DUR.FAC.	1.25		
SPACING	24.0"	JREF-	1SVS487_Z05

(6-126--Russell North Constructio Hynes -- , ^ -- MAG)

Top chord 2x4 SP #2 Dense
Bot chord 2x6 SP #1 Dense
Webs 2x4 SP #3

SPECIAL LOADS
------(LUMBER DUR.FAC.=1.25 / PLATE DUR.FAC.=1.25)
TC - From 62 PLF at 0.00 to 62 PLF at 7.00
BC - From 20 PLF at 0.00 to 20 PLF at 7.00
PLB- 413 LB Conc. Load at (4.52,8.04), (6.52,8.04)

Provide connection for concentrated load(s) shown.

110 mph wind, 15.00 ft mean hgt, ASCE 7-02, CLOSED bldg, not located within 4.50 ft from roof edge, CAT II, EXP B, wind TC DL=5.0 psf, wind BC DL=5.0 psf.

Right end vertical not exposed to wind pressure.

In lieu of structural panels or rigid ceiling use purlins to brace TC @ 24" OC, BC @ 24" OC.

Deflection meets L/360 live and L/240 total load. Creep increase factor for dead load is 1.50.

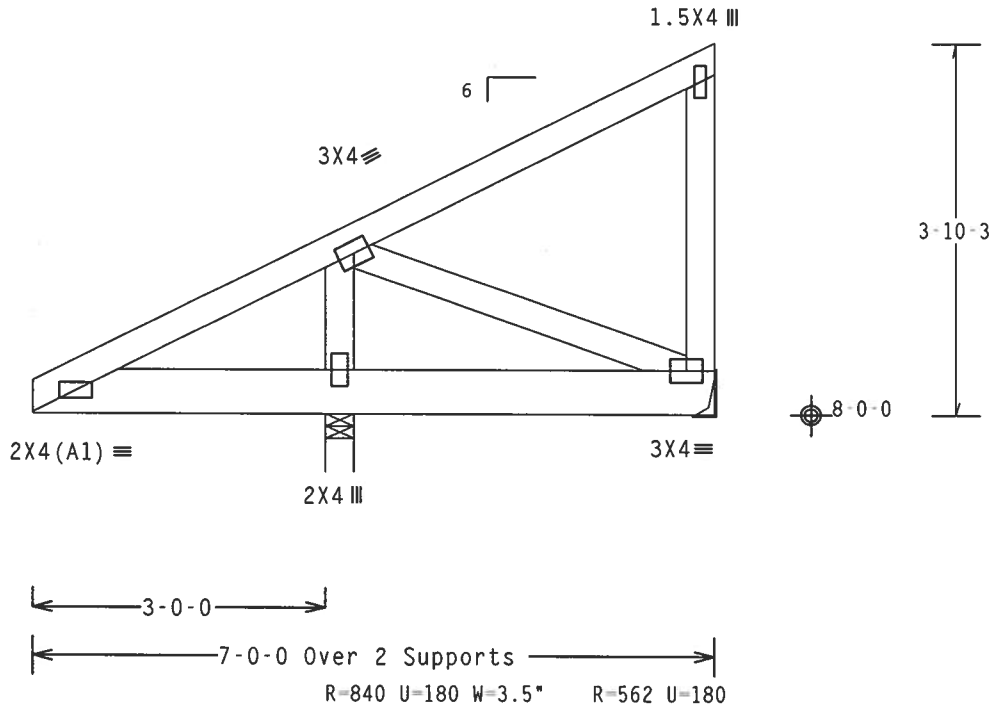

Design Crit: TPI-2002(STD)/FBC
PLT TYP. Wave
Cq/RT=1.00(1.25)/10(0) 7.24.1 TY:1 FL/-/4/-/-/R/- Scale =.5"/Ft.

ALPINE
Alpine Engineered Products, Inc.
1950 Marley Drive
Haines City, FL 33844
FL Certificate of Authorization # 567

WARNING TRUSSES REQUIRE EXTREME CARE IN FABRICATION, HANDLING, SHIPPING, INSTALLING AND BRACING. REFER TO BCSI 1-03 (BUILDING COMPONENT SAFETY INFORMATION), PUBLISHED BY TPI (TRUSS PLATE INSTITUTE, 583 D'ONOFRIO DR., SUITE 200, MADISON, WI 53719) AND WTCA (WOOD TRUSS COUNCIL OF AMERICA, 6300 ENTERPRISE LN. MADISON, WI 53719) FOR SAFETY PRACTICES PRIOR TO PERFORMING THESE FUNCTIONS. UNLESS OTHERWISE INDICATED, TOP CHORD SHALL HAVE PROPERLY ATTACHED STRUCTURAL PANELS AND BOTTOM CHORD SHALL HAVE A PROPERLY ATTACHED RIGID CEILING.

IMPORTANTFURNISH A COPY OF THIS DESIGN TO THE INSTALLATION CONTRACTOR. ALPINE ENGINEERED PRODUCTS, INC. SHALL NOT BE RESPONSIBLE FOR ANY DEVIATION FROM THIS DESIGN; ANY FAILURE TO BUILD THE TRUSS IN CONFORMANCE WITH TPI; OR FABRICATING, HANDLING, SHIPPING, INSTALLING & BRACING OF TRUSSES. DESIGN CONFORMS WITH APPLICABLE PROVISIONS OF NDS (NATIONAL DESIGN SPEC. BY AF&PA) AND TPI. ALPINE CONNECTOR PLATES ARE MADE OF 20/18/16GA (W,H/S/K) ASTM A653 GRADE 40/60 (W, K/H,S) GALV. STEEL. APPLY PLATES TO EACH FACE OF TRUSS AND, UNLESS OTHERWISE LOCATED ON THIS DESIGN, POSITION PER DRAWINGS 160A-Z. ANY INSPECTION OF PLATES FOLLOWED BY (1) SHALL BE PER ANNEX A3 OF TPI1-2002 SEC.3. A SEAL ON THIS DRAWING INDICATES ACCEPTANCE OF PROFESSIONAL ENGINEERING RESPONSIBILITY SOLELY FOR THE TRUSS COMPONENT DESIGN SHOWN. THE SUITABILITY AND USE OF THIS COMPONENT FOR ANY BUILDING IS THE RESPONSIBILITY OF THE BUILDING DESIGNER PER ANSI/TPI 1 SEC. 2.

ARTHUR R. FISHER LICENSE No. 59687 STATE OF FLORIDA PROFESSIONAL ENGINEER
Mar 24 '06

TC LL	20.0 PSF	REF	R487-- 9879
TC DL	10.0 PSF	DATE	03/24/06
BC DL	10.0 PSF	DRW	HCUSR487 06083028
BC LL	0.0 PSF	HC-ENG	TCE/AF
TOT.LD.	40.0 PSF	SEQN-	5060
DUR.FAC.	1.25		
SPACING	see above	JREF-	1SVS487_Z05

(6-126--Russell North Constructio Hynes - , - J5)

Top chord 2x4 SP #2 Dense
Bot chord 2x4 SP #2 Dense

In lieu of structural panels or rigid ceiling use purlins to brace TC @ 24" OC, BC @ 24" OC.

Provide (2) 16d common nails(0.162"x3.5"), toe nailed at Top chord.
Provide (2) 16d common nails(0.162"x3.5"), toe nailed at Bot chord.

110 mph wind, 15.00 ft mean hgt, ASCE 7-02, CLOSED bldg, not located within 4.50 ft from roof edge, CAT II, EXP B, wind TC DL=5.0 psf, wind BC DL=5.0 psf.

Deflection meets L/360 live and L/240 total load. Creep increase factor for dead load is 1.50.

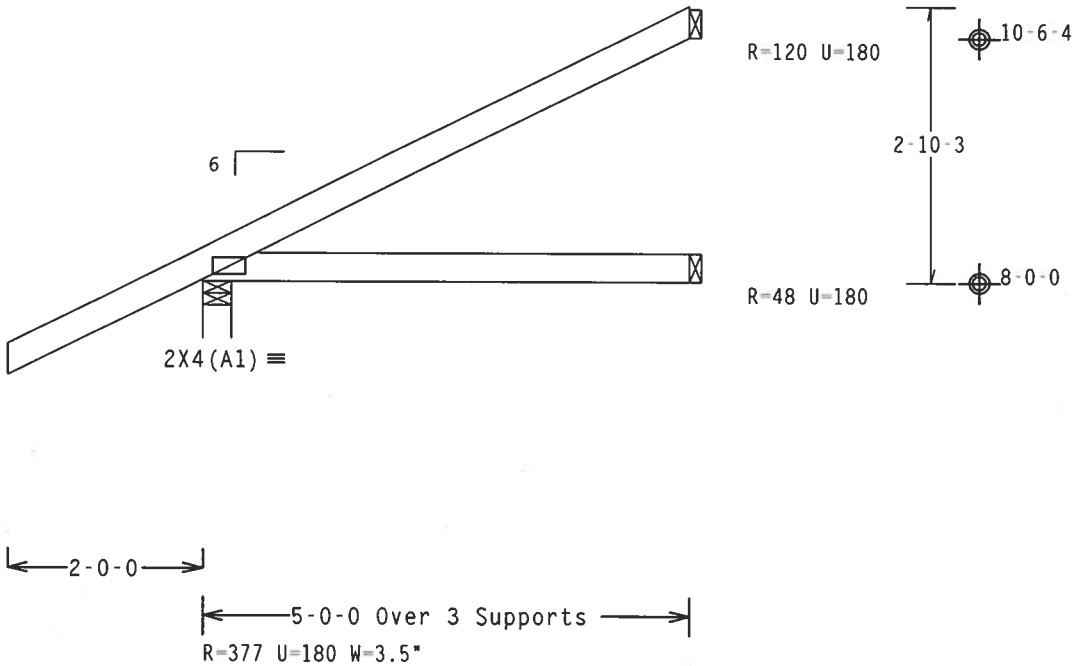

Design Crit: TPI-2002(STD)/FBC
Cq/RT=1.00(1.25)/10(0) 7.24.1

PLT TYP. Wave

QTY:1 FL/-/4/-/-/R/- Scale =.5"/Ft.

ALPINE
Alpine Engineered Products, Inc.
1950 Marley Drive
Haines City, FL 33844
FL Certificate of Authorization # 567

WARNING TRUSSES REQUIRE EXTREME CARE IN FABRICATION, HANDLING, SHIPPING, INSTALLING AND BRACING. REFER TO BCSI 1-03 (BUILDING COMPONENT SAFETY INFORMATION), PUBLISHED BY TPI (TRUSS PLATE INSTITUTE, 583 D'ONOFRIO DR., SUITE 200, MADISON, WI 53719) AND WTCA (WOOD TRUSS COUNCIL OF AMERICA, 6300 ENTERPRISE LN, MADISON, WI 53719) FOR SAFETY PRACTICES PRIOR TO PERFORMING THESE FUNCTIONS. UNLESS OTHERWISE INDICATED, TOP CHORD SHALL HAVE PROPERLY ATTACHED STRUCTURAL PANELS AND BOTTOM CHORD SHALL HAVE A PROPERLY ATTACHED RIGID CEILING.

IMPORTANT FURNISH A COPY OF THIS DESIGN TO THE INSTALLATION CONTRACTOR. ALPINE ENGINEERED PRODUCTS, INC. SHALL NOT BE RESPONSIBLE FOR ANY DEVIATION FROM THIS DESIGN; ANY FAILURE TO BUILD THE TRUSS IN CONFORMANCE WITH TPI; OR FABRICATING, HANDLING, SHIPPING, INSTALLING & BRACING OF TRUSSES. DESIGN CONFORMS WITH APPLICABLE PROVISIONS OF NDS (NATIONAL DESIGN SPEC. BY AF&PA) AND TPI. ALPINE CONNECTOR PLATES ARE MADE OF 20/18/16GA (W.H/S/K) ASTM A653 GRADE 40/60 (W, K/H,S) GALV. STEEL. APPLY PLATES TO EACH FACE OF TRUSS AND, UNLESS OTHERWISE LOCATED ON THIS DESIGN, POSITION PER DRAWINGS 160A-Z. ANY INSPECTION OF PLATES FOLLOWED BY (I) SHALL BE PER ANNEX A3 OF TPI1-2002 SEC.3. A SEAL ON THIS DRAWING INDICATES ACCEPTANCE OF PROFESSIONAL ENGINEERING RESPONSIBILITY SOLELY FOR THE TRUSS COMPONENT DESIGN SHOWN. THE SUITABILITY AND USE OF THIS COMPONENT FOR ANY BUILDING IS THE RESPONSIBILITY OF THE BUILDING DESIGNER PER ANSI/TPI 1 SEC. 2.

ARTHUR R. FISHER
LICENSE
No. 59687
STATE OF FLORIDA
PROFESSIONAL ENGINEER
Mar 24 '06

TC LL	20.0 PSF	REF	R487-- 9880
TC DL	10.0 PSF	DATE	03/24/06
BC DL	10.0 PSF	DRW	HCUSR487 06083051
BC LL	0.0 PSF	HC-ENG	TCE/AF *
TOT.LD.	40.0 PSF	SEQN-	4979
DUR.FAC.	1.25		
SPACING	24.0"	JREF-	1SVS487_Z05

(6-126--Russell North Constructio Hynes -- , ** - J5D)

Top chord 2x4 SP #2 Dense
Bot chord 2x4 SP #2 Dense

In lieu of structural panels or rigid ceiling use purlins to brace TC @ 24" OC, BC @ 24" OC.

Provide (2) 16d common nails(0.162"x3.5"), toe nailed at Top chord.
Provide (2) 16d common nails(0.162"x3.5"), toe nailed at Bot chord.

110 mph wind, 15.00 ft mean hgt, ASCE 7-02, CLOSED bldg, not located within 4.50 ft from roof edge, CAT II, EXP B, wind TC DL=5.0 psf, wind BC DL=5.0 psf.

Deflection meets L/360 live and L/240 total load. Creep increase factor for dead load is 1.50.

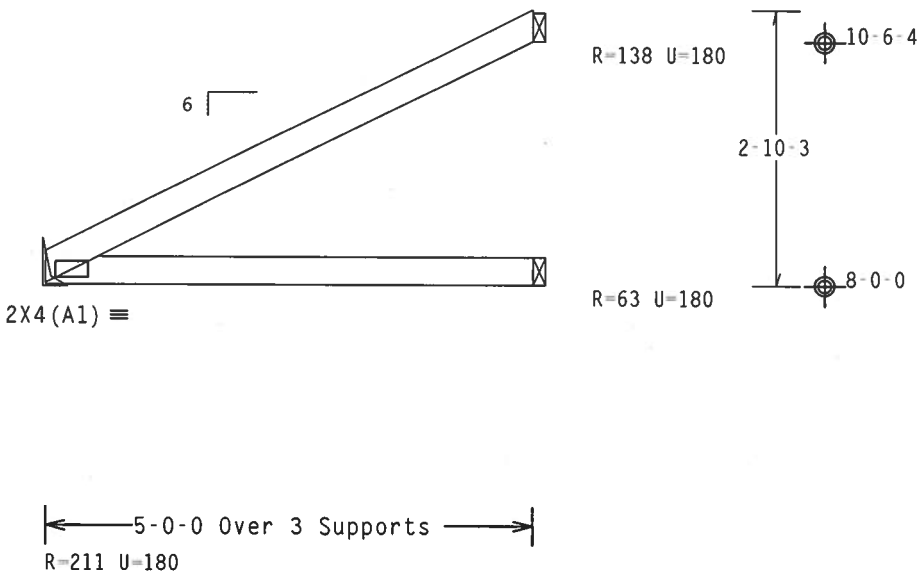

Design Crit: TPI-2002(STD)/FBC
Cq/RT=1.00(1.25)/10(0) 7.24.1 QTY:1 FL/-/4/-/-/R/- Scale =.5"/Ft.

PLT TYP. Wave

ALPINE
Alpine Engineered Products, Inc.
1950 Marley Drive
Haines City, FL 33844
FL Certificate of Authorization # 567

WARNING TRUSSES REQUIRE EXTREME CARE IN FABRICATION, HANDLING, SHIPPING, INSTALLING AND BRACING. REFER TO BCSI 1-03 (BUILDING COMPONENT SAFETY INFORMATION), PUBLISHED BY TPI (TRUSS PLATE INSTITUTE, 583 D'ONOFRIO DR., SUITE 200, MADISON, WI 53719) AND WTCA (WOOD TRUSS COUNCIL OF AMERICA, 6300 ENTERPRISE LN, MADISON, WI 53719) FOR SAFETY PRACTICES PRIOR TO PERFORMING THESE FUNCTIONS. UNLESS OTHERWISE INDICATED, TOP CHORD SHALL HAVE PROPERLY ATTACHED STRUCTURAL PANELS AND BOTTOM CHORD SHALL HAVE A PROPERLY ATTACHED RIGID CEILING.

IMPORTANTFURNISH A COPY OF THIS DESIGN TO THE INSTALLATION CONTRACTOR. ALPINE ENGINEERED PRODUCTS, INC. SHALL NOT BE RESPONSIBLE FOR ANY DEVIATION FROM THIS DESIGN; ANY FAILURE TO BUILD THE TRUSS IN CONFORMANCE WITH TPI; OR FABRICATING, HANDLING, SHIPPING, INSTALLING & BRACING OF TRUSSES. DESIGN CONFORMS WITH APPLICABLE PROVISIONS OF NDS (NATIONAL DESIGN SPEC, BY AF&PA) AND TPI. ALPINE CONNECTOR PLATES ARE MADE OF 20/18/16GA (W.H/S/K) ASTM A653 GRADE 40/60 (W, K/H.S) GALV. STEEL. APPLY PLATES TO EACH FACE OF TRUSS AND, UNLESS OTHERWISE LOCATED ON THIS DESIGN, POSITION PER DRAWINGS 160A-Z. ANY INSPECTION OF PLATES FOLLOWED BY (1) SHALL BE PER ANNEX A3 OF TPI1-2002 SEC.3. A SEAL ON THIS DRAWING INDICATES ACCEPTANCE OF PROFESSIONAL ENGINEERING RESPONSIBILITY SOLELY FOR THE TRUSS COMPONENT DESIGN SHOWN. THE SUITABILITY AND USE OF THIS COMPONENT FOR ANY BUILDING IS THE RESPONSIBILITY OF THE BUILDING DESIGNER PER ANSI/TPI 1 SEC. 2.

ARTHUR R. FISHER
LICENSE
No.59687
STATE OF FLORIDA
PROFESSIONAL ENGINEER
Mar 24 '06

TC LL	20.0 PSF	REF	R487-- 9881
TC DL	10.0 PSF	DATE	03/24/06
BC DL	10.0 PSF	DRW	HCUSR487 06083043
BC LL	0.0 PSF	HC-ENG	TCE/AF *
TOT.LD.	40.0 PSF	SEQN-	5179
DUR.FAC.	1.25		
SPACING	24.0"	JREF-	1SVS487_Z05

(6-126--Russell North Constructio Hynes -- , -- - J3)

Top chord 2x4 SP #2 Dense
Bot chord 2x4 SP #2 Dense

In lieu of structural panels or rigid ceiling use purlins to brace TC @ 24" OC, BC @ 24" OC.

Provide (2) 16d common nails(0.162"x3.5"), toe nailed at Top chord.
Provide (2) 16d common nails(0.162"x3.5"), toe nailed at Bot chord.

110 mph wind, 15.00 ft mean hgt, ASCE 7-02, CLOSED bldg, Located anywhere in roof, CAT II, EXP B, wind TC DL=5.0 psf, wind BC DL=5.0 psf.

Deflection meets L/360 live and L/240 total load. Creep increase factor for dead load is 1.50.

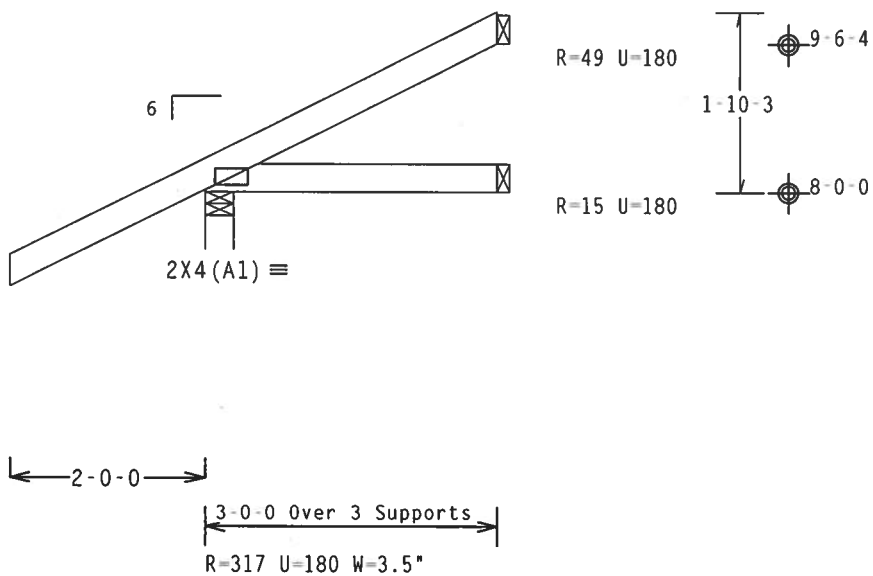

Design Crit: TPI-2002(STD)/FBC
Cq/RT=1.00(1.25)/10(0) 7.24.1 QTY:1 FL/-/4/-/-/R/- Scale =.5"/Ft.

PLT TYP. Wave

ALPINE
Alpine Engineered Products, Inc.
1950 Marley Drive
Haines City, FL 33844
FL Certificate of Authorization # 567

WARNING TRUSSES REQUIRE EXTREME CARE IN FABRICATION, HANDLING, SHIPPING, INSTALLING AND BRACING. REFER TO BCSI 1-03 (BUILDING COMPONENT SAFETY INFORMATION), PUBLISHED BY TPI (TRUSS PLATE INSTITUTE, 583 D'ONOFRIO DR., SUITE 200, MADISON, WI 53719) AND WTCA (WOOD TRUSS COUNCIL OF AMERICA, 6300 ENTERPRISE LN, MADISON, WI 53719) FOR SAFETY PRACTICES PRIOR TO PERFORMING THESE FUNCTIONS. UNLESS OTHERWISE INDICATED, TOP CHORD SHALL HAVE PROPERLY ATTACHED STRUCTURAL PANELS AND BOTTOM CHORD SHALL HAVE A PROPERLY ATTACHED RIGID CEILING.

IMPORTANTFURNISH A COPY OF THIS DESIGN TO THE INSTALLATION CONTRACTOR. ALPINE ENGINEERED PRODUCTS, INC. SHALL NOT BE RESPONSIBLE FOR ANY DEVIATION FROM THIS DESIGN; ANY FAILURE TO BUILD THE TRUSS IN CONFORMANCE WITH TPI; OR FABRICATING, HANDLING, SHIPPING, INSTALLING & BRACING OF TRUSSES. DESIGN CONFORMS WITH APPLICABLE PROVISIONS OF NDS (NATIONAL DESIGN SPEC. BY AF&PA) AND TPI. ALPINE CONNECTOR PLATES ARE MADE OF 20/18/16GA (W.H/S/K) ASTM A653 GRADE 40/60 (W, K/H,S) GALV. STEEL. APPLY PLATES TO EACH FACE OF TRUSS AND, UNLESS OTHERWISE LOCATED ON THIS DESIGN, POSITION PER DRAWINGS 160A-Z. ANY INSPECTION OF PLATES FOLLOWED BY (1) SHALL BE PER ANNEX A3 OF TPI1-2002 SEC.3. A SEAL ON THIS DRAWING INDICATES ACCEPTANCE OF PROFESSIONAL ENGINEERING RESPONSIBILITY SOLELY FOR THE TRUSS COMPONENT DESIGN SHOWN. THE SUITABILITY AND USE OF THIS COMPONENT FOR ANY BUILDING IS THE RESPONSIBILITY OF THE BUILDING DESIGNER PER ANSI/TPI 1 SEC. 2.

ARTHUR R. FISHER LICENSE No.59687 STATE OF FLORIDA PROFESSIONAL ENGINEER
Mar 24 '06

TC LL	20.0 PSF	REF	R487-- 9882
TC DL	10.0 PSF	DATE	03/24/06
BC DL	10.0 PSF	DRW	HCUSR487 06083052
BC LL	0.0 PSF	HC-ENG	TCE/AF *
TOT.LD.	40.0 PSF	SEQN-	4982
DUR.FAC.	1.25		
SPACING	24.0"	JREF-	1SVS487_Z05

(6-126--Russell North Constructio Hynes -- , -- - J1)

Top chord 2x4 SP #2 Dense
Bot chord 2x4 SP #2 Dense

In lieu of structural panels or rigid ceiling use purlins to brace TC @ 24" OC, BC @ 24" OC.

Provide (2) 16d common nails(0.162"x3.5"), toe nailed at Top chord.
Provide (2) 16d common nails(0.162"x3.5"), toe nailed at Bot chord.

110 mph wind, 15.00 ft mean hgt, ASCE 7-02, CLOSED bldg, Located anywhere in roof, CAT II, EXP B, wind TC DL=5.0 psf, wind BC DL=5.0 psf.

Deflection meets L/360 live and L/240 total load. Creep increase factor for dead load is 1.50.

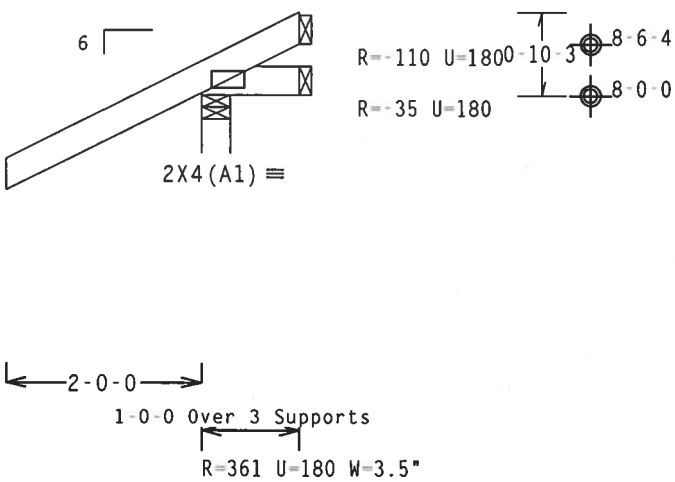

Design Crit: TPI-2002(STD)/FBC
Cq/RT=1.00(1.25)/10(0) 7.24.1 TY:1 FL/-/4/-/-/R/- Scale =.5"/Ft.

PLT TYP. Wave

ALPINE
Alpine Engineered Products, Inc.
1950 Marley Drive
Haines City, FL 33844
FL Certificate of Authorization # 567

WARNING TRUSSES REQUIRE EXTREME CARE IN FABRICATION, HANDLING, SHIPPING, INSTALLING AND BRACING. REFER TO BCSI 1-03 (BUILDING COMPONENT SAFETY INFORMATION), PUBLISHED BY TPI (TRUSS PLATE INSTITUTE, 583 D'ONOFRIO DR., SUITE 200, MADISON, WI 53719) AND WTCA (WOOD TRUSS COUNCIL OF AMERICA, 6300 ENTERPRISE LN. MADISON, WI 53719) FOR SAFETY PRACTICES PRIOR TO PERFORMING THESE FUNCTIONS. UNLESS OTHERWISE INDICATED, TOP CHORD SHALL HAVE PROPERLY ATTACHED STRUCTURAL PANELS AND BOTTOM CHORD SHALL HAVE A PROPERLY ATTACHED RIGID CEILING.

IMPORTANTFURNISH A COPY OF THIS DESIGN TO THE INSTALLATION CONTRACTOR. ALPINE ENGINEERED PRODUCTS, INC. SHALL NOT BE RESPONSIBLE FOR ANY DEVIATION FROM THIS DESIGN; ANY FAILURE TO BUILD THE TRUSS IN CONFORMANCE WITH TPI; OR FABRICATING, HANDLING, SHIPPING, INSTALLING & BRACING OF TRUSSES. DESIGN CONFORMS WITH APPLICABLE PROVISIONS OF NDS (NATIONAL DESIGN SPEC. BY AF&PA) AND TPI. ALPINE CONNECTOR PLATES ARE MADE OF 20/18/16GA (W.H/S/K) ASTM A653 GRADE 40/60 (W. K/H,S) GALV. STEEL. APPLY PLATES TO EACH FACE OF TRUSS AND, UNLESS OTHERWISE LOCATED ON THIS DESIGN, POSITION PER DRAWINGS 160A-Z. ANY INSPECTION OF PLATES FOLLOWED BY (1) SHALL BE PER ANNEX A3 OF TPI1-2002 SEC.3. A SEAL ON THIS DRAWING INDICATES ACCEPTANCE OF PROFESSIONAL ENGINEERING RESPONSIBILITY SOLELY FOR THE TRUSS COMPONENT DESIGN SHOWN. THE SUITABILITY AND USE OF THIS COMPONENT FOR ANY BUILDING IS THE RESPONSIBILITY OF THE BUILDING DESIGNER PER ANSI/TPI 1 SEC. 2.

ARTHUR R. FISHER
LICENSE
No.59687
STATE OF FLORIDA
PROFESSIONAL ENGINEER
Mar 24 '06

TC LL	20.0 PSF	REF	R487-- 9883
TC DL	10.0 PSF	DATE	03/24/06
BC DL	10.0 PSF	DRW	HCUSR487 06083053
BC LL	0.0 PSF	HC-ENG	TCE/AF
TOT.LD.	40.0 PSF	SEQN-	4984
DUR.FAC.	1.25		
SPACING	24.0"	JREF-	1SVS487_Z05

(6-126--Russell North Constructio Hynes -- , ** -- K1)

Top chord 2x4 SP #2 Dense
Bot chord 2x4 SP #2 Dense
Webs 2x4 SP #3

In lieu of structural panels or rigid ceiling use purlins to brace TC @ 24" OC, BC @ 24" OC.

Deflection meets L/360 live and L/240 total load. Creep increase factor for dead load is 1.50.

110 mph wind, 15.00 ft mean hgt, ASCE 7-02, CLOSED bldg, Located anywhere in roof, CAT II, EXP B, wind TC DL=5.0 psf, wind BC DL=5.0 psf.

Right end vertical not exposed to wind pressure.

#1 hip supports 7-0-0 jacks with no webs.

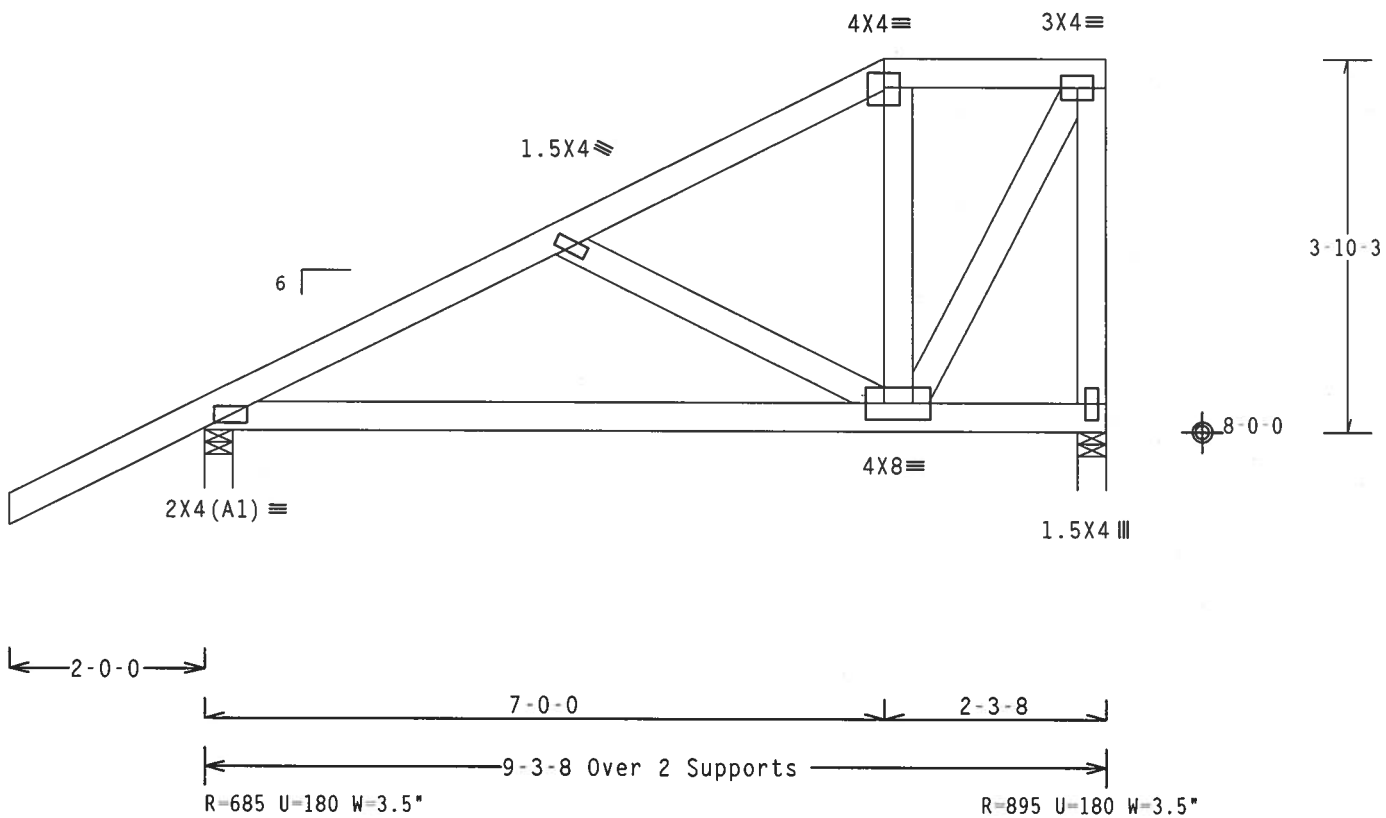

Design Crit: TPI-2002(STD)/FBC
Cq/RT=1.00(1.25)/10(0) 7.24.1 QTY:1 FL/-/4/-/-/R/-

PLT TYP. Wave

Scale =.5"/Ft.

ALPINE
Alpine Engineered Products, Inc.
1950 Marley Drive
Haines City, FL 33844
FL Certificate of Authorization # 567

WARNING TRUSSES REQUIRE EXTREME CARE IN FABRICATION, HANDLING, SHIPPING, INSTALLING AND BRACING. REFER TO BCSI 1-03 (BUILDING COMPONENT SAFETY INFORMATION), PUBLISHED BY TPI (TRUSS PLATE INSTITUTE, 583 D'ONOFRIO DR., SUITE 200, MADISON, WI 53719) AND WTCA (WOOD TRUSS COUNCIL OF AMERICA, 6300 ENTERPRISE LN, MADISON, WI 53719) FOR SAFETY PRACTICES PRIOR TO PERFORMING THESE FUNCTIONS. UNLESS OTHERWISE INDICATED, TOP CHORD SHALL HAVE PROPERLY ATTACHED STRUCTURAL PANELS AND BOTTOM CHORD SHALL HAVE A PROPERLY ATTACHED RIGID CEILING.

IMPORTANT FURNISH A COPY OF THIS DESIGN TO THE INSTALLATION CONTRACTOR. ALPINE ENGINEERED PRODUCTS, INC. SHALL NOT BE RESPONSIBLE FOR ANY DEVIATION FROM THIS DESIGN; ANY FAILURE TO BUILD THE TRUSS IN CONFORMANCE WITH TPI; OR FABRICATING, HANDLING, SHIPPING, INSTALLING & BRACING OF TRUSSES. DESIGN CONFORMS WITH APPLICABLE PROVISIONS OF NDS (NATIONAL DESIGN SPEC. BY AF&PA) AND TPI. ALPINE CONNECTOR PLATES ARE MADE OF 20/18/16GA (W,H/S/K) ASTM A653 GRADE 40/60 (W, K/H,S) GALV. STEEL. APPLY PLATES TO EACH FACE OF TRUSS AND, UNLESS OTHERWISE LOCATED ON THIS DESIGN, POSITION PER DRAWINGS 160A-Z. ANY INSPECTION OF PLATES FOLLOWED BY (1) SHALL BE PER ANNEX A3 OF TPI1-2002 SEC.3. A SEAL ON THIS DRAWING INDICATES ACCEPTANCE OF PROFESSIONAL ENGINEERING RESPONSIBILITY SOLELY FOR THE TRUSS COMPONENT DESIGN SHOWN. THE SUITABILITY AND USE OF THIS COMPONENT FOR ANY BUILDING IS THE RESPONSIBILITY OF THE BUILDING DESIGNER PER ANSI/TPI 1 SEC. 2.

ARTHUR R. FISHER LICENSE No.59687 STATE OF FLORIDA PROFESSIONAL ENGINEER

Mar 24 '06

TC LL	20.0 PSF	REF	R487-- 9884
TC DL	10.0 PSF	DATE	03/24/06
BC DL	10.0 PSF	DRW	HCUSR487 06083054
BC LL	0.0 PSF	HC-ENG	TCE/AF
TOT.LD.	40.0 PSF	SEQN-	5250
DUR.FAC.	1.25		
SPACING	SEE ABOVE	JREF-	1SVS487_Z05

(6-126--Russell North Constructio Hynes -- , ** - K2)

Top chord 2x4 SP #2 Dense
Bot chord 2x4 SP #2 Dense
Webs 2x4 SP #3

In lieu of structural panels or rigid ceiling use purlins to brace TC @ 24" OC, BC @ 24" OC.

110 mph wind, 15.00 ft mean hgt, ASCE 7-02, CLOSED bldg, not located within 4.50 ft from roof edge, CAT II, EXP B, wind TC DL=5.0 psf, wind BC DL=5.0 psf.

Right end vertical not exposed to wind pressure.

Deflection meets L/360 live and L/240 total load. Creep increase factor for dead load is 1.50.

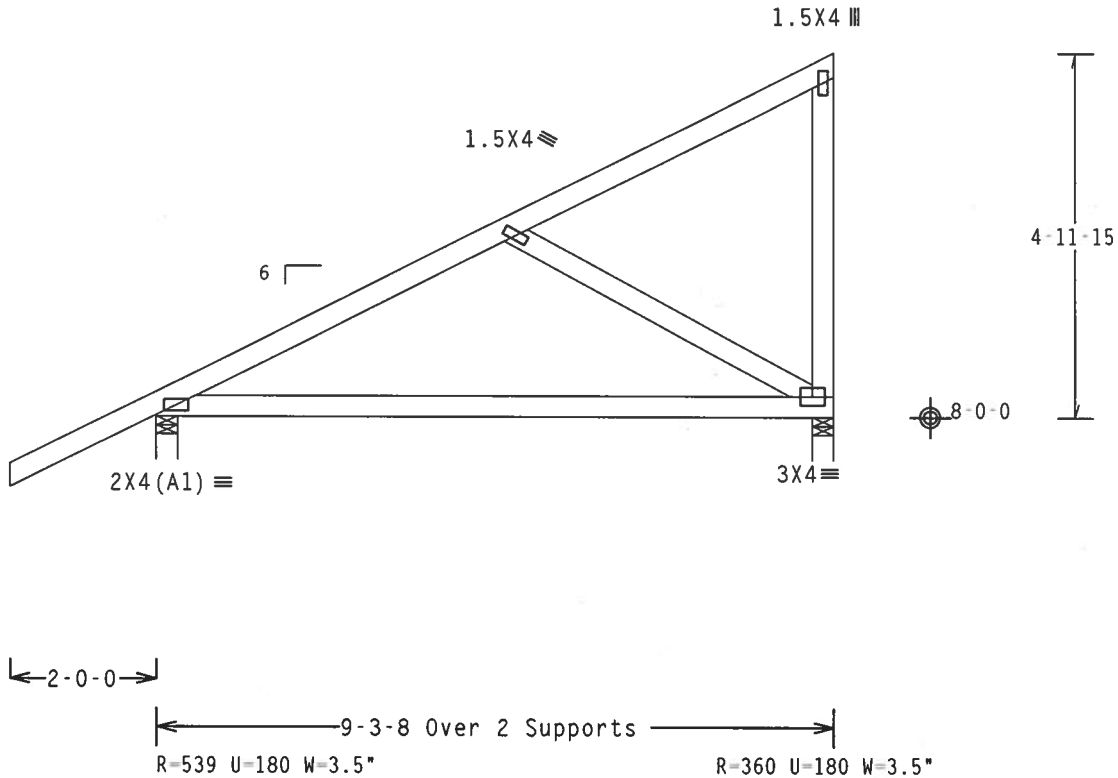

Design Crit: TPI-2002(STD)/FBC
PLT TYP. Wave Cq/RT=1.00(1.25)/10(0) 7.24.12 QTY:1 FL/-/4/-/-/R/- Scale =.375"/Ft.

ALPINE
Alpine Engineered Products, Inc.
1950 Marley Drive
Haines City, FL 33844
FL Certificate of Authorization # 567

WARNING TRUSSES REQUIRE EXTREME CARE IN FABRICATION, HANDLING, SHIPPING, INSTALLING AND BRACING. REFER TO BCSI 1-03 (BUILDING COMPONENT SAFETY INFORMATION), PUBLISHED BY TPI (TRUSS PLATE INSTITUTE, 583 D'ONOFRIO DR., SUITE 200, MADISON, WI 53719) AND WTCA (WOOD TRUSS COUNCIL OF AMERICA, 6300 ENTERPRISE LN. MADISON, WI 53719) FOR SAFETY PRACTICES PRIOR TO PERFORMING THESE FUNCTIONS. UNLESS OTHERWISE INDICATED, TOP CHORD SHALL HAVE PROPERLY ATTACHED STRUCTURAL PANELS AND BOTTOM CHORD SHALL HAVE A PROPERLY ATTACHED RIGID CEILING.

IMPORTANTFURNISH A COPY OF THIS DESIGN TO THE INSTALLATION CONTRACTOR. ALPINE ENGINEERED PRODUCTS, INC. SHALL NOT BE RESPONSIBLE FOR ANY DEVIATION FROM THIS DESIGN; ANY FAILURE TO BUILD THE TRUSS IN CONFORMANCE WITH TPI; OR FABRICATING, HANDLING, SHIPPING, INSTALLING & BRACING OF TRUSSES. DESIGN CONFORMS WITH APPLICABLE PROVISIONS OF NDS (NATIONAL DESIGN SPEC. BY AF&PA) AND TPI. ALPINE CONNECTOR PLATES ARE MADE OF 20/18/16GA (W,H/S/K) ASTM A653 GRADE 40/60 (W, K/H,S) GALV. STEEL. APPLY PLATES TO EACH FACE OF TRUSS AND, UNLESS OTHERWISE LOCATED ON THIS DESIGN, POSITION PER DRAWINGS 160A-Z. ANY INSPECTION OF PLATES FOLLOWED BY (1) SHALL BE PER ANNEX A3 OF TPI1-2002 SEC.3. A SEAL ON THIS DRAWING INDICATES ACCEPTANCE OF PROFESSIONAL ENGINEERING RESPONSIBILITY SOLELY FOR THE TRUSS COMPONENT DESIGN SHOWN. THE SUITABILITY AND USE OF THIS COMPONENT FOR ANY BUILDING IS THE RESPONSIBILITY OF THE BUILDING DESIGNER PER ANSI/TPI 1 SEC. 2.

ARTHUR R. FISHER LICENSE No. 59687 STATE OF FLORIDA PROFESSIONAL ENGINEER
Mar 24 '06

TC LL	20.0 PSF	REF	R487-- 9885
TC DL	10.0 PSF	DATE	03/24/06
BC DL	10.0 PSF	DRW	HCUSR487 06083055
BC LL	0.0 PSF	HC-ENG	TCE/AF *
TOT.LD.	40.0 PSF	SEQN-	5245
DUR.FAC.	1.25		
SPACING	24.0"	JREF-	1SVS487_Z05

CLB WEB BRACE SUBSTITUTION

THIS DETAIL IS TO BE USED WHEN CONTINUOUS LATERAL BRACING (CLB) IS SPECIFIED ON AN ALPINE TRUSS DESIGN BUT AN ALTERNATIVE WEB BRACING METHOD IS DESIRED.

NOTES:

THIS DETAIL IS ONLY APPLICABLE FOR CHANGING THE SPECIFIED CLB SHOWN ON SINGLE PLY SEALED DESIGNS TO T-BRACING OR SCAB BRACING.

ALTERNATIVE BRACING SPECIFIED IN CHART BELOW MAY BE CONSERVATIVE. FOR MINIMUM ALTERNATIVE BRACING, RE-RUN DESIGN WITH APPROPRIATE BRACING.

WEB MEMBER SIZE	SPECIFIED CLB BRACING	ALTERNATIVE BRACING T OR L-BRACE	ALTERNATIVE BRACING SCAB BRACE
2X3 OR 2X4	1 ROW	2X4	1-2X4
2X3 OR 2X4	2 ROWS	2X6	2-2X4
2X6	1 ROW	2X4	1-2X6
2X6	2 ROWS	2X6	2-2X4(*)
2X8	1 ROW	2X6	1-2X8
2X8	2 ROWS	2X6	2-2X6(*)

T-BRACE, L-BRACE AND SCAB BRACE TO BE SAME SPECIES AND GRADE OR BETTER THAN WEB MEMBER UNLESS SPECIFIED OTHERWISE ON ENGINEER'S SEALED DESIGN.

(*) CENTER SCAB ON WIDE FACE OF WEB. APPLY (1) SCAB TO EACH FACE OF WEB.

T-BRACING OR L-BRACING:

APPLY TO EITHER SIDE OF WEB NARROW FACE

ATTACH WITH 16d NAILS AT 6" O.C.

BRACE IS A MINIMUM 80% OF WEB MEMBER LENGTH

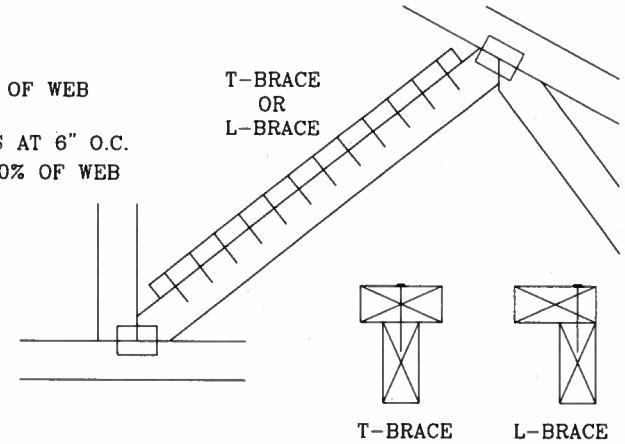

SCAB BRACING:

APPLY SCAB(S) TO WIDE FACE OF WEB.

NO MORE THAN (1) SCAB PER FACE.

ATTACH WITH 10d OR .128"x3" GUN NAILS AT 6" O.C. BRACE IS A MINIMUM 80% OF WEB MEMBER LENGTH

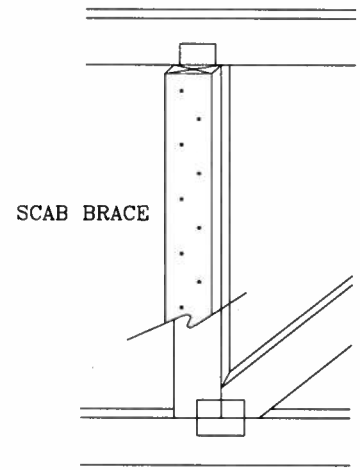

THIS DRAWING REPLACES DRAWING 579,640

ALPINE

ALPINE ENGINEERED PRODUCTS, INC.
POMPANO BEACH, FLORIDA

WARNING TRUSSES REQUIRE EXTREME CARE IN FABRICATING, HANDLING, SHIPPING, INSTALLING AND BRACING. REFER TO BCSI 1-03 (BUILDING COMPONENT SAFETY INFORMATION), PUBLISHED BY TPI (TRUSS PLATE INSTITUTE, 583 D'ONOFRIO DR., SUITE 200, MADISON, WI. 53719) AND WTCA (WOOD TRUSS COUNCIL OF AMERICA, 6300 ENTERPRISE LN, MADISON, WI 53719) FOR SAFETY PRACTICES PRIOR TO PERFORMING THESE FUNCTIONS. UNLESS OTHERWISE INDICATED, TOP CHORD SHALL HAVE PROPERLY ATTACHED STRUCTURAL PANELS AND BOTTOM CHORD SHALL HAVE A PROPERLY ATTACHED RIGID CEILING.

IMPORTANT FURNISH COPY OF THIS DESIGN TO INSTALLATION CONTRACTOR. ALPINE ENGINEERED PRODUCTS, INC., SHALL NOT BE RESPONSIBLE FOR ANY DEVIATION FROM THIS DESIGN; ANY FAILURE TO BUILD THE TRUSS IN CONFORMANCE WITH TPI; OR FABRICATING, HANDLING, SHIPPING, INSTALLING & BRACING OF TRUSSES. DESIGN CONFORMS WITH APPLICABLE PROVISIONS OF NDS (NATIONAL DESIGN SPEC, BY AF&PA) AND TPI. ALPINE CONNECTOR PLATES ARE MADE OF 20/18/16GA (W,H/S/K) ASTM A653 GRADE 40/60 (W,K/H,S) GALV. STEEL. APPLY PLATES TO EACH FACE OF TRUSS AND, UNLESS OTHERWISE LOCATED ON THIS DESIGN, POSITION PER DRAWINGS 160A-Z. ANY INSPECTION OF PLATES FOLLOWED BY (I) SHALL BE PER ANNEX A3 OF TPI 1-2002 SEC. 3. A SEAL ON THIS DRAWING INDICATES ACCEPTANCE OF PROFESSIONAL ENGINEERING RESPONSIBILITY SOLELY FOR THE TRUSS COMPONENT DESIGN SHOWN. THE SUITABILITY AND USE OF THIS COMPONENT FOR ANY BUILDING IS THE RESPONSIBILITY OF THE BUILDING DESIGNER, PER ANSI/TPI 1 SEC. 2.

ARTHUR R. FISHER
LICENSE
No. 59687
STATE OF
FLORIDA
PROFESSIONAL ENGINEER

Mar 24

TC LL	PSF	REF	CLB SUBST.
TC DL	PSF	DATE	11/26/03
BC DL	PSF	DRWG	BRCLBSUB1103
BC LL	PSF	-ENG	MLH/KAR
TOT. LD.	PSF		
DUR. FAC.			
SPACING			