0801161

ITW Building Components Group, Inc.

1950 Marley Drive Haines City, FL 33844
Florida Engineering Certificate of Authorization Number: 0 278
Florida Certificate of Product Approval # FL1999
 Document ID:1TEL8228Z0331072803

Truss Fabricator: Anderson Truss Company
Job Identification: dear--OWNER BUILDER deardorf -- , **
Truss Count: 77
Model Code: Florida Building Code 2004 and 2006 Supplement
Truss Criteria: ANSI/TPI-2002(STD)/FBC
Engineering Software: Alpine Software,Versions 7.24, 7.37, 7.36.
Structural Engineer of Record: The identity of the structural EOR did not exist as of
Address: the seal date per section 61G15-31.003(5a) of the FAC
Minimum Design Loads: Roof - 40.0 PSF @ 1.25 Duration
Floor - N/A
Wind - 110 MPH ASCE 7-02 -Closed

Seal Date: 01/31/2008

-Truss Design Engineer-
James F. Collins Jr.
Florida License Number: 52212
1950 Marley Drive
Haines City, FL 33844

Notes:

1. Determination as to the suitability of these truss components for the structure is the responsibility of the building designer/engineer of record, as defined in ANSI/TPI 1
2. The drawing date shown on this index sheet must match the date shown on the individual truss component drawing.
3. As shown on attached drawings; the drawing number is preceded by: HCUSR8228

Details: A11030EE-GBLLETIN-BRCLBSUB-A11015EE-CNBRGBLK-

#	Ref Description	Drawing#	Date
1	76956--T1	08031070	01/31/08
2	76957--T10	08031071	01/31/08
3	76958--T11	08031072	01/31/08
4	76959--T12	08031073	01/31/08
5	76960--T13	08031074	01/31/08
6	76961--T14	08031075	01/31/08
7	76962--T15	08031076	01/31/08
8	76963--T16	08031077	01/31/08
9	76964--T17	08031078	01/31/08
10	76965--T18	08031079	01/31/08
11	76966--T19	08031080	01/31/08
12	76967--T2	08031081	01/31/08
13	76968--T20	08031082	01/31/08
14	76969--T21	08031083	01/31/08
15	76970--T22	08031084	01/31/08
16	76971--T23	08031085	01/31/08
17	76972--T24	08031086	01/31/08
18	76973--T25	08031087	01/31/08
19	76974--T26	08031088	01/31/08
20	76975--T27	08031089	01/31/08
21	76976--T28	08031090	01/31/08
22	76977--T29	08031091	01/31/08
23	76978--T3	08031092	01/31/08
24	76979--T30	08031093	01/31/08
25	76980--T31	08031094	01/31/08
26	76981--T32	08031095	01/31/08
27	76982--T33	08031096	01/31/08
28	76983--T34	08031097	01/31/08
29	76984--T35	08031098	01/31/08
30	76985--T36	08031099	01/31/08
31	76986--T37	08031100	01/31/08
32	76987--T38	08031101	01/31/08
33	76988--T39	08031102	01/31/08
34	76989--T4	08031077	01/31/08
35	76990--T40	08031103	01/31/08
36	76991--T41	08031104	01/31/08
37	76992--T42	08031105	01/31/08
38	76993--T44	08031106	01/31/08

#	Ref Description	Drawing#	Date
39	76994--T45	08031107	01/31/08
40	76995--T46	08031108	01/31/08
41	76996--T47	08031109	01/31/08
42	76997--T49	08031110	01/31/08
43	76998--T5	08031078	01/31/08
44	76999--T50	08031111	01/31/08
45	77000--T51	08031112	01/31/08
46	77001--T52	08031113	01/31/08
47	77002--T53	08031114	01/31/08
48	77003--T54	08031115	01/31/08
49	77004--T55	08031116	01/31/08
50	77005--T56	08031117	01/31/08
51	77006--T57	08031118	01/31/08
52	77007--T58	08031119	01/31/08
53	77008--T59	08031120	01/31/08
54	77009--T6	08031121	01/31/08
55	77010--T60	08031122	01/31/08
56	77011--T61	08031123	01/31/08
57	77012--T62	08031124	01/31/08
58	77013--T63	08031125	01/31/08
59	77014--T64	08031126	01/31/08
60	77015--T65	08031127	01/31/08
61	77016--T68	08031128	01/31/08
62	77017--T69	08031129	01/31/08
63	77018--T7	08031130	01/31/08
64	77019--T70	08031131	01/31/08
65	77020--T71	08031132	01/31/08
66	77021--T72	08031133	01/31/08
67	77022--T73	08031134	01/31/08
68	77023--T74	08031135	01/31/08
69	77024--T78	08031136	01/31/08
70	77025--T8	08031137	01/31/08
71	77026--T9	08031138	01/31/08
72	77027--T43	08031075	01/31/08
73	77028--T66	08031079	01/31/08
74	77029--T48	08031080	01/31/08
75	77030--T75	08031076	01/31/08
76	77031--T77	08031081	01/31/08

#	Ref Description	Drawing#	Date
77	77032--T99	08031082	01/31/08

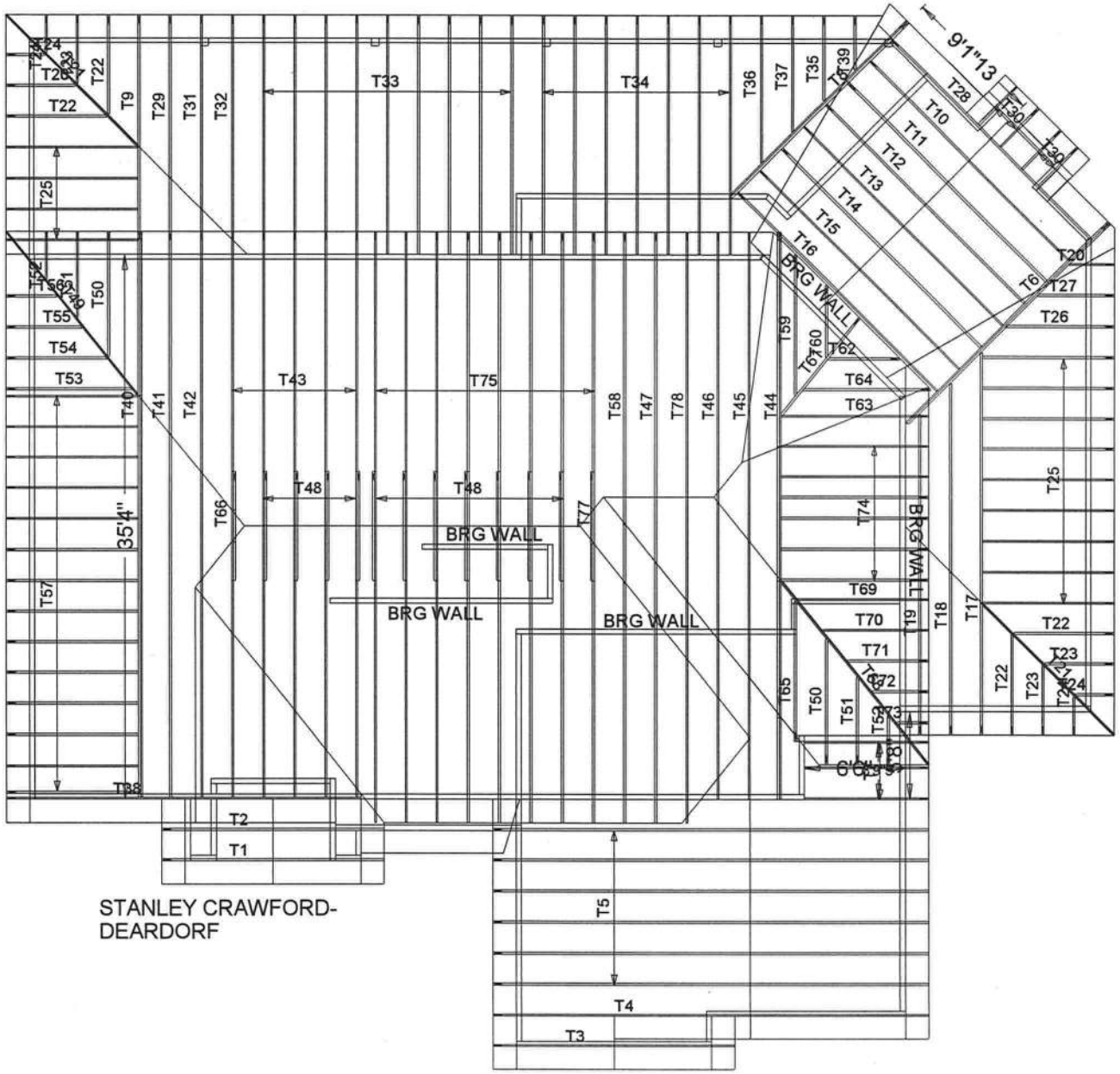

STANLEY CRAWFORD-
DEARDORF

(dear--OWNER BUILDER deardorf -- , ** - T1)

Top chord 2x4 SP #2 Dense
Bot chord 2x4 SP #2 Dense
Webs 2x4 SP #3

Roof overhang supports 2.00 psf soffit load.

THE BUILDING DESIGNER IS RESPONSIBLE FOR THE DESIGN OF THE ROOF AND CEILING DIAPHRAGMS, GABLE END SHEAR WALLS, AND SUPPORTING SHEAR WALLS. SHEAR WALLS MUST PROVIDE CONTINUOUS LATERAL RESTRAINT TO THE GABLE END. ALL CONNECTIONS TO BE DESIGNED BY THE BUILDING DESIGNER.

110 mph wind, 21.45 ft mean hgt, ASCE 7-02, CLOSED bldg, Located anywhere in roof, CAT II, EXP B, wind TC DL=5.0 psf, wind BC DL=5.0 psf. Iw=1.00 GCpi(+/-)=0.18

Wind reactions based on MWFRS pressures.

See DWGS A11030EE0207 & GBLLETIN0207 for more requirements.

Deflection meets L/240 live and L/180 total load. Creep increase factor for dead load is 1.50.

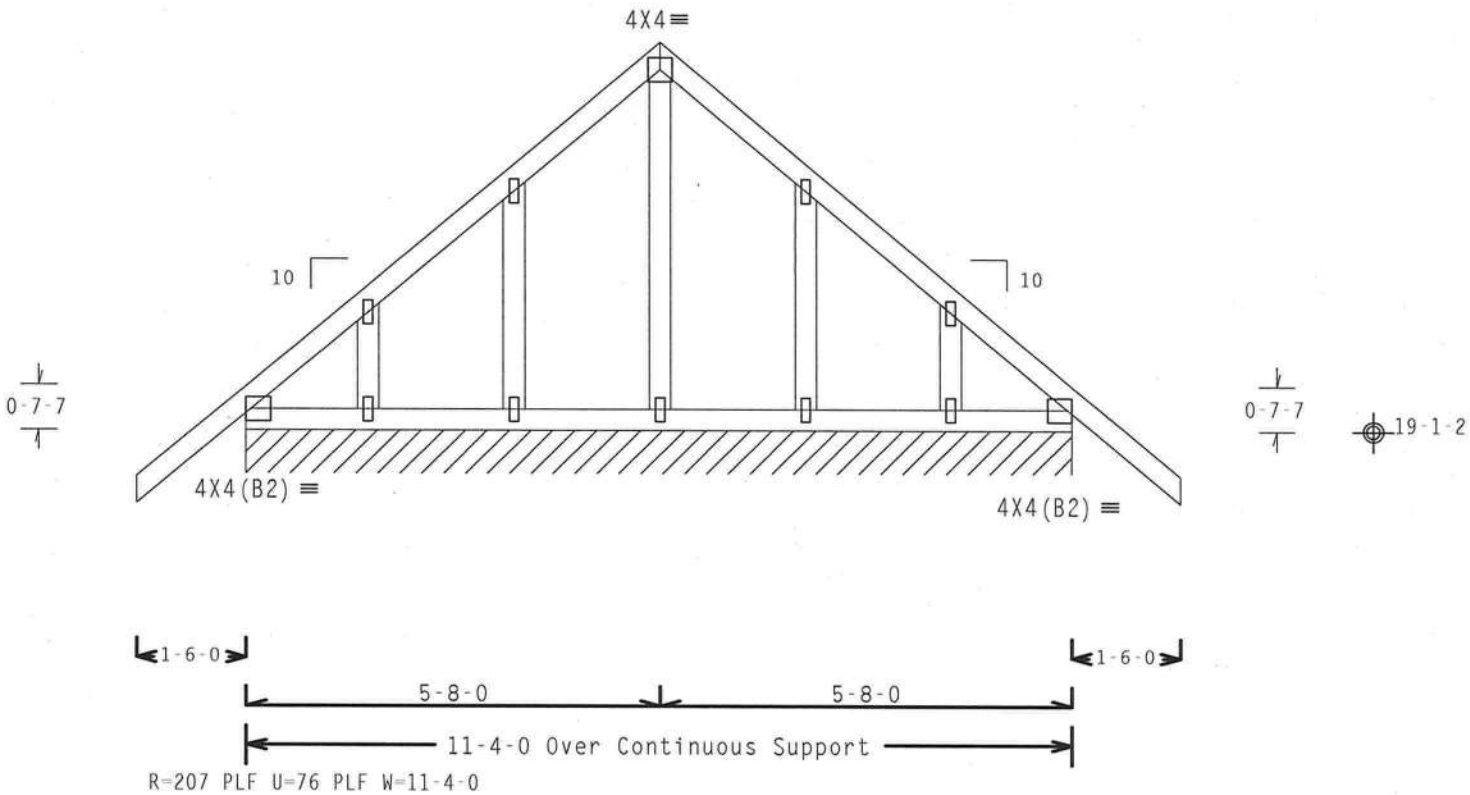

Note: All Plates Are 1.5X4 Except As Shown.

Design Crit: TPI-2002(STD)/FBC

PLT TYP. Wave Cq/RT=1.00(1.25)/0(0) 7.24.1230.16 QTY:1 FL/-/4/-/E/-/- Scale =.375"/Ft.

TW Building Components Group Inc.

Haines City, FL 33844
FL Certificate of Authorization # 0 278

WARNINGRUSSES REQUIRE EXTREME CARE IN FABRICATION, HANDLING, SHIPPING, INSTALLING AND BRACING. REFER TO BCSI (BUILDING COMPONENT SAFETY INFORMATION), PUBLISHED BY TPI (TRUSS PLATE INSTITUTE, 218 NORTH LEE STREET, SUITE 312, ALEXANDRIA, VA. 22314) AND WTCA (WOOD TRUSS COUNCIL OF AMERICA, 6300 ENTERPRISE LANE, MADISON, WI 53719) FOR SAFETY PRACTICES PRIOR TO PERFORMING THESE FUNCTIONS. UNLESS OTHERWISE INDICATED TOP CHORD SHALL HAVE PROPERLY ATTACHED STRUCTURAL PANELS AND BOTTOM CHORD SHALL HAVE A PROPERLY ATTACHED RIGID CEILING.

IMPORTANTFURNISH A COPY OF THIS DESIGN TO THE INSTALLATION CONTRACTOR. ITW BCG, INC. SHALL NOT BE RESPONSIBLE FOR ANY DEVIATION FROM THIS DESIGN; ANY FAILURE TO BUILD THE TRUSS IN COMFORMANCE WITH TPI; OR FABRICATING, HANDLING, SHIPPING, INSTALLING & BRACING OF TRUSSES. DESIGN CONFORMS WITH APPLICABLE PROVISIONS OF NDS (NATIONAL DESIGN SPEC. BY AF&PA) AND TPI. ITW BCG CONNECTOR PLATES ARE MADE OF 20/18/16GA (W,H/SS/K) ASTM A653 GRADE 40/60 (H, K/H,SS) GALV. STEEL. APPLY PLATES TO EACH FACE OF TRUSS AND, UNLESS OTHERWISE LOCATED ON THIS DESIGN, POSITION PER DRAWINGS 160A-Z. ANY INSPECTION OF PLATES FOLLOWED BY (1) SHALL BE PER ANNEX A3 OF TPI1-2002 SEC.3. A SEAL ON THIS DRAWING INDICATES ACCEPTANCE OF PROFESSIONAL ENGINEERING RESPONSIBILITY SOLELY FOR THE TRUSS COMPONENT DESIGN SHOWN. THE SUITABILITY AND USE OF THIS COMPONENT FOR ANY BUILDING IS THE RESPONSIBILITY OF THE BUILDING DESIGNER PER ANSI/TPI 1 SEC. 2.

JAMES F. COLLINS, JR. LICENSE No. 52212 STATE OF FLORIDA PROFESSIONAL ENGINEER
Jan 9, 2008

TC LL	20.0 PSF	REF	R8228- 76956
TC DL	10.0 PSF	DATE	01/31/08
BC DL	10.0 PSF	DRW	HCUSR8228 08031070
BC LL	0.0 PSF	HC-ENG	EC/WHK *
TOT.LD.	40.0 PSF	SEQN-	43773
DUR.FAC.	1.25	FROM	JP
SPACING	24.0"	JREF-	1TEL8228Z03

(dear--OWNER BUILDER deardorf -- , ** - T10)

Top chord 2x4 SP #2 Dense
Bot chord 2x4 SP #2 Dense
Webs 2x4 SP #3
:Lt Slider 2x8 SP SS: BLOCK LENGTH = 1.749'
:Rt Slider 2x8 SP SS: BLOCK LENGTH = 1.777'

Deflection meets L/240 live and L/180 total load. Creep increase factor for dead load is 1.50.

110 mph wind, 15.00 ft mean hgt, ASCE 7-02, CLOSED bldg, Located anywhere in roof, CAT II, EXP B, wind TC DL=5.0 psf, wind BC DL=5.0 psf. Iw=1.00 GCpi(+/-)=0.18

Wind reactions based on MWFRS pressures.

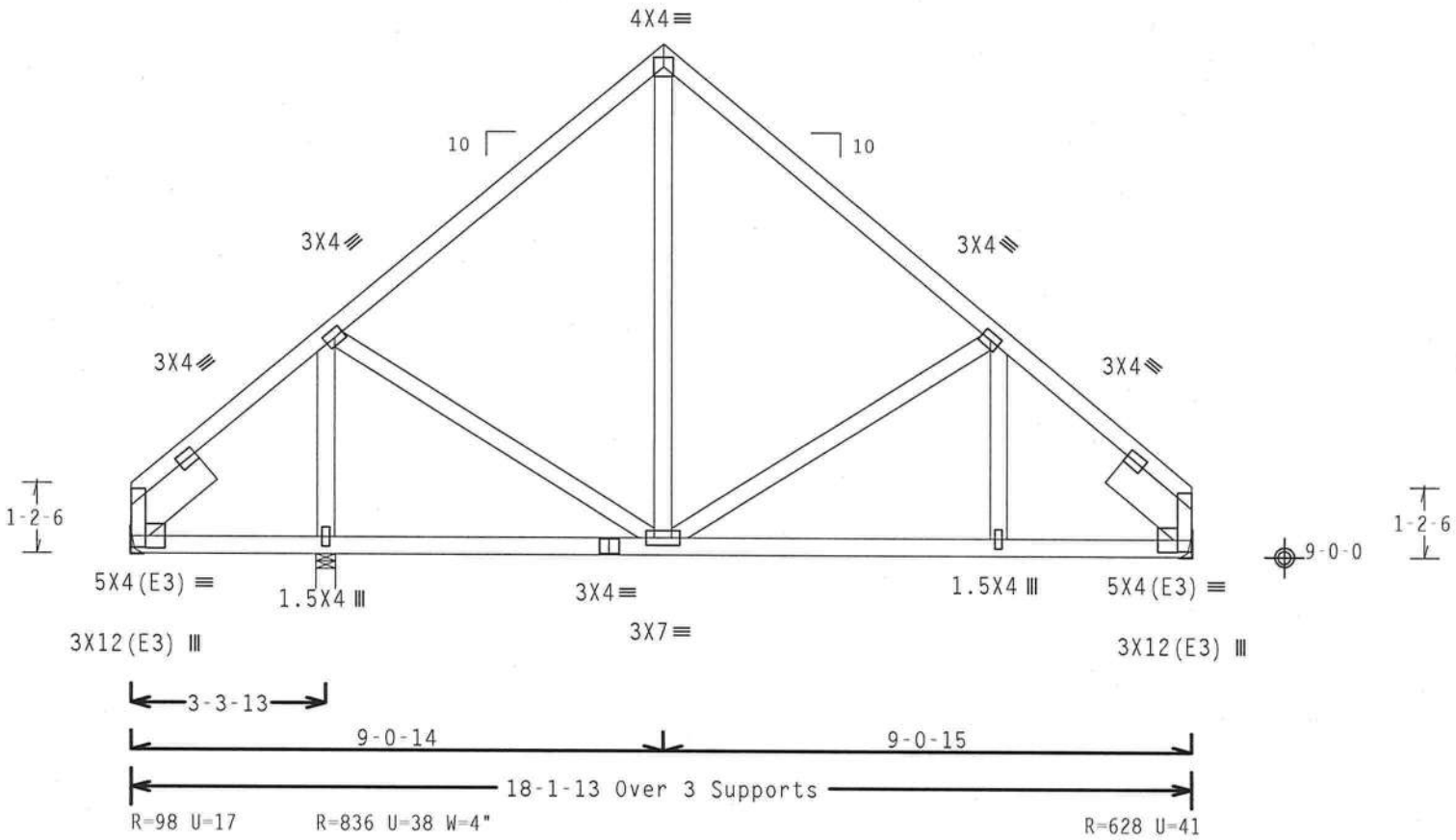

Design Crit: TPI-2002(STD)/FBC
Cq/RT=1.00(1.25)/0(0) 7.24.1230 1

PLT TYP. Wave QTY:1 FL/-/4/-/E/-/- Scale =.3125"/Ft.

Building Components Group Inc.

Haines City, FL 33844
FL Certificate of Authorization # 0 278

WARNING TRUSSES REQUIRE EXTREME CARE IN FABRICATION, HANDLING, SHIPPING, INSTALLING AND BRACING. REFER TO BCSI (BUILDING COMPONENT SAFETY INFORMATION), PUBLISHED BY TPI (TRUSS PLATE INSTITUTE, 218 NORTH LEE STREET, SUITE 312, ALEXANDRIA, VA, 22314) AND WTCA (WOOD TRUSS COUNCIL OF AMERICA, 6300 ENTERPRISE LANE, MADISON, WI 53719) FOR SAFETY PRACTICES PRIOR TO PERFORMING THESE FUNCTIONS. UNLESS OTHERWISE INDICATED TOP CHORD SHALL HAVE PROPERLY ATTACHED STRUCTURAL PANELS AND BOTTOM CHORD SHALL HAVE A PROPERLY ATTACHED RIGID CEILING.

IMPORTANT FURNISH A COPY OF THIS DESIGN TO THE INSTALLATION CONTRACTOR. ITW BCG, INC. SHALL NOT BE RESPONSIBLE FOR ANY DEVIATION FROM THIS DESIGN; ANY FAILURE TO BUILD THE TRUSS IN COMFORMANCE WITH TPI; OR FABRICATING, HANDLING, SHIPPING, INSTALLING & BRACING OF TRUSSES.
DESIGN CONFORMS WITH APPLICABLE PROVISIONS OF NDS (NATIONAL DESIGN SPEC. BY AF&PA) AND TPI. ITW BCG CONNECTOR PLATES ARE MADE OF 20/18/16GA (W.H/SS/K) ASTM A653 GRADE 40/60 (W. K/H.SS) GALV. STEEL. APPLY PLATES TO EACH FACE OF TRUSS AND, UNLESS OTHERWISE LOCATED ON THIS DESIGN, POSITION PER DRAWINGS 160A-Z. ANY INSPECTION OF PLATES FOLLOWED BY (1) SHALL BE PER ANNEX A3 OF TPI1-2002 SEC.3. A SEAL ON THIS DRAWING INDICATES ACCEPTANCE OF PROFESSIONAL ENGINEERING RESPONSIBILITY SOLELY FOR THE TRUSS COMPONENT DESIGN SHOWN. THE SUITABILITY AND USE OF THIS COMPONENT FOR ANY BUILDING IS THE RESPONSIBILITY OF THE BUILDING DESIGNER PER ANSI/TPI 1 SEC. 2.

JAMES F. COLLINS, JR. LICENSE No. 52212 STATE OF FLORIDA PROFESSIONAL ENGINEER
Jan 31 08

TC LL	20.0 PSF	REF R8228- 76957
TC DL	10.0 PSF	DATE 01/31/08
BC DL	10.0 PSF	DRW HCUSR8228 08031071
BC LL	0.0 PSF	HC-ENG EC/WHK
TOT.LD.	40.0 PSF	SEQN- 43977
DUR.FAC.	1.25	FROM JP
SPACING	24.0"	JREF- 1TEL8228Z03

(dear--OWNER BUILDER deardorf -- , ** - T11)

Top chord 2x4 SP #2 Dense
Bot chord 2x4 SP #2 Dense
Webs 2x4 SP #3
:Lt Slider 2x8 SP SS: BLOCK LENGTH = 1.749'
:Rt Slider 2x8 SP SS: BLOCK LENGTH = 1.778'

Deflection meets L/240 live and L/180 total load. Creep increase factor for dead load is 1.50.

110 mph wind, 15.00 ft mean hgt, ASCE 7-02, CLOSED bldg, Located anywhere in roof, CAT II, EXP B, wind TC DL=5.0 psf, wind BC DL=5.0 psf. Iw=1.00 GCpi(+/-)=0.18

Wind reactions based on MWFRS pressures.

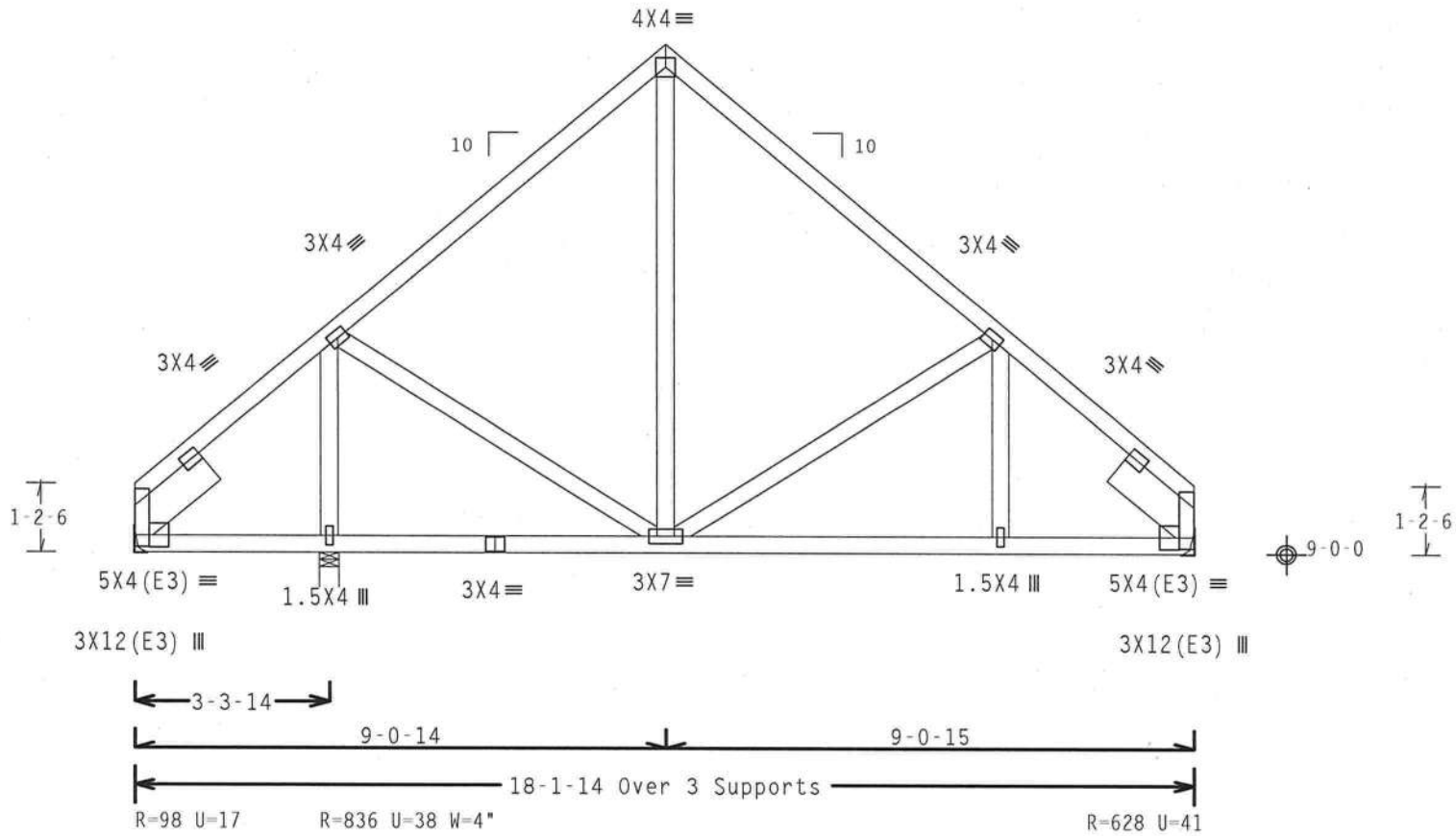

Design Crit: TPI-2002(STD)/FBC
Cq/RT=1.00(1.25)/0(0) 7.24.1230.16

PLT TYP. Wave QTY:1 FL/-/4/-/E/-/- Scale =.3125"/Ft.

WARNING TRUSSES REQUIRE EXTREME CARE IN FABRICATION, HANDLING, SHIPPING, INSTALLING AND BRACING. REFER TO BCSI (BUILDING COMPONENT SAFETY INFORMATION), PUBLISHED BY TPI (TRUSS PLATE INSTITUTE, 218 NORTH LEE STREET, SUITE 312, ALEXANDRIA, VA, 22314) AND WTCA (WOOD TRUSS COUNCIL OF AMERICA, 6300 ENTERPRISE LANE, MADISON, WI 53719) FOR SAFETY PRACTICES PRIOR TO PERFORMING THESE FUNCTIONS. UNLESS OTHERWISE INDICATED TOP CHORD SHALL HAVE PROPERLY ATTACHED STRUCTURAL PANELS AND BOTTOM CHORD SHALL HAVE A PROPERLY ATTACHED RIGID CEILING.

IMPORTANT FURNISH A COPY OF THIS DESIGN TO THE INSTALLATION CONTRACTOR. ITW BCG, INC. SHALL NOT BE RESPONSIBLE FOR ANY DEVIATION FROM THIS DESIGN; ANY FAILURE TO BUILD THE TRUSS IN COMFORMANCE WITH TPI; OR FABRICATING, HANDLING, SHIPPING, INSTALLING & BRACING OF TRUSSES.
DESIGN CONFORMS WITH APPLICABLE PROVISIONS OF NDS (NATIONAL DESIGN SPEC, BY AF&PA) AND TPI. ITW BCG CONNECTOR PLATES ARE MADE OF 20/18/16GA (W,H/SS/K) ASTM A653 GRADE 40/60 (W, K/H,SS) GALV. STEEL. APPLY PLATES TO EACH FACE OF TRUSS AND, UNLESS OTHERWISE LOCATED ON THIS DESIGN, POSITION PER DRAWINGS 160A-Z. ANY INSPECTION OF PLATES FOLLOWED BY (1) SHALL BE PER ANNEX A3 OF TPI1-2002 SEC.3. A SEAL ON THIS DRAWING INDICATES ACCEPTANCE OF PROFESSIONAL ENGINEERING RESPONSIBILITY SOLELY FOR THE TRUSS COMPONENT DESIGN SHOWN. THE SUITABILITY AND USE OF THIS COMPONENT FOR ANY BUILDING IS THE RESPONSIBILITY OF THE BUILDING DESIGNER PER ANSI/TPI 1 SEC. 2.

JAMES F. COLLINS, JR. LICENSE No. 52272 STATE OF FLORIDA PROFESSIONAL ENGINEER

Jan

TC LL	20.0 PSF	REF	R8228- 76958
TC DL	10.0 PSF	DATE	01/31/08
BC DL	10.0 PSF	DRW	HCUSR8228 08031072
BC LL	0.0 PSF	HC-ENG	EC/WHK
TOT.LD.	40.0 PSF	SEQN-	43983
DUR.FAC.	1.25	FROM	JP
SPACING	24.0"	JREF-	1TEL8228Z03

TW Building Components Group Inc.
Haines City, FL 33844
FL Certificate of Authorization # 0 278

(dear--OWNER BUILDER deardorf -- , ** - T12)

Top chord 2x4 SP #2 Dense
Bot chord 2x4 SP #2 Dense
Webs 2x4 SP #3
:Lt Slider 2x8 SP SS: BLOCK LENGTH = 1.750'
:Rt Slider 2x8 SP SS: BLOCK LENGTH = 1.778'

Deflection meets L/240 live and L/180 total load. Creep increase factor for dead load is 1.50.

110 mph wind, 15.00 ft mean hgt, ASCE 7-02, CLOSED bldg, not located within 4.50 ft from roof edge, CAT II, EXP B, wind TC DL=5.0 psf, wind BC DL=5.0 psf. Iw=1.00 GCpi(+/-)=0.18

Wind reactions based on MWFRS pressures.

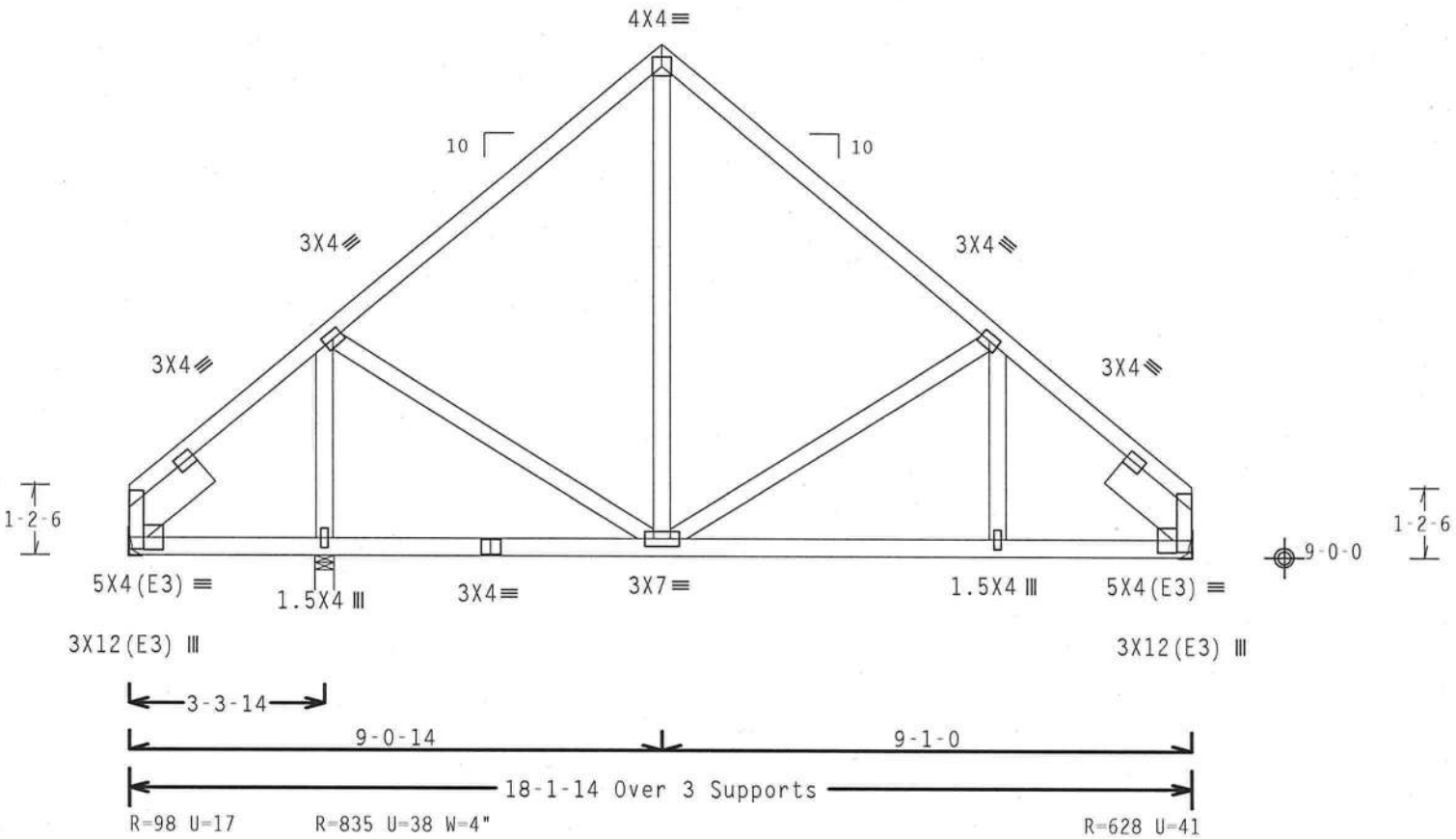

Design Crit: TPI-2002(STD)/FBC
Cq/RT=1.00(1.25)/0(0) 7.24.1230

PLT TYP. Wave QTY:1 FL/-/4/-/E/-/- Scale =.3125"/Ft.

Building Components Group Inc.

Haines City, FL 33844
FL Certificate of Authorization # 0 278

WARNING TRUSSES REQUIRE EXTREME CARE IN FABRICATION, HANDLING, SHIPPING, INSTALLING AND BRACING. REFER TO BCSI (BUILDING COMPONENT SAFETY INFORMATION), PUBLISHED BY TPI (TRUSS PLATE INSTITUTE, 218 NORTH LEE STREET, SUITE 312, ALEXANDRIA, VA, 22314) AND WTCA (WOOD TRUSS COUNCIL OF AMERICA, 6300 ENTERPRISE LANE, MADISON, WI 53719) FOR SAFETY PRACTICES PRIOR TO PERFORMING THESE FUNCTIONS. UNLESS OTHERWISE INDICATED TOP CHORD SHALL HAVE PROPERLY ATTACHED STRUCTURAL PANELS AND BOTTOM CHORD SHALL HAVE A PROPERLY ATTACHED RIGID CEILING.

IMPORTANT FURNISH A COPY OF THIS DESIGN TO THE INSTALLATION CONTRACTOR. ITW BCG, INC. SHALL NOT BE RESPONSIBLE FOR ANY DEVIATION FROM THIS DESIGN; ANY FAILURE TO BUILD THE TRUSS IN COMFORMANCE WITH TPI; OR FABRICATING, HANDLING, SHIPPING, INSTALLING & BRACING OF TRUSSES.
DESIGN CONFORMS WITH APPLICABLE PROVISIONS OF NDS (NATIONAL DESIGN SPEC. BY AF&PA) AND TPI. ITW BCG CONNECTOR PLATES ARE MADE OF 20/18/16GA (W,H/SS/K) ASTM A653 GRADE 40/60 (W, K/H,SS) GALV. STEEL. APPLY PLATES TO EACH FACE OF TRUSS AND, UNLESS OTHERWISE LOCATED ON THIS DESIGN, POSITION PER DRAWINGS 160A-Z. ANY INSPECTION OF PLATES FOLLOWED BY (1) SHALL BE PER ANNEX A3 OF TPI1-2002 SEC.3. A SEAL ON THIS DRAWING INDICATES ACCEPTANCE OF PROFESSIONAL ENGINEERING RESPONSIBILITY SOLELY FOR THE TRUSS COMPONENT DESIGN SHOWN. THE SUITABILITY AND USE OF THIS COMPONENT FOR ANY BUILDING IS THE RESPONSIBILITY OF THE BUILDING DESIGNER PER ANSI/TPI 1 SEC. 2.

JAMES F. COLLINS, JR. LICENSE No. 52212 STATE OF FLORIDA PROFESSIONAL ENGINEER
Jan 31, 2008

TC LL	20.0 PSF	REF R8228- 76959
TC DL	10.0 PSF	DATE 01/31/08
BC DL	10.0 PSF	DRW HCUSR8228 08031073
BC LL	0.0 PSF	HC-ENG EC/WHK
TOT.LD.	40.0 PSF	SEQN- 43989
DUR.FAC.	1.25	FROM JP
SPACING	24.0"	JREF- 1TEL8228Z03

(dear--OWNER BUILDER deardorf -- , ** - T13)

THIS DWG PREPARED FROM COMPUTER INPUT (LOADS & DIMENSIONS) SUBMITTED BY TRUSS MFR.

Top chord 2x4 SP #2 Dense
Bot chord 2x4 SP #2 Dense
Webs 2x4 SP #3

Deflection meets L/240 live and L/180 total load. Creep increase factor for dead load is 1.50.

110 mph wind, 15.00 ft mean hgt, ASCE 7-02, CLOSED bldg, not located within 4.50 ft from roof edge, CAT II, EXP B, wind TC DL=5.0 psf, wind BC DL=5.0 psf. Iw=1.00 GCpi(+/-)=0.18

Wind reactions based on MWFRS pressures.

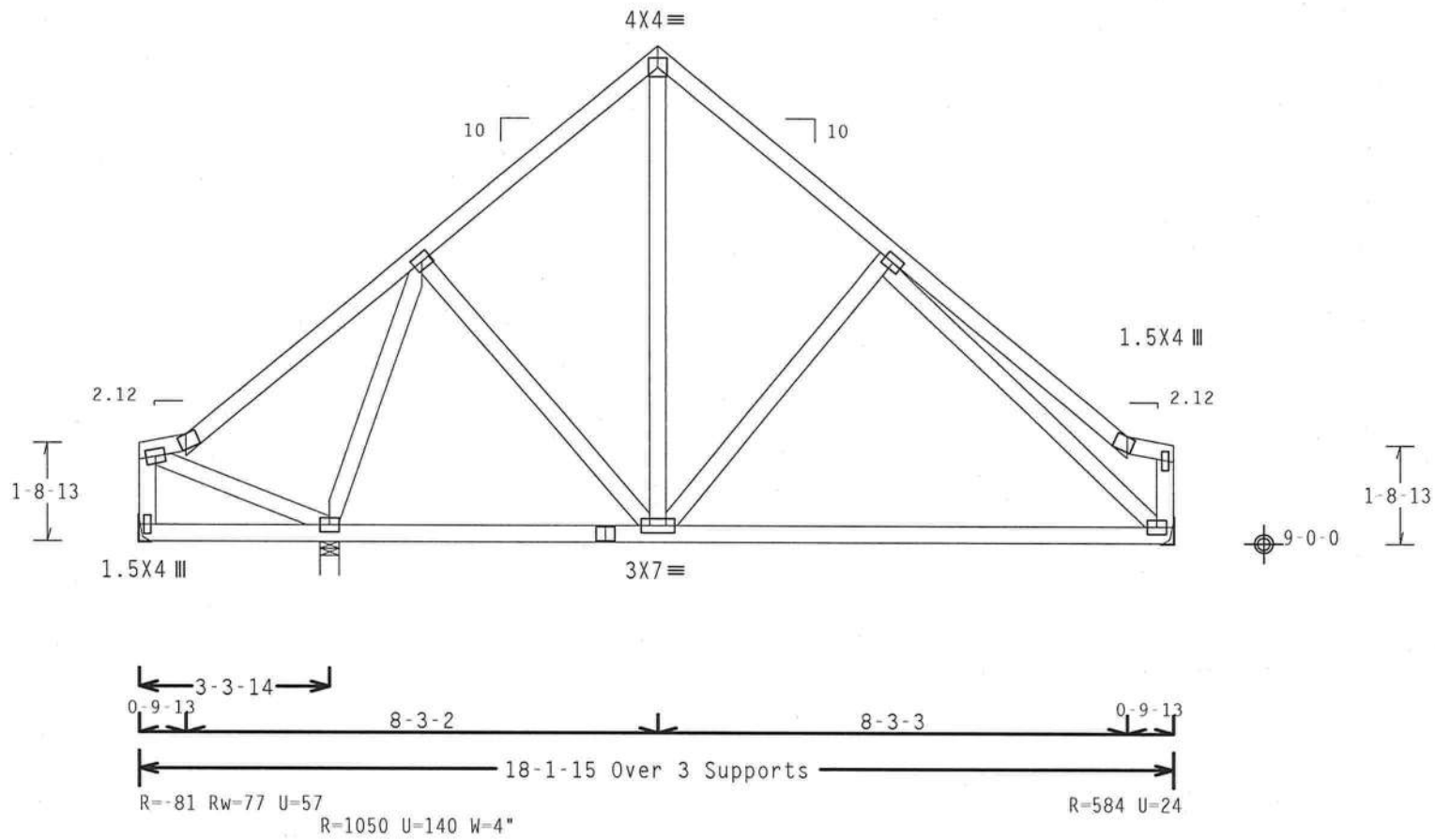

Note: All Plates Are 3X4 Except As Shown.

Design Crit: TPI-2002(STD)/FBC

PLT TYP. Wave Cq/RT=1.00(1.25)/0(0) 7.24.1230.16 QTY:1 FL/-/4/-/E/-/- Scale =.3125"/Ft.

Building Components Group Inc.

Haines City, FL 33844
FL Certificate of Authorization # 0 278

WARNING TRUSSES REQUIRE EXTREME CARE IN FABRICATION, HANDLING, SHIPPING, INSTALLING AND BRACING. REFER TO BCSI (BUILDING COMPONENT SAFETY INFORMATION), PUBLISHED BY TPI (TRUSS PLATE INSTITUTE, 218 NORTH LEE STREET, SUITE 312, ALEXANDRIA, VA, 22314) AND WTCA (WOOD TRUSS COUNCIL OF AMERICA, 6300 ENTERPRISE LANE, MADISON, WI 53719) FOR SAFETY PRACTICES PRIOR TO PERFORMING THESE FUNCTIONS. UNLESS OTHERWISE INDICATED TOP CHORD SHALL HAVE PROPERLY ATTACHED STRUCTURAL PANELS AND BOTTOM CHORD SHALL HAVE A PROPERLY ATTACHED RIGID CEILING.

IMPORTANT FURNISH A COPY OF THIS DESIGN TO THE INSTALLATION CONTRACTOR. ITW BCG, INC. SHALL NOT BE RESPONSIBLE FOR ANY DEVIATION FROM THIS DESIGN; ANY FAILURE TO BUILD THE TRUSS IN COMFORMANCE WITH TPI; OR FABRICATING, HANDLING, SHIPPING, INSTALLING & BRACING OF TRUSSES.
DESIGN CONFORMS WITH APPLICABLE PROVISIONS OF NDS (NATIONAL DESIGN SPEC, BY AF&PA) AND TPI. ITW BCG CONNECTOR PLATES ARE MADE OF 20/18/16GA (W,H/SS/K) ASTM A653 GRADE 40/60 (W, K/H,SS) GALV. STEEL. APPLY PLATES TO EACH FACE OF TRUSS AND, UNLESS OTHERWISE LOCATED ON THIS DESIGN, POSITION PER DRAWINGS 160A-Z. ANY INSPECTION OF PLATES FOLLOWED BY (1) SHALL BE PER ANNEX A3 OF TPI1-2002 SEC.3. A SEAL ON THIS DRAWING INDICATES ACCEPTANCE OF PROFESSIONAL ENGINEERING RESPONSIBILITY SOLELY FOR THE TRUSS COMPONENT DESIGN SHOWN. THE SUITABILITY AND USE OF THIS COMPONENT FOR ANY BUILDING IS THE RESPONSIBILITY OF THE BUILDING DESIGNER PER ANSI/TPI 1 SEC. 2.

JAMES E. COLLINS JR. LICENSE No 52212 STATE OF FLORIDA PROFESSIONAL ENGINEER

Jan 3, 2008

TC LL	20.0 PSF	REF	R8228- 76960
TC DL	10.0 PSF	DATE	01/31/08
BC DL	10.0 PSF	DRW	HCUSR8228 08031074
BC LL	0.0 PSF	HC-ENG	EC/WHK
TOT.LD.	40.0 PSF	SEQN-	43792
DUR.FAC.	1.25	FROM	JP
SPACING	24.0"	JREF-	1TEL8228Z03

(dear--OWNER BUILDER deardorf -- , ** - T14)

THIS DWG PREPARED FROM COMPUTER INPUT (LOADS & DIMENSIONS) SUBMITTED BY TRUSS MFR.

Top chord 2x4 SP #2 Dense
Bot chord 2x4 SP #2 Dense
Webs 2x4 SP #3

End verticals not exposed to wind pressure.

Deflection meets L/240 live and L/180 total load. Creep increase factor for dead load is 1.50.

110 mph wind, 15.00 ft mean hgt, ASCE 7-02, CLOSED bldg, not located within 4.50 ft from roof edge, CAT II, EXP B, wind TC DL=5.0 psf, wind BC DL=5.0 psf. Iw=1.00 GCpi(+/-)=0.18

Wind reactions based on MWFRS pressures.

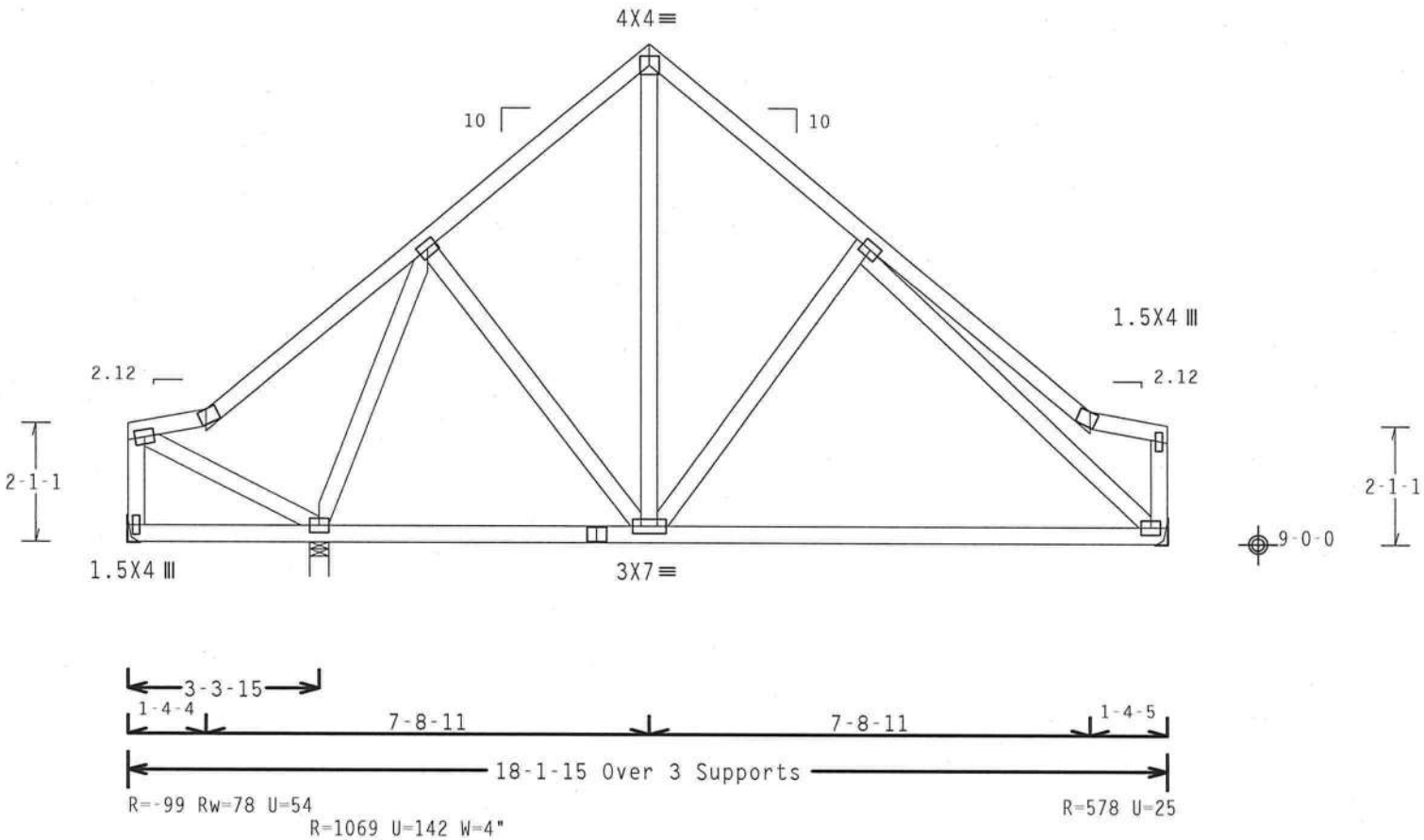

Note: All Plates Are 3X4 Except As Shown.

Design Crit: TPI-2002(STD)/FBC

PLT TYP. Wave

Cq/RT=1.00(1.25)/0(0) 7.24.1230 JP QTY:1 FL/-/4/-/E/-/- Scale =.3125"/Ft.

Building Components Group Inc.

Haines City, FL 33844
FL Certificate of Authorization # 0 278

WARNING TRUSSES REQUIRE EXTREME CARE IN FABRICATION, HANDLING, SHIPPING, INSTALLING AND BRACING. REFER TO BCSI (BUILDING COMPONENT SAFETY INFORMATION), PUBLISHED BY TPI (TRUSS PLATE INSTITUTE, 218 NORTH LEE STREET, SUITE 312, ALEXANDRIA, VA, 22314) AND WTCA (WOOD TRUSS COUNCIL OF AMERICA, 6300 ENTERPRISE LANE, MADISON, WI 53719) FOR SAFETY PRACTICES PRIOR TO PERFORMING THESE FUNCTIONS. UNLESS OTHERWISE INDICATED TOP CHORD SHALL HAVE PROPERLY ATTACHED STRUCTURAL PANELS AND BOTTOM CHORD SHALL HAVE A PROPERLY ATTACHED RIGID CEILING.

IMPORTANT FURNISH A COPY OF THIS DESIGN TO THE INSTALLATION CONTRACTOR. ITW BCG, INC. SHALL NOT BE RESPONSIBLE FOR ANY DEVIATION FROM THIS DESIGN; ANY FAILURE TO BUILD THE TRUSS IN COMFORMANCE WITH TPI; OR FABRICATING, HANDLING, SHIPPING, INSTALLING & BRACING OF TRUSSES.
DESIGN CONFORMS WITH APPLICABLE PROVISIONS OF NDS (NATIONAL DESIGN SPEC. BY AF&PA) AND TPI. ITW BCG CONNECTOR PLATES ARE MADE OF 20/18/16GA (W,H/SS/K) ASTM A653 GRADE 40/60 (W, K/H,SS) GALV. STEEL. APPLY PLATES TO EACH FACE OF TRUSS AND, UNLESS OTHERWISE LOCATED ON THIS DESIGN, POSITION PER DRAWINGS 160A-Z. ANY INSPECTION OF PLATES FOLLOWED BY (1) SHALL BE PER ANNEX A3 OF TPI1-2002 SEC.3. A SEAL ON THIS DRAWING INDICATES ACCEPTANCE OF PROFESSIONAL ENGINEERING RESPONSIBILITY SOLELY FOR THE TRUSS COMPONENT DESIGN SHOWN. THE SUITABILITY AND USE OF THIS COMPONENT FOR ANY BUILDING IS THE RESPONSIBILITY OF THE BUILDING DESIGNER PER ANSI/TPI 1 SEC. 2.

JAMES F. COLLINS, JR. LICENSE No. 52212 STATE OF FLORIDA PROFESSIONAL ENGINEER
Jan 31, 08

TC LL	20.0 PSF	REF R8228- 76961
TC DL	10.0 PSF	DATE 01/31/08
BC DL	10.0 PSF	DRW HCUSR8228 08031075
BC LL	0.0 PSF	HC-ENG EC/WHK
TOT.LD.	40.0 PSF	SEQN- 43794
DUR.FAC.	1.25	FROM JP
SPACING	24.0"	JREF- 1TEL8228Z03

(dear--OWNER BUILDER deardorf -- , ** - T15)

THIS DWG PREPARED FROM COMPUTER INPUT (LOADS & DIMENSIONS) SUBMITTED BY TRUSS MFR.

Top chord 2x4 SP #2 Dense
Bot chord 2x4 SP #2 Dense
Webs 2x4 SP #3 :W1, W6 2x4 SP #2 Dense:

(**) 1 plate(s) require special positioning. Refer to scaled plate plot details for special positioning requirements.

Wind reactions based on MWFRS pressures.

End verticals not exposed to wind pressure.

(A) #3 or better scab brace. Same size & 80% length of web member. Attach with 10d Box or Gun (0.128"x3",min.)nails @ 6" OC.

Deflection meets L/240 live and L/180 total load. Creep increase factor for dead load is 1.50.

SPECIAL LOADS
------(LUMBER DUR.FAC.=1.25 / PLATE DUR.FAC.=1.25)

TC - From	60 PLF	at	0.00	to	60 PLF	at	1.89
TC - From	66 PLF	at	1.89	to	66 PLF	at	9.08
TC - From	66 PLF	at	9.08	to	66 PLF	at	16.27
TC - From	60 PLF	at	16.27	to	60 PLF	at	18.16
BC - From	20 PLF	at	0.00	to	20 PLF	at	18.16

++Negative reaction(s) of -812# MAX. (See below) from a non-wind load case requires uplift connection.

110 mph wind, 15.00 ft mean hgt, ASCE 7-02, CLOSED bldg, not located within 4.50 ft from roof edge, CAT II, EXP B, wind TC DL=5.0 psf, wind BC DL=5.0 psf. Iw=1.00 GCpi(+/-)=0.18

Calculated horizontal deflection is 0.10" due to live load and 0.17" due to dead load.

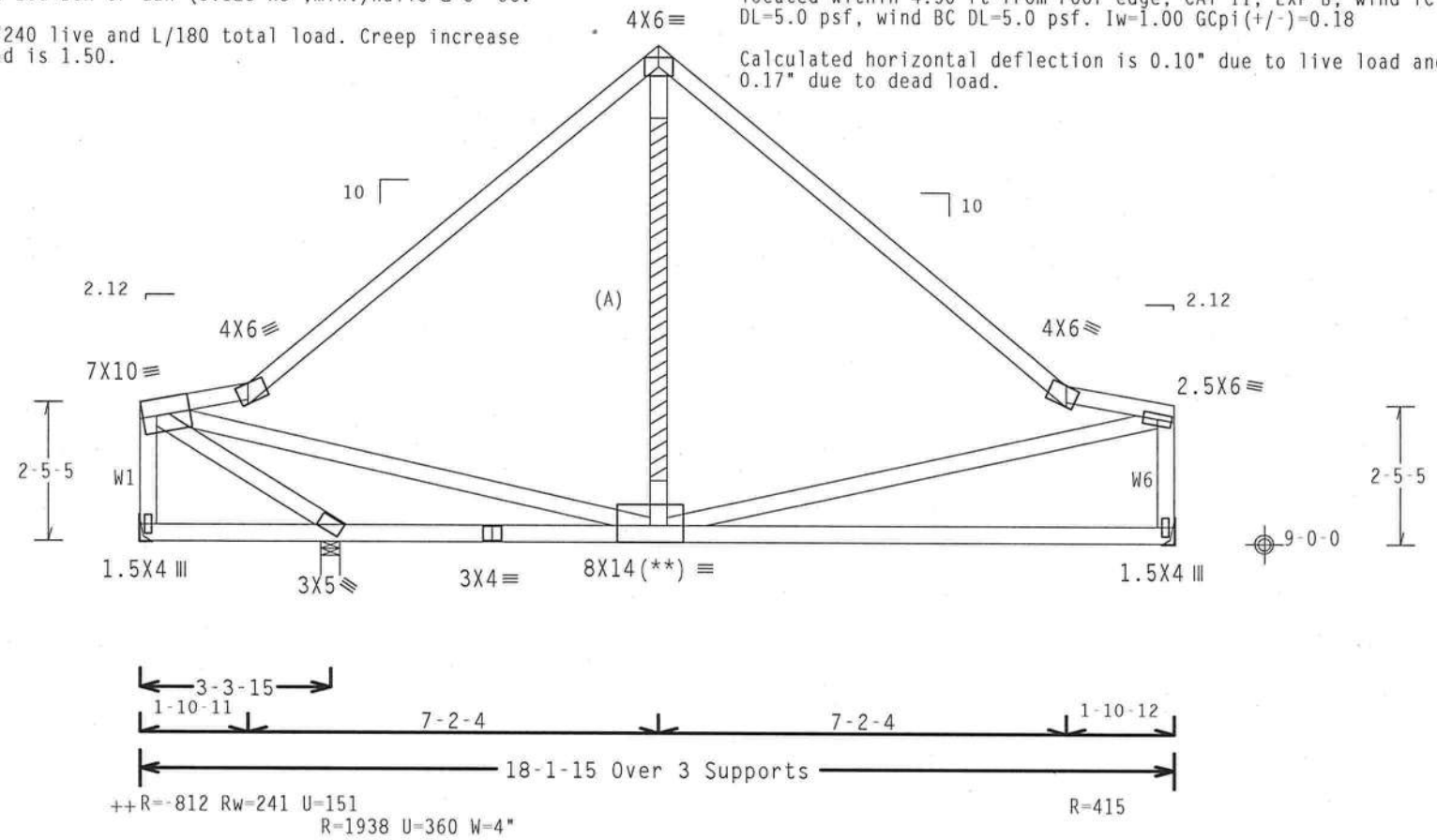

Design Crit: TPI-2002(STD)/FBC
Cq/RT=1.00(1.25)/0(0) 7.37.0521 S QTY:1 FL/-/4/-/E/-/- Scale =.3125"/Ft.

PLT TYP. Wave

TW Building Components Group Inc.
Haines City, FL 33844
FL Certificate of Authorization # 0 278

WARNING TRUSSES REQUIRE EXTREME CARE IN FABRICATION, HANDLING, SHIPPING, INSTALLING AND BRACING. REFER TO BCSI (BUILDING COMPONENT SAFETY INFORMATION), PUBLISHED BY TPI (TRUSS PLATE INSTITUTE, 218 NORTH LEE STREET, SUITE 312, ALEXANDRIA, VA, 22314) AND WTCA (WOOD TRUSS COUNCIL OF AMERICA, 6300 ENTERPRISE LANE, MADISON, WI 53719) FOR SAFETY PRACTICES PRIOR TO PERFORMING THESE FUNCTIONS. UNLESS OTHERWISE INDICATED TOP CHORD SHALL HAVE PROPERLY ATTACHED STRUCTURAL PANELS AND BOTTOM CHORD SHALL HAVE A PROPERLY ATTACHED RIGID CEILING.

IMPORTANT FURNISH A COPY OF THIS DESIGN TO THE INSTALLATION CONTRACTOR. ITW BCG, INC. SHALL NOT BE RESPONSIBLE FOR ANY DEVIATION FROM THIS DESIGN; ANY FAILURE TO BUILD THE TRUSS IN CONFORMANCE WITH TPI; OR FABRICATING, HANDLING, SHIPPING, INSTALLING & BRACING OF TRUSSES.
DESIGN CONFORMS WITH APPLICABLE PROVISIONS OF NDS (NATIONAL DESIGN SPEC, BY AF&PA) AND TPI. ITW BCG CONNECTOR PLATES ARE MADE OF 20/18/16GA (W,H/SS/K) ASTM A653 GRADE 40/60 (W, K/H,SS) GALV. STEEL. APPLY PLATES TO EACH FACE OF TRUSS AND, UNLESS OTHERWISE LOCATED ON THIS DESIGN, POSITION PER DRAWINGS 160A-2. ANY INSPECTION OF PLATES FOLLOWED BY (1) SHALL BE PER ANNEX A3 OF TPI1-2002 SEC.3. A SEAL ON THIS DRAWING INDICATES ACCEPTANCE OF PROFESSIONAL ENGINEERING RESPONSIBILITY SOLELY FOR THE TRUSS COMPONENT DESIGN SHOWN. THE SUITABILITY AND USE OF THIS COMPONENT FOR ANY BUILDING IS THE RESPONSIBILITY OF THE BUILDING DESIGNER PER ANSI/TPI 1 SEC. 2.

JAMES F. COLLINS JR. LICENSED No. 52212 STATE OF FLORIDA PROFESSIONAL ENGINEER
Jan 31 08

TC LL	20.0 PSF	REF	R8228- 76962
TC DL	10.0 PSF	DATE	01/31/08
BC DL	10.0 PSF	DRW	HCUSR8228 08031076
BC LL	0.0 PSF	HC-ENG	EC/WHK
TOT.LD.	40.0 PSF	SEQN-	1918 REV
DUR.FAC.	1.25	FROM	JP
SPACING	24.0"	JREF-	1TEL8228Z03

(dear--OWNER BUILDER deardorf -- , ** - T16)

THIS DWG PREPARED FROM COMPUTER INPUT (LOADS & DIMENSIONS) SUBMITTED BY TRUSS MFR.

Top chord 2x4 SP #2 Dense
Bot chord 2x4 SP #2 Dense
Webs 2x4 SP #3

End verticals not exposed to wind pressure.

Deflection meets L/240 live and L/180 total load. Creep increase factor for dead load is 1.50.

110 mph wind, 15.00 ft mean hgt, ASCE 7-02, CLOSED bldg, not located within 4.50 ft from roof edge, CAT II, EXP B, wind TC DL=5.0 psf, wind BC DL=5.0 psf. Iw=1.00 GCpi(+/-)=0.18

Wind reactions based on MWFRS pressures.

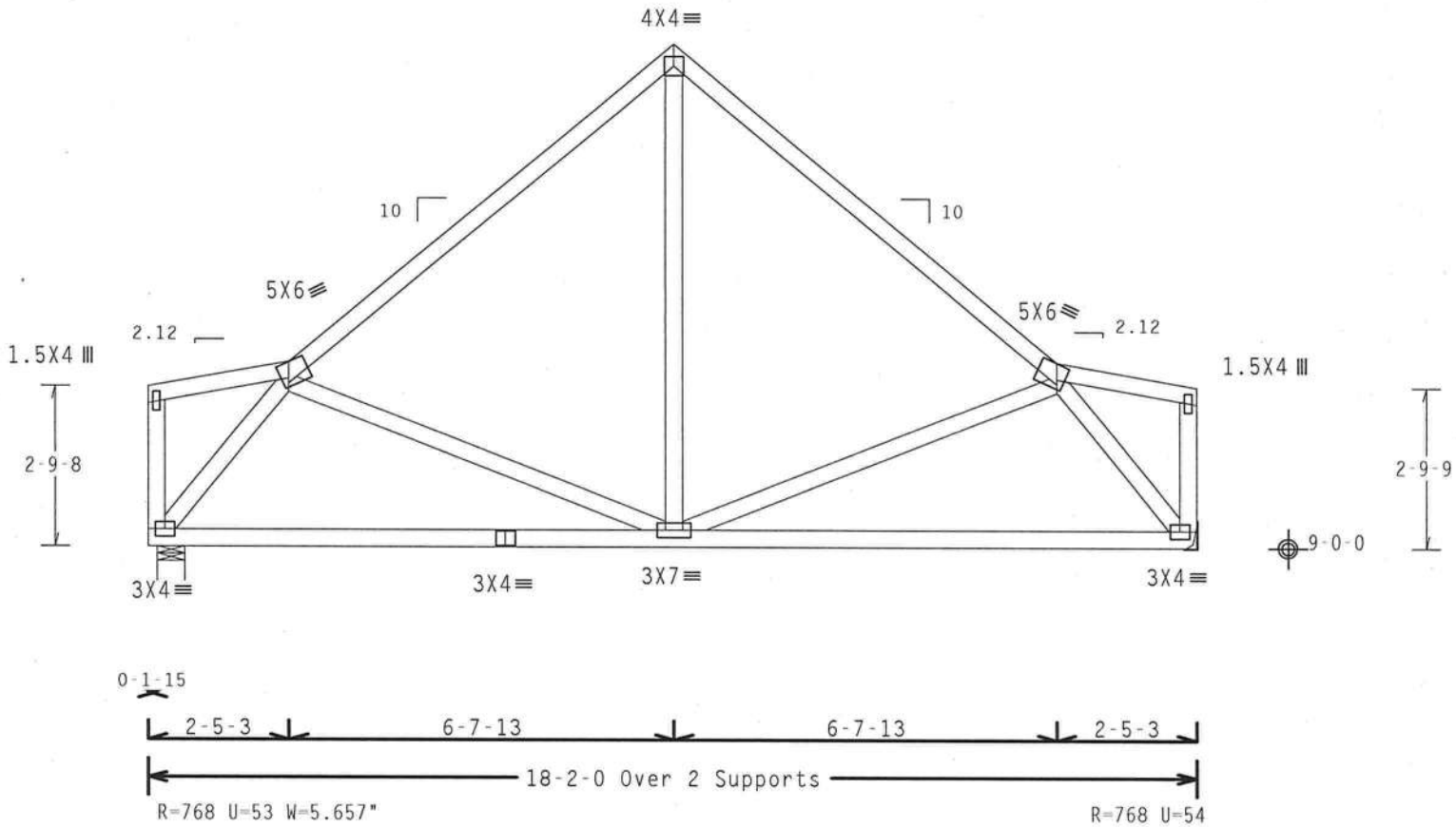

Design Crit: TPI-2002(STD)/FBC
Cq/RT=1.00(1.25)/0(0)

PLT TYP. Wave | 7.24.1230 | QTY:1 | FL/-/4/-/E/-/- | Scale =.3125"/Ft.

Building Components Group Inc.

Haines City, FL 33844
FL Certificate of Authorization # 0 278

WARNING TRUSSES REQUIRE EXTREME CARE IN FABRICATION, HANDLING, SHIPPING, INSTALLING AND BRACING. REFER TO BCSI (BUILDING COMPONENT SAFETY INFORMATION), PUBLISHED BY TPI (TRUSS PLATE INSTITUTE, 218 NORTH LEE STREET, SUITE 312, ALEXANDRIA, VA, 22314) AND WTCA (WOOD TRUSS COUNCIL OF AMERICA, 6300 ENTERPRISE LANE, MADISON, WI 53719) FOR SAFETY PRACTICES PRIOR TO PERFORMING THESE FUNCTIONS. UNLESS OTHERWISE INDICATED TOP CHORD SHALL HAVE PROPERLY ATTACHED STRUCTURAL PANELS AND BOTTOM CHORD SHALL HAVE A PROPERLY ATTACHED RIGID CEILING.

IMPORTANT FURNISH A COPY OF THIS DESIGN TO THE INSTALLATION CONTRACTOR. ITW BCG, INC. SHALL NOT BE RESPONSIBLE FOR ANY DEVIATION FROM THIS DESIGN; ANY FAILURE TO BUILD THE TRUSS IN COMFORMANCE WITH TPI; OR FABRICATING, HANDLING, SHIPPING, INSTALLING & BRACING OF TRUSSES.
DESIGN CONFORMS WITH APPLICABLE PROVISIONS OF NDS (NATIONAL DESIGN SPEC. BY AF&PA) AND TPI. ITW BCG CONNECTOR PLATES ARE MADE OF 20/18/16GA (W.H/SS/K) ASTM A653 GRADE 40/60 (W. K/H.SS) GALV. STEEL. APPLY PLATES TO EACH FACE OF TRUSS AND, UNLESS OTHERWISE LOCATED ON THIS DESIGN. POSITION PER DRAWINGS 160A-2. ANY INSPECTION OF PLATES FOLLOWED BY (1) SHALL BE PER ANNEX A3 OF TPI1-2002 SEC.3. A SEAL ON THIS DRAWING INDICATES ACCEPTANCE OF PROFESSIONAL ENGINEERING RESPONSIBILITY SOLELY FOR THE TRUSS COMPONENT DESIGN SHOWN. THE SUITABILITY AND USE OF THIS COMPONENT FOR ANY BUILDING IS THE RESPONSIBILITY OF THE BUILDING DESIGNER PER ANSI/TPI 1 SEC. 2.

JAMES F. COLLINS JR. LICENSED No. 52212 STATE OF FLORIDA PROFESSIONAL ENGINEER
Jan 31 '08

TC LL	20.0 PSF	REF	R8228- 76963
TC DL	10.0 PSF	DATE	01/31/08
BC DL	10.0 PSF	DRW	HCUSR8228 08031077
BC LL	0.0 PSF	HC-ENG	EC/WHK
TOT.LD.	40.0 PSF	SEQN-	43798
DUR.FAC.	1.25	FROM	JP
SPACING	24.0"	JREF-	1TEL8228Z03

Top chord 2x6 SP #2 :T1 2x4 SP #2 Dense:
Bot chord 2x6 SP #1 Dense
Webs 2x4 SP #3 :W6 2x4 SP #2 Dense:

Roof overhang supports 2.00 psf soffit load.

In lieu of structural panels use purlins to brace all flat TC @ 24" OC.

Deflection meets L/240 live and L/180 total load. Creep increase factor for dead load is 1.50.

110 mph wind, 15.00 ft mean hgt, ASCE 7-02, CLOSED bldg, Located anywhere in roof, CAT II, EXP B, wind TC DL=5.0 psf, wind BC DL=5.0 psf. Iw=1.00 GCpi(+/-)=0.18

Wind reactions based on MWFRS pressures.

Right end vertical not exposed to wind pressure.

#1 hip supports 7-0-0 jacks with no webs.

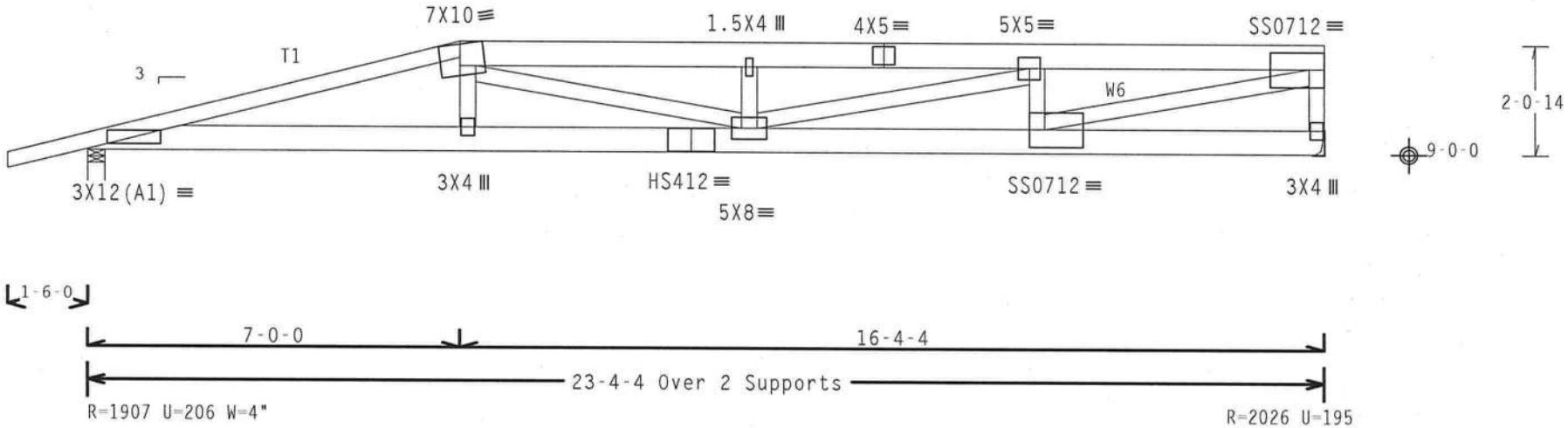

PLT TYP. 20 Gauge HS,18 Gauge HS, Wave Design Crit: TPI-2002(STD)/FBC
Cq/RT=1.00(1.25)/0(0) 7.24.1230 QTY:1 FL/-/4/-/E/-/- Scale =.3125"/Ft.

TW Building Components Group Inc.
Haines City, FL 33844
FL Certificate of Authorization # 0 278

WARNINGRUSSES REQUIRE EXTREME CARE IN FABRICATION, HANDLING, SHIPPING, INSTALLING AND BRACING. REFER TO BCSI (BUILDING COMPONENT SAFETY INFORMATION), PUBLISHED BY TPI (TRUSS PLATE INSTITUTE, 218 NORTH LEE STREET, SUITE 312, ALEXANDRIA, VA, 22314) AND WTCA (WOOD TRUSS COUNCIL OF AMERICA, 6300 ENTERPRISE LANE, MADISON, WI 53719) FOR SAFETY PRACTICES PRIOR TO PERFORMING THESE FUNCTIONS. UNLESS OTHERWISE INDICATED TOP CHORD SHALL HAVE PROPERLY ATTACHED STRUCTURAL PANELS AND BOTTOM CHORD SHALL HAVE A PROPERLY ATTACHED RIGID CEILING.

IMPORTANTFURNISH A COPY OF THIS DESIGN TO THE INSTALLATION CONTRACTOR. ITW BCG, INC. SHALL NOT BE RESPONSIBLE FOR ANY DEVIATION FROM THIS DESIGN; ANY FAILURE TO BUILD THE TRUSS IN COMFORMANCE WITH TPI; OR FABRICATING, HANDLING, SHIPPING, INSTALLING & BRACING OF TRUSSES.
DESIGN CONFORMS WITH APPLICABLE PROVISIONS OF NDS (NATIONAL DESIGN SPEC. BY AF&PA) AND TPI. ITW BCG CONNECTOR PLATES ARE MADE OF 20/18/16GA (W.H/SS/K) ASTM A653 GRADE 40/60 (H. K/H.SS) GALV. STEEL. APPLY PLATES TO EACH FACE OF TRUSS AND, UNLESS OTHERWISE LOCATED ON THIS DESIGN, POSITION PER DRAWINGS 160A-2. ANY INSPECTION OF PLATES FOLLOWED BY (I) SHALL BE PER ANNEX A3 OF TPI1-2002 SEC.3. A SEAL ON THIS DRAWING INDICATES ACCEPTANCE OF PROFESSIONAL ENGINEERING RESPONSIBILITY SOLELY FOR THE TRUSS COMPONENT DESIGN SHOWN. THE SUITABILITY AND USE OF THIS COMPONENT FOR ANY BUILDING IS THE RESPONSIBILITY OF THE BUILDING DESIGNER PER ANSI/TPI 1 SEC. 2.

JAMES F. COLLINS, JR. LICENSED No 52212 STATE OF FLORIDA PROFESSIONAL ENGINEER
Jan 31 '08

TC LL	20.0 PSF	REF R8228- 76964
TC DL	10.0 PSF	DATE 01/31/08
BC DL	10.0 PSF	DRW HCUSR8228 08031078
BC LL	0.0 PSF	HC-ENG EC/WHK
TOT.LD.	40.0 PSF	SEQN- 43960
DUR.FAC.	1.25	FROM JP
SPACING	24.0"	JREF- 1TEL8228Z03

(dear--OWNER BUILDER deardorf -- , ** - T18)

THIS DWG PREPARED FROM COMPUTER INPUT (LOADS & DIMENSIONS) SUBMITTED BY TRUSS MFR.

Top chord 2x4 SP #2 Dense
Bot chord 2x4 SP #2 Dense
Webs 2x4 SP #3

Roof overhang supports 2.00 psf soffit load.

In lieu of structural panels use purlins to brace all flat TC @ 24" OC.

110 mph wind, 15.00 ft mean hgt, ASCE 7-02, CLOSED bldg, not located within 4.50 ft from roof edge, CAT II, EXP B, wind TC DL=5.0 psf, wind BC DL=5.0 psf. Iw=1.00 GCpi(+/-)=0.18

Wind reactions based on MWFRS pressures.

Right end vertical not exposed to wind pressure.

Deflection meets L/240 live and L/180 total load. Creep increase factor for dead load is 1.50.

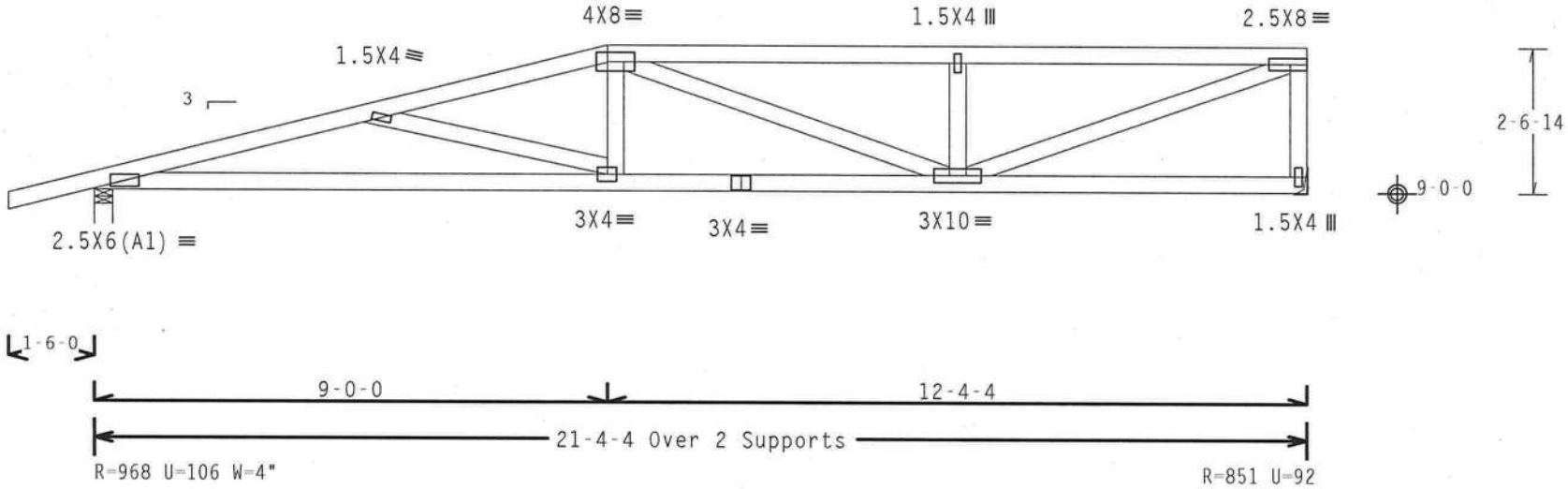

Design Crit: TPI-2002(STD)/FBC

PLT TYP. Wave Cq/RT=1.00(1.25)/0(0) 7.24.1230 QTY:1 FL/-/4/-/E/-/- Scale =.3125"/Ft.

TW Building Components Group Inc.

Haines City, FL 33844
FL Certificate of Authorization # 0 278

WARNINGRUSSES REQUIRE EXTREME CARE IN FABRICATION, HANDLING, SHIPPING, INSTALLING AND BRACING. REFER TO BCSI (BUILDING COMPONENT SAFETY INFORMATION), PUBLISHED BY TPI (TRUSS PLATE INSTITUTE, 218 NORTH LEE STREET, SUITE 312, ALEXANDRIA, VA, 22314) AND WTCA (WOOD TRUSS COUNCIL OF AMERICA, 6300 ENTERPRISE LANE, MADISON, WI 53719) FOR SAFETY PRACTICES PRIOR TO PERFORMING THESE FUNCTIONS. UNLESS OTHERWISE INDICATED TOP CHORD SHALL HAVE PROPERLY ATTACHED STRUCTURAL PANELS AND BOTTOM CHORD SHALL HAVE A PROPERLY ATTACHED RIGID CEILING.

IMPORTANTFURNISH A COPY OF THIS DESIGN TO THE INSTALLATION CONTRACTOR. ITW BCG, INC. SHALL NOT BE RESPONSIBLE FOR ANY DEVIATION FROM THIS DESIGN; ANY FAILURE TO BUILD THE TRUSS IN CONFORMANCE WITH TPI; OR FABRICATING, HANDLING, SHIPPING, INSTALLING & BRACING OF TRUSSES. DESIGN CONFORMS WITH APPLICABLE PROVISIONS OF NDS (NATIONAL DESIGN SPEC. BY AF&PA) AND TPI. ITW BCG CONNECTOR PLATES ARE MADE OF 20/18/16GA (W,H/SS/K) ASTM A653 GRADE 40/60 (W, K/H,SS) GALV. STEEL. APPLY PLATES TO EACH FACE OF TRUSS AND, UNLESS OTHERWISE LOCATED ON THIS DESIGN, POSITION PER DRAWINGS 160A-Z. ANY INSPECTION OF PLATES FOLLOWED BY (I) SHALL BE PER ANNEX A3 OF TPI1-2002 SEC.3. A SEAL ON THIS DRAWING INDICATES ACCEPTANCE OF PROFESSIONAL ENGINEERING RESPONSIBILITY SOLELY FOR THE TRUSS COMPONENT DESIGN SHOWN. THE SUITABILITY AND USE OF THIS COMPONENT FOR ANY BUILDING IS THE RESPONSIBILITY OF THE BUILDING DESIGNER PER ANSI/TPI 1 SEC. 2.

JAMES F. COLLINS, JR. LICENSE No. 52212 STATE OF FLORIDA PROFESSIONAL ENGINEER
Jan 31 '08

TC LL	20.0 PSF	REF R8228- 76965
TC DL	10.0 PSF	DATE 01/31/08
BC DL	10.0 PSF	DRW HCUSR8228 08031079
BC LL	0.0 PSF	HC-ENG EC/WHK *
TOT.LD.	40.0 PSF	SEQN- 43801
DUR.FAC.	1.25	FROM JP
SPACING	24.0"	JREF- 1TEL8228Z03

(dear--OWNER BUILDER deardorf -- , ** - T19)

Top chord 2x4 SP #2 Dense
Bot chord 2x4 SP #2 Dense
Webs 2x4 SP #3

Roof overhang supports 2.00 psf soffit load.

In lieu of structural panels use purlins to brace all flat TC @ 24" OC.

110 mph wind, 15.00 ft mean hgt, ASCE 7-02, CLOSED bldg, not located within 4.50 ft from roof edge, CAT II, EXP B, wind TC DL=5.0 psf, wind BC DL=5.0 psf. Iw=1.00 GCpi(+/-)=0.18

Wind reactions based on MWFRS pressures.

Right end vertical not exposed to wind pressure.

Deflection meets L/240 live and L/180 total load. Creep increase factor for dead load is 1.50.

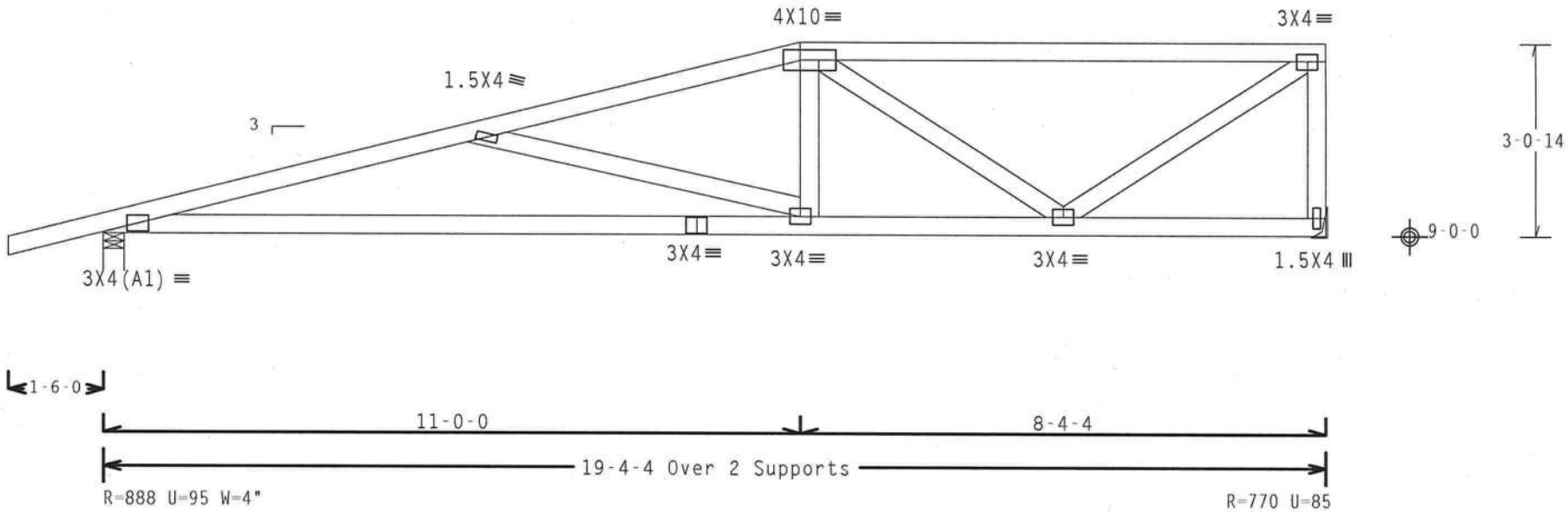

Design Crit: TPI-2002(STD)/FBC

PLT TYP. Wave | Cq/RT=1.00(1.25)/0(0) | 7.24.1230 | QTY:1 | FL/-/4/-/E/-/- | Scale =.375"/Ft.

Building Components Group Inc.

Haines City, FL 33844
FL Certificate of Authorization # 0 278

WARNINGTRUSSES REQUIRE EXTREME CARE IN FABRICATION, HANDLING, SHIPPING, INSTALLING AND BRACING. REFER TO BCSI (BUILDING COMPONENT SAFETY INFORMATION), PUBLISHED BY TPI (TRUSS PLATE INSTITUTE, 218 NORTH LEE STREET, SUITE 312, ALEXANDRIA, VA. 22314) AND WTCA (WOOD TRUSS COUNCIL OF AMERICA, 6300 ENTERPRISE LANE, MADISON, WI 53719) FOR SAFETY PRACTICES PRIOR TO PERFORMING THESE FUNCTIONS. UNLESS OTHERWISE INDICATED TOP CHORD SHALL HAVE PROPERLY ATTACHED STRUCTURAL PANELS AND BOTTOM CHORD SHALL HAVE A PROPERLY ATTACHED RIGID CEILING.

IMPORTANTFURNISH A COPY OF THIS DESIGN TO THE INSTALLATION CONTRACTOR. ITW BCG, INC. SHALL NOT BE RESPONSIBLE FOR ANY DEVIATION FROM THIS DESIGN; ANY FAILURE TO BUILD THE TRUSS IN COMFORMANCE WITH TPI; OR FABRICATING, HANDLING, SHIPPING, INSTALLING & BRACING OF TRUSSES.
DESIGN CONFORMS WITH APPLICABLE PROVISIONS OF NDS (NATIONAL DESIGN SPEC, BY AF&PA) AND TPI. ITW BCG CONNECTOR PLATES ARE MADE OF 20/18/16GA (W,H/SS/K) ASTM A653 GRADE 40/60 (W, K/H,SS) GALV. STEEL. APPLY PLATES TO EACH FACE OF TRUSS AND, UNLESS OTHERWISE LOCATED ON THIS DESIGN, POSITION PER DRAWINGS 160A-Z. ANY INSPECTION OF PLATES FOLLOWED BY (1) SHALL BE PER ANNEX A3 OF TPI1-2002 SEC.3. A SEAL ON THIS DRAWING INDICATES ACCEPTANCE OF PROFESSIONAL ENGINEERING RESPONSIBILITY SOLELY FOR THE TRUSS COMPONENT DESIGN SHOWN. THE SUITABILITY AND USE OF THIS COMPONENT FOR ANY BUILDING IS THE RESPONSIBILITY OF THE BUILDING DESIGNER PER ANSI/TPI 1 SEC. 2.

JAMES F. COLLINS JR. LICENSED No 52242 STATE OF FLORIDA PROFESSIONAL ENGINEER
Jan 31 08

TC LL	20.0 PSF	REF R8228- 76966
TC DL	10.0 PSF	DATE 01/31/08
BC DL	10.0 PSF	DRW HCUSR8228 08031080
BC LL	0.0 PSF	HC-ENG EC/WHK *
TOT.LD.	40.0 PSF	SEQN- 43803
DUR.FAC.	1.25	FROM JP
SPACING	24.0"	JREF- 1TEL8228Z03

(dear--OWNER BUILDER deardorf -- , ** - T2)

Top chord 2x4 SP #2 Dense
Bot chord 2x4 SP #2 Dense
Webs 2x4 SP #3

Roof overhang supports 2.00 psf soffit load.

Deflection meets L/240 live and L/180 total load. Creep increase factor for dead load is 1.50.

110 mph wind, 21.45 ft mean hgt, ASCE 7-02, CLOSED bldg, Located anywhere in roof, CAT II, EXP B, wind TC DL=5.0 psf, wind BC DL=5.0 psf. Iw=1.00 GCpi(+/-)=0.18

Wind reactions based on MWFRS pressures.

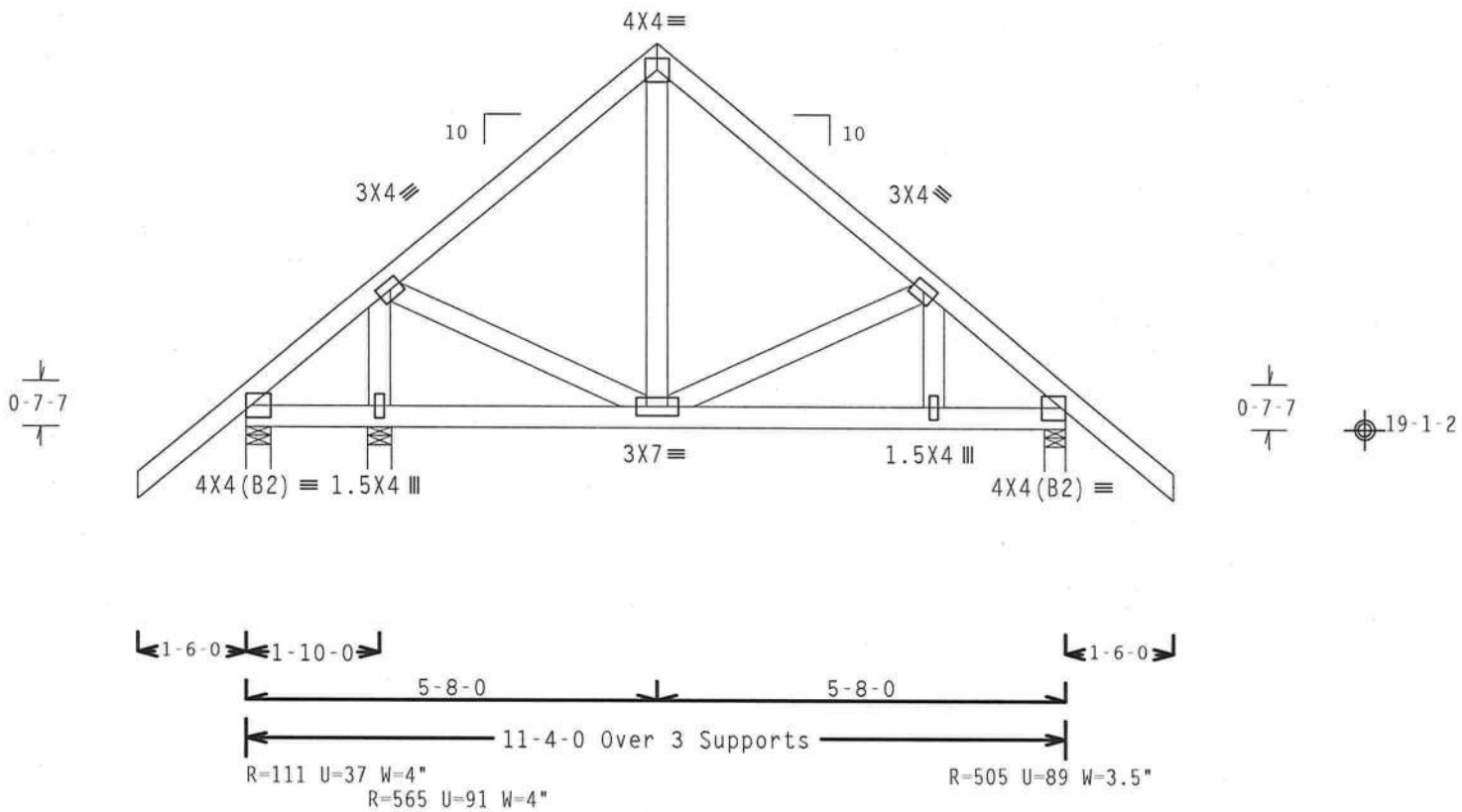

Design Crit: TPI-2002(STD)/FBC
Cq/RT=1.00(1.25)/0(0)

PLT TYP. Wave | 7.24.1230 16 | QTY:1 | FL/-/4/-/E/-/- | Scale =.375"/Ft.

Building Components Group Inc.

Haines City, FL 33844
FL Certificate of Authorization # 0 278

WARNING TRUSSES REQUIRE EXTREME CARE IN FABRICATION, HANDLING, SHIPPING, INSTALLING AND BRACING. REFER TO BCSI (BUILDING COMPONENT SAFETY INFORMATION), PUBLISHED BY TPI (TRUSS PLATE INSTITUTE, 218 NORTH LEE STREET, SUITE 312, ALEXANDRIA, VA. 22314) AND WICA (WOOD TRUSS COUNCIL OF AMERICA, 6300 ENTERPRISE LANE, MADISON, WI 53719) FOR SAFETY PRACTICES PRIOR TO PERFORMING THESE FUNCTIONS. UNLESS OTHERWISE INDICATED TOP CHORD SHALL HAVE PROPERLY ATTACHED STRUCTURAL PANELS AND BOTTOM CHORD SHALL HAVE A PROPERLY ATTACHED RIGID CEILING.

IMPORTANT FURNISH A COPY OF THIS DESIGN TO THE INSTALLATION CONTRACTOR. ITW BCG, INC. SHALL NOT BE RESPONSIBLE FOR ANY DEVIATION FROM THIS DESIGN; ANY FAILURE TO BUILD THE TRUSS IN COMFORMANCE WITH TPI; OR FABRICATING, HANDLING, SHIPPING, INSTALLING & BRACING OF TRUSSES.
DESIGN CONFORMS WITH APPLICABLE PROVISIONS OF NDS (NATIONAL DESIGN SPEC. BY AF&PA) AND TPI. ITW BCG CONNECTOR PLATES ARE MADE OF 20/18/16GA (W.H/SS/K) ASTM A653 GRADE 40/60 (W. K/H.SS) GALV. STEEL. APPLY PLATES TO EACH FACE OF TRUSS AND, UNLESS OTHERWISE LOCATED ON THIS DESIGN, POSITION PER DRAWINGS 160A-Z. ANY INSPECTION OF PLATES FOLLOWED BY (I) SHALL BE PER ANNEX A3 OF TPI1-2002 SEC.3. A SEAL ON THIS DRAWING INDICATES ACCEPTANCE OF PROFESSIONAL ENGINEERING RESPONSIBILITY SOLELY FOR THE TRUSS COMPONENT DESIGN SHOWN. THE SUITABILITY AND USE OF THIS COMPONENT FOR ANY BUILDING IS THE RESPONSIBILITY OF THE BUILDING DESIGNER PER ANSI/TPI 1 SEC. 2.

JAMES F. COLLINS JR. LICENSED No. 52212 STATE OF FLORIDA PROFESSIONAL ENGINEER
Jan 31,2008

TC LL	20.0 PSF	REF R8228- 76967
TC DL	10.0 PSF	DATE 01/31/08
BC DL	10.0 PSF	DRW HCUSR8228 08031081
BC LL	0.0 PSF	HC-ENG EC/WHK
TOT.LD.	40.0 PSF	SEQN- 43917
DUR.FAC.	1.25	FROM JP
SPACING	24.0"	JREF- 1TEL8228Z03

(dear--OWNER BUILDER deardorf -- , ** - T20)

Top chord 2x4 SP #2 Dense
Bot chord 2x4 SP #2 Dense

Roof overhang supports 2.00 psf soffit load.

Deflection meets L/240 live and L/180 total load. Creep increase factor for dead load is 1.50.

110 mph wind, 15.00 ft mean hgt, ASCE 7-02, CLOSED bldg, Located anywhere in roof, CAT II, EXP B, wind TC DL=5.0 psf, wind BC DL=5.0 psf. Iw=1.00 GCpi(+/-)=0.18

Wind reactions based on MWFRS pressures.

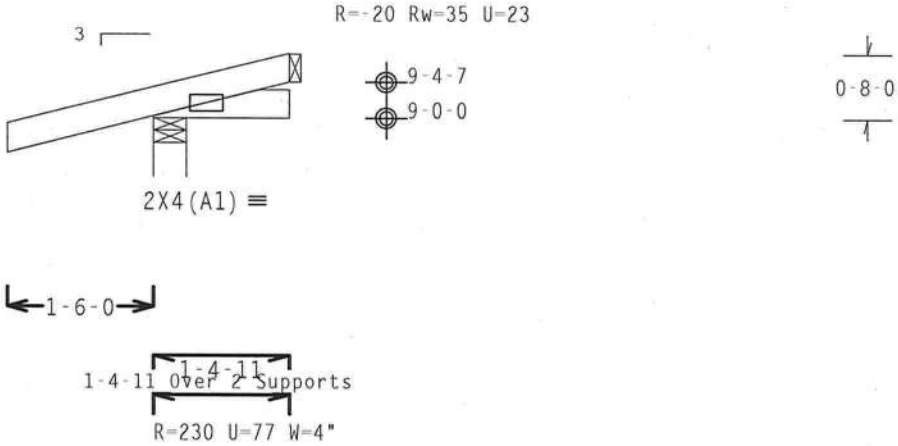

Design Crit: TPI-2002(STD)/FBC
Cq/RT=1.00(1.25)/0(0) 7.24.1230

PLT TYP. Wave QTY:1 FL/-/4/-/E/-/- Scale =.5"/Ft.

Building Components Group Inc.

Haines City, FL 33844
FL Certificate of Authorization # 0 278

WARNINGTRUSSES REQUIRE EXTREME CARE IN FABRICATION, HANDLING, SHIPPING, INSTALLING AND BRACING. REFER TO BCSI (BUILDING COMPONENT SAFETY INFORMATION), PUBLISHED BY TPI (TRUSS PLATE INSTITUTE, 218 NORTH LEE STREET, SUITE 312, ALEXANDRIA, VA. 22314) AND WTCA (WOOD TRUSS COUNCIL OF AMERICA, 6300 ENTERPRISE LANE, MADISON, WI 53719) FOR SAFETY PRACTICES PRIOR TO PERFORMING THESE FUNCTIONS. UNLESS OTHERWISE INDICATED TOP CHORD SHALL HAVE PROPERLY ATTACHED STRUCTURAL PANELS AND BOTTOM CHORD SHALL HAVE A PROPERLY ATTACHED RIGID CEILING.

IMPORTANTFURNISH A COPY OF THIS DESIGN TO THE INSTALLATION CONTRACTOR. ITW BCG, INC. SHALL NOT BE RESPONSIBLE FOR ANY DEVIATION FROM THIS DESIGN; ANY FAILURE TO BUILD THE TRUSS IN COMFORMANCE WITH TPI; OR FABRICATING, HANDLING, SHIPPING, INSTALLING & BRACING OF TRUSSES.
DESIGN CONFORMS WITH APPLICABLE PROVISIONS OF NDS (NATIONAL DESIGN SPEC. BY AF&PA) AND TPI. ITW BCG CONNECTOR PLATES ARE MADE OF 20/18/16GA (W,H/SS/K) ASTM A653 GRADE 40/60 (W, K/H,SS) GALV. STEEL. APPLY PLATES TO EACH FACE OF TRUSS AND, UNLESS OTHERWISE LOCATED ON THIS DESIGN, POSITION PER DRAWINGS 160A-Z. ANY INSPECTION OF PLATES FOLLOWED BY (1) SHALL BE PER ANNEX A3 OF TPI1-2002 SEC.3. A SEAL ON THIS DRAWING INDICATES ACCEPTANCE OF PROFESSIONAL ENGINEERING RESPONSIBILITY SOLELY FOR THE TRUSS COMPONENT DESIGN SHOWN. THE SUITABILITY AND USE OF THIS COMPONENT FOR ANY BUILDING IS THE RESPONSIBILITY OF THE BUILDING DESIGNER PER ANSI/TPI 1 SEC. 2.

JAMES F. COLLINS, JR. LICENSE No. 52212 STATE OF FLORIDA PROFESSIONAL ENGINEER
Jan 31 08

TC LL	20.0 PSF	REF	R8228- 76968
TC DL	10.0 PSF	DATE	01/31/08
BC DL	10.0 PSF	DRW	HCUSR8228 08031082
BC LL	0.0 PSF	HC-ENG	EC/WHK
TOT.LD.	40.0 PSF	SEQN-	43819
DUR.FAC.	1.25	FROM	JP
SPACING	24.0"	JREF-	1TEL8228Z03

(dear--OWNER BUILDER deardorf -- , ** - T21)

THIS DWG PREPARED FROM COMPUTER INPUT (LOADS & DIMENSIONS) SUBMITTED BY TRUSS MFR.

Top chord 2x4 SP #2 Dense
Bot chord 2x4 SP #2 Dense
Webs 2x4 SP #3

110 mph wind, 15.00 ft mean hgt, ASCE 7-02, CLOSED bldg, not located within 4.50 ft from roof edge, CAT II, EXP B, wind TC DL=5.0 psf, wind BC DL=5.0 psf. Iw=1.00 GCpi(+/-)=0.18

Wind reactions based on MWFRS pressures.

Roof overhang supports 2.00 psf soffit load.

Deflection meets L/240 live and L/180 total load. Creep increase factor for dead load is 1.50.

LOADING HAS BEEN CALCULATED BY THE TRUSS MANUFACTURER.
IT IS THE RESPONSIBILITY OF THE BUILDING DESIGNER TO
VERIFY AND APPROVE THE LOADING.

SPECIAL LOADS
------(LUMBER DUR.FAC.=1.25 / PLATE DUR.FAC.=1.25)

TC -	From	60 PLF	at -2.12	to	60 PLF	at	9.90
BC -	From	4 PLF	at -2.12	to	4 PLF	at	0.00
BC -	From	20 PLF	at 0.00	to	20 PLF	at	9.90
TC -		43 LB Conc. Load	at	1.48			
TC -		117 LB Conc. Load	at	4.31			
TC -		242 LB Conc. Load	at	7.13			
BC -		12 LB Conc. Load	at	1.48			
BC -		51 LB Conc. Load	at	4.31			
BC -		113 LB Conc. Load	at	7.13			

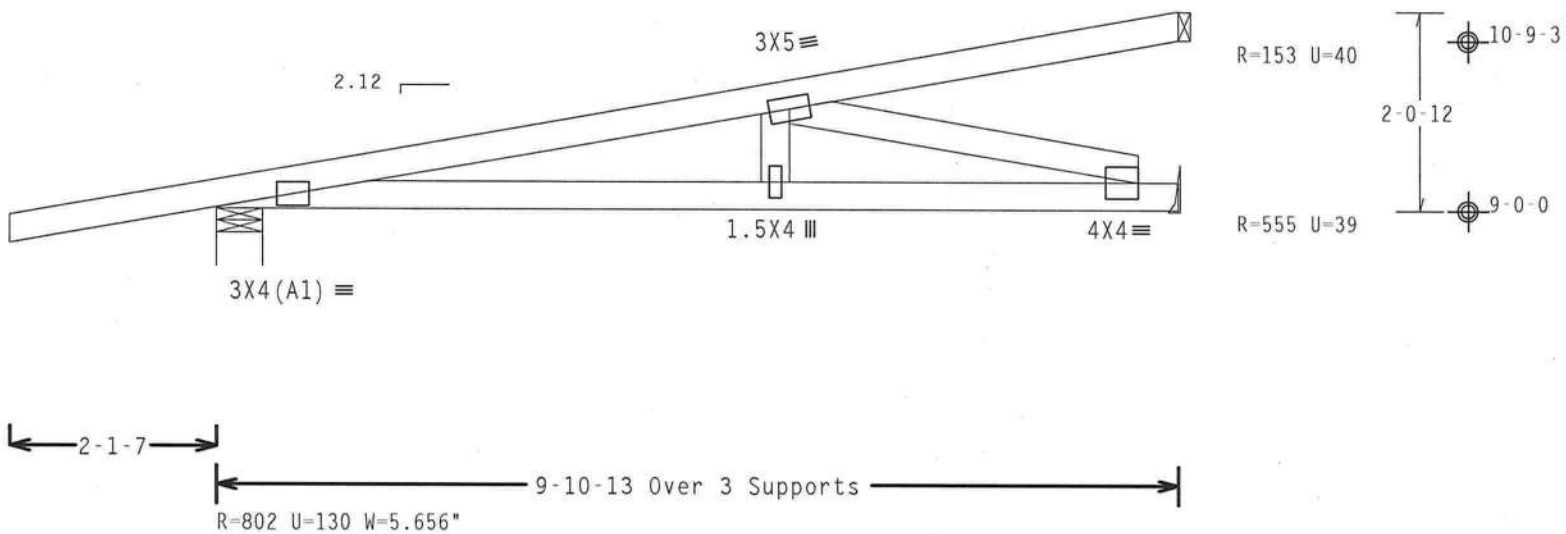

Design Crit: TPI-2002(STD)/FBC

PLT TYP. Wave Cq/RT=1.00(1.25)/0(0) 7.24.1230 QTY:1 FL/-/4/-/E/-/- Scale =.5"/Ft.

WARNINGTRUSSES REQUIRE EXTREME CARE IN FABRICATION, HANDLING, SHIPPING, INSTALLING AND BRACING. REFER TO BCSI (BUILDING COMPONENT SAFETY INFORMATION), PUBLISHED BY TPI (TRUSS PLATE INSTITUTE, 218 NORTH LEE STREET, SUITE 312, ALEXANDRIA, VA, 22314) AND WICA (WOOD TRUSS COUNCIL OF AMERICA, 6300 ENTERPRISE LANE, MADISON, WI 53719) FOR SAFETY PRACTICES PRIOR TO PERFORMING THESE FUNCTIONS. UNLESS OTHERWISE INDICATED TOP CHORD SHALL HAVE PROPERLY ATTACHED STRUCTURAL PANELS AND BOTTOM CHORD SHALL HAVE A PROPERLY ATTACHED RIGID CEILING.

IMPORTANTFURNISH A COPY OF THIS DESIGN TO THE INSTALLATION CONTRACTOR. ITW BCG, INC. SHALL NOT BE RESPONSIBLE FOR ANY DEVIATION FROM THIS DESIGN; ANY FAILURE TO BUILD THE TRUSS IN CONFORMANCE WITH TPI; OR FABRICATING, HANDLING, SHIPPING, INSTALLING & BRACING OF TRUSSES. DESIGN CONFORMS WITH APPLICABLE PROVISIONS OF NDS (NATIONAL DESIGN SPEC. BY AF&PA) AND TPI. ITW BCG CONNECTOR PLATES ARE MADE OF 20/18/16GA (W,H/SS/K) ASTM A653 GRADE 40/60 (W, K/H,SS) GALV. STEEL. APPLY PLATES TO EACH FACE OF TRUSS AND, UNLESS OTHERWISE LOCATED ON THIS DESIGN, POSITION PER DRAWINGS 160A-Z. ANY INSPECTION OF PLATES FOLLOWED BY (1) SHALL BE PER ANNEX A3 OF TPI1-2002 SEC.3. A SEAL ON THIS DRAWING INDICATES ACCEPTANCE OF PROFESSIONAL ENGINEERING RESPONSIBILITY SOLELY FOR THE TRUSS COMPONENT DESIGN SHOWN. THE SUITABILITY AND USE OF THIS COMPONENT FOR ANY BUILDING IS THE RESPONSIBILITY OF THE BUILDING DESIGNER PER ANSI/TPI 1 SEC. 2.

ITW Building Components Group Inc.
Haines City, FL 33844
FL Certificate of Authorization # 0 278

JAMES F. COLLINS JR. LICENSE No. 52212 STATE OF FLORIDA PROFESSIONAL ENGINEER
Jan 31 '08

TC LL	20.0 PSF	REF R8228- 76969
TC DL	10.0 PSF	DATE 01/31/08
BC DL	10.0 PSF	DRW HCUSR8228 08031083
BC LL	0.0 PSF	HC-ENG EC/WHK
TOT.LD.	40.0 PSF	SEQN- 43931
DUR.FAC.	1.25	FROM JP
SPACING	24.0"	JREF- 1TEL8228Z03

(dear--OWNER BUILDER deardorf -- , ** - T22)

Top chord 2x4 SP #2 Dense
Bot chord 2x4 SP #2 Dense

Roof overhang supports 2.00 psf soffit load.

Deflection meets L/240 live and L/180 total load. Creep increase factor for dead load is 1.50.

110 mph wind, 15.00 ft mean hgt, ASCE 7-02, CLOSED bldg, not located within 4.50 ft from roof edge, CAT II, EXP B, wind TC DL=5.0 psf, wind BC DL=5.0 psf. Iw=1.00 GCpi(+/-)=0.18

Wind reactions based on MWFRS pressures.

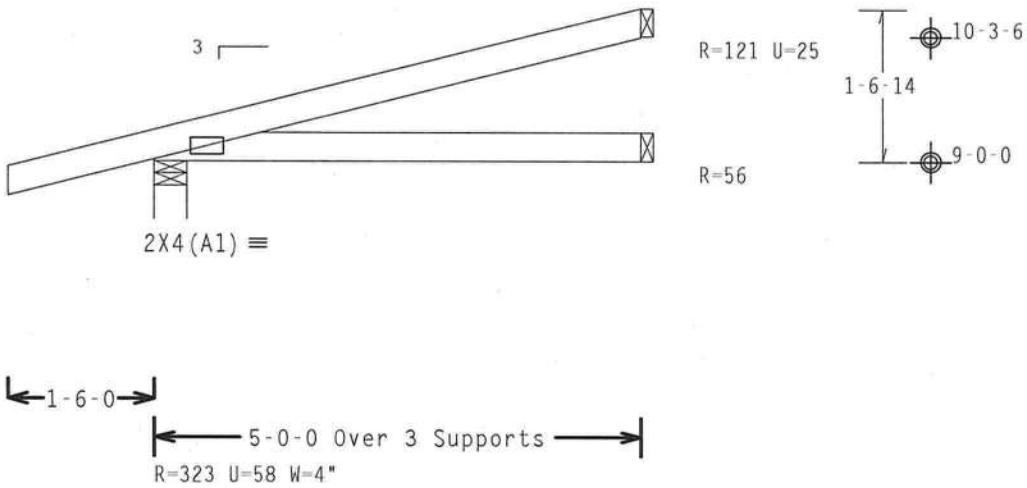

Design Crit: TPI-2002(STD)/FBC
Cq/RT=1.00(1.25)/0(0)

PLT TYP. Wave | 7.24.1230 16 | QTY:1 | FL/-/4/-/E/-/- | Scale =.5"/Ft.

Building Components Group Inc.

Haines City, FL 33844
FL Certificate of Authorization # 0 278

WARNINGTRUSSES REQUIRE EXTREME CARE IN FABRICATION, HANDLING, SHIPPING, INSTALLING AND BRACING. REFER TO BCSI (BUILDING COMPONENT SAFETY INFORMATION), PUBLISHED BY TPI (TRUSS PLATE INSTITUTE, 218 NORTH LEE STREET, SUITE 312, ALEXANDRIA, VA, 22314) AND WTCA (WOOD TRUSS COUNCIL OF AMERICA, 6300 ENTERPRISE LANE, MADISON, WI 53719) FOR SAFETY PRACTICES PRIOR TO PERFORMING THESE FUNCTIONS. UNLESS OTHERWISE INDICATED TOP CHORD SHALL HAVE PROPERLY ATTACHED STRUCTURAL PANELS AND BOTTOM CHORD SHALL HAVE A PROPERLY ATTACHED RIGID CEILING.

IMPORTANTFURNISH A COPY OF THIS DESIGN TO THE INSTALLATION CONTRACTOR. ITW BCG, INC. SHALL NOT BE RESPONSIBLE FOR ANY DEVIATION FROM THIS DESIGN; ANY FAILURE TO BUILD THE TRUSS IN COMFORMANCE WITH TPI; OR FABRICATING, HANDLING, SHIPPING, INSTALLING & BRACING OF TRUSSES.
DESIGN CONFORMS WITH APPLICABLE PROVISIONS OF NDS (NATIONAL DESIGN SPEC, BY AF&PA) AND TPI. ITW BCG CONNECTOR PLATES ARE MADE OF 20/18/16GA (W,H/SS/K) ASTM A653 GRADE 40/60 (W, K/H,SS) GALV. STEEL. APPLY PLATES TO EACH FACE OF TRUSS AND, UNLESS OTHERWISE LOCATED ON THIS DESIGN, POSITION PER DRAWINGS 160A-Z. ANY INSPECTION OF PLATES FOLLOWED BY (1) SHALL BE PER ANNEX A3 OF TPI1-2002 SEC.3. A SEAL ON THIS DRAWING INDICATES ACCEPTANCE OF PROFESSIONAL ENGINEERING RESPONSIBILITY SOLELY FOR THE TRUSS COMPONENT DESIGN SHOWN. THE SUITABILITY AND USE OF THIS COMPONENT FOR ANY BUILDING IS THE RESPONSIBILITY OF THE BUILDING DESIGNER PER ANSI/TPI 1 SEC. 2.

JAMES F. COLLINS, JR. LICENSE No. E2212 STATE OF FLORIDA PROFESSIONAL ENGINEER
Jan

TC LL	20.0 PSF	REF	R8228- 76970
TC DL	10.0 PSF	DATE	01/31/08
BC DL	10.0 PSF	DRW	HCUSR8228 08031084
BC LL	0.0 PSF	HC-ENG	EC/WHK *
TOT.LD.	40.0 PSF	SEQN-	43806
DUR.FAC.	1.25	FROM	JP
SPACING	24.0"	JREF-	1TEL8228Z03

(dear--OWNER BUILDER deardorf -- , ** - T23)

Top chord 2x4 SP #2 Dense
Bot chord 2x4 SP #2 Dense

Roof overhang supports 2.00 psf soffit load.

Deflection meets L/240 live and L/180 total load. Creep increase factor for dead load is 1.50.

110 mph wind, 15.00 ft mean hgt, ASCE 7-02, CLOSED bldg, Located anywhere in roof, CAT II, EXP B, wind TC DL=5.0 psf, wind BC DL=5.0 psf. Iw=1.00 GCpi(+/-)=0.18

Wind reactions based on MWFRS pressures.

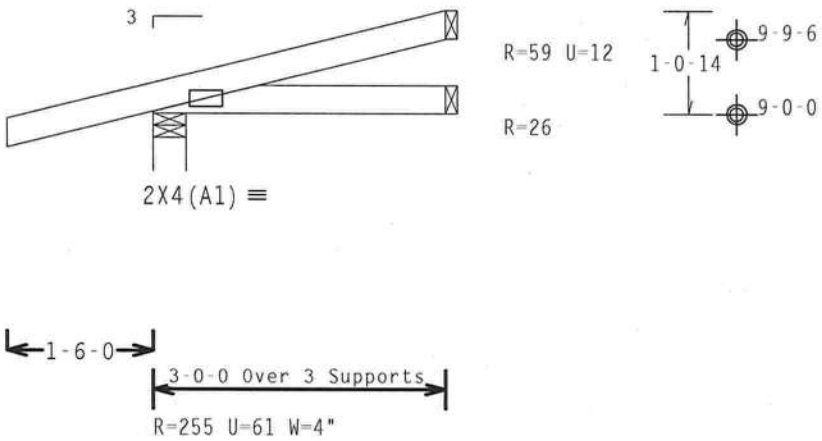

Design Crit: TPI-2002(STD)/FBC
Cq/RT=1.00(1.25)/0(0)

PLT TYP. Wave 7.24.1230 QTY:1 FL/-/4/-/E/-/- Scale =.5"/Ft.

Building Components Group Inc.

Haines City, FL 33844
FL Certificate of Authorization # 0 278

WARNINGTRUSSES REQUIRE EXTREME CARE IN FABRICATION, HANDLING, SHIPPING, INSTALLING AND BRACING. REFER TO BCSI (BUILDING COMPONENT SAFETY INFORMATION), PUBLISHED BY TPI (TRUSS PLATE INSTITUTE, 218 NORTH LEE STREET, SUITE 312, ALEXANDRIA, VA, 22314) AND WTCA (WOOD TRUSS COUNCIL OF AMERICA, 6300 ENTERPRISE LANE, MADISON, WI 53719) FOR SAFETY PRACTICES PRIOR TO PERFORMING THESE FUNCTIONS. UNLESS OTHERWISE INDICATED TOP CHORD SHALL HAVE PROPERLY ATTACHED STRUCTURAL PANELS AND BOTTOM CHORD SHALL HAVE A PROPERLY ATTACHED RIGID CEILING.

IMPORTANTFURNISH A COPY OF THIS DESIGN TO THE INSTALLATION CONTRACTOR. ITW BCG, INC. SHALL NOT BE RESPONSIBLE FOR ANY DEVIATION FROM THIS DESIGN; ANY FAILURE TO BUILD THE TRUSS IN COMFORMANCE WITH TPI; OR FABRICATING, HANDLING, SHIPPING, INSTALLING & BRACING OF TRUSSES.
DESIGN CONFORMS WITH APPLICABLE PROVISIONS OF NDS (NATIONAL DESIGN SPEC, BY AF&PA) AND TPI. ITW BCG CONNECTOR PLATES ARE MADE OF 20/18/16GA (W,H/SS/K) ASTM A653 GRADE 40/60 (W, K/H,SS) GALV. STEEL. APPLY PLATES TO EACH FACE OF TRUSS AND, UNLESS OTHERWISE LOCATED ON THIS DESIGN, POSITION PER DRAWINGS 160A-Z. ANY INSPECTION OF PLATES FOLLOWED BY (1) SHALL BE PER ANNEX A3 OF TPI1-2002 SEC.3. A SEAL ON THIS DRAWING INDICATES ACCEPTANCE OF PROFESSIONAL ENGINEERING RESPONSIBILITY SOLELY FOR THE TRUSS COMPONENT DESIGN SHOWN. THE SUITABILITY AND USE OF THIS COMPONENT FOR ANY BUILDING IS THE RESPONSIBILITY OF THE BUILDING DESIGNER PER ANSI/TPI 1 SEC. 2.

JAMES F. COLLINS LICENSE No 52212 STATE OF FLORIDA PROFESSIONAL ENGINEER
Jan 31 08

TC LL	20.0 PSF	REF R8228- 76971
TC DL	10.0 PSF	DATE 01/31/08
BC DL	10.0 PSF	DRW HCUSR8228 08031085
BC LL	0.0 PSF	HC-ENG EC/WHK *
TOT.LD.	40.0 PSF	SEQN- 43808
DUR.FAC.	1.25	FROM JP
SPACING	24.0"	JREF- 1TEL8228Z03

(dear--OWNER BUILDER deardorf -- , ** - T24)

Top chord 2x4 SP #2 Dense
Bot chord 2x4 SP #2 Dense

Roof overhang supports 2.00 psf soffit load.

Deflection meets L/240 live and L/180 total load. Creep increase factor for dead load is 1.50.

110 mph wind, 15.00 ft mean hgt, ASCE 7-02, CLOSED bldg, Located anywhere in roof, CAT II, EXP B, wind TC DL=5.0 psf, wind BC DL=5.0 psf. Iw=1.00 GCpi(+/-)=0.18

Wind reactions based on MWFRS pressures.

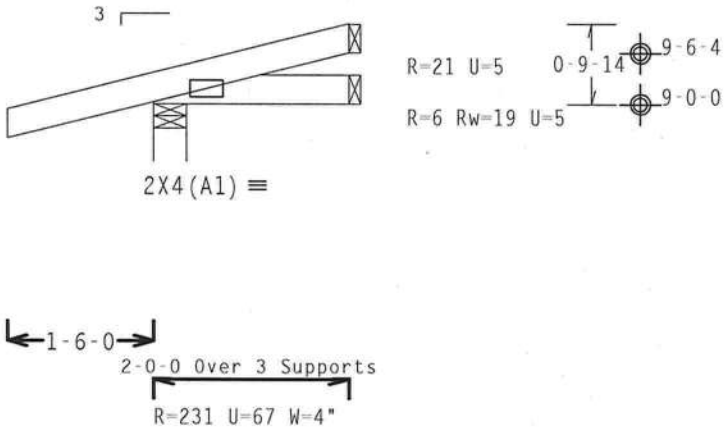

Design Crit: TPI-2002(STD)/FBC

PLT TYP. Wave Cq/RT=1.00(1.25)/0(0) 7.24.1230 QTY:1 FL/-/4/-/E/-/- Scale =.5"/Ft.

Building Components Group Inc.

Haines City, FL 33844
FL Certificate of Authorization # 0 278

WARNINGTRUSSES REQUIRE EXTREME CARE IN FABRICATION, HANDLING, SHIPPING, INSTALLING AND BRACING. REFER TO BCSI (BUILDING COMPONENT SAFETY INFORMATION), PUBLISHED BY TPI (TRUSS PLATE INSTITUTE, 218 NORTH LEE STREET, SUITE 312, ALEXANDRIA, VA, 22314) AND WTCA (WOOD TRUSS COUNCIL OF AMERICA, 6300 ENTERPRISE LANE, MADISON, WI 53719) FOR SAFETY PRACTICES PRIOR TO PERFORMING THESE FUNCTIONS. UNLESS OTHERWISE INDICATED TOP CHORD SHALL HAVE PROPERLY ATTACHED STRUCTURAL PANELS AND BOTTOM CHORD SHALL HAVE A PROPERLY ATTACHED RIGID CEILING.

IMPORTANTFURNISH A COPY OF THIS DESIGN TO THE INSTALLATION CONTRACTOR. ITW BCG, INC. SHALL NOT BE RESPONSIBLE FOR ANY DEVIATION FROM THIS DESIGN; ANY FAILURE TO BUILD THE TRUSS IN CONFORMANCE WITH TPI; OR FABRICATING, HANDLING, SHIPPING, INSTALLING & BRACING OF TRUSSES.
DESIGN CONFORMS WITH APPLICABLE PROVISIONS OF NDS (NATIONAL DESIGN SPEC. BY AF&PA) AND TPI. ITW BCG CONNECTOR PLATES ARE MADE OF 20/18/16GA (W,H/SS/K) ASTM A653 GRADE 40/60 (W, K/H,SS) GALV. STEEL. APPLY PLATES TO EACH FACE OF TRUSS AND, UNLESS OTHERWISE LOCATED ON THIS DESIGN, POSITION PER DRAWINGS 160A-Z. ANY INSPECTION OF PLATES FOLLOWED BY (1) SHALL BE PER ANNEX A3 OF TPI1-2002 SEC.3. A SEAL ON THIS DRAWING INDICATES ACCEPTANCE OF PROFESSIONAL ENGINEERING RESPONSIBILITY SOLELY FOR THE TRUSS COMPONENT DESIGN SHOWN. THE SUITABILITY AND USE OF THIS COMPONENT FOR ANY BUILDING IS THE RESPONSIBILITY OF THE BUILDING DESIGNER PER ANSI/TPI 1 SEC. 2.

JAMES R. COLLINS JR. LICENSE No. 52212 STATE OF FLORIDA PROFESSIONAL ENGINEER
Jan 31 '08

TC LL	20.0 PSF	REF R8228- 76972
TC DL	10.0 PSF	DATE 01/31/08
BC DL	10.0 PSF	DRW HCUSR8228 08031086
BC LL	0.0 PSF	HC-ENG EC/WHK *
TOT.LD.	40.0 PSF	SEQN- 43925
DUR.FAC.	1.25	FROM JP
SPACING	24.0"	JREF- 1TEL8228Z03

(dear--OWNER BUILDER deardorf -- , ** - T25)

Top chord 2x4 SP #2 Dense
Bot chord 2x4 SP #2 Dense

Roof overhang supports 2.00 psf soffit load.

Deflection meets L/240 live and L/180 total load. Creep increase factor for dead load is 1.50.

110 mph wind, 15.00 ft mean hgt, ASCE 7-02, CLOSED bldg, not located within 4.50 ft from roof edge, CAT II, EXP B, wind TC DL=5.0 psf, wind BC DL=5.0 psf. Iw=1.00 GCpi(+/-)=0.18

Wind reactions based on MWFRS pressures.

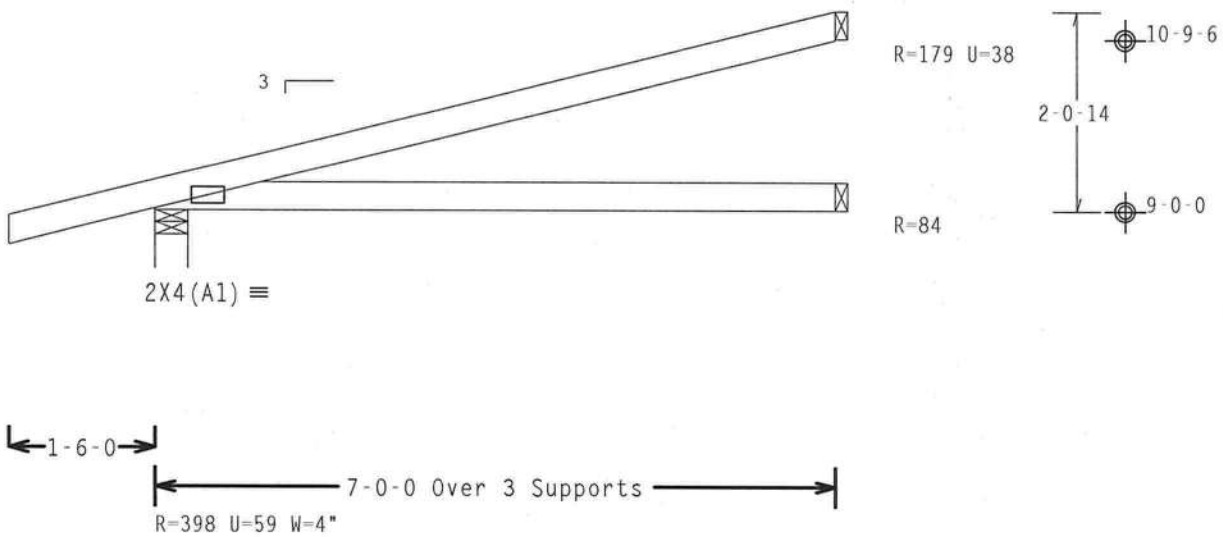

Design Crit: TPI-2002(STD)/FBC
Cq/RT=1.00(1.25)/0(0) 7.24.1230 QTY:1 FL/-/4/-/E/-/- Scale =.5"/Ft.

PLT TYP. Wave

Building Components Group Inc.

Haines City, FL 33844
FL Certificate of Authorization # 0 278

WARNINGTRUSSES REQUIRE EXTREME CARE IN FABRICATION, HANDLING, SHIPPING, INSTALLING AND BRACING. REFER TO BCSI (BUILDING COMPONENT SAFETY INFORMATION), PUBLISHED BY TPI (TRUSS PLATE INSTITUTE, 218 NORTH LEE STREET, SUITE 312, ALEXANDRIA, VA, 22314) AND WTCA (WOOD TRUSS COUNCIL OF AMERICA, 6300 ENTERPRISE LANE, MADISON, WI 53719) FOR SAFETY PRACTICES PRIOR TO PERFORMING THESE FUNCTIONS. UNLESS OTHERWISE INDICATED TOP CHORD SHALL HAVE PROPERLY ATTACHED STRUCTURAL PANELS AND BOTTOM CHORD SHALL HAVE A PROPERLY ATTACHED RIGID CEILING.

IMPORTANTFURNISH A COPY OF THIS DESIGN TO THE INSTALLATION CONTRACTOR. ITW BCG, INC. SHALL NOT BE RESPONSIBLE FOR ANY DEVIATION FROM THIS DESIGN; ANY FAILURE TO BUILD THE TRUSS IN COMFORMANCE WITH TPI; OR FABRICATING, HANDLING, SHIPPING, INSTALLING & BRACING OF TRUSSES.
DESIGN CONFORMS WITH APPLICABLE PROVISIONS OF NDS (NATIONAL DESIGN SPEC, BY AF&PA) AND TPI. ITW BCG CONNECTOR PLATES ARE MADE OF 20/18/16GA (W.H/SS/K) ASTM A653 GRADE 40/60 (W. K/H.SS) GALV. STEEL. APPLY PLATES TO EACH FACE OF TRUSS AND, UNLESS OTHERWISE LOCATED ON THIS DESIGN, POSITION PER DRAWINGS 160A-Z. ANY INSPECTION OF PLATES FOLLOWED BY (1) SHALL BE PER ANNEX A3 OF TPI1-2002 SEC.3. A SEAL ON THIS DRAWING INDICATES ACCEPTANCE OF PROFESSIONAL ENGINEERING RESPONSIBILITY SOLELY FOR THE TRUSS COMPONENT DESIGN SHOWN. THE SUITABILITY AND USE OF THIS COMPONENT FOR ANY BUILDING IS THE RESPONSIBILITY OF THE BUILDING DESIGNER PER ANSI/TPI 1 SEC. 2.

JAMES F. COLLINS, JR. LICENSE No. 52212 STATE OF FLORIDA PROFESSIONAL ENGINEER
Jan 31 08

TC LL	20.0 PSF	REF R8228- 76973
TC DL	10.0 PSF	DATE 01/31/08
BC DL	10.0 PSF	DRW HCUSR8228 08031087
BC LL	0.0 PSF	HC-ENG EC/WHK *
TOT.LD.	40.0 PSF	SEQN- 43814
DUR.FAC.	1.25	FROM JP
SPACING	24.0"	JREF- 1TEL8228Z03

Top chord 2x4 SP #2 Dense
Bot chord 2x4 SP #2 Dense

Roof overhang supports 2.00 psf soffit load.

Deflection meets L/240 live and L/180 total load. Creep increase factor for dead load is 1.50.

110 mph wind, 15.00 ft mean hgt, ASCE 7-02, CLOSED bldg, not located within 4.50 ft from roof edge, CAT II, EXP B, wind TC DL=5.0 psf, wind BC DL=5.0 psf. Iw=1.00 GCpi(+/-)=0.18

Wind reactions based on MWFRS pressures.

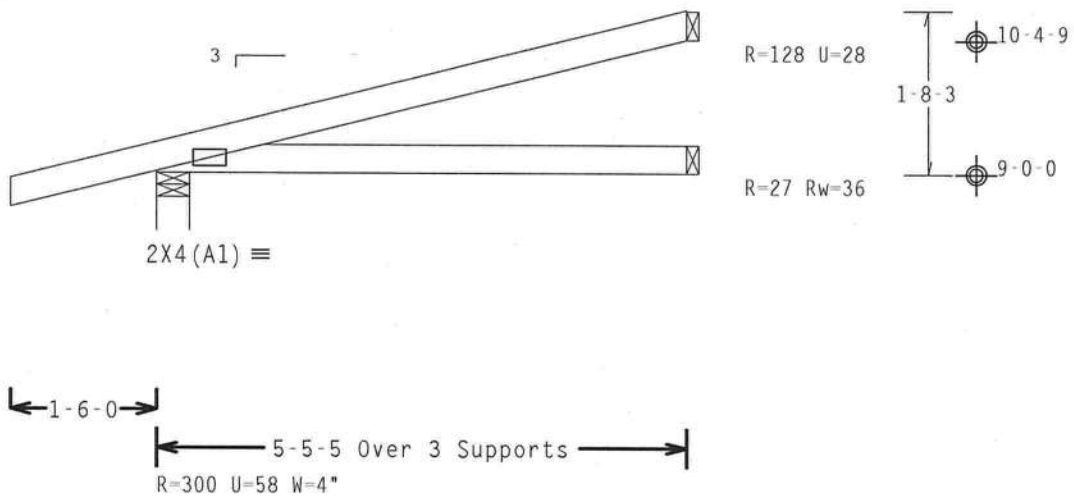

Design Crit: TPI-2002(STD)/FBC
Cq/RT=1.00(1.25)/0(0) 7.24.1230 15 QTY:1 FL/-/4/-/E/-/-

PLT TYP. Wave

Scale =.5"/Ft.

Building Components Group Inc.

Haines City, FL 33844
FL Certificate of Authorization # 0 278

WARNINGTRUSSES REQUIRE EXTREME CARE IN FABRICATION, HANDLING, SHIPPING, INSTALLING AND BRACING. REFER TO BCSI (BUILDING COMPONENT SAFETY INFORMATION), PUBLISHED BY TPI (TRUSS PLATE INSTITUTE, 218 NORTH LEE STREET, SUITE 312, ALEXANDRIA, VA. 22314) AND WTCA (WOOD TRUSS COUNCIL OF AMERICA, 6300 ENTERPRISE LANE, MADISON, WI 53719) FOR SAFETY PRACTICES PRIOR TO PERFORMING THESE FUNCTIONS. UNLESS OTHERWISE INDICATED TOP CHORD SHALL HAVE PROPERLY ATTACHED STRUCTURAL PANELS AND BOTTOM CHORD SHALL HAVE A PROPERLY ATTACHED RIGID CEILING.

IMPORTANTFURNISH A COPY OF THIS DESIGN TO THE INSTALLATION CONTRACTOR. ITW BCG, INC. SHALL NOT BE RESPONSIBLE FOR ANY DEVIATION FROM THIS DESIGN; ANY FAILURE TO BUILD THE TRUSS IN COMFORMANCE WITH TPI; OR FABRICATING, HANDLING, SHIPPING, INSTALLING & BRACING OF TRUSSES.
DESIGN CONFORMS WITH APPLICABLE PROVISIONS OF NDS (NATIONAL DESIGN SPEC. BY AF&PA) AND TPI. ITW BCG CONNECTOR PLATES ARE MADE OF 20/18/16GA (W,H/SS/K) ASTM A653 GRADE 40/60 (W, K/H,SS) GALV. STEEL. APPLY PLATES TO EACH FACE OF TRUSS AND, UNLESS OTHERWISE LOCATED ON THIS DESIGN, POSITION PER DRAWINGS 160A-Z. ANY INSPECTION OF PLATES FOLLOWED BY (1) SHALL BE PER ANNEX A3 OF TPI1-2002 SEC.3. A SEAL ON THIS DRAWING INDICATES ACCEPTANCE OF PROFESSIONAL ENGINEERING RESPONSIBILITY SOLELY FOR THE TRUSS COMPONENT DESIGN SHOWN. THE SUITABILITY AND USE OF THIS COMPONENT FOR ANY BUILDING IS THE RESPONSIBILITY OF THE BUILDING DESIGNER PER ANSI/TPI 1 SEC. 2.

JAMES F. COLLINS, JR. LICENSE No. 52212 STATE OF FLORIDA PROFESSIONAL ENGINEER

Jan 31 08

TC LL	20.0 PSF	REF	R8228- 76974
TC DL	10.0 PSF	DATE	01/31/08
BC DL	10.0 PSF	DRW	HCUSR8228 08031088
BC LL	0.0 PSF	HC-ENG	EC/WHK *
TOT.LD.	40.0 PSF	SEQN-	43942
DUR.FAC.	1.25	FROM	JP
SPACING	24.0"	JREF-	1TEL8228Z03

Top chord 2x4 SP #2 Dense
Bot chord 2x4 SP #2 Dense

Roof overhang supports 2.00 psf soffit load.

Deflection meets L/240 live and L/180 total load. Creep increase factor for dead load is 1.50.

110 mph wind, 15.00 ft mean hgt, ASCE 7-02, CLOSED bldg, Located anywhere in roof, CAT II, EXP B, wind TC DL=5.0 psf, wind BC DL=5.0 psf. Iw=1.00 GCpi(+/-)=0.18

Wind reactions based on MWFRS pressures.

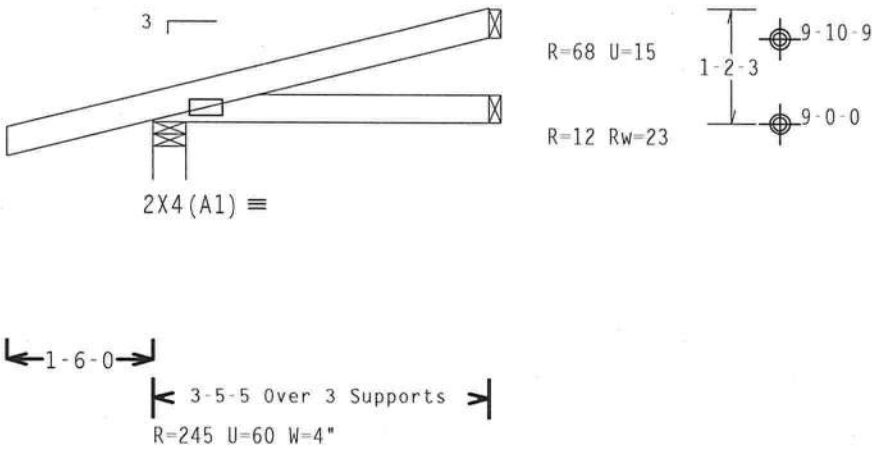

Design Crit: TPI-2002(STD)/FBC
Cq/RT=1.00(1.25)/0(0)

PLT TYP. Wave | 7.24.1230 | QTY:1 | FL/-/4/-/E/-/- | Scale =.5"/Ft.

Building Components Group Inc.

Haines City, FL 33844
FL Certificate of Authorization # 0 278

WARNING TRUSSES REQUIRE EXTREME CARE IN FABRICATION, HANDLING, SHIPPING, INSTALLING AND BRACING. REFER TO BCSI (BUILDING COMPONENT SAFETY INFORMATION), PUBLISHED BY TPI (TRUSS PLATE INSTITUTE, 218 NORTH LEE STREET, SUITE 312, ALEXANDRIA, VA, 22314) AND WTCA (WOOD TRUSS COUNCIL OF AMERICA, 6300 ENTERPRISE LANE, MADISON, WI 53719) FOR SAFETY PRACTICES PRIOR TO PERFORMING THESE FUNCTIONS. UNLESS OTHERWISE INDICATED TOP CHORD SHALL HAVE PROPERLY ATTACHED STRUCTURAL PANELS AND BOTTOM CHORD SHALL HAVE A PROPERLY ATTACHED RIGID CEILING.

IMPORTANT FURNISH A COPY OF THIS DESIGN TO THE INSTALLATION CONTRACTOR. ITW BCG, INC. SHALL NOT BE RESPONSIBLE FOR ANY DEVIATION FROM THIS DESIGN; ANY FAILURE TO BUILD THE TRUSS IN COMFORMANCE WITH TPI; OR FABRICATING, HANDLING, SHIPPING, INSTALLING & BRACING OF TRUSSES.
DESIGN CONFORMS WITH APPLICABLE PROVISIONS OF NDS (NATIONAL DESIGN SPEC. BY AF&PA) AND TPI. ITW BCG CONNECTOR PLATES ARE MADE OF 20/18/16GA (W,H/SS/K) ASTM A653 GRADE 40/60 (W, K/H,SS) GALV. STEEL. APPLY PLATES TO EACH FACE OF TRUSS AND, UNLESS OTHERWISE LOCATED ON THIS DESIGN, POSITION PER DRAWINGS 160A-Z. ANY INSPECTION OF PLATES FOLLOWED BY (I) SHALL BE PER ANNEX A3 OF TPI1-2002 SEC.3. A SEAL ON THIS DRAWING INDICATES ACCEPTANCE OF PROFESSIONAL ENGINEERING RESPONSIBILITY SOLELY FOR THE TRUSS COMPONENT DESIGN SHOWN. THE SUITABILITY AND USE OF THIS COMPONENT FOR ANY BUILDING IS THE RESPONSIBILITY OF THE BUILDING DESIGNER PER ANSI/TPI 1 SEC. 2.

JAMES F. COLLINS, JR. LICENSE No. 52212 STATE OF FLORIDA PROFESSIONAL ENGINEER
Jan 31 '08

TC LL	20.0 PSF	REF	R8228- 76975
TC DL	10.0 PSF	DATE	01/31/08
BC DL	10.0 PSF	DRW	HCUSR8228 08031089
BC LL	0.0 PSF	HC-ENG	EC/WHK *
TOT.LD.	40.0 PSF	SEQN-	43949
DUR.FAC.	1.25	FROM	JP
SPACING	24.0"	JREF-	1TEL8228Z03

Top chord 2x4 SP #2 Dense
Bot chord 2x4 SP #2 Dense
Webs 2x4 SP #3
:Lt Slider 2x8 SP SS: BLOCK LENGTH = 1.777'
:Rt Slider 2x8 SP SS: BLOCK LENGTH = 1.726'

110 mph wind, 15.00 ft mean hgt, ASCE 7-02, CLOSED bldg, not located within 4.50 ft from roof edge, CAT II, EXP B, wind TC DL=5.0 psf, wind BC DL=5.0 psf. Iw=1.00 GCpi(+/-)=0.18

Wind reactions based on MWFRS pressures.

LOADING HAS BEEN CALCULATED BY THE TRUSS MANUFACTURER.
IT IS THE RESPONSIBILITY OF THE BUILDING DESIGNER TO
VERIFY AND APPROVE THE LOADING.

SPECIAL LOADS
------(LUMBER DUR.FAC.=1.25 / PLATE DUR.FAC.=1.25)
TC - From 66 PLF at 0.00 to 66 PLF at 9.07
TC - From 66 PLF at 9.07 to 66 PLF at 18.15
BC - From 20 PLF at 0.00 to 20 PLF at 18.15
PLB- 42 LB Conc. Load at (7.88,9.04), (11.88,9.04), (13.42,9.04)

Deflection meets L/240 live and L/180 total load. Creep increase factor for dead load is 1.50.

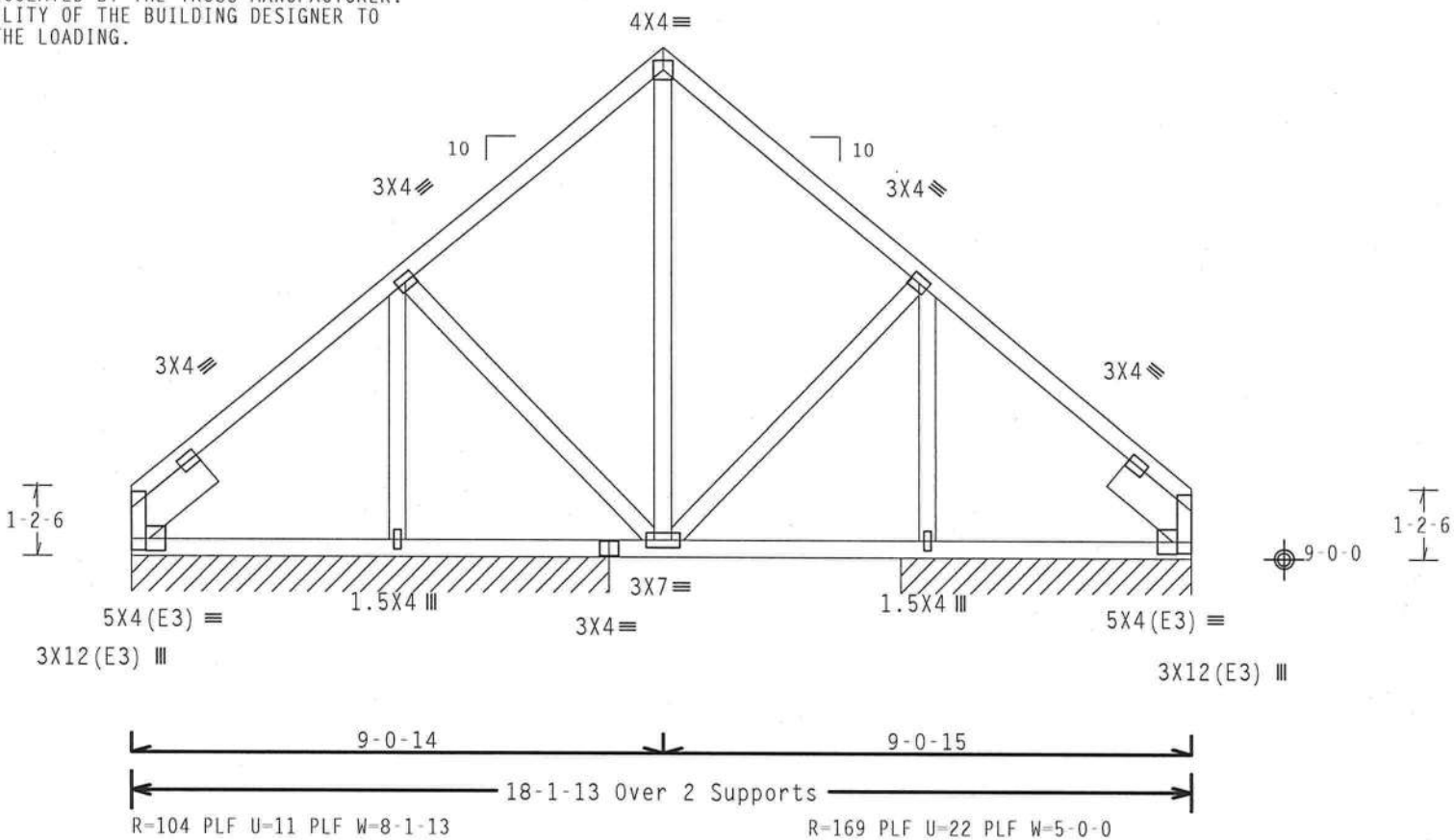

Design Crit: TPI-2002(STD)/FBC
PLT TYP. Wave Cq/RT=1.00(1.25)/0(0) 7.24.1230 QTY:1 FL/-/4/-/E/-/- Scale =.3125"/Ft.

WARNINGTRUSSES REQUIRE EXTREME CARE IN FABRICATION, HANDLING, SHIPPING, INSTALLING AND BRACING. REFER TO BCSI (BUILDING COMPONENT SAFETY INFORMATION), PUBLISHED BY TPI (TRUSS PLATE INSTITUTE, 218 NORTH LEE STREET, SUITE 312, ALEXANDRIA, VA. 22314) AND WTCA (WOOD TRUSS COUNCIL OF AMERICA, 6300 ENTERPRISE LANE, MADISON, WI 53719) FOR SAFETY PRACTICES PRIOR TO PERFORMING THESE FUNCTIONS. UNLESS OTHERWISE INDICATED TOP CHORD SHALL HAVE PROPERLY ATTACHED STRUCTURAL PANELS AND BOTTOM CHORD SHALL HAVE A PROPERLY ATTACHED RIGID CEILING.

IMPORTANTFURNISH A COPY OF THIS DESIGN TO THE INSTALLATION CONTRACTOR. ITW BCG, INC. SHALL NOT BE RESPONSIBLE FOR ANY DEVIATION FROM THIS DESIGN; ANY FAILURE TO BUILD THE TRUSS IN COMFORMANCE WITH TPI; OR FABRICATING, HANDLING, SHIPPING, INSTALLING & BRACING OF TRUSSES.
DESIGN CONFORMS WITH APPLICABLE PROVISIONS OF NDS (NATIONAL DESIGN SPEC. BY AF&PA) AND TPI. ITW BCG CONNECTOR PLATES ARE MADE OF 20/18/16GA (W,H/SS/K) ASTM A653 GRADE 40/60 (W, K/H,SS) GALV. STEEL. APPLY PLATES TO EACH FACE OF TRUSS AND, UNLESS OTHERWISE LOCATED ON THIS DESIGN, POSITION PER DRAWINGS 160A-Z. ANY INSPECTION OF PLATES FOLLOWED BY (1) SHALL BE PER ANNEX A3 OF TPI1-2002 SEC.3. A SEAL ON THIS DRAWING INDICATES ACCEPTANCE OF PROFESSIONAL ENGINEERING RESPONSIBILITY SOLELY FOR THE TRUSS COMPONENT DESIGN SHOWN. THE SUITABILITY AND USE OF THIS COMPONENT FOR ANY BUILDING IS THE RESPONSIBILITY OF THE BUILDING DESIGNER PER ANSI/TPI 1 SEC. 2.

Building Components Group Inc.
Haines City, FL 33844
FL Certificate of Authorization # 0 278

JAMES F. COLLINS JR. LICENSE No. 52212 STATE OF FLORIDA PROFESSIONAL ENGINEER
Jan 31 08

TC LL	20.0 PSF	REF	R8228- 76976
TC DL	10.0 PSF	DATE	01/31/08
BC DL	10.0 PSF	DRW	HCUSR8228 08031090
BC LL	0.0 PSF	HC-ENG	EC/WHK
TOT.LD.	40.0 PSF	SEQN-	43971
DUR.FAC.	1.25	FROM	JP
SPACING	24.0"	JREF-	1TEL8228Z03

Top chord 2x4 SP #2 Dense
Bot chord 2x4 SP #2 Dense
Webs 2x4 SP #3

Roof overhang supports 2.00 psf soffit load.

In lieu of structural panels use purlins to brace all flat TC @ 24" OC.

110 mph wind, 15.00 ft mean hgt, ASCE 7-02, CLOSED bldg, not located within 4.50 ft from roof edge, CAT II, EXP B, wind TC DL=5.0 psf, wind BC DL=5.0 psf. Iw=1.00 GCpi(+/-)=0.18

Wind reactions based on MWFRS pressures.

Right end vertical not exposed to wind pressure.

Deflection meets L/240 live and L/180 total load. Creep increase factor for dead load is 1.50.

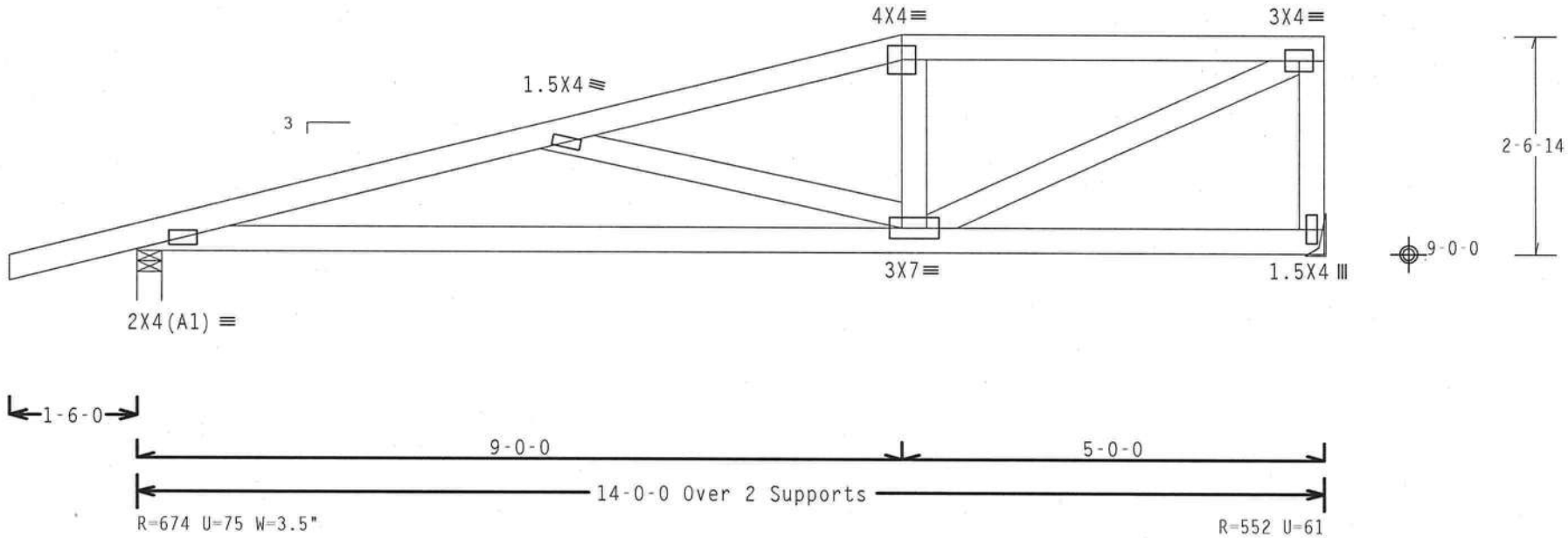

Design Crit: TPI-2002(STD)/FBC
Cq/RT=1.00(1.25)/0(0)

PLT TYP. Wave | 7.24.1230.16 | QTY:1 | FL/-/4/-/E/-/- | Scale =.5"/Ft.

TW
Building Components Group Inc.
Haines City, FL 33844
FL Certificate of Authorization # 0 278

WARNING TRUSSES REQUIRE EXTREME CARE IN FABRICATION, HANDLING, SHIPPING, INSTALLING AND BRACING. REFER TO BCSI (BUILDING COMPONENT SAFETY INFORMATION), PUBLISHED BY TPI (TRUSS PLATE INSTITUTE, 218 NORTH LEE STREET, SUITE 312, ALEXANDRIA, VA, 22314) AND WTCA (WOOD TRUSS COUNCIL OF AMERICA, 6300 ENTERPRISE LANE, MADISON, WI 53719) FOR SAFETY PRACTICES PRIOR TO PERFORMING THESE FUNCTIONS. UNLESS OTHERWISE INDICATED TOP CHORD SHALL HAVE PROPERLY ATTACHED STRUCTURAL PANELS AND BOTTOM CHORD SHALL HAVE A PROPERLY ATTACHED RIGID CEILING.

IMPORTANT FURNISH A COPY OF THIS DESIGN TO THE INSTALLATION CONTRACTOR. ITW BCG, INC. SHALL NOT BE RESPONSIBLE FOR ANY DEVIATION FROM THIS DESIGN; ANY FAILURE TO BUILD THE TRUSS IN COMFORMANCE WITH TPI; OR FABRICATING, HANDLING, SHIPPING, INSTALLING & BRACING OF TRUSSES. DESIGN CONFORMS WITH APPLICABLE PROVISIONS OF NDS (NATIONAL DESIGN SPEC. BY AF&PA) AND TPI. ITW BCG CONNECTOR PLATES ARE MADE OF 20/18/16GA (W,H/SS/K) ASTM A653 GRADE 40/60 (W, K/H,SS) GALV. STEEL. APPLY PLATES TO EACH FACE OF TRUSS AND, UNLESS OTHERWISE LOCATED ON THIS DESIGN, POSITION PER DRAWINGS 160A-2. ANY INSPECTION OF PLATES FOLLOWED BY (1) SHALL BE PER ANNEX A3 OF TPI1-2002 SEC.3. A SEAL ON THIS DRAWING INDICATES ACCEPTANCE OF PROFESSIONAL ENGINEERING RESPONSIBILITY SOLELY FOR THE TRUSS COMPONENT DESIGN SHOWN. THE SUITABILITY AND USE OF THIS COMPONENT FOR ANY BUILDING IS THE RESPONSIBILITY OF THE BUILDING DESIGNER PER ANSI/TPI 1 SEC. 2.

JAMES F. COLLINS, JR. LICENSED No. 52212 STATE OF FLORIDA PROFESSIONAL ENGINEER
Jan

TC LL	20.0 PSF	REF	R8228- 76977
TC DL	10.0 PSF	DATE	01/31/08
BC DL	10.0 PSF	DRW	HCUSR8228 08031091
BC LL	0.0 PSF	HC-ENG	EC/WHK *
TOT.LD.	40.0 PSF	SEQN-	43821
DUR.FAC.	1.25	FROM	JP
SPACING	24.0"	JREF-	1TEL8228Z03

(dear--OWNER BUILDER deardorf -- , ** - T3)

Top chord 2x4 SP #2 Dense
Bot chord 2x4 SP #2 Dense
Webs 2x4 SP #3

Roof overhang supports 2.00 psf soffit load.

THE BUILDING DESIGNER IS RESPONSIBLE FOR THE DESIGN OF THE ROOF AND CEILING DIAPHRAGMS, GABLE END SHEAR WALLS, AND SUPPORTING SHEAR WALLS. SHEAR WALLS MUST PROVIDE CONTINUOUS LATERAL RESTRAINT TO THE GABLE END. ALL CONNECTIONS TO BE DESIGNED BY THE BUILDING DESIGNER.

110 mph wind, 15.00 ft mean hgt, ASCE 7-02, CLOSED bldg, Located anywhere in roof, CAT II, EXP B, wind TC DL=5.0 psf, wind BC DL=5.0 psf. Iw=1.00 GCpi(+/-)=0.18

Wind reactions based on MWFRS pressures.

See DWGS A11015EE0207 & GBLLETIN0207 for more requirements.

Deflection meets L/240 live and L/180 total load. Creep increase factor for dead load is 1.50.

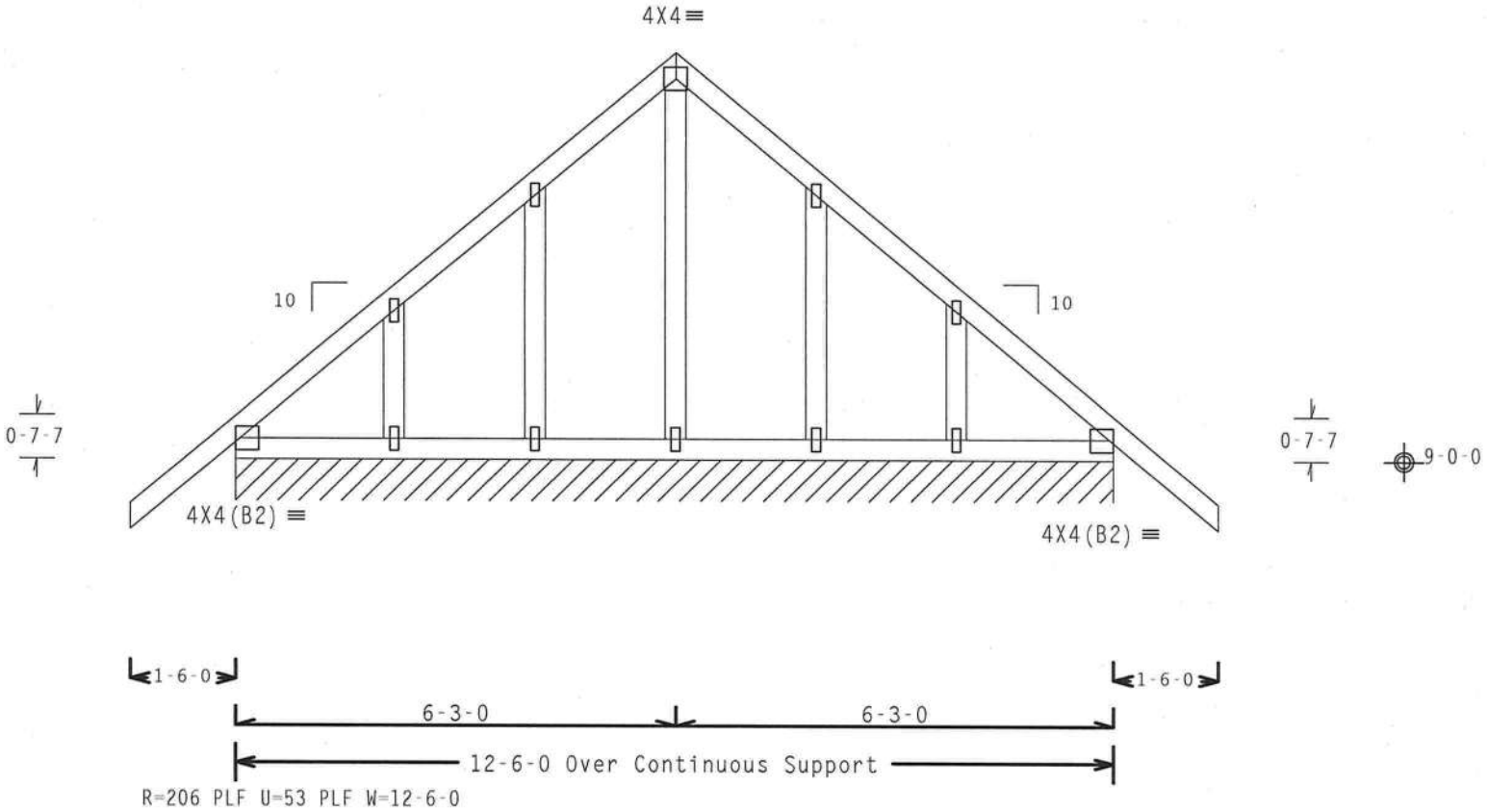

Note: All Plates Are 1.5X4 Except As Shown.

Design Crit: TPI-2002(STD)/FBC

PLT TYP. Wave Cq/RT=1.00(1.25)/0(0) 7.24.1230 QTY:1 FL/-/4/-/E/-/- Scale =.375"/Ft.

TW Building Components Group Inc.

Haines City, FL 33844
FL Certificate of Authorization # 0278

WARNING TRUSSES REQUIRE EXTREME CARE IN FABRICATION, HANDLING, SHIPPING, INSTALLING AND BRACING. REFER TO BCSI (BUILDING COMPONENT SAFETY INFORMATION), PUBLISHED BY TPI (TRUSS PLATE INSTITUTE, 218 NORTH LEE STREET, SUITE 312, ALEXANDRIA, VA, 22314) AND WTCA (WOOD TRUSS COUNCIL OF AMERICA, 6300 ENTERPRISE LANE, MADISON, WI 53719) FOR SAFETY PRACTICES PRIOR TO PERFORMING THESE FUNCTIONS. UNLESS OTHERWISE INDICATED TOP CHORD SHALL HAVE PROPERLY ATTACHED STRUCTURAL PANELS AND BOTTOM CHORD SHALL HAVE A PROPERLY ATTACHED RIGID CEILING.

IMPORTANT FURNISH A COPY OF THIS DESIGN TO THE INSTALLATION CONTRACTOR. ITW BCG, INC. SHALL NOT BE RESPONSIBLE FOR ANY DEVIATION FROM THIS DESIGN; ANY FAILURE TO BUILD THE TRUSS IN COMFORMANCE WITH TPI; OR FABRICATING, HANDLING, SHIPPING, INSTALLING & BRACING OF TRUSSES. DESIGN CONFORMS WITH APPLICABLE PROVISIONS OF NDS (NATIONAL DESIGN SPEC. BY AF&PA) AND TPI. ITW BCG CONNECTOR PLATES ARE MADE OF 20/18/16GA (W,H/SS/K) ASTM A653 GRADE 40/60 (W, K/H,SS) GALV. STEEL. APPLY PLATES TO EACH FACE OF TRUSS AND, UNLESS OTHERWISE LOCATED ON THIS DESIGN, POSITION PER DRAWINGS 160A-Z. ANY INSPECTION OF PLATES FOLLOWED BY (1) SHALL BE PER ANNEX A3 OF TPI1-2002 SEC.3. A SEAL ON THIS DRAWING INDICATES ACCEPTANCE OF PROFESSIONAL ENGINEERING RESPONSIBILITY SOLELY FOR THE TRUSS COMPONENT DESIGN SHOWN. THE SUITABILITY AND USE OF THIS COMPONENT FOR ANY BUILDING IS THE RESPONSIBILITY OF THE BUILDING DESIGNER PER ANSI/TPI 1 SEC. 2.

JAMES F. COLLINS JR. LICENSE No. 52212 STATE OF FLORIDA PROFESSIONAL ENGINEER

Jan 31 '08

TC LL	20.0 PSF	REF R8228- 76978
TC DL	10.0 PSF	DATE 01/31/08
BC DL	10.0 PSF	DRW HCUSR8228 08031092
BC LL	0.0 PSF	HC-ENG EC/WHK *
TOT.LD.	40.0 PSF	SEQN- 43777
DUR.FAC.	1.25	FROM JP
SPACING	24.0"	JREF- 1TEL8228Z03

(dear--OWNER BUILDER deardorf -- , ** - T30)

Top chord 2x4 SP #2 Dense
Bot chord 2x4 SP #2 Dense
Webs 2x4 SP #3

Roof overhang supports 2.00 psf soffit load.

Deflection meets L/240 live and L/180 total load. Creep increase factor for dead load is 1.50.

110 mph wind, 15.00 ft mean hgt, ASCE 7-02, CLOSED bldg, Located anywhere in roof, CAT II, EXP B, wind TC DL=5.0 psf, wind BC DL=5.0 psf. Iw=1.00 GCpi(+/-)=0.18

Wind reactions based on MWFRS pressures.

Right end vertical not exposed to wind pressure.

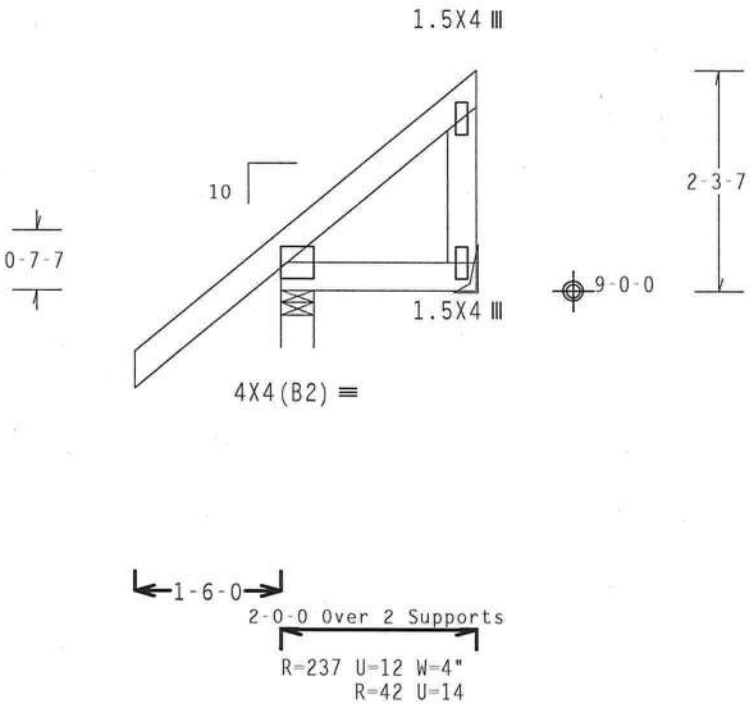

Design Crit: TPI-2002(STD)/FBC
Cq/RT=1.00(1.25)/0(0)

PLT TYP. Wave 7.24.1230.16 QTY:1 FL/-/4/-/E/-/- Scale =.5"/Ft.

Building Components Group Inc.

Haines City, FL 33844
FL Certificate of Authorization # 0 278

WARNINGRUSSES REQUIRE EXTREME CARE IN FABRICATION, HANDLING, SHIPPING, INSTALLING AND BRACING. REFER TO BCSI (BUILDING COMPONENT SAFETY INFORMATION), PUBLISHED BY TPI (TRUSS PLATE INSTITUTE, 218 NORTH LEE STREET, SUITE 312, ALEXANDRIA, VA. 22314) AND WTCA (WOOD TRUSS COUNCIL OF AMERICA, 6300 ENTERPRISE LANE, MADISON, WI 53719) FOR SAFETY PRACTICES PRIOR TO PERFORMING THESE FUNCTIONS. UNLESS OTHERWISE INDICATED TOP CHORD SHALL HAVE PROPERLY ATTACHED STRUCTURAL PANELS AND BOTTOM CHORD SHALL HAVE A PROPERLY ATTACHED RIGID CEILING.

IMPORTANTFURNISH A COPY OF THIS DESIGN TO THE INSTALLATION CONTRACTOR. ITW BCG, INC. SHALL NOT BE RESPONSIBLE FOR ANY DEVIATION FROM THIS DESIGN; ANY FAILURE TO BUILD THE TRUSS IN COMFORMANCE WITH TPI; OR FABRICATING, HANDLING, SHIPPING, INSTALLING & BRACING OF TRUSSES.
DESIGN CONFORMS WITH APPLICABLE PROVISIONS OF NDS (NATIONAL DESIGN SPEC. BY AF&PA) AND TPI. ITW BCG CONNECTOR PLATES ARE MADE OF 20/18/16GA (W.H/SS/K) ASTM A653 GRADE 40/60 (W. K/H.SS) GALV. STEEL. APPLY PLATES TO EACH FACE OF TRUSS AND, UNLESS OTHERWISE LOCATED ON THIS DESIGN, POSITION PER DRAWINGS 160A-Z. ANY INSPECTION OF PLATES FOLLOWED BY (1) SHALL BE PER ANNEX A3 OF TPI1-2002 SEC.3. A SEAL ON THIS DRAWING INDICATES ACCEPTANCE OF PROFESSIONAL ENGINEERING RESPONSIBILITY SOLELY FOR THE TRUSS COMPONENT DESIGN SHOWN. THE SUITABILITY AND USE OF THIS COMPONENT FOR ANY BUILDING IS THE RESPONSIBILITY OF THE BUILDING DESIGNER PER ANSI/TPI 1 SEC. 2.

JAMES F. COLLINS, JR. LICENSE No. 52212 STATE OF FLORIDA PROFESSIONAL ENGINEER

Jan 31 2008

TC LL	20.0 PSF	REF	R8228- 76979
TC DL	10.0 PSF	DATE	01/31/08
BC DL	10.0 PSF	DRW	HCUSR8228 08031093
BC LL	0.0 PSF	HC-ENG	EC/WHK *
TOT.LD.	40.0 PSF	SEQN-	43811
DUR.FAC.	1.25	FROM	JP
SPACING	24.0"	JREF-	1TEL8228Z03

(dear--OWNER BUILDER deardorf -- , ** - T31)

Top chord 2x4 SP #2 Dense
Bot chord 2x4 SP #2 Dense
Webs 2x4 SP #3

Roof overhang supports 2.00 psf soffit load.

In lieu of structural panels use purlins to brace all flat TC @ 24" OC.

110 mph wind, 15.00 ft mean hgt, ASCE 7-02, CLOSED bldg, not located within 4.50 ft from roof edge, CAT II, EXP B, wind TC DL=5.0 psf, wind BC DL=5.0 psf. Iw=1.00 GCpi(+/-)=0.18

Wind reactions based on MWFRS pressures.

Right end vertical not exposed to wind pressure.

Deflection meets L/240 live and L/180 total load. Creep increase factor for dead load is 1.50.

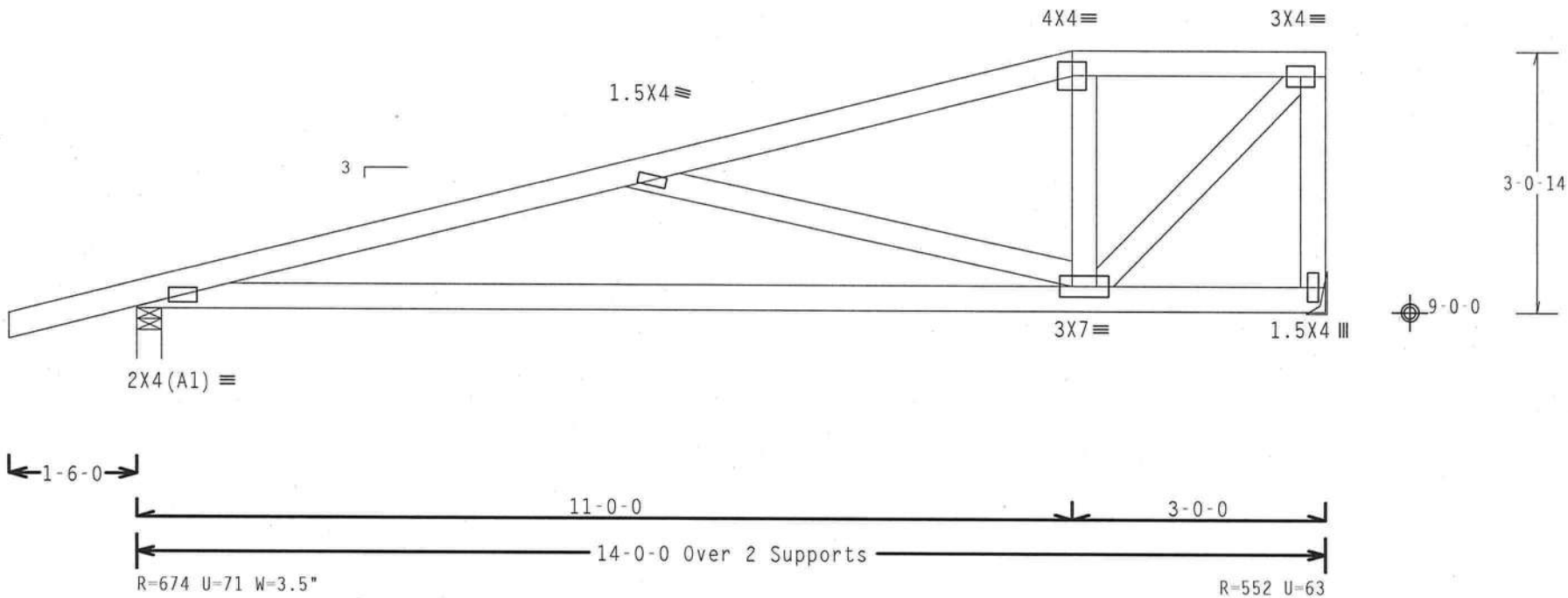

Design Crit: TPI-2002(STD)/FBC
Cq/RT=1.00(1.25)/0(0)

PLT TYP. Wave | 7.24.1230.16 | QTY:1 | FL/-/4/-/E/-/- | Scale =.5"/Ft.

Building Components Group Inc.

Haines City, FL 33844
FL Certificate of Authorization # 0 278

WARNINGTRUSSES REQUIRE EXTREME CARE IN FABRICATION, HANDLING, SHIPPING, INSTALLING AND BRACING. REFER TO BCSI (BUILDING COMPONENT SAFETY INFORMATION), PUBLISHED BY TPI (TRUSS PLATE INSTITUTE, 218 NORTH LEE STREET, SUITE 312, ALEXANDRIA, VA. 22314) AND WICA (WOOD TRUSS COUNCIL OF AMERICA, 6300 ENTERPRISE LANE, MADISON, WI 53719) FOR SAFETY PRACTICES PRIOR TO PERFORMING THESE FUNCTIONS. UNLESS OTHERWISE INDICATED TOP CHORD SHALL HAVE PROPERLY ATTACHED STRUCTURAL PANELS AND BOTTOM CHORD SHALL HAVE A PROPERLY ATTACHED RIGID CEILING.

IMPORTANTFURNISH A COPY OF THIS DESIGN TO THE INSTALLATION CONTRACTOR. ITW BCG, INC. SHALL NOT BE RESPONSIBLE FOR ANY DEVIATION FROM THIS DESIGN; ANY FAILURE TO BUILD THE TRUSS IN CONFORMANCE WITH TPI; OR FABRICATING, HANDLING, SHIPPING, INSTALLING & BRACING OF TRUSSES.
DESIGN CONFORMS WITH APPLICABLE PROVISIONS OF NDS (NATIONAL DESIGN SPEC. BY AF&PA) AND TPI. ITW BCG CONNECTOR PLATES ARE MADE OF 20/18/16GA (W,H/SS/K) ASTM A653 GRADE 40/60 (W, K/H,SS) GALV. STEEL. APPLY PLATES TO EACH FACE OF TRUSS AND, UNLESS OTHERWISE LOCATED ON THIS DESIGN, POSITION PER DRAWINGS 160A-Z. ANY INSPECTION OF PLATES FOLLOWED BY (1) SHALL BE PER ANNEX A3 OF TPI1-2002 SEC.3. A SEAL ON THIS DRAWING INDICATES ACCEPTANCE OF PROFESSIONAL ENGINEERING RESPONSIBILITY SOLELY FOR THE TRUSS COMPONENT DESIGN SHOWN. THE SUITABILITY AND USE OF THIS COMPONENT FOR ANY BUILDING IS THE RESPONSIBILITY OF THE BUILDING DESIGNER PER ANSI/TPI 1 SEC. 2.

JAMES F. COLLINS JR. LICENSED No 52214 STATE OF FLORIDA PROFESSIONAL ENGINEER

Jan

TC LL	20.0 PSF	REF R8228- 76980
TC DL	10.0 PSF	DATE 01/31/08
BC DL	10.0 PSF	DRW HCUSR8228 08031094
BC LL	0.0 PSF	HC-ENG EC/WHK *
TOT.LD.	40.0 PSF	SEQN- 43823
DUR.FAC.	1.25	FROM JP
SPACING	24.0"	JREF- 1TEL8228Z03

(dear--OWNER BUILDER deardorf -- , ** - T32)

Top chord 2x4 SP #2 Dense
Bot chord 2x4 SP #2 Dense
Webs 2x4 SP #3

Roof overhang supports 2.00 psf soffit load.

In lieu of structural panels use purlins to brace all flat TC @ 24" OC.

110 mph wind, 15.00 ft mean hgt, ASCE 7-02, CLOSED bldg, not located within 4.50 ft from roof edge, CAT II, EXP B, wind TC DL=5.0 psf, wind BC DL=5.0 psf. Iw=1.00 GCpi(+/-)=0.18

Wind reactions based on MWFRS pressures.

Right end vertical not exposed to wind pressure.

Deflection meets L/240 live and L/180 total load. Creep increase factor for dead load is 1.50.

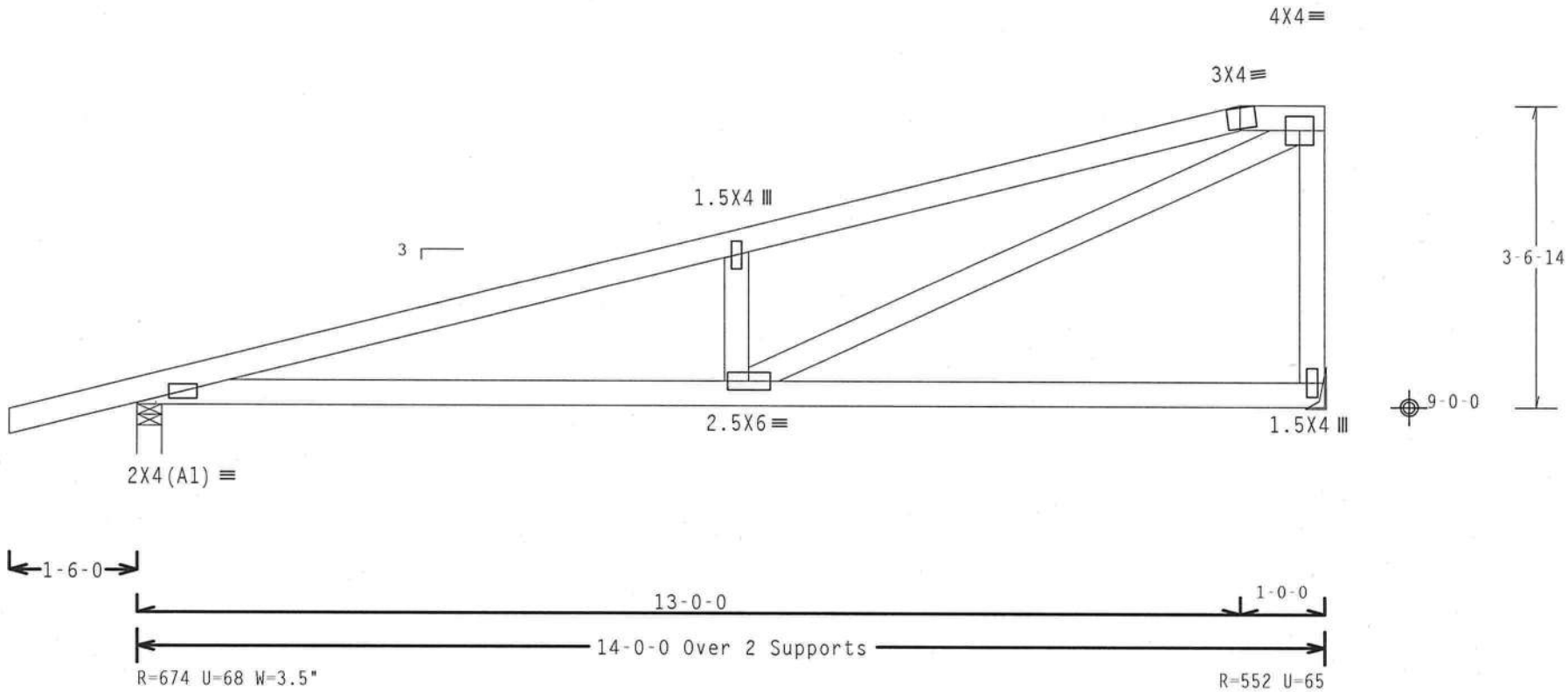

Design Crit: TPI-2002(STD)/FBC

PLT TYP. Wave Cq/RT=1.00(1.25)/0(0) 7.24.1230.16 QTY:1 FL/-/4/-/E/-/- Scale =.5"/Ft.

Building Components Group Inc.

Haines City, FL 33844
FL Certificate of Authorization # 0 278

WARNINGTRUSSES REQUIRE EXTREME CARE IN FABRICATION, HANDLING, SHIPPING, INSTALLING AND BRACING. REFER TO BCSI (BUILDING COMPONENT SAFETY INFORMATION), PUBLISHED BY TPI (TRUSS PLATE INSTITUTE, 218 NORTH LEE STREET, SUITE 312, ALEXANDRIA, VA, 22314) AND WTCA (WOOD TRUSS COUNCIL OF AMERICA, 6300 ENTERPRISE LANE, MADISON, WI 53719) FOR SAFETY PRACTICES PRIOR TO PERFORMING THESE FUNCTIONS. UNLESS OTHERWISE INDICATED TOP CHORD SHALL HAVE PROPERLY ATTACHED STRUCTURAL PANELS AND BOTTOM CHORD SHALL HAVE A PROPERLY ATTACHED RIGID CEILING.

IMPORTANTFURNISH A COPY OF THIS DESIGN TO THE INSTALLATION CONTRACTOR. ITW BCG, INC. SHALL NOT BE RESPONSIBLE FOR ANY DEVIATION FROM THIS DESIGN; ANY FAILURE TO BUILD THE TRUSS IN COMFORMANCE WITH TPI; OR FABRICATING, HANDLING, SHIPPING, INSTALLING & BRACING OF TRUSSES. DESIGN CONFORMS WITH APPLICABLE PROVISIONS OF NDS (NATIONAL DESIGN SPEC, BY AF&PA) AND TPI. ITW BCG CONNECTOR PLATES ARE MADE OF 20/18/16GA (W,H/SS/K) ASTM A653 GRADE 40/60 (W, K/H,SS) GALV. STEEL. APPLY PLATES TO EACH FACE OF TRUSS AND, UNLESS OTHERWISE LOCATED ON THIS DESIGN, POSITION PER DRAWINGS 160A-Z. ANY INSPECTION OF PLATES FOLLOWED BY (1) SHALL BE PER ANNEX A3 OF TPI1-2002 SEC.3. A SEAL ON THIS DRAWING INDICATES ACCEPTANCE OF PROFESSIONAL ENGINEERING RESPONSIBILITY SOLELY FOR THE TRUSS COMPONENT DESIGN SHOWN. THE SUITABILITY AND USE OF THIS COMPONENT FOR ANY BUILDING IS THE RESPONSIBILITY OF THE BUILDING DESIGNER PER ANSI/TPI 1 SEC. 2.

JAMES F. COLLINS JR. LICENSE No 52212 STATE OF FLORIDA PROFESSIONAL ENGINEER

Jan

TC LL	20.0 PSF	REF	R8228- 76981
TC DL	10.0 PSF	DATE	01/31/08
BC DL	10.0 PSF	DRW	HCUSR8228 08031095
BC LL	0.0 PSF	HC-ENG	EC/WHK *
TOT.LD.	40.0 PSF	SEQN-	43825
DUR.FAC.	1.25	FROM	JP
SPACING	24.0"	JREF-	1TEL8228Z03

(dear--OWNER BUILDER deardorf -- , ** - T33)

Top chord 2x4 SP #2 Dense
Bot chord 2x4 SP #2 Dense
Webs 2x4 SP #3

Roof overhang supports 2.00 psf soffit load.

Deflection meets L/240 live and L/180 total load. Creep increase factor for dead load is 1.50.

110 mph wind, 15.00 ft mean hgt, ASCE 7-02, CLOSED bldg, not located within 4.50 ft from roof edge, CAT II, EXP B, wind TC DL=5.0 psf, wind BC DL=5.0 psf. Iw=1.00 GCpi(+/-)=0.18

Wind reactions based on MWFRS pressures.

Right end vertical not exposed to wind pressure.

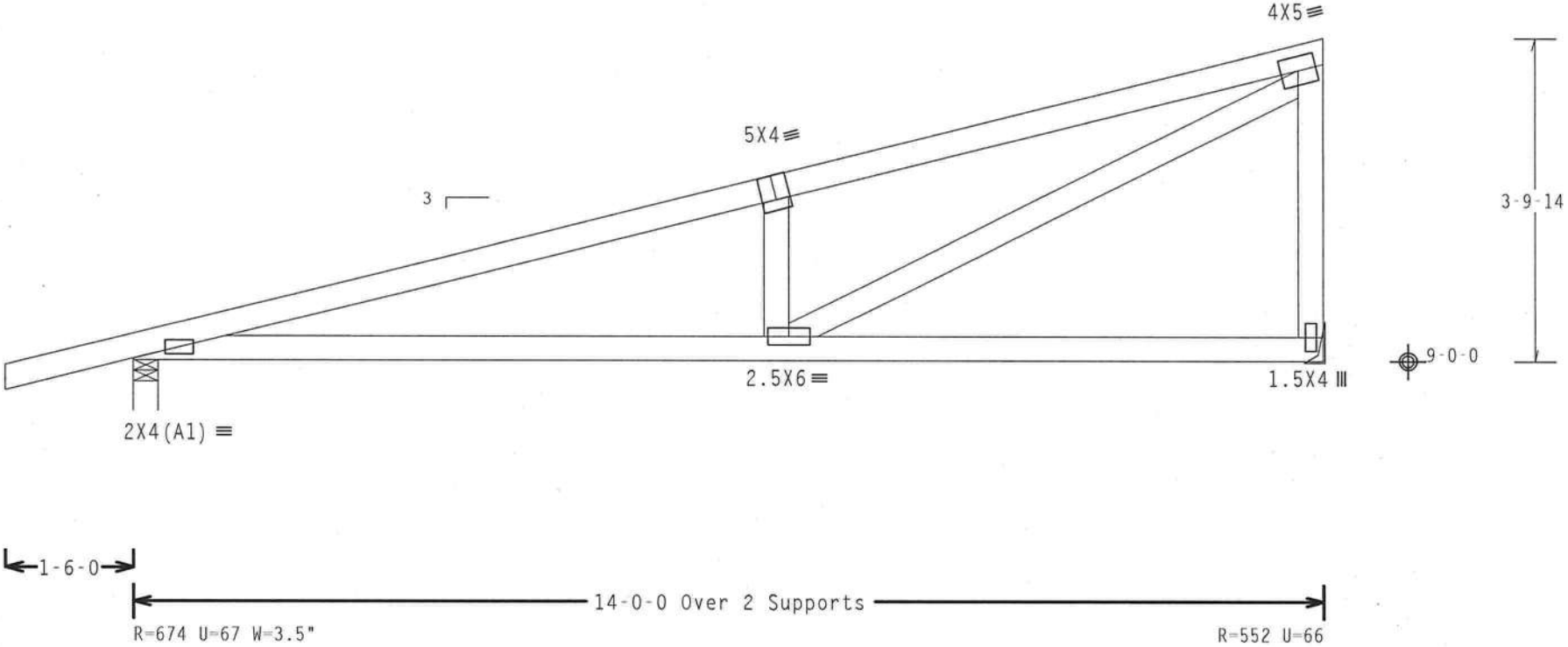

Design Crit: TPI-2002(STD)/FBC
Cq/RT=1.00(1.25)/0(0) 7.24.1230

PLT TYP. Wave | QTY:1 | FL/-/4/-/E/-/- | Scale =.5"/Ft.

Building Components Group Inc.

Haines City, FL 33844
FL Certificate of Authorization # 0 278

WARNING TRUSSES REQUIRE EXTREME CARE IN FABRICATION, HANDLING, SHIPPING, INSTALLING AND BRACING. REFER TO BCSI (BUILDING COMPONENT SAFETY INFORMATION), PUBLISHED BY TPI (TRUSS PLATE INSTITUTE, 218 NORTH LEE STREET, SUITE 312, ALEXANDRIA, VA, 22314) AND WTCA (WOOD TRUSS COUNCIL OF AMERICA, 6300 ENTERPRISE LANE, MADISON, WI 53719) FOR SAFETY PRACTICES PRIOR TO PERFORMING THESE FUNCTIONS. UNLESS OTHERWISE INDICATED TOP CHORD SHALL HAVE PROPERLY ATTACHED STRUCTURAL PANELS AND BOTTOM CHORD SHALL HAVE A PROPERLY ATTACHED RIGID CEILING.

IMPORTANT FURNISH A COPY OF THIS DESIGN TO THE INSTALLATION CONTRACTOR. ITW BCG, INC. SHALL NOT BE RESPONSIBLE FOR ANY DEVIATION FROM THIS DESIGN; ANY FAILURE TO BUILD THE TRUSS IN COMFORMANCE WITH TPI; OR FABRICATING, HANDLING, SHIPPING, INSTALLING & BRACING OF TRUSSES. DESIGN CONFORMS WITH APPLICABLE PROVISIONS OF NDS (NATIONAL DESIGN SPEC. BY AF&PA) AND TPI. ITW BCG CONNECTOR PLATES ARE MADE OF 20/18/16GA (W,H/SS/K) ASTM A653 GRADE 40/60 (W, K/H,SS) GALV. STEEL. APPLY PLATES TO EACH FACE OF TRUSS AND, UNLESS OTHERWISE LOCATED ON THIS DESIGN, POSITION PER DRAWINGS 160A-Z. ANY INSPECTION OF PLATES FOLLOWED BY (1) SHALL BE PER ANNEX A3 OF TPI1-2002 SEC.3. A SEAL ON THIS DRAWING INDICATES ACCEPTANCE OF PROFESSIONAL ENGINEERING RESPONSIBILITY SOLELY FOR THE TRUSS COMPONENT DESIGN SHOWN. THE SUITABILITY AND USE OF THIS COMPONENT FOR ANY BUILDING IS THE RESPONSIBILITY OF THE BUILDING DESIGNER PER ANSI/TPI 1 SEC. 2.

JAMES F. COLLINS, JR. LICENSE No 52212 STATE OF FLORIDA PROFESSIONAL ENGINEER
Jan 31 08

TC LL	20.0 PSF	REF	R8228- 76982
TC DL	10.0 PSF	DATE	01/31/08
BC DL	10.0 PSF	DRW	HCUSR8228 08031096
BC LL	0.0 PSF	HC-ENG	EC/WHK *
TOT.LD.	40.0 PSF	SEQN-	43827
DUR.FAC.	1.25	FROM	JP
SPACING	24.0"	JREF-	1TEL8228Z03

(dear--OWNER BUILDER deardorf -- , ** - T34)

Top chord 2x4 SP #2 Dense
Bot chord 2x4 SP #2 Dense
Webs 2x4 SP #3

Roof overhang supports 2.00 psf soffit load.

Deflection meets L/240 live and L/180 total load. Creep increase factor for dead load is 1.50.

110 mph wind, 15.00 ft mean hgt, ASCE 7-02, CLOSED bldg, not located within 4.50 ft from roof edge, CAT II, EXP B, wind TC DL=5.0 psf, wind BC DL=5.0 psf. Iw=1.00 GCpi(+/-)=0.18

Wind reactions based on MWFRS pressures.

Right end vertical not exposed to wind pressure.

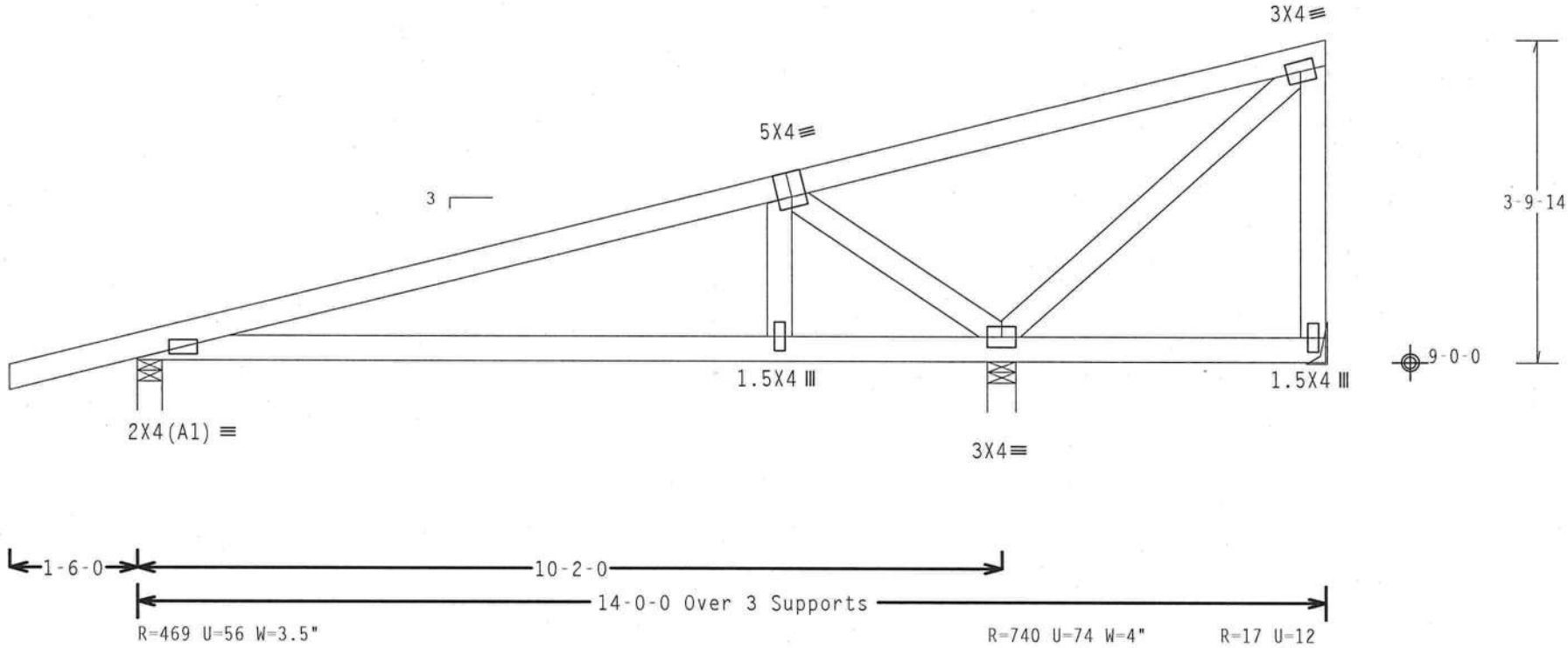

Design Crit: TPI-2002(STD)/FBC
Cq/RT=1.00(1.25)/0(0)

PLT TYP. Wave | 7.24.1230.16 | QTY:1 | FL/-/4/-/E/-/- | Scale =.5"/Ft.

Building Components Group Inc.

Haines City, FL 33844
FL Certificate of Authorization # 0 278

WARNING TRUSSES REQUIRE EXTREME CARE IN FABRICATION, HANDLING, SHIPPING, INSTALLING AND BRACING. REFER TO BCSI (BUILDING COMPONENT SAFETY INFORMATION), PUBLISHED BY TPI (TRUSS PLATE INSTITUTE, 218 NORTH LEE STREET, SUITE 312, ALEXANDRIA, VA, 22314) AND WTCA (WOOD TRUSS COUNCIL OF AMERICA, 6300 ENTERPRISE LANE, MADISON, WI 53719) FOR SAFETY PRACTICES PRIOR TO PERFORMING THESE FUNCTIONS. UNLESS OTHERWISE INDICATED TOP CHORD SHALL HAVE PROPERLY ATTACHED STRUCTURAL PANELS AND BOTTOM CHORD SHALL HAVE A PROPERLY ATTACHED RIGID CEILING.

IMPORTANT FURNISH A COPY OF THIS DESIGN TO THE INSTALLATION CONTRACTOR. ITW BCG, INC. SHALL NOT BE RESPONSIBLE FOR ANY DEVIATION FROM THIS DESIGN; ANY FAILURE TO BUILD THE TRUSS IN COMFORMANCE WITH TPI; OR FABRICATING, HANDLING, SHIPPING, INSTALLING & BRACING OF TRUSSES. DESIGN CONFORMS WITH APPLICABLE PROVISIONS OF NDS (NATIONAL DESIGN SPEC. BY AF&PA) AND TPI. ITW BCG CONNECTOR PLATES ARE MADE OF 20/18/16GA (W,H/SS/K) ASTM A653 GRADE 40/60 (W, K/H,SS) GALV. STEEL. APPLY PLATES TO EACH FACE OF TRUSS AND, UNLESS OTHERWISE LOCATED ON THIS DESIGN, POSITION PER DRAWINGS 160A-Z. ANY INSPECTION OF PLATES FOLLOWED BY (1) SHALL BE PER ANNEX A3 OF TPI1-2002 SEC.3. A SEAL ON THIS DRAWING INDICATES ACCEPTANCE OF PROFESSIONAL ENGINEERING RESPONSIBILITY SOLELY FOR THE TRUSS COMPONENT DESIGN SHOWN. THE SUITABILITY AND USE OF THIS COMPONENT FOR ANY BUILDING IS THE RESPONSIBILITY OF THE BUILDING DESIGNER PER ANSI/TPI 1 SEC. 2.

JAMES F. COLLINS, JR. LICENSE No. 52212 STATE OF FLORIDA PROFESSIONAL ENGINEER

Jan 31, 2008

TC LL	20.0 PSF	REF R8228- 76983
TC DL	10.0 PSF	DATE 01/31/08
BC DL	10.0 PSF	DRW HCUSR8228 08031097
BC LL	0.0 PSF	HC-ENG EC/WHK
TOT.LD.	40.0 PSF	SEQN- 43829
DUR.FAC.	1.25	FROM JP
SPACING	24.0"	JREF- 1TEL8228Z03

Top chord 2x4 SP #2 Dense
Bot chord 2x4 SP #2 Dense
Webs 2x4 SP #3

Roof overhang supports 2.00 psf soffit load.

Deflection meets L/240 live and L/180 total load. Creep increase factor for dead load is 1.50.

110 mph wind, 15.00 ft mean hgt, ASCE 7-02, CLOSED bldg, Located anywhere in roof, CAT II, EXP B, wind TC DL=5.0 psf, wind BC DL=5.0 psf. Iw=1.00 GCpi(+/-)=0.18

Wind reactions based on MWFRS pressures.

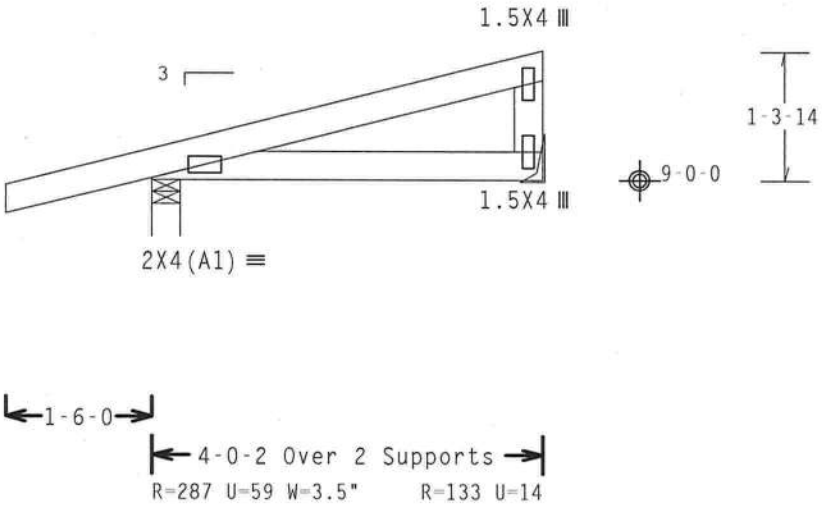

Design Crit: TPI-2002(STD)/FBC
Cq/RT=1.00(1.25)/0(0)

PLT TYP. Wave | 7.24.1230.16 | QTY:1 | FL/-/4/-/E/-/- | Scale =.5"/Ft.

Building Components Group Inc.

Haines City, FL 33844
FL Certificate of Authorization # 0 278

WARNINGTRUSSES REQUIRE EXTREME CARE IN FABRICATION, HANDLING, SHIPPING, INSTALLING AND BRACING. REFER TO BCSI (BUILDING COMPONENT SAFETY INFORMATION), PUBLISHED BY TPI (TRUSS PLATE INSTITUTE, 218 NORTH LEE STREET, SUITE 312, ALEXANDRIA, VA, 22314) AND WTCA (WOOD TRUSS COUNCIL OF AMERICA, 6300 ENTERPRISE LANE, MADISON, WI 53719) FOR SAFETY PRACTICES PRIOR TO PERFORMING THESE FUNCTIONS. UNLESS OTHERWISE INDICATED TOP CHORD SHALL HAVE PROPERLY ATTACHED STRUCTURAL PANELS AND BOTTOM CHORD SHALL HAVE A PROPERLY ATTACHED RIGID CEILING.

IMPORTANTFURNISH A COPY OF THIS DESIGN TO THE INSTALLATION CONTRACTOR. ITW BCG, INC. SHALL NOT BE RESPONSIBLE FOR ANY DEVIATION FROM THIS DESIGN; ANY FAILURE TO BUILD THE TRUSS IN COMFORMANCE WITH TPI; OR FABRICATING, HANDLING, SHIPPING, INSTALLING & BRACING OF TRUSSES.
DESIGN CONFORMS WITH APPLICABLE PROVISIONS OF NDS (NATIONAL DESIGN SPEC. BY AF&PA) AND TPI. ITW BCG CONNECTOR PLATES ARE MADE OF 20/18/16GA (W,H/SS/K) ASTM A653 GRADE 40/60 (W, K/H,SS) GALV. STEEL. APPLY PLATES TO EACH FACE OF TRUSS AND, UNLESS OTHERWISE LOCATED ON THIS DESIGN, POSITION PER DRAWINGS 160A-Z. ANY INSPECTION OF PLATES FOLLOWED BY (1) SHALL BE PER ANNEX A3 OF TPI1-2002 SEC.3. A SEAL ON THIS DRAWING INDICATES ACCEPTANCE OF PROFESSIONAL ENGINEERING RESPONSIBILITY SOLELY FOR THE TRUSS COMPONENT DESIGN SHOWN. THE SUITABILITY AND USE OF THIS COMPONENT FOR ANY BUILDING IS THE RESPONSIBILITY OF THE BUILDING DESIGNER PER ANSI/TPI 1 SEC. 2.

JAMES F. COLLINS, JR. LICENSED No. 22212 STATE OF FLORIDA PROFESSIONAL ENGINEER
Jan 9, 2008

TC LL	20.0 PSF	REF R8228- 76984
TC DL	10.0 PSF	DATE 01/31/08
BC DL	10.0 PSF	DRW HCUSR8228 08031098
BC LL	0.0 PSF	HC-ENG EC/WHK *
TOT.LD.	40.0 PSF	SEQN- 43835
DUR.FAC.	1.25	FROM JP
SPACING	24.0"	JREF- 1TEL8228Z03

(dear--OWNER BUILDER deardorf -- , ** - T36)

THIS DWG PREPARED FROM COMPUTER INPUT (LOADS & DIMENSIONS) SUBMITTED BY TRUSS MFR.

Top chord 2x4 SP #2 Dense
Bot chord 2x4 SP #2 Dense
Webs 2x4 SP #3

Roof overhang supports 2.00 psf soffit load.

Deflection meets L/240 live and L/180 total load. Creep increase factor for dead load is 1.50.

110 mph wind, 15.00 ft mean hgt, ASCE 7-02, CLOSED bldg, not located within 4.50 ft from roof edge, CAT II, EXP B, wind TC DL=5.0 psf, wind BC DL=5.0 psf. Iw=1.00 GCpi(+/-)=0.18

Wind reactions based on MWFRS pressures.

Right end vertical not exposed to wind pressure.

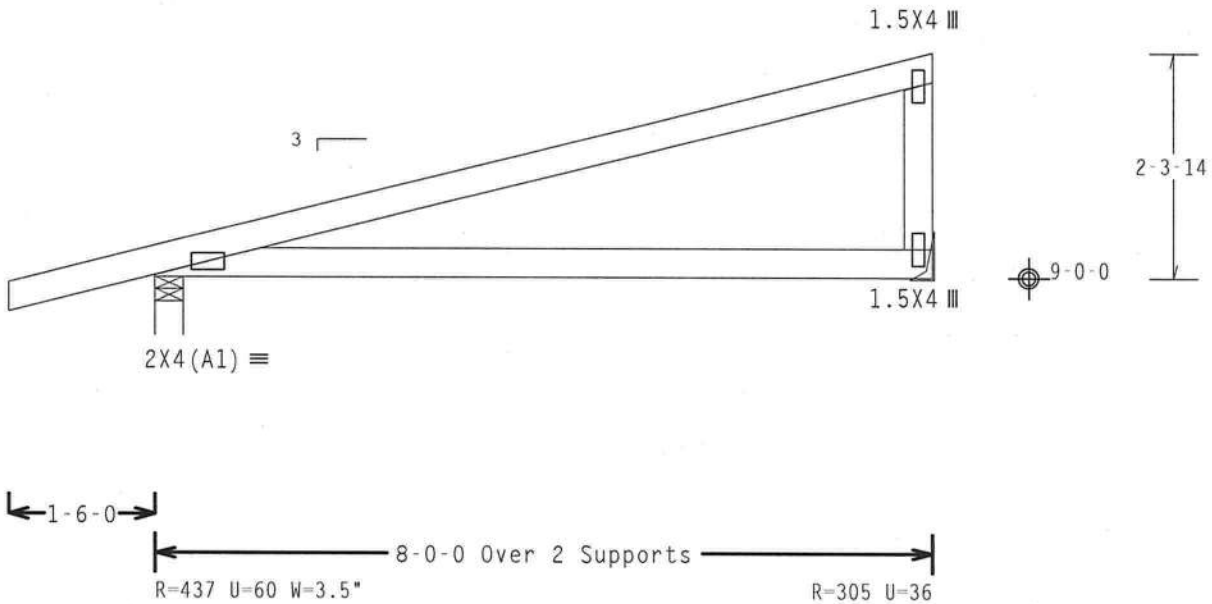

Design Crit: TPI-2002(STD)/FBC
Cq/RT=1.00(1.25)/0(0) 7.24.1230.16

PLT TYP. Wave QTY:1 FL/-/4/-/E/-/- Scale =.5"/Ft.

Building Components Group Inc.

Haines City, FL 33844
FL Certificate of Authorization # 0 278

WARNING TRUSSES REQUIRE EXTREME CARE IN FABRICATION, HANDLING, SHIPPING, INSTALLING AND BRACING. REFER TO BCSI (BUILDING COMPONENT SAFETY INFORMATION), PUBLISHED BY TPI (TRUSS PLATE INSTITUTE, 218 NORTH LEE STREET, SUITE 312, ALEXANDRIA, VA, 22314) AND WTCA (WOOD TRUSS COUNCIL OF AMERICA, 6300 ENTERPRISE LANE, MADISON, WI 53719) FOR SAFETY PRACTICES PRIOR TO PERFORMING THESE FUNCTIONS. UNLESS OTHERWISE INDICATED TOP CHORD SHALL HAVE PROPERLY ATTACHED STRUCTURAL PANELS AND BOTTOM CHORD SHALL HAVE A PROPERLY ATTACHED RIGID CEILING.

IMPORTANT FURNISH A COPY OF THIS DESIGN TO THE INSTALLATION CONTRACTOR. ITW BCG, INC. SHALL NOT BE RESPONSIBLE FOR ANY DEVIATION FROM THIS DESIGN; ANY FAILURE TO BUILD THE TRUSS IN CONFORMANCE WITH TPI; OR FABRICATING, HANDLING, SHIPPING, INSTALLING & BRACING OF TRUSSES. DESIGN CONFORMS WITH APPLICABLE PROVISIONS OF NDS (NATIONAL DESIGN SPEC. BY AF&PA) AND TPI. ITW BCG CONNECTOR PLATES ARE MADE OF 20/18/16GA (W,H/SS/K) ASTM A653 GRADE 40/60 (W, K/H,SS) GALV. STEEL. APPLY PLATES TO EACH FACE OF TRUSS AND, UNLESS OTHERWISE LOCATED ON THIS DESIGN, POSITION PER DRAWINGS 160A-Z. ANY INSPECTION OF PLATES FOLLOWED BY (1) SHALL BE PER ANNEX A3 OF TPI1-2002 SEC.3. A SEAL ON THIS DRAWING INDICATES ACCEPTANCE OF PROFESSIONAL ENGINEERING RESPONSIBILITY SOLELY FOR THE TRUSS COMPONENT DESIGN SHOWN. THE SUITABILITY AND USE OF THIS COMPONENT FOR ANY BUILDING IS THE RESPONSIBILITY OF THE BUILDING DESIGNER PER ANSI/TPI 1 SEC. 2.

JAMES F. COLLINS LICENSE No. 52212 STATE OF FLORIDA PROFESSIONAL ENGINEER

Jan

TC LL	20.0 PSF	REF	R8228- 76985
TC DL	10.0 PSF	DATE	01/31/08
BC DL	10.0 PSF	DRW	HCUSR8228 08031099
BC LL	0.0 PSF	HC-ENG	EC/WHK *
TOT.LD.	40.0 PSF	SEQN-	43831
DUR.FAC.	1.25	FROM	JP
SPACING	24.0"	JREF-	1TEL8228Z03

(dear--OWNER BUILDER deardorf -- , ** - T37)

Top chord 2x4 SP #2 Dense
Bot chord 2x4 SP #2 Dense
Webs 2x4 SP #3

Roof overhang supports 2.00 psf soffit load.

Deflection meets L/240 live and L/180 total load. Creep increase factor for dead load is 1.50.

110 mph wind, 15.00 ft mean hgt, ASCE 7-02, CLOSED bldg, not located within 4.50 ft from roof edge, CAT II, EXP B, wind TC DL=5.0 psf, wind BC DL=5.0 psf. Iw=1.00 GCpi(+/-)=0.18

Wind reactions based on MWFRS pressures.

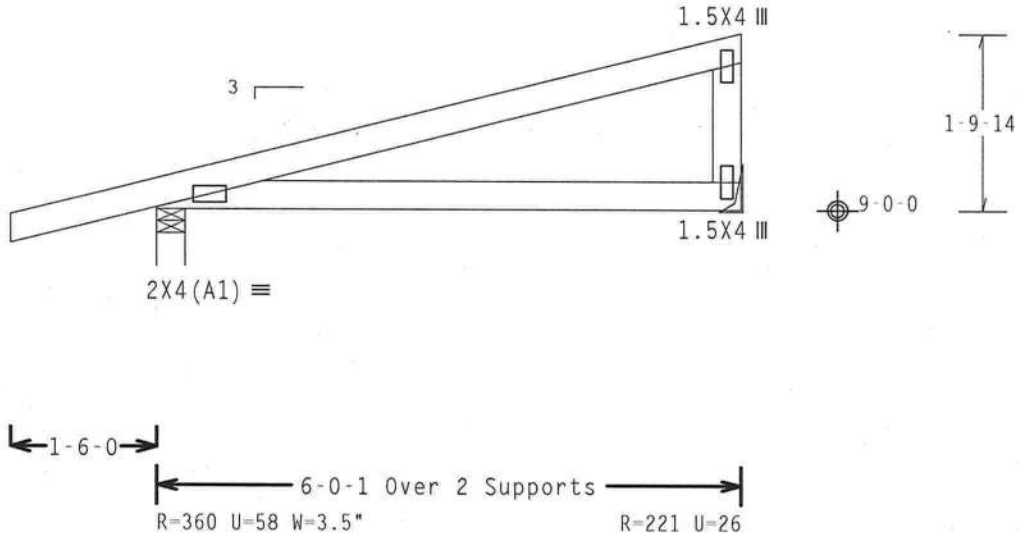

Design Crit: TPI-2002(STD)/FBC
Cq/RT=1.00(1.25)/0(0)

PLT TYP. Wave 7.24.1230 16 QTY:1 FL/-/4/-/E/-/- Scale =.5"/Ft.

Building Components Group Inc.

Haines City, FL 33844
FL Certificate of Authorization # 0 278

WARNING TRUSSES REQUIRE EXTREME CARE IN FABRICATION, HANDLING, SHIPPING, INSTALLING AND BRACING. REFER TO BCSI (BUILDING COMPONENT SAFETY INFORMATION), PUBLISHED BY TPI (TRUSS PLATE INSTITUTE, 218 NORTH LEE STREET, SUITE 312, ALEXANDRIA, VA, 22314) AND WTCA (WOOD TRUSS COUNCIL OF AMERICA, 6300 ENTERPRISE LANE, MADISON, WI 53719) FOR SAFETY PRACTICES PRIOR TO PERFORMING THESE FUNCTIONS. UNLESS OTHERWISE INDICATED TOP CHORD SHALL HAVE PROPERLY ATTACHED STRUCTURAL PANELS AND BOTTOM CHORD SHALL HAVE A PROPERLY ATTACHED RIGID CEILING.

IMPORTANT FURNISH A COPY OF THIS DESIGN TO THE INSTALLATION CONTRACTOR. ITW BCG, INC. SHALL NOT BE RESPONSIBLE FOR ANY DEVIATION FROM THIS DESIGN; ANY FAILURE TO BUILD THE TRUSS IN COMFORMANCE WITH TPI; OR FABRICATING, HANDLING, SHIPPING, INSTALLING & BRACING OF TRUSSES. DESIGN CONFORMS WITH APPLICABLE PROVISIONS OF NDS (NATIONAL DESIGN SPEC. BY AF&PA) AND TPI. ITW BCG CONNECTOR PLATES ARE MADE OF 20/18/16GA (W,H/SS/K) ASTM A653 GRADE 40/60 (W, K/H,SS) GALV. STEEL. APPLY PLATES TO EACH FACE OF TRUSS AND, UNLESS OTHERWISE LOCATED ON THIS DESIGN, POSITION PER DRAWINGS 160A-Z. ANY INSPECTION OF PLATES FOLLOWED BY (1) SHALL BE PER ANNEX A3 OF TPI1-2002 SEC.3. A SEAL ON THIS DRAWING INDICATES ACCEPTANCE OF PROFESSIONAL ENGINEERING RESPONSIBILITY SOLELY FOR THE TRUSS COMPONENT DESIGN SHOWN. THE SUITABILITY AND USE OF THIS COMPONENT FOR ANY BUILDING IS THE RESPONSIBILITY OF THE BUILDING DESIGNER PER ANSI/TPI 1 SEC. 2.

JAMES F. COLLINS JR. LICENSE No. 52212 STATE OF FLORIDA PROFESSIONAL ENGINEER

Jan

TC LL	20.0 PSF	REF	R8228- 76986
TC DL	10.0 PSF	DATE	01/31/08
BC DL	10.0 PSF	DRW	HCUSR8228 08031100
BC LL	0.0 PSF	HC-ENG	EC/WHK *
TOT.LD.	40.0 PSF	SEQN-	43833
DUR.FAC.	1.25	FROM	JP
SPACING	24.0"	JREF-	1TEL8228Z03

(dear--OWNER BUILDER deardorf -- , ** - T38)

Top chord 2x4 SP #2 Dense
Bot chord 2x4 SP #2 Dense
Webs 2x4 SP #3

Roof overhang supports 2.00 psf soffit load.

Deflection meets L/240 live and L/180 total load. Creep increase factor for dead load is 1.50.

THE BUILDING DESIGNER IS RESPONSIBLE FOR THE DESIGN OF THE ROOF AND CEILING DIAPHRAGMS, GABLE END SHEAR WALLS, AND SUPPORTING SHEAR WALLS. SHEAR WALLS MUST PROVIDE CONTINUOUS LATERAL RESTRAINT TO THE GABLE END. ALL CONNECTIONS TO BE DESIGNED BY THE BUILDING DESIGNER.

110 mph wind, 23.53 ft mean hgt, ASCE 7-02, CLOSED bldg, Located anywhere in roof, CAT II, EXP B, wind TC DL=5.0 psf, wind BC DL=5.0 psf. Iw=1.00 GCpi(+/-)=0.18

Wind reactions based on MWFRS pressures.

See DWGS A11030EE0207 & GBLLETIN0207 for more requirements.

(A) 1x4 #3 or better "L" brace. 80% length of web member. Attach with 8d Box or Gun (0.113"x2.5",min.)nails @ 6" OC.

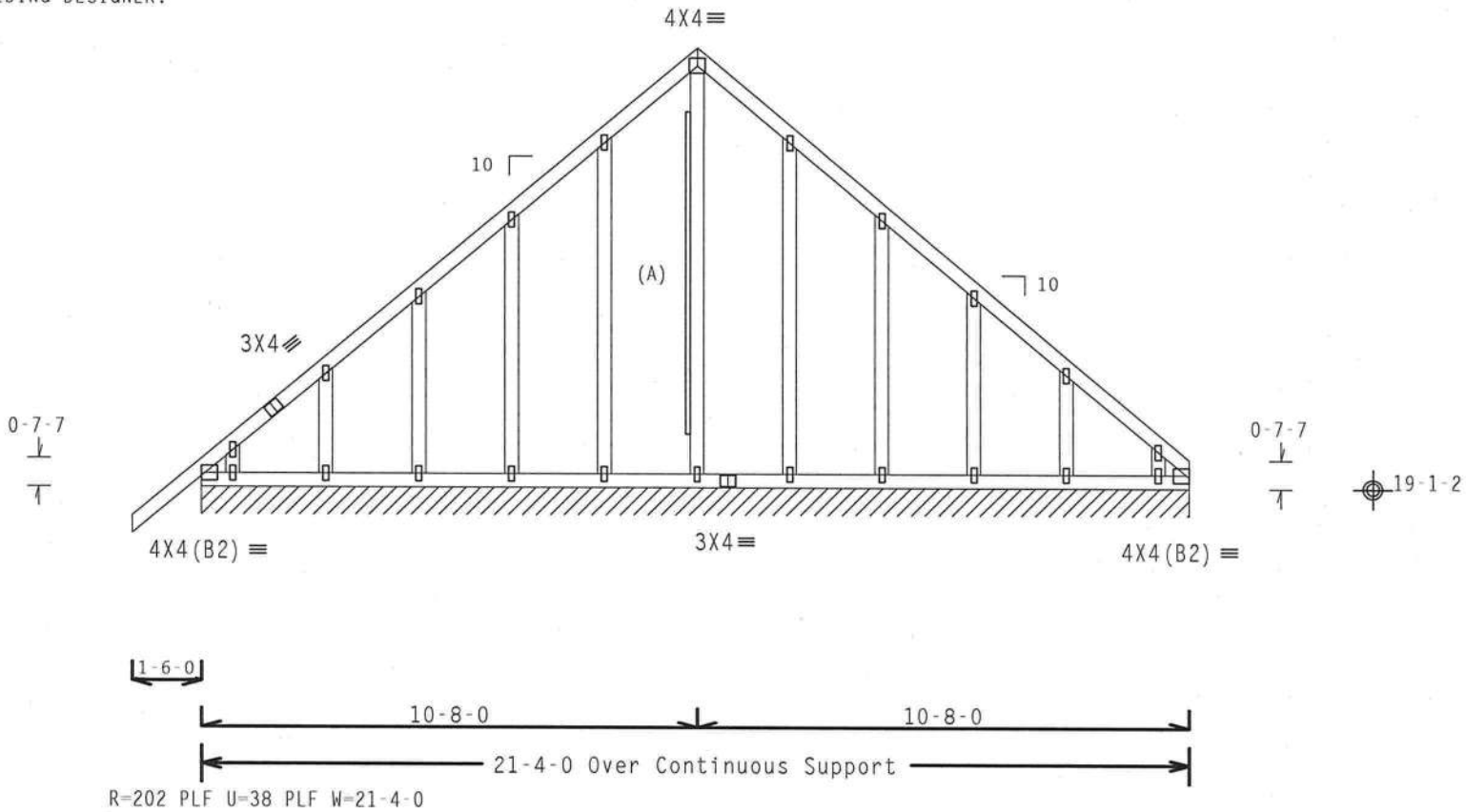

Note: All Plates Are 1.5X4 Except As Shown.

Design Crit: TPI-2002(STD)/FBC

PLT TYP. Wave Cq/RT=1.00(1.25)/0(0) 7.24.1230 QTY:1 FL/-/4/-/E/-/- Scale =.25"/Ft.

TW Building Components Group Inc.

Haines City, FL 33844
FL Certificate of Authorization # 0 278

WARNINGTRUSSES REQUIRE EXTREME CARE IN FABRICATION, HANDLING, SHIPPING, INSTALLING AND BRACING. REFER TO BCSI (BUILDING COMPONENT SAFETY INFORMATION), PUBLISHED BY TPI (TRUSS PLATE INSTITUTE, 218 NORTH LEE STREET, SUITE 312, ALEXANDRIA, VA. 22314) AND WTCA (WOOD TRUSS COUNCIL OF AMERICA, 6300 ENTERPRISE LANE, MADISON, WI 53719) FOR SAFETY PRACTICES PRIOR TO PERFORMING THESE FUNCTIONS. UNLESS OTHERWISE INDICATED TOP CHORD SHALL HAVE PROPERLY ATTACHED STRUCTURAL PANELS AND BOTTOM CHORD SHALL HAVE A PROPERLY ATTACHED RIGID CEILING.

IMPORTANTFURNISH A COPY OF THIS DESIGN TO THE INSTALLATION CONTRACTOR. ITW BCG, INC. SHALL NOT BE RESPONSIBLE FOR ANY DEVIATION FROM THIS DESIGN; ANY FAILURE TO BUILD THE TRUSS IN CONFORMANCE WITH TPI; OR FABRICATING, HANDLING, SHIPPING, INSTALLING & BRACING OF TRUSSES.
DESIGN CONFORMS WITH APPLICABLE PROVISIONS OF NDS (NATIONAL DESIGN SPEC. BY AF&PA) AND TPI. ITW BCG CONNECTOR PLATES ARE MADE OF 20/18/16GA (W,H/SS/K) ASTM A653 GRADE 40/60 (W, K/H,SS) GALV. STEEL. APPLY PLATES TO EACH FACE OF TRUSS AND, UNLESS OTHERWISE LOCATED ON THIS DESIGN, POSITION PER DRAWINGS 160A-Z. ANY INSPECTION OF PLATES FOLLOWED BY (I) SHALL BE PER ANNEX A3 OF TPI1-2002 SEC.3. A SEAL ON THIS DRAWING INDICATES ACCEPTANCE OF PROFESSIONAL ENGINEERING RESPONSIBILITY SOLELY FOR THE TRUSS COMPONENT DESIGN SHOWN. THE SUITABILITY AND USE OF THIS COMPONENT FOR ANY BUILDING IS THE RESPONSIBILITY OF THE BUILDING DESIGNER PER ANSI/TPI 1 SEC. 2.

JAMES F. COLLINS JR. LICENSED No. 52212 STATE OF FLORIDA PROFESSIONAL ENGINEER
Jan 31 '08

TC LL	20.0 PSF	REF R8228- 76987
TC DL	10.0 PSF	DATE 01/31/08
BC DL	10.0 PSF	DRW HCUSR8228 08031101
BC LL	0.0 PSF	HC-ENG EC/WHK
TOT.LD.	40.0 PSF	SEQN- 43786
DUR.FAC.	1.25	FROM JP
SPACING	24.0"	JREF- 1TEL8228Z03

(dear--OWNER BUILDER deardorf -- , ** - T39)

Top chord 2x4 SP #2 Dense
Bot chord 2x4 SP #2 Dense
Webs 2x4 SP #3

Roof overhang supports 2.00 psf soffit load.

Deflection meets L/240 live and L/180 total load. Creep increase factor for dead load is 1.50.

110 mph wind, 15.00 ft mean hgt, ASCE 7-02, CLOSED bldg, Located anywhere in roof, CAT II, EXP B, wind TC DL=5.0 psf, wind BC DL=5.0 psf. Iw=1.00 GCpi(+/-)=0.18

Wind reactions based on MWFRS pressures.

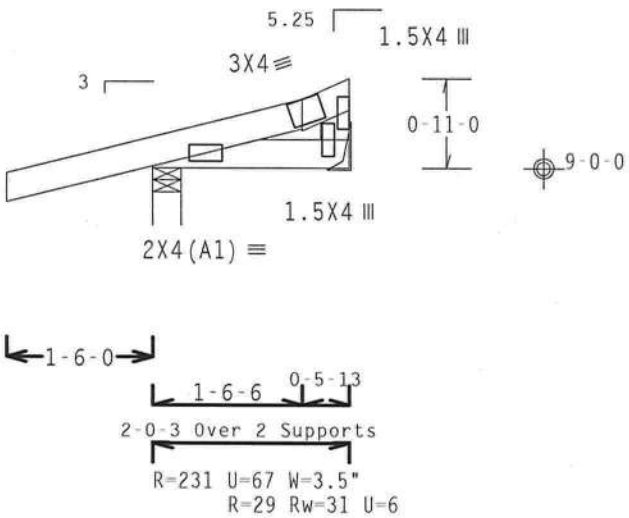

Design Crit: TPI-2002(STD)/FBC
Cq/RT=1.00(1.25)/0(0) 7.24.1230 QTY:1 FL/-/4/-/E/-/- Scale =.5"/Ft.

PLT TYP. Wave

Building Components Group Inc.

Haines City, FL 33844
FL Certificate of Authorization # 0 278

WARNINGRUSSES REQUIRE EXTREME CARE IN FABRICATION, HANDLING, SHIPPING, INSTALLING AND BRACING. REFER TO BCSI (BUILDING COMPONENT SAFETY INFORMATION), PUBLISHED BY TPI (TRUSS PLATE INSTITUTE, 218 NORTH LEE STREET, SUITE 312, ALEXANDRIA, VA, 22314) AND WTCA (WOOD TRUSS COUNCIL OF AMERICA, 6300 ENTERPRISE LANE, MADISON, WI 53719) FOR SAFETY PRACTICES PRIOR TO PERFORMING THESE FUNCTIONS. UNLESS OTHERWISE INDICATED TOP CHORD SHALL HAVE PROPERLY ATTACHED STRUCTURAL PANELS AND BOTTOM CHORD SHALL HAVE A PROPERLY ATTACHED RIGID CEILING.

IMPORTANTFURNISH A COPY OF THIS DESIGN TO THE INSTALLATION CONTRACTOR. ITW BCG, INC. SHALL NOT BE RESPONSIBLE FOR ANY DEVIATION FROM THIS DESIGN; ANY FAILURE TO BUILD THE TRUSS IN CONFORMANCE WITH TPI; OR FABRICATING, HANDLING, SHIPPING, INSTALLING & BRACING OF TRUSSES.
DESIGN CONFORMS WITH APPLICABLE PROVISIONS OF NDS (NATIONAL DESIGN SPEC. BY AF&PA) AND TPI. ITW BCG CONNECTOR PLATES ARE MADE OF 20/18/16GA (W,H/SS/K) ASTM A653 GRADE 40/60 (W, K/H,SS) GALV. STEEL. APPLY PLATES TO EACH FACE OF TRUSS AND, UNLESS OTHERWISE LOCATED ON THIS DESIGN, POSITION PER DRAWINGS 160A-Z. ANY INSPECTION OF PLATES FOLLOWED BY (1) SHALL BE PER ANNEX A3 OF TPI1-2002 SEC.3. A SEAL ON THIS DRAWING INDICATES ACCEPTANCE OF PROFESSIONAL ENGINEERING RESPONSIBILITY SOLELY FOR THE TRUSS COMPONENT DESIGN SHOWN. THE SUITABILITY AND USE OF THIS COMPONENT FOR ANY BUILDING IS THE RESPONSIBILITY OF THE BUILDING DESIGNER PER ANSI/TPI 1 SEC. 2.

JAMES F. COLLINS, JR. LICENSE No. 52212 STATE OF FLORIDA PROFESSIONAL ENGINEER
Jan 31 08

TC LL	20.0 PSF	REF R8228- 76988
TC DL	10.0 PSF	DATE 01/31/08
BC DL	10.0 PSF	DRW HCUSR8228 08031102
BC LL	0.0 PSF	HC-ENG EC/WHK
TOT.LD.	40.0 PSF	SEQN- 43837
DUR.FAC.	1.25	FROM JP
SPACING	24.0"	JREF- 1TEL8228Z03

(dear--OWNER BUILDER deardorf -- , ** - T4)

THIS DWG PREPARED FROM COMPUTER INPUT (LOADS & DIMENSIONS) SUBMITTED BY TRUSS MFR.

Top chord 2x4 SP #2 Dense :T2, T4 2x6 SP #2:
Bot chord 2x10 SP SS :B3 2x4 SP #2 Dense:
Webs 2x4 SP #3 :W20 2x4 SP #2 Dense:

Roof overhang supports 2.00 psf soffit load.

Calculated horizontal deflection is 0.15" due to live load and 0.25" due to dead load.

(A) Continuous lateral bracing equally spaced on member.

Collar-tie braced with continuous lateral bracing at 24" OC. or rigid ceiling.

Deflection meets L/240 live and L/180 total load. Creep increase factor for dead load is 1.50.

THE BUILDING DESIGNER IS RESPONSIBLE FOR THE DESIGN OF THE ROOF AND CEILING DIAPHRAGMS, GABLE END SHEAR WALLS, AND SUPPORTING SHEAR WALLS. SHEAR WALLS MUST PROVIDE CONTINUOUS LATERAL RESTRAINT TO THE GABLE END. ALL CONNECTIONS TO BE DESIGNED BY THE BUILDING DESIGNER.

SEE DWGS A11015EC0207, GBLBRSTD0207, & GBLLETIN0207 FOR ADDITIONAL REQUIREMENTS.

+ MEMBER TO BE LATERALLY BRACED FOR HORIZONTAL WIND LOADS. BRACING SYSTEM TO BE DESIGNED AND FURNISHED BY OTHERS.

110 mph wind, 15.00 ft mean hgt, ASCE 7-02, CLOSED bldg, Located anywhere in roof, CAT II, EXP B, wind TC DL=5.0 psf, wind BC DL=5.0 psf. Iw=1.00 GCpi(+/-)=0.18

Wind reactions based on MWFRS pressures.

Right end vertical exposed to wind pressure. Deflection meets L/240 criteria for brittle and flexible wall coverings.

In lieu of structural panels use purlins to brace all flat TC @ 24" OC.

BC attic room floor loading: LL = 40.00 psf; DL = 10.00 psf; from 9-0-1 to 21-0-1.

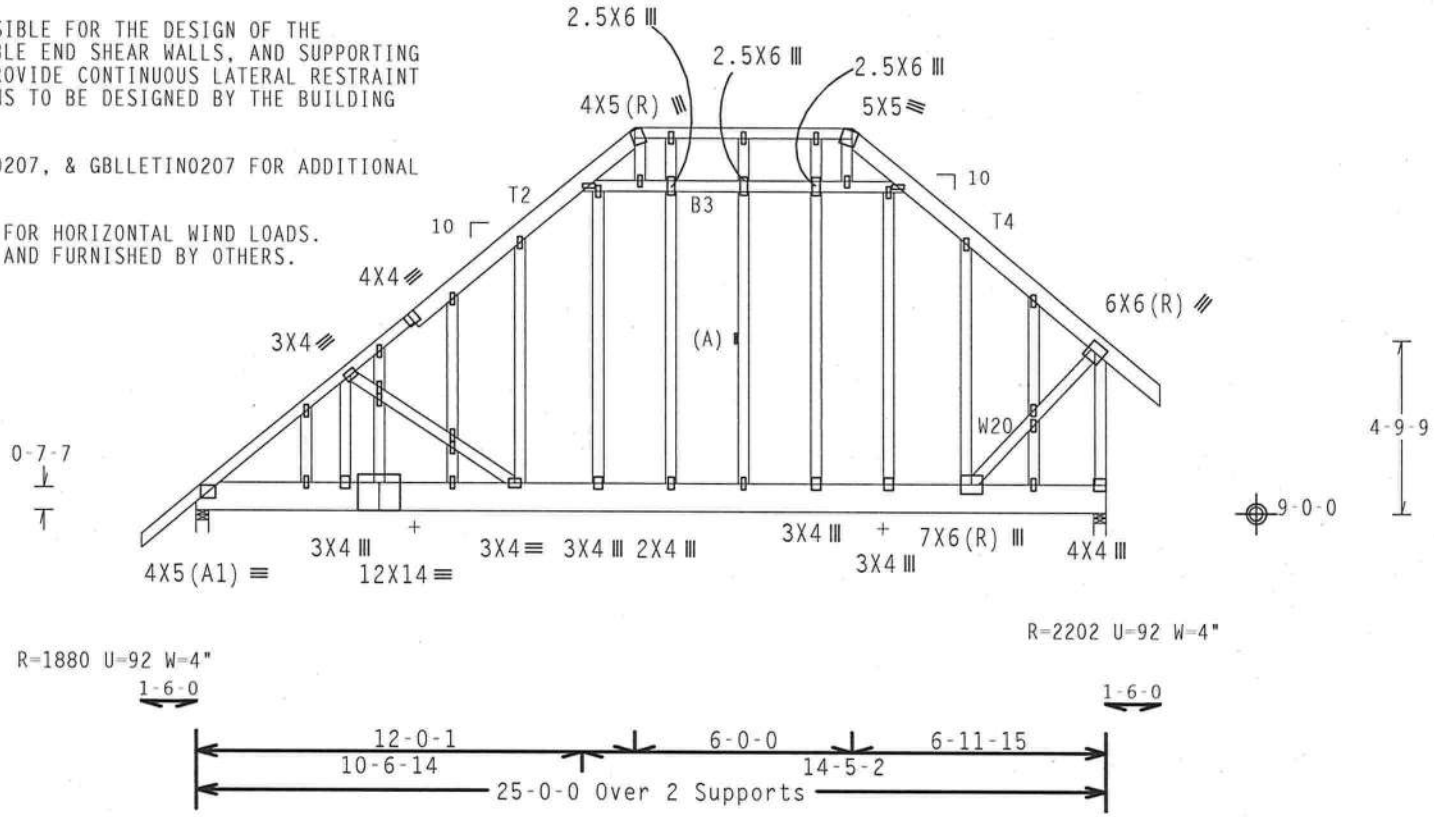

Note: All Plates Are 1.5X4 Except As Shown.

Design Crit: TPI-2002(STD)/FBC

PLT TYP. Wave Cq/RT=1.00(1.25)/0(0) 7.36.0424.11 QTY:1 FL/-/4/-/E/-/- Scale =.1875"/Ft.

TW Building Components Group Inc.

Haines City, FL 33844
FL Certificate of Authorization # 0.278

WARNINGTRUSSES REQUIRE EXTREME CARE IN FABRICATION, HANDLING, SHIPPING, INSTALLING AND BRACING. REFER TO BCSI (BUILDING COMPONENT SAFETY INFORMATION), PUBLISHED BY TPI (TRUSS PLATE INSTITUTE, 218 NORTH LEE STREET, SUITE 312, ALEXANDRIA, VA. 22314) AND WTCA (WOOD TRUSS COUNCIL OF AMERICA, 6300 ENTERPRISE LANE, MADISON, WI 53719) FOR SAFETY PRACTICES PRIOR TO PERFORMING THESE FUNCTIONS. UNLESS OTHERWISE INDICATED TOP CHORD SHALL HAVE PROPERLY ATTACHED STRUCTURAL PANELS AND BOTTOM CHORD SHALL HAVE A PROPERLY ATTACHED RIGID CEILING.

IMPORTANTFURNISH A COPY OF THIS DESIGN TO THE INSTALLATION CONTRACTOR. ITW BCG, INC. SHALL NOT BE RESPONSIBLE FOR ANY DEVIATION FROM THIS DESIGN; ANY FAILURE TO BUILD THE TRUSS IN COMFORMANCE WITH TPI; OR FABRICATING, HANDLING, SHIPPING, INSTALLING & BRACING OF TRUSSES.
DESIGN CONFORMS WITH APPLICABLE PROVISIONS OF NDS (NATIONAL DESIGN SPEC. BY AF&PA) AND TPI. ITW BCG CONNECTOR PLATES ARE MADE OF 20/18/16GA (W.H/SS/K) ASTM A653 GRADE 40/60 (W. K/H.SS) GALV. STEEL. APPLY PLATES TO EACH FACE OF TRUSS AND, UNLESS OTHERWISE LOCATED ON THIS DESIGN, POSITION PER DRAWINGS 160A-Z. ANY INSPECTION OF PLATES FOLLOWED BY (1) SHALL BE PER ANNEX A3 OF TPI1-2002 SEC.3. A SEAL ON THIS DRAWING INDICATES ACCEPTANCE OF PROFESSIONAL ENGINEERING RESPONSIBILITY SOLELY FOR THE TRUSS COMPONENT DESIGN SHOWN. THE SUITABILITY AND USE OF THIS COMPONENT FOR ANY BUILDING IS THE RESPONSIBILITY OF THE BUILDING DESIGNER PER ANSI/TPI 1 SEC. 2.

JAMES F. COLLINS JR. LICENSE No 52212 STATE OF FLORIDA PROFESSIONAL ENGINEER

Jan 31, 2008

TC LL	20.0 PSF	REF R8228- 76989
TC DL	10.0 PSF	DATE 01/31/08
BC DL	10.0 PSF	DRW HCUSR8228 08031077
BC LL	0.0 PSF	HC-ENG EC/WHK
TOT.LD.	40.0 PSF	SEQN- 73650
DUR.FAC.	1.25	FROM JP
SPACING	24.0"	JREF- 1TEL8228Z03

(dear--OWNER BUILDER deardorf -- , ** - T40)

THIS DWG PREPARED FROM COMPUTER INPUT (LOADS & DIMENSIONS) SUBMITTED BY TRUSS MFR.

Top chord 2x4 SP #2 Dense :T1 2x8 SP SS:
Bot chord 2x6 SP #2
Webs 2x4 SP #3

SPECIAL LOADS
------(LUMBER DUR.FAC.=1.25 / PLATE DUR.FAC.=1.25)
TC - From 64 PLF at -1.50 to 64 PLF at 9.13
TC - From 64 PLF at 9.13 to 64 PLF at 35.21
BC - From 5 PLF at -1.50 to 5 PLF at 0.00
BC - From 20 PLF at 0.00 to 20 PLF at 35.21
TC - 207 LB Conc. Load at 9.19, 11.19, 13.19, 15.19, 17.19
19.19, 21.19, 23.19, 25.19, 27.19, 29.19, 31.19, 33.19, 34.90
BC - 1234 LB Conc. Load at 9.12
BC - 81 LB Conc. Load at 11.19, 13.19, 15.19, 17.19, 19.19
21.19, 23.19, 25.19, 27.19, 29.19, 31.19, 33.19, 34.90

Wind reactions based on MWFRS pressures.

Roof overhang supports 2.00 psf soffit load.

In lieu of structural panels use purlins to brace all flat TC @ 24" OC.

LOADING HAS BEEN CALCULATED BY THE TRUSS MANUFACTURER. IT IS THE RESPONSIBILITY OF THE BUILDING DESIGNER TO VERIFY AND APPROVE THE LOADING.

2 COMPLETE TRUSSES REQUIRED

Nailing Schedule: (12d_Common_(0.148"x3.25",_min.)_nails)
Top Chord: 1 Row @ 4.00" o.c.
Bot Chord: 1 Row @12.00" o.c.
Webs : 1 Row @ 4" o.c.
Use equal spacing between rows and stagger nails in each row to avoid splitting.

Bearing blocks: Nail type: 12d_Common_(0.148"x3.25",_min.)_nails

BRG	X-LOC	#BLOCKS	LENGTH/BLK	#NAILS/BLK	WALL PLATE
2	35.000'	1	12"	4	Rigid Surface

Bearing block to be same size and species as bottom chord.
Refer to drawing CNBRGBLK0207 for additional information.

110 mph wind, 22.01 ft mean hgt, ASCE 7-02, CLOSED bldg, not located within 4.50 ft from roof edge, CAT II, EXP B, wind TC DL=5.0 psf, wind BC DL=5.0 psf. Iw=1.00 GCpi(+/-)=0.18

Right end vertical not exposed to wind pressure.

Deflection meets L/240 live and L/180 total load. Creep increase factor for dead load is 1.50.

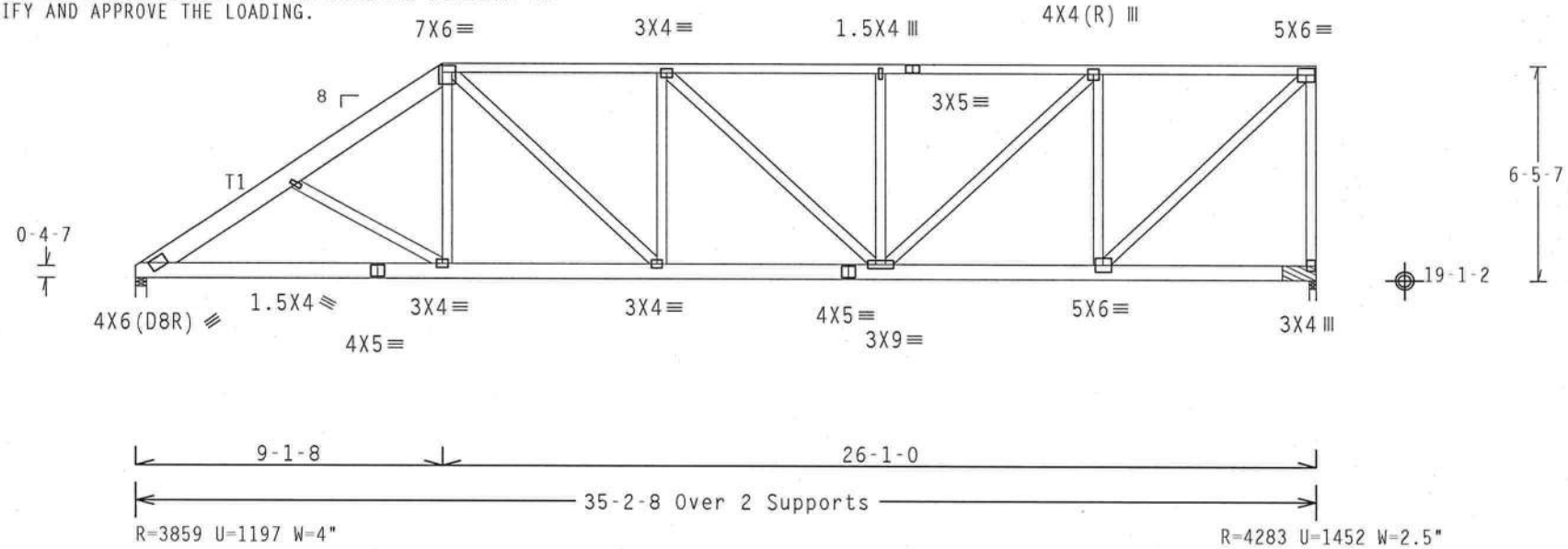

Design Crit: TPI-2002(STD)/FBC

PLT TYP. Wave | Cq/RT=1.00(1.25)/0(0) | 7.24.1230 | QTY:1 | FL/-/4/-/E/-/- | Scale =.1875"/Ft.

WARNING TRUSSES REQUIRE EXTREME CARE IN FABRICATION, HANDLING, SHIPPING, INSTALLING AND BRACING. REFER TO BCSI (BUILDING COMPONENT SAFETY INFORMATION), PUBLISHED BY TPI (TRUSS PLATE INSTITUTE, 218 NORTH LEE STREET, SUITE 312, ALEXANDRIA, VA, 22314) AND WTCA (WOOD TRUSS COUNCIL OF AMERICA, 6300 ENTERPRISE LANE, MADISON, WI 53719) FOR SAFETY PRACTICES PRIOR TO PERFORMING THESE FUNCTIONS. UNLESS OTHERWISE INDICATED TOP CHORD SHALL HAVE PROPERLY ATTACHED STRUCTURAL PANELS AND BOTTOM CHORD SHALL HAVE A PROPERLY ATTACHED RIGID CEILING.

IMPORTANT FURNISH A COPY OF THIS DESIGN TO THE INSTALLATION CONTRACTOR. ITW BCG, INC. SHALL NOT BE RESPONSIBLE FOR ANY DEVIATION FROM THIS DESIGN; ANY FAILURE TO BUILD THE TRUSS IN COMFORMANCE WITH TPI; OR FABRICATING, HANDLING, SHIPPING, INSTALLING & BRACING OF TRUSSES.
DESIGN CONFORMS WITH APPLICABLE PROVISIONS OF NDS (NATIONAL DESIGN SPEC, BY AF&PA) AND TPI. ITW BCG CONNECTOR PLATES ARE MADE OF 20/18/16GA (W,H/SS/K) ASTM A653 GRADE 40/60 (W, K/H,SS) GALV. STEEL. APPLY PLATES TO EACH FACE OF TRUSS AND. UNLESS OTHERWISE LOCATED ON THIS DESIGN, POSITION PER DRAWINGS 160A-2. ANY INSPECTION OF PLATES FOLLOWED BY (1) SHALL BE PER ANNEX A3 OF TPI1-2002 SEC.3. A SEAL ON THIS DRAWING INDICATES ACCEPTANCE OF PROFESSIONAL ENGINEERING RESPONSIBILITY SOLELY FOR THE TRUSS COMPONENT DESIGN SHOWN. THE SUITABILITY AND USE OF THIS COMPONENT FOR ANY BUILDING IS THE RESPONSIBILITY OF THE BUILDING DESIGNER PER ANSI/TPI 1 SEC. 2.

ITW Building Components Group Inc.
Haines City, FL 33844
FL Certificate of Authorization # 0.278

JAMES F. COLLINS, JR. LICENSE No. 50212 STATE OF FLORIDA PROFESSIONAL ENGINEER
Jan 31 08

TC LL	20.0 PSF	REF R8228- 76990
TC DL	10.0 PSF	DATE 01/31/08
BC DL	10.0 PSF	DRW HCUSR8228 08031103
BC LL	0.0 PSF	HC-ENG EC/WHK
TOT.LD.	40.0 PSF	SEQN- 43908
DUR.FAC.	1.25	FROM JP
SPACING	24.0"	JREF- 1TEL8228Z03

Top chord 2x4 SP #2 Dense
Bot chord 2x4 SP #2 Dense
Webs 2x4 SP #3

Roof overhang supports 2.00 psf soffit load.

(A) 1x4 #3 or better "T" brace. 80% length of web member. Attach with 8d Box or Gun (0.113"x2.5",min.)nails @ 6" OC.

In lieu of structural panels use purlins to brace all flat TC @ 24" OC.

110 mph wind, 22.84 ft mean hgt, ASCE 7-02, CLOSED bldg, not located within 4.50 ft from roof edge, CAT II, EXP B, wind TC DL=5.0 psf, wind BC DL=5.0 psf. Iw=1.00 GCpi(+/-)=0.18

Wind reactions based on MWFRS pressures.

Right end vertical not exposed to wind pressure.

(B) 2x4 #3 or better "T" brace. 80% length of web member. Attach with 16d Box or Gun (0.135"x3.5",min.)nails @ 6" OC.

Deflection meets L/240 live and L/180 total load. Creep increase factor for dead load is 1.50.

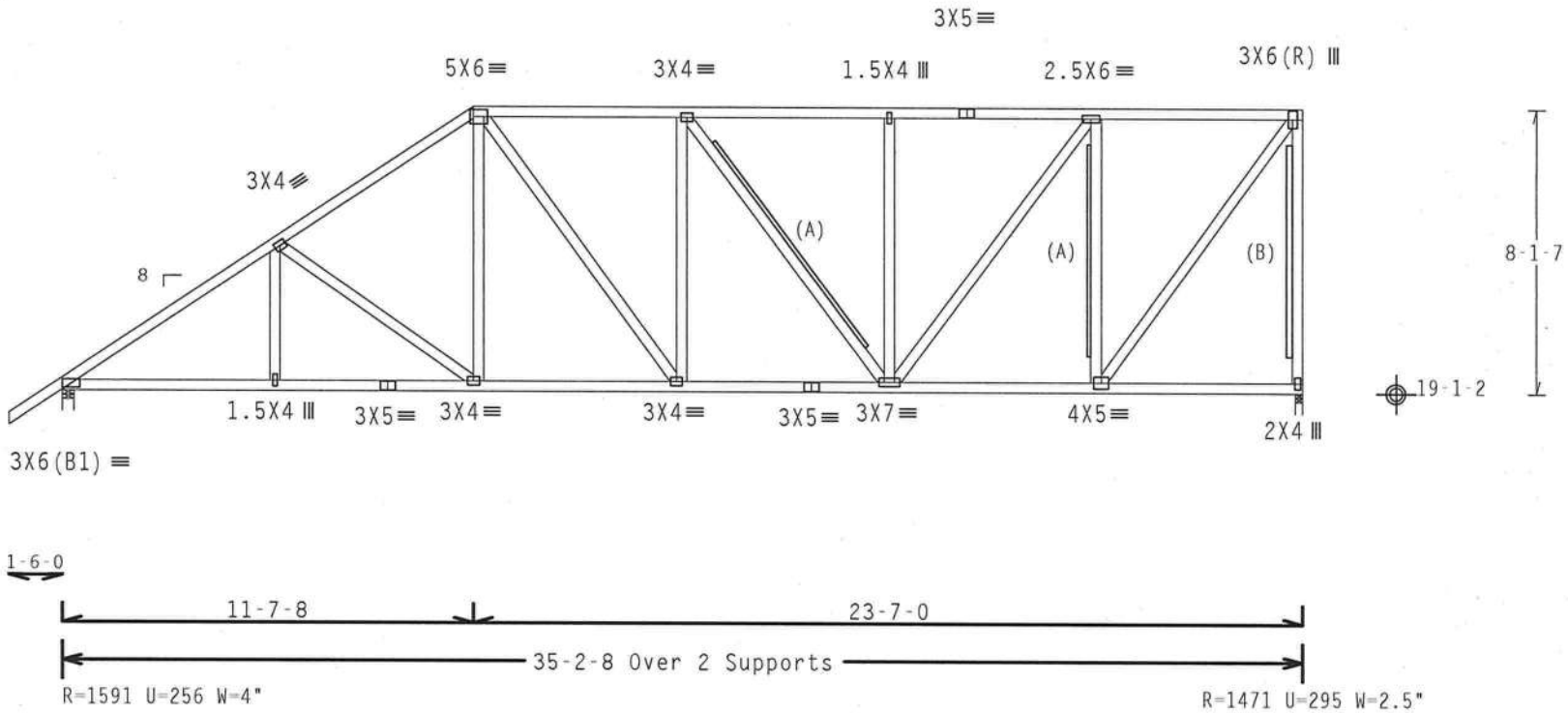

Design Crit: TPI-2002(STD)/FBC

PLT TYP. Wave — Cq/RT=1.00(1.25)/0(0) — 7.24.1230.6 — QTY:1 — FL/-/4/-/E/-/- — Scale =.1875"/Ft.

Building Components Group Inc.

Haines City, FL 33844
FL Certificate of Authorization # 0 278

WARNING TRUSSES REQUIRE EXTREME CARE IN FABRICATION, HANDLING, SHIPPING, INSTALLING AND BRACING. REFER TO BCSI (BUILDING COMPONENT SAFETY INFORMATION), PUBLISHED BY TPI (TRUSS PLATE INSTITUTE, 218 NORTH LEE STREET, SUITE 312, ALEXANDRIA, VA. 22314) AND WTCA (WOOD TRUSS COUNCIL OF AMERICA, 6300 ENTERPRISE LANE, MADISON, WI 53719) FOR SAFETY PRACTICES PRIOR TO PERFORMING THESE FUNCTIONS. UNLESS OTHERWISE INDICATED TOP CHORD SHALL HAVE PROPERLY ATTACHED STRUCTURAL PANELS AND BOTTOM CHORD SHALL HAVE A PROPERLY ATTACHED RIGID CEILING.

IMPORTANT FURNISH A COPY OF THIS DESIGN TO THE INSTALLATION CONTRACTOR. ITW BCG, INC. SHALL NOT BE RESPONSIBLE FOR ANY DEVIATION FROM THIS DESIGN; ANY FAILURE TO BUILD THE TRUSS IN CONFORMANCE WITH TPI; OR FABRICATING, HANDLING, SHIPPING, INSTALLING & BRACING OF TRUSSES.
DESIGN CONFORMS WITH APPLICABLE PROVISIONS OF NDS (NATIONAL DESIGN SPEC. BY AF&PA) AND TPI. ITW BCG CONNECTOR PLATES ARE MADE OF 20/18/16GA (W,H/SS/K) ASTM A653 GRADE 40/60 (W, K/H,SS) GALV. STEEL. APPLY PLATES TO EACH FACE OF TRUSS AND, UNLESS OTHERWISE LOCATED ON THIS DESIGN, POSITION PER DRAWINGS 160A-Z. ANY INSPECTION OF PLATES FOLLOWED BY (1) SHALL BE PER ANNEX A3 OF TPI1-2002 SEC.3. A SEAL ON THIS DRAWING INDICATES ACCEPTANCE OF PROFESSIONAL ENGINEERING RESPONSIBILITY SOLELY FOR THE TRUSS COMPONENT DESIGN SHOWN. THE SUITABILITY AND USE OF THIS COMPONENT FOR ANY BUILDING IS THE RESPONSIBILITY OF THE BUILDING DESIGNER PER ANSI/TPI 1 SEC. 2.

JAMES F. COLLINS JR. LICENSE No 32212 STATE OF FLORIDA PROFESSIONAL ENGINEER
Jan 31 '08

TC LL	20.0 PSF	REF R8228- 76991
TC DL	10.0 PSF	DATE 01/31/08
BC DL	10.0 PSF	DRW HCUSR8228 08031104
BC LL	0.0 PSF	HC-ENG EC/WHK *
TOT.LD.	40.0 PSF	SEQN- 43840
DUR.FAC.	1.25	FROM JP
SPACING	24.0"	JREF- 1TEL8228Z03

(dear--OWNER BUILDER deardorf -- , ** - T42)

Top chord 2x4 SP #2 Dense
Bot chord 2x4 SP #2 Dense
Webs 2x4 SP #3

Roof overhang supports 2.00 psf soffit load.

(A) Continuous lateral bracing equally spaced on member.

Deflection meets L/240 live and L/180 total load. Creep increase factor for dead load is 1.50.

110 mph wind, 23.67 ft mean hgt, ASCE 7-02, CLOSED bldg, not located within 4.50 ft from roof edge, CAT II, EXP B, wind TC DL=5.0 psf, wind BC DL=5.0 psf. Iw=1.00 GCpi(+/-)=0.18

Wind reactions based on MWFRS pressures.

In lieu of structural panels use purlins to brace all flat TC @ 24" OC.

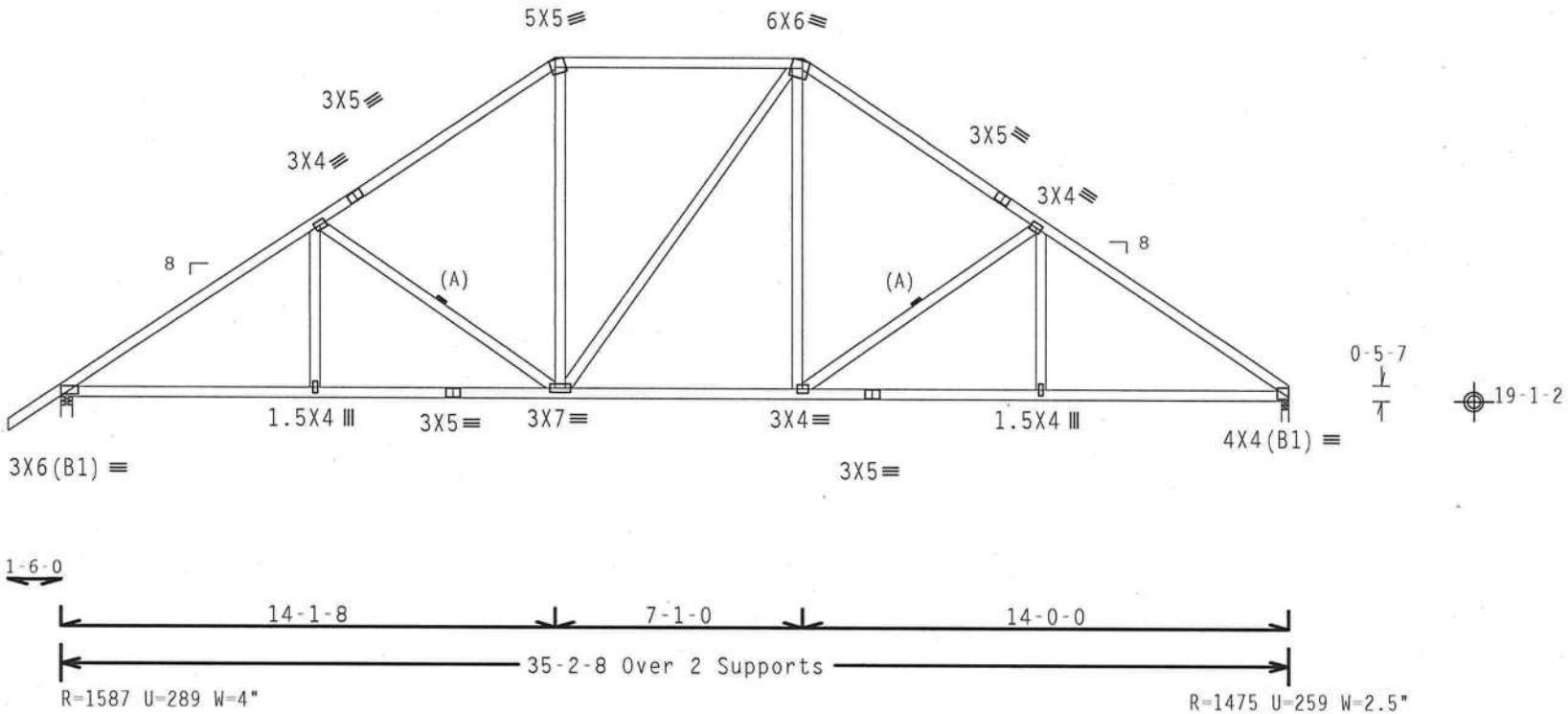

Design Crit: TPI-2002(STD)/FBC

PLT TYP. Wave | Cq/RT=1.00(1.25)/0(0) | 7.24.1230 | QTY:1 | FL/-/4/-/E/-/- | Scale =.1875"/Ft.

Building Components Group Inc.

Haines City, FL 33844
FL Certificate of Authorization # 0 278

WARNINGRUSSES REQUIRE EXTREME CARE IN FABRICATION, HANDLING, SHIPPING, INSTALLING AND BRACING. REFER TO BCSI (BUILDING COMPONENT SAFETY INFORMATION), PUBLISHED BY TPI (TRUSS PLATE INSTITUTE, 218 NORTH LEE STREET, SUITE 312, ALEXANDRIA, VA. 22314) AND WTCA (WOOD TRUSS COUNCIL OF AMERICA, 6300 ENTERPRISE LANE, MADISON, WI 53719) FOR SAFETY PRACTICES PRIOR TO PERFORMING THESE FUNCTIONS. UNLESS OTHERWISE INDICATED TOP CHORD SHALL HAVE PROPERLY ATTACHED STRUCTURAL PANELS AND BOTTOM CHORD SHALL HAVE A PROPERLY ATTACHED RIGID CEILING.

IMPORTANTFURNISH A COPY OF THIS DESIGN TO THE INSTALLATION CONTRACTOR. ITW BCG, INC. SHALL NOT BE RESPONSIBLE FOR ANY DEVIATION FROM THIS DESIGN; ANY FAILURE TO BUILD THE TRUSS IN COMFORMANCE WITH TPI; OR FABRICATING, HANDLING, SHIPPING, INSTALLING & BRACING OF TRUSSES. DESIGN CONFORMS WITH APPLICABLE PROVISIONS OF NDS (NATIONAL DESIGN SPEC. BY AF&PA) AND TPI. ITW BCG CONNECTOR PLATES ARE MADE OF 20/18/16GA (W,H/SS/K) ASTM A653 GRADE 40/60 (W, K/H,SS) GALV. STEEL. APPLY PLATES TO EACH FACE OF TRUSS AND, UNLESS OTHERWISE LOCATED ON THIS DESIGN, POSITION PER DRAWINGS 160A-2. ANY INSPECTION OF PLATES FOLLOWED BY (I) SHALL BE PER ANNEX A3 OF TPI1-2002 SEC.3. A SEAL ON THIS DRAWING INDICATES ACCEPTANCE OF PROFESSIONAL ENGINEERING RESPONSIBILITY SOLELY FOR THE TRUSS COMPONENT DESIGN SHOWN. THE SUITABILITY AND USE OF THIS COMPONENT FOR ANY BUILDING IS THE RESPONSIBILITY OF THE BUILDING DESIGNER PER ANSI/TPI 1 SEC. 2.

JAMES F. COLLINS JR. LICENSE No 52242 STATE OF FLORIDA PROFESSIONAL ENGINEER

Jan 31 08

TC LL	20.0 PSF	REF	R8228- 76992
TC DL	10.0 PSF	DATE	01/31/08
BC DL	10.0 PSF	DRW	HCUSR8228 08031105
BC LL	0.0 PSF	HC-ENG	EC/WHK *
TOT.LD.	40.0 PSF	SEQN-	43842
DUR.FAC.	1.25	FROM	JP
SPACING	24.0"	JREF-	1TEL8228Z03

(dear--OWNER BUILDER deardorf -- , ** - T44)

THIS DWG PREPARED FROM COMPUTER INPUT (LOADS & DIMENSIONS) SUBMITTED BY TRUSS MFR.

Top chord 2x4 SP #2 Dense :T5 2x6 SP #2:
Bot chord 2x6 SP #2 :B3 2x6 SP #1 Dense:
Webs 2x4 SP #3
:Lt Slider 2x6 SP #2: BLOCK LENGTH = 1.556'

SPECIAL LOADS
------(LUMBER DUR.FAC.=1.25 / PLATE DUR.FAC.=1.25)
TC - From 63 PLF at -1.37 to 63 PLF at 11.76
TC - From 63 PLF at 11.76 to 63 PLF at 20.48
TC - From 64 PLF at 20.48 to 64 PLF at 29.36
TC - From 63 PLF at 29.36 to 63 PLF at 34.63
BC - From 20 PLF at -0.04 to 20 PLF at 34.63
PLT- 221 LB Conc. Load at (9.67,25.11)
PLT- -38 LB Conc. Load at (9.74,25.14)
PLT- 287 LB Conc. Load at (11.74,26.32), (13.74,26.34), (15.08,26.34) (16.42,26.34), (18.42,26.34), (20.42,26.34)
PLB- 791 LB Conc. Load at (9.67,19.13)
PLB- 46 LB Conc. Load at (11.74,19.13), (13.74,19.13), (15.08,19.13) (16.42,19.13), (18.42,19.13)
PLB- 1569 LB Conc. Load at (20.48,19.13)

Deflection meets L/240 live and L/180 total load. Creep increase factor for dead load is 1.50.

3 COMPLETE TRUSSES REQUIRED

Nailing Schedule: (12d_Common_(0.148"x3.25",_min.)_nails)
Top Chord: 1 Row @ 4.00" o.c.
Bot Chord: 1 Row @12.00" o.c.
Webs : 1 Row @ 4" o.c.
Repeat nailing as each layer is applied. Use equal spacing between rows and stagger nails in each row to avoid splitting.

(**) 1 plate(s) require special positioning. Refer to scaled plate plot details for special positioning requirements.

110 mph wind, 22.27 ft mean hgt, ASCE 7-02, CLOSED bldg, not located within 4.50 ft from roof edge, CAT II, EXP B, wind TC DL=5.0 psf, wind BC DL=5.0 psf. Iw=1.00 GCpi(+/-)=0.18

Wind reactions based on MWFRS pressures.

In lieu of structural panels use purlins to brace all flat TC @ 24" OC.

LOADING HAS BEEN CALCULATED BY THE TRUSS MANUFACTURER. IT IS THE RESPONSIBILITY OF THE BUILDING DESIGNER TO VERIFY AND APPROVE THE LOADING.

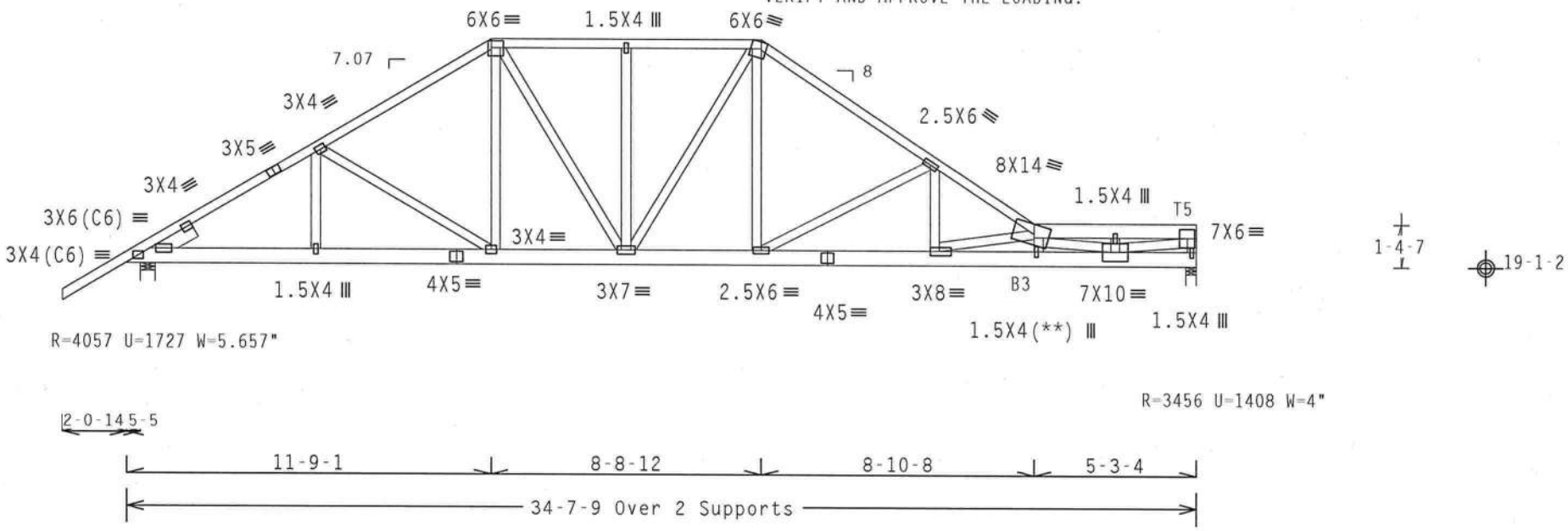

Design Crit: TPI-2002(STD)/FBC
PLT TYP. Wave
Cq/RT=1.00(1.25)/0(0) 7.24.1230 1 QTY:1 FL/-/4/-/E/-/- Scale =.1875"/Ft.

Building Components Group Inc.
Haines City, FL 33844
FL Certificate of Authorization # 0 278

WARNINGRUSSES REQUIRE EXTREME CARE IN FABRICATION, HANDLING, SHIPPING, INSTALLING AND BRACING. REFER TO BCSI (BUILDING COMPONENT SAFETY INFORMATION), PUBLISHED BY TPI (TRUSS PLATE INSTITUTE, 218 NORTH LEE STREET, SUITE 312, ALEXANDRIA, VA, 22314) AND WTCA (WOOD TRUSS COUNCIL OF AMERICA, 6300 ENTERPRISE LANE, MADISON, WI 53719) FOR SAFETY PRACTICES PRIOR TO PERFORMING THESE FUNCTIONS. UNLESS OTHERWISE INDICATED TOP CHORD SHALL HAVE PROPERLY ATTACHED STRUCTURAL PANELS AND BOTTOM CHORD SHALL HAVE A PROPERLY ATTACHED RIGID CEILING.

IMPORTANTFURNISH A COPY OF THIS DESIGN TO THE INSTALLATION CONTRACTOR. ITW BCG, INC. SHALL NOT BE RESPONSIBLE FOR ANY DEVIATION FROM THIS DESIGN; ANY FAILURE TO BUILD THE TRUSS IN COMFORMANCE WITH TPI; OR FABRICATING, HANDLING, SHIPPING, INSTALLING & BRACING OF TRUSSES.
DESIGN CONFORMS WITH APPLICABLE PROVISIONS OF NDS (NATIONAL DESIGN SPEC. BY AF&PA) AND TPI. ITW BCG CONNECTOR PLATES ARE MADE OF 20/18/16GA (W.H/SS/K) ASTM A653 GRADE 40/60 (W. K/H.SS) GALV. STEEL. APPLY PLATES TO EACH FACE OF TRUSS AND, UNLESS OTHERWISE LOCATED ON THIS DESIGN, POSITION PER DRAWINGS 160A-Z. ANY INSPECTION OF PLATES FOLLOWED BY (I) SHALL BE PER ANNEX A3 OF TPI1-2002 SEC.3. A SEAL ON THIS DRAWING INDICATES ACCEPTANCE OF PROFESSIONAL ENGINEERING RESPONSIBILITY SOLELY FOR THE TRUSS COMPONENT DESIGN SHOWN. THE SUITABILITY AND USE OF THIS COMPONENT FOR ANY BUILDING IS THE RESPONSIBILITY OF THE BUILDING DESIGNER PER ANSI/TPI 1 SEC. 2.

JAMES F. COLLINS JR. LICENSE No. 52212 STATE OF FLORIDA PROFESSIONAL ENGINEER
Jan 31 08

TC LL	20.0 PSF	REF R8228- 76993
TC DL	10.0 PSF	DATE 01/31/08
BC DL	10.0 PSF	DRW HCUSR8228 08031106
BC LL	0.0 PSF	HC-ENG EC/WHK
TOT.LD.	40.0 PSF	SEQN- 44006
DUR.FAC.	1.25	FROM JP
SPACING	24.0"	JREF- 1TEL8228Z03

(dear--OWNER BUILDER deardorf -- , ** - T45)

Top chord 2x4 SP #2 Dense
Bot chord 2x4 SP #2 Dense
Webs 2x4 SP #3

Roof overhang supports 2.00 psf soffit load.

(A) Continuous lateral bracing equally spaced on member.

In lieu of structural panels use purlins to brace all flat TC @ 24" OC.

110 mph wind, 23.26 ft mean hgt, ASCE 7-02, CLOSED bldg, not located within 4.50 ft from roof edge, CAT II, EXP B, wind TC DL=5.0 psf, wind BC DL=5.0 psf. Iw=1.00 GCpi(+/-)=0.18

Wind reactions based on MWFRS pressures.

Right end vertical not exposed to wind pressure.

Deflection meets L/240 live and L/180 total load. Creep increase factor for dead load is 1.50.

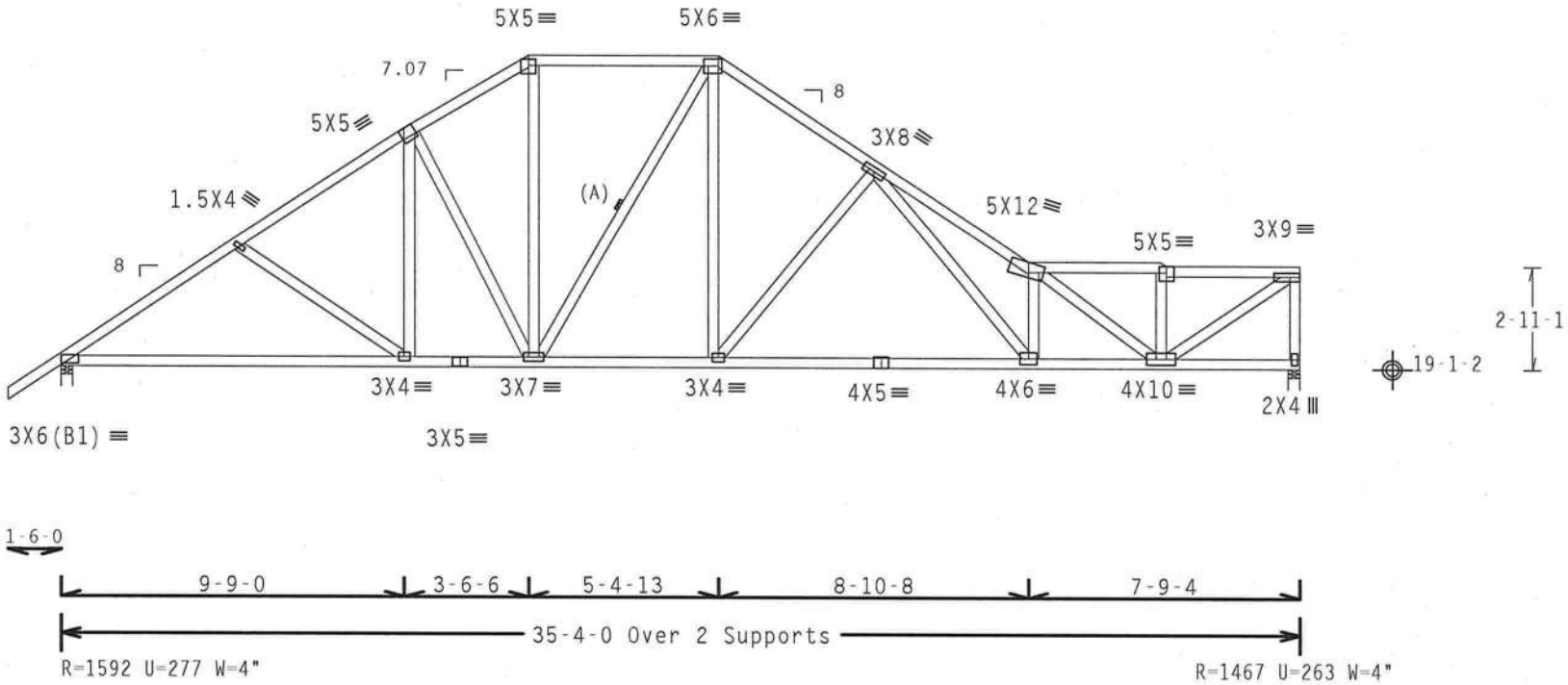

Design Crit: TPI-2002(STD)/FBC

PLT TYP. Wave | Cq/RT=1.00(1.25)/0(0) | 7.24.1230.16 | QTY:1 | FL/-/4/-/E/-/- | Scale =.1875"/Ft.

Building Components Group Inc.

Haines City, FL 33844
FL Certificate of Authorization # 0 278

WARNINGTRUSSES REQUIRE EXTREME CARE IN FABRICATION, HANDLING, SHIPPING, INSTALLING AND BRACING. REFER TO BCSI (BUILDING COMPONENT SAFETY INFORMATION), PUBLISHED BY TPI (TRUSS PLATE INSTITUTE, 218 NORTH LEE STREET, SUITE 312, ALEXANDRIA, VA. 22314) AND WTCA (WOOD TRUSS COUNCIL OF AMERICA, 6300 ENTERPRISE LANE, MADISON, WI 53719) FOR SAFETY PRACTICES PRIOR TO PERFORMING THESE FUNCTIONS. UNLESS OTHERWISE INDICATED TOP CHORD SHALL HAVE PROPERLY ATTACHED STRUCTURAL PANELS AND BOTTOM CHORD SHALL HAVE A PROPERLY ATTACHED RIGID CEILING.

IMPORTANTFURNISH A COPY OF THIS DESIGN TO THE INSTALLATION CONTRACTOR. ITW BCG, INC. SHALL NOT BE RESPONSIBLE FOR ANY DEVIATION FROM THIS DESIGN; ANY FAILURE TO BUILD THE TRUSS IN COMFORMANCE WITH TPI; OR FABRICATING, HANDLING, SHIPPING, INSTALLING & BRACING OF TRUSSES. DESIGN CONFORMS WITH APPLICABLE PROVISIONS OF NDS (NATIONAL DESIGN SPEC. BY AF&PA) AND TPI. ITW BCG CONNECTOR PLATES ARE MADE OF 20/18/16GA (W.H/SS/K) ASTM A653 GRADE 40/60 (W. K/H.SS) GALV. STEEL. APPLY PLATES TO EACH FACE OF TRUSS AND, UNLESS OTHERWISE LOCATED ON THIS DESIGN, POSITION PER DRAWINGS 160A-2. ANY INSPECTION OF PLATES FOLLOWED BY (1) SHALL BE PER ANNEX A3 OF TPI1-2002 SEC.3. A SEAL ON THIS DRAWING INDICATES ACCEPTANCE OF PROFESSIONAL ENGINEERING RESPONSIBILITY SOLELY FOR THE TRUSS COMPONENT DESIGN SHOWN. THE SUITABILITY AND USE OF THIS COMPONENT FOR ANY BUILDING IS THE RESPONSIBILITY OF THE BUILDING DESIGNER PER ANSI/TPI 1 SEC. 2.

JAMES F. COLLINS JR. LICENSE No. 52212 STATE OF FLORIDA PROFESSIONAL ENGINEER

Jan 31, 2008

TC LL	20.0 PSF	REF	R8228- 76994
TC DL	10.0 PSF	DATE	01/31/08
BC DL	10.0 PSF	DRW	HCUSR8228 08031107
BC LL	0.0 PSF	HC-ENG	EC/WHK *
TOT.LD.	40.0 PSF	SEQN-	43994
DUR.FAC.	1.25	FROM	JP
SPACING	24.0"	JREF-	1TEL8228Z03

(dear--OWNER BUILDER deardorf -- , ** - T46)

Top chord 2x4 SP #2 Dense
Bot chord 2x4 SP #2 Dense
Webs 2x4 SP #3

Roof overhang supports 2.00 psf soffit load.

(A) Continuous lateral bracing equally spaced on member.

Deflection meets L/240 live and L/180 total load. Creep increase factor for dead load is 1.50.

110 mph wind, 24.09 ft mean hgt, ASCE 7-02, CLOSED bldg, not located within 4.50 ft from roof edge, CAT II, EXP B, wind TC DL=5.0 psf, wind BC DL=5.0 psf. Iw=1.00 GCpi(+/-)=0.18

Wind reactions based on MWFRS pressures.

In lieu of structural panels use purlins to brace all flat TC @ 24" OC.

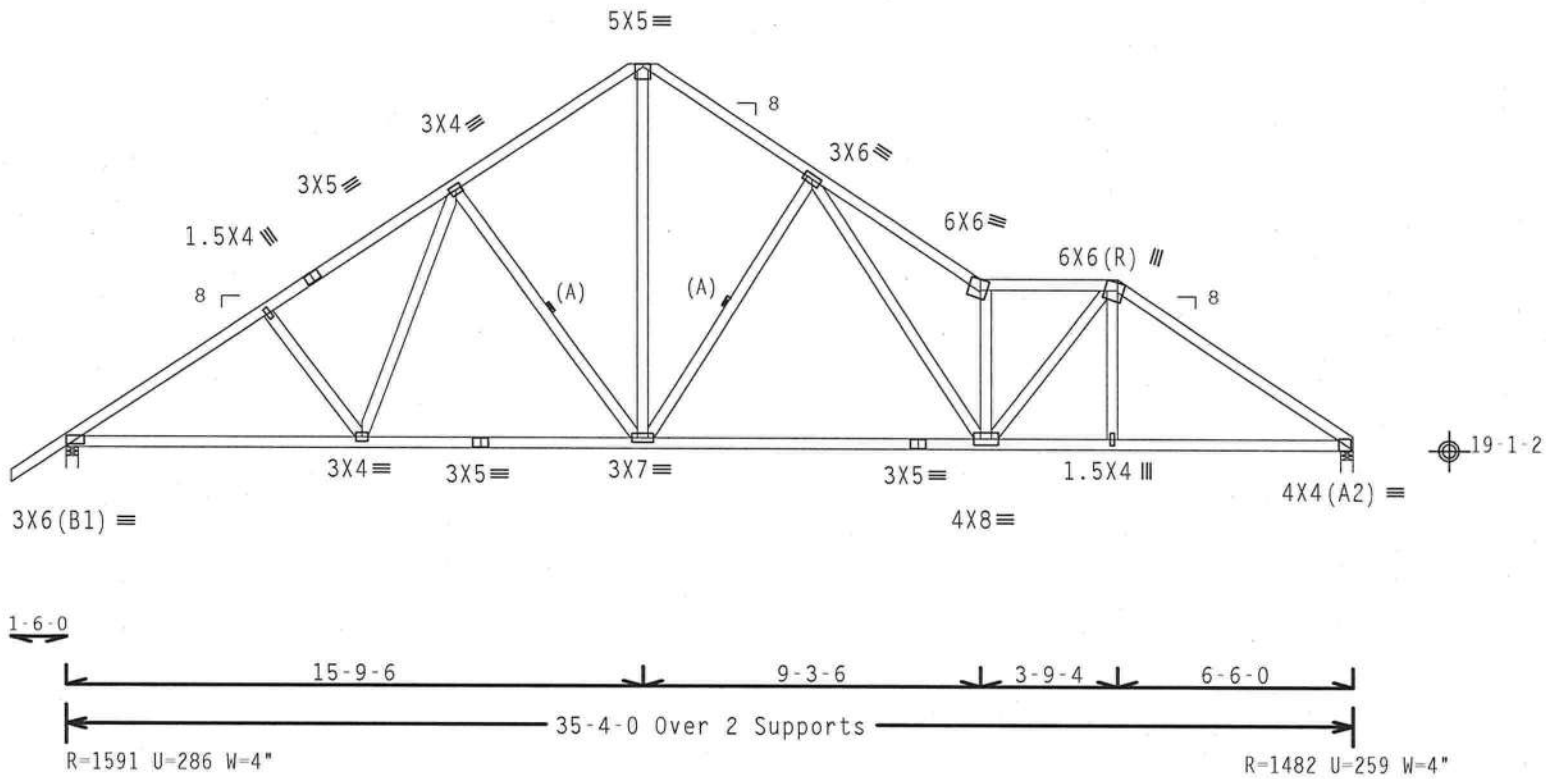

Design Crit: TPI-2002(STD)/FBC

PLT TYP. Wave Cq/RT=1.00(1.25)/0(0) 7.24.1230.16 QTY:1 FL/-/4/-/E/-/- Scale =.1875"/Ft.

Building Components Group Inc.

Haines City, FL 33844
FL Certificate of Authorization # 0 278

WARNING TRUSSES REQUIRE EXTREME CARE IN FABRICATION, HANDLING, SHIPPING, INSTALLING AND BRACING. REFER TO BCSI (BUILDING COMPONENT SAFETY INFORMATION), PUBLISHED BY TPI (TRUSS PLATE INSTITUTE, 218 NORTH LEE STREET, SUITE 312, ALEXANDRIA, VA, 22314) AND WTCA (WOOD TRUSS COUNCIL OF AMERICA, 6300 ENTERPRISE LANE, MADISON, WI 53719) FOR SAFETY PRACTICES PRIOR TO PERFORMING THESE FUNCTIONS. UNLESS OTHERWISE INDICATED TOP CHORD SHALL HAVE PROPERLY ATTACHED STRUCTURAL PANELS AND BOTTOM CHORD SHALL HAVE A PROPERLY ATTACHED RIGID CEILING.

IMPORTANT FURNISH A COPY OF THIS DESIGN TO THE INSTALLATION CONTRACTOR. ITW BCG, INC. SHALL NOT BE RESPONSIBLE FOR ANY DEVIATION FROM THIS DESIGN; ANY FAILURE TO BUILD THE TRUSS IN COMFORMANCE WITH TPI; OR FABRICATING, HANDLING, SHIPPING, INSTALLING & BRACING OF TRUSSES.
DESIGN CONFORMS WITH APPLICABLE PROVISIONS OF NDS (NATIONAL DESIGN SPEC. BY AF&PA) AND TPI. ITW BCG CONNECTOR PLATES ARE MADE OF 20/18/16GA (W,H/SS/K) ASTM A653 GRADE 40/60 (W, K/H,SS) GALV. STEEL. APPLY PLATES TO EACH FACE OF TRUSS AND, UNLESS OTHERWISE LOCATED ON THIS DESIGN, POSITION PER DRAWINGS 160A-Z. ANY INSPECTION OF PLATES FOLLOWED BY (1) SHALL BE PER ANNEX A3 OF TPI1-2002 SEC.3. A SEAL ON THIS DRAWING INDICATES ACCEPTANCE OF PROFESSIONAL ENGINEERING RESPONSIBILITY SOLELY FOR THE TRUSS COMPONENT DESIGN SHOWN. THE SUITABILITY AND USE OF THIS COMPONENT FOR ANY BUILDING IS THE RESPONSIBILITY OF THE BUILDING DESIGNER PER ANSI/TPI 1 SEC. 2.

JAMES F. COLLINS JR. LICENSED No 52212 STATE OF FLORIDA PROFESSIONAL ENGINEER
Jan 9, 2008

TC LL	20.0 PSF	REF	R8228- 76995
TC DL	10.0 PSF	DATE	01/31/08
BC DL	10.0 PSF	DRW	HCUSR8228 08031108
BC LL	0.0 PSF	HC-ENG	EC/WHK *
TOT.LD.	40.0 PSF	SEQN-	43868
DUR.FAC.	1.25	FROM	JP
SPACING	24.0"	JREF-	1TEL8228Z03

Top chord 2x4 SP #2 Dense
Bot chord 2x4 SP #2 Dense
Webs 2x4 SP #3

Roof overhang supports 2.00 psf soffit load.

(A) Continuous lateral bracing equally spaced on member.

Deflection meets L/240 live and L/180 total load. Creep increase factor for dead load is 1.50.

110 mph wind, 24.22 ft mean hgt, ASCE 7-02, CLOSED bldg, not located within 4.50 ft from roof edge, CAT II, EXP B, wind TC DL=5.0 psf, wind BC DL=5.0 psf. Iw=1.00 GCpi(+/-)=0.18

Wind reactions based on MWFRS pressures.

In lieu of structural panels use purlins to brace all flat TC @ 24" OC.

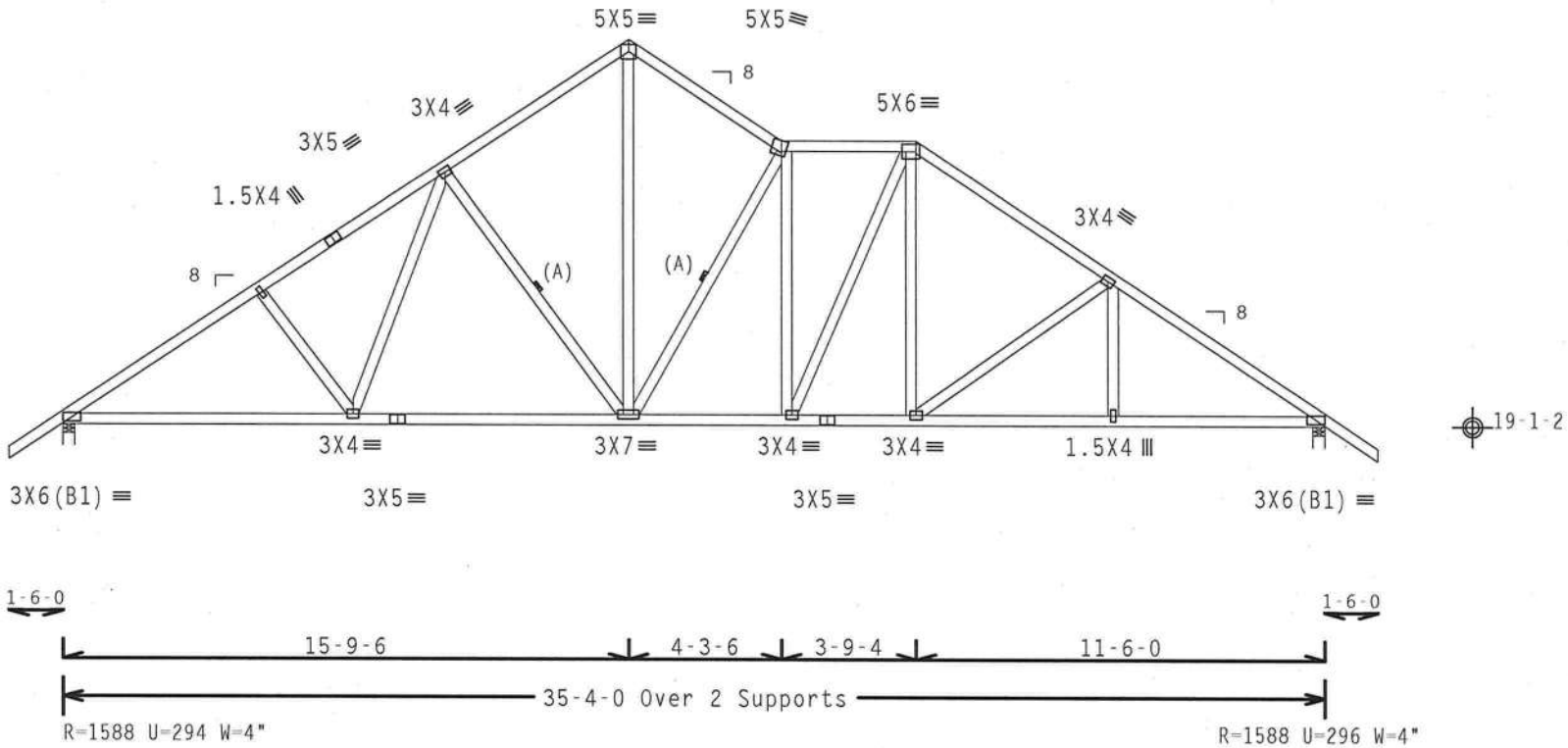

Design Crit: TPI-2002(STD)/FBC
Cq/RT=1.00(1.25)/0(0) 7.24.1230.16

PLT TYP. Wave | QTY:1 | FL/-/4/-/E/-/- | Scale =.1875"/Ft.

Building Components Group Inc.
Haines City, FL 33844
FL Certificate of Authorization # 0 278

WARNING TRUSSES REQUIRE EXTREME CARE IN FABRICATION, HANDLING, SHIPPING, INSTALLING AND BRACING. REFER TO BCSI (BUILDING COMPONENT SAFETY INFORMATION), PUBLISHED BY TPI (TRUSS PLATE INSTITUTE, 218 NORTH LEE STREET, SUITE 312, ALEXANDRIA, VA, 22314) AND WTCA (WOOD TRUSS COUNCIL OF AMERICA, 6300 ENTERPRISE LANE, MADISON, WI 53719) FOR SAFETY PRACTICES PRIOR TO PERFORMING THESE FUNCTIONS. UNLESS OTHERWISE INDICATED TOP CHORD SHALL HAVE PROPERLY ATTACHED STRUCTURAL PANELS AND BOTTOM CHORD SHALL HAVE A PROPERLY ATTACHED RIGID CEILING.

IMPORTANT FURNISH A COPY OF THIS DESIGN TO THE INSTALLATION CONTRACTOR. ITW BCG, INC. SHALL NOT BE RESPONSIBLE FOR ANY DEVIATION FROM THIS DESIGN; ANY FAILURE TO BUILD THE TRUSS IN COMFORMANCE WITH TPI; OR FABRICATING, HANDLING, SHIPPING, INSTALLING & BRACING OF TRUSSES.
DESIGN CONFORMS WITH APPLICABLE PROVISIONS OF NDS (NATIONAL DESIGN SPEC. BY AF&PA) AND TPI. ITW BCG CONNECTOR PLATES ARE MADE OF 20/18/16GA (W,H/SS/K) ASTM A653 GRADE 40/60 (W, K/H,SS) GALV. STEEL. APPLY PLATES TO EACH FACE OF TRUSS AND, UNLESS OTHERWISE LOCATED ON THIS DESIGN, POSITION PER DRAWINGS 160A-Z. ANY INSPECTION OF PLATES FOLLOWED BY (1) SHALL BE PER ANNEX A3 OF TPI1-2002 SEC.3. A SEAL ON THIS DRAWING INDICATES ACCEPTANCE OF PROFESSIONAL ENGINEERING RESPONSIBILITY SOLELY FOR THE TRUSS COMPONENT DESIGN SHOWN. THE SUITABILITY AND USE OF THIS COMPONENT FOR ANY BUILDING IS THE RESPONSIBILITY OF THE BUILDING DESIGNER PER ANSI/TPI 1 SEC. 2.

JAMES F. COLLINS JR. LICENSE No. 52212 STATE OF FLORIDA PROFESSIONAL ENGINEER
Jan 31, 2008

TC LL	20.0 PSF	REF	R8228- 76996
TC DL	10.0 PSF	DATE	01/31/08
BC DL	10.0 PSF	DRW	HCUSR8228 08031109
BC LL	0.0 PSF	HC-ENG	EC/WHK *
TOT.LD.	40.0 PSF	SEQN-	43874
DUR.FAC.	1.25	FROM	JP
SPACING	24.0"	JREF-	1TEL8228Z03

(dear--OWNER BUILDER deardorf -- , ** - T49)

Top chord 2x4 SP #2 Dense
Bot chord 2x4 SP #2 Dense
Webs 2x4 SP #3

110 mph wind, 21.96 ft mean hgt, ASCE 7-02, CLOSED bldg, not located within 4.50 ft from roof edge, CAT II, EXP B, wind TC DL=5.0 psf, wind BC DL=5.0 psf. Iw=1.00 GCpi(+/-)=0.18

Wind reactions based on MWFRS pressures.

Roof overhang supports 2.00 psf soffit load.

Deflection meets L/240 live and L/180 total load. Creep increase factor for dead load is 1.50.

LOADING HAS BEEN CALCULATED BY THE TRUSS MANUFACTURER. IT IS THE RESPONSIBILITY OF THE BUILDING DESIGNER TO VERIFY AND APPROVE THE LOADING.

SPECIAL LOADS
------(LUMBER DUR.FAC.=1.25 / PLATE DUR.FAC.=1.25)
TC - From 63 PLF at -2.40 to 63 PLF at 11.21
BC - From 5 PLF at -2.40 to 5 PLF at 0.00
BC - From 20 PLF at 0.00 to 20 PLF at 11.21
TC - 18 LB Conc. Load at 2.94
TC - 103 LB Conc. Load at 4.87
TC - 88 LB Conc. Load at 5.51
TC - 325 LB Conc. Load at 8.07
TC - 194 LB Conc. Load at 10.63
BC - 10 LB Conc. Load at 2.94
BC - 41 LB Conc. Load at 4.87
BC - 32 LB Conc. Load at 5.51
BC - 130 LB Conc. Load at 8.07
BC - 75 LB Conc. Load at 10.63

Right end vertical not exposed to wind pressure.

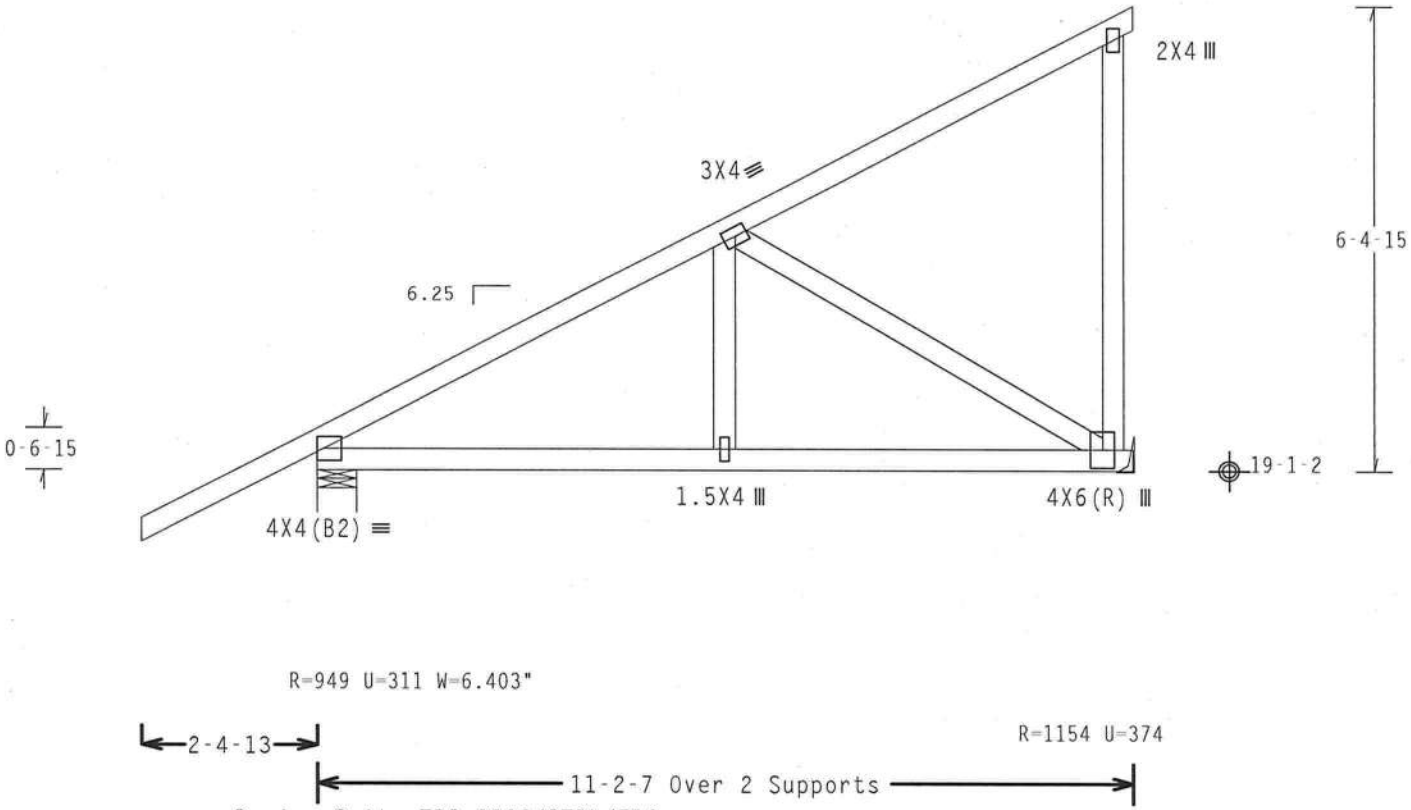

Design Crit: TPI-2002(STD)/FBC
Cq/RT=1.00(1.25)/0(0) 7.24.1230 QTY:1 FL/-/4/-/E/-/- Scale =.375"/Ft.

PLT TYP. Wave

Building Components Group Inc.

Haines City, FL 33844
FL Certificate of Authorization # 0 278

WARNINGRUSSES REQUIRE EXTREME CARE IN FABRICATION, HANDLING, SHIPPING, INSTALLING AND BRACING. REFER TO BCSI (BUILDING COMPONENT SAFETY INFORMATION), PUBLISHED BY TPI (TRUSS PLATE INSTITUTE, 218 NORTH LEE STREET, SUITE 312, ALEXANDRIA, VA, 22314) AND WTCA (WOOD TRUSS COUNCIL OF AMERICA, 6300 ENTERPRISE LANE, MADISON, WI 53719) FOR SAFETY PRACTICES PRIOR TO PERFORMING THESE FUNCTIONS. UNLESS OTHERWISE INDICATED TOP CHORD SHALL HAVE PROPERLY ATTACHED STRUCTURAL PANELS AND BOTTOM CHORD SHALL HAVE A PROPERLY ATTACHED RIGID CEILING.

IMPORTANTFURNISH A COPY OF THIS DESIGN TO THE INSTALLATION CONTRACTOR. ITW BCG, INC. SHALL NOT BE RESPONSIBLE FOR ANY DEVIATION FROM THIS DESIGN; ANY FAILURE TO BUILD THE TRUSS IN COMFORMANCE WITH TPI; OR FABRICATING, HANDLING, SHIPPING, INSTALLING & BRACING OF TRUSSES.
DESIGN CONFORMS WITH APPLICABLE PROVISIONS OF NDS (NATIONAL DESIGN SPEC. BY AF&PA) AND TPI. ITW BCG CONNECTOR PLATES ARE MADE OF 20/18/16GA (W,H/SS/K) ASTM A653 GRADE 40/60 (W, K/H,SS) GALV. STEEL. APPLY PLATES TO EACH FACE OF TRUSS AND, UNLESS OTHERWISE LOCATED ON THIS DESIGN, POSITION PER DRAWINGS 160A-Z. ANY INSPECTION OF PLATES FOLLOWED BY (I) SHALL BE PER ANNEX A3 OF TPI1-2002 SEC.3. A SEAL ON THIS DRAWING INDICATES ACCEPTANCE OF PROFESSIONAL ENGINEERING RESPONSIBILITY SOLELY FOR THE TRUSS COMPONENT DESIGN SHOWN. THE SUITABILITY AND USE OF THIS COMPONENT FOR ANY BUILDING IS THE RESPONSIBILITY OF THE BUILDING DESIGNER PER ANSI/TPI 1 SEC. 2.

JAMES F. COLLINS JR. LICENSE No 52212 STATE OF FLORIDA PROFESSIONAL ENGINEER
Jan 31 08

TC LL	20.0 PSF	REF R8228- 76997
TC DL	10.0 PSF	DATE 01/31/08
BC DL	10.0 PSF	DRW HCUSR8228 08031110
BC LL	0.0 PSF	HC-ENG EC/WHK
TOT.LD.	40.0 PSF	SEQN- 43906
DUR.FAC.	1.25	FROM JP
SPACING	24.0"	JREF- 1TEL8228Z03

(dear--OWNER BUILDER deardorf -- , ** - T5)

Top chord 2x4 SP #2 Dense :T2, T4 2x6 SP #2:
Bot chord 2x10 SP SS :B3 2x4 SP #2 Dense:
Webs 2x4 SP #3

Roof overhang supports 2.00 psf soffit load.

Calculated horizontal deflection is 0.19" due to live load and 0.32" due to dead load.

In lieu of structural panels use purlins to brace all flat TC @ 24" OC.

BC attic room floor loading: LL = 40.00 psf; DL = 10.00 psf; from 9-0-1 to 21-0-1.

110 mph wind, 15.00 ft mean hgt, ASCE 7-02, CLOSED bldg, Located anywhere in roof, CAT II, EXP B, wind TC DL=5.0 psf, wind BC DL=5.0 psf. Iw=1.00 GCpi(+/-)=0.18

Wind reactions based on MWFRS pressures.

Right end vertical exposed to wind pressure. Deflection meets L/240 criteria for brittle and flexible wall coverings.

Collar-tie braced with continuous lateral bracing at 24" OC. or rigid ceiling.

Deflection meets L/240 live and L/180 total load. Creep increase factor for dead load is 1.50.

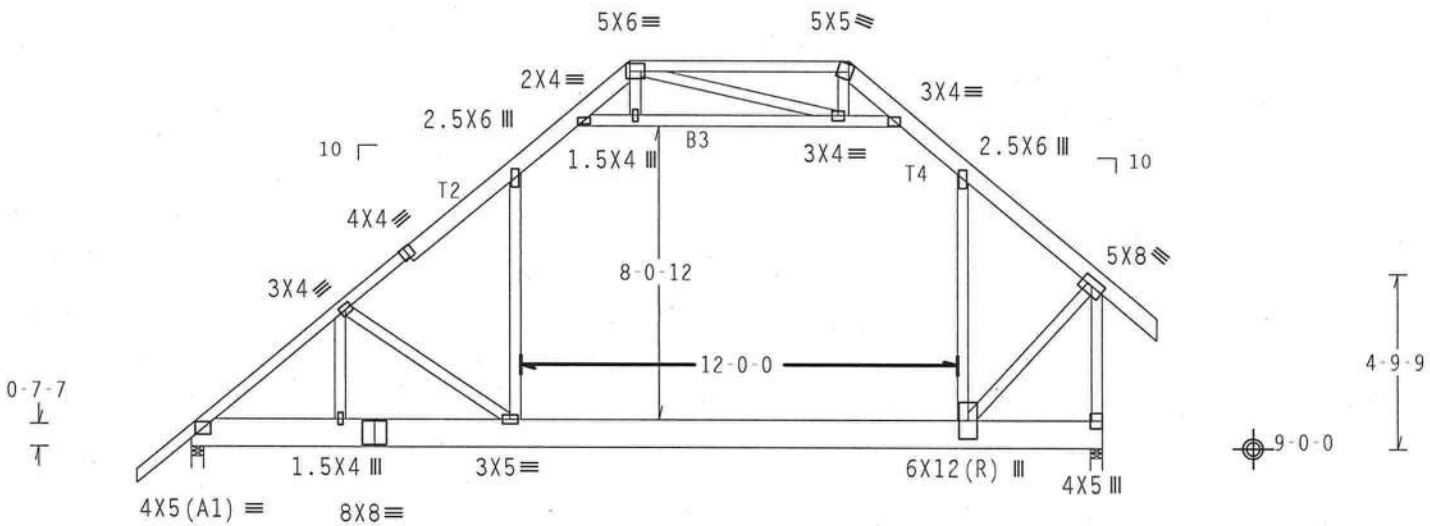

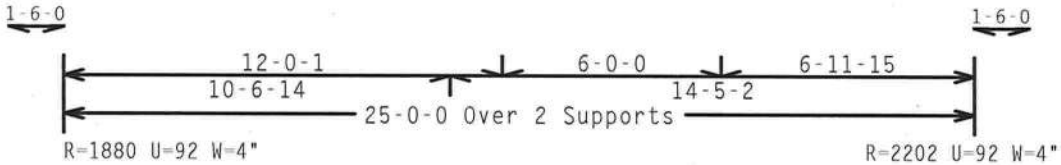

Design Crit: TPI-2002(STD)/FBC
Cq/RT=1.00(1.25)/0(0)

PLT TYP. Wave | 7.36.0424.11 | QTY:1 | FL/-/4/-/E/-/- | Scale =.1875"/Ft.

Building Components Group Inc.

Haines City, FL 33844
FL Certificate of Authorization # 0 278

WARNING TRUSSES REQUIRE EXTREME CARE IN FABRICATION, HANDLING, SHIPPING, INSTALLING AND BRACING. REFER TO BCSI (BUILDING COMPONENT SAFETY INFORMATION), PUBLISHED BY TPI (TRUSS PLATE INSTITUTE, 218 NORTH LEE STREET, SUITE 312, ALEXANDRIA, VA. 22314) AND WTCA (WOOD TRUSS COUNCIL OF AMERICA, 6300 ENTERPRISE LANE, MADISON, WI 53719) FOR SAFETY PRACTICES PRIOR TO PERFORMING THESE FUNCTIONS. UNLESS OTHERWISE INDICATED TOP CHORD SHALL HAVE PROPERLY ATTACHED STRUCTURAL PANELS AND BOTTOM CHORD SHALL HAVE A PROPERLY ATTACHED RIGID CEILING.

IMPORTANT FURNISH A COPY OF THIS DESIGN TO THE INSTALLATION CONTRACTOR. ITW BCG, INC. SHALL NOT BE RESPONSIBLE FOR ANY DEVIATION FROM THIS DESIGN; ANY FAILURE TO BUILD THE TRUSS IN COMFORMANCE WITH TPI; OR FABRICATING, HANDLING, SHIPPING, INSTALLING & BRACING OF TRUSSES.
DESIGN CONFORMS WITH APPLICABLE PROVISIONS OF NDS (NATIONAL DESIGN SPEC. BY AF&PA) AND TPI. ITW BCG CONNECTOR PLATES ARE MADE OF 20/18/16GA (W,H/SS/K) ASTM A653 GRADE 40/60 (W, K/H,SS) GALV. STEEL. APPLY PLATES TO EACH FACE OF TRUSS AND, UNLESS OTHERWISE LOCATED ON THIS DESIGN, POSITION PER DRAWINGS 160A-Z. ANY INSPECTION OF PLATES FOLLOWED BY (1) SHALL BE PER ANNEX A3 OF TPI1-2002 SEC.3. A SEAL ON THIS DRAWING INDICATES ACCEPTANCE OF PROFESSIONAL ENGINEERING RESPONSIBILITY SOLELY FOR THE TRUSS COMPONENT DESIGN SHOWN. THE SUITABILITY AND USE OF THIS COMPONENT FOR ANY BUILDING IS THE RESPONSIBILITY OF THE BUILDING DESIGNER PER ANSI/TPI 1 SEC. 2.

JAMES F. COLLINS, JR. LICENSE No. 52212 STATE OF FLORIDA PROFESSIONAL ENGINEER
Jan

TC LL	20.0 PSF	REF R8228- 76998
TC DL	10.0 PSF	DATE 01/31/08
BC DL	10.0 PSF	DRW HCUSR8228 08031078
BC LL	0.0 PSF	HC-ENG EC/WHK
TOT.LD.	40.0 PSF	SEQN- 73641
DUR.FAC.	1.25	FROM JP
SPACING	24.0"	JREF- 1TEL8228Z03

(dear--OWNER BUILDER deardorf -- , ** - T50)

THIS DWG PREPARED FROM COMPUTER INPUT (LOADS & DIMENSIONS) SUBMITTED BY TRUSS MFR.

Top chord 2x4 SP #2 Dense
Bot chord 2x4 SP #2 Dense

Roof overhang supports 2.00 psf soffit load.

Deflection meets L/240 live and L/180 total load. Creep increase factor for dead load is 1.50.

110 mph wind, 21.18 ft mean hgt, ASCE 7-02, CLOSED bldg, not located within 4.50 ft from roof edge, CAT II, EXP B, wind TC DL=5.0 psf, wind BC DL=5.0 psf. Iw=1.00 GCpi(+/-)=0.18

Wind reactions based on MWFRS pressures.

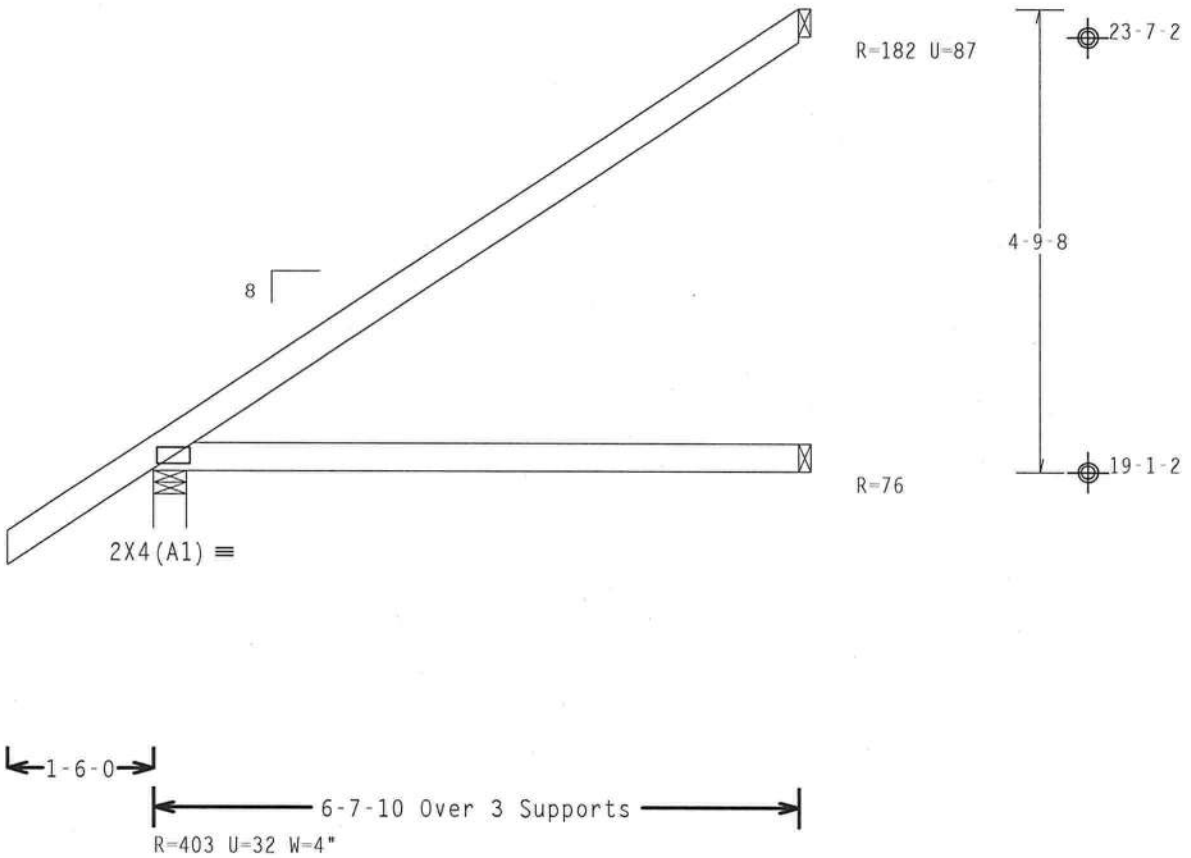

Design Crit: TPI-2002(STD)/FBC
Cq/RT=1.00(1.25)/0(0)

PLT TYP. Wave | 7.24.1230 | QTY:1 | FL/-/4/-/E/-/- | Scale =.5"/Ft.

Building Components Group Inc.

Haines City, FL 33844
FL Certificate of Authorization # 0 278

WARNING TRUSSES REQUIRE EXTREME CARE IN FABRICATION, HANDLING, SHIPPING, INSTALLING AND BRACING. REFER TO BCSI (BUILDING COMPONENT SAFETY INFORMATION), PUBLISHED BY TPI (TRUSS PLATE INSTITUTE, 218 NORTH LEE STREET, SUITE 312, ALEXANDRIA, VA. 22314) AND WTCA (WOOD TRUSS COUNCIL OF AMERICA, 6300 ENTERPRISE LANE, MADISON, WI 53719) FOR SAFETY PRACTICES PRIOR TO PERFORMING THESE FUNCTIONS. UNLESS OTHERWISE INDICATED TOP CHORD SHALL HAVE PROPERLY ATTACHED STRUCTURAL PANELS AND BOTTOM CHORD SHALL HAVE A PROPERLY ATTACHED RIGID CEILING.

IMPORTANT FURNISH A COPY OF THIS DESIGN TO THE INSTALLATION CONTRACTOR. ITW BCG, INC. SHALL NOT BE RESPONSIBLE FOR ANY DEVIATION FROM THIS DESIGN; ANY FAILURE TO BUILD THE TRUSS IN COMFORMANCE WITH TPI; OR FABRICATING, HANDLING, SHIPPING, INSTALLING & BRACING OF TRUSSES. DESIGN CONFORMS WITH APPLICABLE PROVISIONS OF NDS (NATIONAL DESIGN SPEC, BY AF&PA) AND TPI. ITW BCG CONNECTOR PLATES ARE MADE OF 20/18/16GA (W.H/SS/K) ASTM A653 GRADE 40/60 (W. K/H.SS) GALV. STEEL. APPLY PLATES TO EACH FACE OF TRUSS AND, UNLESS OTHERWISE LOCATED ON THIS DESIGN, POSITION PER DRAWINGS 160A-Z. ANY INSPECTION OF PLATES FOLLOWED BY (1) SHALL BE PER ANNEX A3 OF TPI1-2002 SEC.3. A SEAL ON THIS DRAWING INDICATES ACCEPTANCE OF PROFESSIONAL ENGINEERING RESPONSIBILITY SOLELY FOR THE TRUSS COMPONENT DESIGN SHOWN. THE SUITABILITY AND USE OF THIS COMPONENT FOR ANY BUILDING IS THE RESPONSIBILITY OF THE BUILDING DESIGNER PER ANSI/TPI 1 SEC. 2.

JAMES F. COLLINS, JR. LICENSE NO. 32212 STATE OF FLORIDA PROFESSIONAL ENGINEER
Jan 31 08

TC LL	20.0 PSF	REF	R8228- 76999
TC DL	10.0 PSF	DATE	01/31/08
BC DL	10.0 PSF	DRW	HCUSR8228 08031111
BC LL	0.0 PSF	HC-ENG	EC/WHK *
TOT.LD.	40.0 PSF	SEQN-	43850
DUR.FAC.	1.25	FROM	JP
SPACING	24.0"	JREF-	1TEL8228Z03

Top chord 2x4 SP #2 Dense
Bot chord 2x4 SP #2 Dense

Roof overhang supports 2.00 psf soffit load.

Deflection meets L/240 live and L/180 total load. Creep increase factor for dead load is 1.50.

110 mph wind, 20.34 ft mean hgt, ASCE 7-02, CLOSED bldg, Located anywhere in roof, CAT II, EXP B, wind TC DL=5.0 psf, wind BC DL=5.0 psf. Iw=1.00 GCpi(+/-)=0.18

Wind reactions based on MWFRS pressures.

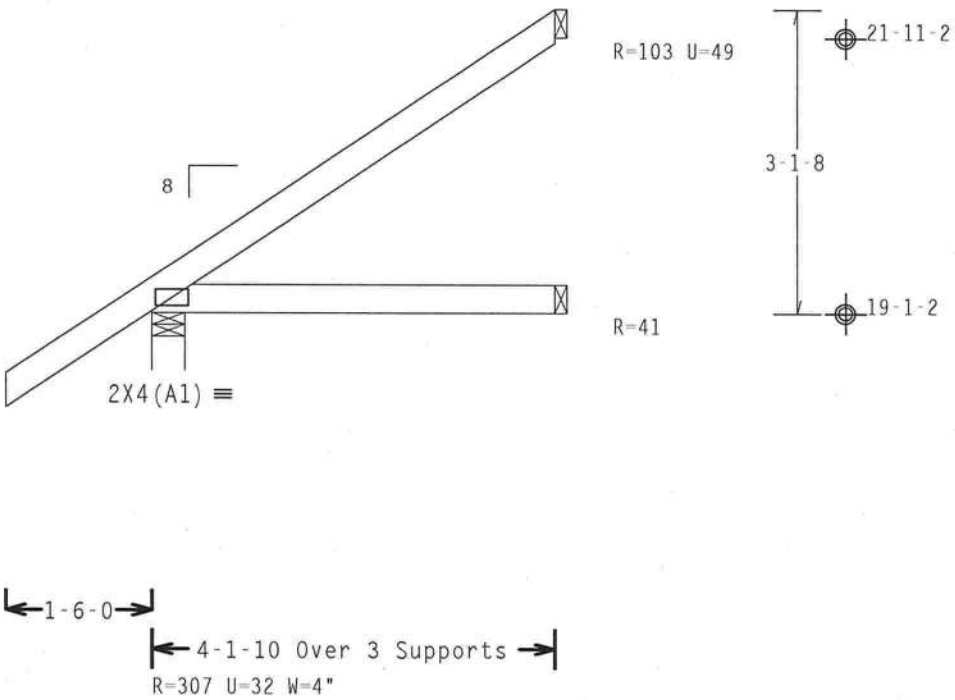

Design Crit: TPI-2002(STD)/FBC
Cq/RT=1.00(1.25)/0(0)

PLT TYP. Wave | 7.24.1230 | QTY:1 | FL/-/4/-/E/-/- | Scale =.5"/Ft.

Building Components Group Inc.

Haines City, FL 33844
FL Certificate of Authorization # 0 278

WARNINGTRUSSES REQUIRE EXTREME CARE IN FABRICATION, HANDLING, SHIPPING, INSTALLING AND BRACING. REFER TO BCSI (BUILDING COMPONENT SAFETY INFORMATION), PUBLISHED BY TPI (TRUSS PLATE INSTITUTE, 218 NORTH LEE STREET, SUITE 312, ALEXANDRIA, VA, 22314) AND WTCA (WOOD TRUSS COUNCIL OF AMERICA, 6300 ENTERPRISE LANE, MADISON, WI 53719) FOR SAFETY PRACTICES PRIOR TO PERFORMING THESE FUNCTIONS. UNLESS OTHERWISE INDICATED TOP CHORD SHALL HAVE PROPERLY ATTACHED STRUCTURAL PANELS AND BOTTOM CHORD SHALL HAVE A PROPERLY ATTACHED RIGID CEILING.

IMPORTANTFURNISH A COPY OF THIS DESIGN TO THE INSTALLATION CONTRACTOR. ITW BCG, INC. SHALL NOT BE RESPONSIBLE FOR ANY DEVIATION FROM THIS DESIGN; ANY FAILURE TO BUILD THE TRUSS IN COMFORMANCE WITH TPI; OR FABRICATING, HANDLING, SHIPPING, INSTALLING & BRACING OF TRUSSES. DESIGN CONFORMS WITH APPLICABLE PROVISIONS OF NDS (NATIONAL DESIGN SPEC. BY AF&PA) AND TPI. ITW BCG CONNECTOR PLATES ARE MADE OF 20/18/16GA (W,H/SS/K) ASTM A653 GRADE 40/60 (W, K/H,SS) GALV. STEEL. APPLY PLATES TO EACH FACE OF TRUSS AND, UNLESS OTHERWISE LOCATED ON THIS DESIGN, POSITION PER DRAWINGS 160A-Z. ANY INSPECTION OF PLATES FOLLOWED BY (1) SHALL BE PER ANNEX A3 OF TPI1-2002 SEC.3. A SEAL ON THIS DRAWING INDICATES ACCEPTANCE OF PROFESSIONAL ENGINEERING RESPONSIBILITY SOLELY FOR THE TRUSS COMPONENT DESIGN SHOWN. THE SUITABILITY AND USE OF THIS COMPONENT FOR ANY BUILDING IS THE RESPONSIBILITY OF THE BUILDING DESIGNER PER ANSI/TPI 1 SEC. 2.

JAMES F. COLLINS, JR. LICENSE No 52212 STATE OF FLORIDA PROFESSIONAL ENGINEER
Jan 31 '08

TC LL	20.0 PSF	REF R8228- 77000
TC DL	10.0 PSF	DATE 01/31/08
BC DL	10.0 PSF	DRW HCUSR8228 08031112
BC LL	0.0 PSF	HC-ENG EC/WHK *
TOT.LD.	40.0 PSF	SEQN- 43853
DUR.FAC.	1.25	FROM JP
SPACING	24.0"	JREF- 1TEL8228Z03

(dear--OWNER BUILDER deardorf -- , ** - T52)

Top chord 2x4 SP #2 Dense
Bot chord 2x4 SP #2 Dense

Roof overhang supports 2.00 psf soffit load.

Deflection meets L/240 live and L/180 total load. Creep increase factor for dead load is 1.50.

110 mph wind, 19.51 ft mean hgt, ASCE 7-02, CLOSED bldg, Located anywhere in roof, CAT II, EXP B, wind TC DL=5.0 psf, wind BC DL=5.0 psf. Iw=1.00 GCpi(+/-)=0.18

Wind reactions based on MWFRS pressures.

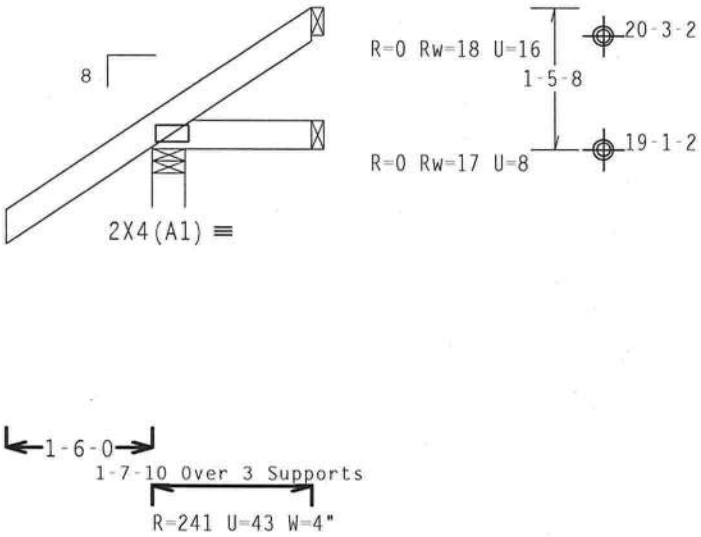

Design Crit: TPI-2002(STD)/FBC

PLT TYP. Wave Cq/RT=1.00(1.25)/0(0) 7.24.1230 QTY:1 FL/-/4/-/E/-/- Scale =.5"/Ft.

Building Components Group Inc.

Haines City, FL 33844
FL Certificate of Authorization # 0 278

WARNING TRUSSES REQUIRE EXTREME CARE IN FABRICATION, HANDLING, SHIPPING, INSTALLING AND BRACING. REFER TO BCSI (BUILDING COMPONENT SAFETY INFORMATION), PUBLISHED BY TPI (TRUSS PLATE INSTITUTE, 218 NORTH LEE STREET, SUITE 312, ALEXANDRIA, VA. 22314) AND WTCA (WOOD TRUSS COUNCIL OF AMERICA, 6300 ENTERPRISE LANE, MADISON, WI 53719) FOR SAFETY PRACTICES PRIOR TO PERFORMING THESE FUNCTIONS. UNLESS OTHERWISE INDICATED TOP CHORD SHALL HAVE PROPERLY ATTACHED STRUCTURAL PANELS AND BOTTOM CHORD SHALL HAVE A PROPERLY ATTACHED RIGID CEILING.

IMPORTANT FURNISH A COPY OF THIS DESIGN TO THE INSTALLATION CONTRACTOR. ITW BCG, INC. SHALL NOT BE RESPONSIBLE FOR ANY DEVIATION FROM THIS DESIGN; ANY FAILURE TO BUILD THE TRUSS IN COMFORMANCE WITH TPI; OR FABRICATING, HANDLING, SHIPPING, INSTALLING & BRACING OF TRUSSES. DESIGN CONFORMS WITH APPLICABLE PROVISIONS OF NDS (NATIONAL DESIGN SPEC. BY AF&PA) AND TPI. ITW BCG CONNECTOR PLATES ARE MADE OF 20/18/16GA (W,H/SS/K) ASTM A653 GRADE 40/60 (W, K/H,SS) GALV. STEEL. APPLY PLATES TO EACH FACE OF TRUSS AND, UNLESS OTHERWISE LOCATED ON THIS DESIGN, POSITION PER DRAWINGS 160A-Z. ANY INSPECTION OF PLATES FOLLOWED BY (1) SHALL BE PER ANNEX A3 OF TPI1-2002 SEC.3. A SEAL ON THIS DRAWING INDICATES ACCEPTANCE OF PROFESSIONAL ENGINEERING RESPONSIBILITY SOLELY FOR THE TRUSS COMPONENT DESIGN SHOWN. THE SUITABILITY AND USE OF THIS COMPONENT FOR ANY BUILDING IS THE RESPONSIBILITY OF THE BUILDING DESIGNER PER ANSI/TPI 1 SEC. 2.

JAMES E. COLLINS, JR. LICENSED No 52212 STATE OF FLORIDA PROFESSIONAL ENGINEER
Jan 31 08

TC LL	20.0 PSF	REF	R8228- 77001
TC DL	10.0 PSF	DATE	01/31/08
BC DL	10.0 PSF	DRW	HCUSR8228 08031113
BC LL	0.0 PSF	HC-ENG	EC/WHK *
TOT.LD.	40.0 PSF	SEQN-	43855
DUR.FAC.	1.25	FROM	JP
SPACING	24.0"	JREF-	1TEL8228Z03

(dear--OWNER BUILDER deardorf -- , ** - T53)

Top chord 2x4 SP #2 Dense
Bot chord 2x4 SP #2 Dense

Roof overhang supports 2.00 psf soffit load.

Deflection meets L/240 live and L/180 total load. Creep increase factor for dead load is 1.50.

110 mph wind, 21.83 ft mean hgt, ASCE 7-02, CLOSED bldg, not located within 4.50 ft from roof edge, CAT II, EXP B, wind TC DL=5.0 psf, wind BC DL=5.0 psf. Iw=1.00 GCpi(+/-)=0.18

Wind reactions based on MWFRS pressures.

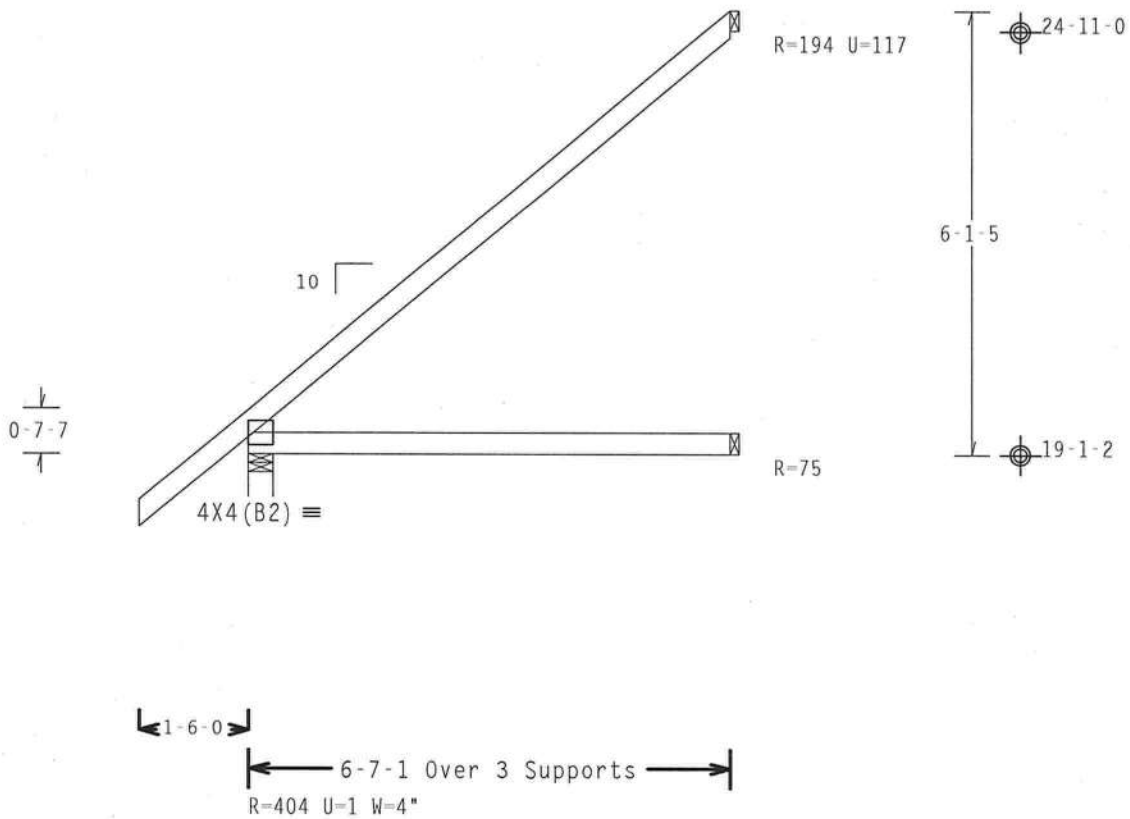

Design Crit: TPI-2002(STD)/FBC
Cq/RT=1.00(1.25)/0(0)

PLT TYP. Wave | 7.24.1230 | QTY:1 | FL/-/4/-/E/-/- | Scale =.375"/Ft.

Building Components Group Inc.

Haines City, FL 33844
FL Certificate of Authorization # 0 278

WARNING TRUSSES REQUIRE EXTREME CARE IN FABRICATION, HANDLING, SHIPPING, INSTALLING AND BRACING. REFER TO BCSI (BUILDING COMPONENT SAFETY INFORMATION), PUBLISHED BY TPI (TRUSS PLATE INSTITUTE, 218 NORTH LEE STREET, SUITE 312, ALEXANDRIA, VA, 22314) AND WTCA (WOOD TRUSS COUNCIL OF AMERICA, 6300 ENTERPRISE LANE, MADISON, WI 53719) FOR SAFETY PRACTICES PRIOR TO PERFORMING THESE FUNCTIONS. UNLESS OTHERWISE INDICATED TOP CHORD SHALL HAVE PROPERLY ATTACHED STRUCTURAL PANELS AND BOTTOM CHORD SHALL HAVE A PROPERLY ATTACHED RIGID CEILING.

IMPORTANT FURNISH A COPY OF THIS DESIGN TO THE INSTALLATION CONTRACTOR. ITW BCG, INC. SHALL NOT BE RESPONSIBLE FOR ANY DEVIATION FROM THIS DESIGN; ANY FAILURE TO BUILD THE TRUSS IN COMFORMANCE WITH TPI; OR FABRICATING, HANDLING, SHIPPING, INSTALLING & BRACING OF TRUSSES. DESIGN CONFORMS WITH APPLICABLE PROVISIONS OF NDS (NATIONAL DESIGN SPEC. BY AF&PA) AND TPI. ITW BCG CONNECTOR PLATES ARE MADE OF 20/18/16GA (W,H/SS/K) ASTM A653 GRADE 40/60 (W, K/H,SS) GALV. STEEL. APPLY PLATES TO EACH FACE OF TRUSS AND, UNLESS OTHERWISE LOCATED ON THIS DESIGN, POSITION PER DRAWINGS 160A-Z. ANY INSPECTION OF PLATES FOLLOWED BY (1) SHALL BE PER ANNEX A3 OF TPI1-2002 SEC.3. A SEAL ON THIS DRAWING INDICATES ACCEPTANCE OF PROFESSIONAL ENGINEERING RESPONSIBILITY SOLELY FOR THE TRUSS COMPONENT DESIGN SHOWN. THE SUITABILITY AND USE OF THIS COMPONENT FOR ANY BUILDING IS THE RESPONSIBILITY OF THE BUILDING DESIGNER PER ANSI/TPI 1 SEC. 2.

JAMES F. COLLINS, JR. LICENSE No. 52212 STATE OF FLORIDA PROFESSIONAL ENGINEER
Jan 31 08

TC LL	20.0 PSF	REF R8228- 77002
TC DL	10.0 PSF	DATE 01/31/08
BC DL	10.0 PSF	DRW HCUSR8228 08031114
BC LL	0.0 PSF	HC-ENG EC/WHK *
TOT.LD.	40.0 PSF	SEQN- 43857
DUR.FAC.	1.25	FROM JP
SPACING	24.0"	JREF- 1TEL8228Z03

(dear--OWNER BUILDER deardorf -- , ** - T54)

Top chord 2x4 SP #2 Dense
Bot chord 2x4 SP #2 Dense

Roof overhang supports 2.00 psf soffit load.

Deflection meets L/240 live and L/180 total load. Creep increase factor for dead load is 1.50.

110 mph wind, 21.17 ft mean hgt, ASCE 7-02, CLOSED bldg, not located within 4.50 ft from roof edge, CAT II, EXP B, wind TC DL=5.0 psf, wind BC DL=5.0 psf. Iw=1.00 GCpi(+/-)=0.18

Wind reactions based on MWFRS pressures.

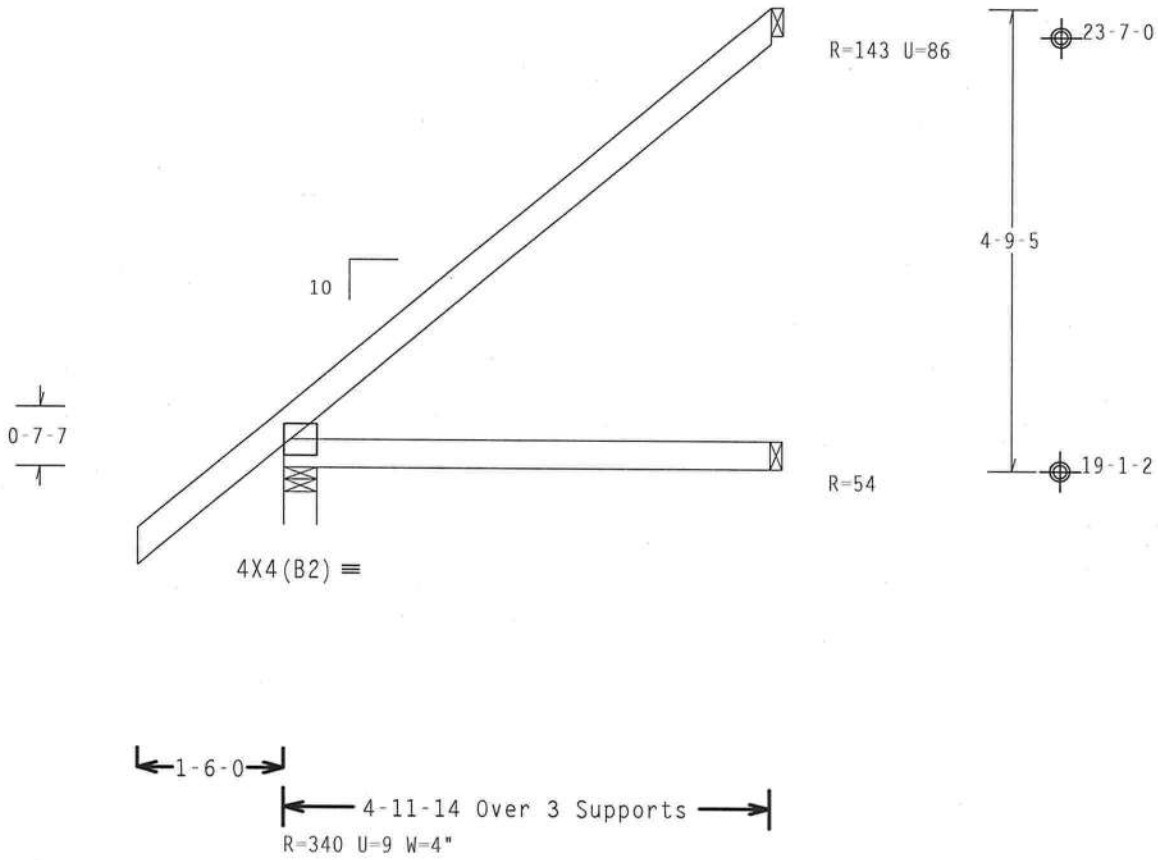

Design Crit: TPI-2002(STD)/FBC
Cq/RT=1.00(1.25)/0(0)

PLT TYP. Wave 7.24.1230.16 QTY:1 FL/-/4/-/E/-/- Scale =.5"/Ft.

ITW Building Components Group Inc.

Haines City, FL 33844
FL Certificate of Authorization # 0 278

WARNING TRUSSES REQUIRE EXTREME CARE IN FABRICATION, HANDLING, SHIPPING, INSTALLING AND BRACING. REFER TO BCSI (BUILDING COMPONENT SAFETY INFORMATION), PUBLISHED BY TPI (TRUSS PLATE INSTITUTE, 218 NORTH LEE STREET, SUITE 312, ALEXANDRIA, VA, 22314) AND WTCA (WOOD TRUSS COUNCIL OF AMERICA, 6300 ENTERPRISE LANE, MADISON, WI 53719) FOR SAFETY PRACTICES PRIOR TO PERFORMING THESE FUNCTIONS. UNLESS OTHERWISE INDICATED TOP CHORD SHALL HAVE PROPERLY ATTACHED STRUCTURAL PANELS AND BOTTOM CHORD SHALL HAVE A PROPERLY ATTACHED RIGID CEILING.

IMPORTANT FURNISH A COPY OF THIS DESIGN TO THE INSTALLATION CONTRACTOR. ITW BCG, INC. SHALL NOT BE RESPONSIBLE FOR ANY DEVIATION FROM THIS DESIGN; ANY FAILURE TO BUILD THE TRUSS IN CONFORMANCE WITH TPI; OR FABRICATING, HANDLING, SHIPPING, INSTALLING & BRACING OF TRUSSES. DESIGN CONFORMS WITH APPLICABLE PROVISIONS OF NDS (NATIONAL DESIGN SPEC. BY AF&PA) AND TPI. ITW BCG CONNECTOR PLATES ARE MADE OF 20/18/16GA (W,H/SS/K) ASTM A653 GRADE 40/60 (W, K/H,SS) GALV. STEEL. APPLY PLATES TO EACH FACE OF TRUSS AND, UNLESS OTHERWISE LOCATED ON THIS DESIGN, POSITION PER DRAWINGS 160A-Z. ANY INSPECTION OF PLATES FOLLOWED BY (1) SHALL BE PER ANNEX A3 OF TPI1-2002 SEC.3. A SEAL ON THIS DRAWING INDICATES ACCEPTANCE OF PROFESSIONAL ENGINEERING RESPONSIBILITY SOLELY FOR THE TRUSS COMPONENT DESIGN SHOWN. THE SUITABILITY AND USE OF THIS COMPONENT FOR ANY BUILDING IS THE RESPONSIBILITY OF THE BUILDING DESIGNER PER ANSI/TPI 1 SEC. 2.

JAMES F. COLLINS, JR. LICENSE No. 52212 STATE OF FLORIDA PROFESSIONAL ENGINEER

Jan 31

TC LL	20.0 PSF	REF R8228- 77003
TC DL	10.0 PSF	DATE 01/31/08
BC DL	10.0 PSF	DRW HCUSR8228 08031115
BC LL	0.0 PSF	HC-ENG EC/WHK *
TOT.LD.	40.0 PSF	SEQN- 43859
DUR.FAC.	1.25	FROM JP
SPACING	24.0"	JREF- 1TEL8228Z03

Top chord 2x4 SP #2 Dense
Bot chord 2x4 SP #2 Dense

Roof overhang supports 2.00 psf soffit load.

Deflection meets L/240 live and L/180 total load. Creep increase factor for dead load is 1.50.

110 mph wind, 20.50 ft mean hgt, ASCE 7-02, CLOSED bldg, Located anywhere in roof, CAT II, EXP B, wind TC DL=5.0 psf, wind BC DL=5.0 psf. Iw=1.00 GCpi(+/-)=0.18

Wind reactions based on MWFRS pressures.

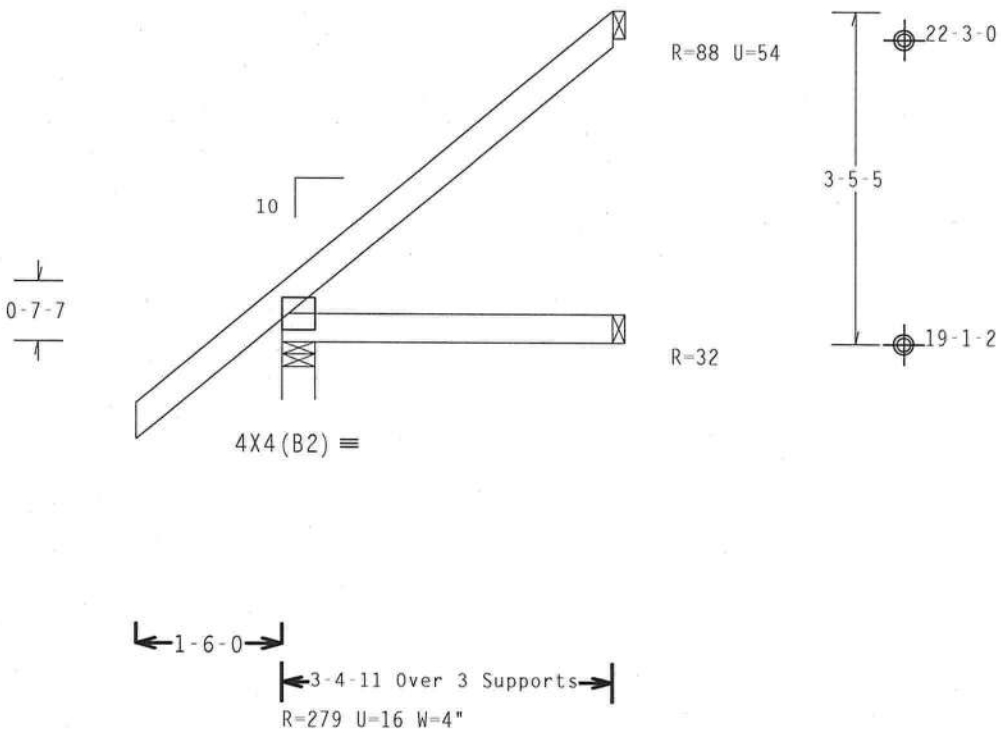

Design Crit: TPI-2002(STD)/FBC
Cq/RT=1.00(1.25)/0(0)

PLT TYP. Wave | 7.24.1230.16 | QTY:1 | FL/-/4/-/E/-/- | Scale =.5"/Ft.

Building Components Group Inc.

Haines City, FL 33844
FL Certificate of Authorization # 0 278

WARNINGRUSSES REQUIRE EXTREME CARE IN FABRICATION, HANDLING, SHIPPING, INSTALLING AND BRACING. REFER TO BCSI (BUILDING COMPONENT SAFETY INFORMATION), PUBLISHED BY TPI (TRUSS PLATE INSTITUTE, 218 NORTH LEE STREET, SUITE 312, ALEXANDRIA, VA, 22314) AND WTCA (WOOD TRUSS COUNCIL OF AMERICA, 6300 ENTERPRISE LANE, MADISON, WI 53719) FOR SAFETY PRACTICES PRIOR TO PERFORMING THESE FUNCTIONS. UNLESS OTHERWISE INDICATED TOP CHORD SHALL HAVE PROPERLY ATTACHED STRUCTURAL PANELS AND BOTTOM CHORD SHALL HAVE A PROPERLY ATTACHED RIGID CEILING.

IMPORTANTFURNISH A COPY OF THIS DESIGN TO THE INSTALLATION CONTRACTOR. ITW BCG, INC. SHALL NOT BE RESPONSIBLE FOR ANY DEVIATION FROM THIS DESIGN; ANY FAILURE TO BUILD THE TRUSS IN COMFORMANCE WITH TPI; OR FABRICATING, HANDLING, SHIPPING, INSTALLING & BRACING OF TRUSSES.
DESIGN CONFORMS WITH APPLICABLE PROVISIONS OF NDS (NATIONAL DESIGN SPEC. BY AF&PA) AND TPI. ITW BCG CONNECTOR PLATES ARE MADE OF 20/18/16GA (W,H/SS/K) ASTM A653 GRADE 40/60 (H, K/H,SS) GALV. STEEL. APPLY PLATES TO EACH FACE OF TRUSS AND, UNLESS OTHERWISE LOCATED ON THIS DESIGN, POSITION PER DRAWINGS 160A-Z. ANY INSPECTION OF PLATES FOLLOWED BY (1) SHALL BE PER ANNEX A3 OF TPI1-2002 SEC.3. A SEAL ON THIS DRAWING INDICATES ACCEPTANCE OF PROFESSIONAL ENGINEERING RESPONSIBILITY SOLELY FOR THE TRUSS COMPONENT DESIGN SHOWN. THE SUITABILITY AND USE OF THIS COMPONENT FOR ANY BUILDING IS THE RESPONSIBILITY OF THE BUILDING DESIGNER PER ANSI/TPI 1 SEC. 2.

JAMES F. COLLINS JR. LICENSED No. 52212 STATE OF FLORIDA PROFESSIONAL ENGINEER
Jan 31, 2008

TC LL	20.0 PSF	REF	R8228- 77004
TC DL	10.0 PSF	DATE	01/31/08
BC DL	10.0 PSF	DRW	HCUSR8228 08031116
BC LL	0.0 PSF	HC-ENG	EC/WHK *
TOT.LD.	40.0 PSF	SEQN-	43861
DUR.FAC.	1.25	FROM	JP
SPACING	24.0"	JREF-	1TEL8228Z03

Top chord 2x4 SP #2 Dense
Bot chord 2x4 SP #2 Dense

Roof overhang supports 2.00 psf soffit load.

Deflection meets L/240 live and L/180 total load. Creep increase factor for dead load is 1.50.

110 mph wind, 19.83 ft mean hgt, ASCE 7-02, CLOSED bldg, Located anywhere in roof, CAT II, EXP B, wind TC DL=5.0 psf, wind BC DL=5.0 psf. Iw=1.00 GCpi(+/-)=0.18

Wind reactions based on MWFRS pressures.

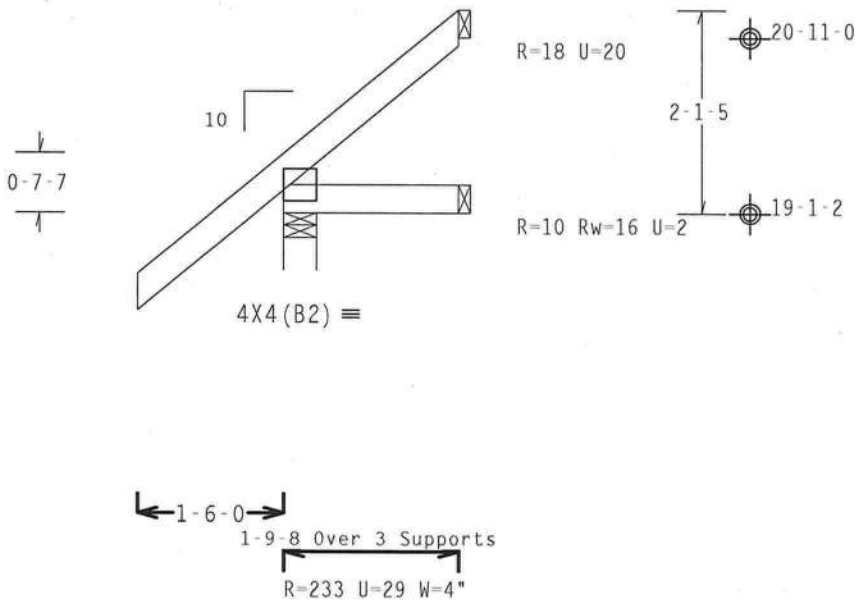

Design Crit: TPI-2002(STD)/FBC

PLT TYP. Wave Cq/RT=1.00(1.25)/0(0) 7.24.1230 QTY:1 FL/-/4/-/E/-/- Scale =.5"/Ft.

Building Components Group Inc.

Haines City, FL 33844
FL Certificate of Authorization # 0 278

WARNINGTRUSSES REQUIRE EXTREME CARE IN FABRICATION, HANDLING, SHIPPING, INSTALLING AND BRACING. REFER TO BCSI (BUILDING COMPONENT SAFETY INFORMATION), PUBLISHED BY TPI (TRUSS PLATE INSTITUTE, 218 NORTH LEE STREET, SUITE 312, ALEXANDRIA, VA, 22314) AND WTCA (WOOD TRUSS COUNCIL OF AMERICA, 6300 ENTERPRISE LANE, MADISON, WI 53719) FOR SAFETY PRACTICES PRIOR TO PERFORMING THESE FUNCTIONS. UNLESS OTHERWISE INDICATED TOP CHORD SHALL HAVE PROPERLY ATTACHED STRUCTURAL PANELS AND BOTTOM CHORD SHALL HAVE A PROPERLY ATTACHED RIGID CEILING.

IMPORTANTFURNISH A COPY OF THIS DESIGN TO THE INSTALLATION CONTRACTOR. ITW BCG, INC. SHALL NOT BE RESPONSIBLE FOR ANY DEVIATION FROM THIS DESIGN; ANY FAILURE TO BUILD THE TRUSS IN COMFORMANCE WITH TPI; OR FABRICATING, HANDLING, SHIPPING, INSTALLING & BRACING OF TRUSSES.
DESIGN CONFORMS WITH APPLICABLE PROVISIONS OF NDS (NATIONAL DESIGN SPEC. BY AF&PA) AND TPI. ITW BCG CONNECTOR PLATES ARE MADE OF 20/18/16GA (W,H/SS/K) ASTM A653 GRADE 40/60 (W, K/H,SS) GALV. STEEL. APPLY PLATES TO EACH FACE OF TRUSS AND, UNLESS OTHERWISE LOCATED ON THIS DESIGN, POSITION PER DRAWINGS 160A-Z. ANY INSPECTION OF PLATES FOLLOWED BY (1) SHALL BE PER ANNEX A3 OF TPI1-2002 SEC.3. A SEAL ON THIS DRAWING INDICATES ACCEPTANCE OF PROFESSIONAL ENGINEERING RESPONSIBILITY SOLELY FOR THE TRUSS COMPONENT DESIGN SHOWN. THE SUITABILITY AND USE OF THIS COMPONENT FOR ANY BUILDING IS THE RESPONSIBILITY OF THE BUILDING DESIGNER PER ANSI/TPI 1 SEC. 2.

JAMES F. COLLINS, JR. LICENSE No. 52212 STATE OF FLORIDA PROFESSIONAL ENGINEER
Jan 31 '08

TC LL	20.0 PSF	REF R8228- 77005
TC DL	10.0 PSF	DATE 01/31/08
BC DL	10.0 PSF	DRW HCUSR8228 08031117
BC LL	0.0 PSF	HC-ENG EC/WHK *
TOT.LD.	40.0 PSF	SEQN- 43863
DUR.FAC.	1.25	FROM JP
SPACING	24.0"	JREF- 1TEL8228Z03

Top chord 2x4 SP #2 Dense
Bot chord 2x4 SP #2 Dense

Roof overhang supports 2.00 psf soffit load.

Deflection meets L/240 live and L/180 total load. Creep increase factor for dead load is 1.50.

110 mph wind, 22.01 ft mean hgt, ASCE 7-02, CLOSED bldg, Located anywhere in roof, CAT II, EXP B, wind TC DL=5.0 psf, wind BC DL=5.0 psf. Iw=1.00 GCpi(+/-)=0.18

Wind reactions based on MWFRS pressures.

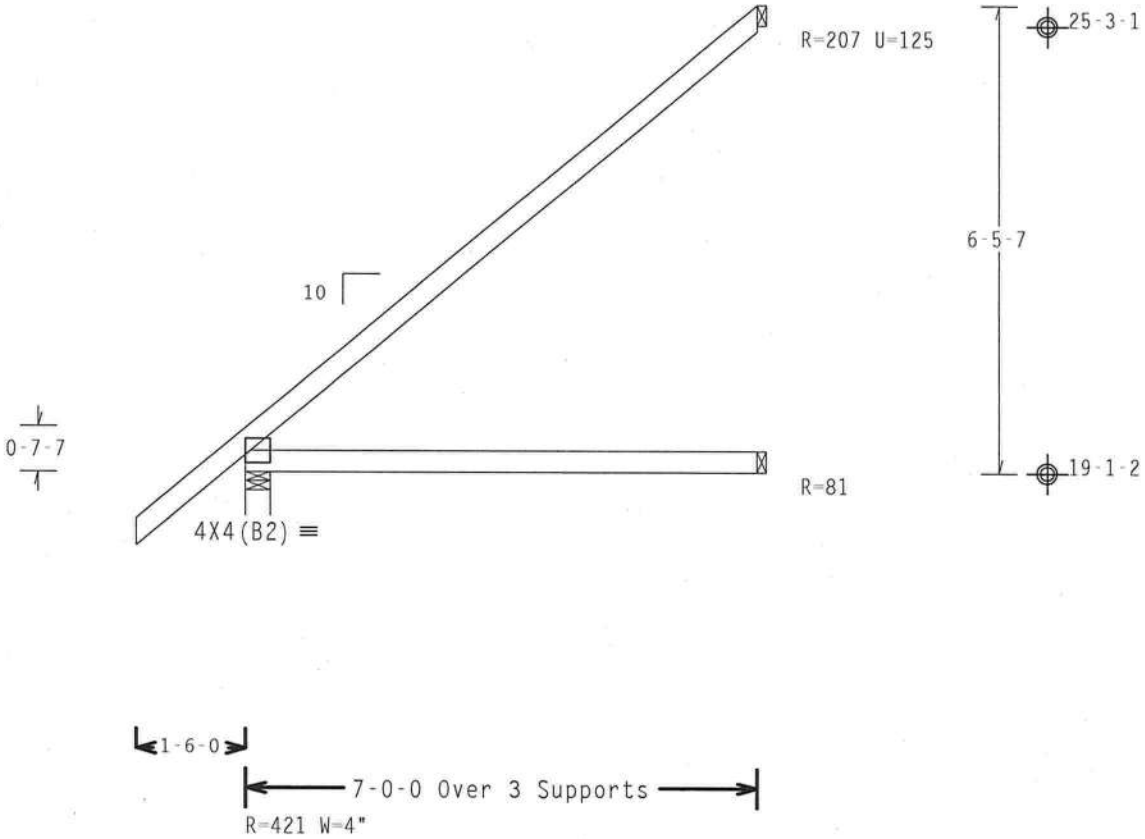

Design Crit: TPI-2002(STD)/FBC
Cq/RT=1.00(1.25)/0(0)

PLT TYP. Wave | 7.24.1230 | QTY:1 | FL/-/4/-/E/-/- | Scale =.375"/Ft.

Building Components Group Inc.

Haines City, FL 33844
FL Certificate of Authorization # 0 278

WARNINGRUSSES REQUIRE EXTREME CARE IN FABRICATION, HANDLING, SHIPPING, INSTALLING AND BRACING. REFER TO BCSI (BUILDING COMPONENT SAFETY INFORMATION), PUBLISHED BY TPI (TRUSS PLATE INSTITUTE, 218 NORTH LEE STREET, SUITE 312, ALEXANDRIA, VA, 22314) AND WTCA (WOOD TRUSS COUNCIL OF AMERICA, 6300 ENTERPRISE LANE, MADISON, WI 53719) FOR SAFETY PRACTICES PRIOR TO PERFORMING THESE FUNCTIONS. UNLESS OTHERWISE INDICATED TOP CHORD SHALL HAVE PROPERLY ATTACHED STRUCTURAL PANELS AND BOTTOM CHORD SHALL HAVE A PROPERLY ATTACHED RIGID CEILING.

IMPORTANTFURNISH A COPY OF THIS DESIGN TO THE INSTALLATION CONTRACTOR. ITW BCG, INC. SHALL NOT BE RESPONSIBLE FOR ANY DEVIATION FROM THIS DESIGN; ANY FAILURE TO BUILD THE TRUSS IN COMFORMANCE WITH TPI; OR FABRICATING, HANDLING, SHIPPING, INSTALLING & BRACING OF TRUSSES.
DESIGN CONFORMS WITH APPLICABLE PROVISIONS OF NDS (NATIONAL DESIGN SPEC. BY AF&PA) AND TPI. ITW BCG CONNECTOR PLATES ARE MADE OF 20/18/16GA (W,H/SS/K) ASTM A653 GRADE 40/60 (W, K/H,SS) GALV. STEEL. APPLY PLATES TO EACH FACE OF TRUSS AND, UNLESS OTHERWISE LOCATED ON THIS DESIGN, POSITION PER DRAWINGS 160A-Z. ANY INSPECTION OF PLATES FOLLOWED BY (1) SHALL BE PER ANNEX A3 OF TPI1-2002 SEC.3. A SEAL ON THIS DRAWING INDICATES ACCEPTANCE OF PROFESSIONAL ENGINEERING RESPONSIBILITY SOLELY FOR THE TRUSS COMPONENT DESIGN SHOWN. THE SUITABILITY AND USE OF THIS COMPONENT FOR ANY BUILDING IS THE RESPONSIBILITY OF THE BUILDING DESIGNER PER ANSI/TPI 1 SEC. 2.

JAMES F. COLLINS JR. LICENSE No. 52212 STATE OF FLORIDA PROFESSIONAL ENGINEER
Jan 31 08

TC LL	20.0 PSF	REF	R8228- 77006
TC DL	10.0 PSF	DATE	01/31/08
BC DL	10.0 PSF	DRW	HCUSR8228 08031118
BC LL	0.0 PSF	HC-ENG	EC/WHK *
TOT.LD.	40.0 PSF	SEQN-	43865
DUR.FAC.	1.25	FROM	JP
SPACING	24.0"	JREF-	1TEL8228Z03

(dear--OWNER BUILDER deardorf -- , ** - T58)

Top chord 2x4 SP #2 Dense
Bot chord 2x4 SP #2 Dense
Webs 2x4 SP #3

Roof overhang supports 2.00 psf soffit load.

(A) Continuous lateral bracing equally spaced on member.

Deflection meets L/240 live and L/180 total load. Creep increase factor for dead load is 1.50.

110 mph wind, 24.22 ft mean hgt, ASCE 7-02, CLOSED bldg, not located within 4.50 ft from roof edge, CAT II, EXP B, wind TC DL=5.0 psf, wind BC DL=5.0 psf. Iw=1.00 GCpi(+/-)=0.18

Wind reactions based on MWFRS pressures.

In lieu of structural panels use purlins to brace all flat TC @ 24" OC.

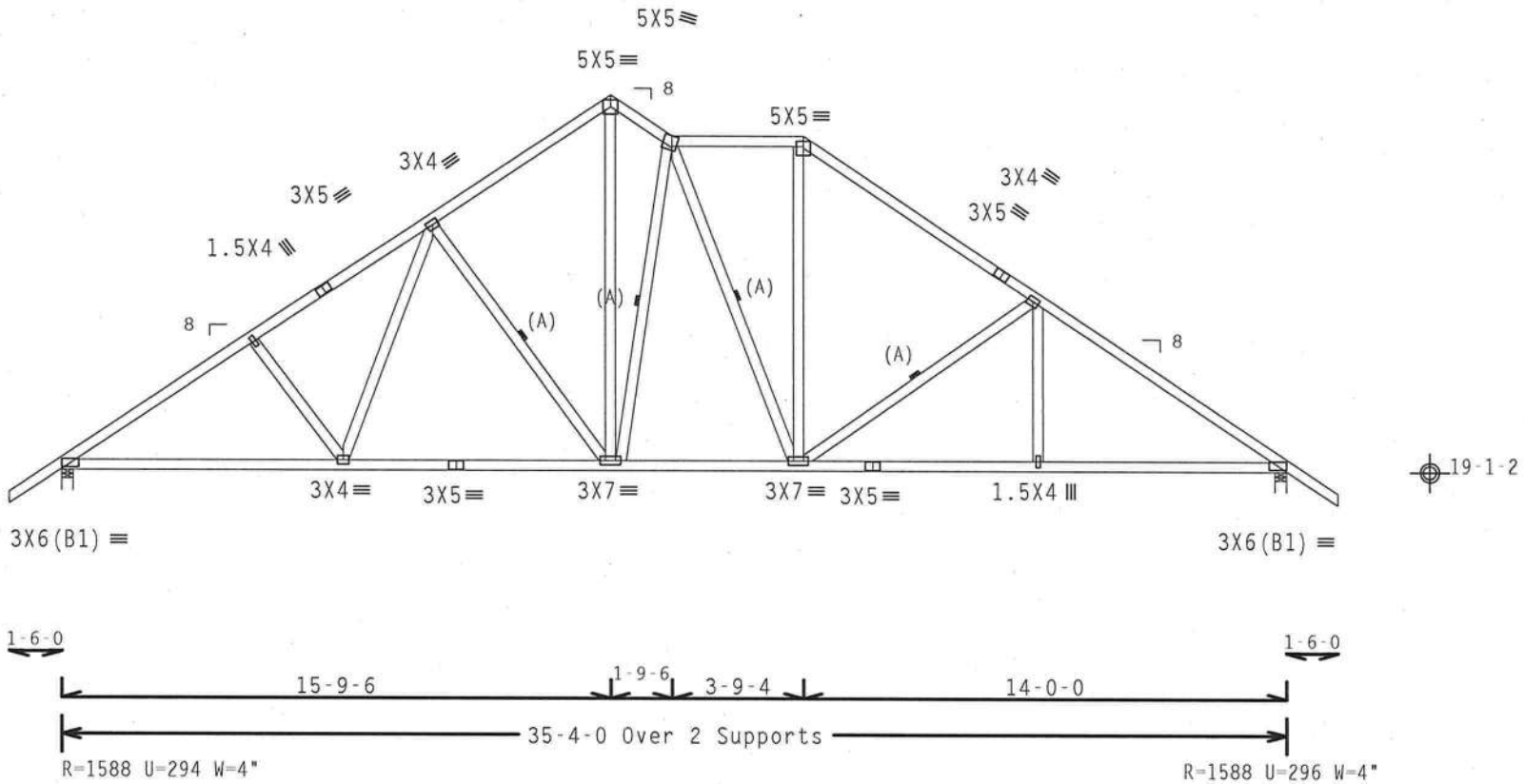

Design Crit: TPI-2002(STD)/FBC

PLT TYP. Wave | Cq/RT=1.00(1.25)/0(0) | 7.24.1230.16 | QTY:1 | FL/-/4/-/E/-/- | Scale =.1875"/Ft.

TW Building Components Group Inc.

Haines City, FL 33844
FL Certificate of Authorization # 0 278

WARNING TRUSSES REQUIRE EXTREME CARE IN FABRICATION, HANDLING, SHIPPING, INSTALLING AND BRACING. REFER TO BCSI (BUILDING COMPONENT SAFETY INFORMATION), PUBLISHED BY TPI (TRUSS PLATE INSTITUTE, 218 NORTH LEE STREET, SUITE 312, ALEXANDRIA, VA, 22314) AND WTCA (WOOD TRUSS COUNCIL OF AMERICA, 6300 ENTERPRISE LANE, MADISON, WI 53719) FOR SAFETY PRACTICES PRIOR TO PERFORMING THESE FUNCTIONS. UNLESS OTHERWISE INDICATED TOP CHORD SHALL HAVE PROPERLY ATTACHED STRUCTURAL PANELS AND BOTTOM CHORD SHALL HAVE A PROPERLY ATTACHED RIGID CEILING.

IMPORTANT FURNISH A COPY OF THIS DESIGN TO THE INSTALLATION CONTRACTOR. ITW BCG, INC. SHALL NOT BE RESPONSIBLE FOR ANY DEVIATION FROM THIS DESIGN; ANY FAILURE TO BUILD THE TRUSS IN COMFORMANCE WITH TPI; OR FABRICATING, HANDLING, SHIPPING, INSTALLING & BRACING OF TRUSSES.
DESIGN CONFORMS WITH APPLICABLE PROVISIONS OF NDS (NATIONAL DESIGN SPEC. BY AF&PA) AND TPI. ITW BCG CONNECTOR PLATES ARE MADE OF 20/18/16GA (W.H/SS/K) ASTM A653 GRADE 40/60 (W. K/H.SS) GALV. STEEL. APPLY PLATES TO EACH FACE OF TRUSS AND, UNLESS OTHERWISE LOCATED ON THIS DESIGN, POSITION PER DRAWINGS 160A-Z. ANY INSPECTION OF PLATES FOLLOWED BY (1) SHALL BE PER ANNEX A3 OF TPI1-2002 SEC.3. A SEAL ON THIS DRAWING INDICATES ACCEPTANCE OF PROFESSIONAL ENGINEERING RESPONSIBILITY SOLELY FOR THE TRUSS COMPONENT DESIGN SHOWN. THE SUITABILITY AND USE OF THIS COMPONENT FOR ANY BUILDING IS THE RESPONSIBILITY OF THE BUILDING DESIGNER PER ANSI/TPI 1 SEC. 2.

JAMES F. COLLINS JR. LICENSED No. 52212 STATE OF FLORIDA PROFESSIONAL ENGINEER
Jan 9, 2008

TC LL	20.0 PSF	REF	R8228- 77007
TC DL	10.0 PSF	DATE	01/31/08
BC DL	10.0 PSF	DRW	HCUSR8228 08031119
BC LL	0.0 PSF	HC-ENG	EC/WHK *
TOT.LD.	40.0 PSF	SEQN-	43876
DUR.FAC.	1.25	FROM	JP
SPACING	24.0"	JREF-	1TEL8228Z03

(dear--OWNER BUILDER deardorf -- , ** - T59)

Top chord 2x4 SP #2 Dense
Bot chord 2x4 SP #2 Dense
:Lt Wedge 2x4 SP #3:

Roof overhang supports 2.00 psf soffit load.

Deflection meets L/240 live and L/180 total load. Creep increase factor for dead load is 1.50.

110 mph wind, 21.16 ft mean hgt, ASCE 7-02, CLOSED bldg, not located within 4.50 ft from roof edge, CAT II, EXP B, wind TC DL=5.0 psf, wind BC DL=5.0 psf. Iw=1.00 GCpi(+/-)=0.18

Wind reactions based on MWFRS pressures.

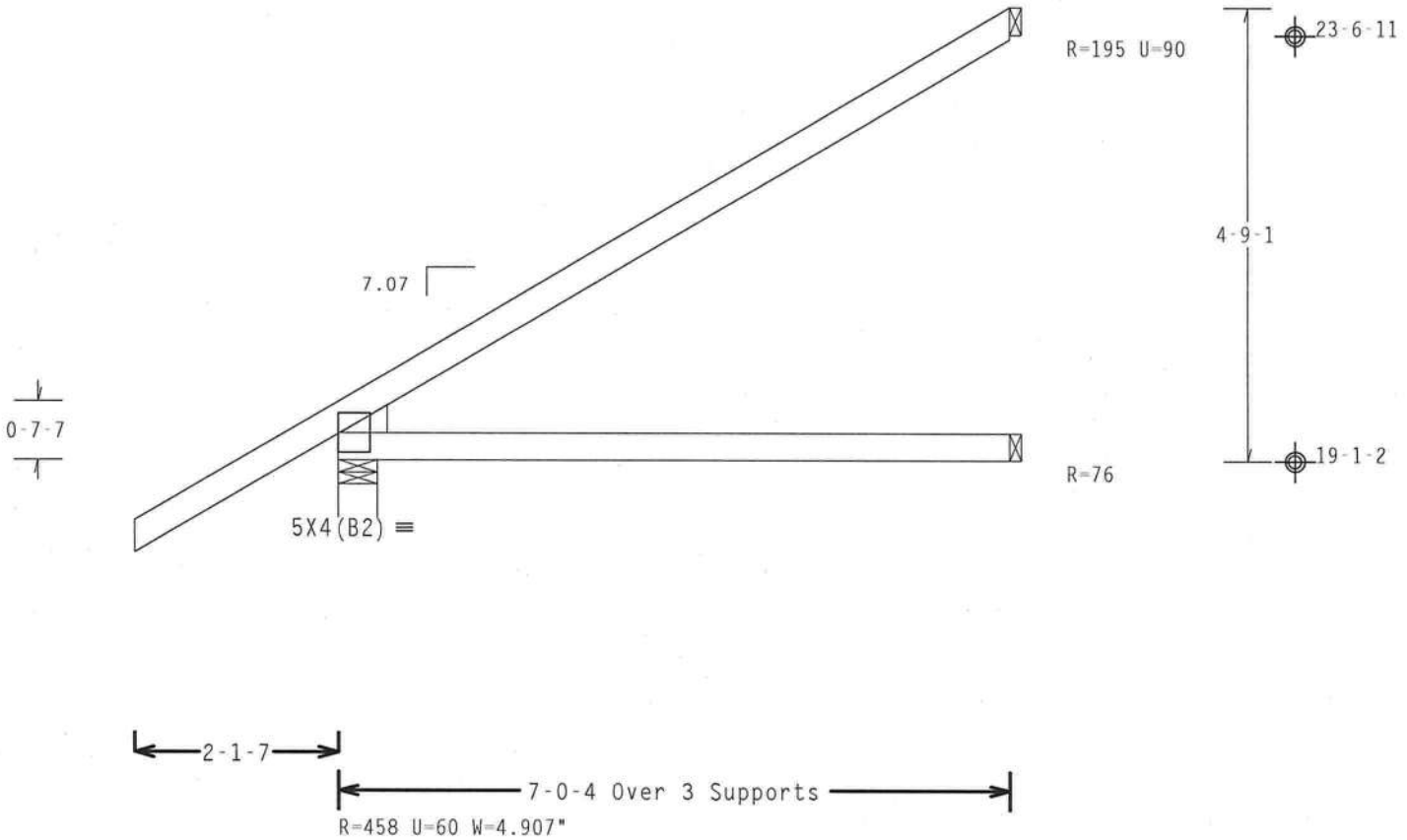

Design Crit: TPI-2002(STD)/FBC
Cq/RT=1.00(1.25)/0(0)

PLT TYP. Wave | 7.24.1230 | QTY:1 | FL/-/4/-/E/-/- | Scale =.5"/Ft.

Building Components Group Inc.

Haines City, FL 33844
FL Certificate of Authorization # 0 278

WARNINGTRUSSES REQUIRE EXTREME CARE IN FABRICATION, HANDLING, SHIPPING, INSTALLING AND BRACING. REFER TO BCSI (BUILDING COMPONENT SAFETY INFORMATION), PUBLISHED BY TPI (TRUSS PLATE INSTITUTE, 218 NORTH LEE STREET, SUITE 312, ALEXANDRIA, VA. 22314) AND WTCA (WOOD TRUSS COUNCIL OF AMERICA, 6300 ENTERPRISE LANE, MADISON, WI 53719) FOR SAFETY PRACTICES PRIOR TO PERFORMING THESE FUNCTIONS. UNLESS OTHERWISE INDICATED TOP CHORD SHALL HAVE PROPERLY ATTACHED STRUCTURAL PANELS AND BOTTOM CHORD SHALL HAVE A PROPERLY ATTACHED RIGID CEILING.

IMPORTANTFURNISH A COPY OF THIS DESIGN TO THE INSTALLATION CONTRACTOR. ITW BCG, INC. SHALL NOT BE RESPONSIBLE FOR ANY DEVIATION FROM THIS DESIGN; ANY FAILURE TO BUILD THE TRUSS IN COMFORMANCE WITH TPI; OR FABRICATING, HANDLING, SHIPPING, INSTALLING & BRACING OF TRUSSES. DESIGN CONFORMS WITH APPLICABLE PROVISIONS OF NDS (NATIONAL DESIGN SPEC. BY AF&PA) AND TPI. ITW BCG CONNECTOR PLATES ARE MADE OF 20/18/16GA (W,H/SS/K) ASTM A653 GRADE 40/60 (W, K/H,SS) GALV. STEEL. APPLY PLATES TO EACH FACE OF TRUSS AND, UNLESS OTHERWISE LOCATED ON THIS DESIGN, POSITION PER DRAWINGS 160A-Z. ANY INSPECTION OF PLATES FOLLOWED BY (1) SHALL BE PER ANNEX A3 OF TPI1-2002 SEC.3. A SEAL ON THIS DRAWING INDICATES ACCEPTANCE OF PROFESSIONAL ENGINEERING RESPONSIBILITY SOLELY FOR THE TRUSS COMPONENT DESIGN SHOWN. THE SUITABILITY AND USE OF THIS COMPONENT FOR ANY BUILDING IS THE RESPONSIBILITY OF THE BUILDING DESIGNER PER ANSI/TPI 1 SEC. 2.

JAMES F. COLLINS, JR. LICENSE No. 52212 STATE OF FLORIDA PROFESSIONAL ENGINEER
Jan 31 08

TC LL	20.0 PSF	REF R8228- 77008
TC DL	10.0 PSF	DATE 01/31/08
BC DL	10.0 PSF	DRW HCUSR8228 08031120
BC LL	0.0 PSF	HC-ENG EC/WHK
TOT.LD.	40.0 PSF	SEQN- 43893
DUR.FAC.	1.25	FROM JP
SPACING	24.0"	JREF- 1TEL8228Z03

(dear--OWNER BUILDER deardorf -- , ** - T6)

Top chord 2x4 SP #2 Dense
Bot chord 2x4 SP #2 Dense
Webs 2x4 SP #3

SPECIAL LOADS
------(LUMBER DUR.FAC.=1.25 / PLATE DUR.FAC.=1.25)

TC - From	60 PLF at	-1.51 to	60 PLF at	4.03
TC - From	60 PLF at	4.03 to	60 PLF at	16.97
BC - From	4 PLF at	-1.51 to	4 PLF at	0.00
BC - From	20 PLF at	0.00 to	20 PLF at	16.97

TC - 843 LB Conc. Load at 0.06
TC - 68 LB Conc. Load at 5.08
BC - 628 LB Conc. Load at 2.06, 4.06, 6.06
BC - 12 LB Conc. Load at 5.08
BC - 584 LB Conc. Load at 8.06
BC - 578 LB Conc. Load at 10.06
BC - 2026 LB Conc. Load at 10.24
BC - 415 LB Conc. Load at 12.06
BC - 851 LB Conc. Load at 13.07
BC - 768 LB Conc. Load at 14.06
BC - 770 LB Conc. Load at 15.89

Deflection meets L/240 live and L/180 total load. Creep increase factor for dead load is 1.50.

LOADING HAS BEEN CALCULATED BY THE TRUSS MANUFACTURER. IT IS THE RESPONSIBILITY OF THE BUILDING DESIGNER TO VERIFY AND APPROVE THE LOADING.

4 COMPLETE TRUSSES REQUIRED

Nailing Schedule: (12d_Common_(0.148"x3.25",_min.)_nails)
Top Chord: 1 Row @ 3.00" o.c.
Bot Chord: 1 Row @ 4.00" o.c.
Webs : 1 Row @ 4" o.c.
Repeat nailing as each layer is applied. Use equal spacing between rows and stagger nails in each row to avoid splitting.

110 mph wind, 15.00 ft mean hgt, ASCE 7-02, CLOSED bldg, not located within 4.50 ft from roof edge, CAT II, EXP B, wind TC DL=5.0 psf, wind BC DL=5.0 psf. Iw=1.00 GCpi(+/-)=0.18

Wind reactions based on MWFRS pressures.

Right end vertical not exposed to wind pressure.

Roof overhang supports 2.00 psf soffit load.

In lieu of structural panels use purlins to brace all flat TC @ 24" OC.

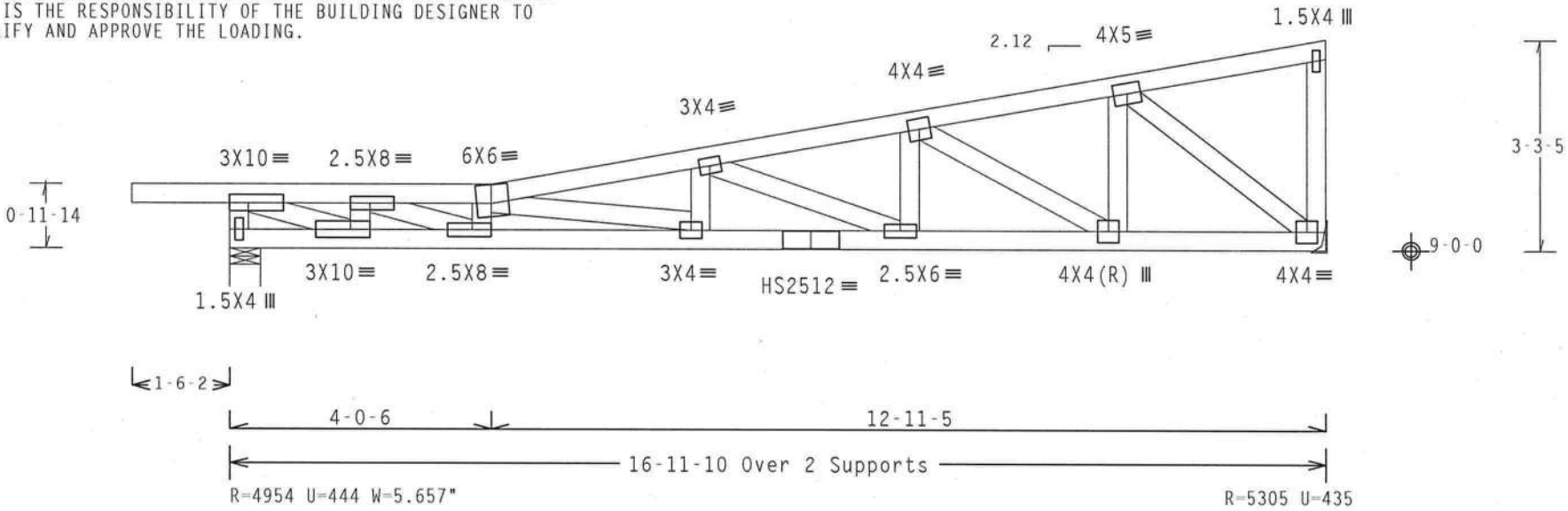

Design Crit: TPI-2002(STD)/FBC

PLT TYP. 20 Gauge HS,Wave Cq/RT=1.00(1.25)/0(0) 7.24.1230 16 QTY:1 FL/-/4/-/E/-/- Scale =.375"/Ft.

Building Components Group Inc.

Haines City, FL 33844
FL Certificate of Authorization # 0 278

WARNING TRUSSES REQUIRE EXTREME CARE IN FABRICATION, HANDLING, SHIPPING, INSTALLING AND BRACING. REFER TO BCSI (BUILDING COMPONENT SAFETY INFORMATION), PUBLISHED BY TPI (TRUSS PLATE INSTITUTE, 218 NORTH LEE STREET, SUITE 312, ALEXANDRIA, VA, 22314) AND WTCA (WOOD TRUSS COUNCIL OF AMERICA, 6300 ENTERPRISE LANE, MADISON, WI 53719) FOR SAFETY PRACTICES PRIOR TO PERFORMING THESE FUNCTIONS. UNLESS OTHERWISE INDICATED TOP CHORD SHALL HAVE PROPERLY ATTACHED STRUCTURAL PANELS AND BOTTOM CHORD SHALL HAVE A PROPERLY ATTACHED RIGID CEILING.

IMPORTANT FURNISH A COPY OF THIS DESIGN TO THE INSTALLATION CONTRACTOR. ITW BCG, INC. SHALL NOT BE RESPONSIBLE FOR ANY DEVIATION FROM THIS DESIGN; ANY FAILURE TO BUILD THE TRUSS IN CONFORMANCE WITH TPI; OR FABRICATING, HANDLING, SHIPPING, INSTALLING & BRACING OF TRUSSES. DESIGN CONFORMS WITH APPLICABLE PROVISIONS OF NDS (NATIONAL DESIGN SPEC. BY AF&PA) AND TPI. ITW BCG CONNECTOR PLATES ARE MADE OF 20/18/16GA (W,H/SS/K) ASTM A653 GRADE 40/60 (W, K/H,SS) GALV. STEEL. APPLY PLATES TO EACH FACE OF TRUSS AND, UNLESS OTHERWISE LOCATED ON THIS DESIGN, POSITION PER DRAWINGS 160A-Z. ANY INSPECTION OF PLATES FOLLOWED BY (1) SHALL BE PER ANNEX A3 OF TPI1-2002 SEC.3. A SEAL ON THIS DRAWING INDICATES ACCEPTANCE OF PROFESSIONAL ENGINEERING RESPONSIBILITY SOLELY FOR THE TRUSS COMPONENT DESIGN SHOWN. THE SUITABILITY AND USE OF THIS COMPONENT FOR ANY BUILDING IS THE RESPONSIBILITY OF THE BUILDING DESIGNER PER ANSI/TPI 1 SEC. 2.

JAMES F. COLLINS LICENSED No. 52212 STATE OF FLORIDA PROFESSIONAL ENGINEER

Jan 31, 2008

TC LL	20.0 PSF	REF R8228- 77009
TC DL	10.0 PSF	DATE 01/31/08
BC DL	10.0 PSF	DRW HCUSR8228 08031121
BC LL	0.0 PSF	HC-ENG EC/WHK
TOT.LD.	40.0 PSF	SEQN- 44038
DUR.FAC.	1.25	FROM JP
SPACING	24.0"	JREF- 1TEL8228Z03

(dear--OWNER BUILDER deardorf -- , ** - T60)

Top chord 2x4 SP #2 Dense
Bot chord 2x4 SP #2 Dense
:Lt Wedge 2x4 SP #3:

Roof overhang supports 2.00 psf soffit load.

Deflection meets L/240 live and L/180 total load. Creep increase factor for dead load is 1.50.

110 mph wind, 19.83 ft mean hgt, ASCE 7-02, CLOSED bldg, Located anywhere in roof, CAT II, EXP B, wind TC DL=5.0 psf, wind BC DL=5.0 psf. Iw=1.00 GCpi(+/-)=0.18

Wind reactions based on MWFRS pressures.

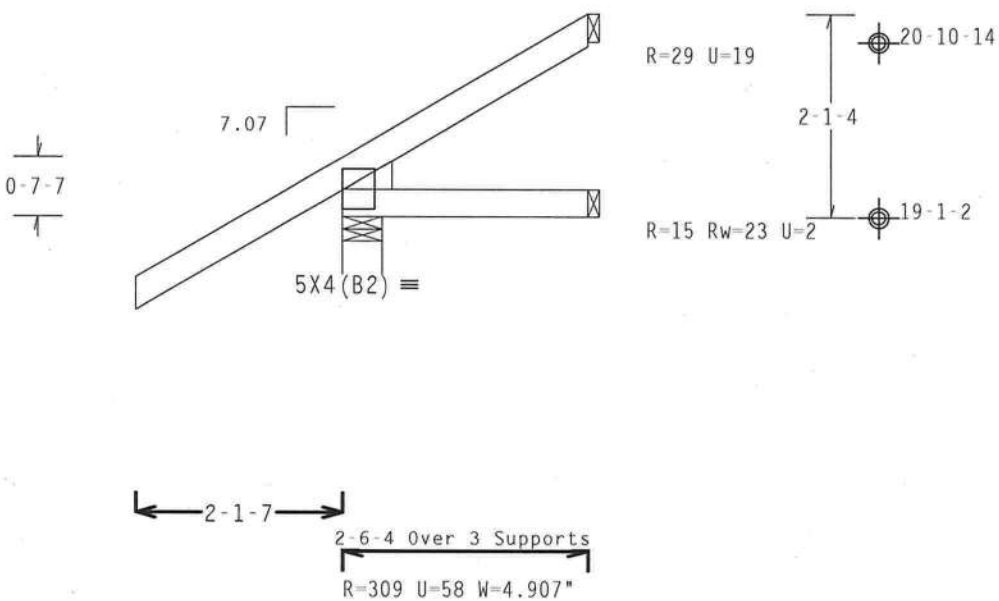

Design Crit: TPI-2002(STD)/FBC
Cq/RT=1.00(1.25)/0(0) 7.24.1230 1

PLT TYP. Wave QTY:1 FL/-/4/-/E/-/- Scale =.5"/Ft.

Building Components Group Inc.

Haines City, FL 33844
FL Certificate of Authorization # 0 278

WARNING TRUSSES REQUIRE EXTREME CARE IN FABRICATION, HANDLING, SHIPPING, INSTALLING AND BRACING. REFER TO BCSI (BUILDING COMPONENT SAFETY INFORMATION), PUBLISHED BY TPI (TRUSS PLATE INSTITUTE, 218 NORTH LEE STREET, SUITE 312, ALEXANDRIA, VA, 22314) AND WTCA (WOOD TRUSS COUNCIL OF AMERICA, 6300 ENTERPRISE LANE, MADISON, WI 53719) FOR SAFETY PRACTICES PRIOR TO PERFORMING THESE FUNCTIONS. UNLESS OTHERWISE INDICATED TOP CHORD SHALL HAVE PROPERLY ATTACHED STRUCTURAL PANELS AND BOTTOM CHORD SHALL HAVE A PROPERLY ATTACHED RIGID CEILING.

IMPORTANT FURNISH A COPY OF THIS DESIGN TO THE INSTALLATION CONTRACTOR. ITW BCG, INC. SHALL NOT BE RESPONSIBLE FOR ANY DEVIATION FROM THIS DESIGN; ANY FAILURE TO BUILD THE TRUSS IN COMFORMANCE WITH TPI; OR FABRICATING, HANDLING, SHIPPING, INSTALLING & BRACING OF TRUSSES.
DESIGN CONFORMS WITH APPLICABLE PROVISIONS OF NDS (NATIONAL DESIGN SPEC. BY AF&PA) AND TPI. ITW BCG CONNECTOR PLATES ARE MADE OF 20/18/16GA (W,H/SS/K) ASTM A653 GRADE 40/60 (W, K/H,SS) GALV. STEEL. APPLY PLATES TO EACH FACE OF TRUSS AND, UNLESS OTHERWISE LOCATED ON THIS DESIGN, POSITION PER DRAWINGS 160A-Z. ANY INSPECTION OF PLATES FOLLOWED BY (1) SHALL BE PER ANNEX A3 OF TPI1-2002 SEC.3. A SEAL ON THIS DRAWING INDICATES ACCEPTANCE OF PROFESSIONAL ENGINEERING RESPONSIBILITY SOLELY FOR THE TRUSS COMPONENT DESIGN SHOWN. THE SUITABILITY AND USE OF THIS COMPONENT FOR ANY BUILDING IS THE RESPONSIBILITY OF THE BUILDING DESIGNER PER ANSI/TPI 1 SEC. 2.

JAMES F. COLLINS, JR. LICENSE No 52212 STATE OF FLORIDA PROFESSIONAL ENGINEER
Jan 31 08

TC LL	20.0 PSF	REF R8228- 77010
TC DL	10.0 PSF	DATE 01/31/08
BC DL	10.0 PSF	DRW HCUSR8228 08031122
BC LL	0.0 PSF	HC-ENG EC/WHK
TOT.LD.	40.0 PSF	SEQN- 43891
DUR.FAC.	1.25	FROM JP
SPACING	24.0"	JREF- 1TEL8228Z03

(dear--OWNER BUILDER deardorf -- , ** - T61)

THIS DWG PREPARED FROM COMPUTER INPUT (LOADS & DIMENSIONS) SUBMITTED BY TRUSS MFR.

Top chord 2x4 SP #2 Dense
Bot chord 2x4 SP #2 Dense
Webs 2x4 SP #3

110 mph wind, 21.81 ft mean hgt, ASCE 7-02, CLOSED bldg, not located within 4.50 ft from roof edge, CAT II, EXP B, wind TC DL=5.0 psf, wind BC DL=5.0 psf. Iw=1.00 GCpi(+/-)=0.18

Wind reactions based on MWFRS pressures.

Roof overhang supports 2.00 psf soffit load.

Deflection meets L/240 live and L/180 total load. Creep increase factor for dead load is 1.50.

LOADING HAS BEEN CALCULATED BY THE TRUSS MANUFACTURER. IT IS THE RESPONSIBILITY OF THE BUILDING DESIGNER TO VERIFY AND APPROVE THE LOADING.

LOADING HAS BEEN CALCULATED BY THE TRUSS MANUFACTURER. IT IS THE RESPONSIBILITY OF THE BUILDING DESIGNER TO VERIFY AND APPROVE THE LOADING.

SPECIAL LOADS
------(LUMBER DUR.FAC.=1.25 / PLATE DUR.FAC.=1.25)

TC -	From	66 PLF	at -1.51	to	66 PLF	at	6.56
BC -	From	5 PLF	at -1.51	to	5 PLF	at	-0.00
BC -	From	20 PLF	at -0.00	to	20 PLF	at	6.56
TC -		58 LB	Conc. Load	at	1.82		
TC -		165 LB	Conc. Load	at	4.38		
TC -		195 LB	Conc. Load	at	5.02		
BC -		29 LB	Conc. Load	at	1.82		
BC -		64 LB	Conc. Load	at	4.38		
BC -		76 LB	Conc. Load	at	5.02		

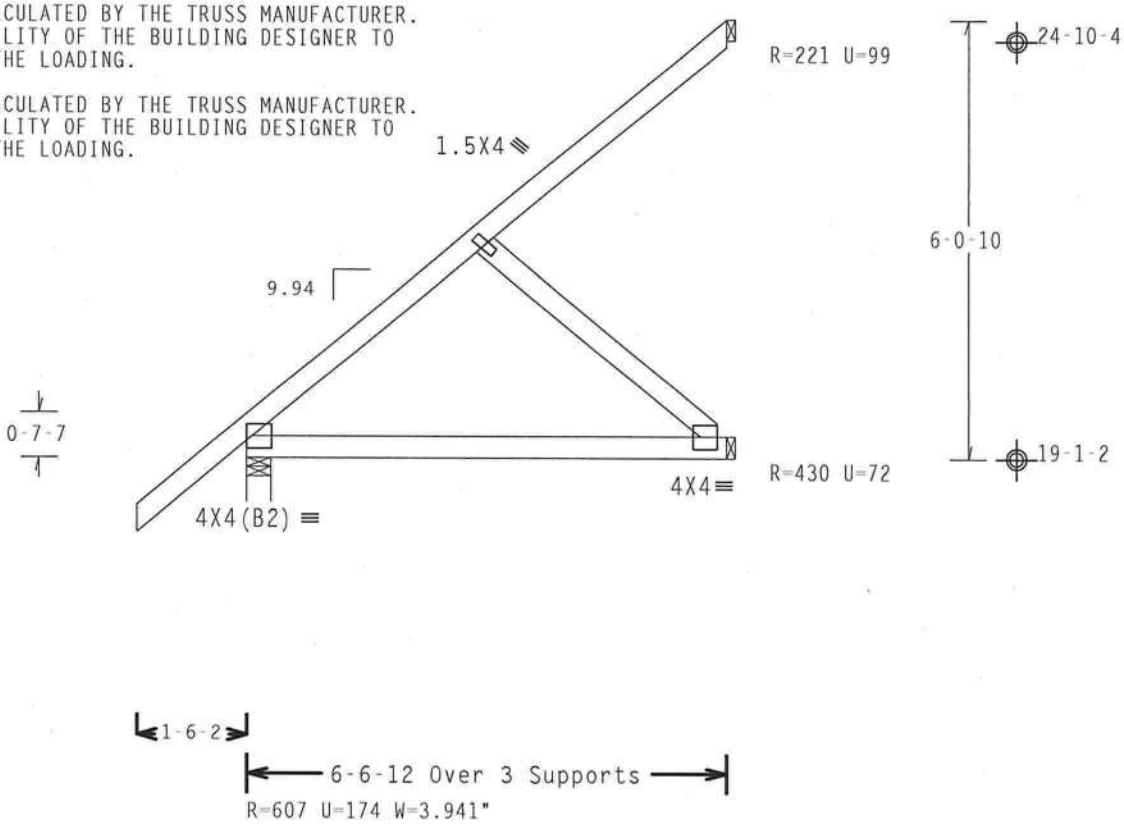

Design Crit: TPI-2002(STD)/FBC
Cq/RT=1.00(1.25)/0(0)

PLT TYP. Wave | 7.24.1230 | QTY:1 | FL/-/4/-/E/-/- | Scale =.375"/Ft.

Building Components Group Inc.
Haines City, FL 33844
FL Certificate of Authorization # 0 278

WARNINGTRUSSES REQUIRE EXTREME CARE IN FABRICATION, HANDLING, SHIPPING, INSTALLING AND BRACING. REFER TO BCSI (BUILDING COMPONENT SAFETY INFORMATION), PUBLISHED BY TPI (TRUSS PLATE INSTITUTE, 218 NORTH LEE STREET, SUITE 312, ALEXANDRIA, VA, 22314) AND WTCA (WOOD TRUSS COUNCIL OF AMERICA, 6300 ENTERPRISE LANE, MADISON, WI 53719) FOR SAFETY PRACTICES PRIOR TO PERFORMING THESE FUNCTIONS. UNLESS OTHERWISE INDICATED TOP CHORD SHALL HAVE PROPERLY ATTACHED STRUCTURAL PANELS AND BOTTOM CHORD SHALL HAVE A PROPERLY ATTACHED RIGID CEILING.

IMPORTANTFURNISH A COPY OF THIS DESIGN TO THE INSTALLATION CONTRACTOR. ITW BCG, INC. SHALL NOT BE RESPONSIBLE FOR ANY DEVIATION FROM THIS DESIGN; ANY FAILURE TO BUILD THE TRUSS IN COMFORMANCE WITH TPI; OR FABRICATING, HANDLING, SHIPPING, INSTALLING & BRACING OF TRUSSES.
DESIGN CONFORMS WITH APPLICABLE PROVISIONS OF NDS (NATIONAL DESIGN SPEC. BY AF&PA) AND TPI. ITW BCG CONNECTOR PLATES ARE MADE OF 20/18/16GA (W,H/SS/K) ASTM A653 GRADE 40/60 (W, K/H,SS) GALV. STEEL. APPLY PLATES TO EACH FACE OF TRUSS AND, UNLESS OTHERWISE LOCATED ON THIS DESIGN, POSITION PER DRAWINGS 160A-Z. ANY INSPECTION OF PLATES FOLLOWED BY (1) SHALL BE PER ANNEX A3 OF TPI1-2002 SEC.3. A SEAL ON THIS DRAWING INDICATES ACCEPTANCE OF PROFESSIONAL ENGINEERING RESPONSIBILITY SOLELY FOR THE TRUSS COMPONENT DESIGN SHOWN. THE SUITABILITY AND USE OF THIS COMPONENT FOR ANY BUILDING IS THE RESPONSIBILITY OF THE BUILDING DESIGNER PER ANSI/TPI 1 SEC. 2.

JAMES F. COLVINS, JR. LICENSE No. 52212 STATE OF FLORIDA PROFESSIONAL ENGINEER
Jan 31 08

TC LL	20.0 PSF	REF	R8228- 77011
TC DL	10.0 PSF	DATE	01/31/08
BC DL	10.0 PSF	DRW	HCUSR8228 08031123
BC LL	0.0 PSF	HC-ENG	EC/WHK
TOT.LD.	40.0 PSF	SEQN-	43912
DUR.FAC.	1.25	FROM	JP
SPACING	24.0"	JREF-	1TEL8228Z03

Top chord 2x4 SP #2 Dense
Bot chord 2x4 SP #2 Dense
:Lt Wedge 2x4 SP #3:

Roof overhang supports 2.00 psf soffit load.

Deflection meets L/240 live and L/180 total load. Creep increase factor for dead load is 1.50.

110 mph wind, 19.82 ft mean hgt, ASCE 7-02, CLOSED bldg, Located anywhere in roof, CAT II, EXP B, wind TC DL=5.0 psf, wind BC DL=5.0 psf. Iw=1.00 GCpi(+/-)=0.18

Wind reactions based on MWFRS pressures.

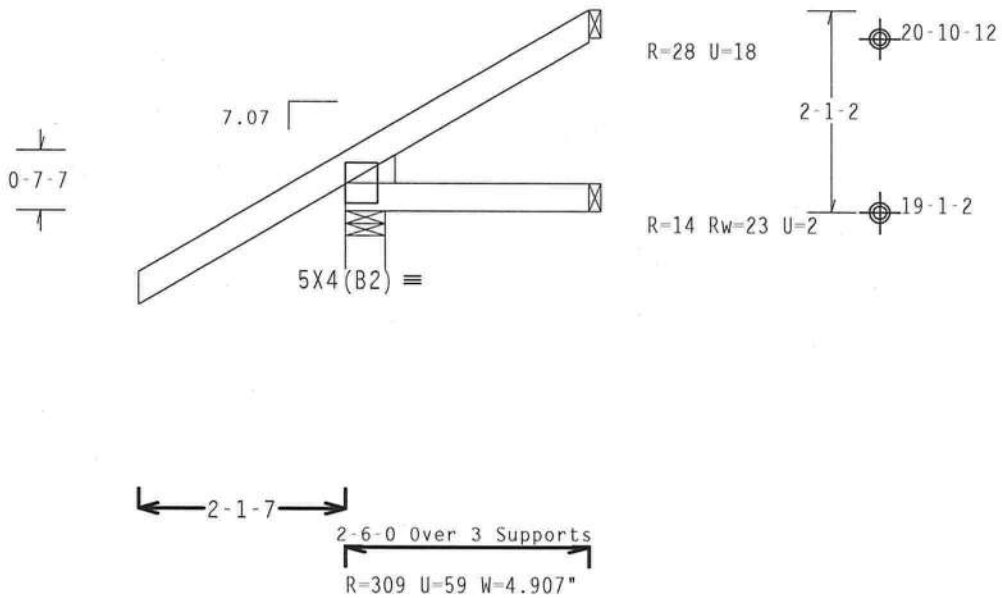

Design Crit: TPI-2002(STD)/FBC
Cq/RT=1.00(1.25)/0(0)

PLT TYP. Wave | 7.24.1230.16 | QTY:1 | FL/-/4/-/E/-/- | Scale =.5"/Ft.

Building Components Group Inc.

Haines City, FL 33844
FL Certificate of Authorization # 0 278

WARNINGTRUSSES REQUIRE EXTREME CARE IN FABRICATION, HANDLING, SHIPPING, INSTALLING AND BRACING. REFER TO BCSI (BUILDING COMPONENT SAFETY INFORMATION), PUBLISHED BY TPI (TRUSS PLATE INSTITUTE, 218 NORTH LEE STREET, SUITE 312, ALEXANDRIA, VA, 22314) AND WTCA (WOOD TRUSS COUNCIL OF AMERICA, 6300 ENTERPRISE LANE, MADISON, WI 53719) FOR SAFETY PRACTICES PRIOR TO PERFORMING THESE FUNCTIONS. UNLESS OTHERWISE INDICATED TOP CHORD SHALL HAVE PROPERLY ATTACHED STRUCTURAL PANELS AND BOTTOM CHORD SHALL HAVE A PROPERLY ATTACHED RIGID CEILING.

IMPORTANTFURNISH A COPY OF THIS DESIGN TO THE INSTALLATION CONTRACTOR. ITW BCG, INC. SHALL NOT BE RESPONSIBLE FOR ANY DEVIATION FROM THIS DESIGN; ANY FAILURE TO BUILD THE TRUSS IN COMFORMANCE WITH TPI; OR FABRICATING, HANDLING, SHIPPING, INSTALLING & BRACING OF TRUSSES.
DESIGN CONFORMS WITH APPLICABLE PROVISIONS OF NDS (NATIONAL DESIGN SPEC, BY AF&PA) AND TPI. ITW BCG CONNECTOR PLATES ARE MADE OF 20/18/16GA (W,H/SS/K) ASTM A653 GRADE 40/60 (W, K/H,SS) GALV. STEEL. APPLY PLATES TO EACH FACE OF TRUSS AND, UNLESS OTHERWISE LOCATED ON THIS DESIGN, POSITION PER DRAWINGS 160A-Z. ANY INSPECTION OF PLATES FOLLOWED BY (1) SHALL BE PER ANNEX A3 OF TPI1-2002 SEC.3. A SEAL ON THIS DRAWING INDICATES ACCEPTANCE OF PROFESSIONAL ENGINEERING RESPONSIBILITY SOLELY FOR THE TRUSS COMPONENT DESIGN SHOWN. THE SUITABILITY AND USE OF THIS COMPONENT FOR ANY BUILDING IS THE RESPONSIBILITY OF THE BUILDING DESIGNER PER ANSI/TPI 1 SEC. 2.

JAMES F. COLLINS, JR. LICENSE No 52212 STATE OF FLORIDA PROFESSIONAL ENGINEER
Jan 31 '08

TC LL	20.0 PSF	REF R8228- 77012
TC DL	10.0 PSF	DATE 01/31/08
BC DL	10.0 PSF	DRW HCUSR8228 08031124
BC LL	0.0 PSF	HC-ENG EC/WHK
TOT.LD.	40.0 PSF	SEQN- 43880
DUR.FAC.	1.25	FROM JP
SPACING	24.0"	JREF- 1TEL8228Z03

Top chord 2x4 SP #2 Dense
Bot chord 2x4 SP #2 Dense
Webs 2x4 SP #3

Roof overhang supports 2.00 psf soffit load.

Deflection meets L/240 live and L/180 total load. Creep increase factor for dead load is 1.50.

110 mph wind, 21.81 ft mean hgt, ASCE 7-02, CLOSED bldg, not located within 4.50 ft from roof edge, CAT II, EXP B, wind TC DL=5.0 psf, wind BC DL=5.0 psf. Iw=1.00 GCpi(+/-)=0.18

Wind reactions based on MWFRS pressures.

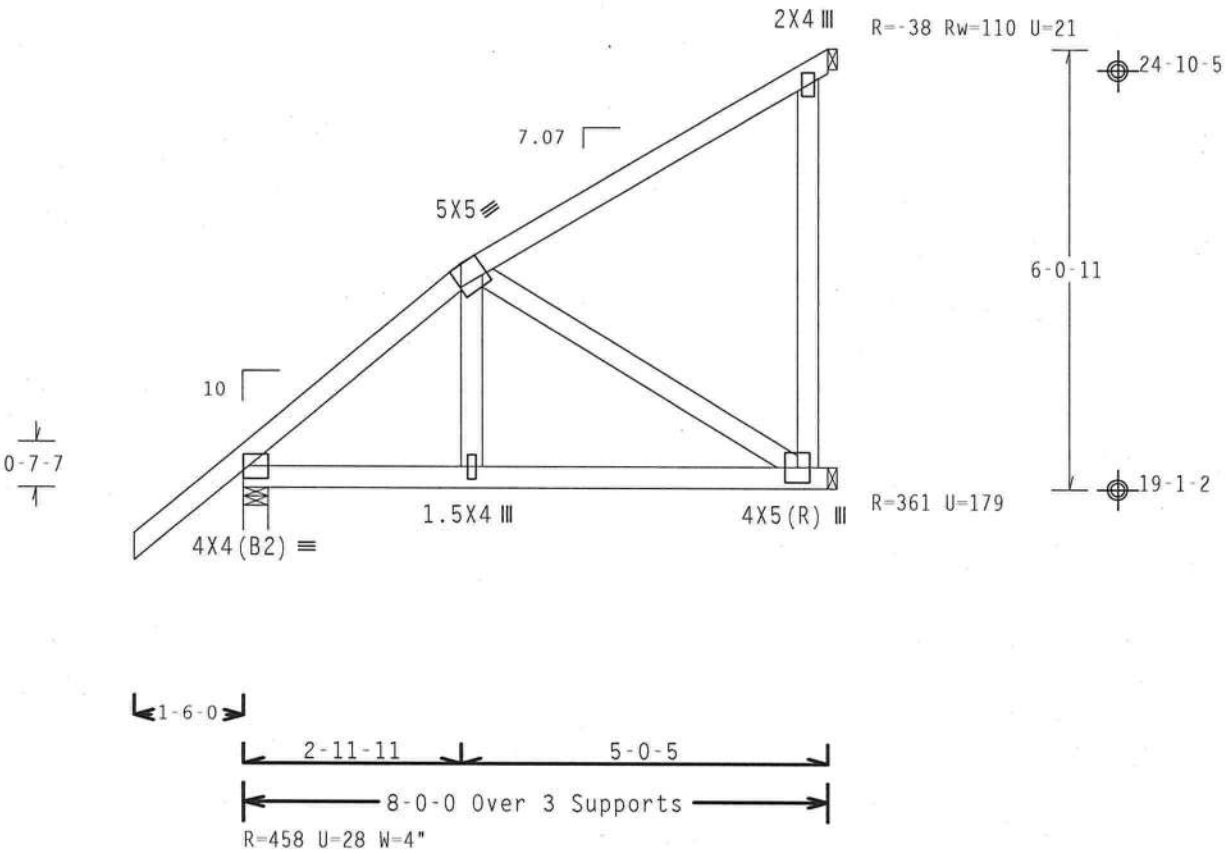

Design Crit: TPI-2002(STD)/FBC
Cq/RT=1.00(1.25)/0(0)

PLT TYP. Wave | 7.24.1230.16 | QTY:1 | FL/-/4/-/E/-/- | Scale =.375"/Ft.

Building Components Group Inc.

Haines City, FL 33844
FL Certificate of Authorization # 0 278

WARNING TRUSSES REQUIRE EXTREME CARE IN FABRICATION, HANDLING, SHIPPING, INSTALLING AND BRACING. REFER TO BCSI (BUILDING COMPONENT SAFETY INFORMATION), PUBLISHED BY TPI (TRUSS PLATE INSTITUTE, 218 NORTH LEE STREET, SUITE 312, ALEXANDRIA, VA, 22314) AND WTCA (WOOD TRUSS COUNCIL OF AMERICA, 6300 ENTERPRISE LANE, MADISON, WI 53719) FOR SAFETY PRACTICES PRIOR TO PERFORMING THESE FUNCTIONS. UNLESS OTHERWISE INDICATED TOP CHORD SHALL HAVE PROPERLY ATTACHED STRUCTURAL PANELS AND BOTTOM CHORD SHALL HAVE A PROPERLY ATTACHED RIGID CEILING.

IMPORTANT FURNISH A COPY OF THIS DESIGN TO THE INSTALLATION CONTRACTOR. ITW BCG, INC. SHALL NOT BE RESPONSIBLE FOR ANY DEVIATION FROM THIS DESIGN; ANY FAILURE TO BUILD THE TRUSS IN CONFORMANCE WITH TPI; OR FABRICATING, HANDLING, SHIPPING, INSTALLING & BRACING OF TRUSSES.
DESIGN CONFORMS WITH APPLICABLE PROVISIONS OF NDS (NATIONAL DESIGN SPEC. BY AF&PA) AND TPI. ITW BCG CONNECTOR PLATES ARE MADE OF 20/18/16GA (W,H/SS/K) ASTM A653 GRADE 40/60 (H, K/H,SS) GALV. STEEL. APPLY PLATES TO EACH FACE OF TRUSS AND, UNLESS OTHERWISE LOCATED ON THIS DESIGN, POSITION PER DRAWINGS 160A-Z. ANY INSPECTION OF PLATES FOLLOWED BY (1) SHALL BE PER ANNEX A3 OF TPI1-2002 SEC.3. A SEAL ON THIS DRAWING INDICATES ACCEPTANCE OF PROFESSIONAL ENGINEERING RESPONSIBILITY SOLELY FOR THE TRUSS COMPONENT DESIGN SHOWN. THE SUITABILITY AND USE OF THIS COMPONENT FOR ANY BUILDING IS THE RESPONSIBILITY OF THE BUILDING DESIGNER PER ANSI/TPI 1 SEC. 2.

JAMES F. COLLINS, JR. LICENSED No. 52212 STATE OF FLORIDA PROFESSIONAL ENGINEER
Jan

TC LL	20.0 PSF	REF R8228- 77013
TC DL	10.0 PSF	DATE 01/31/08
BC DL	10.0 PSF	DRW HCUSR8228 08031125
BC LL	0.0 PSF	HC-ENG EC/WHK
TOT.LD.	40.0 PSF	SEQN- 43901
DUR.FAC.	1.25	FROM JP
SPACING	24.0"	JREF- 1TEL8228Z03

(dear--OWNER BUILDER deardorf -- , ** - T64)

Top chord 2x4 SP #2 Dense
Bot chord 2x4 SP #2 Dense
:Lt Wedge 2x4 SP #3:

Roof overhang supports 2.00 psf soffit load.

Deflection meets L/240 live and L/180 total load. Creep increase factor for dead load is 1.50.

110 mph wind, 20.89 ft mean hgt, ASCE 7-02, CLOSED bldg, not located within 4.50 ft from roof edge, CAT II, EXP B, wind TC DL=5.0 psf, wind BC DL=5.0 psf. Iw=1.00 GCpi(+/-)=0.18

Wind reactions based on MWFRS pressures.

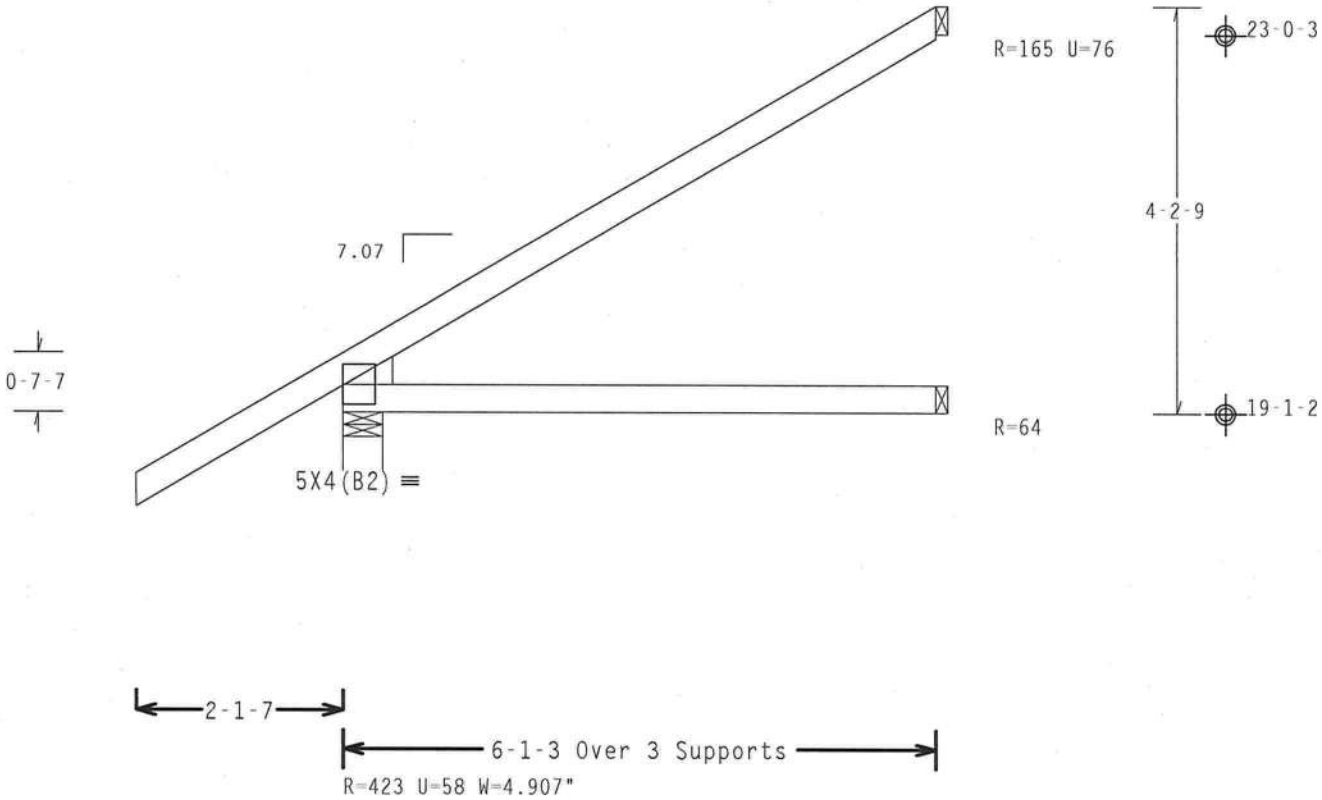

Design Crit: TPI-2002(STD)/FBC
Cq/RT=1.00(1.25)/0(0) 7.24.1230

PLT TYP. Wave QTY:1 FL/-/4/-/E/-/- Scale =.5"/Ft.

Building Components Group Inc.

Haines City, FL 33844
FL Certificate of Authorization # 0 278

WARNING TRUSSES REQUIRE EXTREME CARE IN FABRICATION, HANDLING, SHIPPING, INSTALLING AND BRACING. REFER TO BCSI (BUILDING COMPONENT SAFETY INFORMATION), PUBLISHED BY TPI (TRUSS PLATE INSTITUTE, 218 NORTH LEE STREET, SUITE 312, ALEXANDRIA, VA, 22314) AND WTCA (WOOD TRUSS COUNCIL OF AMERICA, 6300 ENTERPRISE LANE, MADISON, WI 53719) FOR SAFETY PRACTICES PRIOR TO PERFORMING THESE FUNCTIONS. UNLESS OTHERWISE INDICATED TOP CHORD SHALL HAVE PROPERLY ATTACHED STRUCTURAL PANELS AND BOTTOM CHORD SHALL HAVE A PROPERLY ATTACHED RIGID CEILING.

IMPORTANT FURNISH A COPY OF THIS DESIGN TO THE INSTALLATION CONTRACTOR. ITW BCG, INC. SHALL NOT BE RESPONSIBLE FOR ANY DEVIATION FROM THIS DESIGN; ANY FAILURE TO BUILD THE TRUSS IN COMFORMANCE WITH TPI; OR FABRICATING, HANDLING, SHIPPING, INSTALLING & BRACING OF TRUSSES.
DESIGN CONFORMS WITH APPLICABLE PROVISIONS OF NDS (NATIONAL DESIGN SPEC. BY AF&PA) AND TPI. ITW BCG CONNECTOR PLATES ARE MADE OF 20/18/16GA (W,H/SS/K) ASTM A653 GRADE 40/60 (W, K/H,SS) GALV. STEEL. APPLY PLATES TO EACH FACE OF TRUSS AND, UNLESS OTHERWISE LOCATED ON THIS DESIGN, POSITION PER DRAWINGS 160A-Z. ANY INSPECTION OF PLATES FOLLOWED BY (1) SHALL BE PER ANNEX A3 OF TPI1-2002 SEC.3. A SEAL ON THIS DRAWING INDICATES ACCEPTANCE OF PROFESSIONAL ENGINEERING RESPONSIBILITY SOLELY FOR THE TRUSS COMPONENT DESIGN SHOWN. THE SUITABILITY AND USE OF THIS COMPONENT FOR ANY BUILDING IS THE RESPONSIBILITY OF THE BUILDING DESIGNER PER ANSI/TPI 1 SEC. 2.

JAMES F. COLLINS, JR. LICENSE No. 52212 STATE OF FLORIDA PROFESSIONAL ENGINEER
Jan 31 08

TC LL	20.0 PSF	REF R8228- 77014
TC DL	10.0 PSF	DATE 01/31/08
BC DL	10.0 PSF	DRW HCUSR8228 08031126
BC LL	0.0 PSF	HC-ENG EC/WHK
TOT.LD.	40.0 PSF	SEQN- 43895
DUR.FAC.	1.25	FROM JP
SPACING	24.0"	JREF- 1TEL8228Z03

Top chord 2x4 SP #2 Dense
Bot chord 2x4 SP #2 Dense
Webs 2x4 SP #3

Deflection meets L/240 live and L/180 total load. Creep increase factor for dead load is 1.50.

110 mph wind, 22.48 ft mean hgt, ASCE 7-02, CLOSED bldg, not located within 4.50 ft from roof edge, CAT II, EXP B, wind TC DL=5.0 psf, wind BC DL=5.0 psf. Iw=1.00 GCpi(+/-)=0.18

Wind reactions based on MWFRS pressures.

Right end vertical not exposed to wind pressure.

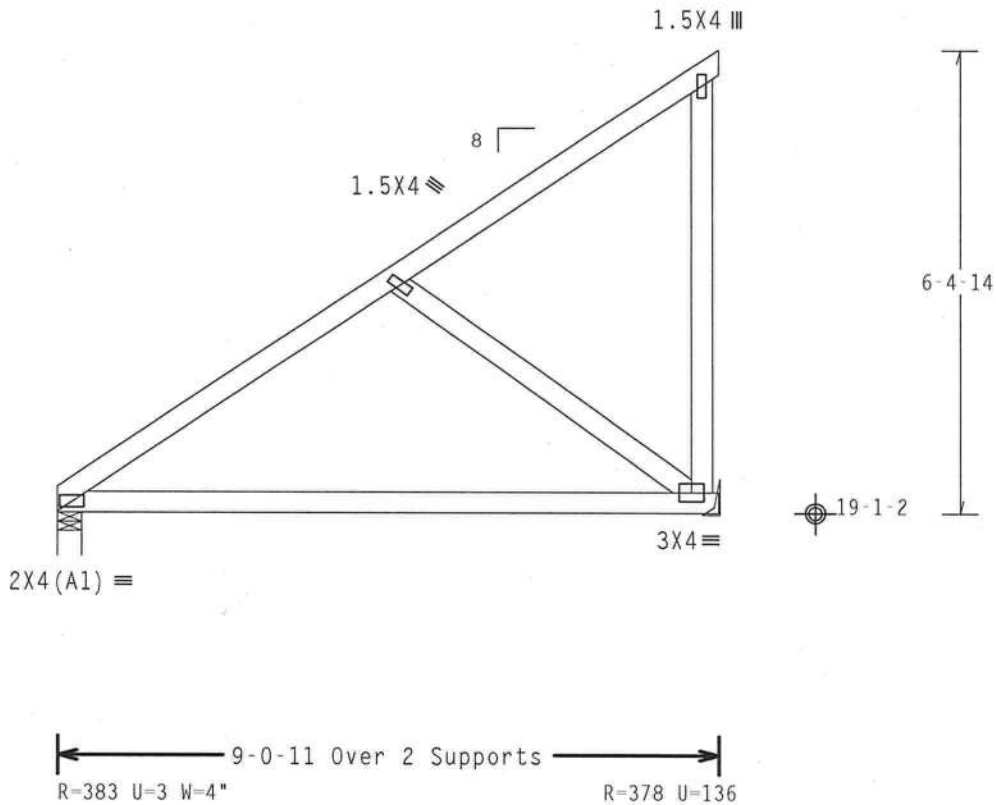

Design Crit: TPI-2002(STD)/FBC
Cq/RT=1.00(1.25)/0(0)

PLT TYP. Wave | 7.24.1230 | QTY:1 | FL/-/4/-/E/-/- | Scale =.375"/Ft.

WARNING TRUSSES REQUIRE EXTREME CARE IN FABRICATION, HANDLING, SHIPPING, INSTALLING AND BRACING. REFER TO BCSI (BUILDING COMPONENT SAFETY INFORMATION), PUBLISHED BY TPI (TRUSS PLATE INSTITUTE, 218 NORTH LEE STREET, SUITE 312, ALEXANDRIA, VA. 22314) AND WTCA (WOOD TRUSS COUNCIL OF AMERICA, 6300 ENTERPRISE LANE, MADISON, WI 53719) FOR SAFETY PRACTICES PRIOR TO PERFORMING THESE FUNCTIONS. UNLESS OTHERWISE INDICATED TOP CHORD SHALL HAVE PROPERLY ATTACHED STRUCTURAL PANELS AND BOTTOM CHORD SHALL HAVE A PROPERLY ATTACHED RIGID CEILING.

IMPORTANT FURNISH A COPY OF THIS DESIGN TO THE INSTALLATION CONTRACTOR. ITW BCG, INC. SHALL NOT BE RESPONSIBLE FOR ANY DEVIATION FROM THIS DESIGN; ANY FAILURE TO BUILD THE TRUSS IN COMFORMANCE WITH TPI; OR FABRICATING, HANDLING, SHIPPING, INSTALLING & BRACING OF TRUSSES. DESIGN CONFORMS WITH APPLICABLE PROVISIONS OF NDS (NATIONAL DESIGN SPEC. BY AF&PA) AND TPI. ITW BCG CONNECTOR PLATES ARE MADE OF 20/18/16GA (W,H/SS/K) ASTM A653 GRADE 40/60 (W, K/H,SS) GALV. STEEL. APPLY PLATES TO EACH FACE OF TRUSS AND, UNLESS OTHERWISE LOCATED ON THIS DESIGN, POSITION PER DRAWINGS 160A-Z. ANY INSPECTION OF PLATES FOLLOWED BY (1) SHALL BE PER ANNEX A3 OF TPI1-2002 SEC.3. A SEAL ON THIS DRAWING INDICATES ACCEPTANCE OF PROFESSIONAL ENGINEERING RESPONSIBILITY SOLELY FOR THE TRUSS COMPONENT DESIGN SHOWN. THE SUITABILITY AND USE OF THIS COMPONENT FOR ANY BUILDING IS THE RESPONSIBILITY OF THE BUILDING DESIGNER PER ANSI/TPI 1 SEC. 2.

ITW Building Components Group Inc.
Haines City, FL 33844
FL Certificate of Authorization # 0 278

JAMES F. COLLINS JR. LICENSE No. 52212 STATE OF FLORIDA PROFESSIONAL ENGINEER
Jan 31 '08

TC LL	20.0 PSF	REF	R8228- 77015
TC DL	10.0 PSF	DATE	01/31/08
BC DL	10.0 PSF	DRW	HCUSR8228 08031127
BC LL	0.0 PSF	HC-ENG	EC/WHK *
TOT.LD.	40.0 PSF	SEQN-	43897
DUR.FAC.	1.25	FROM	JP
SPACING	24.0"	JREF-	1TEL8228Z03

(dear--OWNER BUILDER deardorf -- , ** - T68)

THIS DWG PREPARED FROM COMPUTER INPUT (LOADS & DIMENSIONS) SUBMITTED BY TRUSS MFR.

Top chord 2x4 SP #2 Dense
Bot chord 2x4 SP #2 Dense
Webs 2x4 SP #3

SPECIAL LOADS
------(LUMBER DUR.FAC.=1.25 / PLATE DUR.FAC.=1.25)

TC - From	63 PLF	at	-2.40	to	63 PLF	at 12.81
BC - From	5 PLF	at	-2.40	to	5 PLF	at 0.00
BC - From	20 PLF	at	0.00	to	20 PLF	at 12.81
TC -	-120 LB	Conc. Load	at	0.96		
TC -	37 LB	Conc. Load	at	3.52		
TC -	103 LB	Conc. Load	at	4.87		
TC -	101 LB	Conc. Load	at	6.09		
TC -	182 LB	Conc. Load	at	8.07		
TC -	155 LB	Conc. Load	at	8.65		
TC -	206 LB	Conc. Load	at	11.21		
BC -	-17 LB	Conc. Load	at	0.96		
BC -	15 LB	Conc. Load	at	3.52		
BC -	41 LB	Conc. Load	at	4.87		
BC -	37 LB	Conc. Load	at	6.09		
BC -	76 LB	Conc. Load	at	8.07		
BC -	58 LB	Conc. Load	at	8.65		
BC -	458 LB	Conc. Load	at	11.27		

110 mph wind, 22.38 ft mean hgt, ASCE 7-02, CLOSED bldg, not located within 4.50 ft from roof edge, CAT II, EXP B, wind TC DL=5.0 psf, wind BC DL=5.0 psf. Iw=1.00 GCpi(+/-)=0.18

LOADING HAS BEEN CALCULATED BY THE TRUSS MANUFACTURER. IT IS THE RESPONSIBILITY OF THE BUILDING DESIGNER TO VERIFY AND APPROVE THE LOADING.

Wind reactions based on MWFRS pressures.

Right end vertical not exposed to wind pressure.

Roof overhang supports 2.00 psf soffit load.

(A) Continuous lateral bracing equally spaced on member.

Deflection meets L/240 live and L/180 total load. Creep increase factor for dead load is 1.50.

(B)(1) 2x4x7-11-2 SP #2 Dense scab at right end. Attach scab to face of chord with: 12d_Common_(0.148"x3.25"_min.)_nails @ 8" OC, plus additional nail clusters at: BRG.: (5), heel: (5), 1st panel point: (0).

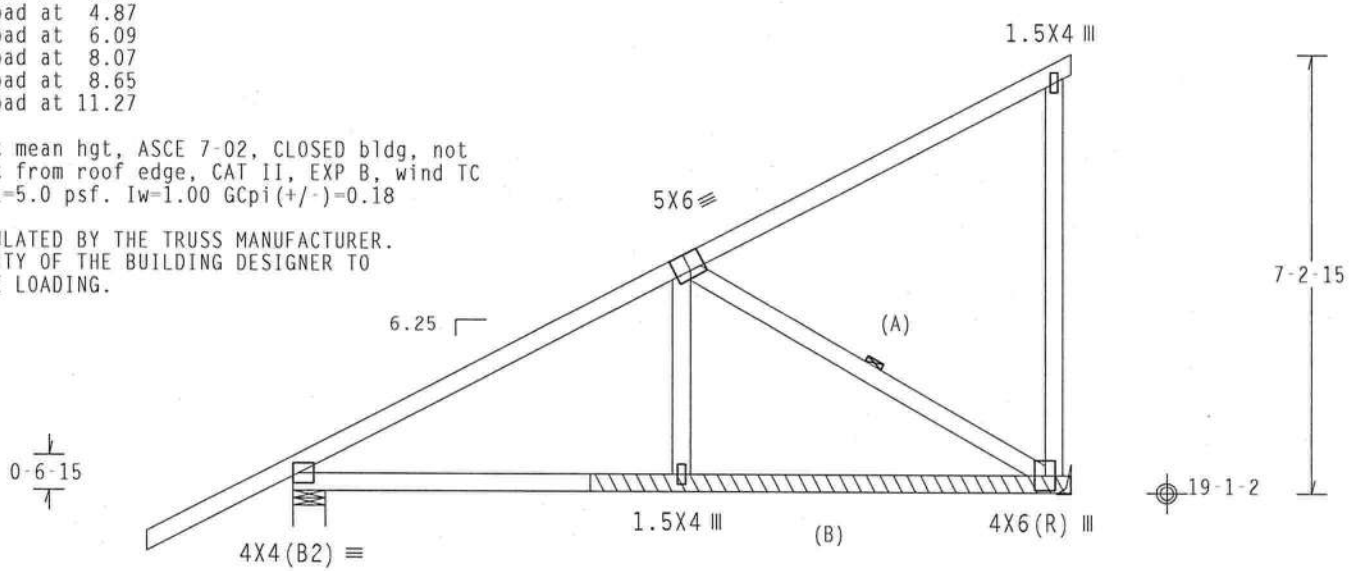

R=1026 U=484 W=6.403"

2-4-13

R=1524 U=514

12-9-11 Over 2 Supports

Design Crit: TPI-2002(STD)/FBC

PLT TYP. Wave

Cq/RT=1.00(1.25)/0(0) 7.24.1230.16 QTY:1 FL/-/4/-/E/-/- Scale =.3125"/Ft.

Building Components Group Inc.

Haines City, FL 33844
FL Certificate of Authorization # 0 278

WARNING TRUSSES REQUIRE EXTREME CARE IN FABRICATION, HANDLING, SHIPPING, INSTALLING AND BRACING. REFER TO BCSI (BUILDING COMPONENT SAFETY INFORMATION), PUBLISHED BY TPI (TRUSS PLATE INSTITUTE, 218 NORTH LEE STREET, SUITE 312, ALEXANDRIA, VA, 22314) AND WTCA (WOOD TRUSS COUNCIL OF AMERICA, 6300 ENTERPRISE LANE, MADISON, WI 53719) FOR SAFETY PRACTICES PRIOR TO PERFORMING THESE FUNCTIONS. UNLESS OTHERWISE INDICATED TOP CHORD SHALL HAVE PROPERLY ATTACHED STRUCTURAL PANELS AND BOTTOM CHORD SHALL HAVE A PROPERLY ATTACHED RIGID CEILING.

IMPORTANT FURNISH A COPY OF THIS DESIGN TO THE INSTALLATION CONTRACTOR. ITW BCG, INC. SHALL NOT BE RESPONSIBLE FOR ANY DEVIATION FROM THIS DESIGN; ANY FAILURE TO BUILD THE TRUSS IN COMFORMANCE WITH TPI; OR FABRICATING, HANDLING, SHIPPING, INSTALLING & BRACING OF TRUSSES. DESIGN CONFORMS WITH APPLICABLE PROVISIONS OF NDS (NATIONAL DESIGN SPEC. BY AF&PA) AND TPI. ITW BCG CONNECTOR PLATES ARE MADE OF 20/18/16GA (W,H/SS/K) ASTM A653 GRADE 40/60 (W, K/H,SS) GALV. STEEL. APPLY PLATES TO EACH FACE OF TRUSS AND, UNLESS OTHERWISE LOCATED ON THIS DESIGN, POSITION PER DRAWINGS 160A-Z. ANY INSPECTION OF PLATES FOLLOWED BY (1) SHALL BE PER ANNEX A3 OF TPI1-2002 SEC.3. A SEAL ON THIS DRAWING INDICATES ACCEPTANCE OF PROFESSIONAL ENGINEERING RESPONSIBILITY SOLELY FOR THE TRUSS COMPONENT DESIGN SHOWN. THE SUITABILITY AND USE OF THIS COMPONENT FOR ANY BUILDING IS THE RESPONSIBILITY OF THE BUILDING DESIGNER PER ANSI/TPI 1 SEC. 2.

JAMES F. COLLINS JR. LICENSED No. 52212 STATE OF FLORIDA PROFESSIONAL ENGINEER

Jan

TC LL	20.0 PSF	REF R8228- 77016
TC DL	10.0 PSF	DATE 01/31/08
BC DL	10.0 PSF	DRW HCUSR8228 08031128
BC LL	0.0 PSF	HC-ENG EC/WHK
TOT.LD.	40.0 PSF	SEQN- 43910
DUR.FAC.	1.25	FROM JP
SPACING	24.0"	JREF- 1TEL8228Z03

(dear--OWNER BUILDER deardorf -- , ** - T69)

Top chord 2x4 SP #2 Dense
Bot chord 2x4 SP #2 Dense

Roof overhang supports 2.00 psf soffit load.

Deflection meets L/240 live and L/180 total load. Creep increase factor for dead load is 1.50.

110 mph wind, 21.99 ft mean hgt, ASCE 7-02, CLOSED bldg, not located within 4.50 ft from roof edge, CAT II, EXP B, wind TC DL=5.0 psf, wind BC DL=5.0 psf. Iw=1.00 GCpi(+/-)=0.18

Wind reactions based on MWFRS pressures.

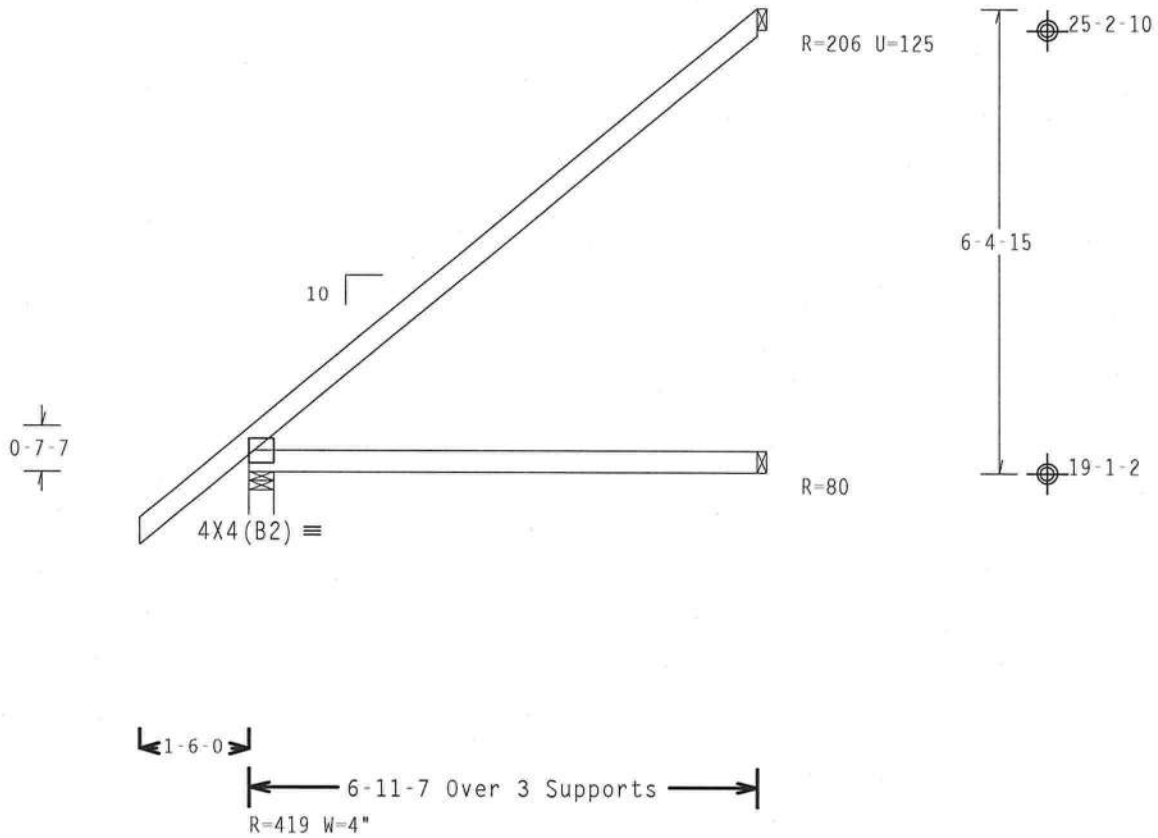

Design Crit: TPI-2002(STD)/FBC
Cq/RT=1.00(1.25)/0(0)

PLT TYP. Wave | 7.24.1230 16 | QTY:1 | FL/-/4/-/E/-/- | Scale =.375"/Ft.

Building Components Group Inc.

Haines City, FL 33844
FL Certificate of Authorization # 0 278

WARNING TRUSSES REQUIRE EXTREME CARE IN FABRICATION, HANDLING, SHIPPING, INSTALLING AND BRACING. REFER TO BCSI (BUILDING COMPONENT SAFETY INFORMATION), PUBLISHED BY TPI (TRUSS PLATE INSTITUTE, 218 NORTH LEE STREET, SUITE 312, ALEXANDRIA, VA. 22314) AND WTCA (WOOD TRUSS COUNCIL OF AMERICA, 6300 ENTERPRISE LANE, MADISON, WI 53719) FOR SAFETY PRACTICES PRIOR TO PERFORMING THESE FUNCTIONS. UNLESS OTHERWISE INDICATED TOP CHORD SHALL HAVE PROPERLY ATTACHED STRUCTURAL PANELS AND BOTTOM CHORD SHALL HAVE A PROPERLY ATTACHED RIGID CEILING.

IMPORTANT FURNISH A COPY OF THIS DESIGN TO THE INSTALLATION CONTRACTOR. ITW BCG, INC. SHALL NOT BE RESPONSIBLE FOR ANY DEVIATION FROM THIS DESIGN; ANY FAILURE TO BUILD THE TRUSS IN CONFORMANCE WITH TPI; OR FABRICATING, HANDLING, SHIPPING, INSTALLING & BRACING OF TRUSSES. DESIGN CONFORMS WITH APPLICABLE PROVISIONS OF NDS (NATIONAL DESIGN SPEC. BY AF&PA) AND TPI. ITW BCG CONNECTOR PLATES ARE MADE OF 20/18/16GA (W.H/SS/K) ASTM A653 GRADE 40/60 (W. K/H.SS) GALV. STEEL. APPLY PLATES TO EACH FACE OF TRUSS AND, UNLESS OTHERWISE LOCATED ON THIS DESIGN, POSITION PER DRAWINGS 160A-Z. ANY INSPECTION OF PLATES FOLLOWED BY (I) SHALL BE PER ANNEX A3 OF TPI1-2002 SEC.3. A SEAL ON THIS DRAWING INDICATES ACCEPTANCE OF PROFESSIONAL ENGINEERING RESPONSIBILITY SOLELY FOR THE TRUSS COMPONENT DESIGN SHOWN. THE SUITABILITY AND USE OF THIS COMPONENT FOR ANY BUILDING IS THE RESPONSIBILITY OF THE BUILDING DESIGNER PER ANSI/TPI 1 SEC. 2.

JAMES F. COLLINS, JR. LICENSE No. 32212 STATE OF FLORIDA PROFESSIONAL ENGINEER
Jan 31, 2008

TC LL	20.0 PSF	REF R8228- 77017
TC DL	10.0 PSF	DATE 01/31/08
BC DL	10.0 PSF	DRW HCUSR8228 08031129
BC LL	0.0 PSF	HC-ENG EC/WHK *
TOT.LD.	40.0 PSF	SEQN- 43883
DUR.FAC.	1.25	FROM JP
SPACING	24.0"	JREF- 1TEL8228Z03

(dear--OWNER BUILDER deardorf -- , ** - T7)

Top chord 2x6 SP #2
Bot chord 2x10 SP #1 Dense :B2 2x4 SP #2 Dense:
Webs 2x4 SP #3

Left end vertical exposed to wind pressure. Deflection meets L/240 criteria for brittle and flexible wall coverings.

Roof overhang supports 2.00 psf soffit load.

Collar-tie braced with continuous lateral bracing at 24" OC. or rigid ceiling.

Deflection meets L/360 live and L/240 total load.
Creep increase factor for dead load is 1.50.

110 mph wind, 15.88 ft mean hgt, ASCE 7-02, CLOSED bldg, not located within 4.50 ft from roof edge, CAT II, EXP B, wind TC DL=5.0 psf, wind BC DL=5.0 psf. Iw=1.00 GCpi(+/-)=0.18

Wind reactions based on MWFRS pressures.

Right end vertical not exposed to wind pressure.

BC attic room floor loading: LL = 40.00 psf; DL = 10.00 psf; from 2-7-5 to 6-2-8.

(A) SCAB BRACE. 80% LENGTH OF WEB MEMBER. SAME SIZE, SPECIES & GRADE OR BETTER. ATTACH WITH 10d NAILS (0.128"x3.0",min.) @ 6" OC.

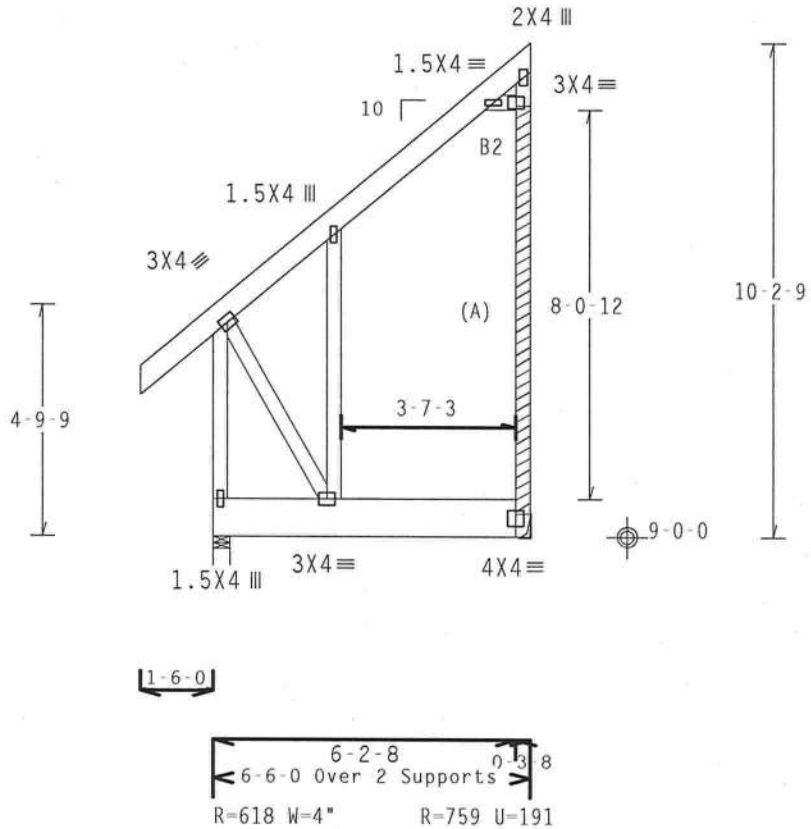

Design Crit: TPI-2002(STD)/FBC
Cq/RT=1.00(1.25)/0(0)

PLT TYP. Wave | 7.36.0424 | QTY:1 | FL/-/4/-/E/-/- | Scale =.25"/Ft.

Building Components Group Inc.

Haines City, FL 33844
FL Certificate of Authorization # 0 278

WARNINGTRUSSES REQUIRE EXTREME CARE IN FABRICATION, HANDLING, SHIPPING, INSTALLING AND BRACING. REFER TO BCSI (BUILDING COMPONENT SAFETY INFORMATION), PUBLISHED BY TPI (TRUSS PLATE INSTITUTE, 218 NORTH LEE STREET, SUITE 312, ALEXANDRIA, VA. 22314) AND WTCA (WOOD TRUSS COUNCIL OF AMERICA, 6300 ENTERPRISE LANE, MADISON, WI 53719) FOR SAFETY PRACTICES PRIOR TO PERFORMING THESE FUNCTIONS. UNLESS OTHERWISE INDICATED TOP CHORD SHALL HAVE PROPERLY ATTACHED STRUCTURAL PANELS AND BOTTOM CHORD SHALL HAVE A PROPERLY ATTACHED RIGID CEILING.

IMPORTANTFURNISH A COPY OF THIS DESIGN TO THE INSTALLATION CONTRACTOR. ITW BCG, INC. SHALL NOT BE RESPONSIBLE FOR ANY DEVIATION FROM THIS DESIGN; ANY FAILURE TO BUILD THE TRUSS IN CONFORMANCE WITH TPI; OR FABRICATING, HANDLING, SHIPPING, INSTALLING & BRACING OF TRUSSES.
DESIGN CONFORMS WITH APPLICABLE PROVISIONS OF NDS (NATIONAL DESIGN SPEC, BY AF&PA) AND TPI. ITW BCG CONNECTOR PLATES ARE MADE OF 20/18/16GA (W,H/SS/K) ASTM A653 GRADE 40/60 (W, K/H,SS) GALV. STEEL. APPLY PLATES TO EACH FACE OF TRUSS AND, UNLESS OTHERWISE LOCATED ON THIS DESIGN, POSITION PER DRAWINGS 160A-Z. ANY INSPECTION OF PLATES FOLLOWED BY (1) SHALL BE PER ANNEX A3 OF TPI1-2002 SEC.3. A SEAL ON THIS DRAWING INDICATES ACCEPTANCE OF PROFESSIONAL ENGINEERING RESPONSIBILITY SOLELY FOR THE TRUSS COMPONENT DESIGN SHOWN. THE SUITABILITY AND USE OF THIS COMPONENT FOR ANY BUILDING IS THE RESPONSIBILITY OF THE BUILDING DESIGNER PER ANSI/TPI 1 SEC. 2.

JAMES F. COLLINS JR. LICENSE No. 52212 STATE OF FLORIDA PROFESSIONAL ENGINEER
Jan 31 08

TC LL	20.0 PSF	REF R8228- 77018
TC DL	10.0 PSF	DATE 01/31/08
BC DL	10.0 PSF	DRW HCUSR8228 08031130
BC LL	0.0 PSF	HC-ENG EC/WHK
TOT.LD.	40.0 PSF	SEQN- 73548
DUR.FAC.	1.25	FROM JP
SPACING	24.0"	JREF- 1TEL8228Z03

(dear--OWNER BUILDER deardorf -- , ** - T70)

Top chord 2x4 SP #2 Dense
Bot chord 2x4 SP #2 Dense

Roof overhang supports 2.00 psf soffit load.

Deflection meets L/240 live and L/180 total load. Creep increase factor for dead load is 1.50.

110 mph wind, 21.32 ft mean hgt, ASCE 7-02, CLOSED bldg, not located within 4.50 ft from roof edge, CAT II, EXP B, wind TC DL=5.0 psf, wind BC DL=5.0 psf. Iw=1.00 GCpi(+/-)=0.18

Wind reactions based on MWFRS pressures.

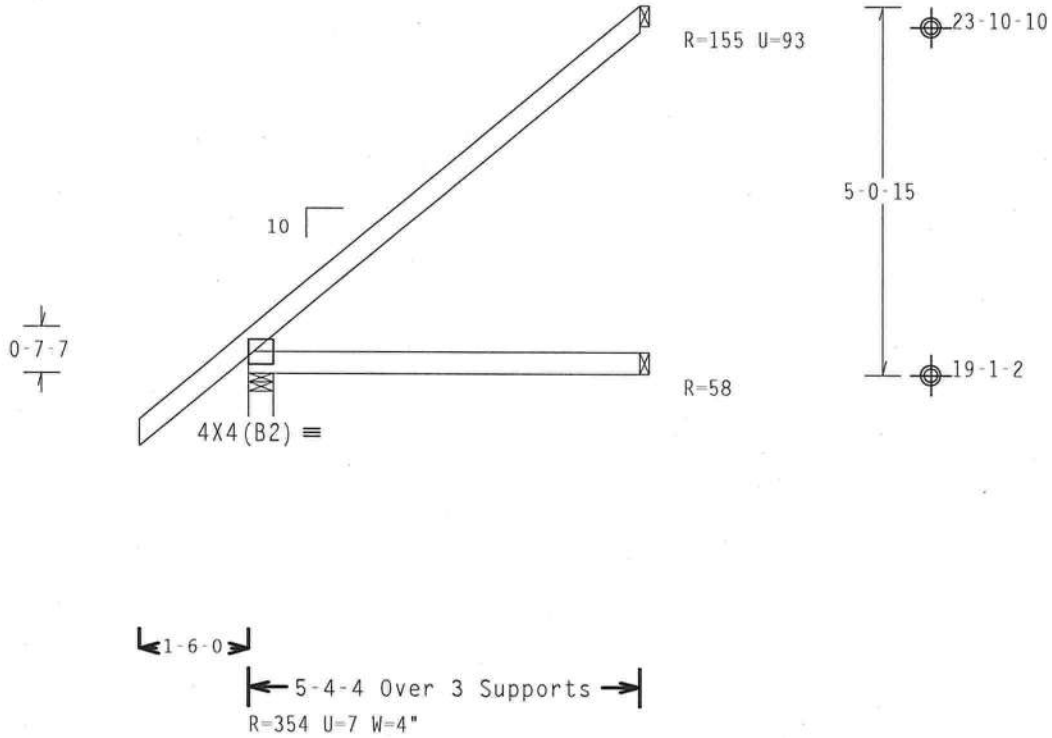

Design Crit: TPI-2002(STD)/FBC
Cq/RT=1.00(1.25)/0(0)

PLT TYP. Wave | 7.24.1230.16 | QTY:1 | FL/-/4/-/E/-/- | Scale =.375"/Ft.

Building Components Group Inc.

Haines City, FL 33844
FL Certificate of Authorization # 0 278

WARNINGTRUSSES REQUIRE EXTREME CARE IN FABRICATION, HANDLING, SHIPPING, INSTALLING AND BRACING. REFER TO BCSI (BUILDING COMPONENT SAFETY INFORMATION), PUBLISHED BY TPI (TRUSS PLATE INSTITUTE, 218 NORTH LEE STREET, SUITE 312, ALEXANDRIA, VA. 22314) AND WTCA (WOOD TRUSS COUNCIL OF AMERICA, 6300 ENTERPRISE LANE, MADISON, WI 53719) FOR SAFETY PRACTICES PRIOR TO PERFORMING THESE FUNCTIONS. UNLESS OTHERWISE INDICATED TOP CHORD SHALL HAVE PROPERLY ATTACHED STRUCTURAL PANELS AND BOTTOM CHORD SHALL HAVE A PROPERLY ATTACHED RIGID CEILING.

IMPORTANTFURNISH A COPY OF THIS DESIGN TO THE INSTALLATION CONTRACTOR. ITW BCG, INC. SHALL NOT BE RESPONSIBLE FOR ANY DEVIATION FROM THIS DESIGN; ANY FAILURE TO BUILD THE TRUSS IN COMFORMANCE WITH TPI; OR FABRICATING, HANDLING, SHIPPING, INSTALLING & BRACING OF TRUSSES. DESIGN CONFORMS WITH APPLICABLE PROVISIONS OF NDS (NATIONAL DESIGN SPEC. BY AF&PA) AND TPI. ITW BCG CONNECTOR PLATES ARE MADE OF 20/18/16GA (W.H/SS/K) ASTM A653 GRADE 40/60 (W. K/H.SS) GALV. STEEL. APPLY PLATES TO EACH FACE OF TRUSS AND, UNLESS OTHERWISE LOCATED ON THIS DESIGN, POSITION PER DRAWINGS 160A-Z. ANY INSPECTION OF PLATES FOLLOWED BY (1) SHALL BE PER ANNEX A3 OF TPI1-2002 SEC.3. A SEAL ON THIS DRAWING INDICATES ACCEPTANCE OF PROFESSIONAL ENGINEERING RESPONSIBILITY SOLELY FOR THE TRUSS COMPONENT DESIGN SHOWN. THE SUITABILITY AND USE OF THIS COMPONENT FOR ANY BUILDING IS THE RESPONSIBILITY OF THE BUILDING DESIGNER PER ANSI/TPI 1 SEC. 2.

JAMES F. COLLINS JR. LICENSE No. 52212 STATE OF FLORIDA PROFESSIONAL ENGINEER

Jan

TC LL	20.0 PSF	REF R8228- 77019
TC DL	10.0 PSF	DATE 01/31/08
BC DL	10.0 PSF	DRW HCUSR8228 08031131
BC LL	0.0 PSF	HC-ENG EC/WHK *
TOT.LD.	40.0 PSF	SEQN- 43885
DUR.FAC.	1.25	FROM JP
SPACING	24.0"	JREF- 1TEL8228Z03

(dear--OWNER BUILDER deardorf -- , ** - T71)

THIS DWG PREPARED FROM COMPUTER INPUT (LOADS & DIMENSIONS) SUBMITTED BY TRUSS MFR.

Top chord 2x4 SP #2 Dense
Bot chord 2x4 SP #2 Dense

Roof overhang supports 2.00 psf soffit load.

Deflection meets L/240 live and L/180 total load. Creep increase factor for dead load is 1.50.

110 mph wind, 20.65 ft mean hgt, ASCE 7-02, CLOSED bldg, Located anywhere in roof, CAT II, EXP B, wind TC DL=5.0 psf, wind BC DL=5.0 psf. Iw=1.00 GCpi(+/-)=0.18

Wind reactions based on MWFRS pressures.

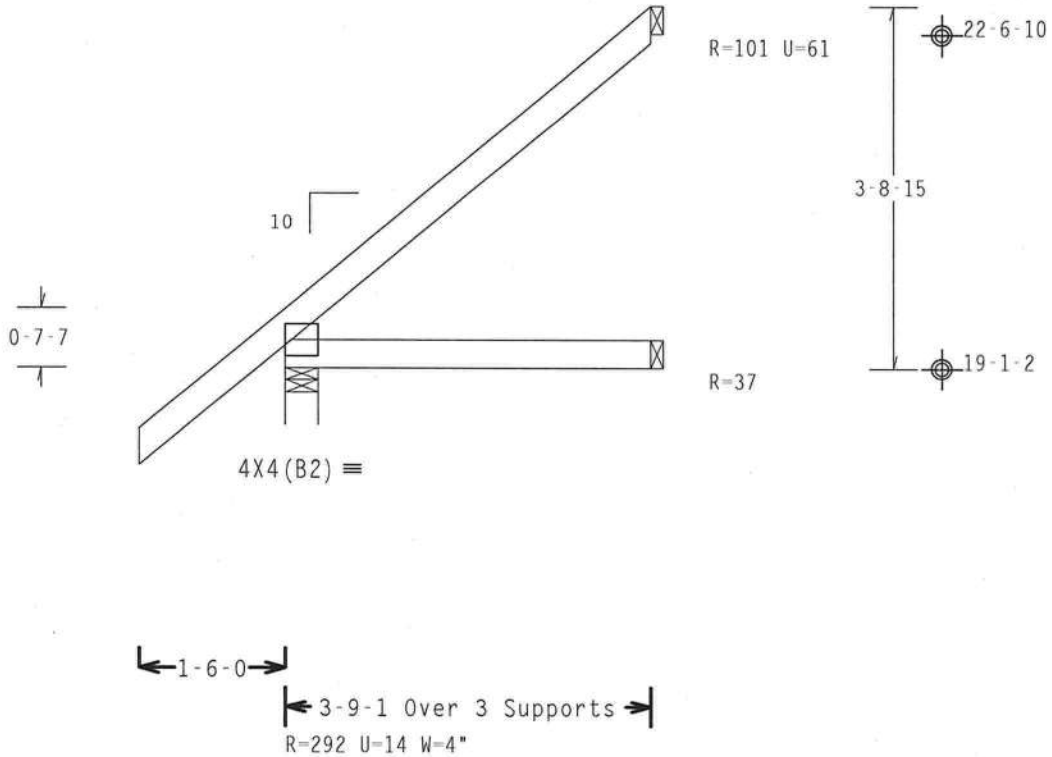

Design Crit: TPI-2002(STD)/FBC
Cq/RT=1.00(1.25)/0(0)

PLT TYP. Wave | 7.24.1230 | QTY:1 | FL/-/4/-/E/-/- | Scale =.5"/Ft.

Building Components Group Inc.

Haines City, FL 33844
FL Certificate of Authorization # 0 278

WARNING TRUSSES REQUIRE EXTREME CARE IN FABRICATION, HANDLING, SHIPPING, INSTALLING AND BRACING. REFER TO BCSI (BUILDING COMPONENT SAFETY INFORMATION), PUBLISHED BY TPI (TRUSS PLATE INSTITUTE, 218 NORTH LEE STREET, SUITE 312, ALEXANDRIA, VA. 22314) AND WTCA (WOOD TRUSS COUNCIL OF AMERICA, 6300 ENTERPRISE LANE, MADISON, WI 53719) FOR SAFETY PRACTICES PRIOR TO PERFORMING THESE FUNCTIONS. UNLESS OTHERWISE INDICATED TOP CHORD SHALL HAVE PROPERLY ATTACHED STRUCTURAL PANELS AND BOTTOM CHORD SHALL HAVE A PROPERLY ATTACHED RIGID CEILING.

IMPORTANT FURNISH A COPY OF THIS DESIGN TO THE INSTALLATION CONTRACTOR. ITW BCG, INC. SHALL NOT BE RESPONSIBLE FOR ANY DEVIATION FROM THIS DESIGN; ANY FAILURE TO BUILD THE TRUSS IN COMFORMANCE WITH TPI; OR FABRICATING, HANDLING, SHIPPING, INSTALLING & BRACING OF TRUSSES.
DESIGN CONFORMS WITH APPLICABLE PROVISIONS OF NDS (NATIONAL DESIGN SPEC, BY AF&PA) AND TPI. ITW BCG CONNECTOR PLATES ARE MADE OF 20/18/16GA (W,H/SS/K) ASTM A653 GRADE 40/60 (W, K/H,SS) GALV. STEEL. APPLY PLATES TO EACH FACE OF TRUSS AND, UNLESS OTHERWISE LOCATED ON THIS DESIGN, POSITION PER DRAWINGS 160A-Z. ANY INSPECTION OF PLATES FOLLOWED BY (1) SHALL BE PER ANNEX A3 OF TPI1-2002 SEC.3. A SEAL ON THIS DRAWING INDICATES ACCEPTANCE OF PROFESSIONAL ENGINEERING RESPONSIBILITY SOLELY FOR THE TRUSS COMPONENT DESIGN SHOWN. THE SUITABILITY AND USE OF THIS COMPONENT FOR ANY BUILDING IS THE RESPONSIBILITY OF THE BUILDING DESIGNER PER ANSI/TPI 1 SEC. 2.

JAMES E. COLLINS JR. LICENSE No 52212 STATE OF FLORIDA PROFESSIONAL ENGINEER
Jan 31 08

TC LL	20.0 PSF	REF R8228- 77020
TC DL	10.0 PSF	DATE 01/31/08
BC DL	10.0 PSF	DRW HCUSR8228 08031132
BC LL	0.0 PSF	HC-ENG EC/WHK *
TOT.LD.	40.0 PSF	SEQN- 43887
DUR.FAC.	1.25	FROM JP
SPACING	24.0"	JREF- 1TEL8228Z03

Top chord 2x4 SP #2 Dense
Bot chord 2x4 SP #2 Dense

Roof overhang supports 2.00 psf soffit load.

Deflection meets L/240 live and L/180 total load. Creep increase factor for dead load is 1.50.

110 mph wind, 19.99 ft mean hgt, ASCE 7-02, CLOSED bldg, Located anywhere in roof, CAT II, EXP B, wind TC DL=5.0 psf, wind BC DL=5.0 psf. Iw=1.00 GCpi(+/-)=0.18

Wind reactions based on MWFRS pressures.

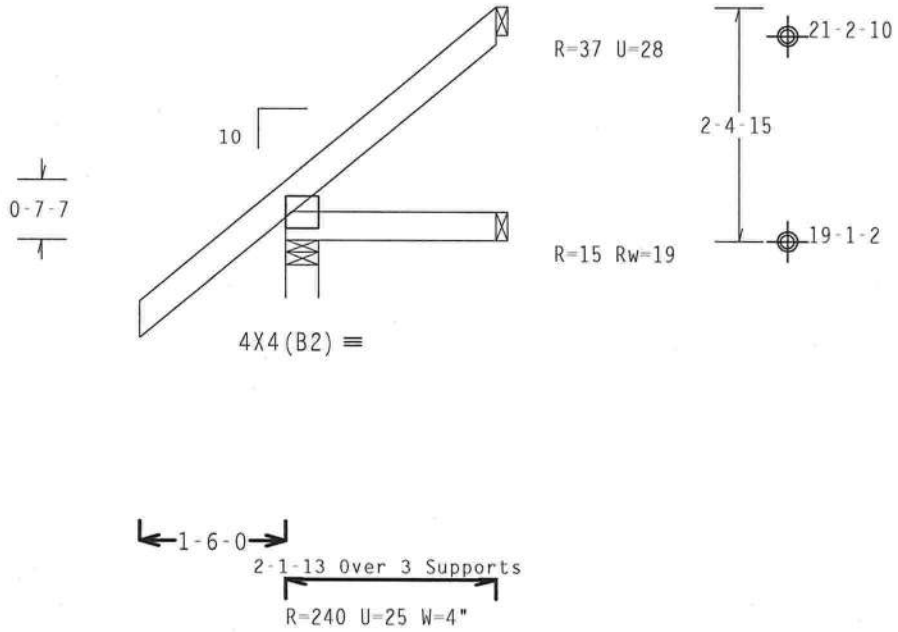

Design Crit: TPI-2002(STD)/FBC
Cq/RT=1.00(1.25)/0(0)

PLT TYP. Wave | 7.24.1230 16 | QTY:1 | FL/-/4/-/E/-/- | Scale =.5"/Ft.

Building Components Group Inc.

Haines City, FL 33844
FL Certificate of Authorization # 0 278

WARNINGTRUSSES REQUIRE EXTREME CARE IN FABRICATION, HANDLING, SHIPPING, INSTALLING AND BRACING. REFER TO BCSI (BUILDING COMPONENT SAFETY INFORMATION), PUBLISHED BY TPI (TRUSS PLATE INSTITUTE, 218 NORTH LEE STREET, SUITE 312, ALEXANDRIA, VA, 22314) AND WTCA (WOOD TRUSS COUNCIL OF AMERICA, 6300 ENTERPRISE LANE, MADISON, WI 53719) FOR SAFETY PRACTICES PRIOR TO PERFORMING THESE FUNCTIONS. UNLESS OTHERWISE INDICATED TOP CHORD SHALL HAVE PROPERLY ATTACHED STRUCTURAL PANELS AND BOTTOM CHORD SHALL HAVE A PROPERLY ATTACHED RIGID CEILING.

IMPORTANTFURNISH A COPY OF THIS DESIGN TO THE INSTALLATION CONTRACTOR. ITW BCG, INC. SHALL NOT BE RESPONSIBLE FOR ANY DEVIATION FROM THIS DESIGN; ANY FAILURE TO BUILD THE TRUSS IN COMFORMANCE WITH TPI; OR FABRICATING, HANDLING, SHIPPING, INSTALLING & BRACING OF TRUSSES.
DESIGN CONFORMS WITH APPLICABLE PROVISIONS OF NDS (NATIONAL DESIGN SPEC, BY AF&PA) AND TPI. ITW BCG CONNECTOR PLATES ARE MADE OF 20/18/16GA (W,H/SS/K) ASTM A653 GRADE 40/60 (W, K/H,SS) GALV. STEEL. APPLY PLATES TO EACH FACE OF TRUSS AND, UNLESS OTHERWISE LOCATED ON THIS DESIGN, POSITION PER DRAWINGS 160A-Z. ANY INSPECTION OF PLATES FOLLOWED BY (1) SHALL BE PER ANNEX A3 OF TPI1-2002 SEC.3. A SEAL ON THIS DRAWING INDICATES ACCEPTANCE OF PROFESSIONAL ENGINEERING RESPONSIBILITY SOLELY FOR THE TRUSS COMPONENT DESIGN SHOWN. THE SUITABILITY AND USE OF THIS COMPONENT FOR ANY BUILDING IS THE RESPONSIBILITY OF THE BUILDING DESIGNER PER ANSI/TPI 1 SEC. 2.

JAMES F. COLLINS LICENSE No. 52272 STATE OF FLORIDA PROFESSIONAL ENGINEER
Jan 31 08

TC LL	20.0 PSF	REF R8228- 77021
TC DL	10.0 PSF	DATE 01/31/08
BC DL	10.0 PSF	DRW HCUSR8228 08031133
BC LL	0.0 PSF	HC-ENG EC/WHK *
TOT.LD.	40.0 PSF	SEQN- 43889
DUR.FAC.	1.25	FROM JP
SPACING	24.0"	JREF- 1TEL8228Z03

(dear--OWNER BUILDER deardorf -- , ** - T73)

Top chord 2x4 SP #2 Dense
Bot chord 2x4 SP #2 Dense

Roof overhang supports 2.00 psf soffit load.

Deflection meets L/240 live and L/180 total load. Creep increase factor for dead load is 1.50.

110 mph wind, 19.32 ft mean hgt, ASCE 7-02, CLOSED bldg, Located anywhere in roof, CAT II, EXP B, wind TC DL=5.0 psf, wind BC DL=5.0 psf. Iw=1.00 GCpi(+/-)=0.18

Wind reactions based on MWFRS pressures.

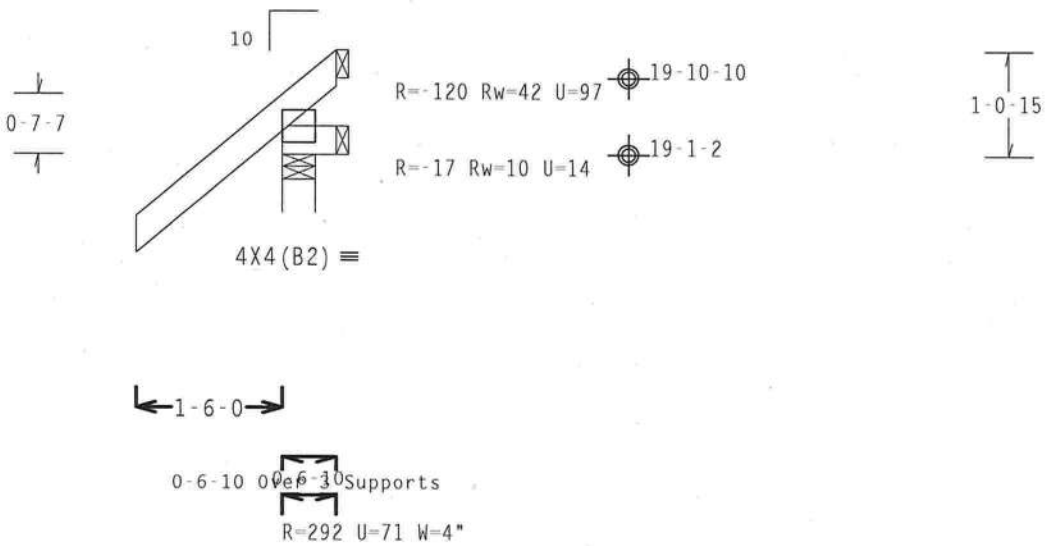

Design Crit: TPI-2002(STD)/FBC
Cq/RT=1.00(1.25)/0(0)

PLT TYP. Wave 7.24.1230 QTY:1 FL/-/4/-/E/-/- Scale =.5"/Ft.

Building Components Group Inc.

Haines City, FL 33844
FL Certificate of Authorization # 0 278

WARNING TRUSSES REQUIRE EXTREME CARE IN FABRICATION, HANDLING, SHIPPING, INSTALLING AND BRACING. REFER TO BCSI (BUILDING COMPONENT SAFETY INFORMATION), PUBLISHED BY TPI (TRUSS PLATE INSTITUTE, 218 NORTH LEE STREET, SUITE 312, ALEXANDRIA, VA. 22314) AND WTCA (WOOD TRUSS COUNCIL OF AMERICA, 6300 ENTERPRISE LANE, MADISON, WI 53719) FOR SAFETY PRACTICES PRIOR TO PERFORMING THESE FUNCTIONS. UNLESS OTHERWISE INDICATED TOP CHORD SHALL HAVE PROPERLY ATTACHED STRUCTURAL PANELS AND BOTTOM CHORD SHALL HAVE A PROPERLY ATTACHED RIGID CEILING.

IMPORTANT FURNISH A COPY OF THIS DESIGN TO THE INSTALLATION CONTRACTOR. ITW BCG, INC. SHALL NOT BE RESPONSIBLE FOR ANY DEVIATION FROM THIS DESIGN; ANY FAILURE TO BUILD THE TRUSS IN COMFORMANCE WITH TPI; OR FABRICATING, HANDLING, SHIPPING, INSTALLING & BRACING OF TRUSSES. DESIGN CONFORMS WITH APPLICABLE PROVISIONS OF NDS (NATIONAL DESIGN SPEC. BY AF&PA) AND TPI. ITW BCG CONNECTOR PLATES ARE MADE OF 20/18/16GA (W,H/SS/K) ASTM A653 GRADE 40/60 (W, K/H,SS) GALV. STEEL. APPLY PLATES TO EACH FACE OF TRUSS AND, UNLESS OTHERWISE LOCATED ON THIS DESIGN, POSITION PER DRAWINGS 160A-Z. ANY INSPECTION OF PLATES FOLLOWED BY (1) SHALL BE PER ANNEX A3 OF TPI1-2002 SEC.3. A SEAL ON THIS DRAWING INDICATES ACCEPTANCE OF PROFESSIONAL ENGINEERING RESPONSIBILITY SOLELY FOR THE TRUSS COMPONENT DESIGN SHOWN. THE SUITABILITY AND USE OF THIS COMPONENT FOR ANY BUILDING IS THE RESPONSIBILITY OF THE BUILDING DESIGNER PER ANSI/TPI 1 SEC. 2.

JAMES F. COLLINS, JR. LICENSE No. 52212 STATE OF FLORIDA PROFESSIONAL ENGINEER

Jan 31 '08

TC LL	20.0 PSF	REF R8228- 77022
TC DL	10.0 PSF	DATE 01/31/08
BC DL	10.0 PSF	DRW HCUSR8228 08031134
BC LL	0.0 PSF	HC-ENG EC/WHK
TOT.LD.	40.0 PSF	SEQN- 43899
DUR.FAC.	1.25	FROM JP
SPACING	24.0"	JREF- 1TEL8228Z03

(dear--OWNER BUILDER deardorf -- , ** - T74)

Top chord 2x4 SP #2 Dense
Bot chord 2x4 SP #2 Dense
Webs 2x4 SP #3

Roof overhang supports 2.00 psf soffit load.

Deflection meets L/240 live and L/180 total load. Creep increase factor for dead load is 1.50.

110 mph wind, 22.42 ft mean hgt, ASCE 7-02, CLOSED bldg, not located within 4.50 ft from roof edge, CAT II, EXP B, wind TC DL=5.0 psf, wind BC DL=5.0 psf. Iw=1.00 GCpi(+/-)=0.18

Wind reactions based on MWFRS pressures.

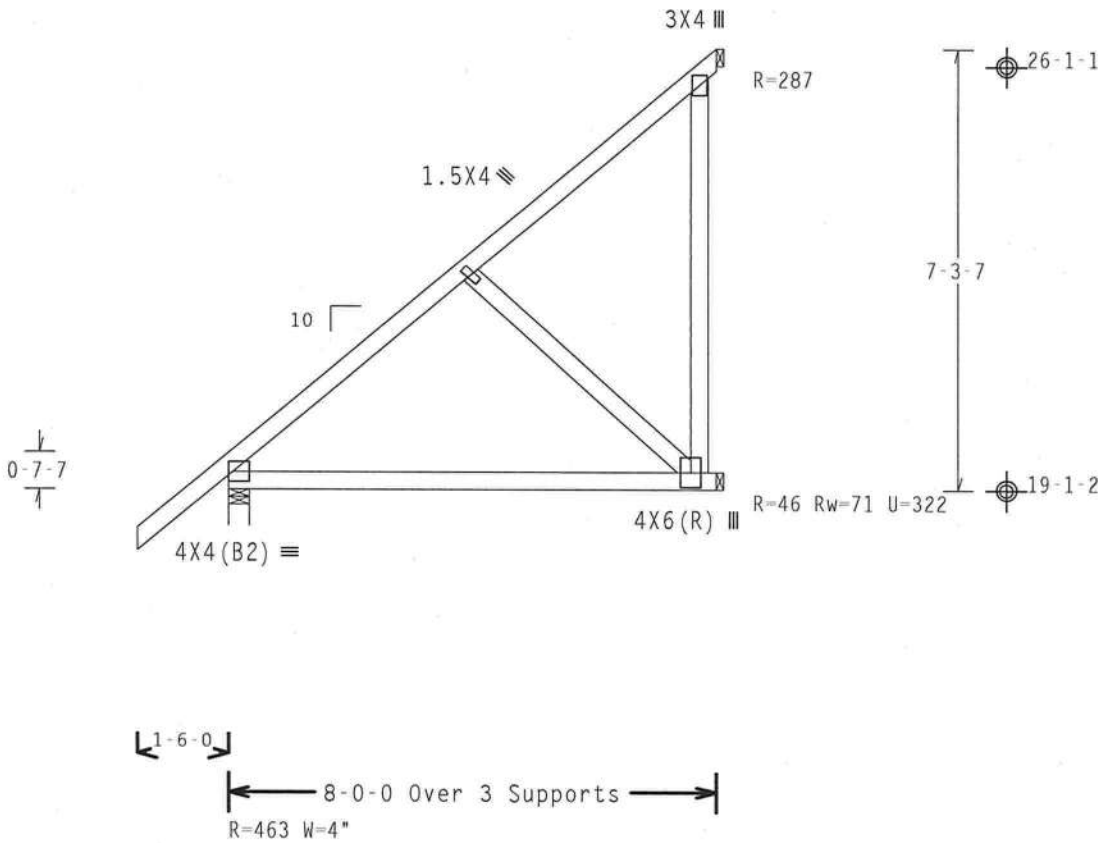

Design Crit: TPI-2002(STD)/FBC
Cq/RT=1.00(1.25)/0(0)

PLT TYP. Wave | 7.24.1230 | QTY:1 | FL/-/4/-/E/-/- | Scale =.3125"/Ft.

Building Components Group Inc.

Haines City, FL 33844
FL Certificate of Authorization # 0 278

WARNINGTRUSSES REQUIRE EXTREME CARE IN FABRICATION, HANDLING, SHIPPING, INSTALLING AND BRACING. REFER TO BCSI (BUILDING COMPONENT SAFETY INFORMATION), PUBLISHED BY TPI (TRUSS PLATE INSTITUTE, 218 NORTH LEE STREET, SUITE 312, ALEXANDRIA, VA, 22314) AND WTCA (WOOD TRUSS COUNCIL OF AMERICA, 6300 ENTERPRISE LANE, MADISON, WI 53719) FOR SAFETY PRACTICES PRIOR TO PERFORMING THESE FUNCTIONS. UNLESS OTHERWISE INDICATED TOP CHORD SHALL HAVE PROPERLY ATTACHED STRUCTURAL PANELS AND BOTTOM CHORD SHALL HAVE A PROPERLY ATTACHED RIGID CEILING.

IMPORTANTFURNISH A COPY OF THIS DESIGN TO THE INSTALLATION CONTRACTOR. ITW BCG, INC. SHALL NOT BE RESPONSIBLE FOR ANY DEVIATION FROM THIS DESIGN; ANY FAILURE TO BUILD THE TRUSS IN COMFORMANCE WITH TPI; OR FABRICATING, HANDLING, SHIPPING, INSTALLING & BRACING OF TRUSSES. DESIGN CONFORMS WITH APPLICABLE PROVISIONS OF NDS (NATIONAL DESIGN SPEC, BY AF&PA) AND TPI. ITW BCG CONNECTOR PLATES ARE MADE OF 20/18/16GA (W,H/SS/K) ASTM A653 GRADE 40/60 (W, K/H,SS) GALV. STEEL. APPLY PLATES TO EACH FACE OF TRUSS AND, UNLESS OTHERWISE LOCATED ON THIS DESIGN, POSITION PER DRAWINGS 160A-2. ANY INSPECTION OF PLATES FOLLOWED BY (1) SHALL BE PER ANNEX A3 OF TP11-2002 SEC.3. A SEAL ON THIS DRAWING INDICATES ACCEPTANCE OF PROFESSIONAL ENGINEERING RESPONSIBILITY SOLELY FOR THE TRUSS COMPONENT DESIGN SHOWN. THE SUITABILITY AND USE OF THIS COMPONENT FOR ANY BUILDING IS THE RESPONSIBILITY OF THE BUILDING DESIGNER PER ANSI/TPI 1 SEC. 2.

JAMES F. COLLINS JR. LICENSE No. 52272 STATE OF FLORIDA PROFESSIONAL ENGINEER
Jan 31 '08

TC LL	20.0 PSF	REF	R8228- 77023
TC DL	10.0 PSF	DATE	01/31/08
BC DL	10.0 PSF	DRW	HCUSR8228 08031135
BC LL	0.0 PSF	HC-ENG	EC/WHK *
TOT.LD.	40.0 PSF	SEQN-	43903
DUR.FAC.	1.25	FROM	JP
SPACING	24.0"	JREF-	1TEL8228Z03

(dear--OWNER BUILDER deardorf -- , ** - T78)

Top chord 2x4 SP #2 Dense
Bot chord 2x4 SP #2 Dense
Webs 2x4 SP #3

Roof overhang supports 2.00 psf soffit load.

(A) Continuous lateral bracing equally spaced on member.

Deflection meets L/240 live and L/180 total load. Creep increase factor for dead load is 1.50.

110 mph wind, 24.22 ft mean hgt, ASCE 7-02, CLOSED bldg, not located within 4.50 ft from roof edge, CAT II, EXP B, wind TC DL=5.0 psf, wind BC DL=5.0 psf. Iw=1.00 GCpi(+/-)=0.18

Wind reactions based on MWFRS pressures.

In lieu of structural panels use purlins to brace all flat TC @ 24" OC.

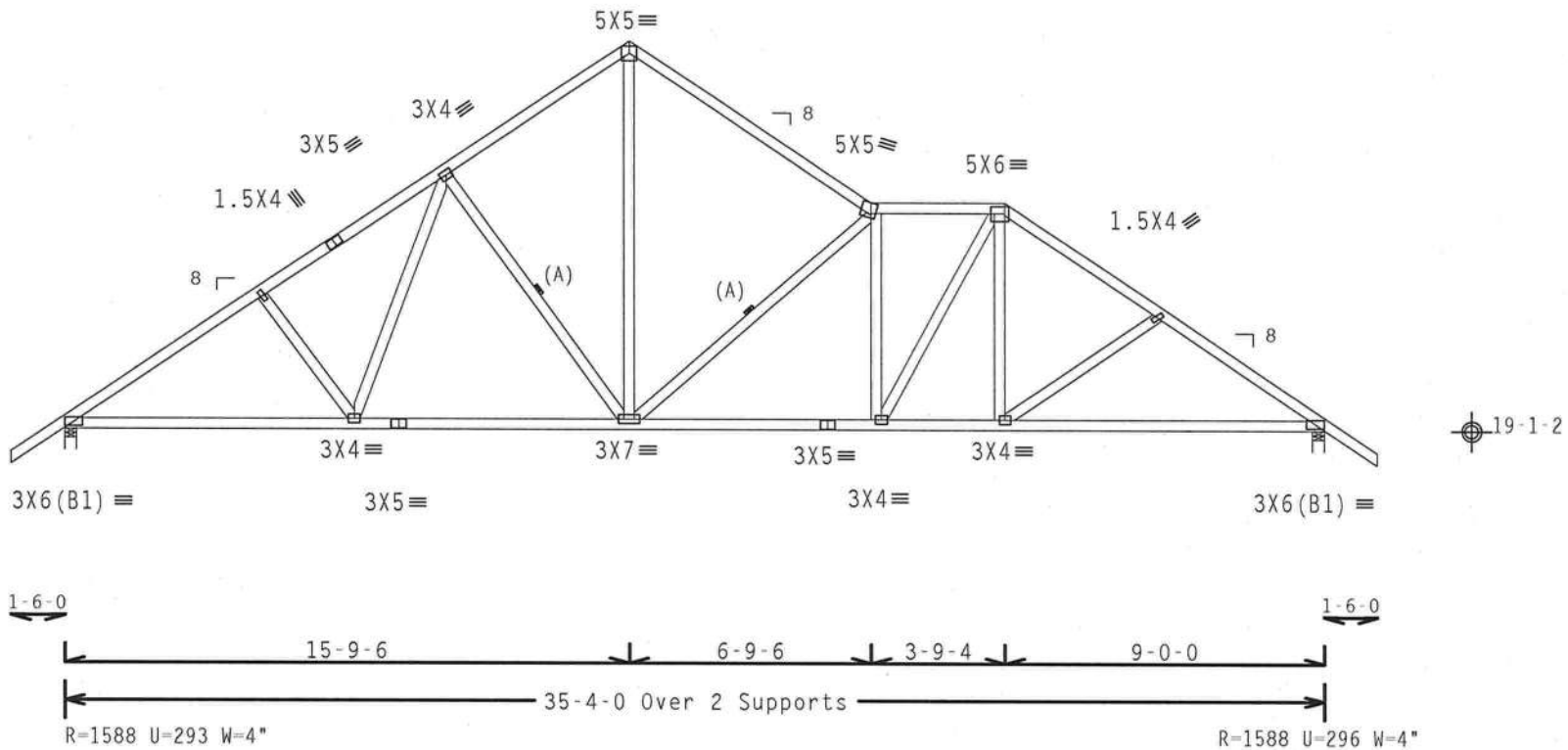

Design Crit: TPI-2002(STD)/FBC
Cq/RT=1.00(1.25)/0(0) 7.24.1230 Jan

PLT TYP. Wave QTY:1 FL/-/4/-/E/-/- Scale =.1875"/Ft.

TW Building Components Group Inc.
Haines City, FL 33844
FL Certificate of Authorization # 0 278

WARNINGRUSSES REQUIRE EXTREME CARE IN FABRICATION, HANDLING, SHIPPING, INSTALLING AND BRACING. REFER TO BCSI (BUILDING COMPONENT SAFETY INFORMATION), PUBLISHED BY TPI (TRUSS PLATE INSTITUTE, 218 NORTH LEE STREET, SUITE 312, ALEXANDRIA, VA, 22314) AND WTCA (WOOD TRUSS COUNCIL OF AMERICA, 6300 ENTERPRISE LANE, MADISON, WI 53719) FOR SAFETY PRACTICES PRIOR TO PERFORMING THESE FUNCTIONS. UNLESS OTHERWISE INDICATED TOP CHORD SHALL HAVE PROPERLY ATTACHED STRUCTURAL PANELS AND BOTTOM CHORD SHALL HAVE A PROPERLY ATTACHED RIGID CEILING.

IMPORTANTFURNISH A COPY OF THIS DESIGN TO THE INSTALLATION CONTRACTOR. ITW BCG, INC. SHALL NOT BE RESPONSIBLE FOR ANY DEVIATION FROM THIS DESIGN; ANY FAILURE TO BUILD THE TRUSS IN COMFORMANCE WITH TPI; OR FABRICATING, HANDLING, SHIPPING, INSTALLING & BRACING OF TRUSSES.
DESIGN CONFORMS WITH APPLICABLE PROVISIONS OF NDS (NATIONAL DESIGN SPEC. BY AF&PA) AND TPI. ITW BCG CONNECTOR PLATES ARE MADE OF 20/18/16GA (W,H/SS/K) ASTM A653 GRADE 40/60 (W, K/H,SS) GALV. STEEL. APPLY PLATES TO EACH FACE OF TRUSS AND. UNLESS OTHERWISE LOCATED ON THIS DESIGN. POSITION PER DRAWINGS 160A-Z. ANY INSPECTION OF PLATES FOLLOWED BY (I) SHALL BE PER ANNEX A3 OF TPI1-2002 SEC.3. A SEAL ON THIS DRAWING INDICATES ACCEPTANCE OF PROFESSIONAL ENGINEERING RESPONSIBILITY SOLELY FOR THE TRUSS COMPONENT DESIGN SHOWN. THE SUITABILITY AND USE OF THIS COMPONENT FOR ANY BUILDING IS THE RESPONSIBILITY OF THE BUILDING DESIGNER PER ANSI/TPI 1 SEC. 2.

JAMES F. COLLINS JR. LICENSE No 52212 STATE OF FLORIDA PROFESSIONAL ENGINEER
Jan 31 08

TC LL	20.0 PSF	REF	R8228- 77024
TC DL	10.0 PSF	DATE	01/31/08
BC DL	10.0 PSF	DRW	HCUSR8228 08031136
BC LL	0.0 PSF	HC-ENG	EC/WHK *
TOT.LD.	40.0 PSF	SEQN-	43872
DUR.FAC.	1.25	FROM	JP
SPACING	24.0"	JREF-	1TEL8228Z03

Top chord 2x4 SP #2 Dense
Bot chord 2x4 SP #2 Dense
Webs 2x4 SP #3

SPECIAL LOADS
------(LUMBER DUR.FAC.=1.25 / PLATE DUR.FAC.=1.25)

TC - From	60 PLF at	-1.51 to	60 PLF at	4.03
TC - From	60 PLF at	4.03 to	60 PLF at	14.63
BC - From	4 PLF at	-1.51 to	4 PLF at	0.00
BC - From	20 PLF at	0.00 to	20 PLF at	14.63
TC -	843 LB Conc. Load at	0.06		
TC -	68 LB Conc. Load at	5.08		
BC -	628 LB Conc. Load at	2.06,	4.06,	6.06
BC -	12 LB Conc. Load at	5.08		
BC -	584 LB Conc. Load at	8.06		
BC -	578 LB Conc. Load at	10.06		
BC -	2026 LB Conc. Load at	10.24		
BC -	415 LB Conc. Load at	12.06		
BC -	851 LB Conc. Load at	13.07		
BC -	768 LB Conc. Load at	14.06		

Deflection meets L/240 live and L/180 total load. Creep increase factor for dead load is 1.50.

LOADING HAS BEEN CALCULATED BY THE TRUSS MANUFACTURER. IT IS THE RESPONSIBILITY OF THE BUILDING DESIGNER TO VERIFY AND APPROVE THE LOADING.

4 COMPLETE TRUSSES REQUIRED

Nailing Schedule: (12d_Common_(0.148"x3.25",_min.)_nails)
Top Chord: 1 Row @ 4.00" o.c.
Bot Chord: 1 Row @ 3.75" o.c.
Webs : 1 Row @ 4" o.c.
Repeat nailing as each layer is applied. Use equal spacing between rows and stagger nails in each row to avoid splitting.

110 mph wind, 15.00 ft mean hgt, ASCE 7-02, CLOSED bldg, not located within 4.50 ft from roof edge, CAT II, EXP B, wind TC DL=5.0 psf, wind BC DL=5.0 psf. Iw=1.00 GCpi(+/-)=0.18

Wind reactions based on MWFRS pressures.

Right end vertical not exposed to wind pressure.

Roof overhang supports 2.00 psf soffit load.

In lieu of structural panels use purlins to brace all flat TC @ 24" OC.

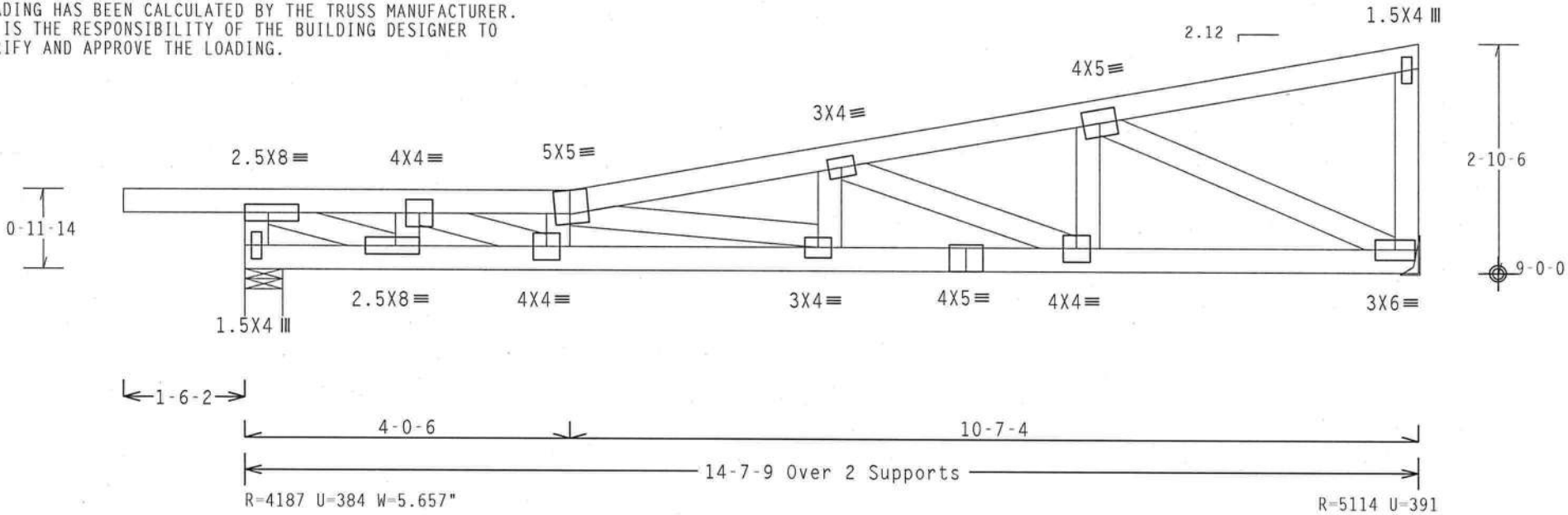

Design Crit: TPI-2002(STD)/FBC
PLT TYP. Wave Cq/RT=1.00(1.25)/0(0) 7.24.1230.16 QTY:1 FL/-/4/-/E/-/- Scale =.5"/Ft.

Building Components Group Inc.
Haines City, FL 33844
FL Certificate of Authorization # 0 278

WARNING TRUSSES REQUIRE EXTREME CARE IN FABRICATION, HANDLING, SHIPPING, INSTALLING AND BRACING. REFER TO BCSI (BUILDING COMPONENT SAFETY INFORMATION), PUBLISHED BY TPI (TRUSS PLATE INSTITUTE, 218 NORTH LEE STREET, SUITE 312, ALEXANDRIA, VA. 22314) AND WTCA (WOOD TRUSS COUNCIL OF AMERICA, 6300 ENTERPRISE LANE, MADISON, WI 53719) FOR SAFETY PRACTICES PRIOR TO PERFORMING THESE FUNCTIONS. UNLESS OTHERWISE INDICATED TOP CHORD SHALL HAVE PROPERLY ATTACHED STRUCTURAL PANELS AND BOTTOM CHORD SHALL HAVE A PROPERLY ATTACHED RIGID CEILING.

IMPORTANT FURNISH A COPY OF THIS DESIGN TO THE INSTALLATION CONTRACTOR. ITW BCG, INC. SHALL NOT BE RESPONSIBLE FOR ANY DEVIATION FROM THIS DESIGN; ANY FAILURE TO BUILD THE TRUSS IN COMFORMANCE WITH TPI; OR FABRICATING, HANDLING, SHIPPING, INSTALLING & BRACING OF TRUSSES. DESIGN CONFORMS WITH APPLICABLE PROVISIONS OF NDS (NATIONAL DESIGN SPEC. BY AF&PA) AND TPI. ITW BCG CONNECTOR PLATES ARE MADE OF 20/18/16GA (W.H/SS/K) ASTM A653 GRADE 40/60 (W. K/H.SS) GALV. STEEL. APPLY PLATES TO EACH FACE OF TRUSS AND, UNLESS OTHERWISE LOCATED ON THIS DESIGN, POSITION PER DRAWINGS 160A-Z. ANY INSPECTION OF PLATES FOLLOWED BY (1) SHALL BE PER ANNEX A3 OF TPI1-2002 SEC.3. A SEAL ON THIS DRAWING INDICATES ACCEPTANCE OF PROFESSIONAL ENGINEERING RESPONSIBILITY SOLELY FOR THE TRUSS COMPONENT DESIGN SHOWN. THE SUITABILITY AND USE OF THIS COMPONENT FOR ANY BUILDING IS THE RESPONSIBILITY OF THE BUILDING DESIGNER PER ANSI/TPI 1 SEC. 2.

JAMES F. COLLINS JR. LICENSE No. 52212 STATE OF FLORIDA PROFESSIONAL ENGINEER

Jan 31,2008

TC LL	20.0 PSF	REF R8228- 77025
TC DL	10.0 PSF	DATE 01/31/08
BC DL	10.0 PSF	DRW HCUSR8228 08031137
BC LL	0.0 PSF	HC-ENG EC/WHK
TOT.LD.	40.0 PSF	SEQN- 44044
DUR.FAC.	1.25	FROM JP
SPACING	24.0"	JREF- 1TEL8228Z03

Top chord 2x4 SP #2 Dense
Bot chord 2x4 SP #2 Dense
Webs 2x4 SP #3

110 mph wind, 15.00 ft mean hgt, ASCE 7-02, CLOSED bldg, not located within 4.50 ft from roof edge, CAT II, EXP B, wind TC DL=5.0 psf, wind BC DL=5.0 psf. Iw=1.00 GCpi(+/-)=0.18

Wind reactions based on MWFRS pressures.

Roof overhang supports 2.00 psf soffit load.

In lieu of structural panels use purlins to brace all flat TC @ 24" OC.

LOADING HAS BEEN CALCULATED BY THE TRUSS MANUFACTURER. IT IS THE RESPONSIBILITY OF THE BUILDING DESIGNER TO VERIFY AND APPROVE THE LOADING.

SPECIAL LOADS
------(LUMBER DUR.FAC.=1.25 / PLATE DUR.FAC.=1.25)

TC -	From	61 PLF	at -1.50	to	61 PLF	at 7.00
TC -	From	61 PLF	at 7.00	to	61 PLF	at 14.00
BC -	From	4 PLF	at -1.50	to	4 PLF	at 0.00
BC -	From	20 PLF	at 0.00	to	20 PLF	at 14.00

TC - 179 LB Conc. Load at 7.06, 9.06, 11.06, 13.06
BC - 640 LB Conc. Load at 7.00
BC - 84 LB Conc. Load at 9.06, 11.06, 13.06

Right end vertical not exposed to wind pressure.

Deflection meets L/240 live and L/180 total load. Creep increase factor for dead load is 1.50.

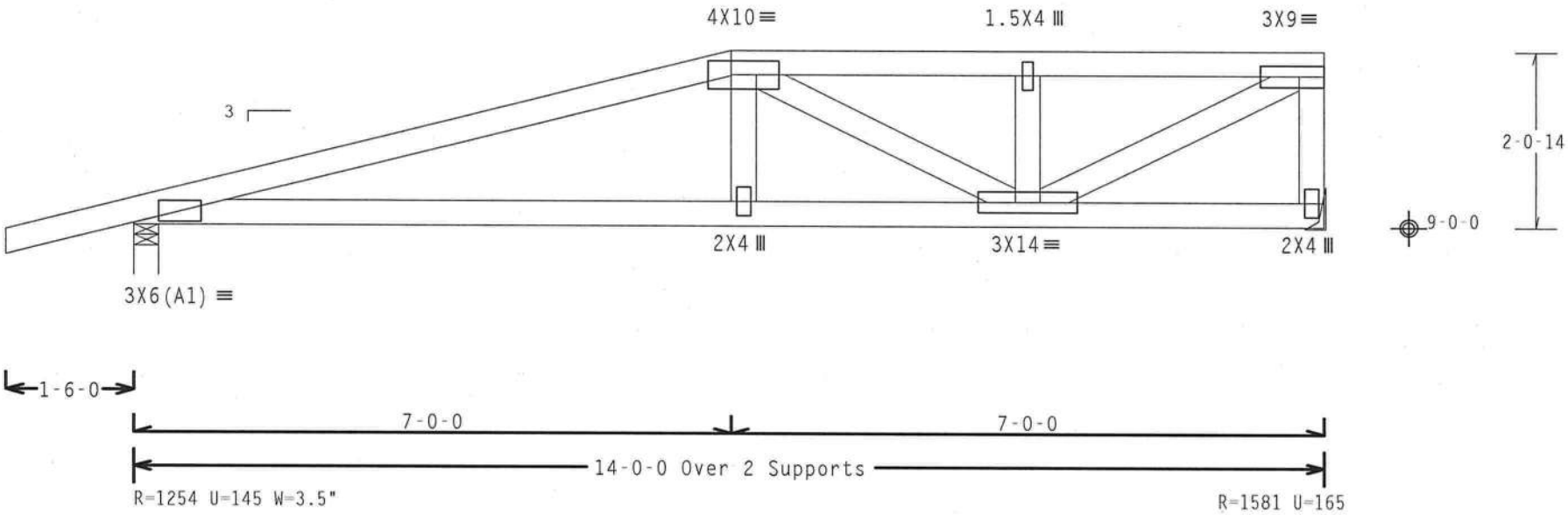

Design Crit: TPI-2002(STD)/FBC
PLT TYP. Wave Cq/RT=1.00(1.25)/0(0) 7.24.1230 Jo QTY:1 FL/-/4/-/E/-/- Scale =.5"/Ft.

Building Components Group Inc.
Haines City, FL 33844
FL Certificate of Authorization # 0 278

WARNING TRUSSES REQUIRE EXTREME CARE IN FABRICATION, HANDLING, SHIPPING, INSTALLING AND BRACING. REFER TO BCSI (BUILDING COMPONENT SAFETY INFORMATION), PUBLISHED BY TPI (TRUSS PLATE INSTITUTE, 218 NORTH LEE STREET, SUITE 312, ALEXANDRIA, VA. 22314) AND WTCA (WOOD TRUSS COUNCIL OF AMERICA, 6300 ENTERPRISE LANE, MADISON, WI 53719) FOR SAFETY PRACTICES PRIOR TO PERFORMING THESE FUNCTIONS. UNLESS OTHERWISE INDICATED TOP CHORD SHALL HAVE PROPERLY ATTACHED STRUCTURAL PANELS AND BOTTOM CHORD SHALL HAVE A PROPERLY ATTACHED RIGID CEILING.

IMPORTANT FURNISH A COPY OF THIS DESIGN TO THE INSTALLATION CONTRACTOR. ITW BCG, INC. SHALL NOT BE RESPONSIBLE FOR ANY DEVIATION FROM THIS DESIGN; ANY FAILURE TO BUILD THE TRUSS IN COMFORMANCE WITH TPI; OR FABRICATING, HANDLING, SHIPPING, INSTALLING & BRACING OF TRUSSES. DESIGN CONFORMS WITH APPLICABLE PROVISIONS OF NDS (NATIONAL DESIGN SPEC, BY AF&PA) AND TPI. ITW BCG CONNECTOR PLATES ARE MADE OF 20/18/16GA (W.H/SS/K) ASTM A653 GRADE 40/60 (W. K/H.SS) GALV. STEEL. APPLY PLATES TO EACH FACE OF TRUSS AND, UNLESS OTHERWISE LOCATED ON THIS DESIGN, POSITION PER DRAWINGS 160A-Z. ANY INSPECTION OF PLATES FOLLOWED BY (1) SHALL BE PER ANNEX A3 OF TPI1-2002 SEC.3. A SEAL ON THIS DRAWING INDICATES ACCEPTANCE OF PROFESSIONAL ENGINEERING RESPONSIBILITY SOLELY FOR THE TRUSS COMPONENT DESIGN SHOWN. THE SUITABILITY AND USE OF THIS COMPONENT FOR ANY BUILDING IS THE RESPONSIBILITY OF THE BUILDING DESIGNER PER ANSI/TPI 1 SEC. 2.

JAMES F. COLLINS JR. LICENSE No. 52212 STATE OF FLORIDA PROFESSIONAL ENGINEER
Jan 31 08

TC LL	20.0 PSF	REF R8228- 77026
TC DL	10.0 PSF	DATE 01/31/08
BC DL	10.0 PSF	DRW HCUSR8228 08031138
BC LL	0.0 PSF	HC-ENG EC/WHK
TOT.LD.	40.0 PSF	SEQN- 43936
DUR.FAC.	1.25	FROM JP
SPACING	24.0"	JREF- 1TEL8228Z03

Top chord 2x4 SP #2 Dense
Bot chord 2x4 SP #2 Dense
Webs 2x4 SP #3

Roof overhang supports 2.00 psf soffit load.

(A) 1x4 #3 or better "T" brace. 80% length of web member. Attach with 8d Box or Gun (0.113"x2.5",min.)nails @ 6" OC.

Deflection meets L/240 live and L/180 total load. Creep increase factor for dead load is 1.50.

110 mph wind, 23.67 ft mean hgt, ASCE 7-02, CLOSED bldg, not located within 4.50 ft from roof edge, CAT II, EXP B, wind TC DL=5.0 psf, wind BC DL=5.0 psf. Iw=1.00 GCpi(+/-)=0.18

Wind reactions based on MWFRS pressures.

In lieu of structural panels use purlins to brace all flat TC @ 24" OC.

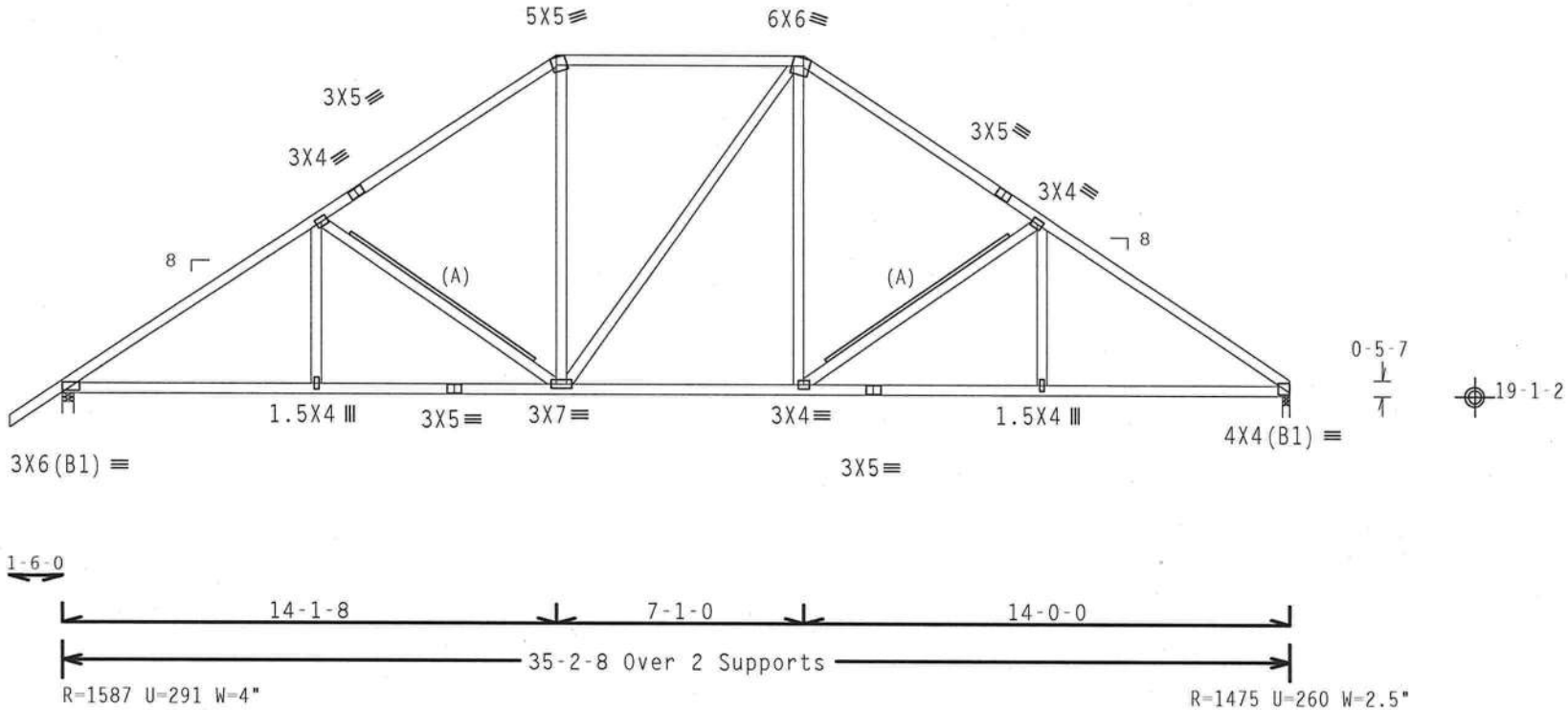

Design Crit: TPI-2002(STD)/FBC
Cq/RT=1.00(1.25)/0(0)

PLT TYP. Wave | 7.36.0424 | QTY:1 | FL/-/4/-/E/-/- | Scale =.1875"/Ft.

Building Components Group Inc.

Haines City, FL 33844
FL Certificate of Authorization # 0 278

WARNING TRUSSES REQUIRE EXTREME CARE IN FABRICATION, HANDLING, SHIPPING, INSTALLING AND BRACING. REFER TO BCSI (BUILDING COMPONENT SAFETY INFORMATION), PUBLISHED BY TPI (TRUSS PLATE INSTITUTE, 218 NORTH LEE STREET, SUITE 312, ALEXANDRIA, VA. 22314) AND WTCA (WOOD TRUSS COUNCIL OF AMERICA, 6300 ENTERPRISE LANE, MADISON, WI 53719) FOR SAFETY PRACTICES PRIOR TO PERFORMING THESE FUNCTIONS. UNLESS OTHERWISE INDICATED TOP CHORD SHALL HAVE PROPERLY ATTACHED STRUCTURAL PANELS AND BOTTOM CHORD SHALL HAVE A PROPERLY ATTACHED RIGID CEILING.

IMPORTANT FURNISH A COPY OF THIS DESIGN TO THE INSTALLATION CONTRACTOR. ITW BCG, INC. SHALL NOT BE RESPONSIBLE FOR ANY DEVIATION FROM THIS DESIGN; ANY FAILURE TO BUILD THE TRUSS IN COMFORMANCE WITH TPI; OR FABRICATING, HANDLING, SHIPPING, INSTALLING & BRACING OF TRUSSES.
DESIGN CONFORMS WITH APPLICABLE PROVISIONS OF NDS (NATIONAL DESIGN SPEC. BY AF&PA) AND TPI. ITW BCG CONNECTOR PLATES ARE MADE OF 20/18/16GA (W,H/SS/K) ASTM A653 GRADE 40/60 (W, K/H,SS) GALV. STEEL. APPLY PLATES TO EACH FACE OF TRUSS AND, UNLESS OTHERWISE LOCATED ON THIS DESIGN, POSITION PER DRAWINGS 160A-Z. ANY INSPECTION OF PLATES FOLLOWED BY (1) SHALL BE PER ANNEX A3 OF TPI1-2002 SEC.3. A SEAL ON THIS DRAWING INDICATES ACCEPTANCE OF PROFESSIONAL ENGINEERING RESPONSIBILITY SOLELY FOR THE TRUSS COMPONENT DESIGN SHOWN. THE SUITABILITY AND USE OF THIS COMPONENT FOR ANY BUILDING IS THE RESPONSIBILITY OF THE BUILDING DESIGNER PER ANSI/TPI 1 SEC. 2.

JAMES F. COLLINS, JR. LICENSE No 52212 STATE OF FLORIDA PROFESSIONAL ENGINEER
Jan 31 '08

TC LL	20.0 PSF	REF	R8228- 77027
TC DL	10.0 PSF	DATE	01/31/08
BC DL	10.0 PSF	DRW	HCUSR8228 08031075
BC LL	0.0 PSF	HC-ENG	EC/WHK *
TOT.LD.	40.0 PSF	SEQN-	73629
DUR.FAC.	1.25	FROM	JP
SPACING	24.0"	JREF-	1TEL8228Z03

(dear--OWNER BUILDER deardorf -- , ** - T66)

Top chord 2x4 SP #2 Dense
Bot chord 2x4 SP #2 Dense
Webs 2x4 SP #3

110 mph wind, 29.71 ft mean hgt, ASCE 7-02, CLOSED bldg, not located within 4.50 ft from roof edge, CAT II, EXP B, wind TC DL=5.0 psf, wind BC DL=2.0 psf. Iw=1.00 GCpi(+/-)=0.18

Wind reactions based on MWFRS pressures.

Deflection meets L/240 live and L/180 total load. Creep increase factor for dead load is 1.50.

REFER TO DRAWING PIGBACKB0204 FOR PIGGYBACK DETAILS.
TOP CHORD OF SUPPORTING TRUSS UNDER PIGGYBACK TO BE BRACED @ 24" O.C.

SPECIAL LOADS
------(LUMBER DUR.FAC.=1.25 / PLATE DUR.FAC.=1.25)

TC - From	64 PLF	at	0.00 to	64 PLF	at	2.50
TC - From	64 PLF	at	2.50 to	64 PLF	at	4.58
TC - From	64 PLF	at	4.58 to	64 PLF	at	7.08
BC - From	4 PLF	at	0.00 to	4 PLF	at	7.08

In lieu of structural panels or rigid ceiling use purlins to brace all flat TC @ 24" OC, all BC @ 24" OC.

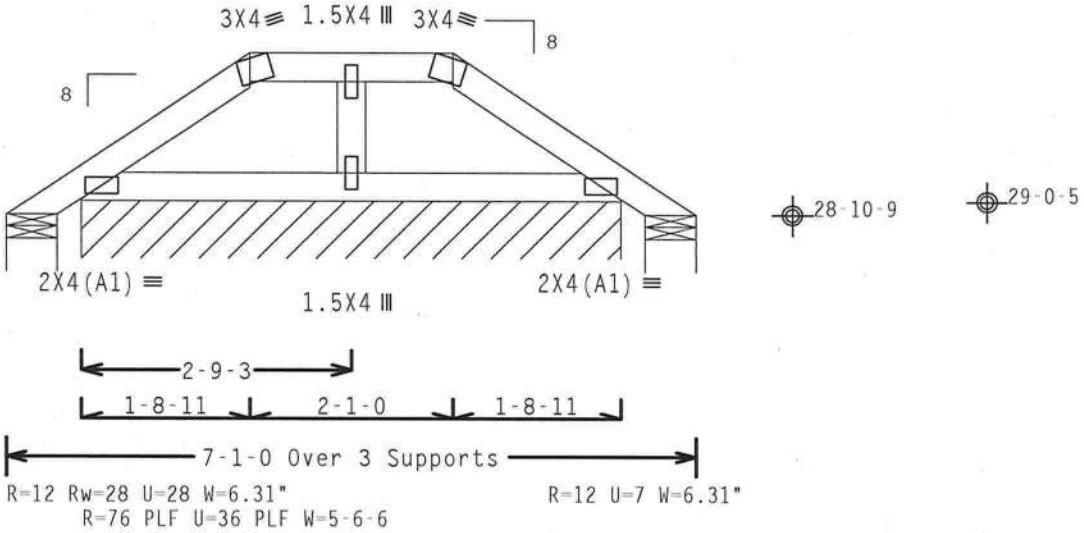

Design Crit: TPI-2002(STD)/FBC
Cq/RT=1.00(1.25)/0(0)

PLT TYP. Wave | 7.36.0424 | QTY:1 | FL/-/4/-/E/-/- | Scale =.5"/Ft.

Building Components Group Inc.
Haines City, FL 33844
FL Certificate of Authorization # 0 278

WARNING TRUSSES REQUIRE EXTREME CARE IN FABRICATION, HANDLING, SHIPPING, INSTALLING AND BRACING. REFER TO BCSI (BUILDING COMPONENT SAFETY INFORMATION), PUBLISHED BY TPI (TRUSS PLATE INSTITUTE, 218 NORTH LEE STREET, SUITE 312, ALEXANDRIA, VA. 22314) AND WTCA (WOOD TRUSS COUNCIL OF AMERICA, 6300 ENTERPRISE LANE, MADISON, WI 53719) FOR SAFETY PRACTICES PRIOR TO PERFORMING THESE FUNCTIONS. UNLESS OTHERWISE INDICATED TOP CHORD SHALL HAVE PROPERLY ATTACHED STRUCTURAL PANELS AND BOTTOM CHORD SHALL HAVE A PROPERLY ATTACHED RIGID CEILING.

IMPORTANT FURNISH A COPY OF THIS DESIGN TO THE INSTALLATION CONTRACTOR. ITW BCG, INC. SHALL NOT BE RESPONSIBLE FOR ANY DEVIATION FROM THIS DESIGN; ANY FAILURE TO BUILD THE TRUSS IN COMFORMANCE WITH TPI; OR FABRICATING, HANDLING, SHIPPING, INSTALLING & BRACING OF TRUSSES. DESIGN CONFORMS WITH APPLICABLE PROVISIONS OF NDS (NATIONAL DESIGN SPEC, BY AF&PA) AND TPI. ITW BCG CONNECTOR PLATES ARE MADE OF 20/18/16GA (W,H/SS/K) ASTM A653 GRADE 40/60 (W, K/H,SS) GALV. STEEL. APPLY PLATES TO EACH FACE OF TRUSS AND, UNLESS OTHERWISE LOCATED ON THIS DESIGN, POSITION PER DRAWINGS 160A-Z. ANY INSPECTION OF PLATES FOLLOWED BY (1) SHALL BE PER ANNEX A3 OF TPI1-2002 SEC.3. A SEAL ON THIS DRAWING INDICATES ACCEPTANCE OF PROFESSIONAL ENGINEERING RESPONSIBILITY SOLELY FOR THE TRUSS COMPONENT DESIGN SHOWN. THE SUITABILITY AND USE OF THIS COMPONENT FOR ANY BUILDING IS THE RESPONSIBILITY OF THE BUILDING DESIGNER PER ANSI/TPI 1 SEC. 2.

JAMES F. COLLINS JR. LICENSE No. 52212 STATE OF FLORIDA PROFESSIONAL ENGINEER
Jan 31 08

TC LL	20.0 PSF	REF	R8228- 77028
TC DL	10.0 PSF	DATE	01/31/08
BC DL	10.0 PSF	DRW	HCUSR8228 08031079
BC LL	0.0 PSF	HC-ENG	EC/WHK
TOT.LD.	40.0 PSF	SEQN-	73631
DUR.FAC.	1.25	FROM	JP
SPACING	24.0"	JREF-	1TEL8228Z03

(dear--OWNER BUILDER deardorf -- , ** - T48)

Top chord 2x4 SP #2 Dense
Bot chord 2x4 SP #2 Dense
Webs 2x4 SP #3

110 mph wind, 30.06 ft mean hgt, ASCE 7-02, CLOSED bldg, not located within 4.50 ft from roof edge, CAT II, EXP B, wind TC DL=5.0 psf, wind BC DL=2.0 psf. Iw=1.00 GCpi(+/-)=0.18

Wind reactions based on MWFRS pressures.

REFER TO DRAWING PIGBACKB0204 FOR PIGGYBACK DETAILS. TOP CHORD OF SUPPORTING TRUSS UNDER PIGGYBACK TO BE BRACED @ 24" O.C.

SPECIAL LOADS
------(LUMBER DUR.FAC.=1.25 / PLATE DUR.FAC.=1.25)

TC - From	64 PLF	at	0.00	to	64 PLF	at	3.54
TC - From	64 PLF	at	3.54	to	64 PLF	at	7.08
BC - From	4 PLF	at	0.00	to	4 PLF	at	7.08

In lieu of rigid ceiling use purlins to brace BC @ 24" OC.

Deflection meets L/240 live and L/180 total load. Creep increase factor for dead load is 1.50.

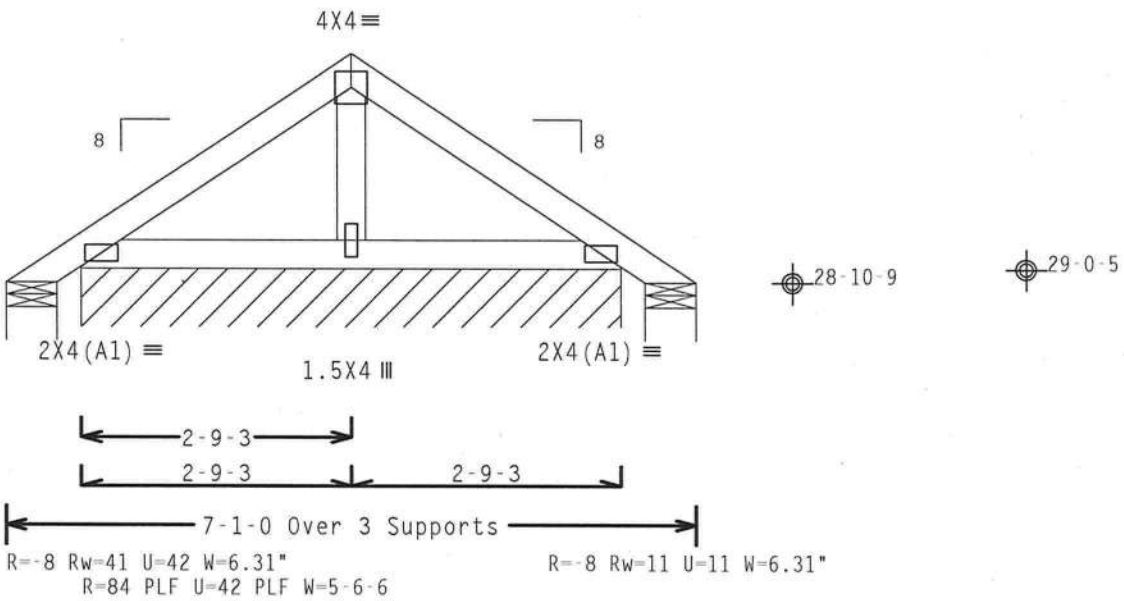

Design Crit: TPI-2002(STD)/FBC
Cq/RT=1.00(1.25)/0(0) 7.36.0424.11

PLT TYP. Wave | QTY:1 | FL/-/4/-/E/-/- | Scale =.5"/Ft.

Building Components Group Inc.
Haines City, FL 33844
FL Certificate of Authorization # 0 278

WARNINGRUSSES REQUIRE EXTREME CARE IN FABRICATION, HANDLING, SHIPPING, INSTALLING AND BRACING. REFER TO BCSI (BUILDING COMPONENT SAFETY INFORMATION), PUBLISHED BY TPI (TRUSS PLATE INSTITUTE, 218 NORTH LEE STREET, SUITE 312, ALEXANDRIA, VA, 22314) AND WTCA (WOOD TRUSS COUNCIL OF AMERICA, 6300 ENTERPRISE LANE, MADISON, WI 53719) FOR SAFETY PRACTICES PRIOR TO PERFORMING THESE FUNCTIONS. UNLESS OTHERWISE INDICATED TOP CHORD SHALL HAVE PROPERLY ATTACHED STRUCTURAL PANELS AND BOTTOM CHORD SHALL HAVE A PROPERLY ATTACHED RIGID CEILING.

IMPORTANTFURNISH A COPY OF THIS DESIGN TO THE INSTALLATION CONTRACTOR. ITW BCG, INC. SHALL NOT BE RESPONSIBLE FOR ANY DEVIATION FROM THIS DESIGN; ANY FAILURE TO BUILD THE TRUSS IN COMFORMANCE WITH TPI; OR FABRICATING, HANDLING, SHIPPING, INSTALLING & BRACING OF TRUSSES.
DESIGN CONFORMS WITH APPLICABLE PROVISIONS OF NDS (NATIONAL DESIGN SPEC, BY AF&PA) AND TPI. ITW BCG CONNECTOR PLATES ARE MADE OF 20/18/16GA (W,H/SS/K) ASTM A653 GRADE 40/60 (W, K/H,SS) GALV. STEEL. APPLY PLATES TO EACH FACE OF TRUSS AND, UNLESS OTHERWISE LOCATED ON THIS DESIGN, POSITION PER DRAWINGS 160A-Z. ANY INSPECTION OF PLATES FOLLOWED BY (1) SHALL BE PER ANNEX A3 OF TPI1-2002 SEC.3. A SEAL ON THIS DRAWING INDICATES ACCEPTANCE OF PROFESSIONAL ENGINEERING RESPONSIBILITY SOLELY FOR THE TRUSS COMPONENT DESIGN SHOWN. THE SUITABILITY AND USE OF THIS COMPONENT FOR ANY BUILDING IS THE RESPONSIBILITY OF THE BUILDING DESIGNER PER ANSI/TPI 1 SEC. 2.

JAMES F. COLVING JR. LICENSE No. 52212 STATE OF FLORIDA PROFESSIONAL ENGINEER
Jan 31,2008

TC LL	20.0 PSF	REF R8228- 77029
TC DL	10.0 PSF	DATE 01/31/08
BC DL	10.0 PSF	DRW HCUSR8228 08031080
BC LL	0.0 PSF	HC-ENG EC/WHK
TOT.LD.	40.0 PSF	SEQN- 73633
DUR.FAC.	1.25	FROM JP
SPACING	24.0"	JREF- 1TEL8228Z03

(dear--OWNER BUILDER deardorf -- , ** - T75)

Top chord 2x4 SP #2 Dense
Bot chord 2x4 SP #2 Dense
Webs 2x4 SP #3

Roof overhang supports 2.00 psf soffit load.

(A) Continuous lateral bracing equally spaced on member.

Deflection meets L/240 live and L/180 total load. Creep increase factor for dead load is 1.50.

110 mph wind, 23.67 ft mean hgt, ASCE 7-02, CLOSED bldg, not located within 4.50 ft from roof edge, CAT II, EXP B, wind TC DL=5.0 psf, wind BC DL=5.0 psf. Iw=1.00 GCpi(+/-)=0.18

Wind reactions based on MWFRS pressures.

In lieu of structural panels use purlins to brace all flat TC @ 24" OC.

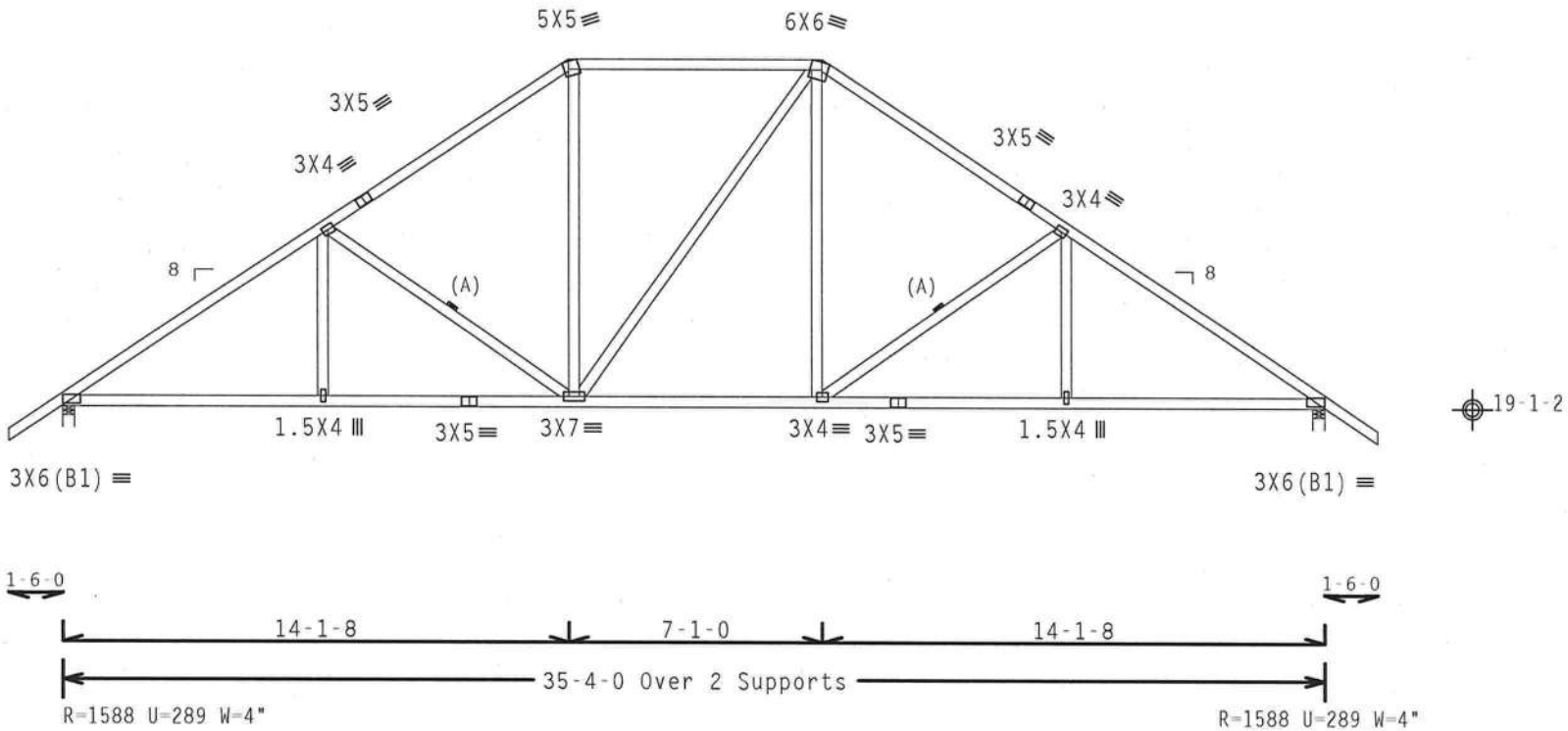

Design Crit: TPI-2002(STD)/FBC
Cq/RT=1.00(1.25)/0(0)

PLT TYP. Wave | 7.36.0424 | QTY:1 | FL/-/4/-/E/-/- | Scale =.1875"/Ft.

Building Components Group Inc.

Haines City, FL 33844
FL Certificate of Authorization # 0 278

WARNINGRUSSES REQUIRE EXTREME CARE IN FABRICATION, HANDLING, SHIPPING, INSTALLING AND BRACING. REFER TO BCSI (BUILDING COMPONENT SAFETY INFORMATION), PUBLISHED BY TPI (TRUSS PLATE INSTITUTE, 218 NORTH LEE STREET, SUITE 312, ALEXANDRIA, VA. 22314) AND WTCA (WOOD TRUSS COUNCIL OF AMERICA, 6300 ENTERPRISE LANE, MADISON, WI 53719) FOR SAFETY PRACTICES PRIOR TO PERFORMING THESE FUNCTIONS. UNLESS OTHERWISE INDICATED TOP CHORD SHALL HAVE PROPERLY ATTACHED STRUCTURAL PANELS AND BOTTOM CHORD SHALL HAVE A PROPERLY ATTACHED RIGID CEILING.

IMPORTANTFURNISH A COPY OF THIS DESIGN TO THE INSTALLATION CONTRACTOR. ITW BCG, INC. SHALL NOT BE RESPONSIBLE FOR ANY DEVIATION FROM THIS DESIGN; ANY FAILURE TO BUILD THE TRUSS IN COMFORMANCE WITH TPI; OR FABRICATING, HANDLING, SHIPPING, INSTALLING & BRACING OF TRUSSES.
DESIGN CONFORMS WITH APPLICABLE PROVISIONS OF NDS (NATIONAL DESIGN SPEC. BY AF&PA) AND TPI. ITW BCG CONNECTOR PLATES ARE MADE OF 20/18/16GA (W,H/SS/K) ASTM A653 GRADE 40/60 (W, K/H,SS) GALV. STEEL. APPLY PLATES TO EACH FACE OF TRUSS AND, UNLESS OTHERWISE LOCATED ON THIS DESIGN, POSITION PER DRAWINGS 160A-2. ANY INSPECTION OF PLATES FOLLOWED BY (1) SHALL BE PER ANNEX A3 OF TPI1-2002 SEC.3. A SEAL ON THIS DRAWING INDICATES ACCEPTANCE OF PROFESSIONAL ENGINEERING RESPONSIBILITY SOLELY FOR THE TRUSS COMPONENT DESIGN SHOWN. THE SUITABILITY AND USE OF THIS COMPONENT FOR ANY BUILDING IS THE RESPONSIBILITY OF THE BUILDING DESIGNER PER ANSI/TPI 1 SEC. 2.

JAMES F. COLLINS, JR. LICENSE No. 52221 STATE OF FLORIDA PROFESSIONAL ENGINEER
Jan 31 08

TC LL	20.0 PSF	REF	R8228- 77030
TC DL	10.0 PSF	DATE	01/31/08
BC DL	10.0 PSF	DRW	HCUSR8228 08031076
BC LL	0.0 PSF	HC-ENG	EC/WHK *
TOT.LD.	40.0 PSF	SEQN-	73635
DUR.FAC.	1.25	FROM	JP
SPACING	24.0"	JREF-	1TEL8228Z03

(dear--OWNER BUILDER deardorf -- , ** - T77)

Top chord 2x4 SP #2 Dense
Bot chord 2x4 SP #2 Dense
Webs 2x4 SP #3

110 mph wind, 29.67 ft mean hgt, ASCE 7-02, CLOSED bldg, not located within 4.50 ft from roof edge, CAT II, EXP B, wind TC DL=5.0 psf, wind BC DL=2.0 psf. Iw=1.00 GCpi(+/-)=0.18

Wind reactions based on MWFRS pressures.

Deflection meets L/240 live and L/180 total load. Creep increase factor for dead load is 1.50.

REFER TO DRAWING PIGBACKB0204 FOR PIGGYBACK DETAILS.
TOP CHORD OF SUPPORTING TRUSS UNDER PIGGYBACK TO BE BRACED @ 24" O.C.

SPECIAL LOADS
------(LUMBER DUR.FAC.=1.25 / PLATE DUR.FAC.=1.25)

TC - From	64 PLF	at	0.00 to	64 PLF	at	2.38
TC - From	64 PLF	at	2.38 to	64 PLF	at	4.71
TC - From	64 PLF	at	4.71 to	64 PLF	at	7.08
BC - From	4 PLF	at	0.00 to	4 PLF	at	7.08

In lieu of structural panels or rigid ceiling use purlins to brace all flat TC @ 24" OC, all BC @ 24" OC.

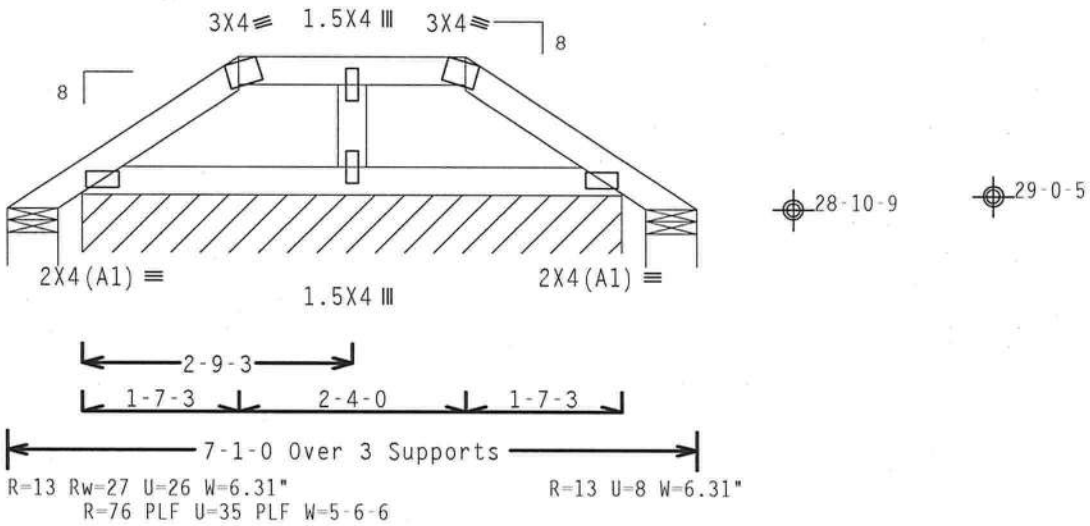

Design Crit: TPI-2002(STD)/FBC
Cq/RT=1.00(1.25)/0(0) 7.36.0424 Jul

PLT TYP. Wave QTY:1 FL/-/4/-/E/-/- Scale =.5"/Ft.

Building Components Group Inc.

Haines City, FL 33844
FL Certificate of Authorization # 0 278

WARNINGTRUSSES REQUIRE EXTREME CARE IN FABRICATION, HANDLING, SHIPPING, INSTALLING AND BRACING. REFER TO BCSI (BUILDING COMPONENT SAFETY INFORMATION), PUBLISHED BY TPI (TRUSS PLATE INSTITUTE, 218 NORTH LEE STREET, SUITE 312, ALEXANDRIA, VA, 22314) AND WTCA (WOOD TRUSS COUNCIL OF AMERICA, 6300 ENTERPRISE LANE, MADISON, WI 53719) FOR SAFETY PRACTICES PRIOR TO PERFORMING THESE FUNCTIONS. UNLESS OTHERWISE INDICATED TOP CHORD SHALL HAVE PROPERLY ATTACHED STRUCTURAL PANELS AND BOTTOM CHORD SHALL HAVE A PROPERLY ATTACHED RIGID CEILING.

IMPORTANTFURNISH A COPY OF THIS DESIGN TO THE INSTALLATION CONTRACTOR. ITW BCG, INC. SHALL NOT BE RESPONSIBLE FOR ANY DEVIATION FROM THIS DESIGN; ANY FAILURE TO BUILD THE TRUSS IN CONFORMANCE WITH TPI; OR FABRICATING, HANDLING, SHIPPING, INSTALLING & BRACING OF TRUSSES.
DESIGN CONFORMS WITH APPLICABLE PROVISIONS OF NDS (NATIONAL DESIGN SPEC. BY AF&PA) AND TPI. ITW BCG CONNECTOR PLATES ARE MADE OF 20/18/16GA (W,H/SS/K) ASTM A653 GRADE 40/60 (W, K/H,SS) GALV. STEEL. APPLY PLATES TO EACH FACE OF TRUSS AND, UNLESS OTHERWISE LOCATED ON THIS DESIGN, POSITION PER DRAWINGS 160A-Z. ANY INSPECTION OF PLATES FOLLOWED BY (1) SHALL BE PER ANNEX A3 OF TPI1-2002 SEC.3. A SEAL ON THIS DRAWING INDICATES ACCEPTANCE OF PROFESSIONAL ENGINEERING RESPONSIBILITY SOLELY FOR THE TRUSS COMPONENT DESIGN SHOWN. THE SUITABILITY AND USE OF THIS COMPONENT FOR ANY BUILDING IS THE RESPONSIBILITY OF THE BUILDING DESIGNER PER ANSI/TPI 1 SEC. 2.

JAMES F. COLLINS, JR. LICENSE No. 52212 STATE OF FLORIDA PROFESSIONAL ENGINEER
Jan 31,2008

TC LL	20.0 PSF	REF R8228- 77031
TC DL	10.0 PSF	DATE 01/31/08
BC DL	10.0 PSF	DRW HCUSR8228 08031081
BC LL	0.0 PSF	HC-ENG EC/WHK
TOT.LD.	40.0 PSF	SEQN- 73637
DUR.FAC.	1.25	FROM JP
SPACING	24.0"	JREF- 1TEL8228Z03

(dear--OWNER BUILDER deardorf -- , ** - T99)

Top chord 2x4 SP #2 Dense
Bot chord 2x4 SP #2 Dense
Webs 2x4 SP #3

Deflection meets L/240 live and L/180 total load. Creep increase factor for dead load is 1.50.

REFER TO DRAWING PIGBACKB0204 FOR PIGGYBACK DETAILS.
TOP CHORD OF SUPPORTING TRUSS UNDER PIGGYBACK TO BE BRACED @ 24" O.C.

110 mph wind, 15.00 ft mean hgt, ASCE 7-02, CLOSED bldg, Located anywhere in roof, CAT II, EXP B, wind TC DL=5.0 psf, wind BC DL=5.0 psf. Iw=1.00 GCpi(+/-)=0.18

Wind reactions based on MWFRS pressures.

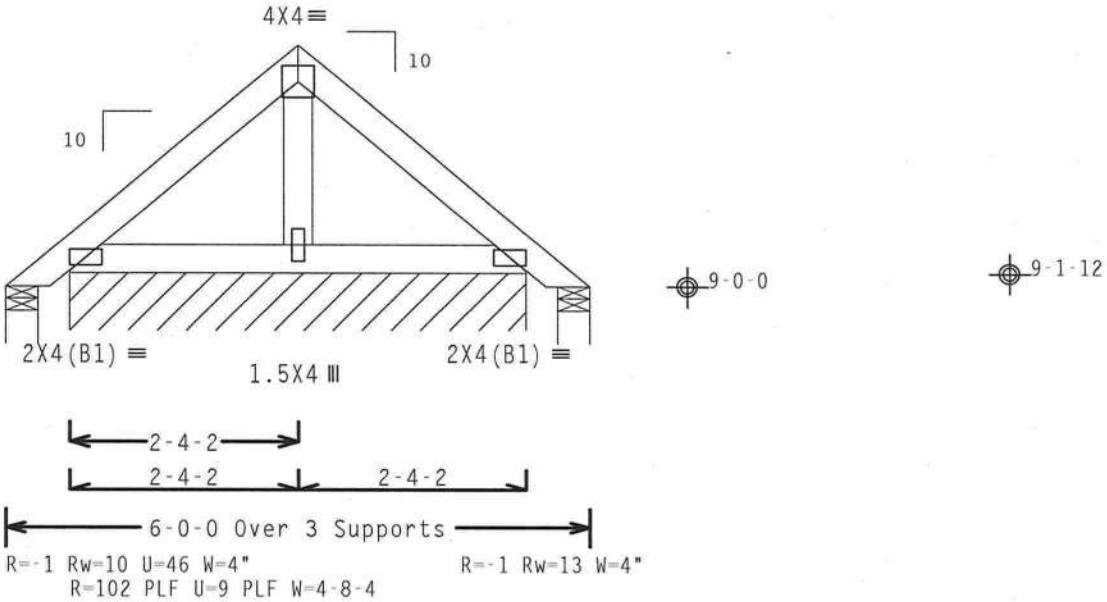

Design Crit: TPI-2002(STD)/FBC
Cq/RT=1.00(1.25)/0(0)

PLT TYP. Wave | 7.36.0424 | QTY:1 | FL/-/4/-/E/-/- | Scale =.5"/Ft.

Building Components Group Inc.
Haines City, FL 33844
FL Certificate of Authorization # 0 278

WARNINGTRUSSES REQUIRE EXTREME CARE IN FABRICATION, HANDLING, SHIPPING, INSTALLING AND BRACING. REFER TO BCSI (BUILDING COMPONENT SAFETY INFORMATION), PUBLISHED BY TPI (TRUSS PLATE INSTITUTE, 218 NORTH LEE STREET, SUITE 312, ALEXANDRIA, VA, 22314) AND WTCA (WOOD TRUSS COUNCIL OF AMERICA, 6300 ENTERPRISE LANE, MADISON, WI 53719) FOR SAFETY PRACTICES PRIOR TO PERFORMING THESE FUNCTIONS. UNLESS OTHERWISE INDICATED TOP CHORD SHALL HAVE PROPERLY ATTACHED STRUCTURAL PANELS AND BOTTOM CHORD SHALL HAVE A PROPERLY ATTACHED RIGID CEILING.

IMPORTANTFURNISH A COPY OF THIS DESIGN TO THE INSTALLATION CONTRACTOR. ITW BCG, INC. SHALL NOT BE RESPONSIBLE FOR ANY DEVIATION FROM THIS DESIGN; ANY FAILURE TO BUILD THE TRUSS IN COMFORMANCE WITH TPI; OR FABRICATING, HANDLING, SHIPPING, INSTALLING & BRACING OF TRUSSES.
DESIGN CONFORMS WITH APPLICABLE PROVISIONS OF NDS (NATIONAL DESIGN SPEC. BY AF&PA) AND TPI. ITW BCG CONNECTOR PLATES ARE MADE OF 20/18/16GA (W,H/SS/K) ASTM A653 GRADE 40/60 (W, K/H,SS) GALV. STEEL. APPLY PLATES TO EACH FACE OF TRUSS AND, UNLESS OTHERWISE LOCATED ON THIS DESIGN, POSITION PER DRAWINGS 160A-Z. ANY INSPECTION OF PLATES FOLLOWED BY (1) SHALL BE PER ANNEX A3 OF TPI1-2002 SEC.3. A SEAL ON THIS DRAWING INDICATES ACCEPTANCE OF PROFESSIONAL ENGINEERING RESPONSIBILITY SOLELY FOR THE TRUSS COMPONENT DESIGN SHOWN. THE SUITABILITY AND USE OF THIS COMPONENT FOR ANY BUILDING IS THE RESPONSIBILITY OF THE BUILDING DESIGNER PER ANSI/TPI 1 SEC. 2.

JAMES F. COLLINS, JR. LICENSE No 52212 STATE OF FLORIDA PROFESSIONAL ENGINEER
Jan 31 08

TC LL	20.0 PSF	REF R8228- 77032
TC DL	10.0 PSF	DATE 01/31/08
BC DL	10.0 PSF	DRW HCUSR8228 08031082
BC LL	0.0 PSF	HC-ENG EC/WHK
TOT.LD.	40.0 PSF	SEQN- 73654
DUR.FAC.	1.25	FROM JP
SPACING	24.0"	JREF- 1TEL8228Z03

ASCE 7-02: 110 MPH WIND SPEED, 30' MEAN HEIGHT, ENCLOSED, I = 1.00, EXPOSURE C

MAX GABLE VERTICAL LENGTH

2X4 GABLE VERTICAL SPACING	SPECIES	BRACE GRADE	NO BRACES	(1) 1X4 "L" BRACE * GROUP A	(1) 1X4 "L" BRACE * GROUP B	(1) 2X4 "L" BRACE * GROUP A	(1) 2X4 "L" BRACE * GROUP B	(2) 2X4 "L" BRACE ** GROUP A	(2) 2X4 "L" BRACE ** GROUP B	(1) 2X6 "L" BRACE * GROUP A	(1) 2X6 "L" BRACE * GROUP B	(2) 2X6 "L" BRACE ** GROUP A	(2) 2X6 "L" BRACE ** GROUP B
24" O.C.	SPF HF	#1 / #2	3' 8"	6' 4"	6' 6"	7' 6"	7' 8"	8' 11"	9' 2"	11' 9"	12' 1"	14' 0"	14' 0"
		#3	3' 7"	5' 5"	5' 5"	7' 2"	7' 2"	8' 11"	8' 11"	11' 2"	11' 2"	14' 0"	14' 0"
		STUD	3' 7"	5' 5"	5' 5"	7' 1"	7' 1"	8' 11"	8' 11"	11' 1"	11' 1"	14' 0"	14' 0"
		STANDARD	3' 7"	4' 8"	4' 8"	6' 1"	6' 1"	8' 3"	8' 3"	9' 6"	9' 6"	12' 11"	12' 11"
	SP DFL	#1	4' 0"	6' 4"	6' 10"	7' 6"	8' 1"	8' 11"	9' 7"	11' 9"	12' 8"	14' 0"	14' 0"
		#2	3' 11"	6' 4"	6' 10"	7' 6"	8' 1"	8' 11"	9' 7"	11' 9"	12' 8"	14' 0"	14' 0"
		#3	3' 9"	5' 7"	5' 7"	7' 4"	7' 4"	8' 11"	9' 5"	11' 5"	11' 5"	14' 0"	14' 0"
		STUD	3' 9"	5' 6"	5' 6"	7' 3"	7' 3"	8' 11"	9' 5"	11' 4"	11' 4"	14' 0"	14' 0"
		STANDARD	3' 8"	4' 9"	4' 9"	6' 3"	6' 3"	8' 5"	8' 5"	9' 9"	9' 9"	13' 3"	14' 0"
16" O.C.	SPF HF	#1 / #2	4' 2"	7' 3"	7' 5"	8' 7"	8' 10"	10' 3"	10' 6"	13' 5"	13' 10"	14' 0"	14' 0"
		#3	4' 1"	6' 8"	6' 8"	8' 7"	8' 7"	10' 3"	10' 3"	13' 5"	13' 5"	14' 0"	14' 0"
		STUD	4' 1"	8' 0"	8' 0"	8' 7"	8' 7"	10' 3"	10' 3"	13' 5"	13' 5"	14' 0"	14' 0"
		STANDARD	4' 1"	5' 8"	5' 8"	7' 6"	7' 6"	10' 1"	10' 1"	11' 8"	11' 8"	14' 0"	14' 0"
	SP DFL	#1	4' 7"	7' 3"	7' 9"	8' 7"	9' 3"	10' 3"	11' 0"	13' 5"	14' 0"	14' 0"	14' 0"
		#2	4' 6"	7' 3"	7' 9"	8' 7"	9' 3"	10' 3"	11' 0"	13' 5"	14' 0"	14' 0"	14' 0"
		#3	4' 4"	6' 10"	6' 10"	8' 7"	9' 0"	10' 3"	10' 9"	13' 5"	14' 0"	14' 0"	14' 0"
		STUD	4' 4"	6' 9"	6' 9"	8' 7"	8' 11"	10' 3"	10' 9"	13' 5"	14' 0"	14' 0"	14' 0"
		STANDARD	4' 2"	5' 10"	5' 10"	7' 8"	7' 8"	10' 3"	10' 4"	11' 11"	11' 11"	14' 0"	14' 0"
12" O.C.	SPF HF	#1 / #2	4' 7"	8' 0"	8' 2"	9' 5"	9' 8"	11' 3"	11' 7"	14' 0"	14' 0"	14' 0"	14' 0"
		#3	4' 6"	7' 8"	7' 8"	9' 5"	9' 5"	11' 3"	11' 3"	14' 0"	14' 0"	14' 0"	14' 0"
		STUD	4' 6"	7' 8"	7' 8"	9' 5"	9' 5"	11' 3"	11' 3"	14' 0"	14' 0"	14' 0"	14' 0"
		STANDARD	4' 6"	6' 7"	6' 7"	8' 8"	8' 8"	11' 3"	11' 3"	13' 6"	13' 6"	14' 0"	14' 0"
	SP DFL	#1	5' 1"	8' 0"	8' 7"	9' 5"	10' 2"	11' 3"	12' 1"	14' 0"	14' 0"	14' 0"	14' 0"
		#2	4' 11"	8' 0"	8' 7"	9' 5"	10' 2"	11' 3"	12' 1"	14' 0"	14' 0"	14' 0"	14' 0"
		#3	4' 9"	7' 11"	7' 11"	9' 5"	9' 11"	11' 3"	11' 10"	14' 0"	14' 0"	14' 0"	14' 0"
		STUD	4' 9"	7' 9"	7' 9"	9' 5"	9' 11"	11' 3"	11' 10"	14' 0"	14' 0"	14' 0"	14' 0"
		STANDARD	4' 7"	6' 9"	6' 9"	8' 10"	8' 10"	11' 3"	11' 7"	13' 10"	13' 10"	14' 0"	14' 0"

BRACING GROUP SPECIES AND GRADES:

GROUP A:

SPRUCE-PINE-FIR

#1 / #2	STANDARD
#3	STUD

HEM-FIR

#2	STUD
#3	STANDARD

DOUGLAS FIR-LARCH

#3
STUD
STANDARD

SOUTHERN PINE

#3
STUD
STANDARD

GROUP B:

HEM-FIR

#1 & BTR
#1

SOUTHERN PINE

#1
#2

DOUGLAS FIR-LARCH

#1
#2

GABLE TRUSS DETAIL NOTES:

LIVE LOAD DEFLECTION CRITERIA IS L/240.

PROVIDE UPLIFT CONNECTIONS FOR 100 PLF OVER CONTINUOUS BEARING (5 PSF TC DEAD LOAD).

GABLE END SUPPORTS LOAD FROM 4' 0" OUTLOOKERS WITH 2' 0" OVERHANG, OR 12" PLYWOOD OVERHANG.

ATTACH EACH "L" BRACE WITH 10d NAILS.
* FOR (1) "L" BRACE: SPACE NAILS AT 2" O.C. IN 18" END ZONES AND 4" O.C. BETWEEN ZONES.
** FOR (2) "L" BRACES: SPACE NAILS AT 3" O.C. IN 18" END ZONES AND 6" O.C. BETWEEN ZONES.

"L" BRACING MUST BE A MINIMUM OF 80% OF WEB MEMBER LENGTH.

GABLE VERTICAL PLATE SIZES

VERTICAL LENGTH	NO SPLICE
LESS THAN 4' 0"	1X4 OR 2X3
GREATER THAN 4' 0", BUT LESS THAN 11' 6"	2X4
GREATER THAN 11' 6"	2.5X4

\+ REFER TO COMMON TRUSS DESIGN FOR PEAK, SPLICE, AND HEEL PLATES.

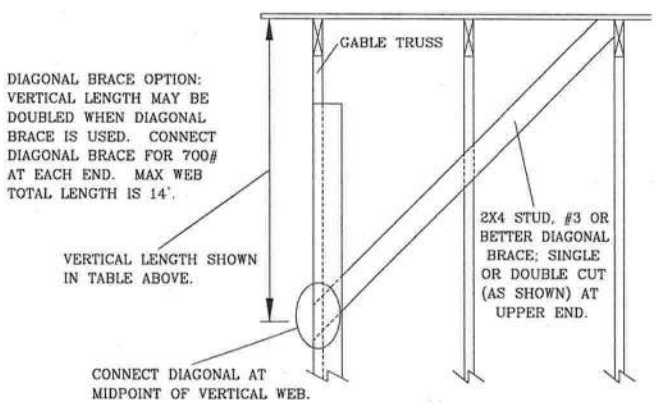

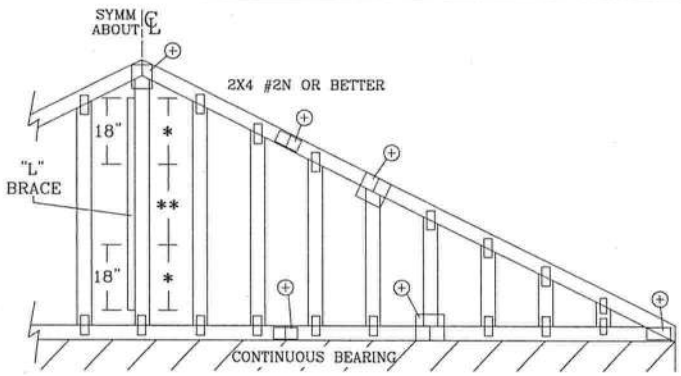

REFER TO CHART ABOVE FOR MAX GABLE VERTICAL LENGTH.

ALPINE

ITW BUILDING COMPONENTS GROUP, INC.
POMPANO BEACH, FLORIDA

WARNING TRUSSES REQUIRE EXTREME CARE IN FABRICATING, HANDLING, SHIPPING, INSTALLING AND BRACING. REFER TO BCSI (BUILDING COMPONENT SAFETY INFORMATION), PUBLISHED BY TPI (TRUSS PLATE INSTITUTE, 218 NORTH LEE STR., SUITE 312, ALEXANDRIA, VA. 22314) AND WTCA (WOOD TRUSS COUNCIL OF AMERICA, 6300 ENTERPRISE LN, MADISON, WI 53719) FOR SAFETY PRACTICES PRIOR TO PERFORMING THESE FUNCTIONS. UNLESS OTHERWISE INDICATED, TOP CHORD SHALL HAVE PROPERLY ATTACHED STRUCTURAL PANELS AND BOTTOM CHORD SHALL HAVE A PROPERLY ATTACHED RIGID CEILING.

IMPORTANT FURNISH COPY OF THIS DESIGN TO INSTALLATION CONTRACTOR. ITW BCG, INC., SHALL NOT BE RESPONSIBLE FOR ANY DEVIATION FROM THIS DESIGN; ANY FAILURE TO BUILD THE TRUSS IN CONFORMANCE WITH TPI; OR FABRICATING, HANDLING, SHIPPING, INSTALLING & BRACING OF TRUSSES. DESIGN CONFORMS WITH APPLICABLE PROVISIONS OF NDS (NATIONAL DESIGN SPEC, BY AF&PA) AND THE ITW, BCG CONNECTOR PLATES ARE MADE OF 20/18/16GA (W,H/SS/K) ASTM A653 GRADE 40/60 (W,K/H,SS) GALV. STEEL. APPLY PLATES TO EACH FACE OF TRUSS AND, UNLESS OTHERWISE LOCATED ON THIS DESIGN, POSITION PER DRAWINGS 160A-Z. ANY INSPECTION OF PLATES FOLLOWED BY (I) SHALL BE PER ANNEX A3 OF TPI 1-2002 SEC. 3. A SEAL ON THIS DRAWING INDICATES ACCEPTANCE OF PROFESSIONAL ENGINEERING RESPONSIBILITY SOLELY FOR THE TRUSS COMPONENT DESIGN SHOWN. THE SUITABILITY AND USE OF THIS COMPONENT FOR ANY BUILDING IS THE RESPONSIBILITY OF THE BUILDING DESIGNER, PER ANSI/TPI 1 SEC. 2.

JAMES F. COMINS, JR. LICENSE No. 52212 STATE OF FLORIDA PROFESSIONAL ENGINEER

MAX. TOT. LD. 60 PSF

MAX. SPACING 24.0"

REF	ASCE7-02-GAB11030
DATE	2/23/07
DRWG	A11030EE0207
-ENG	

GABLE DETAIL
FOR LET-IN VERTICALS

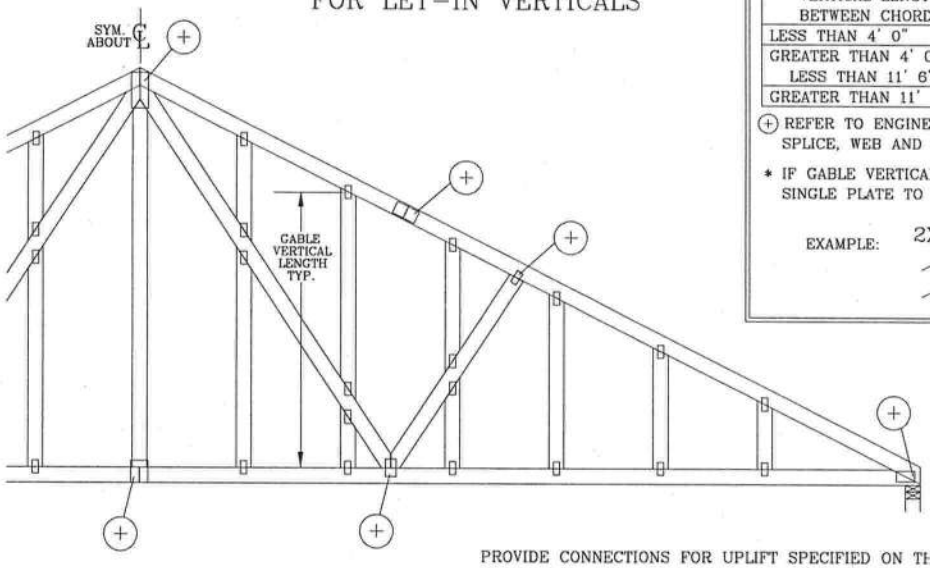

GABLE VERTICAL PLATE SIZES		
VERTICAL LENGTH BETWEEN CHORDS	PLATE SIZE	IF PLATES OVERLAP*
LESS THAN 4' 0"	1X4 OR 2X3	2X8
GREATER THAN 4' 0", BUT LESS THAN 11' 6"	2X4	2X8
GREATER THAN 11' 6"	2.5X4	2.5X8

(+) REFER TO ENGINEERED TRUSS DESIGN FOR PEAK, SPLICE, WEB AND HEEL PLATES.

* IF GABLE VERTICAL PLATES OVERLAP, USE A SINGLE PLATE TO SPAN THE WEB.

EXAMPLE:

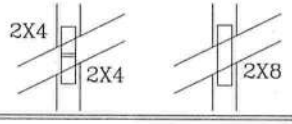

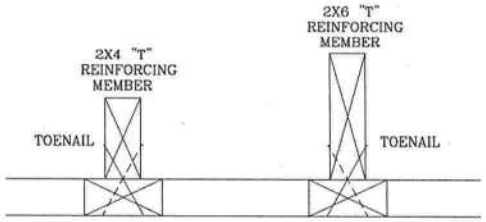

TO CONVERT FROM "L" TO "T" REINFORCING MEMBERS, MULTIPLY "T" FACTOR BY LENGTH (BASED ON GABLE VERTICAL SPECIES, GRADE AND SPACING) FOR (1) 2X4 "L" BRACE, GROUP A, OBTAINED FROM THE APPROPRIATE ALPINE GABLE DETAIL FOR ASCE OR SBCCI WIND LOAD.

MAXIMUM ALLOWABLE "T" REINFORCED GABLE VERTICAL LENGTH IS 14' FROM TOP TO BOTTOM CHORD.

WEB LENGTH INCREASE W/ "T" BRACE

WIND SPEED AND MRH	"T" REINF. MBR. SIZE	SBCCI	ASCE
110 MPH	2x4	10 %	10 %
15 FT	2x6	40 %	50 %
110 MPH	2x4	10 %	10 %
30 FT	2x6	50 %	50 %
100 MPH	2x4	10 %	10 %
15 FT	2x6	30 %	50 %
100 MPH	2x4	10 %	10 %
30 FT	2x6	40 %	40 %
90 MPH	2x4	20 %	10 %
15 FT	2x6	20 %	40 %
90 MPH	2x4	10 %	10 %
30 FT	2x6	30 %	50 %
80 MPH	2x4	10 %	20 %
15 FT	2x6	10 %	30 %
80 MPH	2x4	20 %	10 %
30 FT	2x6	20 %	40 %
70 MPH	2x4	0 %	20 %
15 FT	2x6	0 %	20 %
70 MPH	2x4	10 %	20 %
30 FT	2x6	10 %	30 %

EXAMPLE:
ASCE WIND SPEED = 100 MPH
MEAN ROOF HEIGHT = 30 FT
GABLE VERTICAL = 24" O.C. SP #3
"T" REINFORCING MEMBER SIZE = 2X4
"T" BRACE INCREASE (FROM ABOVE) = 10% = 1.10
(1) 2X4 "L" BRACE LENGTH = 6' 7"
MAXIMUM "T" REINFORCED GABLE VERTICAL LENGTH
1.10 x 6' 7" = 7' 3"

PROVIDE CONNECTIONS FOR UPLIFT SPECIFIED ON THE ENGINEERED TRUSS DESIGN.

ATTACH EACH "T" REINFORCING MEMBER WITH
HAND DRIVEN NAILS:
10d COMMON (0.148"X 3.",MIN) TOENAILS AT 4" O.C. PLUS
(4) 16d COMMON (0.162" X 3.5",MIN) TOENAILS IN TOP AND BOTTOM CHORD.

GUN DRIVEN NAILS:
8d COMMON (0.131"X 2.5",MIN) TOENAILS AT 4" O.C. PLUS
(4) TOENAILS IN TOP AND BOTTOM CHORD.

THIS DETAIL TO BE USED WITH THE APPROPRIATE ALPINE GABLE DETAIL FOR ASCE OR SBCCI WIND LOAD.

ASCE 7-93 GABLE DETAIL DRAWINGS
A11015EN0207, A10015EN0207, A09015EN0207, A08015EN0207, A07015EN0207, A11030EN0207, A10030EN0207, A09030EN0207, A08030EN0207, A07030EN0207

ASCE 7-98 GABLE DETAIL DRAWINGS
A13015EC0207, A12015EC0207, A11015EC0207, A10015EC0207, A08515EC0207, A13030EC0207, A12030EC0207, A11030EC0207, A10030EC0207, A08530EC0207

ASCE 7-02 GABLE DETAIL DRAWINGS
A13015EE0207, A12015EE0207, A11015EE0207, A10015EE0207, A08515EE0207, A13030EE0207, A12030EE0207, A11030EE0207, A10030EE0207, A08530EE0207

ASCE 7-05 GABLE DETAIL DRAWINGS
A13015E50207, A12015E50207, A11015E50207, A10015E50207, A08515E50207, A13030E50207, A12030E50207, A11030E50207, A10030E50207, A08530E50207

SEE APPROPRIATE ALPINE GABLE DETAIL (ASCE OR SBCCI WIND LOAD) FOR MAXIMUM UNREINFORCED GABLE VERTICAL LENGTH.

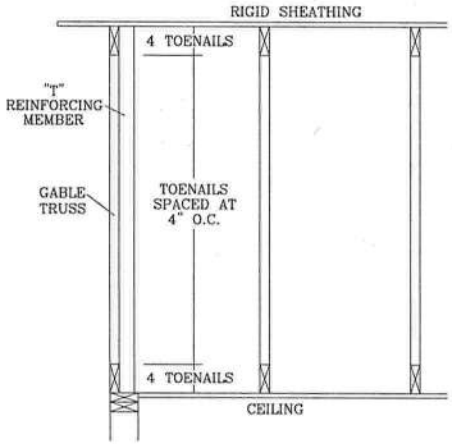

THIS DRAWING REPLACES DRAWINGS GAB98117 876,719 & HC26294035

ALPINE
ITW BUILDING COMPONENTS GROUP, INC.
POMPANO BEACH, FLORIDA

WARNING TRUSSES REQUIRE EXTREME CARE IN FABRICATING, HANDLING, SHIPPING, INSTALLING AND BRACING. REFER TO BCSI (BUILDING COMPONENT SAFETY INFORMATION), PUBLISHED BY TPI (TRUSS PLATE INSTITUTE, 218 NORTH LEE STR., SUITE 312, ALEXANDRIA, VA. 22314) AND WTCA (WOOD TRUSS COUNCIL OF AMERICA, 6300 ENTERPRISE LN, MADISON, WI 53719) FOR SAFETY PRACTICES PRIOR TO PERFORMING THESE FUNCTIONS. UNLESS OTHERWISE INDICATED, TOP CHORD SHALL HAVE PROPERLY ATTACHED STRUCTURAL PANELS AND BOTTOM CHORD SHALL HAVE A PROPERLY ATTACHED RIGID CEILING.

IMPORTANT FURNISH COPY OF THIS DESIGN TO INSTALLATION CONTRACTOR. ITW BCG, INC. SHALL NOT BE RESPONSIBLE FOR ANY DEVIATION FROM THIS DESIGN; ANY FAILURE TO BUILD THE TRUSS IN CONFORMANCE WITH TPI; OR FABRICATING, HANDLING, SHIPPING, INSTALLING & BRACING OF TRUSSES. DESIGN CONFORMS WITH APPLICABLE PROVISIONS OF NDS (NATIONAL DESIGN SPEC, BY AF&PA) AND TPI. ITW, BCG CONNECTOR PLATES ARE MADE OF 20/18/16GA (W,H/SS/K) ASTM A653 GRADE 40/60 (W,K,H,SS) GALV. STEEL. APPLY PLATES TO EACH FACE OF TRUSS AND, UNLESS OTHERWISE LOCATED ON THIS DESIGN, POSITION PER DRAWINGS 160A-Z. ANY INSPECTION OF PLATES FOLLOWED BY (I) SHALL BE PER ANNEX A3 OF TPI 1-2002 SEC. 3. A SEAL ON THIS DRAWING INDICATES ACCEPTANCE OF PROFESSIONAL ENGINEERING RESPONSIBILITY SOLELY FOR THE TRUSS COMPONENT DESIGN SHOWN. THE SUITABILITY AND USE OF THIS COMPONENT FOR ANY BUILDING IS THE RESPONSIBILITY OF THE BUILDING DESIGNER, PER ANSI/TPI 1 SEC. 2.

JAMES F. COLLINS JR. LICENSE No. 52212 STATE OF FLORIDA PROFESSIONAL ENGINEER

Ja 21 '08

MAX TOT. LD. 60 PSF
DUR. FAC. ANY
MAX SPACING 24.0"

REF	LET-IN VERT
DATE	2/23/07
DRWG	GBLLETIN0207
-ENG	DLJ/KAR

CLB WEB BRACE SUBSTITUTION

THIS DETAIL IS TO BE USED WHEN CONTINUOUS LATERAL BRACING (CLB) IS SPECIFIED ON AN ALPINE TRUSS DESIGN BUT AN ALTERNATIVE WEB BRACING METHOD IS DESIRED.

NOTES:

THIS DETAIL IS ONLY APPLICABLE FOR CHANGING THE SPECIFIED CLB SHOWN ON SINGLE PLY SEALED DESIGNS TO T-BRACING OR SCAB BRACING.

ALTERNATIVE BRACING SPECIFIED IN CHART BELOW MAY BE CONSERVATIVE. FOR MINIMUM ALTERNATIVE BRACING, RE-RUN DESIGN WITH APPROPRIATE BRACING.

WEB MEMBER SIZE	SPECIFIED CLB BRACING	ALTERNATIVE BRACING T OR L-BRACE	ALTERNATIVE BRACING SCAB BRACE
2X3 OR 2X4	1 ROW	2X4	1-2X4
2X3 OR 2X4	2 ROWS	2X6	2-2X4
2X6	1 ROW	2X4	1-2X6
2X6	2 ROWS	2X6	2-2X4(*)
2X8	1 ROW	2X6	1-2X8
2X8	2 ROWS	2X6	2-2X6(*)

T-BRACE, L-BRACE AND SCAB BRACE TO BE SAME SPECIES AND GRADE OR BETTER THAN WEB MEMBER UNLESS SPECIFIED OTHERWISE ON ENGINEER'S SEALED DESIGN.

(*) CENTER SCAB ON WIDE FACE OF WEB. APPLY (1) SCAB TO EACH FACE OF WEB.

T-BRACING OR L-BRACING:

APPLY TO EITHER SIDE OF WEB NARROW FACE. ATTACH WITH 10d BOX OR GUN (0.128"x 3.",MIN) NAILS. AT 6" O.C. BRACE IS A MINIMUM 80% OF WEB MEMBER LENGTH

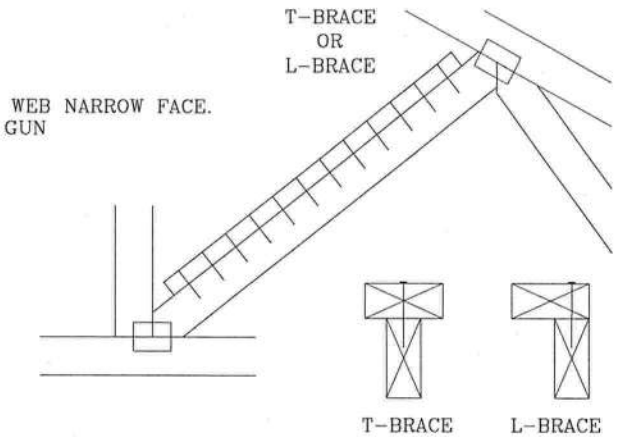

SCAB BRACING:

APPLY SCAB(S) TO WIDE FACE OF WEB. NO MORE THAN (1) SCAB PER FACE. ATTACH WITH 10d BOX OR GUN (0.128"x 3.",MIN) NAILS. AT 6" O.C. BRACE IS A MINIMUM 80% OF WEB MEMBER LENGTH

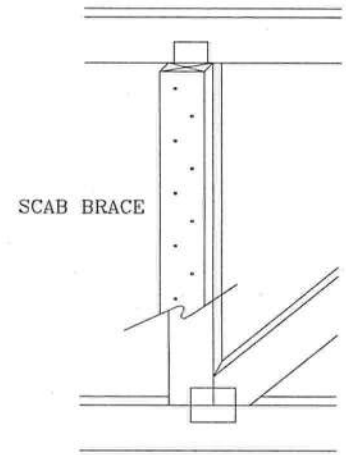

THIS DRAWING REPLACES DRAWING 579,640

ALPINE

ITW BUILDING COMPONENTS GROUP, INC.
POMPANO BEACH, FLORIDA

WARNING TRUSSES REQUIRE EXTREME CARE IN FABRICATING, HANDLING, SHIPPING, INSTALLING AND BRACING. REFER TO BCSI (BUILDING COMPONENT SAFETY INFORMATION), PUBLISHED BY TPI (TRUSS PLATE INSTITUTE, 218 NORTH LEE STR., SUITE 312, ALEXANDRIA, VA. 22314) AND WTCA (WOOD TRUSS COUNCIL OF AMERICA, 6300 ENTERPRISE LN, MADISON, WI 53719) FOR SAFETY PRACTICES PRIOR TO PERFORMING THESE FUNCTIONS. UNLESS OTHERWISE INDICATED, TOP CHORD SHALL HAVE PROPERLY ATTACHED STRUCTURAL PANELS AND BOTTOM CHORD SHALL HAVE A PROPERLY ATTACHED RIGID CEILING.

IMPORTANT FURNISH COPY OF THIS DESIGN TO INSTALLATION CONTRACTOR. ITW BCG, INC., SHALL NOT BE RESPONSIBLE FOR ANY DEVIATION FROM THIS DESIGN; ANY FAILURE TO BUILD THE TRUSS IN CONFORMANCE WITH TPI; OR FABRICATING, HANDLING, SHIPPING, INSTALLING & BRACING OF TRUSSES. DESIGN CONFORMS WITH APPLICABLE PROVISIONS OF NDS (NATIONAL DESIGN SPEC, BY AF&PA) AND TPI. ITW, BCG CONNECTOR PLATES ARE MADE OF 20/18/16GA (W,H/SS/K) ASTM A653 GRADE 40/60 (W,K/H,SS) GALV. STEEL. APPLY PLATES TO EACH FACE OF TRUSS AND, UNLESS OTHERWISE LOCATED ON THIS DESIGN, POSITION PER DRAWINGS 160A-Z. ANY INSPECTION OF PLATES FOLLOWED BY (I) SHALL BE PER ANNEX A3 OF TPI 1-2002 SEC. 3. A SEAL ON THIS DRAWING INDICATES ACCEPTANCE OF PROFESSIONAL ENGINEERING RESPONSIBILITY SOLELY FOR THE TRUSS COMPONENT DESIGN SHOWN. THE SUITABILITY AND USE OF THIS COMPONENT FOR ANY BUILDING IS THE RESPONSIBILITY OF THE BUILDING DESIGNER, PER ANSI/TPI 1 SEC. 2.

JAMES F. COLLINS, JR. LICENSE No. 52212 STATE OF FLORIDA PROFESSIONAL ENGINEER

Jan 31 '08

TC LL	PSF	REF	CLB SUBST.
TC DL	PSF	DATE	2/23/07
BC DL	PSF	DRWG	BRCLBSUB0207
BC LL	PSF	-ENG	MLH/KAR
TOT. LD.	PSF		
DUR. FAC.			
SPACING			

ASCE 7-02: 110 MPH WIND SPEED, 15' MEAN HEIGHT, ENCLOSED, I = 1.00, EXPOSURE C

MAX GABLE VERTICAL LENGTH

2X4 GABLE VERTICAL SPACING	SPECIES	BRACE GRADE	NO BRACES	(1) 1X4 "L" BRACE * GROUP A	(1) 1X4 "L" BRACE * GROUP B	(1) 2X4 "L" BRACE * GROUP A	(1) 2X4 "L" BRACE * GROUP B	(2) 2X4 "L" BRACE ** GROUP A	(2) 2X4 "L" BRACE ** GROUP B	(1) 2X6 "L" BRACE * GROUP A	(1) 2X6 "L" BRACE * GROUP B	(2) 2X6 "L" BRACE ** GROUP A	(2) 2X6 "L" BRACE ** GROUP B
24" O.C.	SPF HF	#1 / #2	3' 10"	6' 8"	6' 10"	7' 11"	8' 1"	9' 5"	9' 8"	12' 5"	12' 9"	14' 0"	14' 0"
		#3	3' 9"	6' 0"	6' 0"	7' 11"	7' 11"	9' 5"	9' 5"	12' 4"	12' 4"	14' 0"	14' 0"
		STUD	3' 9"	6' 0"	6' 0"	7' 11"	7' 11"	9' 5"	9' 5"	12' 3"	12' 3"	14' 0"	14' 0"
		STANDARD	3' 9"	5' 2"	5' 2"	6' 9"	6' 9"	9' 1"	9' 1"	10' 7"	10' 7"	14' 0"	14' 0"
	SP DFL	#1	4' 3"	6' 8"	7' 2"	7' 11"	8' 6"	9' 5"	10' 2"	12' 5"	13' 5"	14' 0"	14' 0"
		#2	4' 2"	6' 8"	7' 2"	7' 11"	8' 6"	9' 5"	10' 2"	12' 5"	13' 5"	14' 0"	14' 0"
		#3	4' 0"	6' 2"	6' 2"	7' 11"	8' 1"	9' 5"	9' 11"	12' 5"	12' 8"	14' 0"	14' 0"
		STUD	4' 0"	6' 1"	6' 1"	7' 11"	8' 0"	9' 5"	9' 11"	12' 5"	12' 6"	14' 0"	14' 0"
		STANDARD	3' 10"	5' 3"	5' 3"	6' 11"	6' 11"	9' 4"	9' 4"	10' 10"	10' 10"	14' 0"	14' 0"
16" O.C.	SPF HF	#1 / #2	4' 5"	7' 8"	7' 10"	9' 1"	9' 4"	10' 10"	11' 1"	14' 0"	14' 0"	14' 0"	14' 0"
		#3	4' 4"	7' 4"	7' 4"	9' 1"	9' 1"	10' 10"	10' 10"	14' 0"	14' 0"	14' 0"	14' 0"
		STUD	4' 4"	7' 4"	7' 4"	9' 1"	9' 1"	10' 10"	10' 10"	14' 0"	14' 0"	14' 0"	14' 0"
		STANDARD	4' 4"	6' 4"	6' 4"	8' 4"	8' 4"	10' 10"	10' 10"	12' 11"	12' 11"	14' 0"	14' 0"
	SP DFL	#1	4' 10"	7' 8"	8' 3"	9' 1"	9' 9"	10' 10"	11' 8"	14' 0"	14' 0"	14' 0"	14' 0"
		#2	4' 9"	7' 8"	8' 3"	9' 1"	9' 9"	10' 10"	11' 8"	14' 0"	14' 0"	14' 0"	14' 0"
		#3	4' 6"	7' 7"	7' 7"	9' 1"	9' 6"	10' 10"	11' 4"	14' 0"	14' 0"	14' 0"	14' 0"
		STUD	4' 6"	7' 6"	7' 6"	9' 1"	9' 6"	10' 10"	11' 4"	14' 0"	14' 0"	14' 0"	14' 0"
		STANDARD	4' 5"	6' 5"	6' 5"	8' 6"	8' 6"	10' 10"	11' 1"	13' 3"	13' 3"	14' 0"	14' 0"
12" O.C.	SPF HF	#1 / #2	4' 11"	8' 5"	8' 8"	10' 0"	10' 3"	11' 11"	12' 3"	14' 0"	14' 0"	14' 0"	14' 0"
		#3	4' 9"	8' 5"	8' 5"	10' 0"	10' 0"	11' 11"	11' 11"	14' 0"	14' 0"	14' 0"	14' 0"
		STUD	4' 9"	8' 5"	8' 5"	10' 0"	10' 0"	11' 11"	11' 11"	14' 0"	14' 0"	14' 0"	14' 0"
		STANDARD	4' 9"	7' 3"	7' 3"	9' 7"	9' 7"	11' 11"	11' 11"	14' 0"	14' 0"	14' 0"	14' 0"
	SP DFL	#1	5' 4"	8' 5"	9' 1"	10' 0"	10' 9"	11' 11"	12' 10"	14' 0"	14' 0"	14' 0"	14' 0"
		#2	5' 3"	8' 5"	9' 1"	10' 0"	10' 9"	11' 11"	12' 10"	14' 0"	14' 0"	14' 0"	14' 0"
		#3	5' 0"	8' 5"	8' 5"	10' 0"	10' 6"	11' 11"	12' 6"	14' 0"	14' 0"	14' 0"	14' 0"
		STUD	5' 0"	8' 5"	8' 7"	10' 0"	10' 6"	11' 11"	12' 6"	14' 0"	14' 0"	14' 0"	14' 0"
		STANDARD	4' 11"	7' 5"	7' 5"	9' 10"	9' 10"	11' 11"	12' 3"	14' 0"	14' 0"	14' 0"	14' 0"

BRACING GROUP SPECIES AND GRADES:

GROUP A:

SPRUCE-PINE-FIR

#1 / #2	STANDARD
#3	STUD

HEM-FIR

#2	STUD
#3	STANDARD

DOUGLAS FIR-LARCH

#3
STUD
STANDARD

SOUTHERN PINE

#3
STUD
STANDARD

GROUP B:

HEM-FIR

#1 & BTR
#1

SOUTHERN PINE

#1
#2

DOUGLAS FIR-LARCH

#1
#2

GABLE TRUSS DETAIL NOTES:

LIVE LOAD DEFLECTION CRITERIA IS L/240.

PROVIDE UPLIFT CONNECTIONS FOR 80 PLF OVER CONTINUOUS BEARING (5 PSF TC DEAD LOAD).

GABLE END SUPPORTS LOAD FROM 4' 0" OUTLOOKERS WITH 2' 0" OVERHANG, OR 12" PLYWOOD OVERHANG.

ATTACH EACH "L" BRACE WITH 10d NAILS.
* FOR (1) "L" BRACE: SPACE NAILS AT 2" O.C. IN 18" END ZONES AND 4" O.C. BETWEEN ZONES.
** FOR (2) "L" BRACES: SPACE NAILS AT 3" O.C. IN 18" END ZONES AND 6" O.C. BETWEEN ZONES.

"L" BRACING MUST BE A MINIMUM OF 80% OF WEB MEMBER LENGTH.

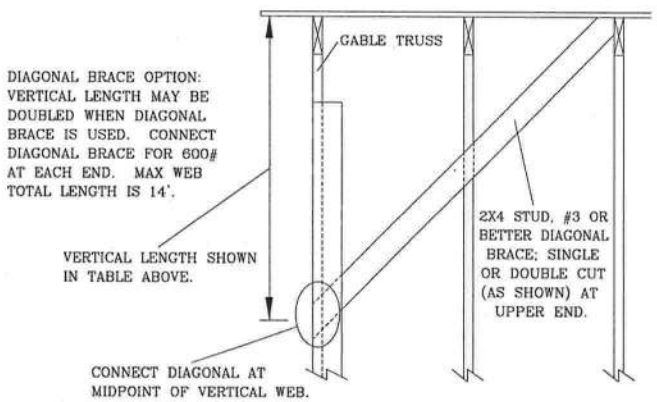

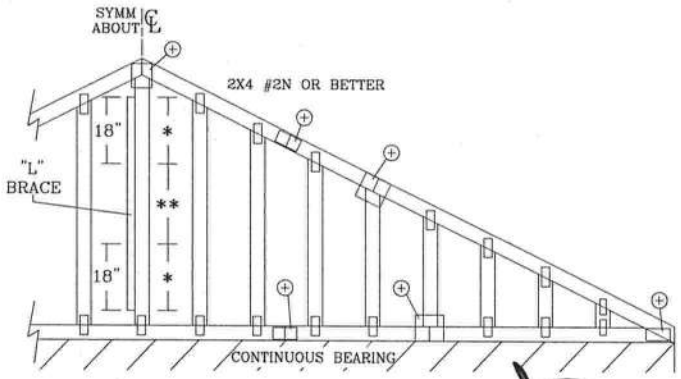

REFER TO CHART ABOVE FOR MAX GABLE VERTICAL LENGTH.

GABLE VERTICAL PLATE SIZES

VERTICAL LENGTH	NO SPLICE
LESS THAN 4' 0"	1X4 OR 2X3
GREATER THAN 4' 0", BUT LESS THAN 11' 6"	2X4
GREATER THAN 11' 6"	2.5X4

+ REFER TO COMMON TRUSS DESIGN FOR PEAK, SPLICE, AND HEEL PLATES.

ALPINE

ITW BUILDING COMPONENTS GROUP, INC.
POMPANO BEACH, FLORIDA

WARNING TRUSSES REQUIRE EXTREME CARE IN FABRICATING, HANDLING, SHIPPING, INSTALLING AND BRACING. REFER TO BCSI (BUILDING COMPONENT SAFETY INFORMATION), PUBLISHED BY TPI (TRUSS PLATE INSTITUTE, 218 NORTH LEE STR., SUITE 312, ALEXANDRIA, VA. 22314) AND WTCA (WOOD TRUSS COUNCIL OF AMERICA, 6300 ENTERPRISE LN, MADISON, WI 53719) FOR SAFETY PRACTICES PRIOR TO PERFORMING THESE FUNCTIONS. UNLESS OTHERWISE INDICATED, TOP CHORD SHALL HAVE PROPERLY ATTACHED STRUCTURAL PANELS AND BOTTOM CHORD SHALL HAVE A PROPERLY ATTACHED RIGID CEILING.

IMPORTANT FURNISH COPY OF THIS DESIGN TO INSTALLATION CONTRACTOR. ITW BCG, INC., SHALL NOT BE RESPONSIBLE FOR ANY DEVIATION FROM THIS DESIGN; ANY FAILURE TO BUILD THE TRUSS IN CONFORMANCE WITH TPI; OR FABRICATING, HANDLING, SHIPPING, INSTALLING & BRACING OF TRUSSES. DESIGN CONFORMS WITH APPLICABLE PROVISIONS OF NDS (NATIONAL DESIGN SPEC, BY AF&PA) AND TPI. ITW, BCG CONNECTOR PLATES ARE MADE OF 20/18/16GA (W,H/SS/K) ASTM A653 GRADE 40/60 (W,K/H,SS) GALV. STEEL. APPLY PLATES TO EACH FACE OF TRUSS AND, UNLESS OTHERWISE LOCATED ON THIS DESIGN, POSITION PER DRAWINGS 160A-Z. ANY INSPECTION OF PLATES FOLLOWED BY (I) SHALL BE PER ANNEX A3 OF TPI 1-2002 SEC. 3. A SEAL ON THIS DRAWING INDICATES ACCEPTANCE OF PROFESSIONAL ENGINEERING RESPONSIBILITY SOLELY FOR THE TRUSS COMPONENT DESIGN SHOWN. THE SUITABILITY AND USE OF THIS COMPONENT FOR ANY BUILDING IS THE RESPONSIBILITY OF THE BUILDING DESIGNER, PER ANSI/TPI 1 SEC. 2.

JAMES F. COLLINS, JR. LICENSE No. 52212 STATE OF FLORIDA PROFESSIONAL ENGINEER

Jan 31, '08

MAX. TOT. LD. 60 PSF

MAX. SPACING 24.0"

REF	ASCE7-02-GAB11015
DATE	2/23/07
DRWG	A11015EE0207
-ENG	

BEARING BLOCK NAIL SPACING DETAIL

MINIMUM SPACING FOR SINGLE BEARING BLOCK IS SHOWN. DOUBLE NAIL SPACINGS AND STAGGER NAILING FOR TWO BLOCKS. GREATER SPACING MAY BE REQUIRED TO AVOID SPLITTING.

A – EDGE DISTANCE AND SPACING BETWEEN STAGGERED ROWS OF NAILS (6 NAIL DIAMETERS)
B – SPACING OF NAILS IN A ROW (12 NAIL DIAMETERS)
C – END DISTANCE (15 NAIL DIAMETERS)

IF NAIL HOLES ARE PREBORED, SOME SPACING MAY BE REDUCED BY THE AMOUNTS GIVEN BELOW:
- • SPACING MAY BE REDUCED BY 50%
- •• SPACING MAY BE REDUCED BY 33%

BEARING BLOCK TO BE SAME SIZE AND SPECIES AS BOTTOM CHORD. BLOCKS MAY BE ANY GRADE WITHIN THE SPECIES, PROVIDED THE COMPRESSION PERPENDICULAR TO GRAIN VALUE (Fc-perp) IS AT LEAST THAT OF THE CHORD.

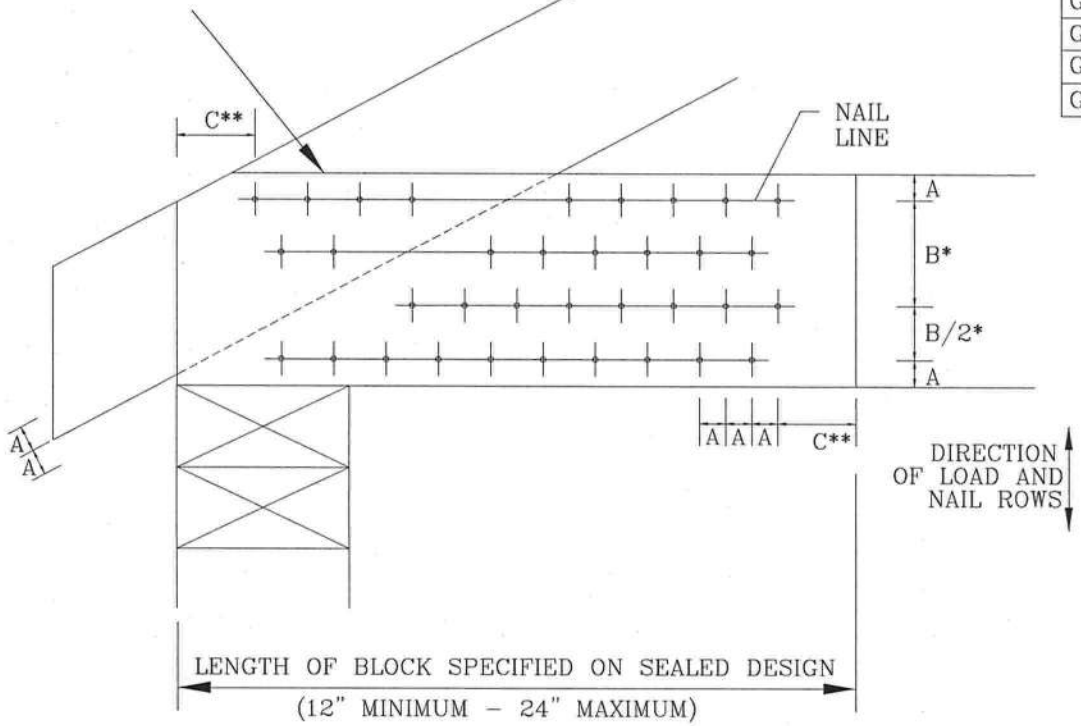

MAXIMUM NUMBER OF NAIL LINES PARALLEL TO GRAIN

NAIL TYPE	CHORD SIZE 2X4	2X6	2X8	2X10	2X12
8d BOX (0.113"X 2.5",MIN)	3	6	9	12	15
10d BOX (0.128"X 3.",MIN)	3	5	7	10	12
12d BOX (0.128"X 3.25",MIN)	3	5	7	10	12
16d BOX (0.135"X 3.5",MIN)	3	5	7	10	12
20d BOX (0.148"X 4.",MIN)	2	4	5	6	8
8d COMMON (0.131"X 2.5",MIN)	3	5	7	10	12
10d COMMON (0.148"X 3.",MIN)	2	4	6	8	10
12d COMMON (0.148"X 3.25",MIN)	2	4	6	8	10
16d COMMON (0.162"X 3.5",MIN)	2	4	6	8	10
GUN (0.120"X 2.5",MIN)	3	6	8	11	14
GUN (0.131"X 2.5",MIN)	3	5	7	10	12
GUN (0.120"X 3.",MIN)	3	6	8	11	14
GUN (0.131"X 3.",MIN)	3	5	7	10	12

MINIMUM NAIL SPACING DISTANCES

NAIL TYPE	DISTANCES A	B*	C**
8d BOX (0.113"X 2.5",MIN)	3/4"	1 3/8"	1 3/4"
10d BOX (0.128"X 3.",MIN)	7/8"	1 5/8"	2"
12d BOX (0.128"X 3.25",MIN)	7/8"	1 5/8"	2"
16d BOX (0.135"X 3.5",MIN)	7/8"	1 5/8"	2 1/8"
20d BOX (0.148"X 4.",MIN)	1"	1 7/8"	2 1/4"
8d COMMON (0.131"X 2.5",MIN)	7/8"	1 5/8"	2"
10d COMMON (0.148"X 3.",MIN)	1"	1 7/8"	2 1/4"
12d COMMON (0.148"X 3.25",MIN)	1"	1 7/8"	2 1/4"
16d COMMON (0.162"X 3.5",MIN)	1'	2"	2 1/2"
GUN (0.120"X 2.5",MIN)	3/4"	1 1/2"	1 7/8"
GUN (0.131"X 2.5",MIN)	7/8"	1 5/8"	2"
GUN (0.120"X 3.",MIN)	3/4"	1 1/2"	1 7/8"
GUN (0.131"X 3.",MIN)	7/8"	1 5/8"	2"

THIS DRAWING REPLACES DRAWING B139 AND CNBRGBLK0699

ALPINE
ITW BUILDING COMPONENTS GROUP, INC.
POMPANO BEACH, FLORIDA

WARNING TRUSSES REQUIRE EXTREME CARE IN FABRICATING, HANDLING, SHIPPING, INSTALLING AND BRACING. REFER TO BCSI (BUILDING COMPONENT SAFETY INFORMATION), PUBLISHED BY TPI (TRUSS PLATE INSTITUTE, 218 NORTH LEE STR., SUITE 312 ALEXANDRIA, VA. 22314) AND WTCA (WOOD TRUSS COUNCIL OF AMERICA, 6300 ENTERPRISE LN. MADISON, WI 53719) FOR SAFETY PRACTICES PRIOR TO PERFORMING THESE FUNCTIONS. UNLESS OTHERWISE INDICATED, TOP CHORD SHALL HAVE PROPERLY ATTACHED STRUCTURAL PANELS AND BOTTOM CHORD SHALL HAVE A PROPERLY ATTACHED RIGID CEILING.

IMPORTANT FURNISH COPY OF THIS DESIGN TO INSTALLATION CONTRACTOR. ITW BCG, INC., SHALL NOT BE RESPONSIBLE FOR ANY DEVIATION FROM THIS DESIGN; ANY FAILURE TO BUILD THE TRUSS IN CONFORMANCE WITH TPI; OR FABRICATING, HANDLING, SHIPPING, INSTALLING & BRACING OF TRUSSES. DESIGN CONFORMS WITH APPLICABLE PROVISIONS OF NDS (NATIONAL DESIGN SPEC, BY AF&PA) AND THE ITW, BCG CONNECTOR PLATES ARE MADE OF 20/18/16GA (W,H/SS/K) ASTM A653 GRADE 40/60 (W,K/H,SS) GALV. STEEL. APPLY PLATES TO EACH FACE OF TRUSS AND, UNLESS OTHERWISE LOCATED ON THIS DESIGN, POSITION PER DRAWINGS 160A-Z. ANY INSPECTION OF PLATES FOLLOWED BY (I) SHALL BE PER ANNEX A3 OF TPI 1-2002 SEC. 3. A SEAL ON THIS DRAWING INDICATES ACCEPTANCE OF PROFESSIONAL ENGINEERING RESPONSIBILITY SOLELY FOR THE TRUSS COMPONENT DESIGN SHOWN. THE SUITABILITY AND USE OF THIS COMPONENT FOR ANY BUILDING IS THE RESPONSIBILITY OF THE BUILDING DESIGNER, PER ANSI/TPI 1 SEC. 2.

Jan 31 '08

JAMES R. COLLINS, JR. LICENSE No. 52212 STATE OF FLORIDA PROFESSIONAL ENGINEER

REF	BEARING BLOCK
DATE	2/23/07
DRWG	CNBRGBLK0207
-ENG	SJP/KAR

ITW Building Components Group, Inc.

1950 Marley Drive Haines City, FL 33844
Florida Engineering Certificate of Authorization Number: 0 278
Florida Certificate of Product Approval # FL1999
 Document ID:1TEL487-Z0130162358

Truss Fabricator: Anderson Truss Company
Job Identification: deardorf-
Truss Count: 22
Model Code: Florida Building Code 2004 and 2006 Supplement
Truss Criteria: ANSI/TPI-2002(STD)/FBC
Engineering Software: Alpine Software,Version 7.24.
Structural Engineer of Record: The identity of the structural EOR did not exist as of
Address: the seal date per section 61G15-31.003(5a) of the FAC
Minimum Design Loads: Roof - 40.0 PSF @ 1.25 Duration
Floor - 55.0 PSF @ 1.00 Duration
Wind - 110 MPH ASCE 7-02 -Closed

Seal Date: 01/30/2008

-Truss Design Engineer-
James F. Collins Jr.
Florida License Number: 52212
1950 Marley Drive
Haines City, FL 33844

Notes:

1. Determination as to the suitability of these truss components for the structure is the responsibility of the building designer/engineer of record, as defined in ANSI/TPI 1
2. The drawing date shown on this index sheet must match the date shown on the individual truss component drawing.
3. As shown on attached drawings; the drawing number is preceded by: HCUSR487

Details: -

#	Ref Description	Drawing#	Date
1	75075--T2	08030115	01/30/08
2	75076--T23	08030116	01/30/08
3	75077--T9	08030117	01/30/08
4	75078--T4	08030118	01/30/08
5	75079--T1	08030119	01/30/08
6	75080--T6	08030120	01/30/08
7	75081--T14	08030121	01/30/08
8	75082--T5	08030122	01/30/08
9	75083--T7	08030123	01/30/08
10	75084--T15	08030124	01/30/08
11	75085--T19	08030125	01/30/08
12	75086--T18	08030126	01/30/08
13	75087--T24	08030127	01/30/08
14	75088--T8	08030128	01/30/08
15	75089--T10	08030129	01/30/08
16	75090--T11	08030130	01/30/08
17	75091--T12	08030131	01/30/08
18	75092--T13	08030132	01/30/08
19	75093--T20	08030133	01/30/08
20	75094--T21	08030134	01/30/08
21	75095--T22	08030135	01/30/08
22	75096--T16	08030136	01/30/08

STANLEY CRAWFORD / DEARDORF FLOOR

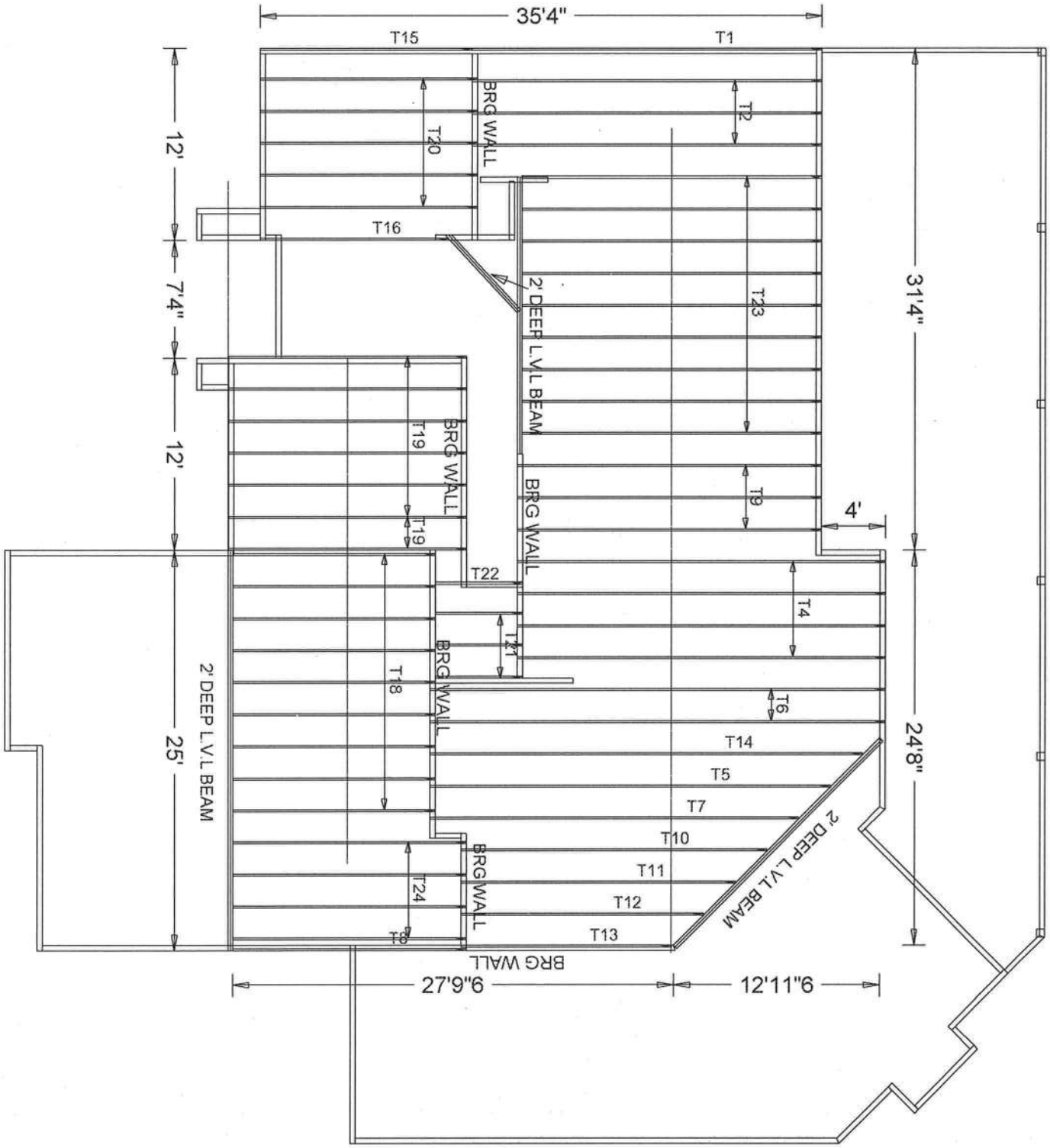

JOB NO: deardorf	DESIGNED BY: Jenny Patterson	JOB DESCRIPTION:	JOB LOCATION:
PAGE NO: 1 OF 1			

(deardorf- - T2)

Top chord 2x4 SP #2 Dense
Bot chord 2x6 SP #2
Webs 2x4 SP #3 :W2 2x4 SP #2 Dense:

Truss must be installed as shown with top chord up.

See ANSI/TPI 1-02 Sect 7.5 for additional bracing requirements.

Deflection meets L/360 live and L/240 total load. Creep increase factor for dead load is 1.50.

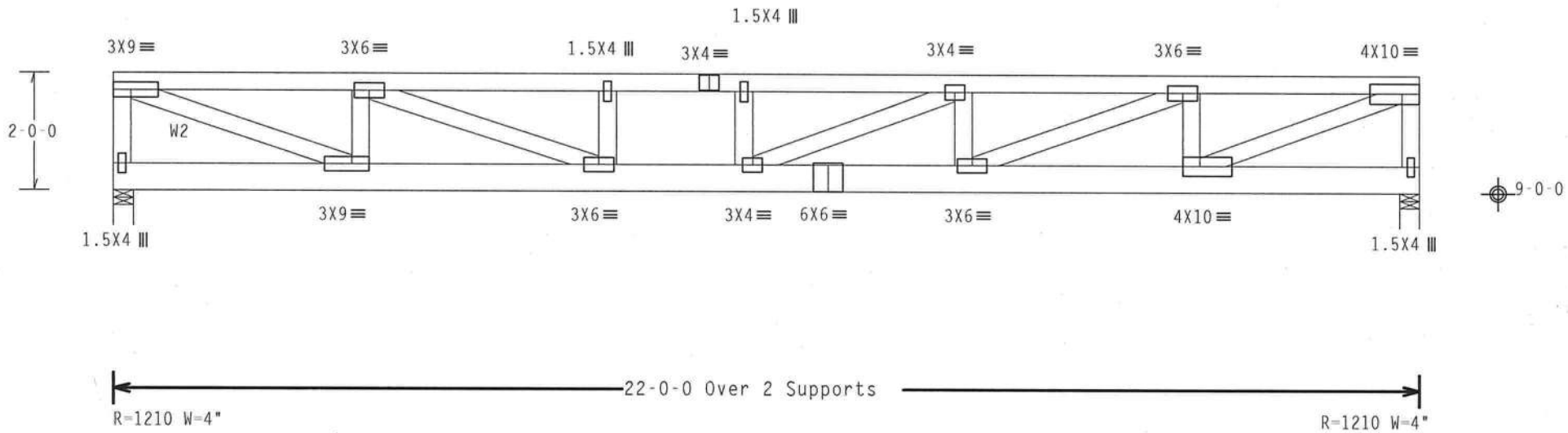

Design Crit: TPI-2002(STD)/FBC
Cq/RT=1.00(1.25)/0(0) 7.24.1230 F6 QTY:3 FL/-/4/-/E/-/- Scale =.375"/Ft.

PLT TYP. Wave

Building Components Group Inc.

ITW Building Components Group, Inc.
Haines City, FL 33844
FL Certificate of Authorization # 0 278

WARNINGTRUSSES REQUIRE EXTREME CARE IN FABRICATION, HANDLING, SHIPPING, INSTALLING AND BRACING. REFER TO BCSI (BUILDING COMPONENT SAFETY INFORMATION), PUBLISHED BY TPI (TRUSS PLATE INSTITUTE, 218 NORTH LEE STREET, SUITE 312, ALEXANDRIA, VA. 22314) AND WTCA (WOOD TRUSS COUNCIL OF AMERICA, 6300 ENTERPRISE LANE, MADISON, WI 53719) FOR SAFETY PRACTICES PRIOR TO PERFORMING THESE FUNCTIONS. UNLESS OTHERWISE INDICATED TOP CHORD SHALL HAVE PROPERLY ATTACHED STRUCTURAL PANELS AND BOTTOM CHORD SHALL HAVE A PROPERLY ATTACHED RIGID CEILING.

IMPORTANTFURNISH A COPY OF THIS DESIGN TO THE INSTALLATION CONTRACTOR. ITW BCG, INC. SHALL NOT BE RESPONSIBLE FOR ANY DEVIATION FROM THIS DESIGN; ANY FAILURE TO BUILD THE TRUSS IN COMFORMANCE WITH TPI; OR FABRICATING, HANDLING, SHIPPING, INSTALLING & BRACING OF TRUSSES.
DESIGN CONFORMS WITH APPLICABLE PROVISIONS OF NDS (NATIONAL DESIGN SPEC. BY AF&PA) AND TPI. ITW BCG CONNECTOR PLATES ARE MADE OF 20/18/16GA (W,H/SS/K) ASTM A653 GRADE 40/60 (W, K/H,SS) GALV. STEEL. APPLY PLATES TO EACH FACE OF TRUSS AND, UNLESS OTHERWISE LOCATED ON THIS DESIGN, POSITION PER DRAWINGS 160A-Z. ANY INSPECTION OF PLATES FOLLOWED BY (1) SHALL BE PER ANNEX A3 OF TPI1-2002 SEC.3. A SEAL ON THIS DRAWING INDICATES ACCEPTANCE OF PROFESSIONAL ENGINEERING RESPONSIBILITY SOLELY FOR THE TRUSS COMPONENT DESIGN SHOWN. THE SUITABILITY AND USE OF THIS COMPONENT FOR ANY BUILDING IS THE RESPONSIBILITY OF THE BUILDING DESIGNER PER ANSI/TPI 1 SEC. 2.

JAMES F. COLLINS LICENSE No. 52212 STATE OF FLORIDA PROFESSIONAL ENGINEER
Jan 30 08

TC LL	40.0 PSF	REF R487-- 75075
TC DL	10.0 PSF	DATE 01/30/08
BC DL	5.0 PSF	DRW HCUSR487 08030115
BC LL	0.0 PSF	HC-ENG JB/AP
TOT.LD.	55.0 PSF	SEQN- 43627
DUR.FAC.	1.00	FROM JP
SPACING	24.0"	JREF- 1TEL487 Z01

(deardorf- - T23)

Top chord 2x4 SP #2 Dense
Bot chord 2x4 SP #2 Dense
Webs 2x4 SP #3

Truss must be installed as shown with top chord up.

See ANSI/TPI 1-02 Sect 7.5 for additional bracing requirements.

Deflection meets L/360 live and L/240 total load. Creep increase factor for dead load is 1.50.

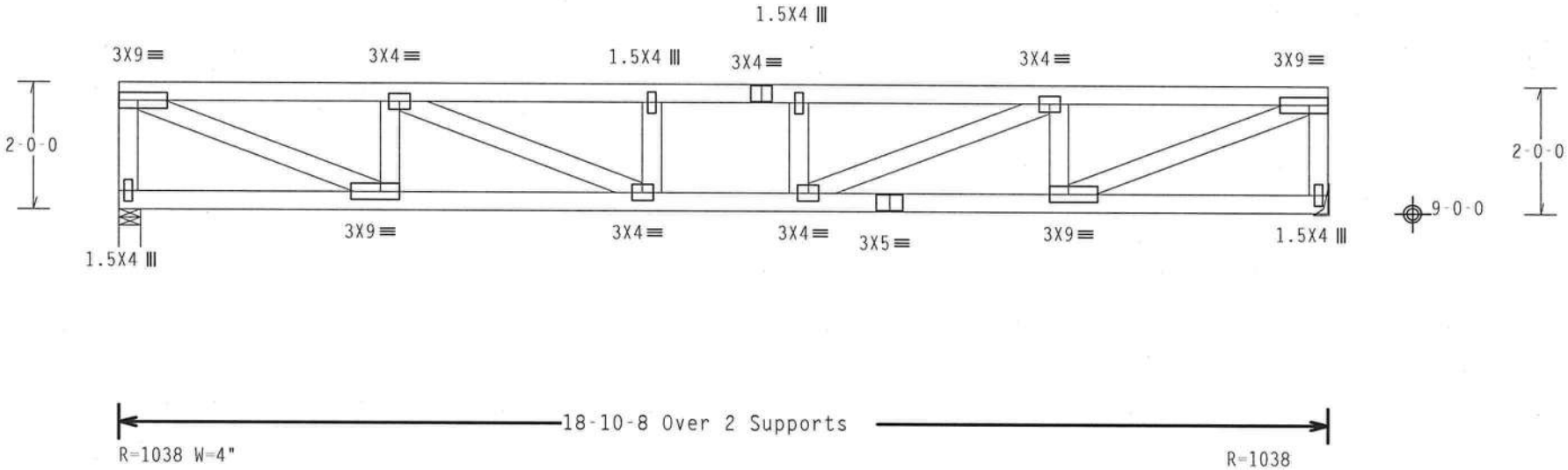

Design Crit: TPI-2002(STD)/FBC
Cq/RT=1.00(1.25)/0(0) 7.24.1230

PLT TYP. Wave QTY:9 FL/-/4/-/E/-/- Scale =.375"/Ft.

Building Components Group Inc.

ITW Building Components Group, Inc.
Haines City, FL 33844
FL Certificate of Authorization # 0 278

WARNINGTRUSSES REQUIRE EXTREME CARE IN FABRICATION, HANDLING, SHIPPING, INSTALLING AND BRACING. REFER TO BCSI (BUILDING COMPONENT SAFETY INFORMATION), PUBLISHED BY TPI (TRUSS PLATE INSTITUTE, 218 NORTH LEE STREET, SUITE 312, ALEXANDRIA, VA. 22314) AND WTCA (WOOD TRUSS COUNCIL OF AMERICA, 6300 ENTERPRISE LANE, MADISON, WI 53719) FOR SAFETY PRACTICES PRIOR TO PERFORMING THESE FUNCTIONS. UNLESS OTHERWISE INDICATED TOP CHORD SHALL HAVE PROPERLY ATTACHED STRUCTURAL PANELS AND BOTTOM CHORD SHALL HAVE A PROPERLY ATTACHED RIGID CEILING.

IMPORTANTFURNISH A COPY OF THIS DESIGN TO THE INSTALLATION CONTRACTOR. ITW BCG, INC. SHALL NOT BE RESPONSIBLE FOR ANY DEVIATION FROM THIS DESIGN; ANY FAILURE TO BUILD THE TRUSS IN COMFORMANCE WITH TPI; OR FABRICATING, HANDLING, SHIPPING, INSTALLING & BRACING OF TRUSSES.
DESIGN CONFORMS WITH APPLICABLE PROVISIONS OF NDS (NATIONAL DESIGN SPEC, BY AF&PA) AND TPI. ITW BCG CONNECTOR PLATES ARE MADE OF 20/18/16GA (W,H/SS/K) ASTM A653 GRADE 40/60 (W, K/H,SS) GALV. STEEL. APPLY PLATES TO EACH FACE OF TRUSS AND, UNLESS OTHERWISE LOCATED ON THIS DESIGN, POSITION PER DRAWINGS 160A-Z. ANY INSPECTION OF PLATES FOLLOWED BY (1) SHALL BE PER ANNEX A3 OF TPI1-2002 SEC.3. A SEAL ON THIS DRAWING INDICATES ACCEPTANCE OF PROFESSIONAL ENGINEERING RESPONSIBILITY SOLELY FOR THE TRUSS COMPONENT DESIGN SHOWN. THE SUITABILITY AND USE OF THIS COMPONENT FOR ANY BUILDING IS THE RESPONSIBILITY OF THE BUILDING DESIGNER PER ANSI/TPI 1 SEC. 2.

JAMES F. COLLINS, JR. LICENSED No. 52272 STATE OF FLORIDA PROFESSIONAL ENGINEER
Jan 30 '08

TC LL	40.0 PSF	REF R487-- 75076
TC DL	10.0 PSF	DATE 01/30/08
BC DL	5.0 PSF	DRW HCUSR487 08030116
BC LL	0.0 PSF	HC-ENG JB/AP
TOT.LD.	55.0 PSF	SEQN- 43636
DUR.FAC.	1.00	FROM JP
SPACING	24.0"	JREF- 1TEL487 Z01

(deardorf- - T9)

Top chord 2x4 SP #2 Dense
Bot chord 2x4 SP #2 Dense
Webs 2x4 SP #3

Truss must be installed as shown with top chord up.

See ANSI/TPI 1-02 Sect 7.5 for additional bracing requirements.

Deflection meets L/360 live and L/240 total load. Creep increase factor for dead load is 1.50.

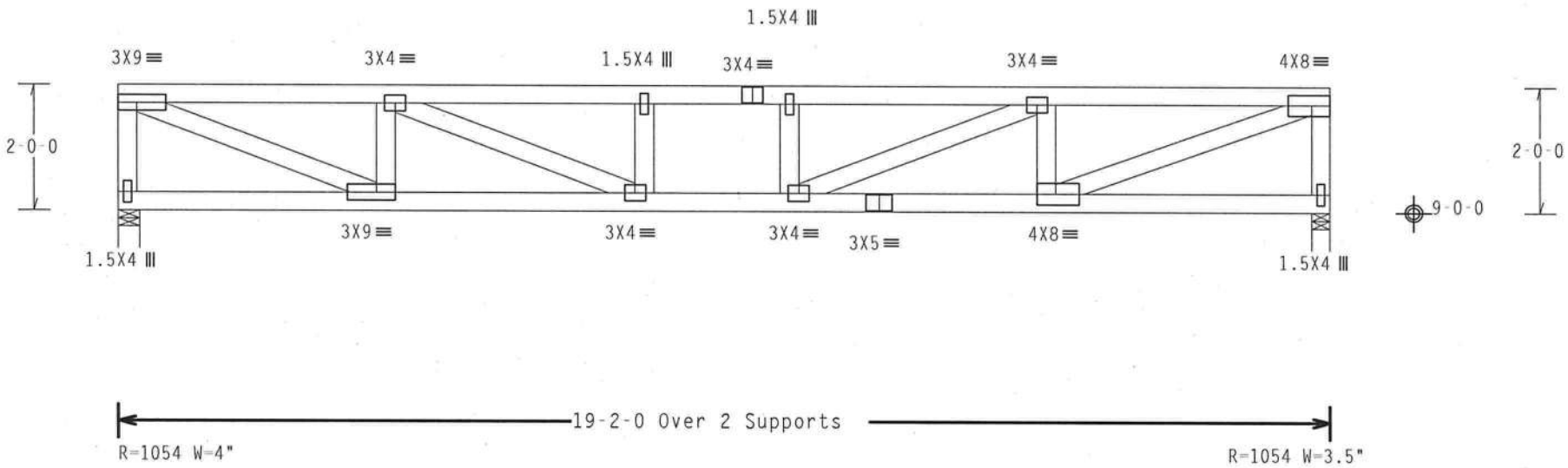

Design Crit: TPI-2002(STD)/FBC

PLT TYP. Wave | Cq/RT=1.00(1.25)/0(0) | 7.24.1230.16 | QTY:3 | FL/-/4/-/E/-/- | Scale =.375"/Ft.

Building Components Group Inc.

ITW Building Components Group, Inc.
Haines City, FL 33844
FL Certificate of Authorization # 0 278

WARNINGTRUSSES REQUIRE EXTREME CARE IN FABRICATION, HANDLING, SHIPPING, INSTALLING AND BRACING. REFER TO BCSI (BUILDING COMPONENT SAFETY INFORMATION), PUBLISHED BY TPI (TRUSS PLATE INSTITUTE, 218 NORTH LEE STREET, SUITE 312, ALEXANDRIA, VA. 22314) AND WTCA (WOOD TRUSS COUNCIL OF AMERICA, 6300 ENTERPRISE LANE, MADISON, WI 53719) FOR SAFETY PRACTICES PRIOR TO PERFORMING THESE FUNCTIONS. UNLESS OTHERWISE INDICATED TOP CHORD SHALL HAVE PROPERLY ATTACHED STRUCTURAL PANELS AND BOTTOM CHORD SHALL HAVE A PROPERLY ATTACHED RIGID CEILING.

IMPORTANTFURNISH A COPY OF THIS DESIGN TO THE INSTALLATION CONTRACTOR. ITW BCG, INC. SHALL NOT BE RESPONSIBLE FOR ANY DEVIATION FROM THIS DESIGN; ANY FAILURE TO BUILD THE TRUSS IN COMFORMANCE WITH TPI; OR FABRICATING, HANDLING, SHIPPING, INSTALLING & BRACING OF TRUSSES.
DESIGN CONFORMS WITH APPLICABLE PROVISIONS OF NDS (NATIONAL DESIGN SPEC. BY AF&PA) AND TPI. ITW BCG CONNECTOR PLATES ARE MADE OF 20/18/16GA (W,H/SS/K) ASTM A653 GRADE 40/60 (W, K/H,SS) GALV. STEEL. APPLY PLATES TO EACH FACE OF TRUSS AND, UNLESS OTHERWISE LOCATED ON THIS DESIGN, POSITION PER DRAWINGS 160A-Z. ANY INSPECTION OF PLATES FOLLOWED BY (1) SHALL BE PER ANNEX A3 OF TPI1-2002 SEC.3. A SEAL ON THIS DRAWING INDICATES ACCEPTANCE OF PROFESSIONAL ENGINEERING RESPONSIBILITY SOLELY FOR THE TRUSS COMPONENT DESIGN SHOWN. THE SUITABILITY AND USE OF THIS COMPONENT FOR ANY BUILDING IS THE RESPONSIBILITY OF THE BUILDING DESIGNER PER ANSI/TPI 1 SEC. 2.

JAMES F. COLLINS LICENSE No. 52212 STATE OF FLORIDA PROFESSIONAL ENGINEER
Jan 30, 2008

TC LL	40.0 PSF	REF	R487-- 75077
TC DL	10.0 PSF	DATE	01/30/08
BC DL	5.0 PSF	DRW	HCUSR487 08030117
BC LL	0.0 PSF	HC-ENG	JB/AP
TOT.LD.	55.0 PSF	SEQN-	43643
DUR.FAC.	1.00	FROM	JP
SPACING	24.0"	JREF-	1TEL487_Z01

(deardorf- - T4)

THIS DWG PREPARED FROM COMPUTER INPUT (LOADS & DIMENSIONS) SUBMITTED BY TRUSS MFR.

Top chord 2x4 SP #2 Dense
Bot chord 2x6 SP #2 :B2 2x6 SP #1 Dense:
Webs 2x4 SP #3 :W2, W11 2x4 SP #2 Dense:

Truss must be installed as shown with top chord up.

See ANSI/TPI 1-02 Sect 7.5 for additional bracing requirements.

Deflection meets L/360 live and L/240 total load. Creep increase factor for dead load is 1.50.

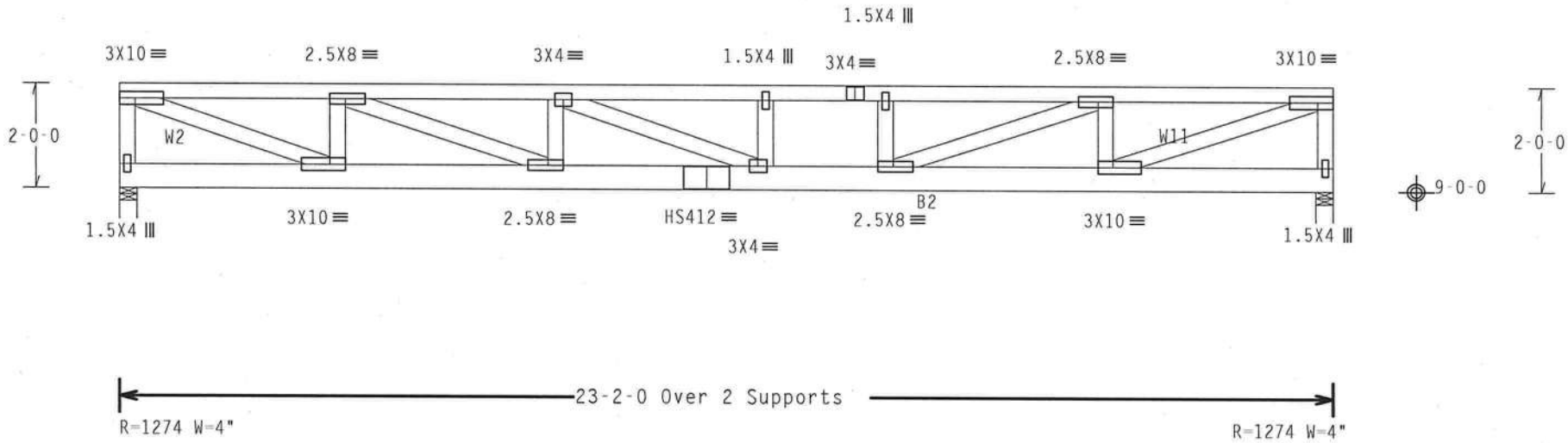

Design Crit: TPI-2002(STD)/FBC

PLT TYP. 20 Gauge HS,Wave Cq/RT=1.00(1.25)/0(0) 7.24.1230.16 QTY:4 FL/-/4/-/E/-/- Scale =.3125"/Ft.

ITW Building Components Group, Inc.

ITW Building Components Group, Inc.
Haines City, FL 33844
FL Certificate of Authorization # 0 278

WARNINGTRUSSES REQUIRE EXTREME CARE IN FABRICATION, HANDLING, SHIPPING, INSTALLING AND BRACING. REFER TO BCSI (BUILDING COMPONENT SAFETY INFORMATION), PUBLISHED BY TPI (TRUSS PLATE INSTITUTE, 218 NORTH LEE STREET, SUITE 312, ALEXANDRIA, VA, 22314) AND WTCA (WOOD TRUSS COUNCIL OF AMERICA, 6300 ENTERPRISE LANE, MADISON, WI 53719) FOR SAFETY PRACTICES PRIOR TO PERFORMING THESE FUNCTIONS. UNLESS OTHERWISE INDICATED TOP CHORD SHALL HAVE PROPERLY ATTACHED STRUCTURAL PANELS AND BOTTOM CHORD SHALL HAVE A PROPERLY ATTACHED RIGID CEILING.

IMPORTANTFURNISH A COPY OF THIS DESIGN TO THE INSTALLATION CONTRACTOR. ITW BCG, INC. SHALL NOT BE RESPONSIBLE FOR ANY DEVIATION FROM THIS DESIGN; ANY FAILURE TO BUILD THE TRUSS IN COMFORMANCE WITH TPI; OR FABRICATING, HANDLING, SHIPPING, INSTALLING & BRACING OF TRUSSES. DESIGN CONFORMS WITH APPLICABLE PROVISIONS OF NDS (NATIONAL DESIGN SPEC, BY AF&PA) AND TPI. ITW BCG CONNECTOR PLATES ARE MADE OF 20/18/16GA (W,H/SS/K) ASTM A653 GRADE 40/60 (W, K/H,SS) GALV. STEEL. APPLY PLATES TO EACH FACE OF TRUSS AND, UNLESS OTHERWISE LOCATED ON THIS DESIGN, POSITION PER DRAWINGS 160A-Z. ANY INSPECTION OF PLATES FOLLOWED BY (1) SHALL BE PER ANNEX A3 OF TPI1-2002 SEC.3. A SEAL ON THIS DRAWING INDICATES ACCEPTANCE OF PROFESSIONAL ENGINEERING RESPONSIBILITY SOLELY FOR THE TRUSS COMPONENT DESIGN SHOWN. THE SUITABILITY AND USE OF THIS COMPONENT FOR ANY BUILDING IS THE RESPONSIBILITY OF THE BUILDING DESIGNER PER ANSI/TPI 1 SEC. 2.

JAMES F. COLLINS, JR. LICENSED No 52212 STATE OF FLORIDA PROFESSIONAL ENGINEER
Jan 30 08

TC LL	40.0 PSF	REF R487-- 75078
TC DL	10.0 PSF	DATE 01/30/08
BC DL	5.0 PSF	DRW HCUSR487 08030118
BC LL	0.0 PSF	HC-ENG JB/AP
TOT.LD.	55.0 PSF	SEQN- 43652
DUR.FAC.	1.00	FROM JP
SPACING	24.0"	JREF- 1TEL487 Z01

(deardorf- - T1)

Top chord 2x4 SP #2 Dense
Bot chord 2x6 SP #2
Webs 2x4 SP #3 :W2 2x4 SP #2 Dense:

Truss must be installed as shown with top chord up.

See ANSI/TPI 1-02 Sect 7.5 for additional bracing requirements.

Deflection meets L/360 live and L/240 total load. Creep increase factor for dead load is 1.50.

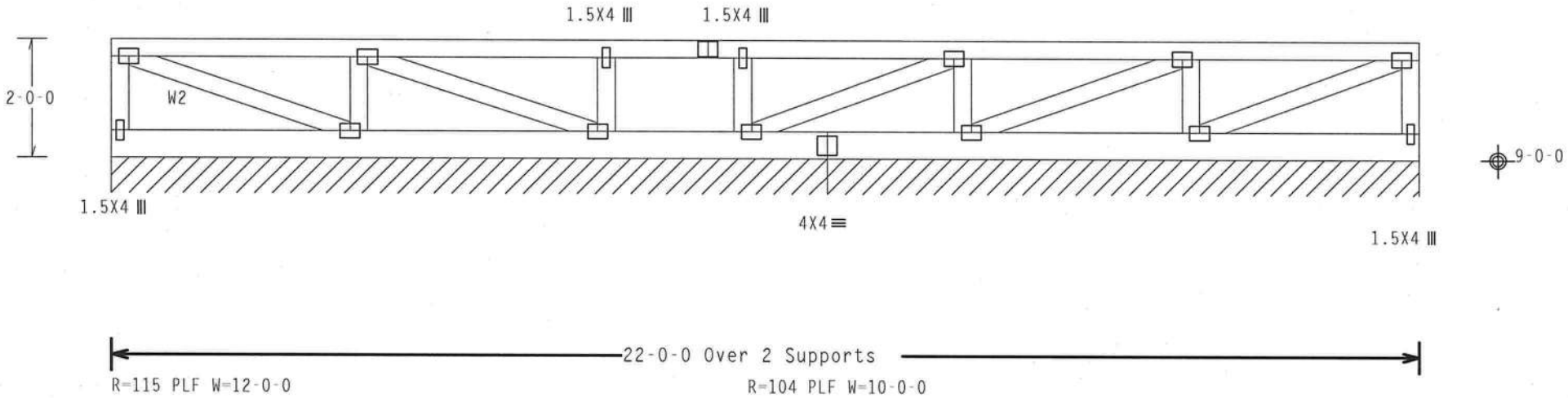

Note: All Plates Are 3X4 Except As Shown.

Design Crit: TPI-2002(STD)/FBC

PLT TYP. Wave Cq/RT=1.00(1.25)/0(0) 7.24.1230 QTY:1 FL/-/4/-/E/-/- Scale =.375"/Ft.

ITW Building Components Group Inc.

ITW Building Components Group, Inc.
Haines City, FL 33844
FL Certificate of Authorization # 0 278

WARNINGTRUSSES REQUIRE EXTREME CARE IN FABRICATION, HANDLING, SHIPPING, INSTALLING AND BRACING. REFER TO BCSI (BUILDING COMPONENT SAFETY INFORMATION), PUBLISHED BY TPI (TRUSS PLATE INSTITUTE, 218 NORTH LEE STREET, SUITE 312, ALEXANDRIA, VA, 22314) AND WTCA (WOOD TRUSS COUNCIL OF AMERICA, 6300 ENTERPRISE LANE, MADISON, WI 53719) FOR SAFETY PRACTICES PRIOR TO PERFORMING THESE FUNCTIONS. UNLESS OTHERWISE INDICATED TOP CHORD SHALL HAVE PROPERLY ATTACHED STRUCTURAL PANELS AND BOTTOM CHORD SHALL HAVE A PROPERLY ATTACHED RIGID CEILING.

IMPORTANTFURNISH A COPY OF THIS DESIGN TO THE INSTALLATION CONTRACTOR. ITW BCG, INC. SHALL NOT BE RESPONSIBLE FOR ANY DEVIATION FROM THIS DESIGN; ANY FAILURE TO BUILD THE TRUSS IN COMFORMANCE WITH TPI; OR FABRICATING, HANDLING, SHIPPING, INSTALLING & BRACING OF TRUSSES.
DESIGN CONFORMS WITH APPLICABLE PROVISIONS OF NDS (NATIONAL DESIGN SPEC. BY AF&PA) AND TPI. ITW BCG CONNECTOR PLATES ARE MADE OF 20/18/16GA (W,H/SS/K) ASTM A653 GRADE 40/60 (W, K/H,SS) GALV. STEEL. APPLY PLATES TO EACH FACE OF TRUSS AND, UNLESS OTHERWISE LOCATED ON THIS DESIGN, POSITION PER DRAWINGS 160A-2. ANY INSPECTION OF PLATES FOLLOWED BY (1) SHALL BE PER ANNEX A3 OF TPI1-2002 SEC.3. A SEAL ON THIS DRAWING INDICATES ACCEPTANCE OF PROFESSIONAL ENGINEERING RESPONSIBILITY SOLELY FOR THE TRUSS COMPONENT DESIGN SHOWN. THE SUITABILITY AND USE OF THIS COMPONENT FOR ANY BUILDING IS THE RESPONSIBILITY OF THE BUILDING DESIGNER PER ANSI/TPI 1 SEC. 2.

JAMES F. COLLINS JR. LICENSE No. 52212 STATE OF FLORIDA PROFESSIONAL ENGINEER
Jan 30 '08

TC LL	40.0 PSF	REF	R487-- 75079
TC DL	10.0 PSF	DATE	01/30/08
BC DL	5.0 PSF	DRW	HCUSR487 08030119
BC LL	0.0 PSF	HC-ENG	JB/AP
TOT.LD.	55.0 PSF	SEQN-	43658
DUR.FAC.	1.00	FROM	JP
SPACING	24.0"	JREF-	1TEL487 Z01

Top chord 2x4 SP #2 Dense
Bot chord 2x8 SP SS
Webs 2x4 SP #3 :W19 2x4 SP #2 Dense:

Calculated vertical deflection is 0.66" due to live load and 0.37" due to dead load at X = 14-8-12.

See ANSI/TPI 1-02 Sect 7.5 for additional bracing requirements.

Deflection meets L/360 live and L/240 total load. Creep increase factor for dead load is 1.50.

Truss must be installed as shown with top chord up.

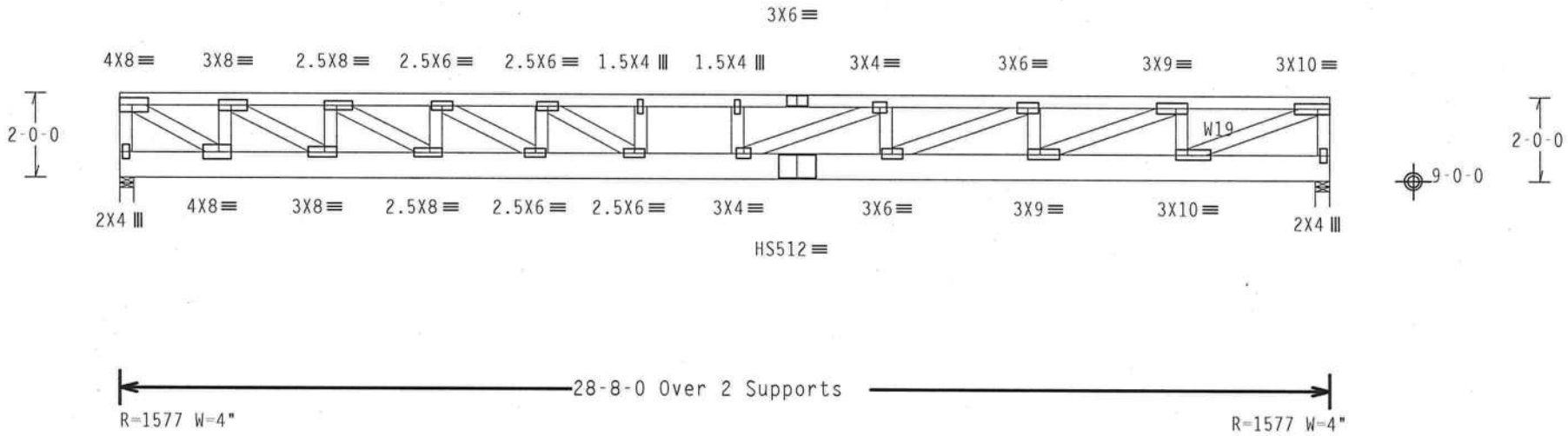

Design Crit: TPI-2002(STD)/FBC

PLT TYP. 20 Gauge HS,Wave Cq/RT=1.00(1.25)/0(0) 7.24.1230 QTY:2 FL/-/4/-/E/-/- Scale =.25"/Ft.

ITW Building Components Group Inc.

ITW Building Components Group, Inc.
Haines City, FL 33844
FL Certificate of Authorization # 0 278

WARNINGTRUSSES REQUIRE EXTREME CARE IN FABRICATION, HANDLING, SHIPPING, INSTALLING AND BRACING. REFER TO BCSI (BUILDING COMPONENT SAFETY INFORMATION), PUBLISHED BY TPI (TRUSS PLATE INSTITUTE, 218 NORTH LEE STREET, SUITE 312, ALEXANDRIA, VA. 22314) AND WTCA (WOOD TRUSS COUNCIL OF AMERICA, 6300 ENTERPRISE LANE, MADISON, WI 53719) FOR SAFETY PRACTICES PRIOR TO PERFORMING THESE FUNCTIONS. UNLESS OTHERWISE INDICATED TOP CHORD SHALL HAVE PROPERLY ATTACHED STRUCTURAL PANELS AND BOTTOM CHORD SHALL HAVE A PROPERLY ATTACHED RIGID CEILING.

IMPORTANTFURNISH A COPY OF THIS DESIGN TO THE INSTALLATION CONTRACTOR. ITW BCG, INC. SHALL NOT BE RESPONSIBLE FOR ANY DEVIATION FROM THIS DESIGN; ANY FAILURE TO BUILD THE TRUSS IN COMFORMANCE WITH TPI; OR FABRICATING, HANDLING, SHIPPING, INSTALLING & BRACING OF TRUSSES.
DESIGN CONFORMS WITH APPLICABLE PROVISIONS OF NDS (NATIONAL DESIGN SPEC. BY AF&PA) AND TPI. ITW BCG CONNECTOR PLATES ARE MADE OF 20/18/16GA (W,H/SS/K) ASTM A653 GRADE 40/60 (W, K/H,SS) GALV. STEEL. APPLY PLATES TO EACH FACE OF TRUSS AND, UNLESS OTHERWISE LOCATED ON THIS DESIGN, POSITION PER DRAWINGS 160A-2. ANY INSPECTION OF PLATES FOLLOWED BY (1) SHALL BE PER ANNEX A3 OF TPI1-2002 SEC.3. A SEAL ON THIS DRAWING INDICATES ACCEPTANCE OF PROFESSIONAL ENGINEERING RESPONSIBILITY SOLELY FOR THE TRUSS COMPONENT DESIGN SHOWN. THE SUITABILITY AND USE OF THIS COMPONENT FOR ANY BUILDING IS THE RESPONSIBILITY OF THE BUILDING DESIGNER PER ANSI/TPI 1 SEC. 2.

JAMES F. COLLINS, JR. LICENSE No 52212 STATE OF FLORIDA PROFESSIONAL ENGINEER
Jan 30 '08

TC LL	40.0 PSF	REF R487-- 75080
TC DL	10.0 PSF	DATE 01/30/08
BC DL	5.0 PSF	DRW HCUSR487 08030120
BC LL	0.0 PSF	HC-ENG JB/AP
TOT.LD.	55.0 PSF	SEQN- 43675
DUR.FAC.	1.00	FROM JP
SPACING	24.0"	JREF- 1TEL487 Z01

(deardorf- - T14)

Top chord 2x4 SP #2 Dense
Bot chord 2x8 SP SS
Webs 2x4 SP #3 :W2, W15 2x4 SP #2 Dense:

Truss must be installed as shown with top chord up.

See ANSI/TPI 1-02 Sect 7.5 for additional bracing requirements.

Deflection meets L/360 live and L/240 total load. Creep increase factor for dead load is 1.50.

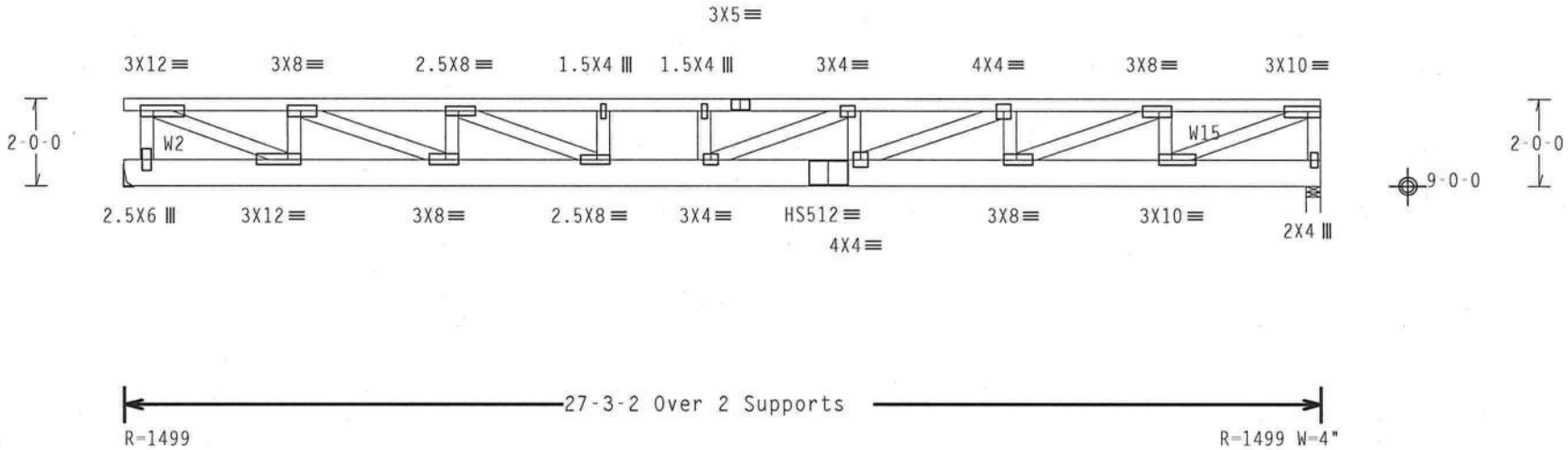

Design Crit: TPI-2002(STD)/FBC

PLT TYP. 20 Gauge HS,Wave Cq/RT=1.00(1.25)/0(0) 7.24.1230 QTY:1 FL/-/4/-/E/-/- Scale =.25"/Ft.

ITW Building Components Group Inc.

ITW Building Components Group, Inc.
Haines City, FL 33844
FL Certificate of Authorization # 0 278

WARNINGTRUSSES REQUIRE EXTREME CARE IN FABRICATION, HANDLING, SHIPPING, INSTALLING AND BRACING. REFER TO BCSI (BUILDING COMPONENT SAFETY INFORMATION), PUBLISHED BY TPI (TRUSS PLATE INSTITUTE, 218 NORTH LEE STREET, SUITE 312, ALEXANDRIA, VA, 22314) AND WTCA (WOOD TRUSS COUNCIL OF AMERICA, 6300 ENTERPRISE LANE, MADISON, WI 53719) FOR SAFETY PRACTICES PRIOR TO PERFORMING THESE FUNCTIONS. UNLESS OTHERWISE INDICATED TOP CHORD SHALL HAVE PROPERLY ATTACHED STRUCTURAL PANELS AND BOTTOM CHORD SHALL HAVE A PROPERLY ATTACHED RIGID CEILING.

IMPORTANTFURNISH A COPY OF THIS DESIGN TO THE INSTALLATION CONTRACTOR. ITW BCG, INC. SHALL NOT BE RESPONSIBLE FOR ANY DEVIATION FROM THIS DESIGN; ANY FAILURE TO BUILD THE TRUSS IN COMFORMANCE WITH TPI; OR FABRICATING, HANDLING, SHIPPING, INSTALLING & BRACING OF TRUSSES.
DESIGN CONFORMS WITH APPLICABLE PROVISIONS OF NDS (NATIONAL DESIGN SPEC, BY AF&PA) AND TPI. ITW BCG CONNECTOR PLATES ARE MADE OF 20/18/16GA (W,H/SS/K) ASTM A653 GRADE 40/60 (W, K/H,SS) GALV. STEEL. APPLY PLATES TO EACH FACE OF TRUSS AND, UNLESS OTHERWISE LOCATED ON THIS DESIGN, POSITION PER DRAWINGS 160A-Z. ANY INSPECTION OF PLATES FOLLOWED BY (1) SHALL BE PER ANNEX A3 OF TPI1-2002 SEC.3. A SEAL ON THIS DRAWING INDICATES ACCEPTANCE OF PROFESSIONAL ENGINEERING RESPONSIBILITY SOLELY FOR THE TRUSS COMPONENT DESIGN SHOWN. THE SUITABILITY AND USE OF THIS COMPONENT FOR ANY BUILDING IS THE RESPONSIBILITY OF THE BUILDING DESIGNER PER ANSI/TPI 1 SEC. 2.

JAMES F. COLLINS JR. LICENSE No. 52212 STATE OF FLORIDA PROFESSIONAL ENGINEER
Jan 30 08

TC LL	40.0 PSF	REF R487-- 75081
TC DL	10.0 PSF	DATE 01/30/08
BC DL	5.0 PSF	DRW HCUSR487 08030121
BC LL	0.0 PSF	HC-ENG JB/AP
TOT.LD.	55.0 PSF	SEQN- 43683
DUR.FAC.	1.00	FROM JP
SPACING	24.0"	JREF- 1TEL487 Z01

(deardorf- - T5)

Top chord 2x4 SP #2 Dense
Bot chord 2x6 SP #1 Dense
Webs 2x4 SP #3 :W2, W15 2x4 SP #2 Dense:

Truss must be installed as shown with top chord up.

See ANSI/TPI 1-02 Sect 7.5 for additional bracing requirements.

Deflection meets L/360 live and L/240 total load. Creep increase factor for dead load is 1.50.

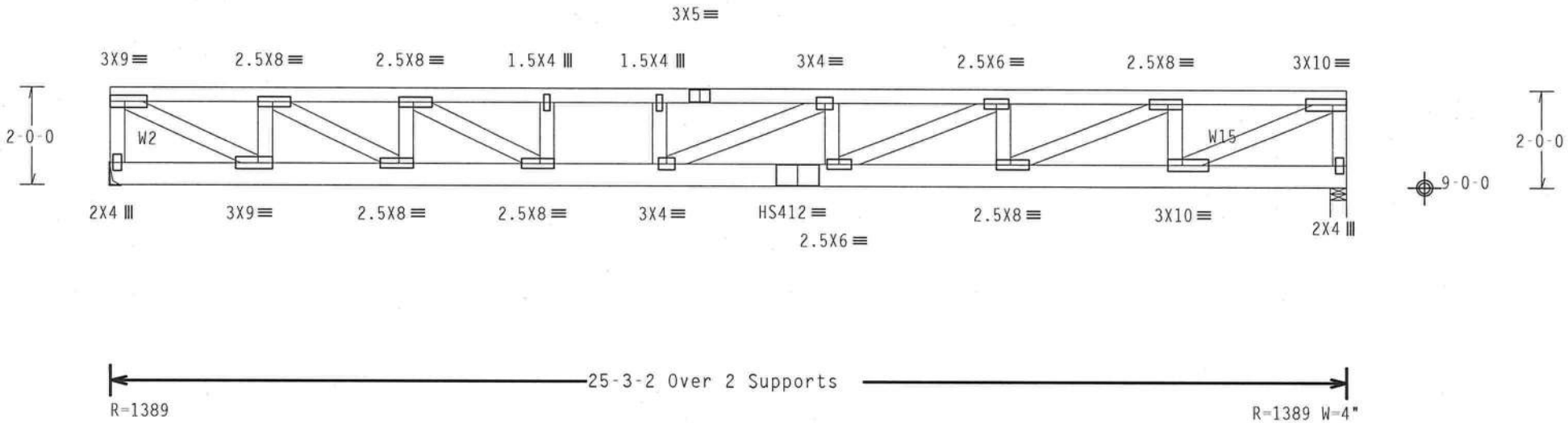

Design Crit: TPI-2002(STD)/FBC

PLT TYP. 20 Gauge HS,Wave Cq/RT=1.00(1.25)/0(0) 7.24.1230 QTY:1 FL/-/4/-/E/-/- Scale =.3125"/Ft.

ITW Building Components Group Inc.

ITW Building Components Group, Inc.
Haines City, FL 33844
FL Certificate of Authorization # 0-278

WARNINGTRUSSES REQUIRE EXTREME CARE IN FABRICATION, HANDLING, SHIPPING, INSTALLING AND BRACING. REFER TO BCSI (BUILDING COMPONENT SAFETY INFORMATION), PUBLISHED BY TPI (TRUSS PLATE INSTITUTE, 218 NORTH LEE STREET, SUITE 312, ALEXANDRIA, VA, 22314) AND WTCA (WOOD TRUSS COUNCIL OF AMERICA, 6300 ENTERPRISE LANE, MADISON, WI 53719) FOR SAFETY PRACTICES PRIOR TO PERFORMING THESE FUNCTIONS. UNLESS OTHERWISE INDICATED TOP CHORD SHALL HAVE PROPERLY ATTACHED STRUCTURAL PANELS AND BOTTOM CHORD SHALL HAVE A PROPERLY ATTACHED RIGID CEILING.

IMPORTANTFURNISH A COPY OF THIS DESIGN TO THE INSTALLATION CONTRACTOR. ITW BCG, INC. SHALL NOT BE RESPONSIBLE FOR ANY DEVIATION FROM THIS DESIGN; ANY FAILURE TO BUILD THE TRUSS IN CONFORMANCE WITH TPI; OR FABRICATING, HANDLING, SHIPPING, INSTALLING & BRACING OF TRUSSES.
DESIGN CONFORMS WITH APPLICABLE PROVISIONS OF NDS (NATIONAL DESIGN SPEC. BY AF&PA) AND TPI. ITW BCG CONNECTOR PLATES ARE MADE OF 20/18/16GA (W,H/SS/K) ASTM A653 GRADE 40/60 (W, K/H,SS) GALV. STEEL. APPLY PLATES TO EACH FACE OF TRUSS AND, UNLESS OTHERWISE LOCATED ON THIS DESIGN, POSITION PER DRAWINGS 160A-Z. ANY INSPECTION OF PLATES FOLLOWED BY (1) SHALL BE PER ANNEX A3 OF TP11-2002 SEC.3. A SEAL ON THIS DRAWING INDICATES ACCEPTANCE OF PROFESSIONAL ENGINEERING RESPONSIBILITY SOLELY FOR THE TRUSS COMPONENT DESIGN SHOWN. THE SUITABILITY AND USE OF THIS COMPONENT FOR ANY BUILDING IS THE RESPONSIBILITY OF THE BUILDING DESIGNER PER ANSI/TPI 1 SEC. 2.

JAMES F. COLLINS, JR. LICENSE No. 52212 STATE OF FLORIDA PROFESSIONAL ENGINEER
Jan 30 08

TC LL	40.0 PSF	REF R487-- 75082
TC DL	10.0 PSF	DATE 01/30/08
BC DL	5.0 PSF	DRW HCUSR487 08030122
BC LL	0.0 PSF	HC-ENG JB/AP
TOT.LD.	55.0 PSF	SEQN- 43694
DUR.FAC.	1.00	FROM JP
SPACING	24.0"	JREF- 1TEL487 Z01

(deardorf- - T7)

THIS DWG PREPARED FROM COMPUTER INPUT (LOADS & DIMENSIONS) SUBMITTED BY TRUSS MFR.

Top chord 2x4 SP #2 Dense
Bot chord 2x6 SP #1 Dense :B2 2x6 SP #2:
Webs 2x4 SP #3

Truss must be installed as shown with top chord up.

See ANSI/TPI 1-02 Sect 7.5 for additional bracing requirements.

Deflection meets L/360 live and L/240 total load. Creep increase factor for dead load is 1.50.

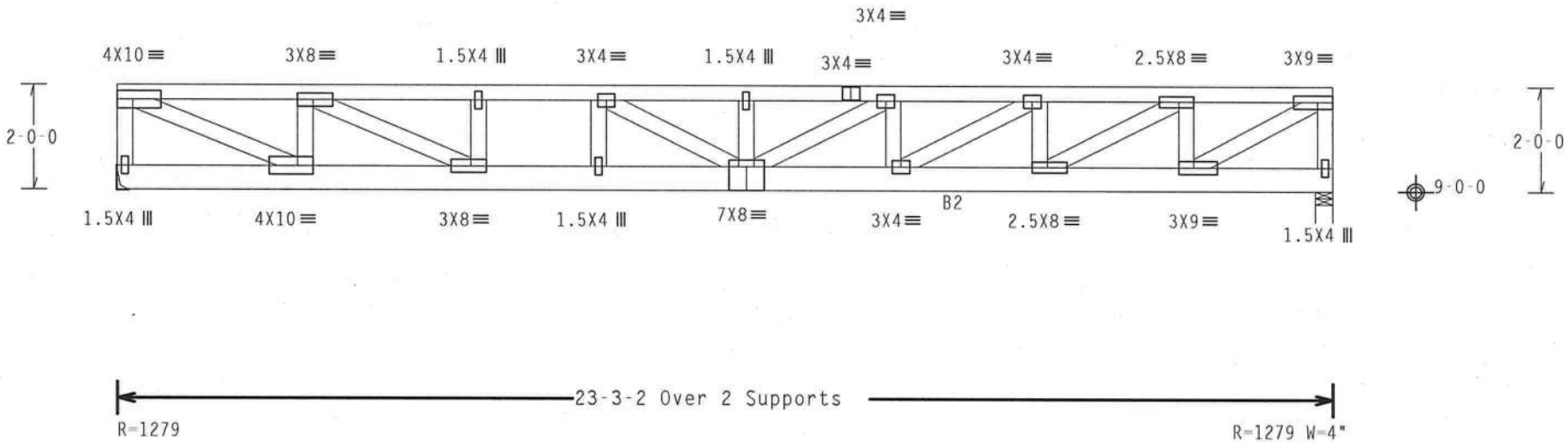

Design Crit: TPI-2002(STD)/FBC

PLT TYP. Wave | Cq/RT=1.00(1.25)/0(0) | 7.24.1230 | QTY:1 | FL/-/4/-/E/-/- | Scale =.3125"/Ft.

WARNINGTRUSSES REQUIRE EXTREME CARE IN FABRICATION, HANDLING, SHIPPING, INSTALLING AND BRACING. REFER TO BCSI (BUILDING COMPONENT SAFETY INFORMATION), PUBLISHED BY TPI (TRUSS PLATE INSTITUTE, 218 NORTH LEE STREET, SUITE 312, ALEXANDRIA, VA, 22314) AND WTCA (WOOD TRUSS COUNCIL OF AMERICA, 6300 ENTERPRISE LANE, MADISON, WI 53719) FOR SAFETY PRACTICES PRIOR TO PERFORMING THESE FUNCTIONS. UNLESS OTHERWISE INDICATED TOP CHORD SHALL HAVE PROPERLY ATTACHED STRUCTURAL PANELS AND BOTTOM CHORD SHALL HAVE A PROPERLY ATTACHED RIGID CEILING.

IMPORTANTFURNISH A COPY OF THIS DESIGN TO THE INSTALLATION CONTRACTOR. ITW BCG, INC. SHALL NOT BE RESPONSIBLE FOR ANY DEVIATION FROM THIS DESIGN; ANY FAILURE TO BUILD THE TRUSS IN COMFORMANCE WITH TPI; OR FABRICATING, HANDLING, SHIPPING, INSTALLING & BRACING OF TRUSSES.
DESIGN CONFORMS WITH APPLICABLE PROVISIONS OF NDS (NATIONAL DESIGN SPEC. BY AF&PA) AND TPI. ITW BCG CONNECTOR PLATES ARE MADE OF 20/18/16GA (W,H/SS/K) ASTM A653 GRADE 40/60 (W, K/H,SS) GALV. STEEL. APPLY PLATES TO EACH FACE OF TRUSS AND, UNLESS OTHERWISE LOCATED ON THIS DESIGN, POSITION PER DRAWINGS 160A-2. ANY INSPECTION OF PLATES FOLLOWED BY (1) SHALL BE PER ANNEX A3 OF TPI1-2002 SEC.3. A SEAL ON THIS DRAWING INDICATES ACCEPTANCE OF PROFESSIONAL ENGINEERING RESPONSIBILITY SOLELY FOR THE TRUSS COMPONENT DESIGN SHOWN. THE SUITABILITY AND USE OF THIS COMPONENT FOR ANY BUILDING IS THE RESPONSIBILITY OF THE BUILDING DESIGNER PER ANSI/TPI 1 SEC. 2.

JAMES F. COLLINS, JR. LICENSE No 52212 STATE OF FLORIDA PROFESSIONAL ENGINEER
Jan 30 08

TC LL	40.0 PSF	REF	R487-- 75083
TC DL	10.0 PSF	DATE	01/30/08
BC DL	5.0 PSF	DRW	HCUSR487 08030123
BC LL	0.0 PSF	HC-ENG	JB/AP
TOT.LD.	55.0 PSF	SEQN-	43704
DUR.FAC.	1.00	FROM	JP
SPACING	24.0"	JREF-	1TEL487 Z01

ITW Building Components Group Inc.

ITW Building Components Group, Inc.
Haines City, FL 33844
FL Certificate of Authorization # 0 278

(deardorf- - T15)

Top chord 2x4 SP #2 Dense
Bot chord 2x4 SP #2 Dense
Webs 2x4 SP #3

Deflection meets L/360 live and L/240 total load. Creep increase factor for dead load is 1.50.

Truss must be installed as shown with top chord up.

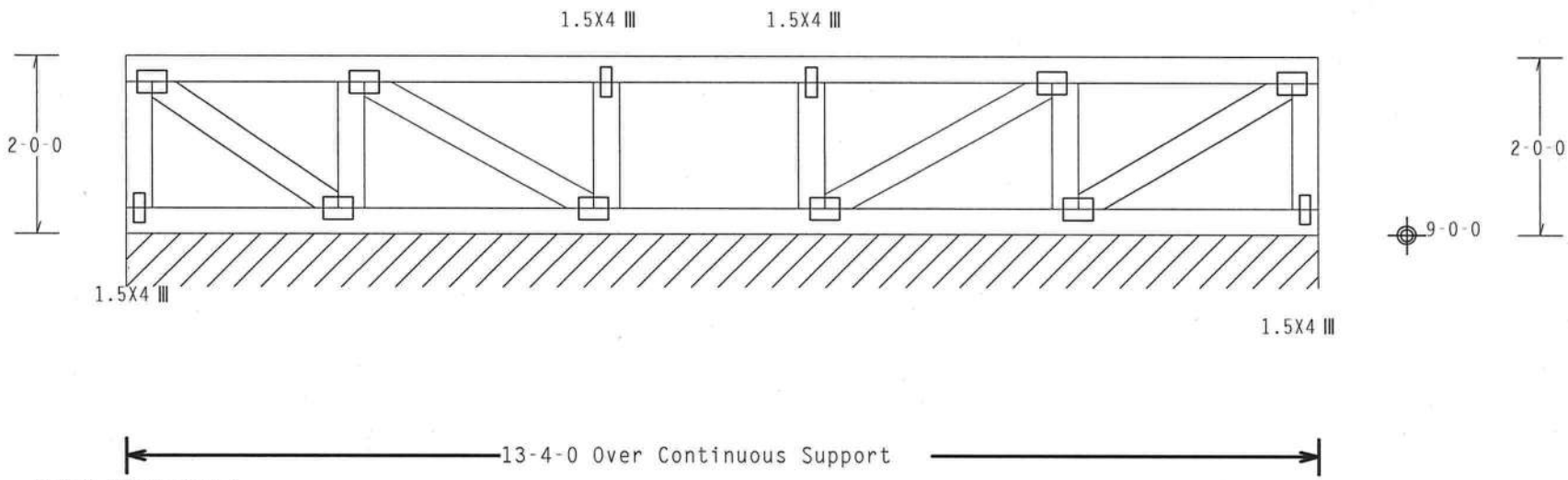

R=110 PLF W=13-4-0

Note: All Plates Are 3X4 Except As Shown.

Design Crit: TPI-2002(STD)/FBC

PLT TYP. Wave Cq/RT=1.00(1.25)/0(0) 7.24.1230 16 QTY:1 FL/-/4/-/E/-/- Scale =.5"/Ft.

ITW Building Components Group Inc.

ITW Building Components Group, Inc.
Haines City, FL 33844
FL Certificate of Authorization # 0 278

WARNING TRUSSES REQUIRE EXTREME CARE IN FABRICATION, HANDLING, SHIPPING, INSTALLING AND BRACING. REFER TO BCSI (BUILDING COMPONENT SAFETY INFORMATION), PUBLISHED BY TPI (TRUSS PLATE INSTITUTE, 218 NORTH LEE STREET, SUITE 312, ALEXANDRIA, VA. 22314) AND WTCA (WOOD TRUSS COUNCIL OF AMERICA, 6300 ENTERPRISE LANE, MADISON, WI 53719) FOR SAFETY PRACTICES PRIOR TO PERFORMING THESE FUNCTIONS. UNLESS OTHERWISE INDICATED TOP CHORD SHALL HAVE PROPERLY ATTACHED STRUCTURAL PANELS AND BOTTOM CHORD SHALL HAVE A PROPERLY ATTACHED RIGID CEILING.

IMPORTANT FURNISH A COPY OF THIS DESIGN TO THE INSTALLATION CONTRACTOR. ITW BCG, INC. SHALL NOT BE RESPONSIBLE FOR ANY DEVIATION FROM THIS DESIGN; ANY FAILURE TO BUILD THE TRUSS IN CONFORMANCE WITH TPI; OR FABRICATING, HANDLING, SHIPPING, INSTALLING & BRACING OF TRUSSES. DESIGN CONFORMS WITH APPLICABLE PROVISIONS OF NDS (NATIONAL DESIGN SPEC. BY AF&PA) AND TPI. ITW BCG CONNECTOR PLATES ARE MADE OF 20/18/16GA (W,H/SS/K) ASTM A653 GRADE 40/60 (W, K/H,SS) GALV. STEEL. APPLY PLATES TO EACH FACE OF TRUSS AND, UNLESS OTHERWISE LOCATED ON THIS DESIGN, POSITION PER DRAWINGS 160A-Z. ANY INSPECTION OF PLATES FOLLOWED BY (1) SHALL BE PER ANNEX A3 OF TPI1-2002 SEC.3. A SEAL ON THIS DRAWING INDICATES ACCEPTANCE OF PROFESSIONAL ENGINEERING RESPONSIBILITY SOLELY FOR THE TRUSS COMPONENT DESIGN SHOWN. THE SUITABILITY AND USE OF THIS COMPONENT FOR ANY BUILDING IS THE RESPONSIBILITY OF THE BUILDING DESIGNER PER ANSI/TPI 1 SEC. 2.

JAMES F. COLLINS, JR. LICENSE No. 52242 STATE OF FLORIDA PROFESSIONAL ENGINEER

Jan 30, 2008

TC LL	40.0 PSF	REF R487-- 75084
TC DL	10.0 PSF	DATE 01/30/08
BC DL	5.0 PSF	DRW HCUSR487 08030124
BC LL	0.0 PSF	HC-ENG JB/AP
TOT.LD.	55.0 PSF	SEQN- 43746
DUR.FAC.	1.00	FROM JP
SPACING	24.0"	JREF- 1TEL487_Z01

(deardorf- - T19)

THIS DWG PREPARED FROM COMPUTER INPUT (LOADS & DIMENSIONS) SUBMITTED BY TRUSS MFR.

Top chord 2x4 SP #2 Dense
Bot chord 2x4 SP #2 Dense
Webs 2x4 SP #3

Deflection meets L/360 live and L/240 total load. Creep increase factor for dead load is 1.50.

Truss must be installed as shown with top chord up.

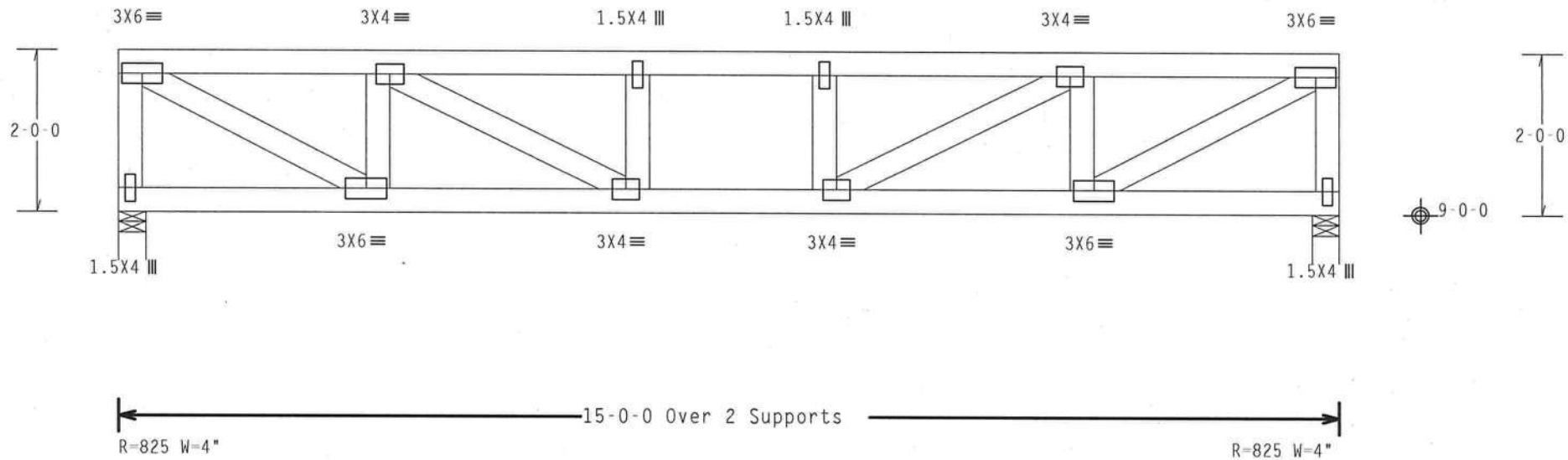

Design Crit: TPI-2002(STD)/FBC

PLT TYP. Wave

Cq/RT=1.00(1.25)/0(0) 7.24.1230 QTY:8 FL/-/4/-/E/-/- Scale =.5"/Ft.

WARNING TRUSSES REQUIRE EXTREME CARE IN FABRICATION, HANDLING, SHIPPING, INSTALLING AND BRACING. REFER TO BCSI (BUILDING COMPONENT SAFETY INFORMATION), PUBLISHED BY TPI (TRUSS PLATE INSTITUTE, 218 NORTH LEE STREET, SUITE 312, ALEXANDRIA, VA, 22314) AND WTCA (WOOD TRUSS COUNCIL OF AMERICA, 6300 ENTERPRISE LANE, MADISON, WI 53719) FOR SAFETY PRACTICES PRIOR TO PERFORMING THESE FUNCTIONS. UNLESS OTHERWISE INDICATED TOP CHORD SHALL HAVE PROPERLY ATTACHED STRUCTURAL PANELS AND BOTTOM CHORD SHALL HAVE A PROPERLY ATTACHED RIGID CEILING.

IMPORTANT FURNISH A COPY OF THIS DESIGN TO THE INSTALLATION CONTRACTOR. ITW BCG, INC. SHALL NOT BE RESPONSIBLE FOR ANY DEVIATION FROM THIS DESIGN; ANY FAILURE TO BUILD THE TRUSS IN CONFORMANCE WITH TPI; OR FABRICATING, HANDLING, SHIPPING, INSTALLING & BRACING OF TRUSSES. DESIGN CONFORMS WITH APPLICABLE PROVISIONS OF NDS (NATIONAL DESIGN SPEC. BY AF&PA) AND TPI. ITW BCG CONNECTOR PLATES ARE MADE OF 20/18/16GA (W,H/SS/K) ASTM A653 GRADE 40/60 (W, K/H,SS) GALV. STEEL. APPLY PLATES TO EACH FACE OF TRUSS AND, UNLESS OTHERWISE LOCATED ON THIS DESIGN, POSITION PER DRAWINGS 160A-Z. ANY INSPECTION OF PLATES FOLLOWED BY (I) SHALL BE PER ANNEX A3 OF TPI1-2002 SEC.3. A SEAL ON THIS DRAWING INDICATES ACCEPTANCE OF PROFESSIONAL ENGINEERING RESPONSIBILITY SOLELY FOR THE TRUSS COMPONENT DESIGN SHOWN. THE SUITABILITY AND USE OF THIS COMPONENT FOR ANY BUILDING IS THE RESPONSIBILITY OF THE BUILDING DESIGNER PER ANSI/TPI 1 SEC. 2.

Building Components Group Inc.

ITW Building Components Group, Inc.
Haines City, FL 33844
FL Certificate of Authorization # 0 278

JAMES F. COLLINS JR. LICENSE No. 52212 STATE OF FLORIDA PROFESSIONAL ENGINEER

Jan 30 '08

TC LL	40.0 PSF	REF	R487-- 75085
TC DL	10.0 PSF	DATE	01/30/08
BC DL	5.0 PSF	DRW	HCUSR487 08030125
BC LL	0.0 PSF	HC-ENG	JB/AP
TOT.LD.	55.0 PSF	SEQN-	43752
DUR.FAC.	1.00	FROM	JP
SPACING	24.0"	JREF-	1TEL487 Z01

(deardorf- - T18)

THIS DWG PREPARED FROM COMPUTER INPUT (LOADS & DIMENSIONS) SUBMITTED BY TRUSS MFR.

Top chord 2x4 SP #2 Dense
Bot chord 2x4 SP #2 Dense
Webs 2x4 SP #3

Deflection meets L/360 live and L/240 total load. Creep increase factor for dead load is 1.50.

Truss must be installed as shown with top chord up.

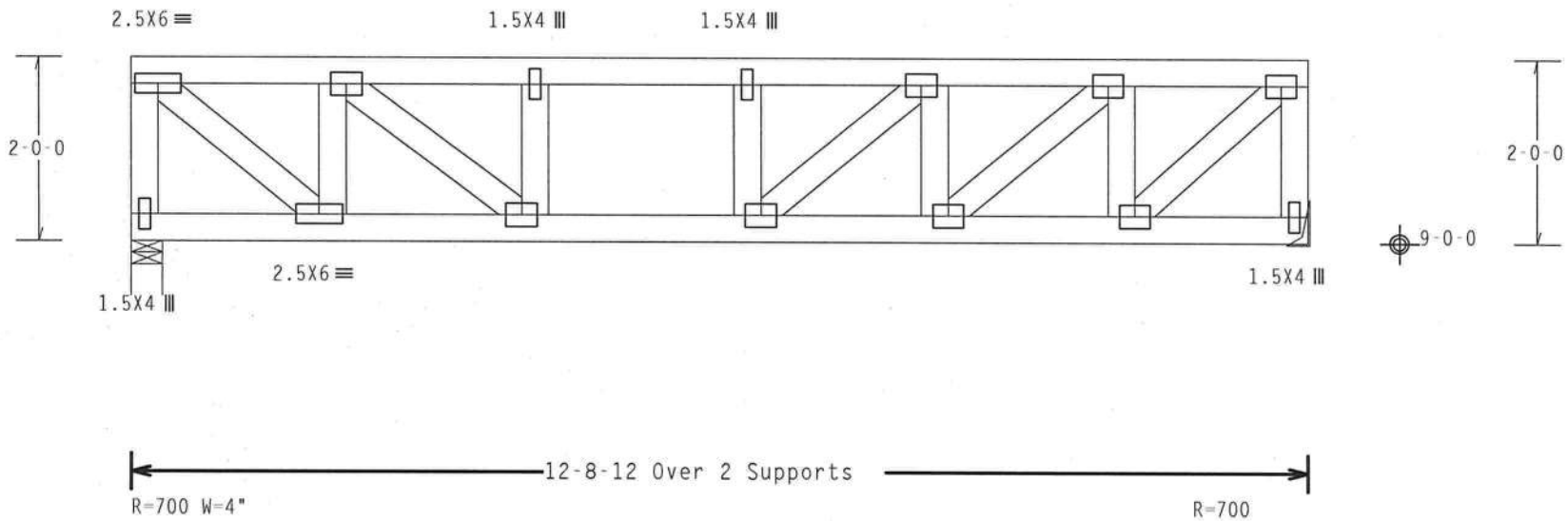

Note: All Plates Are 3X4 Except As Shown.

Design Crit: TPI-2002(STD)/FBC

PLT TYP. Wave Cq/RT=1.00(1.25)/0(0) 7.24.1230 QTY:9 FL/-/4/-/E/-/- Scale =.5"/Ft.

ITW Building Components Group Inc.

ITW Building Components Group, Inc.
Haines City, FL 33844
FL Certificate of Authorization # 0 278

WARNING TRUSSES REQUIRE EXTREME CARE IN FABRICATION, HANDLING, SHIPPING, INSTALLING AND BRACING. REFER TO BCSI (BUILDING COMPONENT SAFETY INFORMATION), PUBLISHED BY TPI (TRUSS PLATE INSTITUTE, 218 NORTH LEE STREET, SUITE 312, ALEXANDRIA, VA, 22314) AND WTCA (WOOD TRUSS COUNCIL OF AMERICA, 6300 ENTERPRISE LANE, MADISON, WI 53719) FOR SAFETY PRACTICES PRIOR TO PERFORMING THESE FUNCTIONS. UNLESS OTHERWISE INDICATED TOP CHORD SHALL HAVE PROPERLY ATTACHED STRUCTURAL PANELS AND BOTTOM CHORD SHALL HAVE A PROPERLY ATTACHED RIGID CEILING.

IMPORTANT FURNISH A COPY OF THIS DESIGN TO THE INSTALLATION CONTRACTOR. ITW BCG, INC. SHALL NOT BE RESPONSIBLE FOR ANY DEVIATION FROM THIS DESIGN; ANY FAILURE TO BUILD THE TRUSS IN COMFORMANCE WITH TPI; OR FABRICATING, HANDLING, SHIPPING, INSTALLING & BRACING OF TRUSSES. DESIGN CONFORMS WITH APPLICABLE PROVISIONS OF NDS (NATIONAL DESIGN SPEC. BY AF&PA) AND TPI. ITW BCG CONNECTOR PLATES ARE MADE OF 20/18/16GA (W,H/SS/K) ASTM A653 GRADE 40/60 (W, K/H,SS) GALV. STEEL. APPLY PLATES TO EACH FACE OF TRUSS AND, UNLESS OTHERWISE LOCATED ON THIS DESIGN, POSITION PER DRAWINGS 160A-Z. ANY INSPECTION OF PLATES FOLLOWED BY (1) SHALL BE PER ANNEX A3 OF TPI1-2002 SEC.3. A SEAL ON THIS DRAWING INDICATES ACCEPTANCE OF PROFESSIONAL ENGINEERING RESPONSIBILITY SOLELY FOR THE TRUSS COMPONENT DESIGN SHOWN. THE SUITABILITY AND USE OF THIS COMPONENT FOR ANY BUILDING IS THE RESPONSIBILITY OF THE BUILDING DESIGNER PER ANSI/TPI 1 SEC. 2.

JAMES F. COLLINS, JR. LICENSE No. 52212 STATE OF FLORIDA PROFESSIONAL ENGINEER

Jan 30 08

TC LL	40.0 PSF	REF R487-- 75086
TC DL	10.0 PSF	DATE 01/30/08
BC DL	5.0 PSF	DRW HCUSR487 08030126
BC LL	0.0 PSF	HC-ENG JB/AP
TOT.LD.	55.0 PSF	SEQN- 43758
DUR.FAC.	1.00	FROM JP
SPACING	24.0"	JREF- 1TEL487 Z01

(deardorf- - T24)

Top chord 2x4 SP #2 Dense
Bot chord 2x4 SP #2 Dense
Webs 2x4 SP #3

Deflection meets L/360 live and L/240 total load. Creep increase factor for dead load is 1.50.

Truss must be installed as shown with top chord up.

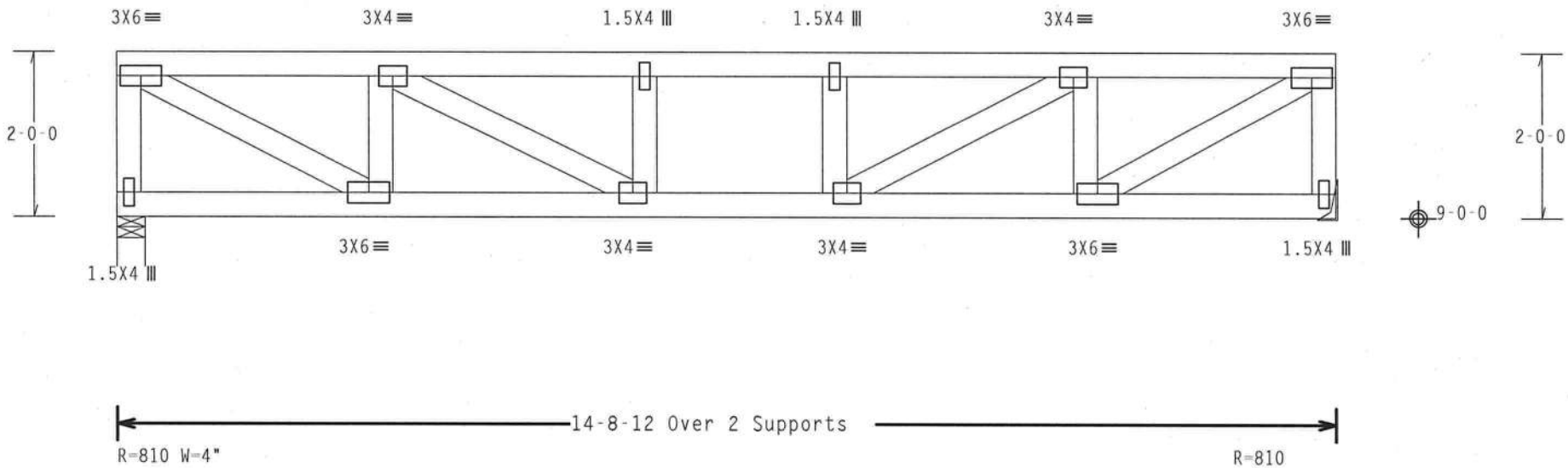

Design Crit: TPI-2002(STD)/FBC

PLT TYP. Wave | Cq/RT=1.00(1.25)/0(0) | 7.24.1230 | QTY:4 | FL/-/4/-/E/-/- | Scale =.5"/Ft.

ITW Building Components Group Inc.

ITW Building Components Group, Inc.
Haines City, FL 33844
FL Certificate of Authorization # 0-278

WARNINGTRUSSES REQUIRE EXTREME CARE IN FABRICATION, HANDLING, SHIPPING, INSTALLING AND BRACING. REFER TO BCSI (BUILDING COMPONENT SAFETY INFORMATION), PUBLISHED BY TPI (TRUSS PLATE INSTITUTE, 218 NORTH LEE STREET, SUITE 312, ALEXANDRIA, VA. 22314) AND WTCA (WOOD TRUSS COUNCIL OF AMERICA, 6300 ENTERPRISE LANE, MADISON, WI 53719) FOR SAFETY PRACTICES PRIOR TO PERFORMING THESE FUNCTIONS. UNLESS OTHERWISE INDICATED TOP CHORD SHALL HAVE PROPERLY ATTACHED STRUCTURAL PANELS AND BOTTOM CHORD SHALL HAVE A PROPERLY ATTACHED RIGID CEILING.

IMPORTANTFURNISH A COPY OF THIS DESIGN TO THE INSTALLATION CONTRACTOR. ITW BCG, INC. SHALL NOT BE RESPONSIBLE FOR ANY DEVIATION FROM THIS DESIGN; ANY FAILURE TO BUILD THE TRUSS IN CONFORMANCE WITH TPI; OR FABRICATING, HANDLING, SHIPPING, INSTALLING & BRACING OF TRUSSES. DESIGN CONFORMS WITH APPLICABLE PROVISIONS OF NDS (NATIONAL DESIGN SPEC. BY AF&PA) AND TPI. ITW BCG CONNECTOR PLATES ARE MADE OF 20/18/16GA (W,H/SS/K) ASTM A653 GRADE 40/60 (W, K/H,SS) GALV. STEEL. APPLY PLATES TO EACH FACE OF TRUSS AND, UNLESS OTHERWISE LOCATED ON THIS DESIGN. POSITION PER DRAWINGS 160A-Z. ANY INSPECTION OF PLATES FOLLOWED BY (1) SHALL BE PER ANNEX A3 OF TPI1-2002 SEC.3. A SEAL ON THIS DRAWING INDICATES ACCEPTANCE OF PROFESSIONAL ENGINEERING RESPONSIBILITY SOLELY FOR THE TRUSS COMPONENT DESIGN SHOWN. THE SUITABILITY AND USE OF THIS COMPONENT FOR ANY BUILDING IS THE RESPONSIBILITY OF THE BUILDING DESIGNER PER ANSI/TPI 1 SEC. 2.

JAMES F. COLLINS JR. LICENSE No. 52212 STATE OF FLORIDA PROFESSIONAL ENGINEER
Jan 30, 08

TC LL	40.0 PSF	REF	R487-- 75087
TC DL	10.0 PSF	DATE	01/30/08
BC DL	5.0 PSF	DRW	HCUSR487 08030127
BC LL	0.0 PSF	HC-ENG	JB/AP
TOT.LD.	55.0 PSF	SEQN-	43763
DUR.FAC.	1.00	FROM	JP
SPACING	24.0"	JREF-	1TEL487 Z01

(deardorf- - T8)

Top chord 2x4 SP #2 Dense
Bot chord 2x4 SP #2 Dense
Webs 2x4 SP #3

Deflection meets L/360 live and L/240 total load. Creep increase factor for dead load is 1.50.

Truss must be installed as shown with top chord up.

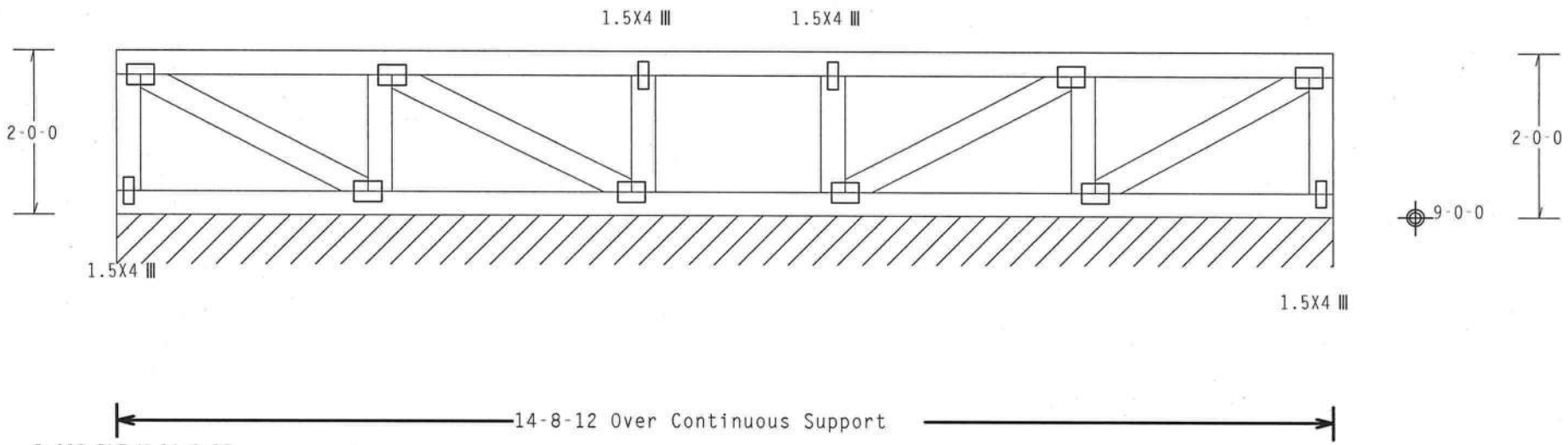

R=110 PLF W=14-8-12

Note: All Plates Are 3X4 Except As Shown.

Design Crit: TPI-2002(STD)/FBC

PLT TYP. Wave Cq/RT=1.00(1.25)/0(0) 7.24.1230 QTY:1 FL/-/4/-/E/-/- Scale =.5"/Ft.

ITW Building Components Group Inc.

ITW Building Components Group, Inc.
Haines City, FL 33844
FL Certificate of Authorization # 0 278

WARNING TRUSSES REQUIRE EXTREME CARE IN FABRICATION, HANDLING, SHIPPING, INSTALLING AND BRACING. REFER TO BCSI (BUILDING COMPONENT SAFETY INFORMATION), PUBLISHED BY TPI (TRUSS PLATE INSTITUTE, 218 NORTH LEE STREET, SUITE 312, ALEXANDRIA, VA. 22314) AND WTCA (WOOD TRUSS COUNCIL OF AMERICA, 6300 ENTERPRISE LANE, MADISON, WI 53719) FOR SAFETY PRACTICES PRIOR TO PERFORMING THESE FUNCTIONS. UNLESS OTHERWISE INDICATED TOP CHORD SHALL HAVE PROPERLY ATTACHED STRUCTURAL PANELS AND BOTTOM CHORD SHALL HAVE A PROPERLY ATTACHED RIGID CEILING.

IMPORTANT FURNISH A COPY OF THIS DESIGN TO THE INSTALLATION CONTRACTOR. ITW BCG, INC. SHALL NOT BE RESPONSIBLE FOR ANY DEVIATION FROM THIS DESIGN; ANY FAILURE TO BUILD THE TRUSS IN CONFORMANCE WITH TPI; OR FABRICATING, HANDLING, SHIPPING, INSTALLING & BRACING OF TRUSSES. DESIGN CONFORMS WITH APPLICABLE PROVISIONS OF NDS (NATIONAL DESIGN SPEC. BY AF&PA) AND TPI. ITW BCG CONNECTOR PLATES ARE MADE OF 20/18/16GA (W.H/SS/K) ASTM A653 GRADE 40/60 (W. K/H.SS) GALV. STEEL. APPLY PLATES TO EACH FACE OF TRUSS AND, UNLESS OTHERWISE LOCATED ON THIS DESIGN, POSITION PER DRAWINGS 160A-Z. ANY INSPECTION OF PLATES FOLLOWED BY (1) SHALL BE PER ANNEX A3 OF TPI1-2002 SEC.3. A SEAL ON THIS DRAWING INDICATES ACCEPTANCE OF PROFESSIONAL ENGINEERING RESPONSIBILITY SOLELY FOR THE TRUSS COMPONENT DESIGN SHOWN. THE SUITABILITY AND USE OF THIS COMPONENT FOR ANY BUILDING IS THE RESPONSIBILITY OF THE BUILDING DESIGNER PER ANSI/TPI 1 SEC. 2.

JAMES F. COLLINS JR
LICENSE
No. 52212
STATE OF FLORIDA
PROFESSIONAL ENGINEER
Jan 30 08

TC LL	40.0 PSF	REF R487-- 75088
TC DL	10.0 PSF	DATE 01/30/08
BC DL	5.0 PSF	DRW HCUSR487 08030128
BC LL	0.0 PSF	HC-ENG JB/AP
TOT.LD.	55.0 PSF	SEQN- 43769
DUR.FAC.	1.00	FROM JP
SPACING	24.0"	JREF- 1TEL487 Z01

(deardorf- - T10)

THIS DWG PREPARED FROM COMPUTER INPUT (LOADS & DIMENSIONS) SUBMITTED BY TRUSS MFR.

Top chord 2x4 SP #2 Dense
Bot chord 2x6 SP #2
Webs 2x4 SP #3

Truss must be installed as shown with top chord up.

See ANSI/TPI 1-02 Sect 7.5 for additional bracing requirements.

Deflection meets L/360 live and L/240 total load. Creep increase factor for dead load is 1.50.

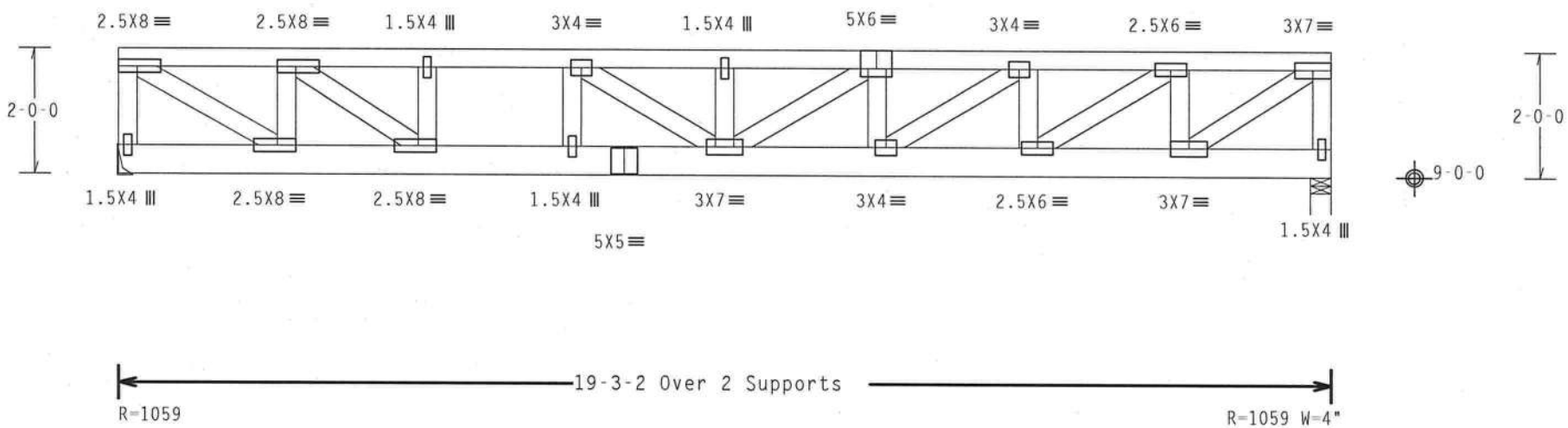

Design Crit: TPI-2002(STD)/FBC

PLT TYP. Wave Cq/RT=1.00(1.25)/0(0) 7.24.1230.16 QTY:1 FL/-/4/-/E/-/- Scale =.375"/Ft.

ITW Building Components Group Inc.

ITW Building Components Group, Inc.
Haines City, FL 33844
FL Certificate of Authorization # 0 278

WARNING TRUSSES REQUIRE EXTREME CARE IN FABRICATION, HANDLING, SHIPPING, INSTALLING AND BRACING. REFER TO BCSI (BUILDING COMPONENT SAFETY INFORMATION), PUBLISHED BY TPI (TRUSS PLATE INSTITUTE, 218 NORTH LEE STREET, SUITE 312, ALEXANDRIA, VA. 22314) AND WTCA (WOOD TRUSS COUNCIL OF AMERICA, 6300 ENTERPRISE LANE, MADISON, WI 53719) FOR SAFETY PRACTICES PRIOR TO PERFORMING THESE FUNCTIONS. UNLESS OTHERWISE INDICATED TOP CHORD SHALL HAVE PROPERLY ATTACHED STRUCTURAL PANELS AND BOTTOM CHORD SHALL HAVE A PROPERLY ATTACHED RIGID CEILING.

IMPORTANT FURNISH A COPY OF THIS DESIGN TO THE INSTALLATION CONTRACTOR. ITW BCG, INC. SHALL NOT BE RESPONSIBLE FOR ANY DEVIATION FROM THIS DESIGN; ANY FAILURE TO BUILD THE TRUSS IN CONFORMANCE WITH TPI; OR FABRICATING, HANDLING, SHIPPING, INSTALLING & BRACING OF TRUSSES.
DESIGN CONFORMS WITH APPLICABLE PROVISIONS OF NDS (NATIONAL DESIGN SPEC. BY AF&PA) AND TPI. ITW BCG CONNECTOR PLATES ARE MADE OF 20/18/16GA (W.H/SS/K) ASTM A653 GRADE 40/60 (W. K/H.SS) GALV. STEEL. APPLY PLATES TO EACH FACE OF TRUSS AND, UNLESS OTHERWISE LOCATED ON THIS DESIGN, POSITION PER DRAWINGS 160A-Z. ANY INSPECTION OF PLATES FOLLOWED BY (1) SHALL BE PER ANNEX A3 OF TPI1-2002 SEC.3. A SEAL ON THIS DRAWING INDICATES ACCEPTANCE OF PROFESSIONAL ENGINEERING RESPONSIBILITY SOLELY FOR THE TRUSS COMPONENT DESIGN SHOWN. THE SUITABILITY AND USE OF THIS COMPONENT FOR ANY BUILDING IS THE RESPONSIBILITY OF THE BUILDING DESIGNER PER ANSI/TPI 1 SEC. 2.

JAMES F. COLLINS, JR. LICENSE No 52212 STATE OF FLORIDA PROFESSIONAL ENGINEER

Jan 30, 2008

TC LL	40.0 PSF	REF	R487-- 75089
TC DL	10.0 PSF	DATE	01/30/08
BC DL	5.0 PSF	DRW	HCUSR487 08030129
BC LL	0.0 PSF	HC-ENG	JB/AP
TOT.LD.	55.0 PSF	SEQN-	43715
DUR.FAC.	1.00	FROM	JP
SPACING	24.0"	JREF-	1TEL487 Z01

(deardorf- - T11)

THIS DWG PREPARED FROM COMPUTER INPUT (LOADS & DIMENSIONS) SUBMITTED BY TRUSS MFR.

Top chord 2x4 SP #2 Dense
Bot chord 2x6 SP #2
Webs 2x4 SP #3

Truss must be installed as shown with top chord up.

See ANSI/TPI 1-02 Sect 7.5 for additional bracing requirements.

Deflection meets L/360 live and L/240 total load. Creep increase factor for dead load is 1.50.

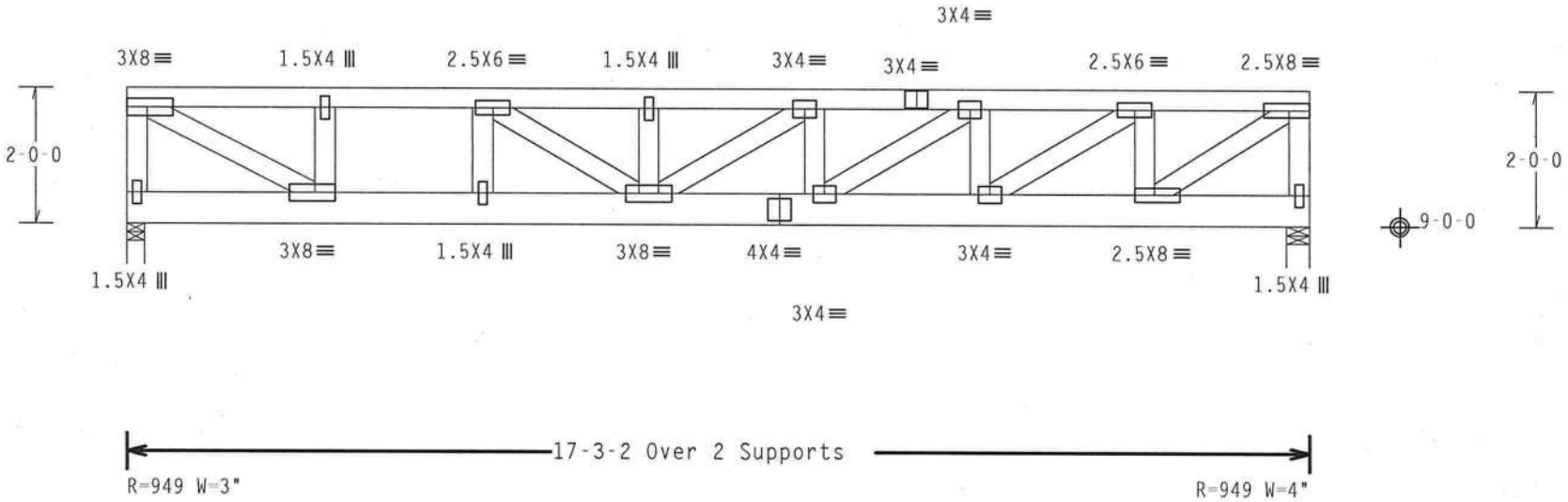

Design Crit: TPI-2002(STD)/FBC

PLT TYP. Wave

Cq/RT=1.00(1.25)/0(0) 7.24.1230 QTY:1 FL/-/4/-/E/-/- Scale =.375"/Ft.

Building Components Group Inc.

ITW Building Components Group, Inc.
Haines City, FL 33844
FL Certificate of Authorization # 0 278

WARNINGTRUSSES REQUIRE EXTREME CARE IN FABRICATION, HANDLING, SHIPPING, INSTALLING AND BRACING. REFER TO BCSI (BUILDING COMPONENT SAFETY INFORMATION), PUBLISHED BY TPI (TRUSS PLATE INSTITUTE, 218 NORTH LEE STREET, SUITE 312, ALEXANDRIA, VA, 22314) AND WTCA (WOOD TRUSS COUNCIL OF AMERICA, 6300 ENTERPRISE LANE, MADISON, WI 53719) FOR SAFETY PRACTICES PRIOR TO PERFORMING THESE FUNCTIONS. UNLESS OTHERWISE INDICATED TOP CHORD SHALL HAVE PROPERLY ATTACHED STRUCTURAL PANELS AND BOTTOM CHORD SHALL HAVE A PROPERLY ATTACHED RIGID CEILING.

IMPORTANTFURNISH A COPY OF THIS DESIGN TO THE INSTALLATION CONTRACTOR. ITW BCG, INC. SHALL NOT BE RESPONSIBLE FOR ANY DEVIATION FROM THIS DESIGN; ANY FAILURE TO BUILD THE TRUSS IN COMFORMANCE WITH TPI; OR FABRICATING, HANDLING, SHIPPING, INSTALLING & BRACING OF TRUSSES.
DESIGN CONFORMS WITH APPLICABLE PROVISIONS OF NDS (NATIONAL DESIGN SPEC. BY AF&PA) AND TPI. ITW BCG CONNECTOR PLATES ARE MADE OF 20/18/16GA (W,H/SS/K) ASTM A653 GRADE 40/60 (W, K/H,SS) GALV. STEEL. APPLY PLATES TO EACH FACE OF TRUSS AND, UNLESS OTHERWISE LOCATED ON THIS DESIGN, POSITION PER DRAWINGS 160A-Z. ANY INSPECTION OF PLATES FOLLOWED BY (1) SHALL BE PER ANNEX A3 OF TPI1-2002 SEC.3. A SEAL ON THIS DRAWING INDICATES ACCEPTANCE OF PROFESSIONAL ENGINEERING RESPONSIBILITY SOLELY FOR THE TRUSS COMPONENT DESIGN SHOWN. THE SUITABILITY AND USE OF THIS COMPONENT FOR ANY BUILDING IS THE RESPONSIBILITY OF THE BUILDING DESIGNER PER ANSI/TPI 1 SEC. 2.

JAMES F. COLLINS JR. LICENSED No 52212 STATE OF FLORIDA PROFESSIONAL ENGINEER

Jan 30 08

TC LL	40.0 PSF	REF R487-- 75090
TC DL	10.0 PSF	DATE 01/30/08
BC DL	5.0 PSF	DRW HCUSR487 08030130
BC LL	0.0 PSF	HC-ENG JB/AP
TOT.LD.	55.0 PSF	SEQN- 43722
DUR.FAC.	1.00	FROM JP
SPACING	24.0"	JREF- 1TEL487 Z01

(deardorf- - T12)

THIS DWG PREPARED FROM COMPUTER INPUT (LOADS & DIMENSIONS) SUBMITTED BY TRUSS MFR.

Top chord 2x4 SP #2 Dense
Bot chord 2x4 SP #2 Dense
Webs 2x4 SP #3

Deflection meets L/360 live and L/240 total load. Creep increase factor for dead load is 1.50.

Truss must be installed as shown with top chord up.

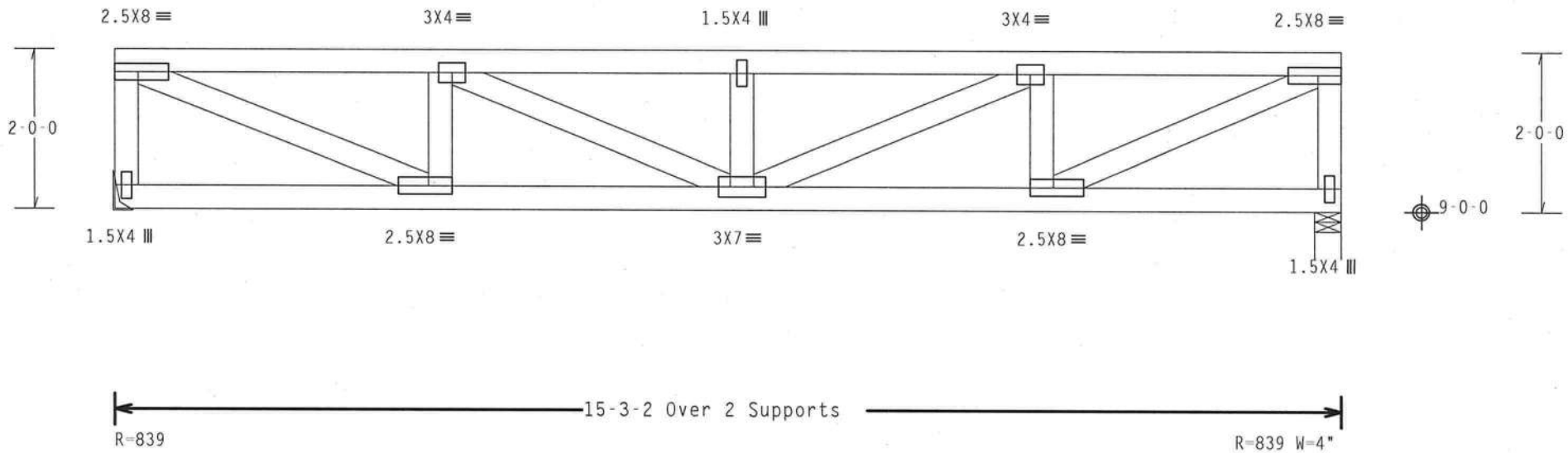

Design Crit: TPI-2002(STD)/FBC
Cq/RT=1.00(1.25)/0(0) 7.24.1230 1@

PLT TYP. Wave

QTY:1 FL/-/4/-/E/-/- Scale =.5"/Ft.

ITW Building Components Group Inc.

ITW Building Components Group, Inc.
Haines City, FL 33844
FL Certificate of Authorization # 0 278

WARNING TRUSSES REQUIRE EXTREME CARE IN FABRICATION, HANDLING, SHIPPING, INSTALLING AND BRACING. REFER TO BCSI (BUILDING COMPONENT SAFETY INFORMATION), PUBLISHED BY TPI (TRUSS PLATE INSTITUTE, 218 NORTH LEE STREET, SUITE 312, ALEXANDRIA, VA. 22314) AND WTCA (WOOD TRUSS COUNCIL OF AMERICA, 6300 ENTERPRISE LANE, MADISON, WI 53719) FOR SAFETY PRACTICES PRIOR TO PERFORMING THESE FUNCTIONS. UNLESS OTHERWISE INDICATED TOP CHORD SHALL HAVE PROPERLY ATTACHED STRUCTURAL PANELS AND BOTTOM CHORD SHALL HAVE A PROPERLY ATTACHED RIGID CEILING.

IMPORTANT FURNISH A COPY OF THIS DESIGN TO THE INSTALLATION CONTRACTOR. ITW BCG, INC. SHALL NOT BE RESPONSIBLE FOR ANY DEVIATION FROM THIS DESIGN; ANY FAILURE TO BUILD THE TRUSS IN COMFORMANCE WITH TPI; OR FABRICATING, HANDLING, SHIPPING, INSTALLING & BRACING OF TRUSSES.
DESIGN CONFORMS WITH APPLICABLE PROVISIONS OF NDS (NATIONAL DESIGN SPEC, BY AF&PA) AND TPI. ITW BCG CONNECTOR PLATES ARE MADE OF 20/18/16GA (W,H/SS/K) ASTM A653 GRADE 40/60 (W, K/H,SS) GALV. STEEL. APPLY PLATES TO EACH FACE OF TRUSS AND, UNLESS OTHERWISE LOCATED ON THIS DESIGN, POSITION PER DRAWINGS 160A-Z. ANY INSPECTION OF PLATES FOLLOWED BY (1) SHALL BE PER ANNEX A3 OF TPI1-2002 SEC.3. A SEAL ON THIS DRAWING INDICATES ACCEPTANCE OF PROFESSIONAL ENGINEERING RESPONSIBILITY SOLELY FOR THE TRUSS COMPONENT DESIGN SHOWN. THE SUITABILITY AND USE OF THIS COMPONENT FOR ANY BUILDING IS THE RESPONSIBILITY OF THE BUILDING DESIGNER PER ANSI/TPI 1 SEC. 2.

JAMES F. COLLINS, JR. LICENSE No. 52212 STATE OF FLORIDA PROFESSIONAL ENGINEER
Jan 30, 08

TC LL	40.0 PSF	REF R487-- 75091
TC DL	10.0 PSF	DATE 01/30/08
BC DL	5.0 PSF	DRW HCUSR487 08030131
BC LL	0.0 PSF	HC-ENG JB/AP
TOT.LD.	55.0 PSF	SEQN- 43727
DUR.FAC.	1.00	FROM JP
SPACING	24.0"	JREF- 1TEL487 Z01

(deardorf- - T13)

Top chord 2x4 SP #2 Dense
Bot chord 2x4 SP #2 Dense
Webs 2x4 SP #3

Deflection meets L/360 live and L/240 total load. Creep increase factor for dead load is 1.50.

Truss must be installed as shown with top chord up.

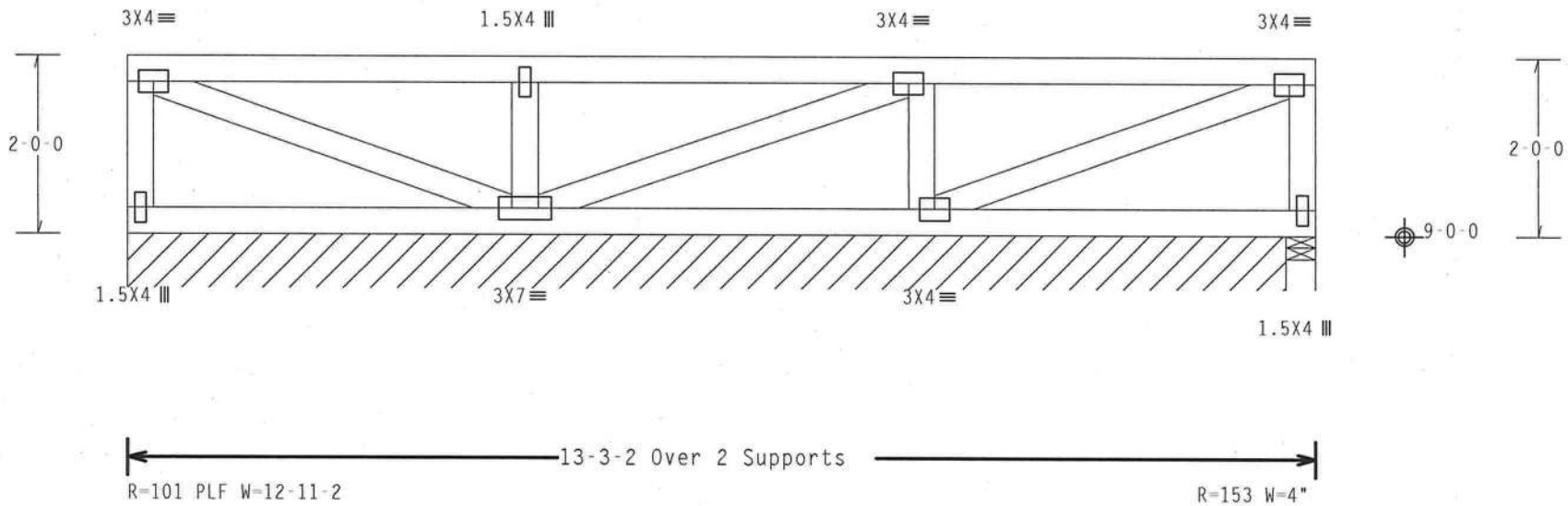

Design Crit: TPI-2002(STD)/FBC

PLT TYP. Wave Cq/RT=1.00(1.25)/0(0) 7.24.1230 QTY:1 FL/-/4/-/E/-/- Scale =.5"/Ft.

ITW Building Components Group Inc.

ITW Building Components Group, Inc.
Haines City, FL 33844
FL Certificate of Authorization # 0 278

WARNING TRUSSES REQUIRE EXTREME CARE IN FABRICATION, HANDLING, SHIPPING, INSTALLING AND BRACING. REFER TO BCSI (BUILDING COMPONENT SAFETY INFORMATION), PUBLISHED BY TPI (TRUSS PLATE INSTITUTE, 218 NORTH LEE STREET, SUITE 312, ALEXANDRIA, VA, 22314) AND WTCA (WOOD TRUSS COUNCIL OF AMERICA, 6300 ENTERPRISE LANE, MADISON, WI 53719) FOR SAFETY PRACTICES PRIOR TO PERFORMING THESE FUNCTIONS. UNLESS OTHERWISE INDICATED TOP CHORD SHALL HAVE PROPERLY ATTACHED STRUCTURAL PANELS AND BOTTOM CHORD SHALL HAVE A PROPERLY ATTACHED RIGID CEILING.

IMPORTANT FURNISH A COPY OF THIS DESIGN TO THE INSTALLATION CONTRACTOR. ITW BCG, INC. SHALL NOT BE RESPONSIBLE FOR ANY DEVIATION FROM THIS DESIGN; ANY FAILURE TO BUILD THE TRUSS IN CONFORMANCE WITH TPI; OR FABRICATING, HANDLING, SHIPPING, INSTALLING & BRACING OF TRUSSES. DESIGN CONFORMS WITH APPLICABLE PROVISIONS OF NDS (NATIONAL DESIGN SPEC, BY AF&PA) AND TPI. ITW BCG CONNECTOR PLATES ARE MADE OF 20/18/16GA (W,H/SS/K) ASTM A653 GRADE 40/60 (W, K/H,SS) GALV. STEEL. APPLY PLATES TO EACH FACE OF TRUSS AND, UNLESS OTHERWISE LOCATED ON THIS DESIGN, POSITION PER DRAWINGS 160A-2. ANY INSPECTION OF PLATES FOLLOWED BY (1) SHALL BE PER ANNEX A3 OF TPI1-2002 SEC.3. A SEAL ON THIS DRAWING INDICATES ACCEPTANCE OF PROFESSIONAL ENGINEERING RESPONSIBILITY SOLELY FOR THE TRUSS COMPONENT DESIGN SHOWN. THE SUITABILITY AND USE OF THIS COMPONENT FOR ANY BUILDING IS THE RESPONSIBILITY OF THE BUILDING DESIGNER PER ANSI/TPI 1 SEC. 2.

JAMES F. COLLINS JR. LICENSE No. 52212 STATE OF FLORIDA PROFESSIONAL ENGINEER
Jan 30 08

TC LL	40.0 PSF	REF R487-- 75092
TC DL	10.0 PSF	DATE 01/30/08
BC DL	5.0 PSF	DRW HCUSR487 08030132
BC LL	0.0 PSF	HC-ENG JB/AP
TOT.LD.	55.0 PSF	SEQN- 43733
DUR.FAC.	1.00	FROM JP
SPACING	24.0"	JREF- 1TEL487 Z01

(deardorf- - T20)

Top chord 2x4 SP #2 Dense
Bot chord 2x4 SP #2 Dense
Webs 2x4 SP #3

Deflection meets L/360 live and L/240 total load. Creep increase factor for dead load is 1.50.

Truss must be installed as shown with top chord up.

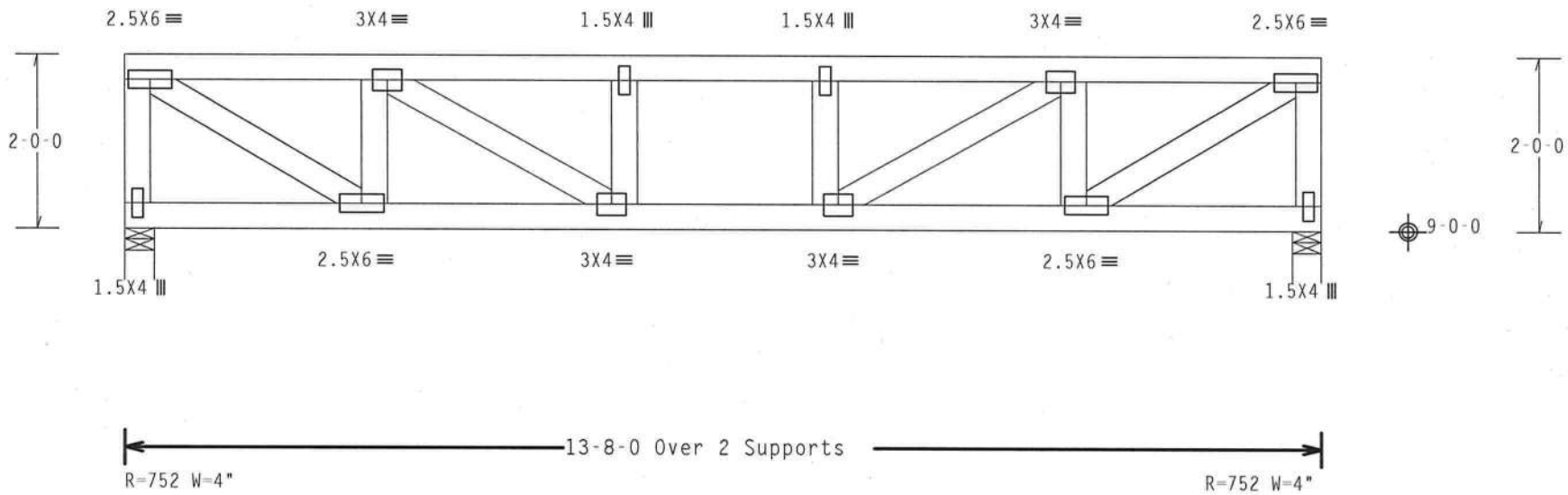

Design Crit: TPI-2002(STD)/FBC

PLT TYP. Wave Cq/RT=1.00(1.25)/0(0) 7.24.1230.16 QTY:5 FL/-/4/-/E/-/- Scale =.5"/Ft.

ITW Building Components Group Inc.

ITW Building Components Group, Inc.
Haines City, FL 33844
FL Certificate of Authorization # 0 278

WARNING TRUSSES REQUIRE EXTREME CARE IN FABRICATION, HANDLING, SHIPPING, INSTALLING AND BRACING. REFER TO BCSI (BUILDING COMPONENT SAFETY INFORMATION), PUBLISHED BY TPI (TRUSS PLATE INSTITUTE, 218 NORTH LEE STREET, SUITE 312, ALEXANDRIA, VA. 22314) AND WTCA (WOOD TRUSS COUNCIL OF AMERICA, 6300 ENTERPRISE LANE, MADISON, WI 53719) FOR SAFETY PRACTICES PRIOR TO PERFORMING THESE FUNCTIONS. UNLESS OTHERWISE INDICATED TOP CHORD SHALL HAVE PROPERLY ATTACHED STRUCTURAL PANELS AND BOTTOM CHORD SHALL HAVE A PROPERLY ATTACHED RIGID CEILING.

IMPORTANT FURNISH A COPY OF THIS DESIGN TO THE INSTALLATION CONTRACTOR. ITW BCG, INC. SHALL NOT BE RESPONSIBLE FOR ANY DEVIATION FROM THIS DESIGN; ANY FAILURE TO BUILD THE TRUSS IN COMFORMANCE WITH TPI; OR FABRICATING, HANDLING, SHIPPING, INSTALLING & BRACING OF TRUSSES.
DESIGN CONFORMS WITH APPLICABLE PROVISIONS OF NDS (NATIONAL DESIGN SPEC. BY AF&PA) AND TPI. ITW BCG CONNECTOR PLATES ARE MADE OF 20/18/16GA (W,H/SS/K) ASTM A653 GRADE 40/60 (W, K/H,SS) GALV. STEEL. APPLY PLATES TO EACH FACE OF TRUSS AND, UNLESS OTHERWISE LOCATED ON THIS DESIGN, POSITION PER DRAWINGS 160A-Z. ANY INSPECTION OF PLATES FOLLOWED BY (1) SHALL BE PER ANNEX A3 OF TPI1-2002 SEC.3. A SEAL ON THIS DRAWING INDICATES ACCEPTANCE OF PROFESSIONAL ENGINEERING RESPONSIBILITY SOLELY FOR THE TRUSS COMPONENT DESIGN SHOWN. THE SUITABILITY AND USE OF THIS COMPONENT FOR ANY BUILDING IS THE RESPONSIBILITY OF THE BUILDING DESIGNER PER ANSI/TPI 1 SEC. 2.

JAMES F. COLLINS JR. LICENSE No. 52212 STATE OF FLORIDA PROFESSIONAL ENGINEER

Jan

TC LL	40.0 PSF	REF R487-- 75093
TC DL	10.0 PSF	DATE 01/30/08
BC DL	5.0 PSF	DRW HCUSR487 08030133
BC LL	0.0 PSF	HC-ENG JB/AP
TOT.LD.	55.0 PSF	SEQN- 43737
DUR.FAC.	1.00	FROM JP
SPACING	24.0"	JREF- 1TEL487 Z01

(deardorf- - T21)

Top chord 2x4 SP #2 Dense
Bot chord 2x4 SP #2 Dense
Webs 2x4 SP #3

Deflection meets L/360 live and L/240 total load. Creep increase factor for dead load is 1.50.

Truss must be installed as shown with top chord up.

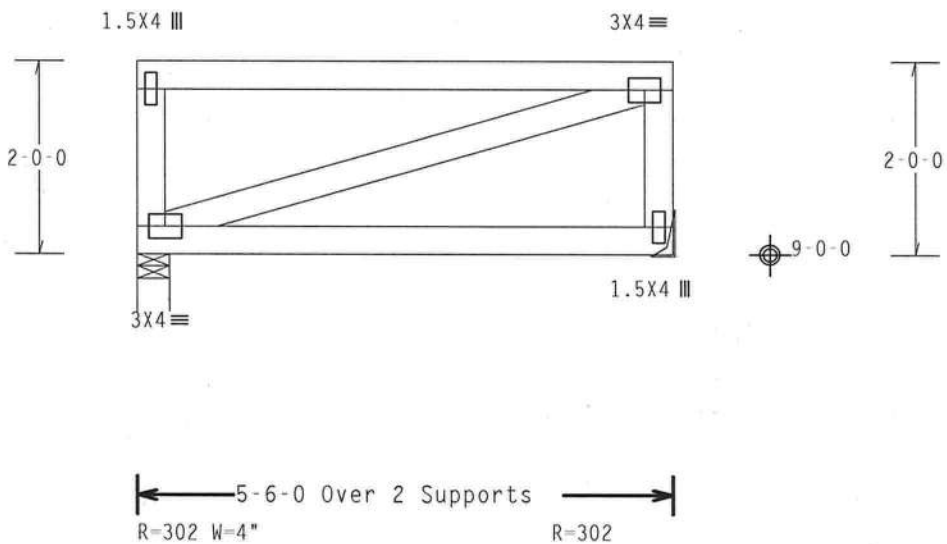

Design Crit: TPI-2002(STD)/FBC
Cq/RT=1.00(1.25)/0(0) 7.24.1230.16

PLT TYP. Wave QTY:3 FL/-/4/-/E/-/- Scale =.5"/Ft.

ITW Building Components Group Inc.

ITW Building Components Group, Inc.
Haines City, FL 33844
FL Certificate of Authorization # 0 278

WARNINGTRUSSES REQUIRE EXTREME CARE IN FABRICATION, HANDLING, SHIPPING, INSTALLING AND BRACING. REFER TO BCSI (BUILDING COMPONENT SAFETY INFORMATION), PUBLISHED BY TPI (TRUSS PLATE INSTITUTE, 218 NORTH LEE STREET, SUITE 312, ALEXANDRIA, VA, 22314) AND WTCA (WOOD TRUSS COUNCIL OF AMERICA, 6300 ENTERPRISE LANE, MADISON, WI 53719) FOR SAFETY PRACTICES PRIOR TO PERFORMING THESE FUNCTIONS. UNLESS OTHERWISE INDICATED TOP CHORD SHALL HAVE PROPERLY ATTACHED STRUCTURAL PANELS AND BOTTOM CHORD SHALL HAVE A PROPERLY ATTACHED RIGID CEILING.

IMPORTANTFURNISH A COPY OF THIS DESIGN TO THE INSTALLATION CONTRACTOR. ITW BCG, INC. SHALL NOT BE RESPONSIBLE FOR ANY DEVIATION FROM THIS DESIGN; ANY FAILURE TO BUILD THE TRUSS IN CONFORMANCE WITH TPI; OR FABRICATING, HANDLING, SHIPPING, INSTALLING & BRACING OF TRUSSES.
DESIGN CONFORMS WITH APPLICABLE PROVISIONS OF NDS (NATIONAL DESIGN SPEC. BY AF&PA) AND TPI. ITW BCG CONNECTOR PLATES ARE MADE OF 20/18/16GA (W,H/SS/K) ASTM A653 GRADE 40/60 (W, K/H,SS) GALV. STEEL. APPLY PLATES TO EACH FACE OF TRUSS AND, UNLESS OTHERWISE LOCATED ON THIS DESIGN, POSITION PER DRAWINGS 160A-Z. ANY INSPECTION OF PLATES FOLLOWED BY (1) SHALL BE PER ANNEX A3 OF TPI1-2002 SEC.3. A SEAL ON THIS DRAWING INDICATES ACCEPTANCE OF PROFESSIONAL ENGINEERING RESPONSIBILITY SOLELY FOR THE TRUSS COMPONENT DESIGN SHOWN. THE SUITABILITY AND USE OF THIS COMPONENT FOR ANY BUILDING IS THE RESPONSIBILITY OF THE BUILDING DESIGNER PER ANSI/TPI 1 SEC. 2.

JAMES F. COLLINS JR. LICENSED No. 52272 STATE OF FLORIDA PROFESSIONAL ENGINEER
Jan

TC LL	40.0 PSF	REF	R487-- 75094
TC DL	10.0 PSF	DATE	01/30/08
BC DL	5.0 PSF	DRW	HCUSR487 08030134
BC LL	0.0 PSF	HC-ENG	JB/AP
TOT.LD.	55.0 PSF	SEQN-	43776
DUR.FAC.	1.00	FROM	JP
SPACING	24.0"	JREF-	1TEL487 Z01

Top chord 2x4 SP #2 Dense
Bot chord 2x4 SP #2 Dense
Webs 2x4 SP #3

End verticals not exposed to wind pressure.

Deflection meets L/360 live and L/240 total load. Creep increase factor for dead load is 1.50.

110 mph wind, 15.00 ft mean hgt, ASCE 7-02, CLOSED bldg, not located within 4.50 ft from roof edge, CAT II, EXP B, wind TC DL=5.0 psf, wind BC DL=5.0 psf. Iw=1.00 GCpi(+/-)=0.18

Wind reactions based on MWFRS pressures.

Provide for complete drainage of roof.

Truss must be installed as shown with top chord up.

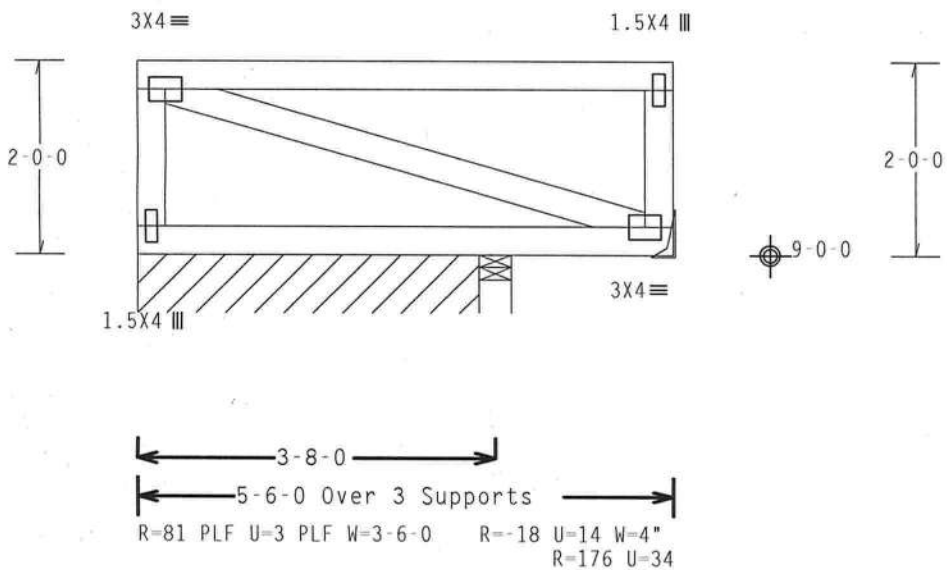

Design Crit: TPI-2002(STD)/FBC

PLT TYP. Wave — Cq/RT=1.00(1.25)/0(0) — 7.24.1230 — QTY:1 — FL/-/4/-/E/-/- — Scale =.5"/Ft.

ITW Building Components Group Inc.

ITW Building Components Group, Inc.
Haines City, FL 33844
FL Certificate of Authorization # 0 278

WARNINGTRUSSES REQUIRE EXTREME CARE IN FABRICATION, HANDLING, SHIPPING, INSTALLING AND BRACING. REFER TO BCSI (BUILDING COMPONENT SAFETY INFORMATION), PUBLISHED BY TPI (TRUSS PLATE INSTITUTE, 218 NORTH LEE STREET, SUITE 312, ALEXANDRIA, VA, 22314) AND WTCA (WOOD TRUSS COUNCIL OF AMERICA, 6300 ENTERPRISE LANE, MADISON, WI 53719) FOR SAFETY PRACTICES PRIOR TO PERFORMING THESE FUNCTIONS. UNLESS OTHERWISE INDICATED TOP CHORD SHALL HAVE PROPERLY ATTACHED STRUCTURAL PANELS AND BOTTOM CHORD SHALL HAVE A PROPERLY ATTACHED RIGID CEILING.

IMPORTANTFURNISH A COPY OF THIS DESIGN TO THE INSTALLATION CONTRACTOR. ITW BCG, INC. SHALL NOT BE RESPONSIBLE FOR ANY DEVIATION FROM THIS DESIGN; ANY FAILURE TO BUILD THE TRUSS IN COMFORMANCE WITH TPI; OR FABRICATING, HANDLING, SHIPPING, INSTALLING & BRACING OF TRUSSES. DESIGN CONFORMS WITH APPLICABLE PROVISIONS OF NDS (NATIONAL DESIGN SPEC. BY AF&PA) AND TPI. ITW BCG CONNECTOR PLATES ARE MADE OF 20/18/16GA (W.H/SS/K) ASTM A653 GRADE 40/60 (W. K/H.SS) GALV. STEEL. APPLY PLATES TO EACH FACE OF TRUSS AND, UNLESS OTHERWISE LOCATED ON THIS DESIGN, POSITION PER DRAWINGS 160A-Z. ANY INSPECTION OF PLATES FOLLOWED BY (1) SHALL BE PER ANNEX A3 OF TPI1-2002 SEC.3. A SEAL ON THIS DRAWING INDICATES ACCEPTANCE OF PROFESSIONAL ENGINEERING RESPONSIBILITY SOLELY FOR THE TRUSS COMPONENT DESIGN SHOWN. THE SUITABILITY AND USE OF THIS COMPONENT FOR ANY BUILDING IS THE RESPONSIBILITY OF THE BUILDING DESIGNER PER ANSI/TPI 1 SEC. 2.

JAMES F. COLLINS, JR. LICENSE No. 52212 STATE OF FLORIDA PROFESSIONAL ENGINEER

Jan 30 '08

TC LL	20.0 PSF	REF R487-- 75095
TC DL	10.0 PSF	DATE 01/30/08
BC DL	10.0 PSF	DRW HCUSR487 08030135
BC LL	0.0 PSF	HC-ENG JB/AP
TOT.LD.	40.0 PSF	SEQN- 43781
DUR.FAC.	1.25	FROM JP
SPACING	24.0"	JREF- 1TEL487_Z01

(deardorf- - T16)

THIS DWG PREPARED FROM COMPUTER INPUT (LOADS & DIMENSIONS) SUBMITTED BY TRUSS MFR.

Top chord 2x4 SP #2 Dense
Bot chord 2x4 SP #2 Dense
Webs 2x4 SP #3

Deflection meets L/360 live and L/240 total load. Creep increase factor for dead load is 1.50.

Truss must be installed as shown with top chord up.

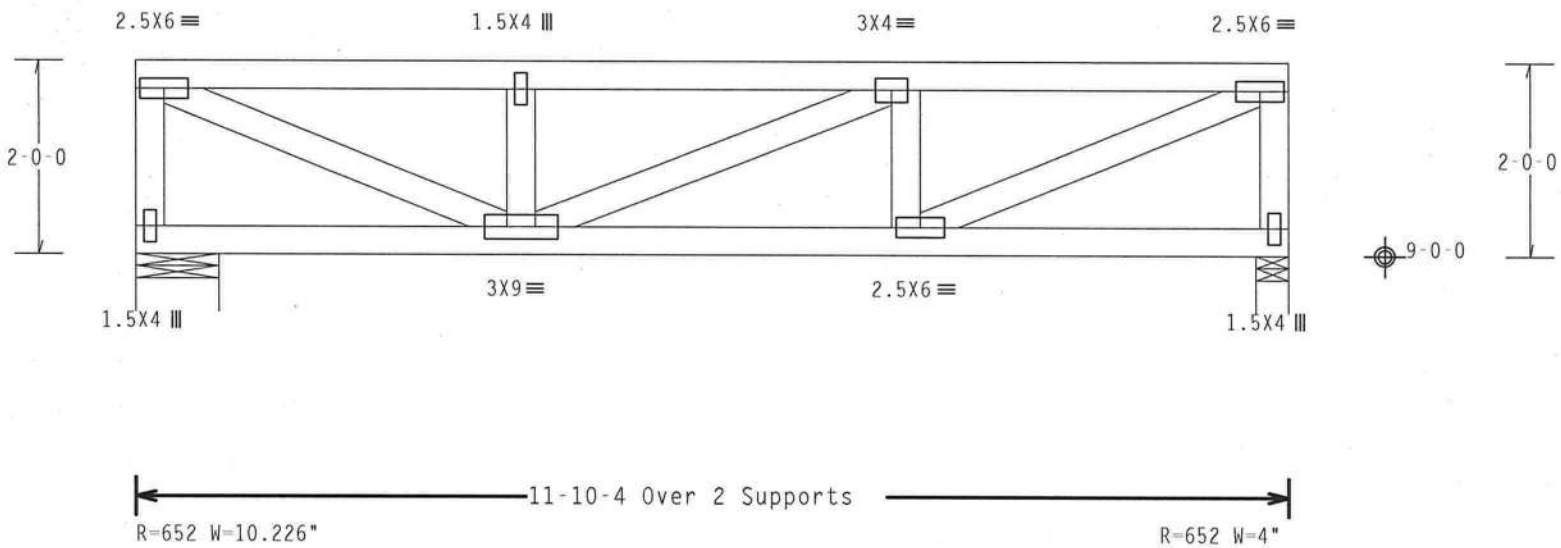

Design Crit: TPI-2002(STD)/FBC

PLT TYP. Wave

Cq/RT=1.00(1.25)/0(0) 7.24.1230 1.0 QTY:1 FL/-/4/-/E/-/- Scale =.5"/Ft.

WARNING TRUSSES REQUIRE EXTREME CARE IN FABRICATION, HANDLING, SHIPPING, INSTALLING AND BRACING. REFER TO BCSI (BUILDING COMPONENT SAFETY INFORMATION), PUBLISHED BY TPI (TRUSS PLATE INSTITUTE, 218 NORTH LEE STREET, SUITE 312, ALEXANDRIA, VA. 22314) AND WTCA (WOOD TRUSS COUNCIL OF AMERICA, 6300 ENTERPRISE LANE, MADISON, WI 53719) FOR SAFETY PRACTICES PRIOR TO PERFORMING THESE FUNCTIONS. UNLESS OTHERWISE INDICATED TOP CHORD SHALL HAVE PROPERLY ATTACHED STRUCTURAL PANELS AND BOTTOM CHORD SHALL HAVE A PROPERLY ATTACHED RIGID CEILING.

IMPORTANT FURNISH A COPY OF THIS DESIGN TO THE INSTALLATION CONTRACTOR. ITW BCG, INC. SHALL NOT BE RESPONSIBLE FOR ANY DEVIATION FROM THIS DESIGN; ANY FAILURE TO BUILD THE TRUSS IN COMFORMANCE WITH TPI; OR FABRICATING, HANDLING, SHIPPING, INSTALLING & BRACING OF TRUSSES.
DESIGN CONFORMS WITH APPLICABLE PROVISIONS OF NDS (NATIONAL DESIGN SPEC, BY AF&PA) AND TPI. ITW BCG CONNECTOR PLATES ARE MADE OF 20/18/16GA (W,H/SS/K) ASTM A653 GRADE 40/60 (W, K/H,SS) GALV. STEEL. APPLY PLATES TO EACH FACE OF TRUSS AND, UNLESS OTHERWISE LOCATED ON THIS DESIGN, POSITION PER DRAWINGS 160A-Z. ANY INSPECTION OF PLATES FOLLOWED BY (1) SHALL BE PER ANNEX A3 OF TPI1-2002 SEC.3. A SEAL ON THIS DRAWING INDICATES ACCEPTANCE OF PROFESSIONAL ENGINEERING RESPONSIBILITY SOLELY FOR THE TRUSS COMPONENT DESIGN SHOWN. THE SUITABILITY AND USE OF THIS COMPONENT FOR ANY BUILDING IS THE RESPONSIBILITY OF THE BUILDING DESIGNER PER ANSI/TPI 1 SEC. 2.

ITW Building Components Group Inc.

ITW Building Components Group, Inc.
Haines City, FL 33844
FL Certificate of Authorization # 0 278

JAMES F. COLLINS, JR. LICENSE No. 52212 STATE OF FLORIDA PROFESSIONAL ENGINEER
Jan 30, 2008

TC LL	40.0 PSF	REF R487-- 75096
TC DL	10.0 PSF	DATE 01/30/08
BC DL	5.0 PSF	DRW HCUSR487 08030136
BC LL	0.0 PSF	HC-ENG JB/AP
TOT.LD.	55.0 PSF	SEQN- 43791
DUR.FAC.	1.00	FROM JP
SPACING	24.0"	JREF- 1TEL487 Z01

STANLEY CRAWFORD / DEARDORF FLOOR

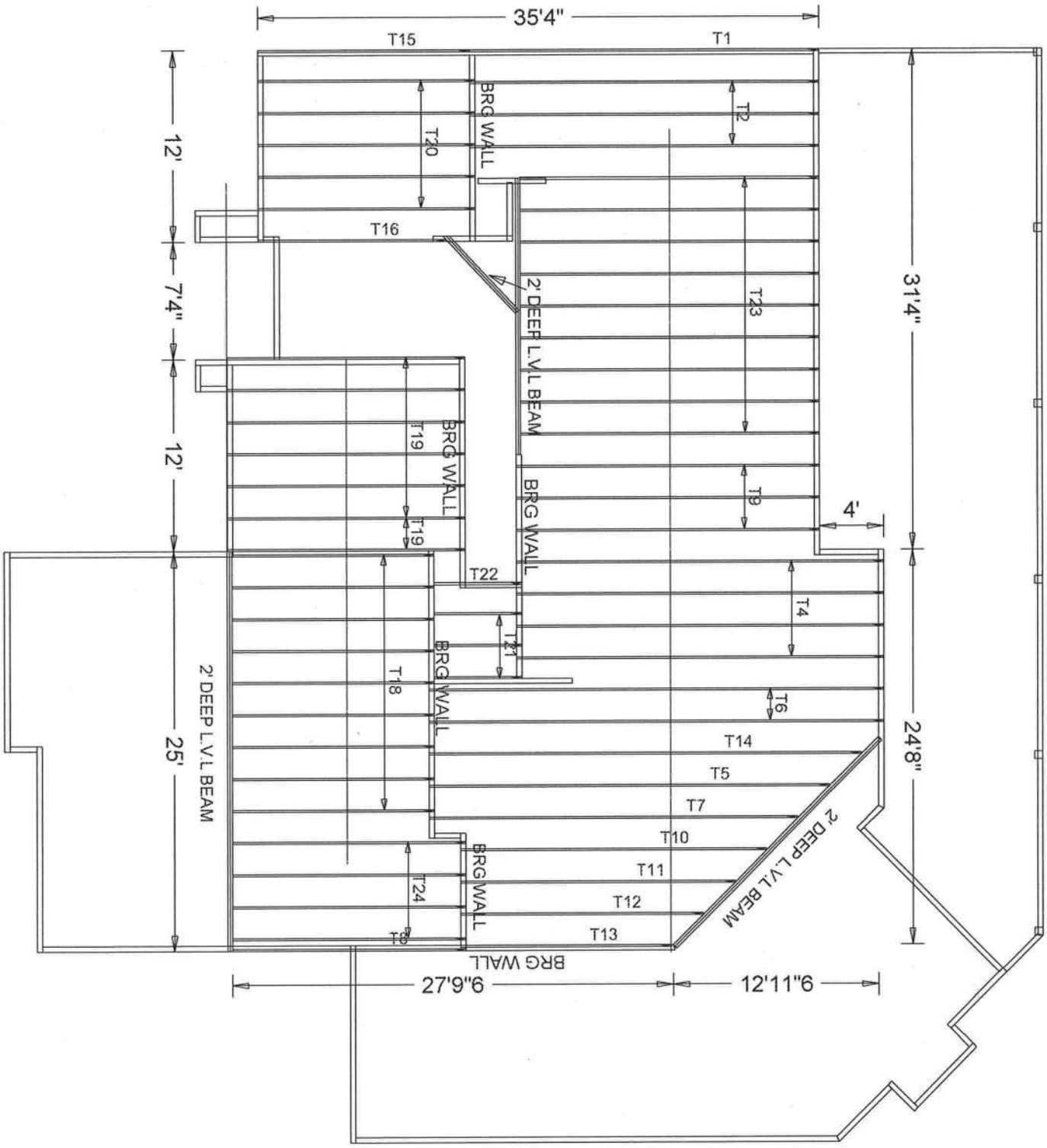

JOB NO:	DESIGNED BY:	JOB DESCRIPTION:	JOB LOCATION:
deardorf	Jenny Patterson		

PAGE NO: 1 OF 1

TrimJoist®

Floor Application Guide

A product of the TrimJoist® Corporation
(800) 844-8281 • www.trimjoist.com

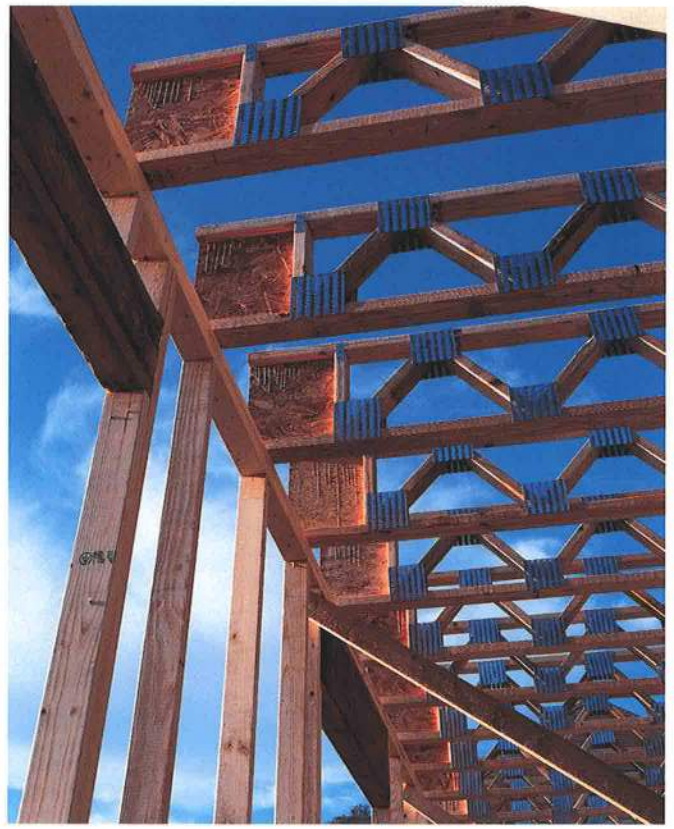

SILENCE. The TrimJoist® provides a full 3-1/2" wide surface for the proper nailing and gluing of subfloor materials. By providing such a wide surface, the TrimJoist® allows the builder to use subfloor framing tolerances that will prevent squeaks. The wide surface also allows for the application of sufficient glue to make the TrimJoist® and the subfloor truly act as a unified system.

QUALITY. The TrimJoist® addresses product consistency and product quality from three key perspectives:

DESIGN. The TrimJoist® was initially designed using the most capable structural engineers and computer software systems available from both inside and outside the forest products industry. This includes the PPSA system from Purdue University as well as Rasna finite element software from Parametric Technology.

MATERIAL CONTROL. All raw material components are structurally rated by various independent agencies such as the Truss Plate Institute (TPI), Southern Pine Inspection Bureau (SPIB), American Plywood Association (APA), American Society for Testing and Materials (ASTM), and of course ANSI. In fact, all TrimJoist® floor trusses now conform to the new ANSI/TPI-1995 standard. In addition, all lumber components of the TrimJoist® are subject to a strict "cull" process where questionable pieces are discarded before entering into the production process.

PRODUCTION TESTING. In addition to the rigorous testing performed on prototype units during the development phase of the TrimJoist®. All production runs are subject to periodic, random tests. These tests are conducted to the standards of the Truss Plate Institute (TPI) Test Truss Specification. No other production floor truss is subjected to such ongoing scrutiny and improvement.

ENVIRONMENT. The TrimJoist® design allows for the utilization of lumber from plantation-grown trees, thus sparing the "old-growth" forests that are necessary to produce all traditional wide-board joists. In addition, our engineered strength allows for longer spans and greater on-center spacing. This not only reduces construction costs, but can reduce the board footage of wood fiber required by up to 12% over traditional joists.

By design, approximately 40% of the TrimJoist® material content is from recycled sources. In addition, our manufacturing process recovers over 97% of its generated waste.

INNOVATION. The TrimJoist® is produced in stock lengths that range from 4' to 30', in standard 2-foot increments. Because each joist has 12-inches of trim at each end, a continuous range of spans is possible. Complex angled walls? No problem for the TrimJoist®.

The open web design of the TrimJoist® allows for the utilization of that valuable floor cavity space. It's now practical for duct work, wiring, and plumbing to be contained within this cavity. This eliminates unsightly and expensive furring. Free access to the floor cavity requires no cutting or notching that can severely impair the structural integrity of other joists products of inferior design.

SERVICE. Put simply, the TrimJoist® is the superior product for floor joist applications. To aid architects, building designers, and contractors we offer toll-free access to a TrimJoist® representative. By simply calling (800) 844-8281 you can gain immediate assistance with your question or framing issue.

U.S. Patent 5,761,872 • U.S. Patent 6,139,667 • Additional Patents Pending

06172/TRI
BuyLine 4916

Installation Details Available in CAD format at trimjoist.com and sweets.com

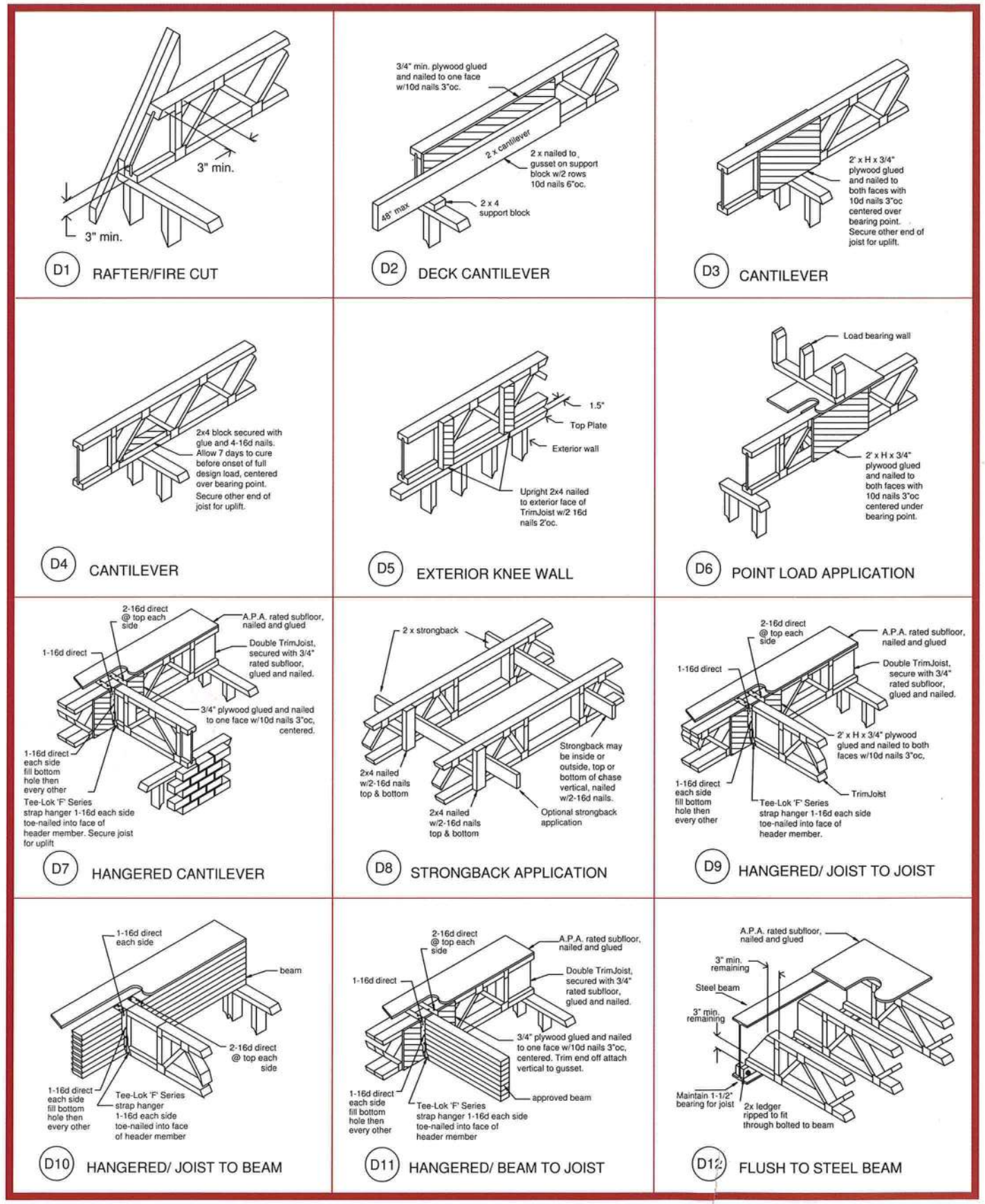

LOAD TABLES AND DESIGN NOTES

The uniform load span charts below indicate the maximum design spans (including a 1-1/2" minimum bearing at each end) for each family of TrimJoist® floor joists. Each chart is divided into columns which represent common design loadings and rows which show typical spacings. Most residential designs require a minimum of 55 psf loading. Floors used for heavy traffic and/or heavy floor coverings (e.g. Tile) should be designed at 60 psf minimum. All loads are broken down into Live, Top-dead and Bottom-dead components. For example, the 55 psf column is really 40 psf live plus 10 psf top-dead plus 5 psf bottom-dead for a total of 55 psf. Dead loads are the weight of construction materials and are always present for the whole life of the structure. Live loads, on the other hand, are transient and are never constant over the life of the structure. Select the appropriate column based on the dead loads of your construction materials. These charts are for uniformly loaded, clear span, simply supported joists. For special applications requiring concentrated loads, asymmetric continuous loads, cantilevers, or special bearing conditions please consult a TrimJoist® representative or authorized dealer. The TPDS computer program can be used to analyze almost any loading and/or bearing condition.

	Loading	55 PSF (40/10/5)		60 PSF (40/10/10)	
11 1/4" Deep	Spacing 12	24'- 0"	L/497	24'- 0"	L/497
	16	22'- 0"	L/485	22'- 0"	L/485
	19.2	21'- 2"	L/453	21'- 2"	L/453
	24	19'- 7"	L/455	19'- 7"	L/455
14" Deep	12	26'- 0"	L/633	26'- 0"	L/633
	16	26'- 0"	L/475	26'- 0"	L/475
	19.2	24'-10"	L/453	24'-10"	L/453
	24	23'- 0"	L/452	22'- 0"	L/517

	Loading	55 PSF (40/10/5)		60 PSF (40/10/10)	
16" Deep	Spacing 12	28'- 0"	L/676	28'- 0"	L/676
	16	28'- 0"	L/507	28'- 0"	L/507
	19.2	27'- 4"	L/453	27'- 4"	L/453
	24	25'- 5"	L/450	25'- 5"	L/450
18" Deep	12	30'- 0"	L/710	30'- 0"	L/710
	16	30'- 0"	L/532	30'- 0"	L/532
	19.2	29'-10"	L/451	29'-10"	L/451
	24	27'- 7"	L/468	27'- 3"	L/473

Notes on Span Charts

1. Spans are based on uniformly loaded joists and include allowances for repetitive use members.
2. Live loads of 40 psf are assumed. Additional dead loads should be chosen based on construction materials.
3. All TrimJoist® floor joists have a TOP orientation and should not be installed upside-down.
4. Stiffness factors (L/xxx) assume a minimum 3/4-inch span-rated subfloor that has been both glued and nailed.
5. Limit total reaction (per end) to that indicated in the Maximum Reaction Table at the right.
6. Do not apply center supports, cantilevers, concentrated, or asymmetrical continuous loads without first consulting a TrimJoist® representative.

Maximum Reaction Table

Width	1 1/2	3 1/2	5 1/2
Max	3000	3500	4000

Width is the width of the loaded wall above, or the bearing wall width whichever is less.

Note About Floor Stiffness: Floor performance is greatly influenced by joist stiffness. Experience has shown that a floor system designed to minimum code acceptance may not meet the expectations of discerning owners. TrimJoist® Corporation strongly recommends that floor spans be limited to those indicated in the charts above. The numbers in these charts far exceed minimum code requirements and are based on both gluing and nailing the subfloor. In cases where the subfloor is nailed only, spans remain the same, but the stiffness must be reduced by 20%. For optimal performance use screws in lieu of nails.

Opening Sizes

	J12	J14	J16	J18
H	11 1/4"	14"	16"	18"
D	5"	8"	9"	10"
R1	8x16	10x24	12x24	14x24
R2	4x9	4x10 6x6	4x12 6x8	4x14 6x10 8x8

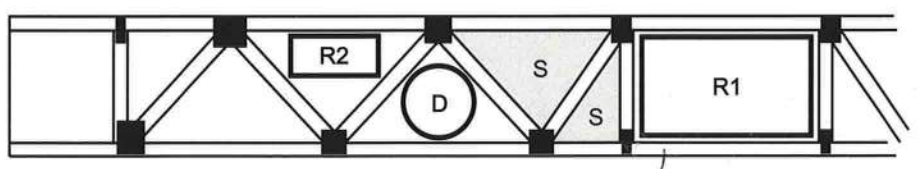

1. All sizes given are in inches and denote maximum expected clearance.
2. Rectangular opening (R1) is provided at centerline of stock length.
3. Only opening D available in 4' stock length (one opening only).
4. Only opening R1 available in 6' and 8' stock length.
5. Openings R2 & D not applicable in shaded areas (s).

JM Allen
June 1, 2004

GOOD FRAMING PRACTICE

DO Install TrimJoist® right side up. TOP is stamped on the top of each joist.

DO Make sure that each TrimJoist® bears on the bottom flange beneath the TrimEnd section or beneath the first metal plate if the TrimEnd section has been removed.

DO Use strongback stiffeners. Although not required for structural performance, strongback adds additional resistance to impact loadings.

DO Provide appropriate bearing width at each end of the TrimJoist®. The required width can be found in the Maximum Reaction Table above. Use vertical web stiffeners where reactions exceed these values.

DO Use TrimJoist® approved hangers for flush-mounted bearing conditions. These may be purchased from your local TrimJoist® dealer.

DO Use an appropriately rated sub-floor that has been both glued and nailed/screwed to the top flange of the TrimJoist®.

DO Consult your TrimJoist® dealer or representative about special loading or bearing conditions not addressed in this Application Guide.

DO NOT cut any part of the TrimJoist® except for the TrimEnd® sections which are specifically designed to be field cut.

DO NOT remove, cut or alter any metal plate connector on the TrimJoist® without first consulting a factory engineer.

DO NOT install the TrimJoist® upside down without first consulting a TrimJoist® factory engineer.

DO NOT use a TrimJoist® as a header or beam except as may be instructed by a TrimJoist® engineer.

DO NOT allow the TrimJoist® to be supported by the top flange. All support must be from under the bottom flange.

DO NOT depend on "toe nailing" to provide adequate support capacity for flush-mounted framing. Consult your local TrimJoist® dealer or a TrimJoist® factory engineer for proper hanger selection.

DO NOT apply special support or load conditions without first consulting a TrimJoist® representative.

TrimJoist®

SEE US IN DIRECTORY CATALOG FILES CD SWEETS.COM

06172/TRI
BuyLine 4916

TrimJoist®

ENGINEERED WOOD PRODUCTS

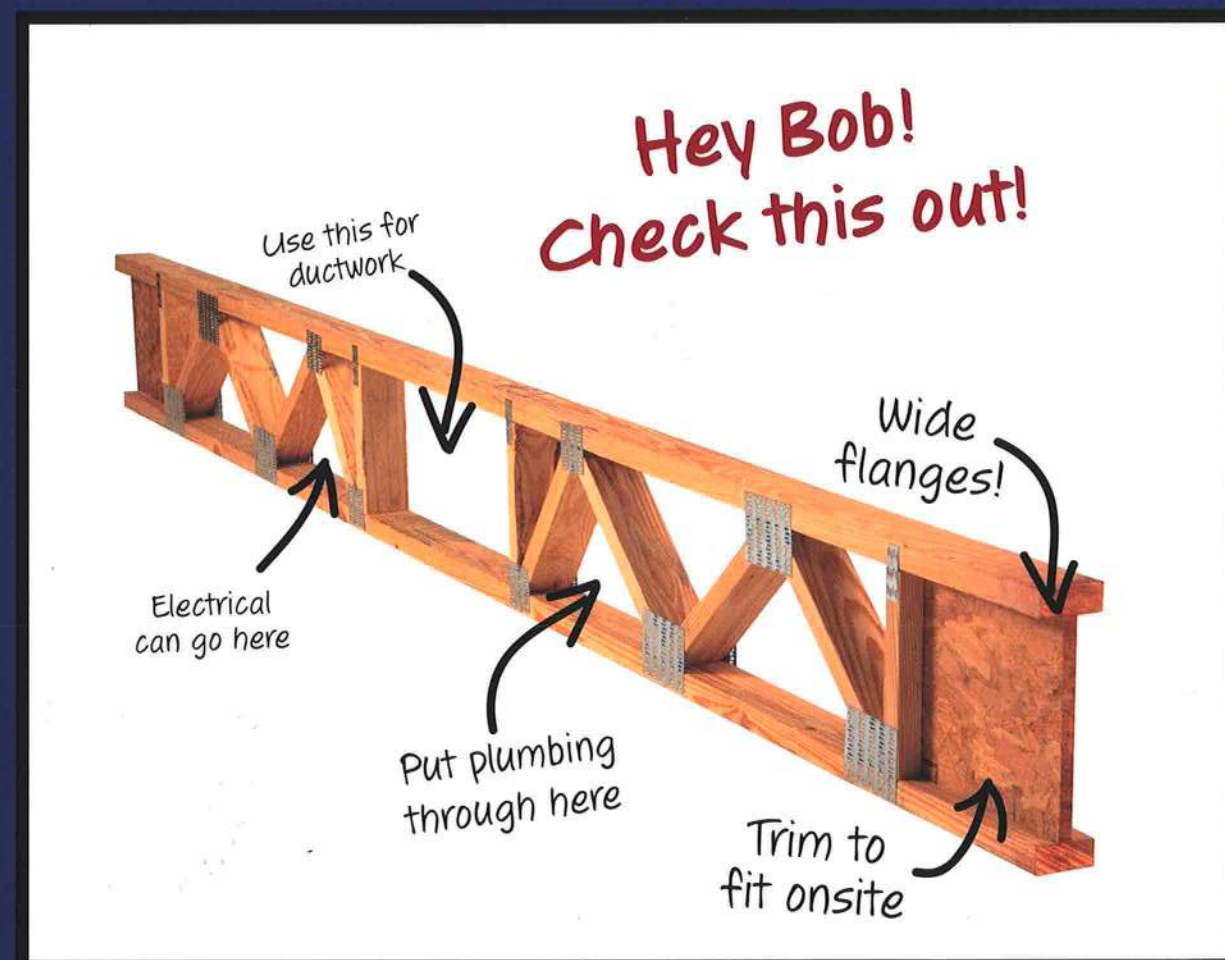

Wood truss joists that can be trimmed at the jobsite

IT'S CONTRACTOR FRIENDLY.
The end sections can be trimmed onsite.

IT SAVES MONEY AND TIME.
With strut-webbing, there's no need for subcontractors to cut holes.

IT'S STRONGER.
You don't weaken the joist with holes.

IT HAS WIDE FLANGES.
With 3.5-inch flanges on the top and bottom, subfloor application is simple. Nailing and gluing are easier.

IT COMES WITH A GREAT TECHNICAL SUPPORT TEAM.
Just call our toll-free number for custom engineering.

1 800 844-8281
www.trimjoist.com

Load Short Form
Entire House
Touchstone Heating and Air, Inc.

Job: Deardorf Residence
Date: Jan 29, 2008
By: ell

P.O. Box 327, Lake Butler, Fl 32054 Phone: 386-496-3467 Fax: 386-496-3147

Project Information

For: Stanley Crawford Construction
Lake City, FL 32025

Design Information

	Htg	Clg
Outside db (°F)	33	92
Inside db (°F)	68	75
Design TD (°F)	35	17
Daily range	-	M
Inside humidity (%)	-	50
Moisture difference (gr/lb)	-	52

Infiltration

Method	Simplified
Construction quality	Average
Fireplaces	0

HEATING EQUIPMENT

Make	
Trade	
Model	
Efficiency	0 HSPF
Heating input	
Heating output	0 Btuh @ 47°F
Temperature rise	0 °F
Actual air flow	2184 cfm
Air flow factor	0.048 cfm/Btuh
Static pressure	0.00 in H2O
Space thermostat	

COOLING EQUIPMENT

Make	
Trade	
Cond	
Coil	
Efficiency	0 EER
Sensible cooling	0 Btuh
Latent cooling	0 Btuh
Total cooling	0 Btuh
Actual air flow	2184 cfm
Air flow factor	0.044 cfm/Btuh
Static pressure	0.00 in H2O
Load sensible heat ratio	0.69

ROOM NAME	Area (ft²)	Htg load (Btuh)	Clg load (Btuh)	Htg AVF (cfm)	Clg AVF (cfm)
BR 5	166	3960	2726	191	119
Bath	54	789	796	38	35
Study	180	4186	3047	202	133
Great Room	492	3983	2875	192	126
Foyer	108	1940	858	94	38
Dining	143	2716	2405	131	105
Pantry	54	0	0	0	0
Laundry	90	0	2842	0	124
Morn/Kitch/Keep	698	7355	11480	355	503
Office	61	1506	1422	73	62
BR 2	154	2450	2942	118	129
J & J Bath	108	669	826	32	36
BR 3	157	2140	2810	103	123
Media Rm	206	2171	2309	105	101
Gallery	190	264	521	13	23
Master BR	273	3244	3734	157	163
BR 4	152	1198	1296	58	57

Printout certified by ACCA to meet all requirements of Manual J 8th Ed.

Bath 2	90	437	674	21	29
Closet	39	54	106	3	5
Master Bath	160	1990	3161	96	138
WIC	210	2679	1837	129	80
Foyer 2	203	1453	1216	70	53
Entire House	3985	45183	49882	2184	2184
Other equip loads		17179	8344		
Equip. @ 0.97 RSM			56480		
Latent cooling			26708		
TOTALS	3985	62362	83187	2184	2184

Printout certified by ACCA to meet all requirements of Manual J 8th Ed.

Job: Deardorf Residence
Date: Jan 29, 2008
By: ell

Duct System Summary
Entire House
Touchstone Heating and Air, Inc.

P.O. Box 327, Lake Butler, Fl 32054 Phone: 386-496-3467 Fax: 386-496-3147

Project Information

For: Stanley Crawford Construction
Lake City, FL 32025

	Heating	Cooling
External static pressure	0.00 in H2O	0.00 in H2O
Pressure losses	0.15 in H2O	0.15 in H2O
Available static pressure	-0.1 in H2O	-0.1 in H2O
Supply / return available pressure	-0.07 / -0.07 in H2O	-0.07 / -0.07 in H2O
Lowest friction rate	***0.880*** in/100ft	***0.880*** in/100ft
Actual air flow	2184 cfm	2184 cfm
Total effective length (TEL)	0 ft	

Supply Branch Detail Table

Name		Design (Btuh)	Htg (cfm)	Clg (cfm)	Design FR	Diam (in)	Rect Size (in)	Duct Matl	Actual Ln (ft)	Ftg.Eqv Ln (ft)	Trunk
BR 5	h	3960	191	119	0.880	8	0x0	VIFx	0.0	0.0	
Bath	h	789	38	35	0.880	4	0x0	VIFx	0.0	0.0	
Study	h	4186	202	133	0.880	8	0x0	VIFx	0.0	0.0	
Great Room	h	3983	192	126	0.880	8	0x0	VIFx	0.0	0.0	
Foyer	h	1940	94	38	0.880	6	0x0	VIFx	0.0	0.0	
Dining	h	2716	131	105	0.880	7	0x0	VIFx	0.0	0.0	
Pantry	c	0	0	0	0.880	0	0x0	VIFx	0.0	0.0	
Laundry	c	2842	0	124	0.880	7	0x0	VIFx	0.0	0.0	
Morn/Kitch/Keep-A	c	3826	118	167	0.880	8	0x0	VIFx	0.0	0.0	
Morn/Kitch/Keep-B	c	3826	118	167	0.880	8	0x0	VIFx	0.0	0.0	
Morn/Kitch/Keep	c	3827	119	168	0.880	8	0x0	VIFx	0.0	0.0	
Office	h	1506	73	62	0.880	5	0x0	VIFx	0.0	0.0	
BR 2	c	2942	116	129	0.880	7	0x0	VIFx	0.0	0.0	
J & J Bath	c	826	32	36	0.880	4	0x0	VIFx	0.0	0.0	
BR 3	c	2810	103	123	0.880	7	0x0	VIFx	0.0	0.0	
Media Rm	h	2171	105	101	0.880	6	0x0	VIFx	0.0	0.0	
Gallery	c	521	13	23	0.880	4	0x0	VIFx	0.0	0.0	
Master BR	c	3734	157	163	0.880	8	0x0	VIFx	0.0	0.0	
BR 4	h	1198	58	57	0.880	5	0x0	VIFx	0.0	0.0	
Bath 2	c	674	21	29	0.880	4	0x0	VIFx	0.0	0.0	
Closet	c	106	3	5	0.880	4	0x0	VIFx	0.0	0.0	
Master Bath	c	3161	96	138	0.880	7	0x0	VIFx	0.0	0.0	
WIC	h	2679	129	80	0.880	7	0x0	VIFx	0.0	0.0	
Foyer 2	h	1453	70	53	0.880	5	0x0	VIFx	0.0	0.0	

Bold/italic values have been manually overridden

Return Branch Detail Table

Name	Grill Size (in)	Htg (cfm)	Clg (cfm)	TEL (ft)	Design FR	Veloc (fpm)	Diam (in)	RectSize (in)	Stud/Joist Opening (in)	Duct Matl	Trunk
rb1	0x0	2184	2184	0.0	0.880	592	26	0x 0		VIFx	

Masonite

SIDE-HINGED WOOD-EDGE STEEL DOOR UNIT
6'-8" GLAZED DOUBLE DOOR WITH / WITHOUT SIDELITES

GENERAL NOTES

1. EVALUATED FOR USE IN LOCATIONS ADHERING TO THE FLORIDA BUILDING CODE AND WHERE PRESSURE REQUIREMENTS AS DETERMINED BY ASCE 7, MINIMUM DESIGN LOADS FOR BUILDINGS AND OTHER STRUCTURES, DOES NOT EXCEED THE DESIGN PRESSURES LISTED
2. HURRICANE PROTECTIVE SYSTEM (SHUTTERS) IS REQUIRED
3. POLYURETHANE CORE FLAME SPREAD INDEX OF 50 AND SMOKE DEVELOPED INDEX OF 60 PER ASTM E84
4. PLASTICS TESTING OF LITE FRAME MATERIAL:

TEST DESCRIPTION	DESIGNATION	RESULT
SELF IGNITION TEMP	ASTM D1929	680 °F > 650 °F
RATE OF BURNING	ASTM D635	1.10 IN/MIN
SMOKE DENSITY	ASTM D2843	69.6%
TENSILE STRENGTH*	ASTM D638	−7.48% DIFF

* COMPARATIVE TENSILE STRENGTH AFTER WEATHERING 4500 HOURS XENON ARC METHOD 1

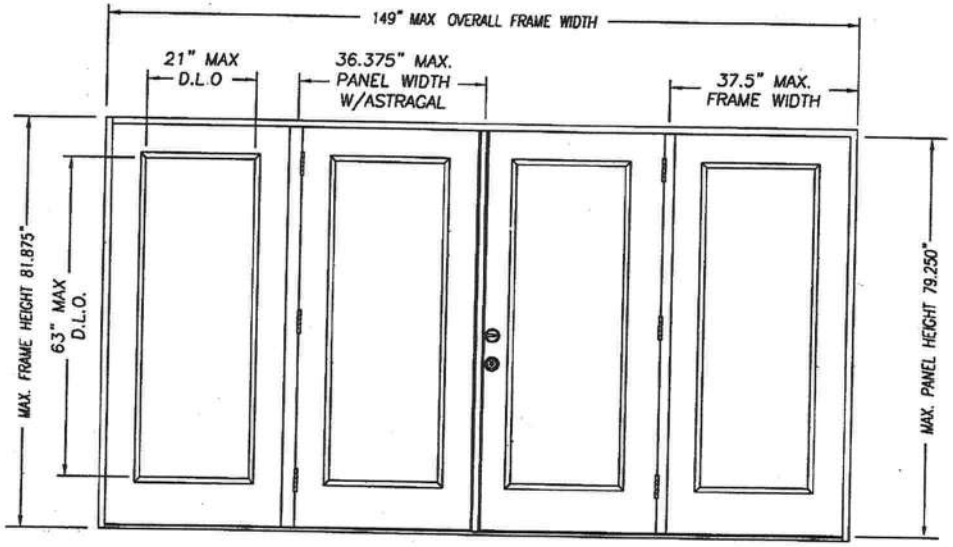

DOUBLE INSWING UNIT W/SIDELITES

Addendum to NAMI
Certification No.: NT006110
Reviewed By:
Date Reviewed: 8/10/05

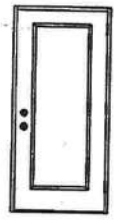

SINGLE DOOR UNIT

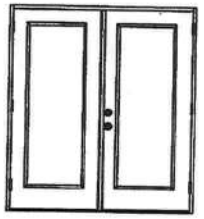

DOUBLE DOOR UNIT

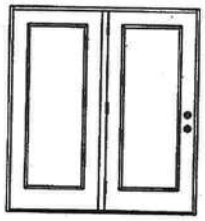

SINGLE DOOR UNIT WITH SIDELITE

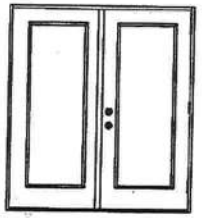

SINGLE DOOR UNIT WITH SIDELITE

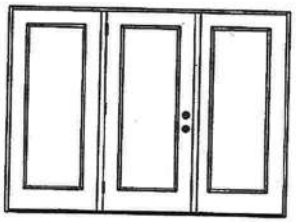

SINGLE DOOR UNIT W/SIDELITES

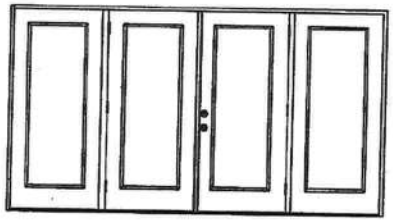

DOUBLE DOOR UNIT W/SIDELITES

TABLE OF CONTENTS

CONFIG	MAX WIDTH	DESIGN PRESSURE RATING		WHERE WATER INFILTRATION PERFORMANCE IS REQUIRED TO BE 15% OF DESIGN PRESSURE	
		INSWING	OUTSWING	INSWING	OUTSWING
X	37.5"	+50.5 / −50.5	+50.5 / −50.5	+19.0 / −19.0	+50.5 / −50.5
XX	74"	+50.5 / −50.5	+50.5 / −50.5	+19.0 / −19.0	+50.5 / −50.5
OX or XO	75"	+50.5 / −50.5	+50.5 / −50.5	+19.0 / −19.0	+50.5 / −50.5
OXO	112.5"	+50.5 / −50.5	+50.5 / −50.5	+19.0 / −19.0	+50.5 / −50.5
OXXO	149"	+50.5 / −50.5	+50.5 / −50.5	+19.0 / −19.0	+50.5 / −50.5

MASONITE INTERNATIONAL CORP.
7300 REAMES RD.
CHARLOTTE, NC 28216

PRODUCT: "EXTERIOR DOOR PRODUCT" DOUBLE 6'8" GLAZED WOOD-EDGE STEEL DOOR

PART OR ASSEMBLY: TYPICAL ELEVATIONS & GENERAL NOTES

NO.	DATE	REVISIONS	BY

DATE: 7/11/05
SCALE: N.T.S.
DWG. BY: SWS
CHK. BY:
DRAWING NO: DWG-MA-FL0130-05
SHEET 1 OF 3

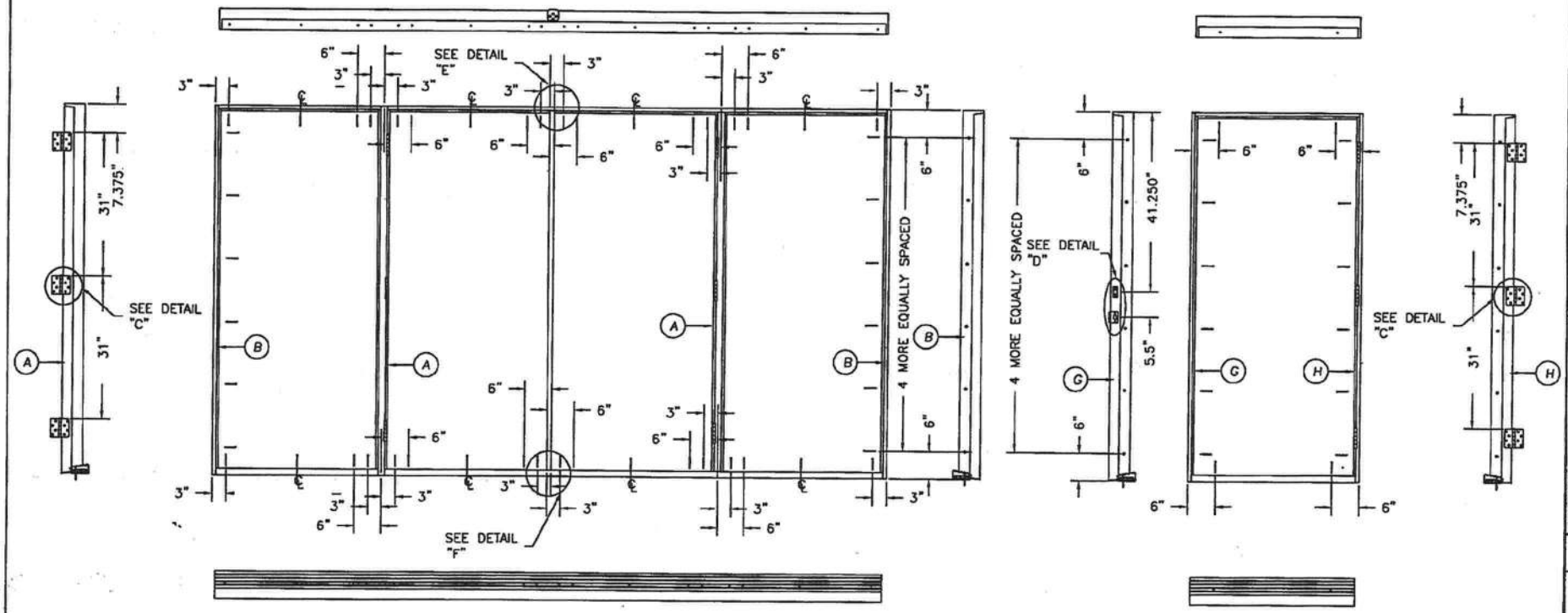

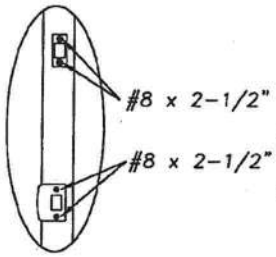

DETAIL "D"

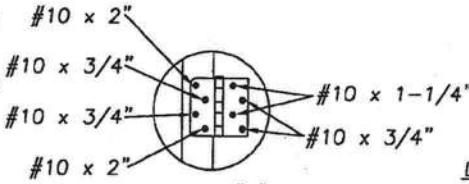

DETAIL "C"

DETAIL "E" ASTRAGAL

ATTACH ASTRAGAL RETAINER BOLT STRIKE PLATE TO FRAME AS SHOWN.

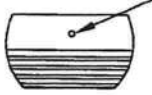

ASTRAGAL RETAINER BOLT HOLE MUST BE DRILLED THROUGH THE THRESHOLD & INTO THE STRUCTURE DEEP ENOUGH FOR A 1.375" THROW

DETAIL "F" ASTRAGAL

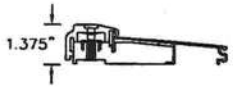

INSWING THRESHOLD

OUTSWING THRESHOLD

Addendum to NAMI
Certification No.: NT006110
Reviewed By:
Date Reviewed: 8/10/05

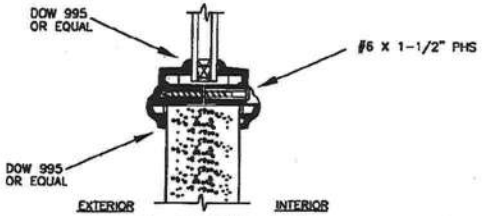

TYPICAL GLAZING DETAIL

MASONITE INTERNATIONAL CORP.
7300 REAMES RD.
CHARLOTTE, NC 28216

PRODUCT: "EXTERIOR DOOR PRODUCT" DOUBLE 6'-8" GLAZED WOOD-EDGE STEEL DOOR

PART OR ASSEMBLY: ANCHORING LOCATIONS & DETAILS

NO.	DATE	REVISIONS	BY

DATE: 7/11/05
SCALE: N.T.S.
DWG. BY: SWS
CHK. BY:
DRAWING NO.: DWG-MA-FL0130-05
SHEET 2 OF 3

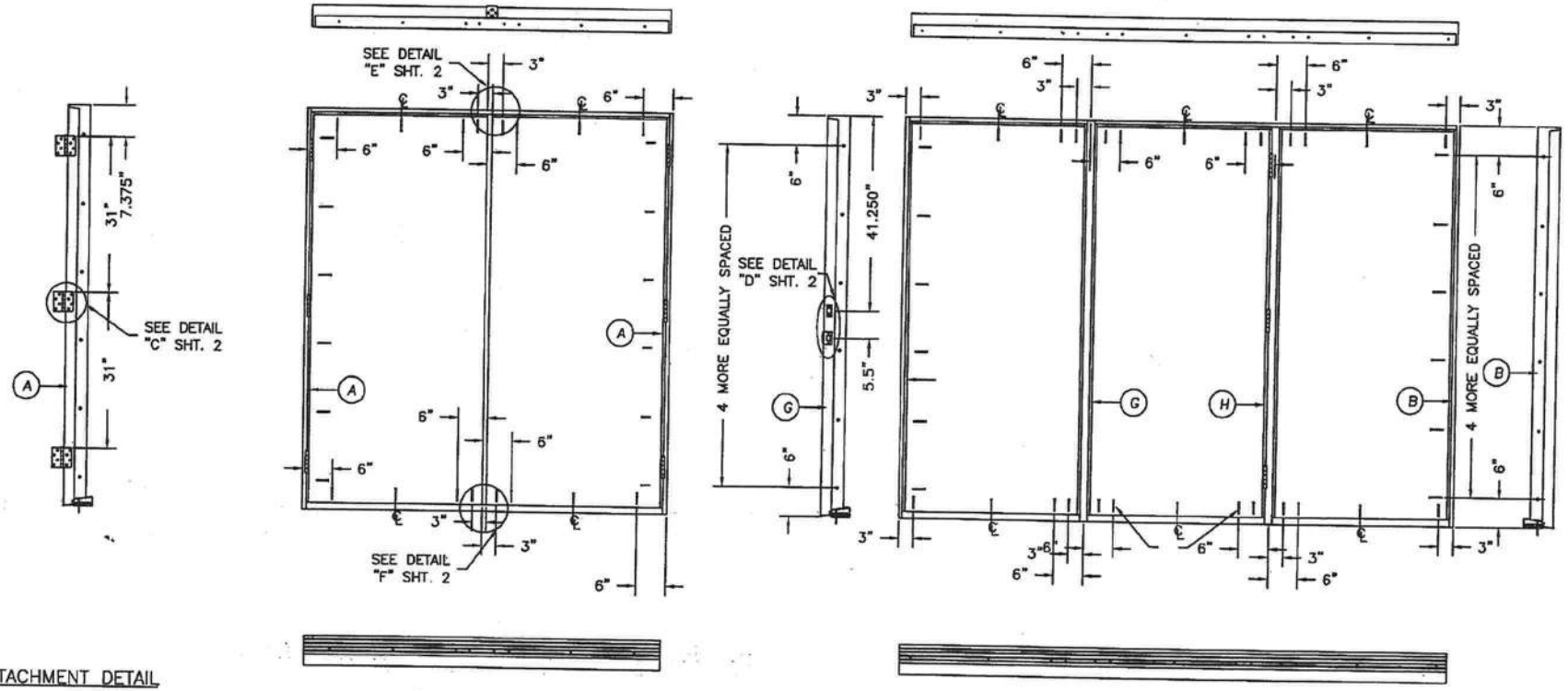

ATTACHMENT DETAIL

1. ANCHOR ANALYSIS FOR LOADING CONDITIONS PREPARED, SIGNED AND SEALED BY HAROLD E. RUPP, PE (FLORIDA #15935) WITH THE LOWEST (LEAST) FASTENER RATING FROM THE DIFFERENT FASTENERS BEING CONSIDERED FOR USE. JAMB, HEAD, AND THRESHOLD FASTENERS ANALYZED FOR THIS UNIT INCLUDE #10 WOOD SCREWS OR 3/16" TAPCONS. A PHYSICAL SHIM MUST BE PLACED IN SHIM SPACE AT EACH ANCHOR LOCATION.
2. THE WOOD SCREW SINGLE SHEAR DESIGN VALUES COME FROM ANSI/AF&PA NDA FOR SOUTHERN PINE LUMBER AND ACHEIVEMENT OF 1-1/2" MINIMUM EMBEDMENT. THE TAPCON MUST ACHIEVE MINIMUM EMBEDMENT OF 1-1/4".
3. WOOD BUCKS BY OTHERS MUST BE ANCHORED PROPERLY TO TRANSFER LOADS TO STRUCTURE.
4. MINIMUM DESIGN VALUE STRENGTH OF ANCHORS 171 LBS.

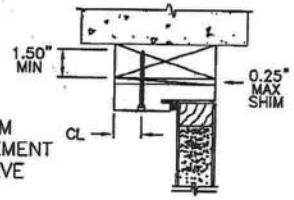

TYPICAL
ANCHOR INSTALLATION

HARDWARE SCHEDULE

1.	KWIKSET OR SCHLEGE ANSI/BHMA GRADE 3 OR BETTER CYLINDRICAL AND DEADLOCK HARDWARE TO BE INSTALLED AT 5-1/2" CENTERLINE.
2.	4" X 4" FULL MORTISE BUTT HINGES

Addendum to NAMI
Certification No.: NI006110
Reviewed By:
Date Reviewed: 8/10/05

MASONITE INTERNATIONAL CORP.
7300 REAMES RD.
CHARLOTTE, NC 28216

PRODUCT: "EXTERIOR DOOR PRODUCT" 6'-8" WOOD-EDGE STEEL GLAZED DOUBLE DOOR UNIT

PART OR ASSEMBLY: ANCHORING LOCATIONS & DETAILS

NO.	DATE	REVISIONS	BY

DATE: 7/11/05
SCALE: N.T.S.
DWG. BY: SWS
CHK. BY:
DRAWING NO.: DWG-MA-FL0130-05
SHEET 3 OF 3

The Florida Department of Community Affairs
Building Code Information System

SITE NAVIGATION

Home
Course Accreditation
Florida Building Code
Manufact. Buildings
Prototype Building
Surcharges
Training
Product Approval
License Search
Mailing List
Florida Building Commission

PRODUCT APPROVAL

Product Type Detail

Overview | Product Search | Organization Search | Product Application

User: Public User - Not Associated with Organization -

Need Help ?

Application #:	FL4904
Date Submitted:	07/25/2005
Code Version:	2004
Product Manufacturer:	Masonite International
Address/Phone/email:	One North Dale Mabry Suite 950 Tampa, FL 33609 (615) 441-4258
Category:	Exterior Doors
Subcategory:	Swinging
Evaluation Method:	Certification Mark or Listing

Referenced Standards from the Florida Building Code:

Section	Standard	Year
	TAS 201	1994
	TAS 202	1994
	TAS 203	1994
	ASTM E1300	1998
	ASTM E1300	2002

Section 2612 HVHZ PI

Certification Agency:	National Accreditation & Management Institute,
Quality Assurance Entity:	
Validation Entity:	
Authorized Signature:	Steve Schreiber sschreiber@masonite com

Evaluation/Test Reports Uploaded:

Installation Documents Uploaded: PTID_4904_I_Install 68 WE Glazed.pdf
PTID_4904_I_Install 68 WE Opaque.pdf
PTID_4904_I_Install 80 WE Glazed.pdf
PTID_4904_I_Install 80 WE Opaque.pdf

Product Approval Method: Method 1 Option A

Application Status: Approved
Date Validated: 09/27/2005
Date Approved: 10/06/2005
Date Certified to the 2004 Code:

Page: 1
Go

Page 1 / 1

App/Seq #	Product Model # or Name	Model Description	Limits of Use
4904 1	Wood-edge Steel Side-Hinged Door Units	6'-8" Opaque I/S and O/S Single Door	Evaluated for use in locations adhering to the Florida Building Code including the High Velocity Hurricane Zone, and where pressure requirements as determined by ASCE 7, Minimum Design Loads for Buildings and Other Structures, does not exceed the design pressures listed. 3'-0" x 6'-8" max nominal size Max DP = +/- 76.0. When large missile impact resistance is required, hurricane protective system is NOT required. See installation drawing DWG-MA-FL0128-05 for additional information.
4904.2	Wood-edge Steel Side-Hinged Door Units	8'-0" Opaque I/S and O/S Single Door	Evaluated for use in locations adhering to the Florida Building Code including the High Velocity Hurricane Zone, and where pressure requirements as determined by ASCE 7, Minimum Design Loads for Buildings and Other Structures, does not exceed the design pressures listed. 3'-0" x 8'-

			0" max nominal size Max DP = +/- 70.0. When large missile impact resistance is required, hurricane protective system is NOT required. See installation drawing DWG-MA-FL0129-05 for additional information.
4904.3	Wood-edge Steel Side-Hinged Door Units	6'-8" Opaque I/S and O/S Door w/ or w/o Sidelites	Evaluated for use in locations adhering to the Florida Building Code including the High Velocity Hurricane Zone, and where pressure requirements as determined by ASCE 7, Minimum Design Loads for Buildings and Other Structures, does not exceed the design pressures listed. 12'-0" x 6'-8" max nominal size. Max DP = +/- 55.0. When large missile impact resistance is required, hurricane protective system is NOT required on opaque panels, but is required on glazed panels. See installation drawing DWG-MA-FL0128-05 for additional information.
4904.4	Wood-edge Steel Side-Hinged Door Units	8'-0" Opaque I/S Door w/ or w/o Sidelites	Evaluated for use in locations adhering to the Florida Building Code including the High Velocity Hurricane Zone, and where pressure requirements as determined by ASCE 7, Minimum Design Loads for Buildings and Other Structures, does not exceed the design pressures listed 12'-0" x 8'-0" max nominal size. Max DP = + 45.0 / -50.0. When large missile impact resistance is required, hurricane protective system is NOT required on opaque panels, but is required on glazed panels. See installation drawing DWG-MA-FL0129-05 for additional information.
			Evaluated for use in

			locations adhering to the Florida Building Code including the High Velocity Hurricane Zone, and where pressure requirements as determined by ASCE 7, Minimum Design Loads for Buildings and Other Structures, does not exceed the design pressures listed. 12'-0" x 8'-0" max nominal size. Max DP = + 50.0 / -45.0. When large missile impact resistance is required, hurricane protective system is NOT required on opaque panels, but is required on glazed panels. See installation drawing DWG-MA-FL0129-05 for additional information.
4904.5	Wood-edge Steel Side-Hinged Door Units	8'-0" Opaque O/S w/ or w/o Sidelites	
4904.6	Wood-edge Steel Side-Hinged Door Units	6'-8" Glazed I/S and O/S Door w/ or w/o Sidelites	Evaluated for use in locations adhering to the Florida Building Code including the High Velocity Hurricane Zone, and where pressure requirements as determined by ASCE 7, Minimum Design Loads for Buildings and Other Structures, does not exceed the design pressures listed. 12'-0" x 6'-8" max nominal size. Max DP = +/- 50 5. When large missile impact resistance is required, hurricane protective system is required. See installation drawing DWG-MA-FL0130-05 for additional information.
4904.7	Wood-edge Steel Side-Hinged Door Units	8'-0" Glazed I/S Door w/ or w/o Sidelites	Evaluated for use in locations adhering to the Florida Building Code including the High Velocity Hurricane Zone, and where pressure requirements as determined by ASCE 7, Minimum Design Loads for Buildings and Other Structures, does not exceed the design pressures listed 12'-0" x 8'-0" max nominal size

			Max DP = +40 0 / -45.0. When large missile impact resistance is required, hurricane protective system is required. See installation drawing DWG-MA-FL0131-05 for additional information.
4904 8	Wood-edge Steel Side-Hinged Door Units	8'-0" Glazed O/S Door w/ or w/o Sidelites	Evaluated for use in locations adhering to the Florida Building Code including the High Velocity Hurricane Zone, and where pressure requirements as determined by ASCE 7, Minimum Design Loads for Buildings and Other Structures, does not exceed the design pressures listed. 12'-0" x 8'-0" max nominal size. Max DP = + 45.0 / -40.0. When large missile impact resistance is required, hurricane protective system is required. See installation drawing DWG-MA-FL0131-05 for additional information.

Next

NAMI NOTICE OF PRODUCT LINE CERTIFICATION

Certification No.: NI006110-Page 1
Date: 07/23/05
Revision Date:
Certification Program: Structural
Company: Masonite International
Code: M-703-1

The "Notice of Product Line Certification" is valid only when Administrator's Seal is applied to the upper left hand portion of this form and a certification label is applied to the product. This certification seal represents product conformity to the applicable specification and that all certification criteria has been satisfied.

The products and systems listed below are approved for listing in the Directory of Certified Products at www.NAMICertification.com. Please review, and advise NAMI immediately if data, as shown requires corrections.

Company: **Masonite International Corporation**
1955 Powis Road
West Chicago, IL 60185

Product Line: **Masonite Wood-Edge Steel Side-Hinged Door Units**

Test Report: **NCTL-210-2929-1/210-2930-1/210-2930-7/210-2930-7/210-3121-1/ 210-3123-1/210-3125-1/CTLA-919W**

Section 1: General Description of the Products and Systems under this Certification

1.1 **Frame:** The frame jambs consist of finger jointed pine with all corners coped, butted, and sealed using three 2" long wire staples (.04375").

1.2 **Mullion Construction:** Where used, each mullion constructed of laminated lumber with a pine cap and attached to the header and threshold with three #10 x 3" Philips Flat Head Wood Screws.

1.3 **Glazing:** Where used, the overall insulated glass was glazed into a rigid plastic lip-lite frame. Consisted of symmetric monolithic insulated glass with 3mm (0.118) tempered glass.

1.4 **Door Leaf Construction:** Each door leaf was constructed from 0.017"(6'8" height) or 0.020"(8'0"height) thick galvanized steel facings.

Section 2: Registered Suppliers

2.1	**Door Lites:**	**ODL, Specialty or Trinity**
2.2	**Astragal:**	**Endura Ultimate**

Section 3: Additional Supportive Test or Acceptance Data Provided with Certification Documentation included:

3.1 **Miami-Dade Building Code Compliance Notice of Acceptance for Lite Frame Material, NOA#02-0429.11; #02-1216.06 and #03-0303.07.**

3.2 **Surface Burning Characteristics for Foam Filled Door performed by Omega Point Laboratories to ASTM E84-98, "Standard Test Method for Surface Burning Characteristics of Building Materials-Report No. 15977-104313.**

3.3 **ASTM E1300 Glass Load Resistance Report provided by National Certified Testing Laboratories NCTL-110-9735-1.**

3.4 **Anchor Calculations for:**
Anchor Performance Calculation Report-Performed by Harold E. Rupp, P.E. (Florida No. 15935.)

See additional Pages of Certification for Certified Product Line Matrix(s) and Installation Details. If you have any questions regarding this certification, please contact NAMI at (757)594-8658.

National Accreditation & Management Institute, Inc.
11870 Merchants Walk Suite 202-Newport News, VA 23606
TEL(757) 594.8658 FAX(757)594-8659

NOTICE OF PRODUCT CERTIFICATION

Company: Masonite International Corporation
1955 Powis Road
West Chicago, IL 60185

Certification No.: NI006110-Page 3
Certification Date: 07/23/2005
Expiration Date: 12/31/2008

Product: Wood-Edge Opaque Inswing or Outswing Door w/ and w/o Non-Impact Rated Sidelites (w/Wood Frame unless noted)
Specifications Tested To: PA 201-94/202-94/203-94

The "Notice of Product Certification" is only valid if the NAMI Certification Label has been applied to the product as described within this document. The certification label represents product conformity to the applicable specification and that all certification criteria has been satisfied. This product has been approved for listing within NAMI's Certified Product Listing at www.Namicertification.com. NAMI's Certification Program is accredited by The American National Standards Institute (ANSI).

Configuration	Inswing or Outswing	Glazed or Opaque	Maximum Size	Design Pressure Pos/Neg	Missile Impact Rated	Test Report Number Drawing Number & Comments
X Single	I/S	Opaque	3'0" x 6'8"	+76/-76	Yes	NCTL-210-2929-1 Maximum Panel Size: 3'0" x 6'8" Installation Drawings-MA-FL0128-05
X Single	O/S	Opaque	3'0" x 6'8"	+76/-76	Yes	NCTL-210-2929-1 Maximum Panel Size: 3'0" x 6'8" Installation Drawings-MA-FL0128-05
XX Double	I/S	Opaque	6'0" x 6'8"	+55/-55	Yes	NCTL-210-2930-1 Maximum Panel Size: 3'0" x 6'8"/Sidelite: 3'0" x 6'8" Installation Drawings-MA-FL0128-05
XX Double	O/S	Opaque	6'0" x 6'8"	+55/-55	Yes	NCTL-210-2930-1 Maximum Panel Size: 3'0" x 6'8"/Sidelite: 3'0" x 6'8" Installation Drawings-MA-FL0128-05
XO/OX Single w/Sidelite	I/S	Opaque Door Glazed Sidelite	6'0" x 6'8"	+55/-55	Door-Yes Sidelite-No	NCTL-210-2930-1 Maximum Panel Size: 3'0" x 6'8"/Sidelite: 3'0" x 6'8" Installation Drawings-MA-FL0128-05
XO/OX Single w/Sidelites	O/S	Opaque Door Glazed Sidelite	6'0" x 6'8"	+55/-55	Door-Yes Sidelite-No	NCTL-210-2930-1 Maximum Panel Size: 3'0" x 6'8"/Sidelite: 3'0" x 6'8" Installation Drawings-MA-FL0128-05
OXO Single w/Sidelites	I/S	Opaque Door Glazed Sidelites	9'0" x 6'8"	+55/-55	Door-Yes Sidelites-No	NCTL-210-2930-1 Maximum Panel Size: 3'0" x 6'8"/Sidelite: 30" x 6'8" Installation Drawings-MA-FL0128-05
OXO Single w/Sidelites	O/S	Opaque Door Glazed Sidelites	9'0" x 6'8"	+55/-55	Door-Yes Sidelites-No	NCTL-210-2930-1 Maximum Panel Size: 3'0" x 6'8"/Sidelite: 3'0" x 6'8" Installation Drawings-MA-FL0128-05
OXXO Double w/Sidelites	I/S	Opaque Doors Glazed Sidelites	12'4" x 6'8"	+55/-55	Doors-Yes Sidelites-No	NCTL-210-2930-1 Maximum Panel Size: 3'0" x 6'8"/Sidelite: 3'0" x 6'8" Installation Drawings-MA-FL0128-05
OXXO Double w/Sidelites	O/S	Opaque Doors Glazed Sidelites	12'4" x 6'8"	+55/-55	Doors-Yes Sidelites-No	NCTL-210-2930-1 Maximum Panel Size: 3'0" x 6'8"/Sidelite: 3'0" x 6'8" Installation Drawings-MA-FL0128-05

National Accreditation & Management Institute, Inc./11870 Merchants Walk Suite 202/Newport News, VA 23606
Tel-757.594.8658/Fax-757.594.8659

NAMI AUTHORIZED SIGNATURE: _____

NOTICE OF PRODUCT CERTIFICATION

Company: Masonite International Corporation
1955 Powis Road
West Chicago, IL 60185

Certification No.: NI006110-Page 4
Certification Date: 07/23/2005
Expiration Date: 12/31/2008

Product: Wood-Edge Steel Opaque Inswing or Outswing Door w/ and w/o Non-Impact Rated Sidelites (w/Wood Frame unless noted)
Specifications Tested To: PA201-94/202-94/203-94

The "Notice of Product Certification" is only valid if the NAMI Certification Label has been applied to the product as described within this document. The certification label represents product conformity to the applicable specification and that all certification criteria has been satisfied. This product has been approved for listing within NAMI's Certified Product Listing at www.Namicertification.com. NAMI's Certification Program is accredited by The American National Standards Institute (ANSI).

Configuration	Inswing or Outswing	Glazed or Opaque	Maximum Size	Design Pressure Pos/Neg	Missile Impact Rated	Test Report Number Drawing Number & Comments
X Single	I/S	Opaque	3'0" x 8'0"	+70/-70	Yes	NCTL-210-3121-1/CTLA919W Maximum Panel Size: 3'0" x 8'0" Installation Drawings-MA-FL0129-05
X Single	O/S	Opaque	3'0" x 8'0"	+70/-70	Yes	NCTL-210-3121-1/CTLA919W Maximum Panel Size: 3'0" x 8'0" Installation Drawings-MA-FL0129-05
XX Double	I/S	Opaque	6'0" x 8'0"	+45/-50	Yes	NCTL-210-3123-1 Maximum Panel Size: 3'0" x 8'0"/Sidelite: 3'0" x 8'0" Installation Drawings-MA-FL0129-05
XX Double	O/S	Opaque	6'0" x 8'0"	+50/-45	Yes	NCTL-210-3123-1 Maximum Panel Size: 3'0" x 8'0"/Sidelite: 3'0" x 8'0" Installation Drawings-MA-FL0129-05
XO/OX Single w/Sidelite	I/S	Opaque Door Glazed Sidelite	6'0" x 8'0"	+45/-50	Door-Yes Sidelite-No	NCTL-210-3123-1 Maximum Panel Size: 3'0" x 8'0"/Sidelite: 3'0" x 8'0" Installation Drawings-MA-FL0129-05
XO/OX Single w/Sidelites	O/S	Opaque Door Glazed Sidelite	6'0" x 8'0"	+50/-45	Door-Yes Sidelite-No	NCTL-210-3123-1 Maximum Panel Size: 3'0" x 8'0"/Sidelite: 3'0" x 8'0" Installation Drawings-MA-FL0129-05
OXO Single w/Sidelites	I/S	Opaque Door Glazed Sidelites	9'0" x 8'0"	+45/-50	Door-Yes Sidelites-No	NCTL-210-3123-1 Maximum Panel Size: 3'0" x 8'0"/Sidelite: 3'0" x 8'0" Installation Drawings-MA-FL0129-05
OXO Single w/Sidelites	O/S	Opaque Door Glazed Sidelites	9'0" x 8'0"	+50/-45	Door-Yes Sidelites-No	NCTL-210-3123-1 Maximum Panel Size: 3'0" x 8'0"/Sidelite: 3'0" x 8'0" Installation Drawings-MA-FL0129-05
OXXO Double w/Sidelites	I/S	Opaque Doors Glazed Sidelites	12'4" x 8'0"	+45/-50	Doors-Yes Sidelites-No	NCTL-210-3123-1 Maximum Panel Size: 3'0" x 8'0"/Sidelite: 3'0" x 8'0" Installation Drawings-MA-FL0129-05
OXXO Double w/Sidelites	O/S	Opaque Doors Glazed Sidelites	12'4" x 8'0"	+50/-45	Doors-Yes Sidelites-No	NCTL-210-3123-1 Maximum Panel Size: 3'0" x 8'0"/Sidelite: 3'0" x 8'0" Installation Drawings-MA-FL0129-05

National Accreditation & Management Institute, Inc./11870 Merchants Walk Suite 202/Newport News, VA 23606
Tel-757.594.8658/Fax-757.594.8659

NAMI AUTHORIZED SIGNATURE: _____

NOTICE OF PRODUCT CERTIFICATION

Company: Masonite International Corporation
1955 Powis Road
West Chicago, IL 60185

Certification No.: NI006110-Page 5
Certification Date: 07/23/2005
Expiration Date: 12/31/2008

Product: Wood-Edge Steel Glazed Inswing or Outswing Door w/ and w/o Non-Impact Rated Sidelites (w/Wood Frame unless noted)
Specifications Tested To: PA 202-94

The "Notice of Product Certification" is only valid if the NAMI Certification Label has been applied to the product as described within this document. The certification label represents product conformity to the applicable specification and that all certification criteria has been satisfied. This product has been approved for listing within NAMI's Certified Product Listing at www.Namicertification.com. NAMI's Certification Program is accredited by The American National Standards Institute (ANSI).

Configuration	Inswing or Outswing	Glazed or Opaque	Maximum Size	Design Pressure Pos/Neg	Missile Impact Rated	Test Report Number Drawing Number & Comments
X Single	I/S	Glazed	3'0" x 6'8"	+50.5/-50.5	No	NCTL-210-2930-7 Maximum Panel Size: 3'0" x 6'8" Installation Drawings-MA-FL0130-05
X Single	O/S	Glazed	3'0" x 6'8"	+50.5/-50.5	No	NCTL-210-2930-7 Maximum Panel Size: 3'0" x 6'8" Installation Drawings-MA-FL0130-05
XX Double	I/S	Glazed	6'0" x 6'8"	+50.5/-50.5	No	NCTL-210-2930-7 Maximum Panel Size: 3'0" x 6'8" Installation Drawings-MA-FL0130-05
XX Double	O/S	Glazed	6'0" x 6'8"	+50.5/-50.5	No	NCTL-210-2930-7 Maximum Panel Size: 3'0" x 6'8" Installation Drawings-MA-FL0130-05
XO/OX Single w/Sidelite	I/S	Glazed Door Glazed Sidelite	6'0" x 6'8"	+50.5/-50.5	Door-No Sidelite-No	NCTL-210-2930-7 MA-WL0115/16/17/18/19/20/21-02 Maximum Panel Size: 3'0" x 6'8" Installation Drawings-MA-FL0130-05
XO/OX Single w/Sidelites	O/S	Glazed Door Glazed Sidelite	6'0" x 6'8"	+50.5/-50.5	Door-No Sidelite-No	NCTL-210-2930-7 Maximum Panel Size: 3'0" x 6'8" Installation Drawings-MA-FL0130-05
OXO Single w/Sidelites	I/S	Glazed Door Glazed Sidelites	9'0" x 6'8"	+50.5/-50.5	Door-No Sidelites-No	NCTL-210-2930-7 Maximum Panel Size: 3'0" x 6'8" Installation Drawings-MA-FL0130-05
OXO Single w/Sidelites	O/S	Glazed Door Glazed Sidelites	9'0" x 6'8"	+50.5/-50.5	Door-No Sidelites-No	NCTL-210-2930-7 Maximum Panel Size: 3'0" x 6'8" Installation Drawings-MA-FL0130-05
OXXO Double w/Sidelites	I/S	Glazed Doors Glazed Sidelites	12'6" x 6'8"	+50.5/-50.5	Doors-No Sidelites-No	NCTL-210-2930-7 Maximum Panel Size: 3'0" x 6'8" Installation Drawings-MA-FL0130-05
OXXO Double w/Sidelites	O/S	Glazed Doors Glazed Sidelites	12'6" x 6'8"	+50.5/-50.5	Doors-No Sidelites-No	NCTL-210-2930-7 Maximum Panel Size: 3'0" x 6'8" Installation Drawings-MA-FL0130-05

National Accreditation & Management Institute, Inc./11870 Merchants Walk Suite 202/Newport News, VA 23606
Tel-757.594.8658/Fax-757.594.8659

NAMI AUTHORIZED SIGNATURE: _____

NOTICE OF PRODUCT CERTIFICATION

Company: Masonite International Corporation
1955 Powis Road
West Chicago, IL 60185

Certification No.: NI006110-Page 6
Certification Date: 07/23/2005
Expiration Date: 12/31/2008

Product: Wood-Edge Steel Glazed Inswing or Outswing Door w/ and w/o Non-Impact Rated Sidelites (w/Wood Frame unless noted)

Specifications Tested To: PA 202-94

The "Notice of Product Certification" is only valid if the NAMI Certification Label has been applied to the product as described within this document. The certification label represents product conformity to the applicable specification and that all certification criteria has been satisfied. This product has been approved for listing within NAMI's Certified Product Listing at www.Namicertification.com. NAMI's Certification Program is accredited by The American National Standards Institute (ANSI).

Configuration	Inswing or Outswing	Glazed or Opaque	Maximum Size	Design Pressure Pos/Neg	Missile Impact Rated	Test Report Number Drawing Number & Comments
X Single	I/S	Glazed	3'0" x 8'0"	+40/-45	No	NCTL-210-3125-1 Maximum Panel Size: 3'0" x 8'0" Installation Drawings-MA-FL0131-05
X Single	O/S	Glazed	3'0" x 8'0"	+45/-40	No	NCTL-210-3125-1 Maximum Panel Size: 3'0" x 8'0" Installation Drawings-MA-FL0131-05
XX Double	I/S	Glazed	6'0" x 8'0"	+40/-45	No	NCTL-210-3125-1 Maximum Panel Size: 3'0" x 8'0" Installation Drawings-MA-FL0131-05
XX Double	O/S	Glazed	6'0" x 8'0"	+45/-40	No	NCTL-210-3125-1 Maximum Panel Size: 3'0" x 8'0" Installation Drawings-MA-FL0131-05
XO/OX Single w/Sidelite	I/S	Glazed Door Glazed Sidelite	6'0" x 8'0"	+40/-45	Door-No Sidelite-No	NCTL-210-3125-1 Maximum Panel Size: 3'0" x 8'0" Installation Drawings-MA-FL0131-05
XO/OX Single w/Sidelites	O/S	Glazed Door Glazed Sidelite	6'0" x 8'0"	+45/-40	Door-No Sidelite-No	NCTL-210-3125-1 Maximum Panel Size: 3'0" x 8'0" Installation Drawings-MA-FL0131-05
OXO Single w/Sidelites	I/S	Glazed Door Glazed Sidelites	9'0" x 8'0"	+40/-45	Door-No Sidelites-No	NCTL-210-3125-1 Maximum Panel Size: 3'0" x 8'0" Installation Drawings-MA-FL0131-05
OXO Single w/Sidelites	O/S	Glazed Door Glazed Sidelites	9'0" x 8'0"	+45/-40	Door-No Sidelites-No	NCTL-210-3125-1 Maximum Panel Size: 3'0" x 8'0" Installation Drawings-MA-FL0131-05
OXXO Double w/Sidelites	I/S	Glazed Doors Glazed Sidelites	12'6" x 8'0"	+40/-45	Doors-No Sidelites-No	NCTL-210-3125-1 Maximum Panel Size: 3'0" x 8'0" Installation Drawings-MA-FL0131-05
OXXO Double w/Sidelites	O/S	Glazed Doors Glazed Sidelites	12'6" x 8'0"	+45/-40	Doors-No Sidelites-No	NCTL-210-3125-1 Maximum Panel Size: 3'0" x 8'0" Installation Drawings-MA-FL0131-05

National Accreditation & Management Institute, Inc./11870 Merchants Walk Suite 202/Newport News, VA 23606
Tel-757.594.8658/Fax-757.594.8659

NAMI AUTHORIZED SIGNATURE: _____

FI 13783

Architectural Testing

AAMA/WDMA 101/I.S. 2-97
TEST REPORT

Rendered to:

JORDAN COMPANIES

SERIES/MODEL: 8500
TYPE: PVC Single Hung Window

Title of Test	Results
AAMA/WDMA Rating	H-R40 (44 x 84)
Uniform Load Deflection Test Pressure	± 40.0 psf
Operating Force	10 lbs max.
Air Infiltration	0.21 cfm/ft^2
Water Resistance Test Pressure	6.00 psf
Uniform Load Structural Test Pressure	± 60.0 psf
Deglazing	Passed
Forced Entry Resistance	Grade 10

Reference should be made to full report for test specimen description and data.

Report No: 02-48976.02
Report Date: 02-26-04
Expiration Date: 02-25-08

849 Western Avenue North
Saint Paul, Minnesota 55117-5245
phone: 651.636.3835
fax: 652.636.3843
www.archtest.com

Architectural Testing

AAMA/WDMA 101/I.S.2-97 TEST REPORT

Rendered to:

JORDAN COMPANIES
P.O. Box 18377
Memphis, Tennessee 38118

Report No:	02-48976.02
Test Date:	02/25/04
Report Date:	02/26/04
Expiration Date:	02/25/08

Project Summary: Architectural Testing, Inc. (ATI) was contracted by Jordan Companies to perform tests on a Jordan Companies Series 8500 Single Hung Window. The sample tested successfully met the performance requirements for a H-R40 44 x 84 rating. Test specimen description and results are reported herein.

Test Procedure: The test specimen was evaluated in accordance with AAMA/NWDMA 101/I.S. 2-97, *"Voluntary Specifications for Aluminum, Vinyl (PVC) and Wood Windows and Glass Doors."*

Test Specimen Description:

Series/Model: 8500

Type: PVC Single Hung Window

Overall Size: 3' 8" wide by 7' 0" high

Sash Size: 3' 4-3/8" wide by 2' 5" high

Fixed D.L.O. Size: 3' 4-3/4" wide by 4' 5" high

Screen Size: 3' 4-3/4" wide by 2' 4-1/4" high

Finish: All PVC was white

849 Western Avenue North
Saint Paul, Minnesota 55117-5245
phone: 651.636.3835
fax: 652.636.3843
www.archtest.com

Test Specimen Description: (Continued)

Glazing Type: The window utilized nominal 3/4" insulating glass comprised of two single-strength annealed sheets in the operating sash and two double-strength sheets in the fixed lite and a desiccant-filled metal spacer system. The glass for the fixed area was set from the interior into a bed of silicone sealant with PVC stops used on the interior. The sash was glazed from the exterior into a bed of silicone sealant with PVC stops used on the exterior.

Weatherstripping:

Description	Quantity	Location
0.260" high by 0.187" backed pile with center fin	1 Row	Sash top and bottom rails
0.260" high by 0.187" backed pile with center fin	2 Rows	Sash stiles

Frame Construction: Frame corners were miter-cut and welded. Aluminum reinforcement was utilized in the fixed meeting rail (Jordan part number H-2447).

Sash Construction: Sash corners were miter-cut and welded. Aluminum reinforcement was utilized in the top rail (Jordan part number H-2448).

Hardware:

Metal cam locks with keepers	2	6" from ends and meeting rail
Plastic tilt latches	2	Sash top rail corners
Metal tilt pins	2	Sash bottom rail corners
Block-and-tackle balances	2	One per jamb

Drainage:

3/16" by 5/8" slots	2	1-3/4" from ends in sill pocket to hollow below
1/8" by 1/2" slots	4	1-3/4" and 2" from each end through sill exterior face

Installation: The unit was installed into a Grade 2 SPF 2" by 8" wood test buck secured through the flange with 1-5/8" screws spaced 4" from corners and 8" on center. The nail fin was sealed to the buck with silicone.

Test Results: The results are tabulated as follows.

Paragraph	Title of Test	Results	Allowed
2.2.1.6.1	Operating Force		
	Force to initiate motion	10 lbs	30 lbs max.
	Force to keep in motion	8 lbs	30 lbs max.
2.1.2	Air Infiltration per ASTM E 283-97 (See Note #1)		
	@ 1.57 psf (25 mph)	0.21 cfm/ft^2	0.30 cfm/ft^2

Note #1: The tested specimen meets the performance levels specified in AAMA/WDMA 101/I.S.2-97 for air infiltration.

2.1.3	Water Resistance per ASTM 547-97 (See Note #2)		
2.1.4.1	Uniform Load Deflection per ASTM E 330-97 (See Note #2)		
2.1.4.2	Uniform Load Structural per ASTM E 330-97 (See Note #2)		

Note #2: The client opted to start at a pressure higher than the minimum required. Those results are listed under "Optional Performance."

2.2.1.6.2	Deglazing Test per ASTM E 987		
	In operating direction @ 70 lbs		
	Top rail	0.04"/ 8%	0.500"/100%
	Bottom rail	0.06"/12%	0.500"/100%
	In remaining direction @ 50 lbs		
	Left stile	0.04"/8%	0.500"/100%
	Right stile	0.03"/6%	0.500"/100%
2.1.7	Corner Weld Test	Meets as stated	Meets as stated
2.1.8	Forced Entry Resistance per ASTM F 588-97		
	Type A		
	Grade 10		
	Lock Manipulation Test	No entry	No entry
	Tests A1 through A7	No entry	No entry
	Lock Manipulation Test	No entry	No entry

Test Results: (Continued)

Paragraph	Title of Test	Results	Allowed
Optional Performance:			
4.3	Water Resistance per ASTM E 547-97 WTP = 6.00 psf	No leakage	No leakage
4.4.1	Uniform Load Deflection per ASTM E 330-97 (See Note #3) (Measurements reported were taken on the meeting rail) (Loads were held for 60 seconds)		
	@ 40.0 psf (positive)	0.45"	(See Note #3)
	@ 40.0 psf (negative)	0.52"	(See Note #3)
4.4.2	Uniform Load Structural per ASTM E 330-97 (Measurements reported were taken on the meeting rail) (Loads were held for 10 seconds)		
	@ 60.0 psf (positive)	0.03"	0.16" max.
	@ 60.0 psf (negative)	0.03"	0.16" max.

Note #3: The Uniform Load Deflection test is not a AAMA/NWWDA 101/I.S. 2-97 requirement for this product designation. The data is recorded in this report for information only.

Detailed drawings, representative samples of the test specimen, and a copy of this report will be retained by ATI for a period of four years. The above results were secured by using the designated test methods and they indicate compliance with the performance requirements of the above referenced specification. This report does not constitute certification of this product, which may only be granted by the certification program administrator. This report may not be reproduced except in full without the approval of Architectural Testing, Inc.

For ARCHITECTURAL TESTING, INC.

Digitally Signed by: Paul L. Spiess

Paul L. Spiess
Project Manager

Digitally Signed by: Daniel A. Johnson

Daniel A. Johnson
Regional Manager

DAJ/jb
02-48976.02

FI 8500 SH 13783 DO 13853 Slider 13843

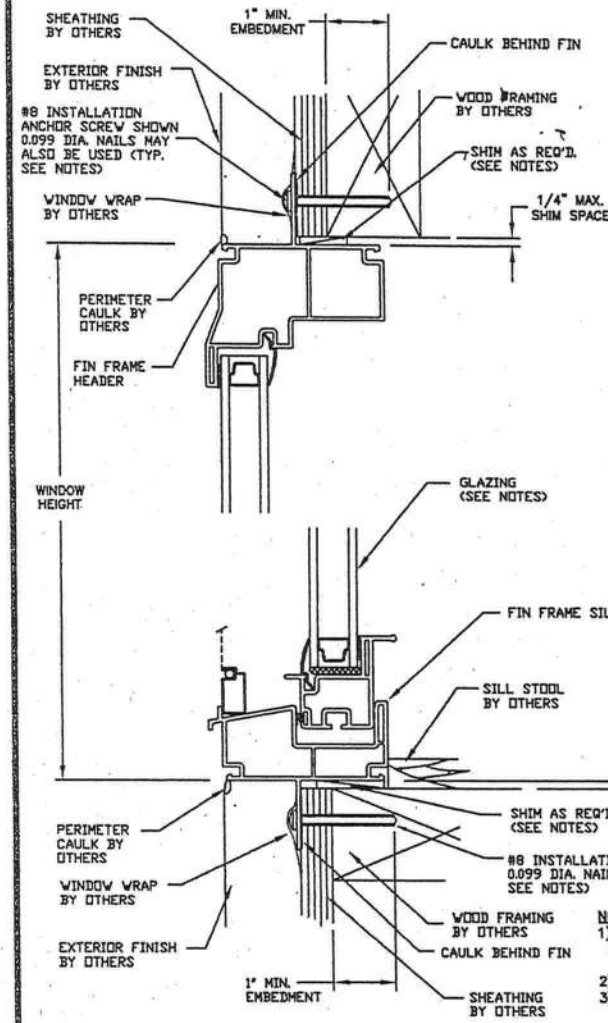

SECTION A–A

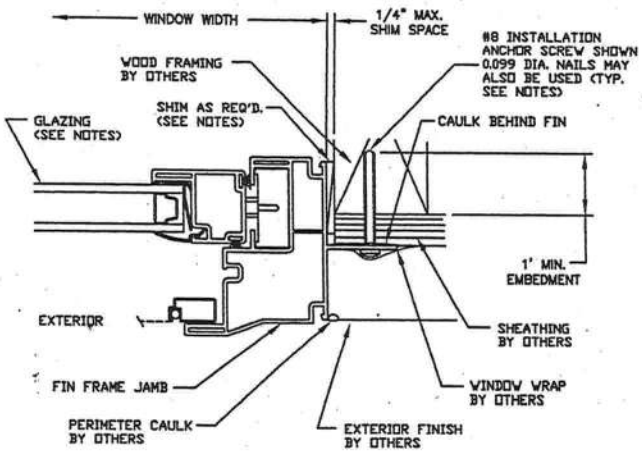

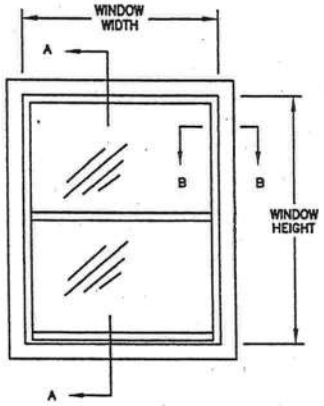

ELEVATION

VIEWED FROM EXTERIOR

NOTES:

1) SHIM AS REQ'D. AT EACH INSTALLATION ANCHOR WITH LOAD BEARING SHIM. MAX. ALLOWABLE SHIM STACK TO BE 1/4". APPLY SHIM WHERE SPACE OF 1/16" OR GREATER IS PRESENT.
2) WINDOW FRAME MATERIAL: POLYVINYL CHLORIDE
3) INSTALLATION ANCHORS, #8 SCREW & .099 DIA. NAILS MUST BE OF SUFFICIENT LENGTH TO ACHIEVE MIN. EMBEDMENT OF 1" INTO WOOD FRAME. USE INSTALLATION ANCHOR CHART FOR NUMBER OF ANCHORS REQD.
4) IF EXACT WINDOW SIZE IS NOT LISTED USE NEXT LARGER SIZE IN THE INSTALLATION CHART FOR NUMBER OF ANCHORS REQD.
5) USE CAULK FOR PERIMETER SEAL AROUND EXTERIOR OF WINDOW FRAME.
6) USE CAULK BEHIND WINDOW FIN.
7) GLASS THICKNESS MAY VARY PER REQUIREMENTS OF ASTM E1300.
8) INSTALLATION AS STATED HEREIN COMPLIES WITH THE FLORIDA BUILDING CODE AT THE DESIGN PRESSURES INDICATED ON THE COMPARATIVE ANALYSIS & ANCHOR CHART.

COMPARATIVE ANALYSIS & ANCHOR CHART

WINDOW SIZE (INCHES)	DESIGN PRESSURE CAPACITY IN PSF		NO. OF #8 SCREWS REQ'D. IN FRAME		NO. OF 0.090 DIA. NAILS REQ'D. IN FRAME	
WIDTH/HEIGHT	EXTERIOR	INTERIOR	HEAD & SILL	@ EA. JAMB	HEAD & SILL	@ EA. JAMB
23-5/8 X 35-5/8	40	120	2	3	3	5
23-5/8 X 43-5/8	40	106	2	3	3	6
23-5/8 X 47-5/8	40	98	2	3	3	6
23-5/8 X 51-5/8	40	91	2	3	3	6
23-5/8 X 59-5/8	40	80	2	4	3	7
23-5/8 X 71-5/8	40	66	2	4	3	7
23-5/8 X 81	40	56	2	4	3	7
27-5/8 X 35-5/8	40	99	2	3	3	5
27-5/8 X 43-5/8	40	91	2	3	3	6
27-5/8 X 47-5/8	40	86	2	3	3	6
27-5/8 X 51-5/8	40	81	2	3	3	6
27-5/8 X 59-5/8	40	71	2	4	3	7
27-5/8 X 71-5/8	40	60	2	4	3	7
27-5/8 X 81	40	53	2	4	3	7
29-5/8 X 35-5/8	40	90	2	3	3	4
29-5/8 X 43-5/8	40	85	2	3	3	6
29-5/8 X 47-5/8	40	81	2	3	3	6
29-5/8 X 51-5/8	40	75	2	3	3	6
29-5/8 X 59-5/8	40	67	2	4	3	7
29-5/8 X 71-5/8	40	56	2	4	3	7
29-5/8 X 81	40	50	2	4	3	7
31-5/8 X 35-5/8	40	83	2	3	3	4
31-5/8 X 43-5/8	40	79	2	3	3	5
31-5/8 X 47-5/8	40	75	2	3	3	6
31-5/8 X 51-5/8	40	71	2	3	3	6
31-5/8 X 59-5/8	40	63	2	4	3	7
31-5/8 X 71-5/8	40	53	2	4	3	7
31-5/8 X 81	40	47	2	4	3	7
35-5/8 X 35-5/8	40	70	3	3	4	4
35-5/8 X 43-5/8	40	69	3	3	4	5
35-5/8 X 47-5/8	40	67	3	3	4	6
35-5/8 X 51-5/8	40	61	3	3	3	6
35-5/8 X 59-5/8	40	56	3	4	3	6
35-5/8 X 71-5/8	40	46	3	4	3	7
35-5/8 X 81	40	42	3	4	3	7
39-5/8 X 35-5/8	40	61	3	3	4	3
39-5/8 X 43-5/8	40	60	3	3	4	4
39-5/8 X 47-5/8	40	58	3	3	4	5
39-5/8 X 51-5/8	40	56	3	3	4	5
39-5/8 X 59-5/8	40	51	3	4	3	6
39-5/8 X 71-5/8	40	43	3	4	3	7
39-5/8 X 81	40	40	3	4	3	7
43-5/8 X 35-5/8	40	53	3	3	4	3
43-5/8 X 43-5/8	40	52	3	3	4	4
43-5/8 X 47-5/8	40	51	3	3	4	5
43-5/8 X 51-5/8	40	49	3	3	4	5
43-5/8 X 59-5/8	40	45	3	4	3	6
43-5/8 X 71-5/8	40	40	3	4	3	7
43-5/8 X 81	40	40	3	4	3	8
44 X 35-5/8	49	52	3	3	4	3
44 X 43-5/8	40	51	3	3	4	4
44 X 47-5/8	40	50	3	3	4	5
44 X 51-5/8	40	48	3	3	4	5
44 X 59-5/8	40	44	3	4	3	6
44 X 71-5/8	40	40	3	4	3	7
44 X 81	40	40	3	4	3	8

REV	DESCRIPTION	DATE
A	REVISED DP CAPACITIES & ANCHOR QNT'YS.	09-03-02

JORDAN
P.O. BOX 18377
MEMPHIS, TN. 38118
PHONE (901) 363-2121

DESCRIPTION: SERIES 8500 SINGLE HUNG INSTALLATION DETAIL

DATE: 6/21/02 | FILE NAME: JRDN0025 | DRAWN BY: BB

PREPARED BY: PRODUCT TECHNOLOGY CORP., 1150 LOUISIANA AVE., SUITE 6, WINTER PARK, FLORIDA 32789 PHONE 407 628-4334 FAX 407 628-4335

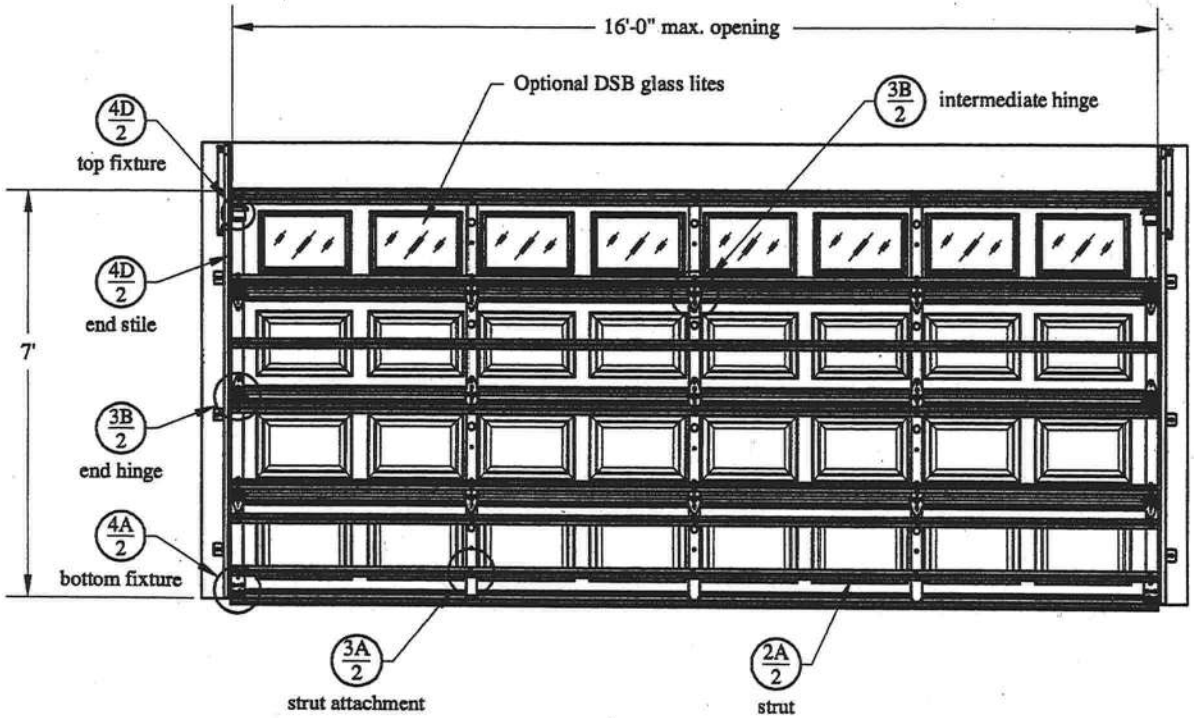

Door Model	Gauge	Decimal
2250/2251	25	.0185
4250/4251	25	.0185
2240/2241	24	.0225
4240/4241	24	.0225
5240/5241	24	.0225

door height	section quantity	strut quantity	trk brkt per side
6'-6" to 7'-0"	4	7	3
7'-6" to 8'-0"	5	8	4
8'-3" to 8'-9"	5	9	4
9'-0" to 10'-6"	6	11	5
10'-9" to 12'-3"	7	13	6
12'-6" to 14'-0"	8	15	7

Refer to Supplemental Instructions for strut placement on doors over 7'-0" high

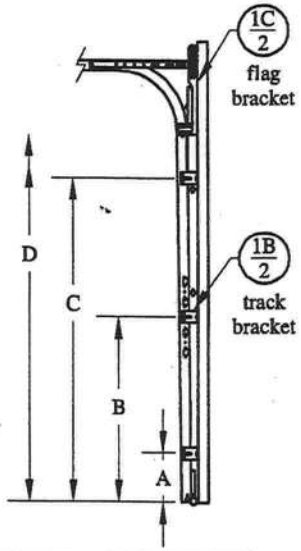

Track Bracket Chart		door height								
		6'-6"	6'-9"	7'-0"	7'-6"	7'-9"	8'-0"	8'-3"	8'-6"	8'-9"
track brackets	D	n/a	n/a	n/a	72"	69"	72"	81"	84"	87"
	C	60"	63"	66"	58"	55"	58"	60"	63"	66"
	B	35"	35"	38"	34"	31"	34"	32"	35"	38"
	A	10"	7"	10"	10"	7"	10"	4"	7"	10"

Track bracket locations shown above are for doors up to five sections high. Additional door sections may be added for a maximum door height of 14'-0". One track bracket (per track) must be added for each section and spaced at a distance not greater than the corresponding section height.

This door has been tested in accordance with ANSI/DASMA 108-2002
Design Pressure (DP): 18.5 pos / 20.7 neg
Test Pressure (TP): 27.8 pos / 31.1 neg

Per 2004 FBC Table 1609.6E, DP meets or exceeds basic wind speed of;
V = 110 MPH for Exposure B and mean roof height of 30' or less
V = 93 MPH for Exposure C and mean roof height of 30' or less

Maximum door size: 16'-0" wide by 14'-0" tall

Glazing and door have not been tested for windborne debris.

Wood buck and supporting structural elements shall be designed by a registered professional engineer for wind loads shown on this drawing.

If door is not electrically operated, a lock must be installed.

Professional Engineer's seal provided only for verification of windload construction details

John E. Scates, P.E.
1411 LeMay Street #205
Carrollton, Texas 75007
Florida P.E. # 51737

FL 5519

C.H.I. OVERHEAD DOORS
SCALE nts
DATE 10-25-2005
Model 2250/51 (16'-0" wide)
C.H.I. Drawing: Z3-1607-01100

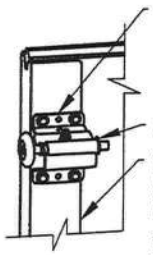

14 gauge (.070) galvanized steel top fixture. Each fixture attached with four 1/4" x 3/4" screws.

push nut

20 gauge (.036) end stile manufactured by C.H.I.

Strut, if applicable, not shown for clarity.

The 2x6 vertical wood jambs are to be grade 2 or better southern pine. Fasteners may be countersunk to provide a flush mounting surface.

2" x 7/16" (nominal) Stop molding required (not supplied by C.H.I.)

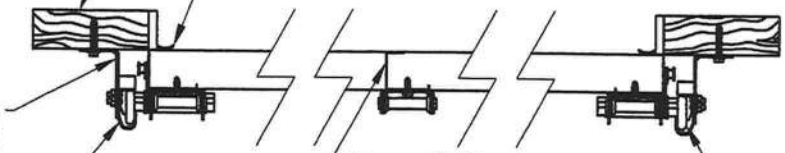

12 gauge (.095) galvanized steel track bracket fastened to wood jamb with one 5/16" x 1-5/8" wood lag screw per bracket.

2" x .051 min. galvanized steel track fastened to track brackets. Each track bracket attached with one 1/4" x 5/8" track bolt and nut.

20 gauge (.036) center stile manufactured by C.H.I.

2" steel roller

Details on some views may have been omitted for clarity.

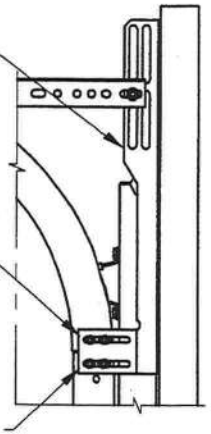

12 gauge (.086) galvanized steel flag bracket fastened to wood jamb with three 5/16" x 1-5/8" wood lag screws.

Flag bracket attached to horizontal track with two 1/4" x 5/8" track bolts and nuts.

Flag bracket attached to vertical track with two 1/4" x 5/8" track bolts and nuts.

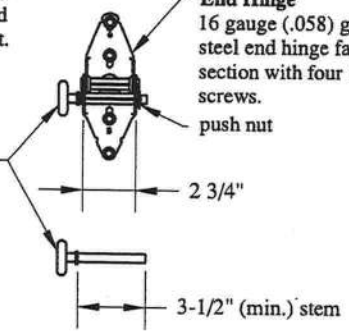

End Hinge
16 gauge (.058) galvanized steel end hinge fastened to section with four 1/4" x 3/4" screws.

push nut

2" steel track roller.

2 3/4"

3-1/2" (min.) stem

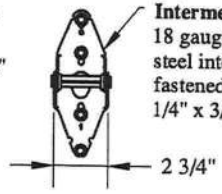

Intermediate Hinge
18 gauge (.047) galvanized steel intermediate hinge fastened to section with four 1/4" x 3/4" screws.

2 3/4"

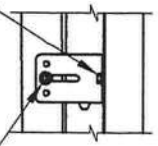

12 gauge (.095) galvanized steel track bracket fastened to wood jamb with one 5/16" x 1-5/8" wood lag screw per bracket.

Each track bracket attached with one 1/4" x 5/8" track bolt and nut. Or two 1/4" x 11/32" rivets.

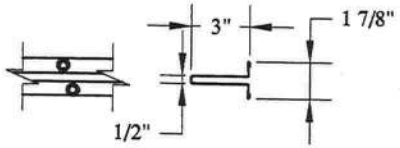

3"

1 7/8"

1/2"

20 gauge (.034) 33 ksi galvanized steel 3" strut attached with two 1/4" x 3/4" screws per stile or hinge plate.

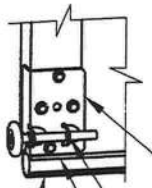

12 gauge (.102) galvanized steel bottom bracket manufactured by C.H.I. Each bracket attached with four red 1/4" x 3/4" screws.

Vinyl weatherstrip

push nut

Aluminum extrusion

Design Load: 18.5 pos / 20.7 neg
Test Load: 27.8 pos / 31.1 neg
page 2 of 2

Professional Engineer's seal provided only for verification of windload construction details

John E. Scates, P.E.
1411 LeMay Street #205
Carrollton, Texas 75007
Florida P.E. # 51737

C.H.I.

SCALE nts

DATE 10-25-2005

Model 2250/51 (16'-0" wide)
C.H.I. Drawing: Z3-1607-01100

FLORIDA DEPARTMENT OF
Community Affairs

Community Affairs

Product Approval
USER: Public User

Search Criteria

Code Version	2004	FL#	ALL
Application Type	ALL	Product Manufacturer	Elk Corpor
Category	Roofing	Subcategory	ALL
Application Status	ALL	Compliance Method	ALL

Search Results - Applications

FL#	Type	Manufacturer	Validated By
FL586-R2 History	Revision	Elk Corporation **Category:** Roofing **Subcategory:** Asphalt Shingles	
FL728-R1 History	Revision	Elk Corporation **Category:** Roofing **Subcategory:** Asphalt Shingles	*
FL1476-R2 History	Revision	Elk Corporation **Category:** Roofing **Subcategory:** Asphalt Shingles	
FL2143-R2 History	Revision	Elk Corporation **Category:** Roofing **Subcategory:** Asphalt Shingles	
FL3453-R1 History	Revision	Elk Corporation **Category:** Roofing **Subcategory:** Underlayments	
FL3461-R2 History	Revision	Elk Corporation **Category:** Roofing **Subcategory:** Underlayments	PRI Asphalt Technologies, Inc (813) 621-5777
FL5178	New	Elk Corporation **Category:** Roofing **Subcategory:** Other	
FL5511-R1 History	Revision	Elk Corporation **Category:** Roofing **Subcategory:** Underlayments	
FL5524	New	Elk Corporation **Category:** Roofing **Subcategory:** Asphalt Shingles	
FL5683	New	Elk Corporation **Category:** Roofing **Subcategory:** Asphalt Shingles	
FL5783	New	Elk Corporation **Category:** Roofing	PRI Asphalt Technologies, Inc (813) 621-5777

ELK

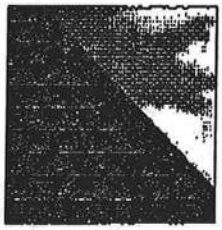

PRESTIQUE®
HIGH DEFINITION®

RAISED PROFILE®

Prestique Plus *High Definition* and Prestique Gallery Collection™

Product size 13¼" x 39¼"
Exposure 5¾"
Pieces/Bundle 16
Bundles/Square 4/98.5 sq.ft.
Squares/Pallet 11

50-year limited warranty period: 5-7** years non-prorated coverage for shingles and application labor with prorated coverage for remainder of limited warranty period, plus an option for transferability*. 5-year limited wind warranty*. Wind Coverage: standard 60 mph, extended 110 mph***

Raised Profile

Product size 13¼" x 38¾"
Exposure 5¾"
Pieces/Bundle 22
Bundles/Square 3/100 sq.ft.
Squares/Pallet 16

30-year limited warranty period: 5-7** years non-prorated coverage for shingles and application labor with prorated coverage for remainder of limited warranty period, plus an option for transferability*. 5-year limited wind warranty*. Wind Coverage: standard 70 mph.

Prestique I *High Definition*

Product size 13¼" x 39¼"
Exposure 5¾"
Pieces/Bundle 16
Bundles/Square 4/98.5 sq.ft.
Squares/Pallet 14

40-year limited warranty period: 5-7** years non-prorated coverage for shingles and application labor with prorated coverage for remainder of limited warranty period, plus an option for transferability*. 5-year limited wind warranty*. Wind Coverage: standard 60 mph, extended 90 mph***

HIP AND RIDGE SHINGLES

Seal-A-Ridge® w/FLX™

Size: 12" x 12"
Exposure: 6¾"
Pieces/Bundle: 45
Coverage: 4 Bundles = 100 linear feet

Vented RidgeCrest™ w/FLX™

Size: 13" x 13¼"
Exposure: 9¾"
Pieces/Box: 28
Coverage: 5 boxes = 100 linear feet

Prestique *High Definition*

Product size 13¼" x 38¾"
Exposure 5¾"
Pieces/Bundle 22
Bundles/Square 3/100 sq.ft.
Squares/Pallet 16

30-year limited warranty period: 5-7** years non-prorated coverage for shingles and application labor with prorated coverage for remainder of limited warranty period, plus an option for transferability*. 5-year limited wind warranty*. Wind Coverage: standard 60 mph.

Elk Starter Strip

52 Bundles/Pallet
18 Pallets/Truck
936 Bundles/Truck
19 Pieces/Bundle
1 Bundle = 120.33 linear feet

Available Colors (Check Availability): Antique Slate, Weatherednood, Shakewood, Sablewood, Hickory, Barkwood, Forest Green, Wedgewood, Birchwood, Sandalwood.
Gallery Collection: Balsam Forest™, Weathered Sage™, Sienna Sunset™.

All Prestique, Raised Profile and Seal-A-Ridge, and Prestique Starter Strip roofing products contain sealant which activates with the sun's heat, bonding shingles into a wind and weather resistant cover that resists blow-offs and leaks.

Check for availability with built-in StainGuard® treatment to inhibit the discoloration of roofing granules caused by the growth of certain types of algae.

All Prestique and Raised Profile shingles meet UL® Wind Resistant (UL 997) and Class "A" Fire Ratings (UL 790); and ASTM Specifications D 3018, Type-I; D 3161, Type-I; E 108 and the requirements of ASTM D 3462.

All Prestique and Raised Profile shingles have approval from the Florida Building Code Commission, Metro-Dade County, ICBO, and Texas Department of Insurance.

*See actual limited warranty for conditions and limitations.
** Effective January 1, 2004, the seven year non-prorated Umbrella Coverage Period applies only when a full Elk Roof System is installed with the original installation of the Elk shingles, all in accordance with Elk's applicable instructions for each product. A full Elk roof system includes Elk Hip and Ridge shingles on all hips and ridges, Elk Starter Strip along all rake and eave edges, an Elk ventilation system, and Elk All-Climate Self-Adhering Underlayment in all valleys. Additionally, Elk All-Climate Self-Adhering Underlayment is required along the rake and eave edges of the roof in mid north of the states of VA, KY, MO, KS, CO, UT, NV, & OR.
***For a limited Wind Warranty up to 110 mph for Prestique Gallery Collection, Prestique Plus, or 90 mph for Prestique I or Grande, at least six (6) properly placed NAILS and Elk Starter Strip shingles are required. See application instructions printed on the shingle wrapper for additional requirements.

SPECIFICATIONS

SCOPE: Work includes furnishing all labor, materials and equipment necessary to complete installation of (name) shingles specified herein. Color shall be (name of color). Hip and ridge type to be Elk Seal-A-Ridge with formula *FLX*.

All exposed metal surfaces (flashing, vents, etc.) to be painted with matching Elk roof accessory paint.

PREPARATION OF ROOF DECK: Roof deck to be dry, well-seasoned 1" x 6" (25.4mm x 152.4mm) boards; exterior-grade plywood (exposure 1 rated sheathing) at least 3/8" (9.525mm) thick conforming to the specifications of the American Plywood Association; 7/16" (11.074mm) oriented strandboard; or chipboard. Most fire retardant plywood decks are NOT approved substrates for Elk shingles. Consult Elk Field Service for application specifications over other decks and other slopes.

MATERIALS: Underlayment for standard roof slopes, 4" per foot (101.6/304.8mm) or greater: apply non-perforated No. 15 or 30 asphalt-saturated felt underlayment. For Low slopes(4" per foot (101.6/304.8mm) to a minimum of 2" per foot (50.8/304.8mm)), use two plies of underlayment overlapped a minimum of 19". Fasteners shall be of sufficient length and holding power for securing material as required by the application instructions printed on shingle wrapper.

For areas where algae is a problem, shingles shall be (name) with StainGuard treatment, as manufactured by the Elk Tuscaloosa plant. Hip and ridge type to be Seal-A-Ridge with formula *FLX* with StainGuard treatment.

Complete application instructions are published by Elk and printed on the back of every shingle bundle. All warranties are contingent upon the correct installation as shown on the instructions. These instructions are the minimum required to meet Elk application requirements. In some areas, building codes may require additional application techniques or methods beyond our instructions. In these cases, the local code must be followed. Under no circumstances will Elk accept application requirements less than those contained in its application instructions.

For specifications in CSI format, call 800.354.SPEC (7732) or e-mail specinfo@elkcorp.com.

SOUTHEAST & ATLANTIC OFFICE:
800.945.5551

CORPORATE HEADQUARTERS:
800.354.7732

PLANT LOCATION:
800.945.5545

ELK
The Premium Choice™
www.elkcorp.com
SS00T 06/04

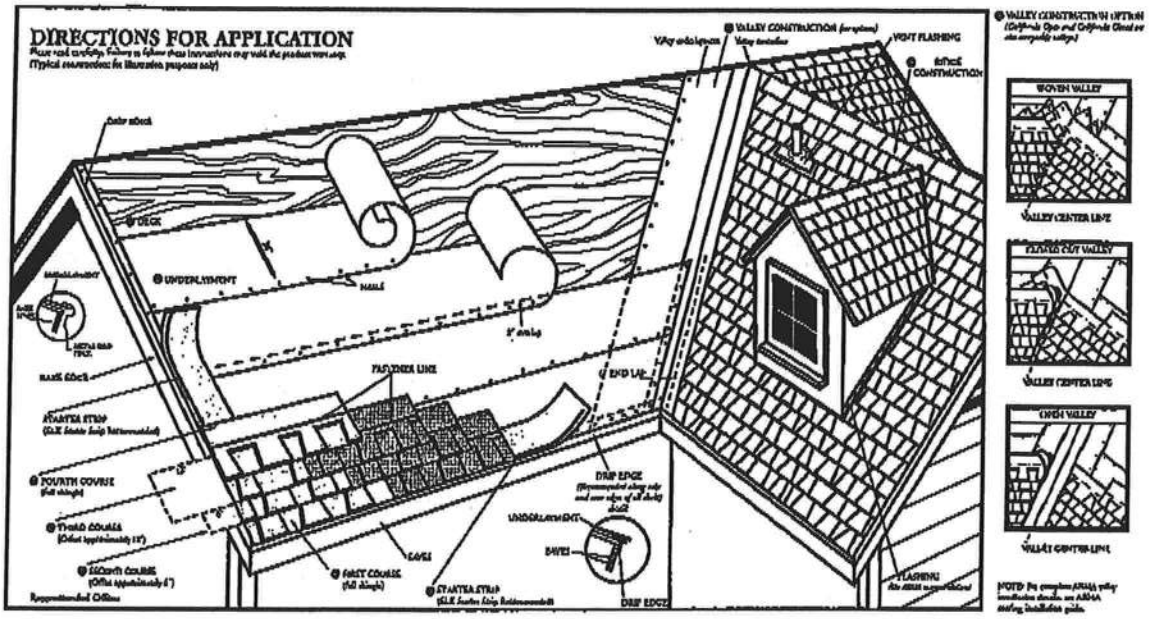

DIRECTIONS FOR APPLICATION

These application instructions are the minimum required to meet Elk's application requirements. Your failure to follow these instructions may void the product warranty. In some areas, the building codes may require additional application techniques or methods beyond our instructions. In these cases, the local code must be followed. Under no circumstances will Elk accept application requirements that are less than those printed here. Shingles should not be jammed tightly together. All attics should be properly ventilated. Note: It is not necessary to remove tape on back of shingle.

❶ DECK PREPARATION

Roof decks should be dry, well-seasoned 1" x 6" boards or exterior grade plywood minimum 3/8" thick and conform to the specifications of the American Plywood Association or 7/16" oriented strandboard, or 7/16" chipboard.

❷ UNDERLAYMENT

Apply underlayment (Non-Perforated No. 15 or 30 asphalt saturated felt). Elk Versashield® or self adhering underlayment is also acceptable. Cover drip edge at eaves only.

For low slope (2/12 up to 4/12), completely cover the deck with two plies of underlayment overlapping a minimum of 19". Begin by fastening a 19" wide strip of underlayment placed along the eaves. Place a full 36" wide sheet over the starter, horizontally placed along the eaves and completely overlapping the starter strip.

EAVE FLASHING FOR ICE DAMS (ASK A ROOFING CONTRACTOR, REFER TO ARMA MANUAL OR CHECK LOCAL CODES)

For standard slope (4/12 to less than 21/12), use coated roll roofing of no less than 50 pounds over the felt underlayment extending from the eave edge to a point at least 24" beyond the inside wall of the living space below or one layer of a self-adhered eave and flashing membrane.

For low slope (2/12 up to 4/12), use a continuous layer of asphalt plastic cement between the two plies of underlayment from the eave edge up roof to a point at least 24" beyond the inside wall of the living space below or one layer of a self-adhered eave and flashing membrane.

Consult the Elk Technical Services Department for application specifications over other decks and other slopes.

❸ STARTER SHINGLE COURSE

USE AN ELK STARTER STRIP OR THE HEADLAP OF A STRIP SHINGLE WITH THE ADHESIVE STRIP POSITIONED AT THE EAVE EDGE. With at least 3" trimmed from the end of the first shingle, start at the rake edge overhanging the eave and rake edges 1/2" to 3/4". Fasten 2" from the lower edge and 1" from each side.

❹ FIRST COURSE

Start at rake and continue course with full shingles laid flush with the starter course. Shingles may be applied with a course alignment of 45° on the roof

❺ SECOND COURSE

Offset the second course of shingles with respect to the first by approximately 6". Other offsets are approved if greater than 4"

❻ THIRD COURSE

Offset the next course by 6" with respect to the second course, or consistent with the original offset.

❼ FOURTH COURSE

Start at the rake and continue with full shingles across roof.

FIFTH AND SUCCEEDING COURSES.

Repeat application as shown for second, third, and fourth courses. Do not rack shingles straight up the roof. Offsets may be adjusted around valleys and penetrations.

❽ VALLEY CONSTRUCTION

Open, woven and closed cut valleys are acceptable when applied by Asphalt Roofing Manufacturing Association (ARMA) recommended procedures. For metal valleys, use 36" wide vertical underlayment prior to applying metal flashing (secure edge with nails). No nails are to be within 6" of valley center.

❾ RIDGE CONSTRUCTION

For ridge construction Elk recommends Class "A" ZeRidge or Seal-A-Ridge® with formula FLX™ or RidgeCrest® with FLX (See ridge package for installation instructions). Vented RidgeCrest or 3-tab shingles are also approved.

FASTENERS

While nailing is the preferred method for Elk shingles, Elk will accept fastening methods according to the following instructions.

Using the fastener line as a reference, nail or staple the shingle in the double thickness common head area. For shingles without a fastener line, nails or staples must be placed between end/or in the sealant dots.

NAILS: Corrosive resistant, 3/8" head, minimum 12-gauge roofing nails. Elk recommends 1-1/4" for new roofs and 1-1/2" for roof-overs. In cases where you are applying shingles to a roof that has an exposed overhang, for new roofs only, 3/4" ring shank nails are allowed to be used from the eave's edge to a point up the roof that is past the outside wall line. 1" ring shank nails allowed for re-roof.

STAPLES: Corrosive resistant, 16-gauge minimum, crown width minimum of 15/16". Note: An improperly adjusted staple gun can result in raised staples that can cause a fish-mouthed appearance and can prevent sealing.

Fasteners should be long enough to obtain 3/4" deck penetration or penetration through deck, whichever is less. This product meets the requirements of the IRC 2003 code when fastened with 4 nails.

MANSARD APPLICATIONS

Correct fastening is critical to the performance of the roof. For slopes exceeding 60° (or 21/12) use six fasteners per shingle. Locate fasteners in the fastener area 1" from each side edge with the remaining four fasteners equally spaced along the length of the double thickness (laminated) area. Only fastening methods according to the above instructions are acceptable.

LIMITED WIND WARRANTY

- For a Limited Wind Warranty, all Prestique and Raised Profile™ shingles must be applied with 4 properly placed fasteners, or in the case of mansard applications, 6 properly placed fasteners per shingle.
- For a Limited Wind Warranty up to 110 MPH for Prestique Gallery Collection or Prestique Plus or 90 MPH for Prestique I, shingles must be applied with 6 properly placed NAILS per shingle. SHINGLES APPLIED WITH STAPLES WILL NOT QUALIFY FOR THIS ENHANCED LIMITED WIND WARRANTY. Also, Elk Starter Strip shingles must be applied at the eaves and rake edges to qualify Prestique Plus, Prestique Gallery Collection and Prestique I shingles for this enhanced Limited Wind Warranty. Under no circumstances should the Elk Shingles or the Elk Starter Strip overhang the eaves or rake edge more than 3/4 of an inch.

HELP STOP BLOW-OFFS AND CALL-BACKS

A minimum of four fasteners must be driven into the DOUBLE THICKNESS (laminated) area of the shingle. Nails or staples must be placed along – and through – the "fastener line" or on products without fastener lines, nail or staple between and in line with sealant dots. CAUTION: Do not use fastener line for shingle alignment.

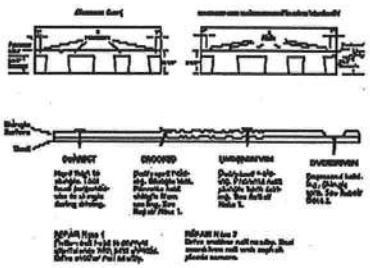

Refer to local codes which in some areas may require specific application techniques beyond those Elk has specified.

All Prestique and Raised Profile shingles have a U.L.® Wind Resistance Rating when applied in accordance with these instructions using nails or staples on re-roofs as well as new construction.

CAUTION TO WHOLESALER: Careless and improper storage or handling can harm fiberglass shingles. Keep these shingles completely covered, dry, reasonably cool, and protected from the weather. Do not store near various sources of heat. Do not store in direct sunlight until applied. DO NOT DOUBLE STACK. Systematically rotate all stock so that the material that has been stored the longest will be the first to be moved out.

ELK
The Premium Choice®
www.elkcorp.com

Water Wells
Pumps & Service

Phone: (386) 752-6677
Fax: (386) 752-1477

Lynch Well Drilling, Inc.
173 SW Young Place
Lake City, FL 32025
www.lynchwelldrilling.com

April 12, 2007

Columbia County Building Department
P. O. Box 1529
Lake City, Fl. 32056

To Whom It May Concern:

As required by building code regulations for Columbia County in order that a building permit can be issued, the following well information is provided with regard to the above-referenced well:

Size of Pump Motor:	1 Horse Power
Size of Pressure Tank:	81-Gallon Bladder Tank
Cycle Stop Valve Used:	No

Should you require any additional information, please contact us.

Sincerely,

Linda Newcomb

Linda Newcomb
Lynch Well Drilling, Inc.

Water Wells
Pumps & Service

Phone: (386) 752-6677
Fax: (386) 752-1477

Lynch Well Drilling, Inc.

173 SW Young Place
Lake City, FL 32025
www.lynchwelldrilling.com

Casing Size 4 inch Steel Pump Installation: Deep Well Submersible

Pump Make Aermotor Pump Model S20-100 HP 1

System Pressure (PSI) On 30 Off 50 Average Pressure 40

Pumping System GPM at average pressure and pumping level 20(GPM)

Tank Installation: Bladder /Galvanized Make Challenger

Model PC 244 Size 81 gallon

Tank Drawdown per cycle at system pressure 25.1 gallons

Linda Newcomb
Signature

Linda Newcomb
Print Name

2609
License Number

4/12/07
Date

CERTIFICATE OF

OCCUPANCY

COLUMBIA COUNTY, FLORIDA

Department of Building and Zoning Inspection

This Certificate of Occupancy is issued to the below named permit holder for the building and premises at the below named location, and certifies that the work has been completed in accordance with the Columbia County Building Code.

Parcel Number 17-3S-16-02168-110 **Building permit No.** 000026746

Use Classification SFD,UTILITY **Fire:** 70.62

Permit Holder STANLEY CRAWFORD **Waste:** 184.25

Owner of Building JOHN & KAREN DEARDORFF **Total:** 254.87

Location: 861 NW BLACKBERRY CIRCLE, LAKE CITY, FL

Date: 11/03/2008

Harry Dicks

Building Inspector

POST IN A CONSPICUOUS PLACE
(Business Places Only)

Notice of Treatment

Applicator: Florida Pest Control & Chemical Co. (www.flapest .com)
Address: 536 SE Baya DR
City Lake City Phone 752-1203

Site Location: Subdivision
Lot # Block# Permit # 26746
Address 861 NW Blackberry CIR.

Product used	Active Ingredient	% Concentration
☒ Premise	Imidacloprid	0.1%
☐ Termidor	Fipronil	0.12%
☐ Bora-Care	Disodium Octaborate Tetrahydrate	23.0%

Type treatment: ☒ Soil ☐ Wood

Area Treated	Square feet	Linear feet	Gallons Applied
MB, BP, FP, & Grg's	3696		330

As per Florida Building Code 104.2.6 – If soil chemical barrier method for termite prevention is used, final exterior treatment shall be completed prior to final building approval.

If this notice is for the final exterior treatment, initial this line _____.

5/29/08 Date
7:57 Time
Guy Print Technician's Name

Remarks:

Applicator - White Permit File - Canary Permit Holder - Pink

10/05 ©