44

As required by Florida Statute 553.842 and Florida Administrative Code 9B-72, please provide the information and approval numbers on the building components listed below if they will be utilized on the construction project for which you are applying for a building permit. We recommend you contact your local product supplier should you not know the product approval number for any of the applicable listed products. Statewide approved products are listed online @ www.floridabuilding.org

Category/Subcategory	Manufacturer	Product Description	Approval Number(s)
1. EXTERIOR DOORS			
A. SWINGING			
B. SLIDING			
C. SECTIONAL/ROLL UP			
D. OTHER			
2. WINDOWS			
A. SINGLE/DOUBLE HUNG			
B. HORIZONTAL SLIDER			
C. CASEMENT			
D. FIXED			
E. MULLION			
F. SKYLIGHTS			
G. OTHER			
3. PANEL WALL			
A. SIDING			
B. SOFFITS	Ply Gem Mastic	Soffit	FL 32502.1
C. STOREFRONTS			
D. GLASS BLOCK			
E. OTHER	Morton Buildings, Inc.	MBI HI-RIB WALL PANEL	FL 37256
4. ROOFING PRODUCTS			
A. ASPHALT SHINGLES			
B. NON-STRUCT METAL			
C. ROOFING TILES			
D. SINGLE PLY ROOF			
E. OTHER	Morton Buildings, Inc.	MBI HI-RIB Roof PANEL	FL 37257
5. STRUCT COMPONENTS			
A. WOOD CONNECTORS			
B. WOOD ANCHORS			
C. TRUSS PLATES			
D. INSULATION FORMS			
E. LINTELS			
F. OTHERS			
6. NEW EXTERIOR			
ENVELOPE PRODUCTS			

COLUMBIA COUNTY BUILDING DEPARTMENT
Received for FILE COPY
Code Compliance
PLANS EXAMINER

The products listed below did not demonstrate product approval at plan review. I understand that at the time of inspection of these products, the following information must be available to the inspector on the jobsite; 1) copy of the product approval, 2) performance characteristics which the product was tested and certified to comply with, 3) copy of the applicable manufacturers installation requirements.
Further, I understand these products may have to be removed if approval cannot be demonstrated during inspection.

NOTES: _____

717-846-3747

Fax 717-846-0355

HR Engineering, Inc.

1541 E. Market St.
York, PA 17403

15 December 2020

Brian Long, R & D Manager
Morton Buildings, Inc.
252 W. Adams Street
P.O. Box 399
Morton, IL 61550

RE: Evaluation Report Hi-Rib II Roof Panels, 2020 FBC

Dear Mr. Long;

The following Morton Buildings, Inc. roofing product; Hi-Rib II Steel Roof Panels has been determined by testing and a combination of comparative and rational analyses to be in conformance with 2020 Florida Building Code, Sections 1504.3.2 *Metal panel roof systems* and 1507.4. *Metal roof panels.* Uplift testing was done to UL 580 and UL 1897 at Underwriters Laboratories, Inc. and is reported in UL File Number R21540 and Project 07NK20519. Roof diaphragm testing was done to ASTM E 455 at Architectural Testing, Inc. and is reported in their project 77287.01-122-44. The comparative and rational analyses were done by myself and are reported here. The complete analyses for the results shown here is in a 7 page hand written report titled *HI-RIB II STEEL ROOF PANELS FLORIDA EVALUATION 2020.*

Testing was done in 2007 under UL 1897-04. The present version of UL 1897-12 has no additional testing required by UL, or change in actual test requirements.

The configuration of these panels is, 36" effective width, 7/8" high ribs at 12" spacing, and 2 embosses between each rib. The panels are produced in 3 different thicknesses; 0.015", 0.017", and 0.019". Installation is on wood purlins spaced at 24" maximum, with a minimum panel slope of 2:12. Installation fasteners are proprietary #9 (0.177" diameter) stainless steel screws with a bonded 7/16" diameter stainless steel washer under the head. A screw is installed through each panel rib into each purlin.

The allowable design pressures for the 0.015" thick panel are +/-60 psf, which is adequate for the 110 mph wind zone, exposure B, with a maximum roof height of 50 feet. The allowable design pressures for the 0.017" thick panel are +/-75 psf, which is adequate for 120 mph wind zone, exposure B, with a maximum roof height of 60 feet; or 120 mph wind zone, exposure C, with a maximum roof height of 15 feet; or 110 mph wind zone, exposure C, with a maximum roof height of 35 feet. The allowable design pressures for the 0.019" thick panel are +/-90 psf, which is adequate for 145 mph wind zone, exposure B, with a maximum roof height of 30 feet; or 130 mph wind zone, exposure C, with a maximum roof height of 15 feet; or 130 mph wind zone, exposure B, with a maximum roof height of 60 feet; or 120 mph wind zone, exposure C, with a maximum roof height of 35 feet. In order to obtain these values, the screws must penetrate into the wood purlins a minimum of 1-1/8 inches.

The 2020 Florida Building Code in Section 1609.1.1 requires the use of ASCE 7-10 for determining wind loads. The values in the previous paragraph were determined using Figure 30.5-1 in ASCE 7. A Risk Category II Building was used in the analyses. This roof panel can be used on Risk Category I, II, III, and IV Buildings.

The results of the diaphragm testing are summarized in the table below. One value for the 0.015" thick panel with lap rib stitching and no insulation was lowered to make a reasonable fit with the other test results. The allowable shear loads were calculated from the average ultimate shear strengths using a factor of safety of 2.0. All values for the 0.019" thick panel were determined by comparative analyses.

MORTON BUILDINGS HI-RIB II ROOF PANELS DIAPHRAGM LOADINGS

PANEL THICKNESS IN INCHES	LAP RIB STITCHING	INSULATION	AV. ULTIMATE SHEAR STRENGTH LB. / FT.	ALLOWABLE SHEAR LOAD LB. / FT.
.015	NO	NO	238	119
.017	NO	NO	267	134
.019	NO	NO	296	148
.015	YES	NO	302	151
.017	YES	NO	309	154
.019	YES	NO	316	158
.015	NO	YES	237	118
.017	NO	YES	244	122
.019	NO	YES	251	126
.015	YES	YES	260	130
.017	YES	YES	338	169
.019	YES	YES	416	208

This roof panel is not for use in High-Velocity Hurricane Zones. Additional installation details are shown on the drawing attached to this report. I trust that this information is sufficient for your needs. If there are any questions about this evaluation report, or if anything additional is required, please contact me.

Sincerely yours;

Allen N. Reeves

Allen N. Reeves, P.E.
Structural Engineer
Florida License No. 19354
15 DEC. 2020

ANR:anr
Cc: 20120001

ALLEN N. REEVES
LICENSE
No. 19354
STATE OF
FLORIDA
PROFESSIONAL ENGINEER

Product Approval
USER: Public User

Search Criteria

Refine Search

Code Version	2020	FL#	37257
Application Type	ALL	Product Manufacturer	ALL
Category	ALL	Subcategory	ALL
Application Status	ALL	Compliance Method	ALL
Quality Assurance Entity	ALL	Quality Assurance Entity Contract Expired	ALL
Product Model, Number or Name	ALL	Product Description	ALL
Approved for use in HVHZ	ALL	Approved for use outside HVHZ	ALL
Impact Resistant	ALL	Design Pressure	ALL
Other	ALL		

Search Results - Applications

FL#	Type	Manufacturer	Validated By	Status
FL37257	New	Morton Buildings, Inc **Category:** Roofing **Subcategory:** Metal Roofing	Ted Berman, PE (305) 868-4707	Applied For

*Approved by DBPR. Approvals by DBPR shall be reviewed and ratified by the POC and/or the Commission if necessary.

The State of Florida is an AA/EEO employer. Copyright 2007-2013 State of Florida. :: Privacy Statement :: Accessibility Statement :: Refund Statement

Under Florida law, email addresses are public records. If you do not want your e-mail address released in response to a public-records request, do not send electronic mail to this entity. Instead, contact the office by phone or by traditional mail. If you have any questions, please contact 850.487.1395. *Pursuant to Section 455.275(1), Florida Statutes, effective October 1, 2012, licensees licensed under Chapter 455, F.S. must provide the Department with an email address if they have one. The emails provided may be used for official communication with the licensee. However email addresses are public record. If you do not wish to supply a personal address, please provide the Department with an email address which can be made available to the public. To determine if you are a licensee under Chapter 455, F.S., please click here.

Product Approval Accepts:

Credit Card
Safe
securityMETRICS

FASTENING HI-RIB WALL PANELS

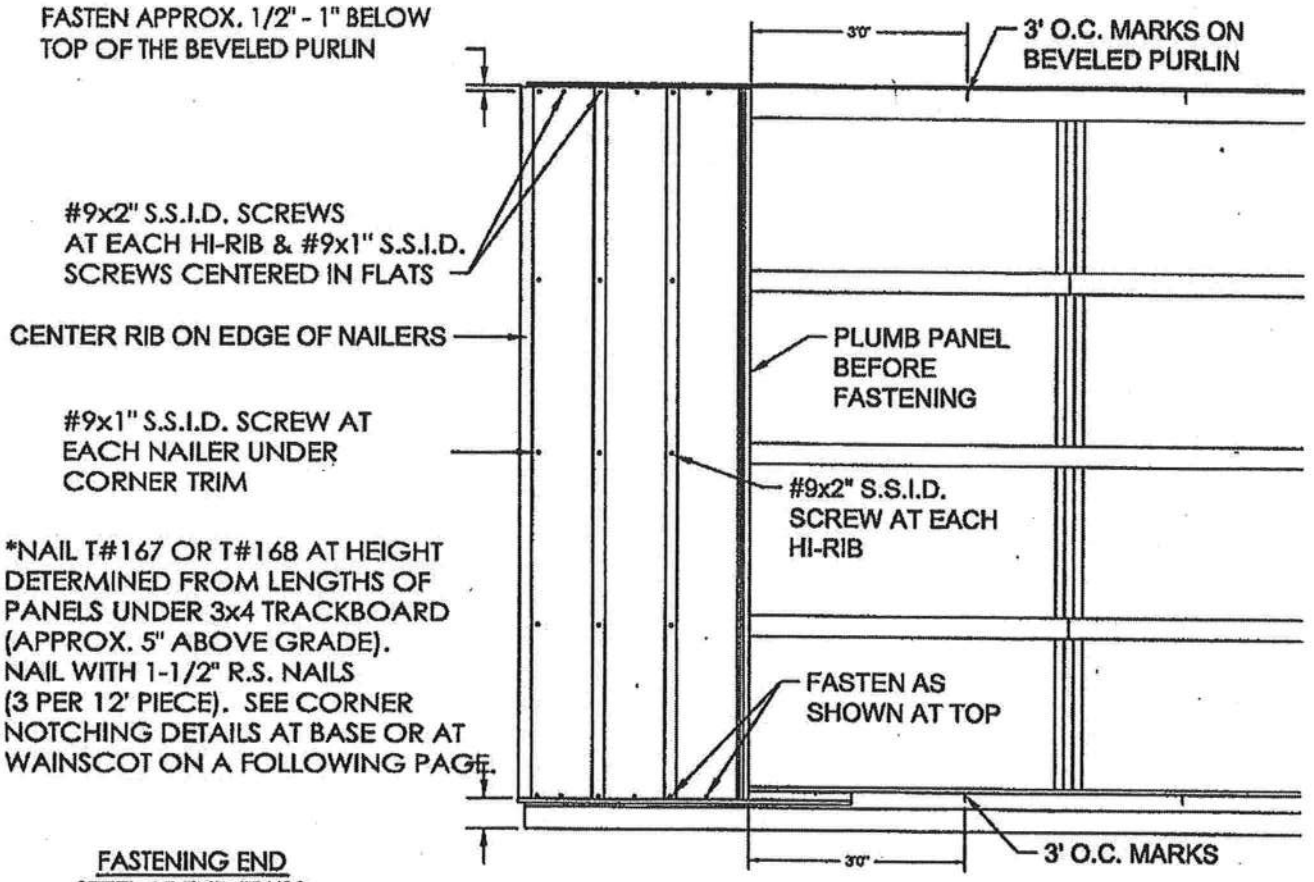

FASTENING END STEEL AT END TRUSS (WITHOUT OVERHANG)

FASTEN WITH #9x1" S.S.I.D. SCREWS CENTERED IN FLATS & NEXT TO RIBS FACING SIPHON GROOVE

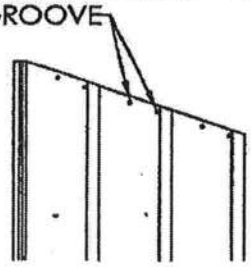

FASTENING SIDE OR END STEEL AT OVERHANG

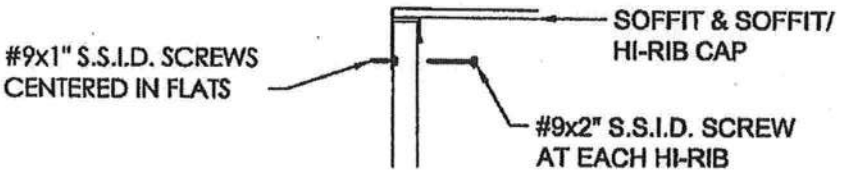

Allen N. Reeves

Allen N. Reeves, P.E., SECB
Structural Engineer
Florida License No. 19354
29 DEC. 2010

ALLEN N. REEVES LICENSE No. 19354 STATE OF FLORIDA PROFESSIONAL ENGINEER

MORTON BUILDINGS, INC.

Product Approval
USER: Public User

Search Criteria

Refine Search

Code Version	2020	FL#	37256
Application Type	ALL	Product Manufacturer	ALL
Category	ALL	Subcategory	ALL
Application Status	ALL	Compliance Method	ALL
Quality Assurance Entity	ALL	Quality Assurance Entity Contract Expired	ALL
Product Model, Number or Name	ALL	Product Description	ALL
Approved for use in HVHZ	ALL	Approved for use outside HVHZ	ALL
Impact Resistant	ALL	Design Pressure	ALL
Other	ALL		

Search Results - Applications

FL#	Type	Manufacturer	Validated By	Status
FL37256	New	Morton Buildings, Inc **Category:** Panel Walls **Subcategory:** Siding	Ted Berman, PE (305) 868-4707	Applied For

*Approved by DBPR. Approvals by DBPR shall be reviewed and ratified by the POC and/or the Commission if necessary.

The State of Florida is an AA/EEO employer. Copyright 2007-2013 State of Florida. :: Privacy Statement :: Accessibility Statement :: Refund Statement

Under Florida law, email addresses are public records. If you do not want your e-mail address released in response to a public-records request, do not send electronic mail to this entity. Instead, contact the office by phone or by traditional mail. If you have any questions, please contact 850.487.1395. *Pursuant to Section 455.275(1), Florida Statutes, effective October 1, 2012, licensees licensed under Chapter 455, F.S. must provide the Department with an email address if they have one. The emails provided may be used for official communication with the licensee. However email addresses are public record. If you do not wish to supply a personal address, please provide the Department with an email address which can be made available to the public. To determine if you are a licensee under Chapter 455, F.S., please click here .

Product Approval Accepts:

Credit Card Safe
securityMETRICS

ALLOWABLE DESIGN WIND PRESSURES IN PSF
SHORT SPAN TABLE

PERFORMANCE COLLECTION PGPC SOFFIT TYPE	EAVE WIDTH IN INCHES 10"	12"	16"
DOUBLE 6" (ALUMINUM) 12", NAILS AAS12219, AFAS12219	+169.1 -169.1	+135.3 -135.3	+96.6 -96.6
DOUBLE 6" (ALUMINUM) 12", STAPLES AAS12219, AFAS12219	+169.1 -177.0	+135.3 -141.6	+96.6 -101.1
DOUBLE 6" (ALUMINUM) 12", NAILS AAS12216, AFAS12216	+142.4 -142.4	+113.9 -113.9	+81.4 -81.4
DOUBLE 6" (ALUMINUM) 12", STAPLES AAS12216, AFAS12216	+142.4 -177.0	+113.9 -141.6	+81.4 -101.1
TRIPLE 4" (ALUMINUM) 12", NAILS AAS12319, ACAS12319, AFAS12319	+169.1 -169.1	+135.3 -135.3	+96.6 -96.6
TRIPLE 4" (ALUMINUM) 12", STAPLES AAS12319, ACAS12319, AFAS12319	+169.1 -177.0	+135.3 -141.6	+96.6 -101.1
QUAD 4" (ALUMINUM) 16", NAILS AAS16419A, ACAS16419A	+126.8 -126.8	+101.5 -101.5	+72.5 -72.5
QUAD 4" (ALUMINUM) 16", STAPLES AAS16419A, ACAS16419A	+126.8 -132.8	+101.5 -106.2	+72.5 -75.9
TRIPLE 4" (ALUMINUM) 12", NAILS AAS12316, ACAS12316, AFAS12316	+142.4 -142.4	+113.9 -113.9	+81.4 -81.4
TRIPLE 4" (ALUMINUM) 12", STAPLES AAS12316, ACAS12316, AFAS12316	+142.4 -177.0	+113.9 -141.6	+81.4 -101.1
TRIPLE 4" (ALUMINUM) SOFFIT 12", NAILS AAS12313, ACAS12313, AFAS12313	+115.7 -115.7	+92.6 -92.6	+66.1 -66.1
TRIPLE 4" (ALUMINUM) SOFFIT 12", STAPLES AAS12313, ACAS12313, AFAS12313	+115.7 -177.0	+92.6 -141.6	+66.1 -101.1
TRIPLE 3 1/3" (VINYL) 10", NAILS VST3N, VST3V	+227.3 -80.1	+181.8 -64.1	+129.9 -45.8
TRIPLE 3 1/3" (VINYL) 10", STAPLES VST3N, VST3V	+227.3 -95.4	+181.8 -76.3	+129.9 -54.5
BEADED (VINYL) 8", NAILS VSB223N, VSB223V	+206.6 -91.0	+165.3 -72.8	+118.1 -52.0
BEADED (VINYL) 8", STAPLES VSB223N, VSB223V	+206.6 -108.4	+165.3 -86.8	+118.1 -62.0
DOUBLE 5" PREMIUM (VINYL) 10", NAILS VSD5N, VSD5FV	+237.6 -83.7	+190.1 -67.0	+135.8 -47.9
DOUBLE 5" PREMIUM (VINYL) 10", STAPLES VSD5N, VSD5FV	+237.6 -99.8	+190.1 -79.8	+135.8 -57.0
PREMIUM TRIPLE 4" (VINYL) 12", NAILS VST4N, VST4FV, VST4CV	+206.6 -60.7	+165.3 -48.5	+118.1 -34.7
PREMIUM TRIPLE 4" (VINYL) 12", STAPLES VST4N, VST4FV, VST4CV	+206.6 -72.3	+165.3 -57.8	+118.1 -41.3
ECONOMY TRIPLE 4" (VINYL) 12", NAILS EVS12N, EVS12P, EVS12CP	+185.9 -54.6	+148.8 -43.7	+106.3 -31.2
ECONOMY TRIPLE 4" (VINYL) 12", STAPLES EVS12N, EVS12P, EVS12CP	+185.9 -65.1	+148.8 -52.1	+106.3 -37.2
ECONOMY DOUBLE 5" (VINYL) 10", NAILS EVSD5N, EVSD5V	+206.6 -72.8	+165.3 -58.3	+118.1 -41.6
ECONOMY DOUBLE 5" (VINYL) 10", STAPLES EVSD5N, EVSD5V	+206.6 -86.8	+165.3 -69.4	+118.1 -49.6
DOUBLE 5" (VINYL) 10", NAILS SVSD5N, SVSD5FV	+216.9 -76.5	+173.5 -61.2	+124.0 -43.7
DOUBLE 5" (VINYL) 10", STAPLES SVSD5N, SVSD5FV	+216.9 -91.1	+173.5 -72.9	+124.0 -52.1

Details that go with this table appear on Sheet 1 of 3

ALLOWABLE DESIGN WIND PRESSURES IN PSF
LONG SPAN TABLE

PERFORMANCE COLLECTION PGPC SOFFIT TYPE	EAVE WIDTH IN INCHES 12"	15"	18"	21"	24"
DOUBLE 6" (ALUMINUM) 12", NAILS AAS12219, AFAS12219	+288.0 -275.3	+170.4 -162.9	+112.5 -107.6	+79.8 -76.3	+59.5 -56.9
DOUBLE 6" (ALUMINUM) 12", STAPLES AAS12219, AFAS12219	+288.0 -275.3	+170.4 -162.9	+112.5 -107.6	+79.8 -76.3	+59.5 -56.9
DOUBLE 6" (ALUMINUM) 12", NAILS AAS12216, AFAS12216	+242.5 -231.9	+143.5 -137.2	+94.7 -90.6	+67.2 -64.2	+50.1 -47.9
DOUBLE 6" (ALUMINUM) 12", STAPLES AAS12216, AFAS12216	+242.5 -231.9	+143.5 -137.2	+94.7 -90.6	+67.2 -64.2	+50.1 -47.9
TRIPLE 4" (ALUMINUM) 12", NAILS AAS12319, ACAS12319, AFAS12319	+288.0 -275.3	+170.4 -162.9	+112.5 -107.6	+79.8 -76.3	+59.5 -56.9
TRIPLE 4" (ALUMINUM) 12", STAPLES AAS12319, ACAS12319, AFAS12319	+288.0 -275.3	+170.4 -162.9	+112.5 -107.6	+79.8 -76.3	+59.5 -56.9
QUAD 4" (ALUMINUM) 16", NAILS AAS16419A, ACAS16419A	+216.0 -206.5	+127.8 -122.2	+84.4 -80.7	+59.8 -57.2	+44.6 -42.7
QUAD 4" (ALUMINUM) 16", STAPLES AAS16419A, ACAS16419A	+216.0 -206.5	+127.8 -122.2	+84.4 -80.7	+59.8 -57.2	+44.6 -42.7
TRIPLE 4" (ALUMINUM) 12", NAILS AAS12316, ACAS12316, AFAS12316	+242.5 -231.9	+143.5 -137.2	+94.7 -90.6	+67.2 -64.2	+50.1 -47.9
TRIPLE 4" (ALUMINUM) 12", STAPLES AAS12316, ACAS12316, AFAS12316	+242.5 -231.9	+143.5 -137.2	+94.7 -90.6	+67.2 -64.2	+50.1 -47.9
TRIPLE 4" (ALUMINUM) SOFFIT 12", NAILS AAS12313, ACAS12313, AFAS12313	+197.1 -188.4	+116.6 -111.5	+77.0 -73.6	+54.6 -52.2	+40.7 -38.9
TRIPLE 4" (ALUMINUM) SOFFIT 12", STAPLES AAS12313, ACAS12313, AFAS12313	197.1 -188.4	+116.6 -111.5	+77.0 -73.6	+54.6 -52.2	+40.7 -38.9
TRIPLE 3 1/3" (VINYL) 10", NAILS VST3N, VST3V	+329.2 -73.8	+194.8 -56.8	+128.6 -46.1	+91.2 -38.8	+68.0 -33.6
TRIPLE 3 1/3" (VINYL) 10", STAPLES VST3N, VST3V	+329.2 -76.3	+194.8 -58.7	+128.6 -47.7	+91.2 -40.2	+68.0 -34.7
BEADED (VINYL) 8", NAILS VSB223N, VSB223V	+374.1 -83.9	+221.4 -64.5	+146.1 -52.4	+103.6 -44.1	+77.3 -38.1
BEADED (VINYL) 8", STAPLES VSB223N, VSB223V	+374.1 -86.76	+221.4 -66.7	+146.1 -54.2	+103.6 -45.7	+77.3 -39.4
DOUBLE 5" PREMIUM (VINYL) 10", NAILS VSD5N, VSD5FV	+344.2 -77.2	+203.7 -59.4	+134.4 -48.2	+95.3 -40.6	+71.1 -35.1
DOUBLE 5" PREMIUM (VINYL) 10", STAPLES VSD5N, VSD5FV	+344.2 -79.8	+203.7 -61.4	+134.4 -49.9	+95.3 -42.0	+71.1 -36.3
PREMIUM TRIPLE 4" (VINYL) 12", NAILS VST4N, VST4FV, VST4CV	+249.4 -55.9	+147.6 -43.0	+97.4 -35.0	+69.1 -29.4	+51.5 -25.4
PREMIUM TRIPLE 4" (VINYL) 12", STAPLES VST4N, VST4FV, VST4CV	+249.4 -57.8	+147.6 -44.5	+97.4 -36.2	+69.1 -30.4	+51.5 -26.3
ECONOMY TRIPLE 4" (VINYL) 12", NAILS EVS12N, EVS12P, EVS12CP	+224.5 -50.3	+132.8 -38.7	+87.7 -31.5	+62.2 -26.5	+46.4 -22.9
ECONOMY TRIPLE 4" (VINYL) 12", STAPLES EVS12N, EVS12P, EVS12CP	+224.5 -52.1	+132.8 -40.0	+87.7 -32.5	+62.2 -27.4	+46.4 -23.7
ECONOMY DOUBLE 5" (VINYL) 10", NAILS EVSD5N, EVSD5V	+299.3 -67.1	+177.1 -51.6	+116.9 -41.9	+82.9 -35.3	+61.8 -30.5
ECONOMY DOUBLE 5" (VINYL) 10", STAPLES EVSD5N, EVSD5V	+299.3 -69.4	+177.1 -53.4	+116.9 -43.4	+82.9 -36.5	+61.8 -31.5
DOUBLE 5" (VINYL) 10", NAILS SVSD5N, SVSD5FV	+314.3 -70.5	+185.9 -54.2	+122.8 -44.0	+87.1 -37.1	+64.9 -32.5
DOUBLE 5" (VINYL) 10", STAPLES SVSD5N, SVSD5FV	+314.3 -72.9	+185.9 -56.1	+122.8 -45.5	+87.1 -38.4	+64.9 -33.1

Details that go with this table are found on Sheet 1 of 3

ALLOWABLE DESIGN WIND PRESSURES IN PSF
MULTI SPAN TABLE (EXTERIOR CEILINGS)

PERFORMANCE COLLECTION PGPC SOFFIT TYPE	
Beaded (Vinyl) 8", Nails Solid – VSB223N Vented –VSB223V	+/-55.0
Beaded (Vinyl) 8", Staples Solid – VSB223N Vented –VSB223V	+/-55.0
Premium Double 5 (Vinyl) 10", Nails Solid – VSD5N Vented – VSD5FV	+/-50.6
Premium Double 5 (Vinyl) 10", Staples Solid – VSD5N Vented – VSD5FV	+/-50.6
Premium Triple 4 (Vinyl) 12", Nails Solid – VST4N Center Vent-VST4CV Full Vent – VST4FV	+/-36.7
Premium Triple 4 (Vinyl) 12", Staples Solid – VST4N Center Vent-VST4CV Full Vent – VST4FV	+/-36.7
Economy Double 5 (Vinyl) 10", Nails Solid – EVSD5N Vented – EVSD5V	+/-44.0
Economy Double 5 (Vinyl) 10", Staples Solid – EVSD5N Vented – EVSD5V	+/-44.0
Triple 3 1/3, (Vinyl) 10", Nails Solid – VST3N Vented – VST3V	+/-48.4
Triple 3 1/3, (Vinyl) 10", Staples Solid – VST3N Vented – VST3V	+/-48.4
Economy Triple 4 (Vinyl) 12", Nails Solid – EVS12N Center Vent-EVS12CP Full Vent – EVS12P	+/-33.0
Economy I Triple 4 (Vinyl) 12", Staples Solid – EVS12N Center Vent-EVS12CP Full Vent – EVS12P	+/-33.0
Double 5, (Vinyl) 10", Nails Solid – SVSD5N Full Vent– SVSD5FV	+/-46.2
Double 5, (Vinyl) 10", Staples Solid – SVSD5N Full Vent – SVSD5FV	+/-46.2

The detail for this table appears on Sheet 2 of 3

ALLEN N. REEVES LICENSE No. 19354 STATE OF FLORIDA PROFESSIONAL ENGINEER

Allen N. Reeves
24 JUNE 2020

Allen N. Reeves, P.E. Structural Engineer Florida License #19354

HR Engineering, Inc.	REV. 15 JUNE 2020 DATE: 27 MARCH 2015	20050001 PROJECT NO. 15030001 SHEET 3 OF 3
CLIENT: PLYGEM/MASTIC	BY: A. REEVES	PROJECT NAME: MASTIC SOFFITS - FLORIDA

ALLOWABLE DESIGN WIND PRESSURES IN PSF LONG SPAN TABLE					
MASTIC SOFFIT TYPE	EAVE WIDTH IN INCHES				
	12"	15"	18"	21"	24"
ENVOY (ALUMINUM) 12", NAILS SVG12N20, SVG12V20	+288.0 -275.3	+170.4 -162.9	+112.5 -107.6	+79.8 -76.3	+59.5 -56.9
ENVOY (ALUMINUM) 12", STAPLES SVG12N20, SVG12V20	+288.0 -275.3	+170.4 -162.9	+112.5 -107.6	+79.8 -76.3	+59.5 -56.9
ENVOY (ALUMINUM) 6", NAILS SVG6N, SVG6V	+576.0 -550.7	+340.8 -325.8	+225.0 -215.1	+159.6 -152.5	+119.0 -113.8
ENVOY (ALUMINUM) 6", STAPLES SVG6N, SVG6V	+576.0 -550.7	+340.8 -325.8	+225.0 -215.1	+159.6 -152.5	+119.0 -113.8
ENDURANCE (ALUMINUM) 12", NAILS SVGN420144, SVGV420144	+242.5 -231.9	+143.5 -137.2	+94.7 -90.6	+67.2 -64.2	+50.1 -47.9
ENDURANCE (ALUMINUM) 12", STAPLES SVGN420144, SVGV420144	+242.5 -231.9	+143.5 -137.2	+94.7 -90.6	+67.2 -64.2	+50.1 -47.9
ENVOY (ALUMINUM) 12", NAILS SAS12219, LFAS12219, SAS12319, LCAS12319, LFAS12319, SAX12219T, LFAX12219T	+288.0 -275.3	+170.4 -162.9	+112.5 -107.6	+79.8 -76.3	+59.5 -56.9
ENVOY (ALUMINUM) 12", STAPLES SAS12219, LFAS12219, SAS12319, LCAS12319, LFAS12319, SAX12219T, LFAX12219T	+288.0 -275.3	+170.4 -162.9	+112.5 -107.6	+79.8 -76.3	+59.5 -56.9
ENVOY QUAD (ALUMINUM) 16", NAILS SAS16419, LCAS16419,	+216.0 -206.5	+127.8 -122.2	+84.4 -80.7	+59.8 -57.2	+44.6 -42.7
ENVOY QUAD (ALUMINUM) 16", STAPLES SAS16419, LCAS16419,	+216.0 -206.5	+127.8 -122.2	+84.4 -80.7	+59.8 -57.2	+44.6 -42.7
ENDURANCE (ALUMINUM) 12", NAILS SAS12216, LFAS12216, SAS12316, LCAS12316, LFAS12316	+242.5 -231.9	+143.5 -137.2	+94.7 -90.6	+67.2 -64.2	+50.1 -47.9
ENDURANCE (ALUMINUM) 12", STAPLES SAS12216, LFAS12216, SAS12316, LCAS12316, LFAS12316	+242.5 -231.9	+143.5 -137.2	+94.7 -90.6	+67.2 -64.2	+50.1 -47.9
ECONOMY (ALUMINUM) SOFFIT 12", NAILS SAS12313, LFAS12313, LCAS12313	+197.1 -188.4	+116.6 -111.5	+77.0 -73.6	+54.6 -52.2	+40.7 -38.9
ECONOMY (ALUMINUM) SOFFIT 12", STAPLES SAS12313, LFAS12313, LCAS12313	197.1 -188.4	+116.6 -111.5	+77.0 -73.6	+54.6 -52.2	+40.7 -38.9
ECONOMY (ALUMINUM) SOFFIT 16", NAILS SAS16413, LFAS16413	+147.8 -141.3	+87.4 -83.6	+57.7 -55.2	+40.9 -39.1	+30.5 -29.2
ECONOMY (ALUMINUM) SOFFIT 16", STAPLES SAS16413, LFAS16413	+147.8 -141.3	+87.4 -83.6	+57.7 -55.2	+40.9 -39.1	+30.5 -29.2
VENTURA™ (VINYL) 10", NAILS HVS10V, HVS10N	+329.2 -73.8	+194.8 -56.8	+128.6 -46.1	+91.2 -38.8	+68.0 -33.6
VENTURA™ (VINYL) 10", STAPLES HVS10V, HVS10N	+329.2 -76.3	+194.8 -58.7	+128.6 -47.7	+91.2 -40.2	+68.0 -34.7
PRO-SERIES BEADED (VINYL) 8", NAILS PBS80N, PBS80V	+374.1 -83.9	+221.4 -64.5	+146.1 -52.4	+103.6 -44.1	+77.3 -38.1
PRO-SERIES BEADED (VINYL) 8", STAPLES PBS80N, PBS80V	+374.1 -86.76	+221.4 -66.7	+146.1 -54.2	+103.6 -45.7	+77.3 -39.4
PRO-SERIES (VINYL) 10", NAILS PSS10N, PSS10V	+344.2 -77.2	+203.7 -59.4	+134.4 -48.2	+95.3 -40.6	+71.1 -35.1
PRO-SERIES (VINYL) 10", STAPLES PSS10N, PSS10V	+344.2 -79.8	+203.7 -61.4	+134.4 -49.9	+95.3 -42.0	+71.1 -36.3
PRO-SERIES (VINYL) 12", NAILS PTS12N, PTS12V, PTS12CV	+249.4 -55.9	+147.6 -43.0	+97.4 -35.0	+69.1 -29.4	+51.5 -25.4
PRO-SERIES (VINYL) 12", STAPLES PTS12N, PTS12V, PTS12CV	+249.4 -57.8	+147.6 -44.5	+97.4 -36.2	+69.1 -30.4	+51.5 -26.3
UNIVERSAL (VINYL) 12", NAILS UVS12N, UVS12P, UVS12CP	+224.5 -50.3	+132.8 -38.7	+87.7 -31.5	+62.2 -26.5	+46.4 -22.9
UNIVERSAL (VINYL) 12", STAPLES UVS12N, UVS12P, UVS12CP	+224.5 -52.1	+132.8 -40.0	+87.7 -32.5	+62.2 -27.4	+46.4 -23.7
TRADE MARK (VINYL) 10", NAILS TRMS10N, TRMS10V	+299.3 -67.1	+177.1 -51.6	+116.9 -41.9	+82.9 -35.3	+61.8 -30.5
TRADE MARK (VINYL) 10", STAPLES TRMS10N, TRMS10V	+299.3 -69.4	+177.1 -53.4	+116.9 -43.4	+82.9 -36.5	+61.8 -31.5
PROTECT PLUS (VINYL) 10", NAILS PTS10N, PTS10V	+299.3 -67.1	+177.1 -51.6	+116.9 -41.9	+82.9 -35.3	+61.8 -30.5
PROTECT PLUS (VINYL) 10", STAPLES PTS10N, PTS10V	+299.3 -69.4	+177.1 -53.4	+116.9 -43.4	+82.9 -36.5	+61.8 -31.5

Details that go with this table are found on Sheet 1 of 3

ALLOWABLE DESIGN WIND PRESSURES IN PSF MULTI SPAN TABLE (EXTERIOR CEILINGS) MASTIC SOFFIT TYPE	
Beaded (Vinyl) 8", Nails Solid – PBS80N Vented –PBS80V	+/-55.0
Beaded (Vinyl) 8", Staples Solid – PBS80N Vented –PBS80V	+/-55.0
Pro-Series Double 5 (Vinyl) 10", Nails Solid – PSS10N Vented – PSS10V	+/-50.6
Pro-Series Double 5 (Vinyl) 10", Staples Solid – PSS10N Vented – PSS10V	+/-50.6
Pro-Series Triple 4 (Vinyl) 12", Nails Solid – PTS12N Center Vent-PTS12CV Full Vent – PTS12V	+/-36.7
Pro-Series Triple 4 (Vinyl) 12", Staples Solid – PTS12N Center Vent-PTS12CV Full Vent – PTS12V	+/-36.7
Trade Mark Double 5 (Vinyl) 10", Nails Solid – TRMS10N Vented – TRMS10V	+/-44.0
Trade Mark Double 5 (Vinyl) 10", Staples Solid – TRMS10N Vented – TRMS10V	+/-44.0
Protect Plus Double 5 (Vinyl) 10", Nails Solid – PTS10N Vented – PTS10V	+/-44.0
Protect Plus Double 5 (Vinyl) 10", Staples Solid – PTS10N Vented – PTS10V	+/-44.0
Ventura™ Triple 3 1/3, (Vinyl) 10", Nails Solid – HVS10N Vented – HVS10V	+/-48.4
Ventura™ Triple 3 1/3, (Vinyl) 10", Staples Solid – HVS10N Vented – HVS10V	+/-48.4
Universal Triple 4 (Vinyl) 12", Nails Solid – UVS12N Center Vent-UVS12CP Full Vent – UVS12P	+/-33.0
Universal Triple 4 (Vinyl) 12", Staples Solid – UVS12N Center Vent-UVS12CP Full Vent – UVS12P	+/-33.0
The detail for this table appears on Sheet 2 of 3	

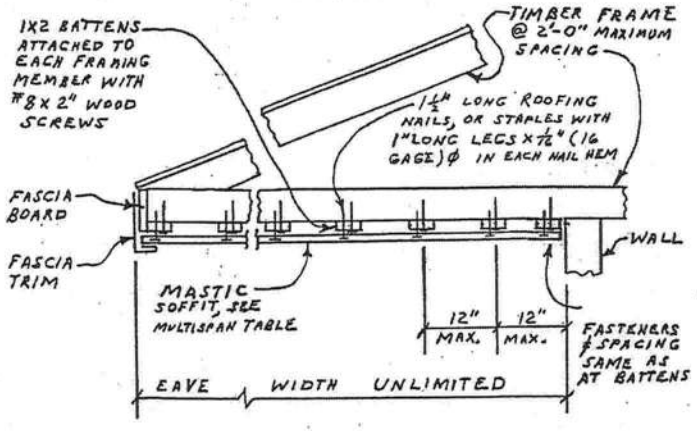

SOFFIT FOR WIDE EAVES AND EXTERIOR CEILINGS

NOT TO SCALE

GENERAL NOTES

DESIGN PRESSURES LISTED IN TABLES ARE BASED ON COMPARATIVE AND RATIONAL ANALYSES DONE IN HR PROJECT 17090003 AND ARE IN CONFORMANCE WITH THE2020 FLORIDA BUILDING CODE AND THE 2020 FLORIDA RESIDENTIAL CODE.

THE2020FLORIDA BUILDING CODE IN SECTION 1609.1 AND THE 2020 FLORIDA RESIDENTIAL CODE IN SECTION R703.1.2.1 DIRECTLY MANDATE THAT THE DESIGN WIND PRESSURES ON SOFFITS ARE TO BE THE SAME AS THE ADJOINING WALLS.

WHERE SHORT SPAN AND LONG SPAN TABLES OVERLAP, THE LOWER VALUES GOVERN AND SHOULD BE USED IN INSTALLATION DESIGNS.

LEGEND

Double 6 has "V" grooves every 6" across width, and each panel is 12" wide.

Triple 4 or T4 has "V" grooves every 4" across width, and each panel is 12" wide.

Quad 4 has "V" grooves every 4" across width, and each panel is 16" wide.

Triple 2-2/3 has "V" grooves every 2-2/3" across width, and each panel is 8" wide.

Double 5 has "V" grooves every 5" across width, and each panel is 10" wide.

Single 6 or S6 has "V" grooves every 6" across width, and each panel is 6" wide.

Triple 3-1/3 has "V" grooves every 3-1/3" across width, and each panel is 10" wide.

ALLEN N. REEVES LICENSE No. 19354 STATE OF FLORIDA PROFESSIONAL ENGINEER

Allen N. Reeves
25 AUG. 2020

Allen N. Reeves, P.E.	Structural Engineer	Florida License #19354
HR Engineering, Inc. CLIENT: PLYGEM/MASTIC	REV. 15 JUNE 2020 DATE: 16 NOV. 2012 BY: A. REEVES	20050001 PROJECT NO. 11100020-7 SHEET 2 OF 3 PROJECT NAME: MASTIC SOFFITS - FLORIDA

ALLOWABLE DESIGN WIND PRESSURES IN PSF

SHORT SPAN TABLE

MASTIC SOFFIT TYPE	EAVE WIDTH IN INCHES 10"	12"	16"
ENVOY (ALUMINUM) 12", NAILS SVG12N20, SVG12V20	+169.1 -169.1	+135.3 -135.3	+96.6 -96.6
ENVOY (ALUMINUM) 12", STAPLES SVG12N20, SVG12V20	+169.1 -177.0	+135.3 -141.6	+96.6 -101.1
ENVOY (ALUMINUM) 6", NAILS SVG6N, SVG6V	+338.2 -338.2	+270.6 -270.6	+193.3 -193.3
ENVOY (ALUMINUM) 6", STAPLES SVG6N, SVG6V	+338.2 -354.0	+270.6 -283.2	+193.3 -202.3
ENDURANCE (ALUMINUM) 12", NAILS SVGN420144, SVGV420144	+142.4 -142.4	+113.9 -113.9	+81.4 -81.4
ENDURANCE (ALUMINUM) 12", STAPLES SVGN420144, SVGV420144	+142.4 -177.0	+113.9 -141.6	+81.4 -101.1
ENVOY (ALUMINUM) 12", NAILS SAS12219, LFAS12219, SAS12319, LCAS12319, LFAS12319, SAX12219T, LFAX12219T	+169.1 -169.1	+135.3 -135.3	+96.6 -96.6
ENVOY (ALUMINUM) 12", STAPLES SAS12219, LFAS12219, SAS12319, LCAS12319, LFAS12319, SAX12219T, LFAX12219T	+169.1 -177.0	+135.3 -141.6	+96.6 -101.1
ENVOY QUAD (ALUMINUM) 16", NAILS SAS16419, LCAS16419,	+126.8 -126.8	+101.5 -101.5	+72.5 -72.5
ENVOY QUAD (ALUMINUM) 16", STAPLES SAS16419, LCAS16419,	+126.8 -132.8	+101.5 -106.2	+72.5 -75.9
ENDURANCE (ALUMINUM) 12", NAILS SAS12216, LFAS12216, SAS12316, LCAS12316, LFAS12316	+142.4 -142.4	+113.9 -113.9	+81.4 -81.4
ENDURANCE (ALUMINUM) 12", STAPLES SAS12216, LFAS12216, SAS12316, LCAS12316, LFAS12316	+142.4 -177.0	+113.9 -141.6	+81.4 -101.1
ECONOMY (ALUMINUM) SOFFIT 12", NAILS SAS12313, LFAS12313, LCAS12313	+115.7 -115.7	+92.6 -92.6	+66.1 -66.1
ECONOMY (ALUMINUM) SOFFIT 12", STAPLES SAS12313, LFAS12313, LCAS12313	+115.7 -177.0	+92.6 -141.6	+66.1 -101.1
ECONOMY (ALUMINUM) SOFFIT 16", NAILS SAS16413, LFAS16413,	+86.8 -86.8	+69.4 -69.4	+49.6 -49.6
ECONOMY (ALUMINUM) SOFFIT 16", STAPLES SAS16413, LFAS16413	+86.8 -132.8	+69.4 -106.2	+49.6 -75.9
VENTURA™ (VINYL) 10", NAILS HVS10V, HVS10N	+227.3 -80.1	+181.8 -64.1	+129.9 -45.8
VENTURA™ (VINYL) 10", STAPLES HVS10V, HVS10N	+227.3 -95.4	+181.8 -76.3	+129.9 -54.5
PRO-SERIES BEADED (VINYL) 8", NAILS PBS80N, PBS80V	+206.6 -91.0	+165.3 -72.8	+118.1 -52.0
PRO-SERIES BEADED (VINYL) 8", STAPLES PBS80N, PBS80V	+206.6 -108.4	+165.3 -86.8	+118.1 -62.0
PRO-SERIES (VINYL) 10", NAILS PSS10N, PSS10V	+237.6 -83.7	+190.1 -67.0	+135.8 -47.9
PRO-SERIES (VINYL) 10", STAPLES PSS10N, PSS10V	+237.6 -99.8	+190.1 -79.8	+135.8 -57.0
PRO-SERIES (VINYL) 12", NAILS PTS12N, PTS12V, PTS12CV	+206.6 -60.7	+165.3 -48.5	+118.1 -34.7
PRO-SERIES (VINYL) 12", STAPLES PTS12N, PTS12V, PTS12CV	+206.6 -72.3	+165.3 -57.8	+118.1 -41.3
UNIVERSAL (VINYL) 12", NAILS UVS12N, UVS12P, UVS12CP	+185.9 -54.6	+148.8 -43.7	+106.3 -31.2
UNIVERSAL (VINYL) 12", STAPLES UVS12N, UVS12P, UVS12CP	+185.9 -65.1	+148.8 -52.1	+106.3 -37.2
TRADE MARK (VINYL) 10", NAILS TRMS10N, TRMS10V	+206.6 -72.8	+165.3 -58.3	+118.1 -41.6
TRADE MARK (VINYL) 10", STAPLES TRMS10N, TRMS10V	+206.6 -86.8	+165.3 -69.4	+118.1 -49.6
PROTECT PLUS (VINYL) 10", NAILS PTS10N, PTS10V	+206.6 -72.8	+165.3 -58.3	+118.1 -41.6
PROTECT PLUS (VINYL) 10", STAPLES PTS10N, PTS10V	+206.6 -86.8	+165.3 -69.4	+118.1 -49.6

Details that go with this table appear on Sheet 1 of 3

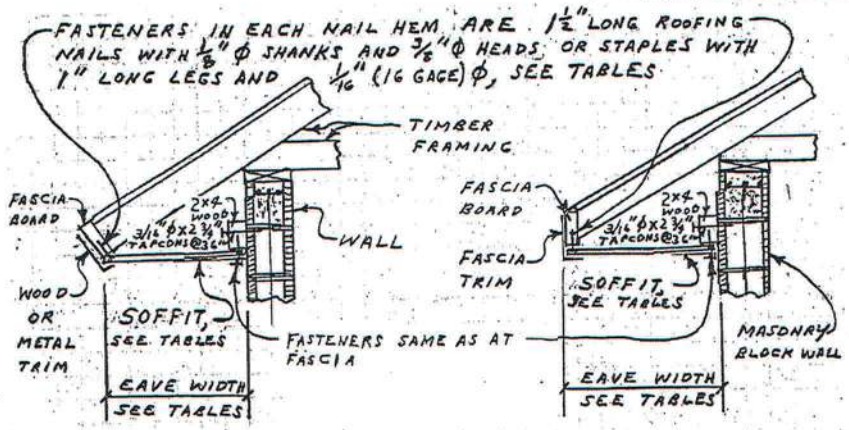

SOFFITS WITH MASONRY BLOCK WALLS
NOT TO SCALE

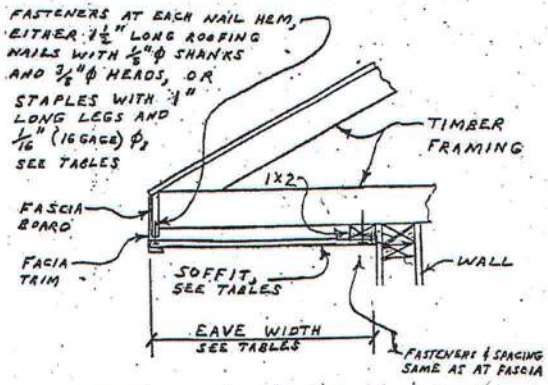

SOFFIT WITH WOOD FRAMED WALL
NOT TO SCALE

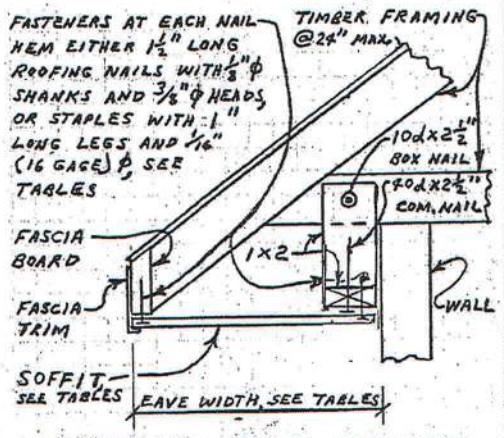

SOFFIT INTO ROOF FRAMING
NOT TO SCALE

ALLEN N. REEVES LICENSE No. 19354 STATE OF FLORIDA PROFESSIONAL ENGINEER

Allen N. Reeves
24 JUNE 2020

Allen N. Reeves, P.E. · Structural Engineer		Florida License #19354
HR Engineering, Inc.	REV. 15 JUNE 2020 DATE: 16 NOV. 2012	20050001 PROJECT NO. 11100020-7 SHEET 1 OF 3
CLIENT: PLYGEM/MASTIC	BY: A. REEVES	PROJECT NAME: MASTIC SOFFITS-FLORIDA

Product Approval
USER: Public User

Search Criteria

Refine Search

Code Version	2020	FL#	32502.1
Application Type	ALL	Product Manufacturer	ALL
Category	ALL	Subcategory	ALL
Application Status	ALL	Compliance Method	ALL
Quality Assurance Entity	ALL	Quality Assurance Entity Contract Expired	ALL
Product Model, Number or Name	ALL	Product Description	ALL
Approved for use in HVHZ	ALL	Approved for use outside HVHZ	ALL
Impact Resistant	ALL	Design Pressure	ALL
Other	ALL		

Search Results - Applications

FL#	Type	Manufacturer	Validated By	Status
FL32502	New	Ply Gem Siding Group **FL#:** FL32502.1 **Model:** Mastic Soffits **Description:** Vinyl and Aluminum **Category:** Panel Walls **Subcategory:** Soffits	Ted Berman, PE (305) 868-4707	Approved

*Approved by DBPR. Approvals by DBPR shall be reviewed and ratified by the POC and/or the Commission if necessary.

The State of Florida is an AA/EEO employer. Copyright 2007-2013 State of Florida. :: Privacy Statement :: Accessibility Statement :: Refund Statement

Under Florida law, email addresses are public records. If you do not want your e-mail address released in response to a public-records request, do not send electronic mail to this entity. Instead, contact the office by phone or by traditional mail. If you have any questions, please contact 850.487.1395. *Pursuant to Section 455.275(1), Florida Statutes, effective October 1, 2012, licensees licensed under Chapter 455, F.S. must provide the Department with an email address if they have one. The emails provided may be used for official communication with the licensee. However email addresses are public record. If you do not wish to supply a personal address, please provide the Department with an email address which can be made available to the public. To determine if you are a licensee under Chapter 455, F.S., please click here .

Product Approval Accepts:

Credit Card Safe securityMETRICS