DESIGN SPECIFICATIONS

DESIGN CODE:
2020 FLORIDA BUILDING CODE – RESIDENTIAL

DESIGN IS VOID ONE YEAR AFTER THE DATE OF THE ORIGINAL PLANS, UNLESS PLANS HAVE BEEN REVIEWED FOR CODE COMPLIANCE.

DESIGN LOADS: ACTUAL AND UNIFORM

	ROOF	FLOOR
ROOF LOADING	(cd=1.25)	(cd=1.00)
TOP CHORD LIVE LOAD	20 psf	40 psf
TOP CHORD DEAD LOAD	7 psf (ARCH SHINGLES)	10 psf
TOP CHORD DEAD LOAD	20 psf (TILE SHINGLES)	10 psf
BOTTOM CHORD LIVE LOAD	10 psf	0 psf
BOTTOM CHORD DEAD LOAD	5 psf	5 psf

DEFLECTION CRITERIA:
ROOF FRAMING: LIVE LOAD L/240 TOTAL LOAD L/180
FLOOR FRAMING: LIVE LOAD L/360 & TOTAL LOAD L/240
0.75" MAX ANY CASE

WIND LOADING:
ASCE 7/16 FOR WIND UPLIFT, TRUSSES SHALL BE DESIGNED WITH A MIN. DEAD LOAD CONDITION OF 5 PSF TOP CHORD AND 5 PSF BOTTOM CHORD. REACTIONS CALCULATED FOR THE BEARING POINTS OF ROOF TRUSSES SHALL BE REDUCED. SPECIFICALLY, ATTIC FLOOR LIVE LOADS COMBINED WITH ROOF LIVE LOADS SHALL BE MULTIPLIED BY 0.75 WHEN COMBINED w/ DEAD LOAD.

BASIC WIND SPEED (ASCE 7–16) ––––––––––
IMPORTANCE FACTOR –––––––––––––––– 1.00
MEAN ROOF HEIGHT –––––––––––––––––– 20.0 FT
ROOF PITCH –––––––––––––––––––––– 6/12
BUILDING CATEGORY –––––––––––––––––– II
EXPOSURE CATEGORY ––––––––––––––––––
ENCLOSURE CLASSIFICATION ––––––––––––––ENCLOSED
INTERNAL PRESSURE COEFFICIENT –––––––––– ± .18

TRIBUTARY AREA (sf)	COMPONENTS & CLADDING ALLOWABLE DESIGN PRESSURES — INTERIOR ZONE (PSF)	EDGE STRIP (PSF): 'a' = 4'–6"
10		
50		
100		

GARAGE DOOR PRESSURES (PSF)	
1 CAR GARAGE DOOR (8'x7')	
2 CAR GARAGE DOOR (16'x7')	

- THE VALUES ABOVE ARE ALLOWABLE WIND PRESSURE VALUES (ASD). THE ABOVE WIND PRESSURES HAVE BEEN REDUCE BY 0.60 AS PERMITTED BY THE ALLOWABLE STRESS DESIGN METHODOLOGY. NO FURTHER REDUCTION SHALL BE PERMITTED
- COMPONENT & CLADDING WALL ELEMENTS SHALL BE DESIGNED FOR BOTH POSITIVE AND NEGATIVE PRESSURES SHOWN IN TABLE ABOVE.
- LINEAR INTERPOLATION IS PERMISSIBLE.
- PLUS = PRESSURE AND MINUS = SUCTION.
- DESIGN OF WINDOWS/DOORS FASTENING TO THE WALL FRAMING IS THE RESPONSIBILITY OF THE WINDOW/DOOR MANUF./SUPPLIER & SHALL MEET THE ABOVE NOTED POSITIVE AND NEGATIVE PRESSURES.

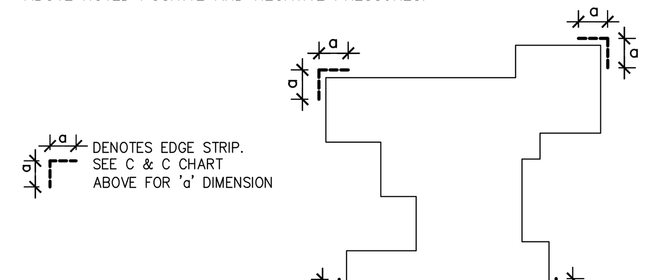

MATERIAL SPECIFICATIONS

HARDWARE AND ANCHORS:
ANCHOR BOLTS & THREADED ROD: SHALL BE IN ACCORDANCE WITH ASTM A 307 OR ASTM F 1554 GRADE 36.
WASHERS: SHALL BE IN ACCORDANCE WITH ASTM A500 (GRADE B).
NUTS: SHALL BE IN ACCORDANCE WITH ASTM A 563 GRADE A HEX.
METAL CONNECTORS: ALL METAL CONNECTORS WHICH ARE EXPOSED TO EXTERIOR SHALL BE GALVANIZED.
RETROFIT REBAR/ROD INSTALLATION: EMBEDMENT OF RODS OR REBAR DOWELS SHALL BE 12 BAR DIAMETER MINIMUM, HOLES SHALL BE 1/4" LARGER THAN REBAR SIX AND 1/8" LARGER THAN THREADED ROD SIZE. (U.O.N.)
ANCHORING ADHESIVE: SHALL BE ONE OF THE FOLLOWING PRODUCTS (DUAL CARTRIDGE INSTALLATION ONLY):
EPOXY: ITW RED HEAD A7
REINFORCING STEEL: SHALL BE ASTM A615, GRADE 60.
STRUCTURAL STEEL: SHALL BE ASTM A992, GRADE 50.
WELDED WIRE FABRIC (WWF): SHALL BE ASTM A185.
LAMINATED VENEER LUMBER (LVL): ALL LAMINATED VENEER LUMBER SHALL MEET OR EXCEED THE FOLLOWING DESIGN PROPERTIES – ELASTIC MODULUS (E)1,900ksi, BENDING STRESS (Fb) 2600psi

SCOPE OF SERVICE

MEANS AND METHODS:
THE STRUCTURAL ENGINEER SHALL NOT HAVE CONTROL OR BE RESPONSIBLE FOR CONSTRUCTION MEANS, METHODS, TECHNIQUES, PROCEDURES, OR SEQUENCES; FOR THE ACTS OR OMISSIONS OF THE CONTRACTOR OR ANY OTHER PERSONS PERFORMING THE WORK OR FOR THE FAILURE FOR ANY OF THEM TO CONSTRUCT THE WORK IN ACCORDANCE WITH THE CONTRACT DOCUMENTS.

LIMITS OF STRUCTURAL ENGINEERING DESIGN RESPONSIBILITIES:
THE ITEMS SPECIFICALLY DESIGNED BY THE STRUCTURAL ENGINEER ARE LIMITED TO THE FOLLOWING: CONTINUOUS LOAD PATH FOR WIND UPLIFT, WOOD PANEL SHEARWALLS, WALL FRAMING AND REQUIRED SHEATHING AND HEADERS DIRECTLY SUPPORTING ROOF FRAMING. ITEMS NOT DESIGNED PRE-ENGINEERED WOOD FLOOR AND ROOF TRUSSES, FLOOR FRAMING NOT SPECIFICALLY ADDRESSED, TRUSS–TO–TRUSS CONNECTION, AND ANY ARCHITECTURAL, MECHANICAL OR ELECTRICAL SYSTEM.

USP CONNECTORS

CONNECTOR	UPLIFT SYP	UPLIFT SPF	FASTENERS	FL# CODE
USP A35	450	450	(9)10dx1 1/2"	
USP RT7	585	495	(5)8d EA. END	
USP RT8A	775	650	(5)10dx1 1/2" EA. END	
USP MTW12	1195	860	(7)10dx1 1/2" EA. END	
USP HTW20	1450	1245	(12)10dx1 1/2" EA. END	
USP MSTA24	1640	1455	(9)10d EA. END	
USP MSTA36	2065	2065	(13)10d EA. END	
USP LTS20B	1105	1105	1/2"ø ROD TO FTG.	
USP JUS28	1305	1305	(6)10d TO HEADER	
USP HTT16	4290	4290	5/8"ø ROD TO FTG.	
USP HTT22	5370	5370	5/8"ø ROD TO FTG.	
USP PAU44	2535		5/8"ø ROD w/ (12)16d	
USP PAU66	2535		5/8"ø ROD w/ (12)16d	
USP MSTAM24	1545	1455	(5)1/4"x2–1/4 TAPCONS	

SIMPSON CONNECTORS

CONNECTOR	UPLIFT SYP	UPLIFT SPF	FASTENERS	FL# CODE
A35	450	450	12–8dx1 1/2"	10446.4
H2.5T	600	520	5–8d EA. END	11478.3
HTS16	1150	1085	16–10d EA. END	10456.6
MTS12	1000	860	7–10dx1 1/2" EA. END	10456.3
HTS20	1450	1245	24–10dx1 1/2" EA. END	13872.3
MSTA24	1765	1270	9–10d EA. END	13872.4
MSTA36	2050	1870	13–10d EA. END	13872.8
HTT4	3480	3080	18–16d TO TRUSS/BEAM; 1–5/8"ø ROD TO FTG.	11496.2
HTT5	5250	4670	32–16d TO TRUSS/BEAM; 1–5/8"ø ROD TO FTG.	11496.2
LUS28	930	780	6–10d TO HEADER; 4–10d TO JOIST	10655.113
HU410	905	785	14–16d TO HEADER; 6–16d TO JOIST	10531.36
ABU44	2200		5/8"ø ROD EPOXIED 6" MIN	10849.6
ABU66	2300		5/8"ø ROD EPOXIED 6" MIN	10849.6
SET	N/A	N/A	SIMPSON EPOXY–TIE	11506.4
LTT20B	1675	1675	10–16d TO STUD/BEAM/POST; 1–1/2"ø ROD TO FTG.	11496.3
LSTA12	805	695	10–10d	13872.5
CS16	1705	1705	13–8d	10852.1

GENERAL NOTES & CONSTRUCTION SPECIFICATIONS

FLOOR SHEATHING SPECIFICATIONS
23/32" T&G OSB OR PLYWOOD SHEATHING, GLUE AND NAIL WITH 10d COMMON @ 6" O.C. EDGE & FIELD

ROOF SHEATHING SPECIFICATIONS:
SHINGLE– MIN. 15/32", 32/16, APA RATED OSB **OR** PLYWOOD SHEATHING, NAILED w/ 0.131x2 1/2" RING SHANK NAILS @ 6" O.C. EDGE & 6" O.C. FIELD (AT GABLE ENDS DECREASE EDGE NAIL SPACING TO 4" O.C. WITHIN 4'–0" OF ROOF EDGE).

TILE – MIN. 15/32" 32/16, APA RATED PLYWOOD SHEATHING, NAILED w/ 0.131x2 1/2" RING SHANK @ 6" O.C. EDGE & 6" O.C. FIELD (AT GABLE ENDS DECREASE EDGE NAIL SPACING TO 4" O.C. WITHIN 4'–0" OF ROOF EDGE).

METAL – MIN. 1/2", 24/16, APA RATED PLYWOOD SHEATHING, NAILED w/ 0.131x2 1/2" RING SHANK NAILS @ 6" O.C. EDGE & 6" O.C. FIELD (AT GABLE ENDS DECREASE EDGE NAIL SPACING TO 4" OWITHIN 4'–0" OF ROOF EDGE).

WALL SHEATHING SPECIFICATIONS:
FLEXIBLE FINISH–MIN. 7/16", 24/16, APA RATED OSB **OR** PLYWOOD SHEATHING, FASTENED W/ 8D @ 6" O.C. EDGE AND 6" O.C. FIELD. SHEATHING SHALL EXTEND FULL HEIGHT FROM BOTTOM PLATE TO UPPER TOP PLATE. **FLEXIBLE FINISH WALLS INCLUDE: WOOD, CEMENT, OR VINYL SIDING, HARDI PANEL & BRICK. ALL OTHER WALL SHALL BE CONSIDERED BRITTLE FINISH.**

STUCCO FINISH,–MIN. 7/16", 24/16, APA RATED OSB **OR** PLYWOOD SHEATHING, FASTENED W/ 8D @ 6" O.C. EDGE AND 6" O.C. FIELD. SHEATHING SHALL ORIENTED WITH THE LONG DIMENSION PERPENDICULAR TO THE STUDS. CONTRACTOR MAY USE 7/16 STRUCTURAL 1 GRADE SHEATHING OR 15/32 OSB SHEATHING AND ORIENT THE PANELS VERTICALLY.

MASONRY SPECIFICATIONS:
MASONRY HAS BEEN DESIGNED IN ACCORDANCE WITH ACI 530–05, AND SHALL BE CONSTRUCTED IN ACCORDANCE WITH ACI530.1–05. GROUT SHALL BE IN ACCORDANCE WITH ASTM C476 WITH A MINIMUM OF 28 DAY COMPRESSIVE STRENGTH OF 2000 psi PER ASTM C1019, GROUT SHALL HAVE A MAXIMUM COURSE AGGREGATE SIZE OF 3/8 PLACED AT AN 8" TO 11" SLUMP. MORTAR SHALL CONFORM TO ASTM C270 AND TYPE M OR S. TYPE N MORTAR MAY BE USED IN BRICK VENEER. CONTRACTOR SHALL BE RESPONSIBLE FOR THE DESIGN AND INSTALLATION OF ALL FLASHING.

CONCRETE MASONRY UNITS (CMU):
CMU SHALL BE IN ACCORDANCE WITH ASTM C90–75, HOLLOW LOAD–BEARING (CMU), TYPE 1, GRADE N–1, NORMAL WEIGHT, WITH A MINIMUM COMPRESSIVE STRENGTH OF 1900 psi (f'm=1500 psi). GROUT ALL CELLS CONTAINING VERTICAL REINFORCEMENT IN 5'–0" MAXIMUM LIFTS PROVIDE CLEANOUTS PER ACI 530.1–02 IN THE BOTTOM OF COURSE OF MASONRY WHEN THE WALL HEIGHT EXCEEDS 5'–0".

MASONRY STEMWALLS: ALL CONCRETE MASONRY UNITS SHALL BE COMPOSED OF ASTM C90E, E GRADE N–1 HOLLOW CONCRETE MASONRY UNITS WITH TYPE 'S' MORTAR. WALL COURSING SHALL BE RUNNING BONDS, STACK BOND SHALL NOT BE USED. GROUT ALL CELLS CONTAINING VERTICAL REINFORCEMENT WITH 3000 PSI PEA ROCK CONCRETE GROUT. SPLICES IN REINFORCING, WHERE PERMITTED, SHALL BE 48 BAR DIAMETERS. ALL EXTERIOR WALLS SHALL BE REINFORCED FULL HEIGHT WITH – #4 @ 4'–0" O.C. MAX. AND AT EACH CORNER, WALL END, AND WALL INTERSECTIONS. PROVIDE CONTINUITY OF REINFORCING AT INTERSECTIONS OF PERPENDICULAR MASONRY ELEMENTS BY INSTALLING CORNER BARS, MINIMUM OF 40 BAR DIAMETERS INTO EACH ELEMENT. AT STEMWALL CONSTRUCTED OF 5 OR MORE COURSES, PROVIDE HORIZONTAL JOINT REINFORCEMENT AT 16" O.C. VERTICALLY, (EVERY OTHER COURSE), AND VERTICAL REINF. SHALL BE INCREASED AS NOTED ON 1/S1.0. UNLESS NOTED OTHERWISE. LAP JOINT REINFORCING SHALL BE A MINIMUM OF 6".

CONCRETE SPECIFICATIONS:
ALL CONCRETE HAS BEEN DESIGNED IN ACCORDANCE WITH ACI 318–08, AND SHALL BE CONSTRUCTED IN ACCORDANCE WITH ACI 301. ALL CONCRETE SHALL HAVE A MINIMUM COMPRESSIVE STRENGTH OF 3000 PSI AT 28 DAYS
CONCRETE AT GARAGE AND PORCH SLABS SHALL HAVE A COMPRESSIVE STRENGTH OF 3000 PSI.

GENERAL NOTES:

FOOTING AND FOUNDATIONS:
FOOTINGS AND FOUNDATIONS SHALL BE IN ACCORDANCE WITH LOCAL BUILDING CODES. FOOTING HAVE BEEN DESIGNED WITH A SOIL BEARING (DESIGN MAXIMUM) OF 2000 PSF. A SOILS INVESTIGATION REPORT IS RECOMMENDED TO VERIFY SUITABLE SUBSURFACE CONDITIONS. IF THE FOOTING ELEVATIONS SHOWN OCCUR IN A DISTURBED OR UNSTABLE SOIL, THE ENGINEER SHALL BE NOTIFIED. SOIL SHALL BE FREE OF ORGANIC MATERIAL AND COHESIVE (CLAY) SOILS. SOIL COMPACTION AND FILL SHALL BE COMPACTED TO A MIN. OF 95% MODIFIED PROCTOR IN ACCORDANCE WITH ASTM D 1557.

FOUNDATION PLAN ONLY CONVEYS STRUCTURAL INFORMATION. FOR GENERAL FEATURES, CONDUITS, ELECTRICAL EMBEDS, STEP HEIGHTS, ETC., SEE ARCHITECTURAL PLANS. DO NOT SCALE FOOTING DIMENSIONS AND LOCATION FROM THE FOUNDATION PLAN SHOWN ON S1.0. DO NOT DETERMINE FOOTING LOCATION BASED ON EITHER THE ARCHITECTURAL PLAN OR FRAMING PLAN, BUT BY DIMENSIONS PROVIDED ON FOUNDATION PLAN. IF FOOTING SIZE OR LOCATION IS NOT DETERMINED ON PLAN THEN CONTACT ENGINEER OF RECORD (EOR)

UNLESS OTHERWISE NOTED ON DRAWINGS, MINIMUM CONCRETE COVER FOR REINFORCING SHALL BE 3" IN FOOTINGS AND MESH SHALL BE CENTERED IN SLAB ON GRADE. IN ALL CONTINUOUS FOOTINGS PROVIDE #3 @ 48" O.C. OR ROD CHAIRS. PROVIDE CONTINUITY OF REINFORCING AT INTERSECTIONS OF PERPENDICULAR CONCRETE ELEMENTS BY INSTALLING CORNER BARS, MINIMUM OF 40 BAR DIAMETERS INTO EACH ELEMENT. SPLICES IN REINFORCING, WHERE PERMITTED, SHALL BE 48 BAR DIAMETERS

CONCRETE SLABS ON GRADE:
SHALL BE INSTALLED OVER MINIMUM 6 MIL POLYETHYLENE VAPOR RETARDER WITH JOINTS LAPPED 6" AND SEALED OVER CLEAN, COMPACTED EARTH OR FILL WITH APPROVED CHEMICAL SOIL TREATMENT FOR PREVENTION OF SUBTERRANEAN TERMITES. **SAWCUTS:** FOR CONTROLLED CRACKING CUT A 1" SAWCUT INTO SLAB IN A 12'x12' GRID WITHIN 12 HOURS OF CONCRETE PLACEMENT, PROVIDE SAWCUTS THROUGH OUT SLAB CALL EOR FOR ALTERNATIVE METHODS.

WOOD FRAMING SPECIFICATIONS:
ALL WOOD FRAMING HAS BEEN DESIGNED IN ACCORDANCE WITH NATIONAL DESIGN SPECIFICATIONS (NDS) FOR WOOD CONSTRUCTION, LATEST EDITION. ALL WOOD MEMBERS EXPOSED TO WEATHER OR IN CONTACT WITH MASONRY, CONCRETE OR SOIL SHALL BE PRESSURE–TREATED. IF, ACQ OR NON–DOT BORATE PRESERVATIVE TREATMENT IS USED, ALL ATTACHED FASTENERS SHALL BE HOT DIPPED GALVANIZED. IF ACZA PRESERVATIVE IS USED, ALL ATTACHED FASTENERS SHALL BE STAINLESS STEEL.

PRE–ENGINEERED WOOD TRUSSES:
SHALL BEAR THE SEAL OF AN ENGINEER IN THE STATE WHERE PROJECT IS BEING BUILT AND SHALL COMPLY WITH NFPA, TPI, AND AITC 100. CONTRACTOR SHALL VERIFY THAT ADEQUATE TRUSS BEARING IS INSTALLED AT ALL TRUSSES AS INDICATED IN THE TRUSS SHOP DRAWINGS. ALL TRUSS–TO–TRUSS CONNECTIONS AND TRUSS PROFILES ARE THE RESPONSIBILITY OF THE DELEGATED TRUSS ENGINEER. ALL TRUSSES SHALL HAVE TEMPORARY BRACING PER 'COMMENTARY' AND RECOMMENDATION FOR HANDLING, INSTALLING & BRACING METAL PLATE CONNECTED WOOD TRUSSES, HIB–91." AT MULTIPLE STRAP CONNECTIONS, SPREAD STRAPS TO AVOID NAILING CONFLICTS THROUGH TRUSS. WHEN USING (2) STRAPS ON SINGLE PLY TRUSSES, PLACE STRAPS DIAGONALLY ACROSS DBL. TOP PLATE FROM EA. OTHER.

ROOF COVERING SPECIFICATIONS:
THE CONTRACTOR SHALL BE RESPONSIBLE FOR THE DESIGN AND INSTALLATION OF THE ROOF COVERING SYSTEM. ASPHALT SHINGS SHALL COMPLY WITH ASTM D3161 AND BE INSTALLED ACCORDING TO THE MANUFACTURER'S REQUIREMENTS. CLAY AND TILE ROOFS SHALL BE INSTALLED PER THE "CONCRETE AND CLAY ROOF TILE INSTALLATION MANUAL." AND THE MANUFACTURER'S REQUIREMENTS. STANDING SEAM METAL ROOFS SHALL COMPLY WITH ASTM E1514 AND BE INSTALLED ACCORDING TO THE MANUFACTURER'S REQUIREMENTS. THE CONTRACTOR SHALL BE RESPONSIBLE FOR THE DESIGN AND INSTALLATION OF ALL METAL FLASHING AND VALLEY MATERIALS.

WATERPROOFING:
THE CONTRACTOR SHALL BE RESPONSIBLE FOR THE DESIGN/INSTALLATION OF ALL WATER PROOFING.

WOOD FASTENING SCHEDULE

MEMBERS	CONNECTION TYPE	FASTENER
TOP PLATE TO TOP PLATE	FACE NAIL	2–GUN NAILS @ 12" STAG.
TOP PLATE, LAPS/INTERSECTION	FACE NAIL	(2–16d) 3–GUN NAILS
DBL. TOP PLATE TO STUD	FACE NAIL	(2–16d) 3–GUN NAILS
RIM JOIST TO TOP PLATE	TOE NAIL	(8d @ 6") GUN NAIL @ 6"
CEILING JOIST TO TOP PLATE	TOE NAIL	(3–8d) 5–GUN NAILS
CEILING JOIST, OVER PARTITIONS	FACE NAIL	(3–16d) 4–GUN NAILS
CEILING JOIST TO ROOF RAFTER	FACE NAIL	(6–16d) 8–GUN NAILS
JOIST/TRUSS TO PLATE	TOE NAIL	(2–16d) 3–GUN NAILS
RAFTER TO PLATE	TOE NAIL	(3–8d) 3–GUN NAILS
JACK RAFTER TO HIP	TOE NAIL	(3–10d) 4–GUN NAILS
ROOF RAFTER TO 2x_ RIDGE BM.	TOE NAIL	(2–16d) 3–GUN NAILS
CONT. HEADER, TWO PIECES	FACE NAIL	16d@ 16" O.C. @ EDGE
CONT. HEADER TO STUD	TOE NAIL	(3–16d) 4–GUN NAILS
STUD TO SOLE PLATE	TOE NAIL	(3–16d) 4–GUN NAILS
SOLE PLATE TO JOIST/BLOCKING	FACE NAIL	(16d @ 16") GUN NAIL @ 8"

NAIL SPECIFICATIONS
3"x0.131"ø = GUN NAILS — 2"x0.113"ø = RINK SHANK
2"x0.113"ø = 6d — 2 1/2"x0.131"ø = 8d
3"x0.148"ø = 10d — 3 1/2"x0.162"ø = 16d
1 1/2"x0.148"ø = 10dx1 1/2" — 1 1/2"x0.131"ø = 8dx1 1/2"

BRICK NOTES / LINTEL SCHD

LINTEL DIMENSION	MIN. BRG.	MAX. SPAN
L3 1/2x3 1/2x1/4	4"	6'–0"
L4x3 1/2"x1/4	6"	8'–0"
L5x3 1/2"x1/4	6"	10'–0"
L6x3 1/2"x1/4	6"	12'–0"
L7x3 1/2"x1/4	6"	16'–0"

1. STEEL LINTELS TO BE MINIMAL 36" LINTEL MUST HAVE CORROSION RESISTANT COATING OF EPOXY BASED PAINT.

2. LINTEL MORE THAN 8'–0". SHOULD BE LATERALLY SUPPORTED NOT TO EXCEED 6 FT. O.C. w/ 2–1/4x3" WD. SCREWS INTO HEADER PROVIDE A 1/2" VERTICAL SLOTTED HOLE FOR SCREW.

3. BRICK VENEER ATTACHMENT: HORIZONTAL TIES @ 24" O.C., VERT. TIES @ 12" O.C.. (FOR 110mph WIND–ZONE VERT. TIES @ 16" O.C.). AT ALL OPENINGS SPACE TIES WITHIN 12" OF OPENINGS. PROVIDE 3/16"ø WEEP HOLES @ 33" O.C. IMMEDIATELY ABOVE FLASHING.

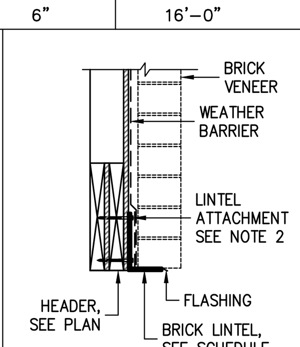

SECTION VIEW OF BRICK LINTEL

PLAN LEGEND AND ABBREVIATIONS

INTERIOR LOAD BEARING WALL
GABLE X–BRACE, SEE DETAIL 10/S0.1
SW 3"/6" — DESIGNATES SHEARWALL. THE HIDDEN LINE DESIGNATES SIDE OF WALL THE SHEARWALL SHEATHING TO BE APPLIED. 8d @ 3/6 DESIGNATES 8d COMMONS @ 3" O.C. EDGE & 6" O.C. "IN THE FIELD"
BUILT–UP POST IN THE WALL
(2)2x8–1/2 — HEADER SIZE, JACK AND KING STUD QUANTITY.

ADJ – ADJACENT
BM – BEAM
BOT – BOTTOM
BRG – BEARING
CMU – CONCRETE MASONRY UNIT
DBL – DOUBLE
DIA – DIAMETER
EA – EACH
EE – EACH END
EOR – ENGINEER OF RECORD
EQ – EQUAL
EXT – EXTERIOR
FBC – FLORIDA BUILDING CODE
FDN – FOUNDATION
FT – FOOT
FTG – FOOTING
HDR – HEADER
HORIZ – HORIZONTAL
LBS – POUNDS
LG – Long
MANUF – Manufacture
MONO – Monolithic
OC – On Center
OSB – Oriented Strand Board
PERP – Perpendicular
PRE ENG – Pre Engineered
PSF – Pounds per Square Foot
PSI – Pounds per Square Inch
PT – PRESSURE TREATED
QT – Quick Tie
REINF – Reinforce
SF – Square Foot
SPF –Spruce Pine Fur
SYP – Southern Yellow Pine
THRU – Through
TYP – Typical
UON – Unless Otherwise Noted
VERT – Vertical
WWF – Welded Wire Fabric

TYPICAL WALL FRAMING NOTES:

1. USE SPF#2 OR BETTER FOR ALL WALL STUDS..
2. USE SYP#2 FOR ALL TOP PLATES AND SOLE PLATES.
3. USE SYP#2 FOR ALL HEADERS
4. ALL WALLS SHALL BE **BALLOON FRAMED** FULL HEIGHT TO ROOF OR FLOOR BEARING ELEVATION, U.O.N. ON PLAN.
5.) FASTEN BOTTOM PLATE OF INTERIOR LOAD BEARING WALLS TO CONCRETE SLAB w/10d MASONRY CUT NAILS @ 48" O.C. MINIMUM. SEE FOUNDATION PLAN ADDITIONAL ANCHORS AT SHEARWALLS

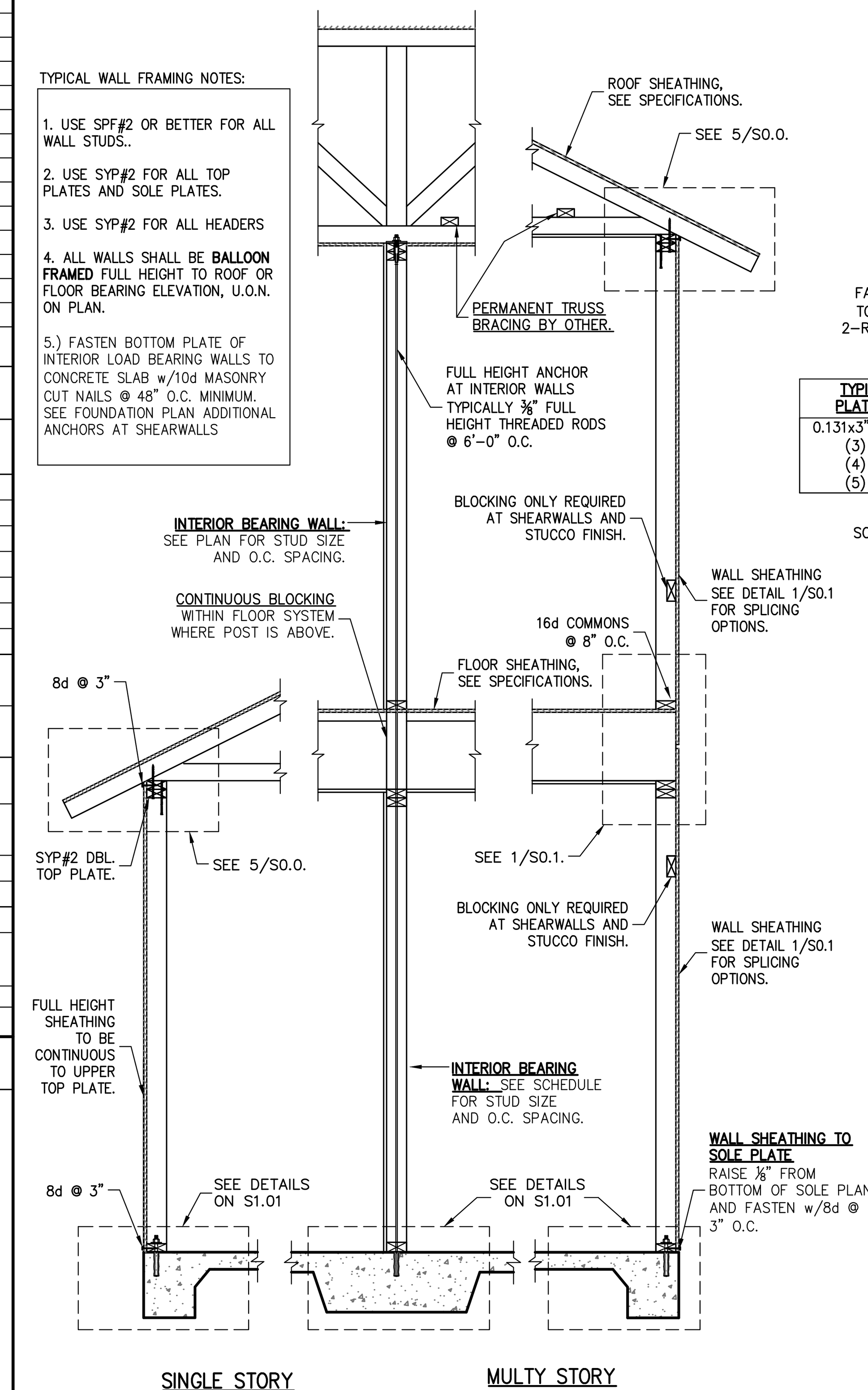

1 S0.0 TYP. WALL SECTIONS

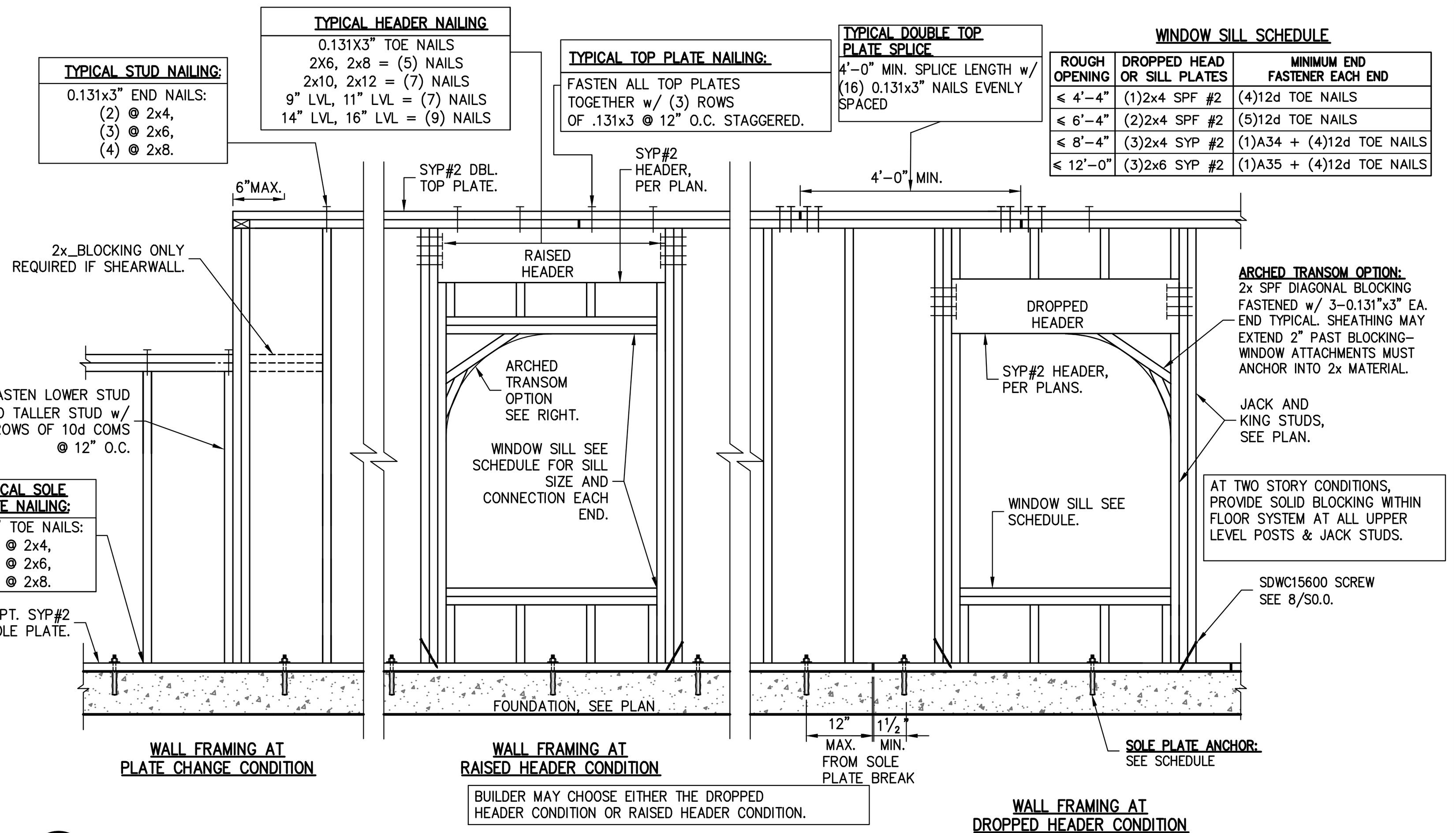

WINDOW SILL SCHEDULE

ROUGH OPENING	DROPPED HEAD OR SILL PLATES	MINIMUM END FASTENER EACH END
≤ 4'–4"	(1)2x4 SPF #2	(4)12d TOE NAILS
≤ 6'–4"	(2)2x4 SPF #2	(5)12d TOE NAILS
≤ 8'–4"	(3)2x4 SYP #2	(1)A34 + (4)12d TOE NAILS
≤ 12'–0"	(3)2x6 SYP #2	(1)A35 + (4)12d TOE NAILS

2 S0.0 TYPICAL WALL FRAMING

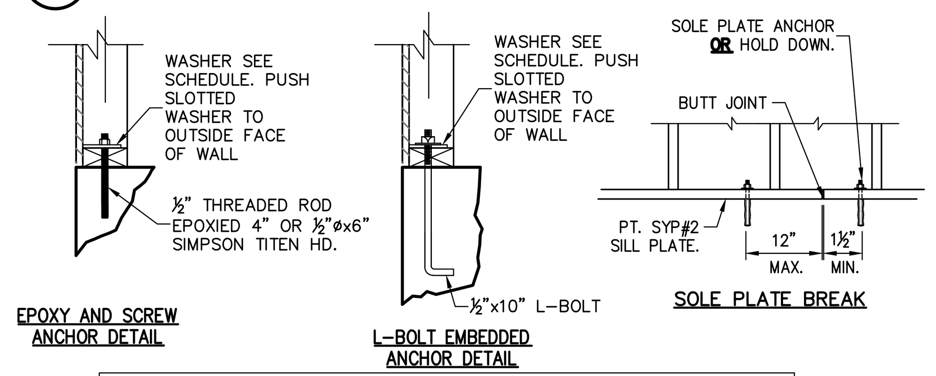

SOLE PLATE ANCHOR SCHEDULE

ANCHOR	EXT. WALL SPACING	SHEARWALLS SPACING	WASHER SPEC 2x4 WALL	WASHER SPEC 2x6 WALL	EMBEDMENT DEPTH	MIN EDGE DISTANCE
TITEN HD	42"	24"	2x2x1/8"	3x3x0.229"	4"	2"
EPOXY	42"	24"	2x2x1/8"	3x3x0.229"	4"	2"
L–BOLT	42"	24"	2x2x1/8"	3x3x0.229"	7"	2"

NOTES:
1. SOLE PLATE ANCHORS ARE REQUIRED AT ALL EXTERIOR WALLS AND ADJACENT TO CORNERS AND PLATE BREAKS..
2. 3x3 WASHERS SHALL BE SLOTTED.
3. AS AN ALTERNATE TO THE 3"X3"X1/4" PLATE WASHER, A 3"X3"X1/8" W/ 1 1/2"ø ROUND STEEL WASHER MAY BE USED.

3 S0.0 SOLE PLATE ANCHOR DETAIL & SCHEDULE
SCALE: 3/4" = 1'–0"

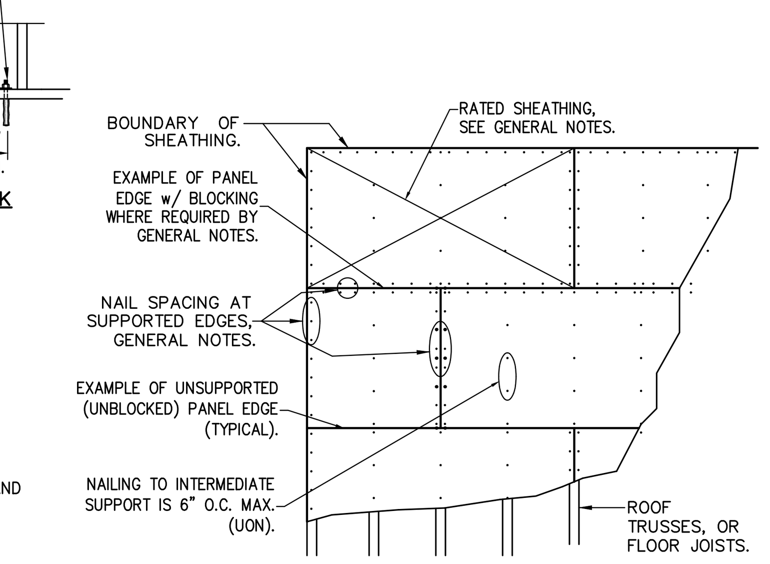

4 S0.0 ROOF AND FLOOR SHEATHING NAILING
SCALE: 3/4" = 1'–0"

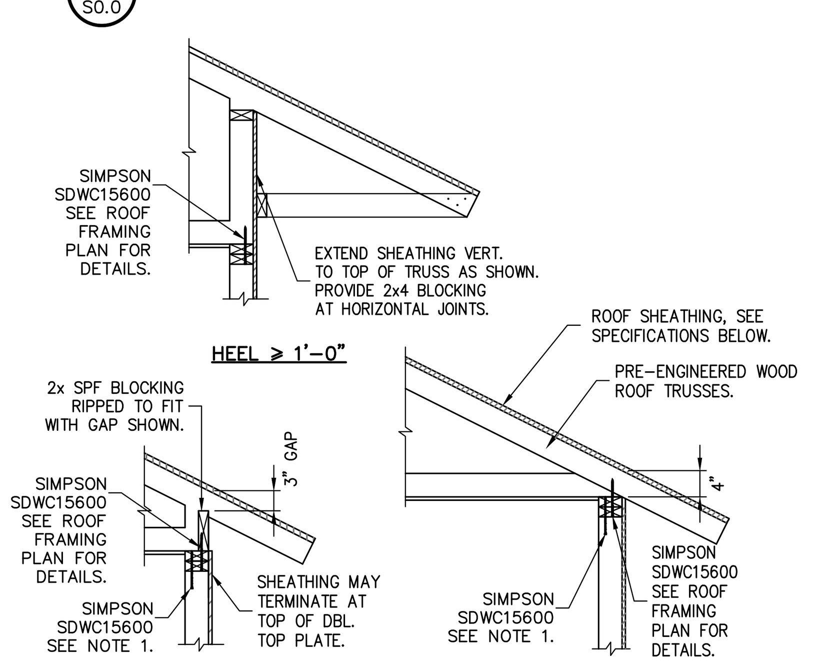

NOTES:
1. TOP PLATE TO STUD SDWC ONLY REQUIRED WHEN STUD IS DIRECTLY BELOW TRUSS.
2. H2.5T MAY BE SUBSTITUTED FOR TRUSS CONNECTION. PROVIDE ADDITIONAL H2.5T AT TOP PLATE TO STUD, SPACE @ 48" O.C.

5 S0.0 ROOF TRUSS CONNECTION

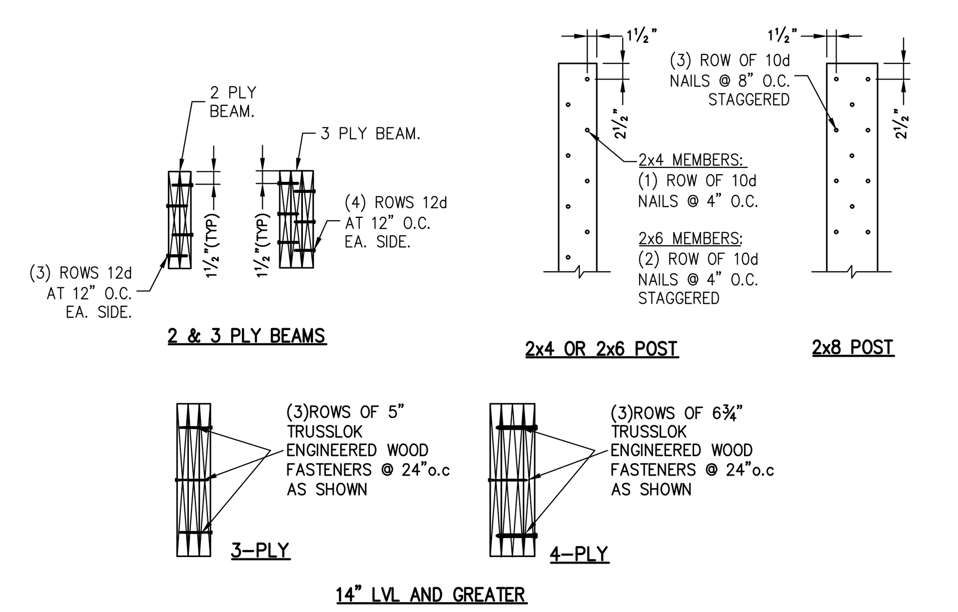

NOTES:
1. TYP. CONNECTION AT STUD COLUMNS, JACK–TO–KING ASSEMBLIES, CORNER POST, ETC.
2. SPECIFIED NAILING REQUIRED FOR EVERY PLY IN ADDITION TO (2) PLYS

6 S0.0 BUILT-UP MEMBER FASTENING

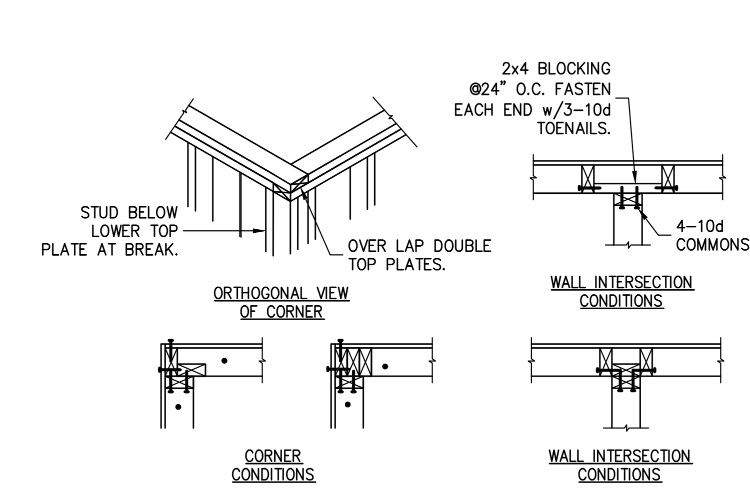

NOTES:
1. OVERLAP TOP PLATES AT CORNERS AND INTERSECTIONS .
2. ━ DENOTES 3"x0.131" GUN NAILS @ 6" O.C. VERTICAL.
3. • DENOTES SOLE PLATE ANCHOR, SEE SCHEDULE.
4. SOLE PLATE ANCHOR NOT REQUIRED WHEN HOLD DOWN IS INSTALLED.
5. CONTRACTOR MAY CHOOSE EITHER OPTION WHERE MULTIPLE OPTIONS ARE SHOWN.

7 S0.0 FRAMED WALL CORNER AND INTERSECTIONS STUDS CONFIGURATIONS

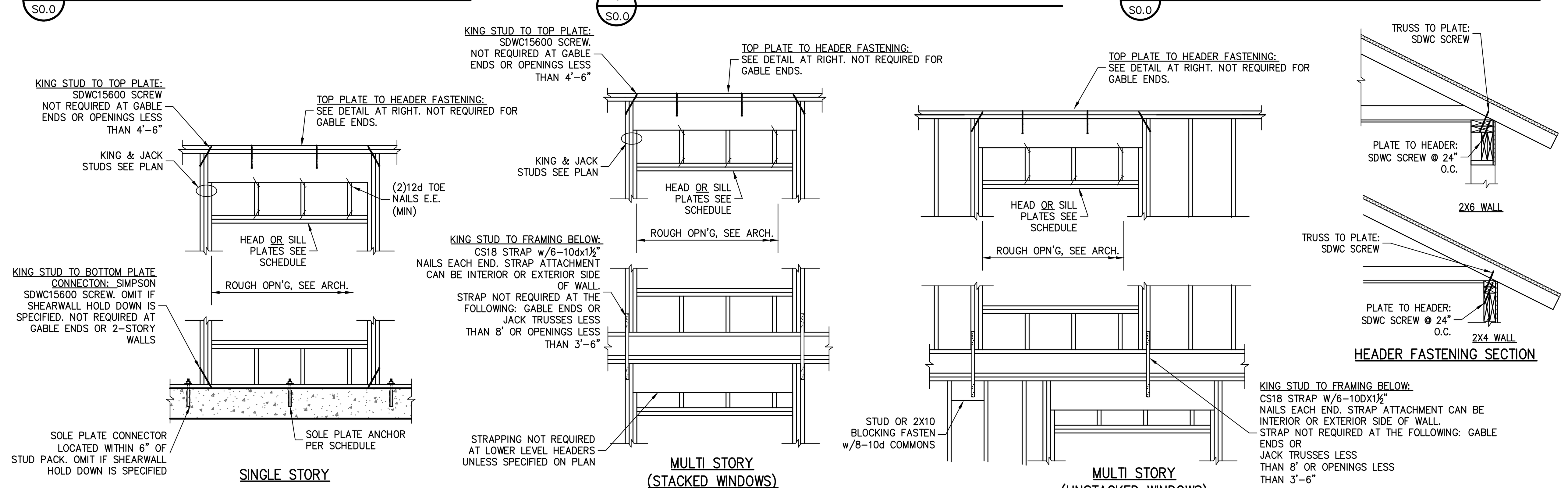

8 S0.0 TYPICAL HEADER STRAPPING

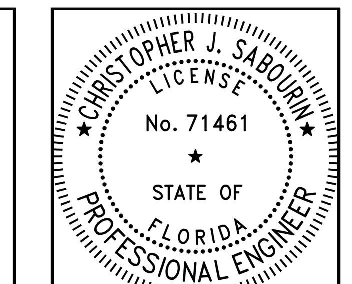

01.12.23
Christopher J Sabourin
FL PE#71461

SABO
STRUCTURAL ENGINEERING
CA#32529
235 9TH AVE N
JAX BEACH, FL 32250
904-712-5750
CHRIS@SABOENG.COM

PLAN NAME
BZEC FOSTER
SSE No.
22-0653

ISSUE	DATE
PERMIT	01.12.23
REVISIONS	DATE

STRUCTURAL ENGINEERING FOR THE FOSTER MODEL HOME

FIELD ALTERATION
CONTRACTOR SHALL CONTACT SABO STRUCTURAL ENGINEERING PRIOR TO MAKING ANY STRUCTURAL FIELD MODIFICATIONS WHICH MAY VARY FROM THE INTENT OF THE ORIGINAL CONSTRUCTION DOCUMENTS. ANY FIELD ALTERATIONS MADE PRIOR TO BEING APPROVED BY CHRISTOPHER SABOURIN MAY RESULT IN ADDITIONAL ENGINEERING OR INSPECTION FEES.

SCALING
DO NOT SCALE DIMENSIONS FROM THESE DRAWINGS. IF A DIMENSION IS UNCLEAR REFER TO THE ARCHITECTURAL DRAWINGS OR CONTACT THE E.O.R.

DESIGN CRITERIA AND GENERAL NOTES

SHEET
S0.0

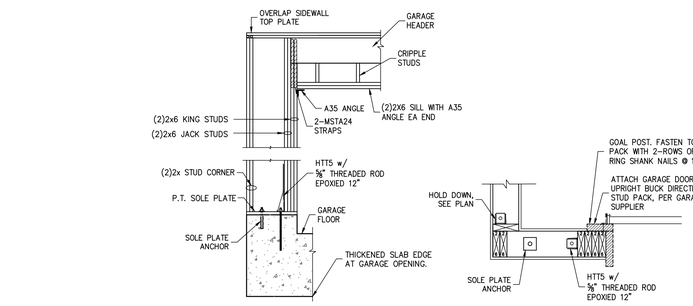

WHEN NOTED 1 S0.1 GARAGE HEADER FRAMING

SCALE: N.T.S.

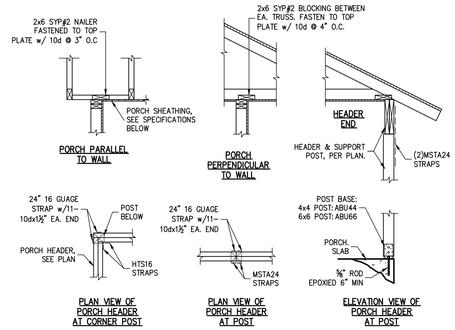

PORCH SHEATHING SPECIFICATIONS:
1/2" GYPSUM (WATER PROOF) GREEN BOARD, w/ 5d COOLER NAILS @ 6" O.C. EDGE & FIELD
OR
3/8" (OR GREATER) OSB OR PLYWOOD, w/ 8d COMMON NAILS @ 6" O.C. EDGE AND FIELD

2 S0.1 TYPICAL PORCH FRAMING DETAILS

SCALE: N.T.S.

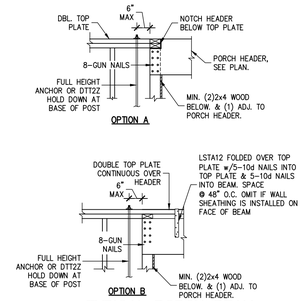

TYPICAL PORCH BEAM CONNECTION

3 S0.1 SCALE: N.T.S.

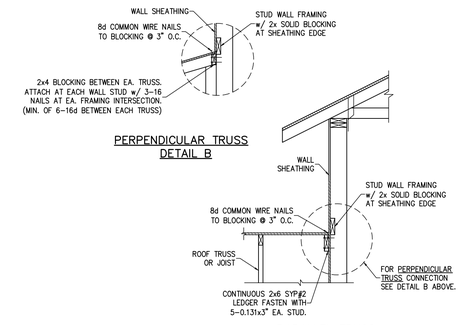

WHEN NOTED 4 S0.1 WALL ADJ. TO ROOF CONNECTION

SEE CONSTRUCTION SPECIFICATIONS FOR ROOF AND WALL SHEATHING AND STUD FRAMING.

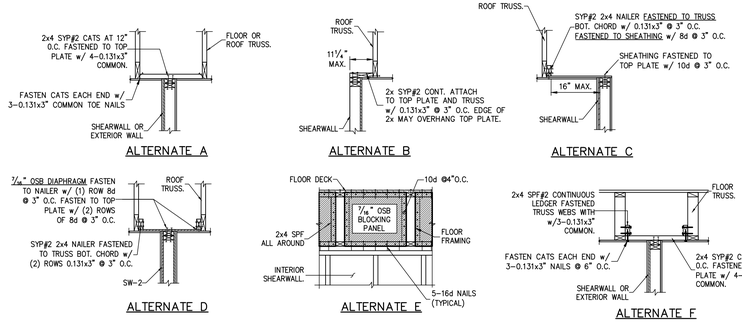

SHEARWALL NOTES:
1. AT ROOF TRUSS, CONTRACTOR MAY CHOOSE A,B,C,D, OR G.
2. USE ALTERNATE A. AT EXTERIOR WALLS ENDING BETWEEN ROOF TRUSSES.
3. USE ALTERNATE E & F FOR FLOOR TRUSS ATTACHMENT

5 S0.1 SHEARWALL ATTACHMENT AT ROOF & FLOOR

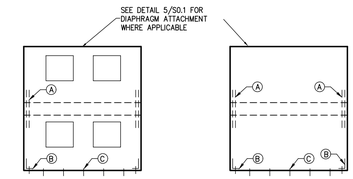

SW 8d@3"/6"
PERFORATED SHEARWALL

(A) – UPPER TO LOWER STUDS
SW 8d@3/6: (2) CS18 STRAPS

(B) – END STUDS TO FOUNDATION
SW 8d@3/6: HTT5 OR HDU5

(C) – SOLE PLATE ANCHORS
SEE SCHEDULE ON DETAIL 3/S0.0

SW 8d@3"/6"
SEGMENTED SHEARWALL

(A) – UPPER TO LOWER STUDS
SW 8d@3/6: (2) CS18 STRAPS

(B) – END STUDS TO FOUNDATION
SW 8d@3/6: HTT5 OR HDU5

(C) – SOLE PLATE ANCHORS
SEE SCHEDULE ON DETAIL 3/S0.0

SHEARWALL NOTES
1. PROVIDE 7/16" OSB SHEATHING WITH 8d COMMONS @ 3" O.C. AT PANEL BOUNDARIES AND 6" IN THE FIELD. PROVIDE 2x BLOCKING AT ALL PANEL EDGES.
2. PROVIDE A MINIMUM OF 2 STUDS EACH END OF SHEARWALLS. KING & JACK STUDS AT HEADERS MAY SERVE AS END POSTS FOR SW.
3. FASTEN ALL INTERIOR SW TO ROOF OR FLOOR TRUSSES PER 5/S0.1
4. INSTALL INTERIOR FOOTING BELOW SHEARWALL PER DETAILS ON S1.0

6 S0.1 TYPICAL SHEARWALL ELEVATION

PROVIDE SOLID BLOCKING WITHIN FLOOR SYSTEM AT SW END POSTS.

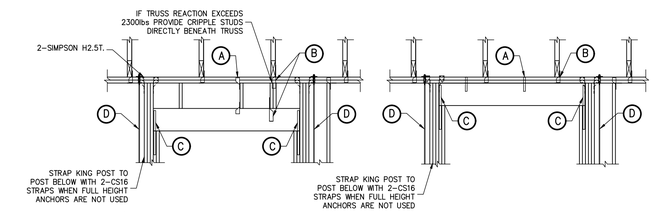

HEADER DOWN CONNECTION	
CONNECTION CALL OUT	UPLIFT CONNECTOR
A	H2.5T @ 32" O.C. TOP & BOT
B	SEE PLAN
C	(1)MSTA24 STRAPS
D	FULL HGT THREADED ROD SEE PLAN OR HTT4 HOLD DOWN AT BASE (U.O.N)

HEADER UP CONNECTION	
CONNECTION CALL OUT	UPLIFT CONNECTOR
A	LS18 @ 32" O.C.
B	SEE PLAN
C	(2)CS16 STRAPS
D	FULL HGT THREADED ROD SEE PLAN OR HTT4 HOLD DOWN AT BASE (U.O.N)

WHEN NOTED 7 S0.1 HEADER TIE DOWN

THIS DETAIL ONLY APPLIES WHEN NOTED ON PLAN

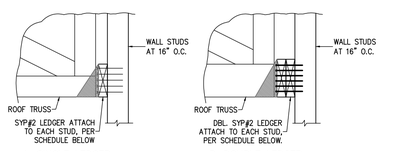

VERTICAL REACTION	LEDGER SIZE & NAILING
0-775	2x6 w/ 5-0.131x3"
776-1250	2x8 w/ 8-0.131x3"
1251-1540	2x10 w/ 10-0.131x3"
1540-1850	2x12 w/ 12-0.131x3"

VERTICAL REACTION	LEDGER SIZE & NAILING
1850-2345	2x8 w/ 6-1/4"ø x6" SDS SCREWS
2346-3125	2x12 w/ 8-1/4"ø x6" SDS SCREWS

LEDGER A NOTES: WHERE A LEDGER IS INDICATED ON PLAN AND NO TRUSSES BEAR AT THAT LOCATION, THE LEDGER IS BEING USED TO ATTACH THE ADJACENT ROOF DECK. USE A 2x6 LEDGER PER NAILING SCHEDULE ABOVE. ATTACH ROOF DECK PER GENERAL NOTES.

WHEN NOTED 8 S0.1 LEDGER CONNECTION

TRUSS TO LEDGER CONNECTION BY TRUSS ENGINEER. NOT SHOWN FOR CLARITY.

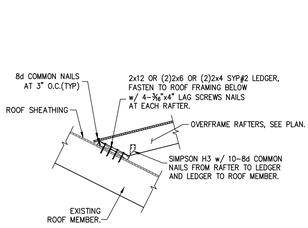

WHEN NOTED 9 S0.1 DECK LEDGER AT OVERFRAME RAFTERS

USE THIS DETAIL TO FASTEN OVERFRAMED ROOFS, VALLEYS, ETC.

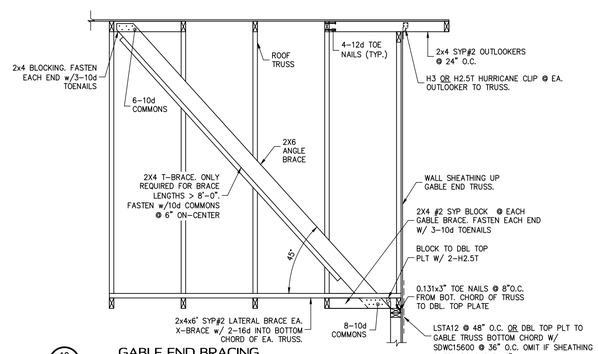

10 S0.1 GABLE END BRACING

NOTES:
1. SPACE GABLE END BRACING @ 4'-6" MAX.
2. ALL MATERIAL TO BE SYP#2

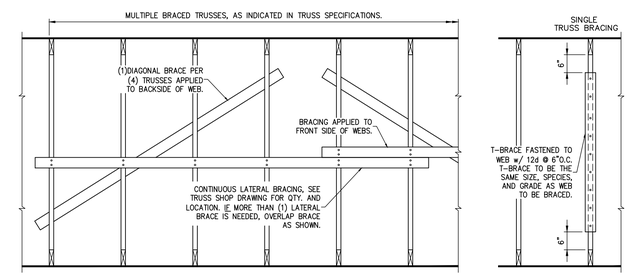

BRACING NOTES AND SPECIFICATIONS
1.)ALL BRACING LUMBER SHOWN, EXCEPT FOR T-BRACE SHALL BE 1x4 SYP#3 OR BETTER OR 2x4 SPF#2 OR BETTER. (UON)
2.)BRACING LUMBER SHALL INTERSECT THE WEB OF THE BRACED TRUSS, PER DELEGATED TRUSS ENGINEER.
3.)PERMANENT PERMANENT BRACING WHERE NOTED ON TRUSS MFR. SHOP DRAWINGS. THE CONTRACTOR SHALL PROVIDE 1x4 SYP#3 OR BETTER BOTTOM CHORD BRACING PERPENDICULAR TO TRUSS BOTTOM CHORDS AND ATTACHED TO EACH TRUS WITH 2-8d COMMON NAILS. AT GABLE END WALLS PROVIDE DIAGONALS AT END WALLS PROVIDE DIAGONALS (APPROXIMATELY 45%) TO THE ADJACENT EXTERIOR PERPENDICULAR WALL BETWEEN EACH LINE OF BRACING TO FORM A ZIGZAG PATTERN ALL CONSTRUCTED OF THE SAME BRACING MATERIAL. THIS REQUIRMENT IS NOT NECESSARY AT HIP ROOFS. ALSO ALONG EXTERIOR WALLS PARALLEL TO BOTTOM CHORD BRACING PROVIDE DIAGONALS IN THE END SPACE BETWEEN THE WALL AND THE FIRST LINE OF BOTTOM CHORD BRACING AT A MAXIMUM SPACING OF 20 FEET.

11 S0.1 PERMANENT TRUSS BRACING

SCALE: 3/4" = 1'-0"

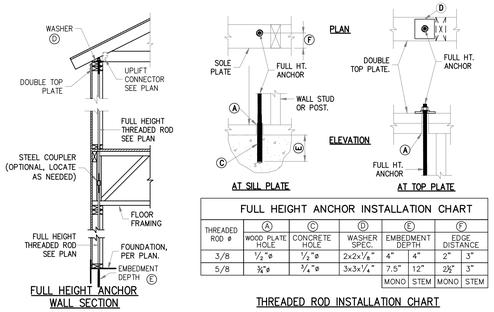

FULL HEIGHT ANCHORING SPECIFICATIONS

ANCHORING SYSTEM: THE THREADED ROD ANCHORING SYSTEM SHALL CONSIST OF 5/8"ø A307 THREADED RODS, ORIENTED VERTICALLY AND ATTACHED TO THE FOUNDATION AND TO THE UPPERMOST PLATE AT THE LOCATIONS INDICATED IN THESE DOCUMENTS. ABOVE TOP PLATE, PROVIDE A 2"x 2"x 1/8" STEEL WASHER. FASTEN WITH A NUT AND ALLOW AT LEAST 3 THREADS TO EXTEND ABOVE TIGHTENED NUT. (TYP.)

ROD INSTALLATION: AT ALL PLATE PENETRATIONS, PROVIDE A HOLE IN THE PLATE 1/8" LARGER THAN THE DIAMETER OF THE THREADED ROD USED. WHILE SINGLE CONTINUOUS RODS ARE PREFERRED, COUPLERS (SIMPSON CNW OR EQUAL) MAY BE USED IN CASES WHERE ONE CONTINUOUS ROD IS UNFEASIBLE. THE ROD SHALL BE INSTALLED APPROXIMATELY CENTERED IN HOLE. RODS MAY BE SLANTED FROM TRUE VERTICAL BY A MAXIMUM OF 2 INCHES IN 10 FEET TO AVOID CONFLICTS WITH FLOOR AND WALL FRAMING. **THE NUT ABOVE THE UPPERMOST PLATE SHALL BE SECURED OVER THE WASHER TO A SNUG-TIGHT CONDITION PLUS ONE-HALF TURN OF A STANDARD WRENCH (APPROXIMATELY 30 FT.-LBS. OF TORQUE). DUE TO SHRINKAGE AND COMPRESSION OF BUILDING CONTRACTORS SHALL RE-TIGHTEN NUT TO 30 FT.-LBS. OF TORQUE AFTER ALL TRADES ARE COMPLETE AND PRIOR TO INSULATION.**

EPOXY ANCHORING: ALL THREADED RODS SHALL BE DRILLED & EPOXY ANCHORED. SEE INSTALLATION CHART FOR EMBEDMENT AND EDGE DISTANCE REQUIREMENTS

FULL HEIGHT ANCHOR INSTALLATION CHART

THREADED ROD ø	(A) WOOD PLATE HOLE	(C) CONCRETE HOLE	(D) WASHER SPEC.	(E) EMBEDMENT DEPTH		(F) EDGE DISTANCE	
				MONO	STEM	MONO	STEM
3/8	1/2"ø	1/2"ø	2x2x1/4"	4"	4"	2"	3"
5/8	3/4"ø	3/4"ø	3x3x1/4"	7.5"	12"	2½"	3"

12 S0.1 FULL HEIGHT WOOD FRAME WALL ANCHORING SYSTEM

THIS DETAIL ONLY APPLIES WHEN NOTED ON PLAN

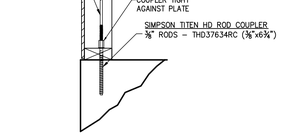

3/8" FULL HEIGHT ROD ALTERNATE ATTACHMENT

13 S0.1

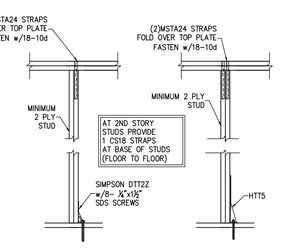

ALTERNATE FOR 3/8" FULL HEIGHT ROD

ALTERNATE FOR 5/8" FULL HEIGHT ROD

14 S0.1 FULL HEIGHT THREADED ROD ALTERNATE

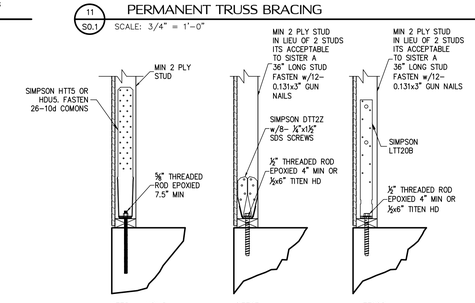

15 S0.1 HOLD DOWN ATTACHMENT DETAIL

CHRISTOPHER J. SABOURIN LICENSE No. 71461 STATE OF FLORIDA PROFESSIONAL ENGINEER
01.12.23
Christopher J Sabourin
FL PE#71461

SABO STRUCTURAL ENGINEERING
CA#32529
235 9TH AVE N
JAX BEACH, FL 32250
904-712-5750
CHRIS@SABOENG.COM

PLAN NAME	BZEC FOSTER
SSE No.	22-0653

ISSUE	DATE
PERMIT	01.12.23
REVISIONS	DATE

STRUCTURAL ENGINEERING FOR THE FOSTER MODEL HOME

FIELD ALTERATION

CONTRACTOR SHALL CONTACT SABO STRUCTURAL ENGINEERING PRIOR TO MAKING ANY STRUCTURAL FIELD MODIFICATIONS WHICH MAY VARY FROM THE INTENT OF THE ORIGINAL CONSTRUCTION DOCUMENTS. ANY FIELD ALTERATIONS MADE PRIOR TO BEING APPROVED BY CHRISTOPHER SABOURIN MAY RESULT IN ADDITIONAL ENGINEERING OR INSPECTION FEES.

SCALING

DO NOT SCALE DIMENSIONS FROM THESE DRAWINGS. IF A DIMENSION IS UNCLEAR REFER TO THE ARCHITECTURAL DRAWINGS OR CONTACT THE E.O.R.

TYPICAL FRAMING DETAILS

SHEET
S0.1
SHEET 2 OF 7

CONTRACTOR TO VERIFY DIMENSIONS

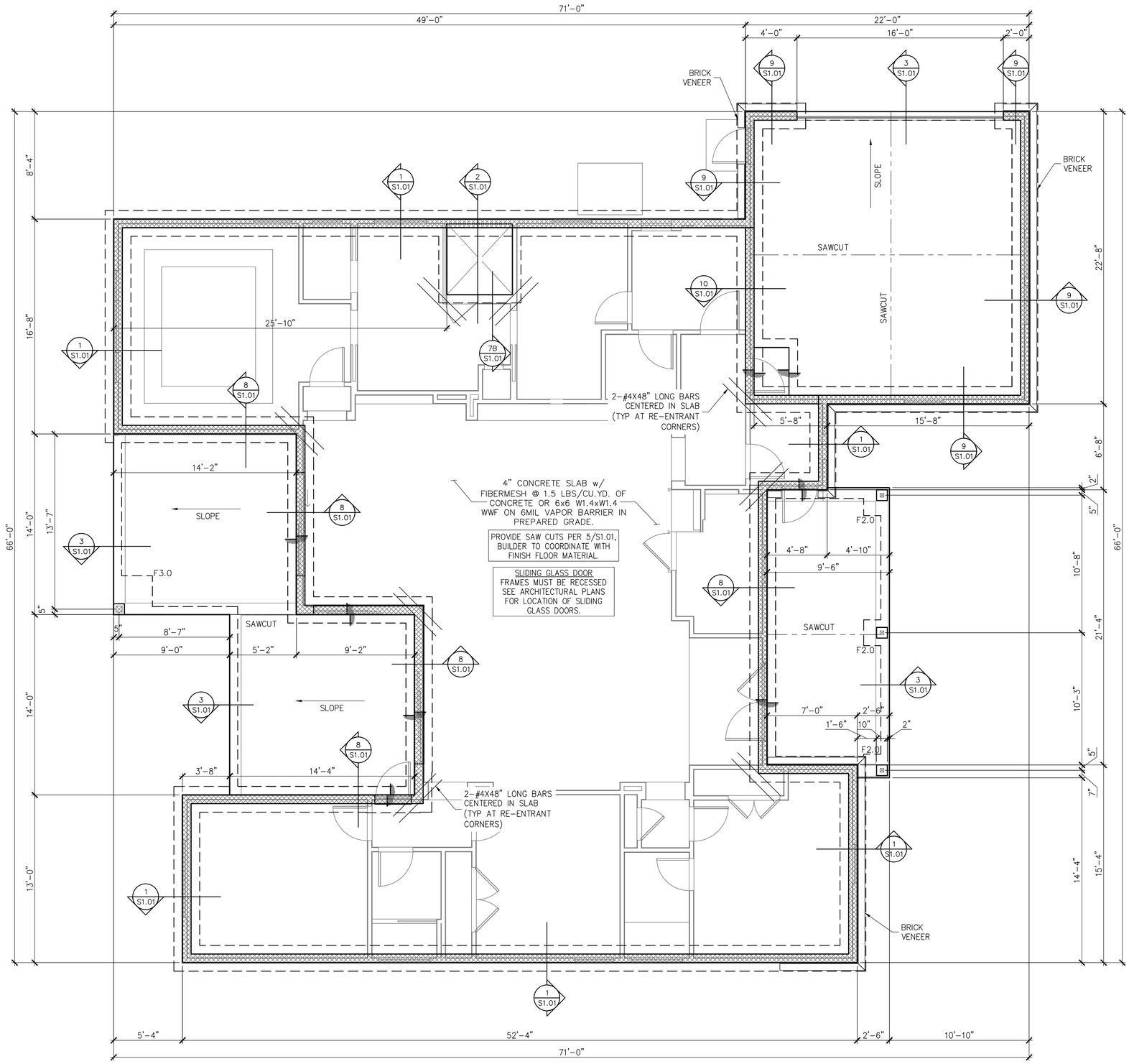

FOUNDATION PLAN
SCALE: 1/4" = 1'-0"

SYMBOLS LEGEND

	DESIGNATES FOOTING LINE
	DESIGNATES SAWCUT LINE
	STEM WALL FOOTING
	DESIGNATES SLAB RECESS

FOOTING SCHEDULE AND NOTES

TYPE	LENGTH	WIDTH	DEPTH	BOTTOM BARS
F2.0	2'-0"	2'-0"	1'-0"	3-#5 EA. WAY BOT.
F2.5	2'-6"	2'-6"	1'-0"	3-#5 EA. WAY BOT.
F3.0	3'-0"	3'-0"	1'-0"	3-#5 EA. WAY BOT.
F3.5	3'-6"	3'-6"	1'-0"	4-#5 EA. WAY BOT.
F4.0	4'-0"	4'-0"	1'-0"	4-#5 EA. WAY BOT.
F4.5	4'-6"	4'-6"	1'-0"	4-#5 EA. WAY BOT.

1. THIS FOUNDATION PLAN ONLY CONVEYS STRUCTURAL INFO. RELATED TO THE FOUNDATION. FOR GENERAL FEATURES, DIMENSIONS, CONDUITS, ELECTRICAL EMBEDS, STEP HEIGHTS, ECT., SEE ARCH. PLAN. ARCHITECTURAL PLAN SHOWN HERE IN FOR REFERENCE ONLY.

2. FTGS. & FND. SHALL BE IN ACCORDANCE w/ LOCAL BUILDING CODES.

3. SOIL COMPACTION AND FILL SHALL BE COMPACTED TO A MIN. OF 95% MODIFIED PROCTOR IN ACCORDANCE WITH ASTM D 1557.

CHRISTOPHER J. SABOURIN LICENSE No. 71461 STATE OF FLORIDA PROFESSIONAL ENGINEER

01.12.23
Christopher J Sabourin
FL PE#71461

SABO STRUCTURAL ENGINEERING
CA#32529
235 9TH AVE N
JAX BEACH, FL 32250
904-712-5750
CHRIS@SABOENG.COM

PLAN NAME	BZEC FOSTER
SSE No.	22-0653

ISSUE	DATE
PERMIT	01.12.23
REVISIONS	DATE

STRUCTURAL ENGINEERING FOR THE FOSTER MODEL HOME

FIELD ALTERATION

CONTRACTOR SHALL CONTACT SABO STRUCTURAL ENGINEERING PRIOR TO MAKING ANY STRUCTURAL FIELD MODIFICATIONS WHICH MAY VARY FROM THE INTENT OF THE ORIGINAL CONSTRUCTION DOCUMENTS. ANY FIELD ALTERATIONS MADE PRIOR TO BEING APPROVED BY CHRISTOPHER SABOURIN MAY RESULT IN ADDITIONAL ENGINEERING OR INSPECTION FEES.

SCALING

DO NOT SCALE DIMENSIONS FROM THESE DRAWINGS. IF A DIMENSION IS UNCLEAR REFER TO THE ARCHITECTURAL DRAWINGS OR CONTACT THE E.O.R.

FOUNDATION PLAN

SHEET
S1.0
SHEET 3 OF 7

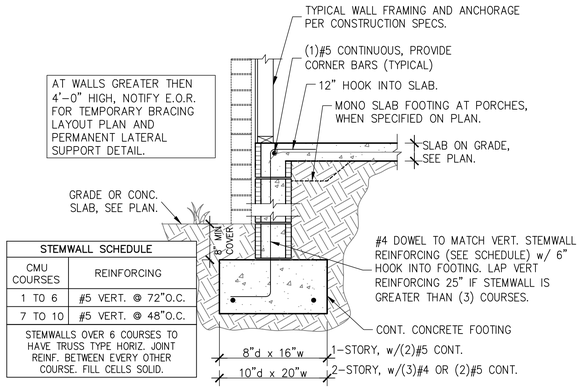

AT WALLS GREATER THEN 4'-0" HIGH, NOTIFY E.O.R. FOR TEMPORARY BRACING LAYOUT PLAN AND PERMANENT LATERAL SUPPORT DETAIL.

STEMWALL SCHEDULE	
CMU COURSES	REINFORCING
1 TO 6	#5 VERT. @ 72"O.C.
7 TO 10	#5 VERT. @ 48"O.C.
STEMWALLS OVER 6 COURSES TO HAVE TRUSS TYPE HORIZ. JOINT REINF. BETWEEN EVERY OTHER COURSE. FILL CELLS SOLID.	

1 S1.01 STEMWALL FOOTING
SCALE: 3/4" = 1'-0"

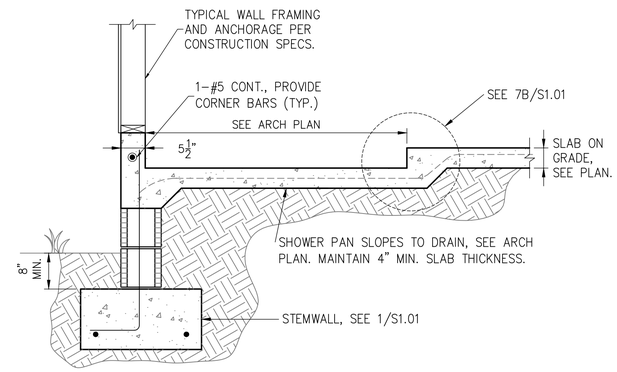

2 S1.01 FOOTING W/ SHOWER RECESS
SCALE: 3/4" = 1'-0"

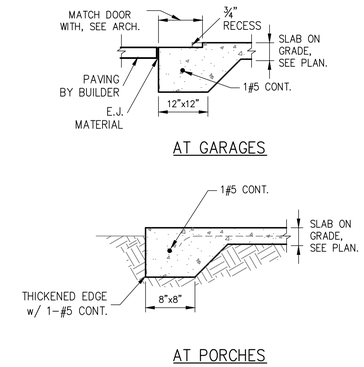

3 S1.01 THICKENED SLAB
SCALE: 3/4" = 1'-0"

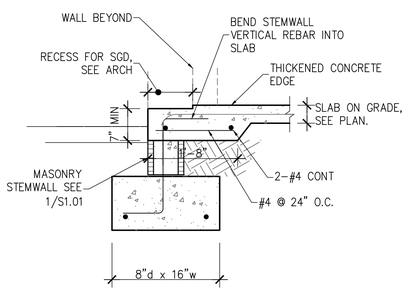

4 S1.01 STEMWALL FOOTING AT SLIDER
SCALE: 3/4" = 1'-0"

NOTES:
1) PROVIDE SAWCUTS TO CREATE APPROXIMATE 12' X 12' MAX. SQ.
2) SAWCUT CONC. SLAB WITHIN 4 TO 12 HOURS OF CONC. PLACEMENT.

5 S1.01 SAW CUT DETAIL
SCALE: 3/4" = 1'-0"

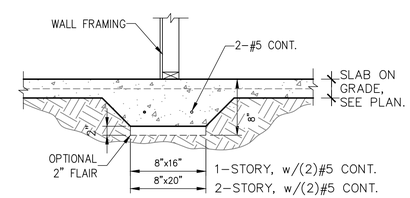

6 S1.01 BEARING AT INTERIOR
SCALE: 3/4" = 1'-0"

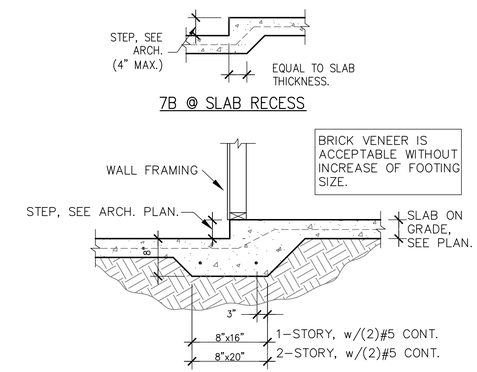

7 S1.01 MONO. FOOTING AT STEP-DOWN
SCALE: 3/4" = 1'-0"

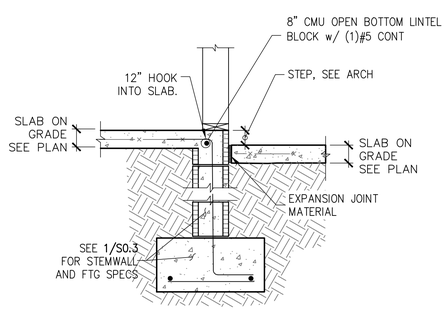

8 S1.01 STEP AT STEMWALL
SCALE: 3/4" = 1'-0"

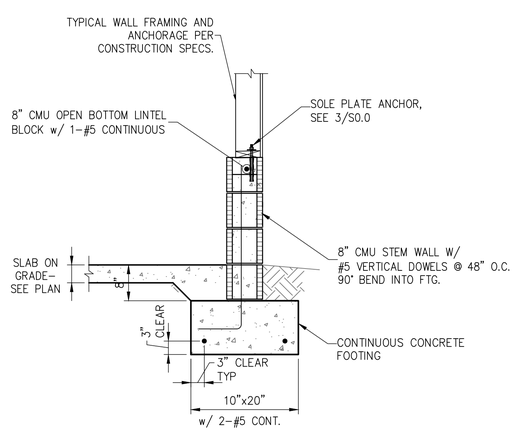

9 S1.01 GARAGE STEM WALL
SCALE: 3/4" = 1'-0"

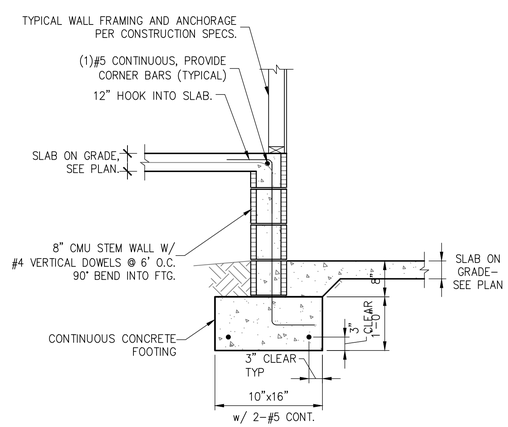

10 S1.01 STEMWALL AT GARAGE
SCALE: 3/4" = 1'-0"

CHRISTOPHER J. SABOURIN LICENSE No. 71461 STATE OF FLORIDA PROFESSIONAL ENGINEER
01.12.23
Christopher J Sabourin
FL PE#71461

SABO STRUCTURAL ENGINEERING
CA#32529
235 9TH AVE N
JAX BEACH, FL 32250
904-712-5750
CHRIS@SABOENG.COM

PLAN NAME
BZEC FOSTER
SSE No.
22-0653

ISSUE	DATE
PERMIT	01.12.23
REVISIONS	DATE

STRUCTURAL ENGINEERING FOR THE FOSTER MODEL HOME

FIELD ALTERATION
CONTRACTOR SHALL CONTACT SABO STRUCTURAL ENGINEERING PRIOR TO MAKING ANY STRUCTURAL FIELD MODIFICATIONS WHICH MAY VARY FROM THE INTENT OF THE ORIGINAL CONSTRUCTION DOCUMENTS. ANY FIELD ALTERATIONS MADE PRIOR TO BEING APPROVED BY CHRISTOPHER SABOURIN MAY RESULT IN ADDITIONAL ENGINEERING OR INSPECTION FEES.

SCALING
DO NOT SCALE DIMENSIONS FROM THESE DRAWINGS. IF A DIMENSION IS UNCLEAR REFER TO THE ARCHITECTURAL DRAWINGS OR CONTACT THE E.O.R.

FOUNDATION DETAILS

SHEET
S1.01
SHEET 4 OF 7

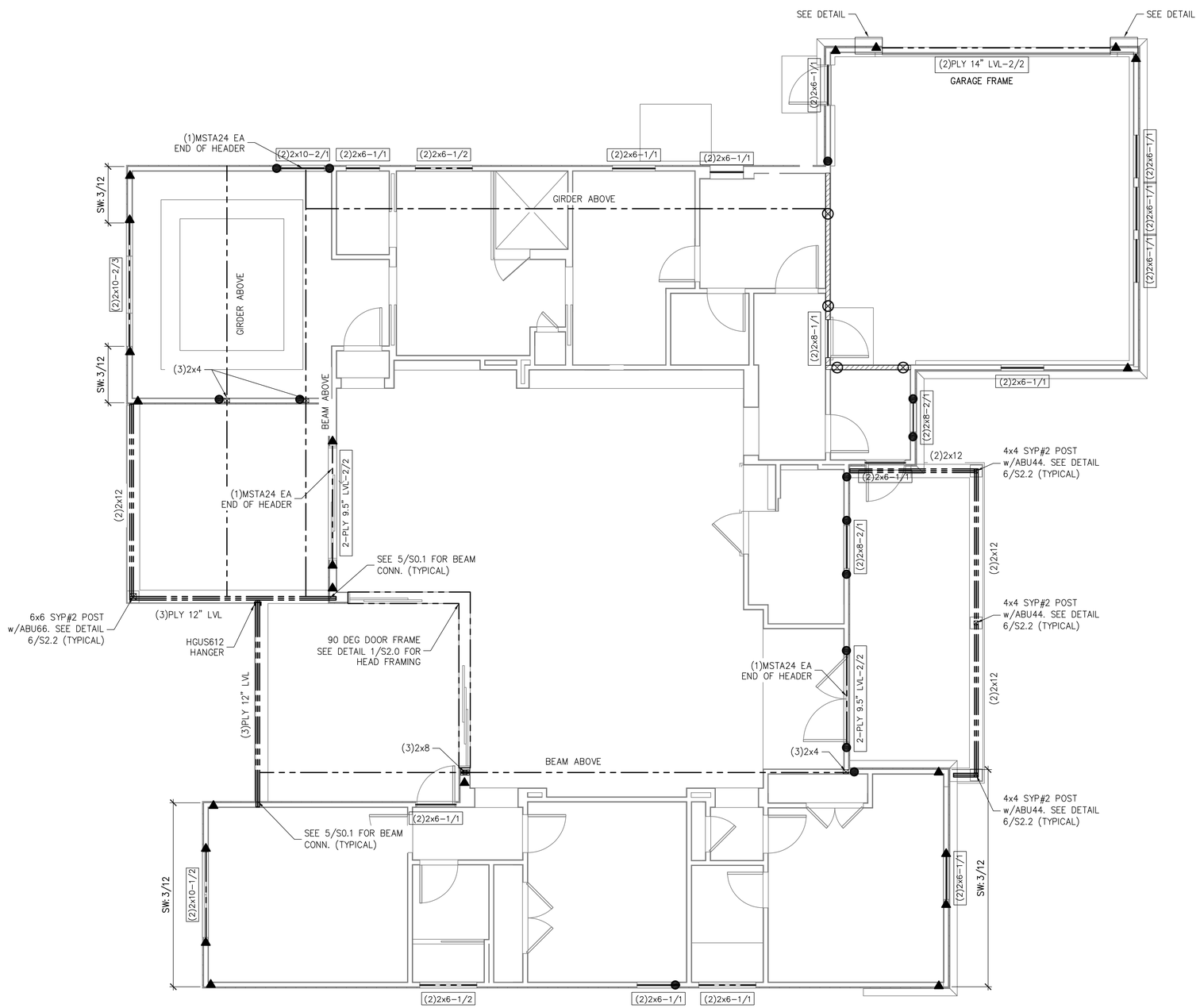

FIRST LEVEL WALL FRAMING PLAN
SCALE: 1/4" = 1'-0"

SYMBOLS LEGEND

SW: 3/12	DESIGNATES OSB SHEARWALL. THE HIDDEN LINE DESIGNATES SIDE OF WALL THE SHEARWALL SHEATHING TO BE APPLIED. 8d @ 6/12 DESIGNATES 8d COMMONS @ 3" O.C. EDGE & 6" O.C. "IN THE FIELD".
(2)2x8-1/2	DESIGNATES THE HEADER SIZE, NUMBER OF PLY'S & JACK/KING STUDS NEEDED FOR SUPPORT HEADER.
	BEAM OR TRUSS, SEE PLAN

ANCHOR LEGEND

X	3/8" A307 DIAMETER FULL HEIGHT THREADED ROD, SEE DETAIL 12/S0.1
X5	5/8" A307 DIAMETER FULL HEIGHT THREADED ROD, SEE DETAIL 12/S0.1
⊗	3/8" A307 DIAMETER THREADED ROD TERMINATES AT FIRST FLOOR TOP PLATE, SEE DETAIL 12/S0.1
⊗5	5/8" A307 DIAMETER THREADED ROD TERMINATES AT FIRST FLOOR TOP PLATE, SEE DETAIL 12/S0.1
▲	SIMPSON HTT5 SEE DETAIL 15/S0.1
●	SIMPSON DTT2Z SEE DETAIL 15/S0.1
◒	SIMPSON LTT20B SEE DETAIL 15/S0.1

WALL STUD SCHEDULE

LOCATION	PLATE HEIGHT	STUD SIZE & SPACING
EXTERIOR	9'-1" MAX	2x4 SPF#2 @ 16" O.C.
EXTERIOR	10'-1 MAX	2x6 SPF#2 @ 16" O.C. or 2x4 SPF#2 @ 12" O.C.
EXTERIOR	10'-1 TO 14'-0"	2x6 SPF#2 @ 16" O.C.
INTERIOR	10'-0" MAX	2x4 SPF#2 @ 16" O.C.
INTERIOR	12'-0" MAX	2x6 SPF#2 @ 16" O.C. or 2x4 SPF#2 @ 12" O.C.

STUD NOTES:

1.) WALL STUDS SPECIFIED ON PLAN SUPERSEDE THIS TABLE

2.) MINIMUM STUD SIZE AND SPACING ARE SHOWN. CONTRACTOR MAY INCREASE STUD SIZE TO MEET ARCHITECTURAL REQUIREMENTS.

3.) SPF DENOTES SPRUCE PINE FIR.. SYP DENOTES SOUTHERN YELLOW PINE.

4.) USE SYP#2 FOR ALL TOP PLATES AND SOLE PLATES.

5.) FASTEN BOTTOM PLATE OF INTERIOR LOAD BEARING WALLS TO CONCRETE SLAB w/16d MASONRY CUT NAILS @ 16" O.C. MINIMUM. SEE 3/S0.0 FOR ADDITIONAL ANCHORS AT SHEARWALLS

COMBINED USE PANEL NOTES

1. EXTERIOR WALL SHEATHING SHALL BE CONTINUOUS FROM BOTTOM PLATE TO UPPER MOST TOP PLATE. SEE DETAIL 1/S0.1 FOR SHEATHING SPLICE LOCATIONS FOR MULTI STORY CONDITIONS

2. SEE SHEET S0.0 FOR WALL SHEATHING SPECIFICATIONS.

3. UPPER MOST TOP PLATE SUPPORTING ROOF MEMBERS SHALL BE STRAPPED AS SHOWN IN DETAIL 1/S0.0

4. INSTALL SOLE PLATE ANCHORS PER DETAIL 3/S0.0

GENERAL NOTES

1. SEE DETAIL 2/S0.0 FOR WALL FRAMING DETAIL. SEE WALL STUD SCHEDULE THIS SHEET FOR STUD SIZES AND SPACING. AT GIRDERS AND BEAMS, PROVIDE STUDS BELOW TO MATCH BEAM/GIRDER PLIES.

2. SEE SHEET S0.0 FOR ROOF AND FLOOR SHEATHING SPECIFICATIONS.

3. WHERE FRAMING MEMBERS CONSIST OF MULTIPLE PLIES (BEAMS, HEADER, AND STUDS) FASTEN PLIES TOGETHER PER DETAIL 6/S0.0

4. INSTALL SOLE PLATE ANCHORS PER DETAIL 3/S0.0

5. AT SHEARWALLS, PROVIDE DIAPHRAGM ATTACHMENT PER DETAIL 5/S0.1

6. FOR ATTACHMENT OF EXTERIOR WALLS THAT TERMINATE BETWEEN TRUSSES, SEE 5A/S0.1

7. AT PORCHES, SEE DETAIL 2/S0.1 FOR FRAMING AND HOLD DOWNS

SOLE PLATE ANCHOR SPACING SCHD

ALL EXTERIOR WALL UNLESS OTHER NOTED	42" O.C.
SHEARWALLS (SW 8d@3"/6")	24" O.C.
SOLE PLT @ #	WHEN NOTED ON PLAN SEE NOTE 2

1. INSTALL SOLE PLATE ANCHORS PER DETAIL 3/S0.0

2. ANCHOR SPACING SHALL BE AS NOTED. FOR EXAMPLE – SOLE PLT @ 36" = 36" ON-CENTER SPACING

CHRISTOPHER J. SABOURIN
LICENSE
No. 71461
STATE OF FLORIDA
PROFESSIONAL ENGINEER

01.12.23
Christopher J Sabourin
FL PE#71461

SABO
STRUCTURAL
ENGINEERING
CA#32529
235 9TH AVE N
JAX BEACH, FL 32250
904-712-5750
CHRIS@SABOENG.COM

PLAN NAME	BZEC FOSTER
SSE No.	22-0653

ISSUE	DATE
PERMIT	01.12.23
REVISIONS	DATE

STRUCTURAL ENGINEERING FOR
THE FOSTER MODEL HOME

FIELD ALTERATION

CONTRACTOR SHALL CONTACT SABO STRUCTURAL ENGINEERING PRIOR TO MAKING ANY STRUCTURAL FIELD MODIFICATIONS WHICH MAY VARY FROM THE INTENT OF THE ORIGINAL CONSTRUCTION DOCUMENTS. ANY FIELD ALTERATIONS MADE PRIOR TO BEING APPROVED BY CHRISTOPHER SABOURIN MAY RESULT IN ADDITIONAL ENGINEERING OR INSPECTION FEES.

SCALING

DO NOT SCALE DIMENSIONS FROM THESE DRAWINGS. IF A DIMENSION IS UNCLEAR REFER TO THE ARCHITECTURAL DRAWINGS OR CONTACT THE E.O.R.

FIRST LEVEL WALL FRAMING PLAN

SHEET
S1.1
SHEET 5 OF 7

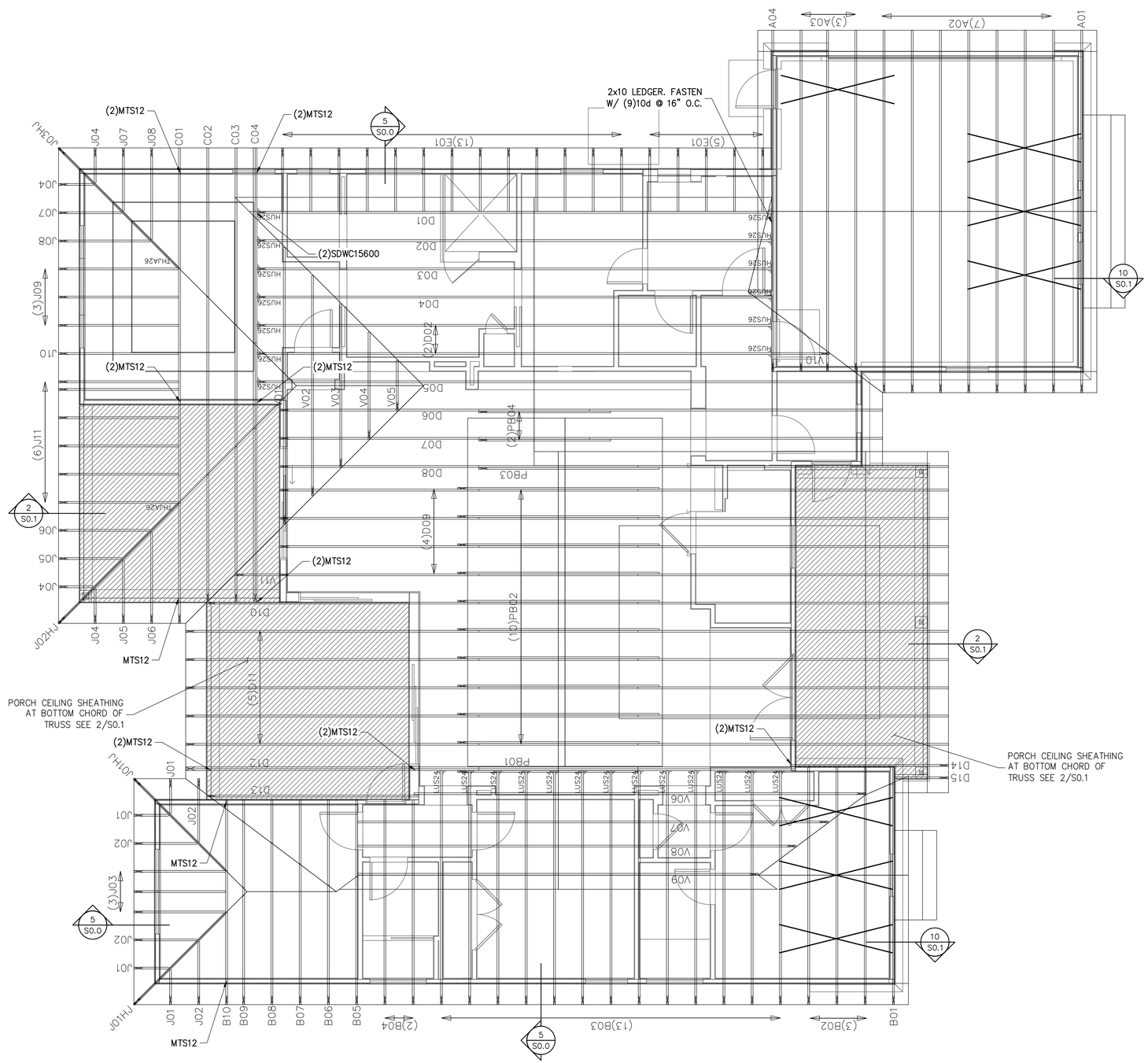

ROOF TRUSS PLACEMENT PLAN

SCALE: 1/4" = 1'-0"

SYMBOLS LEGEND

HTS16	DESIGNATES UPLIFT CONNECTION.

FRAMING PLAN NOTES:

1. FOR **TYPICAL ROOF SHEATHING AND FRAMING**, SEE SHEET S0.0.
2. FOR SPECIFIC UPLIFT CONNECTORS, SEE PLAN. MIN. (1)SDWC CONNECTOR.
3. FOR **GENERAL DESIGN SPECIFICATIONS** SEE SHEET S0.0.
4. WHEN USING (2)H2.5T CLIPS ON 1½" WIDE LUMBER, PLACE CLIPS DIAGONALLY ACROSS DOUBLE TOP PLATE FROM EACH OTHER.

TRUSS FASTENING DETAILS

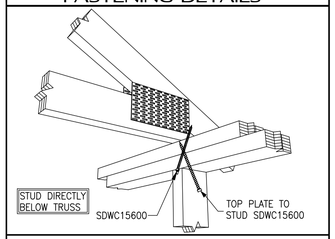

TRUSS TIE DOWN WITH SIMPSON SDWC

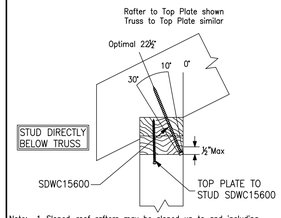

Note: 1. Sloped-roof rafters may be sloped up to and including a 12:12 pitch and must be "birdsmouth" cut.
2. Reference detail 4 for installation instructions.

SIMPSON SDWC INSTALLATION RANGE

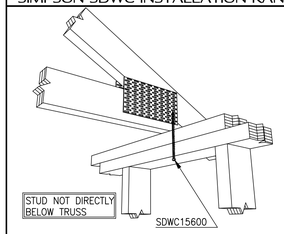

Note: Reference detail 2a for installation angle limit

SDWC INSTALLATION

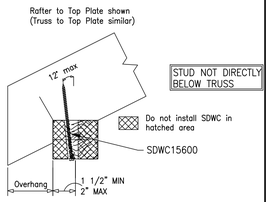

SDWC INSTALLATION RANGE

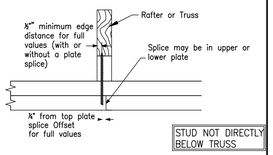

SDWC AT TOP PLATE SPLICE

CHRISTOPHER J. SABOURIN
LICENSE
No. 71461
STATE OF
FLORIDA
PROFESSIONAL ENGINEER

01.12.23
Christopher J Sabourin
FL PE#71461

SABO
STRUCTURAL
ENGINEERING
CA#32529
235 9TH AVE N
JAX BEACH, FL 32250
904-712-5750
CHRIS@SABOENG.COM

PLAN NAME	
BZEC FOSTER	
SSE No.	
22-0653	

ISSUE	DATE
PERMIT	01.12.23
REVISIONS	DATE

STRUCTURAL ENGINEERING FOR THE FOSTER MODEL HOME

FIELD ALTERATION

CONTRACTOR SHALL CONTACT SABO STRUCTURAL ENGINEERING PRIOR TO MAKING ANY STRUCTURAL FIELD MODIFICATIONS WHICH MAY VARY FROM THE INTENT OF THE ORIGINAL CONSTRUCTION DOCUMENTS. ANY FIELD ALTERATIONS MADE PRIOR TO BEING APPROVED BY CHRISTOPHER SABOURIN MAY RESULT IN ADDITIONAL ENGINEERING OR INSPECTION FEES.

SCALING

DO NOT SCALE DIMENSIONS FROM THESE DRAWINGS. IF A DIMENSION IS UNCLEAR REFER TO THE ARCHITECTURAL DRAWINGS OR CONTACT THE E.O.R.

ROOF TRUSS PLACEMENT PLAN

SHEET
S1.2
SHEET 6 OF 7

BUILDER TO VERIFY THAT TRUSSES HAVE BEEN DESIGNED FOR 100# POINT LOADS AT MITERED GLASS INTERSECTIONS.

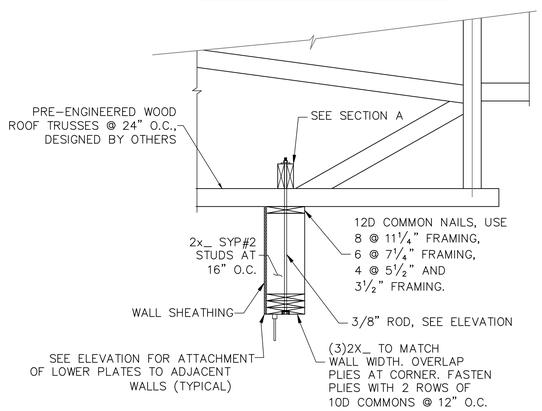

1 / S2.0 MITERED WINDOW HEAD FRAMING

SCALE: N.T.S.

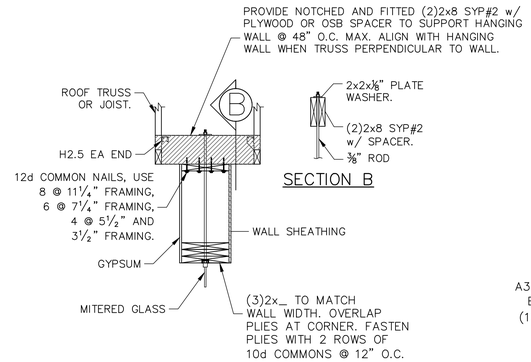

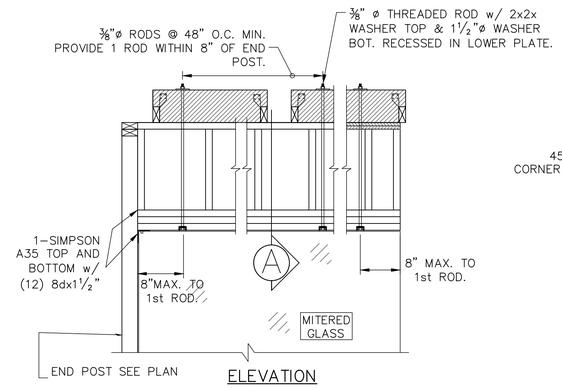

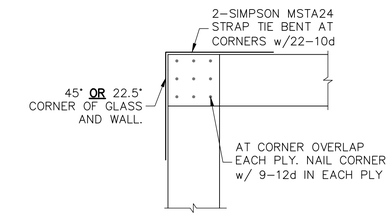

C SECTION AT CORNER

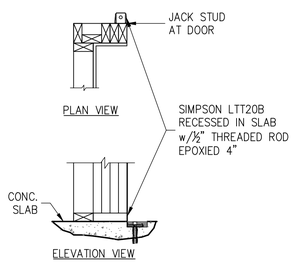

WHEN NOTED / 2 / S2.0 DOOR JAMB FASTENING

THIS DETAIL ONLY APPLIES WHEN NOTED ON PLAN

CHRISTOPHER J. SABOURIN LICENSE No. 71461 STATE OF FLORIDA PROFESSIONAL ENGINEER

01.12.23
Christopher J Sabourin
FL PE#71461

SABO STRUCTURAL ENGINEERING
CA#32529
235 9TH AVE N
JAX BEACH, FL 32250
904-712-5750
CHRIS@SABOENG.COM

PLAN NAME
BZEC FOSTER
SSE No.
22-0653

ISSUE	DATE
PERMIT	01.12.23
REVISIONS	DATE

STRUCTURAL ENGINEERING FOR THE FOSTER MODEL HOME

FIELD ALTERATION

CONTRACTOR SHALL CONTACT SABO STRUCTURAL ENGINEERING PRIOR TO MAKING ANY STRUCTURAL FIELD MODIFICATIONS WHICH MAY VARY FROM THE INTENT OF THE ORIGINAL CONSTRUCTION DOCUMENTS. ANY FIELD ALTERATIONS MADE PRIOR TO BEING APPROVED BY CHRISTOPHER SABOURIN MAY RESULT IN ADDITIONAL ENGINEERING OR INSPECTION FEES.

SCALING

DO NOT SCALE DIMENSIONS FROM THESE DRAWINGS. IF A DIMENSION IS UNCLEAR REFER TO THE ARCHITECTURAL DRAWINGS OR CONTACT THE E.O.R.

MISC DETAILS

SHEET
S2.0
SHEET 7 OF 7