12079

Alpine Engineered Products, Inc.

1950 Marley Drive Haines City, FL 33844
Florida Engineering Certificate of Authorization Number: 567
Florida Certificate of Product Approval # FL1999
Page 1 of 1 Document ID:1SUL487-Z0410150625

Truss Fabricator: Anderson Truss Company
Job Identification: 6-004-GLENWOOD KING - BULLARD
Truss Count: 89
Model Code: Florida Building Code 2004
Truss Criteria: ANSI/TPI-2002(STD)/FBC
Engineering Software: Alpine Software,Version 7.22.
Structural Engineer of Record:
Address:
Minimum Design Loads: Roof - 32.0 PSF @ 1.25 Duration
Floor - N/A
Wind - 110 MPH ASCE 7-02 -Closed

Seal Date: 02/10/2006

-Truss Design Engineer-
Arthur R. Fisher
Florida License Number: 59687
1950 Marley Drive
Haines City, FL 33844

Notes:

1. Determination as to the suitability of these truss components for the structure is the responsibility of the building designer/engineer of record, as defined in ANSI/TPI 1
2. The drawing date shown on this index sheet must match the date shown on the individual truss component drawing.
3. As shown on attached drawings; the drawing number is preceded by: HCUSR487

Details: BRCLBSUB-CNBRGBLK-A11015EE-GBLLETIN-PIGBACKB-

#	Ref Description	Drawing#	Date
1	86561--A1	06041029	02/10/06
2	86562--A2	06041030	02/10/06
3	86563--A3	06041031	02/10/06
4	86564--A4	06041032	02/10/06
5	86565--A5	06041033	02/10/06
6	86566--A6	06041034	02/10/06
7	86567--B1	06041035	02/10/06
8	86568--B2	06041036	02/10/06
9	86569--B3	06041037	02/10/06
10	86570--B4	06041038	02/10/06
11	86571--B5	06041039	02/10/06
12	86572--B6G	06041040	02/10/06
13	86573--B7	06041041	02/10/06
14	86574--B8G	06041042	02/10/06
15	86575--C1-GE	06041043	02/10/06
16	86576--C2	06041044	02/10/06
17	86577--C3G	06041008	02/10/06
18	86578--C4	06041095	02/10/06
19	86579--C5	06041009	02/10/06
20	86580--C6	06041045	02/10/06
21	86581--C7	06041046	02/10/06
22	86582--C8	06041047	02/10/06
23	86583--C9G	06041048	02/10/06
24	86584--CC4	06041010	02/10/06
25	86585--CC5	06041049	02/10/06
26	86586--CC6	06041050	02/10/06
27	86587--CC7	06041051	02/10/06
28	86589--D2	06041053	02/10/06
29	86590--D3	06041054	02/10/06
30	86591--D4	06041055	02/10/06
31	86592--D5G	06041056	02/10/06
32	86593--FGB	06041057	02/10/06
33	86594--FGC	06041058	02/10/06
34	86595--FGCC	06041059	02/10/06
35	86596--FGX	06041060	02/10/06
36	86597--HJ7	06041061	02/10/06
37	86598--EJ7	06041011	02/10/06
38	86599--J5	06041012	02/10/06
39	86600--J3	06041013	02/10/06
40	86601--J1	06041062	02/10/06
41	86602--CC8	06041063	02/10/06
42	86603--HJD	06041064	02/10/06
43	86604--EJD	06041014	02/10/06
44	86605--J5D	06041065	02/10/06
45	86606--J3D	06041015	02/10/06
46	86607--J1D	06041066	02/10/06
47	86608--JD1	06041016	02/10/06
48	86609--JD2	06041017	02/10/06
49	86610--JD3	06041018	02/10/06
50	86611--HJK	06041067	02/10/06
51	86612--EJK1	06041068	02/10/06
52	86613--EJK2	06041069	02/10/06
53	86614--J5K	06041070	02/10/06
54	86615--J3K	06041071	02/10/06
55	86616--J1K	06041072	02/10/06
56	86617--JR1	06041019	02/10/06
57	86618--JR2	06041020	02/10/06
58	86619--JR3	06041021	02/10/06
59	86620--JR4	06041073	02/10/06
60	86621--JR5	06041074	02/10/06
61	86622--X1	06041022	02/10/06
62	86623--K1	06041075	02/10/06
63	86624--K2	06041076	02/10/06
64	86625--K3	06041077	02/10/06
65	86626--K4	06041096	02/10/06
66	86627--K5	06041078	02/10/06
67	86628--01-GE	06041079	02/10/06
68	86629--02	06041023	02/10/06
69	86630--AP1	06041080	02/10/06
70	86631--AP2	06041097	02/10/06
71	86632--AP3	06041082	02/10/06
72	86633--AP4	06041081	02/10/06
73	86634--BP1	06041083	02/10/06
74	86635--BP2	06041084	02/10/06
75	86636--BP3	06041085	02/10/06
76	86637--BP4	06041086	02/10/06
77	86638--BP5	06041087	02/10/06
78	86639--R1	06041088	02/10/06
79	86640--R2	06041024	02/10/06
80	86641--R3G	06041089	02/10/06
81	86642--S1-GE	06041090	02/10/06
82	86643--S2	06041025	02/10/06
83	86644--S3	06041026	02/10/06
84	86645--S4	06041027	02/10/06
85	86646--S5G	06041091	02/10/06
86	86647--W1	06041028	02/10/06
87	86648--Z1-GE	06041092	02/10/06
88	86649--Z2	06041093	02/10/06
89	86650--Z3	06041094	02/10/06

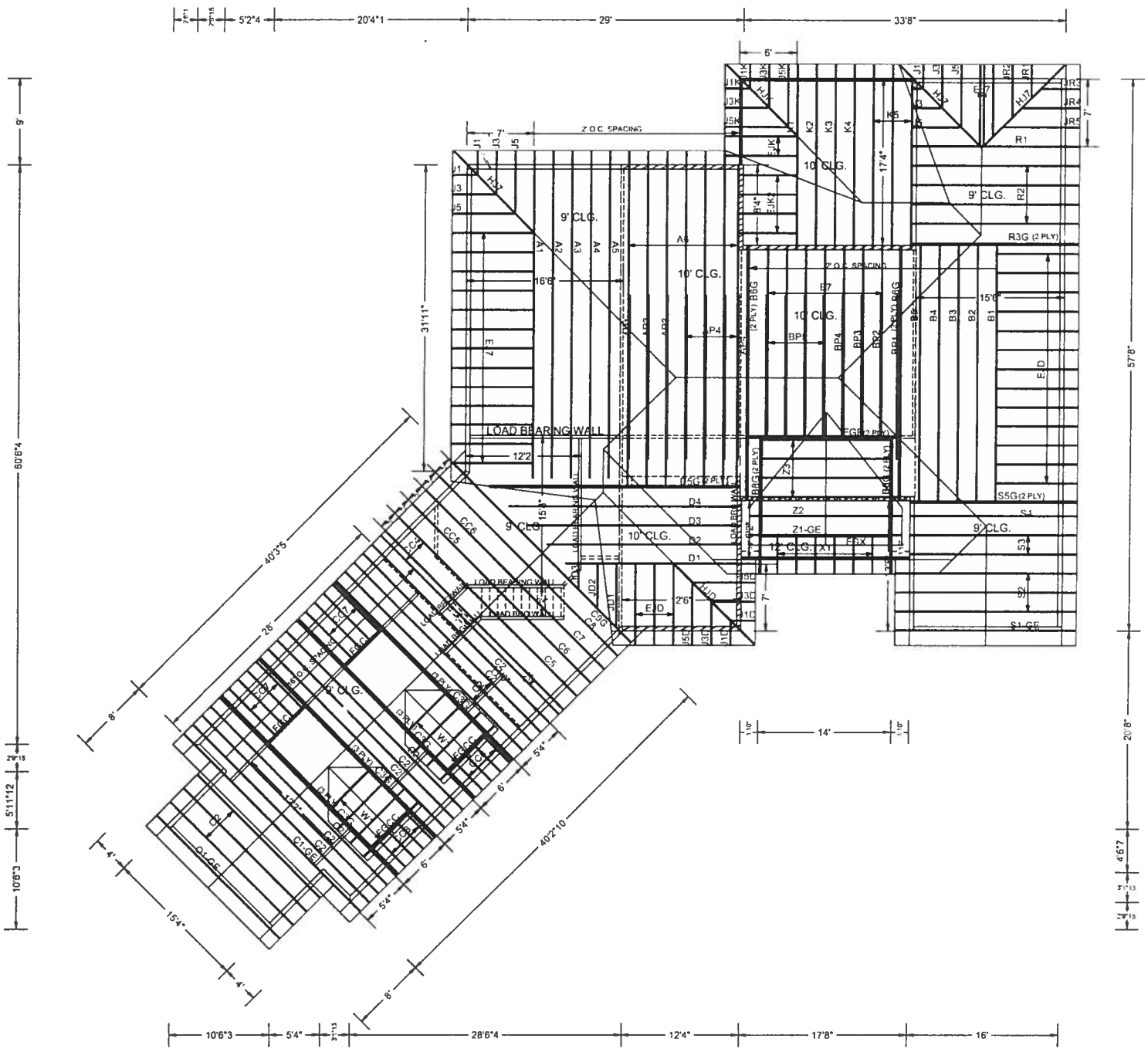

#6-004 GLENNWOOD KING - BULLARD 2/08/06

755-6030
397-4708 Cell

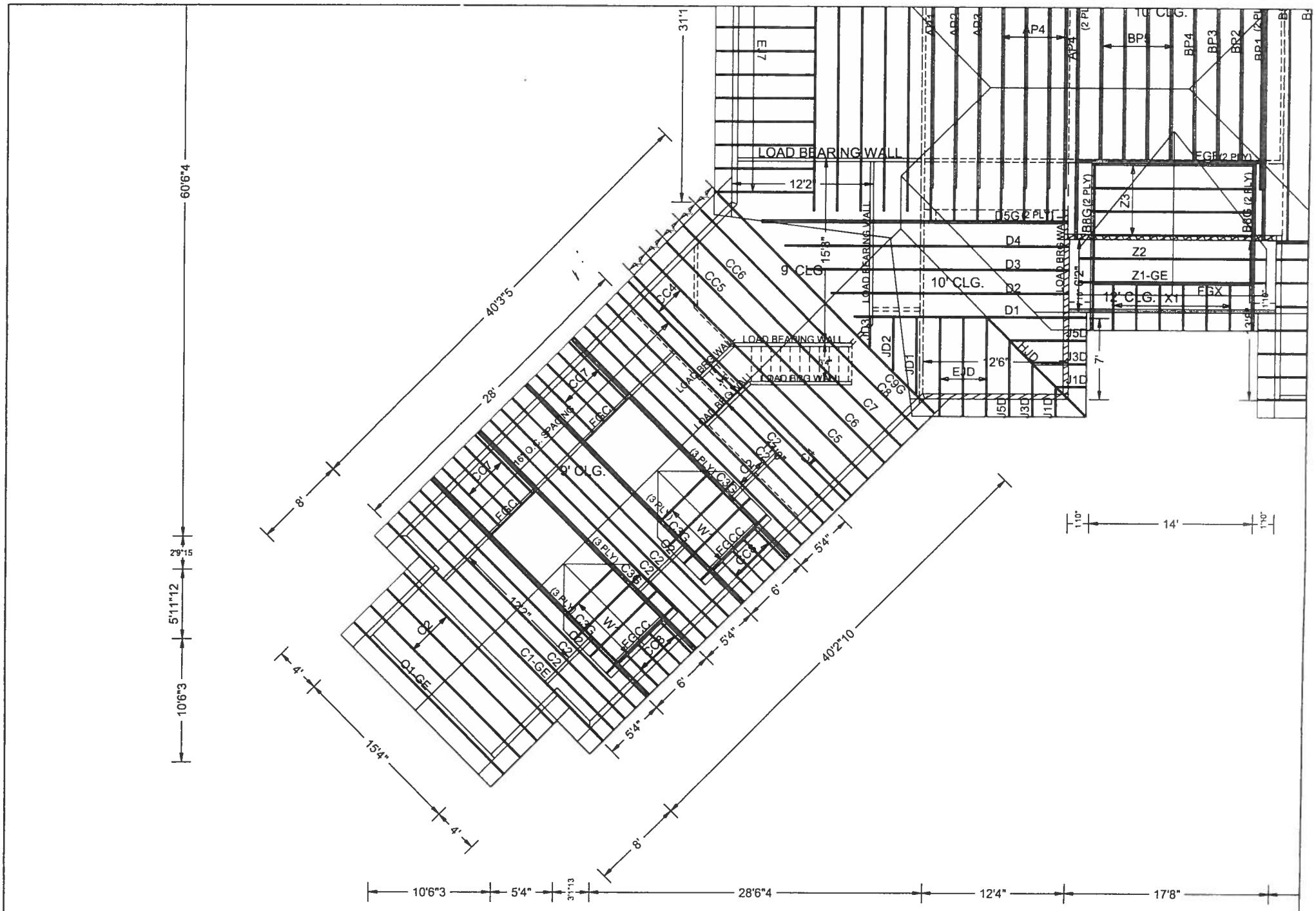

#6-004 GLENNWOOD KING - BULLARD

Scale: 3/32" = 1'

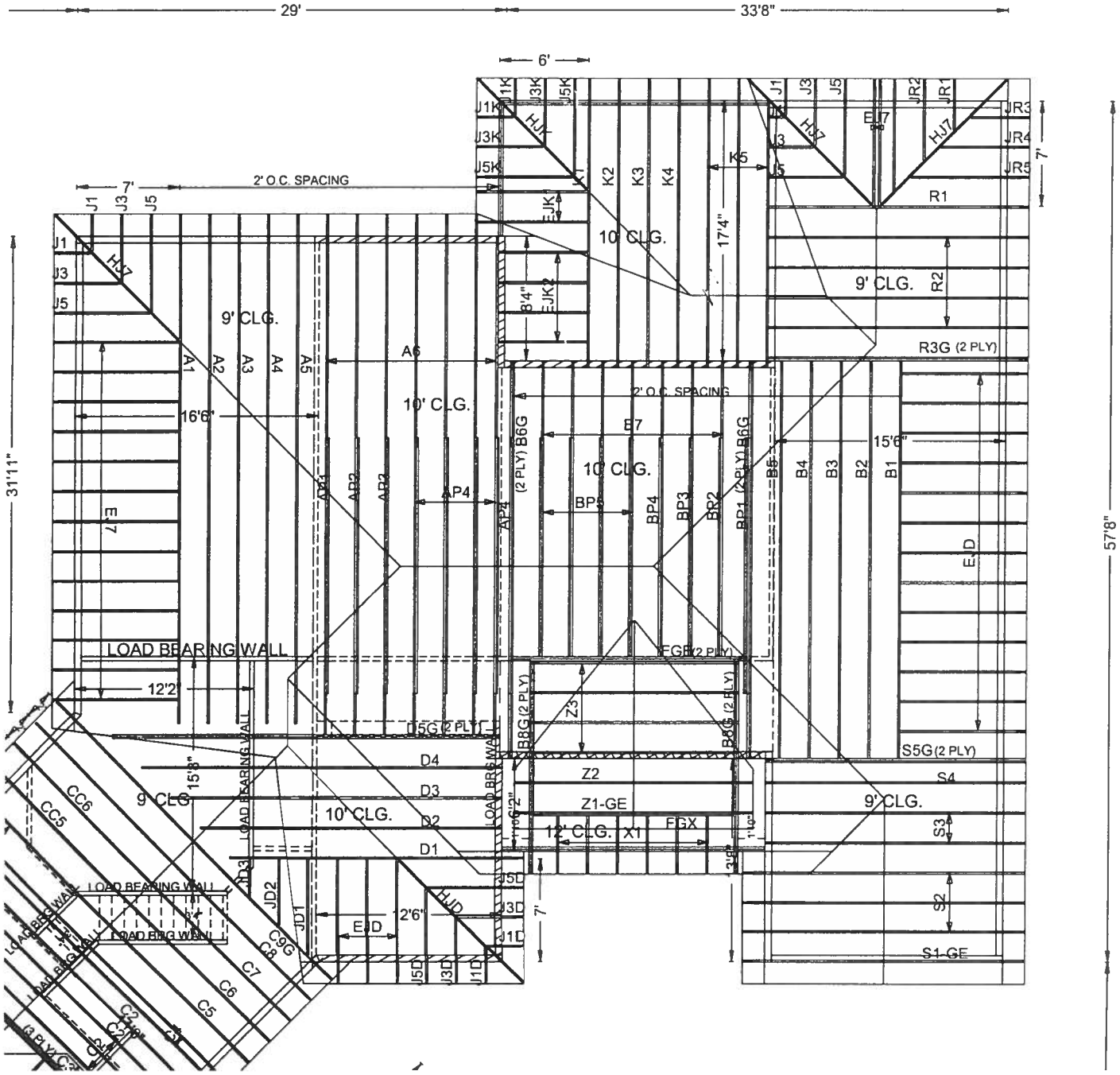
29'
33'8"
6'
7'
2' O.C. SPACING
9' CLG.
10' CLG.
12' CLG.
LOAD BEARING WALL
31'11"
57'8"
16'6"
15'6"
12'2"
15'8"
17'4"
8'4"
12'6"
R3G (2 PLY)
S5G (2 PLY)
FGR (2 PLY)
B6G (2 PLY)
B8G (2 PLY)
B5G (2 PLY)
D5G (2 PLY)
Z1-GE
Z2
Z3
FGX
X1
S1-GE
S2
S3
S4
R1
R2
A1
A2
A3
A4
A5
A6
B1
B2
B3
B4
B5
B7
AP1
AP2
AP3
AP4
BP1
BP2
BP3
BP4
BP5
D1
D2
D3
D4
E7
E8
E9
EJK1
EJK2
HJ7
HJD
JD1
JD2
JD3
J1D
J3D
J5D
K2
K3
K4
K5
J1K
J3K
J5K
J1
J3
J5
JR1
JR2
JR3
JR4
JR5
CC5
CC6
C5
C6
C7
C8
C9G
C2
C3

(0 004-GLENWOOD KING BULLARD A1)

Top chord 2x4 SP #2 Dense
Bot chord 2x4 SP #2 Dense
Webs 2x4 SP #3

110 mph wind, 15.00 ft mean hgt, ASCE 7-02, CLOSED bldg, Located anywhere in roof, CAT II, EXP B, wind TC DL=5.0 psf, wind BC DL=5.0 psf.

(A) 1x4 SP #3 or better "T" brace. 80% length of web member. Attach with 8d Box or Gun (0.113"x2.5",min.)nails @ 6" OC.

(B) 2x6 SP #3 or better "T" brace. 80% length of web member. Attach with 16d Box or Gun (0.135"x3.5",min.)nails @ 6" OC.

Trusses or components connecting to this girder have been modified by the truss designer. The loading for this girder requires verification for accuracy.

Right end vertical not exposed to wind pressure.

#1 hip supports 7-0-0 jacks with no webs.

Deflection meets L/360 live and L/240 total load. Creep increase factor for dead load is 1.50.

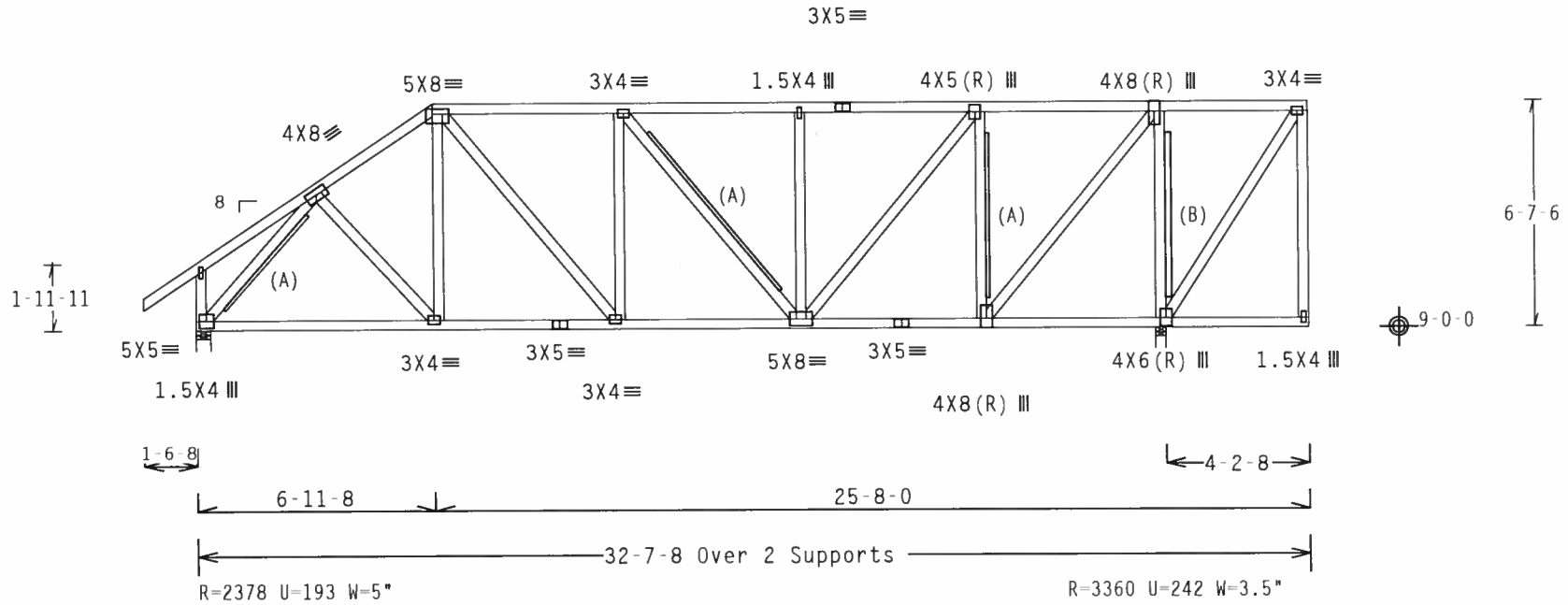

Design Crit: TPI-2002(STD)/FBC
Cq/RT=1.00(1.25)/10(0) 7.22.1 QTY:1 FL/-/4/-/-/R/- Scale =.1875"/Ft.

PLT TYP. Wave

ALPINE
Alpine Engineered Products, Inc.

WARNING TRUSSES REQUIRE EXTREME CARE IN FABRICATION, HANDLING, SHIPPING, INSTALLING AND BRACING. REFER TO BCSI 1-03 (BUILDING COMPONENT SAFETY INFORMATION), PUBLISHED BY TPI (TRUSS PLATE INSTITUTE, 583 D'ONOFRIO DR., SUITE 200, MADISON, WI 53719) AND WTCA (WOOD TRUSS COUNCIL OF AMERICA, 6300 ENTERPRISE LN, MADISON, WI 53719) FOR SAFETY PRACTICES PRIOR TO PERFORMING THESE FUNCTIONS. UNLESS OTHERWISE INDICATED, TOP CHORD SHALL HAVE PROPERLY ATTACHED STRUCTURAL PANELS AND BOTTOM CHORD SHALL HAVE A PROPERLY ATTACHED RIGID CEILING.

IMPORTANTFURNISH A COPY OF THIS DESIGN TO THE INSTALLATION CONTRACTOR. ALPINE ENGINEERED PRODUCTS, INC. SHALL NOT BE RESPONSIBLE FOR ANY DEVIATION FROM THIS DESIGN; ANY FAILURE TO BUILD THE TRUSS IN CONFORMANCE WITH TPI; OR FABRICATING, HANDLING, SHIPPING, INSTALLING & BRACING OF TRUSSES. DESIGN CONFORMS WITH APPLICABLE PROVISIONS OF NDS (NATIONAL DESIGN SPEC. BY AF&PA) AND TPI. ALPINE CONNECTOR PLATES ARE MADE OF 20/18/16GA (W,H/S/K) ASTM A653 GRADE 40/60 (W, K/H,S) GALV. STEEL. APPLY PLATES TO EACH FACE OF TRUSS AND, UNLESS OTHERWISE LOCATED ON THIS DESIGN, POSITION PER DRAWINGS 160A Z. ANY INSPECTION OF PLATES FOLLOWED BY (I) SHALL BE PER ANNEX A3 OF TPI1 2002 SEC.3. A SEAL ON THIS DRAWING INDICATES ACCEPTANCE OF PROFESSIONAL ENGINEERING RESPONSIBILITY SOLELY FOR THE TRUSS COMPONENT

ARTHUR R. FISHER LICENSE No. 59687 STATE OF FLORIDA PROFESSIONAL ENGINEER
Feb 10 '06

TC LL	20.0 PSF	REF	R487-- 86561
TC DL	10.0 PSF	DATE	02/10/06
BC DL	10.0 PSF	DRW	HCUSR487 06041029
BC LL	0.0 PSF	HC-ENG	JB/AF
TOT.LD.	40.0 PSF	SEQN-	82249
DUR.FAC.	1.25		

(0 004-GLENWOOD KING BULLARD A2)

Top chord 2x4 SP #2 Dense
Bot chord 2x4 SP #2 Dense
Webs 2x4 SP #3

(A) 1x4 SP #3 or better "T" brace. 80% length of web member. Attach with 8d Box or Gun (0.113"x2.5",min.)nails @ 6" OC.

110 mph wind, 15.00 ft mean hgt, ASCE 7-02, CLOSED bldg, not located within 4.50 ft from roof edge, CAT II, EXP B, wind TC DL=5.0 psf, wind BC DL=5.0 psf.

Right end vertical not exposed to wind pressure.

Deflection meets L/360 live and L/240 total load. Creep increase factor for dead load is 1.50.

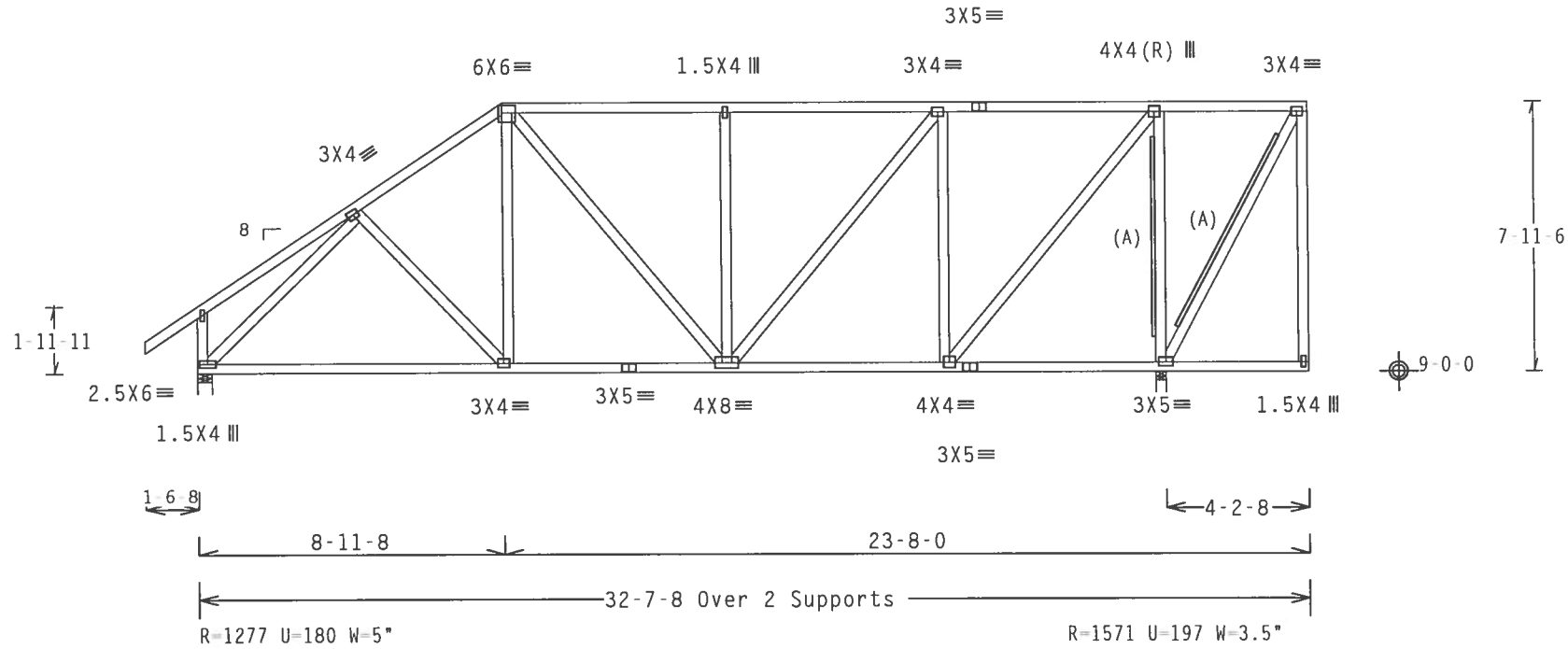

Design Crit: TPI-2002(STD)/FBC
Cq/RT=1.00(1.25)/10(0) 7.22.11 QTY:1 FL/-/4/-/-/R/- Scale =.1875"/Ft.

PLT TYP. Wave

ALPINE
Alpine Engineered Products, Inc.

WARNING TRUSSES REQUIRE EXTREME CARE IN FABRICATION, HANDLING, SHIPPING, INSTALLING AND BRACING. REFER TO BCSI 1-03 (BUILDING COMPONENT SAFETY INFORMATION), PUBLISHED BY TPI (TRUSS PLATE INSTITUTE, 583 D'ONOFRIO DR., SUITE 200, MADISON, WI 53719) AND WTCA (WOOD TRUSS COUNCIL OF AMERICA, 6300 ENTERPRISE LN, MADISON, WI 53719) FOR SAFETY PRACTICES PRIOR TO PERFORMING THESE FUNCTIONS. UNLESS OTHERWISE INDICATED, TOP CHORD SHALL HAVE PROPERLY ATTACHED STRUCTURAL PANELS AND BOTTOM CHORD SHALL HAVE A PROPERLY ATTACHED RIGID CEILING.

IMPORTANT FURNISH A COPY OF THIS DESIGN TO THE INSTALLATION CONTRACTOR. ALPINE ENGINEERED PRODUCTS, INC. SHALL NOT BE RESPONSIBLE FOR ANY DEVIATION FROM THIS DESIGN; ANY FAILURE TO BUILD THE TRUSS IN CONFORMANCE WITH TPI; OR FABRICATING, HANDLING, SHIPPING, INSTALLING & BRACING OF TRUSSES. DESIGN CONFORMS WITH APPLICABLE PROVISIONS OF NDS (NATIONAL DESIGN SPEC. BY AF&PA) AND TPI. ALPINE CONNECTOR PLATES ARE MADE OF 20/18/16GA (W,H/S/K) ASTM A653 GRADE 40/60 (W, K/H,S) GALV. STEEL. APPLY PLATES TO EACH FACE OF TRUSS AND, UNLESS OTHERWISE LOCATED ON THIS DESIGN, POSITION PER DRAWINGS 160A Z. ANY INSPECTION OF PLATES FOLLOWED BY (1) SHALL BE PER ANNEX A3 OF TPI1-2002 SEC.3. A SEAL ON THIS DRAWING INDICATES ACCEPTANCE OF PROFESSIONAL ENGINEERING RESPONSIBILITY SOLELY FOR THE TRUSS COMPONENT

ARTHUR R. FISHER LICENSE No. 59687 STATE OF FLORIDA PROFESSIONAL ENGINEER
Feb 10 '06

TC LL	20.0 PSF	REF	R487-- 86562
TC DL	10.0 PSF	DATE	02/10/06
BC DL	10.0 PSF	DRW	HCUSR487 06041030
BC LL	0.0 PSF	HC-ENG	JB/AF
TOT.LD.	40.0 PSF	SEQN-	82260
DUR.FAC.	1.25		

(6-004-GLENWOOD KING - BULLARD A3)

Top chord 2x4 SP #2 Dense
Bot chord 2x4 SP #2 Dense
Webs 2x4 SP #3

(B) 1x4 SP #3 or better "T" brace. 80% length of web member. Attach with 8d Box or Gun (0.113"x2.5",min.)nails @ 6" OC.

(A) 2x6 SP #3 or better "T" brace. 80% length of web member. Attach with 16d Box or Gun (0.135"x3.5",min.)nails @ 6" OC.

110 mph wind, 15.00 ft mean hgt, ASCE 7-02, CLOSED bldg, not located within 4.50 ft from roof edge, CAT II, EXP B, wind TC DL=5.0 psf, wind BC DL=5.0 psf.

Right end vertical not exposed to wind pressure.

(C) 2x4 SP #3 or better "T" brace. 80% length of web member. Attach with 16d Box or Gun (0.135"x3.5",min.)nails @ 6" OC.

Deflection meets L/360 live and L/240 total load. Creep increase factor for dead load is 1.50.

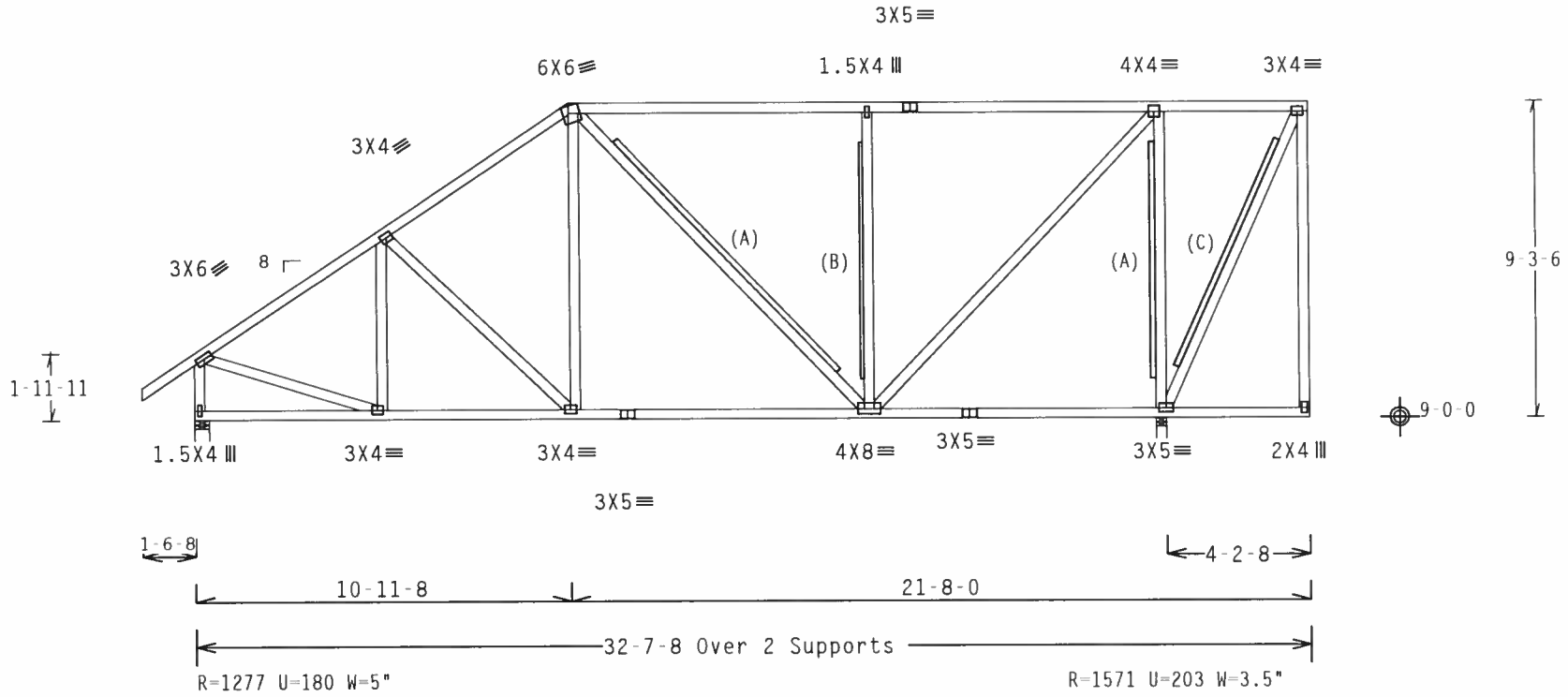

Design Crit: TPI-2002(STD)/FBC

PLT TYP. Wave

Cq/RT=1.00(1.25)/10(0) 7.22.1 QTY:1 FL/-/4/-/-/R/- Scale =.1875"/Ft.

ALPINE
Alpine Engineered Products, Inc.

WARNING TRUSSES REQUIRE EXTREME CARE IN FABRICATION, HANDLING, SHIPPING, INSTALLING AND BRACING. REFER TO BCSI 1-03 (BUILDING COMPONENT SAFETY INFORMATION), PUBLISHED BY TPI (TRUSS PLATE INSTITUTE, 583 D'ONOFRIO DR., SUITE 200, MADISON, WI 53719) AND WTCA (WOOD TRUSS COUNCIL OF AMERICA, 6300 ENTERPRISE LN, MADISON, WI 53719) FOR SAFETY PRACTICES PRIOR TO PERFORMING THESE FUNCTIONS. UNLESS OTHERWISE INDICATED, TOP CHORD SHALL HAVE PROPERLY ATTACHED STRUCTURAL PANELS AND BOTTOM CHORD SHALL HAVE A PROPERLY ATTACHED RIGID CEILING.

IMPORTANT FURNISH A COPY OF THIS DESIGN TO THE INSTALLATION CONTRACTOR. ALPINE ENGINEERED PRODUCTS, INC. SHALL NOT BE RESPONSIBLE FOR ANY DEVIATION FROM THIS DESIGN; ANY FAILURE TO BUILD THE TRUSS IN CONFORMANCE WITH TPI; OR FABRICATING, HANDLING, SHIPPING, INSTALLING & BRACING OF TRUSSES. DESIGN CONFORMS WITH APPLICABLE PROVISIONS OF NDS (NATIONAL DESIGN SPEC. BY AF&PA) AND TPI. ALPINE CONNECTOR PLATES ARE MADE OF 20/18/16GA (W.H/S/K) ASTM A653 GRADE 40/60 (W. K/H.S) GALV. STEEL. APPLY PLATES TO EACH FACE OF TRUSS AND, UNLESS OTHERWISE LOCATED ON THIS DESIGN, POSITION PER DRAWINGS 160A Z. ANY INSPECTION OF PLATES FOLLOWED BY (1) SHALL BE PER ANNEX A3 OF TPI1 2002 SEC.3. A SEAL ON THIS DRAWING INDICATES ACCEPTANCE OF PROFESSIONAL ENGINEERING RESPONSIBILITY SOLELY FOR THE TRUSS COMPONENT

ARTHUR B. FISHER LICENSE No. 59687 STATE OF FLORIDA PROFESSIONAL ENGINEER

Feb 10 '06

TC LL	20.0 PSF	REF R487-- 86563
TC DL	10.0 PSF	DATE 02/10/06
BC DL	10.0 PSF	DRW HCUSR487 06041031
BC LL	0.0 PSF	HC-ENG JB/AF
TOT.LD.	40.0 PSF	SEQN- 82267
DUR.FAC.	1.25	

Top chord 2x4 SP #2 Dense
Bot chord 2x4 SP #2 Dense
Webs 2x4 SP #3

(A) 1x4 SP #3 or better "T" brace. 80% length of web member. Attach with 8d Box or Gun (0.113"x2.5",min.)nails @ 6" OC.

(C) 2x6 SP #3 or better "T" brace. 80% length of web member. Attach with 16d Box or Gun (0.135"x3.5",min.)nails @ 6" OC.

110 mph wind, 15.00 ft mean hgt, ASCE 7-02, CLOSED bldg, not located within 4.50 ft from roof edge, CAT II, EXP B, wind TC DL=5.0 psf, wind BC DL=5.0 psf.

Right end vertical not exposed to wind pressure.

(B) 2x4 SP #3 or better "T" brace. 80% length of web member. Attach with 16d Box or Gun (0.135"x3.5",min.)nails @ 6" OC.

Deflection meets L/360 live and L/240 total load. Creep increase factor for dead load is 1.50.

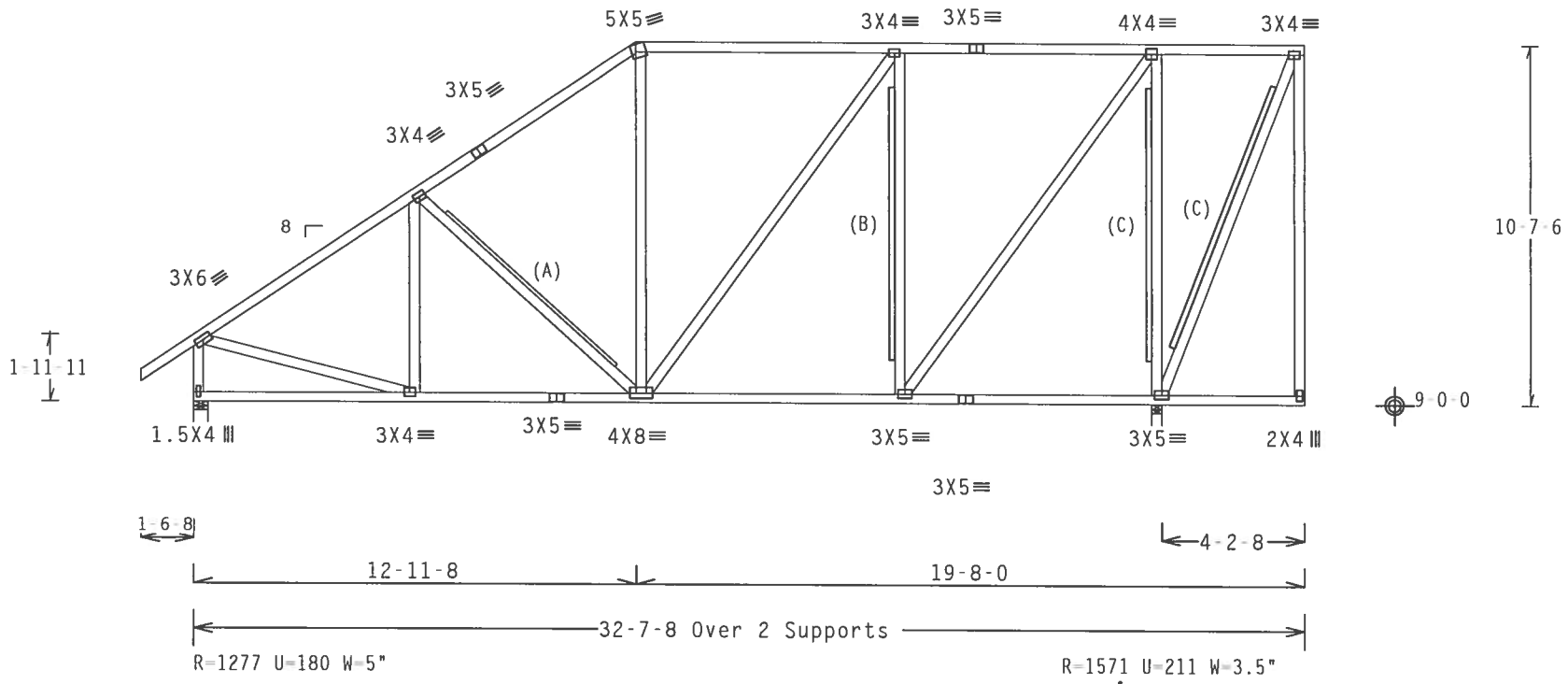

Design Crit: TPI-2002(STD)/FBC

PLT TYP. Wave

Cq/RT=1.00(1.25)/10(0) 7.22.[illegible] QTY:1 FL/-/4/-/-/R/- Scale =.1875"/Ft.

ALPINE
Alpine Engineered Products, Inc.
1950 Marley Drive

WARNING TRUSSES REQUIRE EXTREME CARE IN FABRICATION, HANDLING, SHIPPING, INSTALLING AND BRACING. REFER TO BCSI 1-03 (BUILDING COMPONENT SAFETY INFORMATION), PUBLISHED BY TPI (TRUSS PLATE INSTITUTE, 583 D'ONOFRIO DR., SUITE 200, MADISON, WI 53719) AND WTCA (WOOD TRUSS COUNCIL OF AMERICA, 6300 ENTERPRISE LN, MADISON, WI 53719) FOR SAFETY PRACTICES PRIOR TO PERFORMING THESE FUNCTIONS. UNLESS OTHERWISE INDICATED, TOP CHORD SHALL HAVE PROPERLY ATTACHED STRUCTURAL PANELS AND BOTTOM CHORD SHALL HAVE A PROPERLY ATTACHED RIGID CEILING.

IMPORTANTFURNISH A COPY OF THIS DESIGN TO THE INSTALLATION CONTRACTOR. ALPINE ENGINEERED PRODUCTS, INC. SHALL NOT BE RESPONSIBLE FOR ANY DEVIATION FROM THIS DESIGN; ANY FAILURE TO BUILD THE TRUSS IN CONFORMANCE WITH TPI; OR FABRICATING, HANDLING, SHIPPING, INSTALLING & BRACING OF TRUSSES. DESIGN CONFORMS WITH APPLICABLE PROVISIONS OF NDS (NATIONAL DESIGN SPEC. BY AF&PA) AND TPI. ALPINE CONNECTOR PLATES ARE MADE OF 20/18/16GA (W,H/S/K) ASTM A653 GRADE 40/60 (W, K/H,S) GALV. STEEL. APPLY PLATES TO EACH FACE OF TRUSS AND, UNLESS OTHERWISE LOCATED ON THIS DESIGN, POSITION PER DRAWINGS 160A Z. ANY INSPECTION OF PLATES FOLLOWED BY (I) SHALL BE PER ANNEX A3 OF TPI1 2002 SEC.3. A SEAL ON THIS DRAWING INDICATES ACCEPTANCE OF PROFESSIONAL ENGINEERING RESPONSIBILITY SOLELY FOR THE TRUSS COMPONENT

ARTHUR R. FISHER
LICENSE
No. 59687
STATE OF FLORIDA
PROFESSIONAL ENGINEER

Feb 10 '06

TC LL	20.0 PSF	REF	R487-- 86564
TC DL	10.0 PSF	DATE	02/10/06
BC DL	10.0 PSF	DRW	HCUSR487 06041032
BC LL	0.0 PSF	HC-ENG	JB/AF
TOT.LD.	40.0 PSF	SEQN-	82278
DUR.FAC.	1.25		

Top chord 2x4 SP #2 Dense
Bot chord 2x4 SP #2 Dense
Webs 2x4 SP #3

(A) Continuous lateral bracing equally spaced on member.

Deflection meets L/360 live and L/240 total load. Creep increase factor for dead load is 1.50.

110 mph wind, 15.45 ft mean hgt, ASCE 7-02, CLOSED bldg, not located within 4.50 ft from roof edge, CAT II, EXP B, wind TC DL=5.0 psf, wind BC DL=5.0 psf.

Right end vertical not exposed to wind pressure.

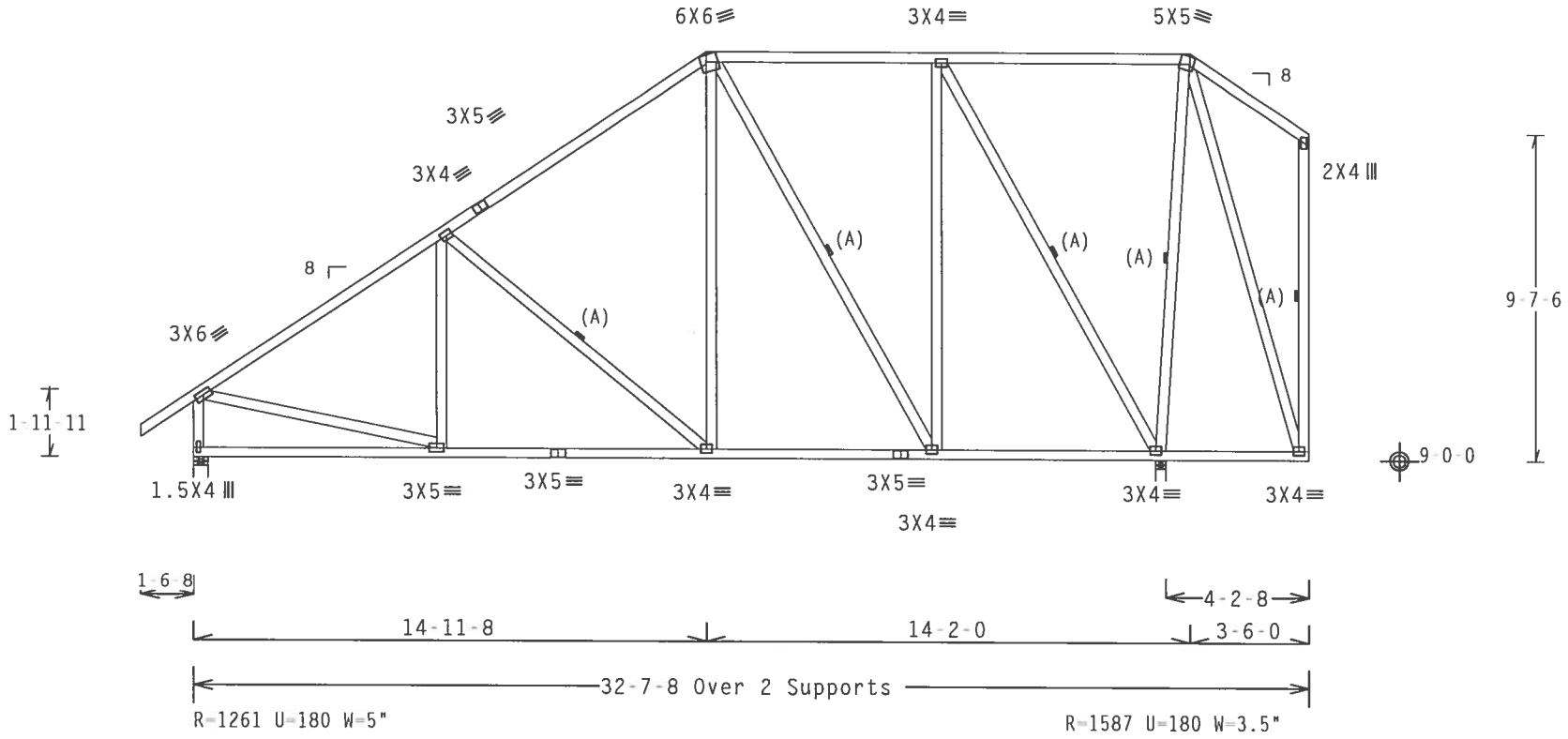

Design Crit: TPI-2002(STD)/FBC

PLT TYP. Wave

Cq/RT=1.00(1.25)/10(0) 7.22.1 QTY:1 FL/-/4/-/-/R/- Scale =.1875"/Ft.

ALPINE
Alpine Engineered Products, Inc.
1950 Marley Drive

WARNING TRUSSES REQUIRE EXTREME CARE IN FABRICATION, HANDLING, SHIPPING, INSTALLING AND BRACING. REFER TO BCSI 1-03 (BUILDING COMPONENT SAFETY INFORMATION), PUBLISHED BY TPI (TRUSS PLATE INSTITUTE, 583 D'ONOFRIO DR., SUITE 200, MADISON, WI 53719) AND WTCA (WOOD TRUSS COUNCIL OF AMERICA, 6300 ENTERPRISE LN, MADISON, WI 53719) FOR SAFETY PRACTICES PRIOR TO PERFORMING THESE FUNCTIONS. UNLESS OTHERWISE INDICATED, TOP CHORD SHALL HAVE PROPERLY ATTACHED STRUCTURAL PANELS AND BOTTOM CHORD SHALL HAVE A PROPERLY ATTACHED RIGID CEILING.

IMPORTANTFURNISH A COPY OF THIS DESIGN TO THE INSTALLATION CONTRACTOR. ALPINE ENGINEERED PRODUCTS, INC. SHALL NOT BE RESPONSIBLE FOR ANY DEVIATION FROM THIS DESIGN; ANY FAILURE TO BUILD THE TRUSS IN CONFORMANCE WITH TPI; OR FABRICATING, HANDLING, SHIPPING, INSTALLING & BRACING OF TRUSSES. DESIGN CONFORMS WITH APPLICABLE PROVISIONS OF NDS (NATIONAL DESIGN SPEC. BY AF&PA) AND TPI. ALPINE CONNECTOR PLATES ARE MADE OF 20/18/16GA (W,H/S/K) ASTM A653 GRADE 40/60 (W, K/H,S) GALV. STEEL. APPLY PLATES TO EACH FACE OF TRUSS AND, UNLESS OTHERWISE LOCATED ON THIS DESIGN, POSITION PER DRAWINGS 160A Z. ANY INSPECTION OF PLATES FOLLOWED BY (I) SHALL BE PER ANNEX A3 OF TPI1 2002 SEC.3. A SEAL ON THIS DRAWING INDICATES ACCEPTANCE OF PROFESSIONAL ENGINEERING RESPONSIBILITY SOLELY FOR THE TRUSS COMPONENT

ARTHUR R. FISHER
LICENSE
No. 59687
STATE OF FLORIDA
PROFESSIONAL ENGINEER

Feb 13 '06

TC LL	20.0 PSF	REF R487-- 86565
TC DL	10.0 PSF	DATE 02/10/06
BC DL	10.0 PSF	DRW HCUSR487 06041033
BC LL	0.0 PSF	HC-ENG JB/AF
TOT.LD.	40.0 PSF	SEQN- 82294
DUR.FAC.	1.25	

Top chord 2x4 SP #2 Dense
Bot chord 2x4 SP #2 Dense
Webs 2x4 SP #3 :W1 2x8 SP SS:

H = recommended connection based on manufacturer tested capacities and calculations. Conditions may exist that require different connections than indicated. Refer to manufacturer publication for additional information.

(A) Continuous lateral bracing equally spaced on member. Or 1x4 SP #3 or better "T" brace. 80% length of web member. Attached with 8d Box or Gun (0.113"x2.5",min.)nails @ 6" OC.

Deflection meets L/360 live and L/240 total load. Creep increase factor for dead load is 1.50.

(**) 2 plate(s) require special positioning. Refer to scaled plate plot details for special positioning requirements.

110 mph wind, 15.00 ft mean hgt, ASCE 7-02, CLOSED bldg, not located within 4.50 ft from roof edge, CAT II, EXP B, wind TC DL=5.0 psf, wind BC DL=5.0 psf.

Right end vertical not exposed to wind pressure.

(B) Continuous lateral bracing equally spaced on member. Or 2x6 SP #3 or better "T" brace. 80% length of web member. Attached with 16d Box or Gun (0.135"x3.5",min.)nails @ 6" OC.

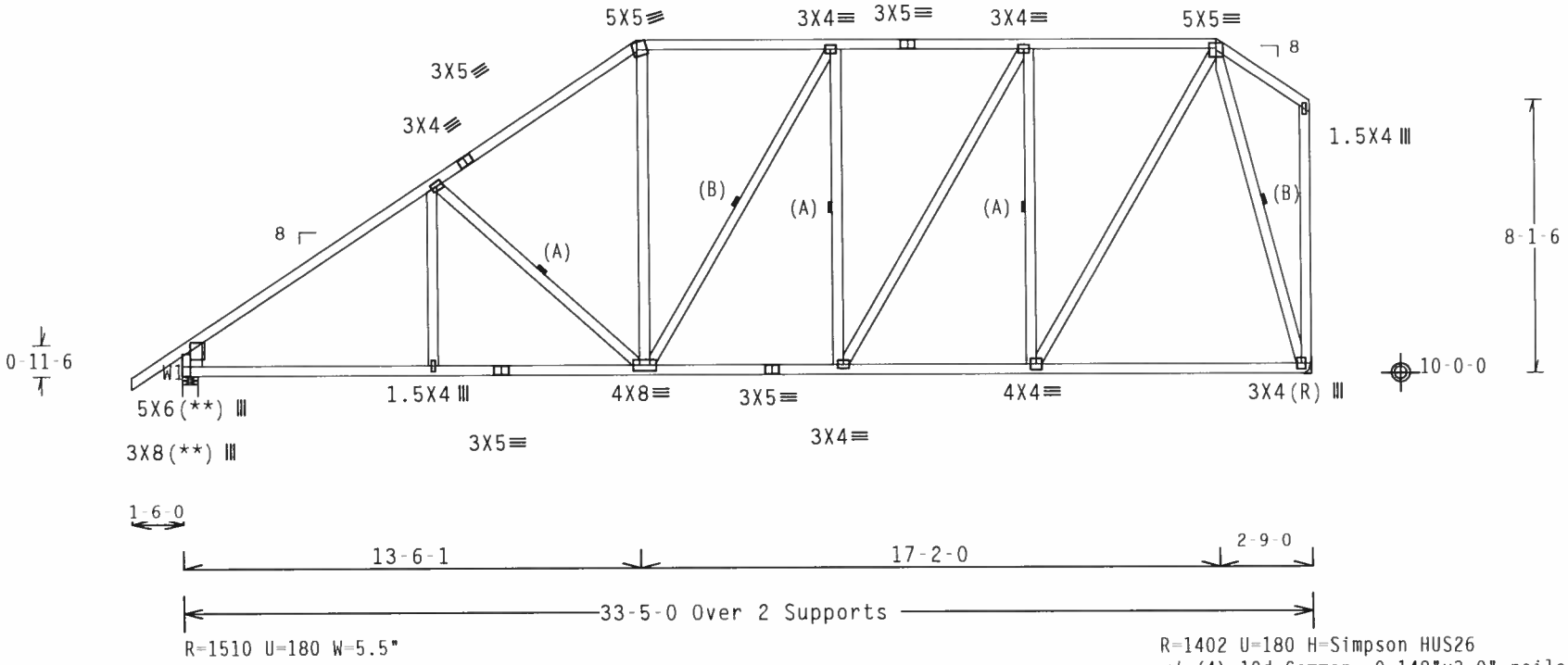

R=1510 U=180 W=5.5"

R=1402 U=180 H=Simpson HUS26
w/ (4) 10d Common, 0.148"x3.0" nails in Truss
w/ (14) 10d Common, 0.148"x3.0" nails in Girder
[illegible] is (1)2X6 min. So.Pine

Design Crit: TPI-2002(STD)/FBC
PLT TYP. Wave Cq/RT=1.00(1.25)/10(0) 7.22.11 [illegible]Y:7 FL/-/4/-/-/R/- Scale =.1875"/Ft.

ALPINE
Alpine Engineered Products, Inc.

WARNING TRUSSES REQUIRE EXTREME CARE IN FABRICATION, HANDLING, SHIPPING, INSTALLING AND BRACING. REFER TO BCSI 1-03 (BUILDING COMPONENT SAFETY INFORMATION), PUBLISHED BY TPI (TRUSS PLATE INSTITUTE, 583 D'ONOFRIO DR., SUITE 200, MADISON, WI 53719) AND WTCA (WOOD TRUSS COUNCIL OF AMERICA, 6300 ENTERPRISE LN, MADISON, WI 53719) FOR SAFETY PRACTICES PRIOR TO PERFORMING THESE FUNCTIONS. UNLESS OTHERWISE INDICATED, TOP CHORD SHALL HAVE PROPERLY ATTACHED STRUCTURAL PANELS AND BOTTOM CHORD SHALL HAVE A PROPERLY ATTACHED RIGID CEILING.

IMPORTANTFURNISH A COPY OF THIS DESIGN TO THE INSTALLATION CONTRACTOR. ALPINE ENGINEERED PRODUCTS, INC. SHALL NOT BE RESPONSIBLE FOR ANY DEVIATION FROM THIS DESIGN; ANY FAILURE TO BUILD THE TRUSS IN CONFORMANCE WITH TPI; OR FABRICATING, HANDLING, SHIPPING, INSTALLING & BRACING OF TRUSSES. DESIGN CONFORMS WITH APPLICABLE PROVISIONS OF NDS (NATIONAL DESIGN SPEC. BY AF&PA) AND TPI. ALPINE CONNECTOR PLATES ARE MADE OF 20/18/16GA (W.H/S/K) ASTM A653 GRADE 40/60 (W. K/H.S) GALV. STEEL. APPLY PLATES TO EACH FACE OF TRUSS AND, UNLESS OTHERWISE LOCATED ON THIS DESIGN, POSITION PER DRAWINGS 160A Z. ANY INSPECTION OF PLATES FOLLOWED BY (1) SHALL BE PER ANNEX A3 OF TPI1 2002 SEC.3. A SEAL ON THIS DRAWING INDICATES ACCEPTANCE OF PROFESSIONAL ENGINEERING RESPONSIBILITY SOLELY FOR THE TRUSS COMPONENT

ARTHUR R. FISHER LICENSE No. 59687 STATE OF FLORIDA PROFESSIONAL ENGINEER
Feb 10 '06

TC LL	20.0 PSF	REF	R487-- 86566
TC DL	10.0 PSF	DATE	02/10/06
BC DL	10.0 PSF	DRW	HCUSR487 06041034
BC LL	0.0 PSF	HC-ENG	JB/AF
TOT.LD.	40.0 PSF	SEQN-	82320
DUR.FAC.	1.25		

Top chord 2x4 SP #2 Dense
Bot chord 2x4 SP #2 Dense
Webs 2x4 SP #3

SPECIAL LOADS
------(LUMBER DUR.FAC.=1.25 / PLATE DUR.FAC.=1.25)
TC - From 130 PLF at 0.00 to 130 PLF at 26.67
BC - From 50 PLF at 0.00 to 50 PLF at 26.67

(A) Continuous lateral bracing equally spaced on member.

Deflection meets L/360 live and L/240 total load. Creep increase factor for dead load is 1.50.

110 mph wind, 15.00 ft mean hgt, ASCE 7-02, CLOSED bldg, Located anywhere in roof, CAT II, EXP B, wind TC DL=5.0 psf, wind BC DL=5.0 psf.

End verticals not exposed to wind pressure.

Max JT VERT DEFL: LL: 0.11" DL: 0.17" recommended camber 1/4"

H = recommended connection based on manufacturer tested capacities and calculations. Conditions may exist that require different connections than indicated. Refer to manufacturer publication for additional information.

Truss must be installed as shown with top chord up.

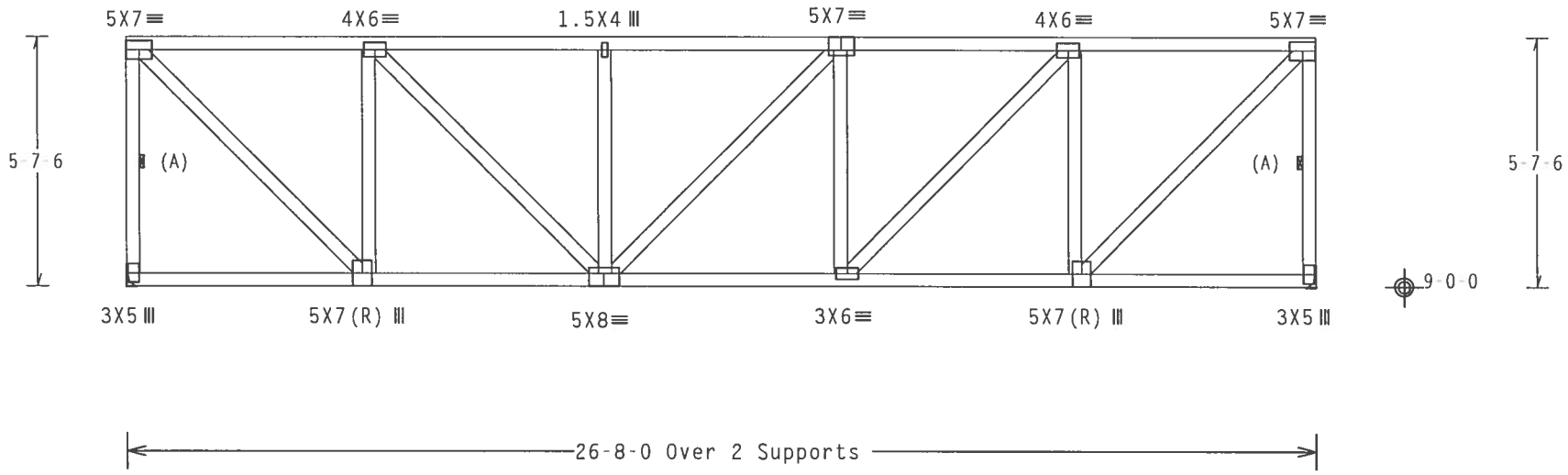

R=2400 U=257 H=Simpson HUS26
w/ (6) 10d Common, 0.148"x3.0" nails in Truss
w/ (14) 10d Common, 0.148"x3.0" nails in Girder
Girder is (1)2X6 min. So.Pine

R=2400 U=257 H=Simpson HUS26
w/ (6) 10d Common, 0.148"x3.0" nails in Truss
w/ (14) 10d Common, 0.148"x3.0" nails in Girder
Girder is (1)2X6 min. So.Pine

Design Crit: TPI-2002(STD)/FBC

PLT TYP. Wave Cq/RT=1.00(1.25)/10(0) 7.22.1 QTY:1 FL/-/4/-/-/R/- Scale =.25"/Ft.

ALPINE
Alpine Engineered Products, Inc.

WARNING TRUSSES REQUIRE EXTREME CARE IN FABRICATION, HANDLING, SHIPPING, INSTALLING AND BRACING. REFER TO BCSI 1-03 (BUILDING COMPONENT SAFETY INFORMATION), PUBLISHED BY TPI (TRUSS PLATE INSTITUTE, 583 D'ONOFRIO DR., SUITE 200, MADISON, WI 53719) AND WTCA (WOOD TRUSS COUNCIL OF AMERICA, 6300 ENTERPRISE LN, MADISON, WI 53719) FOR SAFETY PRACTICES PRIOR TO PERFORMING THESE FUNCTIONS. UNLESS OTHERWISE INDICATED, TOP CHORD SHALL HAVE PROPERLY ATTACHED STRUCTURAL PANELS AND BOTTOM CHORD SHALL HAVE A PROPERLY ATTACHED RIGID CEILING.

IMPORTANTFURNISH A COPY OF THIS DESIGN TO THE INSTALLATION CONTRACTOR. ALPINE ENGINEERED PRODUCTS, INC. SHALL NOT BE RESPONSIBLE FOR ANY DEVIATION FROM THIS DESIGN; ANY FAILURE TO BUILD THE TRUSS IN CONFORMANCE WITH TPI; OR FABRICATING, HANDLING, SHIPPING, INSTALLING & BRACING OF TRUSSES. DESIGN CONFORMS WITH APPLICABLE PROVISIONS OF NDS (NATIONAL DESIGN SPEC. BY AF&PA) AND TPI. ALPINE CONNECTOR PLATES ARE MADE OF 20/18/16GA (W.H/S/K) ASTM A653 GRADE 40/60 (W. K/H.S) GALV. STEEL. APPLY PLATES TO EACH FACE OF TRUSS AND, UNLESS OTHERWISE LOCATED ON THIS DESIGN, POSITION PER DRAWINGS 160A Z. ANY INSPECTION OF PLATES FOLLOWED BY (1) SHALL BE PER ANNEX A3 OF TPI1-2002 SEC.3. A SEAL ON THIS DRAWING INDICATES ACCEPTANCE OF PROFESSIONAL ENGINEERING RESPONSIBILITY SOLELY FOR THE TRUSS COMPONENT

ARTHUR R. FISHER LICENSE No. 59667 STATE OF FLORIDA PROFESSIONAL ENGINEER
Feb 10 '06

TC LL	20.0 PSF	REF	R487-- 86567
TC DL	10.0 PSF	DATE	02/10/06
BC DL	10.0 PSF	DRW	HCUSR487 06041035
BC LL	0.0 PSF	HC-ENG	JB/AF
TOT.LD.	40.0 PSF	SEQN-	146698 REV
DUR.FAC.	1.25		

Top chord 2x4 SP #2 Dense
Bot chord 2x4 SP #2 Dense
Webs 2x4 SP #3

End verticals not exposed to wind pressure.

Deflection meets L/360 live and L/240 total load. Creep increase factor for dead load is 1.50.

Provide for complete drainage of roof.

110 mph wind, 15.95 ft mean hgt, ASCE 7-02, CLOSED bldg, not located within 4.50 ft from roof edge, CAT II, EXP B, wind TC DL=5.0 psf, wind BC DL=5.0 psf.

H = recommended connection based on manufacturer tested capacities and calculations. Conditions may exist that require different connections than indicated. Refer to manufacturer publication for additional information.

Truss must be installed as shown with top chord up.

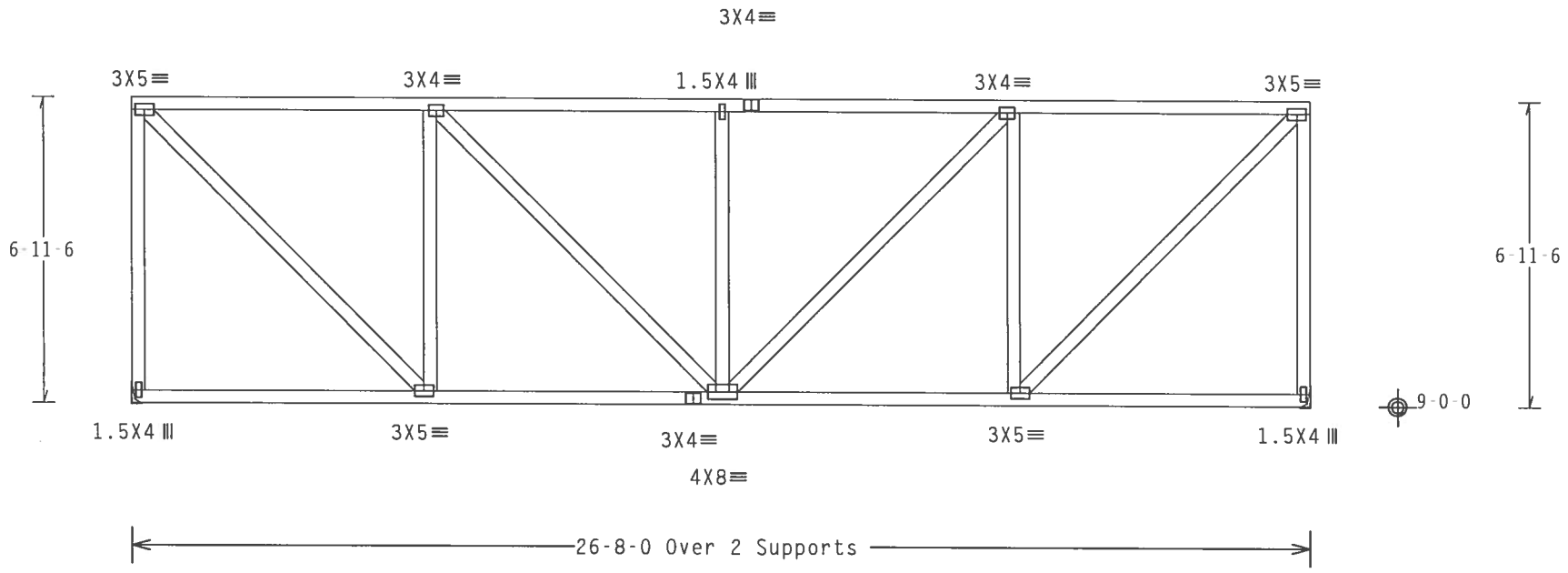

R=1067 U=180 H=Simpson LUS26
w/ (4) 10d Common, 0.148"x3.0" nails in Truss
w/ (4) 10d Common, 0.148"x3.0" nails in Girder
Girder is (1)2X6 min. So.Pine

R=1067 U=180 H=Simpson LUS26
w/ (4) 10d Common, 0.148"x3.0" nails in Truss
w/ (4) 10d Common, 0.148"x3.0" nails in Girder
Girder is (1)2X6 min. So.Pine

Design Crit: TPI-2002(STD)/FBC

PLT TYP. Wave Cq/RT=1.00(1.25)/10(0) 7.22.11.2.01 QTY:1 FL/-/4/-/-/R/- Scale =.25"/Ft.

ALPINE
Alpine Engineered Products, Inc.
1950 Marley Drive

WARNING TRUSSES REQUIRE EXTREME CARE IN FABRICATION, HANDLING, SHIPPING, INSTALLING AND BRACING. REFER TO BCSI 1-03 (BUILDING COMPONENT SAFETY INFORMATION), PUBLISHED BY TPI (TRUSS PLATE INSTITUTE, 583 D'ONOFRIO DR., SUITE 200, MADISON, WI 53719) AND WTCA (WOOD TRUSS COUNCIL OF AMERICA, 6300 ENTERPRISE LN, MADISON, WI 53719) FOR SAFETY PRACTICES PRIOR TO PERFORMING THESE FUNCTIONS. UNLESS OTHERWISE INDICATED, TOP CHORD SHALL HAVE PROPERLY ATTACHED STRUCTURAL PANELS AND BOTTOM CHORD SHALL HAVE A PROPERLY ATTACHED RIGID CEILING.

IMPORTANT FURNISH A COPY OF THIS DESIGN TO THE INSTALLATION CONTRACTOR. ALPINE ENGINEERED PRODUCTS, INC. SHALL NOT BE RESPONSIBLE FOR ANY DEVIATION FROM THIS DESIGN; ANY FAILURE TO BUILD THE TRUSS IN CONFORMANCE WITH TPI; OR FABRICATING, HANDLING, SHIPPING, INSTALLING & BRACING OF TRUSSES. DESIGN CONFORMS WITH APPLICABLE PROVISIONS OF NDS (NATIONAL DESIGN SPEC, BY AF&PA) AND TPI. ALPINE CONNECTOR PLATES ARE MADE OF 20/18/16GA (W,H/S/K) ASTM A653 GRADE 40/60 (W, K/H,S) GALV. STEEL. APPLY PLATES TO EACH FACE OF TRUSS AND, UNLESS OTHERWISE LOCATED ON THIS DESIGN, POSITION PER DRAWINGS 160A-Z. ANY INSPECTION OF PLATES FOLLOWED BY (1) SHALL BE PER ANNEX A3 OF TPI1-2002 SEC.3. A SEAL ON THIS DRAWING INDICATES ACCEPTANCE OF PROFESSIONAL ENGINEERING RESPONSIBILITY SOLELY FOR THE TRUSS COMPONENT

ARTHUR R. FISHER
LICENSE
No. 59687
STATE OF FLORIDA
PROFESSIONAL ENGINEER

Feb 10 '06

TC LL	20.0 PSF	REF	R487-- 86568
TC DL	10.0 PSF	DATE	02/10/06
BC DL	10.0 PSF	DRW	HCUSR487 06041036
BC LL	0.0 PSF	HC-ENG	JB/AF
TOT.LD.	40.0 PSF	SEQN-	82847
DUR.FAC.	1.25		

Top chord 2x4 SP #2 Dense
Bot chord 2x4 SP #2 Dense
Webs 2x4 SP #3

End verticals not exposed to wind pressure.

(A) 1x4 SP #3 or better "T" brace. 80% length of web member. Attach with 8d Box or Gun (0.113"x2.5",min.)nails @ 6" OC.

Deflection meets L/360 live and L/240 total load. Creep increase factor for dead load is 1.50.

110 mph wind, 16.89 ft mean hgt, ASCE 7-02, CLOSED bldg, not located within 4.50 ft from roof edge, CAT II, EXP B, wind TC DL=5.0 psf, wind BC DL=5.0 psf.

H = recommended connection based on manufacturer tested capacities and calculations. Conditions may exist that require different connections than indicated. Refer to manufacturer publication for additional information.

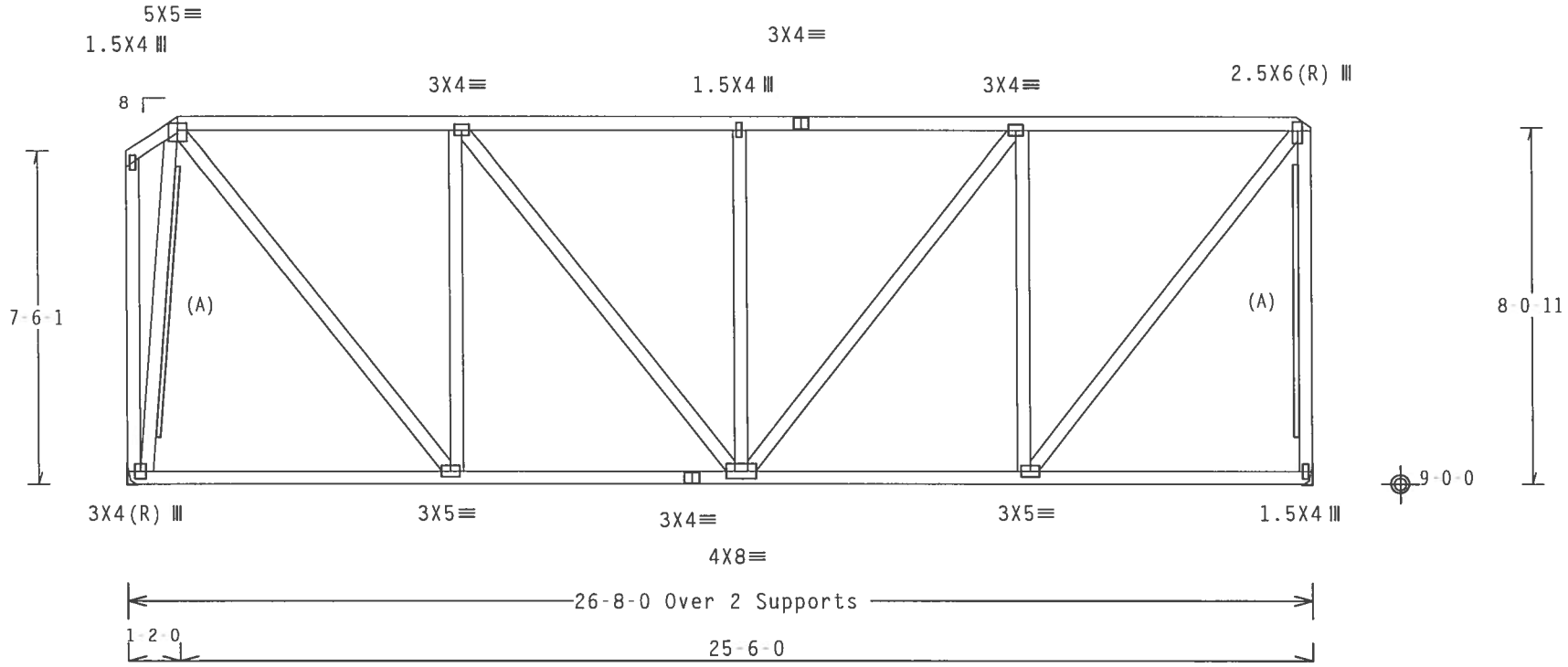

R-1120 U-180 H-Simpson HUS26
w/ (4) 10d Common, 0.148"x3.0" nails in Truss
w/ (14) 10d Common, 0.148"x3.0" nails in Girder
Girder is (1)2X6 min. So.Pine

R-1119 U-180 H-Simpson HUS26
w/ (4) 10d Common, 0.148"x3.0" nails in Truss
w/ (14) 10d Common, 0.148"x3.0" nails in Girder
Girder is (1)2X6 min. So.Pine

Design Crit: TPI-2002(STD)/FBC

PLT TYP. Wave Cq/RT=1.00(1.25)/10(0) 7.22.1[illegible] QTY:1 FL/-/4/-/-/R/- Scale =.25"/Ft.

ALPINE
Alpine Engineered Products, Inc.
1950 Marley Drive

WARNING TRUSSES REQUIRE EXTREME CARE IN FABRICATION, HANDLING, SHIPPING, INSTALLING AND BRACING. REFER TO BCSI 1-03 (BUILDING COMPONENT SAFETY INFORMATION), PUBLISHED BY TPI (TRUSS PLATE INSTITUTE, 583 D'ONOFRIO DR., SUITE 200, MADISON, WI 53719) AND WTCA (WOOD TRUSS COUNCIL OF AMERICA, 6300 ENTERPRISE LN, MADISON, WI 53719) FOR SAFETY PRACTICES PRIOR TO PERFORMING THESE FUNCTIONS. UNLESS OTHERWISE INDICATED, TOP CHORD SHALL HAVE PROPERLY ATTACHED STRUCTURAL PANELS AND BOTTOM CHORD SHALL HAVE A PROPERLY ATTACHED RIGID CEILING.

IMPORTANT FURNISH A COPY OF THIS DESIGN TO THE INSTALLATION CONTRACTOR. ALPINE ENGINEERED PRODUCTS, INC. SHALL NOT BE RESPONSIBLE FOR ANY DEVIATION FROM THIS DESIGN; ANY FAILURE TO BUILD THE TRUSS IN CONFORMANCE WITH TPI; OR FABRICATING, HANDLING, SHIPPING, INSTALLING & BRACING OF TRUSSES. DESIGN CONFORMS WITH APPLICABLE PROVISIONS OF NDS (NATIONAL DESIGN SPEC. BY AF&PA) AND TPI. ALPINE CONNECTOR PLATES ARE MADE OF 20/18/16GA (W,H/S/K) ASTM A653 GRADE 40/60 (W, K/H,S) GALV. STEEL. APPLY PLATES TO EACH FACE OF TRUSS AND, UNLESS OTHERWISE LOCATED ON THIS DESIGN, POSITION PER DRAWINGS 160A Z. ANY INSPECTION OF PLATES FOLLOWED BY (1) SHALL BE PER ANNEX A3 OF TPI1-2002 SEC.3. A SEAL ON THIS DRAWING INDICATES ACCEPTANCE OF PROFESSIONAL ENGINEERING RESPONSIBILITY SOLELY FOR THE TRUSS COMPONENT

ARTHUR R. FISHER
LICENSE
No. 59687
STATE OF FLORIDA
PROFESSIONAL ENGINEER
Feb 10 '06

TC LL	20.0 PSF	REF	R487-- 86569
TC DL	10.0 PSF	DATE	02/10/06
BC DL	10.0 PSF	DRW	HCUSR487 06041037
BC LL	0.0 PSF	HC-ENG	JB/AF
TOT.LD.	40.0 PSF	SEQN-	27901
DUR.FAC.	1.25		

Top chord 2x4 SP #2 Dense
Bot chord 2x4 SP #2 Dense
Webs 2x4 SP #3

End verticals not exposed to wind pressure.

(B) 1x4 SP #3 or better "T" brace. 80% length of web member. Attach with 8d Box or Gun (0.113"x2.5",min.)nails @ 6" OC.

(C) 2x4 SP #3 or better "T" brace. 80% length of web member. Attach with 16d Box or Gun (0.135"x3.5",min.)nails @ 6" OC.

Deflection meets L/360 live and L/240 total load. Creep increase factor for dead load is 1.50.

110 mph wind, 17.56 ft mean hgt, ASCE 7-02, CLOSED bldg, not located within 4.50 ft from roof edge, CAT II, EXP B, wind TC DL=5.0 psf, wind BC DL=5.0 psf.

H = recommended connection based on manufacturer tested capacities and calculations. Conditions may exist that require different connections than indicated. Refer to manufacturer publication for additional information.

(A) 2x6 SP #3 or better "T" brace. 80% length of web member. Attach with 16d Box or Gun (0.135"x3.5",min.)nails @ 6" OC.

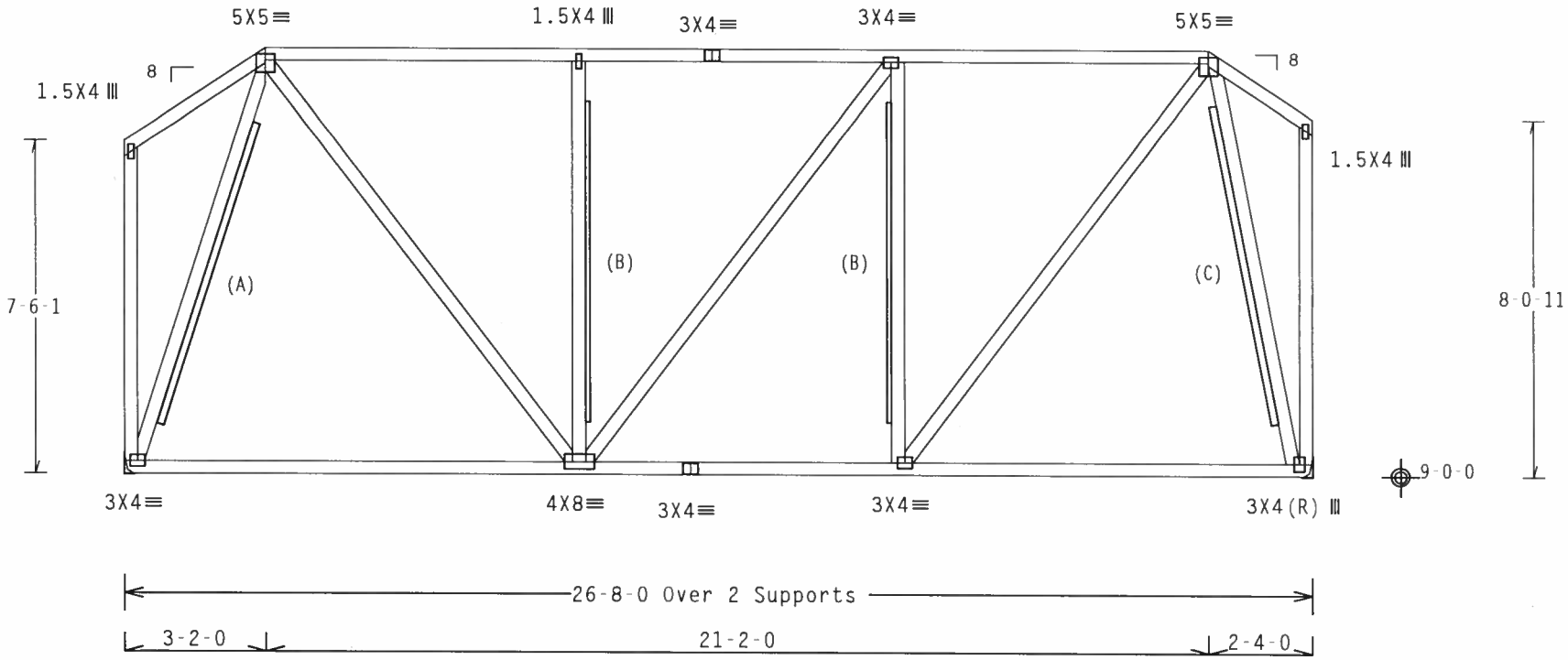

R=1120 U=180 H=Simpson HUS26
w/ (4) 10d Common, 0.148"x3.0" nails in Truss
w/ (14) 10d Common, 0.148"x3.0" nails in Girder
Girder is (1)2X6 min. So.Pine

R=1120 U=180 H=Simpson HUS26
w/ (4) 10d Common, 0.148"x3.0" nails in Truss
w/ (14) 10d Common, 0.148"x3.0" nails in Girder
Girder is (1)2X6 min. So.Pine

Design Crit: TPI-2002(STD)/FBC

PLT TYP. Wave Cq/RT=1.00(1.25)/10(0) 7.22.1 TY:1 FL/-/4/-/-/R/- Scale =.25"/Ft.

ALPINE
Alpine Engineered Products, Inc.
1950 Marley Drive

WARNING TRUSSES REQUIRE EXTREME CARE IN FABRICATION, HANDLING, SHIPPING, INSTALLING AND BRACING. REFER TO BCSI 1-03 (BUILDING COMPONENT SAFETY INFORMATION), PUBLISHED BY TPI (TRUSS PLATE INSTITUTE, 583 D'ONOFRIO DR., SUITE 200, MADISON, WI 53719) AND WTCA (WOOD TRUSS COUNCIL OF AMERICA, 6300 ENTERPRISE LN, MADISON, WI 53719) FOR SAFETY PRACTICES PRIOR TO PERFORMING THESE FUNCTIONS. UNLESS OTHERWISE INDICATED, TOP CHORD SHALL HAVE PROPERLY ATTACHED STRUCTURAL PANELS AND BOTTOM CHORD SHALL HAVE A PROPERLY ATTACHED RIGID CEILING.

IMPORTANTFURNISH A COPY OF THIS DESIGN TO THE INSTALLATION CONTRACTOR. ALPINE ENGINEERED PRODUCTS, INC. SHALL NOT BE RESPONSIBLE FOR ANY DEVIATION FROM THIS DESIGN; ANY FAILURE TO BUILD THE TRUSS IN CONFORMANCE WITH TPI; OR FABRICATING, HANDLING, SHIPPING, INSTALLING & BRACING OF TRUSSES. DESIGN CONFORMS WITH APPLICABLE PROVISIONS OF NDS (NATIONAL DESIGN SPEC. BY AF&PA) AND TPI. ALPINE CONNECTOR PLATES ARE MADE OF 20/18/16GA (W,H/S/K) ASTM A653 GRADE 40/60 (W, K/H,S) GALV. STEEL. APPLY PLATES TO EACH FACE OF TRUSS AND, UNLESS OTHERWISE LOCATED ON THIS DESIGN, POSITION PER DRAWINGS 160A Z. ANY INSPECTION OF PLATES FOLLOWED BY (I) SHALL BE PER ANNEX A3 OF TPI1 2002 SEC.3. A SEAL ON THIS DRAWING INDICATES ACCEPTANCE OF PROFESSIONAL ENGINEERING RESPONSIBILITY SOLELY FOR THE TRUSS COMPONENT DESIGN SHOWN. THE SUITABILITY AND USE OF THIS COMPONENT FOR ANY BUILDING IS THE RESPONSIBILITY OF THE BUILDING DESIGNER PER ANSI/TPI 1-2002 SEC.2.

ARTHUR R. FISHER LICENSE No.59687 STATE OF FLORIDA PROFESSIONAL ENGINEER

Feb 10 '06

TC LL	20.0 PSF	REF R487-- 86570
TC DL	10.0 PSF	DATE 02/10/06
BC DL	10.0 PSF	DRW HCUSR487 06041038
BC LL	0.0 PSF	HC-ENG JB/AF
TOT.LD.	40.0 PSF	SEQN- 27890
DUR.FAC.	1.25	

Top chord 2x4 SP #2 Dense
Bot chord 2x4 SP #2 Dense
Webs 2x4 SP #3

End verticals not exposed to wind pressure.

(A) 1x4 SP #3 or better "T" brace. 80% length of web member. Attach with 8d Box or Gun (0.113"x2.5",min.)nails @ 6" OC.

(B) 2x6 SP #3 or better "T" brace. 80% length of web member. Attach with 16d Box or Gun (0.135"x3.5",min.)nails @ 6" OC.

110 mph wind, 18.22 ft mean hgt, ASCE 7-02, CLOSED bldg, not located within 4.50 ft from roof edge, CAT II, EXP B, wind TC DL=5.0 psf, wind BC DL=5.0 psf.

H = recommended connection based on manufacturer tested capacities and calculations. Conditions may exist that require different connections than indicated. Refer to manufacturer publication for additional information.

Deflection meets L/360 live and L/240 total load. Creep increase factor for dead load is 1.50.

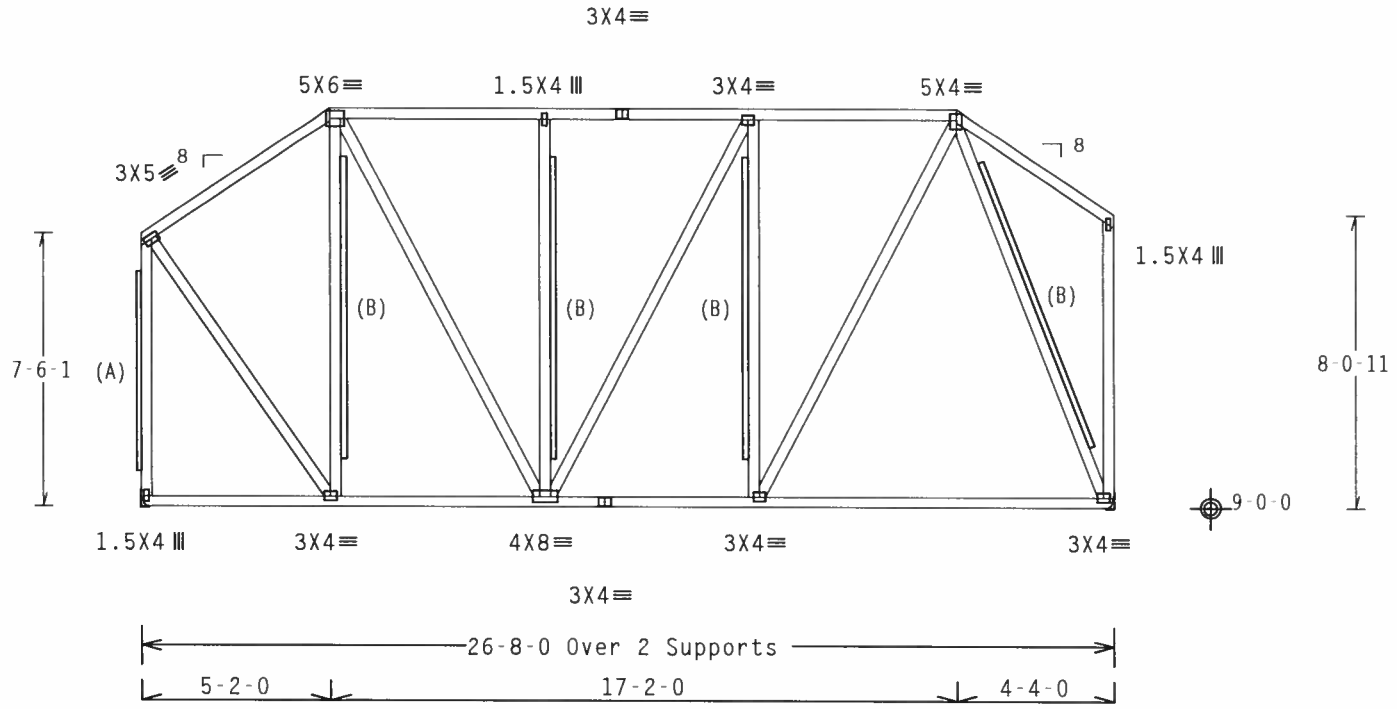

R=1120 U=180 H=Simpson HUS26
w/ (4) 10d Common, 0.148"x3.0" nails in Truss
w/ (14) 10d Common, 0.148"x3.0" nails in Girder
Girder is (1)2X6 min. So.Pine

R=1120 U=180 H=Simpson HUS26
w/ (4) 10d Common, 0.148"x3.0" nails in Truss
w/ (14) 10d Common, 0.148"x3.0" nails in Girder
Girder is (1)2X6 min. So.Pine

Design Crit: TPI-2002(STD)/FBC

PLT TYP. Wave Cq/RT=1.00(1.25)/10(0) 7.22.1 QTY:1 FL/-/4/-/-/R/- Scale =.1875"/Ft.

ARTHUR R. FISHER LICENSE No. 59687 STATE OF FLORIDA PROFESSIONAL ENGINEER

Feb 10, 06

ALPINE
Alpine Engineered Products, Inc.
1950 Marley Drive

WARNING TRUSSES REQUIRE EXTREME CARE IN FABRICATION, HANDLING, SHIPPING, INSTALLING AND BRACING. REFER TO BCSI 1-03 (BUILDING COMPONENT SAFETY INFORMATION), PUBLISHED BY TPI (TRUSS PLATE INSTITUTE, 583 D'ONOFRIO DR., SUITE 200, MADISON, WI 53719) AND WTCA (WOOD TRUSS COUNCIL OF AMERICA, 6300 ENTERPRISE LN, MADISON, WI 53719) FOR SAFETY PRACTICES PRIOR TO PERFORMING THESE FUNCTIONS. UNLESS OTHERWISE INDICATED, TOP CHORD SHALL HAVE PROPERLY ATTACHED STRUCTURAL PANELS AND BOTTOM CHORD SHALL HAVE A PROPERLY ATTACHED RIGID CEILING.

IMPORTANT FURNISH A COPY OF THIS DESIGN TO THE INSTALLATION CONTRACTOR. ALPINE ENGINEERED PRODUCTS, INC. SHALL NOT BE RESPONSIBLE FOR ANY DEVIATION FROM THIS DESIGN; ANY FAILURE TO BUILD THE TRUSS IN CONFORMANCE WITH TPI; OR FABRICATING, HANDLING, SHIPPING, INSTALLING & BRACING OF TRUSSES. DESIGN CONFORMS WITH APPLICABLE PROVISIONS OF NDS (NATIONAL DESIGN SPEC. BY AF&PA) AND TPI. ALPINE CONNECTOR PLATES ARE MADE OF 20/18/16GA (W,H/S/K) ASTM A653 GRADE 40/60 (W, K/H,S) GALV. STEEL. APPLY PLATES TO EACH FACE OF TRUSS AND, UNLESS OTHERWISE LOCATED ON THIS DESIGN, POSITION PER DRAWINGS 160A Z. ANY INSPECTION OF PLATES FOLLOWED BY (1) SHALL BE PER ANNEX A3 OF TPI1 2002 SEC.3. A SEAL ON THIS DRAWING INDICATES ACCEPTANCE OF PROFESSIONAL ENGINEERING RESPONSIBILITY SOLELY FOR THE TRUSS COMPONENT

TC LL	20.0 PSF	REF R487-- 86571
TC DL	10.0 PSF	DATE 02/10/06
BC DL	10.0 PSF	DRW HCUSR487 06041039
BC LL	0.0 PSF	HC-ENG JB/AF
TOT.LD.	40.0 PSF	SEQN- 27879
DUR.FAC.	1.25	

(0 004-GLENWOOD KING BULLARD B6G)

Top chord 2x4 SP #2 Dense
Bot chord 2x4 SP #2 Dense :B3 2x6 SP #2:
Webs 2x4 SP #3

Trusses or components connecting to this girder have been modified by the truss designer. The loading for this girder requires verification for accuracy.

SPECIAL LOADS
------(LUMBER DUR.FAC.=1.25 / PLATE DUR.FAC.=1.25)
TC - From 64 PLF at 0.00 to 64 PLF at 26.67
BC - From 20 PLF at 0.00 to 20 PLF at 26.67
BC - 4685 LB Conc. Load at 20.00

Deflection meets L/360 live and L/240 total load. Creep increase factor for dead load is 1.50.

2 COMPLETE TRUSSES REQUIRED

Nailing Schedule: (12d_Common_(0.148"x3.25",_min.)_nails)
Top Chord: 1 Row @12.00" o.c.
Bot Chord: 1 Row @10.25" o.c.
Webs : 1 Row @ 4" o.c.
Use equal spacing between rows and stagger nails in each row to avoid splitting.

110 mph wind, 18.22 ft mean hgt, ASCE 7-02, CLOSED bldg, not located within 4.50 ft from roof edge, CAT II, EXP B, wind TC DL=5.0 psf, wind BC DL=5.0 psf.

End verticals not exposed to wind pressure.

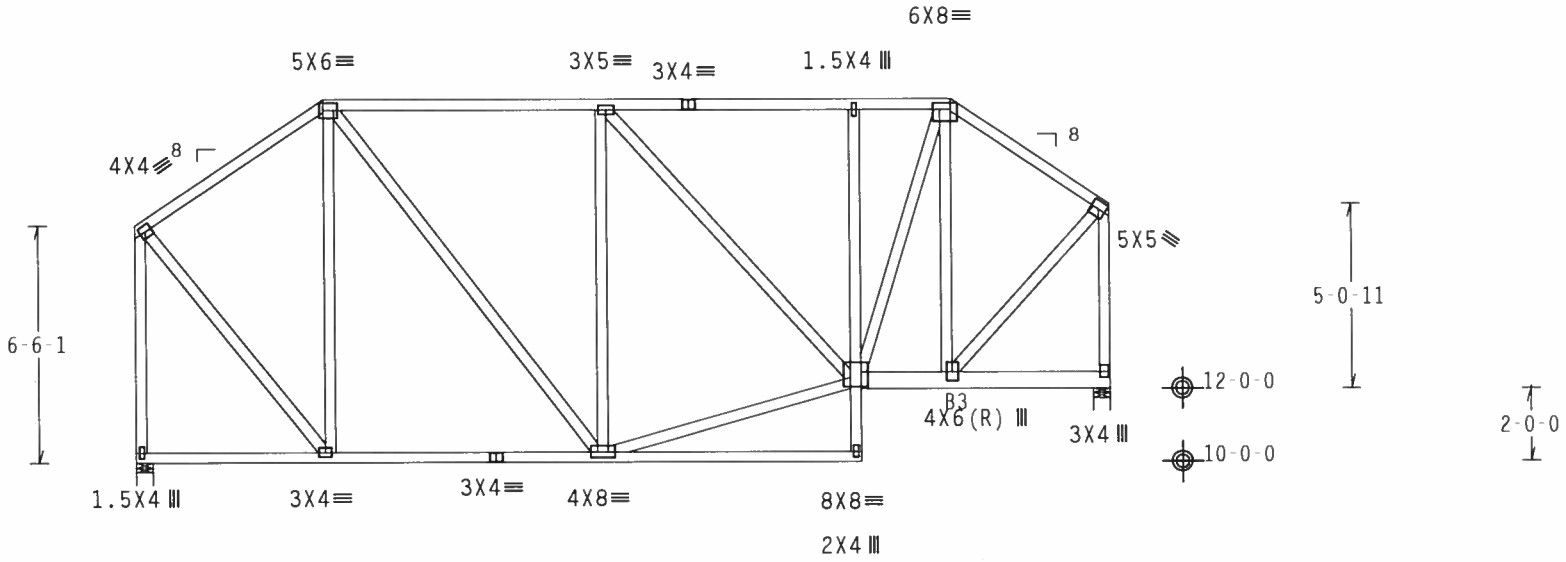

Design Crit: TPI-2002(STD)/FBC
PLT TYP. Wave Cq/RT=1.00(1.25)/10(0) 7.22.1 QTY:2 FL/-/4/-/-/R/- Scale =.1875"/Ft.

ALPINE
Alpine Engineered Products, Inc.

WARNING TRUSSES REQUIRE EXTREME CARE IN FABRICATION, HANDLING, SHIPPING, INSTALLING AND BRACING. REFER TO BCSI 1-03 (BUILDING COMPONENT SAFETY INFORMATION), PUBLISHED BY TPI (TRUSS PLATE INSTITUTE, 583 D'ONOFRIO DR., SUITE 200, MADISON, WI 53719) AND WTCA (WOOD TRUSS COUNCIL OF AMERICA, 6300 ENTERPRISE LN, MADISON, WI 53719) FOR SAFETY PRACTICES PRIOR TO PERFORMING THESE FUNCTIONS. UNLESS OTHERWISE INDICATED, TOP CHORD SHALL HAVE PROPERLY ATTACHED STRUCTURAL PANELS AND BOTTOM CHORD SHALL HAVE A PROPERLY ATTACHED RIGID CEILING.

IMPORTANT FURNISH A COPY OF THIS DESIGN TO THE INSTALLATION CONTRACTOR. ALPINE ENGINEERED PRODUCTS, INC. SHALL NOT BE RESPONSIBLE FOR ANY DEVIATION FROM THIS DESIGN; ANY FAILURE TO BUILD THE TRUSS IN CONFORMANCE WITH TPI; OR FABRICATING, HANDLING, SHIPPING, INSTALLING & BRACING OF TRUSSES. DESIGN CONFORMS WITH APPLICABLE PROVISIONS OF NDS (NATIONAL DESIGN SPEC. BY AF&PA) AND TPI. ALPINE CONNECTOR PLATES ARE MADE OF 20/18/16GA (W,H/S/K) ASTM A653 GRADE 40/60 (W, K/H,S) GALV. STEEL. APPLY PLATES TO EACH FACE OF TRUSS AND, UNLESS OTHERWISE LOCATED ON THIS DESIGN, POSITION PER DRAWINGS 160A Z. ANY INSPECTION OF PLATES FOLLOWED BY (1) SHALL BE PER ANNEX A3 OF TPI1 2002 SEC.3. A SEAL ON THIS DRAWING INDICATES ACCEPTANCE OF PROFESSIONAL ENGINEERING RESPONSIBILITY SOLELY FOR THE TRUSS COMPONENT

ARTHUR R. FISHER LICENSE No.59687 STATE OF FLORIDA PROFESSIONAL ENGINEER
Feb 10 '06

TC LL	20.0 PSF	REF	R487-- 86572
TC DL	10.0 PSF	DATE	02/10/06
BC DL	10.0 PSF	DRW	HCUSR487 06041040
BC LL	0.0 PSF	HC-ENG	JB/AF
TOT.LD.	40.0 PSF	SEQN-	27808
DUR.FAC.	1.25		

(6 004 GLENWOOD KING - BULLARD - B7)

Top chord 2x4 SP #2 Dense
Bot chord 2x4 SP #2 Dense
Webs 2x4 SP #3
:Rt Bearing Leg 2x4 SP #3:

Left end vertical not exposed to wind pressure.

(A) Continuous lateral bracing equally spaced on member.

110 mph wind, 18.22 ft mean hgt, ASCE 7-02, CLOSED bldg, not located within 4.50 ft from roof edge, CAT II, EXP B, wind TC DL=5.0 psf, wind BC DL=5.0 psf.

(J) hanger connection not found in inventory file for this condition. Provide connection.

Deflection meets L/360 live and L/240 total load. Creep increase factor for dead load is 1.50.

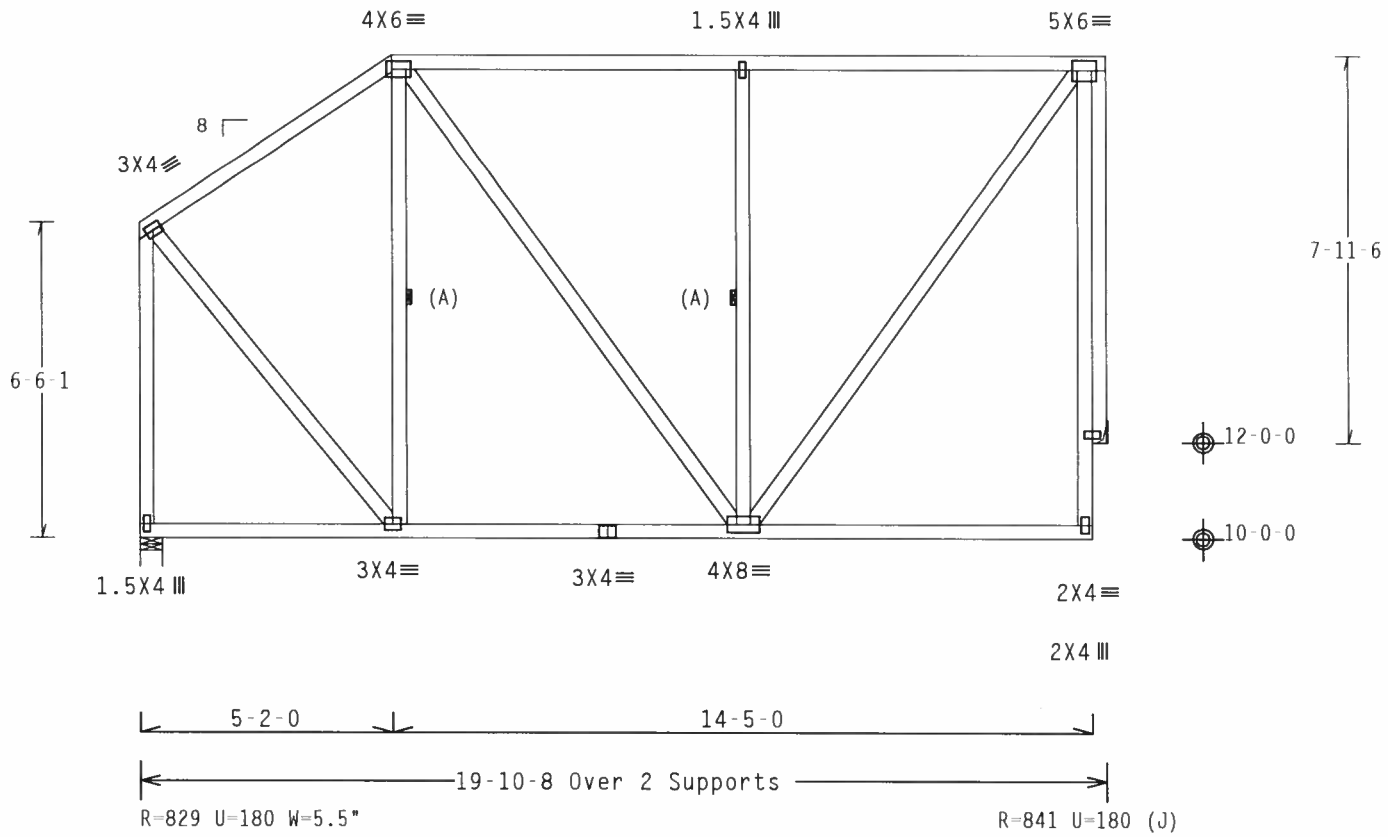

Design Crit: TPI-2002(STD)/FBC

PLT TYP. Wave

Cq/RT=1.00(1.25)/10(0) 7.22.1 QTY:7 FL/-/4/-/-/R/- Scale =.25"/Ft.

ALPINE
Alpine Engineered Products, Inc.
1950 Marley Drive

WARNING TRUSSES REQUIRE EXTREME CARE IN FABRICATION, HANDLING, SHIPPING, INSTALLING AND BRACING. REFER TO BCSI 1 03 (BUILDING COMPONENT SAFETY INFORMATION), PUBLISHED BY TPI (TRUSS PLATE INSTITUTE, 583 D'ONOFRIO DR., SUITE 200, MADISON, WI 53719) AND WTCA (WOOD TRUSS COUNCIL OF AMERICA, 6300 ENTERPRISE LN, MADISON, WI 53719) FOR SAFETY PRACTICES PRIOR TO PERFORMING THESE FUNCTIONS. UNLESS OTHERWISE INDICATED, TOP CHORD SHALL HAVE PROPERLY ATTACHED STRUCTURAL PANELS AND BOTTOM CHORD SHALL HAVE A PROPERLY ATTACHED RIGID CEILING.

IMPORTANT FURNISH A COPY OF THIS DESIGN TO THE INSTALLATION CONTRACTOR. ALPINE ENGINEERED PRODUCTS, INC. SHALL NOT BE RESPONSIBLE FOR ANY DEVIATION FROM THIS DESIGN; ANY FAILURE TO BUILD THE TRUSS IN CONFORMANCE WITH TPI; OR FABRICATING, HANDLING, SHIPPING, INSTALLING & BRACING OF TRUSSES. DESIGN CONFORMS WITH APPLICABLE PROVISIONS OF NDS (NATIONAL DESIGN SPEC. BY AF&PA) AND TPI. ALPINE CONNECTOR PLATES ARE MADE OF 20/18/16GA (W,H/S/K) ASTM A653 GRADE 40/60 (W, K/H,S) GALV. STEEL. APPLY PLATES TO EACH FACE OF TRUSS AND, UNLESS OTHERWISE LOCATED ON THIS DESIGN, POSITION PER DRAWINGS 160A Z. ANY INSPECTION OF PLATES FOLLOWED BY (I) SHALL BE PER ANNEX A3 OF TPI1 2002 SEC.3. A SEAL ON THIS DRAWING INDICATES ACCEPTANCE OF PROFESSIONAL ENGINEERING RESPONSIBILITY SOLELY FOR THE TRUSS COMPONENT

ARTHUR R. FISHER
LICENSE
No. 59687
STATE OF FLORIDA
PROFESSIONAL ENGINEER

Feb 10, 06

TC LL	20.0 PSF	REF	R487-- 86573
TC DL	10.0 PSF	DATE	02/10/06
BC DL	10.0 PSF	DRW	HCUSR487 06041041
BC LL	0.0 PSF	HC-ENG	JB/AF
TOT.LD.	40.0 PSF	SEQN-	27748
DUR.FAC.	1.25		

(0-004 GLENWOOD KING BULLARD B8G)

Top chord 2x4 SP #2 Dense :T2 2x6 SP #2:
Bot chord 2x6 SP #2
Webs 2x4 SP #3
:Lt Slider 2x4 SP #3: BLOCK LENGTH = 1.500'

SPECIAL LOADS
------(LUMBER DUR.FAC.=1.25 / PLATE DUR.FAC.=1.25)
TC - From 64 PLF at -1.50 to 64 PLF at 12.71
PLT- From 312 PLF at 6.08 to 312 PLF at 12.71
BC - From 5 PLF at -1.50 to 5 PLF at 0.00
BC - From 20 PLF at 0.00 to 20 PLF at 12.71
TC - 240 LB Conc. Load at 2.38
PLB- 579 LB Conc. Load at (2.44,12.04)

Right end vertical not exposed to wind pressure.

H = recommended connection based on manufacturer tested capacities and calculations. Conditions may exist that require different connections than indicated. Refer to manufacturer publication for additional information.

2 COMPLETE TRUSSES REQUIRED

Nailing Schedule: (12d_Common_(0.148"x3.25",_min.)_nails)
Top Chord: 1 Row @ 9.25" o.c.
Bot Chord: 1 Row @12.00" o.c.
Webs : 1 Row @ 4" o.c.
Use equal spacing between rows and stagger nails in each row to avoid splitting.

110 mph wind, 16.68 ft mean hgt, ASCE 7-02, CLOSED bldg, not located within 4.50 ft from roof edge, CAT II, EXP B, wind TC DL=5.0 psf, wind BC DL=5.0 psf.

Deflection meets L/360 live and L/240 total load. Creep increase factor for dead load is 1.50.

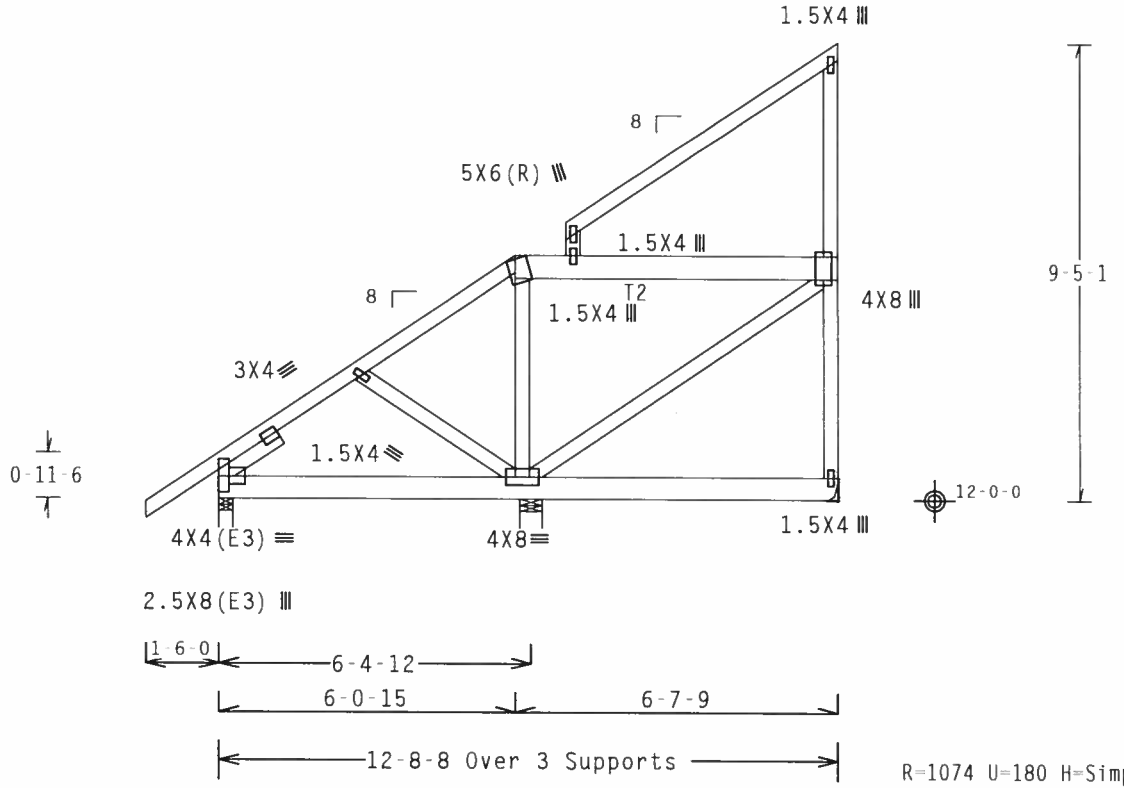

R=1074 U=180 H=Simpson LUS26-2
w/ (4) 16d, 0.162"x2.5" nails in Truss
w/ (4) 16d, 0.162"x2.5" nails in Girder
Girder is (1) 2X6 min. So.Pine

Design Crit: TPI-2002(STD)/FBC

PLT TYP. Wave Cq/RT=1.00(1.25)/10(0) 7.22.1 [illegible] Y:2 FL/-/4/-/-/R/- Scale =.25"/Ft.

ALPINE
Alpine Engineered Products, Inc.
1950 Marley Drive

WARNING TRUSSES REQUIRE EXTREME CARE IN FABRICATION, HANDLING, SHIPPING, INSTALLING AND BRACING. REFER TO BCSI 1-03 (BUILDING COMPONENT SAFETY INFORMATION), PUBLISHED BY TPI (TRUSS PLATE INSTITUTE, 583 D'ONORIO DR., SUITE 200, MADISON, WI 53719) AND WTCA (WOOD TRUSS COUNCIL OF AMERICA, 6300 ENTERPRISE LN. MADISON, WI 53719) FOR SAFETY PRACTICES PRIOR TO PERFORMING THESE FUNCTIONS. UNLESS OTHERWISE INDICATED, TOP CHORD SHALL HAVE PROPERLY ATTACHED STRUCTURAL PANELS AND BOTTOM CHORD SHALL HAVE A PROPERLY ATTACHED RIGID CEILING.

IMPORTANTFURNISH A COPY OF THIS DESIGN TO THE INSTALLATION CONTRACTOR. ALPINE ENGINEERED PRODUCTS, INC. SHALL NOT BE RESPONSIBLE FOR ANY DEVIATION FROM THIS DESIGN; ANY FAILURE TO BUILD THE TRUSS IN CONFORMANCE WITH TPI, OR FABRICATING, HANDLING, SHIPPING, INSTALLING & BRACING OF TRUSSES DESIGN CONFORMS WITH APPLICABLE PROVISIONS OF NDS (NATIONAL DESIGN SPEC. BY AF&PA) AND TPI. ALPINE CONNECTOR PLATES ARE MADE OF 20/18/16GA (W,H/S/K) ASTM A653 GRADE 40/60 (W, K/H,S) GALV. STEEL. APPLY PLATES TO EACH FACE OF TRUSS AND, UNLESS OTHERWISE LOCATED ON THIS DESIGN, POSITION PER DRAWINGS 160A Z. ANY INSPECTION OF PLATES FOLLOWED BY (1) SHALL BE PER ANNEX A3 OF TPI1 2002 SEC.3. A SEAL ON THIS DRAWING INDICATES ACCEPTANCE OF PROFESSIONAL ENGINEERING RESPONSIBILITY SOLELY FOR THE TRUSS COMPONENT

ARTHUR R. FISHER
LICENSE
No. 59687
STATE OF FLORIDA
PROFESSIONAL ENGINEER

Feb 10 '06

TC LL	20.0 PSF	REF	R487-- 86574
TC DL	10.0 PSF	DATE	02/10/06
BC DL	10.0 PSF	DRW	HCUSR487 06041042
BC LL	0.0 PSF	HC-ENG	JB/AF
TOT.LD.	40.0 PSF	SEQN-	27678
DUR.FAC.	1.25		

(6 004-GLENWOOD KING BULLARD C1 GE)

Top chord 2x4 SP #2 Dense :T2, T3 2x8 SP SS:
Bot chord 2x8 SP SS :B3 2x4 SP #2 Dense:
Webs 2x4 SP #3

SPECIAL LOADS
------(LUMBER DUR.FAC.=1.25 / PLATE DUR.FAC.=1.25)

TC -	From	65 PLF	at -1.51	to	65 PLF	at	5.58
TC -	From	82 PLF	at 5.58	to	82 PLF	at	9.82
TC -	From	65 PLF	at 9.82	to	65 PLF	at	11.67
TC -	From	65 PLF	at 11.67	to	65 PLF	at	13.51
TC -	From	82 PLF	at 13.51	to	82 PLF	at	17.75
TC -	From	65 PLF	at 17.75	to	65 PLF	at	20.89
TC -	From	65 PLF	at 20.89	to	65 PLF	at	24.84
PLT-	From	13 PLF	at 10.58	to	13 PLF	at	12.75
BC -	From	3 PLF	at -1.51	to	3 PLF	at	0.00
BC -	From	13 PLF	at 0.00	to	13 PLF	at	5.58
BC -	From	80 PLF	at 5.58	to	80 PLF	at	17.75
BC -	From	13 PLF	at 17.75	to	13 PLF	at	23.33
BC -	From	3 PLF	at 23.33	to	3 PLF	at	24.84

BC - 60 LB Conc. Load at 5.58, 17.75

110 mph wind, 15.00 ft mean hgt, ASCE 7-02, CLOSED bldg, not located within 4.50 ft from roof edge, CAT II, EXP B, wind TC DL=5.0 psf, wind BC DL=5.0 psf.

Trusses to be spaced at 16.0" OC maximum.

Collar-tie braced with continuous lateral bracing at 24" OC. or rigid ceiling.

Deflection meets L/360 live and L/240 total load. Creep increase factor for dead load is 1.50.

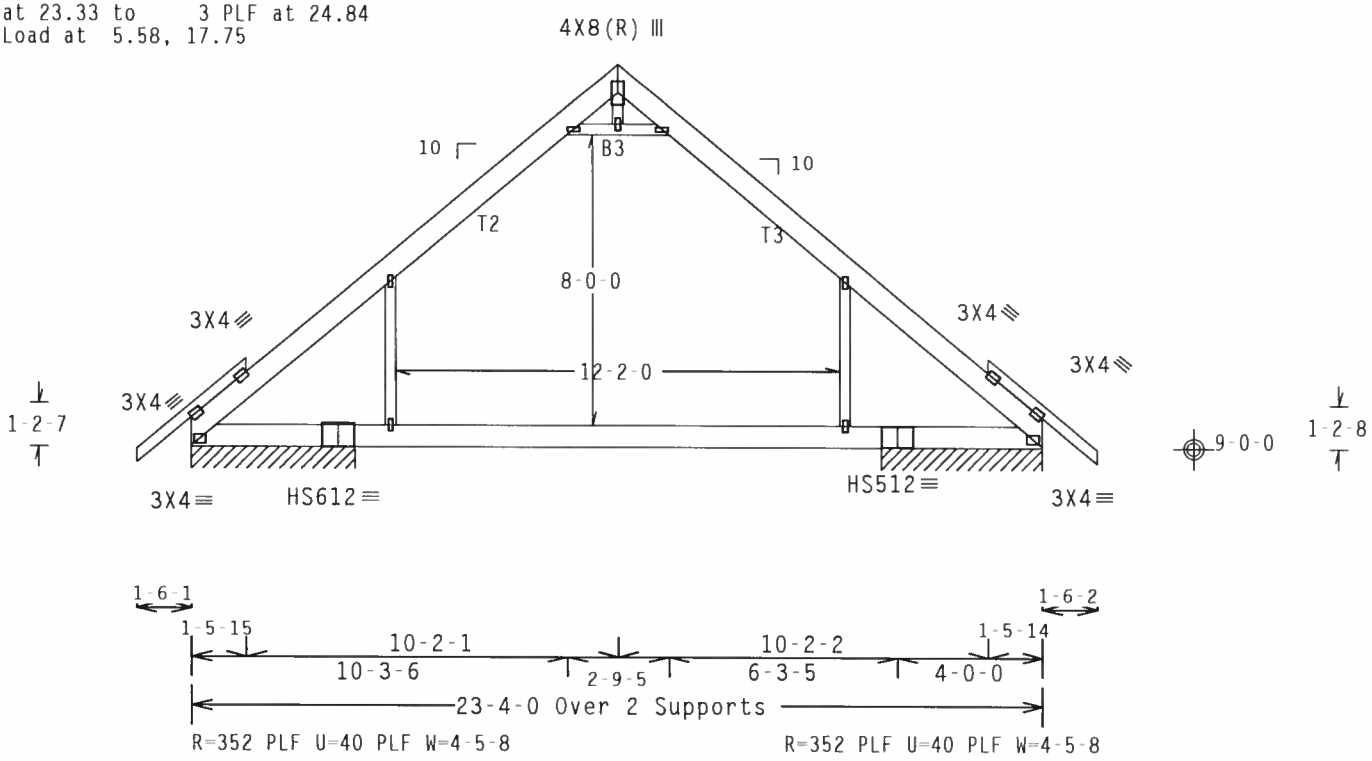

Note: All Plates Are 1.5X4 Except As Shown.

Design Crit: TPI-2002(STD)/FBC

PLT TYP. 20 Gauge HS,Wave Cq/RT=1.00(1.25)/10(0) 7.22.1 QTY:1 FL/-/4/-/-/R/- Scale =.1875"/Ft.

ALPINE
Alpine Engineered Products, Inc.
1950 Marley Drive

WARNING TRUSSES REQUIRE EXTREME CARE IN FABRICATION, HANDLING, SHIPPING, INSTALLING AND BRACING. REFER TO BCSI 1-03 (BUILDING COMPONENT SAFETY INFORMATION), PUBLISHED BY TPI (TRUSS PLATE INSTITUTE, 583 D'ONOFRIO DR., SUITE 200, MADISON, WI 53719) AND WTCA (WOOD TRUSS COUNCIL OF AMERICA, 6300 ENTERPRISE LN, MADISON, WI 53719) FOR SAFETY PRACTICES PRIOR TO PERFORMING THESE FUNCTIONS. UNLESS OTHERWISE INDICATED, TOP CHORD SHALL HAVE PROPERLY ATTACHED STRUCTURAL PANELS AND BOTTOM CHORD SHALL HAVE A PROPERLY ATTACHED RIGID CEILING.

IMPORTANTFURNISH A COPY OF THIS DESIGN TO THE INSTALLATION CONTRACTOR. ALPINE ENGINEERED PRODUCTS, INC. SHALL NOT BE RESPONSIBLE FOR ANY DEVIATION FROM THIS DESIGN; ANY FAILURE TO BUILD THE TRUSS IN CONFORMANCE WITH TPI; OR FABRICATING, HANDLING, SHIPPING, INSTALLING & BRACING OF TRUSSES. DESIGN CONFORMS WITH APPLICABLE PROVISIONS OF NDS (NATIONAL DESIGN SPEC. BY AF&PA) AND TPI. ALPINE CONNECTOR PLATES ARE MADE OF 20/18/16GA (W,H/S/K) ASTM A653 GRADE 40/60 (W, K/H,S) GALV. STEEL. APPLY PLATES TO EACH FACE OF TRUSS AND, UNLESS OTHERWISE LOCATED ON THIS DESIGN, POSITION PER DRAWINGS 160A Z ANY INSPECTION OF PLATES FOLLOWED BY (1) SHALL BE PER ANNEX A3 OF TPI1 2002 SEC.3. A SEAL ON THIS DRAWING INDICATES ACCEPTANCE OF PROFESSIONAL ENGINEERING RESPONSIBILITY SOLELY FOR THE TRUSS COMPONENT

ARTHUR B. FISHER LICENSE No.59687 STATE OF FLORIDA PROFESSIONAL ENGINEER

Feb 10 '06

TC LL	20.0 PSF	REF	R487-- 86575
TC DL	10.0 PSF	DATE	02/10/06
BC DL	10.0 PSF	DRW	HCUSR487 06041043
BC LL	0.0 PSF	HC-ENG	JB/AF
TOT.LD.	40.0 PSF	SEQN-	82829 REV
DUR.FAC.	1.25		

Top chord 2x8 SP SS
Bot chord 2x8 SP SS :B3 2x4 SP #2 Dense:
Webs 2x4 SP #3

Calculated horizontal deflection is 0.10" due to live load and 0.19" due to dead load.

BC attic room floor loading: LL = 40.00 psf; DL = 10.00 psf; from 5-7-0 to 17-9-0.

110 mph wind, 15.00 ft mean hgt, ASCE 7-02, CLOSED bldg, not located within 4.50 ft from roof edge, CAT II, EXP B, wind TC DL=5.0 psf, wind BC DL=5.0 psf.

Trusses to be spaced at 16.0" OC maximum.

Collar-tie braced with continuous lateral bracing at 24" OC. or rigid ceiling.

Deflection meets L/360 live and L/240 total load. Creep increase factor for dead load is 1.50.

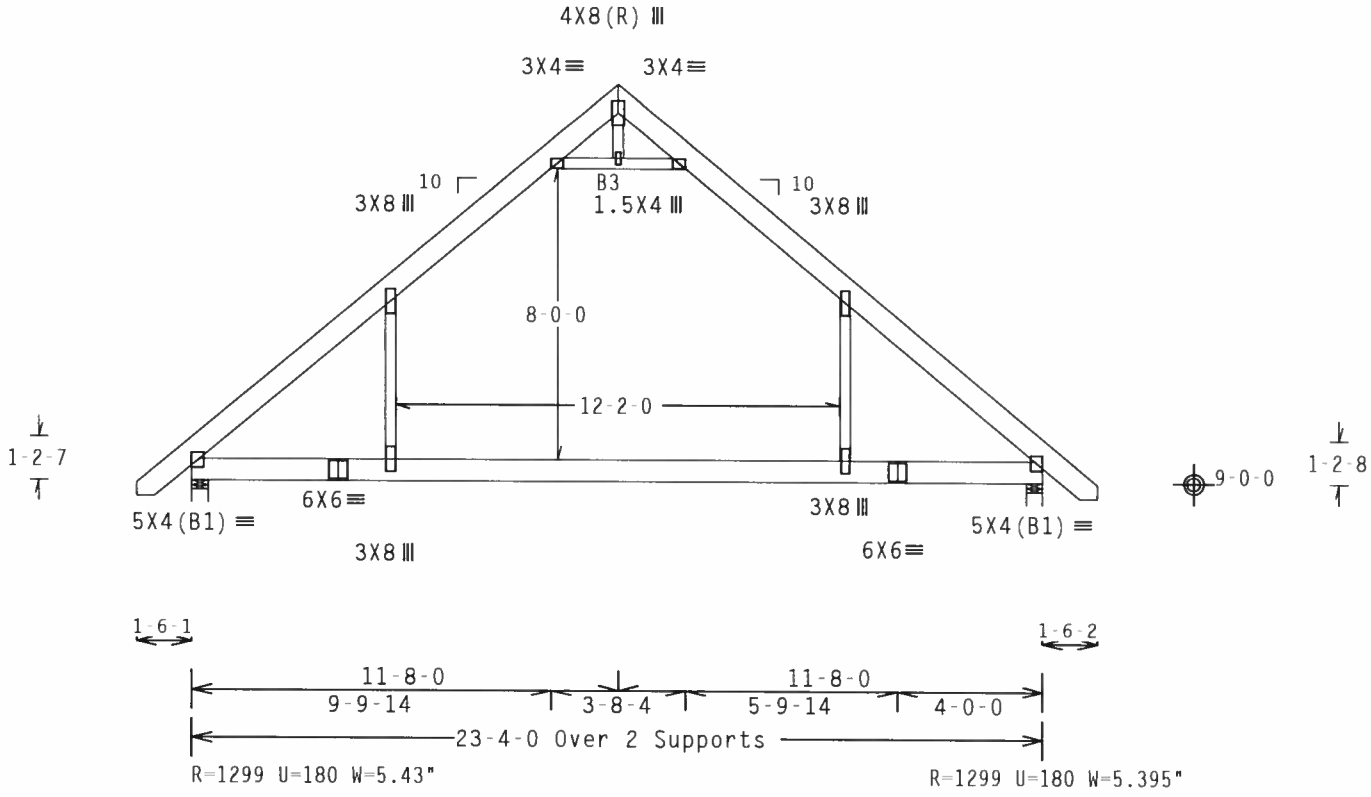

Design Crit: TPI-2002(STD)/FBC
Cq/RT=1.00(1.25)/10(0) 7.22.1 QTY:10 FL/-/4/-/-/R/- Scale =.1875"/Ft.

PLT TYP. Wave

ALPINE
Alpine Engineered Products, Inc.
1950 Marley Drive

WARNING TRUSSES REQUIRE EXTREME CARE IN FABRICATION, HANDLING, SHIPPING, INSTALLING AND BRACING. REFER TO BCSI 1 03 (BUILDING COMPONENT SAFETY INFORMATION), PUBLISHED BY TPI (TRUSS PLATE INSTITUTE, 583 D'ONOFRIO DR., SUITE 200, MADISON, WI 53719) AND WTCA (WOOD TRUSS COUNCIL OF AMERICA, 6300 ENTERPRISE LN, MADISON, WI 53719) FOR SAFETY PRACTICES PRIOR TO PERFORMING THESE FUNCTIONS. UNLESS OTHERWISE INDICATED, TOP CHORD SHALL HAVE PROPERLY ATTACHED STRUCTURAL PANELS AND BOTTOM CHORD SHALL HAVE A PROPERLY ATTACHED RIGID CEILING.

IMPORTANT FURNISH A COPY OF THIS DESIGN TO THE INSTALLATION CONTRACTOR. ALPINE ENGINEERED PRODUCTS, INC. SHALL NOT BE RESPONSIBLE FOR ANY DEVIATION FROM THIS DESIGN; ANY FAILURE TO BUILD THE TRUSS IN CONFORMANCE WITH TPI; OR FABRICATING, HANDLING, SHIPPING, INSTALLING & BRACING OF TRUSSES. DESIGN CONFORMS WITH APPLICABLE PROVISIONS OF NDS (NATIONAL DESIGN SPEC. BY AF&PA) AND TPI. ALPINE CONNECTOR PLATES ARE MADE OF 20/18/16GA (W,H/S/K) ASTM A653 GRADE 40/60 (W, K/H,S) GALV. STEEL. APPLY PLATES TO EACH FACE OF TRUSS AND, UNLESS OTHERWISE LOCATED ON THIS DESIGN, POSITION PER DRAWINGS 160A Z. ANY INSPECTION OF PLATES FOLLOWED BY (1) SHALL BE PER ANNEX A3 OF TPI1 2002 SEC.3. A SEAL ON THIS DRAWING INDICATES ACCEPTANCE OF PROFESSIONAL ENGINEERING RESPONSIBILITY SOLELY FOR THE TRUSS COMPONENT DESIGN SHOWN. THE SUITABILITY AND USE OF THIS COMPONENT FOR ANY BUILDING IS THE RESPONSIBILITY OF THE

ARTHUR R. FISHER
LICENSE
No. 59687
STATE OF FLORIDA
PROFESSIONAL ENGINEER

Feb 10 '06

TC LL	20.0 PSF	REF R487-- 86576
TC DL	10.0 PSF	DATE 02/10/06
BC DL	10.0 PSF	DRW HCUSR487 06041044
BC LL	0.0 PSF	HC-ENG JB/AF
TOT.LD.	40.0 PSF	SEQN- 82512
DUR.FAC.	1.25	

Top chord 2x8 SP SS
Bot chord 2x8 SP SS :B3 2x4 SP #2 Dense:
Webs 2x4 SP #3

SPECIAL LOADS
------(LUMBER DUR.FAC.=1.25 / PLATE DUR.FAC.=1.25)

TC - From	117 PLF	at -1.51	to	117 PLF	at	5.58
TC - From	163 PLF	at 5.58	to	163 PLF	at	9.82
TC - From	117 PLF	at 9.82	to	117 PLF	at	11.67
TC - From	117 PLF	at 11.67	to	117 PLF	at	13.51
TC - From	163 PLF	at 13.51	to	163 PLF	at	14.45
TC - From	328 PLF	at 14.45	to	366 PLF	at	17.75
TC - From	320 PLF	at 17.75	to	358 PLF	at	21.04
TC - From	117 PLF	at 21.04	to	117 PLF	at	24.84
PLT- From	35 PLF	at 10.13	to	35 PLF	at	13.21
BC - From	9 PLF	at -1.51	to	9 PLF	at	0.00
BC - From	35 PLF	at 0.00	to	35 PLF	at	5.58
BC - From	213 PLF	at 5.58	to	213 PLF	at	23.33
BC - From	9 PLF	at 23.33	to	9 PLF	at	24.84

TC - 713 LB Conc. Load at 11.67
TC - 454 LB Conc. Load at 20.63
BC - 648 LB Conc. Load at 5.46
BC - 158 LB Conc. Load at 5.58, 17.75
BC - 219 LB Conc. Load at 21.17

THE ARCHITECT OR ENGINEER OF RECORD SHALL EVALUATE AND APPROVE LOAD MAGNITUDES AND LOCATIONS FROM AREAS FIELD FRAMED BY OTHERS.
TRUSS ENGINEER IS NOT RESPONSIBLE FOR LOAD MAGNITUDES AND LOCATIONS FROM CONVENTIONAL FRAMING.

In lieu of structural panels or rigid ceiling use purlins to brace TC @ 24" OC, BC @ 48" OC.

3 COMPLETE TRUSSES REQUIRED

Nailing Schedule: (12d_Common_(0.148"x3.25",_min.)_nails)
Top Chord: 1 Row @ 6.25" o.c.
Bot Chord: 1 Row @ 8.00" o.c.
Webs : 1 Row @ 4" o.c.
Repeat nailing as each layer is applied. Use equal spacing between rows and stagger nails in each row to avoid splitting.

110 mph wind, 15.00 ft mean hgt, ASCE 7-02, CLOSED bldg, not located within 4.04 ft from roof edge, CAT II, EXP B, wind TC DL=5.0 psf, wind BC DL=5.0 psf.

Calculated horizontal deflection is 0.18" due to live load and 0.28" due to dead load.

Trusses to be spaced at 42.5" OC maximum.

Collar-tie braced with continuous lateral bracing at 24" OC.

Deflection meets L/360 live and L/240 total load. Creep increase factor for dead load is 1.50.

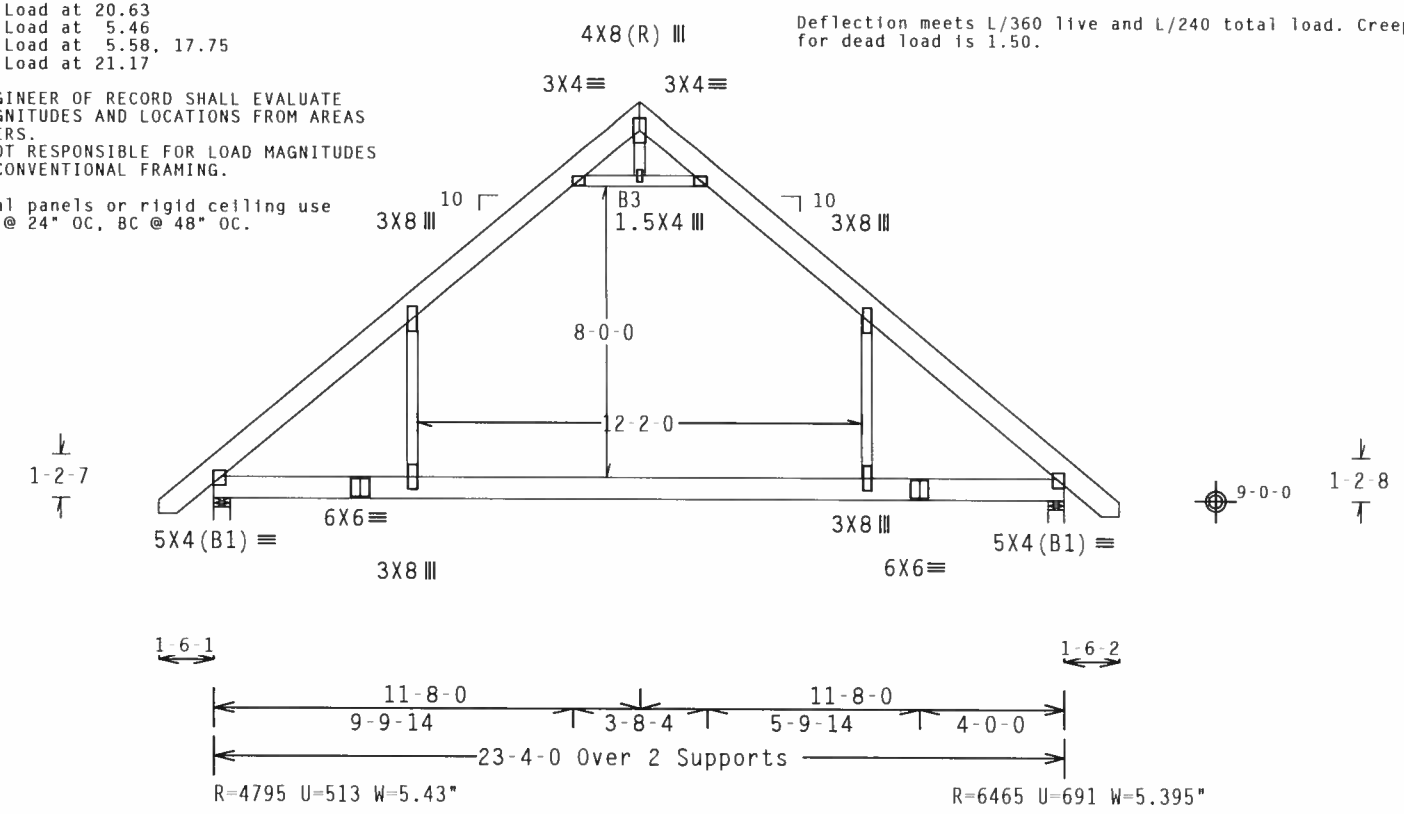

Design Crit: TPI-2002(STD)/FBC
Cq/RT=1.00(1.25)/10(0) 7.22.1 QTY:4 FL/-/4/-/-/R/-

PLT TYP. Wave

Scale =.1875"/Ft.

ALPINE
Alpine Engineered Products, Inc.
1950 Marley Drive

WARNING TRUSSES REQUIRE EXTREME CARE IN FABRICATION, HANDLING, SHIPPING, INSTALLING AND BRACING. REFER TO BCSI 1-03 (BUILDING COMPONENT SAFETY INFORMATION), PUBLISHED BY TPI (TRUSS PLATE INSTITUTE, 583 D'ONOFRIO DR., SUITE 200, MADISON, WI 53719) AND WTCA (WOOD TRUSS COUNCIL OF AMERICA, 6300 ENTERPRISE LN, MADISON, WI 53719) FOR SAFETY PRACTICES PRIOR TO PERFORMING THESE FUNCTIONS. UNLESS OTHERWISE INDICATED, TOP CHORD SHALL HAVE PROPERLY ATTACHED STRUCTURAL PANELS AND BOTTOM CHORD SHALL HAVE A PROPERLY ATTACHED RIGID CEILING.

IMPORTANTFURNISH A COPY OF THIS DESIGN TO THE INSTALLATION CONTRACTOR. ALPINE ENGINEERED PRODUCTS, INC. SHALL NOT BE RESPONSIBLE FOR ANY DEVIATION FROM THIS DESIGN; ANY FAILURE TO BUILD THE TRUSS IN CONFORMANCE WITH TPI; OR FABRICATING, HANDLING, SHIPPING, INSTALLING & BRACING OF TRUSSES. DESIGN CONFORMS WITH APPLICABLE PROVISIONS OF NDS (NATIONAL DESIGN SPEC. BY AF&PA) AND TPI. ALPINE CONNECTOR PLATES ARE MADE OF 20/18/16GA (W,H/S/K) ASTM A653 GRADE 40/60 (W, K/H,S) GALV. STEEL. APPLY PLATES TO EACH FACE OF TRUSS AND, UNLESS OTHERWISE LOCATED ON THIS DESIGN, POSITION PER DRAWINGS 160A 2. ANY INSPECTION OF PLATES FOLLOWED BY (1) SHALL BE PER ANNEX A3 OF TPI1 2002 SEC.3 A SEAL ON THIS DRAWING INDICATES ACCEPTANCE OF PROFESSIONAL ENGINEERING RESPONSIBILITY SOLELY FOR THE TRUSS COMPONENT DESIGN SHOWN. THE SUITABILITY AND USE OF THIS COMPONENT FOR ANY BUILDING IS THE RESPONSIBILITY

ARTHUR R. FISHER
LICENSE
No. 59687
STATE OF FLORIDA
PROFESSIONAL ENGINEER

Feb 10 '06

TC LL	20.0 PSF	REF R487-- 86577
TC DL	10.0 PSF	DATE 02/10/06
BC DL	10.0 PSF	DRW HCUSR487 06041008
BC LL	0.0 PSF	HC-ENG JB/AF
TOT.LD.	40.0 PSF	SEQN- 82719
DUR.FAC.	1.25	

Top chord 2x4 SP #2 Dense
Bot chord 2x4 SP #2 Dense
Webs 2x4 SP #3

(A) Continuous lateral bracing equally spaced on member.

Deflection meets L/360 live and L/240 total load. Creep increase factor for dead load is 1.50.

110 mph wind, 15.00 ft mean hgt, ASCE 7-02, CLOSED bldg, not located within 4.50 ft from roof edge, CAT II, EXP B, wind TC DL=5.0 psf, wind BC DL=5.0 psf.

Right end vertical not exposed to wind pressure.

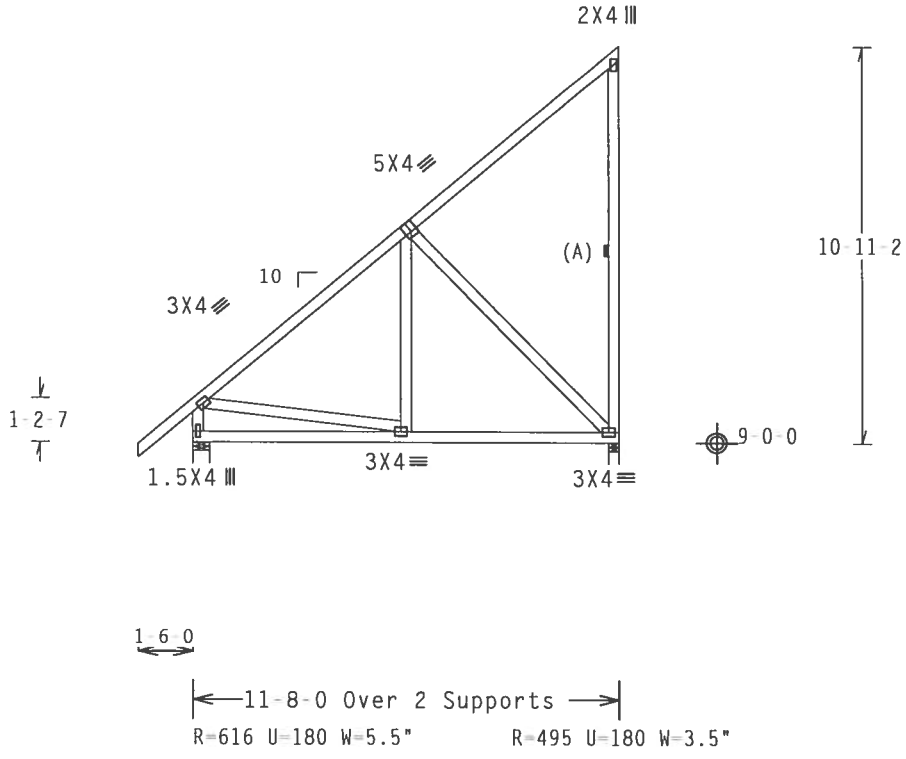

Design Crit: TPI-2002(STD)/FBC

PLT TYP. Wave Cq/RT=1.00(1.25)/10(0) 7.22.1.2 0 TY:2 FL/-/4/-/-/R/- Scale =.1875"/Ft.

ALPINE
Alpine Engineered Products, Inc.
1950 Marley Drive

WARNING TRUSSES REQUIRE EXTREME CARE IN FABRICATION, HANDLING, SHIPPING, INSTALLING AND BRACING. REFER TO BCSI 1-03 (BUILDING COMPONENT SAFETY INFORMATION), PUBLISHED BY TPI (TRUSS PLATE INSTITUTE, 583 D'ONOFRIO DR., SUITE 200, MADISON, WI 53719) AND WTCA (WOOD TRUSS COUNCIL OF AMERICA, 6300 ENTERPRISE LN, MADISON, WI 53719) FOR SAFETY PRACTICES PRIOR TO PERFORMING THESE FUNCTIONS. UNLESS OTHERWISE INDICATED, TOP CHORD SHALL HAVE PROPERLY ATTACHED STRUCTURAL PANELS AND BOTTOM CHORD SHALL HAVE A PROPERLY ATTACHED RIGID CEILING.

IMPORTANTFURNISH A COPY OF THIS DESIGN TO THE INSTALLATION CONTRACTOR. ALPINE ENGINEERED PRODUCTS, INC. SHALL NOT BE RESPONSIBLE FOR ANY DEVIATION FROM THIS DESIGN; ANY FAILURE TO BUILD THE TRUSS IN CONFORMANCE WITH TPI; OR FABRICATING, HANDLING, SHIPPING, INSTALLING & BRACING OF TRUSSES. DESIGN CONFORMS WITH APPLICABLE PROVISIONS OF NDS (NATIONAL DESIGN SPEC. BY AF&PA) AND TPI. ALPINE CONNECTOR PLATES ARE MADE OF 20/18/16GA (W,H/S/K) ASTM A653 GRADE 40/60 (W, K/H,S) GALV. STEEL. APPLY PLATES TO EACH FACE OF TRUSS AND, UNLESS OTHERWISE LOCATED ON THIS DESIGN, POSITION PER DRAWINGS 160A-Z. ANY INSPECTION OF PLATES FOLLOWED BY (I) SHALL BE PER ANNEX A3 OF TPI1-2002 SEC.3. A SEAL ON THIS DRAWING INDICATES ACCEPTANCE OF PROFESSIONAL ENGINEERING RESPONSIBILITY SOLELY FOR THE TRUSS COMPONENT

ARTHUR R. FISHER
LICENSE
No. 59687
STATE OF FLORIDA
PROFESSIONAL ENGINEER

Feb 10 '06

TC LL	20.0 PSF	REF	R487-- 86578
TC DL	10.0 PSF	DATE	02/10/06
BC DL	10.0 PSF	DRW	HCUSR487 06041095
BC LL	0.0 PSF	HC-ENG	JB/AF *
TOT.LD.	40.0 PSF	SEQN-	82633
DUR.FAC.	1.25		

Top chord 2x4 SP #2 Dense
Bot chord 2x4 SP #2 Dense
Webs 2x4 SP #3

(A) Continuous lateral bracing equally spaced on member.

Deflection meets L/360 live and L/240 total load. Creep increase factor for dead load is 1.50.

110 mph wind, 15.00 ft mean hgt, ASCE 7-02, CLOSED bldg, not located within 4.50 ft from roof edge, CAT II, EXP B, wind TC DL=5.0 psf, wind BC DL=5.0 psf.

Right end vertical not exposed to wind pressure.

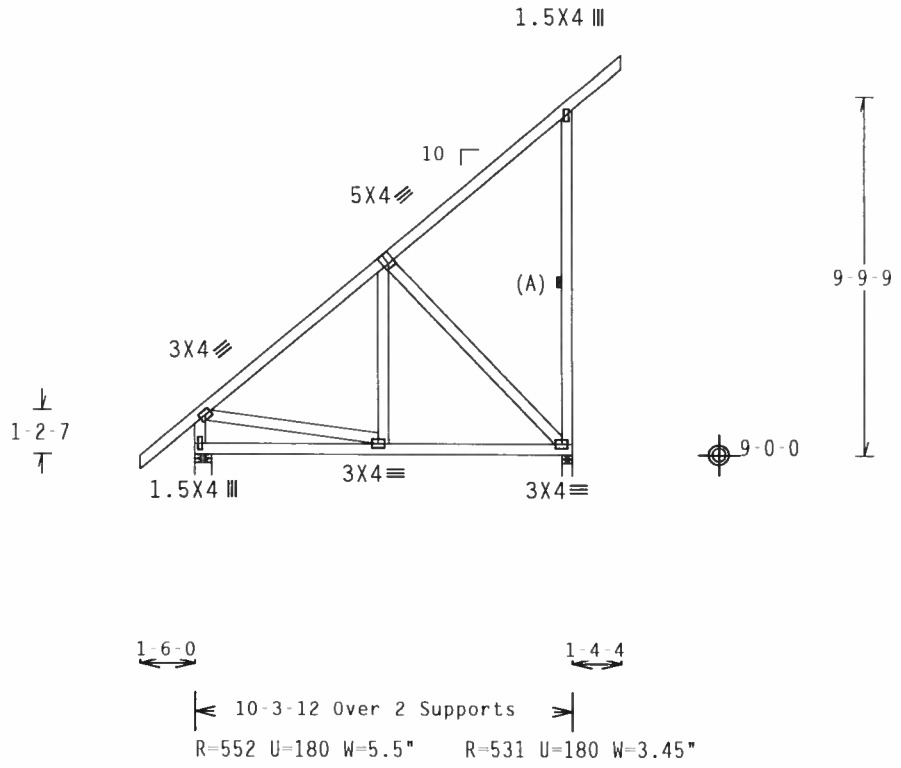

Design Crit: TPI-2002(STD)/FBC

PLT TYP. Wave

Cq/RT=1.00(1.25)/10(0) 7.22.11 QTY:1 FL/-/4/-/-/R/- Scale =.1875"/Ft.

ALPINE
Alpine Engineered Products, Inc.
1950 Marley Drive

WARNING TRUSSES REQUIRE EXTREME CARE IN FABRICATION, HANDLING, SHIPPING, INSTALLING AND BRACING. REFER TO BCSI 1-03 (BUILDING COMPONENT SAFETY INFORMATION), PUBLISHED BY TPI (TRUSS PLATE INSTITUTE, 583 D'ONOFRIO DR., SUITE 200, MADISON, WI 53719) AND WTCA (WOOD TRUSS COUNCIL OF AMERICA, 6300 ENTERPRISE LN, MADISON, WI 53719) FOR SAFETY PRACTICES PRIOR TO PERFORMING THESE FUNCTIONS. UNLESS OTHERWISE INDICATED, TOP CHORD SHALL HAVE PROPERLY ATTACHED STRUCTURAL PANELS AND BOTTOM CHORD SHALL HAVE A PROPERLY ATTACHED RIGID CEILING.

IMPORTANT FURNISH A COPY OF THIS DESIGN TO THE INSTALLATION CONTRACTOR. ALPINE ENGINEERED PRODUCTS, INC. SHALL NOT BE RESPONSIBLE FOR ANY DEVIATION FROM THIS DESIGN; ANY FAILURE TO BUILD THE TRUSS IN CONFORMANCE WITH TPI; OR FABRICATING, HANDLING, SHIPPING, INSTALLING & BRACING OF TRUSSES. DESIGN CONFORMS WITH APPLICABLE PROVISIONS OF NDS (NATIONAL DESIGN SPEC. BY AF&PA) AND TPI. ALPINE CONNECTOR PLATES ARE MADE OF 20/18/16GA (W,H/S/K) ASTM A653 GRADE 40/60 (W, K/H,S) GALV. STEEL. APPLY PLATES TO EACH FACE OF TRUSS AND, UNLESS OTHERWISE LOCATED ON THIS DESIGN, POSITION PER DRAWINGS 160A Z. ANY INSPECTION OF PLATES FOLLOWED BY (I) SHALL BE PER ANNEX A3 OF TPI1 2002 SEC.3. A SEAL ON THIS DRAWING INDICATES ACCEPTANCE OF PROFESSIONAL ENGINEERING RESPONSIBILITY SOLELY FOR THE TRUSS COMPONENT

ARTHUR R. FISHER LICENSE No. 59687 STATE OF FLORIDA PROFESSIONAL ENGINEER

Feb 10 '06

TC LL	20.0 PSF	REF	R487-- 86579
TC DL	10.0 PSF	DATE	02/10/06
BC DL	10.0 PSF	DRW	HCUSR487 06041009
BC LL	0.0 PSF	HC-ENG	JB/AF *
TOT.LD.	40.0 PSF	SEQN-	82729
DUR.FAC.	1.25		

(0 004-GLENWOOD KING - BULLARD - C6)

Top chord 2x4 SP #2 Dense :T2 2x6 SP #2:
Bot chord 2x4 SP #2 Dense
Webs 2x4 SP #3

Deflection meets L/360 live and L/240 total load. Creep increase factor for dead load is 1.50.

110 mph wind, 15.00 ft mean hgt, ASCE 7-02, CLOSED bldg, not located within 4.50 ft from roof edge, CAT II, EXP B, wind TC DL=5.0 psf, wind BC DL=5.0 psf.

Right end vertical not exposed to wind pressure.

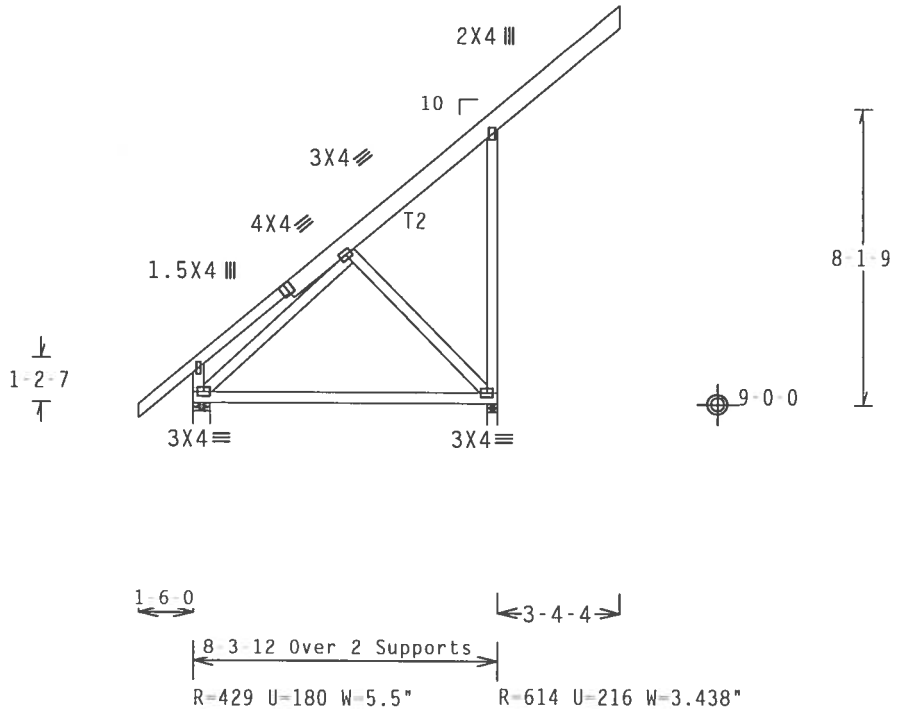

Design Crit: TPI-2002(STD)/FBC

PLT TYP. Wave

Cq/RT=1.00(1.25)/10(0) 7.22.1 QTY:1 FL/-/4/-/-/R/- Scale =.1875"/Ft.

ALPINE
Alpine Engineered Products, Inc.
1950 Marley Drive

WARNING TRUSSES REQUIRE EXTREME CARE IN FABRICATION, HANDLING, SHIPPING, INSTALLING AND BRACING. REFER TO BCSI 1-03 (BUILDING COMPONENT SAFETY INFORMATION), PUBLISHED BY TPI (TRUSS PLATE INSTITUTE, 583 D'ONOFRIO DR., SUITE 200, MADISON, WI 53719) AND WTCA (WOOD TRUSS COUNCIL OF AMERICA, 6300 ENTERPRISE LN, MADISON, WI 53719) FOR SAFETY PRACTICES PRIOR TO PERFORMING THESE FUNCTIONS. UNLESS OTHERWISE INDICATED, TOP CHORD SHALL HAVE PROPERLY ATTACHED STRUCTURAL PANELS AND BOTTOM CHORD SHALL HAVE A PROPERLY ATTACHED RIGID CEILING.

IMPORTANTFURNISH A COPY OF THIS DESIGN TO THE INSTALLATION CONTRACTOR. ALPINE ENGINEERED PRODUCTS, INC. SHALL NOT BE RESPONSIBLE FOR ANY DEVIATION FROM THIS DESIGN; ANY FAILURE TO BUILD THE TRUSS IN CONFORMANCE WITH TPI; OR FABRICATING, HANDLING, SHIPPING, INSTALLING & BRACING OF TRUSSES. DESIGN CONFORMS WITH APPLICABLE PROVISIONS OF NDS (NATIONAL DESIGN SPEC. BY AF&PA) AND TPI. ALPINE CONNECTOR PLATES ARE MADE OF 20/18/16GA (W,H/S/K) ASTM A653 GRADE 40/60 (W, K/H,S) GALV. STEEL. APPLY PLATES TO EACH FACE OF TRUSS AND, UNLESS OTHERWISE LOCATED ON THIS DESIGN, POSITION PER DRAWINGS 160A-Z. ANY INSPECTION OF PLATES FOLLOWED BY (I) SHALL BE PER ANNEX A3 OF TPI1-2002 SEC.3. A SEAL ON THIS DRAWING INDICATES ACCEPTANCE OF PROFESSIONAL ENGINEERING RESPONSIBILITY SOLELY FOR THE TRUSS COMPONENT DESIGN SHOWN. THE SUITABILITY AND USE OF THIS COMPONENT FOR ANY BUILDING IS THE RESPONSIBILITY OF THE

ARTHUR R. FISHER LICENSE No. 59687 STATE OF FLORIDA PROFESSIONAL ENGINEER

Feb 10, 2006

TC LL	20.0 PSF	REF	R487-- 86580
TC DL	10.0 PSF	DATE	02/10/06
BC DL	10.0 PSF	DRW	HCUSR487 06041045
BC LL	0.0 PSF	HC-ENG	JB/AF
TOT.LD.	40.0 PSF	SEQN-	82744
DUR.FAC.	1.25		

(6-004-GLENWOOD KING - BULLARD - C7)

Top chord 2x6 SP #2
Bot chord 2x4 SP #2 Dense
Webs 2x4 SP #3

Deflection meets L/360 live and L/240 total load. Creep increase factor for dead load is 1.50.

110 mph wind, 15.00 ft mean hgt, ASCE 7-02, CLOSED bldg, not located within 4.50 ft from roof edge, CAT II, EXP B, wind TC DL=5.0 psf, wind BC DL=5.0 psf.

Right end vertical not exposed to wind pressure.

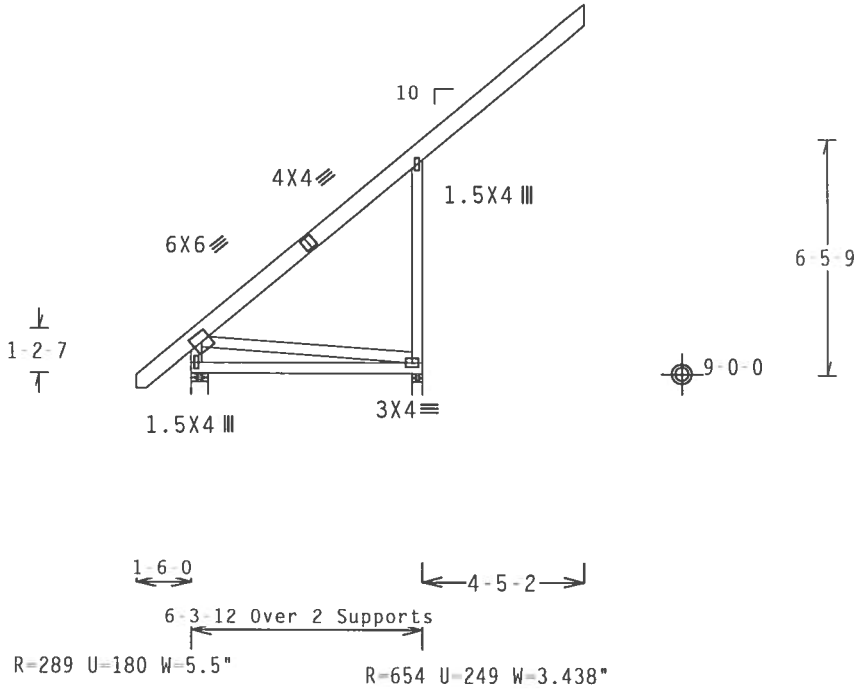

Design Crit: TPI-2002(STD)/FBC

PLT TYP. Wave Cq/RT=1.00(1.25)/10(0) 7.22.1 QTY:1 FL/-/4/-/-/R/- Scale =.1875"/Ft.

ALPINE
Alpine Engineered Products, Inc.
1950 Marley Drive

WARNING TRUSSES REQUIRE EXTREME CARE IN FABRICATION, HANDLING, SHIPPING, INSTALLING AND BRACING. REFER TO BCSI 1-03 (BUILDING COMPONENT SAFETY INFORMATION), PUBLISHED BY TPI (TRUSS PLATE INSTITUTE, 583 D'ONOFRIO DR., SUITE 200, MADISON, WI 53719) AND WTCA (WOOD TRUSS COUNCIL OF AMERICA, 6300 ENTERPRISE LN, MADISON, WI 53719) FOR SAFETY PRACTICES PRIOR TO PERFORMING THESE FUNCTIONS. UNLESS OTHERWISE INDICATED, TOP CHORD SHALL HAVE PROPERLY ATTACHED STRUCTURAL PANELS AND BOTTOM CHORD SHALL HAVE A PROPERLY ATTACHED RIGID CEILING.

IMPORTANTFURNISH A COPY OF THIS DESIGN TO THE INSTALLATION CONTRACTOR. ALPINE ENGINEERED PRODUCTS, INC. SHALL NOT BE RESPONSIBLE FOR ANY DEVIATION FROM THIS DESIGN; ANY FAILURE TO BUILD THE TRUSS IN CONFORMANCE WITH TPI; OR FABRICATING, HANDLING, SHIPPING, INSTALLING & BRACING OF TRUSSES. DESIGN CONFORMS WITH APPLICABLE PROVISIONS OF NDS (NATIONAL DESIGN SPEC. BY AF&PA) AND TPI. ALPINE CONNECTOR PLATES ARE MADE OF 20/18/16GA (W,H/S/K) ASTM A653 GRADE 40/60 (W, K/H,S) GALV. STEEL. APPLY PLATES TO EACH FACE OF TRUSS AND, UNLESS OTHERWISE LOCATED ON THIS DESIGN, POSITION PER DRAWINGS 160A-2. ANY INSPECTION OF PLATES FOLLOWED BY (1) SHALL BE PER ANNEX A3 OF TPI1-2002 SEC.3. A SEAL ON THIS DRAWING INDICATES ACCEPTANCE OF PROFESSIONAL ENGINEERING RESPONSIBILITY SOLELY FOR THE TRUSS COMPONENT

ARTHUR R. FISHER LICENSE No.59687 STATE OF FLORIDA PROFESSIONAL ENGINEER

Feb 10 '06

TC LL	20.0 PSF	REF R487-- 86581
TC DL	10.0 PSF	DATE 02/10/06
BC DL	10.0 PSF	DRW HCUSR487 06041046
BC LL	0.0 PSF	HC-ENG JB/AF
TOT.LD.	40.0 PSF	SEQN- 82762
DUR.FAC.	1.25	

(6-004 GLENWOOD KING BULLARD C8)

Top chord 2x4 SP #2 Dense
Bot chord 2x4 SP #2 Dense
Webs 2x4 SP #3

Deflection meets L/360 live and L/240 total load. Creep increase factor for dead load is 1.50.

110 mph wind, 15.00 ft mean hgt, ASCE 7-02, CLOSED bldg, not located within 4.50 ft from roof edge, CAT II, EXP B, wind TC DL=5.0 psf, wind BC DL=5.0 psf.

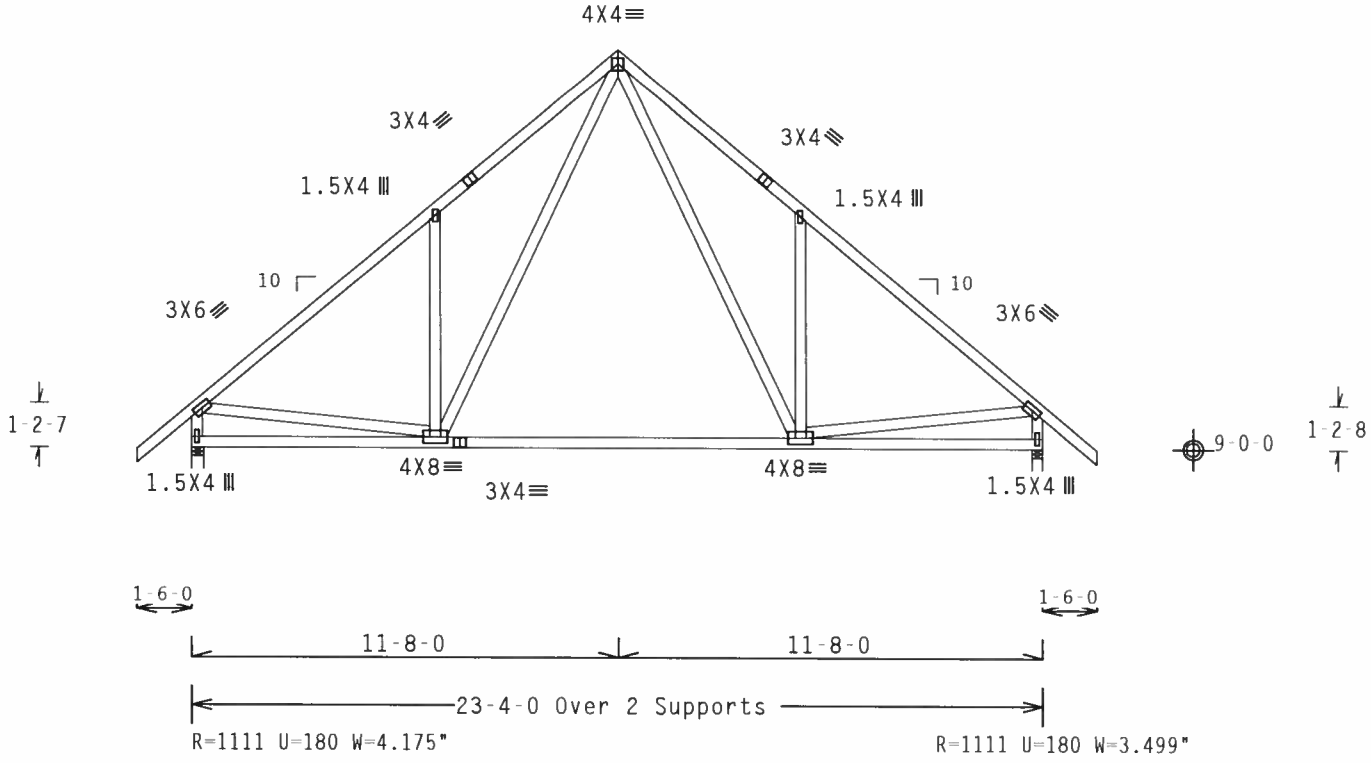

Design Crit: TPI-2002(STD)/FBC

PLT TYP. Wave

Cq/RT=1.00(1.25)/10(0) 7.22.11 QTY:1 FL/-/4/-/-/R/- Scale =.1875"/Ft.

ALPINE
Alpine Engineered Products, Inc.
1950 Marley Drive

WARNING TRUSSES REQUIRE EXTREME CARE IN FABRICATION, HANDLING, SHIPPING, INSTALLING AND BRACING. REFER TO BCSI 1-03 (BUILDING COMPONENT SAFETY INFORMATION), PUBLISHED BY TPI (TRUSS PLATE INSTITUTE, 583 D'ONOFRIO DR., SUITE 200, MADISON, WI 53719) AND WTCA (WOOD TRUSS COUNCIL OF AMERICA, 6300 ENTERPRISE LN, MADISON, WI 53719) FOR SAFETY PRACTICES PRIOR TO PERFORMING THESE FUNCTIONS. UNLESS OTHERWISE INDICATED, TOP CHORD SHALL HAVE PROPERLY ATTACHED STRUCTURAL PANELS AND BOTTOM CHORD SHALL HAVE A PROPERLY ATTACHED RIGID CEILING.

IMPORTANTFURNISH A COPY OF THIS DESIGN TO THE INSTALLATION CONTRACTOR. ALPINE ENGINEERED PRODUCTS, INC. SHALL NOT BE RESPONSIBLE FOR ANY DEVIATION FROM THIS DESIGN; ANY FAILURE TO BUILD THE TRUSS IN CONFORMANCE WITH TPI; OR FABRICATING, HANDLING, SHIPPING, INSTALLING & BRACING OF TRUSSES. DESIGN CONFORMS WITH APPLICABLE PROVISIONS OF NDS (NATIONAL DESIGN SPEC, BY AF&PA) AND TPI. ALPINE CONNECTOR PLATES ARE MADE OF 20/18/16GA (W,H/S/K) ASTM A653 GRADE 40/60 (W, K/H,S) GALV. STEEL. APPLY PLATES TO EACH FACE OF TRUSS AND, UNLESS OTHERWISE LOCATED ON THIS DESIGN, POSITION PER DRAWINGS 160A Z. ANY INSPECTION OF PLATES FOLLOWED BY (1) SHALL BE PER ANNEX A3 OF TPI1 2002 SEC.3. A SEAL ON THIS DRAWING INDICATES ACCEPTANCE OF PROFESSIONAL ENGINEERING RESPONSIBILITY SOLELY FOR THE TRUSS COMPONENT

ARTHUR R. FISHER
LICENSE
No. 59687
STATE OF FLORIDA
PROFESSIONAL ENGINEER

Feb 10 '06

TC LL	20.0 PSF	REF R487-- 86582
TC DL	10.0 PSF	DATE 02/10/06
BC DL	10.0 PSF	DRW HCUSR487 06041047
BC LL	0.0 PSF	HC-ENG JB/AF
TOT.LD.	40.0 PSF	SEQN- 82788
DUR.FAC.	1.25	

(6-004-GLENWOOD KING - BULLARD - C9G)

Top chord 2x4 SP #2 Dense
Bot chord 2x4 SP #2 Dense
Webs 2x4 SP #3

110 mph wind, 15.00 ft mean hgt, ASCE 7-02, CLOSED bldg, not located within 4.50 ft from roof edge, CAT II, EXP B, wind TC DL=5.0 psf, wind BC DL=5.0 psf.

Deflection meets L/360 live and L/240 total load. Creep increase factor for dead load is 1.50.

SPECIAL LOADS
------(LUMBER DUR.FAC.=1.25 / PLATE DUR.FAC.=1.25)

TC	From	66 PLF	at	-1.50	to	66 PLF	at 24.83
BC	From	5 PLF	at	-1.50	to	5 PLF	at 0.00
BC	From	20 PLF	at	0.00	to	20 PLF	at 23.33
BC	From	5 PLF	at	23.33	to	5 PLF	at 24.83
BC		274 LB	Conc. Load	at	0.79		
BC		190 LB	Conc. Load	at	3.61		
BC		106 LB	Conc. Load	at	6.44		

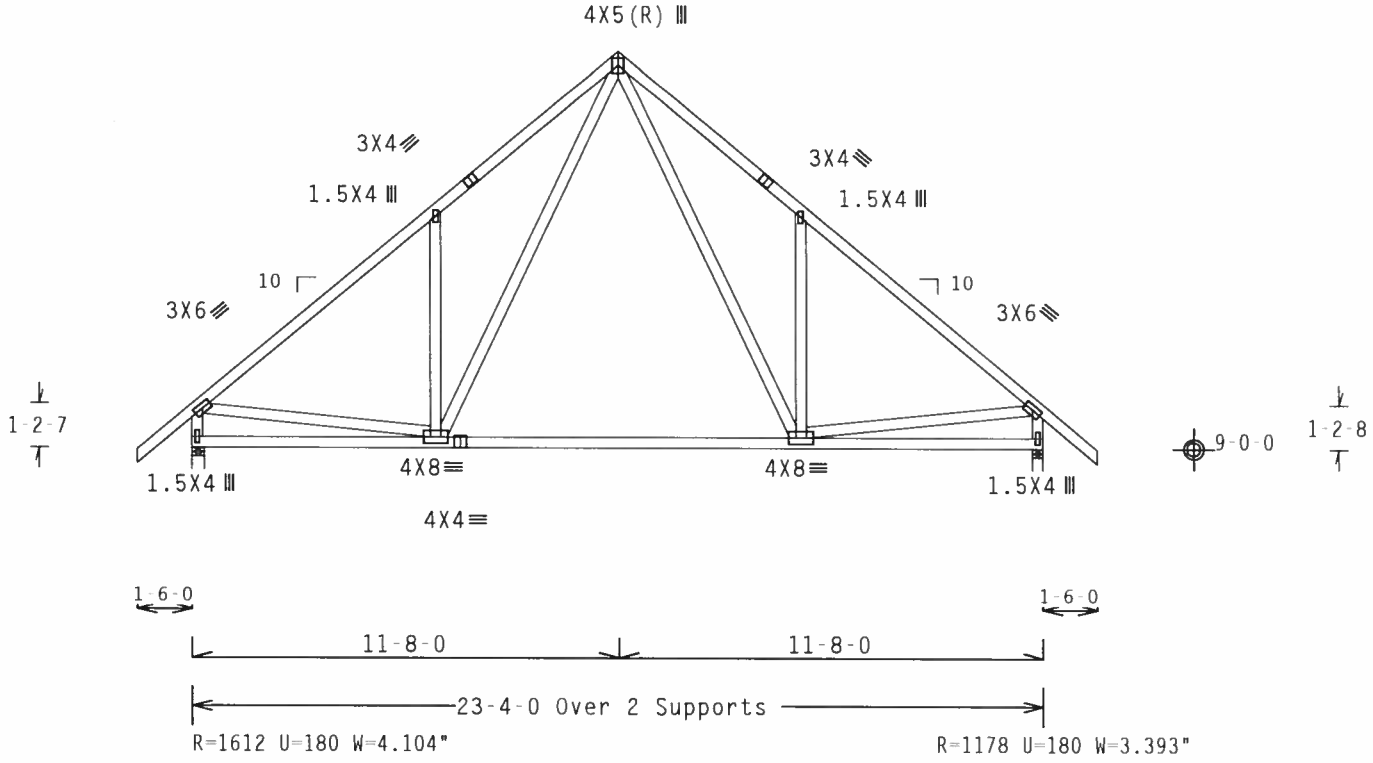

Design Crit: TPI-2002(STD)/FBC

PLT TYP. Wave

Cq/RT=1.00(1.25)/10(0) 7.22.1 QTY:1 FL/-/4/-/-/R/- Scale =.1875"/Ft.

ALPINE
Alpine Engineered Products, Inc.
1950 Marley Drive

WARNING TRUSSES REQUIRE EXTREME CARE IN FABRICATION, HANDLING, SHIPPING, INSTALLING AND BRACING. REFER TO BCSI 1-03 (BUILDING COMPONENT SAFETY INFORMATION), PUBLISHED BY TPI (TRUSS PLATE INSTITUTE, 583 D'ONOFRIO DR., SUITE 200, MADISON, WI 53719) AND WTCA (WOOD TRUSS COUNCIL OF AMERICA, 6300 ENTERPRISE LN, MADISON, WI 53719) FOR SAFETY PRACTICES PRIOR TO PERFORMING THESE FUNCTIONS. UNLESS OTHERWISE INDICATED, TOP CHORD SHALL HAVE PROPERLY ATTACHED STRUCTURAL PANELS AND BOTTOM CHORD SHALL HAVE A PROPERLY ATTACHED RIGID CEILING.

IMPORTANTFURNISH A COPY OF THIS DESIGN TO THE INSTALLATION CONTRACTOR. ALPINE ENGINEERED PRODUCTS, INC. SHALL NOT BE RESPONSIBLE FOR ANY DEVIATION FROM THIS DESIGN; ANY FAILURE TO BUILD THE TRUSS IN CONFORMANCE WITH TPI; OR FABRICATING, HANDLING, SHIPPING, INSTALLING & BRACING OF TRUSSES. DESIGN CONFORMS WITH APPLICABLE PROVISIONS OF NDS (NATIONAL DESIGN SPEC. BY AF&PA) AND TPI. ALPINE CONNECTOR PLATES ARE MADE OF 20/18/16GA (W.H/S/K) ASTM A653 GRADE 40/60 (W. K/H.S) GALV. STEEL. APPLY PLATES TO EACH FACE OF TRUSS AND, UNLESS OTHERWISE LOCATED ON THIS DESIGN, POSITION PER DRAWINGS 160A Z. ANY INSPECTION OF PLATES FOLLOWED BY (I) SHALL BE PER ANNEX A3 OF TPI1 2002 SEC.3. A SEAL ON THIS DRAWING INDICATES ACCEPTANCE OF PROFESSIONAL ENGINEERING RESPONSIBILITY SOLELY FOR THE TRUSS COMPONENT

ARTHUR R. FISHER LICENSE No. 39687 STATE OF FLORIDA PROFESSIONAL ENGINEER

Feb 10, 2006

TC LL	20.0 PSF	REF	R487-- 86583
TC DL	10.0 PSF	DATE	02/10/06
BC DL	10.0 PSF	DRW	HCUSR487 06041048
BC LL	0.0 PSF	HC-ENG	JB/AF
TOT.LD.	40.0 PSF	SEQN-	82797
DUR.FAC.	1.25		

Top chord 2x4 SP #2 Dense
Bot chord 2x4 SP #2 Dense
Webs 2x4 SP #3

Deflection meets L/360 live and L/240 total load. Creep increase factor for dead load is 1.50.

110 mph wind, 15.00 ft mean hgt, ASCE 7-02, CLOSED bldg, not located within 4.50 ft from roof edge, CAT II, EXP B, wind TC DL=5.0 psf, wind BC DL=5.0 psf.

Right end vertical not exposed to wind pressure.

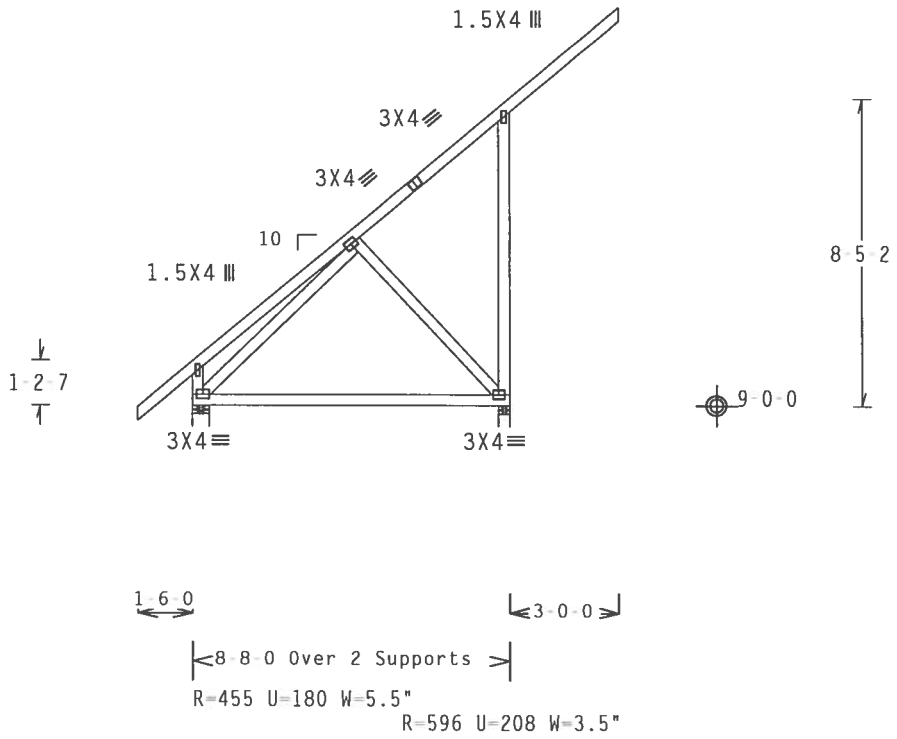

Design Crit: TPI-2002(STD)/FBC

PLT TYP. Wave Cq/RT=1.00(1.25)/10(0) 7.22.1 QTY:3 FL/-/4/-/-/R/- Scale =.1875"/Ft.

ALPINE
Alpine Engineered Products, Inc.
1950 Marley Drive

WARNING TRUSSES REQUIRE EXTREME CARE IN FABRICATION, HANDLING, SHIPPING, INSTALLING AND BRACING. REFER TO BCSI 1-03 (BUILDING COMPONENT SAFETY INFORMATION), PUBLISHED BY TPI (TRUSS PLATE INSTITUTE, 583 D'ONOFRIO DR., SUITE 200, MADISON, WI 53719) AND WTCA (WOOD TRUSS COUNCIL OF AMERICA, 6300 ENTERPRISE LN, MADISON, WI 53719) FOR SAFETY PRACTICES PRIOR TO PERFORMING THESE FUNCTIONS. UNLESS OTHERWISE INDICATED, TOP CHORD SHALL HAVE PROPERLY ATTACHED STRUCTURAL PANELS AND BOTTOM CHORD SHALL HAVE A PROPERLY ATTACHED RIGID CEILING.

IMPORTANTFURNISH A COPY OF THIS DESIGN TO THE INSTALLATION CONTRACTOR. ALPINE ENGINEERED PRODUCTS, INC. SHALL NOT BE RESPONSIBLE FOR ANY DEVIATION FROM THIS DESIGN; ANY FAILURE TO BUILD THE TRUSS IN CONFORMANCE WITH TPI; OR FABRICATING, HANDLING, SHIPPING, INSTALLING & BRACING OF TRUSSES. DESIGN CONFORMS WITH APPLICABLE PROVISIONS OF NDS (NATIONAL DESIGN SPEC. BY AF&PA) AND TPI. ALPINE CONNECTOR PLATES ARE MADE OF 20/18/16GA (W,H/S/K) ASTM A653 GRADE 40/60 (W, K/H,S) GALV. STEEL. APPLY PLATES TO EACH FACE OF TRUSS AND, UNLESS OTHERWISE LOCATED ON THIS DESIGN, POSITION PER DRAWINGS 160A Z. ANY INSPECTION OF PLATES FOLLOWED BY (1) SHALL BE PER ANNEX A3 OF TPI1 2002 SEC.3. A SEAL ON THIS DRAWING INDICATES ACCEPTANCE OF PROFESSIONAL ENGINEERING RESPONSIBILITY SOLELY FOR THE TRUSS COMPONENT

ARTHUR R. FISHER LICENSE No. 39687 STATE OF FLORIDA PROFESSIONAL ENGINEER
Feb 10 '06

TC LL	20.0 PSF	REF	R487-- 86584
TC DL	10.0 PSF	DATE	02/10/06
BC DL	10.0 PSF	DRW	HCUSR487 06041010
BC LL	0.0 PSF	HC-ENG	JB/AF *
TOT.LD.	40.0 PSF	SEQN-	82819
DUR.FAC.	1.25		

(6-004-GLENWOOD KING BULLARD CC5)

Top chord 2x4 SP #2 Dense
Bot chord 2x4 SP #2 Dense
Webs 2x4 SP #3

(A) Continuous lateral bracing equally spaced on member.

Deflection meets L/360 live and L/240 total load. Creep increase factor for dead load is 1.50.

110 mph wind, 15.00 ft mean hgt, ASCE 7-02, CLOSED bldg, not located within 4.50 ft from roof edge, CAT II, EXP B, wind TC DL=5.0 psf, wind BC DL=5.0 psf.

Right end vertical not exposed to wind pressure.

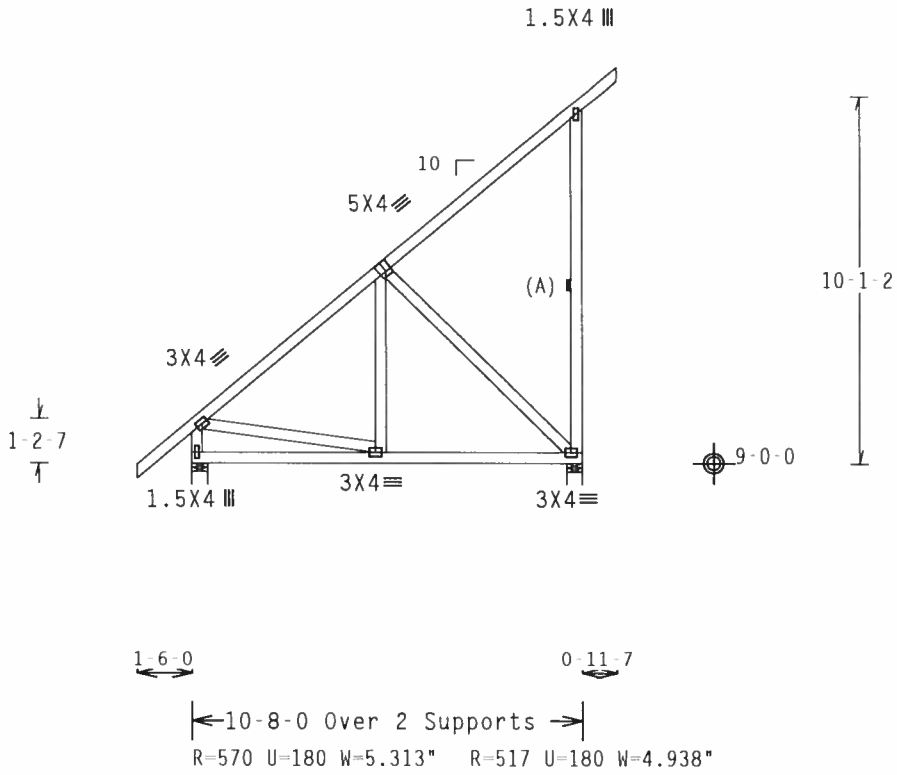

Design Crit: TPI-2002(STD)/FBC

PLT TYP. Wave

Cq/RT=1.00(1.25)/10(0) 7.22.1 QTY:1 FL/-/4/-/-/R/- Scale =.1875"/Ft.

ALPINE
Alpine Engineered Products, Inc.

WARNING TRUSSES REQUIRE EXTREME CARE IN FABRICATION, HANDLING, SHIPPING, INSTALLING AND BRACING. REFER TO BCSI 1-03 (BUILDING COMPONENT SAFETY INFORMATION), PUBLISHED BY TPI (TRUSS PLATE INSTITUTE, 583 D'ONOFRIO DR., SUITE 200, MADISON, WI 53719) AND WTCA (WOOD TRUSS COUNCIL OF AMERICA, 6300 ENTERPRISE LN, MADISON, WI 53719) FOR SAFETY PRACTICES PRIOR TO PERFORMING THESE FUNCTIONS. UNLESS OTHERWISE INDICATED, TOP CHORD SHALL HAVE PROPERLY ATTACHED STRUCTURAL PANELS AND BOTTOM CHORD SHALL HAVE A PROPERLY ATTACHED RIGID CEILING.

IMPORTANT FURNISH A COPY OF THIS DESIGN TO THE INSTALLATION CONTRACTOR. ALPINE ENGINEERED PRODUCTS, INC. SHALL NOT BE RESPONSIBLE FOR ANY DEVIATION FROM THIS DESIGN; ANY FAILURE TO BUILD THE TRUSS IN CONFORMANCE WITH TPI; OR FABRICATING, HANDLING, SHIPPING, INSTALLING & BRACING OF TRUSSES DESIGN CONFORMS WITH APPLICABLE PROVISIONS OF NDS (NATIONAL DESIGN SPEC. BY AF&PA) AND TPI. ALPINE CONNECTOR PLATES ARE MADE OF 20/18/16GA (W,H/S/K) ASTM A653 GRADE 40/60 (W, K/H,S) GALV. STEEL. APPLY PLATES TO EACH FACE OF TRUSS AND, UNLESS OTHERWISE LOCATED ON THIS DESIGN, POSITION PER DRAWINGS 160A Z. ANY INSPECTION OF PLATES FOLLOWED BY (I) SHALL BE PER ANNEX A3 OF TPI1 2002 SEC 3 A SEAL ON THIS DRAWING INDICATES ACCEPTANCE OF PROFESSIONAL ENGINEERING RESPONSIBILITY SOLELY FOR THE TRUSS COMPONENT

ARTHUR R. FISHER
LICENSE
No. 59687
STATE OF FLORIDA
PROFESSIONAL ENGINEER

Feb 1 '06

TC LL	20.0 PSF	REF	R487-- 86585
TC DL	10.0 PSF	DATE	02/10/06
BC DL	10.0 PSF	DRW	HCUSR487 06041049
BC LL	0.0 PSF	HC-ENG	JB/AF
TOT.LD.	40.0 PSF	SEQN-	82771
DUR.FAC.	1.25		

(6 004-GLENWOOD KING - BULLARD CC6)

Top chord 2x4 SP #2 Dense
Bot chord 2x4 SP #2 Dense
Webs 2x4 SP #3

(A) Continuous lateral bracing equally spaced on member.

Deflection meets L/360 live and L/240 total load. Creep increase factor for dead load is 1.50.

110 mph wind, 15.00 ft mean hgt, ASCE 7-02, CLOSED bldg, not located within 4.50 ft from roof edge, CAT II, EXP B, wind TC DL=5.0 psf, wind BC DL=5.0 psf.

Right end vertical not exposed to wind pressure.

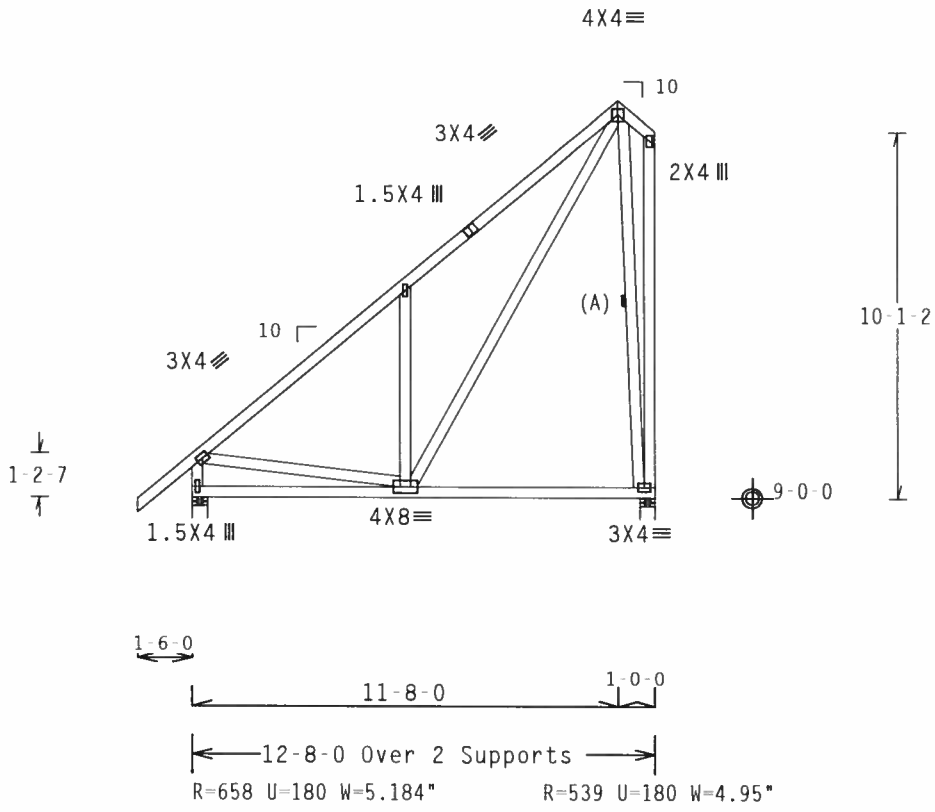

Design Crit: TPI-2002(STD)/FBC

PLT TYP. Wave

Cq/RT=1.00(1.25)/10(0) 7.22.1 QTY:1 FL/-/4/-/-/R/- Scale =.1875"/Ft.

WARNING TRUSSES REQUIRE EXTREME CARE IN FABRICATION, HANDLING, SHIPPING, INSTALLING AND BRACING. REFER TO BCSI 1-03 (BUILDING COMPONENT SAFETY INFORMATION), PUBLISHED BY TPI (TRUSS PLATE INSTITUTE, 583 D'ONOFRIO DR., SUITE 200, MADISON, WI 53719) AND WTCA (WOOD TRUSS COUNCIL OF AMERICA, 6300 ENTERPRISE LN, MADISON, WI 53719) FOR SAFETY PRACTICES PRIOR TO PERFORMING THESE FUNCTIONS. UNLESS OTHERWISE INDICATED, TOP CHORD SHALL HAVE PROPERLY ATTACHED STRUCTURAL PANELS AND BOTTOM CHORD SHALL HAVE A PROPERLY ATTACHED RIGID CEILING.

IMPORTANTFURNISH A COPY OF THIS DESIGN TO THE INSTALLATION CONTRACTOR. ALPINE ENGINEERED PRODUCTS, INC. SHALL NOT BE RESPONSIBLE FOR ANY DEVIATION FROM THIS DESIGN. ANY FAILURE TO BUILD THE TRUSS IN CONFORMANCE WITH TPI: OR FABRICATING, HANDLING, SHIPPING, INSTALLING & BRACING OF TRUSSES DESIGN CONFORMS WITH APPLICABLE PROVISIONS OF NDS (NATIONAL DESIGN SPEC. BY AF&PA) AND TPI. ALPINE CONNECTOR PLATES ARE MADE OF 20/18/16GA (W,H/S/K) ASTM A653 GRADE 40/60 (W, K/H,S) GALV. STEEL. APPLY PLATES TO EACH FACE OF TRUSS AND, UNLESS OTHERWISE LOCATED ON THIS DESIGN, POSITION PER DRAWINGS 160A Z. ANY INSPECTION OF PLATES FOLLOWED BY (I) SHALL BE PER ANNEX A3 OF TPI1 2002 SEC.3. A SEAL ON THIS DRAWING INDICATES ACCEPTANCE OF PROFESSIONAL ENGINEERING RESPONSIBILITY SOLELY FOR THE TRUSS COMPONENT

ARTHUR R. FISHER LICENSE No.59687 STATE OF FLORIDA PROFESSIONAL ENGINEER

Feb 10 '06

TC LL	20.0 PSF	REF R487-- 86586
TC DL	10.0 PSF	DATE 02/10/06
BC DL	10.0 PSF	DRW HCUSR487 06041050
BC LL	0.0 PSF	HC-ENG JB/AF
TOT.LD.	40.0 PSF	SEQN- 82804
DUR.FAC.	1.25	

ALPINE

Alpine Engineered Products, Inc.
1950 Marley Drive

Top chord 2x4 SP #2 Dense
Bot chord 2x4 SP #2 Dense
Webs 2x4 SP #3

H = recommended connection based on manufacturer tested capacities and calculations. Conditions may exist that require different connections than indicated. Refer to manufacturer publication for additional information.

110 mph wind, 15.00 ft mean hgt, ASCE 7-02, CLOSED bldg, not located within 4.50 ft from roof edge, CAT II, EXP B, wind TC DL=5.0 psf, wind BC DL=5.0 psf.

Right end vertical not exposed to wind pressure.

Deflection meets L/360 live and L/240 total load. Creep increase factor for dead load is 1.50.

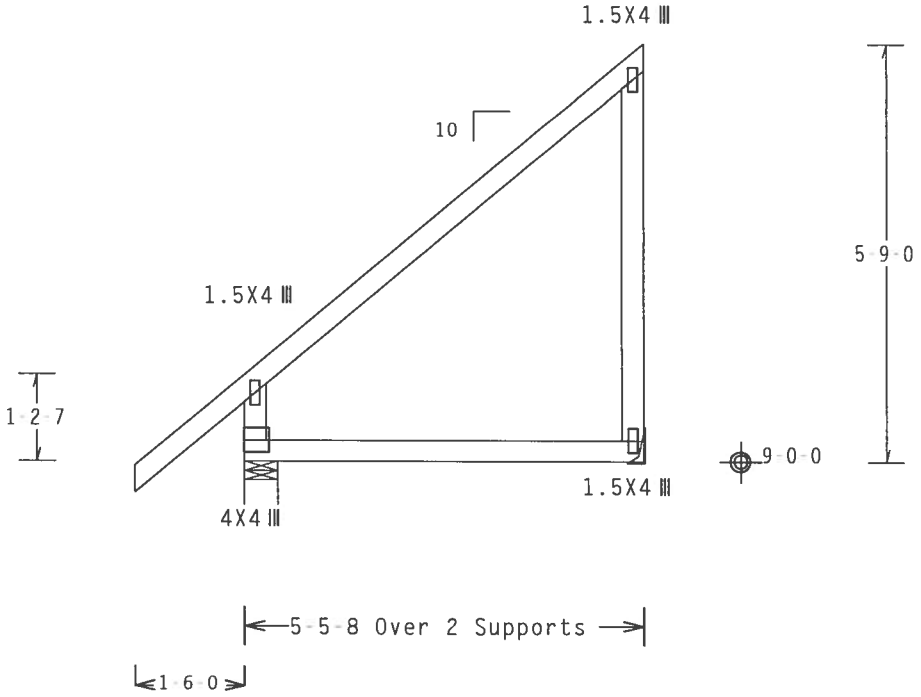

R=356 U=180 W=5.5"

R=220 U=180 H=Simpson LU24
w/ (2) 10d, 0.148"x1.5" nails in Truss
w/ (4) 10d Common, 0.148"x3.0" nails in Girder
Girder is (1)2X6 min. So.Pine

Design Crit: TPI-2002(STD)/FBC

PLT TYP. Wave Cq/RT=1.00(1.25)/10(0) 7.22.1 QTY:8 FL/-/4/-/-/R/- Scale =.375"/Ft.

ALPINE
Alpine Engineered Products, Inc.
1950 Marley Drive

WARNING TRUSSES REQUIRE EXTREME CARE IN FABRICATION, HANDLING, SHIPPING, INSTALLING AND BRACING. REFER TO BCSI 1-03 (BUILDING COMPONENT SAFETY INFORMATION), PUBLISHED BY TPI (TRUSS PLATE INSTITUTE, 583 D'ONOFRIO DR., SUITE 200, MADISON, WI 53719) AND WTCA (WOOD TRUSS COUNCIL OF AMERICA, 6300 ENTERPRISE LN, MADISON, WI 53719) FOR SAFETY PRACTICES PRIOR TO PERFORMING THESE FUNCTIONS. UNLESS OTHERWISE INDICATED, TOP CHORD SHALL HAVE PROPERLY ATTACHED STRUCTURAL PANELS AND BOTTOM CHORD SHALL HAVE A PROPERLY ATTACHED RIGID CEILING.

IMPORTANTFURNISH A COPY OF THIS DESIGN TO THE INSTALLATION CONTRACTOR. ALPINE ENGINEERED PRODUCTS, INC. SHALL NOT BE RESPONSIBLE FOR ANY DEVIATION FROM THIS DESIGN; ANY FAILURE TO BUILD THE TRUSS IN CONFORMANCE WITH TPI; OR FABRICATING, HANDLING, SHIPPING, INSTALLING & BRACING OF TRUSSES. DESIGN CONFORMS WITH APPLICABLE PROVISIONS OF NDS (NATIONAL DESIGN SPEC. BY AF&PA) AND TPI. ALPINE CONNECTOR PLATES ARE MADE OF 20/18/16GA (W,H/S/K) ASTM A653 GRADE 40/60 (W, K/H,S) GALV. STEEL. APPLY PLATES TO EACH FACE OF TRUSS AND, UNLESS OTHERWISE LOCATED ON THIS DESIGN, POSITION PER DRAWINGS 160A Z. ANY INSPECTION OF PLATES FOLLOWED BY (1) SHALL BE PER ANNEX A3 OF TPI1 2002 SEC.3. A SEAL ON THIS DRAWING INDICATES ACCEPTANCE OF PROFESSIONAL ENGINEERING RESPONSIBILITY SOLELY FOR THE TRUSS COMPONENT DESIGN SHOWN. THE SUITABILITY AND USE OF THIS COMPONENT FOR ANY BUILDING IS THE RESPONSIBILITY OF THE

ARTHUR R. FISHER LICENSE No.59687 STATE OF FLORIDA PROFESSIONAL ENGINEER
Feb 10 '06

TC LL	20.0 PSF	REF R487-- 86587
TC DL	10.0 PSF	DATE 02/10/06
BC DL	10.0 PSF	DRW HCUSR487 06041051
BC LL	0.0 PSF	HC-ENG JB/AF
TOT.LD.	40.0 PSF	SEQN- 82572
DUR.FAC.	1.25	

(6 004-GLENWOOD KING BULLARD D2)

Top chord 2x4 SP #2 Dense
Bot chord 2x4 SP #2 Dense
Webs 2x4 SP #3 :W1 2x6 SP #2:
:W5 2x4 SP #2 Dense:

(A) 1x4 SP #3 or better "T" brace. 80% length of web member. Attach with 8d Box or Gun (0.113"x2.5",min.)nails @ 6" OC.

Deflection meets L/360 live and L/240 total load. Creep increase factor for dead load is 1.50.

(**) Plate relocated as shown.

110 mph wind, 15.00 ft mean hgt, ASCE 7-02, CLOSED bldg, not located within 4.50 ft from roof edge, CAT II, EXP B, wind TC DL=5.0 psf, wind BC DL=5.0 psf.

Right end vertical not exposed to wind pressure.

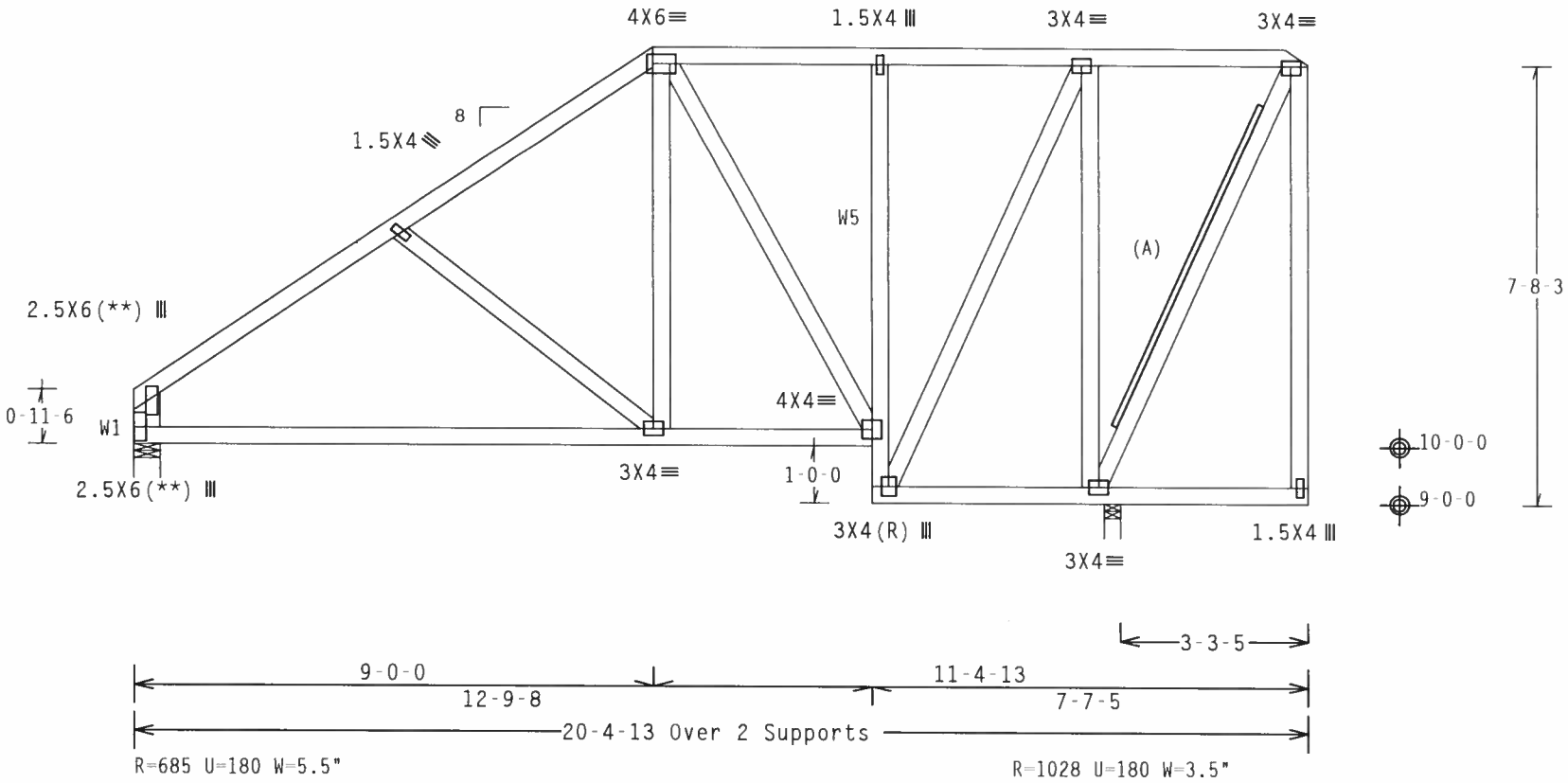

Design Crit: TPI-2002(STD)/FBC

PLT TYP. Wave

Cq/RT=1.00(1.25)/10(0) 7.22. QTY:1 FL/-/4/-/-/R/- Scale =.3125"/Ft.

ALPINE
Alpine Engineered Products, Inc.
1950 Marley Drive

WARNING TRUSSES REQUIRE EXTREME CARE IN FABRICATION, HANDLING, SHIPPING, INSTALLING AND BRACING. REFER TO BCSI 1-03 (BUILDING COMPONENT SAFETY INFORMATION), PUBLISHED BY TPI (TRUSS PLATE INSTITUTE, 583 D'ONOFRIO DR., SUITE 200, MADISON, WI 53719) AND WTCA (WOOD TRUSS COUNCIL OF AMERICA, 6300 ENTERPRISE LN, MADISON, WI 53719) FOR SAFETY PRACTICES PRIOR TO PERFORMING THESE FUNCTIONS. UNLESS OTHERWISE INDICATED, TOP CHORD SHALL HAVE PROPERLY ATTACHED STRUCTURAL PANELS AND BOTTOM CHORD SHALL HAVE A PROPERLY ATTACHED RIGID CEILING.

IMPORTANTFURNISH A COPY OF THIS DESIGN TO THE INSTALLATION CONTRACTOR. ALPINE ENGINEERED PRODUCTS, INC. SHALL NOT BE RESPONSIBLE FOR ANY DEVIATION FROM THIS DESIGN; ANY FAILURE TO BUILD THE TRUSS IN CONFORMANCE WITH TPI; OR FABRICATING, HANDLING, SHIPPING, INSTALLING & BRACING OF TRUSSES. DESIGN CONFORMS WITH APPLICABLE PROVISIONS OF NDS (NATIONAL DESIGN SPEC. BY AF&PA) AND TPI. ALPINE CONNECTOR PLATES ARE MADE OF 20/18/16GA (W,H/S/K) ASTM A653 GRADE 40/60 (W, K/H,S) GALV. STEEL. APPLY PLATES TO EACH FACE OF TRUSS AND, UNLESS OTHERWISE LOCATED ON THIS DESIGN, POSITION PER DRAWINGS 160A Z. ANY INSPECTION OF PLATES FOLLOWED BY (1) SHALL BE PER ANNEX A3 OF TPI1 2002 SEC.3. A SEAL ON THIS DRAWING INDICATES ACCEPTANCE OF PROFESSIONAL ENGINEERING RESPONSIBILITY SOLELY FOR THE TRUSS COMPONENT DESIGN SHOWN. THE SUITABILITY AND USE OF THIS COMPONENT FOR ANY BUILDING IS THE RESPONSIBILITY OF THE

ARTHUR R. FISHER
LICENSE
No. 39687
STATE OF FLORIDA
PROFESSIONAL ENGINEER

Feb 10 '06

TC LL	20.0 PSF	REF R487-- 86589
TC DL	10.0 PSF	DATE 02/10/06
BC DL	10.0 PSF	DRW HCUSR487 06041053
BC LL	0.0 PSF	HC-ENG JB/AF
TOT.LD.	40.0 PSF	SEQN- 82189
DUR.FAC.	1.25	

Top chord 2x4 SP #2 Dense
Bot chord 2x4 SP #2 Dense
Webs 2x4 SP #3 :W1 2x6 SP #2:
:W6 2x4 SP #2 Dense:

(B) 1x4 SP #3 or better "T" brace. 80% length of web member. Attach with 8d Box or Gun (0.113"x2.5",min.)nails @ 6" OC.

Deflection meets L/360 live and L/240 total load. Creep increase factor for dead load is 1.50.

NOTE: IN THE CALCULATION OF DEFLECTION AT CANTILEVER END, CREEP WAS NOT CONSIDERED.

110 mph wind, 15.00 ft mean hgt, ASCE 7-02, CLOSED bldg, not located within 4.50 ft from roof edge, CAT II, EXP B, wind TC DL=5.0 psf, wind BC DL=5.0 psf.

Right end vertical not exposed to wind pressure.

(A) 2x4 SP #3 or better "T" brace. 80% length of web member. Attach with 16d Box or Gun (0.135"x3.5",min.)nails @ 6" OC.

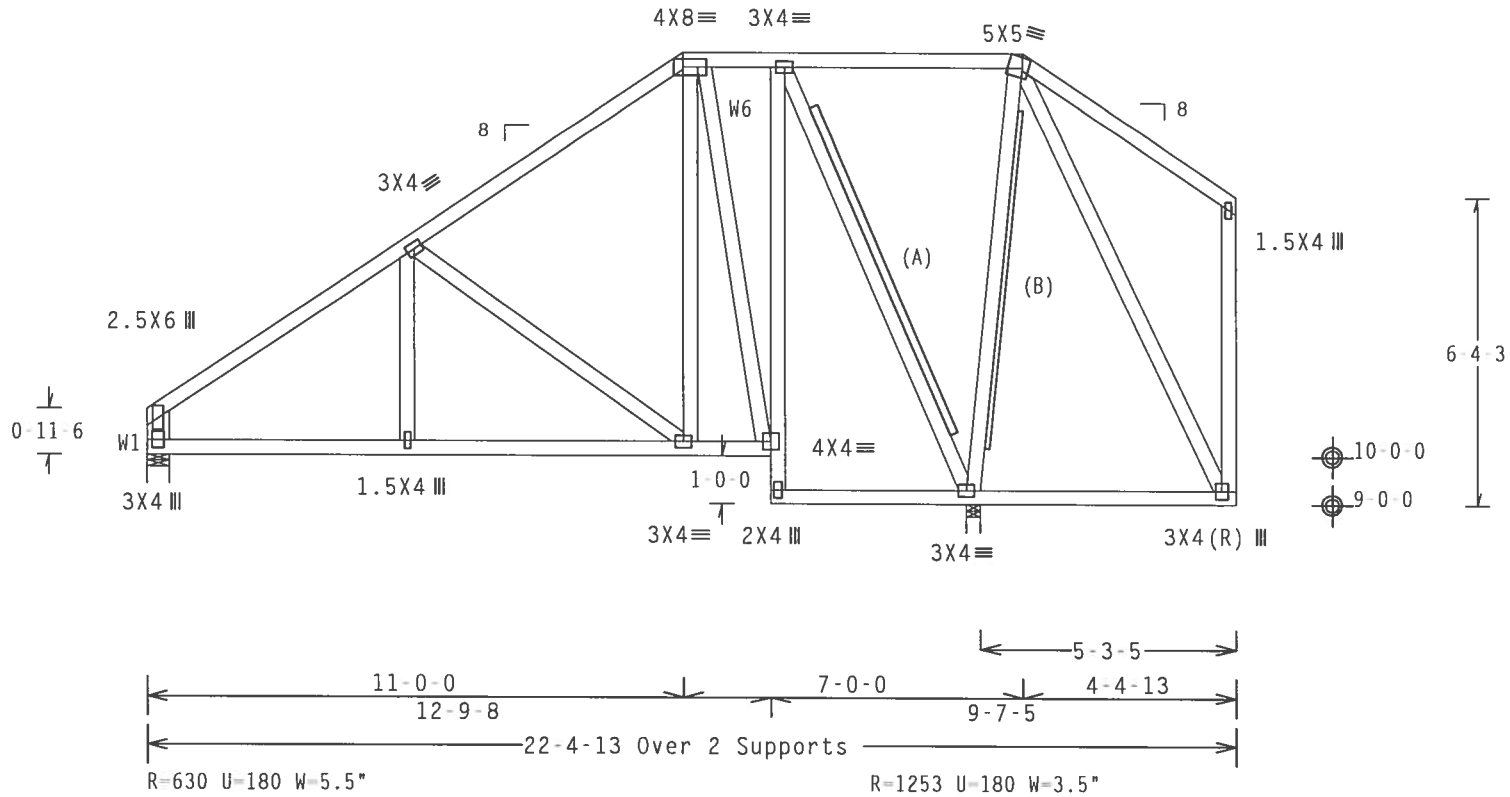

Design Crit: TPI-2002(STD)/FBC
Cq/RT=1.00(1.25)/10(0) 7.22.1 QTY:1 FL/-/4/-/-/R/- Scale =.25"/Ft.

PLT TYP. Wave

ALPINE
Alpine Engineered Products, Inc.
1950 Marley Drive

WARNING TRUSSES REQUIRE EXTREME CARE IN FABRICATION, HANDLING, SHIPPING, INSTALLING AND BRACING. REFER TO BCSI 1-03 (BUILDING COMPONENT SAFETY INFORMATION), PUBLISHED BY TPI (TRUSS PLATE INSTITUTE, 583 D'ONOFRIO DR., SUITE 200, MADISON, WI 53719) AND WTCA (WOOD TRUSS COUNCIL OF AMERICA, 6300 ENTERPRISE LN, MADISON, WI 53719) FOR SAFETY PRACTICES PRIOR TO PERFORMING THESE FUNCTIONS. UNLESS OTHERWISE INDICATED, TOP CHORD SHALL HAVE PROPERLY ATTACHED STRUCTURAL PANELS AND BOTTOM CHORD SHALL HAVE A PROPERLY ATTACHED RIGID CEILING.

IMPORTANTFURNISH A COPY OF THIS DESIGN TO THE INSTALLATION CONTRACTOR. ALPINE ENGINEERED PRODUCTS, INC. SHALL NOT BE RESPONSIBLE FOR ANY DEVIATION FROM THIS DESIGN; ANY FAILURE TO BUILD THE TRUSS IN CONFORMANCE WITH TPI; OR FABRICATING, HANDLING, SHIPPING, INSTALLING & BRACING OF TRUSSES. DESIGN CONFORMS WITH APPLICABLE PROVISIONS OF NDS (NATIONAL DESIGN SPEC, BY AF&PA) AND TPI. ALPINE CONNECTOR PLATES ARE MADE OF 20/18/16GA (W,H/S/K) ASTM A653 GRADE 40/60 (W, K/H,S) GALV. STEEL. APPLY PLATES TO EACH FACE OF TRUSS AND, UNLESS OTHERWISE LOCATED ON THIS DESIGN, POSITION PER DRAWINGS 160A-Z. ANY INSPECTION OF PLATES FOLLOWED BY (I) SHALL BE PER ANNEX A3 OF TPI1-2002 SEC.3. A SEAL ON THIS DRAWING INDICATES ACCEPTANCE OF PROFESSIONAL ENGINEERING RESPONSIBILITY SOLELY FOR THE TRUSS COMPONENT

ARTHUR R. FISHER
LICENSE
No. 56687
STATE OF FLORIDA
PROFESSIONAL ENGINEER
Feb 10 '06

TC LL	20.0 PSF	REF	R487-- 86590
TC DL	10.0 PSF	DATE	02/10/06
BC DL	10.0 PSF	DRW	HCUSR487 06041054
BC LL	0.0 PSF	HC-ENG	JB/AF
TOT.LD.	40.0 PSF	SEQN-	82198
DUR.FAC.	1.25		

(6-004-GLENWOOD KING - BULLARD - D4)

Top chord 2x4 SP #2 Dense
Bot chord 2x4 SP #2 Dense
Webs 2x4 SP #3 :W1 2x6 SP #2:

(A) SP #3 or better scab brace. Same size & 80% length of web member. Attach with 10d Box or Gun (0.128"x3",min.)nails @ 6" OC.

(B) Continuous lateral bracing equally spaced on member. Or 2x6 SP #3 or better "T" brace. 80% length of web member. Attached with 16d Box or Gun (0.135"x3.5",min.)nails @ 6" OC.

NOTE: IN THE CALCULATION OF DEFLECTION AT CANTILEVER END, CREEP WAS NOT CONSIDERED.

110 mph wind, 15.28 ft mean hgt, ASCE 7-02, CLOSED bldg, not located within 4.50 ft from roof edge, CAT II, EXP B, wind TC DL=5.0 psf, wind BC DL=5.0 psf.

Right end vertical not exposed to wind pressure.

(C) Continuous lateral bracing equally spaced on member. Or 1x4 SP #3 or better "T" brace. 80% length of web member. Attached with 8d Box or Gun (0.113"x2.5",min.)nails @ 6" OC.

Deflection meets L/360 live and L/240 total load. Creep increase factor for dead load is 1.50.

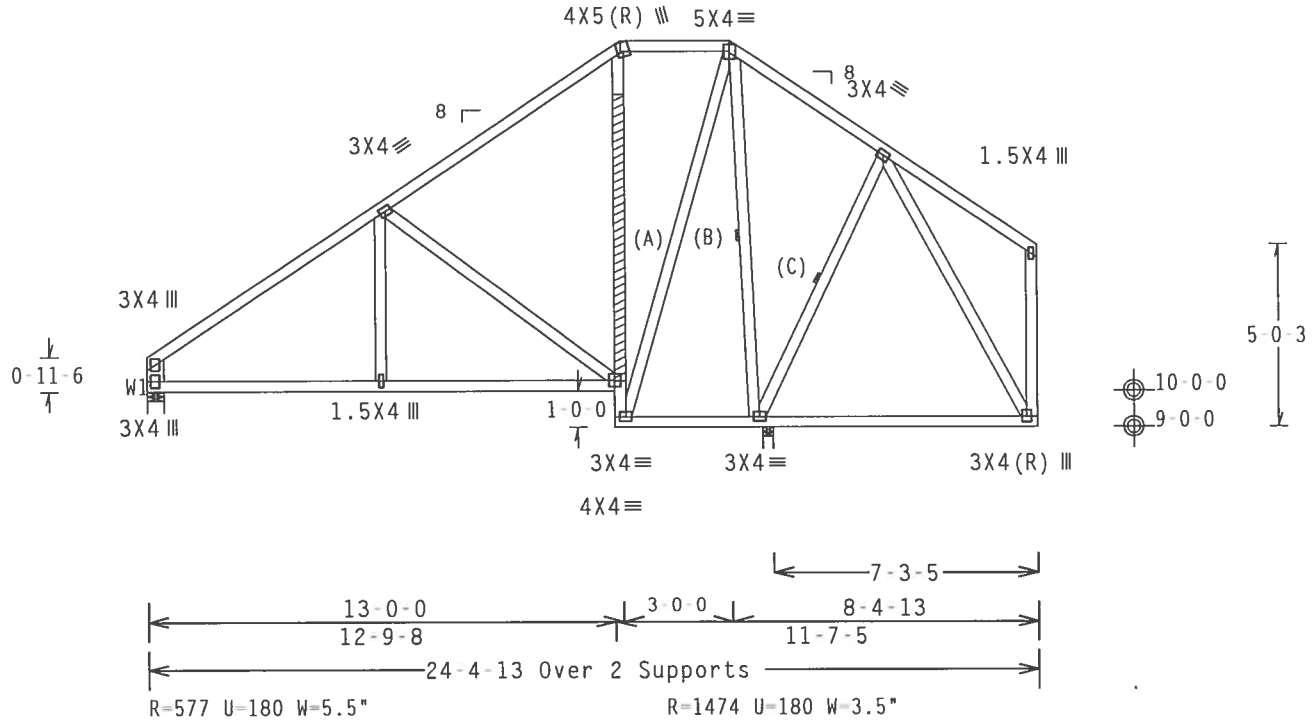

Design Crit: TPI-2002(STD)/FBC
Cq/RT=1.00(1.25)/10(0) 7.22.1 QTY:1 FL/-/4/-/-/R/- Scale =.1875"/Ft.

PLT TYP. Wave

ALPINE
Alpine Engineered Products, Inc.

WARNING TRUSSES REQUIRE EXTREME CARE IN FABRICATION, HANDLING, SHIPPING, INSTALLING AND BRACING. REFER TO BCSI 1-03 (BUILDING COMPONENT SAFETY INFORMATION), PUBLISHED BY TPI (TRUSS PLATE INSTITUTE, 583 D'ONOFRIO DR., SUITE 200, MADISON, WI 53719) AND WTCA (WOOD TRUSS COUNCIL OF AMERICA, 6300 ENTERPRISE LN, MADISON, WI 53719) FOR SAFETY PRACTICES PRIOR TO PERFORMING THESE FUNCTIONS. UNLESS OTHERWISE INDICATED, TOP CHORD SHALL HAVE PROPERLY ATTACHED STRUCTURAL PANELS AND BOTTOM CHORD SHALL HAVE A PROPERLY ATTACHED RIGID CEILING.

IMPORTANT FURNISH A COPY OF THIS DESIGN TO THE INSTALLATION CONTRACTOR. ALPINE ENGINEERED PRODUCTS, INC. SHALL NOT BE RESPONSIBLE FOR ANY DEVIATION FROM THIS DESIGN; ANY FAILURE TO BUILD THE TRUSS IN CONFORMANCE WITH TPI; OR FABRICATING, HANDLING, SHIPPING, INSTALLING & BRACING OF TRUSSES. DESIGN CONFORMS WITH APPLICABLE PROVISIONS OF NDS (NATIONAL DESIGN SPEC. BY AF&PA) AND TPI. ALPINE CONNECTOR PLATES ARE MADE OF 20/18/16GA (W,H/S/K) ASTM A653 GRADE 40/60 (W, K/H,S) GALV. STEEL. APPLY PLATES TO EACH FACE OF TRUSS AND, UNLESS OTHERWISE LOCATED ON THIS DESIGN, POSITION PER DRAWINGS 160A Z. ANY INSPECTION OF PLATES FOLLOWED BY (1) SHALL BE PER ANNEX A3 OF TPI1 2002 SEC.3. A SEAL ON THIS DRAWING INDICATES ACCEPTANCE OF PROFESSIONAL ENGINEERING RESPONSIBILITY SOLELY FOR THE TRUSS COMPONENT

ARTHUR R. FISHER LICENSE No. 59687 STATE OF FLORIDA PROFESSIONAL ENGINEER

Feb 10 06

TC LL	20.0 PSF	REF R487-- 86591
TC DL	10.0 PSF	DATE 02/10/06
BC DL	10.0 PSF	DRW HCUSR487 06041055
BC LL	0.0 PSF	HC-ENG JB/AF
TOT.LD.	40.0 PSF	SEQN- 82236
DUR.FAC.	1.25	

(6 004-GLENWOOD KING - BULLARD D5G)

Top chord 2x4 SP #2 Dense
Bot chord 2x8 SP SS :B2 2x6 SP #2:
Webs 2x4 SP #3 :W3, W5 2x4 SP #2 Dense:
:Lt Slider 2x6 SP #2: BLOCK LENGTH = 1.911'

SPECIAL LOADS
------(LUMBER DUR.FAC.=1.25 / PLATE DUR.FAC.=1.25)
TC - From 64 PLF at 0.00 to 64 PLF at 26.24
BC - From 20 PLF at 0.00 to 20 PLF at 26.24
BC - 1402 LB Conc. Load at 0.35, 1.77, 3.77, 5.77, 7.77
9.77, 11.77

110 mph wind, 15.84 ft mean hgt, ASCE 7-02, CLOSED bldg, not located within 4.50 ft from roof edge, CAT II, EXP B, wind TC DL=5.0 psf, wind BC DL=5.0 psf.

Calculated horizontal deflection is 0.20" due to live load and 0.31" due to dead load.

Deflection meets L/360 live and L/240 total load. Creep increase factor for dead load is 1.50.

2 COMPLETE TRUSSES REQUIRED

Nailing Schedule: (12d_Common_(0.148"x3.25",_min.)_nails)
Top Chord: 1 Row @12.00" o.c.
Bot Chord: 1 Row @ 5.00" o.c.
Webs : 1 Row @ 4" o.c.
Use equal spacing between rows and stagger nails in each row to avoid splitting.

Bearing blocks: Nail type: 12d_Common_(0.148"x3.25",_min.)_nails

BRG	X-LOC	#BLOCKS	LENGTH/BLK	#NAILS/BLK	WALL PLATE
1	0.000'	1	12"	8	Match Truss

Bearing block to be same size and species as bottom chord.
Refer to drawing CNBRGBLK1103 for additional information.

Right end vertical not exposed to wind pressure.

(A) SP #3 or better scab brace. Same size & 80% length of web member. Attach with 10d Box or Gun (0.128"x3",min.)nails @ 6" OC.

NOTE: IN THE CALCULATION OF DEFLECTION AT CANTILEVER END, CREEP WAS NOT CONSIDERED.

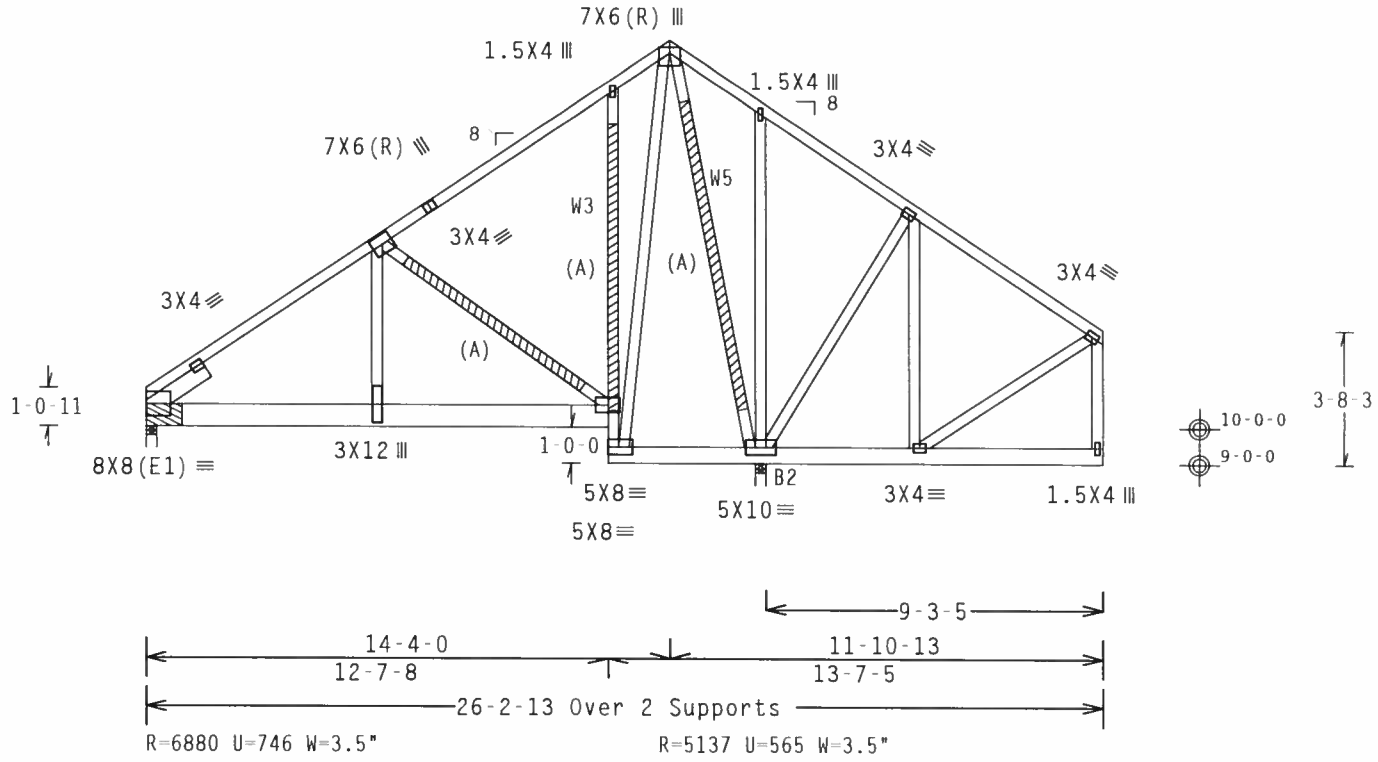

Design Crit: TPI-2002(STD)/FBC
PLT TYP. Wave Cq/RT=1.00(1.25)/10(0) 7.22.11 QTY:1 FL/-/4/-/-/R/- Scale =.1875"/Ft.

ALPINE
Alpine Engineered Products, Inc.
1950 Marley Drive

WARNING TRUSSES REQUIRE EXTREME CARE IN FABRICATION, HANDLING, SHIPPING, INSTALLING AND BRACING. REFER TO BCSI 1-03 (BUILDING COMPONENT SAFETY INFORMATION), PUBLISHED BY TPI (TRUSS PLATE INSTITUTE, 583 D'ONOFRIO DR., SUITE 200, MADISON, WI 53719) AND WTCA (WOOD TRUSS COUNCIL OF AMERICA, 6300 ENTERPRISE LN, MADISON, WI 53719) FOR SAFETY PRACTICES PRIOR TO PERFORMING THESE FUNCTIONS. UNLESS OTHERWISE INDICATED, TOP CHORD SHALL HAVE PROPERLY ATTACHED STRUCTURAL PANELS AND BOTTOM CHORD SHALL HAVE A PROPERLY ATTACHED RIGID CEILING.

IMPORTANTFURNISH A COPY OF THIS DESIGN TO THE INSTALLATION CONTRACTOR. ALPINE ENGINEERED PRODUCTS, INC. SHALL NOT BE RESPONSIBLE FOR ANY DEVIATION FROM THIS DESIGN; ANY FAILURE TO BUILD THE TRUSS IN CONFORMANCE WITH TPI; OR FABRICATING, HANDLING, SHIPPING, INSTALLING & BRACING OF TRUSSES. DESIGN CONFORMS WITH APPLICABLE PROVISIONS OF NDS (NATIONAL DESIGN SPEC. BY AF&PA) AND TPI. ALPINE CONNECTOR PLATES ARE MADE OF 20/18/16GA (W,H/S/K) ASTM A653 GRADE 40/60 (W, K/H,S) GALV. STEEL. APPLY PLATES TO EACH FACE OF TRUSS AND, UNLESS OTHERWISE LOCATED ON THIS DESIGN, POSITION PER DRAWINGS 160A Z. ANY INSPECTION OF PLATES FOLLOWED BY (I) SHALL BE PER ANNEX A3 OF TPI1 2002 SEC.3. A SEAL ON THIS DRAWING INDICATES ACCEPTANCE OF PROFESSIONAL ENGINEERING RESPONSIBILITY SOLELY FOR THE TRUSS COMPONENT

ARTHUR R. FISHER
LICENSE
No.59687
STATE OF FLORIDA
PROFESSIONAL ENGINEER
Feb 10 '06

TC LL	20.0 PSF	REF	R487-- 86592
TC DL	10.0 PSF	DATE	02/10/06
BC DL	10.0 PSF	DRW	HCUSR487 06041056
BC LL	0.0 PSF	HC-ENG	JB/AF
TOT.LD.	40.0 PSF	SEQN-	82340
DUR.FAC.	1.25		

Top chord 2x4 SP #2 Dense
Bot chord 2x6 SP #2
Webs 2x4 SP #3

Trusses or components connecting to this girder have been modified by the truss designer. The loading for this girder requires verification for accuracy.

SPECIAL LOADS
------(LUMBER DUR.FAC.=1.25 / PLATE DUR.FAC.=1.25)
TC - From 60 PLF at 0.00 to 60 PLF at 15.75
BC - From 20 PLF at 0.00 to 20 PLF at 15.75
BC - 1074 LB Conc. Load at 0.71, 14.46
BC - 841 LB Conc. Load at 1.81, 3.81, 5.81, 7.81, 9.81 11.81, 13.81

(A) SP #3 or better scab brace. Same size & 80% length of web member. Attach with 10d Box or Gun (0.128"x3",min.)nails @ 6" OC.

Truss must be installed as shown with top chord up.

2 COMPLETE TRUSSES REQUIRED

Nailing Schedule: (12d_Common_(0.148"x3.25"._min.)_nails)
Top Chord: 1 Row @12.00" o.c.
Bot Chord: 1 Row @ 3.75" o.c.
Webs : 1 Row @ 4" o.c.
Use equal spacing between rows and stagger nails in each row to avoid splitting.

110 mph wind, 21.42 ft mean hgt, ASCE 7-02, CLOSED bldg, not located within 4.50 ft from roof edge, CAT II, EXP B, wind TC DL=5.0 psf, wind BC DL=5.0 psf.

End verticals not exposed to wind pressure.

H = recommended connection based on manufacturer tested capacities and calculations. Conditions may exist that require different connections than indicated. Refer to manufacturer publication for additional information.

Deflection meets L/360 live and L/240 total load. Creep increase factor for dead load is 1.50.

The TC of this truss shall be braced with attached spans at 24" OC in lieu of structural sheathing.

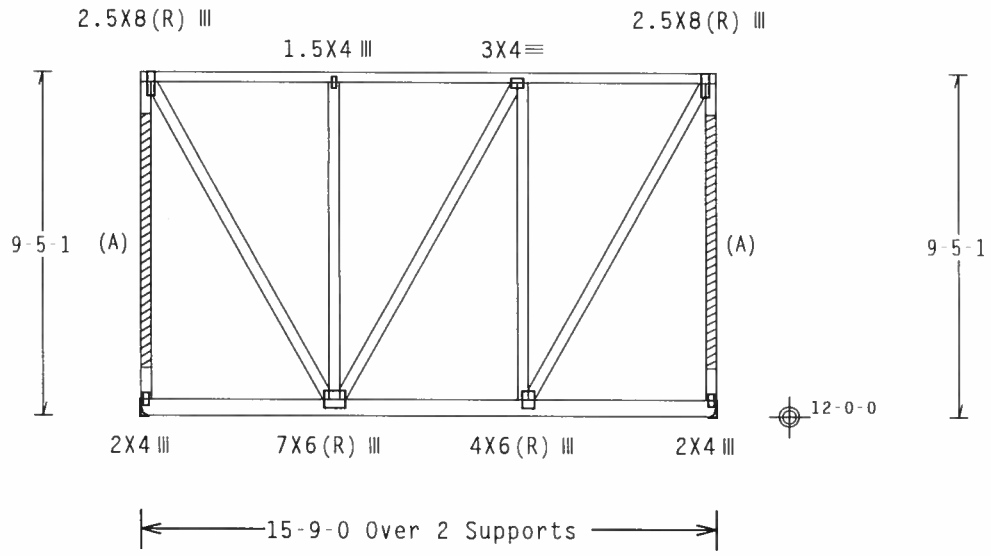

R=4712 U=970 H=Simpson HGUS28-2
w/ (6) 16d, 0.162"x2.5" nails in Truss
w/ (36) 16d, 0.162"x2.5" nails in Girder
Girder is (2)2X8 min. So.Pine

R=4585 U=944 H=Simpson HGUS28-2
w/ (6) 16d, 0.162"x2.5" nails in Truss
w/ (36) 16d, 0.162"x2.5" nails in Girder
Girder is (2)2X8 min. So.Pine

Design Crit: TPI-2002(STD)/FBC
PLT TYP. Wave Cq/RT=1.00(1.25)/10(0) 7.22.1 QTY:1 FL/-/4/-/-/R/- Scale =.1875"/Ft.

ALPINE
Alpine Engineered Products, Inc.
1950 Marley Drive

WARNING TRUSSES REQUIRE EXTREME CARE IN FABRICATION, HANDLING, SHIPPING, INSTALLING AND BRACING. REFER TO BCSI 1 03 (BUILDING COMPONENT SAFETY INFORMATION), PUBLISHED BY TPI (TRUSS PLATE INSTITUTE, 583 D'ONOFRIO DR., SUITE 200, MADISON, WI 53719) AND WTCA (WOOD TRUSS COUNCIL OF AMERICA, 6300 ENTERPRISE LN, MADISON, WI 53719) FOR SAFETY PRACTICES PRIOR TO PERFORMING THESE FUNCTIONS. UNLESS OTHERWISE INDICATED, TOP CHORD SHALL HAVE PROPERLY ATTACHED STRUCTURAL PANELS AND BOTTOM CHORD SHALL HAVE A PROPERLY ATTACHED RIGID CEILING.

IMPORTANTFURNISH A COPY OF THIS DESIGN TO THE INSTALLATION CONTRACTOR. ALPINE ENGINEERED PRODUCTS, INC. SHALL NOT BE RESPONSIBLE FOR ANY DEVIATION FROM THIS DESIGN; ANY FAILURE TO BUILD THE TRUSS IN CONFORMANCE WITH TPI; OR FABRICATING, HANDLING, SHIPPING, INSTALLING & BRACING OF TRUSSES. DESIGN CONFORMS WITH APPLICABLE PROVISIONS OF NDS (NATIONAL DESIGN SPEC. BY AF&PA) AND TPI. ALPINE CONNECTOR PLATES ARE MADE OF 20/18/16GA (M,H/S/K) ASTM A653 GRADE 40/60 (M, K/H,S) GALV. STEEL. APPLY PLATES TO EACH FACE OF TRUSS AND, UNLESS OTHERWISE LOCATED ON THIS DESIGN, POSITION PER DRAWINGS 160A Z. ANY INSPECTION OF PLATES FOLLOWED BY (1) SHALL BE PER ANNEX A3 OF TPI1 2002 SEC.3. A SEAL ON THIS DRAWING INDICATES ACCEPTANCE OF PROFESSIONAL ENGINEERING RESPONSIBILITY SOLELY FOR THE TRUSS COMPONENT

ARTHUR R. FISHER
LICENSE
No. 59687
STATE OF FLORIDA
PROFESSIONAL ENGINEER
Feb 10 '06

TC LL	20.0 PSF	REF R487-- 86593
TC DL	10.0 PSF	DATE 02/10/06
BC DL	10.0 PSF	DRW HCUSR487 06041057
BC LL	0.0 PSF	HC-ENG JB/AF
TOT.LD.	40.0 PSF	SEQN- 27814
DUR.FAC.	1.25	

Top chord 2x4 SP #2 Dense
Bot chord 2x6 SP #2
Webs 2x4 SP #3

End verticals not exposed to wind pressure.

Girder supports 5-5-8 span to BC one face and 6-1-0 span to TC opposite face.

Deflection meets L/360 live and L/240 total load. Creep increase factor for dead load is 1.50.

110 mph wind, 15.00 ft mean hgt, ASCE 7-02, CLOSED bldg, Located anywhere in roof, CAT II, EXP B, wind TC DL=5.0 psf, wind BC DL=5.0 psf.

H = recommended connection based on manufacturer tested capacities and calculations. Conditions may exist that require different connections than indicated. Refer to manufacturer publication for additional information.

Truss must be installed as shown with top chord up.

The TC of this truss shall be braced with attached spans at 24" OC in lieu of structural sheathing.

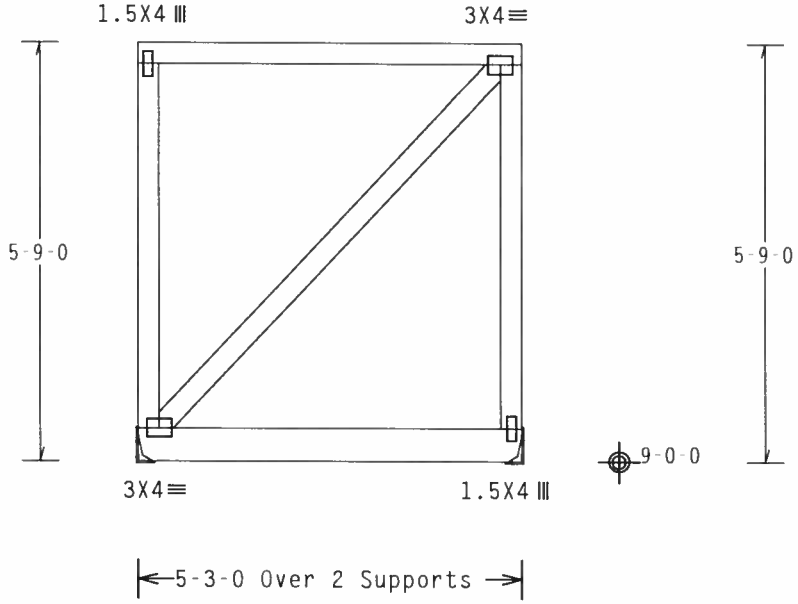

R=619 U=180 H=Simpson LUS24
w/ (2) 10d Common, 0.148"x3.0" nails in Truss
w/ (4) 10d Common, 0.148"x3.0" nails in Girder
Girder is (1)2X4 min. So.Pine

R=619 U=180 H=Simpson LU26
w/ (4) 10d, 0.148"x1.5" nails in Truss
w/ (6) 10d Common, 0.148"x3.0" nails in Girder
Girder is (1)2X6 min. So.Pine

Design Crit: TPI-2002(STD)/FBC

PLT TYP. Wave

Cq/RT=1.00(1.25)/10(0) 7.22.11 QTY:2 FL/-/4/-/-/R/- Scale =.375"/Ft.

ALPINE
Alpine Engineered Products, Inc.
1950 Marley Drive

WARNING TRUSSES REQUIRE EXTREME CARE IN FABRICATION, HANDLING, SHIPPING, INSTALLING AND BRACING. REFER TO BCSI 1-03 (BUILDING COMPONENT SAFETY INFORMATION), PUBLISHED BY TPI (TRUSS PLATE INSTITUTE, 583 D'ONOFRIO DR., SUITE 200, MADISON, WI 53719) AND WTCA (WOOD TRUSS COUNCIL OF AMERICA, 6300 ENTERPRISE LN, MADISON, WI 53719) FOR SAFETY PRACTICES PRIOR TO PERFORMING THESE FUNCTIONS. UNLESS OTHERWISE INDICATED, TOP CHORD SHALL HAVE PROPERLY ATTACHED STRUCTURAL PANELS AND BOTTOM CHORD SHALL HAVE A PROPERLY ATTACHED RIGID CEILING.

IMPORTANTFURNISH A COPY OF THIS DESIGN TO THE INSTALLATION CONTRACTOR. ALPINE ENGINEERED PRODUCTS, INC. SHALL NOT BE RESPONSIBLE FOR ANY DEVIATION FROM THIS DESIGN; ANY FAILURE TO BUILD THE TRUSS IN CONFORMANCE WITH TPI; OR FABRICATING, HANDLING, SHIPPING, INSTALLING & BRACING OF TRUSSES. DESIGN CONFORMS WITH APPLICABLE PROVISIONS OF NDS (NATIONAL DESIGN SPEC. BY AF&PA) AND TPI. ALPINE CONNECTOR PLATES ARE MADE OF 20/18/16GA (W,H/S/K) ASTM A653 GRADE 40/60 (W, K/H,S) GALV. STEEL. APPLY PLATES TO EACH FACE OF TRUSS AND, UNLESS OTHERWISE LOCATED ON THIS DESIGN, POSITION PER DRAWINGS 160A Z. ANY INSPECTION OF PLATES FOLLOWED BY (1) SHALL BE PER ANNEX A3 OF TPI1 2002 SEC.3. A SEAL ON THIS DRAWING INDICATES ACCEPTANCE OF PROFESSIONAL ENGINEERING RESPONSIBILITY SOLELY FOR THE TRUSS COMPONENT

ARTHUR R. FISHER
LICENSE
No. 59687
STATE OF FLORIDA
PROFESSIONAL ENGINEER

Feb 10 '06

TC LL	20.0 PSF	REF	R487-- 86594
TC DL	10.0 PSF	DATE	02/10/06
BC DL	10.0 PSF	DRW	HCUSR487 06041058
BC LL	0.0 PSF	HC-ENG	JB/AF
TOT.LD.	40.0 PSF	SEQN-	82584
DUR.FAC.	1.25		

Top chord 2x4 SP #2 Dense
Bot chord 2x4 SP #2 Dense
Webs 2x4 SP #3

110 mph wind, 15.00 ft mean hgt, ASCE 7-02, CLOSED bldg, Located anywhere in roof, CAT II, EXP B, wind TC DL=5.0 psf, wind BC DL=5.0 psf.

Girder supports 2-2-0 span to BC one face and 2-0-0 span to TC/BC split opposite face.

Deflection meets L/360 live and L/240 total load. Creep increase factor for dead load is 1.50.

The TC of this truss shall be braced with attached spans at 24" OC in lieu of structural sheathing.

Trusses or components connecting to this girder have been modified by the truss designer. The loading for this girder requires verification for accuracy.

End verticals not exposed to wind pressure.

H = recommended connection based on manufacturer tested capacities and calculations. Conditions may exist that require different connections than indicated. Refer to manufacturer publication for additional information.

Provide for complete drainage of roof.

Truss must be installed as shown with top chord up.

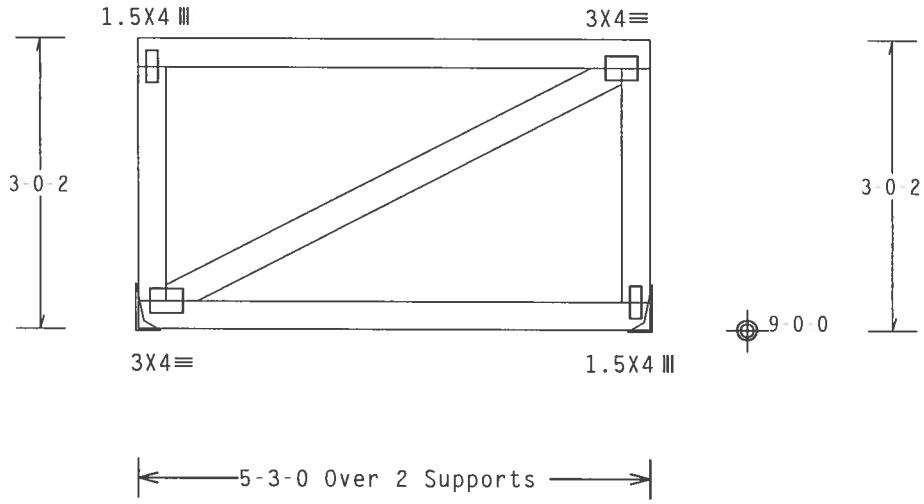

R=219 U=180 H=Simpson LU24
w/ (2) 10d, 0.148"x1.5" nails in Truss
w/ (4) 10d Common, 0.148"x3.0" nails in Girder
Girder is (1)2X4 min. So.Pine

R=219 U=180 H=Simpson LU24
w/ (2) 10d, 0.148"x1.5" nails in Truss
w/ (4) 10d Common, 0.148"x3.0" nails in Girder
Girder is (1)2X6 min. So.Pine

Design Crit: TPI-2002(STD)/FBC

PLT TYP. Wave Cq/RT=1.00(1.25)/10(0) 7.22.1[illegible] [illegible]TY:2 FL/-/4/-/-/R/- Scale =.5"/Ft.

ALPINE
Alpine Engineered Products, Inc.
1950 Marley Drive

WARNING TRUSSES REQUIRE EXTREME CARE IN FABRICATION, HANDLING, SHIPPING, INSTALLING AND BRACING. REFER TO BCSI 1-03 (BUILDING COMPONENT SAFETY INFORMATION), PUBLISHED BY TPI (TRUSS PLATE INSTITUTE, 583 D'ONOFRIO DR., SUITE 200, MADISON, WI 53719) AND WTCA (WOOD TRUSS COUNCIL OF AMERICA, 6300 ENTERPRISE LN, MADISON, WI 53719) FOR SAFETY PRACTICES PRIOR TO PERFORMING THESE FUNCTIONS. UNLESS OTHERWISE INDICATED, TOP CHORD SHALL HAVE PROPERLY ATTACHED STRUCTURAL PANELS AND BOTTOM CHORD SHALL HAVE A PROPERLY ATTACHED RIGID CEILING.

IMPORTANTFURNISH A COPY OF THIS DESIGN TO THE INSTALLATION CONTRACTOR. ALPINE ENGINEERED PRODUCTS, INC. SHALL NOT BE RESPONSIBLE FOR ANY DEVIATION FROM THIS DESIGN; ANY FAILURE TO BUILD THE TRUSS IN CONFORMANCE WITH TPI; OR FABRICATING, HANDLING, SHIPPING, INSTALLING & BRACING OF TRUSSES. DESIGN CONFORMS WITH APPLICABLE PROVISIONS OF NDS (NATIONAL DESIGN SPEC. BY AF&PA) AND TPI. ALPINE CONNECTOR PLATES ARE MADE OF 20/18/16GA (W,H/S/K) ASTM A653 GRADE 40/60 (W, K/H,S) GALV. STEEL. APPLY PLATES TO EACH FACE OF TRUSS AND, UNLESS OTHERWISE LOCATED ON THIS DESIGN, POSITION PER DRAWINGS 160A-Z. ANY INSPECTION OF PLATES FOLLOWED BY (1) SHALL BE PER ANNEX A3 OF TPI1 2002 SEC.3. A SEAL ON THIS DRAWING INDICATES ACCEPTANCE OF PROFESSIONAL ENGINEERING RESPONSIBILITY SOLELY FOR THE TRUSS COMPONENT

ARTHUR R. FISHER
LICENSE
No. 59687
STATE OF FLORIDA
PROFESSIONAL ENGINEER
Feb 10 '06

TC LL	20.0 PSF	REF	R487-- 86595
TC DL	10.0 PSF	DATE	02/10/06
BC DL	10.0 PSF	DRW	HCUSR487 06041059
BC LL	0.0 PSF	HC-ENG	JB/AF
TOT.LD.	40.0 PSF	SEQN-	82701
DUR.FAC.	1.25	FROM	JP

(6-004-GLENWOOD KING - BULLARD - FGX)

Top chord 2x4 SP #2 Dense
Bot chord 2x4 SP #2 Dense
Webs 2x4 SP #3

End verticals not exposed to wind pressure.

Girder supports 2-4-8 span to BC one face and 2-0-0 span to TC/BC split opposite face.

Deflection meets L/360 live and L/240 total load. Creep increase factor for dead load is 1.50.

The TC of this truss shall be braced with attached spans at 24" OC in lieu of structural sheathing.

110 mph wind, 15.00 ft mean hgt, ASCE 7-02, CLOSED bldg, Located anywhere in roof, CAT I, EXP C, wind TC DL=5.0 psf, wind BC DL=5.0 psf.

H = recommended connection based on manufacturer tested capacities and calculations. Conditions may exist that require different connections than indicated. Refer to manufacturer publication for additional information.

Provide for complete drainage of roof.

Truss must be installed as shown with top chord up.

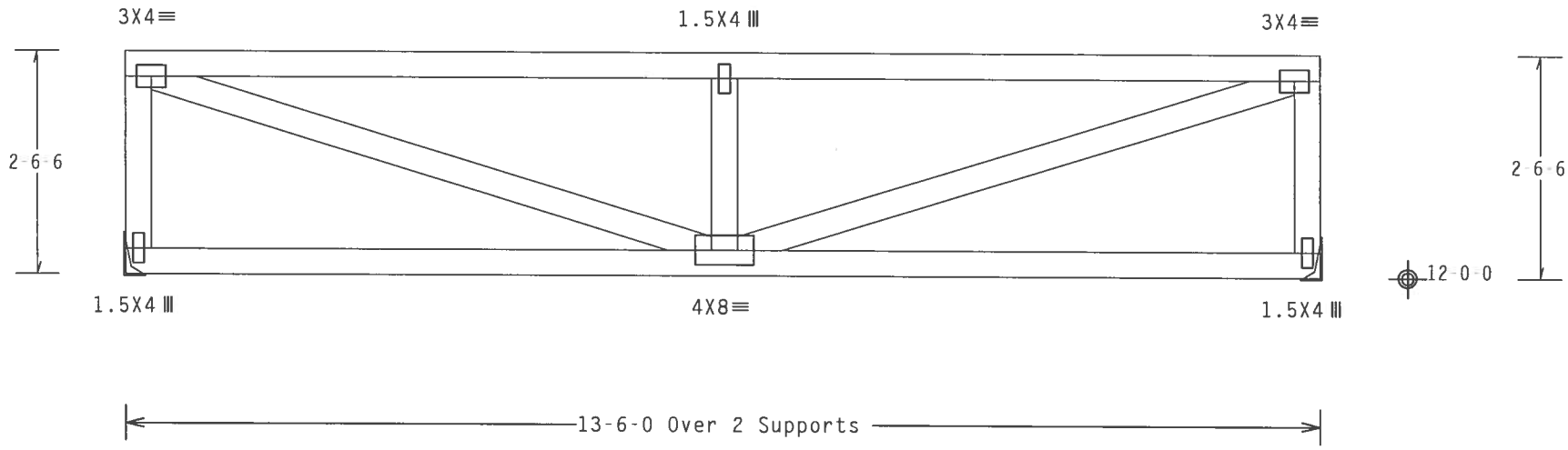

R=579 U=180 H=Simpson LU26
w/ (4) 10d, 0.148"x1.5" nails in Truss
w/ (6) 10d Common, 0.148"x3.0" nails in Girder
Girder is (1)2X6 min. So.Pine

R=579 U=180 H=Simpson LU26
w/ (4) 10d, 0.148"x1.5" nails in Truss
w/ (6) 10d Common, 0.148"x3.0" nails in Girder
Girder is (1)2X6 min. So.Pine

Design Crit: TPI-2002(STD)/FBC

PLT TYP. Wave | Cq/RT=1.00(1.25)/10(0) | 7.22.1 | QTY:1 | FL/-/4/-/-/R/- | Scale =.5"/Ft.

ALPINE
Alpine Engineered Products, Inc.
1950 Marley Drive

WARNING TRUSSES REQUIRE EXTREME CARE IN FABRICATION, HANDLING, SHIPPING, INSTALLING AND BRACING. REFER TO BCSI 1-03 (BUILDING COMPONENT SAFETY INFORMATION), PUBLISHED BY TPI (TRUSS PLATE INSTITUTE, 583 D'ONOFRIO DR., SUITE 200, MADISON, WI 53719) AND WTCA (WOOD TRUSS COUNCIL OF AMERICA, 6300 ENTERPRISE LN, MADISON, WI 53719) FOR SAFETY PRACTICES PRIOR TO PERFORMING THESE FUNCTIONS. UNLESS OTHERWISE INDICATED, TOP CHORD SHALL HAVE PROPERLY ATTACHED STRUCTURAL PANELS AND BOTTOM CHORD SHALL HAVE A PROPERLY ATTACHED RIGID CEILING.

IMPORTANTFURNISH A COPY OF THIS DESIGN TO THE INSTALLATION CONTRACTOR. ALPINE ENGINEERED PRODUCTS, INC. SHALL NOT BE RESPONSIBLE FOR ANY DEVIATION FROM THIS DESIGN; ANY FAILURE TO BUILD THE TRUSS IN CONFORMANCE WITH TPI; OR FABRICATING, HANDLING, SHIPPING, INSTALLING & BRACING OF TRUSSES. DESIGN CONFORMS WITH APPLICABLE PROVISIONS OF NDS (NATIONAL DESIGN SPEC. BY AFAPA) AND TPI. ALPINE CONNECTOR PLATES ARE MADE OF 20/18/16GA (W,H/S/K) ASTM A653 GRADE 40/60 (W, K/H,S) GALV. STEEL. APPLY PLATES TO EACH FACE OF TRUSS AND, UNLESS OTHERWISE LOCATED ON THIS DESIGN, POSITION PER DRAWINGS 160A-Z. ANY INSPECTION OF PLATES FOLLOWED BY (1) SHALL BE PER ANNEX A3 OF TPI1-2002 SEC.3. A SEAL ON THIS DRAWING INDICATES ACCEPTANCE OF PROFESSIONAL ENGINEERING RESPONSIBILITY SOLELY FOR THE TRUSS COMPONENT

ARTHUR R. FISHER LICENSE No.59687 STATE OF FLORIDA PROFESSIONAL ENGINEER

Feb 10 '06

TC LL	20.0 PSF	REF	R487-- 86596
TC DL	10.0 PSF	DATE	02/10/06
BC DL	10.0 PSF	DRW	HCUSR487 06041060
BC LL	0.0 PSF	HC-ENG	JB/AF
TOT.LD.	40.0 PSF	SEQN-	82052
DUR.FAC.	1.25		

(6-004-GLENWOOD KING - BULLARD - HJ7)

Top chord 2x4 SP #2 Dense
Bot chord 2x4 SP #2 Dense
Webs 2x4 SP #3

Hipjack supports 7-0-0 setback jacks with no webs.

Provide (2) 16d common nails(0.162"x3.5"), toe nailed at Top chord.
Provide (3) 16d common nails(0.162"x3.5"), toe nailed at Bot chord.

110 mph wind, 15.00 ft mean hgt, ASCE 7-02, CLOSED bldg, Located anywhere in roof, CAT II, EXP B, wind TC DL=5.0 psf, wind BC DL=5.0 psf.

Deflection meets L/360 live and L/240 total load. Creep increase factor for dead load is 1.50.

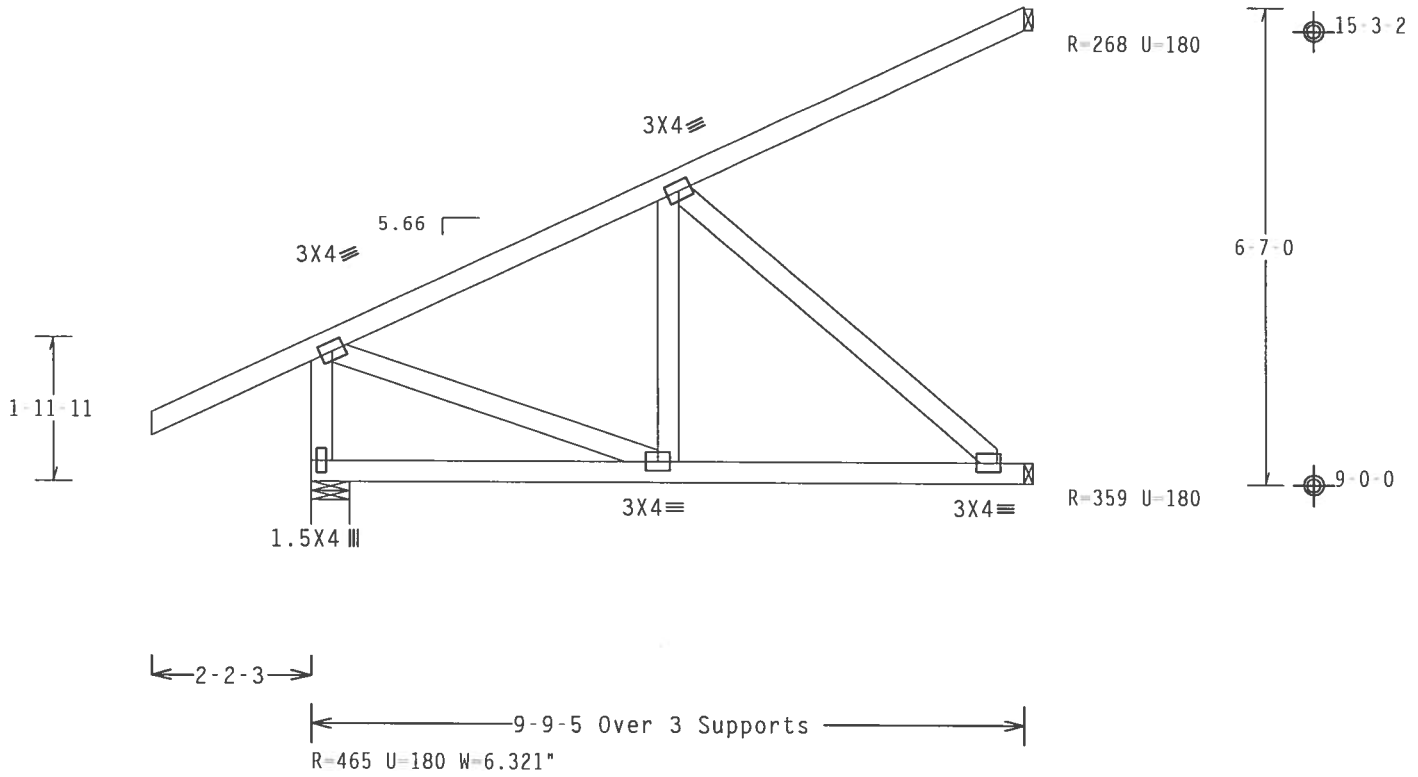

Design Crit: TPI-2002(STD)/FBC

PLT TYP. Wave

Cq/RT=1.00(1.25)/10(0) 7.22.1 QTY:3 FL/-/4/-/-/R/- Scale =.375"/Ft.

ALPINE
Alpine Engineered Products, Inc.
1950 Marley Drive

WARNING TRUSSES REQUIRE EXTREME CARE IN FABRICATION, HANDLING, SHIPPING, INSTALLING AND BRACING. REFER TO BCSI 1-03 (BUILDING COMPONENT SAFETY INFORMATION), PUBLISHED BY TPI (TRUSS PLATE INSTITUTE, 583 D'ONOFRIO DR., SUITE 200, MADISON, WI 53719) AND WTCA (WOOD TRUSS COUNCIL OF AMERICA, 6300 ENTERPRISE LN, MADISON, WI 53719) FOR SAFETY PRACTICES PRIOR TO PERFORMING THESE FUNCTIONS. UNLESS OTHERWISE INDICATED, TOP CHORD SHALL HAVE PROPERLY ATTACHED STRUCTURAL PANELS AND BOTTOM CHORD SHALL HAVE A PROPERLY ATTACHED RIGID CEILING.

IMPORTANTFURNISH A COPY OF THIS DESIGN TO THE INSTALLATION CONTRACTOR. ALPINE ENGINEERED PRODUCTS, INC. SHALL NOT BE RESPONSIBLE FOR ANY DEVIATION FROM THIS DESIGN; ANY FAILURE TO BUILD THE TRUSS IN CONFORMANCE WITH TPI; OR FABRICATING, HANDLING, SHIPPING, INSTALLING & BRACING OF TRUSSES. DESIGN CONFORMS WITH APPLICABLE PROVISIONS OF NDS (NATIONAL DESIGN SPEC. BY AF&PA) AND TPI. ALPINE CONNECTOR PLATES ARE MADE OF 20/18/16GA (W,H/S/K) ASTM A653 GRADE 40/60 (W, K/H,S) GALV. STEEL. APPLY PLATES TO EACH FACE OF TRUSS AND, UNLESS OTHERWISE LOCATED ON THIS DESIGN, POSITION PER DRAWINGS 160A-Z. ANY INSPECTION OF PLATES FOLLOWED BY (1) SHALL BE PER ANNEX A3 OF TPI1-2002 SEC.3. A SEAL ON THIS DRAWING INDICATES ACCEPTANCE OF PROFESSIONAL ENGINEERING RESPONSIBILITY SOLELY FOR THE TRUSS COMPONENT DESIGN SHOWN. THE SUITABILITY AND USE OF THIS COMPONENT FOR ANY BUILDING IS THE RESPONSIBILITY OF THE BUILDING DESIGNER PER ANSI/TPI 1-2002 SEC.2.

ARTHUR R. FISHER
LICENSE
No.59687
STATE OF FLORIDA
PROFESSIONAL ENGINEER

Feb 10 '06

TC LL	20.0 PSF	REF	R487-- 86597
TC DL	10.0 PSF	DATE	02/10/06
BC DL	10.0 PSF	DRW	HCUSR487 06041061
BC LL	0.0 PSF	HC-ENG	JB/AF
TOT.LD.	40.0 PSF	SEQN-	28045
DUR.FAC.	1.25		

(B 004-GLENWOOD KING - BULLARD - EJ7)

Top chord 2x4 SP #2 Dense
Bot chord 2x4 SP #2 Dense
Webs 2x4 SP #3

Deflection meets L/360 live and L/240 total load. Creep increase factor for dead load is 1.50.

110 mph wind, 15.00 ft mean hgt, ASCE 7-02, CLOSED bldg, not located within 4.50 ft from roof edge, CAT II, EXP B, wind TC DL=5.0 psf, wind BC DL=5.0 psf.

Provide (2) 16d common nails(0.162"x3.5"), toe nailed at Top chord.
Provide (2) 16d common nails(0.162"x3.5"), toe nailed at Bot chord.

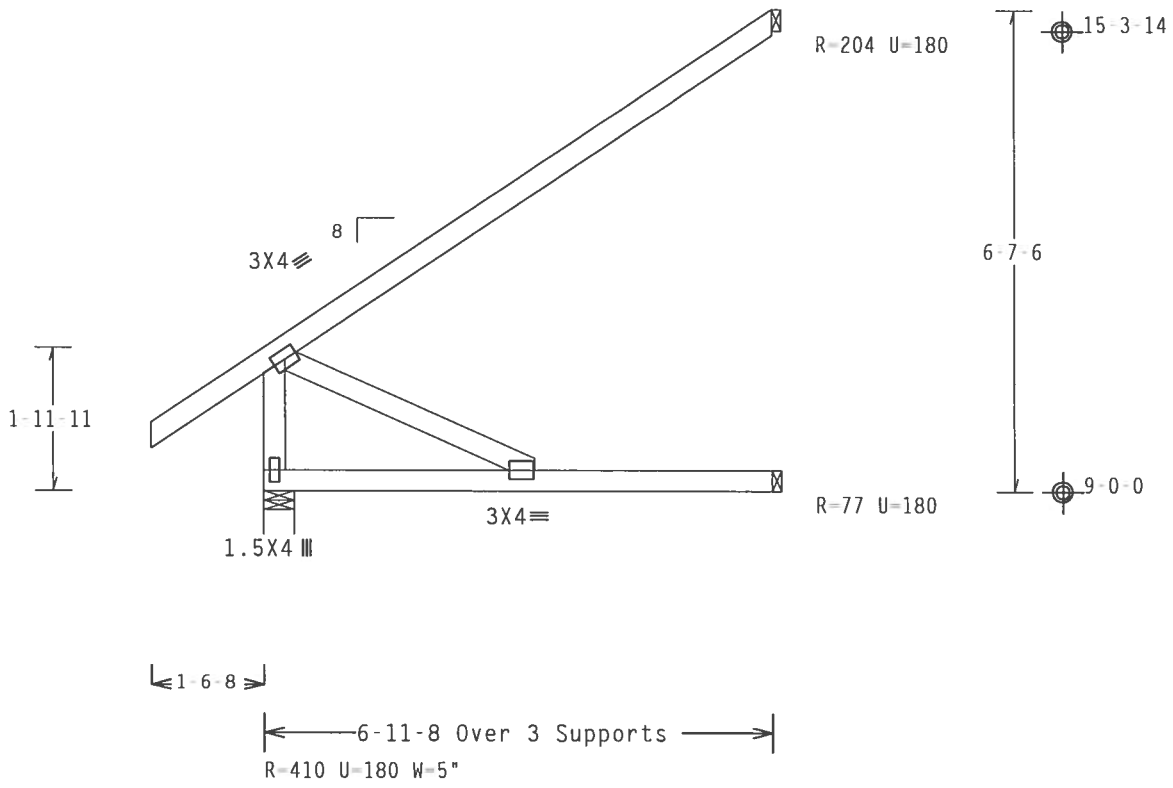

Design Crit: TPI-2002(STD)/FBC

PLT TYP. Wave

Cq/RT=1.00(1.25)/10(0) 7.22.1 QTY:15 FL/-/4/-/-/R/- Scale =.375"/Ft.

ALPINE
Alpine Engineered Products, Inc.
1950 Marley Drive

WARNING TRUSSES REQUIRE EXTREME CARE IN FABRICATION, HANDLING, SHIPPING, INSTALLING AND BRACING. REFER TO BCSI 1-03 (BUILDING COMPONENT SAFETY INFORMATION), PUBLISHED BY TPI (TRUSS PLATE INSTITUTE, 583 D'ONOFRIO DR., SUITE 200, MADISON, WI 53719) AND WTCA (WOOD TRUSS COUNCIL OF AMERICA, 6300 ENTERPRISE LN, MADISON, WI 53719) FOR SAFETY PRACTICES PRIOR TO PERFORMING THESE FUNCTIONS. UNLESS OTHERWISE INDICATED, TOP CHORD SHALL HAVE PROPERLY ATTACHED STRUCTURAL PANELS AND BOTTOM CHORD SHALL HAVE A PROPERLY ATTACHED RIGID CEILING.

IMPORTANT FURNISH A COPY OF THIS DESIGN TO THE INSTALLATION CONTRACTOR. ALPINE ENGINEERED PRODUCTS, INC. SHALL NOT BE RESPONSIBLE FOR ANY DEVIATION FROM THIS DESIGN; ANY FAILURE TO BUILD THE TRUSS IN CONFORMANCE WITH TPI; OR FABRICATING, HANDLING, SHIPPING, INSTALLING & BRACING OF TRUSSES. DESIGN CONFORMS WITH APPLICABLE PROVISIONS OF NDS (NATIONAL DESIGN SPEC, BY AF&PA) AND TPI. ALPINE CONNECTOR PLATES ARE MADE OF 20/18/16GA (W,H/S/K) ASTM A653 GRADE 40/60 (W, K/H,S) GALV. STEEL. APPLY PLATES TO EACH FACE OF TRUSS AND, UNLESS OTHERWISE LOCATED ON THIS DESIGN, POSITION PER DRAWINGS 160A Z. ANY INSPECTION OF PLATES FOLLOWED BY (I) SHALL BE PER ANNEX A3 OF TPI1-2002 SEC.3. A SEAL ON THIS DRAWING INDICATES ACCEPTANCE OF PROFESSIONAL ENGINEERING RESPONSIBILITY SOLELY FOR THE TRUSS COMPONENT

ARTHUR R. FISHER LICENSE No.59687 STATE OF FLORIDA PROFESSIONAL ENGINEER

Feb 10 '06

TC LL	20.0 PSF	REF	R487-- 86598
TC DL	10.0 PSF	DATE	02/10/06
BC DL	10.0 PSF	DRW	HCUSR487 06041011
BC LL	0.0 PSF	HC-ENG	JB/AF *
TOT.LD.	40.0 PSF	SEQN-	27974
DUR.FAC.	1.25		

(0-004-GLENWOOD KING - BULLARD - J5)

Top chord 2x4 SP #2 Dense
Bot chord 2x4 SP #2 Dense
Webs 2x4 SP #2 Dense

Calculated horizontal deflection is 0.21" due to live load and 0.13" due to dead load.

Provide (2) 16d common nails(0.162"x3.5"), toe nailed at Top chord.
Provide (2) 16d common nails(0.162"x3.5"), toe nailed at Bot chord.

110 mph wind, 15.00 ft mean hgt, ASCE 7-02, CLOSED bldg, not located within 4.50 ft from roof edge, CAT II, EXP B, wind TC DL=5.0 psf, wind BC DL=5.0 psf.

Deflection meets L/360 live and L/240 total load. Creep increase factor for dead load is 1.50.

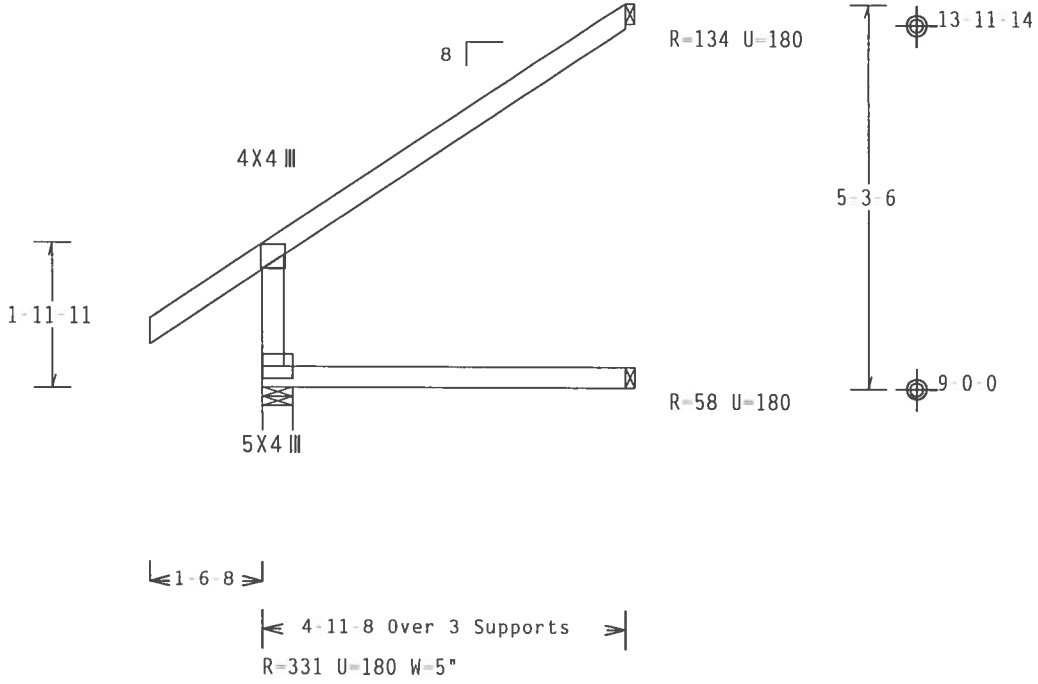

Design Crit: TPI-2002(STD)/FBC

PLT TYP. Wave Cq/RT=1.00(1.25)/10(0) 7.22.1[illegible] QTY:4 FL/-/4/-/-/R/- Scale =.375"/Ft.

ALPINE
Alpine Engineered Products, Inc.
1950 Marley Drive

WARNING TRUSSES REQUIRE EXTREME CARE IN FABRICATION, HANDLING, SHIPPING, INSTALLING AND BRACING. REFER TO BCSI 1-03 (BUILDING COMPONENT SAFETY INFORMATION), PUBLISHED BY TPI (TRUSS PLATE INSTITUTE, 583 D'ONOFRIO DR., SUITE 200, MADISON, WI 53719) AND WTCA (WOOD TRUSS COUNCIL OF AMERICA, 6300 ENTERPRISE LN, MADISON, WI 53719) FOR SAFETY PRACTICES PRIOR TO PERFORMING THESE FUNCTIONS. UNLESS OTHERWISE INDICATED, TOP CHORD SHALL HAVE PROPERLY ATTACHED STRUCTURAL PANELS AND BOTTOM CHORD SHALL HAVE A PROPERLY ATTACHED RIGID CEILING.

IMPORTANTFURNISH A COPY OF THIS DESIGN TO THE INSTALLATION CONTRACTOR. ALPINE ENGINEERED PRODUCTS, INC. SHALL NOT BE RESPONSIBLE FOR ANY DEVIATION FROM THIS DESIGN; ANY FAILURE TO BUILD THE TRUSS IN CONFORMANCE WITH TPI; OR FABRICATING, HANDLING, SHIPPING, INSTALLING & BRACING OF TRUSSES. DESIGN CONFORMS WITH APPLICABLE PROVISIONS OF NDS (NATIONAL DESIGN SPEC. BY AF&PA) AND TPI. ALPINE CONNECTOR PLATES ARE MADE OF 20/18/16GA (W,H/S/K) ASTM A653 GRADE 40/60 (W, K/H,S) GALV. STEEL. APPLY PLATES TO EACH FACE OF TRUSS AND, UNLESS OTHERWISE LOCATED ON THIS DESIGN, POSITION PER DRAWINGS 160A-Z. ANY INSPECTION OF PLATES FOLLOWED BY (1) SHALL BE PER ANNEX A3 OF TPI1-2002 SEC.3. A SEAL ON THIS DRAWING INDICATES ACCEPTANCE OF PROFESSIONAL ENGINEERING RESPONSIBILITY SOLELY FOR THE TRUSS COMPONENT DESIGN SHOWN. THE SUITABILITY AND USE OF THIS COMPONENT FOR ANY BUILDING IS THE RESPONSIBILITY OF THE

ARTHUR R. FISHER LICENSE No.59687 STATE OF FLORIDA PROFESSIONAL ENGINEER

Feb 10, 06

TC LL	20.0 PSF	REF	R487-- 86599
TC DL	10.0 PSF	DATE	02/10/06
BC DL	10.0 PSF	DRW	HCUSR487 06041012
BC LL	0.0 PSF	HC-ENG	JB/AF *
TOT.LD.	40.0 PSF	SEQN-	28005
DUR.FAC.	1.25		

(6-004-GLENWOOD KING - BULLARD - J3)

Top chord 2x4 SP #2 Dense
Bot chord 2x4 SP #2 Dense
Webs 2x4 SP #2 Dense

Deflection meets L/360 live and L/240 total load. Creep increase factor for dead load is 1.50.

110 mph wind, 15.00 ft mean hgt, ASCE 7-02, CLOSED bldg, Located anywhere in roof, CAT II, EXP B, wind TC DL=5.0 psf, wind BC DL=5.0 psf.

Provide (2) 16d common nails(0.162"x3.5"), toe nailed at Top chord.
Provide (2) 16d common nails(0.162"x3.5"), toe nailed at Bot chord.

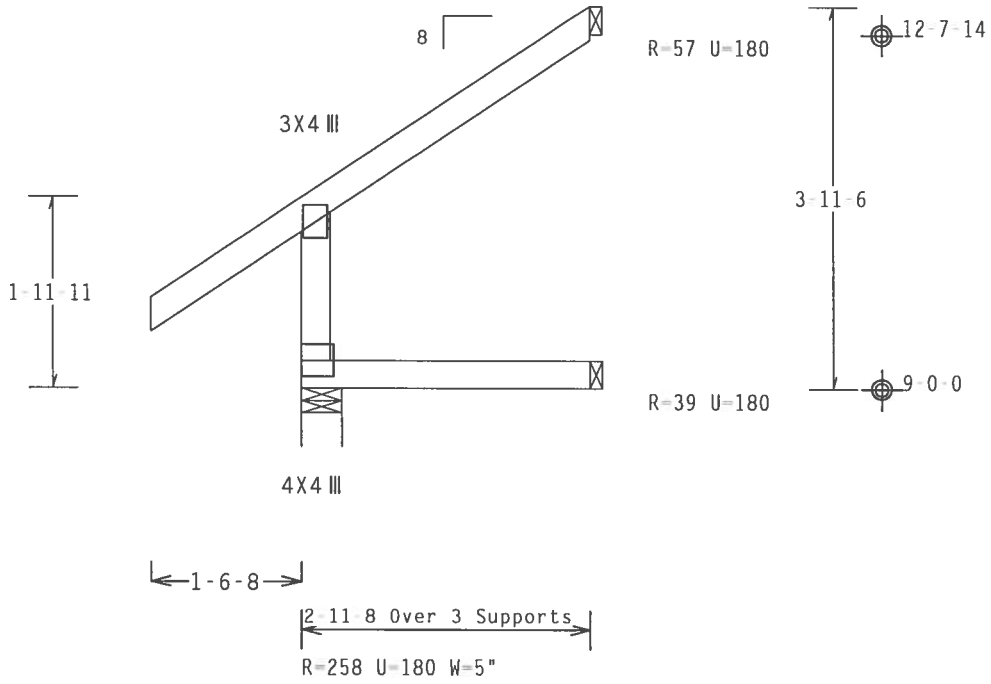

Design Crit: TPI-2002(STD)/FBC

PLT TYP. Wave Cq/RT=1.00(1.25)/10(0) 7.22.1 QTY:4 FL/-/4/-/-/R/- Scale =.5"/Ft.

WARNING TRUSSES REQUIRE EXTREME CARE IN FABRICATION, HANDLING, SHIPPING, INSTALLING AND BRACING. REFER TO BCSI 1-03 (BUILDING COMPONENT SAFETY INFORMATION), PUBLISHED BY TPI (TRUSS PLATE INSTITUTE, 583 D'ONOFRIO DR., SUITE 200, MADISON, WI 53719) AND WTCA (WOOD TRUSS COUNCIL OF AMERICA, 6300 ENTERPRISE LN, MADISON, WI 53719) FOR SAFETY PRACTICES PRIOR TO PERFORMING THESE FUNCTIONS. UNLESS OTHERWISE INDICATED, TOP CHORD SHALL HAVE PROPERLY ATTACHED STRUCTURAL PANELS AND BOTTOM CHORD SHALL HAVE A PROPERLY ATTACHED RIGID CEILING.

IMPORTANTFURNISH A COPY OF THIS DESIGN TO THE INSTALLATION CONTRACTOR. ALPINE ENGINEERED PRODUCTS, INC. SHALL NOT BE RESPONSIBLE FOR ANY DEVIATION FROM THIS DESIGN; ANY FAILURE TO BUILD THE TRUSS IN CONFORMANCE WITH TPI; OR FABRICATING, HANDLING, SHIPPING, INSTALLING & BRACING OF TRUSSES. DESIGN CONFORMS WITH APPLICABLE PROVISIONS OF NDS (NATIONAL DESIGN SPEC. BY AFAPA) AND TPI. ALPINE CONNECTOR PLATES ARE MADE OF 20/18/16GA (W,H/S/K) ASTM A653 GRADE 40/60 (W, K/H,S) GALV. STEEL. APPLY PLATES TO EACH FACE OF TRUSS AND, UNLESS OTHERWISE LOCATED ON THIS DESIGN, POSITION PER DRAWINGS 160A Z. ANY INSPECTION OF PLATES FOLLOWED BY (1) SHALL BE PER ANNEX A3 OF TPI1-2002 SEC.3. A SEAL ON THIS DRAWING INDICATES ACCEPTANCE OF PROFESSIONAL ENGINEERING RESPONSIBILITY SOLELY FOR THE TRUSS COMPONENT DESIGN SHOWN. THE SUITABILITY AND USE OF THIS COMPONENT FOR ANY BUILDING IS THE RESPONSIBILITY OF THE

ALPINE
Alpine Engineered Products, Inc.
1950 Marley Drive

ARTHUR T. FISHER LICENSE No. 59687 STATE OF FLORIDA PROFESSIONAL ENGINEER
Feb 10 '06

TC LL	20.0 PSF	REF R487-- 86600
TC DL	10.0 PSF	DATE 02/10/06
BC DL	10.0 PSF	DRW HCUSR487 06041013
BC LL	0.0 PSF	HC-ENG JB/AF *
TOT.LD.	40.0 PSF	SEQN- 28012
DUR.FAC.	1.25	

(6-004-GLENWOOD KING - BULLARD - J1)

Top chord 2x4 SP #2 Dense
Bot chord 2x4 SP #2 Dense
Webs 2x4 SP #3

Deflection meets L/360 live and L/240 total load. Creep increase factor for dead load is 1.50.

110 mph wind, 15.00 ft mean hgt, ASCE 7-02, CLOSED bldg, Located anywhere in roof, CAT II, EXP B, wind TC DL=5.0 psf, wind BC DL=5.0 psf.

Provide (2) 16d common nails(0.162"x3.5"), toe nailed at Top chord.
Provide (2) 16d common nails(0.162"x3.5"), toe nailed at Bot chord.

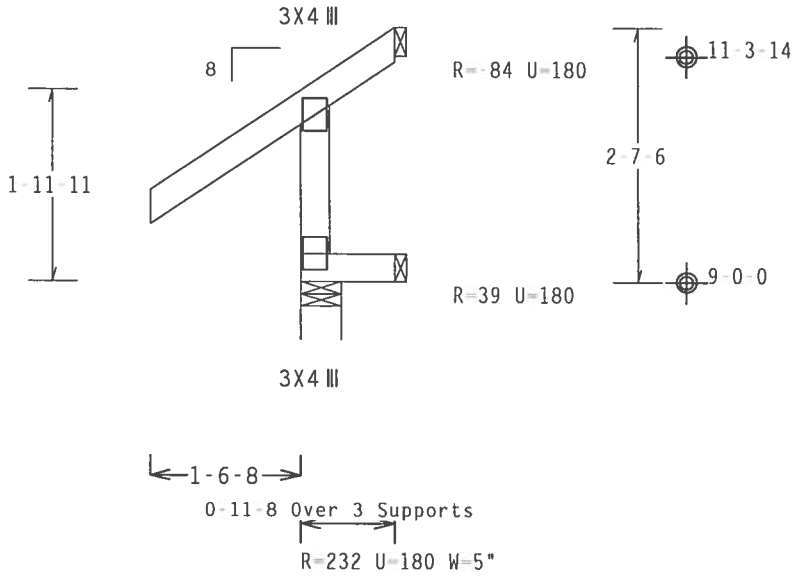

Design Crit: TPI-2002(STD)/FBC

PLT TYP. Wave

Cq/RT=1.00(1.25)/10(0) 7.22.1 QTY:4 FL/-/4/-/-/R/- Scale =.5"/Ft.

WARNING TRUSSES REQUIRE EXTREME CARE IN FABRICATION, HANDLING, SHIPPING, INSTALLING AND BRACING. REFER TO BCSI 1-03 (BUILDING COMPONENT SAFETY INFORMATION), PUBLISHED BY TPI (TRUSS PLATE INSTITUTE, 583 D'ONOFRIO DR., SUITE 200, MADISON, WI 53719) AND WTCA (WOOD TRUSS COUNCIL OF AMERICA, 6300 ENTERPRISE LN, MADISON, WI 53719) FOR SAFETY PRACTICES PRIOR TO PERFORMING THESE FUNCTIONS. UNLESS OTHERWISE INDICATED, TOP CHORD SHALL HAVE PROPERLY ATTACHED STRUCTURAL PANELS AND BOTTOM CHORD SHALL HAVE A PROPERLY ATTACHED RIGID CEILING.

IMPORTANT FURNISH A COPY OF THIS DESIGN TO THE INSTALLATION CONTRACTOR. ALPINE ENGINEERED PRODUCTS, INC. SHALL NOT BE RESPONSIBLE FOR ANY DEVIATION FROM THIS DESIGN; ANY FAILURE TO BUILD THE TRUSS IN CONFORMANCE WITH TPI; OR FABRICATING, HANDLING, SHIPPING, INSTALLING & BRACING OF TRUSSES. DESIGN CONFORMS WITH APPLICABLE PROVISIONS OF NDS (NATIONAL DESIGN SPEC, BY AF&PA) AND TPI. ALPINE CONNECTOR PLATES ARE MADE OF 20/18/16GA (W,H/S/K) ASTM A653 GRADE 40/60 (W, K/H,S) GALV. STEEL. APPLY PLATES TO EACH FACE OF TRUSS AND, UNLESS OTHERWISE LOCATED ON THIS DESIGN, POSITION PER DRAWINGS 160A-Z. ANY INSPECTION OF PLATES FOLLOWED BY (1) SHALL BE PER ANNEX A3 OF TPI1-2002 SEC.3. A SEAL ON THIS DRAWING INDICATES ACCEPTANCE OF PROFESSIONAL ENGINEERING RESPONSIBILITY SOLELY FOR THE TRUSS COMPONENT DESIGN SHOWN. THE SUITABILITY AND USE OF THIS COMPONENT FOR ANY BUILDING IS THE RESPONSIBILITY OF THE

ALPINE
Alpine Engineered Products, Inc.
1950 Marley Drive

ARTHUR R. FISHER LICENSE No. 59687 STATE OF FLORIDA PROFESSIONAL ENGINEER

Feb 10 '06

TC LL	20.0 PSF	REF R487-- 86601
TC DL	10.0 PSF	DATE 02/10/06
BC DL	10.0 PSF	DRW HCUSR487 06041062
BC LL	0.0 PSF	HC-ENG JB/AF
TOT.LD.	40.0 PSF	SEQN- 28019
DUR.FAC.	1.25	

(6-004-GLENWOOD KING - BULLARD - CC6)

Top chord 2x4 SP #2 Dense
Bot chord 2x4 SP #2 Dense
Webs 2x4 SP #3

H = recommended connection based on manufacturer tested capacities and calculations. Conditions may exist that require different connections than indicated. Refer to manufacturer publication for additional information.

Deflection meets L/360 live and L/240 total load. Creep increase factor for dead load is 1.50.

110 mph wind, 15.00 ft mean hgt, ASCE 7-02, CLOSED bldg, Located anywhere in roof, CAT II, EXP B, wind TC DL=5.0 psf, wind BC DL=5.0 psf.

Right end vertical not exposed to wind pressure.

Trusses to be spaced at 16.0" OC maximum.

Fasten rated sheathing to one face of this frame.

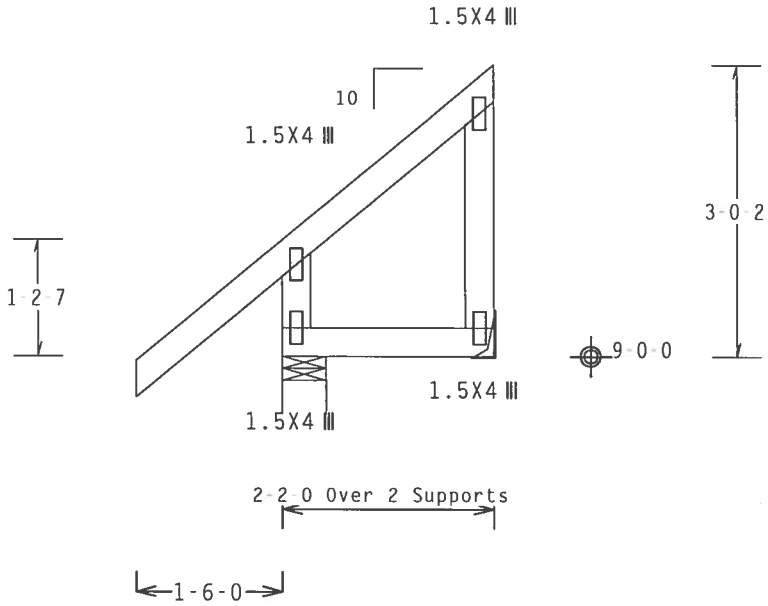

R=158 U=180 W=5.438"

R=37 U=180 H=Simpson LU24
w/ (2) 10d, 0.148"x1.5" nails in Truss
w/ (4) 10d Common, 0.148"x3.0" nails in Girder
Girder is (1)2X4 min. So.Pine

Design Crit: TPI-2002(STD)/FBC

PLT TYP. Wave

Cq/RT=1.00(1.25)/10(0) 7.22.1 QTY:8 FL/-/4/-/-/R/- Scale =.5"/Ft.

ALPINE
Alpine Engineered Products, Inc.
1950 Marley Drive

WARNING TRUSSES REQUIRE EXTREME CARE IN FABRICATION, HANDLING, SHIPPING, INSTALLING AND BRACING. REFER TO BCSI 1-03 (BUILDING COMPONENT SAFETY INFORMATION), PUBLISHED BY TPI (TRUSS PLATE INSTITUTE, 583 D'ONOFRIO DR., SUITE 200, MADISON, WI 53719) AND WTCA (WOOD TRUSS COUNCIL OF AMERICA, 6300 ENTERPRISE LN, MADISON, WI 53719) FOR SAFETY PRACTICES PRIOR TO PERFORMING THESE FUNCTIONS. UNLESS OTHERWISE INDICATED, TOP CHORD SHALL HAVE PROPERLY ATTACHED STRUCTURAL PANELS AND BOTTOM CHORD SHALL HAVE A PROPERLY ATTACHED RIGID CEILING.

IMPORTANTFURNISH A COPY OF THIS DESIGN TO THE INSTALLATION CONTRACTOR. ALPINE ENGINEERED PRODUCTS, INC. SHALL NOT BE RESPONSIBLE FOR ANY DEVIATION FROM THIS DESIGN; ANY FAILURE TO BUILD THE TRUSS IN CONFORMANCE WITH TPI; OR FABRICATING, HANDLING, SHIPPING, INSTALLING & BRACING OF TRUSSES. DESIGN CONFORMS WITH APPLICABLE PROVISIONS OF NDS (NATIONAL DESIGN SPEC. BY AF&PA) AND TPI. ALPINE CONNECTOR PLATES ARE MADE OF 20/18/16GA (W,H/S/K) ASTM A653 GRADE 40/60 (H, K/H,S) GALV. STEEL. APPLY PLATES TO EACH FACE OF TRUSS AND, UNLESS OTHERWISE LOCATED ON THIS DESIGN, POSITION PER DRAWINGS 160A-Z. ANY INSPECTION OF PLATES FOLLOWED BY (1) SHALL BE PER ANNEX A3 OF TPI1-2002 SEC.3. A SEAL ON THIS DRAWING INDICATES ACCEPTANCE OF PROFESSIONAL ENGINEERING RESPONSIBILITY SOLELY FOR THE TRUSS COMPONENT

ARTHUR R. FISHER
LICENSE
No.59687
STATE OF FLORIDA
PROFESSIONAL ENGINEER

Feb 10 '06

TC LL	20.0 PSF	REF	R487-- 86602
TC DL	10.0 PSF	DATE	02/10/06
BC DL	10.0 PSF	DRW	HCUSR487 06041063
BC LL	0.0 PSF	HC-ENG	JB/AF
TOT.LD.	40.0 PSF	SEQN-	82779
DUR.FAC.	1.25	FROM	JP

(6 004 GLENWOOD KING BULLARD HJD)

Top chord 2x4 SP #2 Dense
Bot chord 2x4 SP #2 Dense
Webs 2x8 SP SS :W2 2x4 SP #3:

Hipjack supports 7-0-0 setback jacks with no webs.

Provide (2) 16d common nails(0.162"x3.5"), toe nailed at Top chord.
Provide (3) 16d common nails(0.162"x3.5"), toe nailed at Bot chord.

110 mph wind, 15.00 ft mean hgt, ASCE 7-02, CLOSED bldg, Located anywhere in roof, CAT II, EXP B, wind TC DL=5.0 psf, wind BC DL=5.0 psf.

Deflection meets L/360 live and L/240 total load. Creep increase factor for dead load is 1.50.

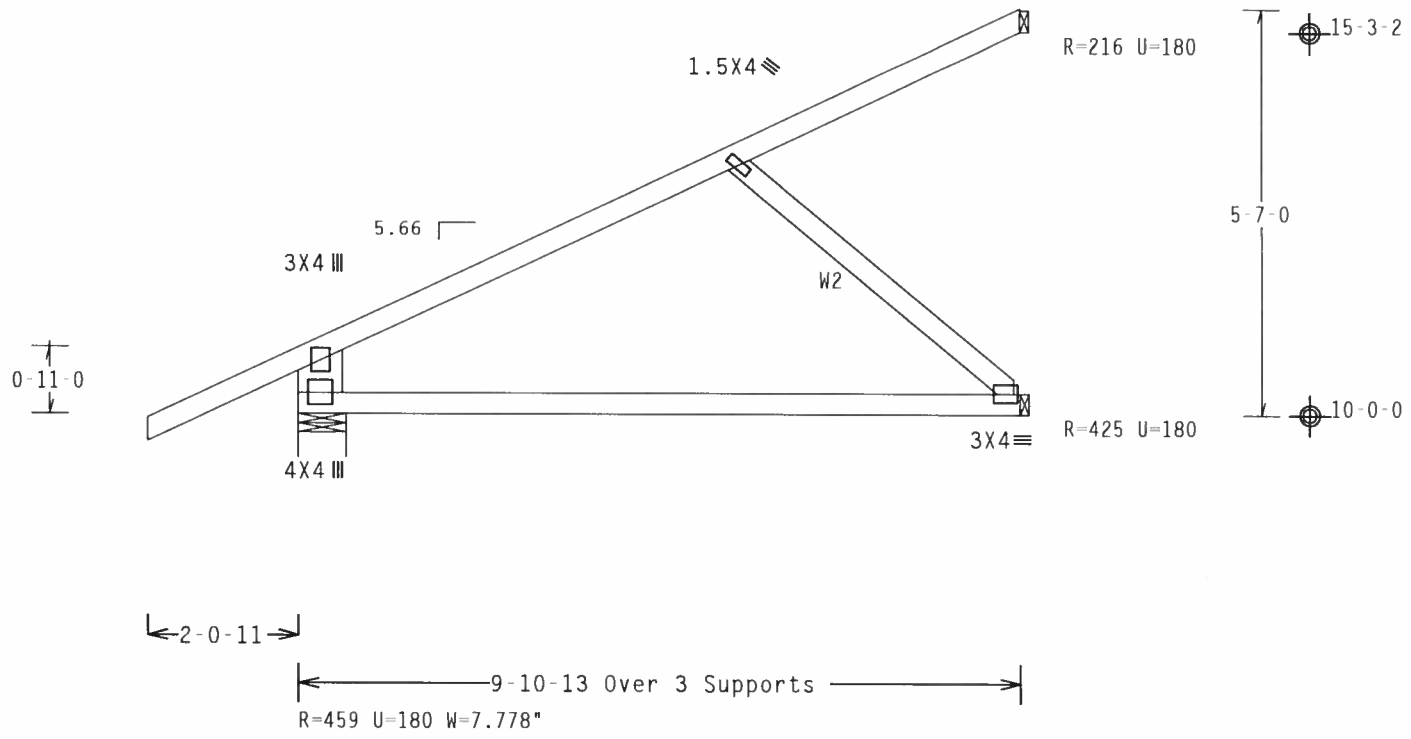

Design Crit: TPI-2002(STD)/FBC

PLT TYP. Wave Cq/RT=1.00(1.25)/10(0) 7.22. QTY:1 FL/-/4/-/-/R/- Scale =.375"/Ft.

ALPINE
Alpine Engineered Products, Inc.
1950 Marley Drive

WARNING TRUSSES REQUIRE EXTREME CARE IN FABRICATION, HANDLING, SHIPPING, INSTALLING AND BRACING. REFER TO BCSI 1 03 (BUILDING COMPONENT SAFETY INFORMATION), PUBLISHED BY TPI (TRUSS PLATE INSTITUTE, 583 D'ONOFRIO DR., SUITE 200, MADISON, WI 53719) AND WTCA (WOOD TRUSS COUNCIL OF AMERICA, 6300 ENTERPRISE LN, MADISON, WI 53719) FOR SAFETY PRACTICES PRIOR TO PERFORMING THESE FUNCTIONS. UNLESS OTHERWISE INDICATED, TOP CHORD SHALL HAVE PROPERLY ATTACHED STRUCTURAL PANELS AND BOTTOM CHORD SHALL HAVE A PROPERLY ATTACHED RIGID CEILING.

IMPORTANTFURNISH A COPY OF THIS DESIGN TO THE INSTALLATION CONTRACTOR. ALPINE ENGINEERED PRODUCTS, INC. SHALL NOT BE RESPONSIBLE FOR ANY DEVIATION FROM THIS DESIGN; ANY FAILURE TO BUILD THE TRUSS IN CONFORMANCE WITH TPI; OR FABRICATING, HANDLING, SHIPPING, INSTALLING & BRACING OF TRUSSES. DESIGN CONFORMS WITH APPLICABLE PROVISIONS OF NDS (NATIONAL DESIGN SPEC. BY AF&PA) AND TPI. ALPINE CONNECTOR PLATES ARE MADE OF 20/18/16GA (W,H/S/K) ASTM A653 GRADE 40/60 (H, K/H,S) GALV. STEEL. APPLY PLATES TO EACH FACE OF TRUSS AND, UNLESS OTHERWISE LOCATED ON THIS DESIGN, POSITION PER DRAWINGS 160A Z. ANY INSPECTION OF PLATES FOLLOWED BY (1) SHALL BE PER ANNEX A3 OF TPI1 2002 SEC.3. A SEAL ON THIS DRAWING INDICATES ACCEPTANCE OF PROFESSIONAL ENGINEERING RESPONSIBILITY SOLELY FOR THE TRUSS COMPONENT

ARTHUR R. FISHER LICENSE No 59687 STATE OF FLORIDA PROFESSIONAL ENGINEER

Feb 10 '06

TC LL	20.0 PSF	REF	R487-- 86603
TC DL	10.0 PSF	DATE	02/10/06
BC DL	10.0 PSF	DRW	HCUSR487 06041064
BC LL	0.0 PSF	HC-ENG	JB/AF
TOT.LD.	40.0 PSF	SEQN-	82154
DUR.FAC.	1.25		

(6-004-GLENWOOD KING - BULLARD - EJD)

Top chord 2x4 SP #2 Dense
Bot chord 2x4 SP #2 Dense
Webs 2x4 SP #3

Deflection meets L/360 live and L/240 total load. Creep increase factor for dead load is 1.50.

110 mph wind, 15.00 ft mean hgt, ASCE 7-02, CLOSED bldg, not located within 4.50 ft from roof edge, CAT II, EXP B, wind TC DL=5.0 psf, wind BC DL=5.0 psf.

Provide (2) 16d common nails(0.162"x3.5"), toe nailed at Top chord.
Provide (2) 16d common nails(0.162"x3.5"), toe nailed at Bot chord.

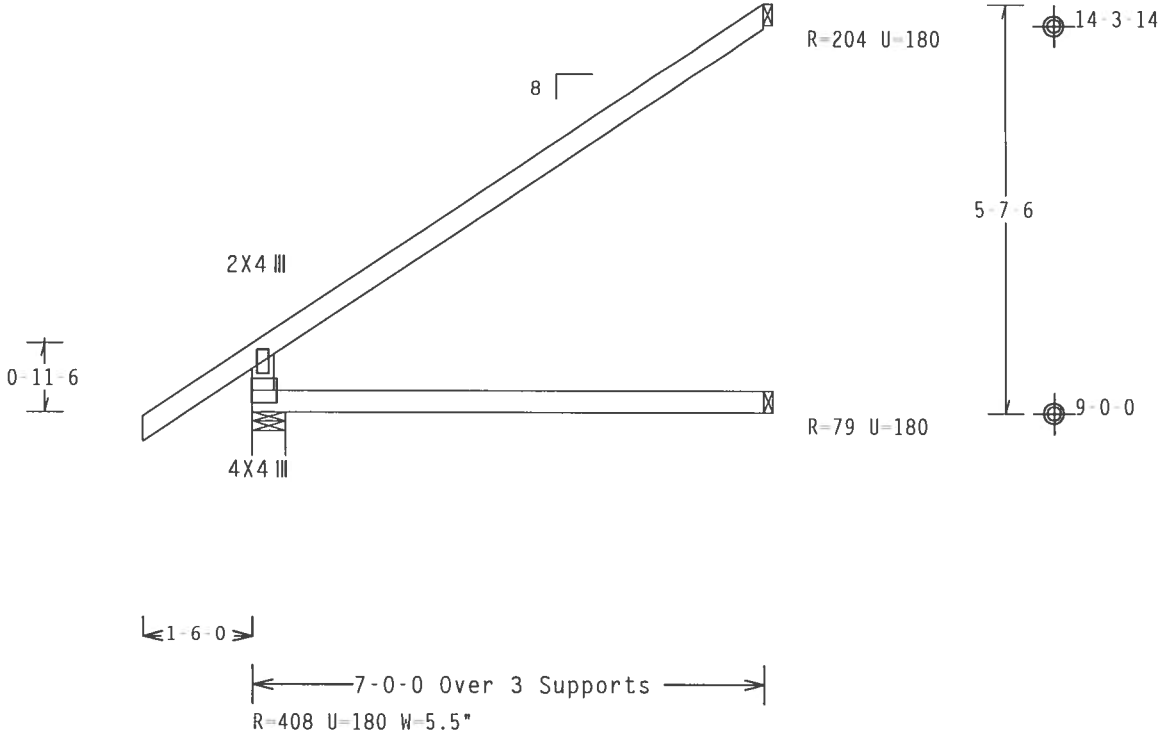

Design Crit: TPI-2002(STD)/FBC

PLT TYP. Wave

Cq/RT=1.00(1.25)/10(0) 7.22.11 QTY:16 FL/-/4/-/-/R/- Scale =.375"/Ft.

ALPINE
Alpine Engineered Products, Inc.
1950 Marley Drive

WARNING TRUSSES REQUIRE EXTREME CARE IN FABRICATION, HANDLING, SHIPPING, INSTALLING AND BRACING. REFER TO BCSI 1-03 (BUILDING COMPONENT SAFETY INFORMATION), PUBLISHED BY TPI (TRUSS PLATE INSTITUTE, 583 D'ONOFRIO DR., SUITE 200, MADISON, WI 53719) AND WTCA (WOOD TRUSS COUNCIL OF AMERICA, 6300 ENTERPRISE LN, MADISON, WI 53719) FOR SAFETY PRACTICES PRIOR TO PERFORMING THESE FUNCTIONS. UNLESS OTHERWISE INDICATED, TOP CHORD SHALL HAVE PROPERLY ATTACHED STRUCTURAL PANELS AND BOTTOM CHORD SHALL HAVE A PROPERLY ATTACHED RIGID CEILING.

IMPORTANTFURNISH A COPY OF THIS DESIGN TO THE INSTALLATION CONTRACTOR. ALPINE ENGINEERED PRODUCTS, INC. SHALL NOT BE RESPONSIBLE FOR ANY DEVIATION FROM THIS DESIGN; ANY FAILURE TO BUILD THE TRUSS IN CONFORMANCE WITH TPI; OR FABRICATING, HANDLING, SHIPPING, INSTALLING & BRACING OF TRUSSES. DESIGN CONFORMS WITH APPLICABLE PROVISIONS OF NDS (NATIONAL DESIGN SPEC. BY AF&PA) AND TPI. ALPINE CONNECTOR PLATES ARE MADE OF 20/18/16GA (W,H/S/K) ASTM A653 GRADE 40/60 (W, K/H,S) GALV. STEEL. APPLY PLATES TO EACH FACE OF TRUSS AND, UNLESS OTHERWISE LOCATED ON THIS DESIGN, POSITION PER DRAWINGS 160A Z. ANY INSPECTION OF PLATES FOLLOWED BY (1) SHALL BE PER ANNEX A3 OF TPI1-2002 SEC.3. A SEAL ON THIS DRAWING INDICATES ACCEPTANCE OF PROFESSIONAL ENGINEERING RESPONSIBILITY SOLELY FOR THE TRUSS COMPONENT

ARTHUR R. FISHER LICENSE No. 59687 STATE OF FLORIDA PROFESSIONAL ENGINEER

Feb 10 '06

TC LL	20.0 PSF	REF	R487-- 86604
TC DL	10.0 PSF	DATE	02/10/06
BC DL	10.0 PSF	DRW	HCUSR487 06041014
BC LL	0.0 PSF	HC-ENG	JB/AF *
TOT.LD.	40.0 PSF	SEQN-	82875
DUR.FAC.	1.25		

(6-004-GLENWOOD KING - BULLARD - J5D)

Top chord 2x4 SP #2 Dense
Bot chord 2x4 SP #2 Dense
:Lt Stubbed Wedge 2x6 SP #2:

Deflection meets L/360 live and L/240 total load. Creep increase factor for dead load is 1.50.

110 mph wind, 15.00 ft mean hgt, ASCE 7-02, CLOSED bldg, not located within 4.50 ft from roof edge, CAT II, EXP B, wind TC DL=5.0 psf, wind BC DL=5.0 psf.

Provide (2) 16d common nails(0.162"x3.5"), toe nailed at Top chord.
Provide (2) 16d common nails(0.162"x3.5"), toe nailed at Bot chord.

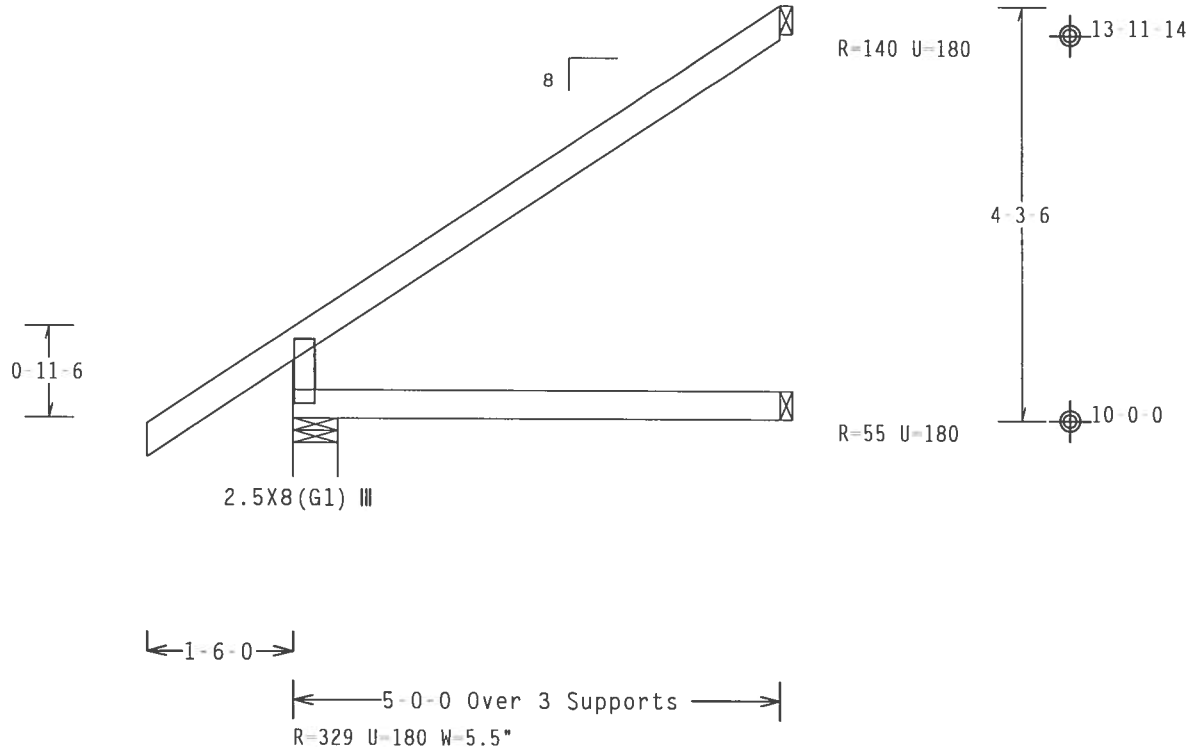

Design Crit: TPI-2002(STD)/FBC

PLT TYP. Wave Cq/RT=1.00(1.25)/10(0) 7.22.1 QTY:2 FL/-/4/-/-/R/- Scale =.5"/Ft.

ALPINE
Alpine Engineered Products, Inc.
1950 Marley Drive

WARNING TRUSSES REQUIRE EXTREME CARE IN FABRICATION, HANDLING, SHIPPING, INSTALLING AND BRACING. REFER TO BCSI 1-03 (BUILDING COMPONENT SAFETY INFORMATION), PUBLISHED BY TPI (TRUSS PLATE INSTITUTE, 583 D'ONOFRIO DR., SUITE 200, MADISON, WI 53719) AND WTCA (WOOD TRUSS COUNCIL OF AMERICA, 6300 ENTERPRISE LN, MADISON, WI 53719) FOR SAFETY PRACTICES PRIOR TO PERFORMING THESE FUNCTIONS. UNLESS OTHERWISE INDICATED, TOP CHORD SHALL HAVE PROPERLY ATTACHED STRUCTURAL PANELS AND BOTTOM CHORD SHALL HAVE A PROPERLY ATTACHED RIGID CEILING.

IMPORTANTFURNISH A COPY OF THIS DESIGN TO THE INSTALLATION CONTRACTOR. ALPINE ENGINEERED PRODUCTS, INC. SHALL NOT BE RESPONSIBLE FOR ANY DEVIATION FROM THIS DESIGN; ANY FAILURE TO BUILD THE TRUSS IN CONFORMANCE WITH TPI; OR FABRICATING, HANDLING, SHIPPING, INSTALLING & BRACING OF TRUSSES. DESIGN CONFORMS WITH APPLICABLE PROVISIONS OF NDS (NATIONAL DESIGN SPEC. BY AF&PA) AND TPI. ALPINE CONNECTOR PLATES ARE MADE OF 20/18/16GA (W,H/S/K) ASTM A653 GRADE 40/60 (W, K/H,S) GALV. STEEL. APPLY PLATES TO EACH FACE OF TRUSS AND, UNLESS OTHERWISE LOCATED ON THIS DESIGN, POSITION PER DRAWINGS 160A-Z. ANY INSPECTION OF PLATES FOLLOWED BY (I) SHALL BE PER ANNEX A3 OF TPI1 2002 SEC.3. A SEAL ON THIS DRAWING INDICATES ACCEPTANCE OF PROFESSIONAL ENGINEERING RESPONSIBILITY SOLELY FOR THE TRUSS COMPONENT

ARTHUR R. FISHER
LICENSE
No.59687
STATE OF
FLORIDA
PROFESSIONAL ENGINEER

Feb 10 '06

TC LL	20.0 PSF	REF R487-- 86605
TC DL	10.0 PSF	DATE 02/10/06
BC DL	10.0 PSF	DRW HCUSR487 06041065
BC LL	0.0 PSF	HC-ENG JB/AF
TOT.LD.	40.0 PSF	SEQN- 82129
DUR.FAC.	1.25	

Top chord 2x4 SP #2 Dense
Bot chord 2x4 SP #2 Dense
:Lt Stubbed Wedge 2x6 SP #2:

Deflection meets L/360 live and L/240 total load. Creep increase factor for dead load is 1.50.

110 mph wind, 15.00 ft mean hgt, ASCE 7-02, CLOSED bldg, Located anywhere in roof, CAT II, EXP B, wind TC DL=5.0 psf, wind BC DL=5.0 psf.

Provide (2) 16d common nails(0.162"x3.5"), toe nailed at Top chord.
Provide (2) 16d common nails(0.162"x3.5"), toe nailed at Bot chord.

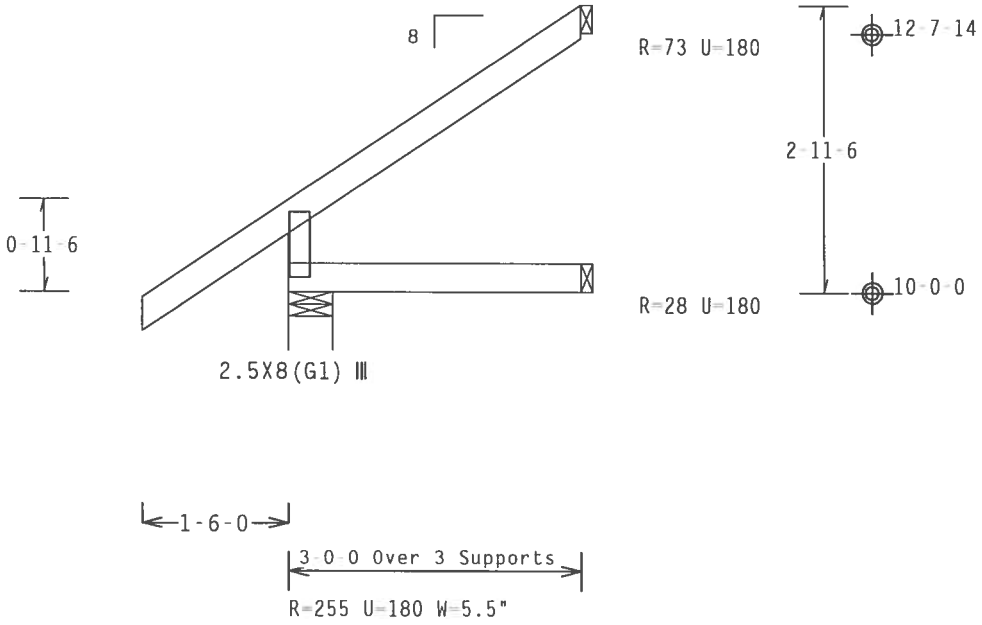

Design Crit: TPI-2002(STD)/FBC

PLT TYP. Wave Cq/RT=1.00(1.25)/10(0) 7.22.1 QTY:2 FL/-/4/-/-/R/- Scale =.5"/Ft.

ALPINE
Alpine Engineered Products, Inc.
1950 Marley Drive

WARNING TRUSSES REQUIRE EXTREME CARE IN FABRICATION, HANDLING, SHIPPING, INSTALLING AND BRACING. REFER TO BCSI 1-03 (BUILDING COMPONENT SAFETY INFORMATION), PUBLISHED BY TPI (TRUSS PLATE INSTITUTE, 583 D'ONOFRIO DR., SUITE 200, MADISON, WI 53719) AND WTCA (WOOD TRUSS COUNCIL OF AMERICA, 6300 ENTERPRISE LN, MADISON, WI 53719) FOR SAFETY PRACTICES PRIOR TO PERFORMING THESE FUNCTIONS. UNLESS OTHERWISE INDICATED, TOP CHORD SHALL HAVE PROPERLY ATTACHED STRUCTURAL PANELS AND BOTTOM CHORD SHALL HAVE A PROPERLY ATTACHED RIGID CEILING.

IMPORTANTFURNISH A COPY OF THIS DESIGN TO THE INSTALLATION CONTRACTOR. ALPINE ENGINEERED PRODUCTS, INC. SHALL NOT BE RESPONSIBLE FOR ANY DEVIATION FROM THIS DESIGN; ANY FAILURE TO BUILD THE TRUSS IN CONFORMANCE WITH TPI; OR FABRICATING, HANDLING, SHIPPING, INSTALLING & BRACING OF TRUSSES. DESIGN CONFORMS WITH APPLICABLE PROVISIONS OF NDS (NATIONAL DESIGN SPEC. BY AF&PA) AND TPI. ALPINE CONNECTOR PLATES ARE MADE OF 20/18/16GA (W,H/S/K) ASTM A653 GRADE 40/60 (W, K/H,S) GALV. STEEL. APPLY PLATES TO EACH FACE OF TRUSS AND, UNLESS OTHERWISE LOCATED ON THIS DESIGN, POSITION PER DRAWINGS 160A Z. ANY INSPECTION OF PLATES FOLLOWED BY (1) SHALL BE PER ANNEX A3 OF TPI1-2002 SEC.3. A SEAL ON THIS DRAWING INDICATES ACCEPTANCE OF PROFESSIONAL ENGINEERING RESPONSIBILITY SOLELY FOR THE TRUSS COMPONENT

ARTHUR R. FISHER LICENSE No. 59687 STATE OF FLORIDA PROFESSIONAL ENGINEER
Feb 10 '06

TC LL	20.0 PSF	REF	R487-- 86606
TC DL	10.0 PSF	DATE	02/10/06
BC DL	10.0 PSF	DRW	HCUSR487 06041015
BC LL	0.0 PSF	HC-ENG	JB/AF *
TOT.LD.	40.0 PSF	SEQN-	82136
DUR.FAC.	1.25		

Top chord 2x4 SP #2 Dense
Bot chord 2x4 SP #2 Dense
:Lt Stubbed Wedge 2x6 SP #2:

Deflection meets L/360 live and L/240 total load. Creep increase factor for dead load is 1.50.

110 mph wind, 15.00 ft mean hgt, ASCE 7-02, CLOSED bldg, Located anywhere in roof, CAT II, EXP B, wind TC DL=5.0 psf, wind BC DL=5.0 psf.

Provide (2) 16d common nails(0.162"x3.5"), toe nailed at Top chord.
Provide (2) 16d common nails(0.162"x3.5"), toe nailed at Bot chord.

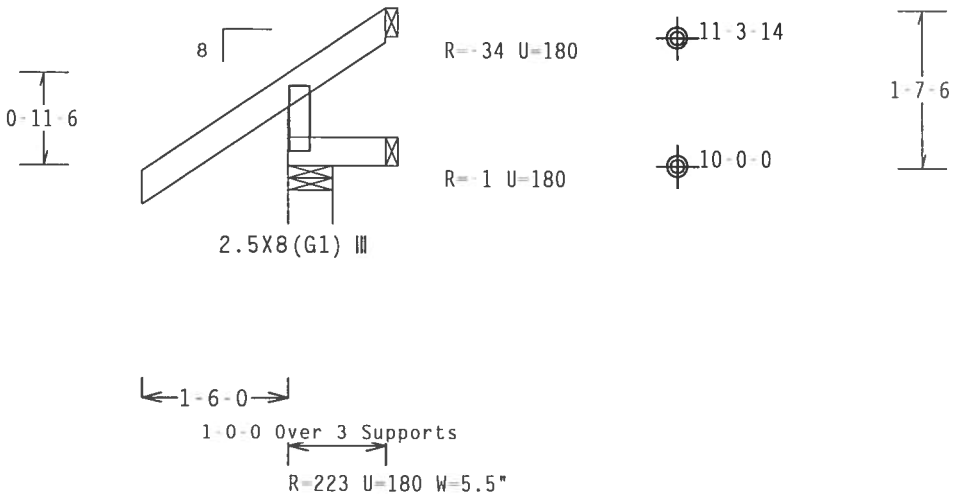

Design Crit: TPI-2002(STD)/FBC

PLT TYP. Wave

Cq/RT=1.00(1.25)/10(0) 7.22.1 QTY:2 FL/-/4/-/-/R/- Scale =.5"/Ft.

WARNING TRUSSES REQUIRE EXTREME CARE IN FABRICATION, HANDLING, SHIPPING, INSTALLING AND BRACING. REFER TO BCSI 1-03 (BUILDING COMPONENT SAFETY INFORMATION), PUBLISHED BY TPI (TRUSS PLATE INSTITUTE, 583 D'ONOFRIO DR., SUITE 200, MADISON, WI 53719) AND WTCA (WOOD TRUSS COUNCIL OF AMERICA, 6300 ENTERPRISE LN, MADISON, WI 53719) FOR SAFETY PRACTICES PRIOR TO PERFORMING THESE FUNCTIONS. UNLESS OTHERWISE INDICATED, TOP CHORD SHALL HAVE PROPERLY ATTACHED STRUCTURAL PANELS AND BOTTOM CHORD SHALL HAVE A PROPERLY ATTACHED RIGID CEILING.

IMPORTANTFURNISH A COPY OF THIS DESIGN TO THE INSTALLATION CONTRACTOR. ALPINE ENGINEERED PRODUCTS, INC. SHALL NOT BE RESPONSIBLE FOR ANY DEVIATION FROM THIS DESIGN; ANY FAILURE TO BUILD THE TRUSS IN CONFORMANCE WITH TPI; OR FABRICATING, HANDLING, SHIPPING, INSTALLING & BRACING OF TRUSSES. DESIGN CONFORMS WITH APPLICABLE PROVISIONS OF NDS (NATIONAL DESIGN SPEC. BY AF&PA) AND TPI. ALPINE CONNECTOR PLATES ARE MADE OF 20/18/16GA (W,H/S/K) ASTM A653 GRADE 40/60 (W, K/H,S) GALV. STEEL. APPLY PLATES TO EACH FACE OF TRUSS AND, UNLESS OTHERWISE LOCATED ON THIS DESIGN, POSITION PER DRAWINGS 160A-Z. ANY INSPECTION OF PLATES FOLLOWED BY (1) SHALL BE PER ANNEX A3 OF TPI1 2002 SEC.3. A SEAL ON THIS DRAWING INDICATES ACCEPTANCE OF PROFESSIONAL ENGINEERING RESPONSIBILITY SOLELY FOR THE TRUSS COMPONENT DESIGN SHOWN. THE SUITABILITY AND USE OF THIS COMPONENT FOR ANY BUILDING IS THE RESPONSIBILITY OF THE

ALPINE
Alpine Engineered Products, Inc.
1950 Marley Drive

ARTHUR R. FISHER
LICENSE
No. 59687
STATE OF FLORIDA
PROFESSIONAL ENGINEER

Feb 10 '06

TC LL	20.0 PSF	REF R487-- 86607
TC DL	10.0 PSF	DATE 02/10/06
BC DL	10.0 PSF	DRW HCUSR487 06041066
BC LL	0.0 PSF	HC-ENG JB/AF
TOT.LD.	40.0 PSF	SEQN- 82142
DUR.FAC.	1.25	

(6-004-GLENWOOD KING - BULLARD - JD1)

Top chord 2x4 SP #2 Dense
Bot chord 2x4 SP #2 Dense
Webs 2x4 SP #3

H = recommended connection based on manufacturer tested capacities and calculations. Conditions may exist that require different connections than indicated. Refer to manufacturer publication for additional information.

110 mph wind, 15.00 ft mean hgt, ASCE 7-02, CLOSED bldg, not located within 4.50 ft from roof edge, CAT II, EXP B, wind TC DL=5.0 psf, wind BC DL=5.0 psf.

Deflection meets L/360 live and L/240 total load. Creep increase factor for dead load is 1.50.

Provide (2) 16d common nails(0.162"x3.5"), toe nailed at Top chord.
Provide (2) 16d common nails(0.162"x3.5"), toe nailed at Bot chord.

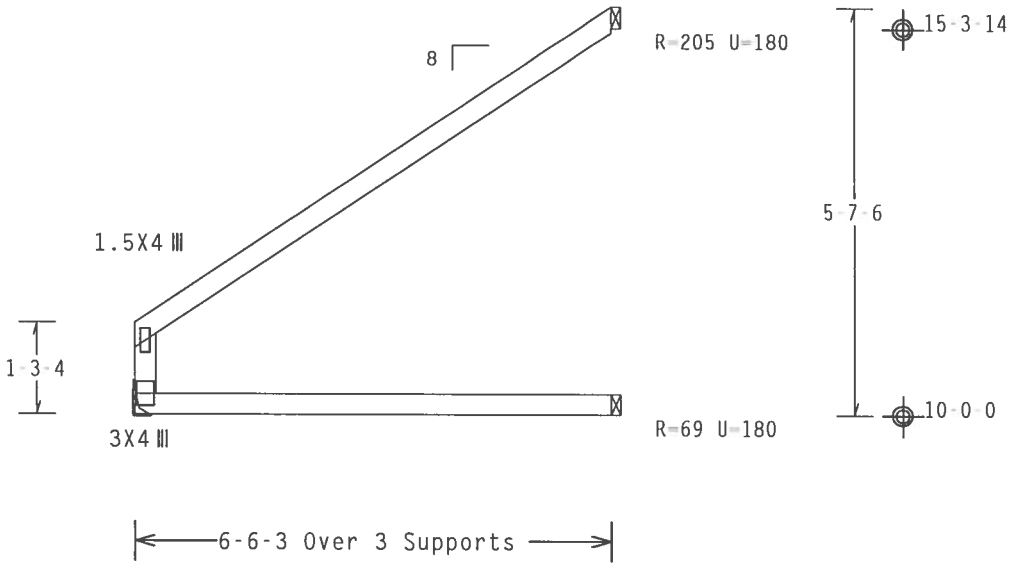

R=274 U=180 H=Simpson LU24
w/ (2) 10d, 0.148"x1.5" nails in Truss
w/ (4) 10d Common, 0.148"x3.0" nails in Girder
Girder is (1)2X4 min. So.Pine

Design Crit: TPI-2002(STD)/FBC

PLT TYP. Wave Cq/RT=1.00(1.25)/10(0) 7.22. TY:1 FL/-/4/-/-/R/- Scale =.375"/Ft.

ALPINE
Alpine Engineered Products, Inc.
1950 Marley Drive

WARNING TRUSSES REQUIRE EXTREME CARE IN FABRICATION, HANDLING, SHIPPING, INSTALLING AND BRACING. REFER TO BCSI 1-03 (BUILDING COMPONENT SAFETY INFORMATION), PUBLISHED BY TPI (TRUSS PLATE INSTITUTE, 583 D'ONOFRIO DR., SUITE 200, MADISON, WI 53719) AND WTCA (WOOD TRUSS COUNCIL OF AMERICA, 6300 ENTERPRISE LN, MADISON, WI 53719) FOR SAFETY PRACTICES PRIOR TO PERFORMING THESE FUNCTIONS. UNLESS OTHERWISE INDICATED, TOP CHORD SHALL HAVE PROPERLY ATTACHED STRUCTURAL PANELS AND BOTTOM CHORD SHALL HAVE A PROPERLY ATTACHED RIGID CEILING.

IMPORTANT FURNISH A COPY OF THIS DESIGN TO THE INSTALLATION CONTRACTOR. ALPINE ENGINEERED PRODUCTS, INC. SHALL NOT BE RESPONSIBLE FOR ANY DEVIATION FROM THIS DESIGN; ANY FAILURE TO BUILD THE TRUSS IN CONFORMANCE WITH TPI; OR FABRICATING, HANDLING, SHIPPING, INSTALLING & BRACING OF TRUSSES. DESIGN CONFORMS WITH APPLICABLE PROVISIONS OF NDS (NATIONAL DESIGN SPEC. BY AF&PA) AND TPI. ALPINE CONNECTOR PLATES ARE MADE OF 20/18/16GA (W,H/S/K) ASTM A653 GRADE 40/60 (W, K/H,S) GALV. STEEL. APPLY PLATES TO EACH FACE OF TRUSS AND, UNLESS OTHERWISE LOCATED ON THIS DESIGN, POSITION PER DRAWINGS 160A-Z. ANY INSPECTION OF PLATES FOLLOWED BY (1) SHALL BE PER ANNEX A3 OF TPI1-2002 SEC.3. A SEAL ON THIS DRAWING INDICATES ACCEPTANCE OF PROFESSIONAL ENGINEERING RESPONSIBILITY SOLELY FOR THE TRUSS COMPONENT DESIGN SHOWN. THE SUITABILITY AND USE OF THIS COMPONENT FOR ANY BUILDING IS THE RESPONSIBILITY OF THE BUILDING DESIGNER.

ARTHUR R. FISHER LICENSE No. 59687 STATE OF FLORIDA PROFESSIONAL ENGINEER

Feb 10 '06

TC LL	20.0 PSF	REF	R487-- 86608
TC DL	10.0 PSF	DATE	02/10/06
BC DL	10.0 PSF	DRW	HCUSR487 06041016
BC LL	0.0 PSF	HC-ENG	JB/AF *
TOT.LD.	40.0 PSF	SEQN-	82106
DUR.FAC.	1.25		

(0-004 GLENWOOD KING - BULLARD - JD2)

Top chord 2x4 SP #2 Dense
Bot chord 2x4 SP #2 Dense
Webs 2x4 SP #3

Left end vertical not exposed to wind pressure.

H = recommended connection based on manufacturer tested capacities and calculations. Conditions may exist that require different connections than indicated. Refer to manufacturer publication for additional information.

Provide (2) 16d common nails(0.162"x3.5"), toe nailed at Top chord.
Provide (2) 16d common nails(0.162"x3.5"), toe nailed at Bot chord.

110 mph wind, 15.00 ft mean hgt, ASCE 7-02, CLOSED bldg, not located within 4.50 ft from roof edge, CAT II, EXP B, wind TC DL=5.0 psf, wind BC DL=5.0 psf.

Calculated horizontal deflection is 0.26" due to live load and 0.17" due to dead load.

Deflection meets L/360 live and L/240 total load. Creep increase factor for dead load is 1.50.

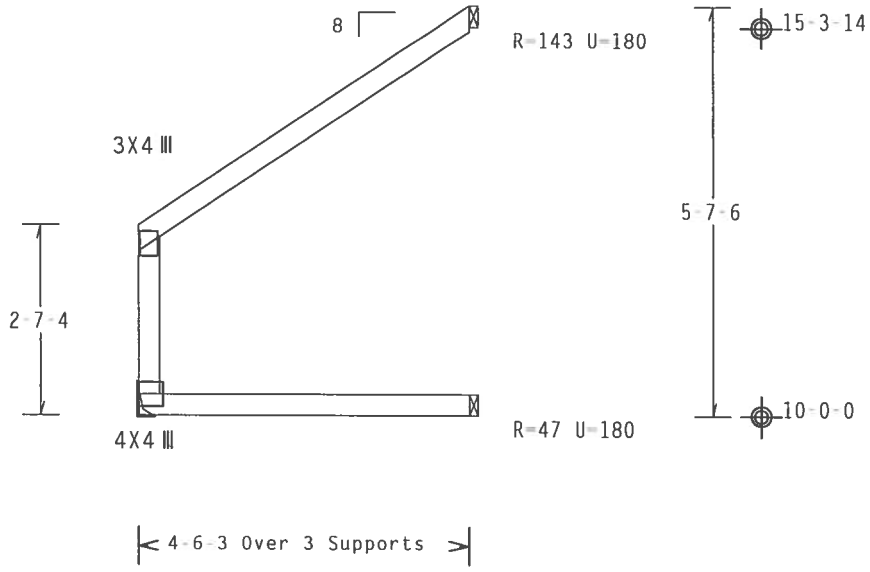

R-190 U-180 H-Simpson LU24
w/ (2) 10d, 0.148"x1.5" nails in Truss
w/ (4) 10d Common, 0.148"x3.0" nails in Girder
Girder is (1)2X4 min. So.Pine

Design Crit: TPI-2002(STD)/FBC

PLT TYP. Wave

Cq/RT=1.00(1.25)/10(0) 7.22.1 [illegible] Y:1 FL/-/4/-/-/R/- Scale =.375"/Ft.

WARNING TRUSSES REQUIRE EXTREME CARE IN FABRICATION, HANDLING, SHIPPING, INSTALLING AND BRACING. REFER TO BCSI 1-03 (BUILDING COMPONENT SAFETY INFORMATION), PUBLISHED BY TPI (TRUSS PLATE INSTITUTE, 583 D'ONOFRIO DR., SUITE 200, MADISON, WI 53719) AND WTCA (WOOD TRUSS COUNCIL OF AMERICA, 6300 ENTERPRISE LN, MADISON, WI 53719) FOR SAFETY PRACTICES PRIOR TO PERFORMING THESE FUNCTIONS. UNLESS OTHERWISE INDICATED, TOP CHORD SHALL HAVE PROPERLY ATTACHED STRUCTURAL PANELS AND BOTTOM CHORD SHALL HAVE A PROPERLY ATTACHED RIGID CEILING.

IMPORTANTFURNISH A COPY OF THIS DESIGN TO THE INSTALLATION CONTRACTOR. ALPINE ENGINEERED PRODUCTS, INC. SHALL NOT BE RESPONSIBLE FOR ANY DEVIATION FROM THIS DESIGN; ANY FAILURE TO BUILD THE TRUSS IN CONFORMANCE WITH TPI; OR FABRICATING, HANDLING, SHIPPING, INSTALLING & BRACING OF TRUSSES. DESIGN CONFORMS WITH APPLICABLE PROVISIONS OF NDS (NATIONAL DESIGN SPEC. BY AFAPA) AND TPI. ALPINE CONNECTOR PLATES ARE MADE OF 20/18/16GA (W,H/S/K) ASTM A653 GRADE 40/60 (W, K/H,S) GALV. STEEL. APPLY PLATES TO EACH FACE OF TRUSS AND, UNLESS OTHERWISE LOCATED ON THIS DESIGN, POSITION PER DRAWINGS 160A-Z. ANY INSPECTION OF PLATES FOLLOWED BY (1) SHALL BE PER ANNEX A3 OF TPI1-2002 SEC.3. A SEAL ON THIS DRAWING INDICATES ACCEPTANCE OF PROFESSIONAL ENGINEERING RESPONSIBILITY SOLELY FOR THE TRUSS COMPONENT DESIGN SHOWN. THE SUITABILITY AND USE OF THIS COMPONENT FOR ANY BUILDING IS THE RESPONSIBILITY OF THE BUILDING DESIGNER PER ANSI/TPI1-2002 SEC.2.

ALPINE
Alpine Engineered Products, Inc.
1950 Marley Drive

ARTHUR R. FISHER LICENSE No.59687 STATE OF FLORIDA PROFESSIONAL ENGINEER

Feb 10 '06

TC LL	20.0 PSF	REF	R487-- 86609
TC DL	10.0 PSF	DATE	02/10/06
BC DL	10.0 PSF	DRW	HCUSR487 06041017
BC LL	0.0 PSF	HC-ENG	JB/AF *
TOT.LD.	40.0 PSF	SEQN-	82115
DUR.FAC.	1.25		

Top chord 2x4 SP #2 Dense
Bot chord 2x4 SP #2 Dense
Webs 2x4 SP #3

Left end vertical not exposed to wind pressure.

H = recommended connection based on manufacturer tested capacities and calculations. Conditions may exist that require different connections than indicated. Refer to manufacturer publication for additional information.

Provide (2) 16d common nails(0.162"x3.5"), toe nailed at Top chord.
Provide (2) 16d common nails(0.162"x3.5"), toe nailed at Bot chord.

110 mph wind, 15.00 ft mean hgt, ASCE 7-02, CLOSED bldg, Located anywhere in roof, CAT II, EXP B, wind TC DL=5.0 psf, wind BC DL=5.0 psf.

Calculated horizontal deflection is 0.34" due to live load and 0.22" due to dead load.

Deflection meets L/360 live and L/240 total load. Creep increase factor for dead load is 1.50.

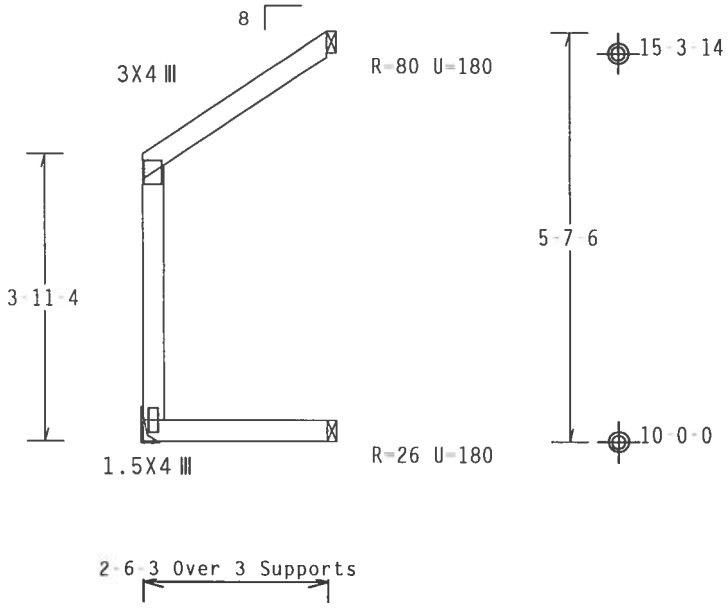

R=106 U=180 H=Simpson LU24
w/ (2) 10d, 0.148"x1.5" nails in Truss
w/ (4) 10d Common, 0.148"x3.0" nails in Girder
Girder is (1)2X4 min. So.Pine

Design Crit: TPI-2002(STD)/FBC

PLT TYP. Wave Cq/RT=1.00(1.25)/10(0) 7.22.1 TY:1 FL/-/4/-/-/R/- Scale =.375"/Ft.

ALPINE
Alpine Engineered Products, Inc.
1950 Marley Drive

WARNING TRUSSES REQUIRE EXTREME CARE IN FABRICATION, HANDLING, SHIPPING, INSTALLING AND BRACING. REFER TO BCSI 1-03 (BUILDING COMPONENT SAFETY INFORMATION), PUBLISHED BY TPI (TRUSS PLATE INSTITUTE, 583 D'ONOFRIO DR., SUITE 200, MADISON, WI 53719) AND WTCA (WOOD TRUSS COUNCIL OF AMERICA, 6300 ENTERPRISE LN, MADISON, WI 53719) FOR SAFETY PRACTICES PRIOR TO PERFORMING THESE FUNCTIONS. UNLESS OTHERWISE INDICATED, TOP CHORD SHALL HAVE PROPERLY ATTACHED STRUCTURAL PANELS AND BOTTOM CHORD SHALL HAVE A PROPERLY ATTACHED RIGID CEILING.

IMPORTANTFURNISH A COPY OF THIS DESIGN TO THE INSTALLATION CONTRACTOR. ALPINE ENGINEERED PRODUCTS, INC. SHALL NOT BE RESPONSIBLE FOR ANY DEVIATION FROM THIS DESIGN; ANY FAILURE TO BUILD THE TRUSS IN CONFORMANCE WITH TPI; OR FABRICATING, HANDLING, SHIPPING, INSTALLING & BRACING OF TRUSSES. DESIGN CONFORMS WITH APPLICABLE PROVISIONS OF NDS (NATIONAL DESIGN SPEC. BY AF&PA) AND TPI. ALPINE CONNECTOR PLATES ARE MADE OF 20/18/16GA (W,H/S/K) ASTM A653 GRADE 40/60 (W, K/H,S) GALV. STEEL. APPLY PLATES TO EACH FACE OF TRUSS AND, UNLESS OTHERWISE LOCATED ON THIS DESIGN, POSITION PER DRAWINGS 160A Z. ANY INSPECTION OF PLATES FOLLOWED BY (1) SHALL BE PER ANNEX A3 OF TPI 1-2002 SEC.3. A SEAL ON THIS DRAWING INDICATES ACCEPTANCE OF PROFESSIONAL ENGINEERING RESPONSIBILITY SOLELY FOR THE TRUSS COMPONENT

ARTHUR R. FISHER LICENSE No. 59687 STATE OF FLORIDA PROFESSIONAL ENGINEER
Feb 10, 2006

TC LL	20.0 PSF	REF	R487-- 86610
TC DL	10.0 PSF	DATE	02/10/06
BC DL	10.0 PSF	DRW	HCUSR487 06041018
BC LL	0.0 PSF	HC-ENG	JB/AF *
TOT.LD.	40.0 PSF	SEQN-	82122
DUR.FAC.	1.25		

(6-004-GLENWOOD KING - BULLARD - HJK)

Top chord 2x4 SP #2 Dense
Bot chord 2x4 SP #2 Dense
Webs 2x4 SP #3

Hipjack supports 6-0-0 setback jacks with no webs.

Provide (2) 16d common nails(0.162"x3.5"), toe nailed at Top chord.
Provide (2) 16d common nails(0.162"x3.5"), toe nailed at Bot chord.

110 mph wind, 15.00 ft mean hgt, ASCE 7-02, CLOSED bldg, Located anywhere in roof, CAT II, EXP B, wind TC DL=5.0 psf, wind BC DL=5.0 psf.

Deflection meets L/360 live and L/240 total load. Creep increase factor for dead load is 1.50.

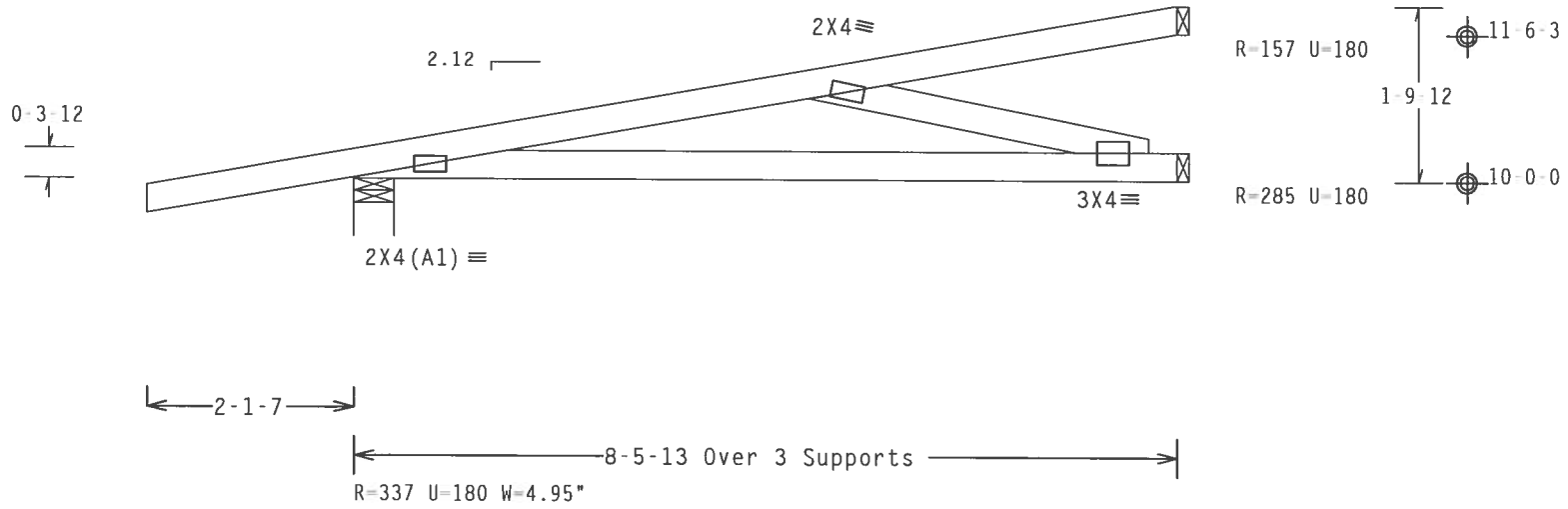

Design Crit: TPI-2002(STD)/FBC

PLT TYP. Wave

Cq/RT=1.00(1.25)/10(0) 7.22.1 QTY:1 FL/-/4/-/-/R/- Scale =.5"/Ft.

WARNING TRUSSES REQUIRE EXTREME CARE IN FABRICATION, HANDLING, SHIPPING, INSTALLING AND BRACING. REFER TO BCSI 1-03 (BUILDING COMPONENT SAFETY INFORMATION), PUBLISHED BY TPI (TRUSS PLATE INSTITUTE, 583 D'ONOFRIO DR., SUITE 200, MADISON, WI 53719) AND WTCA (WOOD TRUSS COUNCIL OF AMERICA, 6300 ENTERPRISE LN, MADISON, WI 53719) FOR SAFETY PRACTICES PRIOR TO PERFORMING THESE FUNCTIONS. UNLESS OTHERWISE INDICATED, TOP CHORD SHALL HAVE PROPERLY ATTACHED STRUCTURAL PANELS AND BOTTOM CHORD SHALL HAVE A PROPERLY ATTACHED RIGID CEILING.

IMPORTANTFURNISH A COPY OF THIS DESIGN TO THE INSTALLATION CONTRACTOR. ALPINE ENGINEERED PRODUCTS, INC. SHALL NOT BE RESPONSIBLE FOR ANY DEVIATION FROM THIS DESIGN; ANY FAILURE TO BUILD THE TRUSS IN CONFORMANCE WITH TPI; OR FABRICATING, HANDLING, SHIPPING, INSTALLING & BRACING OF TRUSSES. DESIGN CONFORMS WITH APPLICABLE PROVISIONS OF NDS (NATIONAL DESIGN SPEC. BY AF&PA) AND TPI. ALPINE CONNECTOR PLATES ARE MADE OF 20/18/16GA (W,H/S/K) ASTM A653 GRADE 40/60 (W, K/H,S) GALV. STEEL. APPLY PLATES TO EACH FACE OF TRUSS AND, UNLESS OTHERWISE LOCATED ON THIS DESIGN, POSITION PER DRAWINGS 160A-Z. ANY INSPECTION OF PLATES FOLLOWED BY (1) SHALL BE PER ANNEX A3 OF TPI1-2002 SEC.3. A SEAL ON THIS DRAWING INDICATES ACCEPTANCE OF PROFESSIONAL ENGINEERING RESPONSIBILITY SOLELY FOR THE TRUSS COMPONENT

ALPINE
Alpine Engineered Products, Inc.
1950 Marley Drive

ARTHUR R. FISHER
LICENSE
No. 59687
STATE OF FLORIDA
PROFESSIONAL ENGINEER

Feb 10 '06

TC LL	20.0 PSF	REF	R487-- 86611
TC DL	10.0 PSF	DATE	02/10/06
BC DL	10.0 PSF	DRW	HCUSR487 06041067
BC LL	0.0 PSF	HC-ENG	JB/AF
TOT.LD.	40.0 PSF	SEQN-	28098
DUR.FAC.	1.25		

(6-004-GLENWOOD KING - BULLARD - EJK1)

Top chord 2x4 SP #2 Dense
Bot chord 2x4 SP #2 Dense

Deflection meets L/360 live and L/240 total load. Creep increase factor for dead load is 1.50.

110 mph wind, 15.00 ft mean hgt, ASCE 7-02, CLOSED bldg, not located within 4.50 ft from roof edge, CAT II, EXP B, wind TC DL=5.0 psf, wind BC DL=5.0 psf.

Provide (2) 16d common nails(0.162"x3.5"), toe nailed at Top chord.
Provide (2) 16d common nails(0.162"x3.5"), toe nailed at Bot chord.

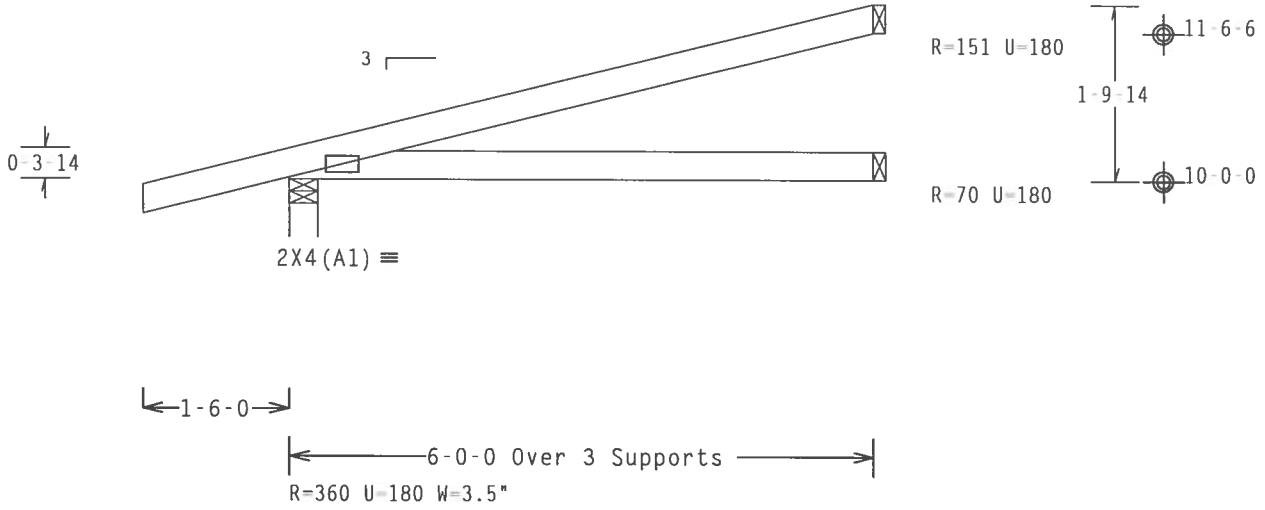

Design Crit: TPI-2002(STD)/FBC

PLT TYP. Wave

Cq/RT=1.00(1.25)/10(0) 7.22.1 [illegible] Y:2 FL/-/4/-/-/R/- Scale =.5"/Ft.

ALPINE
Alpine Engineered Products, Inc.
1950 Marley Drive

WARNING TRUSSES REQUIRE EXTREME CARE IN FABRICATION, HANDLING, SHIPPING, INSTALLING AND BRACING. REFER TO BCSI 1-03 (BUILDING COMPONENT SAFETY INFORMATION), PUBLISHED BY TPI (TRUSS PLATE INSTITUTE, 583 D'ONOFRIO DR., SUITE 200, MADISON, WI 53719) AND WTCA (WOOD TRUSS COUNCIL OF AMERICA, 6300 ENTERPRISE LN, MADISON, WI 53719) FOR SAFETY PRACTICES PRIOR TO PERFORMING THESE FUNCTIONS. UNLESS OTHERWISE INDICATED, TOP CHORD SHALL HAVE PROPERLY ATTACHED STRUCTURAL PANELS AND BOTTOM CHORD SHALL HAVE A PROPERLY ATTACHED RIGID CEILING.

IMPORTANTFURNISH A COPY OF THIS DESIGN TO THE INSTALLATION CONTRACTOR. ALPINE ENGINEERED PRODUCTS, INC. SHALL NOT BE RESPONSIBLE FOR ANY DEVIATION FROM THIS DESIGN; ANY FAILURE TO BUILD THE TRUSS IN CONFORMANCE WITH TPI; OR FABRICATING, HANDLING, SHIPPING, INSTALLING & BRACING OF TRUSSES. DESIGN CONFORMS WITH APPLICABLE PROVISIONS OF NDS (NATIONAL DESIGN SPEC. BY AF&PA) AND TPI. ALPINE CONNECTOR PLATES ARE MADE OF 20/18/16GA (W,H/S/K) ASTM A653 GRADE 40/60 (W, K/H,S) GALV. STEEL. APPLY PLATES TO EACH FACE OF TRUSS AND, UNLESS OTHERWISE LOCATED ON THIS DESIGN, POSITION PER DRAWINGS 160A-Z. ANY INSPECTION OF PLATES FOLLOWED BY (1) SHALL BE PER ANNEX A3 OF TPI1-2002 SEC.3. A SEAL ON THIS DRAWING INDICATES ACCEPTANCE OF PROFESSIONAL ENGINEERING RESPONSIBILITY SOLELY FOR THE TRUSS COMPONENT

ARTHUR R. FISHER
LICENSE
No.59687
STATE OF FLORIDA
PROFESSIONAL ENGINEER

Feb 10 '06

TC LL	20.0 PSF	REF	R487-- 86612
TC DL	10.0 PSF	DATE	02/10/06
BC DL	10.0 PSF	DRW	HCUSR487 06041068
BC LL	0.0 PSF	HC-ENG	JB/AF
TOT.LD.	40.0 PSF	SEQN-	28076
DUR.FAC.	1.25		

Top chord 2x4 SP #2 Dense
Bot chord 2x4 SP #2 Dense

Deflection meets L/360 live and L/240 total load. Creep increase factor for dead load is 1.50.

110 mph wind, 15.00 ft mean hgt, ASCE 7-02, CLOSED bldg, not located within 4.50 ft from roof edge, CAT II, EXP B, wind TC DL=5.0 psf, wind BC DL=5.0 psf.

Provide (2) 16d common nails(0.162"x3.5"), toe nailed at Top chord.
Provide (2) 16d common nails(0.162"x3.5"), toe nailed at Bot chord.

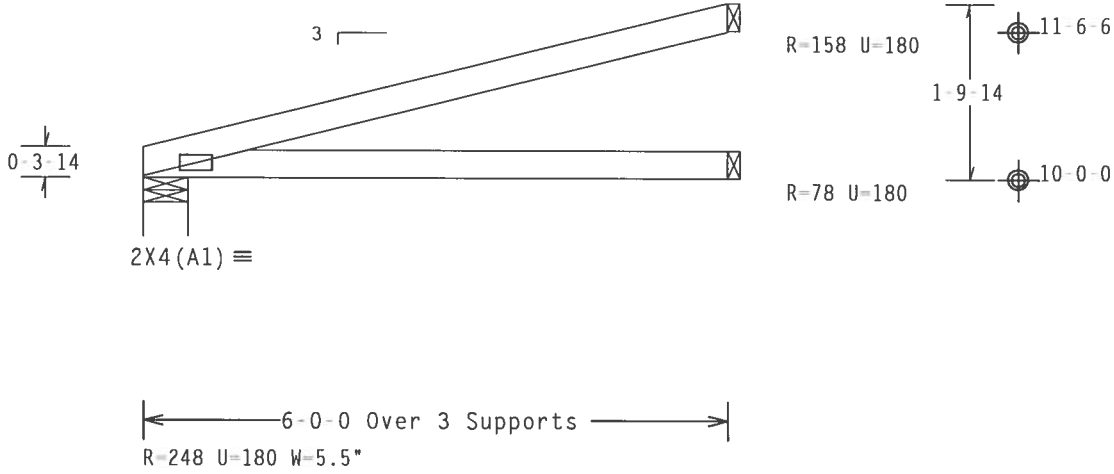

Design Crit: TPI-2002(STD)/FBC
PLT TYP. Wave Cq/RT=1.00(1.25)/10(0) 7.22.1 QTY:4 FL/-/4/-/-/R/- Scale =.5"/Ft.

ALPINE
Alpine Engineered Products, Inc.
1950 Marley Drive

WARNING TRUSSES REQUIRE EXTREME CARE IN FABRICATION, HANDLING, SHIPPING, INSTALLING AND BRACING. REFER TO BCSI 1-03 (BUILDING COMPONENT SAFETY INFORMATION), PUBLISHED BY TPI (TRUSS PLATE INSTITUTE, 583 D'ONOFRIO DR., SUITE 200, MADISON, WI 53719) AND WTCA (WOOD TRUSS COUNCIL OF AMERICA, 6300 ENTERPRISE LN, MADISON, WI 53719) FOR SAFETY PRACTICES PRIOR TO PERFORMING THESE FUNCTIONS. UNLESS OTHERWISE INDICATED, TOP CHORD SHALL HAVE PROPERLY ATTACHED STRUCTURAL PANELS AND BOTTOM CHORD SHALL HAVE A PROPERLY ATTACHED RIGID CEILING.

IMPORTANTFURNISH A COPY OF THIS DESIGN TO THE INSTALLATION CONTRACTOR. ALPINE ENGINEERED PRODUCTS, INC. SHALL NOT BE RESPONSIBLE FOR ANY DEVIATION FROM THIS DESIGN; ANY FAILURE TO BUILD THE TRUSS IN CONFORMANCE WITH TPI; OR FABRICATING, HANDLING, SHIPPING, INSTALLING & BRACING OF TRUSSES. DESIGN CONFORMS WITH APPLICABLE PROVISIONS OF NDS (NATIONAL DESIGN SPEC, BY AF&PA) AND TPI. ALPINE CONNECTOR PLATES ARE MADE OF 20/18/16GA (W,H/S/K) ASTM A653 GRADE 40/60 (W, K/H,S) GALV. STEEL. APPLY PLATES TO EACH FACE OF TRUSS AND, UNLESS OTHERWISE LOCATED ON THIS DESIGN, POSITION PER DRAWINGS 160A Z. ANY INSPECTION OF PLATES FOLLOWED BY (1) SHALL BE PER ANNEX A3 OF TPI1 2002 SEC.3. A SEAL ON THIS DRAWING INDICATES ACCEPTANCE OF PROFESSIONAL ENGINEERING RESPONSIBILITY SOLELY FOR THE TRUSS COMPONENT

ARTHUR R. FISHER
LICENSE
No. 59687
STATE OF FLORIDA
PROFESSIONAL ENGINEER
Feb 17 '06

TC LL	20.0 PSF	REF	R487-- 86613
TC DL	10.0 PSF	DATE	02/10/06
BC DL	10.0 PSF	DRW	HCUSR487 06041069
BC LL	0.0 PSF	HC-ENG	JB/AF
TOT.LD.	40.0 PSF	SEQN-	28073
DUR.FAC.	1.25		

Top chord 2x4 SP #2 Dense
Bot chord 2x4 SP #2 Dense

Deflection meets L/360 live and L/240 total load. Creep increase factor for dead load is 1.50.

110 mph wind, 15.00 ft mean hgt, ASCE 7-02, CLOSED bldg, not located within 4.50 ft from roof edge, CAT II, EXP B, wind TC DL=5.0 psf, wind BC DL=5.0 psf.

Provide (2) 16d common nails(0.162"x3.5"), toe nailed at Top chord.
Provide (2) 16d common nails(0.162"x3.5"), toe nailed at Bot chord.

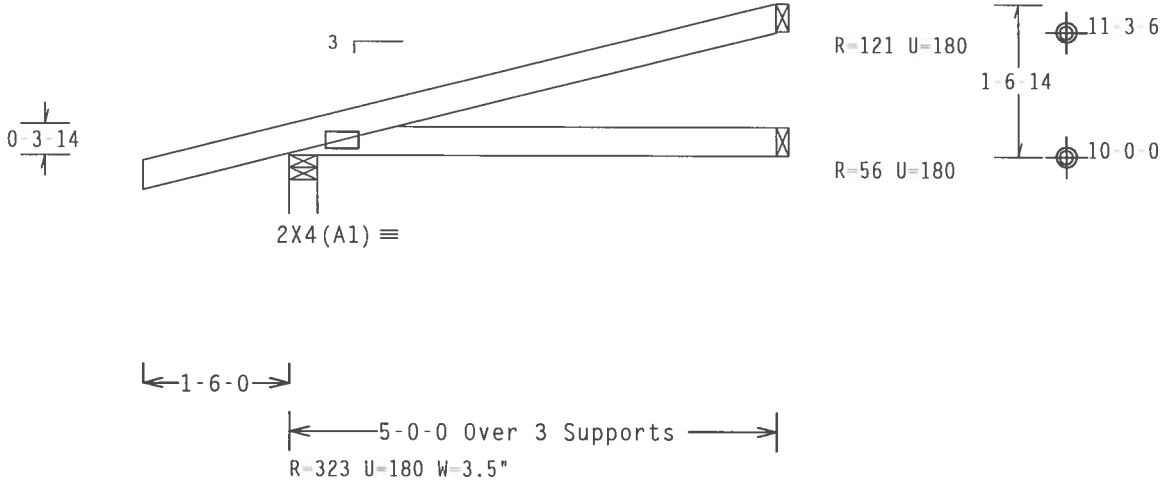

Design Crit: TPI-2002(STD)/FBC

PLT TYP. Wave Cq/RT=1.00(1.25)/10(0) 7.22.1 QTY:2 FL/-/4/-/-/R/- Scale =.5"/Ft.

ALPINE
Alpine Engineered Products, Inc.
1950 Marley Drive

WARNING TRUSSES REQUIRE EXTREME CARE IN FABRICATION, HANDLING, SHIPPING, INSTALLING AND BRACING. REFER TO BCSI 1-03 (BUILDING COMPONENT SAFETY INFORMATION), PUBLISHED BY TPI (TRUSS PLATE INSTITUTE, 583 D'ONOFRIO DR., SUITE 200, MADISON, WI 53719) AND WTCA (WOOD TRUSS COUNCIL OF AMERICA, 6300 ENTERPRISE LN, MADISON, WI 53719) FOR SAFETY PRACTICES PRIOR TO PERFORMING THESE FUNCTIONS. UNLESS OTHERWISE INDICATED, TOP CHORD SHALL HAVE PROPERLY ATTACHED STRUCTURAL PANELS AND BOTTOM CHORD SHALL HAVE A PROPERLY ATTACHED RIGID CEILING.

IMPORTANTFURNISH A COPY OF THIS DESIGN TO THE INSTALLATION CONTRACTOR. ALPINE ENGINEERED PRODUCTS, INC. SHALL NOT BE RESPONSIBLE FOR ANY DEVIATION FROM THIS DESIGN; ANY FAILURE TO BUILD THE TRUSS IN CONFORMANCE WITH TPI; OR FABRICATING, HANDLING, SHIPPING, INSTALLING & BRACING OF TRUSSES. DESIGN CONFORMS WITH APPLICABLE PROVISIONS OF NDS (NATIONAL DESIGN SPEC. BY AFAPA) AND TPI. ALPINE CONNECTOR PLATES ARE MADE OF 20/18/16GA (W,H/S/K) ASTM A653 GRADE 40/60 (W, K/H,S) GALV. STEEL. APPLY PLATES TO EACH FACE OF TRUSS AND, UNLESS OTHERWISE LOCATED ON THIS DESIGN, POSITION PER DRAWINGS 160A-7. ANY INSPECTION OF PLATES FOLLOWED BY (1) SHALL BE PER ANNEX A3 OF TPI1 2002 SEC.3. A SEAL ON THIS DRAWING INDICATES ACCEPTANCE OF PROFESSIONAL ENGINEERING RESPONSIBILITY SOLELY FOR THE TRUSS COMPONENT

ARTHUR R. FISHER LICENSE No.59687 STATE OF FLORIDA PROFESSIONAL ENGINEER
Feb 10 '06

TC LL	20.0 PSF	REF	R487-- 86614
TC DL	10.0 PSF	DATE	02/10/06
BC DL	10.0 PSF	DRW	HCUSR487 06041070
BC LL	0.0 PSF	HC-ENG	JB/AF
TOT.LD.	40.0 PSF	SEQN-	28078
DUR.FAC.	1.25		

(6-004-GLENWOOD KING - BULLARD - J3K)

Top chord 2x4 SP #2 Dense
Bot chord 2x4 SP #2 Dense

Deflection meets L/360 live and L/240 total load. Creep increase factor for dead load is 1.50.

110 mph wind, 15.00 ft mean hgt, ASCE 7-02, CLOSED bldg, Located anywhere in roof, CAT II, EXP B, wind TC DL=5.0 psf, wind BC DL=5.0 psf.

Provide (2) 16d common nails(0.162"x3.5"), toe nailed at Top chord.
Provide (2) 16d common nails(0.162"x3.5"), toe nailed at Bot chord.

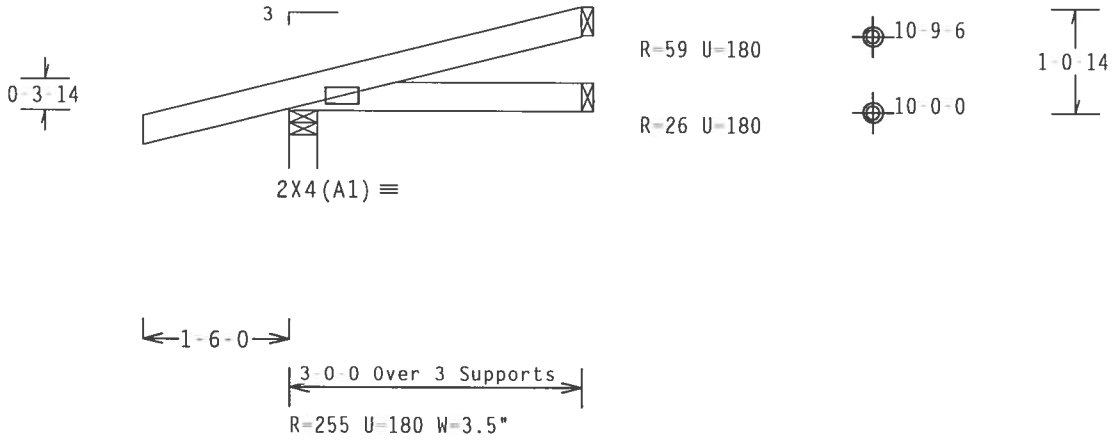

Design Crit: TPI-2002(STD)/FBC

PLT TYP. Wave Cq/RT=1.00(1.25)/10(0) 7.22.11 QTY:2 FL/-/4/-/-/R/- Scale =.5"/Ft.

ALPINE
Alpine Engineered Products, Inc.
1950 Marley Drive

WARNING TRUSSES REQUIRE EXTREME CARE IN FABRICATION, HANDLING, SHIPPING, INSTALLING AND BRACING. REFER TO BCSI 1-03 (BUILDING COMPONENT SAFETY INFORMATION), PUBLISHED BY TPI (TRUSS PLATE INSTITUTE, 583 D'ONOFRIO DR., SUITE 200, MADISON, WI 53719) AND WTCA (WOOD TRUSS COUNCIL OF AMERICA, 6300 ENTERPRISE LN, MADISON, WI 53719) FOR SAFETY PRACTICES PRIOR TO PERFORMING THESE FUNCTIONS. UNLESS OTHERWISE INDICATED, TOP CHORD SHALL HAVE PROPERLY ATTACHED STRUCTURAL PANELS AND BOTTOM CHORD SHALL HAVE A PROPERLY ATTACHED RIGID CEILING.

IMPORTANTFURNISH A COPY OF THIS DESIGN TO THE INSTALLATION CONTRACTOR. ALPINE ENGINEERED PRODUCTS, INC. SHALL NOT BE RESPONSIBLE FOR ANY DEVIATION FROM THIS DESIGN; ANY FAILURE TO BUILD THE TRUSS IN CONFORMANCE WITH TPI; OR FABRICATING, HANDLING, SHIPPING, INSTALLING & BRACING OF TRUSSES. DESIGN CONFORMS WITH APPLICABLE PROVISIONS OF NDS (NATIONAL DESIGN SPEC. BY AF&PA) AND TPI. ALPINE CONNECTOR PLATES ARE MADE OF 20/18/16GA (W,H/S/K) ASTM A653 GRADE 40/60 (W, K/H,S) GALV. STEEL. APPLY PLATES TO EACH FACE OF TRUSS AND, UNLESS OTHERWISE LOCATED ON THIS DESIGN, POSITION PER DRAWINGS 160A-Z. ANY INSPECTION OF PLATES FOLLOWED BY (1) SHALL BE PER ANNEX A3 OF TPI1-2002 SEC.3. A SEAL ON THIS DRAWING INDICATES ACCEPTANCE OF PROFESSIONAL ENGINEERING RESPONSIBILITY SOLELY FOR THE TRUSS COMPONENT DESIGN SHOWN. THE SUITABILITY AND USE OF THIS COMPONENT FOR ANY BUILDING IS THE RESPONSIBILITY OF THE

ARTHUR R. FISHER
LICENSE
No. 59687
STATE OF FLORIDA
PROFESSIONAL ENGINEER
Feb 10 '06

TC LL	20.0 PSF	REF	R487-- 86615
TC DL	10.0 PSF	DATE	02/10/06
BC DL	10.0 PSF	DRW	HCUSR487 06041071
BC LL	0.0 PSF	HC-ENG	JB/AF
TOT.LD.	40.0 PSF	SEQN-	28081
DUR.FAC.	1.25		

(6-004-GLENWOOD KING - BULLARD - J1K)

Top chord 2x4 SP #2 Dense
Bot chord 2x4 SP #2 Dense

Deflection meets L/360 live and L/240 total load. Creep increase factor for dead load is 1.50.

110 mph wind, 15.00 ft mean hgt, ASCE 7-02, CLOSED bldg, Located anywhere in roof, CAT II, EXP B, wind TC DL=5.0 psf, wind BC DL=5.0 psf.

Provide (2) 16d common nails(0.162"x3.5"), toe nailed at Top chord.
Provide (2) 16d common nails(0.162"x3.5"), toe nailed at Bot chord.

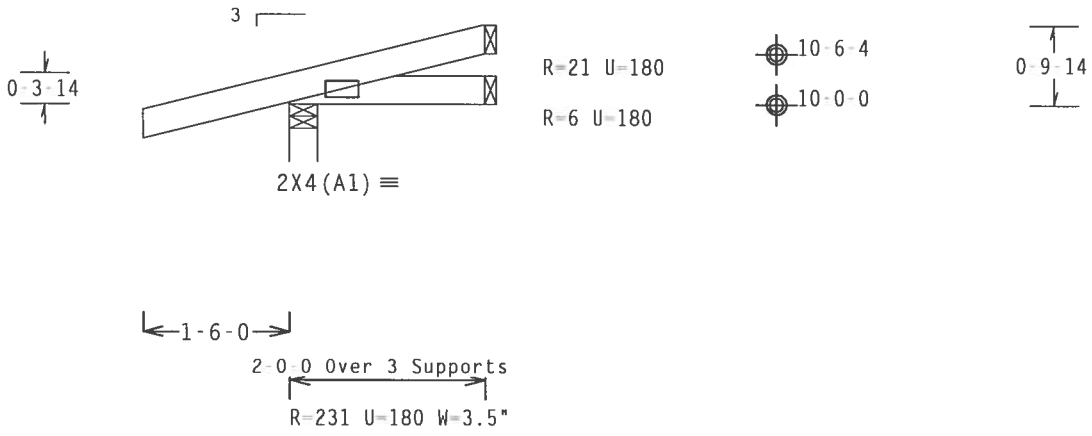

Design Crit: TPI-2002(STD)/FBC

PLT TYP. Wave Cq/RT=1.00(1.25)/10(0) 7.22.1 QTY:2 FL/-/4/-/-/R/- Scale =.5"/Ft.

ALPINE
Alpine Engineered Products, Inc.
1950 Morley Drive

WARNING TRUSSES REQUIRE EXTREME CARE IN FABRICATION, HANDLING, SHIPPING, INSTALLING AND BRACING. REFER TO BCSI 1-03 (BUILDING COMPONENT SAFETY INFORMATION), PUBLISHED BY TPI (TRUSS PLATE INSTITUTE, 583 D'ONOFRIO DR., SUITE 200, MADISON, WI 53719) AND WTCA (WOOD TRUSS COUNCIL OF AMERICA, 6300 ENTERPRISE LN, MADISON, WI 53719) FOR SAFETY PRACTICES PRIOR TO PERFORMING THESE FUNCTIONS. UNLESS OTHERWISE INDICATED, TOP CHORD SHALL HAVE PROPERLY ATTACHED STRUCTURAL PANELS AND BOTTOM CHORD SHALL HAVE A PROPERLY ATTACHED RIGID CEILING.

IMPORTANT FURNISH A COPY OF THIS DESIGN TO THE INSTALLATION CONTRACTOR. ALPINE ENGINEERED PRODUCTS, INC. SHALL NOT BE RESPONSIBLE FOR ANY DEVIATION FROM THIS DESIGN; ANY FAILURE TO BUILD THE TRUSS IN CONFORMANCE WITH TPI; OR FABRICATING, HANDLING, SHIPPING, INSTALLING & BRACING OF TRUSSES. DESIGN CONFORMS WITH APPLICABLE PROVISIONS OF NDS (NATIONAL DESIGN SPEC. BY AF&PA) AND TPI. ALPINE CONNECTOR PLATES ARE MADE OF 20/18/16GA (W,H/S/K) ASTM A653 GRADE 40/60 (W, K/H,S) GALV. STEEL. APPLY PLATES TO EACH FACE OF TRUSS AND, UNLESS OTHERWISE LOCATED ON THIS DESIGN, POSITION PER DRAWINGS 160A-Z. ANY INSPECTION OF PLATES FOLLOWED BY (1) SHALL BE PER ANNEX A3 OF TPI1-2002 SEC.3. A SEAL ON THIS DRAWING INDICATES ACCEPTANCE OF PROFESSIONAL ENGINEERING RESPONSIBILITY SOLELY FOR THE TRUSS COMPONENT

ARTHUR R. FISHER LICENSE No.59687 STATE OF FLORIDA PROFESSIONAL ENGINEER
Feb 10 '06

TC LL	20.0 PSF	REF R487-- 86616
TC DL	10.0 PSF	DATE 02/10/06
BC DL	10.0 PSF	DRW HCUSR487 06041072
BC LL	0.0 PSF	HC-ENG JB/AF
TOT.LD.	40.0 PSF	SEQN- 28088
DUR.FAC.	1.25	

(6-004-GLENWOOD KING - BULLARD - JR1)

Top chord 2x4 SP #2 Dense
Bot chord 2x4 SP #2 Dense
Webs 2x4 SP #3

Deflection meets L/360 live and L/240 total load. Creep increase factor for dead load is 1.50.

110 mph wind, 15.00 ft mean hgt, ASCE 7-02, CLOSED bldg, Located anywhere in roof, CAT II, EXP B, wind TC DL=5.0 psf, wind BC DL=5.0 psf.

Provide (2) 16d common nails(0.162"x3.5"), toe nailed at Top chord.
Provide (2) 16d common nails(0.162"x3.5"), toe nailed at Bot chord.

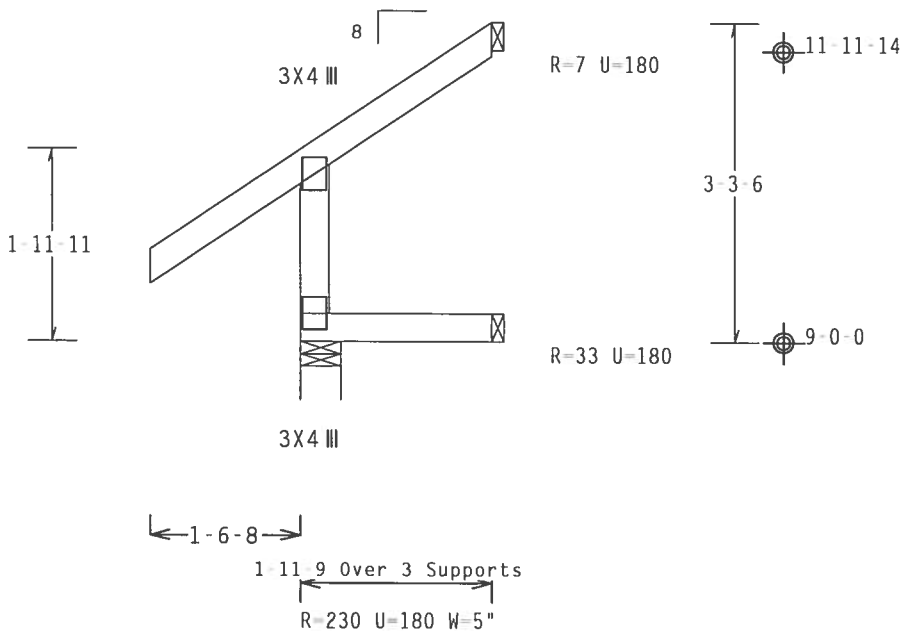

Design Crit: TPI-2002(STD)/FBC

PLT TYP. Wave

Cq/RT=1.00(1.25)/10(0) 7.22.11 QTY:1 FL/-/4/-/-/R/- Scale =.5"/Ft.

WARNING TRUSSES REQUIRE EXTREME CARE IN FABRICATION, HANDLING, SHIPPING, INSTALLING AND BRACING. REFER TO BCSI 1-03 (BUILDING COMPONENT SAFETY INFORMATION), PUBLISHED BY TPI (TRUSS PLATE INSTITUTE, 583 D'ONOFRIO DR., SUITE 200, MADISON, WI 53719) AND WTCA (WOOD TRUSS COUNCIL OF AMERICA, 6300 ENTERPRISE LN, MADISON, WI 53719) FOR SAFETY PRACTICES PRIOR TO PERFORMING THESE FUNCTIONS. UNLESS OTHERWISE INDICATED, TOP CHORD SHALL HAVE PROPERLY ATTACHED STRUCTURAL PANELS AND BOTTOM CHORD SHALL HAVE A PROPERLY ATTACHED RIGID CEILING.

IMPORTANT FURNISH A COPY OF THIS DESIGN TO THE INSTALLATION CONTRACTOR. ALPINE ENGINEERED PRODUCTS, INC. SHALL NOT BE RESPONSIBLE FOR ANY DEVIATION FROM THIS DESIGN; ANY FAILURE TO BUILD THE TRUSS IN CONFORMANCE WITH TPI; OR FABRICATING, HANDLING, SHIPPING, INSTALLING & BRACING OF TRUSSES. DESIGN CONFORMS WITH APPLICABLE PROVISIONS OF NDS (NATIONAL DESIGN SPEC. BY AF&PA) AND TPI. ALPINE CONNECTOR PLATES ARE MADE OF 20/18/16GA (W,H/S/K) ASTM A653 GRADE 40/60 (W, K/H,S) GALV. STEEL. APPLY PLATES TO EACH FACE OF TRUSS AND, UNLESS OTHERWISE LOCATED ON THIS DESIGN, POSITION PER DRAWINGS 160A Z. ANY INSPECTION OF PLATES FOLLOWED BY (1) SHALL BE PER ANNEX A3 OF TPI1-2002 SEC.3. A SEAL ON THIS DRAWING INDICATES ACCEPTANCE OF PROFESSIONAL ENGINEERING RESPONSIBILITY SOLELY FOR THE TRUSS COMPONENT DESIGN SHOWN. THE SUITABILITY AND USE OF THIS COMPONENT FOR ANY BUILDING IS THE RESPONSIBILITY OF THE

ALPINE
Alpine Engineered Products, Inc.
1950 Marley Drive

ARTHUR R. FISHER
LICENSE
No. 59687
STATE OF FLORIDA
PROFESSIONAL ENGINEER

Feb 10 '06

TC LL	20.0 PSF	REF	R487-- 86617
TC DL	10.0 PSF	DATE	02/10/06
BC DL	10.0 PSF	DRW	HCUSR487 06041019
BC LL	0.0 PSF	HC-ENG	JB/AF *
TOT.LD.	40.0 PSF	SEQN-	27999
DUR.FAC.	1.25		

(6-004-GLENWOOD KING - BULLARD - JR2)

Top chord 2x4 SP #2 Dense
Bot chord 2x4 SP #2 Dense
Webs 2x4 SP #2 Dense

Calculated horizontal deflection is 0.17" due to live load and 0.10" due to dead load.

Provide (2) 16d common nails(0.162"x3.5"), toe nailed at Top chord.
Provide (2) 16d common nails(0.162"x3.5"), toe nailed at Bot chord.

110 mph wind, 15.00 ft mean hgt, ASCE 7-02, CLOSED bldg, Located anywhere in roof, CAT II, EXP B, wind TC DL=5.0 psf, wind BC DL=5.0 psf.

Deflection meets L/360 live and L/240 total load. Creep increase factor for dead load is 1.50.

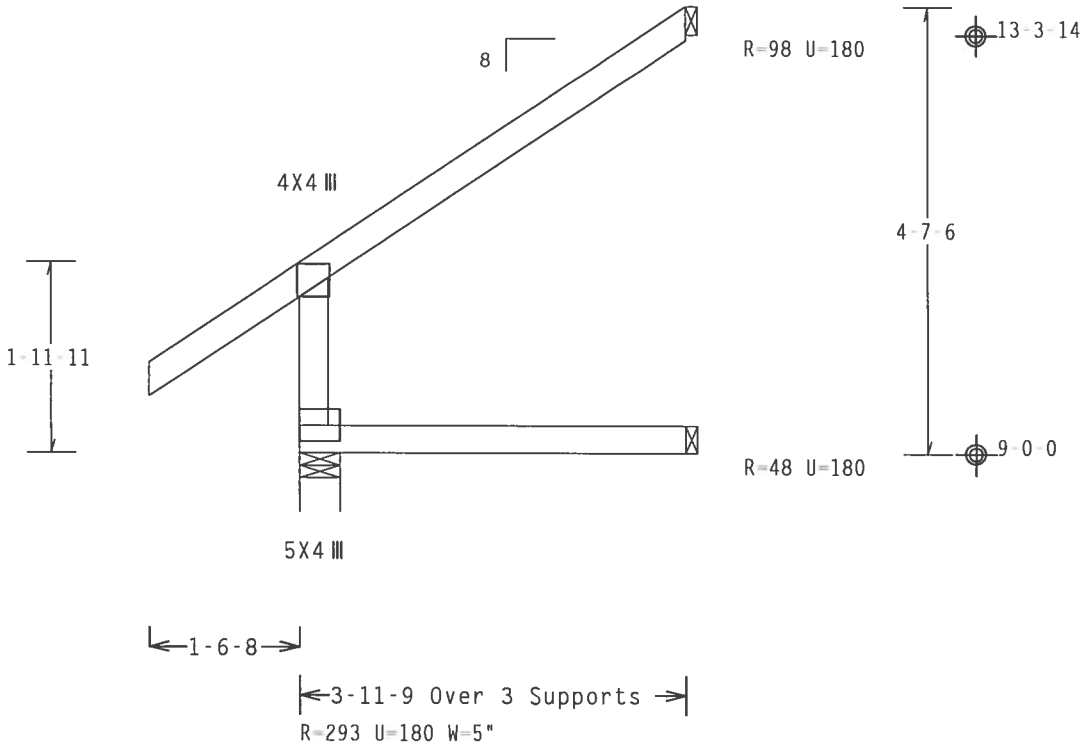

Design Crit: TPI-2002(STD)/FBC
Cq/RT=1.00(1.25)/10(0) 7.22.1 QTY:1 FL/-/4/-/-/R/- Scale =.5"/Ft.

PLT TYP. Wave

ALPINE
Alpine Engineered Products, Inc.
1950 Marley Drive

WARNING TRUSSES REQUIRE EXTREME CARE IN FABRICATION, HANDLING, SHIPPING, INSTALLING AND BRACING. REFER TO BCSI 1-03 (BUILDING COMPONENT SAFETY INFORMATION), PUBLISHED BY TPI (TRUSS PLATE INSTITUTE, 583 D'ONOFRIO DR., SUITE 200, MADISON, WI 53719) AND WTCA (WOOD TRUSS COUNCIL OF AMERICA, 6300 ENTERPRISE LN, MADISON, WI 53719) FOR SAFETY PRACTICES PRIOR TO PERFORMING THESE FUNCTIONS. UNLESS OTHERWISE INDICATED, TOP CHORD SHALL HAVE PROPERLY ATTACHED STRUCTURAL PANELS AND BOTTOM CHORD SHALL HAVE A PROPERLY ATTACHED RIGID CEILING.

IMPORTANTFURNISH A COPY OF THIS DESIGN TO THE INSTALLATION CONTRACTOR. ALPINE ENGINEERED PRODUCTS, INC. SHALL NOT BE RESPONSIBLE FOR ANY DEVIATION FROM THIS DESIGN; ANY FAILURE TO BUILD THE TRUSS IN CONFORMANCE WITH TPI; OR FABRICATING, HANDLING, SHIPPING, INSTALLING & BRACING OF TRUSSES. DESIGN CONFORMS WITH APPLICABLE PROVISIONS OF NDS (NATIONAL DESIGN SPEC, BY AF&PA) AND TPI. ALPINE CONNECTOR PLATES ARE MADE OF 20/18/16GA (W,H/S/K) ASTM A653 GRADE 40/60 (W, K/H,S) GALV. STEEL. APPLY PLATES TO EACH FACE OF TRUSS AND, UNLESS OTHERWISE LOCATED ON THIS DESIGN, POSITION PER DRAWINGS 160A Z. ANY INSPECTION OF PLATES FOLLOWED BY (I) SHALL BE PER ANNEX A3 OF TPI1 2002 SEC.3. A SEAL ON THIS DRAWING INDICATES ACCEPTANCE OF PROFESSIONAL ENGINEERING RESPONSIBILITY SOLELY FOR THE TRUSS COMPONENT

ARTHUR R. FISHER LICENSE No.59687 STATE OF FLORIDA PROFESSIONAL ENGINEER

Feb 10 '06

TC LL	20.0 PSF	REF	R487-- 86618
TC DL	10.0 PSF	DATE	02/10/06
BC DL	10.0 PSF	DRW	HCUSR487 06041020
BC LL	0.0 PSF	HC-ENG	JB/AF *
TOT.LD.	40.0 PSF	SEQN-	27993
DUR.FAC.	1.25		

(6-004-GLENWOOD KING - BULLARD - JR3)

Top chord 2x4 SP #2 Dense
Bot chord 2x4 SP #2 Dense
:Lt Stubbed Wedge 2x6 SP #2:

Deflection meets L/360 live and L/240 total load. Creep increase factor for dead load is 1.50.

110 mph wind, 15.00 ft mean hgt, ASCE 7-02, CLOSED bldg, Located anywhere in roof, CAT II, EXP B, wind TC DL=5.0 psf, wind BC DL=5.0 psf.

Provide (2) 16d common nails(0.162"x3.5"), toe nailed at Top chord.
Provide (2) 16d common nails(0.162"x3.5"), toe nailed at Bot chord.

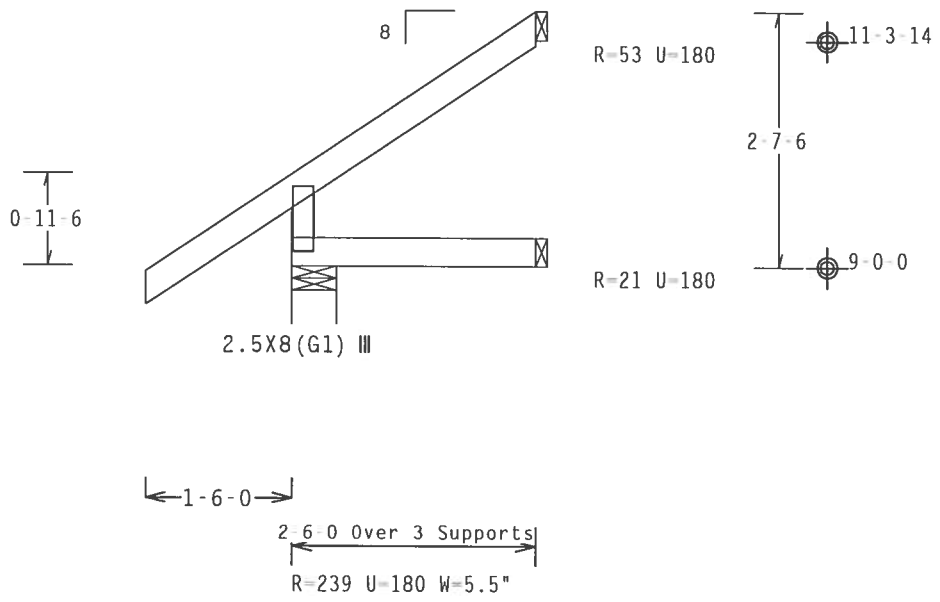

Design Crit: TPI-2002(STD)/FBC

PLT TYP. Wave

Cq/RT=1.00(1.25)/10(0) 7.22.1 QTY:1 FL/-/4/-/-/R/- Scale =.5"/Ft.

ALPINE
Alpine Engineered Products, Inc.
1950 Marley Drive

WARNING TRUSSES REQUIRE EXTREME CARE IN FABRICATION, HANDLING, SHIPPING, INSTALLING AND BRACING. REFER TO BCSI 1-03 (BUILDING COMPONENT SAFETY INFORMATION), PUBLISHED BY TPI (TRUSS PLATE INSTITUTE, 583 D'ONOFRIO DR., SUITE 200, MADISON, WI 53719) AND WTCA (WOOD TRUSS COUNCIL OF AMERICA, 6300 ENTERPRISE LN, MADISON, WI 53719) FOR SAFETY PRACTICES PRIOR TO PERFORMING THESE FUNCTIONS. UNLESS OTHERWISE INDICATED, TOP CHORD SHALL HAVE PROPERLY ATTACHED STRUCTURAL PANELS AND BOTTOM CHORD SHALL HAVE A PROPERLY ATTACHED RIGID CEILING.

IMPORTANTFURNISH A COPY OF THIS DESIGN TO THE INSTALLATION CONTRACTOR. ALPINE ENGINEERED PRODUCTS, INC. SHALL NOT BE RESPONSIBLE FOR ANY DEVIATION FROM THIS DESIGN; ANY FAILURE TO BUILD THE TRUSS IN CONFORMANCE WITH TPI; OR FABRICATING, HANDLING, SHIPPING, INSTALLING & BRACING OF TRUSSES. DESIGN CONFORMS WITH APPLICABLE PROVISIONS OF NDS (NATIONAL DESIGN SPEC. BY AF&PA) AND TPI. ALPINE CONNECTOR PLATES ARE MADE OF 20/18/16GA (W,H/S/K) ASTM A653 GRADE 40/60 (W, K/H,S) GALV. STEEL. APPLY PLATES TO EACH FACE OF TRUSS AND, UNLESS OTHERWISE LOCATED ON THIS DESIGN, POSITION PER DRAWINGS 160A-Z. ANY INSPECTION OF PLATES FOLLOWED BY (1) SHALL BE PER ANNEX A3 OF TPI1-2002 SEC.3. A SEAL ON THIS DRAWING INDICATES ACCEPTANCE OF PROFESSIONAL ENGINEERING RESPONSIBILITY SOLELY FOR THE TRUSS COMPONENT DESIGN SHOWN. THE SUITABILITY AND USE OF THIS COMPONENT FOR ANY BUILDING IS THE RESPONSIBILITY OF THE

ARTHUR R. FISHER
LICENSE
No.59687
STATE OF FLORIDA
PROFESSIONAL ENGINEER

Feb 10 '06

TC LL	20.0 PSF	REF	R487-- 86619
TC DL	10.0 PSF	DATE	02/10/06
BC DL	10.0 PSF	DRW	HCUSR487 06041021
BC LL	0.0 PSF	HC-ENG	JB/AF *
TOT.LD.	40.0 PSF	SEQN-	28025
DUR.FAC.	1.25		

Top chord 2x4 SP #2 Dense
Bot chord 2x4 SP #2 Dense
:Lt Stubbed Wedge 2x6 SP #2:

Deflection meets L/360 live and L/240 total load. Creep increase factor for dead load is 1.50.

110 mph wind, 15.00 ft mean hgt, ASCE 7-02, CLOSED bldg, Located anywhere in roof, CAT II, EXP B, wind TC DL=5.0 psf, wind BC DL=5.0 psf.

Provide (2) 16d common nails(0.162"x3.5"), toe nailed at Top chord.
Provide (2) 16d common nails(0.162"x3.5"), toe nailed at Bot chord.

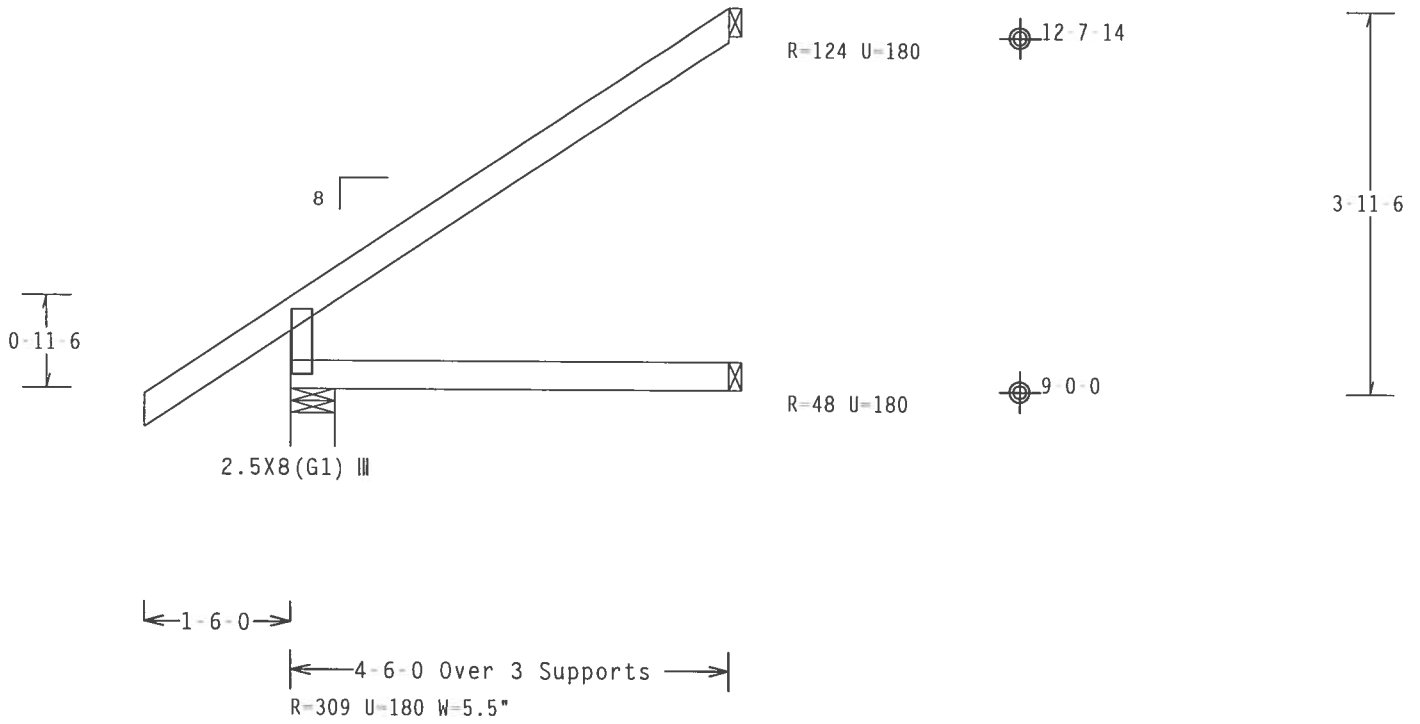

PLT TYP. Wave

Design Crit: TPI-2002(STD)/FBC
Cq/RT=1.00(1.25)/10(0) 7.22.1 QTY:1 FL/-/4/-/-/R/- Scale =.5"/Ft.

ALPINE
Alpine Engineered Products, Inc.
1950 Marley Drive

WARNING TRUSSES REQUIRE EXTREME CARE IN FABRICATION, HANDLING, SHIPPING, INSTALLING AND BRACING. REFER TO BCSI 1-03 (BUILDING COMPONENT SAFETY INFORMATION), PUBLISHED BY TPI (TRUSS PLATE INSTITUTE, 583 D'ONOFRIO DR., SUITE 200, MADISON, WI 53719) AND WTCA (WOOD TRUSS COUNCIL OF AMERICA, 6300 ENTERPRISE LN, MADISON, WI 53719) FOR SAFETY PRACTICES PRIOR TO PERFORMING THESE FUNCTIONS. UNLESS OTHERWISE INDICATED, TOP CHORD SHALL HAVE PROPERLY ATTACHED STRUCTURAL PANELS AND BOTTOM CHORD SHALL HAVE A PROPERLY ATTACHED RIGID CEILING.

IMPORTANTFURNISH A COPY OF THIS DESIGN TO THE INSTALLATION CONTRACTOR. ALPINE ENGINEERED PRODUCTS, INC. SHALL NOT BE RESPONSIBLE FOR ANY DEVIATION FROM THIS DESIGN; ANY FAILURE TO BUILD THE TRUSS IN CONFORMANCE WITH TPI; OR FABRICATING, HANDLING, SHIPPING, INSTALLING & BRACING OF TRUSSES. DESIGN CONFORMS WITH APPLICABLE PROVISIONS OF NDS (NATIONAL DESIGN SPEC. BY AF&PA) AND TPI. ALPINE CONNECTOR PLATES ARE MADE OF 20/18/16GA (W.H/S/K) ASTM A653 GRADE 40/60 (W. K/H.S) GALV. STEEL. APPLY PLATES TO EACH FACE OF TRUSS AND, UNLESS OTHERWISE LOCATED ON THIS DESIGN, POSITION PER DRAWINGS 160A-Z. ANY INSPECTION OF PLATES FOLLOWED BY (I) SHALL BE PER ANNEX A3 OF TPI1-2002 SEC.3. A SEAL ON THIS DRAWING INDICATES ACCEPTANCE OF PROFESSIONAL ENGINEERING RESPONSIBILITY SOLELY FOR THE TRUSS COMPONENT DESIGN SHOWN. THE SUITABILITY AND USE OF THIS COMPONENT FOR ANY PURPOSE OR IN ANY BUILDING IS THE RESPONSIBILITY OF OTHERS.

ARTHUR R. FISHER
LICENSE
No. 59687
STATE OF FLORIDA
PROFESSIONAL ENGINEER

Feb 10 '06

TC LL	20.0 PSF	REF R487-- 86620
TC DL	10.0 PSF	DATE 02/10/06
BC DL	10.0 PSF	DRW HCUSR487 06041073
BC LL	0.0 PSF	HC-ENG JB/AF
TOT.LD.	40.0 PSF	SEQN- 28031
DUR.FAC.	1.25	

Top chord 2x4 SP #2 Dense
Bot chord 2x4 SP #2 Dense
:Lt Stubbed Wedge 2x8 SP SS:

Deflection meets L/360 live and L/240 total load. Creep increase factor for dead load is 1.50.

110 mph wind, 15.00 ft mean hgt, ASCE 7-02, CLOSED bldg, not located within 4.50 ft from roof edge, CAT II, EXP B, wind TC DL=5.0 psf, wind BC DL=5.0 psf.

Provide (2) 16d common nails(0.162"x3.5"), toe nailed at Top chord.
Provide (2) 16d common nails(0.162"x3.5"), toe nailed at Bot chord.

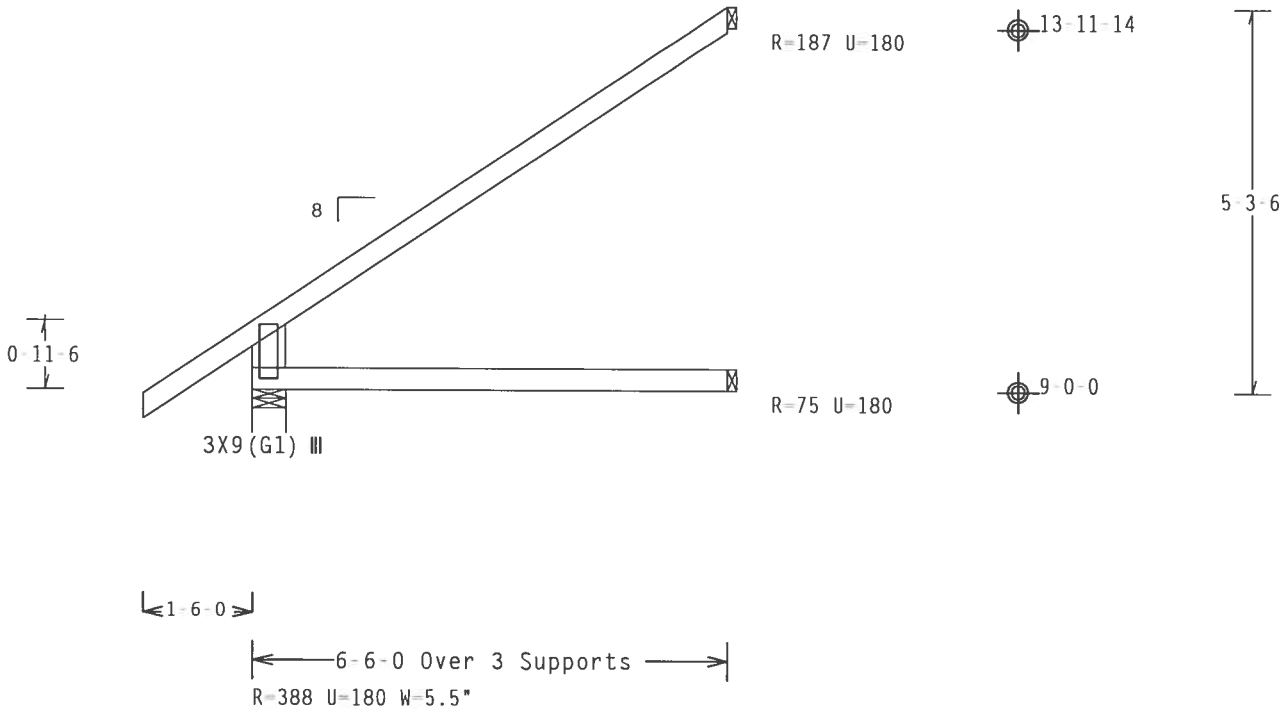

Design Crit: TPI-2002(STD)/FBC

PLT TYP. Wave

Cq/RT=1.00(1.25)/10(0) 7.22.1 QTY:1 FL/-/4/-/-/R/- Scale =.375"/Ft.

ALPINE
Alpine Engineered Products, Inc.
1950 Marley Drive

WARNING TRUSSES REQUIRE EXTREME CARE IN FABRICATION, HANDLING, SHIPPING, INSTALLING AND BRACING. REFER TO BCSI 1-03 (BUILDING COMPONENT SAFETY INFORMATION), PUBLISHED BY TPI (TRUSS PLATE INSTITUTE, 583 D'ONOFRIO DR., SUITE 200, MADISON, WI 53719) AND WTCA (WOOD TRUSS COUNCIL OF AMERICA, 6300 ENTERPRISE LN, MADISON, WI 53719) FOR SAFETY PRACTICES PRIOR TO PERFORMING THESE FUNCTIONS. UNLESS OTHERWISE INDICATED, TOP CHORD SHALL HAVE PROPERLY ATTACHED STRUCTURAL PANELS AND BOTTOM CHORD SHALL HAVE A PROPERLY ATTACHED RIGID CEILING.

IMPORTANT FURNISH A COPY OF THIS DESIGN TO THE INSTALLATION CONTRACTOR. ALPINE ENGINEERED PRODUCTS, INC. SHALL NOT BE RESPONSIBLE FOR ANY DEVIATION FROM THIS DESIGN; ANY FAILURE TO BUILD THE TRUSS IN CONFORMANCE WITH TPI; OR FABRICATING, HANDLING, SHIPPING, INSTALLING & BRACING OF TRUSSES. DESIGN CONFORMS WITH APPLICABLE PROVISIONS OF NDS (NATIONAL DESIGN SPEC, BY AF&PA) AND TPI. ALPINE CONNECTOR PLATES ARE MADE OF 20/18/16GA (W,H/S/K) ASTM A653 GRADE 40/60 (W, K/H,S) GALV. STEEL. APPLY PLATES TO EACH FACE OF TRUSS AND. UNLESS OTHERWISE LOCATED ON THIS DESIGN, POSITION PER DRAWINGS 160A Z. ANY INSPECTION OF PLATES FOLLOWED BY (1) SHALL BE PER ANNEX A3 OF TPI1-2002 SEC.3. A SEAL ON THIS DRAWING INDICATES ACCEPTANCE OF PROFESSIONAL ENGINEERING RESPONSIBILITY SOLELY FOR THE TRUSS COMPONENT DESIGN SHOWN. THE SUITABILITY AND USE OF THIS COMPONENT FOR ANY BUILDING IS THE RESPONSIBILITY OF THE BUILDING DESIGNER PER ANSI/TPI 1-2002 SEC.2.

ARTHUR B. FISHER LICENSE No.59687 STATE OF FLORIDA PROFESSIONAL ENGINEER

Feb 10 '06

TC LL	20.0 PSF	REF	R487-- 86621
TC DL	10.0 PSF	DATE	02/10/06
BC DL	10.0 PSF	DRW	HCUSR487 06041074
BC LL	0.0 PSF	HC-ENG	JB/AF
TOT.LD.	40.0 PSF	SEQN-	28037
DUR.FAC.	1.25		

(6-004-GLENWOOD KING - BULLARD - X1)

Top chord 2x4 SP #2 Dense
Bot chord 2x4 SP #2 Dense
Webs 2x4 SP #3
:Lt Stubbed Wedge 2x6 SP #2:

H = recommended connection based on manufacturer tested capacities and calculations. Conditions may exist that require different connections than indicated. Refer to manufacturer publication for additional information.

110 mph wind, 15.00 ft mean hgt, ASCE 7-02, CLOSED bldg, Located anywhere in roof, CAT II, EXP B, wind TC DL=5.0 psf, wind BC DL=5.0 psf.

Right end vertical not exposed to wind pressure.

Deflection meets L/360 live and L/240 total load. Creep increase factor for dead load is 1.50.

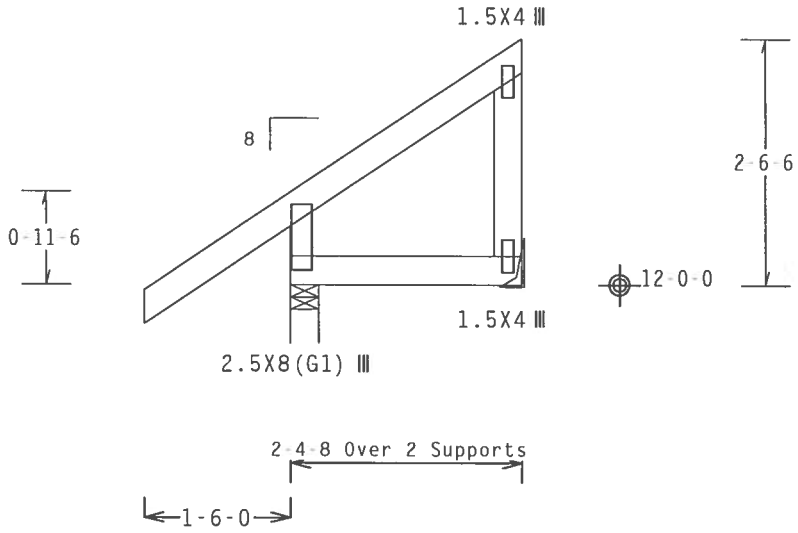

R=236 U=180 W=3.5"

R=67 U=180 H=Simpson LU24
w/ (2) 10d, 0.148"x1.5" nails in Truss
w/ (4) 10d Common, 0.148"x3.0" nails in Girder
Girder is (1)2X6 min. So.Pine

Design Crit: TPI-2002(STD)/FBC

PLT TYP. Wave

Cq/RT=1.00(1.25)/10(0) 7.22.1 QTY:6 FL/-/4/-/-/R/- Scale =.5"/Ft.

ALPINE
Alpine Engineered Products, Inc.
1950 Marley Drive

WARNING TRUSSES REQUIRE EXTREME CARE IN FABRICATION, HANDLING, SHIPPING, INSTALLING AND BRACING. REFER TO BCSI 1-03 (BUILDING COMPONENT SAFETY INFORMATION), PUBLISHED BY TPI (TRUSS PLATE INSTITUTE, 583 D'ONOFRIO DR., SUITE 200, MADISON, WI 53719) AND WTCA (WOOD TRUSS COUNCIL OF AMERICA, 6300 ENTERPRISE LN, MADISON, WI 53719) FOR SAFETY PRACTICES PRIOR TO PERFORMING THESE FUNCTIONS. UNLESS OTHERWISE INDICATED, TOP CHORD SHALL HAVE PROPERLY ATTACHED STRUCTURAL PANELS AND BOTTOM CHORD SHALL HAVE A PROPERLY ATTACHED RIGID CEILING.

IMPORTANTFURNISH A COPY OF THIS DESIGN TO THE INSTALLATION CONTRACTOR. ALPINE ENGINEERED PRODUCTS, INC. SHALL NOT BE RESPONSIBLE FOR ANY DEVIATION FROM THIS DESIGN; ANY FAILURE TO BUILD THE TRUSS IN CONFORMANCE WITH TPI; OR FABRICATING, HANDLING, SHIPPING, INSTALLING & BRACING OF TRUSSES. DESIGN CONFORMS WITH APPLICABLE PROVISIONS OF NDS (NATIONAL DESIGN SPEC. BY AF&PA) AND TPI. ALPINE CONNECTOR PLATES ARE MADE OF 20/18/16GA (W.H/S/K) ASTM A653 GRADE 40/60 (W. K/H.S) GALV. STEEL. APPLY PLATES TO EACH FACE OF TRUSS AND, UNLESS OTHERWISE LOCATED ON THIS DESIGN, POSITION PER DRAWINGS 160A Z. ANY INSPECTION OF PLATES FOLLOWED BY (I) SHALL BE PER ANNEX A3 OF TPI1-2002 SEC.3. A SEAL ON THIS DRAWING INDICATES ACCEPTANCE OF PROFESSIONAL ENGINEERING RESPONSIBILITY SOLELY FOR THE TRUSS COMPONENT

ARTHUR R. FISHER LICENSE No. 59687 STATE OF FLORIDA PROFESSIONAL ENGINEER

Feb 10 '06

TC LL	20.0 PSF	REF	R487-- 86622
TC DL	10.0 PSF	DATE	02/10/06
BC DL	10.0 PSF	DRW	HCUSR487 06041022
BC LL	0.0 PSF	HC-ENG	JB/AF *
TOT.LD.	40.0 PSF	SEQN-	82043
DUR.FAC.	1.25		

(6-004-GLENWOOD KING - BULLARD - K1)

Top chord 2x4 SP #2 Dense
Bot chord 2x4 SP #2 Dense
Webs 2x4 SP #3 :W4 2x4 SP #2 Dense:

Calculated horizontal deflection is 0.13" due to live load and 0.20" due to dead load.

Deflection meets L/360 live and L/240 total load. Creep increase factor for dead load is 1.50.

+ MEMBER TO BE LATERALLY BRACED FOR HORIZONTAL WIND LOADS. BRACING SYSTEM TO BE DESIGNED AND FURNISHED BY OTHERS.

See DWGS A11015EE0405 & GBLLETIN0405 for more requirements.

110 mph wind, 15.00 ft mean hgt, ASCE 7-02, CLOSED bldg, Located anywhere in roof, CAT II, EXP B, wind TC DL=5.0 psf, wind BC DL=5.0 psf.

Right end vertical not exposed to wind pressure.

#1 hip supports 6-0-0 jacks with no webs.

THE BUILDING DESIGNER IS RESPONSIBLE FOR THE DESIGN OF ROOF AND CEILING DIAPHRAGMS, GABLE END SHEAR WALLS, SUPPORTING SHEAR WALLS. SHEAR WALLS MUST PROVIDE CONTINUOUS LATERAL RESTRAINT TO GABLE END. ALL CONNECTIONS TO BE DESIGNED BY THE BUILDING DESIGNER.

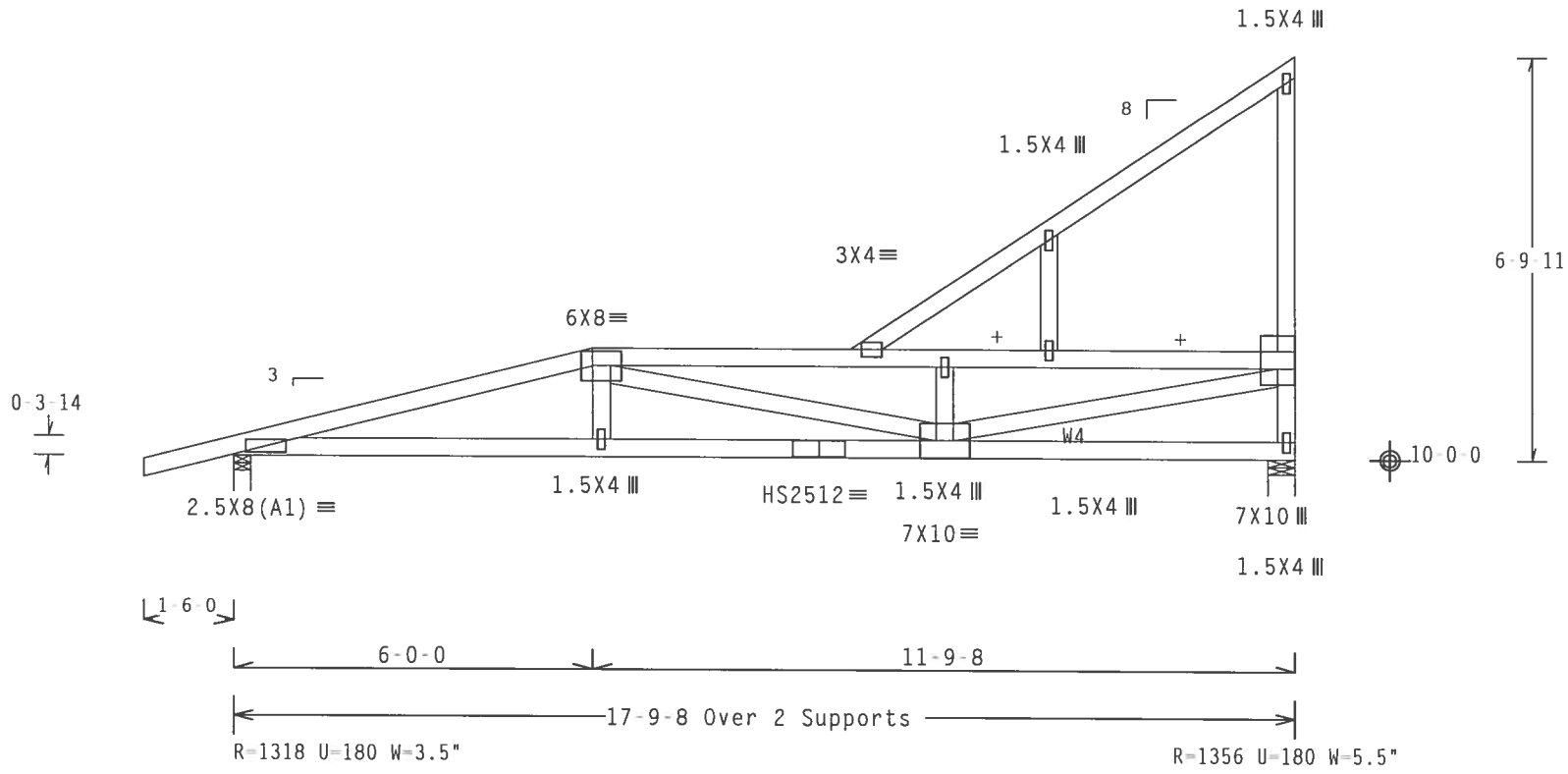

Design Crit: TPI-2002(STD)/FBC

PLT TYP. 20 Gauge HS,Wave Cq/RT=1.00(1.25)/10(0) 7.22.11 QTY:1 FL/-/4/-/-/R/- Scale =.3125"/Ft.

ALPINE
Alpine Engineered Products, Inc.
1950 Marley Drive

WARNING TRUSSES REQUIRE EXTREME CARE IN FABRICATION, HANDLING, SHIPPING, INSTALLING AND BRACING. REFER TO BCSI 1-03 (BUILDING COMPONENT SAFETY INFORMATION), PUBLISHED BY TPI (TRUSS PLATE INSTITUTE, 583 D'ONOFRIO DR., SUITE 200, MADISON, WI 53719) AND WTCA (WOOD TRUSS COUNCIL OF AMERICA, 6300 ENTERPRISE LN, MADISON, WI 53719) FOR SAFETY PRACTICES PRIOR TO PERFORMING THESE FUNCTIONS. UNLESS OTHERWISE INDICATED, TOP CHORD SHALL HAVE PROPERLY ATTACHED STRUCTURAL PANELS AND BOTTOM CHORD SHALL HAVE A PROPERLY ATTACHED RIGID CEILING.

IMPORTANTFURNISH A COPY OF THIS DESIGN TO THE INSTALLATION CONTRACTOR. ALPINE ENGINEERED PRODUCTS, INC. SHALL NOT BE RESPONSIBLE FOR ANY DEVIATION FROM THIS DESIGN; ANY FAILURE TO BUILD THE TRUSS IN CONFORMANCE WITH TPI; OR FABRICATING, HANDLING, SHIPPING, INSTALLING & BRACING OF TRUSSES. DESIGN CONFORMS WITH APPLICABLE PROVISIONS OF NDS (NATIONAL DESIGN SPEC. BY AF&PA) AND TPI. ALPINE CONNECTOR PLATES ARE MADE OF 20/18/16GA (W.H/S/K) ASTM A653 GRADE 40/60 (W. K/H.S) GALV. STEEL. APPLY PLATES TO EACH FACE OF TRUSS AND, UNLESS OTHERWISE LOCATED ON THIS DESIGN, POSITION PER DRAWINGS 160A Z. ANY INSPECTION OF PLATES FOLLOWED BY (1) SHALL BE PER ANNEX A3 OF TPI1-2002 SEC.3. A SEAL ON THIS DRAWING INDICATES ACCEPTANCE OF PROFESSIONAL ENGINEERING RESPONSIBILITY SOLELY FOR THE TRUSS COMPONENT

ARTHUR R. FISHER LICENSE No.59687 STATE OF FLORIDA PROFESSIONAL ENGINEER

Feb 10,'06

TC LL	20.0 PSF	REF	R487-- 86623
TC DL	10.0 PSF	DATE	02/10/06
BC DL	10.0 PSF	DRW	HCUSR487 06041075
BC LL	0.0 PSF	HC-ENG	JB/AF
TOT.LD.	40.0 PSF	SEQN-	28105
DUR.FAC.	1.25		

(6-004-GLENWOOD KING - BULLARD - K2)

Top chord 2x4 SP #2 Dense
Bot chord 2x4 SP #2 Dense
Webs 2x4 SP #3

(A) Continuous lateral bracing equally spaced on member.

Deflection meets L/360 live and L/240 total load. Creep increase factor for dead load is 1.50.

110 mph wind, 15.00 ft mean hgt, ASCE 7-02, CLOSED bldg, not located within 4.50 ft from roof edge, CAT II, EXP B, wind TC DL=5.0 psf, wind BC DL=5.0 psf.

Right end vertical not exposed to wind pressure.

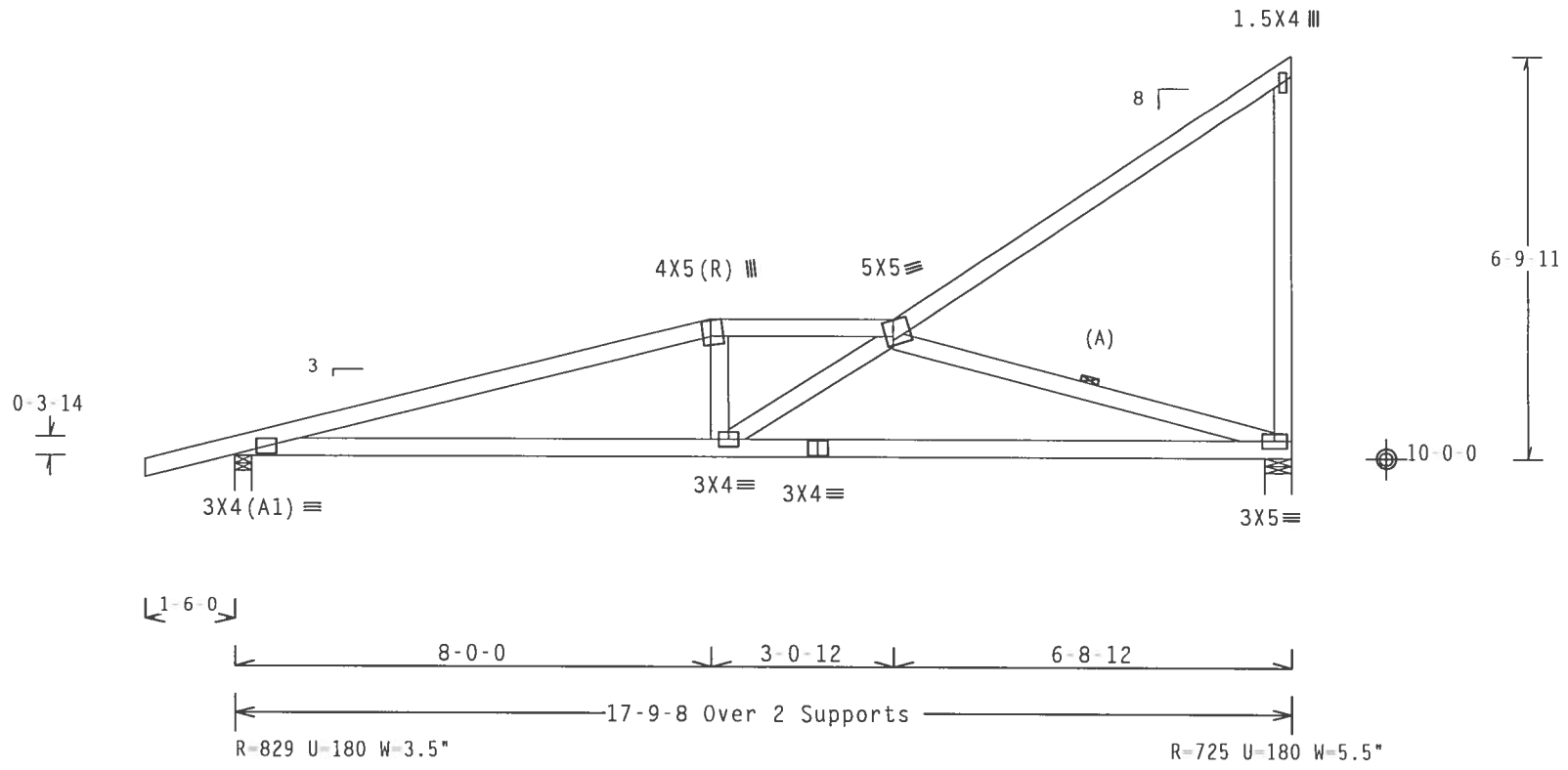

Design Crit: TPI-2002(STD)/FBC

PLT TYP. Wave — Cq/RT=1.00(1.25)/10(0) 7.22.1 — QTY:1 — FL/-/4/-/-/R/- — Scale =.3125"/Ft.

ALPINE
Alpine Engineered Products, Inc.
1950 Marley Drive

WARNING TRUSSES REQUIRE EXTREME CARE IN FABRICATION, HANDLING, SHIPPING, INSTALLING AND BRACING. REFER TO BCSI 1-03 (BUILDING COMPONENT SAFETY INFORMATION), PUBLISHED BY TPI (TRUSS PLATE INSTITUTE, 583 D'ONOFRIO DR., SUITE 200, MADISON, WI 53719) AND WTCA (WOOD TRUSS COUNCIL OF AMERICA, 6300 ENTERPRISE LN, MADISON, WI 53719) FOR SAFETY PRACTICES PRIOR TO PERFORMING THESE FUNCTIONS. UNLESS OTHERWISE INDICATED, TOP CHORD SHALL HAVE PROPERLY ATTACHED STRUCTURAL PANELS AND BOTTOM CHORD SHALL HAVE A PROPERLY ATTACHED RIGID CEILING.

IMPORTANTFURNISH A COPY OF THIS DESIGN TO THE INSTALLATION CONTRACTOR. ALPINE ENGINEERED PRODUCTS, INC. SHALL NOT BE RESPONSIBLE FOR ANY DEVIATION FROM THIS DESIGN; ANY FAILURE TO BUILD THE TRUSS IN CONFORMANCE WITH TPI; OR FABRICATING, HANDLING, SHIPPING, INSTALLING & BRACING OF TRUSSES. DESIGN CONFORMS WITH APPLICABLE PROVISIONS OF NDS (NATIONAL DESIGN SPEC. BY AFAPA) AND TPI. ALPINE CONNECTOR PLATES ARE MADE OF 20/18/16GA (W,H/S/K) ASTM A653 GRADE 40/60 (W, K/H,S) GALV. STEEL. APPLY PLATES TO EACH FACE OF TRUSS AND, UNLESS OTHERWISE LOCATED ON THIS DESIGN, POSITION PER DRAWINGS 160A Z. ANY INSPECTION OF PLATES FOLLOWED BY (1) SHALL BE PER ANNEX A3 OF TPI1 2002 SEC.3. A SEAL ON THIS DRAWING INDICATES ACCEPTANCE OF PROFESSIONAL ENGINEERING RESPONSIBILITY SOLELY FOR THE TRUSS COMPONENT

ARTHUR R. FISHER LICENSE No.59687 STATE OF FLORIDA PROFESSIONAL ENGINEER
Feb 10 '06

TC LL	20.0 PSF	REF	R487-- 86624
TC DL	10.0 PSF	DATE	02/10/06
BC DL	10.0 PSF	DRW	HCUSR487 06041076
BC LL	0.0 PSF	HC-ENG	JB/AF
TOT.LD.	40.0 PSF	SEQN-	28113
DUR.FAC.	1.25		

(6-004-GLENWOOD KING - BULLARD - K3)

Top chord 2x4 SP #2 Dense
Bot chord 2x4 SP #2 Dense
Webs 2x4 SP #3

Deflection meets L/360 live and L/240 total load. Creep increase factor for dead load is 1.50.

110 mph wind, 15.00 ft mean hgt, ASCE 7-02, CLOSED bldg, not located within 4.50 ft from roof edge, CAT II, EXP B, wind TC DL=5.0 psf, wind BC DL=5.0 psf.

Right end vertical not exposed to wind pressure.

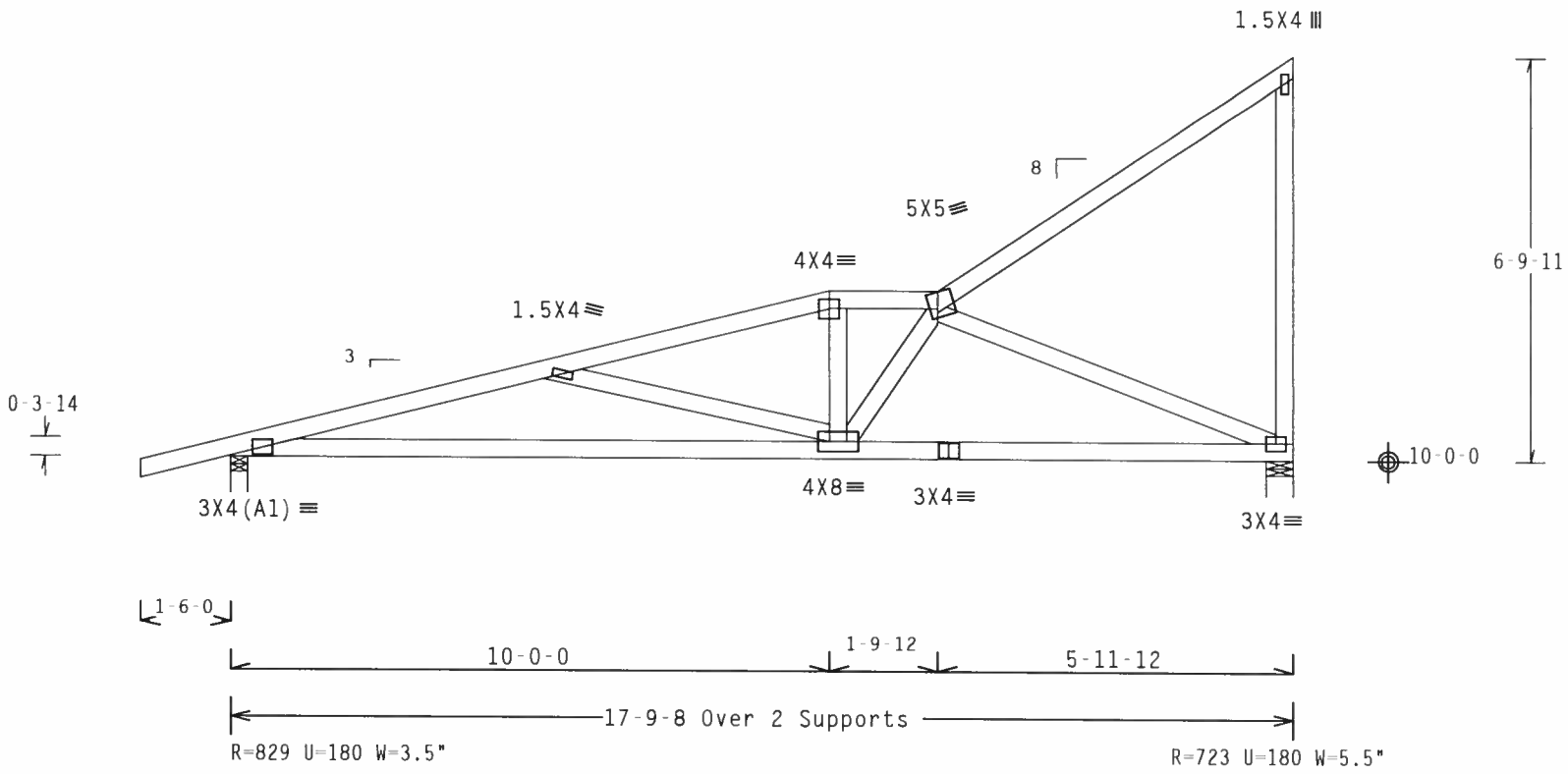

Design Crit: TPI-2002(STD)/FBC
Cq/RT=1.00(1.25)/10(0) 7.22.11

PLT TYP. Wave

QTY:1 FL/-/4/-/-/R/- Scale =.3125"/Ft.

WARNING TRUSSES REQUIRE EXTREME CARE IN FABRICATION, HANDLING, SHIPPING, INSTALLING AND BRACING. REFER TO BCSI 1-03 (BUILDING COMPONENT SAFETY INFORMATION), PUBLISHED BY TPI (TRUSS PLATE INSTITUTE, 583 D'ONOFRIO DR., SUITE 200, MADISON, WI 53719) AND WTCA (WOOD TRUSS COUNCIL OF AMERICA, 6300 ENTERPRISE LN, MADISON, WI 53719) FOR SAFETY PRACTICES PRIOR TO PERFORMING THESE FUNCTIONS. UNLESS OTHERWISE INDICATED, TOP CHORD SHALL HAVE PROPERLY ATTACHED STRUCTURAL PANELS AND BOTTOM CHORD SHALL HAVE A PROPERLY ATTACHED RIGID CEILING.

IMPORTANTFURNISH A COPY OF THIS DESIGN TO THE INSTALLATION CONTRACTOR. ALPINE ENGINEERED PRODUCTS, INC. SHALL NOT BE RESPONSIBLE FOR ANY DEVIATION FROM THIS DESIGN; ANY FAILURE TO BUILD THE TRUSS IN CONFORMANCE WITH TPI; OR FABRICATING, HANDLING, SHIPPING, INSTALLING & BRACING OF TRUSSES. DESIGN CONFORMS WITH APPLICABLE PROVISIONS OF NDS (NATIONAL DESIGN SPEC. BY AF&PA) AND TPI. ALPINE CONNECTOR PLATES ARE MADE OF 20/18/16GA (W,H/S/K) ASTM A653 GRADE 40/60 (W, K/H,S) GALV. STEEL. APPLY PLATES TO EACH FACE OF TRUSS AND, UNLESS OTHERWISE LOCATED ON THIS DESIGN, POSITION PER DRAWINGS 160A Z. ANY INSPECTION OF PLATES FOLLOWED BY (I) SHALL BE PER ANNEX A3 OF TPI1 2002 SEC.3. A SEAL ON THIS DRAWING INDICATES ACCEPTANCE OF PROFESSIONAL ENGINEERING RESPONSIBILITY SOLELY FOR THE TRUSS COMPONENT DESIGN SHOWN. THE SUITABILITY AND USE OF THIS COMPONENT FOR ANY BUILDING IS THE RESPONSIBILITY OF THE

ALPINE
Alpine Engineered Products, Inc.
1950 Marley Drive

ARTHUR R. FISHER
LICENSE
No. 59687
STATE OF FLORIDA
PROFESSIONAL ENGINEER

Feb 10 '06

TC LL	20.0 PSF	REF R487-- 86625
TC DL	10.0 PSF	DATE 02/10/06
BC DL	10.0 PSF	DRW HCUSR487 06041077
BC LL	0.0 PSF	HC-ENG JB/AF
TOT.LD.	40.0 PSF	SEQN- 28130
DUR.FAC.	1.25	

(6-004-GLENWOOD KING - BULLARD - K4)

Top chord 2x4 SP #2 Dense
Bot chord 2x4 SP #2 Dense
Webs 2x4 SP #3

Deflection meets L/360 live and L/240 total load. Creep increase factor for dead load is 1.50.

110 mph wind, 15.00 ft mean hgt, ASCE 7-02, CLOSED bldg, not located within 4.50 ft from roof edge, CAT II, EXP B, wind TC DL=5.0 psf, wind BC DL=5.0 psf.

Right end vertical not exposed to wind pressure.

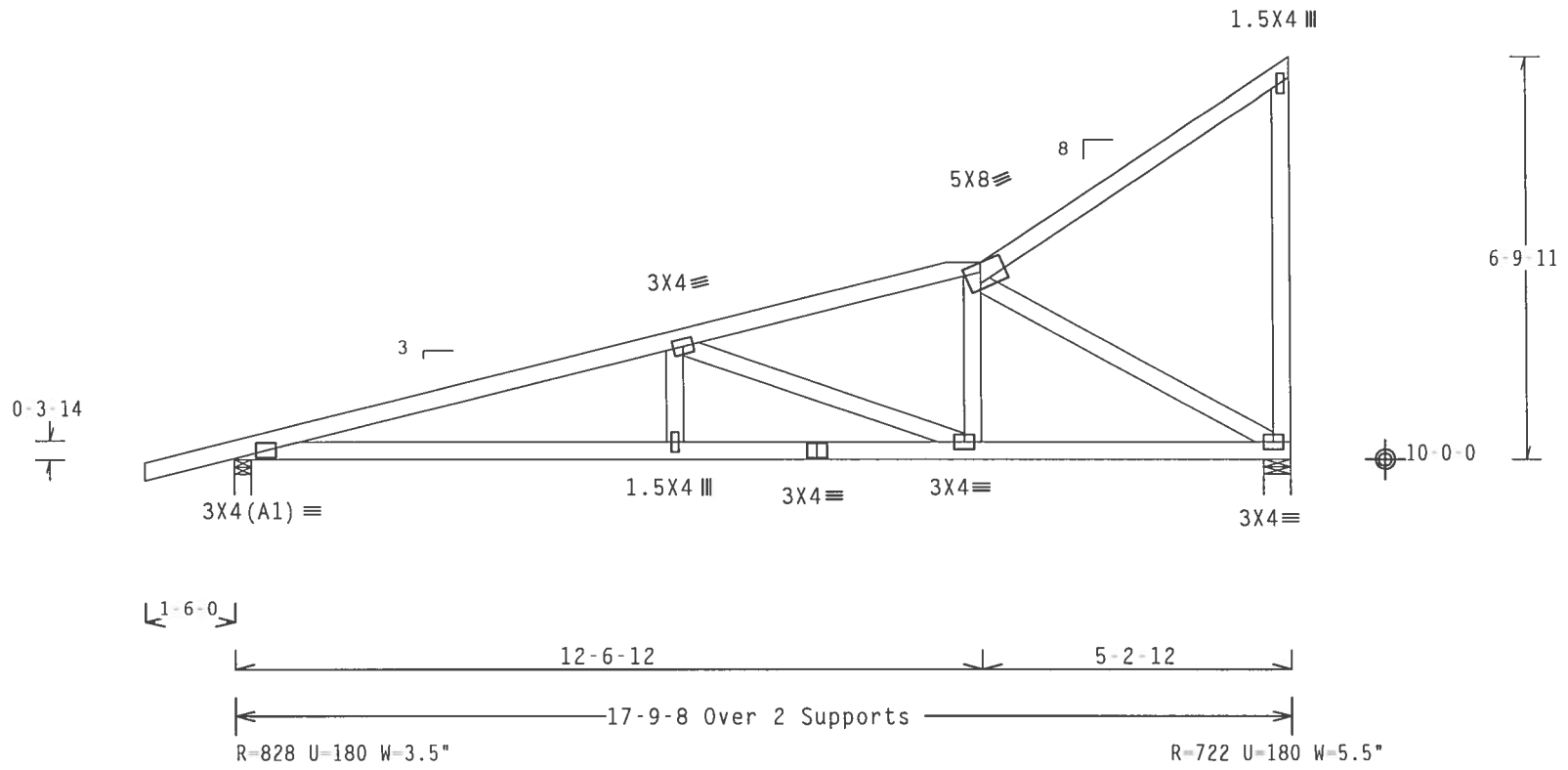

Design Crit: TPI-2002(STD)/FBC
PLT TYP. Wave — Cq/RT=1.00(1.25)/10(0) 7.22.1 — QTY:1 — FL/-/4/-/-/R/- — Scale =.3125"/Ft.

ALPINE
Alpine Engineered Products, Inc.

WARNING TRUSSES REQUIRE EXTREME CARE IN FABRICATION, HANDLING, SHIPPING, INSTALLING AND BRACING. REFER TO BCSI 1-03 (BUILDING COMPONENT SAFETY INFORMATION), PUBLISHED BY TPI (TRUSS PLATE INSTITUTE, 583 D'ONOFRIO DR., SUITE 200, MADISON, WI 53719) AND WTCA (WOOD TRUSS COUNCIL OF AMERICA, 6300 ENTERPRISE LN, MADISON, WI 53719) FOR SAFETY PRACTICES PRIOR TO PERFORMING THESE FUNCTIONS. UNLESS OTHERWISE INDICATED, TOP CHORD SHALL HAVE PROPERLY ATTACHED STRUCTURAL PANELS AND BOTTOM CHORD SHALL HAVE A PROPERLY ATTACHED RIGID CEILING.

IMPORTANT FURNISH A COPY OF THIS DESIGN TO THE INSTALLATION CONTRACTOR. ALPINE ENGINEERED PRODUCTS, INC. SHALL NOT BE RESPONSIBLE FOR ANY DEVIATION FROM THIS DESIGN; ANY FAILURE TO BUILD THE TRUSS IN CONFORMANCE WITH TPI; OR FABRICATING, HANDLING, SHIPPING, INSTALLING & BRACING OF TRUSSES. DESIGN CONFORMS WITH APPLICABLE PROVISIONS OF NDS (NATIONAL DESIGN SPEC, BY AF&PA) AND TPI. ALPINE CONNECTOR PLATES ARE MADE OF 20/18/16GA (W,H/S/K) ASTM A653 GRADE 40/60 (W, K/H,S) GALV. STEEL. APPLY PLATES TO EACH FACE OF TRUSS AND, UNLESS OTHERWISE LOCATED ON THIS DESIGN, POSITION PER DRAWINGS 160A Z. ANY INSPECTION OF PLATES FOLLOWED BY (1) SHALL BE PER ANNEX A3 OF TPI1 2002 SEC.3. A SEAL ON THIS DRAWING INDICATES ACCEPTANCE OF PROFESSIONAL ENGINEERING RESPONSIBILITY SOLELY FOR THE TRUSS COMPONENT

ARTHUR R. FISHER LICENSE No. 59687 STATE OF FLORIDA PROFESSIONAL ENGINEER
Feb 10 '06

TC LL	20.0 PSF	REF	R487-- 86626
TC DL	10.0 PSF	DATE	02/10/06
BC DL	10.0 PSF	DRW	HCUSR487 06041096
BC LL	0.0 PSF	HC-ENG	JB/AF
TOT.LD.	40.0 PSF	SEQN-	28139
DUR.FAC.	1.25		

(6-004-GLENWOOD KING - BULLARD - K5)

Top chord 2x4 SP #2 Dense
Bot chord 2x4 SP #2 Dense
Webs 2x4 SP #3

Deflection meets L/360 live and L/240 total load. Creep increase factor for dead load is 1.50.

110 mph wind, 15.00 ft mean hgt, ASCE 7-02, CLOSED bldg, not located within 4.50 ft from roof edge, CAT II, EXP B, wind TC DL=5.0 psf, wind BC DL=5.0 psf.

Right end vertical not exposed to wind pressure.

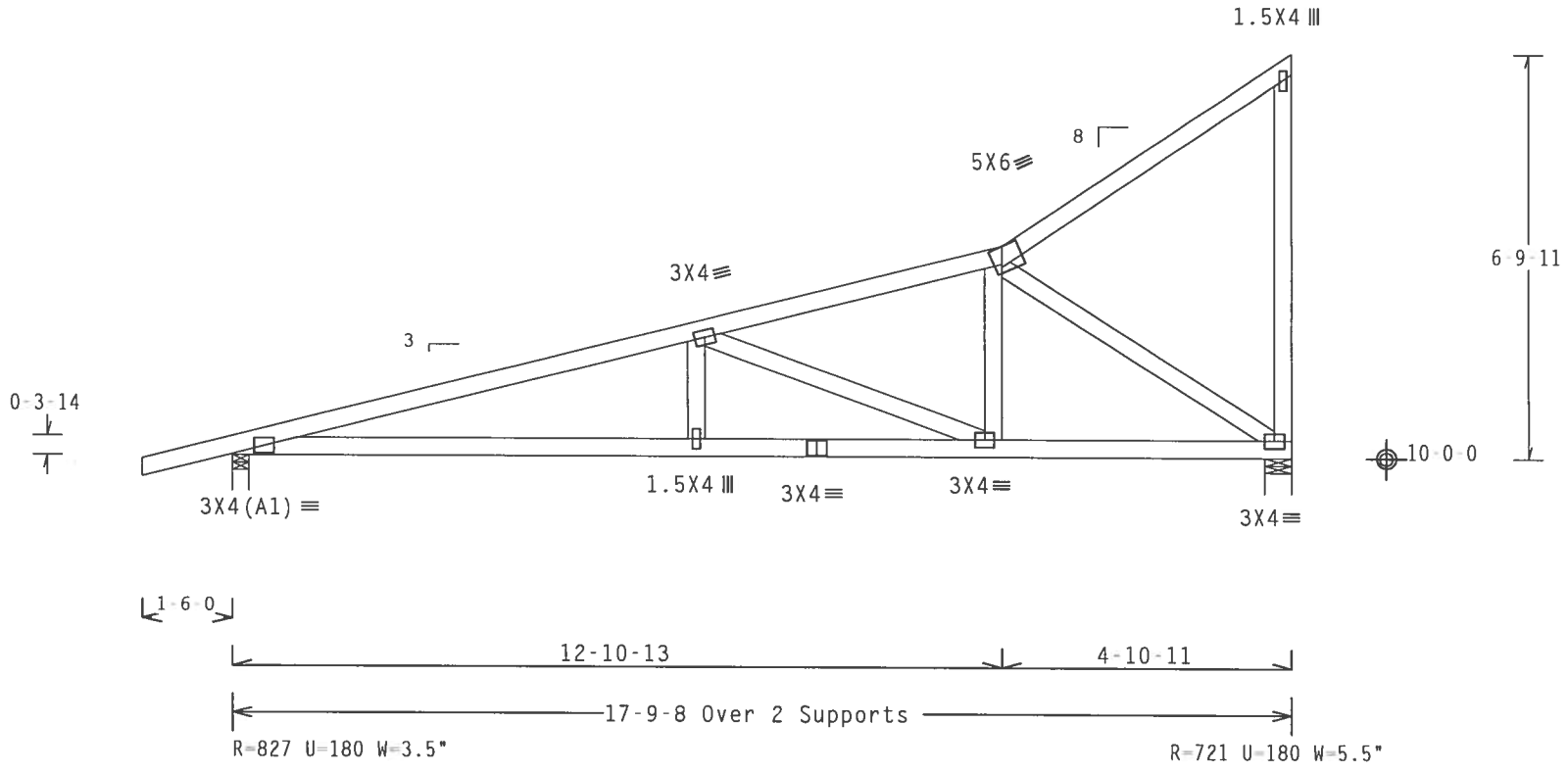

Design Crit: TPI-2002(STD)/FBC

PLT TYP. Wave

Cq/RT=1.00(1.25)/10(0) 7.22.11 QTY:3 FL/-/4/-/-/R/- Scale =.3125"/Ft.

ALPINE
Alpine Engineered Products, Inc.
1950 Marley Drive

WARNING TRUSSES REQUIRE EXTREME CARE IN FABRICATION, HANDLING, SHIPPING, INSTALLING AND BRACING. REFER TO BCSI 1-03 (BUILDING COMPONENT SAFETY INFORMATION), PUBLISHED BY TPI (TRUSS PLATE INSTITUTE, 583 D'ONOFRIO DR., SUITE 200, MADISON, WI 53719) AND WTCA (WOOD TRUSS COUNCIL OF AMERICA, 6300 ENTERPRISE LN, MADISON, WI 53719) FOR SAFETY PRACTICES PRIOR TO PERFORMING THESE FUNCTIONS. UNLESS OTHERWISE INDICATED, TOP CHORD SHALL HAVE PROPERLY ATTACHED STRUCTURAL PANELS AND BOTTOM CHORD SHALL HAVE A PROPERLY ATTACHED RIGID CEILING.

IMPORTANTFURNISH A COPY OF THIS DESIGN TO THE INSTALLATION CONTRACTOR. ALPINE ENGINEERED PRODUCTS, INC. SHALL NOT BE RESPONSIBLE FOR ANY DEVIATION FROM THIS DESIGN; ANY FAILURE TO BUILD THE TRUSS IN CONFORMANCE WITH TPI; OR FABRICATING, HANDLING, SHIPPING, INSTALLING & BRACING OF TRUSSES. DESIGN CONFORMS WITH APPLICABLE PROVISIONS OF NDS (NATIONAL DESIGN SPEC, BY AF&PA) AND TPI. ALPINE CONNECTOR PLATES ARE MADE OF 20/18/16GA (W,H/S/K) ASTM A653 GRADE 40/60 (W, K/H,S) GALV. STEEL. APPLY PLATES TO EACH FACE OF TRUSS AND, UNLESS OTHERWISE LOCATED ON THIS DESIGN, POSITION PER DRAWINGS 160A Z. ANY INSPECTION OF PLATES FOLLOWED BY (1) SHALL BE PER ANNEX A3 OF TPI1 2002 SEC.3. A SEAL ON THIS DRAWING INDICATES ACCEPTANCE OF PROFESSIONAL ENGINEERING RESPONSIBILITY SOLELY FOR THE TRUSS COMPONENT DESIGN SHOWN. THE SUITABILITY AND USE OF THIS COMPONENT FOR ANY BUILDING IS THE RESPONSIBILITY OF THE

ARTHUR R. FISHER
LICENSE
No. 59687
STATE OF FLORIDA
PROFESSIONAL ENGINEER

Feb 10 06

TC LL	20.0 PSF	REF	R487-- 86627
TC DL	10.0 PSF	DATE	02/10/06
BC DL	10.0 PSF	DRW	HCUSR487 06041078
BC LL	0.0 PSF	HC-ENG	JB/AF
TOT.LD.	40.0 PSF	SEQN-	28148
DUR.FAC.	1.25		

(6-004 GLENWOOD KING - BULLARD 01 GE)

Top chord 2x4 SP #2 Dense
Bot chord 2x4 SP #2 Dense
Webs 2x4 SP #3

Truss spaced at 24.0" OC designed to support 1-4-0 top chord outlookers. Cladding load shall not exceed 10.00 PSF. Top chord must not be cut or notched.

Fasten rated sheathing to one face of this frame.

110 mph wind, 15.00 ft mean hgt, ASCE 7-02, CLOSED bldg, Located anywhere in roof, CAT II, EXP B, wind TC DL=5.0 psf, wind BC DL=5.0 psf.

See DWGS A11015EE0405 & GBLLETIN0405 for more requirements.

Deflection meets L/360 live and L/240 total load. Creep increase factor for dead load is 1.50.

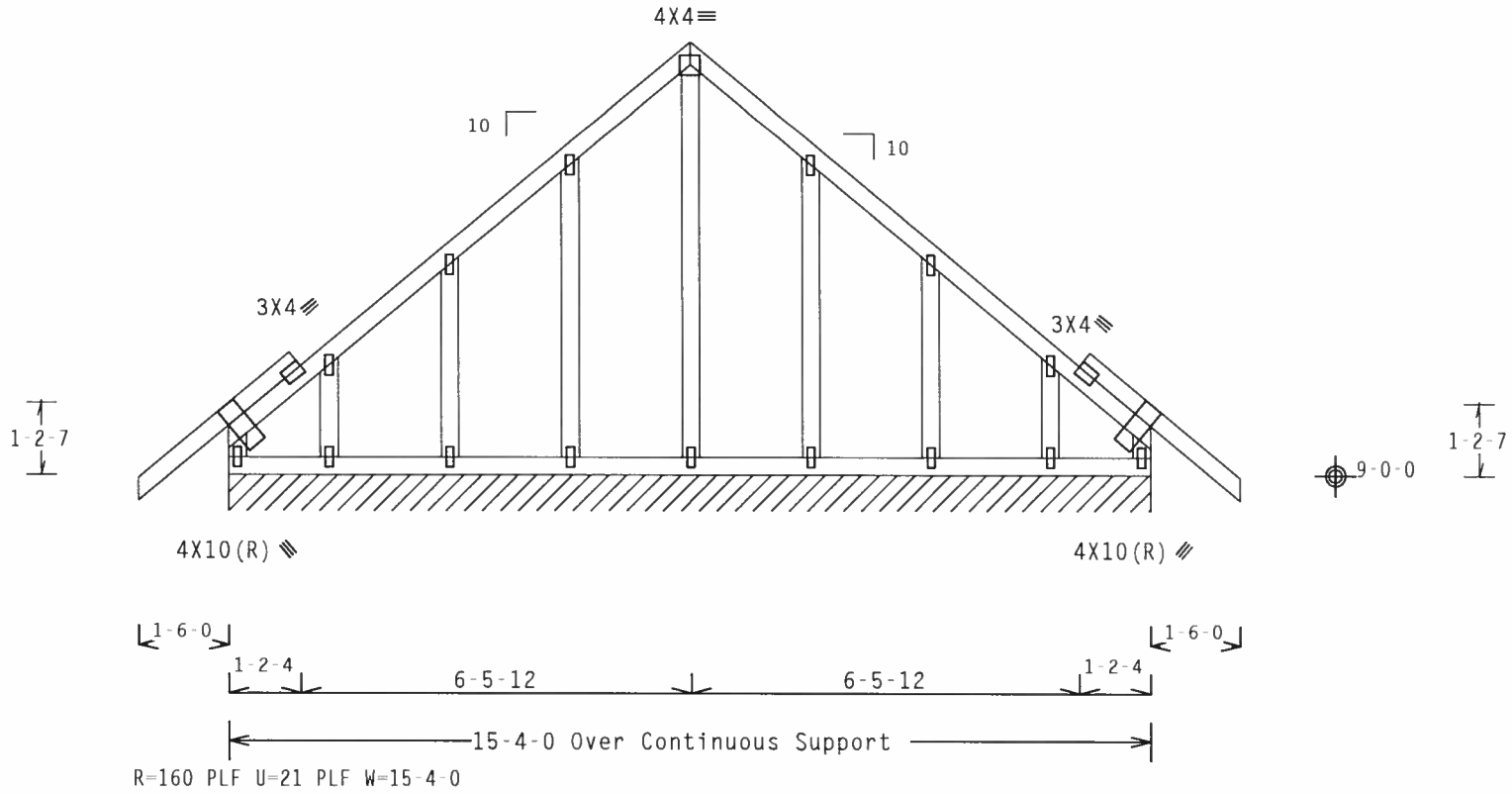

Note: All Plates Are 1.5X4 Except As Shown.

Design Crit: TPI-2002(STD)/FBC

PLT TYP. Wave Cq/RT=1.00(1.25)/10(0) 7.22. QTY:1 FL/-/4/-/-/R/- Scale =.3125"/Ft.

ALPINE
Alpine Engineered Products, Inc.

WARNING TRUSSES REQUIRE EXTREME CARE IN FABRICATION, HANDLING, SHIPPING, INSTALLING AND BRACING. REFER TO BCSI 1-03 (BUILDING COMPONENT SAFETY INFORMATION), PUBLISHED BY TPI (TRUSS PLATE INSTITUTE, 583 D'ONOFRIO DR., SUITE 200, MADISON, WI 53719) AND WTCA (WOOD TRUSS COUNCIL OF AMERICA, 6300 ENTERPRISE LN, MADISON, WI 53719) FOR SAFETY PRACTICES PRIOR TO PERFORMING THESE FUNCTIONS. UNLESS OTHERWISE INDICATED, TOP CHORD SHALL HAVE PROPERLY ATTACHED STRUCTURAL PANELS AND BOTTOM CHORD SHALL HAVE A PROPERLY ATTACHED RIGID CEILING.

IMPORTANT FURNISH A COPY OF THIS DESIGN TO THE INSTALLATION CONTRACTOR. ALPINE ENGINEERED PRODUCTS, INC. SHALL NOT BE RESPONSIBLE FOR ANY DEVIATION FROM THIS DESIGN; ANY FAILURE TO BUILD THE TRUSS IN CONFORMANCE WITH TPI; OR FABRICATING, HANDLING, SHIPPING, INSTALLING & BRACING OF TRUSSES. DESIGN CONFORMS WITH APPLICABLE PROVISIONS OF NDS (NATIONAL DESIGN SPEC. BY AF&PA) AND TPI. ALPINE CONNECTOR PLATES ARE MADE OF 20/18/16GA (W,H/S/K) ASTM A653 GRADE 40/60 (W, K/H,S) GALV. STEEL. APPLY PLATES TO EACH FACE OF TRUSS AND, UNLESS OTHERWISE LOCATED ON THIS DESIGN, POSITION PER DRAWINGS 160A Z. ANY INSPECTION OF PLATES FOLLOWED BY (1) SHALL BE PER ANNEX A3 OF TPII 2002 SEC.3. A SEAL ON THIS DRAWING INDICATES ACCEPTANCE OF PROFESSIONAL ENGINEERING RESPONSIBILITY SOLELY FOR THE TRUSS COMPONENT

ARTHUR R. FISHER LICENSE No. 39687 STATE OF FLORIDA PROFESSIONAL ENGINEER

Feb 10 '06

TC LL	20.0 PSF	REF	R487-- 86628
TC DL	10.0 PSF	DATE	02/10/06
BC DL	10.0 PSF	DRW	HCUSR487 06041079
BC LL	0.0 PSF	HC-ENG	JB/AF
TOT.LD.	40.0 PSF	SEQN-	82556
DUR.FAC.	1.25		

(6 004 GLENWOOD KING BULLARD - 02)

Top chord 2x4 SP #2 Dense
Bot chord 2x4 SP #2 Dense
Webs 2x4 SP #3

Deflection meets L/360 live and L/240 total load. Creep increase factor for dead load is 1.50.

110 mph wind, 15.00 ft mean hgt, ASCE 7-02, CLOSED bldg, Located anywhere in roof, CAT II, EXP B, wind TC DL=5.0 psf, wind BC DL=5.0 psf.

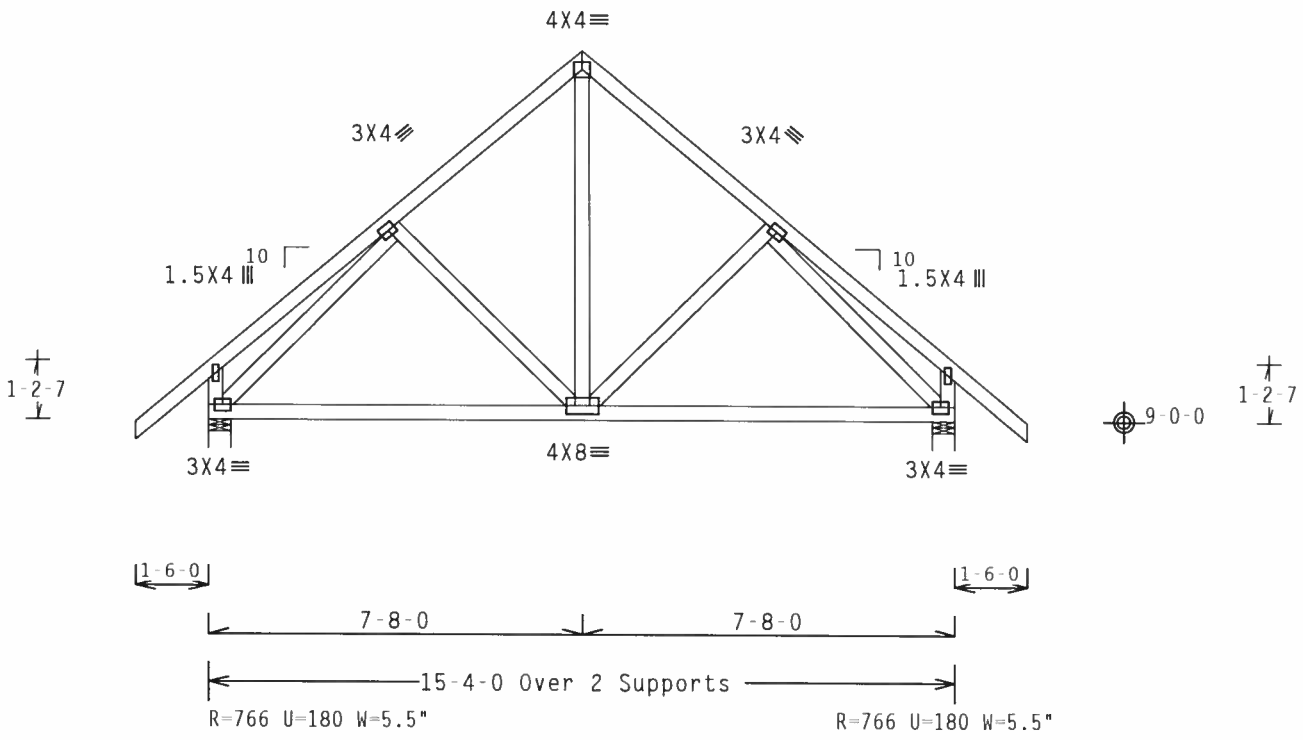

Design Crit: TPI-2002(STD)/FBC

PLT TYP. Wave

Cq/RT=1.00(1.25)/10(0) 7.22.11 QTY:3 FL/-/4/-/-/R/- Scale =.25"/Ft.

WARNING TRUSSES REQUIRE EXTREME CARE IN FABRICATION, HANDLING, SHIPPING, INSTALLING AND BRACING. REFER TO BCSI 1 03 (BUILDING COMPONENT SAFETY INFORMATION), PUBLISHED BY TPI (TRUSS PLATE INSTITUTE, 583 D'ONOFRIO DR., SUITE 200, MADISON, WI 53719) AND WTCA (WOOD TRUSS COUNCIL OF AMERICA, 6300 ENTERPRISE LN, MADISON, WI 53719) FOR SAFETY PRACTICES PRIOR TO PERFORMING THESE FUNCTIONS. UNLESS OTHERWISE INDICATED, TOP CHORD SHALL HAVE PROPERLY ATTACHED STRUCTURAL PANELS AND BOTTOM CHORD SHALL HAVE A PROPERLY ATTACHED RIGID CEILING.

IMPORTANT FURNISH A COPY OF THIS DESIGN TO THE INSTALLATION CONTRACTOR. ALPINE ENGINEERED PRODUCTS, INC. SHALL NOT BE RESPONSIBLE FOR ANY DEVIATION FROM THIS DESIGN, ANY FAILURE TO BUILD THE TRUSS IN CONFORMANCE WITH TPI; OR FABRICATING, HANDLING, SHIPPING, INSTALLING & BRACING OF TRUSSES. DESIGN CONFORMS WITH APPLICABLE PROVISIONS OF NDS (NATIONAL DESIGN SPEC. BY AF&PA) AND TPI. ALPINE CONNECTOR PLATES ARE MADE OF 20/18/16GA (W,H/S/K) ASTM A653 GRADE 40/60 (W, K/H,S) GALV. STEEL. APPLY PLATES TO EACH FACE OF TRUSS AND, UNLESS OTHERWISE LOCATED ON THIS DESIGN, POSITION PER DRAWINGS 160A Z. ANY INSPECTION OF PLATES FOLLOWED BY (1) SHALL BE PER ANNEX A3 OF TPI1 2002 SEC.3. A SEAL ON THIS DRAWING INDICATES ACCEPTANCE OF PROFESSIONAL ENGINEERING RESPONSIBILITY SOLELY FOR THE TRUSS COMPONENT

ALPINE
Alpine Engineered Products, Inc.
1950 Marley Drive

ARTHUR R. FISHER LICENSE No. 53687 STATE OF FLORIDA PROFESSIONAL ENGINEER

Feb 10 '06

TC LL	20.0 PSF	REF	R487-- 86629
TC DL	10.0 PSF	DATE	02/10/06
BC DL	10.0 PSF	DRW	HCUSR487 06041023
BC LL	0.0 PSF	HC-ENG	JB/AF *
TOT.LD.	40.0 PSF	SEQN-	82547
DUR.FAC.	1.25		

(6-004-GLENWOOD KING - BULLARD - AP1)

Top chord 2x4 SP #2 Dense
Bot chord 2x4 SP #2 Dense
Webs 2x4 SP #3

In lieu of rigid ceiling use purlins to brace BC @ 24" OC.

REFER TO DWG PIGBACKB0405 FOR PIGGYBACK DETAILS.
TOP CHORD OF SUPPORTING TRUSS UNDER PIGGYBACK TO BE BRACED @ 24"O.C., UNLESS OTHERWISE SPECIFIED

110 mph wind, 21.11 ft mean hgt, ASCE 7-02, CLOSED bldg, not located within 4.50 ft from roof edge, CAT II, EXP B, wind TC DL=5.0 psf, wind BC DL=1.2 psf.

Deflection meets L/360 live and L/240 total load. Creep increase factor for dead load is 1.50.

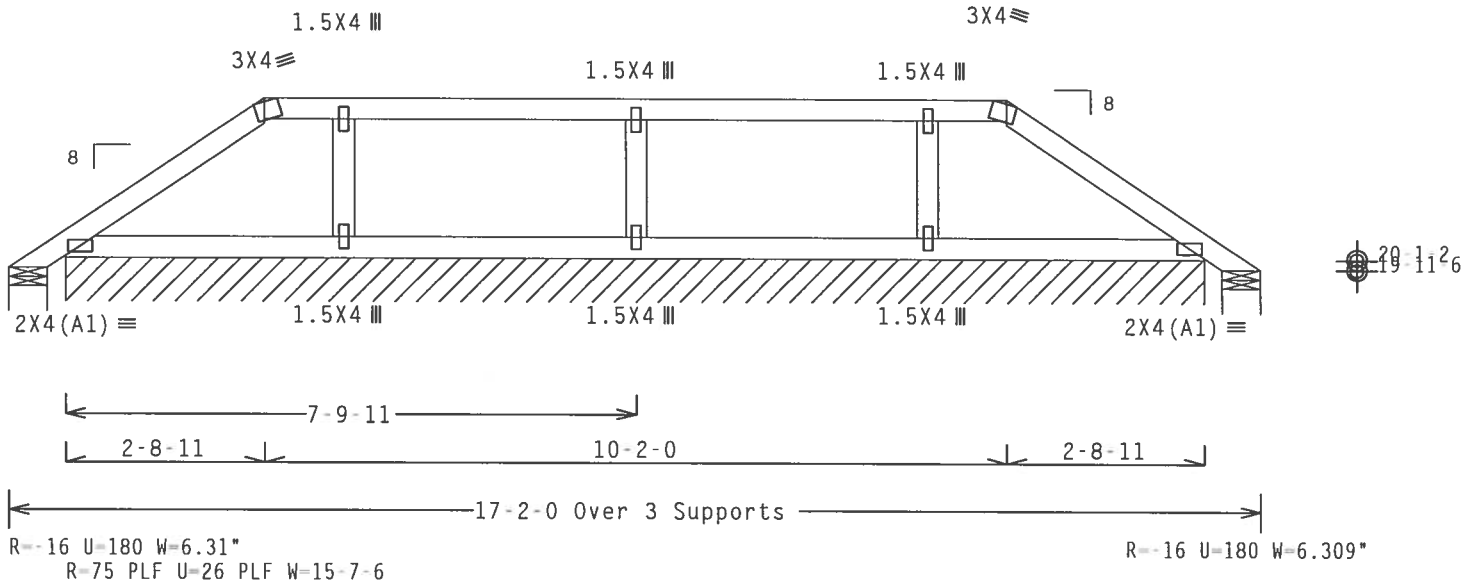

Design Crit: TPI-2002(STD)/FBC

PLT TYP. Wave Cq/RT=1.00(1.25)/10(0) 7.22.1 QTY:1 FL/-/4/-/-/R/- Scale =.375"/Ft.

ALPINE
Alpine Engineered Products, Inc.
1950 Marley Drive

WARNING TRUSSES REQUIRE EXTREME CARE IN FABRICATION, HANDLING, SHIPPING, INSTALLING AND BRACING. REFER TO BCSI 1-03 (BUILDING COMPONENT SAFETY INFORMATION), PUBLISHED BY TPI (TRUSS PLATE INSTITUTE, 583 D'ONOFRIO DR., SUITE 200, MADISON, WI 53719) AND WTCA (WOOD TRUSS COUNCIL OF AMERICA, 6300 ENTERPRISE LN, MADISON, WI 53719) FOR SAFETY PRACTICES PRIOR TO PERFORMING THESE FUNCTIONS. UNLESS OTHERWISE INDICATED, TOP CHORD SHALL HAVE PROPERLY ATTACHED STRUCTURAL PANELS AND BOTTOM CHORD SHALL HAVE A PROPERLY ATTACHED RIGID CEILING.

IMPORTANTFURNISH A COPY OF THIS DESIGN TO THE INSTALLATION CONTRACTOR. ALPINE ENGINEERED PRODUCTS, INC. SHALL NOT BE RESPONSIBLE FOR ANY DEVIATION FROM THIS DESIGN; ANY FAILURE TO BUILD THE TRUSS IN CONFORMANCE WITH TPI; OR FABRICATING, HANDLING, SHIPPING, INSTALLING & BRACING OF TRUSSES. DESIGN CONFORMS WITH APPLICABLE PROVISIONS OF NDS (NATIONAL DESIGN SPEC. BY AF&PA) AND TPI. ALPINE CONNECTOR PLATES ARE MADE OF 20/18/16GA (W,H/S/K) ASTM A653 GRADE 40/60 (W, K/H,S) GALV. STEEL. APPLY PLATES TO EACH FACE OF TRUSS AND, UNLESS OTHERWISE LOCATED ON THIS DESIGN, POSITION PER DRAWINGS 160A-Z. ANY INSPECTION OF PLATES FOLLOWED BY (I) SHALL BE PER ANNEX A3 OF TPI1-2002 SEC.3. A SEAL ON THIS DRAWING INDICATES ACCEPTANCE OF PROFESSIONAL ENGINEERING RESPONSIBILITY SOLELY FOR THE TRUSS COMPONENT

ARTHUR R. FISHER
LICENSE
No.59687
STATE OF FLORIDA
PROFESSIONAL ENGINEER

Feb 10 '06

TC LL	20.0 PSF	REF	R487-- 86630
TC DL	10.0 PSF	DATE	02/10/06
BC DL	2.0 PSF	DRW	HCUSR487 06041080
BC LL	0.0 PSF	HC-ENG	JB/AF
TOT.LD.	32.0 PSF	SEQN-	82205
DUR.FAC.	1.25		

(6 004 GLENWOOD KING BULLARD AP2)

Top chord 2x4 SP #2 Dense
Bot chord 2x4 SP #2 Dense
Webs 2x4 SP #3

Deflection meets L/360 live and L/240 total load. Creep increase factor for dead load is 1.50.

REFER TO DWG PIGBACKB0405 FOR PIGGYBACK DETAILS.
TOP CHORD OF SUPPORTING TRUSS UNDER PIGGYBACK TO BE BRACED @ 24"O.C., UNLESS OTHERWISE SPECIFIED

110 mph wind, 21.78 ft mean hgt, ASCE 7-02, CLOSED bldg, Located anywhere in roof, CAT II, EXP B, wind TC DL=5.0 psf, wind BC DL=1.2 psf.

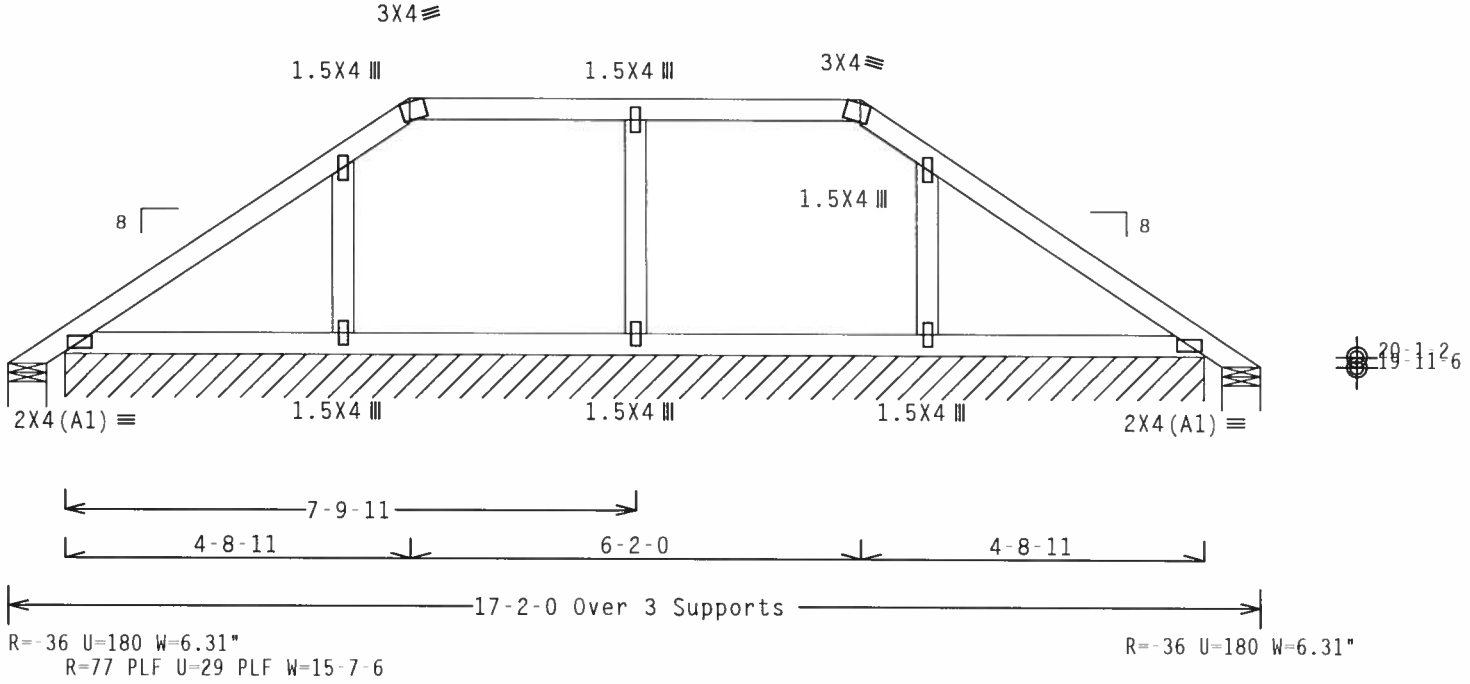

Design Crit: TPI-2002(STD)/FBC

PLT TYP. Wave Cq/RT=1.00(1.25)/10(0) 7.22. QTY:1 FL/-/4/-/-/R/- Scale =.375"/Ft.

ALPINE
Alpine Engineered Products, Inc.
1950 Marley Drive

WARNING TRUSSES REQUIRE EXTREME CARE IN FABRICATION, HANDLING, SHIPPING, INSTALLING AND BRACING. REFER TO BCSI 1-03 (BUILDING COMPONENT SAFETY INFORMATION), PUBLISHED BY TPI (TRUSS PLATE INSTITUTE, 583 D'ONOFRIO DR., SUITE 200, MADISON, WI 53719) AND WTCA (WOOD TRUSS COUNCIL OF AMERICA, 6300 ENTERPRISE LN, MADISON, WI 53719) FOR SAFETY PRACTICES PRIOR TO PERFORMING THESE FUNCTIONS. UNLESS OTHERWISE INDICATED, TOP CHORD SHALL HAVE PROPERLY ATTACHED STRUCTURAL PANELS AND BOTTOM CHORD SHALL HAVE A PROPERLY ATTACHED RIGID CEILING.

IMPORTANTFURNISH A COPY OF THIS DESIGN TO THE INSTALLATION CONTRACTOR. ALPINE ENGINEERED PRODUCTS, INC. SHALL NOT BE RESPONSIBLE FOR ANY DEVIATION FROM THIS DESIGN; ANY FAILURE TO BUILD THE TRUSS IN CONFORMANCE WITH TPI; OR FABRICATING, HANDLING, SHIPPING, INSTALLING & BRACING OF TRUSSES. DESIGN CONFORMS WITH APPLICABLE PROVISIONS OF NDS (NATIONAL DESIGN SPEC. BY AF&PA) AND TPI. ALPINE CONNECTOR PLATES ARE MADE OF 20/18/16GA (W,H/S/K) ASTM A653 GRADE 40/60 (W, K/H,S) GALV. STEEL. APPLY PLATES TO EACH FACE OF TRUSS AND, UNLESS OTHERWISE LOCATED ON THIS DESIGN, POSITION PER DRAWINGS 160A Z. ANY INSPECTION OF PLATES FOLLOWED BY (1) SHALL BE PER ANNEX A3 OF TPI1 2002 SEC.3. A SEAL ON THIS DRAWING INDICATES ACCEPTANCE OF PROFESSIONAL ENGINEERING RESPONSIBILITY SOLELY FOR THE TRUSS COMPONENT

ARTHUR R. FISHER
LICENSE
No. 39687
STATE OF FLORIDA
PROFESSIONAL ENGINEER
Feb 10, 2006

TC LL	20.0 PSF	REF	R487-- 86631
TC DL	10.0 PSF	DATE	02/10/06
BC DL	2.0 PSF	DRW	HCUSR487 06041097
BC LL	0.0 PSF	HC-ENG	JB/AF
TOT.LD.	32.0 PSF	SEQN-	146694 REV
DUR.FAC.	1.25		

(6-004 GLENWOOD KING - BULLARD - AP3)

Top chord 2x4 SP #2 Dense
Bot chord 2x4 SP #2 Dense
Webs 2x4 SP #3

In lieu of rigid ceiling use purlins to brace BC @ 24" OC.

REFER TO DWG PIGBACKB0405 FOR PIGGYBACK DETAILS.
TOP CHORD OF SUPPORTING TRUSS UNDER PIGGYBACK TO BE BRACED @ 24"O.C., UNLESS OTHERWISE SPECIFIED

110 mph wind, 22.45 ft mean hgt, ASCE 7-02, CLOSED bldg, not located within 4.50 ft from roof edge, CAT II, EXP B, wind TC DL=5.0 psf, wind BC DL=1.2 psf.

Deflection meets L/360 live and L/240 total load. Creep increase factor for dead load is 1.50.

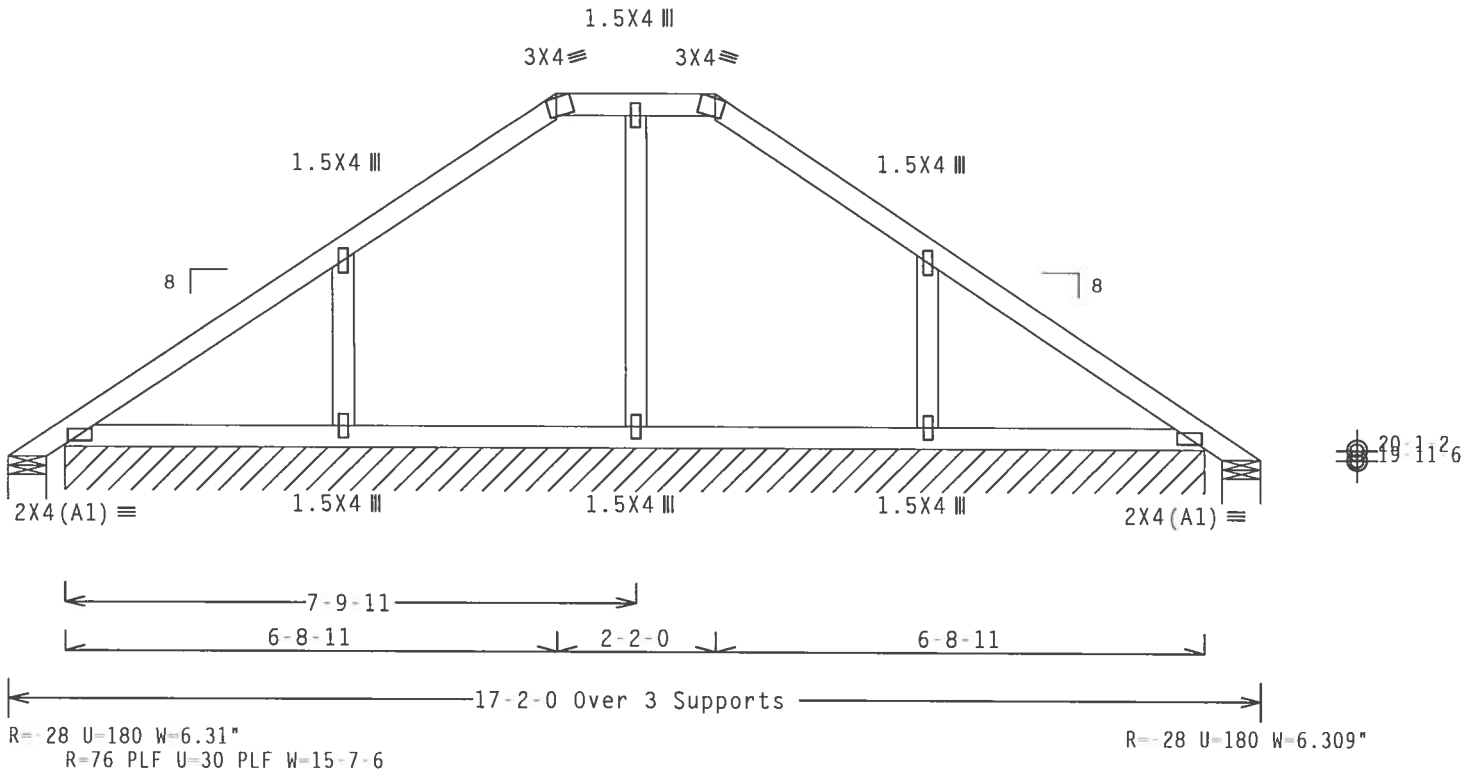

Design Crit: TPI-2002(STD)/FBC
PLT TYP. Wave Cq/RT=1.00(1.25)/10(0) 7.22.11 QTY:1 FL/-/4/-/-/R/- Scale =.375"/Ft.

ALPINE
Alpine Engineered Products, Inc.
1950 Marley Drive

WARNING TRUSSES REQUIRE EXTREME CARE IN FABRICATION, HANDLING, SHIPPING, INSTALLING AND BRACING. REFER TO BCSI 1-03 (BUILDING COMPONENT SAFETY INFORMATION), PUBLISHED BY TPI (TRUSS PLATE INSTITUTE, 583 D'ONOFRIO DR., SUITE 200, MADISON, WI 53719) AND WTCA (WOOD TRUSS COUNCIL OF AMERICA, 6300 ENTERPRISE LN, MADISON, WI 53719) FOR SAFETY PRACTICES PRIOR TO PERFORMING THESE FUNCTIONS. UNLESS OTHERWISE INDICATED, TOP CHORD SHALL HAVE PROPERLY ATTACHED STRUCTURAL PANELS AND BOTTOM CHORD SHALL HAVE A PROPERLY ATTACHED RIGID CEILING.

IMPORTANTFURNISH A COPY OF THIS DESIGN TO THE INSTALLATION CONTRACTOR. ALPINE ENGINEERED PRODUCTS, INC. SHALL NOT BE RESPONSIBLE FOR ANY DEVIATION FROM THIS DESIGN; ANY FAILURE TO BUILD THE TRUSS IN CONFORMANCE WITH TPI; OR FABRICATING, HANDLING, SHIPPING, INSTALLING & BRACING OF TRUSSES. DESIGN CONFORMS WITH APPLICABLE PROVISIONS OF NDS (NATIONAL DESIGN SPEC. BY AF&PA) AND TPI. ALPINE CONNECTOR PLATES ARE MADE OF 20/18/16GA (W,H/S/K) ASTM A653 GRADE 40/60 (W, K/H,S) GALV. STEEL. APPLY PLATES TO EACH FACE OF TRUSS AND, UNLESS OTHERWISE LOCATED ON THIS DESIGN, POSITION PER DRAWINGS 160A-Z. ANY INSPECTION OF PLATES FOLLOWED BY (1) SHALL BE PER ANNEX A3 OF TPI1 2002 SEC.3. A SEAL ON THIS DRAWING INDICATES ACCEPTANCE OF PROFESSIONAL ENGINEERING RESPONSIBILITY SOLELY FOR THE TRUSS COMPONENT

ARTHUR R. FISHER
LICENSE
No. 39687
STATE OF FLORIDA
PROFESSIONAL ENGINEER
Feb 10 '06

TC LL	20.0 PSF	REF	R487-- 86632
TC DL	10.0 PSF	DATE	02/10/06
BC DL	2.0 PSF	DRW	HCUSR487 06041082
BC LL	0.0 PSF	HC-ENG	JB/AF
TOT.LD.	32.0 PSF	SEQN-	82217
DUR.FAC.	1.25		

(6-004-GLENWOOD KING - BULLARD - AP4)

Top chord 2x4 SP #2 Dense
Bot chord 2x4 SP #2 Dense
Webs 2x4 SP #3

110 mph wind, 21.78 ft mean hgt, ASCE 7-02, CLOSED bldg, Located anywhere in roof, CAT II, EXP B, wind TC DL=5.0 psf, wind BC DL=1.2 psf.

Deflection meets L/360 live and L/240 total load. Creep increase factor for dead load is 1.50.

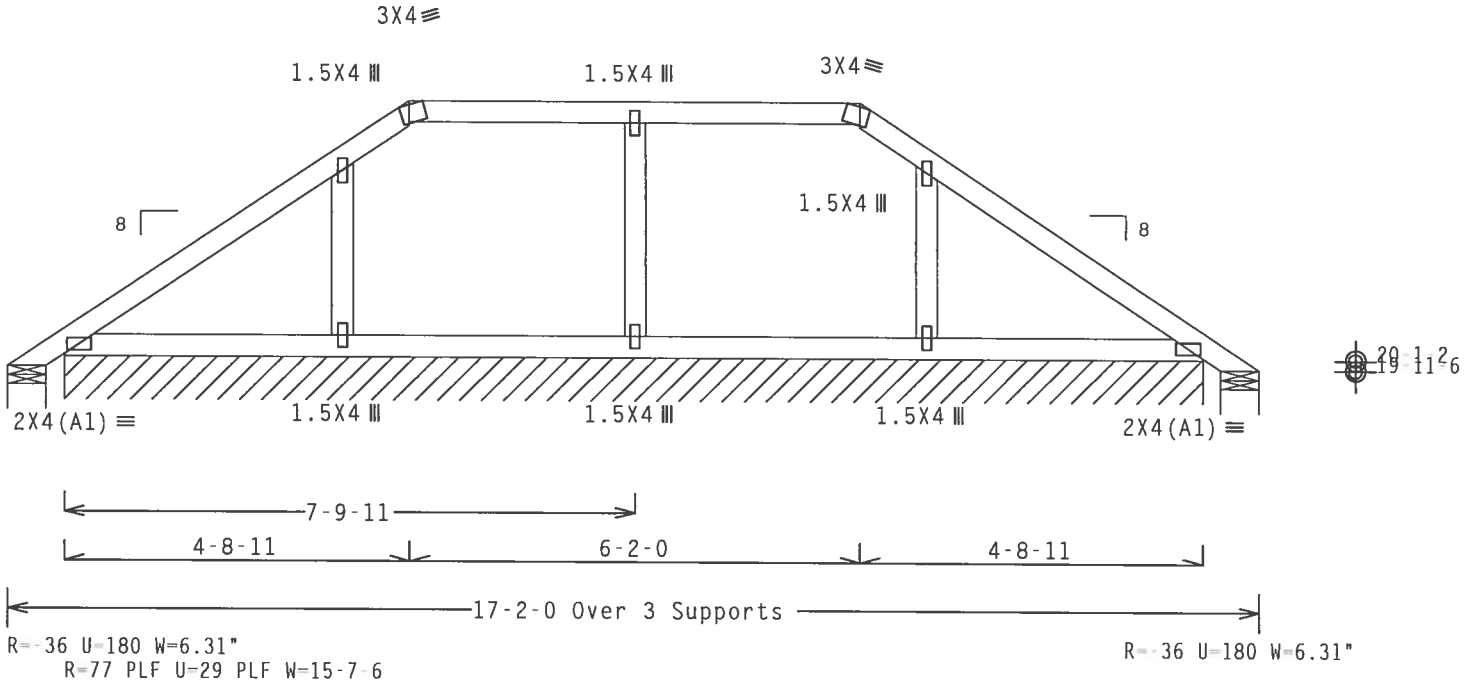

Design Crit: TPI-2002(STD)/FBC
Cq/RT=1.00(1.25)/10(0) 7.22.11 QTY:5 FL/-/4/-/-/R/- Scale =.375"/Ft.

PLT TYP. Wave

ALPINE
Alpine Engineered Products, Inc.
1950 Marley Drive

WARNING TRUSSES REQUIRE EXTREME CARE IN FABRICATION, HANDLING, SHIPPING, INSTALLING AND BRACING. REFER TO BCSI 1-03 (BUILDING COMPONENT SAFETY INFORMATION), PUBLISHED BY TPI (TRUSS PLATE INSTITUTE, 583 D'ONOFRIO DR., SUITE 200, MADISON, WI 53719) AND WTCA (WOOD TRUSS COUNCIL OF AMERICA, 6300 ENTERPRISE LN, MADISON, WI 53719) FOR SAFETY PRACTICES PRIOR TO PERFORMING THESE FUNCTIONS. UNLESS OTHERWISE INDICATED, TOP CHORD SHALL HAVE PROPERLY ATTACHED STRUCTURAL PANELS AND BOTTOM CHORD SHALL HAVE A PROPERLY ATTACHED RIGID CEILING.

IMPORTANTFURNISH A COPY OF THIS DESIGN TO THE INSTALLATION CONTRACTOR. ALPINE ENGINEERED PRODUCTS, INC. SHALL NOT BE RESPONSIBLE FOR ANY DEVIATION FROM THIS DESIGN; ANY FAILURE TO BUILD THE TRUSS IN CONFORMANCE WITH TPI; OR FABRICATING, HANDLING, SHIPPING, INSTALLING & BRACING OF TRUSSES. DESIGN CONFORMS WITH APPLICABLE PROVISIONS OF NDS (NATIONAL DESIGN SPEC. BY AF&PA) AND TPI. ALPINE CONNECTOR PLATES ARE MADE OF 20/18/16GA (W,H/S/K) ASTM A653 GRADE 40/60 (W, K/H,S) GALV. STEEL. APPLY PLATES TO EACH FACE OF TRUSS AND, UNLESS OTHERWISE LOCATED ON THIS DESIGN, POSITION PER DRAWINGS 160A Z. ANY INSPECTION OF PLATES FOLLOWED BY (1) SHALL BE PER ANNEX A3 OF TPI1 2002 SEC.3. A SEAL ON THIS DRAWING INDICATES ACCEPTANCE OF PROFESSIONAL ENGINEERING RESPONSIBILITY SOLELY FOR THE TRUSS COMPONENT DESIGN SHOWN. THE SUITABILITY AND USE OF THIS COMPONENT FOR ANY BUILDING IS THE RESPONSIBILITY OF THE

ARTHUR R. FISHER LICENSE No.59687 STATE OF FLORIDA PROFESSIONAL ENGINEER

Feb 10, 06

TC LL	20.0 PSF	REF	R487-- 86633
TC DL	10.0 PSF	DATE	02/10/06
BC DL	2.0 PSF	DRW	HCUSR487 06041081
BC LL	0.0 PSF	HC-ENG	JB/AF
TOT.LD.	32.0 PSF	SEQN-	146689 REV
DUR.FAC.	1.25		

(0-004-GLENWOOD KING - BULLARD - BP1)

Top chord 2x4 SP #2 Dense
Bot chord 2x4 SP #2 Dense
Webs 2x4 SP #3

SPECIAL LOADS
------(LUMBER DUR.FAC.=1.25 / PLATE DUR.FAC.=1.25)
TC - From 64 PLF at 0.00 to 64 PLF at 17.16
BC - From 4 PLF at 0.00 to 4 PLF at 17.16

Deflection meets L/360 live and L/240 total load. Creep increase factor for dead load is 1.50.

REFER TO DWG PIGBACKB0405 FOR PIGGYBACK DETAILS.
TOP CHORD OF SUPPORTING TRUSS UNDER PIGGYBACK TO BE BRACED @ 24"O.C., UNLESS OTHERWISE SPECIFIED

Trusses or components connecting to this girder have been modified by the truss designer. The loading for this girder requires verification for accuracy.

110 mph wind, 20.61 ft mean hgt, ASCE 7-02, CLOSED bldg, not located within 4.50 ft from roof edge, CAT II, EXP B, wind TC DL=5.0 psf, wind BC DL=5.0 psf.

In lieu of rigid ceiling use purlins to brace BC @ 24" OC.

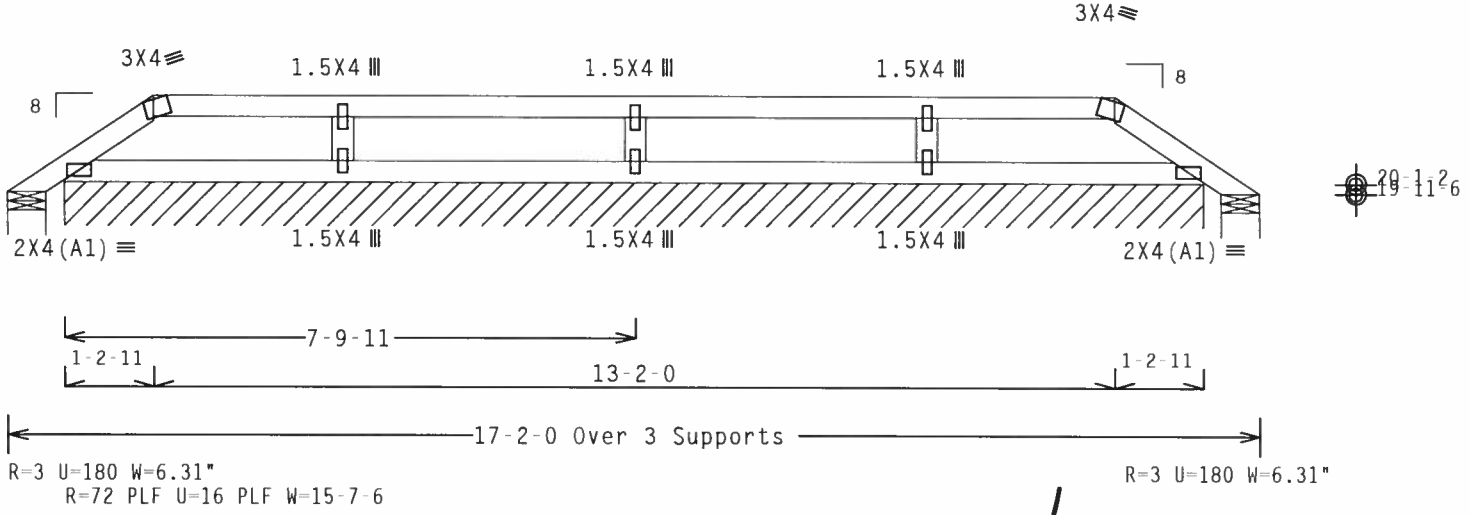

Design Crit: TPI-2002(STD)/FBC

PLT TYP. Wave Cq/RT=1.00(1.25)/10(0) 7.22.1 QTY:1 FL/-/4/-/-/R/- Scale =.375"/Ft.

ALPINE
Alpine Engineered Products, Inc.
1950 Morley Drive

WARNING TRUSSES REQUIRE EXTREME CARE IN FABRICATION, HANDLING, SHIPPING, INSTALLING AND BRACING. REFER TO BCSI 1-03 (BUILDING COMPONENT SAFETY INFORMATION), PUBLISHED BY TPI (TRUSS PLATE INSTITUTE, 583 D'ONOFRIO DR., SUITE 200, MADISON, WI 53719) AND WTCA (WOOD TRUSS COUNCIL OF AMERICA, 6300 ENTERPRISE LN, MADISON, WI 53719) FOR SAFETY PRACTICES PRIOR TO PERFORMING THESE FUNCTIONS. UNLESS OTHERWISE INDICATED, TOP CHORD SHALL HAVE PROPERLY ATTACHED STRUCTURAL PANELS AND BOTTOM CHORD SHALL HAVE A PROPERLY ATTACHED RIGID CEILING.

IMPORTANT FURNISH A COPY OF THIS DESIGN TO THE INSTALLATION CONTRACTOR. ALPINE ENGINEERED PRODUCTS, INC. SHALL NOT BE RESPONSIBLE FOR ANY DEVIATION FROM THIS DESIGN; ANY FAILURE TO BUILD THE TRUSS IN CONFORMANCE WITH TPI; OR FABRICATING, HANDLING, SHIPPING, INSTALLING & BRACING OF TRUSSES. DESIGN CONFORMS WITH APPLICABLE PROVISIONS OF NDS (NATIONAL DESIGN SPEC. BY AF&PA) AND TPI. ALPINE CONNECTOR PLATES ARE MADE OF 20/18/16GA (W.H/S/K) ASTM A653 GRADE 40/60 (H, K/H,S) GALV. STEEL. APPLY PLATES TO EACH FACE OF TRUSS AND, UNLESS OTHERWISE LOCATED ON THIS DESIGN, POSITION PER DRAWINGS 160A Z. ANY INSPECTION OF PLATES FOLLOWED BY (1) SHALL BE PER ANNEX A3 OF TPI1 2002 SEC.3. A SEAL ON THIS DRAWING INDICATES ACCEPTANCE OF PROFESSIONAL ENGINEERING RESPONSIBILITY SOLELY FOR THE TRUSS COMPONENT

ARTHUR R. FISHER
LICENSE
No.59687
STATE OF FLORIDA
PROFESSIONAL ENGINEER
Feb 10 '06

TC LL	20.0 PSF	REF	R487-- 86634
TC DL	10.0 PSF	DATE	02/10/06
BC DL	10.0 PSF	DRW	HCUSR487 06041083
BC LL	0.0 PSF	HC-ENG	JB/AF
TOT.LD.	40.0 PSF	SEQN-	27861
DUR.FAC.	1.25		

(6-004-GLENWOOD KING - BULLARD - BP2)

Top chord 2x4 SP #2 Dense
Bot chord 2x4 SP #2 Dense
Webs 2x4 SP #3

In lieu of rigid ceiling use purlins to brace BC @ 24" OC.

REFER TO DWG PIGBACKB0405 FOR PIGGYBACK DETAILS.
TOP CHORD OF SUPPORTING TRUSS UNDER PIGGYBACK TO
BE BRACED @ 24"O.C., UNLESS OTHERWISE SPECIFIED

110 mph wind, 21.28 ft mean hgt, ASCE 7-02, CLOSED bldg, not located within 4.50 ft from roof edge, CAT II, EXP B, wind TC DL=5.0 psf, wind BC DL=1.2 psf.

Deflection meets L/360 live and L/240 total load. Creep increase factor for dead load is 1.50.

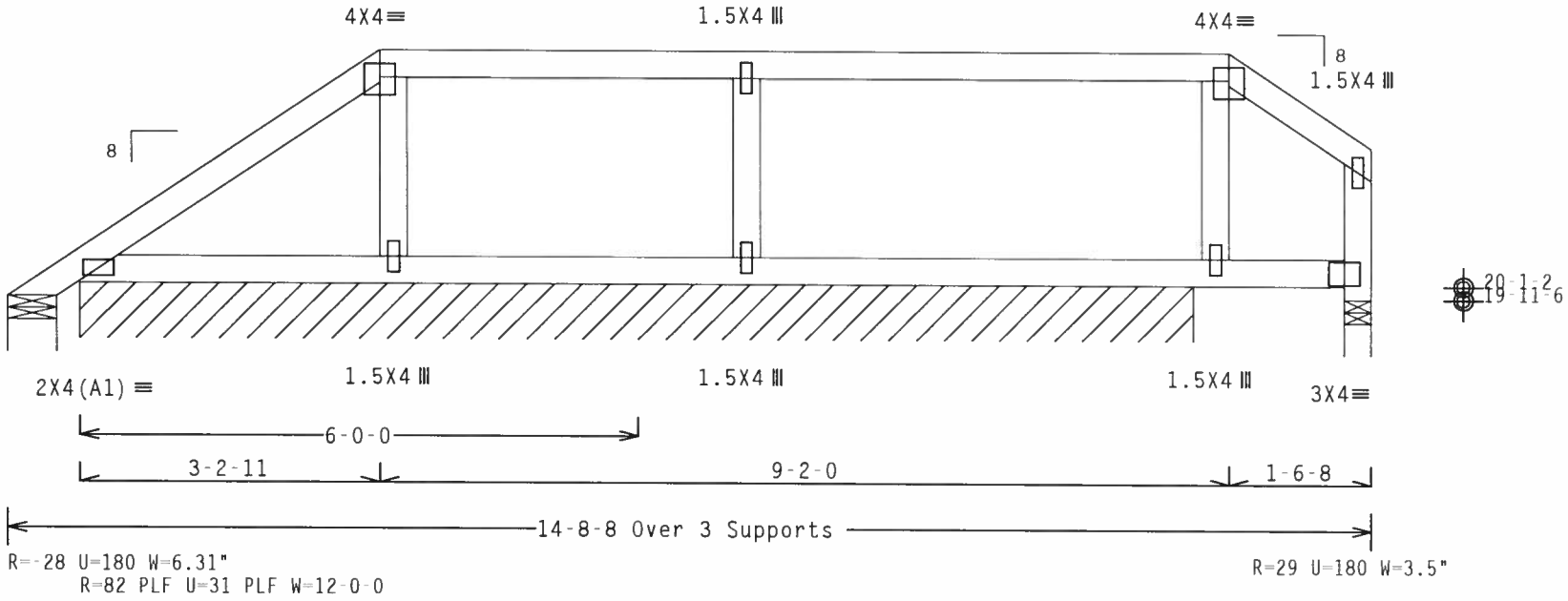

Design Crit: TPI-2002(STD)/FBC

PLT TYP. Wave Cq/RT=1.00(1.25)/10(0) 7.22.1 QTY:1 FL/-/4/-/-/R/- Scale =.5"/Ft.

ALPINE
Alpine Engineered Products, Inc.
1950 Marley Drive

WARNING TRUSSES REQUIRE EXTREME CARE IN FABRICATION, HANDLING, SHIPPING, INSTALLING AND BRACING. REFER TO BCSI 1-03 (BUILDING COMPONENT SAFETY INFORMATION), PUBLISHED BY TPI (TRUSS PLATE INSTITUTE, 583 D'ONOFRIO DR., SUITE 200, MADISON, WI 53719) AND WTCA (WOOD TRUSS COUNCIL OF AMERICA, 6300 ENTERPRISE LN, MADISON, WI 53719) FOR SAFETY PRACTICES PRIOR TO PERFORMING THESE FUNCTIONS. UNLESS OTHERWISE INDICATED, TOP CHORD SHALL HAVE PROPERLY ATTACHED STRUCTURAL PANELS AND BOTTOM CHORD SHALL HAVE A PROPERLY ATTACHED RIGID CEILING.

IMPORTANTFURNISH A COPY OF THIS DESIGN TO THE INSTALLATION CONTRACTOR. ALPINE ENGINEERED PRODUCTS, INC. SHALL NOT BE RESPONSIBLE FOR ANY DEVIATION FROM THIS DESIGN; ANY FAILURE TO BUILD THE TRUSS IN CONFORMANCE WITH TPI; OR FABRICATING, HANDLING, SHIPPING, INSTALLING & BRACING OF TRUSSES. DESIGN CONFORMS WITH APPLICABLE PROVISIONS OF NDS (NATIONAL DESIGN SPEC. BY AF&PA) AND TPI. ALPINE CONNECTOR PLATES ARE MADE OF 20/18/16GA (W,H/S/K) ASTM A653 GRADE 40/60 (W, K/H,S) GALV. STEEL. APPLY PLATES TO EACH FACE OF TRUSS AND, UNLESS OTHERWISE LOCATED ON THIS DESIGN, POSITION PER DRAWINGS 160A Z. ANY INSPECTION OF PLATES FOLLOWED BY (1) SHALL BE PER ANNEX A3 OF TPI1 2002 SEC.3. A SEAL ON THIS DRAWING INDICATES ACCEPTANCE OF PROFESSIONAL ENGINEERING RESPONSIBILITY SOLELY FOR THE TRUSS COMPONENT

ARTHUR R. FISHER LICENSE No.59687 STATE OF FLORIDA PROFESSIONAL ENGINEER

Feb 10 '06

TC LL	20.0 PSF	REF	R487-- 86635
TC DL	10.0 PSF	DATE	02/10/06
BC DL	2.0 PSF	DRW	HCUSR487 06041084
BC LL	0.0 PSF	HC-ENG	JB/AF
TOT.LD.	32.0 PSF	SEQN-	27849
DUR.FAC.	1.25		

(0 004-GLENWOOD KING BULLARD BP3)

Top chord 2x4 SP #2 Dense
Bot chord 2x4 SP #2 Dense
Webs 2x4 SP #3

In lieu of rigid ceiling use purlins to brace BC @ 24" OC.

REFER TO DWG PIGBACKB0405 FOR PIGGYBACK DETAILS.
TOP CHORD OF SUPPORTING TRUSS UNDER PIGGYBACK TO
BE BRACED @ 24"O.C., UNLESS OTHERWISE SPECIFIED

110 mph wind, 21.95 ft mean hgt, ASCE 7-02, CLOSED bldg, not located within 4.50 ft from roof edge, CAT II, EXP B, wind TC DL=5.0 psf, wind BC DL=1.2 psf.

Deflection meets L/360 live and L/240 total load. Creep increase factor for dead load is 1.50.

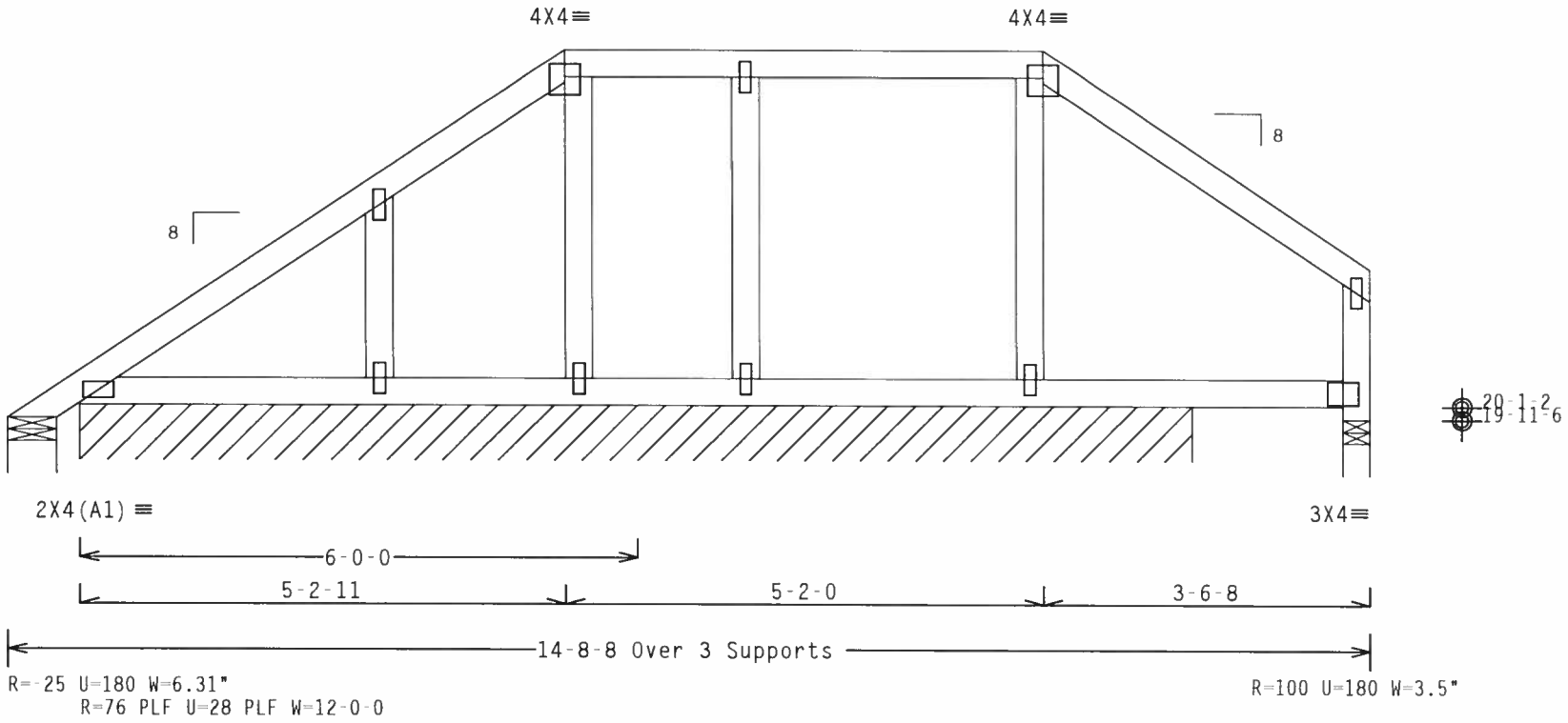

Note: All Plates Are 1.5X4 Except As Shown.

Design Crit: TPI-2002(STD)/FBC

PLT TYP. Wave Cq/RT=1.00(1.25)/10(0) 7.22.1 QTY:1 FL/-/4/-/-/R/- Scale =.5"/Ft.

ALPINE
Alpine Engineered Products, Inc.
1950 Marley Drive

WARNING TRUSSES REQUIRE EXTREME CARE IN FABRICATION, HANDLING, SHIPPING, INSTALLING AND BRACING. REFER TO BCSI 1-03 (BUILDING COMPONENT SAFETY INFORMATION), PUBLISHED BY TPI (TRUSS PLATE INSTITUTE, 583 D'ONOFRIO DR., SUITE 200, MADISON, WI 53719) AND WTCA (WOOD TRUSS COUNCIL OF AMERICA, 6300 ENTERPRISE LN, MADISON, WI 53719) FOR SAFETY PRACTICES PRIOR TO PERFORMING THESE FUNCTIONS. UNLESS OTHERWISE INDICATED, TOP CHORD SHALL HAVE PROPERLY ATTACHED STRUCTURAL PANELS AND BOTTOM CHORD SHALL HAVE A PROPERLY ATTACHED RIGID CEILING.

IMPORTANTFURNISH A COPY OF THIS DESIGN TO THE INSTALLATION CONTRACTOR. ALPINE ENGINEERED PRODUCTS, INC. SHALL NOT BE RESPONSIBLE FOR ANY DEVIATION FROM THIS DESIGN; ANY FAILURE TO BUILD THE TRUSS IN CONFORMANCE WITH TPI; OR FABRICATING, HANDLING, SHIPPING, INSTALLING & BRACING OF TRUSSES. DESIGN CONFORMS WITH APPLICABLE PROVISIONS OF NDS (NATIONAL DESIGN SPEC. BY AF&PA) AND TPI. ALPINE CONNECTOR PLATES ARE MADE OF 20/18/16GA (W,H/S/K) ASTM A653 GRADE 40/60 (W, K/H,S) GALV. STEEL. APPLY PLATES TO EACH FACE OF TRUSS AND, UNLESS OTHERWISE LOCATED ON THIS DESIGN, POSITION PER DRAWINGS 160A Z. ANY INSPECTION OF PLATES FOLLOWED BY (1) SHALL BE PER ANNEX A3 OF TPI1 2002 SEC.3. A SEAL ON THIS DRAWING INDICATES ACCEPTANCE OF PROFESSIONAL ENGINEERING RESPONSIBILITY SOLELY FOR THE TRUSS COMPONENT

ARTHUR D. FISHER
LICENSE
No.59687
STATE OF FLORIDA
PROFESSIONAL ENGINEER

Feb 10 '06

TC LL	20.0 PSF	REF	R487-- 86636
TC DL	10.0 PSF	DATE	02/10/06
BC DL	2.0 PSF	DRW	HCUSR487 06041085
BC LL	0.0 PSF	HC-ENG	JB/AF
TOT.LD.	32.0 PSF	SEQN-	27841
DUR.FAC.	1.25		

(6-004 GLENWOOD KING - BULLARD - BP4)

Top chord 2x4 SP #2 Dense
Bot chord 2x4 SP #2 Dense
Webs 2x4 SP #3

In lieu of rigid ceiling use purlins to brace BC @ 24" OC.

REFER TO DWG PIGBACKB0405 FOR PIGGYBACK DETAILS.
TOP CHORD OF SUPPORTING TRUSS UNDER PIGGYBACK TO
BE BRACED @ 24"O.C., UNLESS OTHERWISE SPECIFIED

110 mph wind, 22.61 ft mean hgt, ASCE 7-02, CLOSED bldg, not located within 4.50 ft from roof edge, CAT II, EXP B, wind TC DL=5.0 psf, wind BC DL=1.2 psf.

Deflection meets L/360 live and L/240 total load. Creep increase factor for dead load is 1.50.

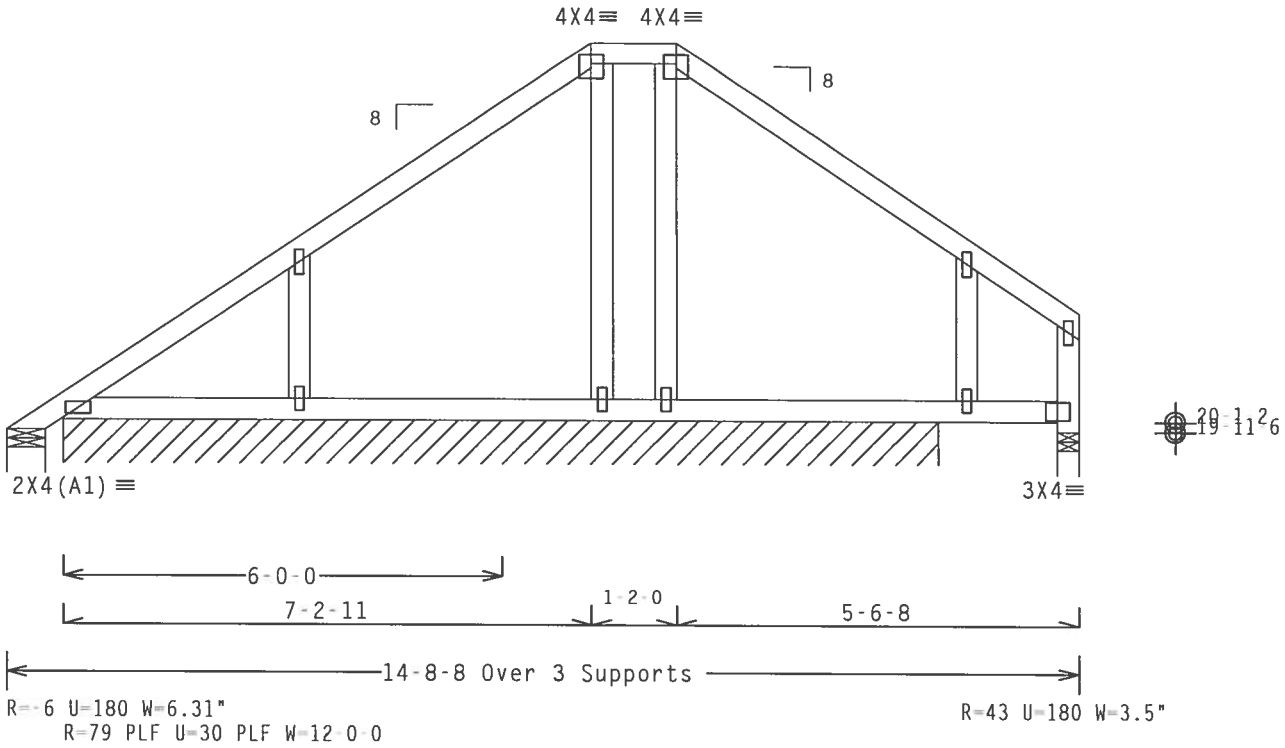

Note: All Plates Are 1.5X4 Except As Shown.

Design Crit: TPI-2002(STD)/FBC

PLT TYP. Wave Cq/RT=1.00(1.25)/10(0) 7.22.1 QTY:1 FL/-/4/-/-/R/- Scale =.375"/Ft.

ALPINE
Alpine Engineered Products, Inc.
1950 Marley Drive

WARNING TRUSSES REQUIRE EXTREME CARE IN FABRICATION, HANDLING, SHIPPING, INSTALLING AND BRACING. REFER TO BCSI 1-03 (BUILDING COMPONENT SAFETY INFORMATION), PUBLISHED BY TPI (TRUSS PLATE INSTITUTE, 583 D'ONOFRIO DR., SUITE 200, MADISON, WI 53719) AND WTCA (WOOD TRUSS COUNCIL OF AMERICA, 6300 ENTERPRISE LN, MADISON, WI 53719) FOR SAFETY PRACTICES PRIOR TO PERFORMING THESE FUNCTIONS. UNLESS OTHERWISE INDICATED, TOP CHORD SHALL HAVE PROPERLY ATTACHED STRUCTURAL PANELS AND BOTTOM CHORD SHALL HAVE A PROPERLY ATTACHED RIGID CEILING.

IMPORTANTFURNISH A COPY OF THIS DESIGN TO THE INSTALLATION CONTRACTOR. ALPINE ENGINEERED PRODUCTS, INC. SHALL NOT BE RESPONSIBLE FOR ANY DEVIATION FROM THIS DESIGN; ANY FAILURE TO BUILD THE TRUSS IN CONFORMANCE WITH TPI; OR FABRICATING, HANDLING, SHIPPING, INSTALLING & BRACING OF TRUSSES. DESIGN CONFORMS WITH APPLICABLE PROVISIONS OF NDS (NATIONAL DESIGN SPEC. BY AF&PA) AND TPI. ALPINE CONNECTOR PLATES ARE MADE OF 20/18/16GA (W,H/S/K) ASTM A653 GRADE 40/60 (H, K/H,S) GALV. STEEL. APPLY PLATES TO EACH FACE OF TRUSS AND, UNLESS OTHERWISE LOCATED ON THIS DESIGN, POSITION PER DRAWINGS 160A-Z. ANY INSPECTION OF PLATES FOLLOWED BY (1) SHALL BE PER ANNEX A3 OF TPI1-2002 SEC.3. A SEAL ON THIS DRAWING INDICATES ACCEPTANCE OF PROFESSIONAL ENGINEERING RESPONSIBILITY SOLELY FOR THE TRUSS COMPONENT

ARTHUR R. FISHER
LICENSE
No. 59687
STATE OF FLORIDA
PROFESSIONAL ENGINEER

Feb 10 '06

TC LL	20.0 PSF	REF	R487-- 86637
TC DL	10.0 PSF	DATE	02/10/06
BC DL	2.0 PSF	DRW	HCUSR487 06041086
BC LL	0.0 PSF	HC-ENG	JB/AF
TOT.LD.	32.0 PSF	SEQN-	27831
DUR.FAC.	1.25		

(6-004-GLENWOOD KING - BULLARD - BP5)

Top chord 2x4 SP #2 Dense
Bot chord 2x4 SP #2 Dense
Webs 2x4 SP #3

In lieu of rigid ceiling use purlins to brace BC @ 24" OC.

REFER TO DWG PIGBACKB0405 FOR PIGGYBACK DETAILS.
TOP CHORD OF SUPPORTING TRUSS UNDER PIGGYBACK TO BE BRACED @ 24"O.C., UNLESS OTHERWISE SPECIFIED

110 mph wind, 22.81 ft mean hgt, ASCE 7-02, CLOSED bldg, not located within 4.50 ft from roof edge, CAT II, EXP B, wind TC DL=5.0 psf, wind BC DL=1.2 psf.

Deflection meets L/360 live and L/240 total load. Creep increase factor for dead load is 1.50.

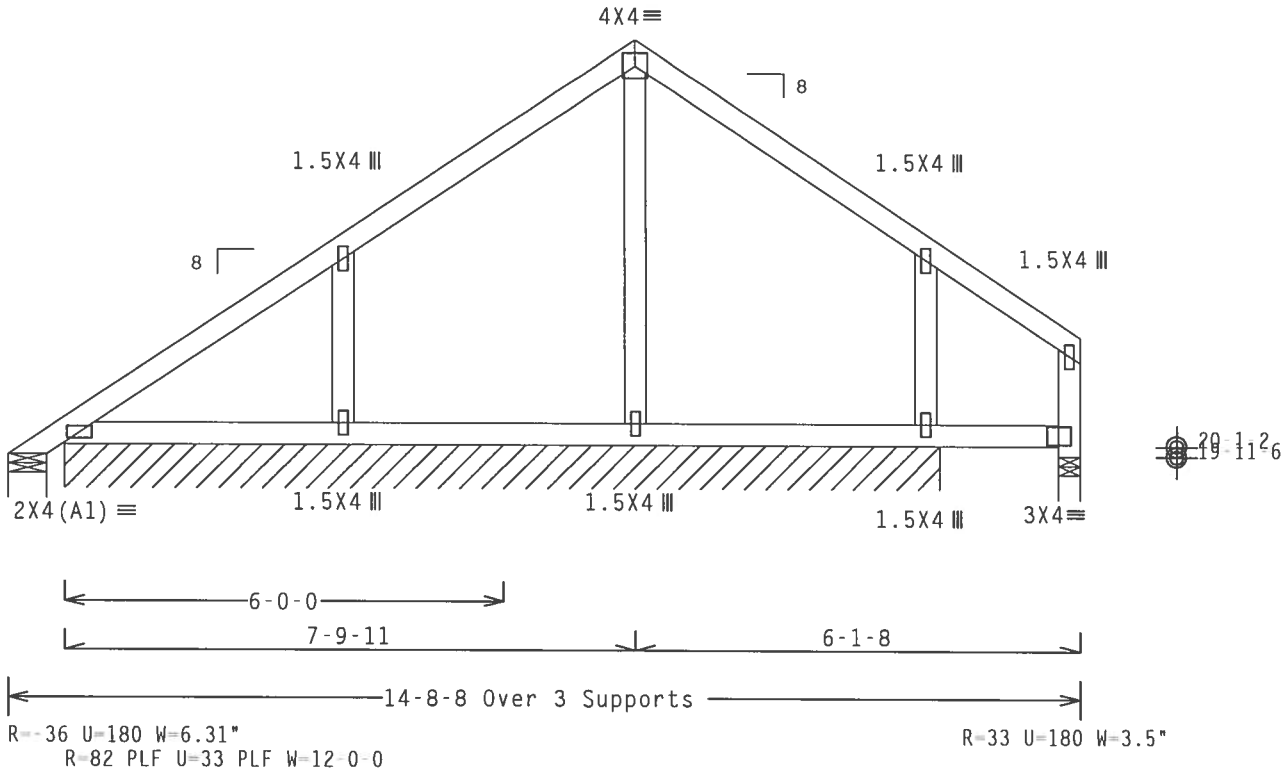

Design Crit: TPI-2002(STD)/FBC
Cq/RT=1.00(1.25)/10(0) 7.22.1

PLT TYP. Wave

QTY:4 FL/-/4/-/-/R/- Scale =.375"/Ft.

ALPINE
Alpine Engineered Products, Inc.
1950 Marley Drive

WARNING TRUSSES REQUIRE EXTREME CARE IN FABRICATION, HANDLING, SHIPPING, INSTALLING AND BRACING. REFER TO BCSI 1-03 (BUILDING COMPONENT SAFETY INFORMATION), PUBLISHED BY TPI (TRUSS PLATE INSTITUTE, 583 D'ONOFRIO DR., SUITE 200, MADISON, WI 53719) AND WTCA (WOOD TRUSS COUNCIL OF AMERICA, 6300 ENTERPRISE LN, MADISON, WI 53719) FOR SAFETY PRACTICES PRIOR TO PERFORMING THESE FUNCTIONS. UNLESS OTHERWISE INDICATED, TOP CHORD SHALL HAVE PROPERLY ATTACHED STRUCTURAL PANELS AND BOTTOM CHORD SHALL HAVE A PROPERLY ATTACHED RIGID CEILING.

IMPORTANTFURNISH A COPY OF THIS DESIGN TO THE INSTALLATION CONTRACTOR. ALPINE ENGINEERED PRODUCTS, INC. SHALL NOT BE RESPONSIBLE FOR ANY DEVIATION FROM THIS DESIGN; ANY FAILURE TO BUILD THE TRUSS IN CONFORMANCE WITH TPI; OR FABRICATING, HANDLING, SHIPPING, INSTALLING & BRACING OF TRUSSES. DESIGN CONFORMS WITH APPLICABLE PROVISIONS OF NDS (NATIONAL DESIGN SPEC, BY AF&PA) AND TPI. ALPINE CONNECTOR PLATES ARE MADE OF 20/18/16GA (W,H/S/K) ASTM A653 GRADE 40/60 (W, K/H,S) GALV. STEEL. APPLY PLATES TO EACH FACE OF TRUSS AND, UNLESS OTHERWISE LOCATED ON THIS DESIGN, POSITION PER DRAWINGS 160A-Z. ANY INSPECTION OF PLATES FOLLOWED BY (1) SHALL BE PER ANNEX A3 OF TPI1-2002 SEC.3. A SEAL ON THIS DRAWING INDICATES ACCEPTANCE OF PROFESSIONAL ENGINEERING RESPONSIBILITY SOLELY FOR THE TRUSS COMPONENT

ARTHUR R. FISHER
LICENSE
No. 59687
STATE OF FLORIDA
PROFESSIONAL ENGINEER
Feb 10 '06

TC LL	20.0 PSF	REF	R487-- 86638
TC DL	10.0 PSF	DATE	02/10/06
BC DL	2.0 PSF	DRW	HCUSR487 06041087
BC LL	0.0 PSF	HC-ENG	JB/AF
TOT.LD.	32.0 PSF	SEQN-	27823
DUR.FAC.	1.25		

(6-004-GLENWOOD KING - BULLARD - R1)

Top chord 2x4 SP #2 Dense
Bot chord 2x4 SP #2 Dense
Webs 2x4 SP #3 :W1 2x8 SP SS:

110 mph wind, 15.00 ft mean hgt, ASCE 7-02, CLOSED bldg, not located within 4.50 ft from roof edge, CAT II, EXP B, wind TC DL=5.0 psf, wind BC DL=5.0 psf.

(**) Plate relocated as shown.

SPECIAL LOADS
------(LUMBER DUR.FAC.=1.25 / PLATE DUR.FAC.=1.25)
TC - From 64 PLF at -1.50 to 64 PLF at 16.00
BC - From 5 PLF at -1.50 to 5 PLF at 0.00
BC - From 20 PLF at 0.00 to 20 PLF at 16.00
TC - 204 LB Conc. Load at 8.56, 8.94
BC - 436 LB Conc. Load at 8.50, 9.00

Deflection meets L/360 live and L/240 total load. Creep increase factor for dead load is 1.50.

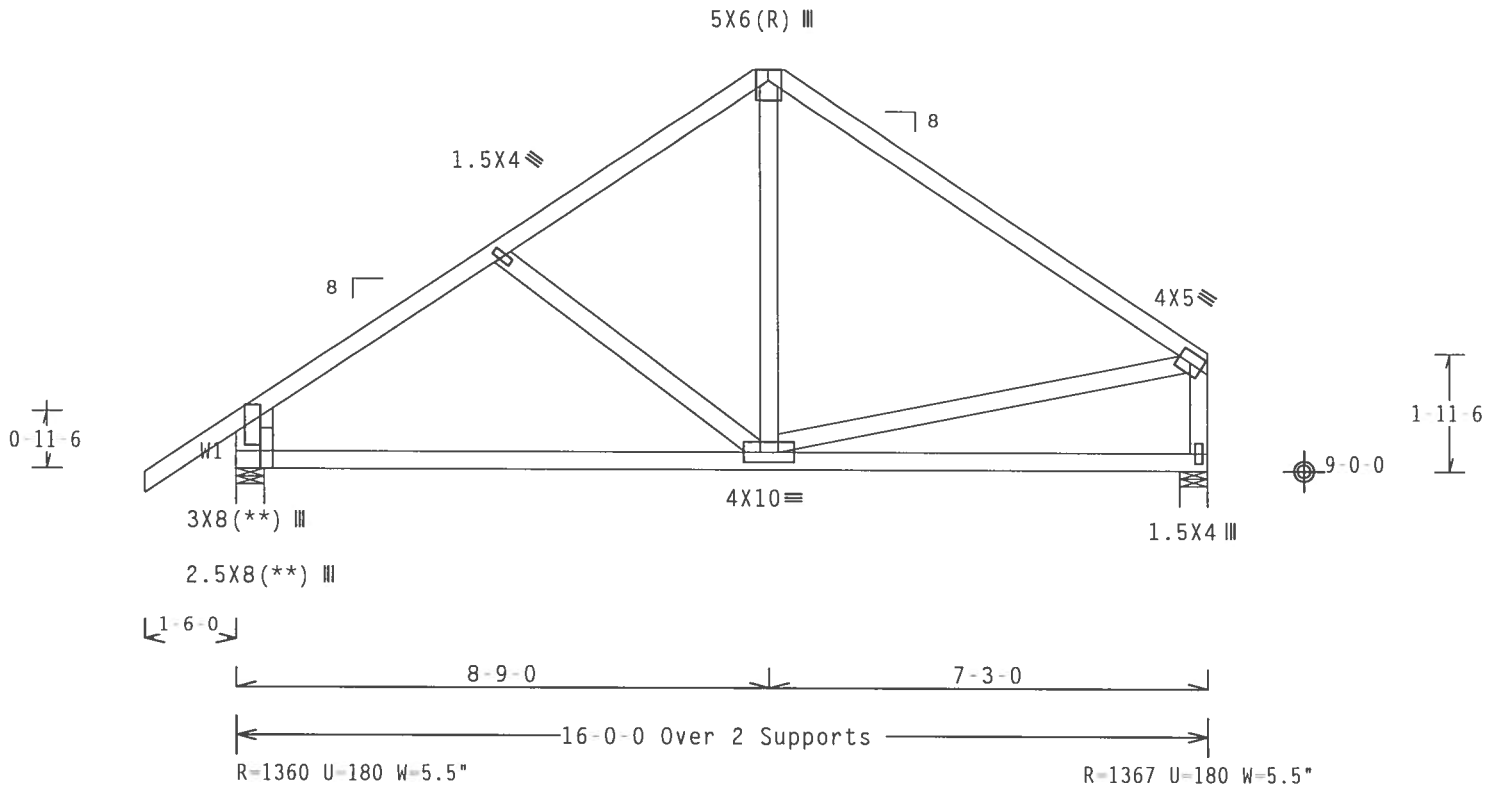

Design Crit: TPI-2002(STD)/FBC
PLT TYP. Wave Cq/RT=1.00(1.25)/10(0) 7.22.1 QTY:1 FL/-/4/-/-/R/- Scale =.3125"/Ft.

ALPINE
Alpine Engineered Products, Inc.
1950 Marley Drive

WARNING TRUSSES REQUIRE EXTREME CARE IN FABRICATION, HANDLING, SHIPPING, INSTALLING AND BRACING. REFER TO BCSI 1-03 (BUILDING COMPONENT SAFETY INFORMATION), PUBLISHED BY TPI (TRUSS PLATE INSTITUTE, 583 D'ONOFRIO DR., SUITE 200, MADISON, WI 53719) AND WTCA (WOOD TRUSS COUNCIL OF AMERICA, 6300 ENTERPRISE LN, MADISON, WI 53719) FOR SAFETY PRACTICES PRIOR TO PERFORMING THESE FUNCTIONS. UNLESS OTHERWISE INDICATED, TOP CHORD SHALL HAVE PROPERLY ATTACHED STRUCTURAL PANELS AND BOTTOM CHORD SHALL HAVE A PROPERLY ATTACHED RIGID CEILING.

IMPORTANTFURNISH A COPY OF THIS DESIGN TO THE INSTALLATION CONTRACTOR. ALPINE ENGINEERED PRODUCTS, INC. SHALL NOT BE RESPONSIBLE FOR ANY DEVIATION FROM THIS DESIGN; ANY FAILURE TO BUILD THE TRUSS IN CONFORMANCE WITH TPI; OR FABRICATING, HANDLING, SHIPPING, INSTALLING & BRACING OF TRUSSES. DESIGN CONFORMS WITH APPLICABLE PROVISIONS OF NDS (NATIONAL DESIGN SPEC. BY AF&PA) AND TPI. ALPINE CONNECTOR PLATES ARE MADE OF 20/18/16GA (W.H/S/K) ASTM A653 GRADE 40/60 (W. K/H.S) GALV. STEEL. APPLY PLATES TO EACH FACE OF TRUSS AND, UNLESS OTHERWISE LOCATED ON THIS DESIGN, POSITION PER DRAWINGS 160A-Z. ANY INSPECTION OF PLATES FOLLOWED BY (1) SHALL BE PER ANNEX A3 OF TPI1 2002 SEC.3. A SEAL ON THIS DRAWING INDICATES ACCEPTANCE OF PROFESSIONAL ENGINEERING RESPONSIBILITY SOLELY FOR THE TRUSS COMPONENT

ARTHUR R. FISHER
LICENSE
No.59687
STATE OF FLORIDA
PROFESSIONAL ENGINEER
FEB 10 '06

TC LL	20.0 PSF	REF	R487-- 86639
TC DL	10.0 PSF	DATE	02/10/06
BC DL	10.0 PSF	DRW	HCUSR487 06041088
BC LL	0.0 PSF	HC-ENG	JB/AF
TOT.LD.	40.0 PSF	SEQN-	28070
DUR.FAC.	1.25		

(6-004-GLENWOOD KING - BULLARD - R2)

Top chord 2x4 SP #2 Dense
Bot chord 2x4 SP #2 Dense
Webs 2x4 SP #3
:Lt Stubbed Wedge 2x8 SP SS:

110 mph wind, 15.00 ft mean hgt, ASCE 7-02, CLOSED bldg, not located within 4.50 ft from roof edge, CAT II, EXP B, wind TC DL=5.0 psf, wind BC DL=5.0 psf.

Deflection meets L/360 live and L/240 total load. Creep increase factor for dead load is 1.50.

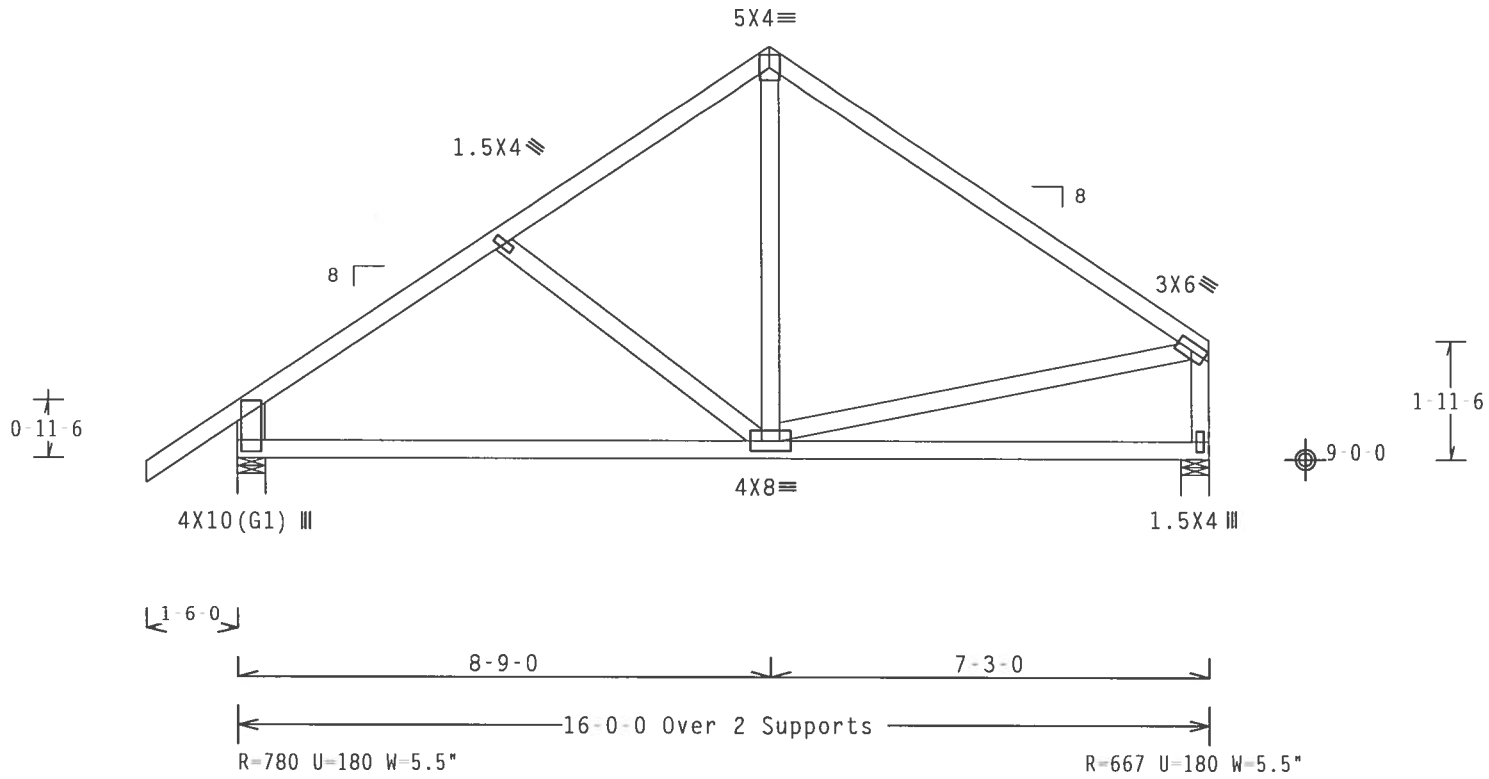

Design Crit: TPI-2002(STD)/FBC

PLT TYP. Wave Cq/RT=1.00(1.25)/10(0) 7.22.1 QTY:4 FL/-/4/-/-/R/- Scale =.3125"/Ft.

ALPINE
Alpine Engineered Products, Inc.

WARNING TRUSSES REQUIRE EXTREME CARE IN FABRICATION, HANDLING, SHIPPING, INSTALLING AND BRACING. REFER TO BCSI 1-03 (BUILDING COMPONENT SAFETY INFORMATION), PUBLISHED BY TPI (TRUSS PLATE INSTITUTE, 583 D'ONOFRIO DR., SUITE 200, MADISON, WI 53719) AND WTCA (WOOD TRUSS COUNCIL OF AMERICA, 6300 ENTERPRISE LN, MADISON, WI 53719) FOR SAFETY PRACTICES PRIOR TO PERFORMING THESE FUNCTIONS. UNLESS OTHERWISE INDICATED, TOP CHORD SHALL HAVE PROPERLY ATTACHED STRUCTURAL PANELS AND BOTTOM CHORD SHALL HAVE A PROPERLY ATTACHED RIGID CEILING.

IMPORTANT FURNISH A COPY OF THIS DESIGN TO THE INSTALLATION CONTRACTOR. ALPINE ENGINEERED PRODUCTS, INC. SHALL NOT BE RESPONSIBLE FOR ANY DEVIATION FROM THIS DESIGN; ANY FAILURE TO BUILD THE TRUSS IN CONFORMANCE WITH TPI; OR FABRICATING, HANDLING, SHIPPING, INSTALLING & BRACING OF TRUSSES. DESIGN CONFORMS WITH APPLICABLE PROVISIONS OF NDS (NATIONAL DESIGN SPEC. BY AF&PA) AND TPI. ALPINE CONNECTOR PLATES ARE MADE OF 20/18/16GA (W.H/S/K) ASTM A653 GRADE 40/60 (W. K/H.S) GALV. STEEL. APPLY PLATES TO EACH FACE OF TRUSS AND. UNLESS OTHERWISE LOCATED ON THIS DESIGN, POSITION PER DRAWINGS 160A-Z. ANY INSPECTION OF PLATES FOLLOWED BY (I) SHALL BE PER ANNEX A3 OF TPI1-2002 SEC.3. A SEAL ON THIS DRAWING INDICATES ACCEPTANCE OF PROFESSIONAL ENGINEERING RESPONSIBILITY SOLELY FOR THE TRUSS COMPONENT

ARTHUR R. FISHER LICENSE No. 59687 STATE OF FLORIDA PROFESSIONAL ENGINEER

Feb 10 '06

TC LL	20.0 PSF	REF	R487-- 86640
TC DL	10.0 PSF	DATE	02/10/06
BC DL	10.0 PSF	DRW	HCUSR487 06041024
BC LL	0.0 PSF	HC-ENG	JB/AF *
TOT.LD.	40.0 PSF	SEQN-	28051
DUR.FAC.	1.25		

(6 004-GLENWOOD KING - BULLARD R3G)

Top chord 2x4 SP #2 Dense
Bot chord 2x6 SP #1 Dense
Webs 2x4 SP #3
:Lt Stubbed Wedge 2x8 SP SS:

Trusses or components connecting to this girder have been modified by the truss designer. The loading for this girder requires verification for accuracy.

SPECIAL LOADS
------(LUMBER DUR.FAC.=1.25 / PLATE DUR.FAC.=1.25)
TC - From 64 PLF at -1.50 to 64 PLF at 16.00
BC - From 5 PLF at -1.50 to 5 PLF at 0.00
BC - From 20 PLF at 0.00 to 20 PLF at 8.00
BC - From 532 PLF at 8.00 to 532 PLF at 16.00
BC - 2400 LB Conc. Load at 7.00

Deflection meets L/360 live and L/240 total load. Creep increase factor for dead load is 1.50.

2 COMPLETE TRUSSES REQUIRED

Nailing Schedule: (12d_Common_(0.148"x3.25",_min.)_nails)
Top Chord: 1 Row @12.00" o.c.
Bot Chord: 1 Row @ 4.50" o.c.
Webs : 1 Row @ 4" o.c.
Use equal spacing between rows and stagger nails in each row to avoid splitting.

110 mph wind, 15.00 ft mean hgt, ASCE 7-02, CLOSED bldg, not located within 4.50 ft from roof edge, CAT II, EXP B, wind TC DL=5.0 psf, wind BC DL=5.0 psf.

Right end vertical not exposed to wind pressure.

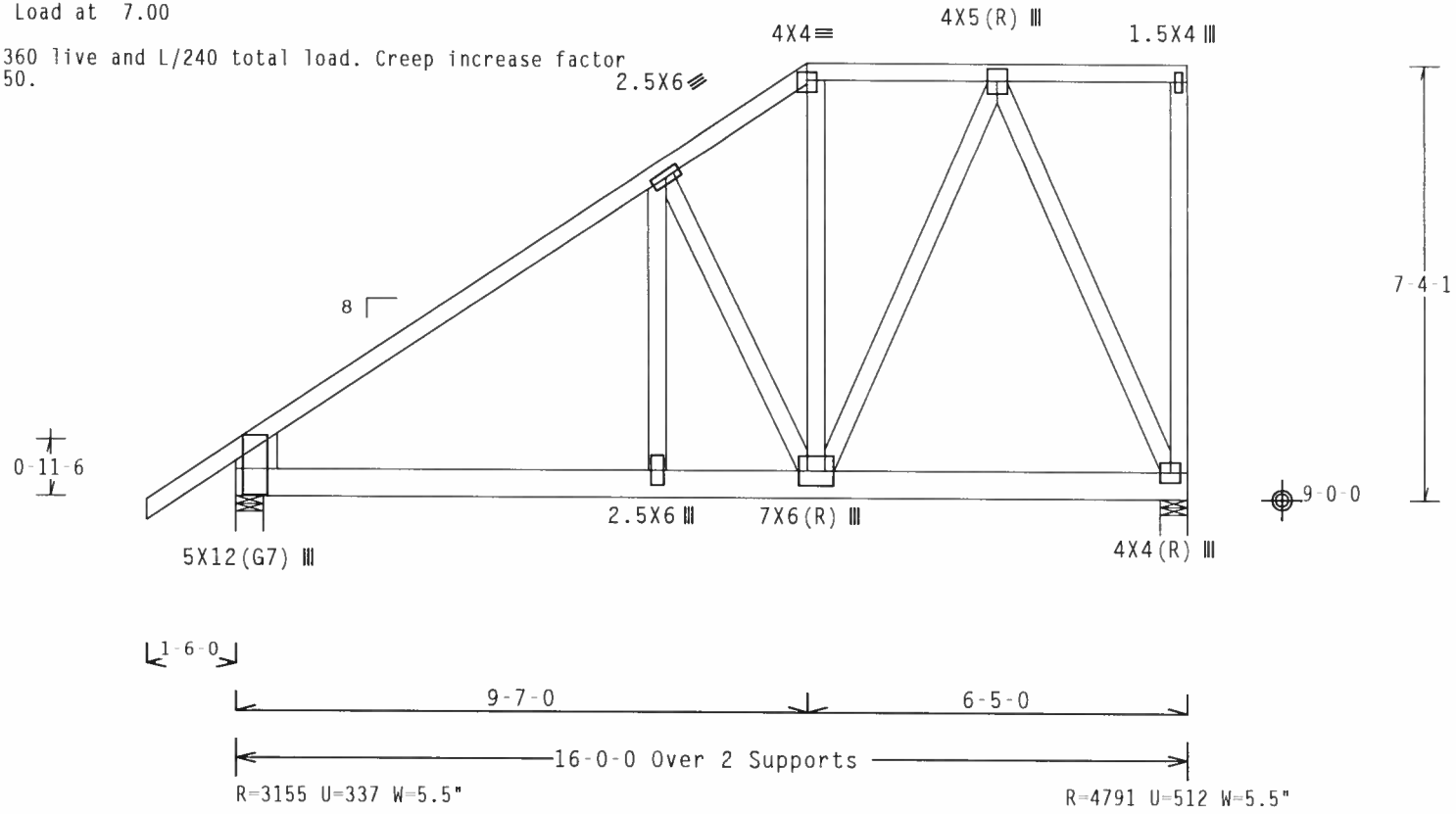

Design Crit: TPI-2002(STD)/FBC
PLT TYP. Wave Cq/RT=1.00(1.25)/10(0) 7.22.1 QTY:1 FL/-/4/-/-/R/- Scale =.3125"/Ft.

ALPINE
Alpine Engineered Products, Inc.
1950 Marley Drive

WARNING TRUSSES REQUIRE EXTREME CARE IN FABRICATION, HANDLING, SHIPPING, INSTALLING AND BRACING. REFER TO BCSI 1-03 (BUILDING COMPONENT SAFETY INFORMATION), PUBLISHED BY TPI (TRUSS PLATE INSTITUTE, 583 D'ONOFRIO DR., SUITE 200, MADISON, WI 53719) AND WTCA (WOOD TRUSS COUNCIL OF AMERICA, 6300 ENTERPRISE LN, MADISON, WI 53719) FOR SAFETY PRACTICES PRIOR TO PERFORMING THESE FUNCTIONS. UNLESS OTHERWISE INDICATED, TOP CHORD SHALL HAVE PROPERLY ATTACHED STRUCTURAL PANELS AND BOTTOM CHORD SHALL HAVE A PROPERLY ATTACHED RIGID CEILING.

IMPORTANTFURNISH A COPY OF THIS DESIGN TO THE INSTALLATION CONTRACTOR. ALPINE ENGINEERED PRODUCTS, INC. SHALL NOT BE RESPONSIBLE FOR ANY DEVIATION FROM THIS DESIGN; ANY FAILURE TO BUILD THE TRUSS IN CONFORMANCE WITH TPI; OR FABRICATING, HANDLING, SHIPPING, INSTALLING & BRACING OF TRUSSES. DESIGN CONFORMS WITH APPLICABLE PROVISIONS OF NDS (NATIONAL DESIGN SPEC. BY AF&PA) AND TPI. ALPINE CONNECTOR PLATES ARE MADE OF 20/18/16GA (W,H/S/K) ASTM A653 GRADE 40/60 (W, K/H,S) GALV. STEEL. APPLY PLATES TO EACH FACE OF TRUSS AND, UNLESS OTHERWISE LOCATED ON THIS DESIGN, POSITION PER DRAWINGS 160A Z. ANY INSPECTION OF PLATES FOLLOWED BY (1) SHALL BE PER ANNEX A3 OF TPI1 2002 SEC.3. A SEAL ON THIS DRAWING INDICATES ACCEPTANCE OF PROFESSIONAL ENGINEERING RESPONSIBILITY SOLELY FOR THE TRUSS COMPONENT

ARTHUR R. FISHER LICENSE No. 59687 STATE OF FLORIDA PROFESSIONAL ENGINEER
Feb 10 '06

TC LL	20.0 PSF	REF	R487-- 86641
TC DL	10.0 PSF	DATE	02/10/06
BC DL	10.0 PSF	DRW	HCUSR487 06041089
BC LL	0.0 PSF	HC-ENG	JB/AF
TOT.LD.	40.0 PSF	SEQN-	146703 REV
DUR.FAC.	1.25		

(6-004-GLENWOOD KING - BULLARD - S1 GE)

Top chord 2x4 SP #2 Dense
Bot chord 2x4 SP #2 Dense
Webs 2x4 SP #3

Truss spaced at 24.0" OC designed to support 1-4-0 top chord outlookers. Cladding load shall not exceed 10.00 PSF. Top chord must not be cut or notched.

Deflection meets L/360 live and L/240 total load. Creep increase factor for dead load is 1.50.

110 mph wind, 15.00 ft mean hgt, ASCE 7-02, CLOSED bldg, Located anywhere in roof, CAT II, EXP B, wind TC DL=5.0 psf, wind BC DL=5.0 psf.

See DWGS A11015EE0405 & GBLLETIN0405 for more requirements.

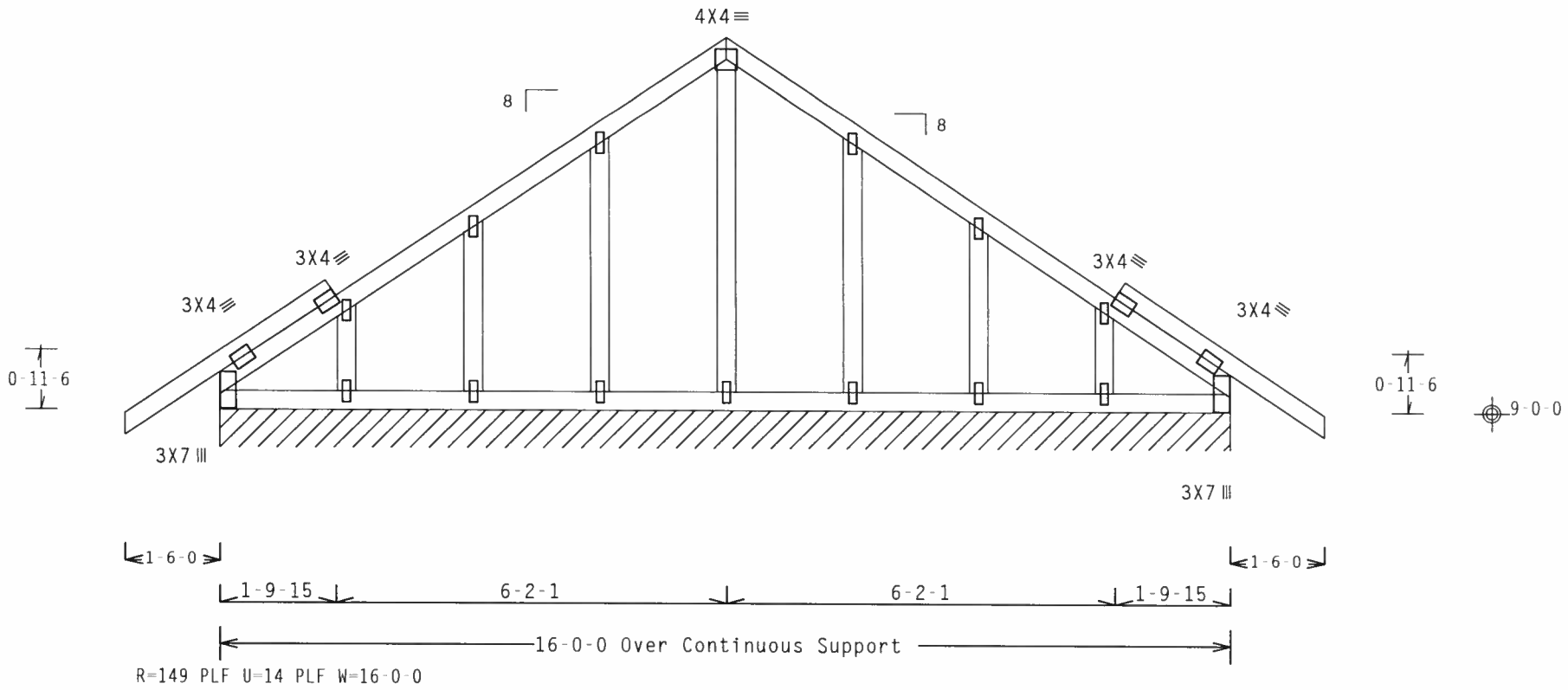

Note: All Plates Are 1.5X4 Except As Shown.

Design Crit: TPI-2002(STD)/FBC

PLT TYP. Wave Cq/RT=1.00(1.25)/10(0) 7.22.1 QTY:1 FL/-/4/-/-/R/- Scale =.375"/Ft.

ALPINE
Alpine Engineered Products, Inc.
1950 Marley Drive

WARNING TRUSSES REQUIRE EXTREME CARE IN FABRICATION, HANDLING, SHIPPING, INSTALLING AND BRACING. REFER TO BCSI 1 03 (BUILDING COMPONENT SAFETY INFORMATION), PUBLISHED BY TPI (TRUSS PLATE INSTITUTE, 583 D'ONOFRIO DR., SUITE 200, MADISON, WI 53719) AND WTCA (WOOD TRUSS COUNCIL OF AMERICA, 6300 ENTERPRISE LN, MADISON, WI 53719) FOR SAFETY PRACTICES PRIOR TO PERFORMING THESE FUNCTIONS. UNLESS OTHERWISE INDICATED, TOP CHORD SHALL HAVE PROPERLY ATTACHED STRUCTURAL PANELS AND BOTTOM CHORD SHALL HAVE A PROPERLY ATTACHED RIGID CEILING.

IMPORTANTFURNISH A COPY OF THIS DESIGN TO THE INSTALLATION CONTRACTOR. ALPINE ENGINEERED PRODUCTS, INC. SHALL NOT BE RESPONSIBLE FOR ANY DEVIATION FROM THIS DESIGN; ANY FAILURE TO BUILD THE TRUSS IN CONFORMANCE WITH TPI; OR FABRICATING, HANDLING, SHIPPING, INSTALLING & BRACING OF TRUSSES. DESIGN CONFORMS WITH APPLICABLE PROVISIONS OF NDS (NATIONAL DESIGN SPEC. BY AF&PA) AND TPI. ALPINE CONNECTOR PLATES ARE MADE OF 20/18/16GA (W,H/S/K) ASTM A653 GRADE 40/60 (W, K/H,S) GALV. STEEL. APPLY PLATES TO EACH FACE OF TRUSS AND, UNLESS OTHERWISE LOCATED ON THIS DESIGN, POSITION PER DRAWINGS 160A Z. ANY INSPECTION OF PLATES FOLLOWED BY (1) SHALL BE PER ANNEX A3 OF TPI1 2002 SEC.3. A SEAL ON THIS DRAWING INDICATES ACCEPTANCE OF PROFESSIONAL ENGINEERING RESPONSIBILITY SOLELY FOR THE TRUSS COMPONENT

ARTHUR R. FISHER LICENSE No. 59687 STATE OF FLORIDA PROFESSIONAL ENGINEER

Feb 10 '06

TC LL	20.0 PSF	REF	R487-- 86642
TC DL	10.0 PSF	DATE	02/10/06
BC DL	10.0 PSF	DRW	HCUSR487 06041090
BC LL	0.0 PSF	HC-ENG	JB/AF
TOT.LD.	40.0 PSF	SEQN-	27954 REV
DUR.FAC.	1.25		

(6-004-GLENWOOD KING - BULLARD - S2)

Top chord 2x4 SP #2 Dense
Bot chord 2x4 SP #2 Dense
Webs 2x4 SP #3
:Lt Stubbed Wedge 2x8 SP SS::Rt Stubbed Wedge 2x8 SP SS:

110 mph wind, 15.00 ft mean hgt, ASCE 7-02, CLOSED bldg, Located anywhere in roof, CAT II, EXP B, wind TC DL=5.0 psf, wind BC DL=5.0 psf.

Deflection meets L/360 live and L/240 total load. Creep increase factor for dead load is 1.50.

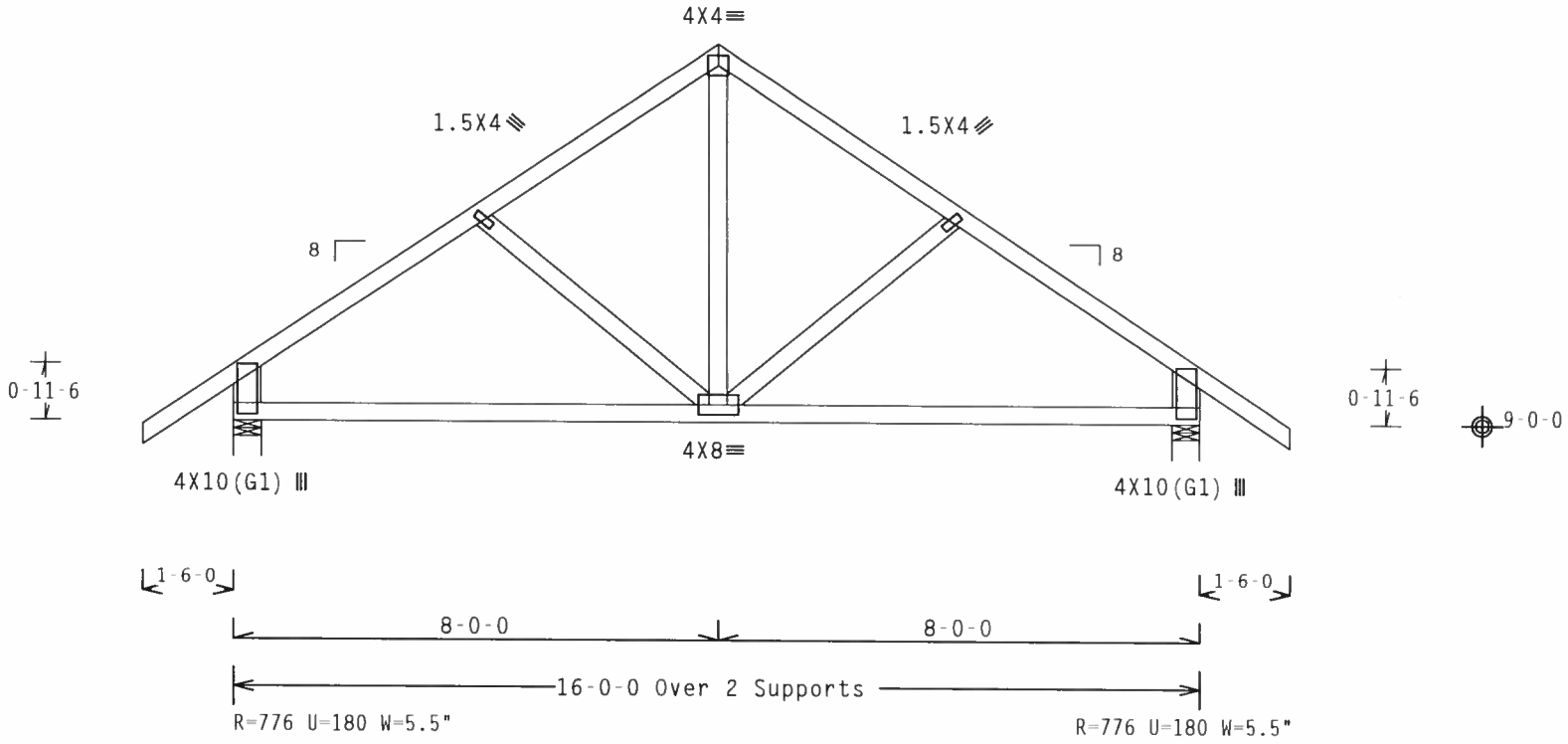

Design Crit: TPI-2002(STD)/FBC

PLT TYP. Wave

Cq/RT=1.00(1.25)/10(0) 7.22.1 QTY:3 FL/-/4/-/-/R/- Scale =.3125"/Ft.

ALPINE
Alpine Engineered Products, Inc.
1950 Marley Drive

WARNING TRUSSES REQUIRE EXTREME CARE IN FABRICATION, HANDLING, SHIPPING, INSTALLING AND BRACING. REFER TO BCSI 1-03 (BUILDING COMPONENT SAFETY INFORMATION), PUBLISHED BY TPI (TRUSS PLATE INSTITUTE, 583 D'ONOFRIO DR., SUITE 200, MADISON, WI 53719) AND WTCA (WOOD TRUSS COUNCIL OF AMERICA, 6300 ENTERPRISE LN, MADISON, WI 53719) FOR SAFETY PRACTICES PRIOR TO PERFORMING THESE FUNCTIONS. UNLESS OTHERWISE INDICATED, TOP CHORD SHALL HAVE PROPERLY ATTACHED STRUCTURAL PANELS AND BOTTOM CHORD SHALL HAVE A PROPERLY ATTACHED RIGID CEILING.

IMPORTANTFURNISH A COPY OF THIS DESIGN TO THE INSTALLATION CONTRACTOR. ALPINE ENGINEERED PRODUCTS, INC. SHALL NOT BE RESPONSIBLE FOR ANY DEVIATION FROM THIS DESIGN; ANY FAILURE TO BUILD THE TRUSS IN CONFORMANCE WITH TPI; OR FABRICATING, HANDLING, SHIPPING, INSTALLING & BRACING OF TRUSSES. DESIGN CONFORMS WITH APPLICABLE PROVISIONS OF NDS (NATIONAL DESIGN SPEC. BY AF&PA) AND TPI. ALPINE CONNECTOR PLATES ARE MADE OF 20/18/16GA (W,H/S/K) ASTM A653 GRADE 40/60 (W, K/H,S) GALV. STEEL. APPLY PLATES TO EACH FACE OF TRUSS AND, UNLESS OTHERWISE LOCATED ON THIS DESIGN, POSITION PER DRAWINGS 160A Z. ANY INSPECTION OF PLATES FOLLOWED BY (1) SHALL BE PER ANNEX A3 OF TPI1 2002 SEC.3. A SEAL ON THIS DRAWING INDICATES ACCEPTANCE OF PROFESSIONAL ENGINEERING RESPONSIBILITY SOLELY FOR THE TRUSS COMPONENT DESIGN SHOWN. THE SUITABILITY AND USE OF THIS COMPONENT FOR ANY BUILDING IS THE RESPONSIBILITY OF THE

ARTHUR R. FISHER LICENSE No. 59687 STATE OF FLORIDA PROFESSIONAL ENGINEER

Feb 10, 2006

TC LL	20.0 PSF	REF	R487-- 86643
TC DL	10.0 PSF	DATE	02/10/06
BC DL	10.0 PSF	DRW	HCUSR487 06041025
BC LL	0.0 PSF	HC-ENG	JB/AF *
TOT.LD.	40.0 PSF	SEQN-	27939
DUR.FAC.	1.25		

(6-004 GLENWOOD KING - BULLARD - S3)

Top chord 2x4 SP #2 Dense
Bot chord 2x4 SP #2 Dense
Webs 2x4 SP #3
:Lt Stubbed Wedge 2x8 SP SS::Rt Stubbed Wedge 2x8 SP SS:

110 mph wind, 15.00 ft mean hgt, ASCE 7-02, CLOSED bldg, Located anywhere in roof, CAT II, EXP B, wind TC DL=5.0 psf, wind BC DL=5.0 psf.

Deflection meets L/360 live and L/240 total load. Creep increase factor for dead load is 1.50.

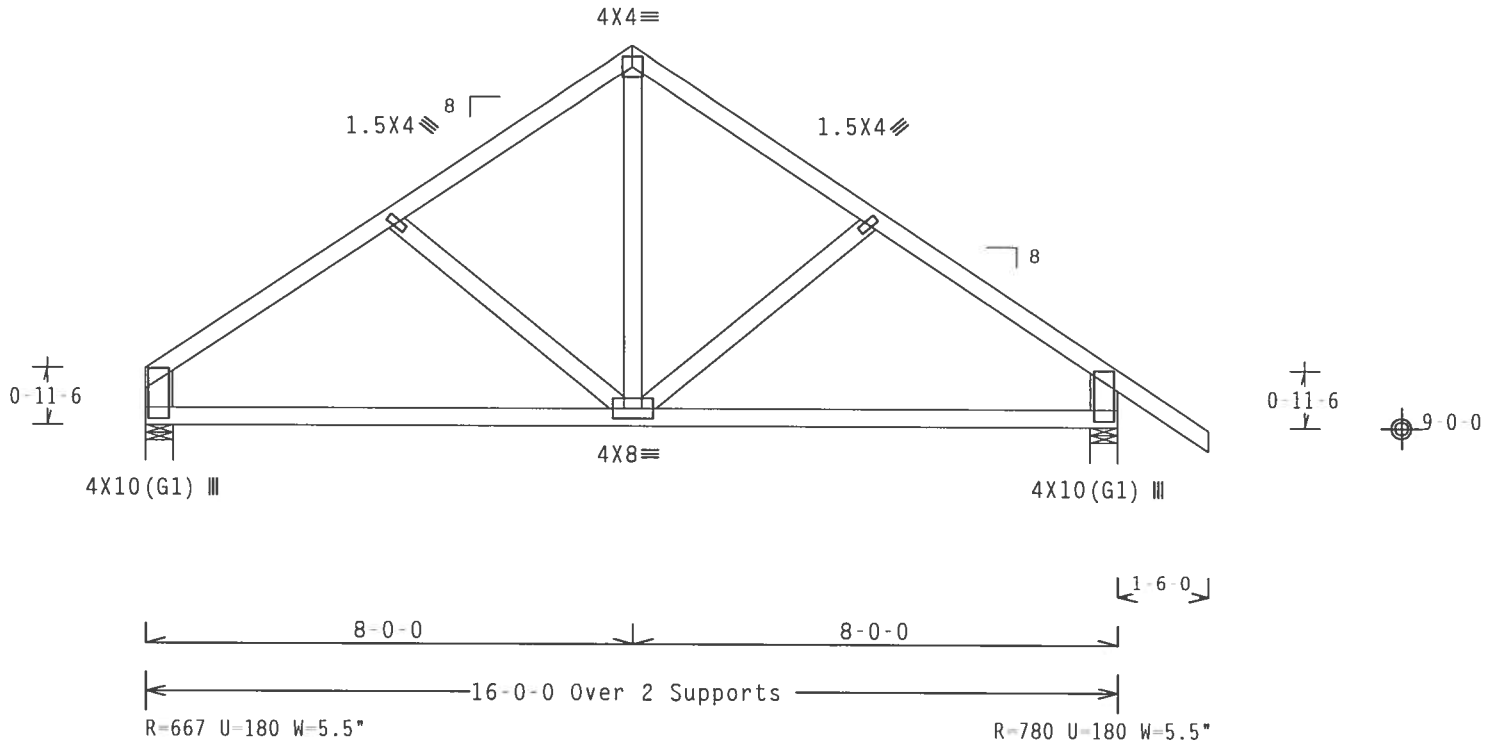

Design Crit: TPI-2002(STD)/FBC

PLT TYP. Wave

Cq/RT=1.00(1.25)/10(0) 7.22.1 QTY:2 FL/-/4/-/-/R/- Scale =.3125"/Ft.

ALPINE

Alpine Engineered Products, Inc.
1950 Marley Drive

WARNING TRUSSES REQUIRE EXTREME CARE IN FABRICATION, HANDLING, SHIPPING, INSTALLING AND BRACING. REFER TO BCSI 1-03 (BUILDING COMPONENT SAFETY INFORMATION), PUBLISHED BY TPI (TRUSS PLATE INSTITUTE, 583 D'ONOFRIO DR., SUITE 200, MADISON, WI 53719) AND WTCA (WOOD TRUSS COUNCIL OF AMERICA, 6300 ENTERPRISE LN, MADISON, WI 53719) FOR SAFETY PRACTICES PRIOR TO PERFORMING THESE FUNCTIONS. UNLESS OTHERWISE INDICATED, TOP CHORD SHALL HAVE PROPERLY ATTACHED STRUCTURAL PANELS AND BOTTOM CHORD SHALL HAVE A PROPERLY ATTACHED RIGID CEILING.

IMPORTANTFURNISH A COPY OF THIS DESIGN TO THE INSTALLATION CONTRACTOR. ALPINE ENGINEERED PRODUCTS, INC. SHALL NOT BE RESPONSIBLE FOR ANY DEVIATION FROM THIS DESIGN; ANY FAILURE TO BUILD THE TRUSS IN CONFORMANCE WITH TPI; OR FABRICATING, HANDLING, SHIPPING, INSTALLING & BRACING OF TRUSSES. DESIGN CONFORMS WITH APPLICABLE PROVISIONS OF NDS (NATIONAL DESIGN SPEC. BY AF&PA) AND TPI. ALPINE CONNECTOR PLATES ARE MADE OF 20/18/16GA (W,H/S/K) ASTM A653 GRADE 40/60 (W, K/H,S) GALV. STEEL. APPLY PLATES TO EACH FACE OF TRUSS AND, UNLESS OTHERWISE LOCATED ON THIS DESIGN, POSITION PER DRAWINGS 160A-Z. ANY INSPECTION OF PLATES FOLLOWED BY (1) SHALL BE PER ANNEX A3 OF TPI1-2002 SEC.3. A SEAL ON THIS DRAWING INDICATES ACCEPTANCE OF PROFESSIONAL ENGINEERING RESPONSIBILITY SOLELY FOR THE TRUSS COMPONENT

ARTHUR R. FISHER
LICENSE
No. 59687
STATE OF FLORIDA
PROFESSIONAL ENGINEER

Feb 10 '06

TC LL	20.0 PSF	REF	R487-- 86644
TC DL	10.0 PSF	DATE	02/10/06
BC DL	10.0 PSF	DRW	HCUSR487 06041026
BC LL	0.0 PSF	HC-ENG	JB/AF *
TOT.LD.	40.0 PSF	SEQN-	27946
DUR.FAC.	1.25		

(6 004-GLENWOOD KING - BULLARD - S4)

Top chord 2x4 SP #2 Dense
Bot chord 2x4 SP #2 Dense
Webs 2x4 SP #3
:Rt Stubbed Wedge 2x8 SP SS:

Left end vertical not exposed to wind pressure.

110 mph wind, 15.00 ft mean hgt, ASCE 7-02, CLOSED bldg, not located within 4.50 ft from roof edge, CAT II, EXP B, wind TC DL=5.0 psf, wind BC DL=5.0 psf.

Deflection meets L/360 live and L/240 total load. Creep increase factor for dead load is 1.50.

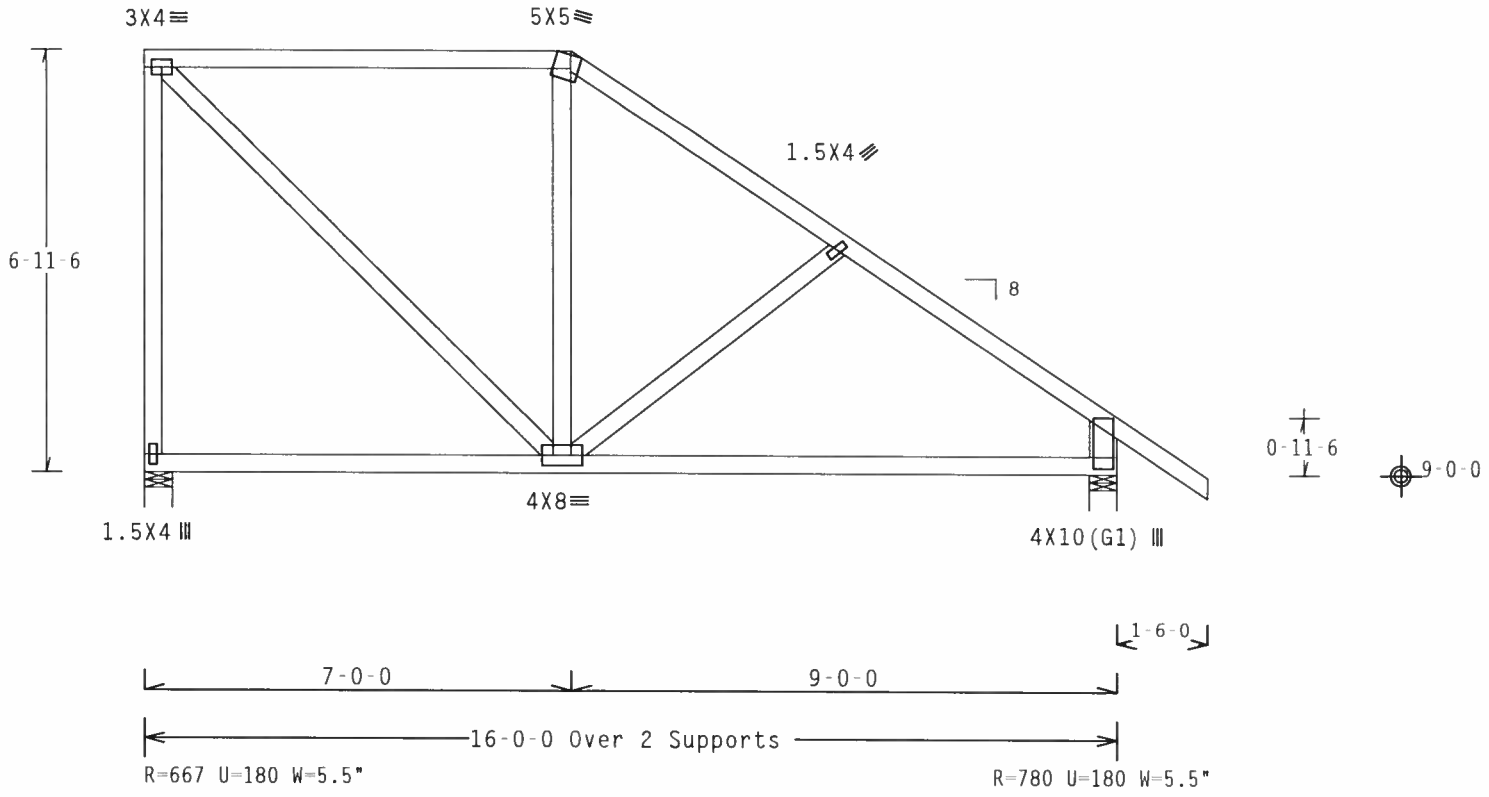

Design Crit: TPI-2002(STD)/FBC

PLT TYP. Wave

Cq/RT=1.00(1.25)/10(0) 7.22.11 QTY:1 FL/-/4/-/-/R/- Scale =.3125"/Ft.

ALPINE
Alpine Engineered Products, Inc.
1950 Marley Drive

WARNING TRUSSES REQUIRE EXTREME CARE IN FABRICATION, HANDLING, SHIPPING, INSTALLING AND BRACING. REFER TO BCSI 1 03 (BUILDING COMPONENT SAFETY INFORMATION), PUBLISHED BY TPI (TRUSS PLATE INSTITUTE, 583 D'ONOFRIO DR., SUITE 200, MADISON, WI 53719) AND WTCA (WOOD TRUSS COUNCIL OF AMERICA, 6300 ENTERPRISE LN, MADISON, WI 53719) FOR SAFETY PRACTICES PRIOR TO PERFORMING THESE FUNCTIONS. UNLESS OTHERWISE INDICATED, TOP CHORD SHALL HAVE PROPERLY ATTACHED STRUCTURAL PANELS AND BOTTOM CHORD SHALL HAVE A PROPERLY ATTACHED RIGID CEILING.

IMPORTANTFURNISH A COPY OF THIS DESIGN TO THE INSTALLATION CONTRACTOR. ALPINE ENGINEERED PRODUCTS, INC. SHALL NOT BE RESPONSIBLE FOR ANY DEVIATION FROM THIS DESIGN; ANY FAILURE TO BUILD THE TRUSS IN CONFORMANCE WITH TPI; OR FABRICATING, HANDLING, SHIPPING, INSTALLING & BRACING OF TRUSSES. DESIGN CONFORMS WITH APPLICABLE PROVISIONS OF NDS (NATIONAL DESIGN SPEC. BY AF&PA) AND TPI. ALPINE CONNECTOR PLATES ARE MADE OF 20/18/16GA (W,H/S/K) ASTM A653 GRADE 40/60 (W, K/H,S) GALV. STEEL. APPLY PLATES TO EACH FACE OF TRUSS AND, UNLESS OTHERWISE LOCATED ON THIS DESIGN, POSITION PER DRAWINGS 160A Z. ANY INSPECTION OF PLATES FOLLOWED BY (1) SHALL BE PER ANNEX A3 OF TPI1 2002 SEC.3. A SEAL ON THIS DRAWING INDICATES ACCEPTANCE OF PROFESSIONAL ENGINEERING RESPONSIBILITY SOLELY FOR THE TRUSS COMPONENT DESIGN SHOWN. THE SUITABILITY AND USE OF THIS COMPONENT FOR ANY BUILDING IS THE RESPONSIBILITY OF THE

ARTHUR R. FISHER LICENSE No.59687 STATE OF FLORIDA PROFESSIONAL ENGINEER

Feb 10 '06

TC LL	20.0 PSF	REF	R487-- 86645
TC DL	10.0 PSF	DATE	02/10/06
BC DL	10.0 PSF	DRW	HCUSR487 06041027
BC LL	0.0 PSF	HC-ENG	JB/AF *
TOT.LD.	40.0 PSF	SEQN-	27960
DUR.FAC.	1.25		

(8 004-GLENWOOD KING - BULLARD - S5G)

Top chord 2x4 SP #2 Dense
Bot chord 2x6 SP #2
Webs 2x4 SP #3
:Rt Stubbed Wedge 2x8 SP SS:

Trusses or components connecting to this girder have been modified by the truss designer. The loading for this girder requires verification for accuracy.

SPECIAL LOADS
------(LUMBER DUR.FAC.=1.25 / PLATE DUR.FAC.=1.25)

TC -	From	64 PLF	at 0.00	to	64 PLF	at	17.50
BC -	From	20 PLF	at 0.00	to	20 PLF	at	0.05
BC -	From	532 PLF	at 0.05	to	532 PLF	at	7.85
BC -	From	264 PLF	at 7.85	to	264 PLF	at	7.92
BC -	From	20 PLF	at 7.92	to	20 PLF	at	16.00
BC -	From	5 PLF	at 16.00	to	5 PLF	at	17.50
BC -	2400 LB Conc. Load at 8.93						

2 COMPLETE TRUSSES REQUIRED

Nailing Schedule: (12d_Common_(0.148"x3.25",_min.)_nails)
Top Chord: 1 Row @12.00" o.c.
Bot Chord: 1 Row @ 4.50" o.c.
Webs : 1 Row @ 4" o.c.
Use equal spacing between rows and stagger nails in each row to avoid splitting.

110 mph wind, 15.00 ft mean hgt, ASCE 7-02, CLOSED bldg, not located within 4.50 ft from roof edge, CAT II, EXP B, wind TC DL=5.0 psf, wind BC DL=5.0 psf.

Left end vertical not exposed to wind pressure.

Deflection meets L/360 live and L/240 total load. Creep increase factor for dead load is 1.50.

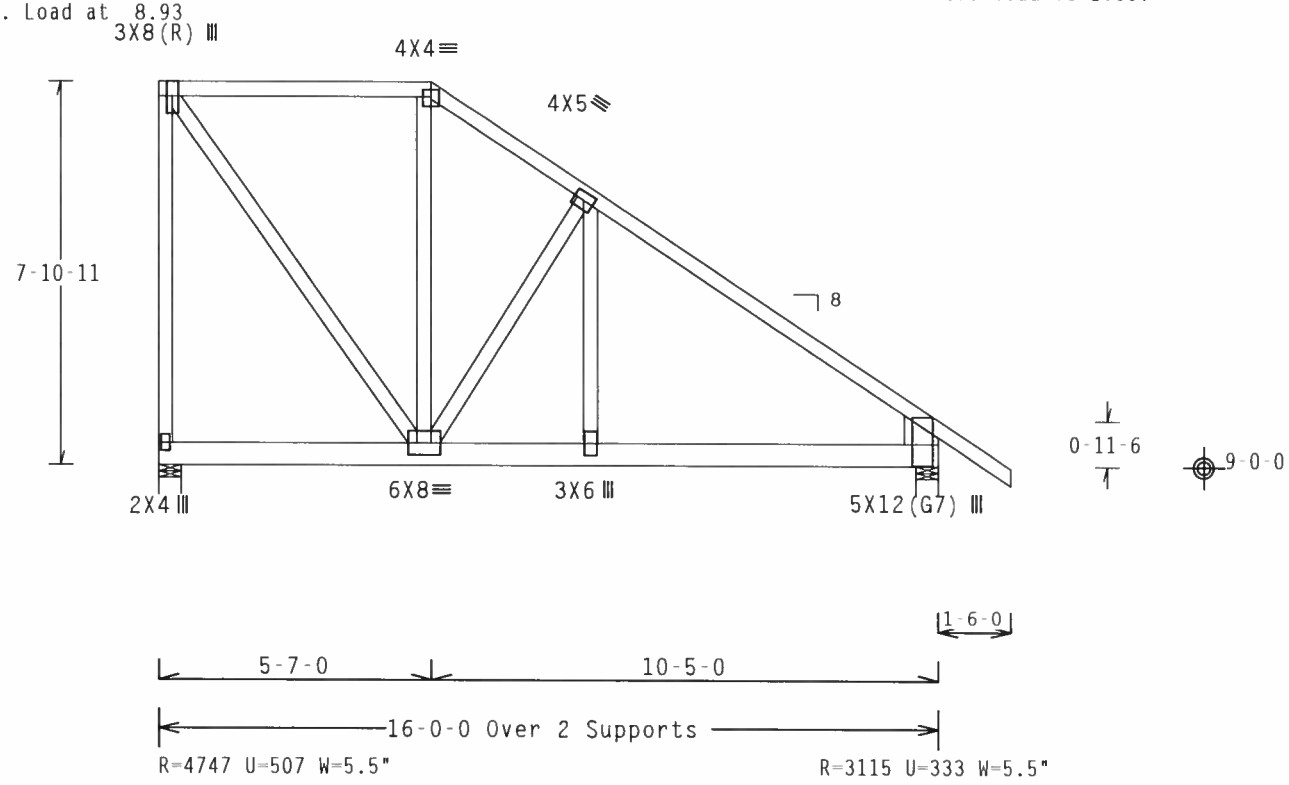

Design Crit: TPI-2002(STD)/FBC
PLT TYP. Wave Cq/RT=1.00(1.25)/10(0) 7.22.11 QTY:1 FL/-/4/-/-/R/- Scale =.25"/Ft.

ALPINE
Alpine Engineered Products, Inc.
1950 Marley Drive

WARNING TRUSSES REQUIRE EXTREME CARE IN FABRICATION, HANDLING, SHIPPING, INSTALLING AND BRACING. REFER TO BCSI 1-03 (BUILDING COMPONENT SAFETY INFORMATION), PUBLISHED BY TPI (TRUSS PLATE INSTITUTE, 583 D'ONOFRIO DR., SUITE 200, MADISON, WI 53719) AND WTCA (WOOD TRUSS COUNCIL OF AMERICA, 6300 ENTERPRISE LN, MADISON, WI 53719) FOR SAFETY PRACTICES PRIOR TO PERFORMING THESE FUNCTIONS. UNLESS OTHERWISE INDICATED, TOP CHORD SHALL HAVE PROPERLY ATTACHED STRUCTURAL PANELS AND BOTTOM CHORD SHALL HAVE A PROPERLY ATTACHED RIGID CEILING.

IMPORTANT FURNISH A COPY OF THIS DESIGN TO THE INSTALLATION CONTRACTOR. ALPINE ENGINEERED PRODUCTS, INC. SHALL NOT BE RESPONSIBLE FOR ANY DEVIATION FROM THIS DESIGN; ANY FAILURE TO BUILD THE TRUSS IN CONFORMANCE WITH TPI; OR FABRICATING, HANDLING, SHIPPING, INSTALLING & BRACING OF TRUSSES. DESIGN CONFORMS WITH APPLICABLE PROVISIONS OF NDS (NATIONAL DESIGN SPEC. BY AF&PA) AND TPI. ALPINE CONNECTOR PLATES ARE MADE OF 20/18/16GA (W,H/S/K) ASTM A653 GRADE 40/60 (W, K/H,S) GALV. STEEL. APPLY PLATES TO EACH FACE OF TRUSS AND, UNLESS OTHERWISE LOCATED ON THIS DESIGN, POSITION PER DRAWINGS 160A Z. ANY INSPECTION OF PLATES FOLLOWED BY (1) SHALL BE PER ANNEX A3 OF TPI1 2002 SEC.3. A SEAL ON THIS DRAWING INDICATES ACCEPTANCE OF PROFESSIONAL ENGINEERING RESPONSIBILITY SOLELY FOR THE TRUSS COMPONENT

ARTHUR R. FISHER LICENSE No.59687 STATE OF FLORIDA PROFESSIONAL ENGINEER
Feb 10 '06

TC LL	20.0 PSF	REF	R487-- 86646
TC DL	10.0 PSF	DATE	02/10/06
BC DL	10.0 PSF	DRW	HCUSR487 06041091
BC LL	0.0 PSF	HC-ENG	JB/AF
TOT.LD.	40.0 PSF	SEQN-	146706 REV
DUR.FAC.	1.25		

Top chord 2x4 SP #2 Dense
Bot chord 2x4 SP #2 Dense
Webs 2x4 SP #3

Deflection meets L/360 live and L/240 total load. Creep increase factor for dead load is 1.50.

110 mph wind, 18.23 ft mean hgt, ASCE 7-02, CLOSED bldg, not located within 4.50 ft from roof edge, CAT II, EXP B, wind TC DL=5.0 psf, wind BC DL=5.0 psf.

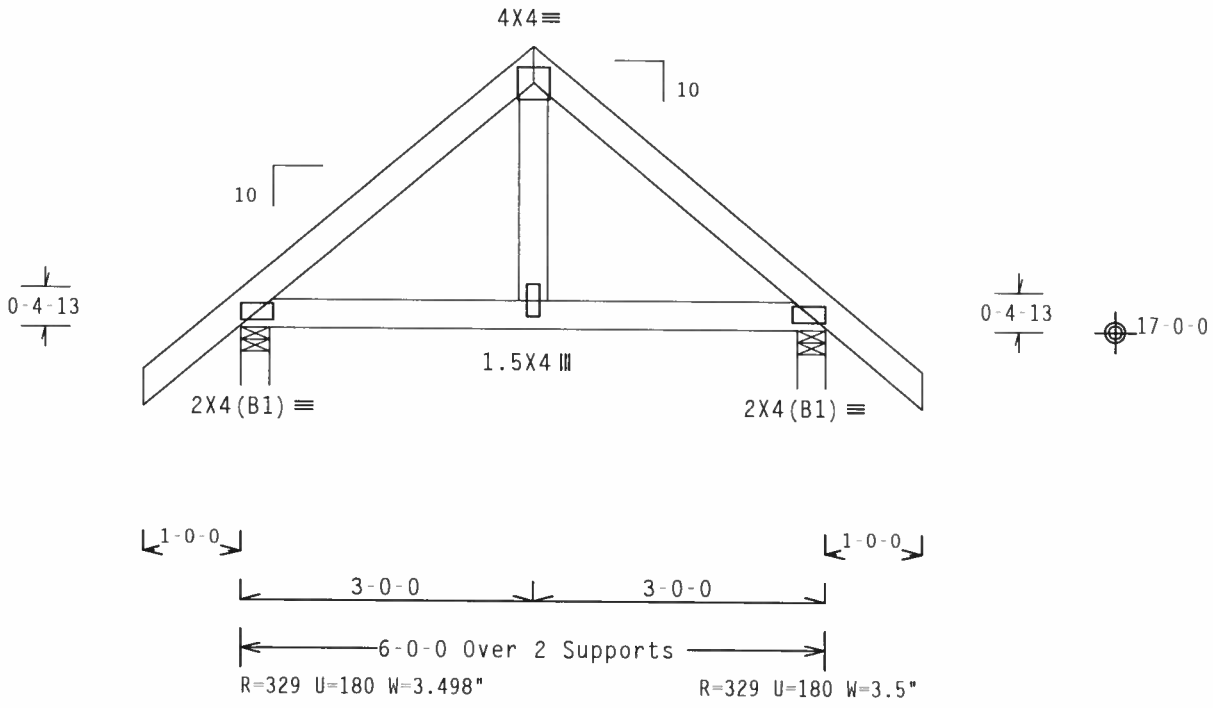

Design Crit: TPI-2002(STD)/FBC
Cq/RT=1.00(1.25)/10(0) 7.22.1 TY:8 FL/-/4/-/-/R/- Scale =.5"/Ft.

PLT TYP. Wave

ALPINE
Alpine Engineered Products, Inc.
1950 Marley Drive

WARNING TRUSSES REQUIRE EXTREME CARE IN FABRICATION, HANDLING, SHIPPING, INSTALLING AND BRACING. REFER TO BCSI 1-03 (BUILDING COMPONENT SAFETY INFORMATION), PUBLISHED BY TPI (TRUSS PLATE INSTITUTE, 583 D'ONOFRIO DR., SUITE 200, MADISON, WI 53719) AND WTCA (WOOD TRUSS COUNCIL OF AMERICA, 6300 ENTERPRISE LN, MADISON, WI 53719) FOR SAFETY PRACTICES PRIOR TO PERFORMING THESE FUNCTIONS. UNLESS OTHERWISE INDICATED, TOP CHORD SHALL HAVE PROPERLY ATTACHED STRUCTURAL PANELS AND BOTTOM CHORD SHALL HAVE A PROPERLY ATTACHED RIGID CEILING.

IMPORTANT FURNISH A COPY OF THIS DESIGN TO THE INSTALLATION CONTRACTOR. ALPINE ENGINEERED PRODUCTS, INC. SHALL NOT BE RESPONSIBLE FOR ANY DEVIATION FROM THIS DESIGN; ANY FAILURE TO BUILD THE TRUSS IN CONFORMANCE WITH TPI; OR FABRICATING, HANDLING, SHIPPING, INSTALLING & BRACING OF TRUSSES. DESIGN CONFORMS WITH APPLICABLE PROVISIONS OF NDS (NATIONAL DESIGN SPEC. BY AF&PA) AND TPI. ALPINE CONNECTOR PLATES ARE MADE OF 20/18/16GA (W,H/S/K) ASTM A653 GRADE 40/60 (W, K/H,S) GALV. STEEL. APPLY PLATES TO EACH FACE OF TRUSS AND, UNLESS OTHERWISE LOCATED ON THIS DESIGN, POSITION PER DRAWINGS 160A Z. ANY INSPECTION OF PLATES FOLLOWED BY (1) SHALL BE PER ANNEX A3 OF TPI1 2002 SEC.3. A SEAL ON THIS DRAWING INDICATES ACCEPTANCE OF PROFESSIONAL ENGINEERING RESPONSIBILITY SOLELY FOR THE TRUSS COMPONENT DESIGN SHOWN. THE SUITABILITY AND USE OF THIS COMPONENT FOR ANY BUILDING IS THE SOLE RESPONSIBILITY OF THE BUILDING DESIGNER.

ARTHUR R. FISHER LICENSE No. 59687 STATE OF FLORIDA PROFESSIONAL ENGINEER
Feb 10 '06

TC LL	20.0 PSF	REF	R487-- 86647
TC DL	10.0 PSF	DATE	02/10/06
BC DL	10.0 PSF	DRW	HCUSR487 06041028
BC LL	0.0 PSF	HC-ENG	JB/AF *
TOT.LD.	40.0 PSF	SEQN-	82453
DUR.FAC.	1.25		

(6 004 GLENWOOD KING BULLARD Z1 GE)

Top chord 2x4 SP #2 Dense
Bot chord 2x4 SP #2 Dense
Webs 2x4 SP #3
:Stack Chord SC1 2x4 SP #2 Dense:
:Stack Chord SC2 2x4 SP #2 Dense:

Stacked top chord must NOT be notched or cut in area (NNL). Dropped top chord braced at 24" o.c. intervals. Attach stacked top chord (SC) to dropped top chord in notchable area using 3x4 tie-plates 24" o.c. Center plate on stacked/dropped chord interface, plate length perpendicular to chord length. Splice top chord in notchable area using 3x6.

+ MEMBER TO BE LATERALLY BRACED FOR HORIZONTAL WIND LOADS.
BRACING SYSTEM TO BE DESIGNED AND FURNISHED BY OTHERS.

110 mph wind, 20.18 ft mean hgt, ASCE 7-02, CLOSED bldg, Located anywhere in roof, CAT II, EXP B, wind TC DL=5.0 psf, wind BC DL=5.0 psf.

Calculated horizontal deflection is 0.27" due to live load and 0.41" due to dead load.

Deflection meets L/360 live and L/240 total load. Creep increase factor for dead load is 1.50.

THE BUILDING DESIGNER IS RESPONSIBLE FOR THE DESIGN OF ROOF AND CEILING DIAPHRAGMS, GABLE END SHEAR WALLS, SUPPORTING SHEAR WALLS. SHEAR WALLS MUST PROVIDE CONTINUOUS LATERAL RESTRAINT TO GABLE END. ALL CONNECTIONS TO BE DESIGNED BY THE BUILDING DESIGNER.

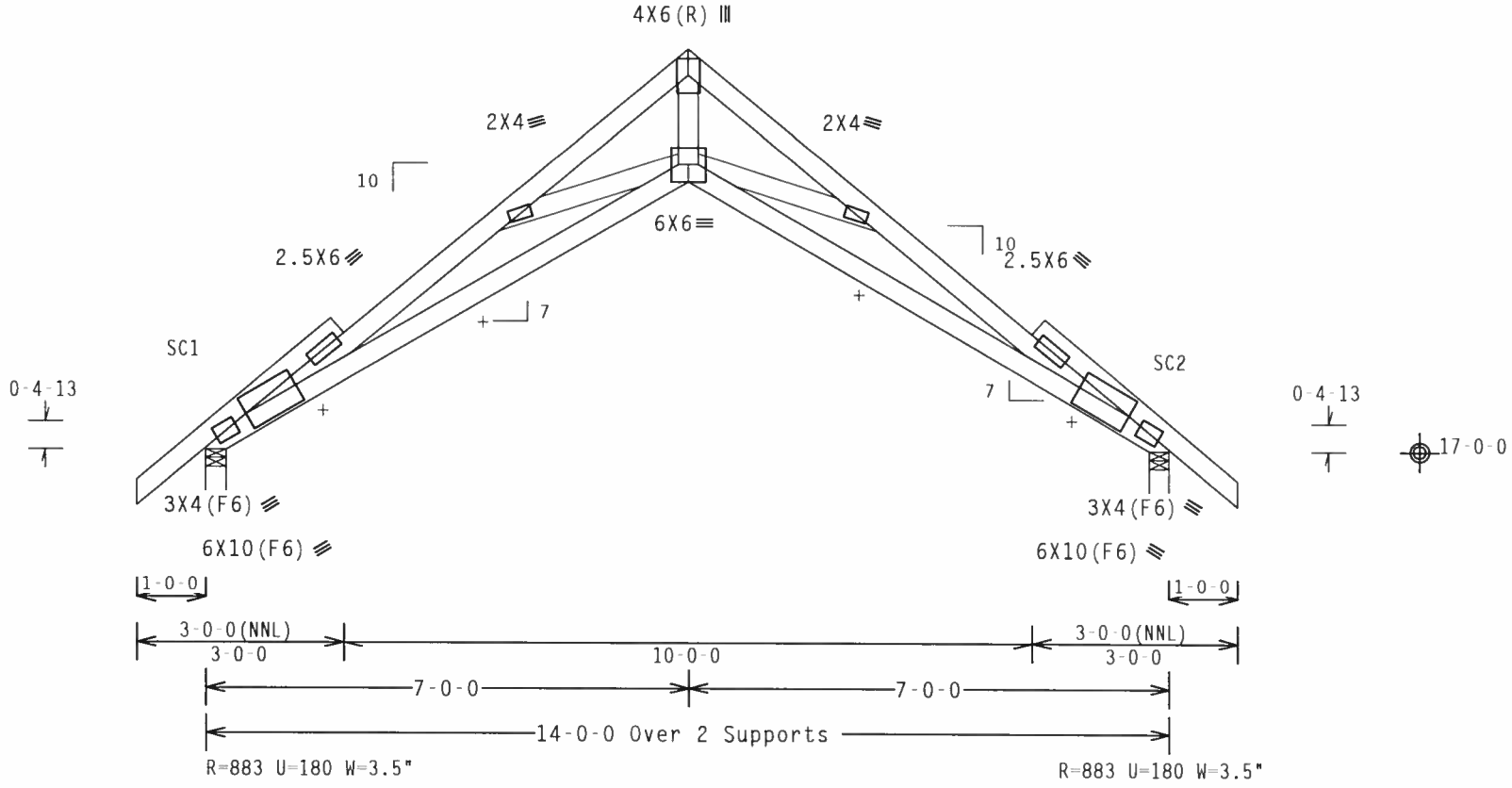

Design Crit: TPI-2002(STD)/FBC
PLT TYP. Wave Cq/RT=1.00(1.25)/10(0) 7.22.1 QTY:1 FL/-/4/-/-/R/- Scale =.375"/Ft.

ALPINE
Alpine Engineered Products, Inc.
1950 Marley Drive

WARNING TRUSSES REQUIRE EXTREME CARE IN FABRICATION, HANDLING, SHIPPING, INSTALLING AND BRACING. REFER TO BCSI 1 03 (BUILDING COMPONENT SAFETY INFORMATION), PUBLISHED BY TPI (TRUSS PLATE INSTITUTE, 583 D'ONOFRIO DR., SUITE 200, MADISON, WI 53719) AND WTCA (WOOD TRUSS COUNCIL OF AMERICA, 6300 ENTERPRISE LN, MADISON, WI 53719) FOR SAFETY PRACTICES PRIOR TO PERFORMING THESE FUNCTIONS. UNLESS OTHERWISE INDICATED, TOP CHORD SHALL HAVE PROPERLY ATTACHED STRUCTURAL PANELS AND BOTTOM CHORD SHALL HAVE A PROPERLY ATTACHED RIGID CEILING.

IMPORTANTFURNISH A COPY OF THIS DESIGN TO THE INSTALLATION CONTRACTOR. ALPINE ENGINEERED PRODUCTS, INC. SHALL NOT BE RESPONSIBLE FOR ANY DEVIATION FROM THIS DESIGN; ANY FAILURE TO BUILD THE TRUSS IN CONFORMANCE WITH TPI; OR FABRICATING, HANDLING, SHIPPING, INSTALLING & BRACING OF TRUSSES. DESIGN CONFORMS WITH APPLICABLE PROVISIONS OF NDS (NATIONAL DESIGN SPEC, BY AF&PA) AND TPI. ALPINE CONNECTOR PLATES ARE MADE OF 20/18/16GA (W,H/S/K) ASTM A653 GRADE 40/60 (W, K/H,S) GALV. STEEL. APPLY PLATES TO EACH FACE OF TRUSS AND, UNLESS OTHERWISE LOCATED ON THIS DESIGN, POSITION PER DRAWINGS 160A Z. ANY INSPECTION OF PLATES FOLLOWED BY (1) SHALL BE PER ANNEX A3 OF TPI1 2002 SEC.3. A SEAL ON THIS DRAWING INDICATES ACCEPTANCE OF PROFESSIONAL ENGINEERING RESPONSIBILITY SOLELY FOR THE TRUSS COMPONENT

ARTHUR R. FISHER LICENSE No.59687 STATE OF FLORIDA PROFESSIONAL ENGINEER
Feb 10 '06

TC LL	20.0 PSF	REF	R487-- 86648
TC DL	10.0 PSF	DATE	02/10/06
BC DL	10.0 PSF	DRW	HCUSR487 06041092
BC LL	0.0 PSF	HC-ENG	JB/AF
TOT.LD.	40.0 PSF	SEQN-	82035
DUR.FAC.	1.25		

(6-004 GLENWOOD KING - BULLARD - Z2)

Top chord 2x4 SP #2 Dense
Bot chord 2x4 SP #2 Dense
Webs 2x4 SP #3

Calculated horizontal deflection is 0.11" due to live load and 0.19" due to dead load.

110 mph wind, 19.90 ft mean hgt, ASCE 7-02, CLOSED bldg, not located within 4.50 ft from roof edge, CAT II, EXP B, wind TC DL=5.0 psf, wind BC DL=5.0 psf.

Deflection meets L/360 live and L/240 total load. Creep increase factor for dead load is 1.50.

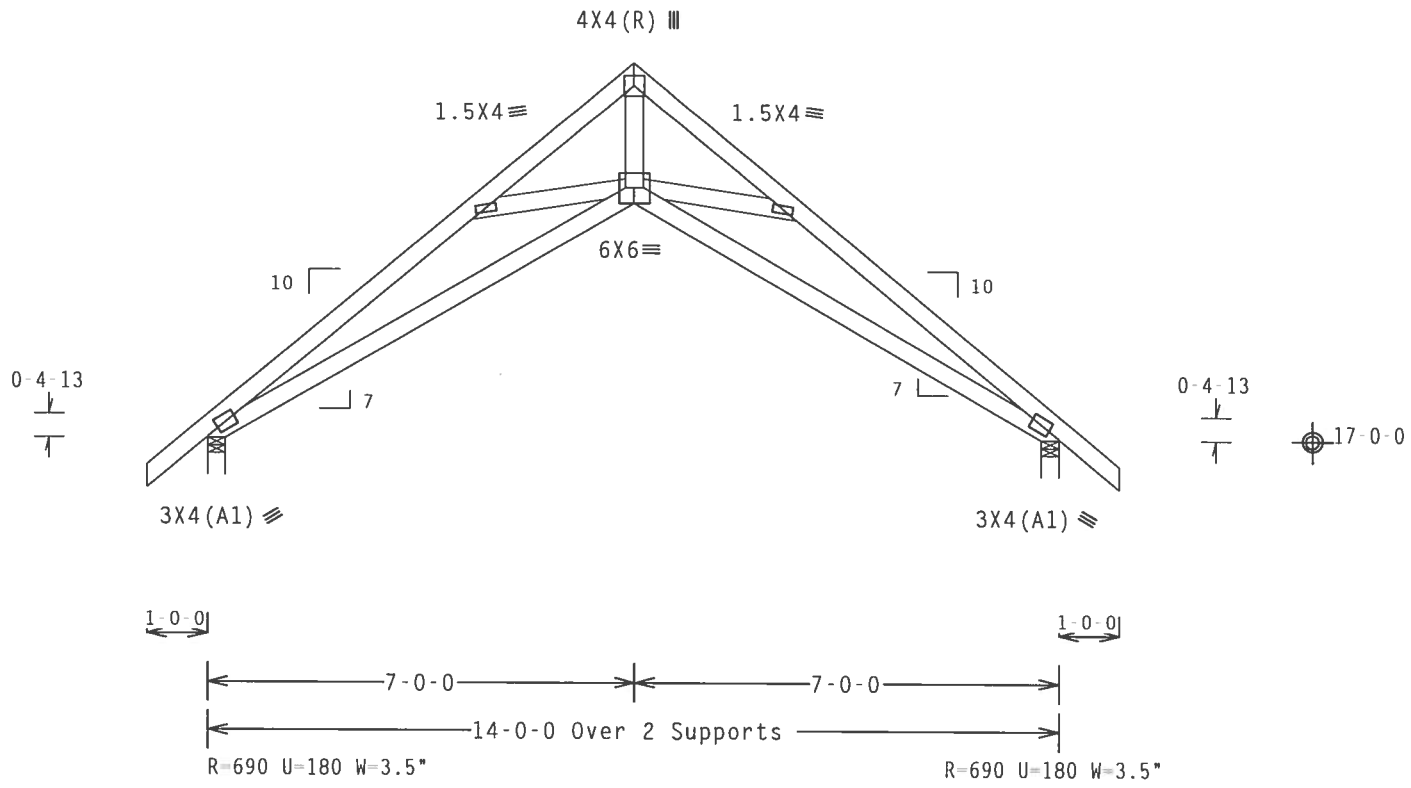

Design Crit: TPI-2002(STD)/FBC

PLT TYP. Wave

Cq/RT=1.00(1.25)/10(0) 7.22.1 QTY:1 FL/-/4/-/-/R/- Scale =.3125"/Ft.

ALPINE
Alpine Engineered Products, Inc.
1950 Marley Drive

WARNING TRUSSES REQUIRE EXTREME CARE IN FABRICATION, HANDLING, SHIPPING, INSTALLING AND BRACING. REFER TO BCSI 1-03 (BUILDING COMPONENT SAFETY INFORMATION), PUBLISHED BY TPI (TRUSS PLATE INSTITUTE, 583 D'ONOFRIO DR., SUITE 200, MADISON, WI 53719) AND WTCA (WOOD TRUSS COUNCIL OF AMERICA, 6300 ENTERPRISE LN, MADISON, WI 53719) FOR SAFETY PRACTICES PRIOR TO PERFORMING THESE FUNCTIONS. UNLESS OTHERWISE INDICATED, TOP CHORD SHALL HAVE PROPERLY ATTACHED STRUCTURAL PANELS AND BOTTOM CHORD SHALL HAVE A PROPERLY ATTACHED RIGID CEILING.

IMPORTANT FURNISH A COPY OF THIS DESIGN TO THE INSTALLATION CONTRACTOR. ALPINE ENGINEERED PRODUCTS, INC. SHALL NOT BE RESPONSIBLE FOR ANY DEVIATION FROM THIS DESIGN; ANY FAILURE TO BUILD THE TRUSS IN CONFORMANCE WITH TPI; OR FABRICATING, HANDLING, SHIPPING, INSTALLING & BRACING OF TRUSSES. DESIGN CONFORMS WITH APPLICABLE PROVISIONS OF NDS (NATIONAL DESIGN SPEC. BY AF&PA) AND TPI. ALPINE CONNECTOR PLATES ARE MADE OF 20/18/16GA (W,H/S/K) ASTM A653 GRADE 40/60 (H, K/H,S) GALV. STEEL. APPLY PLATES TO EACH FACE OF TRUSS AND, UNLESS OTHERWISE LOCATED ON THIS DESIGN, POSITION PER DRAWINGS 160A-Z. ANY INSPECTION OF PLATES FOLLOWED BY (1) SHALL BE PER ANNEX A3 OF TPI1-2002 SEC.3. A SEAL ON THIS DRAWING INDICATES ACCEPTANCE OF PROFESSIONAL ENGINEERING RESPONSIBILITY SOLELY FOR THE TRUSS COMPONENT

ARTHUR R. FISHER
LICENSE
No. 59687
STATE OF FLORIDA
PROFESSIONAL ENGINEER

Feb 10 '06

TC LL	20.0 PSF	REF	R487-- 86649
TC DL	10.0 PSF	DATE	02/10/06
BC DL	10.0 PSF	DRW	HCUSR487 06041093
BC LL	0.0 PSF	HC-ENG	JB/AF
TOT.LD.	40.0 PSF	SEQN-	27645
DUR.FAC.	1.25		

(6-004-GLENWOOD KING - BULLARD Z3)

Top chord 2x4 SP #2 Dense
Bot chord 2x4 SP #2 Dense
Webs 2x4 SP #3

Calculated horizontal deflection is 0.10" due to live load and 0.19" due to dead load.

110 mph wind, 20.32 ft mean hgt, ASCE 7-02, CLOSED bldg, not located within 4.50 ft from roof edge, CAT II, EXP B, wind TC DL=5.0 psf, wind BC DL=5.0 psf.

Deflection meets L/360 live and L/240 total load. Creep increase factor for dead load is 1.50.

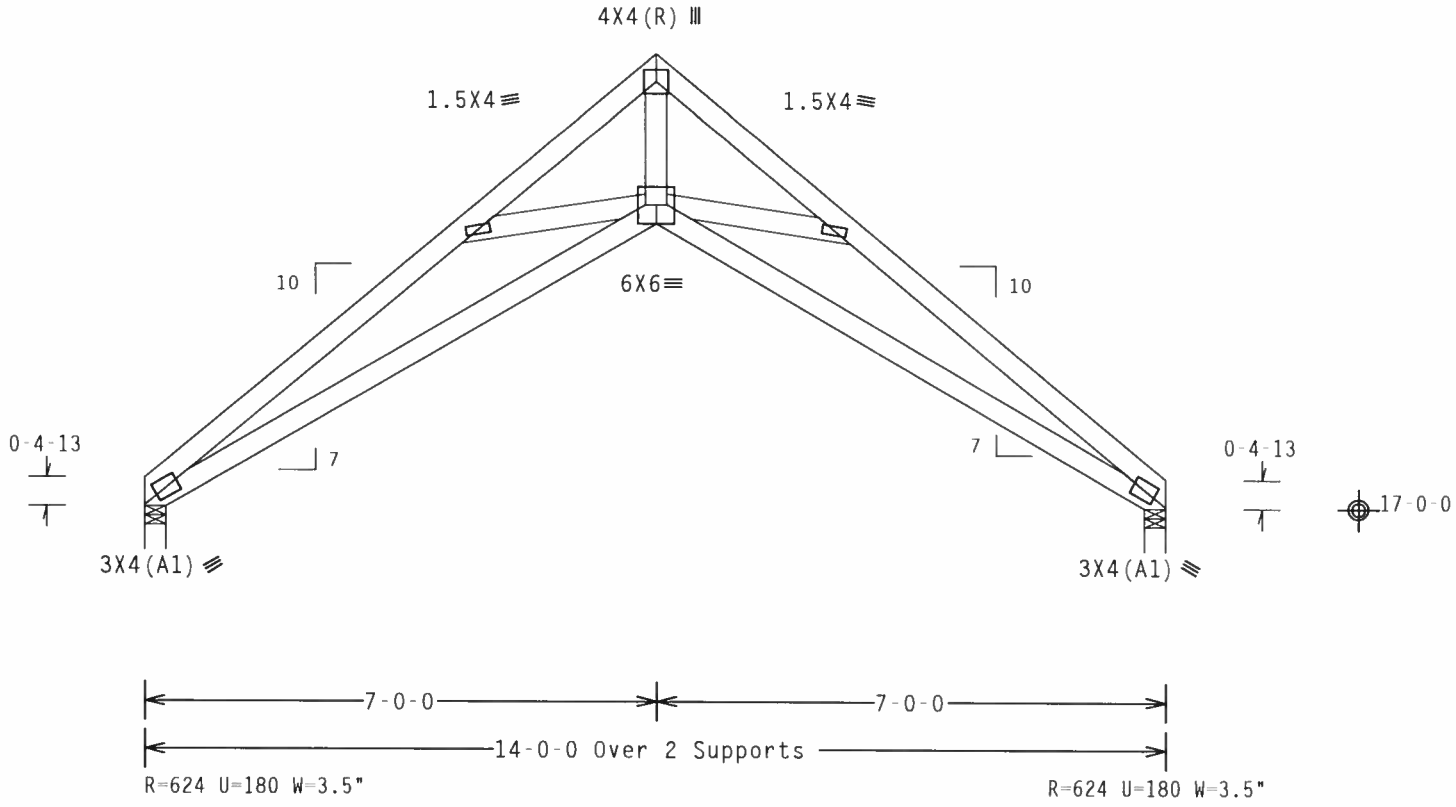

Design Crit: TPI-2002(STD)/FBC

PLT TYP. Wave

Cq/RT=1.00(1.25)/10(0) 7.22.11 QTY:4 FL/-/4/-/-/R/- Scale =.375"/Ft.

ALPINE
Alpine Engineered Products, Inc.
1950 Marley Drive

WARNING TRUSSES REQUIRE EXTREME CARE IN FABRICATION, HANDLING, SHIPPING, INSTALLING AND BRACING. REFER TO BCSI 1-03 (BUILDING COMPONENT SAFETY INFORMATION), PUBLISHED BY TPI (TRUSS PLATE INSTITUTE, 583 D'ONOFRIO DR., SUITE 200, MADISON, WI 53719) AND WTCA (WOOD TRUSS COUNCIL OF AMERICA, 6300 ENTERPRISE LN. MADISON, WI 53719) FOR SAFETY PRACTICES PRIOR TO PERFORMING THESE FUNCTIONS. UNLESS OTHERWISE INDICATED, TOP CHORD SHALL HAVE PROPERLY ATTACHED STRUCTURAL PANELS AND BOTTOM CHORD SHALL HAVE A PROPERLY ATTACHED RIGID CEILING.

IMPORTANTFURNISH A COPY OF THIS DESIGN TO THE INSTALLATION CONTRACTOR. ALPINE ENGINEERED PRODUCTS, INC. SHALL NOT BE RESPONSIBLE FOR ANY DEVIATION FROM THIS DESIGN; ANY FAILURE TO BUILD THE TRUSS IN CONFORMANCE WITH TPI; OR FABRICATING, HANDLING, SHIPPING, INSTALLING & BRACING OF TRUSSES. DESIGN CONFORMS WITH APPLICABLE PROVISIONS OF NDS (NATIONAL DESIGN SPEC. BY AF&PA) AND TPI. ALPINE CONNECTOR PLATES ARE MADE OF 20/18/16GA (W,H/S/K) ASTM A653 GRADE 40/60 (W, K/H,S) GALV. STEEL. APPLY PLATES TO EACH FACE OF TRUSS AND, UNLESS OTHERWISE LOCATED ON THIS DESIGN, POSITION PER DRAWINGS 160A Z. ANY INSPECTION OF PLATES FOLLOWED BY (I) SHALL BE PER ANNEX A3 OF TPI1 2002 SEC.3. A SEAL ON THIS DRAWING INDICATES ACCEPTANCE OF PROFESSIONAL ENGINEERING RESPONSIBILITY SOLELY FOR THE TRUSS COMPONENT

ARTHUR R. FISHER LICENSE No.59687 STATE OF FLORIDA PROFESSIONAL ENGINEER

Feb 10 '06

TC LL	20.0 PSF	REF	R487-- 86650
TC DL	10.0 PSF	DATE	02/10/06
BC DL	10.0 PSF	DRW	HCUSR487 06041094
BC LL	0.0 PSF	HC-ENG	JB/AF
TOT.LD.	40.0 PSF	SEQN-	27639
DUR.FAC.	1.25		

CLB WEB BRACE SUBSTITUTION

THIS DETAIL IS TO BE USED WHEN CONTINUOUS LATERAL BRACING (CLB) IS SPECIFIED ON AN ALPINE TRUSS DESIGN BUT AN ALTERNATIVE WEB BRACING METHOD IS DESIRED.

NOTES:

THIS DETAIL IS ONLY APPLICABLE FOR CHANGING THE SPECIFIED CLB SHOWN ON SINGLE PLY SEALED DESIGNS TO T-BRACING OR SCAB BRACING.

ALTERNATIVE BRACING SPECIFIED IN CHART BELOW MAY BE CONSERVATIVE. FOR MINIMUM ALTERNATIVE BRACING, RE-RUN DESIGN WITH APPROPRIATE BRACING.

WEB MEMBER SIZE	SPECIFIED CLB BRACING	ALTERNATIVE BRACING T OR L-BRACE	ALTERNATIVE BRACING SCAB BRACE
2X3 OR 2X4	1 ROW	2X4	1-2X4
2X3 OR 2X4	2 ROWS	2X6	2-2X4
2X6	1 ROW	2X4	1-2X6
2X6	2 ROWS	2X6	2-2X4(*)
2X8	1 ROW	2X6	1-2X8
2X8	2 ROWS	2X6	2-2X6(*)

T-BRACE, L-BRACE AND SCAB BRACE TO BE SAME SPECIES AND GRADE OR BETTER THAN WEB MEMBER UNLESS SPECIFIED OTHERWISE ON ENGINEER'S SEALED DESIGN.

(*) CENTER SCAB ON WIDE FACE OF WEB. APPLY (1) SCAB TO EACH FACE OF WEB.

T-BRACING OR L-BRACING:

APPLY TO EITHER SIDE OF WEB NARROW FACE

ATTACH WITH 16d NAILS AT 6" O.C.

BRACE IS A MINIMUM 80% OF WEB MEMBER LENGTH

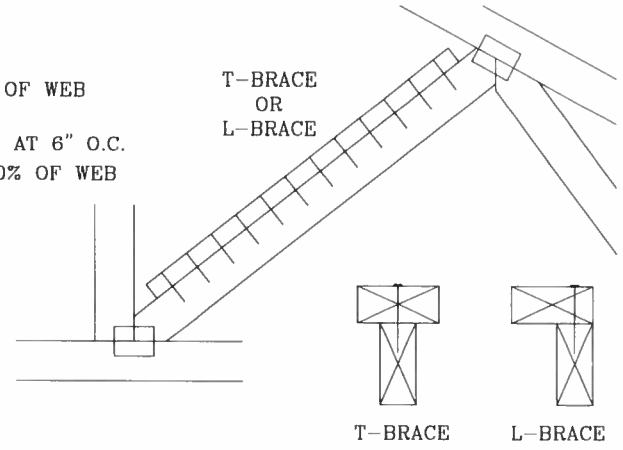

SCAB BRACING:

APPLY SCAB(S) TO WIDE FACE OF WEB.

NO MORE THAN (1) SCAB PER FACE.

ATTACH WITH 10d OR .128"x3" GUN NAILS AT 6" O.C. BRACE IS A MINIMUM 80% OF WEB MEMBER LENGTH

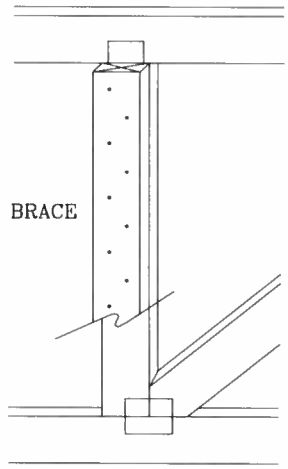

THIS DRAWING REPLACES DRAWING 579,640

ALPINE

ALPINE ENGINEERED PRODUCTS, INC.
POMPANO BEACH, FLORIDA

WARNING TRUSSES REQUIRE EXTREME CARE IN FABRICATING, HANDLING, SHIPPING, INSTALLING AND BRACING. REFER TO BCSI 1-03 (BUILDING COMPONENT SAFETY INFORMATION), PUBLISHED BY TPI (TRUSS PLATE INSTITUTE, 583 D'ONOFRIO DR, SUITE 200, MADISON, WI 53719) AND WTCA (WOOD TRUSS COUNCIL OF AMERICA, 6300 ENTERPRISE LN, MADISON, WI 53719) FOR SAFETY PRACTICES PRIOR TO PERFORMING THESE FUNCTIONS. UNLESS OTHERWISE INDICATED, TOP CHORD SHALL HAVE PROPERLY ATTACHED STRUCTURAL PANELS AND BOTTOM CHORD SHALL HAVE A PROPERLY ATTACHED RIGID CEILING.

IMPORTANT FURNISH COPY OF THIS DESIGN TO INSTALLATION CONTRACTOR. ALPINE ENGINEERED PRODUCTS, INC., SHALL NOT BE RESPONSIBLE FOR ANY DEVIATION FROM THIS DESIGN; ANY FAILURE TO BUILD THE TRUSS IN CONFORMANCE WITH TPI; OR FABRICATING, HANDLING, SHIPPING, INSTALLING & BRACING OF TRUSSES. DESIGN CONFORMS WITH APPLICABLE PROVISIONS OF NDS (NATIONAL DESIGN SPEC, BY AF&PA) AND TPI. ALPINE CONNECTOR PLATES ARE MADE OF 20/18/16GA (W,H/S/K) ASTM A653 GRADE 40/60 (W,K/H,S) GALV. STEEL. APPLY PLATES TO EACH FACE OF TRUSS AND, UNLESS OTHERWISE LOCATED ON THIS DESIGN, POSITION PER DRAWINGS 160A-Z. ANY INSPECTION OF PLATES FOLLOWED BY (I) SHALL BE PER ANNEX A3 OF TPI 1-2002 SEC 3. A SEAL ON THIS DRAWING INDICATES ACCEPTANCE OF PROFESSIONAL ENGINEERING RESPONSIBILITY SOLELY FOR THE TRUSS COMPONENT DESIGN SHOWN. THE SUITABILITY AND USE OF THIS COMPONENT FOR ANY BUILDING IS THE RESPONSIBILITY OF THE BUILDING

ARTHUR R. FISHER
LICENSE
No. 59687
STATE OF FLORIDA
PROFESSIONAL ENGINEER

Feb. 10

TC LL	PSF	REF	CLB SUBST.
TC DL	PSF	DATE	11/26/03
BC DL	PSF	DRWG	BRCLBSUB1103
BC LL	PSF	-ENG	MLH/KAR
TOT. LD.	PSF		
DUR. FAC.			

BEARING BLOCK NAIL SPACING DETAIL

MINIMUM SPACING FOR SINGLE BEARING BLOCK IS SHOWN. DOUBLE NAIL SPACINGS AND STAGGER NAILING FOR TWO BLOCKS. GREATER SPACING MAY BE REQUIRED TO AVOID SPLITTING.

A – EDGE DISTANCE AND SPACING BETWEEN STAGGERED ROWS OF NAILS (6 NAIL DIAMETERS)
B – SPACING OF NAILS IN A ROW (12 NAIL DIAMETERS)
C – END DISTANCE (15 NAIL DIAMETERS)

IF NAIL HOLES ARE PREBORED, SOME SPACING MAY BE REDUCED BY THE AMOUNTS GIVEN BELOW:
- • SPACING MAY BE REDUCED BY 50%
- •• SPACING MAY BE REDUCED BY 33%

BEARING BLOCK TO BE SAME SIZE AND SPECIES AS BOTTOM CHORD. BLOCKS MAY BE ANY GRADE WITHIN THE SPECIES, PROVIDED THE COMPRESSION PERPENDICULAR TO GRAIN VALUE (Fc-perp) IS AT LEAST THAT OF THE CHORD.

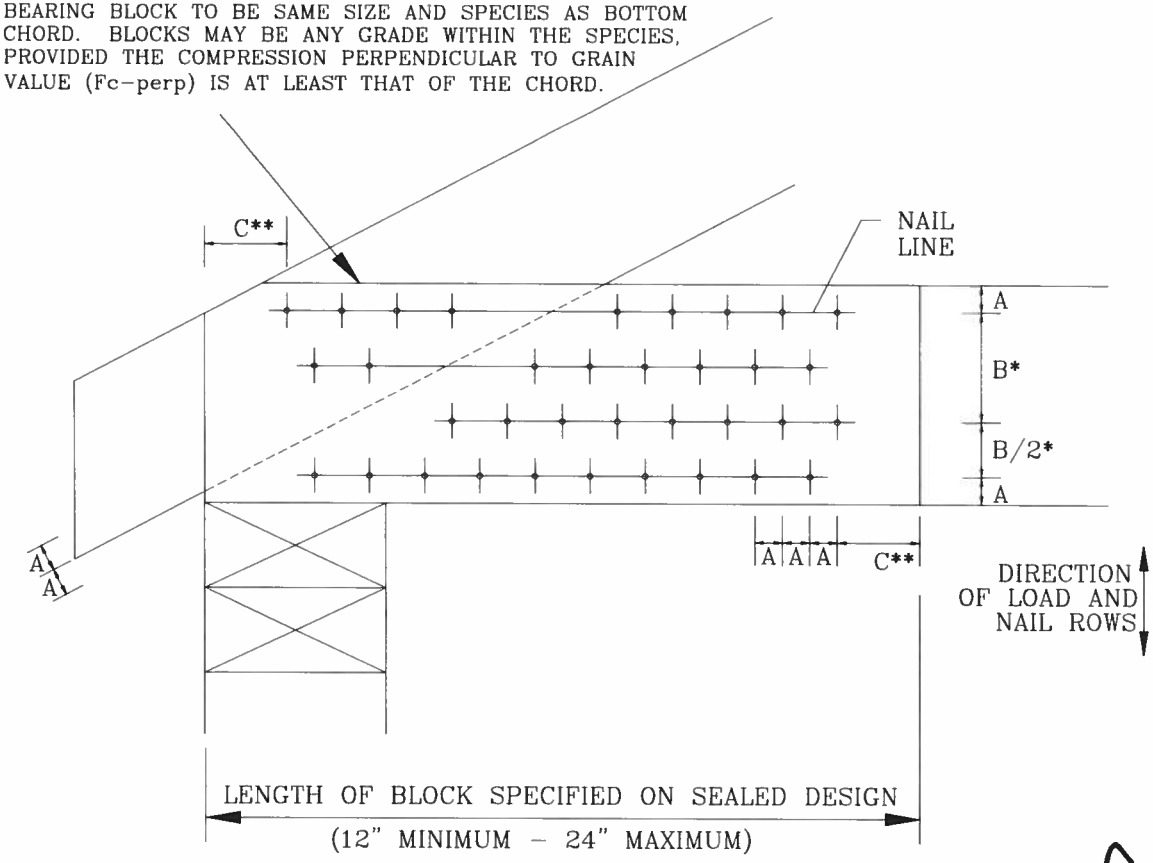

MAXIMUM NUMBER OF NAIL LINES PARALLEL TO GRAIN

NAIL TYPE	CHORD SIZE 2X4	2X6	2X8	2X10	2X12
8d BOX (0.113"X2.5")	3	6	9	12	15
10d BOX (0.128"X3")	3	5	7	10	12
12d BOX (0.128"X3.25")	3	5	7	10	12
16d BOX (0.135"X3.5")	3	5	7	10	12
20d BOX (0.148"X4")	2	4	5	6	8
8d COMMON (0.131"X2.5")	3	5	7	10	12
10d COMMON (0.148"X3")	2	4	6	8	10
12d COMMON (0.148"X3.25")	2	4	6	8	10
16d COMMON (0.162"X3.5")	2	4	6	8	10
0.120"X2.5" GUN	3	6	8	11	14
0.131"X2.5" GUN	3	5	7	10	12
0.120"X3.0" GUN	3	6	8	11	14
0.131"x3.0" GUN	3	5	7	10	12

MINIMUM NAIL SPACING DISTANCES

NAIL TYPE	DISTANCES A	B*	C**
8d BOX (0.113"X2.5")	3/4"	1 3/8"	1 3/4"
10d BOX (0.128"X3")	7/8"	1 5/8"	2"
12d BOX (0.128"X3.25")	7/8"	1 5/8"	2"
16d BOX (0.135"X3.5")	7/8"	1 5/8"	2 1/8"
20d BOX (0.148"X4")	1"	1 7/8"	2 1/4"
8d COMMON (0.131"X2.5")	7/8"	1 5/8"	2"
10d COMMON (0.148"X3")	1"	1 7/8"	2 1/4"
12d COMMON (0.148"X3.25")	1"	1 7/8"	2 1/4"
16d COMMON (0.162"X3.5")	1'	2"	2 1/2"
0.120"X2.5" GUN	3/4"	1 1/2"	1 7/8"
0.131"X2.5" GUN	7/8"	1 5/8"	2"
0.120"X3.0" GUN	3/4"	1 1/2"	1 7/8"
0.131"x3.0" GUN	7/8"	1 5/8"	2"

THIS DRAWING REPLACES DRAWING B139 AND CNBRGBLK0699

ALPINE

ALPINE ENGINEERED PRODUCTS, INC.
POMPANO BEACH, FLORIDA

WARNING TRUSSES REQUIRE EXTREME CARE IN FABRICATING, HANDLING, SHIPPING, INSTALLING AND BRACING. REFER TO BCSI 1-03 (BUILDING COMPONENT SAFETY INFORMATION), PUBLISHED BY TPI (TRUSS PLATE INSTITUTE, 583 D'ONOFRIO DR, SUITE 200, MADISON, WI. 53719) AND WTCA (WOOD TRUSS COUNCIL OF AMERICA, 6300 ENTERPRISE LN, MADISON, WI 53719) FOR SAFETY PRACTICES PRIOR TO PERFORMING THESE FUNCTIONS. UNLESS OTHERWISE INDICATED, TOP CHORD SHALL HAVE PROPERLY ATTACHED STRUCTURAL PANELS AND BOTTOM CHORD SHALL HAVE A PROPERLY ATTACHED RIGID CEILING.

IMPORTANT FURNISH COPY OF THIS DESIGN TO INSTALLATION CONTRACTOR. ALPINE ENGINEERED PRODUCTS, INC., SHALL NOT BE RESPONSIBLE FOR ANY DEVIATION FROM THIS DESIGN, ANY FAILURE TO BUILD THE TRUSS IN CONFORMANCE WITH TPI, OR FABRICATING, HANDLING, SHIPPING, INSTALLING & BRACING OF TRUSSES. DESIGN CONFORMS WITH APPLICABLE PROVISIONS OF NDS (NATIONAL DESIGN SPEC, BY AF&PA) AND TPI. ALPINE CONNECTOR PLATES ARE MADE OF 20/18/16GA (W,H/S/K) ASTM A653 GRADE 40/60 (W,K/H,S) GALV. STEEL. APPLY PLATES TO EACH FACE OF TRUSS AND, UNLESS OTHERWISE LOCATED ON THIS DESIGN, POSITION PER DRAWINGS 160A-Z. ANY INSPECTION OF PLATES FOLLOWED BY (I) SHALL BE PER ANNEX A3 OF TPI 1-2002 SEC. 3. A SEAL ON THIS DRAWING INDICATES ACCEPTANCE OF PROFESSIONAL ENGINEERING RESPONSIBILITY SOLELY FOR THE TRUSS COMPONENT DESIGN SHOWN. THE

ARTHUR R. FISHER LICENSE No. 59687 STATE OF FLORIDA PROFESSIONAL ENGINEER

Feb 2006

REF	BEARING BLOCK
DATE	11/26/03
DRWG	CNBRGBLK1103
-ENG	SJP/KAR

ASCE 7-02: 110 MPH WIND SPEED, 15' MEAN HEIGHT, ENCLOSED, I = 1.00, EXPOSURE C

MAX GABLE VERTICAL LENGTH

2X4 GABLE VERTICAL SPACING	SPECIES	BRACE GRADE	NO BRACES	(1) 1X4 "L" BRACE * GROUP A	(1) 1X4 "L" BRACE * GROUP B	(1) 2X4 "L" BRACE * GROUP A	(1) 2X4 "L" BRACE * GROUP B	(2) 2X4 "L" BRACE ** GROUP A	(2) 2X4 "L" BRACE ** GROUP B	(1) 2X6 "L" BRACE * GROUP A	(1) 2X6 "L" BRACE * GROUP B	(2) 2X6 "L" BRACE ** GROUP A	(2) 2X6 "L" BRACE ** GROUP B
24" O.C.	SPF HF	#1 / #2	3' 10"	6' 8"	6' 10"	7' 11"	8' 1"	9' 5"	9' 8"	12' 5"	12' 9"	14' 0"	14' 0"
		#3	3' 9"	6' 0"	6' 0"	7' 11"	7' 11"	9' 5"	9' 5"	12' 4"	12' 4"	14' 0"	14' 0"
		STUD	3' 9"	6' 0"	6' 0"	7' 11"	7' 11"	9' 5"	9' 5"	12' 3"	12' 3"	14' 0"	14' 0"
		STANDARD	3' 9"	5' 2"	5' 2"	6' 9"	6' 9"	9' 1"	9' 1"	10' 7"	10' 7"	14' 0"	14' 0"
	SP DFL	#1	4' 3"	6' 8"	7' 2"	7' 11"	8' 6"	9' 5"	10' 2"	12' 5"	13' 5"	14' 0"	14' 0"
		#2	4' 2"	6' 8"	7' 2"	7' 11"	8' 6"	9' 5"	10' 2"	12' 5"	13' 5"	14' 0"	14' 0"
		#3	4' 0"	6' 2"	6' 2"	7' 11"	8' 1"	9' 5"	9' 11"	12' 5"	12' 8"	14' 0"	14' 0"
		STUD	4' 0"	6' 1"	6' 1"	7' 11"	8' 0"	9' 5"	9' 11"	12' 5"	12' 6"	14' 0"	14' 0"
		STANDARD	3' 10"	5' 3"	5' 3"	6' 11"	6' 11"	9' 4"	9' 4"	10' 10"	10' 10"	14' 0"	14' 0"
16" O.C.	SPF HF	#1 / #2	4' 5"	7' 8"	7' 10"	9' 1"	9' 4"	10' 10"	11' 1"	14' 0"	14' 0"	14' 0"	14' 0"
		#3	4' 4"	7' 4"	7' 4"	9' 1"	9' 1"	10' 10"	10' 10"	14' 0"	14' 0"	14' 0"	14' 0"
		STUD	4' 4"	7' 4"	7' 4"	9' 1"	9' 1"	10' 10"	10' 10"	14' 0"	14' 0"	14' 0"	14' 0"
		STANDARD	4' 4"	6' 4"	6' 4"	8' 4"	8' 4"	10' 10"	10' 10"	12' 11"	12' 11"	14' 0"	14' 0"
	SP DFL	#1	4' 10"	7' 8"	8' 3"	9' 1"	9' 9"	10' 10"	11' 8"	14' 0"	14' 0"	14' 0"	14' 0"
		#2	4' 9"	7' 8"	8' 3"	9' 1"	9' 9"	10' 10"	11' 8"	14' 0"	14' 0"	14' 0"	14' 0"
		#3	4' 6"	7' 7"	7' 7"	9' 1"	9' 6"	10' 10"	11' 4"	14' 0"	14' 0"	14' 0"	14' 0"
		STUD	4' 6"	7' 6"	7' 6"	9' 1"	9' 6"	10' 10"	11' 4"	14' 0"	14' 0"	14' 0"	14' 0"
		STANDARD	4' 5"	6' 5"	6' 5"	8' 6"	8' 6"	10' 10"	11' 1"	13' 3"	13' 3"	14' 0"	14' 0"
12" O.C.	SPF HF	#1 / #2	4' 11"	8' 5"	8' 8"	10' 0"	10' 3"	11' 11"	12' 3"	14' 0"	14' 0"	14' 0"	14' 0"
		#3	4' 9"	8' 5"	8' 5"	10' 0"	10' 0"	11' 11"	11' 11"	14' 0"	14' 0"	14' 0"	14' 0"
		STUD	4' 9"	8' 5"	8' 5"	10' 0"	10' 0"	11' 11"	11' 11"	14' 0"	14' 0"	14' 0"	14' 0"
		STANDARD	4' 9"	7' 3"	7' 3"	9' 7"	9' 7"	11' 11"	11' 11"	14' 0"	14' 0"	14' 0"	14' 0"
	SP DFL	#1	5' 4"	8' 5"	9' 1"	10' 0"	10' 9"	11' 11"	12' 10"	14' 0"	14' 0"	14' 0"	14' 0"
		#2	5' 3"	8' 5"	9' 1"	10' 0"	10' 9"	11' 11"	12' 10"	14' 0"	14' 0"	14' 0"	14' 0"
		#3	5' 0"	8' 5"	8' 5"	10' 0"	10' 6"	11' 11"	12' 6"	14' 0"	14' 0"	14' 0"	14' 0"
		STUD	5' 0"	8' 5"	8' 7"	10' 0"	10' 6"	11' 11"	12' 6"	14' 0"	14' 0"	14' 0"	14' 0"
		STANDARD	4' 11"	7' 5"	7' 5"	9' 10"	9' 10"	11' 11"	12' 3"	14' 0"	14' 0"	14' 0"	14' 0"

BRACING GROUP SPECIES AND GRADES:

GROUP A:

SPRUCE-PINE-FIR

#1 / #2	STANDARD
#3	STUD

HEM-FIR

#2	STUD
#3	STANDARD

DOUGLAS FIR-LARCH

#3
STUD
STANDARD

SOUTHERN PINE

#3
STUD
STANDARD

GROUP B:

HEM-FIR

#1 & BTR
#1

SOUTHERN PINE

#1
#2

DOUGLAS FIR-LARCH

#1
#2

GABLE TRUSS DETAIL NOTES:

LIVE LOAD DEFLECTION CRITERIA IS L/240.

PROVIDE UPLIFT CONNECTIONS FOR 80 PLF OVER CONTINUOUS BEARING (5 PSF TC DEAD LOAD).

GABLE END SUPPORTS LOAD FROM 4' 0" OUTLOOKERS WITH 2' 0" OVERHANG, OR 12" PLYWOOD OVERHANG.

ATTACH EACH "L" BRACE WITH 10d NAILS.
* FOR (1) "L" BRACE: SPACE NAILS AT 2" O.C. IN 18" END ZONES AND 4" O.C. BETWEEN ZONES.
** FOR (2) "L" BRACES: SPACE NAILS AT 3" O.C. IN 18" END ZONES AND 6" O.C. BETWEEN ZONES.

"L" BRACING MUST BE A MINIMUM OF 80% OF WEB MEMBER LENGTH.

DIAGONAL BRACE OPTION: VERTICAL LENGTH MAY BE DOUBLED WHEN DIAGONAL BRACE IS USED. CONNECT DIAGONAL BRACE FOR 600# AT EACH END. MAX WEB TOTAL LENGTH IS 14'.

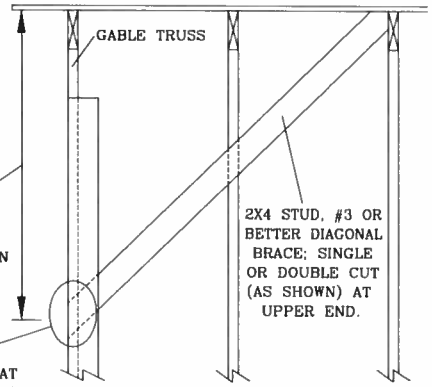

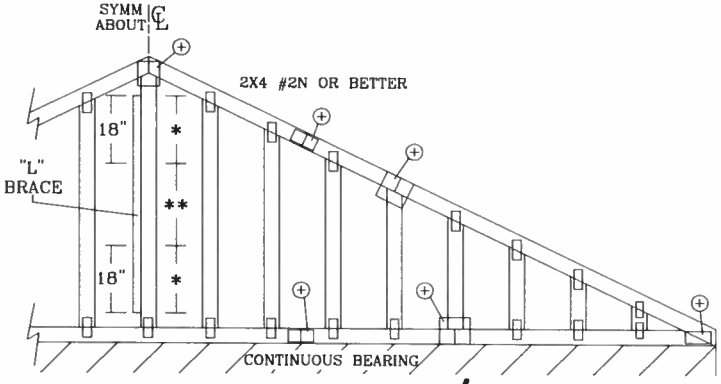

REFER TO CHART ABOVE FOR MAX GABLE VERTICAL LENGTH.

GABLE VERTICAL PLATE SIZES

VERTICAL LENGTH	NO SPLICE
LESS THAN 4' 0"	1X4 OR 2X3
GREATER THAN 4' 0", BUT LESS THAN 11' 6"	2X4
GREATER THAN 11' 6"	2.5X4

+ REFER TO COMMON TRUSS DESIGN FOR PEAK, SPLICE, AND HEEL PLATES.

ALPINE

ALPINE ENGINEERED PRODUCTS, INC.
POMPANO BEACH, FLORIDA

WARNING TRUSSES REQUIRE EXTREME CARE IN FABRICATING, HANDLING, SHIPPING, INSTALLING AND BRACING. REFER TO BCSI 1-03 (BUILDING COMPONENT SAFETY INFORMATION), PUBLISHED BY TPI (TRUSS PLATE INSTITUTE, 583 D'ONOFRIO DR., SUITE 200, MADISON, WI. 53719) AND WTCA (WOOD TRUSS COUNCIL OF AMERICA, 6300 ENTERPRISE LN, MADISON, WI 53719) FOR SAFETY PRACTICES PRIOR TO PERFORMING THESE FUNCTIONS. UNLESS OTHERWISE INDICATED, TOP CHORD SHALL HAVE PROPERLY ATTACHED STRUCTURAL PANELS AND BOTTOM CHORD SHALL HAVE A PROPERLY ATTACHED RIGID CEILING.

IMPORTANT FURNISH COPY OF THIS DESIGN TO INSTALLATION CONTRACTOR. ALPINE ENGINEERED PRODUCTS, INC., SHALL NOT BE RESPONSIBLE FOR ANY DEVIATION FROM THIS DESIGN; ANY FAILURE TO BUILD THE TRUSS IN CONFORMANCE WITH TPI, OR FABRICATING, HANDLING, SHIPPING, INSTALLING & BRACING OF TRUSSES. DESIGN CONFORMS WITH APPLICABLE PROVISIONS OF NDS (NATIONAL DESIGN SPEC. BY AF&PA) AND TPI. ALPINE CONNECTOR PLATES ARE MADE OF 20/18/16GA (W,H/S/K) ASTM A653 GRADE 40/60 (W,K/H,S) GALV. STEEL. APPLY PLATES TO EACH FACE OF TRUSS AND, UNLESS OTHERWISE LOCATED ON THIS DESIGN, POSITION PER DRAWINGS 160A-Z. ANY INSPECTION OF PLATES FOLLOWED BY (I) SHALL BE PER ANNEX A3 OF TPI 1-2002 SEC. 3. A SEAL ON THIS DRAWING INDICATES ACCEPTANCE OF PROFESSIONAL ENGINEERING RESPONSIBILITY SOLELY FOR THE TRUSS COMPONENT DESIGN SHOWN. THE SUITABILITY AND USE OF THIS COMPONENT FOR ANY BUILDING IS THE RESPONSIBILITY OF THE BUILDING DESIGNER PER ANSI/TPI 1 SEC. 2.

Feb 10

ARTHUR R. FISHER
LICENSE
No. 59687
STATE OF FLORIDA
PROFESSIONAL ENGINEER

MAX. TOT. LD. 60 PSF

MAX. SPACING 24.0"

REF	ASCE7-02-GAB11015
DATE	04/15/05
DRWG	A11015EE0405
-ENG	

GABLE DETAIL
FOR LET-IN VERTICALS

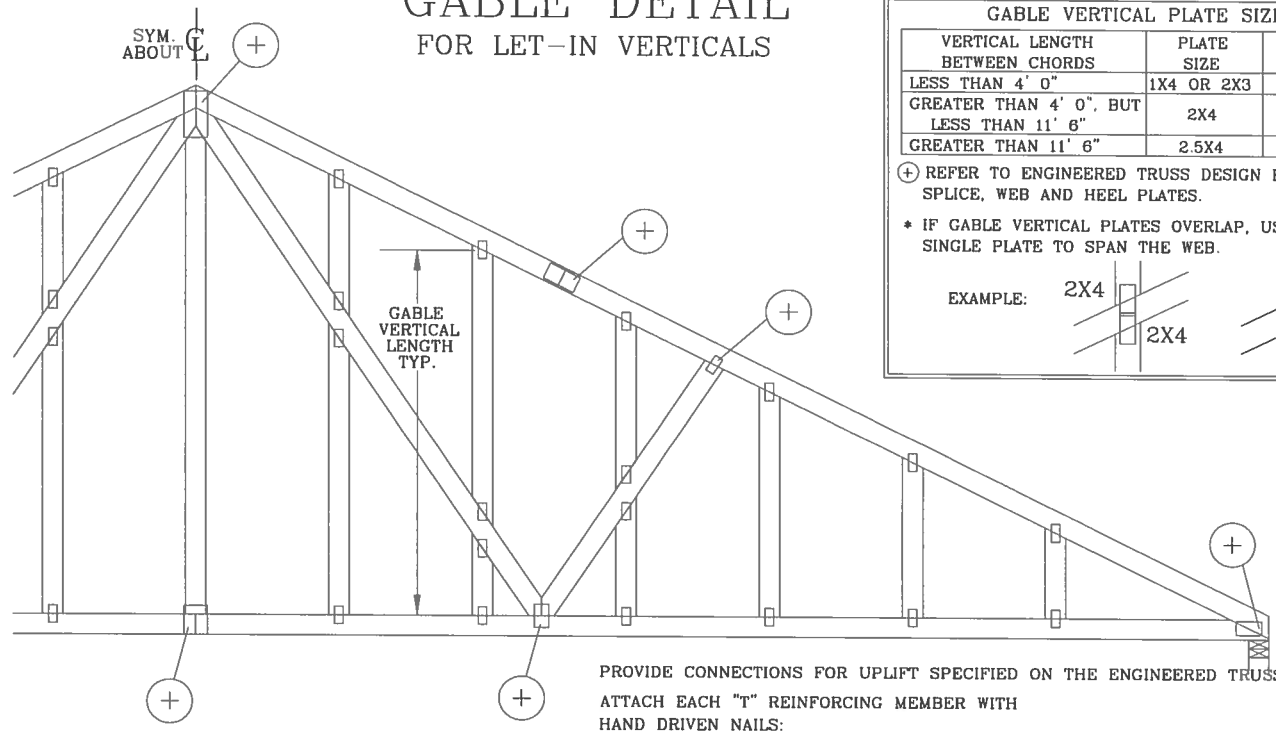

GABLE VERTICAL PLATE SIZES		
VERTICAL LENGTH BETWEEN CHORDS	PLATE SIZE	IF PLATES OVERLAP*
LESS THAN 4' 0"	1X4 OR 2X3	2X8
GREATER THAN 4' 0", BUT LESS THAN 11' 6"	2X4	2X8
GREATER THAN 11' 6"	2.5X4	2.5X8

(+) REFER TO ENGINEERED TRUSS DESIGN FOR PEAK, SPLICE, WEB AND HEEL PLATES.

* IF GABLE VERTICAL PLATES OVERLAP, USE A SINGLE PLATE TO SPAN THE WEB.

EXAMPLE:

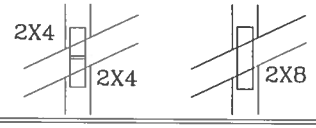

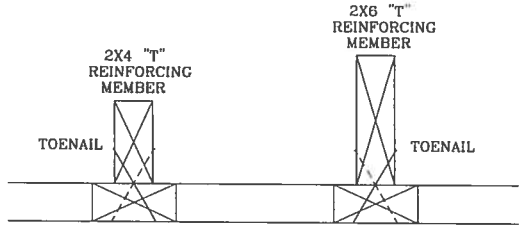

TO CONVERT FROM "L" TO "T" REINFORCING MEMBERS, MULTIPLY "T" FACTOR BY LENGTH (BASED ON GABLE VERTICAL SPECIES, GRADE AND SPACING) FOR (1) 2X4 "L" BRACE, GROUP A, OBTAINED FROM THE APPROPRIATE ALPINE GABLE DETAIL FOR ASCE OR SBCCI WIND LOAD.

MAXIMUM ALLOWABLE "T" REINFORCED GABLE VERTICAL LENGTH IS 14' FROM TOP TO BOTTOM CHORD.

WEB LENGTH INCREASE W/ "T" BRACE

WIND SPEED AND MRH	"T" REINF. MBR. SIZE	SBCCI	ASCE
110 MPH	2x4	10 %	10 %
15 FT	2x6	40 %	50 %
110 MPH	2x4	10 %	10 %
30 FT	2x6	50 %	50 %
100 MPH	2x4	10 %	10 %
15 FT	2x6	30 %	50 %
100 MPH	2x4	10 %	10 %
30 FT	2x6	40 %	40 %
90 MPH	2x4	20 %	10 %
15 FT	2x6	20 %	40 %
90 MPH	2x4	10 %	10 %
30 FT	2x6	30 %	50 %
80 MPH	2x4	10 %	20 %
15 FT	2x6	10 %	30 %
80 MPH	2x4	20 %	10 %
30 FT	2x6	20 %	40 %
70 MPH	2x4	0 %	20 %
15 FT	2x6	0 %	20 %
70 MPH	2x4	10 %	20 %
30 FT	2x6	10 %	30 %

EXAMPLE:
ASCE WIND SPEED = 100 MPH
MEAN ROOF HEIGHT = 30 FT
GABLE VERTICAL = 24" O.C. SP #3
"T" REINFORCING MEMBER SIZE = 2X4
"T" BRACE INCREASE (FROM ABOVE) = 10% = 1.10
(1) 2X4 "L" BRACE LENGTH = 6' 7"
MAXIMUM "T" REINFORCED GABLE VERTICAL LENGTH
1.10 x 6' 7" = 7' 3"

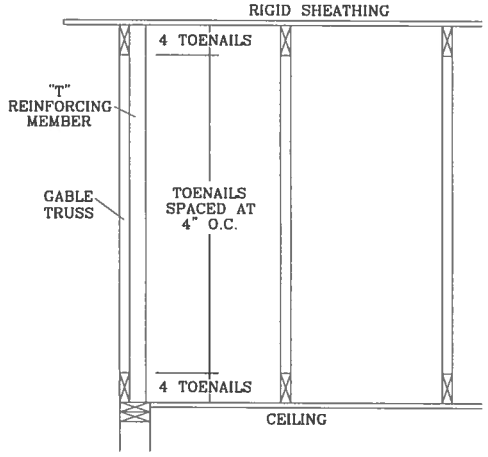

PROVIDE CONNECTIONS FOR UPLIFT SPECIFIED ON THE ENGINEERED TRUSS DESIGN.

ATTACH EACH "T" REINFORCING MEMBER WITH
HAND DRIVEN NAILS:
10d COMMON (0.148"X 3.",MIN) TOENAILS AT 4" O.C. PLUS
(4) 16d COMMON (0.162" X 3.5",MIN) TOENAILS IN TOP AND BOTTOM CHORD.

GUN DRIVEN NAILS:
8d COMMON (0.131"X 2.5",MIN) TOENAILS AT 4" O.C. PLUS
(4) TOENAILS IN TOP AND BOTTOM CHORD.

THIS DETAIL TO BE USED WITH THE APPROPRIATE ALPINE GABLE DETAIL FOR ASCE OR SBCCI WIND LOAD.
ASCE 7-93 GABLE DETAIL DRAWINGS
A11015EN1103, A10015EN1103, A09015EN1103, A08015EN1103, A07015EN1103
A11030EN1103, A10030EN1103, A09030EN1103, A08030EN1103, A07030EN1103
ASCE 7-98 GABLE DETAIL DRAWINGS
A13015EC1103, A12015EC1103, A11015EC1103, A10015EC1103, A08515EC1103
A13030EC1103, A12030EC1103, A11030EC1103, A10030EC1103, A08530EC1103
ASCE 7-02 GABLE DETAIL DRAWINGS
A13015EE0405, A12015EE0405, A11015EE0405, A10015EE0405, A08515EE0405,
A13030EE0405, A12030EE0405, A11030EE0405, A10030EE0405, A08530EE0405

SEE APPROPRIATE ALPINE GABLE DETAIL (ASCE OR SBCCI WIND LOAD) FOR MAXIMUM UNREINFORCED GABLE VERTICAL LENGTH.

THIS DRAWING REPLACES DRAWINGS GAB98117 876,719 & HC26294035

ALPINE
ALPINE ENGINEERED PRODUCTS, INC.
POMPANO BEACH, FLORIDA

WARNING TRUSSES REQUIRE EXTREME CARE IN FABRICATING, HANDLING, SHIPPING, INSTALLING AND BRACING. REFER TO BCSI 1-03 (BUILDING COMPONENT SAFETY INFORMATION), PUBLISHED BY TPI (TRUSS PLATE INSTITUTE, 583 D'ONOFRIO DR, SUITE 200, MADISON, WI 53719) AND WTCA (WOOD TRUSS COUNCIL OF AMERICA, 6300 ENTERPRISE LN, MADISON, WI 53719) FOR SAFETY PRACTICES PRIOR TO PERFORMING THESE FUNCTIONS. UNLESS OTHERWISE INDICATED, TOP CHORD SHALL HAVE PROPERLY ATTACHED STRUCTURAL PANELS AND BOTTOM CHORD SHALL HAVE A PROPERLY ATTACHED RIGID CEILING.

IMPORTANT FURNISH COPY OF THIS DESIGN TO INSTALLATION CONTRACTOR. ALPINE ENGINEERED PRODUCTS, INC., SHALL NOT BE RESPONSIBLE FOR ANY DEVIATION FROM THIS DESIGN; ANY FAILURE TO BUILD THE TRUSS IN CONFORMANCE WITH TPI, OR FABRICATING, HANDLING, SHIPPING, INSTALLING & BRACING OF TRUSSES. DESIGN CONFORMS WITH APPLICABLE PROVISIONS OF NDS (NATIONAL DESIGN SPEC, BY AF&PA) AND TPI. ALPINE CONNECTOR PLATES ARE MADE OF 20/18/16GA (W,H/S/K) ASTM A653 GRADE 40/60 (W,K/H,S) GALV. STEEL. APPLY PLATES TO EACH FACE OF TRUSS AND, UNLESS OTHERWISE LOCATED ON THIS DESIGN, POSITION PER DRAWINGS 160A-Z. ANY INSPECTION OF PLATES FOLLOWED BY (I) SHALL BE PER ANNEX A3 OF TPI 1-2002 SEC 3. A SEAL ON THIS DRAWING INDICATES ACCEPTANCE OF PROFESSIONAL ENGINEERING RESPONSIBILITY SOLELY FOR THE TRUSS COMPONENT DESIGN SHOWN. THE SUITABILITY AND USE OF THIS COMPONENT FOR ANY BUILDING IS THE RESPONSIBILITY OF THE BUILDING

ARTHUR R. FISHER
LICENSE
No. 59687
STATE OF FLORIDA
PROFESSIONAL ENGINEER

Feb 10, 2006

MAX TOT. LD. 60 PSF
DUR. FAC. ANY

REF	LET-IN VERT
DATE	04/14/05
DRWG	GBLLETIN0405
-ENG	DLJ/KAR

PIGGYBACK DETAIL

TOP CHORD 2X4 #2 OR BETTER
BOT CHORD 2X4 #2 OR BETTER
WEBS 2X4 #3 OR BETTER

REFER TO SEALED DESIGN FOR DASHED PLATES.

SPACE PIGGYBACK VERTICALS AT 4' OC MAX.

TOP AND BOTTOM CHORD SPLICES MUST BE STAGGERED SO THAT ONE SPLICE IS NOT DIRECTLY OVER ANOTHER.

PIGGYBACK BOTTOM CHORD MAY BE OMITTED. ATTACH VERTICAL WEBS TO TRUSS TOP CHORD WITH 1.5X3 PLATE.

ATTACH PURLINS TO TOP OF FLAT TOP CHORD. IF PIGGYBACK IS SOLID LUMBER OR THE BOTTOM CHORD IS OMITTED, PURLINS MAY BE APPLIED BENEATH THE TOP CHORD OF SUPPORTING TRUSS.

REFER TO ENGINEER'S SEALED DESIGN FOR REQUIRED PURLIN SPACING.

THIS DETAIL IS APPLICABLE FOR THE FOLLOWING WIND CONDITIONS:

130 MPH WIND, 30' MEAN HGT, ASCE 7-02, CLOSED BLDG, LOCATED ANYWHERE IN ROOF, CAT II, EXP C, WIND TC DL=5 PSF, WIND BC DL=5 PSF

110 MPH WIND, 30' MEAN HGT, SBC ENCLOSED BLDG, LOCATED ANYWHERE IN ROOF WIND TC DL=5 PSF, WIND BC DL=5 PSF

130 MPH WIND, 30' MEAN HGT, ASCE 7-98, CLOSED BLDG, LOCATED ANYWHERE IN ROOF, CAT II, EXP. C, WIND TC DL=5 PSF, WIND BC DL=5 PSF

FRONT FACE (E,*) PLATES MAY BE OFFSET FROM BACK FACE PLATES AS LONG AS BOTH FACES ARE SPACED 4' OC MAX.

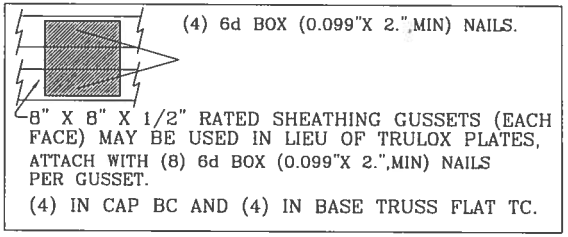

JOINT TYPE	SPANS UP TO			
	30'	34'	38'	52'
A	2X4	2.5X4	2.5X4	3X5
B	4X6	5X6	5X6	5X6
C	1.5X3	1.5X4	1.5X4	1.5X4
D	5X4	5X5	5X5	5X6
E	4X6 OR 3X6 TRULOX AT 4' OC, ROTATED VERTICALLY			

ATTACH TRULOX PLATES WITH (8) 0.120" X 1.375" NAILS, OR EQUAL, PER FACE PER PLY. (4) NAILS IN EACH MEMBER TO BE CONNECTED. REFER TO DRAWING 160 TL FOR TRULOX INFORMATION.

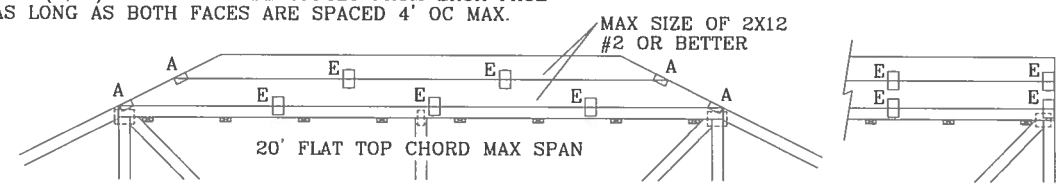

WEB BRACING CHART	
WEB LENGTH	REQUIRED BRACING
0' TO 7'9"	NO BRACING
7'9" TO 10'	1x4 "T" BRACE. SAME GRADE, SPECIES AS WEB MEMBER, OR BETTER, AND 80% LENGTH OF WEB MEMBER. ATTACH WITH 8d BOX (0.113"X 2.5",MIN) NAILS AT 4" OC.
10' TO 14'	2x4 "T" BRACE. SAME GRADE, SPECIES AS WEB MEMBER, OR BETTER, AND 80% LENGTH OF WEB MEMBER. ATTACH WITH 16d BOX (0.135"X 3.5",MIN) NAILS AT 4" OC.

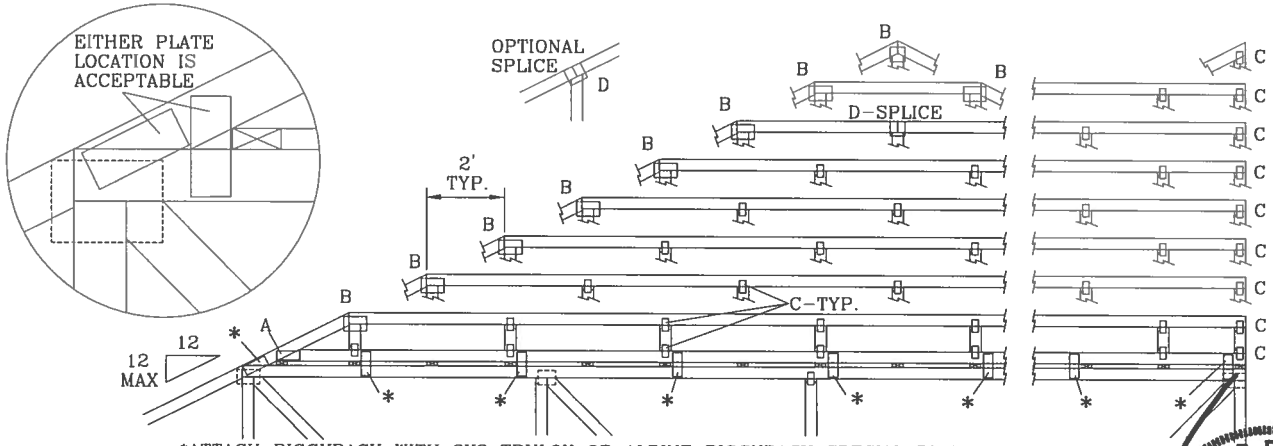

*ATTACH PIGGYBACK WITH 3X8 TRULOX OR ALPINE PIGGYBACK SPECIAL PLATE.

* PIGGYBACK SPECIAL PLATE

ATTACH TEETH TO THE PIGGYBACK AT THE TIME OF FABRICATION. ATTACH TO SUPPORTING TRUSS WITH (4) 0.120" X 1.375" NAILS PER FACE PER PLY. APPLY PIGGYBACK SPECIAL PLATE TO EACH TRUSS FACE AND SPACE 4' OC OR LESS.

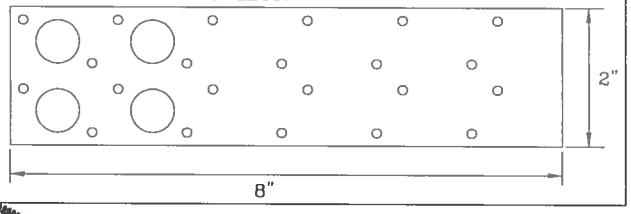

THIS DRAWING REPLACES DRAWINGS 634,016 634,017 & 847,045

ALPINE

ALPINE ENGINEERED PRODUCTS, INC.
POMPANO BEACH, FLORIDA

WARNING TRUSSES REQUIRE EXTREME CARE IN FABRICATING, HANDLING, SHIPPING, INSTALLING AND BRACING. REFER TO BCSI 1-03 (BUILDING COMPONENT SAFETY INFORMATION), PUBLISHED BY TPI (TRUSS PLATE INSTITUTE, 583 D'ONOFRIO DR., SUITE 200, MADISON, WI. 53719) AND WTCA (WOOD TRUSS COUNCIL OF AMERICA, 6300 ENTERPRISE LN, MADISON, WI 53719) FOR SAFETY PRACTICES PRIOR TO PERFORMING THESE FUNCTIONS. UNLESS OTHERWISE INDICATED, TOP CHORD SHALL HAVE PROPERLY ATTACHED STRUCTURAL PANELS AND BOTTOM CHORD SHALL HAVE A PROPERLY ATTACHED RIGID CEILING.

IMPORTANT FURNISH COPY OF THIS DESIGN TO INSTALLATION CONTRACTOR. ALPINE ENGINEERED PRODUCTS, INC, SHALL NOT BE RESPONSIBLE FOR ANY DEVIATION FROM THIS DESIGN; ANY FAILURE TO BUILD THE TRUSS IN CONFORMANCE WITH TPI; OR FABRICATING, HANDLING, SHIPPING, INSTALLING & BRACING OF TRUSSES. DESIGN CONFORMS WITH APPLICABLE PROVISIONS OF NDS (NATIONAL DESIGN SPEC, BY AF&PA) AND TPI. ALPINE CONNECTOR PLATES ARE MADE OF 20/18/16GA (W,H/S/K) ASTM A653 GRADE 40/60 (W,K/H,S) GALV. STEEL. APPLY PLATES TO EACH FACE OF TRUSS AND, UNLESS OTHERWISE LOCATED ON THIS DESIGN, POSITION PER DRAWINGS 160A-Z. ANY INSPECTION OF PLATES FOLLOWED BY (I) SHALL BE PER ANNEX A3 OF TPI 1-2002 SEC. 3. A SEAL ON THIS DRAWING INDICATES ACCEPTANCE OF PROFESSIONAL ENGINEERING RESPONSIBILITY SOLELY FOR THE TRUSS COMPONENT DESIGN SHOWN. THE SUITABILITY AND USE OF THIS COMPONENT FOR ANY BUILDING IS THE RESPONSIBILITY OF THE BUILDING

Feb 10

ARTHUR R. FISHER
LICENSE
No. 59687
STATE OF
FLORIDA
PROFESSIONAL ENGINEER

MAX LOADING
55 PSF AT 1.33 DUR. FAC.
50 PSF AT 1.25 DUR. FAC.
47 PSF AT 1.15 DUR. FAC.

REF	PIGGYBACK
DATE	04/14/05
DRWG	PIGBACKB0405
ENG	DLJ/KAR