L. Roberto Lomas P.E.
233 W. Main St
Danville, VA 24541
434-688-0609
rllomas@lrlomaspe.com

Engineering Evaluation Report

Report No.: 512914B

Manufacturer: Alpha Aluminum Inc.
1710 Premier Row
Orlando, FL 32809

Product Line: Alpha Aluminum Solid and Vented Aluminum Soffit /CMU & Wood

Compliance:
The above mentioned product has been evaluated for compliance with the requirements of the Florida Department of Business and Professional Regulation for Statewide Acceptance per Rule 61G20-3.005 method 1(d). The product listed herein complies with requirements of the Florida Building Code.

Supporting Technical Documentation:
1. Approval document: drawing number 08-02198 Revision B, prepared, signed and sealed by Luis Roberto Lomas P.E.
2. Test report No.: ESP014159P and -1 signed and sealed by Ramesh Patel, P.E.
   Element Materials Technology, Wausau, WI
   ASTM E330-02
   Design pressure: ±54.2psf (12" Overhang)
   ±38.4psf (16" Overhang)
   ±31.1psf (24" Overhang)
3. Anchor calculations, report number 512914-1A, prepared, signed and sealed by Luis Roberto Lomas P.E.

Limitations and Conditions of use:
Maximum design pressure: ±54.2psf (12" Overhang)
±38.4psf (16" Overhang)
±31.1psf (24" Overhang)

- Maximum unit size: refer to installation details
- This product is not rated to be used in the HVHZ.
- This product is not impact resistant and requires impact protection in wind borne debris regions.
- Soffit material to be 3105 H28 Aluminum.

Installation:
Units must be installed in accordance with manufacturer's installation instructions and approval document 08-02198 Revision B.

Certification of Independence:
Please note that I don't have nor will acquire a financial interest in any company manufacturing or distributing the product(s) for which this report is being issued. Also, I don't have nor will acquire a financial interest in any other entity involved in the approval process of the listed product(s).

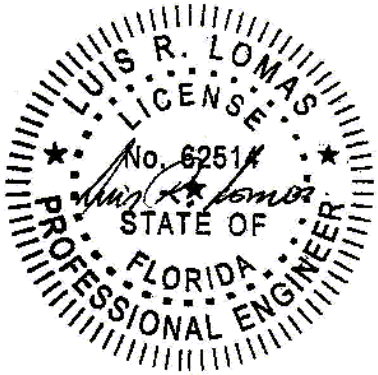

Luis R. Lomas, P.E.
FL No.: 62514
01/10/2020

NEMO|etc.
Certificate of Authorization #32455
353 Christian Street, Unit #13
Oxford, CT 06478
(203) 262-9245

ENGINEER **EVALUATE** **TEST** **CONSULT**

EVALUATION REPORT

Owens Corning
One Owens Corning Parkway
Toledo, OH 43659
(740) 404-7829

Evaluation Report O37940.02.12-R11
FL10674-R16
Date of Issuance: 02/06/2012
Revision 11: 12/11/2020

SCOPE:
This Evaluation Report is issued under **Rule 61G20-3** and the applicable rules and regulations governing the use of construction materials in the State of Florida. The documentation submitted has been reviewed by Robert Nieminen, P.E. for use of the product under the Florida Building Code. The product described herein has been evaluated for compliance with the **7th Edition (2020) Florida Building Code** sections noted herein.

DESCRIPTION: Owens Corning Asphalt Roof Shingles

LABELING: Labeling shall be in accordance with the requirements of the Accredited Quality Assurance Agency noted herein and **FBC 1507.2.7.1 / R905.2.6.1**

CONTINUED COMPLIANCE: This Evaluation Report is valid until such time as the named product(s) changes, the referenced Quality Assurance or production facility location(s) changes, or Code provisions that relate to the product(s) change. Acceptance of our Evaluation Reports by the named client constitutes agreement to notify NEMO ETC, LLC of any changes to the product(s), the Quality Assurance or the production facility location(s). NEMO ETC, LLC requires a complete review of its Evaluation Report relative to updated Code requirements with each Code Cycle.

ADVERTISEMENT: The Florida Product Approval Number (FL#) preceded by the words "NEMO|etc. Evaluated" may be displayed in advertising literature. If any portion of the Evaluation Report is displayed, then it shall be done in its entirety.

INSPECTION: Upon request, a copy of this entire Evaluation Report shall be provided to the user by the manufacturer or its distributors and shall be available for inspection at the job site at the request of the Building Official.

This Evaluation Report consists of pages 1 through 10.

Prepared by:

Robert J.M. Nieminen, P.E.
Florida Registration No. 59166, Florida DCA ANE1983

The facsimile seal appearing was authorized by Robert Nieminen, P.E. on 12/11/2020. This does not serve as an electronically signed document.

CERTIFICATION OF INDEPENDENCE:

1. NEMO ETC, LLC does not have, nor does it intend to acquire or will it acquire, a financial interest in any company manufacturing or distributing products it evaluates.
2. NEMO ETC, LLC is not owned, operated or controlled by any company manufacturing or distributing products it evaluates.
3. Robert Nieminen, P.E. does not have nor will acquire, a financial interest in any company manufacturing or distributing products for which the evaluation reports are being issued.
4. Robert Nieminen, P.E. does not have, nor will acquire, a financial interest in any other entity involved in the approval process of the product.
5. This is a building code evaluation. Neither NEMO ETC, LLC nor Robert Nieminen, P.E. are, in any way, the Designer of Record for any project on which this Evaluation Report, or previous versions thereof, is/was used for permitting or design guidance unless retained specifically for that purpose.

©2018 NEMO ETC, LLC

ROOFING SYSTEMS EVALUATION:

1. SCOPE:

Product Category: Roofing
Sub-Category: Asphalt Shingles
Compliance Statement: **Owens Corning Asphalt Roof Shingles**, as produced by **Owens Corning**, have demonstrated compliance with the following sections of the **7th Edition (2020) Florida Building Code** through testing in accordance with the following Standards. Compliance is subject to the Installation Requirements and Limitations / Conditions of Use set forth herein.

2. STANDARDS:

Section	Property	Standard	Year
1507.2.4, R905.2.3	Physical Properties	ASTM D1970	2015
1507.2.5, R905.2.4	Material standard	ASTM D3462	2010
1507.2.7.1, R905.2.6.1	Wind Resistance	ASTM D3161	2016
1507.2.7.1, R905.2.6.1	Wind Resistance	ASTM D7158	2019

3. REFERENCES:

Entity	Examination	Reference	Date
Owens Corning	Declaration	Equivalency Declaration	08/06/2019
PRI (TST5878)	ASTM D1970	OCF-382-02-01	10/24/2017
UL LLC (CER9626)	Physicals & Wind Resistance	File R2453, Vol. 3	02/15/2007
UL LLC (CER9626)	Physicals & Wind Resistance	20120516-R2453	05/16/2012
UL LLC (TST9628)	Physical Properties	06CA20263	04/18/2006
UL LLC (TST9628)	Wind Resistance	11CA34308	02/18/2012
UL LLC (TST9628)	Physicals & Wind Resistance	4786093137	02/01/2014
UL LLC (TST9628)	Wind Resistance	4786126532	02/10/2014
UL LLC (TST9628)	Physical Properties	Classification letter	02/13/2014
UL LLC (TST9628)	Physical Properties	Classification letter	10/02/2015
PRI (QUA9110)	Quality Control	Service Confirmation	04/05/2020
PRI (QUA9110)	Quality Control	Florida BCIS	Current

4. PRODUCT DESCRIPTION:

TABLE 1: ASPHALT SHINGLE COMPONENTS

Type	Product	Plant(s)	Material Standard	Description
Accessory Starter Strips	Starter Strip Shingle	H-TX, OR	ASTM D3462	starter strips for asphalt roof shingles
	Starter Strip Plus	MN, OR		
	SRS TopShield Starter	MN, OR		
	Starter Shingle Roll	NH	ASTM D1970	mineral-surfaced, fiberglass-reinforced, self-adhering SBS modified bitumen starter
Asphalt Shingles	Supreme®	GA, CA, CO, I-TX, NJ, OH, TN, OR, IL	ASTM D3462	fiberglass reinforced 3-tab asphalt roof shingles
	Berkshire®	MN	ASTM D3462	fiberglass reinforced, 4-tab asphalt roof shingles
	Duration® Premium	CA, OR	ASTM D3462	fiberglass reinforced, laminated asphalt roof shingles
	Duration® Premium COOL	CA		
	TruDefinition® Duration®	IN, CA, CO, I-TX, FL, NJ, OH, MN, OR, GA, IL, TN		
	TruDefinition® Duration® Designer Color Collection			
	Oakridge®	GA, IN, CA, CO, H-TX, I-TX, FL, NJ OH, TN		
	TruDefinition® Oakridge®	H-TX, I-TX		
	WeatherGuard® HP	TN		

TABLE 1: ASPHALT SHINGLE COMPONENTS				
Type	**Product**	**Plant(s)**	**Material Standard**	**Description**
Hip and Ridge Shingles	Berkshire® Hip and Ridge Shingles with Sealant	MN	ASTM D3462	fiberglass reinforced, hip and ridge asphalt roof shingles
	DuraRidge® Hip and Ridge Shingles with Sealant	MN		
	ProEdge®	GA, CA, OH, OR		
	WeatherGuard® HP Hip and Ridge Shingles	TN		

5. LIMITATIONS:

5.1 This is a building code evaluation. Neither NEMO ETC, LLC nor Robert Nieminen, P.E. are, in any way, the Designer of Record for any project on which this Evaluation Report, or previous versions thereof, is/was used for permitting or design guidance unless retained specifically for that purpose.

5.2 This Evaluation Report is not for use in FBC High Velocity Hurricane Zone jurisdictions (i.e., Broward and Miami-Dade Counties).

5.3 This Evaluation Report pertains to above-deck roof components. Roof decks and structural members shall be in accordance with FBC requirements to the satisfaction of the Authority Having Jurisdiction.

5.4 This Evaluation Report does not include evaluation of fire classification. Refer to **FBC 1505** for requirements and limitations regarding roof assembly fire classification. Refer to **FBC 2603** for requirements and limitations concerning the use of foam plastic insulation.

5.5 **Wind Classification:** Refer to Section 6 for installation requirements to meet wind classifications

TABLE 2A: WIND CLASSIFICATIONS, ASPHALT SHINGLES	
Product	**FBC Table 1507.2.7.1 or R905.2.6.1**
Supreme®	ASTM D3161(F) & ASTM D7158(H)
Berkshire®	
Duration® Premium	
Duration® Premium COOL	
TruDefinition® Duration®	
TruDefinition® Duration® Designer Color Collection	
Oakridge®	
TruDefinition® Oakridge®	
WeatherGuard® HP	

5.5.1 **Classification by ASTM D7158:**

ASTM D7158, Class H applies only to **exposure category B or C** and a **building height of 60 feet or less**. Calculations by a qualified design professional are required for conditions outside these limitations. Contact the shingle manufacturer for data specific to each shingle.

TABLE 2B: WIND CLASSIFICATIONS, STARTER STRIPS AND HIP & RIDGE		
Type	**Product**	**FBC Table 1507.2.7.1 or R905.2.6.1**
Starter Strips	Starter Strip Shingle	ASTM D3161, Class F
	Starter Strip Plus	
	SRS TopShield Starter	
Hip & Ridge Shingles	Berkshire® Hip and Ridge Shingles with Sealant	ASTM D3161, Class F
	DuraRidge® Hip and Ridge Shingles with Sealant	
	ProEdge®	
	WeatherGuard® HP Hip and Ridge Shingles	

5.5.2 Refer to Owens Corning published information on wind resistance and installation limitations.

5.6 All components in the roof assembly shall have quality assurance audit in accordance with **F.A.C. Rule 61G20-3**. Refer to the Product Approval of the component manufacturer for components that are produced by a Product Manufacturer other than the report holder on Page 1 of this Evaluation Report.

6. INSTALLATION:

6.1 GENERAL:

6.1.1 Roof deck, slope, underlayment and fasteners shall comply with FBC 1507.2 / R905.2 and the shingle manufacturer's minimum requirements.

6.1.2 Underlayment shall be acceptable to the shingle manufacturer and shall hold current Florida Statewide Product Approval, or be Locally Approved per Rule 61G20-3, per FBC Sections 1507.2.3, 1507.2.4 or R905.2.3.

6.1.3 Fasteners shall be in accordance with the shingle manufacturer's published requirements, but not less than FBC 1507.2.6 or R905.2.5. Staples are not permitted.

6.1.4 Owens Corning asphalt shingles are acceptable for use in reroof (tear-off) or recover applications, subject to the limitations set forth in FBC Section 1511 or R908 and published installation instructions.

6.2 ACCESSORY STARTERS:

6.2.1 Installation of **Starter Strip Shingle, Starter Strip Plus and SRS TopShield Starter** shall comply with the Owens Corning current published instructions, using minimum five (5) nails per strip.

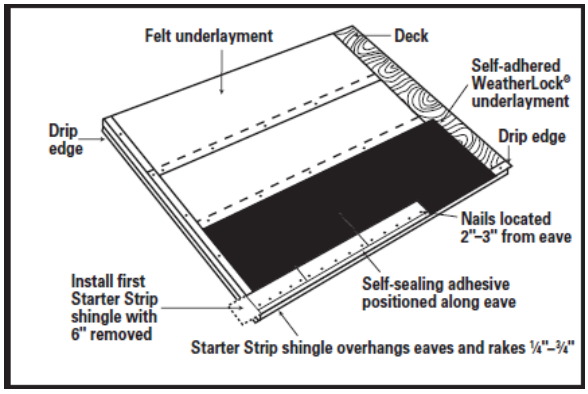

Figure 1: Minimum Nailing, Starter Strip

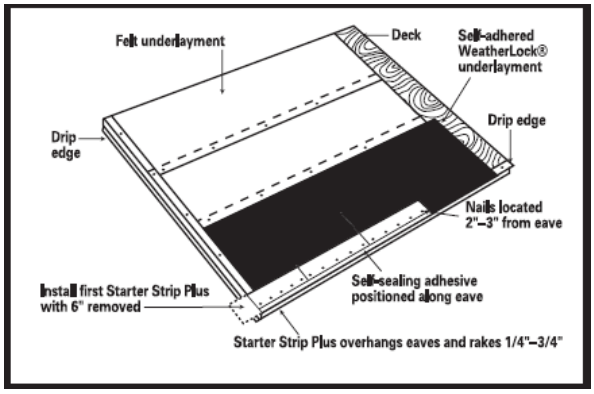

Figure 2: Minimum Nailing, Starter Strip Plus

6.2.2 Installation of **Starter Shingle Roll** shall comply with the Owens Corning current published instructions.

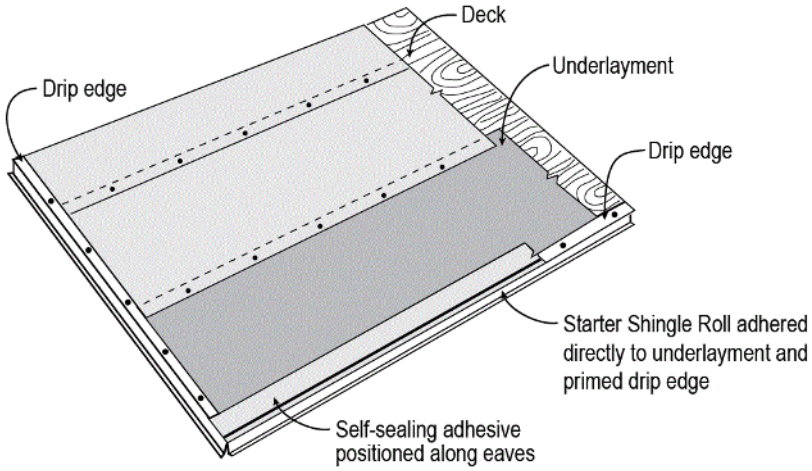

Figure 3: Starter Shingle Roll

6.3	**ASPHALT SHINGLES:**

6.3.1 Installation of asphalt shingles shall comply with the Owens Corning current published instructions, using minimum four (4) nails per shingle in accordance with FBC 1507.2.7 or R905.2.6, with the following exceptions:

- Berkshire® shingles require minimum five (5) nails per shingle.
- WeatherGuard® HP shingles require minimum six (6) nails per shingle.

Where the roof slope exceeds 21 units vertical in 12 units horizontal, special methods of fastening are required Refer to Owens Corning published information on wind resistance and installation limitations.

6.3.1.1 **Supreme**:

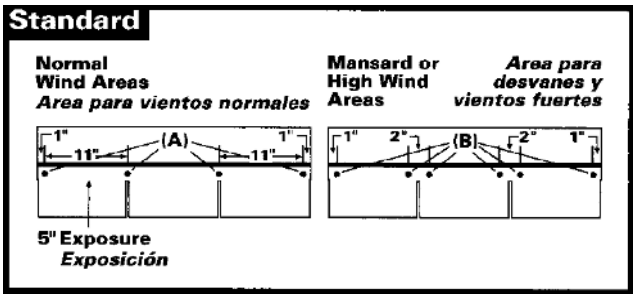

Figure 4: Minimum Nailing, Supreme (Standard Size)

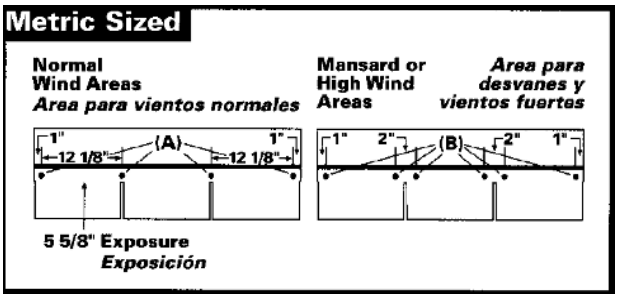

Figure 5: Minimum Nailing, Supreme (Metric Size)

6.3.1.2 **Berkshire®:**

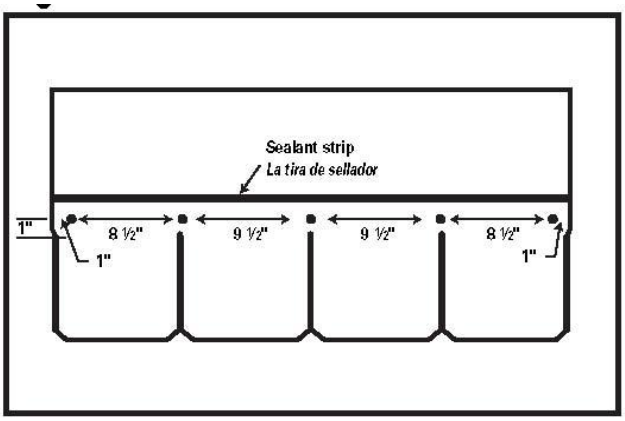

Figure 6: 5-Nail Pattern, Berkshire

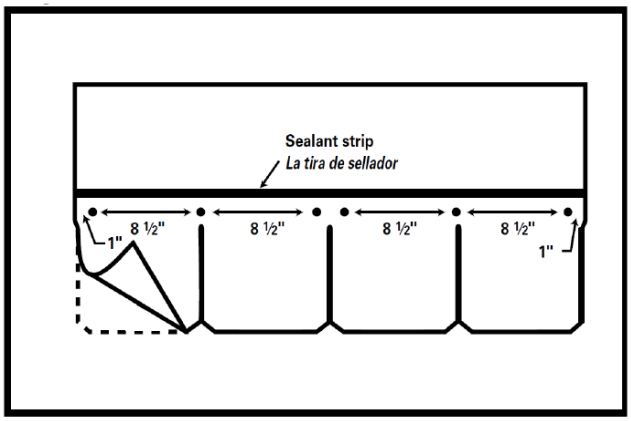

Figure 7: 6-Nail Pattern, Berkshire

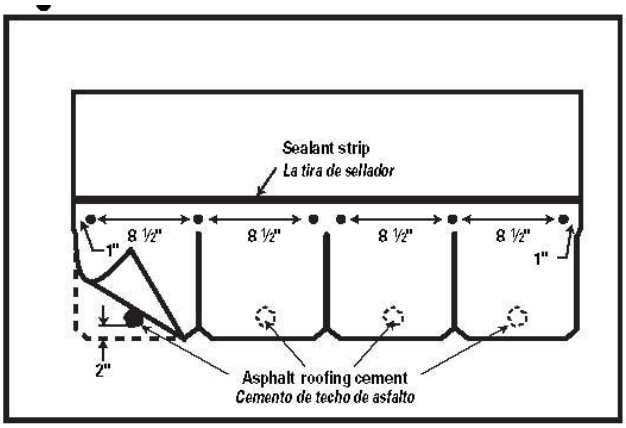

Figure 8: Mansard or Steep Slope Pattern, Berkshire

6.3.1.3 **Duration® Premium, TruDefinition® Duration, Duration® Premium COOL & TruDefinition® Duration® Designer Color Collection**:

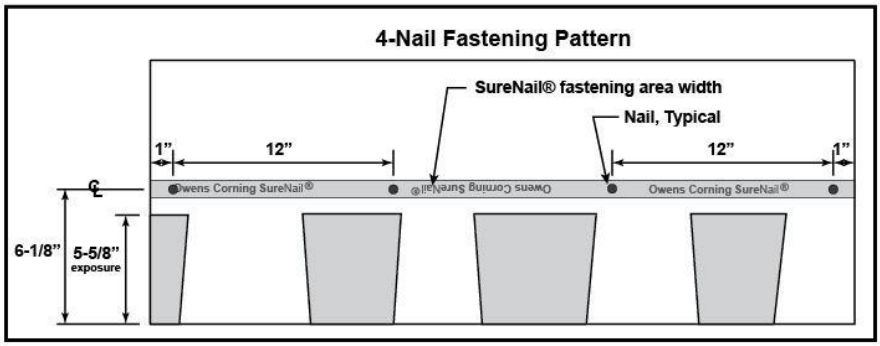

Figure 9: Standard 4-Nail Pattern, Duration

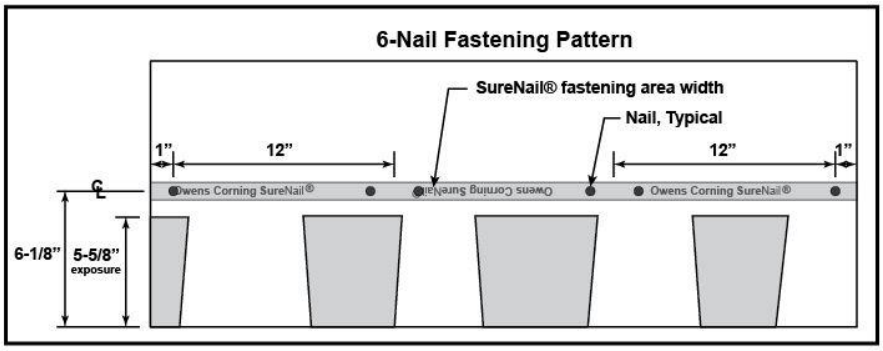

Figure 10: 6-Nail Pattern, Duration

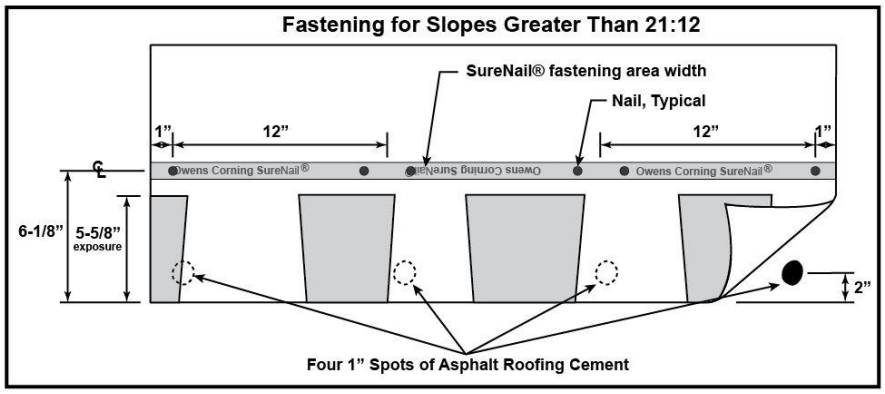

Figure 11: Mansard or Steep Slope Pattern, Duration

6.3.1.4 TruDefinition® Oakridge®, Oakridge®:

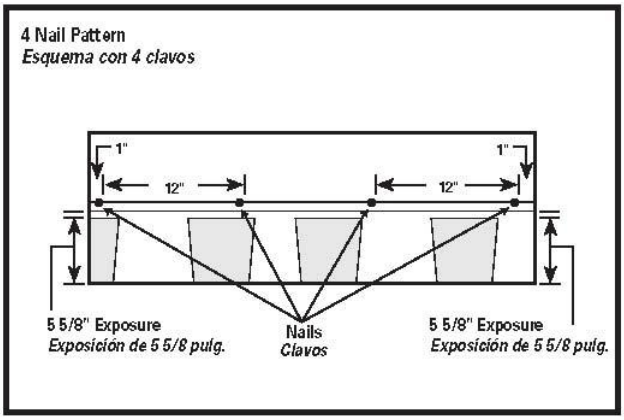

Figure 12: Standard 4-Nail Pattern, Oakridge

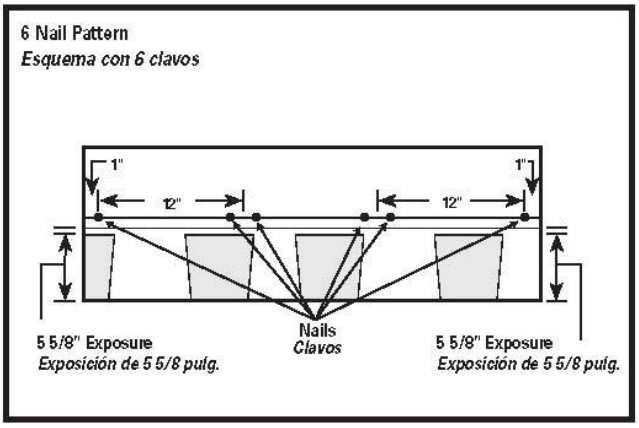

Figure 13: 6-Nail Pattern, Oakridge

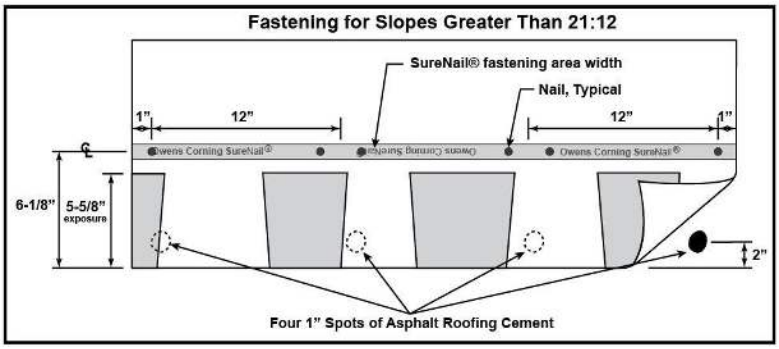

Figure 14: Mansard or Steep-Slope Pattern, Oakridge

6.3.1.5 WeatherGuard® HP:

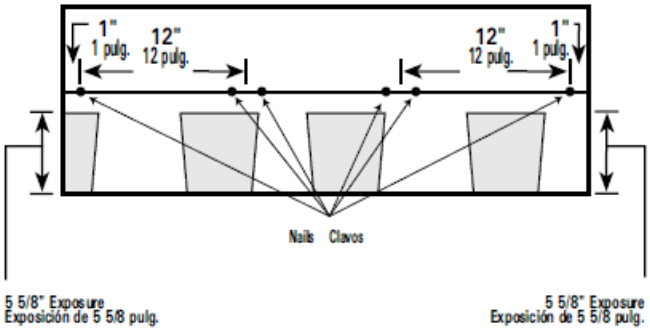

Figure 15: 6-Nail Pattern, WeatherGuard HP

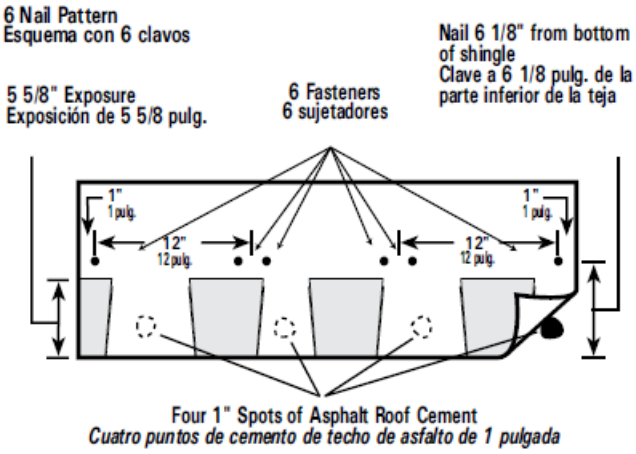

Figure 16: Mansard or Steep-Slope Pattern, WeatherGuard HP

6.4	HIP AND RIDGE SHINGLES:

6.4.1 Installation of asphalt shingles shall comply with the Owens Corning current published instructions.

- Berkshire® Hip and Ridge Shingles *with Sealant* and DuraRidge® Hip and Ridge Shingles *with Sealant* require minimum two (2) nails per shingle.
- WeatherGuard® HP Hip and Ridge Shingles and ProEdge® require minimum four (4) nails per shingle.

Refer to Owens Corning published information on wind resistance and installation limitations.

6.4.1.1 **Berkshire® Hip and Ridge *with Sealant* and DuraRidge® Hip and Ridge Shingles *with Sealant*:**

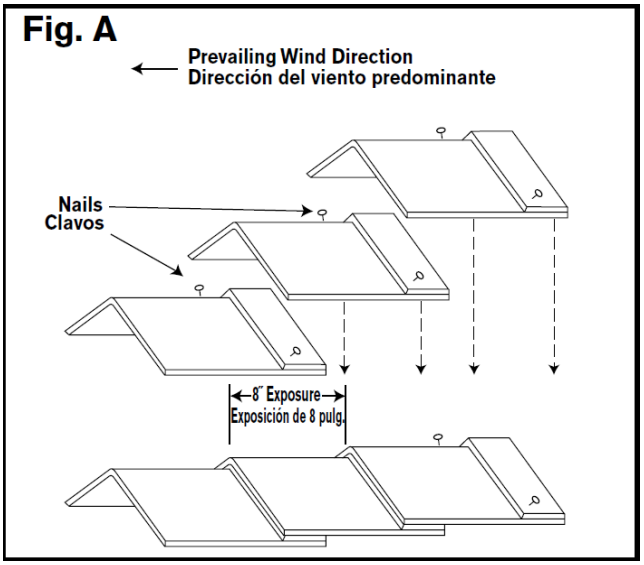

Figure 17: Isometric View, Berkshire and DuraRidge

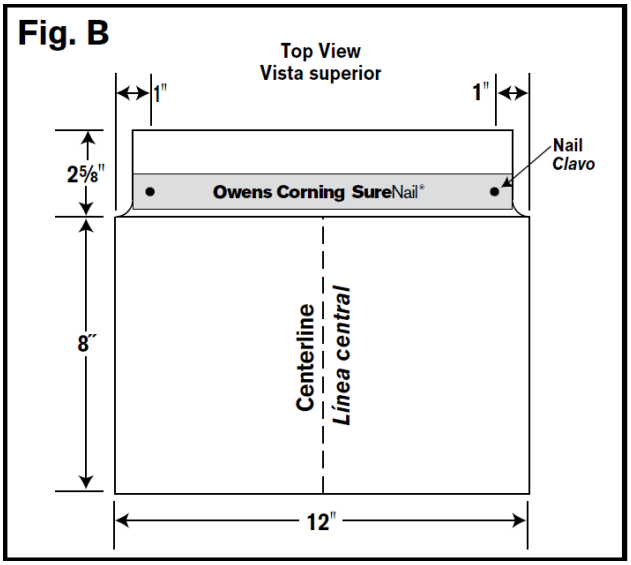

Figure 18: Plan View, Berkshire and DuraRidge

6.4.1.2 **WeatherGuard® HP Hip and Ridge Shingles:**

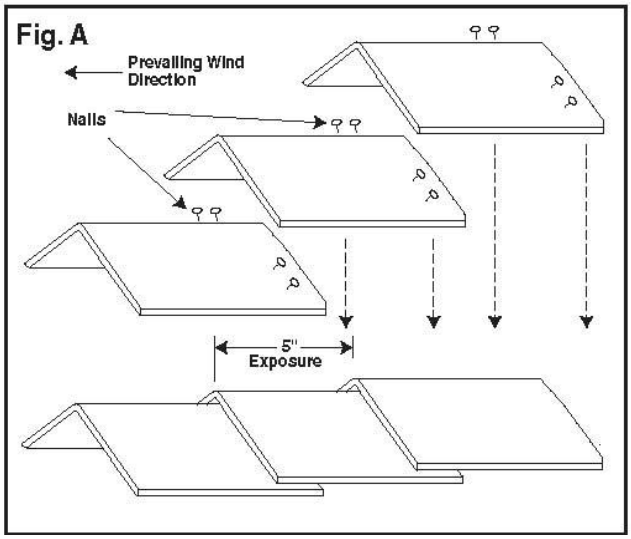

Figure 19: Isometric View, WeatherGuard HP Hip and Ridge

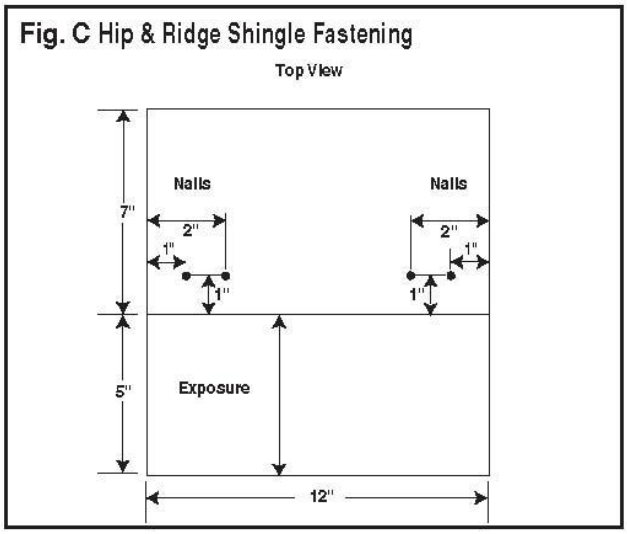

Figure 20: Plan View, WeatherGuard HP Hip and Ridge

6.4.1.3 **ProEdge®:**

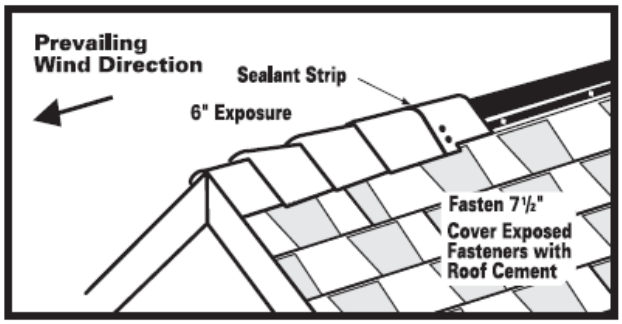

Figure 21: Isometric View, ProEdge

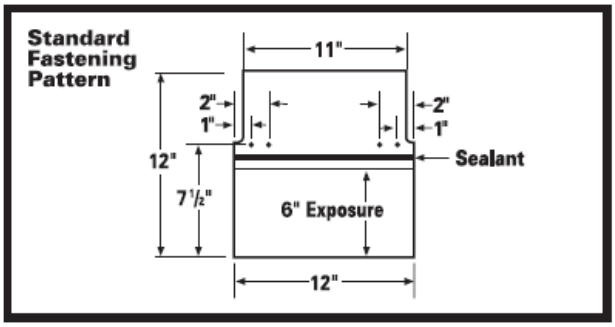

Figure 22: Plan View, ProEdge

7. BUILDING PERMIT REQUIREMENTS:

As required by the Building Official or Authority Having Jurisdiction to properly evaluate the installation of this product.

8. MANUFACTURING PLANTS:

Contact the named QA entity for manufacturing facilities covered by **F.A.C. Rule 61G20-3** QA requirements. Refer to Section 4 herein for products and production locations having met codified material standards.

9. QUALITY ASSURANCE ENTITY:

PRI Construction Materials Technologies, LLC– QUA9110 ; (813) 621-5777; bwilson@pricmt.com

- END OF EVALUATION REPORT -

Construction Applied Engineering

®Dec, e9shv 8, l o®n9

mX K qb X cX 8 K z

oX q mX K q b K G 9 XKq v X q G q qK q X X B
&' @zØ®;' [K h' ≤ T@Ø=sb * + ®;' [K T@Ø=s®Θ ' Ø h' ≤ T@Ø=

®Dec, e9shv 8nhb®B

- Tb 4 I HuB t I Hu,
gBul S;] @Ø' D @zØ= b] z* , ZG 4 z@Ø[J' [z gBgB S;] @Ø' D @zØ= b] z* I ZG 4 z@Ø[J
gBuc ' [z gBu. @[Z @' Z@[' ; D @zØ= b] z*

®Dec, e9shv b, wbh8®B

" GØ' [' ; ° Ø Ø Z] z* Z Θ- Ø* ZG' + ' @ + z* ° Θ[PH* U] [z = ° Z Ø z ° ≤** z Z] M' Θ ° ØZ z M ' [' ° ° * + M]] j &' @zØ®;' [K b * + ®;' [Ks®Θ ' Ø h' ≤ J ° @Ø= G* [j' ° Z [* z Z]]] z] Θ+ * Z ;
j Θ+ Ø= @G ' @Ø ° j' ° Z [* Θr

w®p®w®v n® w®bh w98B

1: @[Z @Z' K 9 * ≤] GZPB, I AuP - T") b uu. , J) ' Z @Ø; ≤Θ ≤* GZØ ° &' @zØ®;' [K T@Ø=

0: 9' + Z' UGh' M] Θ Z] @Ø ° s@[Ur 9 * ≤] GZuBcAPHA, duPAc - T") 4 PPBJ" Θ [° * Θ* h] ' z " * ° Zscdu, I " GØKM I rc ØUG @* &' @zØ®;' [Kh' ≤ T@Ø= Ø ° Z ;;* z] [g/ o X HS@Ø]] z ° Z z ° ° ≤' U* ' Zu, ØUG* °] [U* [Z Θ @G' BrBAP ØUG ° G [KM Brggg ØUG G* ' z zO+ * Z ΘM grc ØUG;] [= = ' ; ' [O* z ° @Ø= [' Ø

5: 9' + Z' UGh' M] Θ Z] @Ø ° s@[Ur 9 * ≤] GZ6 b HuBPoH. - T") 4 PPBJ" Θ [° * Θ* h] ' z " * ° Zscdu, I " GØKM Arc ØUG @* &' @zØ®;' [Kh' ≤ T@Ø= Ø ° Z ;;* z] [g/ o &* + HS@Ø]] z ° Z z ° ° ≤' U* ' Zu, ØUG* °] [U* [Z Θ @G' 5 + M' Θuu =' =* uHPob ØUG;] [= = ' ; ' [O* z @] j Ø= [' Ø

. : 9' + Z' UGh' M] Θ Z] @Ø ° s@[Ur 9 * ≤] GZ6 b HuBgBH. - T") 4 PPBJ" Θ [° * Θ* h] ' z " * ° Zscdu, I " GØKM Arc ØUG @* &' @zØ®;' [Kh' ≤ T@Ø= Ø ° Z ;;* z] [g/ o &* + HS@Ø]] z ° Z z ° ° ≤' U* ' Zu, ØUG* °] [U* [Z Θ @G' , z U] + +] [[' Ø

7: 9' + Z' UGh' M] Θ Z] @Ø ° s@[Ur 9 * ≤] GZguoAHBI HuB b J - T") 4 PPBJ" Θ [° * Θ* h] ' z " * ° Zscdu, I " GØKM . rgc ØUG @* &' @zØ®;' [Kh' ≤ T@Ø= Ø ° Z ;;* z] [g/ o f] =HS@Θh' ØUG]] z ° Z z ° ° ≤' U* ' Zu, ØUG* °] [U* [Z Θ @G' [. z @Ø= ° G [KM] [' @;BruuP ØUG ° G [KM Brg, B ØUG G* ' z zO+ * Z ΘM grPI c ØUG;] [=

2: 9' + Z' UGh' M] Θ Z] @Ø ° s@[Ur 9 * ≤] GZguoAHBI HuB 4 J - T") 4 PPBJ" Θ [° * Θ* h] ' z " * ° Zscdu, I " GØKM . rgc ØUG @* &' @zØ®;' [Kh' ≤ T@Ø= Ø ° Z ;;* z] [g/ o f] =HS@Θh' ØUG]] z ° Z z ° ° ≤' U* ' Zu, ØUG* °] [U* [Z Θ @G' BrBAg ØUG ° G [KM Brggg ØUG G* ' z zO+ * Z ΘM grc ØUG;] [= = ' ; ' [O* z ° @Ø= [' Ø

3: 9' + Z' UGh' M] Θ Z] @Ø ° s@[Ur 9 * ≤] GZgPouHB. HB, - T") 4 PPBJ" Θ [° * Θ* h] ' z " * ° Zscdu, I " GØKM . rgc ØUG @* &' @zØ®;' [Kh' ≤ T@Ø= Ø ° Z ;;* z] [g/ o f] =HS@Θh' ØUG]] z ° Z z ° ° ≤' U* ' Zu, ØUG* °] [U* [Z Θ @G' BrBAg ØUG ° G [KM Brggg ØUG G* ' z zO+ * Z ΘM g ØUG;] [= = ' ; ' [O* z ° @Ø= [' Ø

6: 9' + Z' UGh' M] Θ Z] @Ø ° s@[Ur 9 * ≤] GZguoAHBI HuB SJ - T") 4 PPBJ" Θ [° * Θ* h] ' z " * ° Zscdu, I " GØKM . rgc ØUG @* &' @zØ®;' [Kh' ≤ T@Ø= Ø ° Z ;;* z] [g/ o T ≤ Θ U* H®Ø* HS Θ]] z ° Z z ° ° ≤' U* ' Zu, ØUG* °] [U* [Z Θ @G' BrBAg ØUG ° G [KM Brggg ØUG G* ' z zO+ * Z ΘM grc ØUG;] [= = ' ; ' [O* z ° @Ø= [' Ø

4: 9' + Z' UGh' M] Θ Z] @Ø ° s@[Ur 9 * ≤] GZuuuoAducco - T") 4 PPBJ" Θ [° * Θ* h] ' z " * ° Zcdu, I " GØKM , rgc ØUG @* &' @zØ®;' [Kh' ≤ T@Ø= Ø ° Z ;;* z] [gB =' =* + * Z ; ° Z z ° ° ≤' U* z ' Zu, ' [z go ØUG* °] [U* [Z Θ @G 4" t S K[@* z ≤ Ø j' ° Z [* Θ

1Fr 9' + Z' UGh' M] Θ Z] @Ø ° s@[Ur 9 * ≤] GZuuuoAduccoD - T") 4 PPBJ" Θ [° * Θ* h] ' z " * ° Zcdu, I " GØKM . rgc ØUG @* &' @zØ®;' [Kh' ≤ T@Ø= Ø ° Z ;;* z] [gB =' =* + * Z ; ° Z z ° ° ≤' U* z ' Zu, ' [z go ØUG* °] [U* [Z Θ @G 4" t S K[@* z ≤ Ø j' ° Z [* Θ

11: 9' + Z' UGh' M] Θ Z] @Ø ° s@[Ur 9 * ≤] GZuuuoAducco- - T") 4 PPBJ" Θ [° * Θ* h] ' z " * ° Zcdu, I " GØKM ug ØUG @* &' @zØ®;' [Kh' ≤ T@Ø= Ø ° Z ;;* z] [gB =' =* + * Z ; ° Z z ° ° ≤' U* z ' Zu, ' [z go ØUG* °] [U* [Z Θ @G 4" t S K[@* z ≤ Ø j' ° Z [* Θ

10: 9' + Z' UGh' M] Θ Z] @Ø ° s@[Ur 9 * ≤] GZ6 b HuBPcH. - T") 4 PPBJ" Θ [° * Θ* h] ' z " * ° Z cdu, I " GØKM Arc ØUG &' @zØ®;' [Kh' ≤ T@Ø= Ø ° Z ;;* z] [gB=') * Z ; TZ z T ≤' U* z u,
@[UG* °] [b * [Z Θ X @G 5] r. / uHudbl ;] [= / BrPI cI G* ' z zO+ * Z Θ @ØM' z ' j* Θ G* ' z ° UØ °

9®89 w®8, c98B

9X/ q 1e : wq	Z9 X q q c XK 9q z Z n Zz X				8 qq p X z		
9' + Z' UG ° 9 * j* Θ[U* " * ° Z9 * ≤] GZ 5 + M' Θ	uuuoA ducco		uuuoA duccoD		uuuoA ducco-		@b HuBPcH.
T@Ø= " GØKq * ° ° @rJ	BrPugc						
T@Ø= X @ZG @rJ	, rgc		. rgc		ug		Arc
S Θ+ * " ≤*	gB =' r ° Z *; ° Z z °	gB =' r ° Z *; ° Z z °	gB =' r ° Z *; ° Z z °	gB =' r ° Z *; ° Z z °	gB =' r ° Z *; ° Z z °	gB =' r ° Z *; ° Z z °	gB =' r ° Z *; ° Z z °
S Θ+ * T ≤' U @= @rJ	u,	go	u,	go	u,	go	u,
S' ° Z [* Θ' ≤*	4" t S BruBB K[@* z ° G [K zO+ * Z Θ BrgcB &f urc ;] [=	4" t S BruBB K[@* z ° G [K zO+ * Z Θ BrgcB &f urc ;] [=	4" t S BruBB K[@* z ° G [K zO+ * Z Θ BrPuP &f urc ;] [=	4" t S BruBB K[@* z ° G [K zO+ * Z Θ BrPuP &f urc ;] [=	4" t S BruBB K[@* z ° G [K zO+ * Z Θ BrgcB &f urc ;] [=	4" t S BruBB K[@* z ° G [K zO+ * Z Θ BrgcB &f urc ;] [=	5] r. / uH udbl ;] [= / BrPI cI G* ' z zO+ * Z Θ @ØM' z ' j* Θ G* ' z ° UØ
S' ° Z [@=) * ZG] z	S' U* [' Ø	S' U* [' Ø	D;@z [' Ø	D;@z [' Ø	S' U* [' Ø	S' U* [' Ø	D;@z [' Ø
k ;ZØ ' Z h] ' z ≤° jJ	Pul	ul P	, o	cB	ucu	. u	u, Arg
f * ° Θ[h] ' z ≤° jJ	**1F7:3**	**73:3**	**01:5**	**12:3**	**7F:5**	**03:F**	**72:.**
4 jj* UZO* " @ØM Z Θ - Θ' ° >jZJ	Brcc,	Br. PP	Brl I .	uru, I	uruAo	url Ag	BrAul

S' ° Z [* @h] ' z s' ° Z ° Z z ;Mj' ° Z [* @	76:3	. 6:1	12:2	14:.	2F:1	. 6:.	71:3

ur - ;;] ' M* f * ° @[h] ' z Ö ZG* k ;Z@ ' Z h] ' z zO@* z M ' S' UZ[@] j ° ' j * Z] j Pr
gr " G' ° @Q= ≤@z UZU] + ≤;Ö° @G - T") b uu. , sw w q }}f (' & o 0 dE 0 w G

9X/ q 1I : wq Z9 X q q c XK 9q z Z n Zz X & Kp X z							
9 ' + Z UG° 9 * j * @ [U' z " * ° Z9 * ≤] @Z 5 + M' @	uBc APH A, duPAc	6b HuBPoH . .	6b HuBgBH . .	guoAHBI H uB b J	guoAHBI H uB 4 J	gPouHB. HB,	guoAHBI H uB SJ
T@Q= " @DK[* ° ° @rJ	BrPugc						
T@Q= X @ZG @rJ	I rc	Arc	Arc	. rgc	. rgc	. rgc	. rgc
S@+ * " ≤*	g/ o]] z & * + HS@a	g/ o]] z & * + HS@a	g/ o]] z & * + HS@a	g/ o]] z f Sh	g/ o]] z f Sh	g/ o]] z f Sh	g/ o]] z T®S
S@+ * T≤' UQ= @rJ	u,	u,	u,	u,	u,	u,	u,
S' ° Z [* @' ≤*	. z ° @Q= [' @s BrBAPI / Brgggl / grcI	uHPobI 5] r uu =' r 9]] j @= [' @	, z U] + +] [' @	. z @Q= ° G [K M] [' @s BruuPI / Brg, BI / grPI cI	. z ° @Q= [' @s BrBAgI / Brgggl / grcI	, z ° @Q= [' @s BrBAgI / Brgggl / gI	. z ° @Q= [' @s BrBAgI / Brgggl / grcI
S' ° Z [* @h* [=ZG @rJ	grc	urI c	g	grPI c	grc	g	grc
S' ° Z [@=) * ZG] z	D;@z [' @	D;@z [' @	S' U' [' @	S' U' [' @	S' U' [' @	S' U' [' @	S' U' [' @
k ;Z@ ' Z h] ' z ≤° j J	Ag	uo, r,	uAA	gA,	gcP	u, c	u, .
f * ° @[h] ' z ≤° j Js ° * * " ' M*	**5F:3**	o. rA	, , rP	**46:3**	**6. :5**	**77:F**	**72:F**
4 jj * UZO * " @DM Z @ - @' ° > j Z J	Br, Ao	BrAuI	BrAuI	BrI I .	BrI I .	BrI I .	BrI I .
S' Z [@h] ' z s' Z ° Z z ;Mj' ° Z [* @	gurP	oor.	, Br.	I , rI	, cr,	ogr.	oPr,
5 f T - zV ° Z z @Gz @ ' ; z * ° @[;] ' z ;Mj' ° Z [* @ s v ° * * " ' M*	curo	oPrc	PArg	uogro	, I rP	oAro	oPrc
5 * Z S' ° Z [* @® * [* Z @ Z @] [@rJ s g	gru. .	uroP.	urPI c	urI cB	ur. I c	urPI c	ur. I c
X]] z T≤* UQ @D 7 @ @z s q	Brog	Brog	Brog	BrcB	BrcB	BrcB	Brog
5' @TG [K f @+ * Z @ @rJ s 7	BrBAP	BrugB	BruuP	BruuP	BrBAg	BrBAg	BrBAg
S' Z [@X @Z @ ' , ' @[X ' , ≤* @5 f T gBu. ;M @r] j ≤* [* Z @ Z @] [J s X	uorI	u. rA	uI r.	cBrA	ggro	ggro	uorc
S' ° Z [* @h] ' z ' ° Z ° Z z * U' * z ° 5 f T @z @ ' ; X : * ° @] J	[ ]	* °	* °	[ ]	[ ]	[ ]	* °
- zV ° Z z f * ° @[h] ' z ≤° j Js ° * * Z M* j]] Z] Z o	[ ] ' zV ° Z + * [Z	**. 3:7**	**. 0:6**	[ ] ' zV ° Z + * [Z	[ ] ' zV ° Z + * [Z	[ ] ' zV ° Z + * [Z	**72:F**

aThe assigned specific gravity of Hem Fir in NDS-2018 is 0.43, however 0.42 is used in this analysis in order to match the specific gravity of SPF lumber, which is more poular.

ur - ;;] ' M* f * ° @[h] ' z Ö ZG* k ;Z@ ' Z h] ' z zO@* z M ' S' UZ[@] j ° ' j * Z] j Pr
gr " G' ° @Q= ≤@z UZU] + ≤;Ö° @G - T") b uu. , sw w q }}f (' & o 0 dE 0 w G
Pr " G' 5 f T j' ° Z [* @' zV ° Z z @Gz @ ' ; z * ° @[' ; * ° sX :s' @ U ;U ;' Z z ° @= ZG* j] ;;] @= * > ' Z @] [° E
5 f T 4 > r ugrgHP j] @' +]] ZG ° G [K [' @' E X : N b z uP. B 7 grc f ®s b z N ur,
5 f T 4 > r4 > r ugrgHt j] @z * j] @+ * z ° G [K [' @' E X : N b z u. BB 7 g f ®s b z N ur,
or - zV ° Z z f * ° @[h] ' z s G' [Z G' j' ° Z [* @] ' z j @+ Z G* Z ° Z @] = * U' * z ° Z G* 5 f T U ;U ;' Z z @Gz @ ' ; U ≤' UZ X :J N X :d jj * UZO * " @DM Z @ - @'

p 9X/ q 0e 0v q Kq z XK X q GX G X qK / z q / X X qX qXG ZX q q C q q/ Kq z XK qXG ZX q q / q q G X : I K z C q X X/ q Kq z XK Z X mX K qb X K X K K XG z X q Kq q qK:

9X/ q 0e Ce X/ q k q z c XK I X qK n X pX q q c XKO®9Tp F:1FF qK X F:07F mk 1:7 z C12Vh n 0FzX t q X 8 K CZX q q q qK @XGq X N

b G' U K j] @@ ° ;Z ° @= , rgc @UG ≤;' [K ' ; * ° j @+ 9 * ≤] @Z5 + M' @ uuuoAducco ' [z uuuoAducco - r
f * ° @[;] ' z N ;Z@ ' Z j' @ @ ;] ' z dS8 T N HPuI ≤° j dP N HuBcrI ≤° j
4 jj * UZO * Z @DM Z @ N ≤;' [K @Z G* ≤] ° * z Z] * ' Z G* @/ ° Z z ° ≤' UQ= JduooJ N , rgc HurgcJ / u, Jduoo N Brcc, ° > rj Z
S' ° Z [* @] ' z N z * ° @[;] ' z / Z @DM Z @ ' @' N HuBcr, I / Brcc, N Ht. rI ≤] [z °
b ' ;U ;' Z z ' ;;] ' M* z * ° @[;] ' z N j' ° Z [* @] ' z Z ° Z z U] [z @] [zO@* z M ' @' Z @DM Z @ j] @Z G* U] [z @] [Z] M' U ;U ;' Z z

&' @zÖ®;' [K X @Z G @UG * ° J	" * ° Z z b] [Z @] [s k Z @ ' Z ≤° j	T Z z T≤' UQ= @UG * °	4 jj * UZO * - @' " @DM Z @ ° > rj Z	- ;;] ' M* f * ° @[h] ' z @TS	S' ° Z [* @h] ' z ;M	
crgc		u,	Broooo	HuPgrB.	Ht. rI B	
, rgc	**F513**	**12**	**F:7772**	**PI F7:23**	**F76:3F**	
I rgc		u,	Br, , , I	HI . rB,	Ht. rI B	
I rc		u,	Br, Aoo	HI orcP	Ht. rI B	
.		u,	BrI cBB	HI . rgI	Ht. rI B	
6:07		u,	BrI I I .	HI cro.	Ht. rI B	
Argc		u,	Br. . . A	HI , rBo	Ht. rI B	
Arc		u,	BrAu, I	HI orBo	Ht. rI B	
ug	**PI 71**	**12**	**1:14. .**	**F7F:55**	**F2F:10**	

9X/ q 0l Ce X/ q k q z c XK l X qK n X pX q q c XKO®9Tp F:1FF qK X F:07F mk 1:7 zC0. V h n 0FzX t q X 8 K CZX q q q qK @ZXGq X N

b G* UKj] Θ@° ;Z °Ø= , rgc ØUG≤;' [K ' ; * ° j@+ 9 * ≤] @Z5 + M' ØuuuoAducco ' [z uuuoAducco- r
f * ° @[;] ' z N ;Z@ ' Z j' Ø @ ;] ' zcS8 T Nul P≤° jdP N cl r, l ≤° j
4jj* UZO* Z@M Z Θ N ≤;' [K @ZG* ≤] ° * z Z, * ' ZG* @/ ° Z z °≤' UØ=JuuooJ N , rgcHurgcJ/ goJuuoo N Br. PPP ° >rjZ
S' ° Z [* @] ' z N z* ° @[;] ' z / Z@M Z Θ ' @' N cl r, l / Br. PPP N o. rB, ≤] [z °
b ' ;U ;' Z z ' ;;] ' M* z* ° @[;] ' z N j' ° Z [* @] ' z Z ° Z z U, [z@Ø[zO@* z M ' @' Z@M Z Θ j] @ZG* U, [z@Ø[Z, M' U ;U ;' Z z

&' @zØ®;' [K X @ZG ØUG* ° J	" * ° Z z b] [z@Ø[s k ;Z@ ' Z ≤° j	T Z z T ≤' UØ= ØUG °	4jj* UZO* - @' " @M Z Θ ° >rjZ	- ;;] ' M* f * ° @[h] ' z ®TS	S' ° Z [* @h] ' z ;M
crgc		go	Br, , , l	HlgrB.	Hb. rB,
, rgc	**P135**	**0.**	**F:6555**	**F73:23**	**P. 6:F2**
l rgc		go	urBBBB	Hb. rB,	Hb. rB,
l rc		go	urBoul	Hb, ruP	Hb. rB,
.		go	urugcB	Hbgrl g	Hb. rB,
6:07		go	uru, , l	HburuA	Hb. rB,
Argc		go	urPPPP	HP, rBo	Hb. rB,
Arc		go	urPl cB	HPorAc	Hb. rB,
ug	**P61**	**0.**	**1:3413**	**F03:FF**	**P. 6:56**

9X/ q 0nCe X/ q k q z c XK l X qK n X pX q q c XKO®9Tp F:1FF qK X F:515 mk 1:7 zC12V h n 0FzX t q X 8 K CZX q q G GqXqK@ K X N

b G* UKj] Θ@° ;Z °Ø= . rgc ØUG≤;' [K ' ; * ° j@+ 9 * ≤] @Z5 + M' ØuuuoAduccoDr
f * ° @[;] ' z N ;Z@ ' Z j' Ø @ ;] ' zcS8 T N H, o≤° jdP N hgurPP ≤° j
4jj* UZO* Z@M Z Θ N ≤;' [K @ZG* ≤] ° * z Z, * ' ZG* @/ ° Z z °≤' UØ=JuuooJ N . rgcHurgcJ/ u, Juuoo N Brl l . ° >rjZ
S' ° Z [* @] ' z N z* ° @[;] ' z / Z@M Z Θ ' @' N hgurPP / Brl l . N Hu, rcA ≤] [z °
b ' ;U ;' Z z ' ;;] ' M* z* ° @[;] ' z N j' ° Z [* @] ' z Z ° Z z U, [z@Ø[zO@* z M ' @' Z@M Z Θ j] @ZG* U, [z@Ø[Z, M' U ;U ;' Z z

&' @zØ®;' [K X @ZG ØUG* ° J	" * ° Z z b] [z@Ø[s k ;Z@ ' Z ≤° j	T Z z T ≤' UØ= ØUG °	4jj* UZO* - @' " @M Z Θ ° >rjZ	- ;;] ' M* f * ° @[h] ' z ®TS	S' ° Z [* @h] ' z ;M
crgc		u,	Broooo	HPl rPP	Hu, rcA
, rgc		u,	Brccc,	HgAr. l	Hu, rcA
l rgc		u,	Br, , , l	Hgor. A	Hu, rcA
l rc		u,	Br, Aoo	HgPr. A	Hu, rcA
.		u,	Brl cBB	Hggrug	Hu, rcA
6:07	**P2.**	**12**	**F:3336**	**F01:55**	**Pl2:74**
Argc		u,	Br. . . A	Hu. r, l	Hu, rcA
Arc		u,	BrAu, l	Hu. ruB	Hu, rcA
ug		u,	uruAoo	HuPr. A	Hu, rcA

9X/ q 0kCe X/ q k q z c XK l X qK n X pX q q c XKO®9Tp F:1FF qK X F:515 mk 1:7 zC0. V h n 0FzX t q X 8 K CZX q q G GqXqK@ K X N

b G* UKj] Θ@° ;Z °Ø= . rgc ØUG≤;' [K ' ; * ° j@+ 9 * ≤] @Z5 + M' ØuuuoAduccoDr
f * ° @[;] ' z N ;Z@ ' Z j' Ø @ ;] ' zcS8 T N HcB≤° jdP N Hu, r, l ≤° j
4jj* UZO* Z@M Z Θ N ≤;' [K @ZG* ≤] ° * z Z, * ' ZG* @/ ° Z z °≤' UØ=JuuooJ N . rgcHurgcJ/ goJuuoo N uru, , l ° >rjZ
S' ° Z [* @] ' z N z* ° @[;] ' z / Z@M Z Θ ' @' N Hu, r, l / uru, , l N HuAroo ≤] [z °
b ' ;U ;' Z z ' ;;] ' M* z* ° @[;] ' z N j' ° Z [* @] ' z Z ° Z z U, [z@Ø[zO@* z M ' @' Z@M Z Θ j] @ZG* U, [z@Ø[Z, M' U ;U ;' Z z

&' @zØ®;' [K X @ZG ØUG* ° J	" * ° Z z b] [z@Ø[s k ;Z@ ' Z ≤° j	T Z z T ≤' UØ= ØUG °	4jj* UZO* - @' " @M Z Θ ° >rjZ	- ;;] ' M* f * ° @[h] ' z ®TS	S' ° Z [* @h] ' z ;M
crgc		go	Br, , , l	HgArul	HuAroo
, rgc		go	Br. PPP	HgPrPP	HuAroo
l rgc		go	urBBBB	HuAroo	HuAroo
l rc		go	urBoul	Hu. r, l	HuAroo
.		go	urugcB	Hul rg.	HuAroo
6:07	**P7F**	**0.**	**1:1223**	**Pl2:23**	**Pl4:. .**
Argc		go	urPPPP	Huorc.	HuAroo
Arc		go	urPl cB	Huoruo	HuAroo
ug		go	url Aul	HuBr. c	HuAroo

b ;Ø[ZEF' + * ° &' Ø¤Ø D Ø¤Ø= ®Ø z U Z' s¢[U-
b - 4 4 [=Ø * * ØØ= 9 * ≤] ØZ5] rEgBBuHuBrgru
f * U' + M' ØusgBgB
®' =* o] j oo

9X/ q 0®Ce X/ q k q z c XK l X q K n X p X q q c XKOv : 6 " 1P7R6V z " F:537Vmk / / q K XZq q X K G q C0FzX: t q X 8 K CZX q q G GqXqKØ K X N

b G* UKj] ØØ° ;Z °Ø= Arc ØUG≤;' [K ' ; * ° jØ+ 9 * ≤] ØZ5 + M' ØbHuBPcH. .
f * ° Ø[;] ' z N ;ZØ ' Z j' Ø Ø ;] ' zdS8 T N Hu, Arg≤° jdP N Ht, ro ≤° j
4jj* UZO* ZØM Z Ø N ≤;' [K ØZG* ≤] ° * z Z] * ' ZG* Ø/ ° Z z ° ≤' UØ=JduooJ N ArcHurgcJ / u, Jduoo N BrAu, l °>rjZ
S' ° Z [* Ø;] ' z Nz* ° Ø[;] ' z / ZØM Z Ø ' Ø' N Ht, ro / BrAu, l N Hturl ≤] [z°
b ' ;U ;' Z z ' ;;] ' M* z* ° Ø[;] ' z Nj' ° Z [* Ø;] ' z Z ° Z z U] [zØØ[zO Ø* z M ' Ø' ZØM Z Ø j] ØZG* U] [zØØ[Z] M' U ;U ;' Z z

&' Ø¤Ø®;' [K X Ø¤ZG ØUG* ° J	" * ° Z z b] [zØØ[s k ;ZØ ' Z ≤° j.	T Z z T ≤' UØ= ØUG* ° .	4jj* UZO* - Ø' " ØØM Z Ø °>rjZ.	- ;;] ' M* f * ° Ø[h] ' z ®TS.	S' ° Z [* Øh] ' z ;M' J
crgc		u,	Broooo	Hu, rPP	Hturl B
, rgc		u,	Brccc,	HAPrB,	Hturl B
l rgc		u,	Br, , , l	Hl l rcc	Hturl B
l rc		u,	Br, Aoo	Hl oroc	Hturl B
.		u,	Brl cBB	H, . rAP	Hturl B
. rgc		u,	Brl l l .	H, , rol	Hturl B
Argc		u,	Br. . . A	Ht. ru,	Hturl B
4:7	**P124:0**	**12**	**F:4123**	**P72:. F**	**P71:3F**
ug		u,	uruAoo	HoPrg.	Hturl B

T Z z T ≤' UØ= ØUG* ° .	4jj* UZO* - Ø' " ØØM Z Ø °>rjZ.	- ;;] ' M* f * ° Ø[h] ' z ®TS.
go	Br, , , l	Hl l rcc
go	Br. PPP	H, grBo
go	urBBBB	Hturl B
go	urBoul	HoAr, P
go	urugcB	HocrA,
go	uru, , l	HoorPu
go	urPPPP	HP. rl .
go	urPl cB	HPl r, B
go	url Aul	Hg. r. ,

9X/ q 0pCe X/ q k q z c XK l X q K n X p X q q c XKOC6K K z X 0:7VcC8bp 8 K CZX q q G GqXqKØ K X N

b G* UKj] ØØ° ;Z °Ø= I rc ØUG≤;' [K ' ; * ° jØ+ 9 * ≤] ØZ5 + M' ØuBcAPHA, duPAcr " G' j] ;;] Ø= * ' + ≤;* Ø, z* +] [° ZØ Z ZG* M ° ØØ' [' ; ° ØE
f * ° Ø[;] ' z N ;ZØ ' Z j' Ø Ø ;] ' zdS8 T N HAg≤° jdP N HPBrl ≤° j
4jj* UZO* ZØM Z Ø N ≤;' [K ØZG* ≤] ° * z Z] * ' ZG* Ø/ ° Z z ° ≤' UØ=JduooJ N I rcHurgcJ / u, Jduoo N Br, Ao °>rjZ
S' ° Z [* Ø;] ' z Nz* ° Ø[;] ' z / ZØM Z Ø ' Ø' N HPBrl / Br, Ao N HgurP ≤] [z°s GØØG Ø, M' ° * z j] ØZG* U ;U ;' ZØ[
- zV ° Z z j' ° Z [* Ø ØZG Ø ' ; ;] ' z jØ+ 5 f TsX : N corc ;Mj' ° Z [* Ø GØØG Ø ;' Ø* ØZG [ZG* Z ° Z z j' ° Z [* Ø;] ' z
b ' ;U ;' Z z ' ;;] ' M* z* ° Ø[;] ' z Nj' ° Z [* Ø;] ' z Z ° Z z U] [zØØ[zO Ø* z M ' Ø' ZØM Z Ø j] ØZG* U] [zØØ[Z] M' U ;U ;' Z z

&' Ø¤Ø®;' [K X Ø¤ZG ØUG* ° J	" * ° Z z b] [zØØ[s k ;ZØ ' Z ≤° j.	T Z z T ≤' UØ= ØUG* ° J	4jj* UZO* - Ø' " ØØM Z Ø °>rjZ.	- ;;] ' M* f * ° Ø[h] ' z ®TS.	S' ° Z [* Øh] ' z ;M' J
crgc		u,	Broooo	Hol rAg	HgurPB
, rgc		u,	Brccc,	HP. rPP	HgurPB
l rgc		u,	Br, , , l	HPurAo	HgurPB
3:7	**P40**	**12**	**F:24. .**	**P5F:23**	**P01:5F**
.		u,	Brl cBB	Hg. roB	HgurPB
. rgc		u,	Brl l l .	Hgl rP.	HgurPB
Argc		u,	Br. . . A	HgPrA,	HgurPB
Arc		u,	BrAu, l	HgPrgP	HgurPB
ug		u,	uruAoo	Hul r. P	HgurPB

T Z z T ≤' UØ= ØUG* ° J	4jj* UZO* - Ø' " ØØM Z Ø °>rjZ.	- ;;] ' M* f * ° Ø[h] ' z ®TS.
go	Br, , , l	HPurAo
go	Br. PPP	Hgcrc,
go	urBBBB	HgurPB
go	urBoul	HgBroo
go	urugcB	Hu. rAP
go	uru, , l	Hu. rgc
go	urPPPP	HucrAl
go	urPl cB	HucroA
go	url Aul	Huur. A

9X/ q 0gCe X/ q k q z c XK l X q K n X p X q q c XKOv : 11zX: w Z z X 1P5R VcC8bp 8 K CZX q q G GqXqKØ K X N

b G* UKj] ØØ° ;Z °Ø= Arc ØUG≤;' [K ' ; * ° jØ+ 9 * ≤] ØZ5 + M' ØbHuBPoH. . r
f * ° Ø[;] ' z N ;ZØ ' Z j' Ø Ø ;] ' zdS8 T N Huo, r, ≤° jdP N Ho. rA ≤° j
4jj* UZO* ZØM Z Ø N ≤;' [K ØZG* ≤] ° * z Z] * ' ZG* Ø/ ° Z z ° ≤' UØ=JduooJ N . rgcHurgcJ / u, Jduoo N BrAu, l °>rjZ
S' ° Z [* Ø;] ' z Nz* ° Ø[;] ' z / ZØM Z Ø ' Ø' N Ho. rA / rAu, l N HoorlA ≤] [z°
- zV ° Z z j' ° Z [* Ø ØZG Ø ' ; ;] ' z jØ+ 5 f TsX : N oPrco ;Mj' ° Z [* Ø GØØG Ø ;* ° ° ZG [ZG* Z ° Z z j' ° Z [* Ø;] ' zs' [z Ø, M' ° * z Ø z* Z Ø Ø' ZØ[ ] j
ZG* ' ;;] ' M* z* ° Ø[;] ' z° Ø ZG* Z M* M' ;] r
b ' ;U ;' Z z ' ;;] ' M* z* ° Ø[;] ' z N X : zO Ø* z M * jj* UZO* ZØM Z Ø ' Ø'

&' Ø¤Ø®;' [K X Ø¤ZG ØUG* ° J	" * ° Z z b] [zØØ[s k ;ZØ ' Z ≤° j.	T Z z T ≤' UØ= ØUG* ° .	4jj* UZO* - Ø' " ØØM Z Ø °>rjZ.	- ;;] ' M* f * ° Ø[h] ' z ®TS.	S' ° Z [* Øh] ' z ;M' .
crgc		u,	Broooo	HAl rAl	HoPrco
, rgc		u,	Brccc,	Hl . rP.	HoPrco
l rgc		u,	Br, , , l	H, crPu	HoPrco
l rc		u,	Br, Aoo	H, grl B	HoPrco
.		u,	Brl cBB	Ht. rB,	HoPrco
. rgc		u,	Brl l l .	HtcrA.	HoPrco
Argc		u,	Br. . . A	Ho. rAA	HoPrco
4:7	**P1. 2:2**	**12**	**F:4123**	**Hol rcB**	**P. 5:7.**
ug		u,	uruAoo	HP, roc	HoPrco

T Z z T ≤' UØ= ØUG* ° .	4jj* UZO* - Ø' " ØØM Z Ø °>rjZ.	- ;;] ' M* f * ° Ø[h] ' z ®TS.
go	Br, , , l	H, crPu
go	Br. PPP	Htgrgc
go	urBBBB	HoPrco
go	urBoul	Hour. B
go	urugcB	HP. rl B
go	uru, , l	HPl rPg
go	urPPPP	HPgr, ,
go	urPl cB	HPur, l
go	url Aul	HgorPB

9X/ q 0mCe X/ q k q z c XK l X qK n X pX q q c XKCv : 11zX: w Z z X 1PlR.VcC8bp 8 K CZX q q G GqXqKΘ K X N

" G* z* ° Θ[;] ' z Θ ZΘ U ° * Θ ;Θ ΘΖ z M M ZΘZ * ZΘ ° ;Z] j Θ ≤] ΘΖΘ b HuBPoH . ' [z - zV ° Ζ z ΘΖΘ ' ; ;] ' z jΘ + 5 f TsX :
X :N X ur, ®s G* Θ X Nu. rA ;MΘ ' [z ® N urgc HBrPugc N BrAPl c
TΘΘ= z* ° Θ[;] ' z Θ ZΘ U ° * Θ * > ' ; Ζ ZΘ* 5 f T ' zV ° Ζ z j ' ° Ζ [* Θ ΘΖΘ ' ; z* ° Θ[;] ' z g. ro ;MΘ ' Ζ [* ΘΖΘ z M j ' ° Ζ [* ΘΖΘM Z Θ ' Θ ' r

&' ΘΖΘ®;' [K X ΘΖG ΘUG* ° J	" * ° Ζ z b] [z ΘΘ[s k ;ΖΘ ' Ζ ≤ ° j.	TΖ z T ≤' UΘ= ΘUG* ° .	4 j j * UΖΘ* - Θ' " ΘΘM Z Θ ° > rj Ζ.	- ;;] ' M* f * ° Θ[h] ' z ®TS.	- zV ° Ζ z S' ° Ζ [* Θh] ' z ;M.
crgc		u,	Broooo	H, Pr. A	Hg. ro
, rgc		u,	Brccc,	Hcuruu	Hg. ro
l rgc		u,	Br, , , l	Hogr, B	Hg. ro
l rc		u,	Br, Aoo	HoBr. A	Hg. ro
.	D b ' ;U ;' ΖΘ[	u,	Brl cBB	HPl r. ,	Hg. ro
. rgc		u,	Brl l l .	HP, rcu	Hg. ro
Argc		u,	Br. . . A	HPurAc	Hg. ro
4:7		**12**	**F:4123**	**F5F:46**	**F06:.**
ug		u,	uruAoo	HgPrl l	Hg. ro

TΖ z T ≤' UΘ= ΘUG* ° .	4 j j * UΖΘ* - Θ' " ΘΘM Z Θ ° > rj Ζ.	- ;;] ' M* f * ° Θ[h] ' z ®TS.
go	Br, , , l	Hogr, B
go	Br. PPP	HPorB.
go	urBBBB	Hg. roB
go	urBoul	Hgl rg,
go	urugcB	Hgcrgo
go	uru, , l	Hgorl Po
go	urPPPP	HgurPB
go	urPl cB	HgBr, c
go	url Aul	Hucr. c

9X/ q 0sCe X/ q k q z c XK l X qK n X pX q q c XKC2K G X 0VcC8bp 8 K CZX q q q qKΘΖΘG q X N

b G* U-K j] ΘΘ* ° ;Ζ ° ΘΘ= Arc ΘUG ≤;' [K ' ; * ° j ΘΘ + 9 * ≤] ΘΖ5 + M' ΘΘb HuBgBH . r
f * ° Θ[;] ' z N ;ΖΘ ' Ζ j' Θ Θ ;] ' zdS8 T N HuAA≤° jdP N H, rP ≤° j
4 j j * UΖΘ* ΖΘM Z Θ N ≤;' [K ΘΖG* ≤] ° * z Ζ *' ΖG* Θ/ ° Ζ z ° ≤' UΘ= JduooJ N ArcHurgcJ / u, Jduoo N BrAu, l ° > rj Ζ
S' ° Ζ [* Θ;] ' z Nz* ° Θ[;] ' z / ΖΘM Z Θ ' Θ' N H, rPP / BrAu, l N H, Br. u ≤] [z°
- zV ° Ζ z j' ° Ζ [* Θ ΘΖΘ ' ; ;] ' z jΘ + 5 f TsX : N PArg ;MΘ ' Ζ [* ΘΘ ΘΖΘ U ° * ΘΖ° +] Θ U] [° * Θ' ΖΘ* ' [z Θ; M' ° * z j] ΘΖG* U ;U ;' ΖΘ[
b ' ;U ;' Ζ z ' ;;] ' M* z* ° Θ[;] ' z N X : zOΘ* z M * jj * UΖΘ* ΖΘM Z Θ ' Θ'

&' ΘΖΘ®;' [K X ΘΖG ΘUG* ° J	" * ° Ζ z b] [z ΘΘ[s k ;ΖΘ ' Ζ ≤ ° j.	TΖ z T ≤' UΘ= ΘUG* ° .	4 j j * UΖΘ* - Θ' " ΘΘM Z Θ ° > rj Ζ.	- ;;] ' M* f * ° Θ[h] ' z ®TS.	S' ° Ζ [* Θh] ' z ;M.
crgc		u,	Broooo	H . rgo	HPArgg
, rgc		u,	Brccc,	Hl Br, B	HPArgg
l rgc		u,	Br, , , l	Hc. r. P	HPArgg
l rc		u,	Br, Aoo	Hc, ro.	HPArgg
.		u,	Brl cBB	HcgrgA	HPArgg
. rgc		u,	Brl l l .	HcBroP	HPArgg
Argc		u,	Br. . . A	Hoorug	HPArgg
4:7	**Pl44**	**12**	**F:4123**	**P: 0:34**	**F54:00**
ug		u,	uruAoo	HPgr. o	HPArgg

TΖ z T ≤' UΘ= ΘUG* ° .	4 j j * UΖΘ* - Θ' " ΘΘM Z Θ ° > rj Ζ.	- ;;] ' M* f * ° Θ[h] ' z ®TS.
go	Br, , , l	Hc. r. P
go	Br. PPP	Hol rB,
go	urBBBB	HPArgg
go	urBoul	HPl r, c
go	urugcB	HPor. ,
go	uru, , l	HPPr, g
go	urPPPP	HgArou
go	urPl cB	Hg. rcg
go	url Aul	Hgur. A

9X/ q 0oCe X/ q k q z c XK l X qK n X pX q q c XKC6K G X 0:7VcC8bp 8 K CZX q q q qKΘΖΘG q X N

" G* z* ° Θ[;] ' z Θ ZΘ U ° * Θ ;Θ ΘΖ z M M ZΘZ * ZΘ ° ;Z] j Θ ≤] ΘΖΘ b HuBgBH . ' [z - zV ° Ζ z ΘΖΘ ' ; ;] ' z jΘ + 5 f T
TΘΘ= z* ° Θ[;] ' z Θ ZΘ U ° * Θ * > ' ; Ζ ZΘ* ' zV ° Ζ z j' ° Ζ [* Θ ΘΖΘ ' ; z* ° Θ[;] ' z PBru ;MΘ ' Ζ [* ΘΖΘ z M j ' ° Ζ [* ΘΖΘM Z Θ ' Θ' r
f * ° Θ[;] ' z N ;ΖΘ ' Ζ j' Θ Θ ;] ' zdS8 T N HuAA≤° jdP N H, rP ≤° j
4 j j * UΖΘ* ΖΘM Z Θ N ≤;' [K ΘΖG* ≤] ° * z Ζ *' ΖG* Θ/ ° Ζ z ° ≤' UΘ= JduooJ N ArcHurgcJ / u, Jduoo N BrAu, l ° > rj Ζ
S' ° Ζ [* Θ;] ' z Nz* ° Θ[;] ' z / ΖΘM Z Θ ' Θ' N H, rPP / BrAu, l N H, Br. u ≤] [z°
- zV ° Ζ z j' ° Ζ [* Θ ΘΖΘ ' ; ;] ' z jΘ + 5 f TsX : N b z X ® G* Θ b z N ur, sX N ul r. s® N grcHg BrPugcJ N
gru. l cr " G ° X : N, grP ;MΘ ' Ζ [* ΘΘ ΘΘG Θ +] Θ ΖG [ΖG* Ζ ° Ζ z j' ° Ζ [* Θ;] ' z °] ΖG* ' ;;] ' M* z* ° Θ[;] ' z jΘ + ΖG* Ζ ° ΖΘ= U [M' ° * zr
b ' ;U ;' Ζ z ' ;;] ' M* z* ° Θ[;] ' z N X : zOΘ* z M * jj * UΖΘ* ΖΘM Z Θ ' Θ'

&' ΘΖΘ®;' [K X ΘΖG ΘUG* ° J	" * ° Ζ z b] [z ΘΘ[s k ;ΖΘ ' Ζ ≤ ° j.	TΖ z T ≤' UΘ= ΘUG* ° .	4 j j * UΖΘ* - Θ' " ΘΘM Z Θ ° > rj Ζ.	- ;;] ' M* f * ° Θ[h] ' z ®TS.	S' ° Ζ [* Θh] ' z ;M.
crgc		u,	Broooo	HuP, r. u	H, Br. u
, rgc		u,	Brccc,	HuBAroc	H, Br. u
l rgc		u,	Br, , , l	HAurgu	H, Br. u
l rc		u,	Br, Aoo	H l rc,	H, Br. u
.		u,	Brl cBB	H urBl	H, Br. u
. rgc		u,	Brl l l .	Hl. ru.	H, Br. u
Argc		u,	Br. . . A	H, . rou	H, Br. u
4:7	**Pl44**	**12**	**F:4123**	**P22:55**	**P2F:61**
ug		u,	uruAoo	HcBrAu	H, Br. u

TΖ z T ≤' UΘ= ΘUG* ° .	4 j j * UΖΘ* - Θ' " ΘΘM Z Θ ° > rj Ζ.	- ;;] ' M* f * ° Θ[h] ' z ®TS.
go	Br, , , l	HAurgu
go	Br. PPP	Hl grAl
go	urBBBB	H, Br. u
go	urBoul	Hc. rPl
go	urugcB	HcorBc
go	uru, , l	Hcgrug
go	urPPPP	Hocr, B
go	urPl cB	Hoorgg
go	url Aul	HPPrAo

b ;Θ[ZEF' + * ° &' Θ⊗Θ D Θ⊗Θ= ®Θ⊗z UZ'sΘ[U-
b - 4 4 [=Θ* * ΘΘ= 9 * ≤] ΘZ5] rEgBBuHuBrgru
f * U' + M' ΘusgBgB
®' =* ,] j oo

9X/ q 0u Ce X/ q k q z c XK l X qK n X pX q q c XKC6K ΘP5R6VcN z X / X Ckpc 8 K CZX q q q qK ΘZXGq X N

b G* UKj] ΘΘ° ;Z °Θ= . rgc ΘUG≤;' [K ' ; * ° jΘ⊗+ 9 * ≤] ΘZ5 + M' ΘguoAHBl HuB b Jr
f * ° Θ[;] ' z N ;ZΘ' Z j' Θ Θ ;] ' zdS8 T N HgA, ≤° jdP N HA. rl ≤° j
4jj* UΘO* ZΘΘM Z Θ N ≤;' [K ΘZG* ≤] ° * z Z, * ' ZG* Θ/ ° Z z ° ≤' UΘ=JduooJ N . rgcHurgcJ/ u, Jduoo N Brl l . ° >rjZ
S' ° Z [* Θ;] ' z Nz* ° Θ[;] ' z / ZΘΘM Z Θ ' Θ' N HA. rl / Brl l . N Hl, rl o ≤] [z° s GΘΘG Θ;M' ° * z j] ΘZG* U ;U ;' ZΘ[
- zV ° Z z j' ° Z [* Θ ΘZGzΘ ' ; ;] ' z ≤* Θ4T9 HucPA N . o ;Mj' ° Z [* Θ⊗ GΘΘG Θ ;' Θ⊗* ΘZG [ZG* Z ° Zj' ° Z [* Θ;] ' z
b ' ;U ;' Z z ' ;;] ' M;* z* ° Θ[;] ' z Nj' ° Z [* Θ;] ' z Z ° Z z U, [zΘΘ[zOΘ⊗* z M ' Θ' ZΘΘM Z Θ j] ΘZG* U, [zΘΘ[Z, M' U ;U ;' Z z

&' Θ⊗Θ®;' [K X ΘZG ΘUG* ° J	" * ° Z z b] [zΘΘ[s k ;ZΘ' Z ≤° j.	T Z z T ≤' UΘ= ΘUG* ° J	4jj* UΘO* - Θ' " ΘΘM Z Θ ° >rjZ.	- ;;] ' M;* f * ° Θ[h] ' z ®TS.	S' ° Z [* Θh] ' z ;M; J	T Z z T ≤' UΘ= ΘUG* ° J	4jj* UΘO* - Θ' " ΘΘM Z Θ ° >rjZ.	- ;;] ' M;* f * ° Θ[h] ' z ®TS.
crgc		u,	Broooo	HuI gr, I	HI, rl o	go	Br, , , I	Huucruu
, rgc		u,	Brccc,	HuP. ruP	HI, rl o	go	Br. PPP	HAgrBA
I rgc		u,	Br, , , I	Huucruu	HI, rl o	go	urBBBB	HI, rl o
I rc		u,	Br, Aoo	HuuBrcu	HI, rl o	go	urBoul	HI Pr, I
.		u,	Brl cBB	HuBgrPg	HI, rl o	go	urugcB	H, . rgu
6:07	**P042**	**12**	**F:3336**	**P46:23**	**P32:3.**	go	uru, , I	H, crl .
Argc		u,	Br. . . A	H, rPP	HI, rl o	go	urPPPP	HtI rc,
Arc		u,	BrAu, I	H Prl g	HI, rl o	go	urPl cB	Htcr. u
ug		u,	uruAoo	H, orgc	HI, rl o	go	url Aul	Hogr. P

9X/ q 0c e X/ q k q z c XK l X qK n X pX q q c XKC6K K z X ΘF:F40V X NΘkpc 8 K CZX q q q qK ΘZXGq X N

b G* UKj] ΘΘ° ;Z °Θ= . rgc ΘUG≤;' [K ' ; * ° jΘ⊗+ 9 * ≤] ΘZ5 + M' ΘguoAHBl HuB 4 Jr
f * ° Θ[;] ' z N ;ZΘ' Z j' Θ Θ ;] ' zdS8 T N HgcP≤° jdP N H, orP ≤° j
4jj* UΘO* ZΘΘM Z Θ N ≤;' [K ΘZG* ≤] ° * z Z, * ' ZG* Θ/ ° Z z ° ≤' UΘ=JduooJ N . rgcHurgcJ/ u, Jduoo N Brl l . ° >rjZ
S' ° Z [* Θ;] ' z Nz* ° Θ[;] ' z / ZΘΘM Z Θ ' Θ' N H, orP / Brl l . N H, crcA ≤] [z° s GΘΘG Θ;M' ° * z j] ΘZG* U ;U ;' ZΘ[
" G* ' zV ° Z z [' Θ ΘZGzΘ ' ; ;] ' z ≤* Θ4T9 HucPA N , I rB ;Mj' ° Z [* Θ⊗ GΘΘG Θ ;' Θ⊗* ΘZG [ZG* Z ° Zj' ° Z [* Θ;] ' zr
b ' ;U ;' Z z ' ;;] ' M;* z* ° Θ[;] ' z Nj' ° Z [* Θ;] ' z Z ° Z z U, [zΘΘ[zOΘ⊗* z M ' Θ' ZΘΘM Z Θ j] ΘZG* U, [zΘΘ[Z, M' U ;U ;' Z z

&' Θ⊗Θ®;' [K X ΘZG ΘUG* ° J	" * ° Z z b] [zΘΘ[s k ;ZΘ' Z ≤° j.	T Z z T ≤' UΘ= ΘUG* ° .	4jj* UΘO* - Θ' " ΘΘM Z Θ ° >rjZ.	- ;;] ' M;* f * ° Θ[h] ' z ®TS.	S' ° Z [* Θh] ' z ;M;	T Z z T ≤' UΘ= ΘUG* ° .	4jj* UΘO* - Θ' " ΘΘM Z Θ ° >rjZ.	- ;;] ' M;* f * ° Θ[h] ' z ®TS.
crgc		u,	Broooo	HuoI rc.	H, crcA	go	Br, , , I	HA. rPA
, rgc		u,	Brccc,	Huu. rBl	H, crcA	go	Br. PPP	HI. rl u
I rgc		u,	Br, , , I	HA. rPA	H, crcA	go	urBBBB	H, crcA
I rc		u,	Br, Aoo	HAoroc	H, crcA	go	urBoul	H, grAl
.		u,	Brl cBB	H I ro,	H, crcA	go	urugcB	Ht. rPB
6:07	**P075**	**12**	**F:3336**	**P6. :55**	**P27:74**	go	uru, , I	Ht, rgg
Argc		u,	Br. . . A	HI Prl A	H, crcA	go	urPPPP	HoAruA
Arc		u,	BrAu, I	H urc,	H, crcA	go	urPl cB	HoI rl B
ug		u,	uruAoo	HtorAu	H, crcA	go	url Aul	HP, r, u

9X/ q 0t Ce X/ q k q z c XK l X qK n X pX q q c XKC2K K z X ΘF:F40V X NΘkpc 8 K CZX q q q qK ΘZXGq X N

b G* UKj] ΘΘ° ;Z °Θ= . rgc ΘUG≤;' [K ' ; * ° jΘ⊗+ 9 * ≤] ΘZ5 + M' ΘgPouHB. HB, r
f * ° Θ[;] ' z N ;ZΘ' Z j' Θ Θ ;] ' zdS8 T N Hu, c≤° jdP N Htc ≤° j
4jj* UΘO* ZΘΘM Z Θ N ≤;' [K ΘZG* ≤] ° * z Z, * ' ZG* Θ/ ° Z z ° ≤' UΘ=JduooJ N . rgcHurgcJ/ u, Jduoo N Brl l . ° >rjZ
S' ° Z [* Θ;] ' z Nz* ° Θ[;] ' z / ZΘΘM Z Θ ' Θ' N HtcrB / Brl l . N Hogrl . ≤] [z° s GΘΘG Θ;M' ° * z j] ΘZG* U ;U ;' ZΘ[
" G* ' zV ° Z z [' Θ ΘZGzΘ ' ; ;] ' z ≤* Θ4T9 HucPA N oAru ;Mj' ° Z [* Θ⊗ GΘΘG Θ ;' Θ⊗* ΘZG [ZG* Z ° Zj' ° Z [* Θ;] ' zr
b ' ;U ;' Z z ' ;;] ' M;* z* ° Θ[;] ' z Nj' ° Z [* Θ;] ' z Z ° Z z U, [zΘΘ[zOΘ⊗* z M ' Θ' ZΘΘM Z Θ j] ΘZG* U, [zΘΘ[Z, M' U ;U ;' Z z

&' Θ⊗Θ®;' [K X ΘZG ΘUG* ° J	" * ° Z z b] [zΘΘ[s k ;ZΘ' Z ≤° j.	T Z z T ≤' UΘ= ΘUG* ° J	4jj* UΘO* - Θ' " ΘΘM Z Θ ° >rjZ.	- ;;] ' M;* f * ° Θ[h] ' z ®TS.	S' ° Z [* Θh] ' z ;M J	T Z z T ≤' UΘ= ΘUG* ° J	4jj* UΘO* - Θ' " ΘΘM Z Θ ° >rjZ.	- ;;] ' M;* f * ° Θ[h] ' z ®TS.
crgc		u,	Broooo	HA, rgc	Hogrl .	go	Br, , , I	H, oruI
, rgc		u,	Brccc,	HI I rBB	Hogrl .	go	Br. PPP	HturPP
I rgc		u,	Br, , , I	H, oruI	Hogrl .	go	urBBBB	Hogrl .
I rc		u,	Br, Aoo	H, ur, B	Hogrl .	go	urBoul	HourBl
.		u,	Brl cBB	HtI rBo	Hogrl .	go	urugcB	HP. rBg
6:07	**P127**	**12**	**F:3336**	**P77:FF**	**P. 0:36**	go	uru, , I	HP, r, I
Argc		u,	Br. . . A	Ho. ruP	Hogrl .	go	urPPPP	HPgrB.
Arc		u,	BrAu, I	Ho, r, I	Hogrl .	go	urPl cB	HPuruu
ug		u,	uruAoo	HPcr. u	Hogrl .	go	url Aul	HgPr. .

9X/ q 0v Ce X/ q k q z c XK I X qK n X pX q q c XKC6K K z X ΘF:F40V X NC8 bp 8 K CZX q q q qK ΘZXGq X N

b G* UKj] Θ⊗° ;Z ° Φ= . rgc ΦUG ≤;' [K ' ; * ° jΘ) + 9 * ≤] ΘZ5 + M' ΘguoAHBI HuB SJr
f * ° Θ[;] ' z N ;ZΘ ' Z j' Φ, Θ ;] ' zdS8 T N Hu, . ≤° jdP N Hc, rB ≤° j
4 jj* UZΘ* ZΘΘM Z Θ N ≤;' [K ⊗ZG* ≤] ° * z Z] * ' ZG* Θ/ ° Z z ° ≤' UΦ=JuooJ N . rgcHurgcJ/ u, Juoo N BrI I . ° >rjZ
S' ° Z [* Θ;] ' z Nz * ° Θ[;] ' z / ZΘΘM Z Θ ' Θ' N Hc, rB / BrI I . N HoPrc, ≤] [z °
" G* ' zV ° Z z [' Φ, ΘZGz Θ ' ; ;] ' z ≤* Θ4 T 9 HucPA N oPrB ;Mj' ° Z [* G⊗ GΦΦG Θ +] Θ U] [° * Θ' ZΘ* ' [z Φ, M' ° * z j] ΘZG* U ;U ;' ZΦ[r
b ' ;U ;' Z z ' ;;] ' M,* z * ° Θ[;] ' z Nj' ° Z [* Θ] ' z Z ° Z z U] [zΘΦ[zOΘ⊗* z M ' Θ' ZΘΘM Z Θ j] ΘZG* U] [zΘΦ[Z] M' U ;U ;' Z z

&' Θ⊗Θ®;' [K X Θ⊗ZG ΦUG* ° J	" * ° Z z b] [zΘΦ[s k ;ZΘ ' Z ≤° j.	TZ z T ≤' UΦ= ΦUG* ° J	4 jj* UZΘ* - Θ' " ΘΘM Z Θ " ° >rjZ	- ;;] ' M,* f * ° Θ[h] ' z ®TSJ	] Θ
crgc		u,	Brooooo	HA, rI c	HoPrBB
, rgc		u,	Brccc,	HI I roB	HoPrBB
I rgc		u,	Br, , , I	HJ orcB	HoPrBB
I rc		u,	Br, Aoo	HJ urAg	HoPrBB
.		u,	Br I cBB	Hc I rPP	HoPrBB
6:07	**PI26**	**12**	**F:3336**	**PI77:04**	**P. 5:FF**
Argc		u,	Br. . . A	Ho. rP.	HoPrBB
Arc		u,	BrAu, I	Ho, rAu	HoPrBB
ug		u,	uruAoo	HP, rBB	HoPrBB

TZ z T ≤' UΦ= ΦUG* ° J	4 jj* UZΘ* - Θ' " ΘΘM Z Θ " ° >rjZ	- ;;] ' M,* f * ° Θ[h] ' z ®TSJ
go	Br, , , I	HJ orcB
go	Br. PPP	Hcur, B
go	urBBBB	HoPrBB
go	urBoul	Hourg.
go	urugcB	HP. rgg
go	uru, , I	HP, r. ,
go	urPPPP	HPgrgc
go	urPI cB	HPurgI
go	urI AuI	HJorBB

k®8sgv & s/k chek bwhn®k, w®8B

SΘΘM' ΘHU* + * [Z° ⊗ΘΦ= ZΘ] ° * Θ* ;] ' z U ≤' UΘZ Φz ;] ' z U ≤' UΘZ J Θ z * Z Θ+ Φ* z jΘ) + ZΘ [° * Θ* ;] ' z Z ° ZΦ= Φ ' UJ, Θ⊗' [U' ΘZG- T") 4 PPB] Θ4 I g ' ° [ ] Z z Φ T * UΘΦ[orB] j ZG* Θ b b 4 T
- b ABs- UU' ≤Z [U' b ΘΘZ ΘΦ j] ΘSΘM' Θb * + * [ZT ⊗ΘΦ= k ° * z ' ° 4 Z ΘΦΘX ' ;; TΘΦ= ' ≤≤Φ) * z 8 UΦ] M' ΘgBu. J r " G* ' ;;] ' M,*] Θz * ° Θ[U ≤' UΘZ jΘ) + ZG* Z ° ZΦ= Θ M ° * z] [' j' UΦ] Θ] j ° ' j * Z
] j P ' ≤≤;ΘΘz Z] ZG* ;ZΘ ' Z Z ° Z;] ' z ≤* Θ- b ABr " G* Φz ;] ' z ' ; * ° ' Θ z * Z Θ+ Φ* z jΘ) + ZG* - Tb 4 I * > ' ZΦ[° r

TΦU' ZG* ' ;;] ' M,* z * ° Θ[;] ' z Θ M ° * z] [j' UΦ] Θ] j ° ' j * Z] j Ps' ;;] ' M,* z * ° Θ[;] ' z°] [jΘM' ΘHU' + * [Z° ⊗ΘΦ= U] ΘΘ;' Z z ΘΘ UΘ Z] Θ > ΘΘz z * ° Θ[≤Θ ° ° Θ ° j] Θ- ;;] ' M,* TZΘ ° ° f * ° Θ[s
' [z ZG* Θ j] Θ ° Θ] ;z M' ° * z ΘZG U] + MΦ' ZΦ[;] ' z Φ= * > ' ZΦ[° j] Θ- ;;] ' M,* TZΘ ° ° f * ° Θ[- Tf Jr

D ° Φ= ZG* U] + MΦ' ZΦ[;] ' z Φ= * > ' ZΦ[° j] Θ- ;;] ' M,* TZΘ ° ° f * ° Θ[- Tf JsZG* Z ° Z z ' ;;] ' M,* z * ° Θ[;] ' z° j] Θ] ΘM' ΘHU' + * [Z° ⊗ΘΦ= ' Θ ' ;Θ[* z ΘZG ZG* Φz ° ≤** z Θ> ΘΘ + * [Z Φ
- Tb 4 I HuB SΘ Θ° g, rcHu- sg, rcHuDs' [z g, rcHub J' [z - Tb 4 I Hu, SΘ Θ° g, rcHu- Z] Huf sgcrcHj- Z] Hjf Js] ΘZG* j Θ Θ° Φ ZG* M Θ z Φ= U] z * ' ° ' ≤≤;ΘΦ M,* r

® X 1C > NBrBBgc, a(a( ]a( ]ax g *G' wE1 boT, 1 GA, ΘΘoT*
> NBrBBgc, a(a( ]a( ]a(⋅x g *G' wE1 boTs 1 GysG', oT*
> s * ;] UΘZ ≤Θ ° ° Θ ' ZG* Θ⊗ZG
(s * ;] UΘZ ≤Θ ° ° Θ * ≤] ° Θ U] * jjΘΦΘ[Z* ' ; ' Z z ' ZG* Θ⊗ZG
( ]z s Z] ≤] = Θ ≤ ΘΦΦj' UΦ] Θ
( ]z s Φz z ΘΘ UΘΦ[' ;ΘΦ j' UΦ] Θ
(⋅ s = Φ) [z * ;* ' ZΦ[j' UΦ] Θ ≤* Θ⊗ ΘZ z Z] Z K* (⋅ NurB
x sM ° ΘΦ Φz ° ≤** z PH1 * U] [z = ° Z) ®&J' ° z * Z Θ+ Φ* z jΘ) + E
- Tb 4 I HuB SΘ Θ° g, rcHu- sDs] Θb
- Tb 4 I Hu, SΘ Θ° g, rcHu- sDs] Θg, rcHj- sDsb] Θf
gBu. ΘDb SΘ Θ° u, BArP uJ Hu, BArP . J

® X 0C
x Nx ;Z *G/, T- }{ E r y, Tb 0{ E w Ts, yG'*
x ;Z s ;ZΘ ' Z z * ° Θ[Φz ° ≤** z ° PH1 * U] [z = ° Z) ®&J z * Z Θ+ Φ* z jΘ) + gBuI SDb SΘ Θ° u, BArP uJ Hu, BArP PJRgBgB SDb SΘ Θ° u, ABrP uJ Hu, BArP oJR

® X 5C ≤N>G a 7 b ≤H7 b ≤Θ J *G' wE1 boT, 1 GA, ΘΘbT ' wE1 boTs 1 GA, ΘΘoT*
>G s * ;] UΘZ ≤Θ ° ° Θ ' Z + * ' [Θ]] j G* Θ⊗ZG
7 b ≤ s ≤Θ) z UΘZ] j * Z Θ) ' ; ≤Θ ° ° Θ U] * jjΘΦΘ[Z' [z = ° Z H jj* UΘZ] ' UΦ] Θ
7 b ≤O s ≤Θ) z UΘZ] j Φ Z Θ) ' ; ≤Θ ° ° Θ U] * jjΘΦΘ[Z' [z = ° Z H jj* UΘZ] ' UΦ] Θ
≤ sz * ° Θ[≤Θ ° ° Θ ®TSJ] j] Θ° ⊗ΘΦ= ' ;;] ' M,* z * ° Θ[;] ' z j] Θ° ⊗ΘΦ=J

(f 1 Af

® X . C ≤N BrBBgc, a(a( ]a( ]ax g a 7 b ≤H7 b ≤Θ J *Gy, T- r y, TF }{ E*
] Θ ≤N BrBBgc, a(a( ]a( ]ax ;Z g a 7 b ≤H7 b ≤Θ J *Gy, Tb y, y, 0{ E*

' w 7 f ' wE1 boT, w yΘΘUGf bf

® X 7C Br, f mBr, X *G' wE1 boT, r boTs yΘΘUGf b*
f sz * ' z ;] ' z
X s Φz ;] ' z ;] ' z z * Z] Φz ≤Θ ° ° Θ J

(' w 7 g f v p e 1 N p e N

® X 2C ≤ ⋅z N Br, aΘΘy

® X 3C ≤ ⋅z N Br, aΘBrBBgc, a(a( ]a( ]ax ;Z g a 7 b ≤H7 b ≤Θ J y

1 b (Nf - f sG

(3 w (bf 1 b H f

® X 6C x ;Z N ≤ ⋅z ΘBr, aBrBBgc, a(a( ]a( ]a 7 b ≤H7 b ≤Θ J Brc

' 1 T A]y, T- }{ Ef y, Tb 0{ E/ w Ts, CGTGTG pH e 3 w
(bf f

® X 4C x ° z N x ;z a Br, J^Brc
x ° z N x a Br, J^Brc

Ø¥, Tb y, y, 0{ E 1 GTsoAA
Ø¥, T- Iy, TF }{ E 1 GTsoAA

x ° z s5] + Ø' ; z * ° Θ[Øz ° ≤ * * z PH ° * U¡ [z = ° Z+ ≤ GJ
x sD' ° ØØz * ° Θ[Øz ° ≤ * * z PH ° * U¡ [z = ° Z≤+ ≤ GJ

9X/ q 5Ø n qZZGq X K n X qK k q q z D X K C									
	u							& X " q 7	
mq z ØZN	® I Ø¤8 n ® 3PI 2N	® I	® n	® k		u	u_K	g n	g n
BHuc	Brc I	Br I B	Br. c	urBP	G , B	u	Br. c	Huro	Bru.
gB	Br, g	Br I B	BrAB	urB.		u	Br. c	Huro	Bru.
gc	Br, ,	Br I B	BrAo	urug		u	Br. c	Huro	Bru.
PB	Br I B	Br I B	BrA.	uru,		u	Br. c	Huro	Bru.
Pc	Br I P	Br I P	urBu	uruA		u	Br. c	Huro	Bru.
oB	Br I ,	Br I ,	urBo	urgg		u	Br. c	Huro	Bru.
oc	Br I . c	Br I . c	urB, c	urgoc		u	Br. c	Huro	Bru.
cB	Br. u	Br. u	urBA	urgI		u	Br. c	Huro	Bru.
cc	Br. P	Br. P	uruu	urgA		u	Br. c	Huro	Bru.
, B	Br. c	Br. c	uruP	urPu		u	Br. c	Huro	Bru.
uBB	BrAA	BrAA	urg,	uroP	G2, B	u	Br. c	Hur.	Bru.

" G* U¡ * jjØØ[Z' ' [z U¡ [° Z [Z ;ØZ z Ø " ' ' M* P' M¡ * * Θ U¡ [° ØZ [Zj] Θ- Tb 4 I HuB ' [z - Tb 4 I Hu, * U* ≤ Zj] Θ(' Z4 ≤] ° Θ D [z * ΘPB jZS G* Θ - Tb 4 I Hu, ' ;;] ° Z¡
° * ;] * Θ* ≤] ° Θ U¡ * jjØØ[ZZG Z≤Θ Ø ° U¡ z * ° ° * z ' +] Θ U¡ [° * Θ' ZØ* ' ; * ° Θ° ;Z z Ø GΘG* Θz * ° Θ[≤Θ ° ° Θ Jr S] ØZG* ° Θ ≤;ØØZ] j ZG* Z M* ° s ZG* Z M* ° Ø Z G*
j] ;;] Ø= ° G* * Z ' ° ≤] ≤ ;' Z z ° Ø= ZG* +] Θ U¡ [° * Θ' ZØ* - Tb 4 I HuB U¡ * jjØØ[Z' r

9X/ q . Ce X/ q 8 q k q z Pn q X K n XKK z ØnTnNb q q Ø¤8 pN / q wq qK X DX & K 8 qqK P& K® q n X qz I C														
X Øz T≤ * * z PH ° * U¡ [z = ° ZJ	uBB	uBc	uuB	uuc	ugB	uPB	uoB	ucB	u, B	uI B	u. B	uAB	gBB	guB
& * ΘØZ jZJ	D	D	D	D	D	D	D	D	D	D	D	D	D	D
BHuc	Huoro	HucrA	HuI rc	HuAru	HgBr.	Hgoro	Hg. rP	HPgrc	HPI rB	Hburl	Hb, r.	Hcgru	HcI r.	HJ PrI
gB	Huoro	HucrA	HuI rc	HuAru	HgBr.	Hgoro	Hg. rP	HPgrc	HPI rB	Hburl	Hb, r.	Hcgru	HcI r.	HJ PrI
gc	Huoro	HucrA	HuI rc	HuAru	HgBr.	Hgoro	Hg. rP	HPgrc	HPI rB	Hburl	Hb, r.	Hcgru	HcI r.	HJ PrI
PB	Huoro	HucrA	HuI rc	HuAru	HgBr.	Hgoro	Hg. rP	HPgrc	HPI rB	Hburl	Hb, r.	Hcgru	HcI r.	HJ PrI
Pc	Hucru	Hu, r,	Hu. rg	HuArA	Hgurl	Hgcro	HgArc	HPPrA	HP. r,	HbPrc	Hb. r.	Hcoro	HJ Brg	HJ , ro
oB	HucrI	HuI rP	HuArB	HgBrI	Hggr,	Hg, rc	HPBrI	HPcrP	HbBru	HbcrP	HcBr.	Hc, r,	HJ grI	HJ Aru
oc	Hu, rg	HuI rA	HuAr,	Hguro	HgPrP	HgI ro	HPurI	HP, ro	Hburc	Hb, r.	Hcgrc	Hc. rc	HJ or.	HI uro
cB	Hu, rI	Hu. ro	HgBrg	Hggru	Hgoru	Hg. rg	HPgrI	HPI r,	Hbgr.	Hb. rP	Hcoru	HJ BrP	HJ , r.	HI PrI
cc	HuI ru	Hu. rA	HgBrI	Hggr,	HgorI	Hg. rA	HPPr,	HP. rc	HbPr.	HbArc	Hccrc	HJ ur.	HJ . rc	HI crc
, B	HuI rc	HuArP	Hgurg	HgPrg	Hgcrg	HgAr,	HPoro	HPArc	HborA	HcBrI	Hc, r.	HJ PrP	HI Bru	HI I rP
uBB	Hgcr,	Hg. rg	HPurB	HPPr.	HP, rA	HbPrP	HcBrg	HcI r,	HJ crc	HI orB	HJ grA	HAgro	HuBgro	HuugrA

9X/ q 7Ce X/ q 8 q k q z Pn q X K n XKK z ØnTnNb q q Ø¤8 pN / q wq qK X DX & K 8 qqK P& K® q n X qz n C														
X Øz T≤ * * z PH ° * U¡ [z = ° ZJ	uBB	uBc	uuB	uuc	ugB	uPB	uoB	ucB	u, B	uI B	u. B	uAB	gBB	guB
& * ΘØZ jZJ	b	b	b	b	b	b	b	b	b	b	b	b	b	b
BHuc	HuI rc	HuArP	Hgurg	HgPrg	Hgcrg	HgAr,	HPoro	HPArc	HborA	HcBrI	Hc, r.	HJ PrP	HI Bru	HI I rP
gB	Hu. r,	HgBrc	Hggrc	Hgor,	Hg, rI	HPuro	HP, ro	Hbur.	HbI rc	HcPrI	HJ Brg	HJ I rB	HI orP	HJ urA
gc	HuAro	Hguro	HgPrc	Hgcr,	HgI rA	HPgr.	HP. rB	HbPr,	HbAr,	Hc, rB	HJ gr.	HI BrB	HI I r,	HJ crc
PB	HgBrg	HggrP	Hgorc	Hg, rI	HgArU	HPorg	HPAr,	Hbcrc	Hcur.	Hc. ro	HJ crc	HI PrB	HJ BrA	HJ Arg
Pc	HgBr.	HgPrB	Hgcrg	HgI r,	HPBrB	HPcrg	HbBr.	Hb, rA	HcPrP	HJ Brg	HJ I rc	HI crg	HJ PrP	HAurA
oB	Hgurc	HgPrI	Hg, rB	Hg. ro	HPBrA	HP, rP	HbgrB	Hb. rP	HcorA	HJ grB	HJ Arc	HI I ro	HJ cr.	HAor,
oc	HggrB	Hgorg	Hg, r,	HgArU	HPur,	HPI ru	HbPru	HbAro	Hc, rg	HJ Prc	HI urg	HI ArP	HJ I rA	HA, rA
cB	Hggrc	Hgor.	HgI rg	HgArI	HPgro	HP. rB	Hboru	HcBr,	HcI r,	HJ crB	HI grA	HJ urg	HJ ArA	HAArg
cc	HggrA	Hgcrg	HgI rI	HPBrP	HPPrB	HP. rI	HborA	Hcurc	Hc. r,	HJ , rg	HI org	HJ grI	HAur,	HuBurB
, B	HgPrP	HgcrI	Hg. rg	HPBr.	HPPr,	HPAro	Hbcrl	Hcgro	HcArI	HJ I ro	HI crc	HJ oru	HAPrg	HuBgr.
uBB	HPgr,	HPcrA	HPAro	HbPru	Hb, rA	HccrB	HJ Pr.	HI PrP	HJ Pro	HAoru	HuBcrc	HuuI r,	HuPBrP	HuoPr,

b ;Ø[ZEF' + * ° &' Ø¤Ø D Ø¤Ø= ®Ø z UZ' sØ[U-
b - 4 4 [=Ø* * ØØ= 9 * ≤] ØZ5] rEgBBuHuBrgru
f * U* + M' ØusgBgB
®' =* A] j oo

9X/ q 2Ce	X/ q 8 q kq z Pn		q X K n XKK z ØnTnNb q		q Øb8pN / q wq		qK X DX		& K 8 qqK P& K®		q n X qz kC			
X Ø z T≤* * z PH °* U] [z = °ZJ	uBB	uBc	uuB	uuc	ugB	uPB	uoB	ucB	u, B	ul B	u. B	uAB	gBB	guB
& * ØØZ j ZJ	f	f	f	f	f	f	f	f	f	f	f	f	f	f
BHuc	HØurg	HØPro	HØcrl	HØ. ru	HPBr,	HPcrA	HØur,	HØl r.	HØoro	H, uro	H, . r.	Hl , rl	H-l crB	HAPrl
gB	HØgrP	HØor,	HØl rB	HØArc	HPgru	HPl rl	HØPrl	HØBru	HØl rB	H, oro	Hl grg	H-l Bro	H-l Aru	HA. rg
gc	HØPru	HØcrc	HØ. rB	HPBr,	HPPrP	HPArB	HØcrP	HØgrB	HØAru	H, , r.	Hl orA	H-l Pro	HAgro	HuBurA
PB	HØPrA	HØ, ro	HØArB	HPur,	HPorc	HØBro	HØ, rA	HØPr.	H, urP	H, Arg	Hl l rc	H-l , ro	HAcrl	HuBcrc
Pc	HØorc	HØl ru	HØArl	HPgrc	HPcrP	HØurc	HØ. ru	HØcrg	H, gr.	Hl BrA	Hl Arc	H-l . r,	HA. rg	HuB. rP
oB	HØcrg	HØl rl	HPBrc	HPPrP	HP, rg	HØgrc	HØArP	HØ, r,	H, oro	Hl grl	H-l urc	HABrA	HuBBrl	HuuurB
oc	HØcrl	HØ. rP	HPuru	HPorB	HPl rB	HØPro	HØBrP	HØl r.	H, crl	Hl org	H-l Prg	HAgrl	HuBgrl	HuuPrP
cB	HØ, rg	HØ. rA	HPurl	HPor,	HPl rl	HØorP	HØurP	HØ. rA	H, l ru	Hl crl	H-l orA	HAor,	HuBor.	Huucrc
cc	HØ, r,	HØArP	HPgrg	HPcrg	HP. rP	HØcrB	HØgrg	HØArA	H, . ru	Hl , rA	H-l , rg	HA, ru	HuB, ro	Huul ro
, B	HØl rB	HØAr.	HPgrl	HPcrl	HP. rA	HØcrl	HØPrB	H, Br.	H, Arg	Hl . ru	H-l l r,	HAl r,	HuB. ru	HuuArg
uBB	HPl rB	HØBr.	HØorl	HØ. rA	HØPrg	H, grc	Hl grc	H-l Prg	HAor,	HuB, r.	HuuAr.	HuPPro	Huol rA	Hu, PrB

" ' M* ° oscs' [z , ' Θ M ° * z] [- Tb 4 l HuB ' [z l Hu, s' [z ' Θ U] [° ØZ [Z ØGZG' gBucØBu. ØDb s' [z ZG' gBul ØBgB S;] ØØ' D Ø¤Ø= b] z* r

V. ANDREW TAN
LICENSE
No. 81662
STATE OF
FLORIDA
PROFESSIONAL ENGINEER

b ;Ø[ZÆF' + * ° &' Ø2Ø D Ø2Ø= ®Ø z UZ s[U-
b - 4 4 [=Ø * * ØØ= 9 * ≤] ØZ5] rEgBBuHuBrgru
f * U' + M' ØusgBgB
®' =* uB] j oo

9el c®3 Pt e"st , t &sv k 8b®®k 8 Ø bmNme wks®bcevu ceb 8sksvg[1]

V. ANDREW TAN
LICENSE
No. 81662
STATE OF FLORIDA
PROFESSIONAL ENGINEER

0F13RØF0F pl nCØF17 sl n Ø X q k q z & KC8 qqKCD 7ØNC 0F16 sl n Ø X G k q z & K8 qqKC DØØN	0F13RØF0F pl nC 0F17RØF16 sl n Ø X k q z & KC 8 qqKCD X K ØØN
e GX/ q q K qGZqK 8qG 12F4:1:1: Z0F13 pl nC 0F0F pl n 0F17RØF16 sl n	e GX/ q q K qGZqK ® Gq 1 z 5 Z8qG 12F4:1:1 Z0F13 pl nCØF0F pl n X K0F17RØF16 sl n
& K q q GX qz	& K q q GX qz

																			n qZZGq qK			9X/ q 2 GX G X Z D		
															T Ø=	(								
®Ø z UZ	®Ø z UZ " GØDK[* ° ° ØUG ° J	X ØZG ØUG ° J	S' ° Z [* Ø " ≤ * g	S' ° Z [* G Ts' UØ=	SØ + * " ≤ *	TZ z Ts' UØ= ØUG ° J	D Ø2Ø= &* ØG Z s j * * Z J	D	b	f	D	b	f	f * ° Ø[h] ' z ®TSJ	4 ≤ D	4 ≤ b	4 ≤ f		(z	(z	7 b ≤	7 b ≤ Ø
							BHuc	u. g	u, c	ucB	uou	ug.	uu,	HØl rA	Brl	Br. c	urBP	G , B	u	Br. c	Hu	Brg
							gB	u. g	u, u	uoI	uou	ugo	uuo	HØl rA	Brl	BrA	urB.		u	Br. c	Hu	Brg
							gc	u. g	ucI	uoo	uou	ugg	uug	HØl rA	Brl	BrAo	urug		u	Br. c	Hu	Brg
							PB	u. g	uco	uog	uou	uuA	uuB	HØl rA	Brl	BrA.	uru,		u	Br. c	Hu	Brg
							Pc	uI .	ucg	uoB	uP.	uuI	uB.	HØl rA	Brl P	urBu	uruA		u	Br. c	Hu	Brg
							oB	uI c	uoA	uP.	uPc	uu,	uBl	HØl rA	Brl ,	urBo	urgg		u	Br. c	Hu	Brg
							oc	uI g	uo.	uPl	uPP	uuo	uB,	HØl rA	Brl A	urBl	urgc		u	Br. c	Hu	Brg
							cB	u, A	uo,	uPc	uPu	uuP	uBc	HØl rA	Br. u	urBA	urgI		u	Br. c	Hu	Brg
							cc	u, I	uoc	uPo	uPB	uug	uBo	HØl rA	Br. P	uruu	urgA		u	Br. c	Hu	Brg
							, B	u, c	uoP	uPP	ug.	uuu	uBP	HØl rA	Br. c	uruP	urPu		u	Br. c	Hu	Brg
							uBB	uPl	ugu	uuo	uB,	Ao	. .	HØl rA	BrAA	urg,	uroP	G2, B	u	Br. c	Hg	Brg
							BHuc	u, P	uo.	uPo	ug,	uuc	uBo	HP. rP	Brl	Br. c	urBP	G , B	u	Br. c	Hu	Brg
							gB	u, P	uoo	uPu	ug,	uuu	uBg	HP. rP	Brl	BrA	urB.		u	Br. c	Hu	Brg
							gc	u, P	uou	ugA	ug,	uBA	uBB	HP. rP	Brl	BrAo	urug		u	Br. c	Hu	Brg
							PB	u, P	uP.	ugI	ug,	uBl	A.	HP. rP	Brl	BrA.	uru,		u	Br. c	Hu	Brg
							Pc	u, B	uP,	ugc	ugo	uBc	Al	HP. rP	Brl P	urBu	uruA		u	Br. c	Hu	Brg
							oB	uc,	uPo	ugP	ugu	uBo	A,	HP. rP	Brl ,	urBo	urgg		u	Br. c	Hu	Brg
							oc	uco	uPg	ugg	uuA	uBg	Ac	HP. rP	Brl A	urBl	urgc		u	Br. c	Hu	Brg
							cB	ucu	uPu	ugu	uuI	uBu	Ao	HP. rP	Br. u	urBA	urgI		u	Br. c	Hu	Brg
							cc	ucB	ugA	ugB	uu,	uBB	AP	HP. rP	Br. P	uruu	urgA		u	Br. c	Hu	Brg
							, B	uo.	ug.	uuA	uuc	AA	Ag	HP. rP	Br. c	uruP	urPu		u	Br. c	Hu	Brg
							uBB	ugg	H	H	Ac	H	H	HP. rP	BrAA	urg,	uroP	G2, B	u	Br. c	Hg	Brg
							BHuc	uoA	uPc	ugP	uuc	uBc	Ac	HPurA	Brl	Br. c	urBP	G , B	u	Br. c	Hu	Brg
							gB	uoA	uPu	ugB	uuc	uBg	AP	HPurA	Brl	BrA	urB.		u	Br. c	Hu	Brg
							gc	uoA	ug.	uu.	uuc	AA	Au	HPurA	Brl	BrAo	urug		u	Br. c	Hu	Brg
							PB	uoA	ug,	uu,	uuc	Al	. A	HPurA	Brl	BrA.	uru,		u	Br. c	Hu	Brg
							Pc	uo,	ugo	uuo	uuP	A,	. .	HPurA	Brl P	urBu	uruA		u	Br. c	Hu	Brg
							oB	uoP	ugg	uuP	uuu	Ac	. I	HPurA	Brl ,	urBo	urgg		u	Br. c	Hu	Brg
							oc	uoB	ugu	uug	uBA	AP	. ,	HPurA	Brl A	urBl	urgc		u	Br. c	Hu	Brg
							cB	uP.	uuA	uuB	uBl	Ag	. ,	HPurA	Br. u	urBA	urgI		u	Br. c	Hu	Brg
							cc	uPl	uu.	H	uB,	Au	H	HPurA	Br. P	uruu	urgA		u	Br. c	Hu	Brg
							, B	uPc	uuI	H	uBc	Au	H	HPurA	Br. c	uruP	urPu		u	Br. c	Hu	Brg
							uBB	uug	H	H	. I	H	H	HPurA	BrAA	urg,	uroP	G2, B	u	Br. c	Hg	Brg
							BHuc	uo,	uPg	ugB	uuP	uBg	AP	HPBrI	Brl	Br. c	urBP	G , B	u	Br. c	Hu	Brg
							gB	uo,	ugA	uuI	uuP	uBB	Au	HPBrI	Brl	BrA	urB.		u	Br. c	Hu	Brg
							gc	uo,	ug,	uuc	uuP	Al	. A	HPBrI	Brl	BrAo	urug		u	Br. c	Hu	Brg
							PB	uo,	ugP	uuP	uuP	Ac	. .	HPBrI	Brl	BrA.	uru,		u	Br. c	Hu	Brg
							Pc	uoP	ugu	uug	uuu	Ao	. I	HPBrI	Brl P	urBu	uruA		u	Br. c	Hu	Brg
							oB	uoB	ugB	uuB	uB.	AP	. ,	HPBrI	Brl ,	urBo	urgg		u	Br. c	Hu	Brg
							oc	uP.	uu.	H	uBl	Ag	H	HPBrI	Brl A	urBl	urgc		u	Br. c	Hu	Brg
							cB	uPc	uuI	H	uBc	AB	H	HPBrI	Br. u	urBA	urgI		u	Br. c	Hu	Brg
							cc	uPo	uu,	H	uBo	AB	H	HPBrI	Br. P	uruu	urgA		u	Br. c	Hu	Brg
							, B	uPg	uuc	H	uBg	. A	H	HPBrI	Br. c	uruP	urPu		u	Br. c	Hu	Brg
							uBB	H	H	H	H	H	H	HPBrI	BrAA	urg,	uroP	G2, B	u	Br. c	Hg	Brg
							BHuc	uoB	ugI	uu,	uBA	AA	AB	Hg. ro	Brl	Br. c	urBP	G , B	u	Br. c	Hu	Brg
							gB	uoB	ugo	uuP	uBA	A,	. I	Hg. ro	Brl	BrA	urB.		u	Br. c	Hu	Brg
							gc	uoB	ugu	uuu	uBA	Ao	. ,	Hg. ro	Brl	BrAo	urug		u	Br. c	Hu	Brg
							PB	uoB	uuA	H	uBA	Ag	H	Hg. ro	Brl	BrA.	uru,		u	Br. c	Hu	Brg
							Pc	uPl	uuI	H	uB,	AB	H	Hg. ro	Brl P	urBu	uruA		u	Br. c	Hu	Brg
							oB	uPc	uuc	H	uBo	. A	H	Hg. ro	Brl ,	urBo	urgg		u	Br. c	Hu	Brg
							oc	uPg	uuo	H	uBP	. .	H	Hg. ro	Brl A	urBl	urgc		u	Br. c	Hu	Brg
							cB	uPB	uug	H	uBu	. I	H	Hg. ro	Br. u	urBA	urgI		u	Br. c	Hu	Brg
							cc	ugA	uuu	H	uBB	. ,	H	Hg. ro	Br. P	uruu	urgA		u	Br. c	Hu	Brg
							, B	ugI	uuB	H	AA	. c	H	Hg. ro	Br. c	uruP	urPu		u	Br. c	Hu	Brg
							uBB	H	H	H	H	H	H	Hg. ro	BrAA	urg,	uroP	G2, B	u	Br. c	Hg	Brg

9el c®3 Pt e"st , t &s/k 8b®®k 8 Ø bmNme wks®bcevu ceb 8sks/g[1]

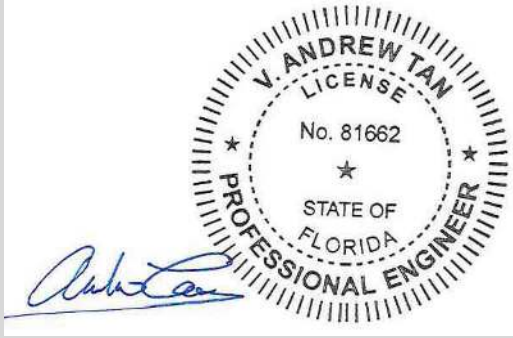

							0F13RØF0F pl nCØF17 sl n Ø X q k q z & KC8 qqKCD 7Ø NC 0F16 sl n Ø X G k q z & K8 qqKC D2Ø N			0F13RØF0F pl nC 0F17RØF16 sl n Ø X k q z & KC 8 qqKCDx K ØØ N			n qZZGq qK 9X/ q 2 GX G X Z D							
							e GX/ q q K qGZqK 8qG 12F4:1:1: Z0F13 pl nC 0F0F pl n 0F17RØF16 sl n			e GX/ q q K qGZqK ® Gq 1 z 5 Z8qG 12F4:1:1 Z0F13 pl nCØF0F pl n X K0F17RØF16 sl n											
							& Kq q GX qz			& Kq q GX qz			T¤Ø=	(							
®Ø z UØ	®Ø z UØ " GØDK[* ° ° ØUG ° J	X ØØZG ØUG ° J	S' ° Z [* Ø " ≤ * g	S' ° Z [* G T≤' UØ=	SØ + * " ≤*	TZ z T≤' UØ= ØUG ° J	D ¤Ø= &* ØG Z s j * * Z]	D	b	f	D	b	f	f * ° Ø[h] ' z ®TSJ	4 ≤ D	4 ≤ b	4 ≤ f		(z	(z	7 b s	7 b sØ
							BHuc	uP.	ugc	uuo	uBl	Al	. .	HØl ro	Brl	Br. c	urBP	G , B	u	Br. c	Hu	Brg
							gB	uP.	ugu	uuu	uBl	Ao	. ,	HØl ro	Brl	BrA	urB.		u	Br. c	Hu	Brg
							gc	uP.	uuA	H	uBl	Ag	H	HØl ro	Brl	BrAo	urug		u	Br. c	Hu	Brg
							PB	uP.	uu,	H	uBl	AB	H	HØl ro	Brl	BrA.	uru,		u	Br. c	Hu	Brg
							Pc	uPc	uuc	H	uBo	. A	H	HØl ro	Brl P	urBu	uruA		u	Br. c	Hu	Brg
							oB	uPg	uuP	H	uBg	. .	H	HØl ro	Brl ,	urBo	urgg		u	Br. c	Hu	Brg
							oc	uPB	uug	H	uBu	. ,	H	HØl ro	Brl A	urBl	urgc		u	Br. c	Hu	Brg
							cB	ug.	uuB	H	AA	. c	H	HØl ro	Br. u	urBA	urgl		u	Br. c	Hu	Brg
							cc	ug,	H	H	A.	H	H	HØl ro	Br. P	uruu	urgA		u	Br. c	Hu	Brg
							, B	ugc	H	H	Al	H	H	HØl ro	Br. c	uruP	urPu		u	Br. c	Hu	Brg
							uBB	H	H	H	H	H	H	HØl ro	BrAA	urg,	uroP	G2, B	u	Br. c	HØ	Brg
							BHuc	ugA	uuI	H	uBB	Au	H	HØorB	Brl	Br. c	urBP	G , B	u	Br. c	Hu	Brg
							gB	ugA	uuo	H	uBB	. .	H	HØorB	Brl	BrA	urB.		u	Br. c	Hu	Brg
							gc	ugA	uuu	H	uBB	. ,	H	HØorB	Brl	BrAo	urug		u	Br. c	Hu	Brg
							PB	ugA	H	H	uBB	H	H	HØorB	Brl	BrA.	uru,		u	Br. c	Hu	Brg
							Pc	ug,	H	H	A.	H	H	HØorB	Brl P	urBu	uruA		u	Br. c	Hu	Brg
							oB	ugo	H	H	A,	H	H	HØorB	Brl ,	urBo	urgg		u	Br. c	Hu	Brg
							oc	ugg	H	H	Ao	H	H	HØorB	Brl A	urBl	urgc		u	Br. c	Hu	Brg
							cB	ugB	H	H	AP	H	H	HØorB	Br. u	urBA	urgl		u	Br. c	Hu	Brg
							cc	uu.	H	H	Ag	H	H	HØorB	Br. P	uruu	urgA		u	Br. c	Hu	Brg
							, B	uuI	H	H	Au	H	H	HØorB	Br. c	uruP	urPu		u	Br. c	Hu	Brg
							uBB	H	H	H	H	H	H	HØorB	BrAA	urg,	uroP	G2, B	u	Br. c	HØ	Brg
							BHuc	ugI	uuc	H	A.	. A	H	HØPrg	Brl	Br. c	urBP	G , B	u	Br. c	Hu	Brg
							gB	ugI	uug	H	A.	. I	H	HØPrg	Brl	BrA	urB.		u	Br. c	Hu	Brg
							gc	ugI	H	H	A.	H	H	HØPrg	Brl	BrAo	urug		u	Br. c	Hu	Brg
							PB	ugI	H	H	A.	H	H	HØPrg	Brl	BrA.	uru,		u	Br. c	Hu	Brg
							Pc	ugo	H	H	A,	H	H	HØPrg	Brl P	urBu	uruA		u	Br. c	Hu	Brg
							oB	ugg	H	H	Ao	H	H	HØPrg	Brl ,	urBo	urgg		u	Br. c	Hu	Brg
							oc	ugB	H	H	AP	H	H	HØPrg	Brl A	urBl	urgc		u	Br. c	Hu	Brg
							cB	uu.	H	H	Au	H	H	HØPrg	Br. u	urBA	urgl		u	Br. c	Hu	Brg
							cc	uu,	H	H	AB	H	H	HØPrg	Br. P	uruu	urgA		u	Br. c	Hu	Brg
							, B	uuc	H	H	. A	H	H	HØPrg	Br. c	uruP	urPu		u	Br. c	Hu	Brg
							uBB	H	H	H	H	H	H	HØPrg	BrAA	urg,	uroP	G2, B	u	Br. c	HØ	Brg
							BHuc	uuu	H	H	. ,	H	H	HØl r.	Brl	Br. c	urBP	G , B	u	Br. c	Hu	Brg
							gB	uuu	H	H	. ,	H	H	HØl r.	Brl	BrA	urB.		u	Br. c	Hu	Brg
							gc	uuu	H	H	. ,	H	H	HØl r.	Brl	BrAo	urug		u	Br. c	Hu	Brg
							PB	uuu	H	H	. ,	H	H	HØl r.	Brl	BrA.	uru,		u	Br. c	Hu	Brg
							Pc	H	H	H	H	H	H	HØl r.	Brl P	urBu	uruA		u	Br. c	Hu	Brg
							oB	H	H	H	H	H	H	HØl r.	Brl ,	urBo	urgg		u	Br. c	Hu	Brg
							oc	H	H	H	H	H	H	HØl r.	Brl A	urBl	urgc		u	Br. c	Hu	Brg
							cB	H	H	H	H	H	H	HØl r.	Br. u	urBA	urgl		u	Br. c	Hu	Brg
							cc	H	H	H	H	H	H	HØl r.	Br. P	uruu	urgA		u	Br. c	Hu	Brg
							, B	H	H	H	H	H	H	HØl r.	Br. c	uruP	urPu		u	Br. c	Hu	Brg
							uBB	H	H	H	H	H	H	HØl r.	BrAA	urg,	uroP	G2, B	u	Br. c	HØ	Brg
							BHuc	uoA	uPc	ugP	uuc	uBc	Ac	HPurA	Brl	Br. c	urBP	G , B	u	Br. c	Hu	Brg
							gB	uoA	uPu	ugB	uuc	uBg	AP	HPurA	Brl	BrA	urB.		u	Br. c	Hu	Brg
							gc	uoA	ug.	uu.	uuc	AA	Au	HPurA	Brl	BrAo	urug		u	Br. c	Hu	Brg
							PB	uoA	ug,	uu,	uuc	Al	. A	HPurA	Brl	BrA.	uru,		u	Br. c	Hu	Brg
							Pc	uo,	ugo	uuo	uuP	A,	. .	HPurA	Brl P	urBu	uruA		u	Br. c	Hu	Brg
							oB	uoP	ugg	uuP	uuu	Ac	. I	HPurA	Brl ,	urBo	urgg		u	Br. c	Hu	Brg
							oc	uoB	ugu	uug	uBA	AP	. ,	HPurA	Brl A	urBl	urgc		u	Br. c	Hu	Brg
							cB	uP.	uuA	uuB	uBl	Ag	. ,	HPurA	Br. u	urBA	urgl		u	Br. c	Hu	Brg
							cc	uPl	uu.	H	uB,	Au	H	HPurA	Br. P	uruu	urgA		u	Br. c	Hu	Brg
							, B	uPc	uuI	H	uBc	Au	H	HPurA	Br. c	uruP	urPu		u	Br. c	Hu	Brg
							uBB	uug	H	H	. I	H	H	HPurA	BrAA	urg,	uroP	G2, B	u	Br. c	HØ	Brg
							BHuc	uPP	ugu	H	uBP	Ao	H	HØcr,	Brl	Br. c	urBP	G , B	u	Br. c	Hu	Brg
							gB	uPP	uuI	H	uBP	Au	H	HØcr,	Brl	BrA	urB.		u	Br. c	Hu	Brg
							gc	uPP	uuc	H	uBP	. A	H	HØcr,	Brl	BrAo	urug		u	Br. c	Hu	Brg
							PB	uPP	uug	H	uBP	. I	H	HØcr,	Brl	BrA.	uru,		u	Br. c	Hu	Brg
							Pc	uPB	uuu	H	uBu	. ,	H	HØcr,	Brl P	urBu	uruA		u	Br. c	Hu	Brg
							oB	ug.	H	H	AA	H	H	HØcr,	Brl ,	urBo	urgg		u	Br. c	Hu	Brg
							oc	ug,	H	H	Al	H	H	HØcr,	Brl A	urBl	urgc		u	Br. c	Hu	Brg
							cB	ugo	H	H	A,	H	H	HØcr,	Br. u	urBA	urgl		u	Br. c	Hu	Brg
							cc	ugg	H	H	Ac	H	H	HØcr,	Br. P	uruu	urgA		u	Br. c	Hu	Brg
							, B	ugu	H	H	Ao	H	H	HØcr,	Br. c	uruP	urPu		u	Br. c	Hu	Brg
							uBB	H	H	H	H	H	H	HØcr,	BrAA	urg,	uroP	G2, B	u	Br. c	HØ	Brg

9el c®3 Pt e"st , t &sv k 8b®®k 8 Ø bmNme wks®bcevu ceb 8sksvg[1]

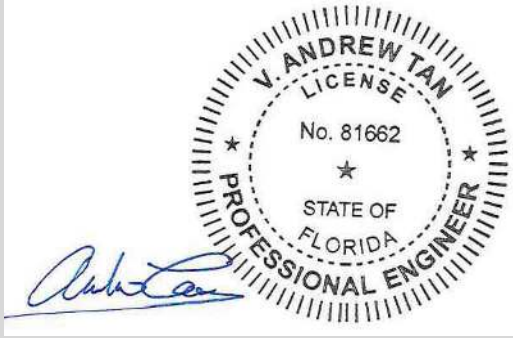

								0F13RØF0F pl nCØF17 sl n Ø X q k q z & KC8 qqKCD 7ØNC 0F16 sl n Ø X G k q z & K8 qqKC DØØN			0F13RØF0F pl nC 0F17RØF16 sl n Ø X k q z & KC 8 qqKCDx K ØØN			n qZZGq qK 9X/ q 2 GXG X Z D							
								e GX/ q q K qGZqK 8qG 12F4:1:1: Z0F13 pl nC 0F0F pl n 0F17RØF16 sl n			e GX/ q q K qGZqK ® Gq 1 z 5 Z8qG 12F4:1:1 Z0F13 pl nCØF0F pl n X K0F17RØF16 sl n										
								& Kq q GX qz			& Kq q GX qz			T2Ø=	(						
®Ø z UZ	®Ø z UZ " GØDK[* ° ° ØUG ° J	X ØZG ØUG ° J	S' ° Z [* Ø " ≤ * g	S' ° Z [* G T≤' UØ=	SØ + * " ≤*	TZ z T≤' UØ= ØUG ° J	D Ø2Ø= &* ØG Ø2s j * * Z]	D	b	f	D	b	f	f * ° Ø[h] ' z ®TSJ	4 ≤ D	4 ≤ b	4 ≤ f		(z	(z	7 b s	7 b sØ
							BHuc	ugu	uuB	H	Ao	. c	H	HgurP	Brl	Br. c	urBP	G , B	u	Br. c	Hu	Brg
							gB	ugu	H	H	Ao	H	H	HgurP	Brl	BrA	urB.		u	Br. c	Hu	Brg
							gc	ugu	H	H	Ao	H	H	HgurP	Brl	BrAo	urug		u	Br. c	Hu	Brg
							PB	ugu	H	H	Ao	H	H	HgurP	Brl	BrA.	uru,		u	Br. c	Hu	Brg
							Pc	uuA	H	H	Ag	H	H	HgurP	Brl P	urBu	uruA		u	Br. c	Hu	Brg
							oB	uuI	H	H	AB	H	H	HgurP	Brl ,	urBo	urgg		u	Br. c	Hu	Brg
							oc	uuc	H	H	. A	H	H	HgurP	Brl A	urBI	urgc		u	Br. c	Hu	Brg
							cB	uuP	H	H	. I	H	H	HgurP	Br. u	urBA	urgI		u	Br. c	Hu	Brg
							cc	uug	H	H	. ,	H	H	HgurP	Br. P	uruu	urgA		u	Br. c	Hu	Brg
							, B	uuB	H	H	. c	H	H	HgurP	Br. c	uruP	urPu		u	Br. c	Hu	Brg
							uBB	H	H	H	H	H	H	HgurP	BrAA	urg,	uroP	G2, B	u	Br. c	Hg	Brg
							BHuc	uuA	H	H	Ag	H	H	HgBro	Brl	Br. c	urBP	G , B	u	Br. c	Hu	Brg
							gB	uuA	H	H	Ag	H	H	HgBro	Brl	BrA	urB.		u	Br. c	Hu	Brg
							gc	uuA	H	H	Ag	H	H	HgBro	Brl	BrAo	urug		u	Br. c	Hu	Brg
							PB	uuA	H	H	Ag	H	H	HgBro	Brl	BrA.	uru,		u	Br. c	Hu	Brg
							Pc	uuI	H	H	AB	H	H	HgBro	Brl P	urBu	uruA		u	Br. c	Hu	Brg
							oB	uuo	H	H	. .	H	H	HgBro	Brl ,	urBo	urgg		u	Br. c	Hu	Brg
							oc	uug	H	H	. I	H	H	HgBro	Brl A	urBI	urgc		u	Br. c	Hu	Brg
							cB	uuu	H	H	. ,	H	H	HgBro	Br. u	urBA	urgI		u	Br. c	Hu	Brg
							cc	H	H	H	H	H	H	HgBro	Br. P	uruu	urgA		u	Br. c	Hu	Brg
							, B	H	H	H	H	H	H	HgBro	Br. c	uruP	urPu		u	Br. c	Hu	Brg
							uBB	H	H	H	H	H	H	HgBro	BrAA	urg,	uroP	G2, B	u	Br. c	Hg	Brg
							BHuc	uuo	H	H	. A	H	H	Hu. rA	Brl	Br. c	urBP	G , B	u	Br. c	Hu	Brg
							gB	uuo	H	H	. A	H	H	Hu. rA	Brl	BrA	urB.		u	Br. c	Hu	Brg
							gc	uuo	H	H	. A	H	H	Hu. rA	Brl	BrAo	urug		u	Br. c	Hu	Brg
							PB	uuo	H	H	. A	H	H	Hu. rA	Brl	BrA.	uru,		u	Br. c	Hu	Brg
							Pc	uug	H	H	. I	H	H	Hu. rA	Brl P	urBu	uruA		u	Br. c	Hu	Brg
							oB	H	H	H	H	H	H	Hu. rA	Brl ,	urBo	urgg		u	Br. c	Hu	Brg
							oc	H	H	H	H	H	H	Hu. rA	Brl A	urBI	urgc		u	Br. c	Hu	Brg
							cB	H	H	H	H	H	H	Hu. rA	Br. u	urBA	urgI		u	Br. c	Hu	Brg
							cc	H	H	H	H	H	H	Hu. rA	Br. P	uruu	urgA		u	Br. c	Hu	Brg
							, B	H	H	H	H	H	H	Hu. rA	Br. c	uruP	urPu		u	Br. c	Hu	Brg
							uBB	H	H	H	H	H	H	Hu. rA	BrAA	urg,	uroP	G2, B	u	Br. c	Hg	Brg
							BHuc	uug	H	H	. I	H	H	Hu. rP	Brl	Br. c	urBP	G , B	u	Br. c	Hu	Brg
							gB	uug	H	H	. I	H	H	Hu. rP	Brl	BrA	urB.		u	Br. c	Hu	Brg
							gc	uug	H	H	. I	H	H	Hu. rP	Brl	BrAo	urug		u	Br. c	Hu	Brg
							PB	uug	H	H	. I	H	H	Hu. rP	Brl	BrA.	uru,		u	Br. c	Hu	Brg
							Pc	uuB	H	H	. c	H	H	Hu. rP	Brl P	urBu	uruA		u	Br. c	Hu	Brg
							oB	H	H	H	H	H	H	Hu. rP	Brl ,	urBo	urgg		u	Br. c	Hu	Brg
							oc	H	H	H	H	H	H	Hu. rP	Brl A	urBI	urgc		u	Br. c	Hu	Brg
							cB	H	H	H	H	H	H	Hu. rP	Br. u	urBA	urgI		u	Br. c	Hu	Brg
							cc	H	H	H	H	H	H	Hu. rP	Br. P	uruu	urgA		u	Br. c	Hu	Brg
							, B	H	H	H	H	H	H	Hu. rP	Br. c	uruP	urPu		u	Br. c	Hu	Brg
							uBB	H	H	H	H	H	H	Hu. rP	BrAA	urg,	uroP	G2, B	u	Br. c	Hg	Brg
							BHuc	q, B	qP,	quc	qBg	u. P	u, .	HA. rB	Brl	Br. c	urBP	G , B	u	Br. c	Hu	Brg
							gB	g, B	gPB	guB	gBg	ul .	u, g	HA. rB	Brl	BrA	urB.		u	Br. c	Hu	Brg
							gc	g, B	ggc	gB,	gBg	ul o	u, B	HA. rB	Brl	BrAo	urug		u	Br. c	Hu	Brg
							PB	g, B	ggB	gBg	gBg	ul u	ucI	HA. rB	Brl	BrA.	uru,		u	Br. c	Hu	Brg
							Pc	gcc	guI	gBB	uA.	u, .	ucc	HA. rB	Brl P	urBu	uruA		u	Br. c	Hu	Brg
							oB	gcB	guo	uAI	uAo	u, ,	ucP	HA. rB	Brl ,	urBo	urgg		u	Br. c	Hu	Brg
							oc	go,	guu	uAc	uAu	u, o	ucu	HA. rB	Brl A	urBI	urgc		u	Br. c	Hu	Brg
							cB	gog	gBA	uAP	u. .	u, g	ucB	HA. rB	Br. u	urBA	urgI		u	Br. c	Hu	Brg
							cc	gPA	gBI	uAg	u. c	u, B	uoA	HA. rB	Br. P	uruu	urgA		u	Br. c	Hu	Brg
							, B	gP,	gBc	uAB	u. P	ucA	uoI	HA. rB	Br. c	uruP	urPu		u	Br. c	Hu	Brg
							uBB	uA,	ul P	u, P	ucg	uPo	ug,	HA. rB	BrAA	urg,	uroP	G2, B	u	Br. c	Hg	Brg
							BHuc	gPP	guu	uAg	u. B	u, o	uoA	HI . ro	Brl	Br. c	urBP	G , B	u	Br. c	Hu	Brg
							gB	gPP	gBc	u. .	u. B	ucA	uoc	HI . ro	Brl	BrA	urB.		u	Br. c	Hu	Brg
							gc	gPP	gBu	u. o	u. B	uc,	uoP	HI . ro	Brl	BrAo	urug		u	Br. c	Hu	Brg
							PB	gPP	uAI	u. u	u. B	ucP	uoB	HI . ro	Brl	BrA.	uru,		u	Br. c	Hu	Brg
							Pc	gg.	uAo	ul A	ul I	ucB	uP.	HI . ro	Brl P	urBu	uruA		u	Br. c	Hu	Brg
							oB	ggo	uAu	ul ,	ul P	uo.	uPI	HI . ro	Brl ,	urBo	urgg		u	Br. c	Hu	Brg
							oc	ggB	u. A	ul c	ul B	uo,	uPc	HI . ro	Brl A	urBI	urgc		u	Br. c	Hu	Brg
							cB	guI	u. I	ul P	u, .	uoc	uPo	HI . ro	Br. u	urBA	urgI		u	Br. c	Hu	Brg
							cc	guo	u. c	ul g	u, ,	uoP	uPP	HI . ro	Br. P	uruu	urgA		u	Br. c	Hu	Brg
							, B	guu	u. P	ul B	u, o	uog	uPg	HI . ro	Br. c	uruP	urPu		u	Br. c	Hu	Brg
							uBB	ul c	ucc	uo,	uP,	ugB	uuP	HI . ro	BrAA	urg,	uroP	G2, B	u	Br. c	Hg	Brg

9el c®3 Pt e"st , t &s/k 8b®®k8 Ø bmNme wks®bcevu ceb 8ks/g[1]

V. ANDREW TAN
LICENSE
No. 81662
STATE OF FLORIDA
PROFESSIONAL ENGINEER

								0F13RØF0F pl nCØF17 sl n Ø X q k q z & KC8 qqKCD 7ØNC 0F16 sl n Ø X G k q z & K8 qqKC DØØN			0F13RØF0F pl nC 0F17RØF16 sl n Ø X k q z & KC 8 qqKCDx K ØØN									
								e GX/ q q K qGZqK 8qG 12F4:1:1: Z0F13 pl nC 0F0F pl n 0F17RØF16 sl n			e GX/ q q K qGZqK ® Gq 1 z 5 Z8qG 12F4:1:1 Z0F13 pl nCØF0F pl n X K0F17RØF16 sl n			n qZZGq qK 9X/ q 2 GXG X Z D						
								& K q q GX qz			& K q q GX qz			T Ø¤Ø=	(					
®Ø¤z UÆ	®Ø¤z UÆ "GØDK[* ° ° ØUG ° J	X Ø¤ZG ØUG ° J	S' ° Æ [* Ø " ≤ * g	S' ° Æ [* G T≤' UØ=	SØ + * " ≤*	TZ z T≤' UØ= ØUG ° J	D Ø¤Ø= &* ØG Ø ≤s j * * Æ	D	b	f	D	b	f	f * ° Ø[h] ' z ®TSJ	4 ≤ D	4 ≤ b	4 ≤ f		(z	(z	7 b≤	7 b≤Ø
							BHuc	guP	uAP	ul c	u, c	uoA	uP,	H crP	Brl	Br. c	urBP	G , B	u	Br. c	Hu	Brg
							gB	guP	u. .	ul u	u, c	uoc	uPP	H crP	Brl	BrA	urB.		u	Br. c	Hu	Brg
							gc	guP	u. o	u, .	u, c	uog	uPB	H crP	Brl	BrAo	urug		u	Br. c	Hu	Brg
							PB	guP	u. B	u, c	u, c	uPA	ug.	H crP	Brl	BrA.	uru,		u	Br. c	Hu	Brg
							Pc	gB.	ul l	u, P	u, u	uPl	ug,	H crP	Brl P	urBu	uruA		u	Br. c	Hu	Brg
							oB	gBo	ul o	u, u	uc.	uPc	ugc	H crP	Brl ,	urBo	urgg		u	Br. c	Hu	Brg
							oc	gBu	ul g	ucA	uc,	uPo	ugo	H crP	Brl A	urBl	urgc		u	Br. c	Hu	Brg
							cB	uA.	ul B	uc.	ucP	uPg	ugg	H crP	Br. u	urBA	urgl		u	Br. c	Hu	Brg
							cc	uAc	u, A	ucl	ucu	uPu	ugu	H crP	Br. P	uruu	urgA		u	Br. c	Hu	Brg
							, B	uAP	u, l	ucc	uoA	uPB	ugB	H crP	Br. c	uruP	urPu		u	Br. c	Hu	Brg
							uBB	u, B	uog	uPP	ugo	uuB	uBP	H crP	BrAA	urg,	uroP	G2, B	u	Br. c	Hg	Brg
							BHuc	gB.	u. A	ul g	u, u	uo,	uPP	H grl	Brl	Br. c	urBP	G , B	u	Br. c	Hu	Brg
							gB	gB.	u. o	u, .	u, u	uog	uPB	H grl	Brl	BrA	urB.		u	Br. c	Hu	Brg
							gc	gB.	u. B	u, c	u, u	uPA	ug.	H grl	Brl	BrAo	urug		u	Br. c	Hu	Brg
							PB	gB.	ul ,	u, g	u, u	uP,	ugc	H grl	Brl	BrA.	uru,		u	Br. c	Hu	Brg
							Pc	gBo	ul P	u, B	uc.	uPo	ugo	H grl	Brl P	urBu	uruA		u	Br. c	Hu	Brg
							oB	gBB	ul u	uc.	ucc	uPg	ugg	H grl	Brl ,	urBo	urgg		u	Br. c	Hu	Brg
							oc	uAl	u, A	uc,	ucg	uPu	ugu	H grl	Brl A	urBl	urgc		u	Br. c	Hu	Brg
							cB	uAo	u, l	ucc	ucB	ugA	ugB	H grl	Br. u	urBA	urgl		u	Br. c	Hu	Brg
							cc	uAu	u, c	uco	uo.	ug.	uuA	H grl	Br. P	uruu	urgA		u	Br. c	Hu	Brg
							, B	u. A	u, o	ucg	uo,	ugl	uu.	H grl	Br. c	uruP	urPu		u	Br. c	Hu	Brg
							uBB	ucl	uPA	uPB	ugu	uBl	uBu	H grl	BrAA	urg,	uroP	G2, B	u	Br. c	Hg	Brg
							BHuc	gBu	u. g	u, c	ucc	uou	ug.	Hc. ru	Brl	Br. c	urBP	G , B	u	Br. c	Hu	Brg
							gB	gBu	ul l	u, u	ucc	uPl	ugc	Hc. ru	Brl	BrA	urB.		u	Br. c	Hu	Brg
							gc	gBu	ul P	ucA	ucc	uPo	ugP	Hc. ru	Brl	BrAo	urug		u	Br. c	Hu	Brg
							PB	gBu	u, A	uc,	ucc	uPu	ugu	Hc. ru	Brl	BrA.	uru,		u	Br. c	Hu	Brg
							Pc	uA,	u, l	uco	ucg	ugA	uuA	Hc. ru	Brl P	urBu	uruA		u	Br. c	Hu	Brg
							oB	uAg	u, c	ucg	uoA	ugl	uu.	Hc. ru	Brl ,	urBo	urgg		u	Br. c	Hu	Brg
							oc	u. A	u, P	ucB	uoI	ug,	uu,	Hc. ru	Brl A	urBl	urgc		u	Br. c	Hu	Brg
							cB	u. ,	u, u	uoA	uoo	ugo	uuc	Hc. ru	Br. u	urBA	urgl		u	Br. c	Hu	Brg
							cc	u. o	ucA	uo.	uoP	ugP	uuo	Hc. ru	Br. P	uruu	urgA		u	Br. c	Hu	Brg
							, B	u. g	uc.	uoI	uou	ugg	uuo	Hc. ru	Br. c	uruP	urPu		u	Br. c	Hu	Brg
							uBB	ucu	uPo	ugc	uuI	uBP	Al	Hc. ru	BrAA	urg,	uroP	G2, B	u	Br. c	Hg	Brg
							BHuc	uAl	ul A	u, g	ucP	uP.	ug,	Hc, rB	Brl	Br. c	urBP	G , B	u	Br. c	Hu	Brg
							gB	uAl	ul o	ucA	ucP	uPc	ugP	Hc, rB	Brl	BrA	urB.		u	Br. c	Hu	Brg
							gc	uAl	ul B	uc,	ucP	uPg	ugu	Hc, rB	Brl	BrAo	urug		u	Br. c	Hu	Brg
							PB	uAl	u, ,	ucP	ucP	ugA	uu.	Hc, rB	Brl	BrA.	uru,		u	Br. c	Hu	Brg
							Pc	uAP	u, o	ucu	uoA	ugl	uuI	Hc, rB	Brl P	urBu	uruA		u	Br. c	Hu	Brg
							oB	u. A	u, g	uoA	uo,	ugc	uu,	Hc, rB	Brl ,	urBo	urgg		u	Br. c	Hu	Brg
							oc	u. ,	u, B	uo.	uoo	ugo	uuo	Hc, rB	Brl A	urBl	urgc		u	Br. c	Hu	Brg
							cB	u. P	uc.	uo,	uog	ugg	uuP	Hc, rB	Br. u	urBA	urgl		u	Br. c	Hu	Brg
							cc	u. u	uc,	uoc	uoB	ugu	uug	Hc, rB	Br. P	uruu	urgA		u	Br. c	Hu	Brg
							, B	ul A	ucc	uoo	uP.	ugB	uuu	Hc, rB	Br. c	uruP	urPu		u	Br. c	Hu	Brg
							uBB	uo.	uPu	ugP	uuc	uBg	Ac	Hc, rB	BrAA	urg,	uroP	G2, B	u	Br. c	Hg	Brg
							BHuc	u. o	u, l	ucg	uoP	ugA	uu.	HØArB	Brl	Br. c	urBP	G , B	u	Br. c	Hu	Brg
							gB	u. o	u, g	uo.	uoP	ug,	uuc	HØArB	Brl	BrA	urB.		u	Br. c	Hu	Brg
							gc	u. o	ucA	uo,	uoP	ugP	uuP	HØArB	Brl	BrAo	urug		u	Br. c	Hu	Brg
							PB	u. o	uc,	uoP	uoP	ugu	uuu	HØArB	Brl	BrA.	uru,		u	Br. c	Hu	Brg
							Pc	u. B	ucP	uou	uoB	uuA	uBA	HØArB	Brl P	urBu	uruA		u	Br. c	Hu	Brg
							oB	ul l	ucu	uoB	uPl	uuI	uB.	HØArB	Brl ,	urBo	urgg		u	Br. c	Hu	Brg
							oc	ul o	uoA	uP.	uPc	uu,	uBl	HØArB	Brl A	urBl	urgc		u	Br. c	Hu	Brg
							cB	ul u	uo.	uPl	uPP	uuo	uB,	HØArB	Br. u	urBA	urgl		u	Br. c	Hu	Brg
							cc	u, A	uo,	uP,	uPu	uuP	uBc	HØArB	Br. P	uruu	urgA		u	Br. c	Hu	Brg
							, B	u, l	uoc	uPc	ugA	uug	uBo	HØArB	Br. c	uruP	urPu		u	Br. c	Hu	Brg
							uBB	uP.	ugP	uuc	uBl	Ac	. A	HØArB	BrAA	urg,	uroP	G2, B	u	Br. c	Hg	Brg
							BHuc	u. u	u, c	ucB	uoB	ugl	uu,	HØl rc	Brl	Br. c	urBP	G , B	u	Br. c	Hu	Brg
							gB	u. u	u, B	uo,	uoB	ugo	uuP	HØl rc	Brl	BrA	urB.		u	Br. c	Hu	Brg
							gc	u. u	ucl	uoP	uoB	ugu	uuu	HØl rc	Brl	BrAo	urug		u	Br. c	Hu	Brg
							PB	u. u	ucP	uou	uoB	uuA	uBA	HØl rc	Brl	BrA.	uru,		u	Br. c	Hu	Brg
							Pc	ul .	ucu	uPA	uP.	uuI	uB.	HØl rc	Brl P	urBu	uruA		u	Br. c	Hu	Brg
							oB	ul o	uoA	uPl	uPc	uuc	uB,	HØl rc	Brl ,	urBo	urgg		u	Br. c	Hu	Brg
							oc	ul u	uoI	uP,	uPP	uuo	uBc	HØl rc	Brl A	urBl	urgc		u	Br. c	Hu	Brg
							cB	u, A	uoc	uPc	uPu	uuP	uBo	HØl rc	Br. u	urBA	urgl		u	Br. c	Hu	Brg
							cc	u, l	uoo	uPo	ugA	uug	uBP	HØl rc	Br. P	uruu	urgA		u	Br. c	Hu	Brg
							, B	u, c	uoP	uPP	ugl	uuu	uBP	HØl rc	Br. c	uruP	urPu		u	Br. c	Hu	Brg
							uBB	uP,	ugu	uuP	uB,	Ao	. .	HØl rc	BrAA	urg,	uroP	G2, B	u	Br. c	Hg	Brg

9el c®3 Pt e"st , t &s/k 8b®®k8 Ø bmNme wks®bcevu ceb 8sks/g[1]

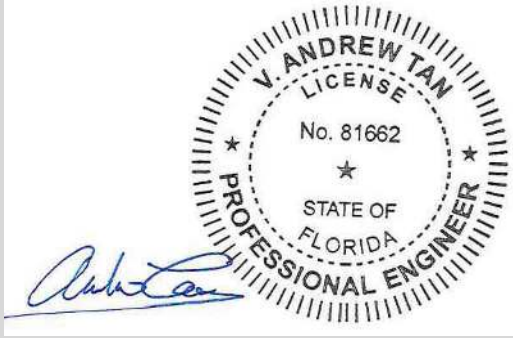

0F13®0F0F pl nØ0F17 sl n Ø X q k q z & KØ8 qqKØD 7Ø NØ 0F16 sl n Ø X G k q z & K8 qqKØ D2Ø N	0F13®0F0F pl nØ 0F17®0F16 sl n Ø X k q z & KØ 8 qqKØD x K ØØ N
e GX/ q q K qGZqK 8qG 12F4:1:1: Z0F13 pl nØ 0F0F pl n 0F17®0F16 sl n	e GX/ q q K qGZqK ® Gq 1 z 5 Z8qG 12F4:1:1 Z0F13 pl nØ0F0F pl n X K0F17®0F16 sl n

& K q q GX qz	& K q q GX qz

n qZZGq qK 9X/ q 2 GXG X Z D																		
T¤Ø=	(																	
f * ° Θ[h] ' z ®TSJ	4 ≤ D	4 ≤ b	4 ≤ f		(z	(z	7 b s	7 b sØ
HP, rc	Brl	Br. c	urBP	G , B	u	Br. c	Hu	Brg
HP, rc	Brl	BrA	urB.		u	Br. c	Hu	Brg
HP, rc	Brl	BrAo	urug		u	Br. c	Hu	Brg
HP, rc	Brl	BrA.	uru,		u	Br. c	Hu	Brg
HP, rc	Brl P	urBu	uruA		u	Br. c	Hu	Brg
HP, rc	Brl ,	urBo	urgg		u	Br. c	Hu	Brg
HP, rc	Brl A	urBl	urgc		u	Br. c	Hu	Brg
HP, rc	Br. u	urBA	urgl		u	Br. c	Hu	Brg
HP, rc	Br. P	uruu	urgA		u	Br. c	Hu	Brg
HP, rc	Br. c	uruP	urPu		u	Br. c	Hu	Brg
HP, rc	BrAA	urg,	uroP	G2, B	u	Br. c	Hg	Brg
HJ crP	Brl	Br. c	urBP	G , B	u	Br. c	Hu	Brg
HJ crP	Brl	BrA	urB.		u	Br. c	Hu	Brg
HJ crP	Brl	BrAo	urug		u	Br. c	Hu	Brg
HJ crP	Brl	BrA.	uru,		u	Br. c	Hu	Brg
HJ crP	Brl P	urBu	uruA		u	Br. c	Hu	Brg
HJ crP	Brl ,	urBo	urgg		u	Br. c	Hu	Brg
HJ crP	Brl A	urBl	urgc		u	Br. c	Hu	Brg
HJ crP	Br. u	urBA	urgl		u	Br. c	Hu	Brg
HJ crP	Br. P	uruu	urgA		u	Br. c	Hu	Brg
HJ crP	Br. c	uruP	urPu		u	Br. c	Hu	Brg
HJ crP	BrAA	urg,	uroP	G2, B	u	Br. c	Hg	Brg
HtgrP	Brl	Br. c	urBP	G , B	u	Br. c	Hu	Brg
HtgrP	Brl	BrA	urB.		u	Br. c	Hu	Brg
HtgrP	Brl	BrAo	urug		u	Br. c	Hu	Brg
HtgrP	Brl	BrA.	uru,		u	Br. c	Hu	Brg
HtgrP	Brl P	urBu	uruA		u	Br. c	Hu	Brg
HtgrP	Brl ,	urBo	urgg		u	Br. c	Hu	Brg
HtgrP	Brl A	urBl	urgc		u	Br. c	Hu	Brg
HtgrP	Br. u	urBA	urgl		u	Br. c	Hu	Brg
HtgrP	Br. P	uruu	urgA		u	Br. c	Hu	Brg
HtgrP	Br. c	uruP	urPu		u	Br. c	Hu	Brg
HtgrP	BrAA	urg,	uroP	G2, B	u	Br. c	Hg	Brg
HbPrc	Brl	Br. c	urBP	G , B	u	Br. c	Hu	Brg
HbPrc	Brl	BrA	urB.		u	Br. c	Hu	Brg
HbPrc	Brl	BrAo	urug		u	Br. c	Hu	Brg
HbPrc	Brl	BrA.	uru,		u	Br. c	Hu	Brg
HbPrc	Brl P	urBu	uruA		u	Br. c	Hu	Brg
HbPrc	Brl ,	urBo	urgg		u	Br. c	Hu	Brg
HbPrc	Brl A	urBl	urgc		u	Br. c	Hu	Brg
HbPrc	Br. u	urBA	urgl		u	Br. c	Hu	Brg
HbPrc	Br. P	uruu	urgA		u	Br. c	Hu	Brg
HbPrc	Br. c	uruP	urPu		u	Br. c	Hu	Brg
HbPrc	BrAA	urg,	uroP	G2, B	u	Br. c	Hg	Brg
Hbur.	Brl	Br. c	urBP	G , B	u	Br. c	Hu	Brg
Hbur.	Brl	BrA	urB.		u	Br. c	Hu	Brg
Hbur.	Brl	BrAo	urug		u	Br. c	Hu	Brg
Hbur.	Brl	BrA.	uru,		u	Br. c	Hu	Brg
Hbur.	Brl P	urBu	uruA		u	Br. c	Hu	Brg
Hbur.	Brl ,	urBo	urgg		u	Br. c	Hu	Brg
Hbur.	Brl A	urBl	urgc		u	Br. c	Hu	Brg
Hbur.	Br. u	urBA	urgl		u	Br. c	Hu	Brg
Hbur.	Br. P	uruu	urgA		u	Br. c	Hu	Brg
Hbur.	Br. c	uruP	urPu		u	Br. c	Hu	Brg
Hbur.	BrAA	urg,	uroP	G2, B	u	Br. c	Hg	Brg
HP. rl	Brl	Br. c	urBP	G , B	u	Br. c	Hu	Brg
HP. rl	Brl	BrA	urB.		u	Br. c	Hu	Brg
HP. rl	Brl	BrAo	urug		u	Br. c	Hu	Brg
HP. rl	Brl	BrA.	uru,		u	Br. c	Hu	Brg
HP. rl	Brl P	urBu	uruA		u	Br. c	Hu	Brg
HP. rl	Brl ,	urBo	urgg		u	Br. c	Hu	Brg
HP. rl	Brl A	urBl	urgc		u	Br. c	Hu	Brg
HP. rl	Br. u	urBA	urgl		u	Br. c	Hu	Brg
HP. rl	Br. P	uruu	urgA		u	Br. c	Hu	Brg
HP. rl	Br. c	uruP	urPu		u	Br. c	Hu	Brg
HP. rl	BrAA	urg,	uroP	G2, B	u	Br. c	Hg	Brg

®Ø z UZ	®Ø z UZ "GØK[* ° ° ØUG ° J	X ØZG ØUG ° J	S' ° Z [* Θ " ≤ * g	S' ° Z [* G T≤' UØ=	SΘ + * " ≤*	TZ z T≤' UØ= ØUG ° J	D ØØ= &* ΘG p Zs j * * Z J	D	b	f	D	b	f
&' ØØ®;' [K	cdu,	ug	5] r uu =' r / uHPdbl ;] [= 9]] j Ø= [' Ø	D;Øz [' Ø	g/ o X]] z T®S	u,	BHuc	ucA	uoo	uPu	ugP	uug	uBu
							gB	ucA	uoB	ug.	ugP	uBA	AA
							gc	ucA	uPl	ug,	ugP	uB,	Al
							PB	ucA	uPo	ugP	ugP	uBo	A,
							Pc	uc,	uPg	ugg	ugu	uBg	Ao
							oB	ucg	uPB	ugB	uu.	uBu	AP
							oc	ucB	ugA	uuA	uu,	uBB	Ag
							cB	uo.	ugl	uu.	uuo	AA	Au
							cc	uo,	ug,	uul	uuP	A.	Au
							, B	uoo	ugc	uu,	uug	Al	AB
							uBB	uuA	H	H	Ag	H	H
&' ØØ®;' [K	cdu,	crgc	5] r uu =' r / uHPdbl ;] [= 9]] j Ø= [' Ø	D;Øz [' Ø	g/ o X]] z T®S	go	BHuc	guP	uAP	ul c	u, c	uoA	uP,
							gB	guP	u. .	ul u	u, c	uoc	uPP
							gc	guP	u. o	u, .	u, c	uog	uPB
							PB	guP	u. B	u, c	u, c	uPA	ug.
							Pc	gB.	ul l	u, P	u, u	uPl	ug,
							oB	gBo	ul o	u, u	uc.	uPc	ugc
							oc	gBu	ul g	ucA	uc,	uPo	ugo
							cB	uA.	ul B	uc.	ucP	uPg	ugg
							cc	uAc	u, A	ucl	ucu	uPu	ugu
							, B	uAP	u, l	ucc	uoA	uPB	ugB
							uBB	u, B	uog	uPP	ugo	uuB	uBP
&' ØØ®;' [K	cdu,	, rgc	5] r uu =' r / uHPdbl ;] [= 9]] j Ø= [' Ø	D;Øz [' Ø	g/ o X]] z T®S	go	BHuc	uAB	ul P	ucl	uol	uPo	ugu
							gB	uAB	u, .	ucP	uol	uPB	uuA
							gc	uAB	u, o	ucB	uol	ugl	uu,
							PB	uAB	u, u	uo.	uol	ugc	uuo
							Pc	u. ,	uc.	uo,	uoo	ugP	uuP
							oB	u. P	uc,	uoo	uou	ugu	uug
							oc	u. B	uco	uoP	uPA	uuA	uuB
							cB	ul l	ucg	uou	uPl	uu.	uBA
							cc	ul c	ucu	uoB	uPc	uul	uBA
							, B	ul P	ucB	uPA	uPo	uu,	uB.
							uBB	uoP	ugl	uuA	uuu	A.	Ag
&' ØØ®;' [K	cdu,	l rgc	5] r uu =' r / uHPdbl ;] [= 9]] j Ø= [' Ø	D;Øz [' Ø	g/ o X]] z T®S	go	BHuc	ul o	uc.	uoP	uPc	ugg	uuu
							gB	ul o	ucP	uoB	uPc	uuA	uB.
							gc	ul o	ucB	uPl	uPc	uu,	uB,
							PB	ul o	uol	uPc	uPc	uuo	uBo
							Pc	ul B	uoc	uPP	uPg	uug	uBP
							oB	u, l	uog	uPg	ugA	uuB	uBg
							oc	u, o	uou	uPB	ugl	uBA	uBu
							cB	u, u	uPA	ugA	ugc	uB.	uBB
							cc	ucA	uP.	ug.	ugo	uBl	AA
							, B	uc.	uPl	ugl	ugg	uB,	A.
							uBB	uPB	uu,	H	uBu	AB	H
&' ØØ®;' [K	cdu,	l rc	5] r uu =' r / uHPdbl ;] [= 9]] j Ø= [' Ø	D;Øz [' Ø	g/ o X]] z T®S	go	BHuc	ul B	uco	uoB	uPg	ugB	uBA
							gB	ul B	ucB	uPl	uPg	uu,	uB,
							gc	ul B	uol	uPc	uPg	uuo	uBo
							PB	ul B	uoo	uPg	uPg	uuu	uBg
							Pc	u, l	uog	uPB	ugA	uuB	uBu
							oB	u, P	uoB	ugA	ug,	uB.	uBB
							oc	u, u	uP.	ug.	ugo	uBl	AA
							cB	uc.	uP,	ug,	ugP	uB,	A.
							cc	uc,	uPc	ugc	ugu	uBc	Al
							, B	uco	uPo	ugo	ugB	uBo	A,
							uBB	ug.	uuP	H	AA	. .	H
&' ØØ®;' [K	cdu,	.	5] r uu =' r / uHPdbl ;] [= 9]] j Ø= [' Ø	D;Øz [' Ø	g/ o X]] z T®S	go	BHuc	u, o	uoA	uPc	ugl	uuc	uBc
							gB	u, o	uoo	uPg	ugl	uug	uBg
							gc	u, o	uou	ugA	ugl	uBA	uBB
							PB	u, o	uP.	ugl	ugl	uBl	AA
							Pc	u, B	uP,	ug,	ugo	uB,	Al
							oB	ucl	uPo	ugo	ugg	uBo	A,
							oc	ucc	uPP	ugP	ugB	uBP	Ac
							cB	ucg	uPu	ugg	uu.	uBg	Ao
							cc	ucB	uPB	ugu	uu,	uBu	AP
							, B	uoA	ugA	ugB	uuc	uBB	AP
							uBB	ugP	H	H	Ac	H	H

9el c®3 Pt e"st , t &s/k 8b®®k8 @ bmNmewks®bcevu ceb 8ksvg[1]

V. ANDREW TAN
LICENSE
No. 81662
STATE OF FLORIDA
PROFESSIONAL ENGINEER

0F13R0F0F pl nC0F17 sl n Q X q k q z & KC8 qqKCD 7@NC 0F16 sl n @ X G k q z & K8 qqKC D2@N

0F13R0F0F pl nC 0F17R0F16 sl n @ X k q z & KC 8 qqKCDx K @@N

e GX/ q q K qGZqK 8qG 12F4:1:1: Z0F13 pl nC 0F0F pl n 0F17R0F16 sl n

e GX/ q q K qGZqK ® Gq 1 z 5 Z8qG 12F4:1:1 Z0F13 pl nC0F0F pl n X K0F17R0F16 sl n

n qZZGq qK 9X/ q 2 GXG X Z D

& K q q GX qz

& K q q GX qz

T@Ö= (

®@z UZ	®@z UZ "GDK[* ° ° @UG° ° J	X @ZG @UG° ° J	S' ° Z [* @ " ≤* g	S' ° Z [* @ T≤' U@=	S@+ * " ≤*	TZ z T≤' U@= @UG° ° J	D @Ö= &* @@Z s j * * Z]	D	b	f	D	b	f	f * ° @[h] ' z ®TSJ	4 ≤ D	4 ≤ b	4 ≤ f		(z	(z	7 b s	7 b sC
							BHuc	u, u	uo,	uPP	ugc	uuP	uBP	HPl rP	Brl	Br. c	urBP	G , B	u	Br. c	Hu	Brg
							gB	u, u	uog	ugA	ugc	uuB	uBB	HPl rP	Brl	BrA	urB.		u	Br. c	Hu	Brg
							gc	u, u	uPA	ugI	ugc	uBl	A.	HPl rP	Brl	BrAo	urug		u	Br. c	Hu	Brg
							PB	u, u	uP,	ugc	ugc	uBc	Al	HPl rP	Brl	BrA.	uru,		u	Br. c	Hu	Brg
							Pc	ucI	uPo	ugP	ugg	uBo	A,	HPl rP	Brl P	urBu	uruA		u	Br. c	Hu	Brg
							oB	uco	uPg	ugg	ugB	uBg	Ao	HPl rP	Brl ,	urBo	urgg		u	Br. c	Hu	Brg
							oc	ucg	uPB	ugu	uu.	uBu	AP	HPl rP	Brl A	urBl	urgc		u	Br. c	Hu	Brg
							cB	uoA	ugA	uuA	uu,	uBB	Ag	HPl rP	Br. u	urBA	urgI		u	Br. c	Hu	Brg
							cc	uo.	ug.	uu.	uuo	AA	Ag	HPl rP	Br. P	uruu	urgA		u	Br. c	Hu	Brg
							, B	uo,	ugI	uu.	uuP	A.	Au	HPl rP	Br. c	uruP	urPu		u	Br. c	Hu	Brg
							uBB	ugu	H	H	Ao	H	H	HPl rP	BrAA	urg,	uroP	G2, B	u	Br. c	Hg	Brg
							BHuc	ucB	uP,	ugo	uu,	uB,	A,	HPgr,	Brl	Br. c	urBP	G , B	u	Br. c	Hu	Brg
							gB	ucB	uPP	ugu	uu,	uBP	Ao	HPgr,	Brl	BrA	urB.		u	Br. c	Hu	Brg
							gc	ucB	uPB	uuA	uu,	uBB	Ag	HPgr,	Brl	BrAo	urug		u	Br. c	Hu	Brg
							PB	ucB	ugI	uuI	uu,	A.	AB	HPgr,	Brl	BrA.	uru,		u	Br. c	Hu	Brg
							Pc	uoI	ugc	uuc	uuo	Al	. A	HPgr,	Brl P	urBu	uruA		u	Br. c	Hu	Brg
							oB	uoo	ugP	uuo	uug	Ac	. .	HPgr,	Brl ,	urBo	urgg		u	Br. c	Hu	Brg
							oc	uog	ugg	uuP	uuB	Ao	. I	HPgr,	Brl A	urBl	urgc		u	Br. c	Hu	Brg
							cB	uoB	ugB	uug	uB.	AP	. ,	HPgr,	Br. u	urBA	urgI		u	Br. c	Hu	Brg
							cc	uP.	uuA	uuu	uBl	Ag	. ,	HPgr,	Br. P	uruu	urgA		u	Br. c	Hu	Brg
							, B	uP,	uu.	H	uB,	Ag	H	HPgr,	Br. c	uruP	urPu		u	Br. c	Hu	Brg
							uBB	uuP	H	H	. I	H	H	HPgr,	BrAA	urg,	uroP	G2, B	u	Br. c	Hg	Brg
							BHuc	uo.	uPo	ugg	uuc	uBo	Ac	HPurI	Brl	Br. c	urBP	G , B	u	Br. c	Hu	Brg
							gB	uo.	uPu	uuA	uuc	uBu	Ag	HPurI	Brl	BrA	urB.		u	Br. c	Hu	Brg
							gc	uo.	ug.	uuI	uuc	AA	Au	HPurI	Brl	BrAo	urug		u	Br. c	Hu	Brg
							PB	uo.	ugc	uuc	uuc	Al	. A	HPurI	Brl	BrA.	uru,		u	Br. c	Hu	Brg
							Pc	uoc	ugP	uuo	uug	Ac	. .	HPurI	Brl P	urBu	uruA		u	Br. c	Hu	Brg
							oB	uog	ugu	uug	uuB	Ao	. I	HPurI	Brl ,	urBo	urgg		u	Br. c	Hu	Brg
							oc	uoB	ugB	uuu	uB.	AP	. ,	HPurI	Brl A	urBl	urgc		u	Br. c	Hu	Brg
							cB	uP.	uuA	H	uBl	Ag	H	HPurI	Br. u	urBA	urgI		u	Br. c	Hu	Brg
							cc	uP,	uu.	H	uBc	Au	H	HPurI	Br. P	uruu	urgA		u	Br. c	Hu	Brg
							, B	uPo	uuI	H	uBo	AB	H	HPurI	Br. c	uruP	urPu		u	Br. c	Hu	Brg
							uBB	uuu	H	H	. ,	H	H	HPurI	BrAA	urg,	uroP	G2, B	u	Br. c	Hg	Brg
							BHuc	uPB	uu.	H	uBB	Au	H	HgorP	Brl	Br. c	urBP	G , B	u	Br. c	Hu	Brg
							gB	uPB	uuo	H	uBB	. A	H	HgorP	Brl	BrA	urB.		u	Br. c	Hu	Brg
							gc	uPB	uug	H	uBB	. I	H	HgorP	Brl	BrAo	urug		u	Br. c	Hu	Brg
							PB	uPB	H	H	uBB	H	H	HgorP	Brl	BrA.	uru,		u	Br. c	Hu	Brg
							Pc	ugI	H	H	A.	H	H	HgorP	Brl P	urBu	uruA		u	Br. c	Hu	Brg
							oB	ugc	H	H	A,	H	H	HgorP	Brl ,	urBo	urgg		u	Br. c	Hu	Brg
							oc	ugP	H	H	Ac	H	H	HgorP	Brl A	urBl	urgc		u	Br. c	Hu	Brg
							cB	ugu	H	H	AP	H	H	HgorP	Br. u	urBA	urgI		u	Br. c	Hu	Brg
							cc	uuA	H	H	Ag	H	H	HgorP	Br. P	uruu	urgA		u	Br. c	Hu	Brg
							, B	uu.	H	H	Au	H	H	HgorP	Br. c	uruP	urPu		u	Br. c	Hu	Brg
							uBB	H	H	H	H	H	H	HgorP	BrAA	urg,	uroP	G2, B	u	Br. c	Hg	Brg
							BHuc	quB	uAu	uI P	u, P	uo.	uPo	HJ PrA	Brl	Br. c	urBP	G , B	u	Br. c	Hu	Brg
							gB	guB	u. ,	u, A	u, P	uoo	uPu	HJ PrA	Brl	BrA	urB.		u	Br. c	Hu	Brg
							gc	guB	u. g	u, ,	u, P	uou	ugA	HJ PrA	Brl	BrAo	urug		u	Br. c	Hu	Brg
							PB	guB	uI .	u, P	u, P	uP.	ugI	HJ PrA	Brl	BrA.	uru,		u	Br. c	Hu	Brg
							Pc	gB,	uI c	u, u	u, B	uP,	ugc	HJ PrA	Brl P	urBu	uruA		u	Br. c	Hu	Brg
							oB	gBg	uI P	ucA	uc,	uPo	ugP	HJ PrA	Brl ,	urBo	urgg		u	Br. c	Hu	Brg
							oc	uAA	uI u	uc.	uco	uPg	ugg	HJ PrA	Brl A	urBl	urgc		u	Br. c	Hu	Brg
							cB	uA,	u, A	uc,	ucu	uPu	ugu	HJ PrA	Br. u	urBA	urgI		u	Br. c	Hu	Brg
							cc	uAP	u, I	ucc	ucB	ugA	ugB	HJ PrA	Br. P	uruu	urgA		u	Br. c	Hu	Brg
							, B	uAu	u, ,	uco	uo.	ug.	uuA	HJ PrA	Br. c	uruP	urPu		u	Br. c	Hu	Brg
							uBB	uc.	uoB	uPu	ugg	uB.	uBg	HJ PrA	BrAA	urg,	uroP	G2, B	u	Br. c	Hg	Brg
							BHuc	u. .	uI u	ucc	uo,	uPg	ugB	Hcuru	Brl	Br. c	urBP	G , B	u	Br. c	Hu	Brg
							gB	u. .	u, ,	ucu	uo,	ugA	uuI	Hcuru	Brl	BrA	urB.		u	Br. c	Hu	Brg
							gc	u. .	u, g	uoA	uo,	ug,	uuc	Hcuru	Brl	BrAo	urug		u	Br. c	Hu	Brg
							PB	u. .	ucA	uo,	uo,	ugP	uuP	Hcuru	Brl	BrA.	uru,		u	Br. c	Hu	Brg
							Pc	u. o	ucI	uoo	uoP	ugu	uug	Hcuru	Brl P	urBu	uruA		u	Br. c	Hu	Brg
							oB	u. u	uco	uoP	uoB	ugB	uuB	Hcuru	Brl ,	urBo	urgg		u	Br. c	Hu	Brg
							oc	uI .	ucP	uou	uP.	uu.	uBA	Hcuru	Brl A	urBl	urgc		u	Br. c	Hu	Brg
							cB	uI c	ucu	uoB	uPc	uuI	uB.	Hcuru	Br. u	urBA	urgI		u	Br. c	Hu	Brg
							cc	uI P	uoA	uPA	uPo	uu,	uBl	Hcuru	Br. P	uruu	urgA		u	Br. c	Hu	Brg
							, B	uI u	uo.	uP.	uPg	uuc	uBl	Hcuru	Br. c	uruP	urPu		u	Br. c	Hu	Brg
							uBB	uou	ugc	uu.	uBA	Al	Au	Hcuru	BrAA	urg,	uroP	G2, B	u	Br. c	Hg	Brg

9el c®3 Pt e"st , t &s/k 8b®®k8 Ø bmNme wks®bcevu ceb 8ksvg[1]

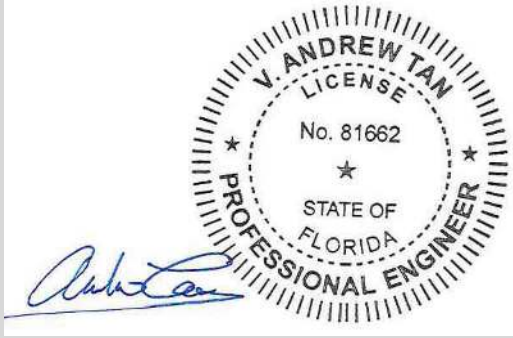

								0F13RØF0F pl nCØF17 sl n Ø X q k q z & KC8 qqKCD 7ØNC 0F16 sl n Ø X G k q z & K8 qqKC DØØN			0F13RØF0F pl nC 0F17RØF16 sl n Ø X k q z & KC 8 qqKCDx K ØØN			n qZZGq qK 9X/ q 2 GX G X Z D						
								e GX/ q q K qGZqK 8qG 12F4:1:1: Z0F13 pl nC 0F0F pl n 0F17RØF16 sl n			e GX/ q q K qGZqK ® Gq 1 z 5 Z8qG 12F4:1:1 Z0F13 pl nCØF0F pl n X K0F17RØF16 sl n									
								& Kq q GX qz			& Kq q GX qz			T¤Ø=	(					
®Ø z UØ	®Ø z UØ "GØK[* ° ° ØUG° J	X ØØG ØUG° J	S' ° Z [* Θ " ≤* g	S' ° Z [* G T≤' UØ=	SΘ + * " ≤*	TZ z T≤' UØ= ØUG° J	D ØØ= &* ΘG Ø s j * * Z	D	b	f	D	b	f	f * ° Θ[h] ' z ®TSJ	4 ≤ D	4 ≤ b	4 ≤ f		(z	(z	7 b s	7 b sØ
							BHuc	ul g	uc,	uog	uPP	ugu	uuB	Hbgr,	Brl	Br. c	urBP	G , B	u	Br. c	Hu	Brg
							gB	ul g	ucu	uP.	uPP	uul	uBl	Hbgr,	Brl	BrA	urB.		u	Br. c	Hu	Brg
							gc	ul g	uo.	uP,	uPP	uuc	uBc	Hbgr,	Brl	BrAo	urug		u	Br. c	Hu	Brg
							PB	ul g	uoc	uPP	uPP	uug	uBP	Hbgr,	Brl	BrA.	uru,		u	Br. c	Hu	Brg
							Pc	u, .	uoP	uPg	uPB	uuu	uBg	Hbgr,	Brl P	urBu	uruA		u	Br. c	Hu	Brg
							oB	u, c	uou	uPB	ug.	uBA	uBu	Hbgr,	Brl ,	urBo	urgg		u	Br. c	Hu	Brg
							oc	u, g	uPA	ugA	ug,	uB.	uBB	Hbgr,	Brl A	urBl	urgc		u	Br. c	Hu	Brg
							cB	u, B	uP.	ug.	ugo	uBl	AA	Hbgr,	Br. u	urBA	urgl		u	Br. c	Hu	Brg
							cc	uc.	uP,	ugl	ugg	uB,	A.	Hbgr,	Br. P	uruu	urgA		u	Br. c	Hu	Brg
							, B	uc,	uPc	ug,	ugu	uBc	Al	Hbgr,	Br. c	uruP	urPu		u	Br. c	Hu	Brg
							uBB	ugA	uuo	H	uBB	. A	H	Hbgr,	BrAA	urg,	uroP	G2, B	u	Br. c	Hg	Brg
							BHuc	u, .	ucP	uPA	uPB	uu.	uBl	HbBrA	Brl	Br. c	urBP	G , B	u	Br. c	Hu	Brg
							gB	u, .	uo.	uPc	uPB	uuc	uBc	HbBrA	Brl	BrA	urB.		u	Br. c	Hu	Brg
							gc	u, .	uoc	uPP	uPB	uug	uBP	HbBrA	Brl	BrAo	urug		u	Br. c	Hu	Brg
							PB	u, .	uog	uPu	uPB	uuB	uBu	HbBrA	Brl	BrA.	uru,		u	Br. c	Hu	Brg
							Pc	u, c	uoB	ugA	ug.	uBA	uBB	HbBrA	Brl P	urBu	uruA		u	Br. c	Hu	Brg
							oB	u, g	uP.	ugl	ugc	uBl	AA	HbBrA	Brl ,	urBo	urgg		u	Br. c	Hu	Brg
							oc	ucA	uP,	ug,	ugP	uB,	A.	HbBrA	Brl A	urBl	urgc		u	Br. c	Hu	Brg
							cB	uc,	uPc	ugc	ugu	uBo	Al	HbBrA	Br. u	urBA	urgl		u	Br. c	Hu	Brg
							cc	ucc	uPo	ugo	ugB	uBo	A,	HbBrA	Br. P	uruu	urgA		u	Br. c	Hu	Brg
							, B	ucP	uPg	ugP	uu.	uBP	Ac	HbBrA	Br. c	uruP	urPu		u	Br. c	Hu	Brg
							uBB	ug,	uug	H	A.	. I	H	HbBrA	BrAA	urg,	uroP	G2, B	u	Br. c	Hg	Brg
							BHuc	u, g	uoI	uPP	ugc	uuo	uBP	HPI rA	Brl	Br. c	urBP	G , B	u	Br. c	Hu	Brg
							gB	u, g	uoP	uPB	ugc	uuu	uBu	HPI rA	Brl	BrA	urB.		u	Br. c	Hu	Brg
							gc	u, g	uoB	ug.	ugc	uB.	AA	HPI rA	Brl	BrAo	urug		u	Br. c	Hu	Brg
							PB	u, g	uPI	ug,	ugc	uB,	Al	HPI rA	Brl	BrA.	uru,		u	Br. c	Hu	Brg
							Pc	ucA	uPc	ugo	ugP	uBo	A,	HPI rA	Brl P	urBu	uruA		u	Br. c	Hu	Brg
							oB	ucc	uPP	ugP	ugB	uBP	Ac	HPI rA	Brl ,	urBo	urgg		u	Br. c	Hu	Brg
							oc	ucP	uPu	ugu	uu.	uBg	Ao	HPI rA	Brl A	urBl	urgc		u	Br. c	Hu	Brg
							cB	ucu	uPB	ugB	uuI	uBu	AP	HPI rA	Br. u	urBA	urgl		u	Br. c	Hu	Brg
							cc	uoA	ugA	uuA	uuc	uBB	Ag	HPI rA	Br. P	uruu	urgA		u	Br. c	Hu	Brg
							, B	uoI	ugI	uu.	uuo	AA	Ag	HPI rA	Br. c	uruP	urPu		u	Br. c	Hu	Brg
							uBB	ugg	H	H	Ao	H	H	HPI rA	BrAA	urg,	uroP	G2, B	u	Br. c	Hg	Brg
							BHuc	ucA	uoo	uPu	ugP	uug	uBg	HP, rc	Brl	Br. c	urBP	G , B	u	Br. c	Hu	Brg
							gB	ucA	uoB	ug.	ugP	uBA	AA	HP, rc	Brl	BrA	urB.		u	Br. c	Hu	Brg
							gc	ucA	uPI	ug,	ugP	uB,	Al	HP, rc	Brl	BrAo	urug		u	Br. c	Hu	Brg
							PB	ucA	uPo	ugo	ugP	uBo	A,	HP, rc	Brl	BrA.	uru,		u	Br. c	Hu	Brg
							Pc	uc,	uPg	ugg	ugu	uBP	Ao	HP, rc	Brl P	urBu	uruA		u	Br. c	Hu	Brg
							oB	ucP	uPB	ugB	uu.	uBu	AP	HP, rc	Brl ,	urBo	urgg		u	Br. c	Hu	Brg
							oc	ucB	ugA	uuA	uu,	uBB	Ag	HP, rc	Brl A	urBl	urgc		u	Br. c	Hu	Brg
							cB	uo.	ugI	uu.	uuc	AA	Au	HP, rc	Br. u	urBA	urgl		u	Br. c	Hu	Brg
							cc	uo,	ug,	uuI	uuP	A.	Au	HP, rc	Br. P	uruu	urgA		u	Br. c	Hu	Brg
							, B	uoo	ugc	uu,	uug	Al	AB	HP, rc	Br. c	uruP	urPu		u	Br. c	Hu	Brg
							uBB	uuA	H	H	AP	H	H	HP, rc	BrAA	urg,	uroP	G2, B	u	Br. c	Hg	Brg
							BHuc	uoA	uPc	ugP	uuc	uBc	Ac	HPurA	Brl	Br. c	urBP	G , B	u	Br. c	Hu	Brg
							gB	uoA	uPu	ugB	uuc	uBg	AP	HPurA	Brl	BrA	urB.		u	Br. c	Hu	Brg
							gc	uoA	ug.	uu.	uuc	AA	Au	HPurA	Brl	BrAo	urug		u	Br. c	Hu	Brg
							PB	uoA	ug,	uu,	uuc	Al	AB	HPurA	Brl	BrA.	uru,		u	Br. c	Hu	Brg
							Pc	uo,	ugo	uuo	uuP	A,	. .	HPurA	Brl P	urBu	uruA		u	Br. c	Hu	Brg
							oB	uoP	ugg	uuP	uuu	Ac	. I	HPurA	Brl ,	urBo	urgg		u	Br. c	Hu	Brg
							oc	uoB	ugu	uug	uBA	AP	. ,	HPurA	Brl A	urBl	urgc		u	Br. c	Hu	Brg
							cB	uP.	uuA	uuB	uBl	Ag	. ,	HPurA	Br. u	urBA	urgl		u	Br. c	Hu	Brg
							cc	uPI	uu.	H	uB,	Au	H	HPurA	Br. P	uruu	urgA		u	Br. c	Hu	Brg
							, B	uPc	uuI	H	uBc	Au	H	HPurA	Br. c	uruP	urPu		u	Br. c	Hu	Brg
							uBB	uug	H	H	. I	H	H	HPurA	BrAA	urg,	uroP	G2, B	u	Br. c	Hg	Brg
							BHuc	uo,	uPP	ugu	uuP	uBP	Ao	HPurB	Brl	Br. c	urBP	G , B	u	Br. c	Hu	Brg
							gB	uo,	ugA	uu.	uuP	uBB	Au	HPurB	Brl	BrA	urB.		u	Br. c	Hu	Brg
							gc	uo,	ug,	uu,	uuP	A.	AB	HPurB	Brl	BrAo	urug		u	Br. c	Hu	Brg
							PB	uo,	ugo	uuo	uuP	A,	. .	HPurB	Brl	BrA.	uru,		u	Br. c	Hu	Brg
							Pc	uoP	ugg	uug	uuu	Ao	. I	HPurB	Brl P	urBu	uruA		u	Br. c	Hu	Brg
							oB	uou	ugB	uuu	uBA	AP	. ,	HPurB	Brl ,	urBo	urgg		u	Br. c	Hu	Brg
							oc	uP.	uuA	H	uBl	Ag	H	HPurB	Brl A	urBl	urgc		u	Br. c	Hu	Brg
							cB	uP,	uuI	H	uBc	Au	H	HPurB	Br. u	urBA	urgl		u	Br. c	Hu	Brg
							cc	uPc	uu,	H	uBo	AB	H	HPurB	Br. P	uruu	urgA		u	Br. c	Hu	Brg
							, B	uPP	uuc	H	uBP	. A	H	HPurB	Br. c	uruP	urPu		u	Br. c	Hu	Brg
							uBB	uuB	H	H	. c	H	H	HPurB	BrAA	urg,	uroP	G2, B	u	Br. c	Hg	Brg

9el c®3 Pt e"st , t &s/k 8b®®k8 Ø bmNme wks®bcevu ceb 8sks/g[1]

V. ANDREW TAN
LICENSE
No. 81662
STATE OF FLORIDA
PROFESSIONAL ENGINEER

0F13RØF0F pl nCØF17 sl n Ø X q k q z & KC8 qqKCD 7ØNC 0F16 sl n Ø X G k q z & K8 qqKC DØØN

0F13RØF0F pl nC 0F17RØF16 sl n Ø X k q z & KC 8 qqKCDx K ØØN

e GX/ q q K qGZqK 8qG 12F4:1:1: Z0F13 pl nC 0F0F pl n 0F17RØF16 sl n

e GX/ q q K qGZqK ® Gq 1 z 5 Z8qG 12F4:1:1 Z0F13 pl nCØF0F pl n X K0F17RØF16 sl n

n qZZGq qK 9X/ q 2 GXG X Z D

& K q q GX qz

& K q q GX qz

TØØ= (

®Ø z UØ	®Ø z UØ " GØDK[* ° ° ØUG° J	X ØØZG ØUG° J	S' ° Z [* Ø " ≤* g	S' ° Z [* G T≤' UØ=	SØ + * " ≤*	TZ z T≤' UØ= ØUG° J	D Ø¤Ø= &* ØG Ø Zs j * * Z]	D	b	f	D	b	f	f * ° Ø[h] ' z ®TSJ	4 ≤ D	4 ≤ b	4 ≤ f		(z	(z	7 b s	7 b sØ
&' Ø¤Ø®;' [K	cdu,	ug	5] r uu =' r / uHudbl ;] [= 9]] j ØØ= [' Ø	D;ØØz [' Ø	g/ o X]] z T®S	u,	BHuc	ug,	uu,	H	AA	AB	H	HgPr.	Brl	Br. c	urBP	G , B	u	Br. c	Hu	Brg
							gB	ug.	uuP	H	AA	. .	H	HgPr.	Brl	BrA	urB.		u	Br. c	Hu	Brg
							gc	ug.	uuu	H	AA	. ,	H	HgPr.	Brl	BrAo	urug		u	Br. c	Hu	Brg
							PB	ug.	H	H	AA	H	H	HgPr.	Brl	BrA.	uru,		u	Br. c	Hu	Brg
							Pc	ug,	H	H	Al	H	H	HgPr.	Brl P	urBu	uruA		u	Br. c	Hu	Brg
							oB	ugP	H	H	Ac	H	H	HgPr.	Brl ,	urBo	urgg		u	Br. c	Hu	Brg
							oc	ugu	H	H	Ao	H	H	HgPr.	Brl A	urBl	urgc		u	Br. c	Hu	Brg
							cB	uuA	H	H	Ag	H	H	HgPr.	Br. u	urBA	urgl		u	Br. c	Hu	Brg
							cc	uu.	H	H	Au	H	H	HgPr.	Br. P	uruu	urgA		u	Br. c	Hu	Brg
							, B	uu,	H	H	AB	H	H	HgPr.	Br. c	uruP	urPu		u	Br. c	Hu	Brg
							uBB	H	H	H	H	H	H	HgPr.	BrAA	urg,	uroP	G2, B	u	Br. c	Hg	Brg
&' Ø¤Ø®;' [K	cdu,	crgc	5] r uu =' r / uHudbl ;] [= 9]] j ØØ= [' Ø	D;ØØz [' Ø	g/ o X]] z T®S	go	BHuc	ul g	uc,	uog	uPP	ugu	uuB	Hogr,	Brl	Br. c	urBP	G , B	u	Br. c	Hu	Brg
							gB	ul g	ucu	uP.	uPP	uul	uBl	Hogr,	Brl	BrA	urB.		u	Br. c	Hu	Brg
							gc	ul g	uo.	uP,	uPP	uuc	uBc	Hogr,	Brl	BrAo	urug		u	Br. c	Hu	Brg
							PB	ul g	uoc	uPP	uPP	uug	uBP	Hogr,	Brl	BrA.	uru,		u	Br. c	Hu	Brg
							Pc	u, .	uoP	uPg	uPB	uuu	uBg	Hogr,	Brl P	urBu	uruA		u	Br. c	Hu	Brg
							oB	u, c	uou	uPB	ug.	uBA	uBu	Hogr,	Brl ,	urBo	urgg		u	Br. c	Hu	Brg
							oc	u, g	uPA	ugA	ug,	uB.	uBB	Hogr,	Brl A	urBl	urgc		u	Br. c	Hu	Brg
							cB	u, B	uP.	ug.	ugo	uBl	AA	Hogr,	Br. u	urBA	urgl		u	Br. c	Hu	Brg
							cc	uc.	uP,	ugl	ugg	uB,	A.	Hogr,	Br. P	uruu	urgA		u	Br. c	Hu	Brg
							, B	uc,	uPc	ug,	ugu	uBc	Al	Hogr,	Br. c	uruP	urPu		u	Br. c	Hu	Brg
							uBB	ugA	uuo	H	uBB	. A	H	Hogr,	BrAA	urg,	uroP	G2, B	u	Br. c	Hg	Brg
&' Ø¤Ø®;' [K	cdu,	, rgc	5] r uu =' r / uHudbl ;] [= 9]] j ØØ= [' Ø	D;ØØz [' Ø	g/ o X]] z T®S	go	BHuc	uco	uPA	ugl	uuA	uB.	A.	HPoru	Brl	Br. c	urBP	G , B	u	Br. c	Hu	Brg
							gB	uco	uPc	ugo	uuA	uBc	A,	HPoru	Brl	BrA	urB.		u	Br. c	Hu	Brg
							gc	uco	uPP	ugu	uuA	uBP	Ao	HPoru	Brl	BrAo	urug		u	Br. c	Hu	Brg
							PB	uco	uPB	uuA	uuA	uBu	Ag	HPoru	Brl	BrA.	uru,		u	Br. c	Hu	Brg
							Pc	ucB	ug.	uu.	uul	AA	Au	HPoru	Brl P	urBu	uruA		u	Br. c	Hu	Brg
							oB	uol	ug,	uu,	uuo	A.	AB	HPoru	Brl ,	urBo	urgg		u	Br. c	Hu	Brg
							oc	uoc	ugc	uuc	uug	A,	. A	HPoru	Brl A	urBl	urgc		u	Br. c	Hu	Brg
							cB	uoP	ugP	uuo	uuu	Ac	. .	HPoru	Br. u	urBA	urgl		u	Br. c	Hu	Brg
							cc	uou	ugg	uuP	uBA	Ao	. .	HPoru	Br. P	uruu	urgA		u	Br. c	Hu	Brg
							, B	uPA	ugu	uug	uB.	Ao	. l	HPoru	Br. c	uruP	urPu		u	Br. c	Hu	Brg
							uBB	uuc	H	H	. A	H	H	HPoru	BrAA	urg,	uroP	G2, B	u	Br. c	Hg	Brg
&' Ø¤Ø®;' [K	cdu,	l rgc	5] r uu =' r / uHudbl ;] [= 9]] j ØØ= [' Ø	D;ØØz [' Ø	g/ o X]] z T®S	go	BHuc	uoB	ugl	uu,	uBA	AA	AB	Hg. ro	Brl	Br. c	urBP	G , B	u	Br. c	Hu	Brg
							gB	uoB	ugo	uuP	uBA	A,	. l	Hg. ro	Brl	BrA	urB.		u	Br. c	Hu	Brg
							gc	uoB	ugu	uuu	uBA	Ao	. ,	Hg. ro	Brl	BrAo	urug		u	Br. c	Hu	Brg
							PB	uoB	uuA	H	uBA	Ag	H	Hg. ro	Brl	BrA.	uru,		u	Br. c	Hu	Brg
							Pc	uPl	uul	H	uB,	AB	H	Hg. ro	Brl P	urBu	uruA		u	Br. c	Hu	Brg
							oB	uPc	uuc	H	uBo	. A	H	Hg. ro	Brl ,	urBo	urgg		u	Br. c	Hu	Brg
							oc	uPg	uuo	H	uBP	. .	H	Hg. ro	Brl A	urBl	urgc		u	Br. c	Hu	Brg
							cB	uPB	uug	H	uBu	. l	H	Hg. ro	Br. u	urBA	urgl		u	Br. c	Hu	Brg
							cc	ugA	uuu	H	uBB	. ,	H	Hg. ro	Br. P	uruu	urgA		u	Br. c	Hu	Brg
							, B	ugl	uuB	H	AA	. c	H	Hg. ro	Br. c	uruP	urPu		u	Br. c	Hu	Brg
							uBB	H	H	H	H	H	H	Hg. ro	BrAA	urg,	uroP	G2, B	u	Br. c	Hg	Brg
&' Ø¤Ø®;' [K	cdu,	l rc	5] r uu =' r / uHudbl ;] [= 9]] j ØØ= [' Ø	D;ØØz [' Ø	g/ o X]] z T®S	go	BHuc	uPl	ugc	uuP	uB,	Al	. .	Hgl rP	Brl	Br. c	urBP	G , B	u	Br. c	Hu	Brg
							gB	uPl	ugu	uuu	uB,	Ao	. ,	Hgl rP	Brl	BrA	urB.		u	Br. c	Hu	Brg
							gc	uPl	uuA	H	uB,	Ag	H	Hgl rP	Brl	BrAo	urug		u	Br. c	Hu	Brg
							PB	uPl	uu,	H	uB,	AB	H	Hgl rP	Brl	BrA.	uru,		u	Br. c	Hu	Brg
							Pc	uPc	uuo	H	uBo	. A	H	Hgl rP	Brl P	urBu	uruA		u	Br. c	Hu	Brg
							oB	uPg	uuP	H	uBg	. l	H	Hgl rP	Brl ,	urBo	urgg		u	Br. c	Hu	Brg
							oc	uPB	uuu	H	uBu	. ,	H	Hgl rP	Brl A	urBl	urgc		u	Br. c	Hu	Brg
							cB	ug.	uuB	H	AA	. c	H	Hgl rP	Br. u	urBA	urgl		u	Br. c	Hu	Brg
							cc	ug,	H	H	A.	H	H	Hgl rP	Br. P	uruu	urgA		u	Br. c	Hu	Brg
							, B	ugc	H	H	Al	H	H	Hgl rP	Br. c	uruP	urPu		u	Br. c	Hu	Brg
							uBB	H	H	H	H	H	H	Hgl rP	BrAA	urg,	uroP	G2, B	u	Br. c	Hg	Brg
&' Ø¤Ø®;' [K	cdu,	.	5] r uu =' r / uHudbl ;] [= 9]] j ØØ= [' Ø	D;ØØz [' Ø	g/ o X]] z T®S	go	BHuc	uPg	ugB	H	uBg	AP	H	Hgcrg	Brl	Br. c	urBP	G , B	u	Br. c	Hu	Brg
							gB	uPg	uul	H	uBg	AB	H	Hgcrg	Brl	BrA	urB.		u	Br. c	Hu	Brg
							gc	uPg	uuo	H	uBg	. .	H	Hgcrg	Brl	BrAo	urug		u	Br. c	Hu	Brg
							PB	uPg	uug	H	uBg	. l	H	Hgcrg	Brl	BrA.	uru,		u	Br. c	Hu	Brg
							Pc	ugA	uuB	H	uBB	. c	H	Hgcrg	Brl P	urBu	uruA		u	Br. c	Hu	Brg
							oB	ugl	H	H	A.	H	H	Hgcrg	Brl ,	urBo	urgg		u	Br. c	Hu	Brg
							oc	ugc	H	H	Al	H	H	Hgcrg	Brl A	urBl	urgc		u	Br. c	Hu	Brg
							cB	ugP	H	H	Ac	H	H	Hgcrg	Br. u	urBA	urgl		u	Br. c	Hu	Brg
							cc	ugu	H	H	Ao	H	H	Hgcrg	Br. P	uruu	urgA		u	Br. c	Hu	Brg
							, B	ugB	H	H	AP	H	H	Hgcrg	Br. c	uruP	urPu		u	Br. c	Hu	Brg
							uBB	H	H	H	H	H	H	Hgcrg	BrAA	urg,	uroP	G2, B	u	Br. c	Hg	Brg

9el c®3 Pt e"st , t &s/k 8b®®k8 @ bmNmewks®bcevu ceb 8sks/g[1]

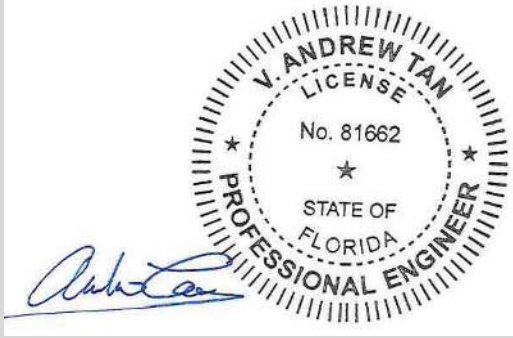

							0F13R0F0F pl nC0F17 sl n Q Xqkq z & KC8 qqKCD 7@NC 0F16 sl n @ X G kq z & K8 qqKC D2@N			0F13R0F0F pl nC 0F17R0F16 sl n @ X kq z & KC 8 qqKCDx K @@N											
							e GX/ q q K qGZqK 8qG 12F4:1:1: Z0F13 pl nC 0F0F pl n 0F17R0F16 sl n			e GX/ q q K qGZqK ® Gq 1 z 5 Z8qG 12F4:1:1 Z0F13 pl nC0F0F pl n X K0F17R0F16 sl n			n qZZGq qK 9X/ q2GXG X Z D							
							& Kq q GX qz			& Kq q GX qz			T@Ö=	(						
®@z UZ	®@z UZ "GDK[* ° ° @UG° J	X @ZG @UG° J	S' ° Z [* @ " ≤* g	S' ° Z [* @ T≤' U@=	S@+ * " ≤*	TZ z T≤' U@= @UG° J	D @zÖ= &* @G2 p ≤s j * * Z]	D	b	f	D	b	f	f * ° @[h] ' z ®TSJ	4 ≤ D	4 ≤ b	4 ≤ f		(z	(z	7 b ≤	7 b ≤ c
							BHuc	uPB	uu.	H	uBu	Au	H	H@orP	Brl	Br. c	urBP	G , B	u	Br. c	Hu	Brg
							gB	uPB	uuc	H	uBu	. A	H	H@orP	Brl	BrA	urB.		u	Br. c	Hu	Brg
							gc	uPB	uug	H	uBu	. I	H	H@orP	Brl	BrAo	urug		u	Br. c	Hu	Brg
							PB	uPB	H	H	uBu	H	H	H@orP	Brl	BrA.	uru,		u	Br. c	Hu	Brg
							Pc	ugI	H	H	A.	H	H	H@orP	Brl P	urBu	uruA		u	Br. c	Hu	Brg
							oB	ugc	H	H	AI	H	H	H@orP	Brl ,	urBo	urgg		u	Br. c	Hu	Brg
							oc	ugP	H	H	Ac	H	H	H@orP	Brl A	urBI	urgc		u	Br. c	Hu	Brg
							cB	ugu	H	H	AP	H	H	H@orP	Br. u	urBA	urgI		u	Br. c	Hu	Brg
							cc	uuA	H	H	Ag	H	H	H@orP	Br. P	uruu	urgA		u	Br. c	Hu	Brg
							, B	uu.	H	H	Au	H	H	H@orP	Br. c	uruP	urPu		u	Br. c	Hu	Brg
							uBB	H	H	H	H	H	H	H@orP	BrAA	urg,	uroP	G2, B	u	Br. c	H@	Brg
							BHuc	ugu	uuB	H	Ao	. c	H	H@urP	Brl	Br. c	urBP	G , B	u	Br. c	Hu	Brg
							gB	ugu	H	H	Ao	H	H	H@urP	Brl	BrA	urB.		u	Br. c	Hu	Brg
							gc	ugu	H	H	Ao	H	H	H@urP	Brl	BrAo	urug		u	Br. c	Hu	Brg
							PB	ugu	H	H	Ao	H	H	H@urP	Brl	BrA.	uru,		u	Br. c	Hu	Brg
							Pc	uuA	H	H	Ag	H	H	H@urP	Brl P	urBu	uruA		u	Br. c	Hu	Brg
							oB	uuI	H	H	AB	H	H	H@urP	Brl ,	urBo	urgg		u	Br. c	Hu	Brg
							oc	uuc	H	H	. A	H	H	H@urP	Brl A	urBI	urgc		u	Br. c	Hu	Brg
							cB	uuP	H	H	. I	H	H	H@urP	Br. u	urBA	urgI		u	Br. c	Hu	Brg
							cc	uug	H	H	. ,	H	H	H@urP	Br. P	uruu	urgA		u	Br. c	Hu	Brg
							, B	uuB	H	H	. c	H	H	H@urP	Br. c	uruP	urPu		u	Br. c	Hu	Brg
							uBB	H	H	H	H	H	H	H@urP	BrAA	urg,	uroP	G2, B	u	Br. c	H@	Brg
							BHuc	ugB	H	H	AP	H	H	H@Brl	Brl	Br. c	urBP	G , B	u	Br. c	Hu	Brg
							gB	ugB	H	H	AP	H	H	H@Brl	Brl	BrA	urB.		u	Br. c	Hu	Brg
							gc	ugB	H	H	AP	H	H	H@Brl	Brl	BrAo	urug		u	Br. c	Hu	Brg
							PB	ugB	H	H	AP	H	H	H@Brl	Brl	BrA.	uru,		u	Br. c	Hu	Brg
							Pc	uuI	H	H	Au	H	H	H@Brl	Brl P	urBu	uruA		u	Br. c	Hu	Brg
							oB	uuc	H	H	. A	H	H	H@Brl	Brl ,	urBo	urgg		u	Br. c	Hu	Brg
							oc	uuP	H	H	. I	H	H	H@Brl	Brl A	urBI	urgc		u	Br. c	Hu	Brg
							cB	uuu	H	H	. ,	H	H	H@Brl	Br. u	urBA	urgI		u	Br. c	Hu	Brg
							cc	H	H	H	H	H	H	H@Brl	Br. P	uruu	urgA		u	Br. c	Hu	Brg
							, B	H	H	H	H	H	H	H@Brl	Br. c	uruP	urPu		u	Br. c	Hu	Brg
							uBB	H	H	H	H	H	H	H@Brl	BrAA	urg,	uroP	G2, B	u	Br. c	H@	Brg
							BHuc	goI	ggo	gBo	uAu	ul o	uc.	H . rg	Brl	Br. c	urBP	G , B	u	Br. c	Hu	Brg
							gB	goI	gu.	uAA	uAu	u, A	uco	H . rg	Brl	BrA	urB.		u	Br. c	Hu	Brg
							gc	goI	guP	uAc	uAu	u, c	ucu	H . rg	Brl	BrAo	urug		u	Br. c	Hu	Brg
							PB	goI	gBA	uAg	uAu	u, g	uoA	H . rg	Brl	BrA.	uru,		u	Br. c	Hu	Brg
							Pc	gog	gB,	uAB	u. .	ucA	uoI	H . rg	Brl P	urBu	uruA		u	Br. c	Hu	Brg
							oB	gPI	gBP	u. I	u. o	ucI	uoc	H . rg	Brl ,	urBo	urgg		u	Br. c	Hu	Brg
							oc	gPP	gBB	u. c	u. u	ucc	uoo	H . rg	Brl A	urBI	urgc		u	Br. c	Hu	Brg
							cB	gPB	uA.	u. o	ul .	ucP	uog	H . rg	Br. u	urBA	urgI		u	Br. c	Hu	Brg
							cc	ggI	uA,	u. g	ul ,	ucg	uou	H . rg	Br. P	uruu	urgA		u	Br. c	Hu	Brg
							, B	ggo	uAc	u. u	ul o	ucu	uoB	H . rg	Br. c	uruP	urPu		u	Br. c	Hu	Brg
							uBB	u. ,	u, c	ucc	uoo	ugI	ugB	H . rg	BrAA	urg,	uroP	G2, B	u	Br. c	H@	Brg
							BHuc	ggu	gBu	u. g	ul u	ucc	uou	HI Br,	Brl	Br. c	urBP	G , B	u	Br. c	Hu	Brg
							gB	ggu	uAc	ul .	ul u	ucu	uP.	HI Br,	Brl	BrA	urB.		u	Br. c	Hu	Brg
							gc	ggu	uAu	ul c	ul u	uo.	uPc	HI Br,	Brl	BrAo	urug		u	Br. c	Hu	Brg
							PB	ggu	u. I	ul g	ul u	uoc	uPP	HI Br,	Brl	BrA.	uru,		u	Br. c	Hu	Brg
							Pc	guI	u. o	ul B	u, .	uoP	uPu	HI Br,	Brl P	urBu	uruA		u	Br. c	Hu	Brg
							oB	gug	u. u	u, I	u, o	uou	uPB	HI Br,	Brl ,	urBo	urgg		u	Br. c	Hu	Brg
							oc	gBA	ul A	u, ,	u, g	uPA	ug.	HI Br,	Brl A	urBI	urgc		u	Br. c	Hu	Brg
							cB	gB,	ul I	u, o	ucA	uPI	ugI	HI Br,	Br. u	urBA	urgI		u	Br. c	Hu	Brg
							cc	gBP	ul ,	u, P	ucI	uP,	ug,	HI Br,	Br. P	uruu	urgA		u	Br. c	Hu	Brg
							, B	gBu	ul o	u, g	ucc	uPc	ugc	HI Br,	Br. c	uruP	urPu		u	Br. c	Hu	Brg
							uBB	u, ,	uoI	uP.	ugA	uuo	uBI	HI Br,	BrAA	urg,	uroP	G2, B	u	Br. c	H@	Brg
							BHuc	gBg	u. P	u, ,	uc,	uog	ugA	H@. r.	Brl	Br. c	urBP	G , B	u	Br. c	Hu	Brg
							gB	gBg	ul .	u, g	uc,	uP.	ug,	H@. r.	Brl	BrA	urB.		u	Br. c	Hu	Brg
							gc	gBg	ul o	u, B	uc,	uPc	ugo	H@. r.	Brl	BrAo	urug		u	Br. c	Hu	Brg
							PB	gBg	ul u	ucI	uc,	uPg	ugu	H@. r.	Brl	BrA.	uru,		u	Br. c	Hu	Brg
							Pc	uA.	u, .	ucc	ucP	uPB	ugB	H@. r.	Brl P	urBu	uruA		u	Br. c	Hu	Brg
							oB	uAo	u, ,	ucP	ucB	ug.	uu.	H@. r.	Brl ,	urBo	urgg		u	Br. c	Hu	Brg
							oc	uAu	u, o	ucu	uo.	ugI	uuI	H@. r.	Brl A	urBI	urgc		u	Br. c	Hu	Brg
							cB	u. .	u, g	ucB	uoc	ugc	uu,	H@. r.	Br. u	urBA	urgI		u	Br. c	Hu	Brg
							cc	u. c	u, B	uoA	uoo	ugo	uuc	H@. r.	Br. P	uruu	urgA		u	Br. c	Hu	Brg
							, B	u. P	ucA	uo.	uog	ugP	uuo	H@. r.	Br. c	uruP	urPu		u	Br. c	Hu	Brg
							uBB	ucg	uPo	ug,	uuI	uBo	A.	H@. r.	BrAA	urg,	uroP	G2, B	u	Br. c	H@	Brg

b;Ø[ZÆF' + * ° &' Ø¤Ø D Ø¤Ø= ®Ø z UØ sq[U-
b - 4 4 [=Ø * * Ø= 9 * ≤] Ø Z5] rEgBBuHuBrgru
f * U' + M' ØusgBgB
®' =* uA] j oo

9el c®3 Pt e"st , t &s/k 8b®®k8 Ø bmNme wks®bcevu ceb 8sks/g[1]

V. ANDREW TAN
LICENSE
No. 81662
STATE OF FLORIDA
PROFESSIONAL ENGINEER

0F13RØF0F pl nCØF17 sl n Ø X q k q z & KC8 qqKCD 7Ø NC 0F16 sl n Ø X G k q z & K8 qqKC D2Ø N

0F13RØF0F pl nC 0F17RØF16 sl n Ø X k q z & KC 8 qqKCDx K Ø N

e GX/ q q K qGZqK 8qG 12F4:1:1: ZØF13 pl nC 0F0F pl n 0F17RØF16 sl n

e GX/ q q K qGZqK ® Gq 1 z 5 Z8qG 12F4:1:1 ZØF13 pl nCØF0F pl n X K0F17RØF16 sl n

n qZZGq qK 9X/ q 2 GXG X Z D

& Kq q GX qz

& Kq q GX qz

TØ¤Ø= (

®Ø z UØ	®Ø z UØ "GØDK[* ° ° ØUG° J	X Ø¤ZG ØUG° J	S' ° Z [* Ø " ≤* g	S' ° Z [* Ø Ts' UØ=	SØ + * " ≤*	TZ z Ts' UØ= ØUG° J	D Ø¤Ø= &* ØØ Z2s j * * Z]	D	b	f	D	b	f	f * ° Ø[h] ' z ®TSJ	4 ≤ D	4 ≤ b	4 ≤ f		(z	(z	7 b s	7 b sØ
&' Ø¤Ø®;' [K	cdu,	I rc	, z Uj + +] [[' Ø	S' U' [' Ø	g/ o X]] z T®S	u,	BHuc	uA.	ul A	u, P	ucP	uPA	ug,	Ht, rc	Brl	Br. c	urBP	G , B	u	Br. c	Hu	Brg
							gB	uA.	ul o	ucA	ucP	uPc	ugP	Ht, rc	Brl	BrA	urB.		u	Br. c	Hu	Brg
							gc	uA.	ul u	uc,	ucP	uPg	ugu	Ht, rc	Brl	BrAo	urug		u	Br. c	Hu	Brg
							PB	uA.	u, I	uco	ucP	ugA	uuA	Ht, rc	Brl	BrA.	uru,		u	Br. c	Hu	Brg
							Pc	uAo	u, c	ucg	ucB	ug.	uuI	Ht, rc	Brl P	urBu	uruA		u	Br. c	Hu	Brg
							oB	uAB	u, g	ucB	uoI	ug,	uu,	Ht, rc	Brl ,	urBo	urgg		u	Br. c	Hu	Brg
							oc	u. I	u, B	uo.	uoc	ugo	uuc	Ht, rc	Brl A	urBI	urgc		u	Br. c	Hu	Brg
							cB	u. o	uc.	uoI	uog	ugP	uuo	Ht, rc	Br. u	urBA	urgI		u	Br. c	Hu	Brg
							cc	u. g	ucI	uo,	uou	ugg	uuP	Ht, rc	Br. P	uruu	urgA		u	Br. c	Hu	Brg
							, B	ul A	uc,	uoc	uPA	ugu	uug	Ht, rc	Br. c	uruP	urPu		u	Br. c	Hu	Brg
							uBB	uoA	uPg	ugo	uuc	uBg	A,	Ht, rc	BrAA	urg,	uroP	G2, B	u	Br. c	Hg	Brg
&' Ø¤Ø®;' [K	cdu,	.	, z Uj + +] [[' Ø	S' U' [' Ø	g/ o X]] z T®S	u,	BHuc	uAB	ul P	ucI	uoI	uPo	ugg	HtgrP	Brl	Br. c	urBP	G , B	u	Br. c	Hu	Brg
							gB	uAB	u, .	ucP	uoI	uPB	uuA	HtgrP	Brl	BrA	urB.		u	Br. c	Hu	Brg
							gc	uAB	u, o	ucB	uoI	ugI	uuI	HtgrP	Brl	BrAo	urug		u	Br. c	Hu	Brg
							PB	uAB	u, u	uo.	uoI	ugc	uuc	HtgrP	Brl	BrA.	uru,		u	Br. c	Hu	Brg
							Pc	u. ,	uc.	uo,	uoo	ugP	uuP	HtgrP	Brl P	urBu	uruA		u	Br. c	Hu	Brg
							oB	u. P	uc,	uoo	uou	ugu	uug	HtgrP	Brl ,	urBo	urgg		u	Br. c	Hu	Brg
							oc	u. B	uco	uoP	uPA	ugB	uuu	HtgrP	Brl A	urBI	urgc		u	Br. c	Hu	Brg
							cB	ul I	ucP	uou	uPI	uu.	uBA	HtgrP	Br. u	urBA	urgI		u	Br. c	Hu	Brg
							cc	ul c	ucu	uoB	uPc	uuI	uBA	HtgrP	Br. P	uruu	urgA		u	Br. c	Hu	Brg
							, B	ul P	ucB	uPA	uPo	uu,	uB.	HtgrP	Br. c	uruP	urPu		u	Br. c	Hu	Brg
							uBB	uoP	ugI	uuA	uuu	A.	Ag	HtgrP	BrAA	urg,	uroP	G2, B	u	Br. c	Hg	Brg
&' Ø¤Ø®;' [K	cdu,	. rgc	, z Uj + +] [[' Ø	S' U' [' Ø	g/ o X]] z T®S	u,	BHuc	u. I	ul B	uco	uoc	uPu	uuA	HtBro	Brl	Br. c	urBP	G , B	u	Br. c	Hu	Brg
							gB	u. I	u, c	ucB	uoc	ug.	uuI	HtBro	Brl	BrA	urB.		u	Br. c	Hu	Brg
							gc	u. I	u, u	uo.	uoc	ugc	uuo	HtBro	Brl	BrAo	urug		u	Br. c	Hu	Brg
							PB	u. I	uc.	uoc	uoc	ugg	uug	HtBro	Brl	BrA.	uru,		u	Br. c	Hu	Brg
							Pc	u. P	uc,	uoP	uog	ugu	uuu	HtBro	Brl P	urBu	uruA		u	Br. c	Hu	Brg
							oB	ul A	ucP	uog	uPA	uuA	uuB	HtBro	Brl ,	urBo	urgg		u	Br. c	Hu	Brg
							oc	ul ,	ucg	uoB	uPI	uuI	uBA	HtBro	Brl A	urBI	urgc		u	Br. c	Hu	Brg
							cB	ul o	ucB	uPA	uPc	uu,	uBI	HtBro	Br. u	urBA	urgI		u	Br. c	Hu	Brg
							cc	ul g	uo.	uP.	uPP	uuc	uBI	HtBro	Br. P	uruu	urgA		u	Br. c	Hu	Brg
							, B	ul B	uoI	uPI	uPu	uuo	uB,	HtBro	Br. c	uruP	urPu		u	Br. c	Hu	Brg
							uBB	uoB	ugo	uuI	uBA	A,	AB	HtBro	BrAA	urg,	uroP	G2, B	u	Br. c	Hg	Brg
&' Ø¤Ø®;' [K	cdu,	Argc	, z Uj + +] [[' Ø	S' U' [' Ø	g/ o X]] z T®S	u,	BHuc	ul c	ucA	uoo	uPc	ugP	uug	Htooru	Brl	Br. c	urBP	G , B	u	Br. c	Hu	Brg
							gB	ul c	uco	uou	uPc	uuA	uBA	Htooru	Brl	BrA	urB.		u	Br. c	Hu	Brg
							gc	ul c	ucu	uP.	uPc	uuI	uBI	Htooru	Brl	BrAo	urug		u	Br. c	Hu	Brg
							PB	ul c	uo.	uP,	uPc	uuo	uBc	Htooru	Brl	BrA.	uru,		u	Br. c	Hu	Brg
							Pc	ul u	uo,	uPo	uPP	uuP	uBo	Htooru	Brl P	urBu	uruA		u	Br. c	Hu	Brg
							oB	u, .	uoP	uPg	uPB	uuu	uBP	Htooru	Brl ,	urBo	urgg		u	Br. c	Hu	Brg
							oc	u, c	uog	uPu	ug.	uuB	uBg	Htooru	Brl A	urBI	urgc		u	Br. c	Hu	Brg
							cB	u, g	uoB	uPB	ug,	uBA	uBu	Htooru	Br. u	urBA	urgI		u	Br. c	Hu	Brg
							cc	u, u	uPA	ugA	ugo	uB.	uBB	Htooru	Br. P	uruu	urgA		u	Br. c	Hu	Brg
							, B	ucA	uP.	ug.	ugP	uBI	AA	Htooru	Br. c	uruP	urPu		u	Br. c	Hu	Brg
							uBB	uPu	uu,	H	uBg	AB	H	Htooru	BrAA	urg,	uroP	G2, B	u	Br. c	Hg	Brg
&' Ø¤Ø®;' [K	cdu,	Arc	, z Uj + +] [[' Ø	S' U' [' Ø	g/ o X]] z T®S	u,	BHuc	ul g	uc,	uog	uPP	ugu	uuB	Htogr.	Brl	Br. c	urBP	G , B	u	Br. c	Hu	Brg
							gB	ul g	ucg	uPA	uPP	uu.	uBI	Htogr.	Brl	BrA	urB.		u	Br. c	Hu	Brg
							gc	ul g	uoA	uP,	uPP	uuc	uBc	Htogr.	Brl	BrAo	urug		u	Br. c	Hu	Brg
							PB	ul g	uoc	uPo	uPP	uuP	uBo	Htogr.	Brl	BrA.	uru,		u	Br. c	Hu	Brg
							Pc	u, A	uoP	uPg	uPu	uuu	uBg	Htogr.	Brl P	urBu	uruA		u	Br. c	Hu	Brg
							oB	u, c	uou	uPB	ug.	uBA	uBu	Htogr.	Brl ,	urBo	urgg		u	Br. c	Hu	Brg
							oc	u, P	uoB	ugA	ug,	uB.	uBB	Htogr.	Brl A	urBI	urgc		u	Br. c	Hu	Brg
							cB	u, B	uP.	ug.	ugo	uBI	AA	Htogr.	Br. u	urBA	urgI		u	Br. c	Hu	Brg
							cc	uc.	uPI	ugI	ugg	uB,	A.	Htogr.	Br. P	uruu	urgA		u	Br. c	Hu	Brg
							, B	uc,	uPc	ug,	ugu	uBc	AI	Htogr.	Br. c	uruP	urPu		u	Br. c	Hu	Brg
							uBB	ugA	uuc	H	uBB	. A	H	Htogr.	BrAA	urg,	uroP	G2, B	u	Br. c	Hg	Brg
&' Ø¤Ø®;' [K	cdu,	ug	, z Uj + +] [[' Ø	S' U' [' Ø	g/ o X]] z T®S	u,	BHuc	ucu	uPI	ugo	uuI	uB,	A,	HPgr.	Brl	Br. c	urBP	G , B	u	Br. c	Hu	Brg
							gB	ucu	uPP	ugu	uuI	uBP	Ao	HPgr.	Brl	BrA	urB.		u	Br. c	Hu	Brg
							gc	ucu	uPB	uuA	uuI	uBu	Ag	HPgr.	Brl	BrAo	urug		u	Br. c	Hu	Brg
							PB	ucu	ugI	uuI	uuI	AA	Au	HPgr.	Brl	BrA.	uru,		u	Br. c	Hu	Brg
							Pc	uo.	ug,	uu,	uuo	AI	AB	HPgr.	Brl P	urBu	uruA		u	Br. c	Hu	Brg
							oB	uoc	ugo	uuo	uug	A,	. .	HPgr.	Brl ,	urBo	urgg		u	Br. c	Hu	Brg
							oc	uog	ugg	uuP	uuB	Ac	. .	HPgr.	Brl A	urBI	urgc		u	Br. c	Hu	Brg
							cB	uoB	ugu	uug	uBA	Ao	. I	HPgr.	Br. u	urBA	urgI		u	Br. c	Hu	Brg
							cc	uP.	ugB	uuu	uBI	AP	. ,	HPgr.	Br. P	uruu	urgA		u	Br. c	Hu	Brg
							, B	uPI	uuA	uuB	uB,	Ag	. c	HPgr.	Br. c	uruP	urPu		u	Br. c	Hu	Brg
							uBB	uuP	H	H	. .	H	H	HPgr.	BrAA	urg,	uroP	G2, B	u	Br. c	Hg	Brg

9el c®3 Pt e"st , t &s/k 8b®®k8 Ø bmNme wks®bcevu ceb 8ksvg[1]

V. ANDREW TAN
LICENSE
No. 81662
STATE OF FLORIDA
PROFESSIONAL ENGINEER

®Ø z UZ	®Ø z UZ "GØK[* ° ° ØUG° J	X Ø¤ZG ØUG° J	S' °Z [* Ø " ≤*[g]	S' °Z [* Ø Ts' UØ=	SØ + * " ≤*	TZ z Ts' UØ= ØUG° J	D Ø¤Ø= &* ØØ[p]Zs j * * Z]	D	b	f	D	b	f	f * ° Ø[h] ' z ®TSJ	4 ≤ D	4 ≤ b	4 ≤ f		(z	(z	7 b≤	7 b≤Ø
								0F13RØF0F pl nCØF17 sl n Ø X q k q z & KC8 qqKCD [7Ø]NC			0F13RØF0F pl nC 0F17RØF16 sl n Ø X k q z & KC 8 qqKCD[x K] [ØØ]N										
								e GX/ q q K qGZqK 8qG 12F4:1:1: Z0F13 pl nC 0F0F pl n 0F17RØF16 sl n			e GX/ q q K qGZqK ® Gq 1 z 5 Z8qG 12F4:1:1 Z0F13 pl nCØF0F pl n X K0F17RØF16 sl n				n qZZGq qK	9X/ q 2 GXG X Z D					
								& K q q GX qz			& K q q GX qz			T Ø¤Ø=	(							
&' Ø¤Ø®;' [K	cdu,	crgc	, z Uj + +] [[' Ø	S' U' [' Ø	g/ o X]] z T®S	go	BHuc	qBg	u. P	u, ,	uc,	uog	ugA	Ht. r.	Brl	Br. c	urBP	G , B	u	Br. c	Hu	Brg
							gB	gBg	ul .	u, g	uc,	uP.	ug,	Ht. r.	Brl	BrA	urB.		u	Br. c	Hu	Brg
							gc	gBg	ul o	u, B	uc,	uPc	ugo	Ht. r.	Brl	BrAo	urug		u	Br. c	Hu	Brg
							PB	gBg	ul u	ucl	uc,	uPg	ugu	Ht. r.	Brl	BrA.	uru,		u	Br. c	Hu	Brg
							Pc	uA.	u, .	ucc	ucP	uPB	ugB	Ht. r.	Brl P	urBu	uruA		u	Br. c	Hu	Brg
							oB	uAo	u, ,	ucP	ucB	ug.	uu.	Ht. r.	Brl ,	urBo	urgg		u	Br. c	Hu	Brg
							oc	uAu	u, o	ucu	uo.	ugl	uul	Ht. r.	Brl A	urBl	urgc		u	Br. c	Hu	Brg
							cB	u. .	u, g	ucB	uoc	ugc	uu,	Ht. r.	Br. u	urBA	urgl		u	Br. c	Hu	Brg
							cc	u. c	u, B	uoA	uoo	ugo	uuc	Ht. r.	Br. P	uruu	urgA		u	Br. c	Hu	Brg
							, B	u. P	ucA	uo.	uog	ugP	uuo	Ht. r.	Br. c	uruP	urPu		u	Br. c	Hu	Brg
							uBB	ucg	uPo	ug,	uul	uBo	A.	Ht. r.	BrAA	urg,	uroP	G2, B	u	Br. c	Hg	Brg
&' Ø¤Ø®;' [K	cdu,	, rgc	, z Uj + +] [[' Ø	S' U' [' Ø	g/ o X]] z T®S	go	BHuc	u. u	u, o	uoA	uoB	ugl	uuc	Hol ru	Brl	Br. c	urBP	G , B	u	Br. c	Hu	Brg
							gB	u. u	ucA	uoc	uoB	ugP	uuP	Hol ru	Brl	BrA	urB.		u	Br. c	Hu	Brg
							gc	u. u	uc,	uoP	uoB	ugu	uuu	Hol ru	Brl	BrAo	urug		u	Br. c	Hu	Brg
							PB	u. u	ucP	uoB	uoB	uu.	uBA	Hol ru	Brl	BrA.	uru,		u	Br. c	Hu	Brg
							Pc	ul l	ucB	uP.	uPl	uu,	uBl	Hol ru	Brl P	urBu	uruA		u	Br. c	Hu	Brg
							oB	ul P	uo.	uPl	uPo	uuc	uB,	Hol ru	Brl ,	urBo	urgg		u	Br. c	Hu	Brg
							oc	ul B	uo,	uPc	uPg	uuP	uBc	Hol ru	Brl A	urBl	urgc		u	Br. c	Hu	Brg
							cB	u, .	uoc	uPo	uPB	uug	uBo	Hol ru	Br. u	urBA	urgl		u	Br. c	Hu	Brg
							cc	u, ,	uoP	uPP	ug.	uuu	uBP	Hol ru	Br. P	uruu	urgA		u	Br. c	Hu	Brg
							, B	u, o	uog	uPg	ugl	uuB	uBg	Hol ru	Br. c	uruP	urPu		u	Br. c	Hu	Brg
							uBB	uP,	ugB	uuP	uBc	AP	. l	Hol ru	BrAA	urg,	uroP	G2, B	u	Br. c	Hg	Brg
&' Ø¤Ø®;' [K	cdu,	l rgc	, z Uj + +] [[' Ø	S' U' [' Ø	g/ o X]] z T®S	go	BHuc	u, c	ucB	uP,	ug.	uu,	uBc	HPArg	Brl	Br. c	urBP	G , B	u	Br. c	Hu	Brg
							gB	u, c	uoc	uPP	ug.	uuP	uBP	HPArg	Brl	BrA	urB.		u	Br. c	Hu	Brg
							gc	u, c	uog	uPB	ug.	uuB	uBu	HPArg	Brl	BrAo	urug		u	Br. c	Hu	Brg
							PB	u, c	uPA	ug.	ug.	uB.	AA	HPArg	Brl	BrA.	uru,		u	Br. c	Hu	Brg
							Pc	u, u	uPl	ug,	ugc	uB,	A.	HPArg	Brl P	urBu	uruA		u	Br. c	Hu	Brg
							oB	uc.	uPc	ugc	ugP	uBc	Al	HPArg	Brl ,	urBo	urgg		u	Br. c	Hu	Brg
							oc	uc,	uPo	ugo	ugu	uBP	A,	HPArg	Brl A	urBl	urgc		u	Br. c	Hu	Brg
							cB	ucP	uPg	ugg	uuA	uBg	Ac	HPArg	Br. u	urBA	urgl		u	Br. c	Hu	Brg
							cc	ucu	uPu	ugu	uul	uBu	Ao	HPArg	Br. P	uruu	urgA		u	Br. c	Hu	Brg
							, B	ucB	uPB	ugB	uu,	uBB	AP	HPArg	Br. c	uruP	urPu		u	Br. c	Hu	Brg
							uBB	ugo	H	H	A,	H	H	HPArg	BrAA	urg,	uroP	G2, B	u	Br. c	Hg	Brg
&' Ø¤Ø®;' [K	cdu,	l rc	, z Uj + +] [[' Ø	S' U' [' Ø	g/ o X]] z T®S	go	BHuc	u, u	uol	uPP	ugc	uuo	uBP	HPl rl	Brl	Br. c	urBP	G , B	u	Br. c	Hu	Brg
							gB	u, u	uog	uPB	ugc	uuB	uBu	HPl rl	Brl	BrA	urB.		u	Br. c	Hu	Brg
							gc	u, u	uPA	ug.	ugc	uB.	AA	HPl rl	Brl	BrAo	urug		u	Br. c	Hu	Brg
							PB	u, u	uP,	ugc	ugc	uB,	Al	HPl rl	Brl	BrA.	uru,		u	Br. c	Hu	Brg
							Pc	uc.	uPo	ugo	ugg	uBo	A,	HPl rl	Brl P	urBu	uruA		u	Br. c	Hu	Brg
							oB	ucc	uPg	ugg	ugB	uBP	Ac	HPl rl	Brl ,	urBo	urgg		u	Br. c	Hu	Brg
							oc	ucg	uPu	ugu	uu.	uBu	Ao	HPl rl	Brl A	urBl	urgc		u	Br. c	Hu	Brg
							cB	ucB	ugA	ugB	uu,	uBB	AP	HPl rl	Br. u	urBA	urgl		u	Br. c	Hu	Brg
							cc	uo.	ug.	uuA	uuc	AA	Ag	HPl rl	Br. P	uruu	urgA		u	Br. c	Hu	Brg
							, B	uol	ugl	uu.	uuo	A.	Au	HPl rl	Br. c	uruP	urPu		u	Br. c	Hu	Brg
							uBB	ugu	H	H	Ao	H	H	HPl rl	BrAA	urg,	uroP	G2, B	u	Br. c	Hg	Brg
&' Ø¤Ø®;' [K	cdu,	.	, z Uj + +] [[' Ø	S' U' [' Ø	g/ o X]] z T®S	go	BHuc	ucc	uou	ug.	ugB	uBA	AA	HPorA	Brl	Br. c	urBP	G , B	u	Br. c	Hu	Brg
							gB	ucc	uPl	ugc	ugB	uB,	Al	HPorA	Brl	BrA	urB.		u	Br. c	Hu	Brg
							gc	ucc	uPo	ugP	ugB	uBo	Ac	HPorA	Brl	BrAo	urug		u	Br. c	Hu	Brg
							PB	ucc	uPu	ugu	ugB	uBg	AP	HPorA	Brl	BrA.	uru,		u	Br. c	Hu	Brg
							Pc	ucg	ugA	uuA	uu.	uBB	Ag	HPorA	Brl P	urBu	uruA		u	Br. c	Hu	Brg
							oB	uoA	ugl	uu.	uu,	AA	Au	HPorA	Brl ,	urBo	urgg		u	Br. c	Hu	Brg
							oc	uol	ug,	uul	uuo	A.	AB	HPorA	Brl A	urBl	urgc		u	Br. c	Hu	Brg
							cB	uoo	ugc	uuc	uug	A,	. A	HPorA	Br. u	urBA	urgl		u	Br. c	Hu	Brg
							cc	uoP	ugP	uuo	uuu	A,	. A	HPorA	Br. P	uruu	urgA		u	Br. c	Hu	Brg
							, B	uou	ugg	uuo	uBA	Ac	. .	HPorA	Br. c	uruP	urPu		u	Br. c	Hu	Brg
							uBB	uul	H	H	AB	H	H	HPorA	BrAA	urg,	uroP	G2, B	u	Br. c	Hg	Brg
&' Ø¤Ø®;' [K	cdu,	. rgc	, z Uj + +] [[' Ø	S' U' [' Ø	g/ o X]] z T®S	go	BHuc	ucP	uP.	ug,	uu.	uBl	Al	HPPr,	Brl	Br. c	urBP	G , B	u	Br. c	Hu	Brg
							gB	ucP	uPc	ugP	uu.	uBo	Ac	HPPr,	Brl	BrA	urB.		u	Br. c	Hu	Brg
							gc	ucP	uPg	ugu	uu.	uBg	AP	HPPr,	Brl	BrAo	urug		u	Br. c	Hu	Brg
							PB	ucP	ugA	uuA	uu.	uBB	Ag	HPPr,	Brl	BrA.	uru,		u	Br. c	Hu	Brg
							Pc	uoA	ugl	uul	uu,	A.	Au	HPPr,	Brl P	urBu	uruA		u	Br. c	Hu	Brg
							oB	uo,	ugc	uu,	uuP	Al	AB	HPPr,	Brl ,	urBo	urgg		u	Br. c	Hu	Brg
							oc	uoo	ugo	uuo	uug	A,	. A	HPPr,	Brl A	urBl	urgc		u	Br. c	Hu	Brg
							cB	uog	ugg	uuP	uuB	Ac	. .	HPPr,	Br. u	urBA	urgl		u	Br. c	Hu	Brg
							cc	uoB	ugu	uug	uBA	Ao	. l	HPPr,	Br. P	uruu	urgA		u	Br. c	Hu	Brg
							, B	uP.	ugB	uug	uBl	AP	. ,	HPPr,	Br. c	uruP	urPu		u	Br. c	Hu	Brg
							uBB	uuc	H	H	. A	H	H	HPPr,	BrAA	urg,	uroP	G2, B	u	Br. c	Hg	Brg

9el c®3 Pt e"st , t &s vk 8b®®k 8 Ø bmNme wks®bcevu ceb 8ksvg[1]

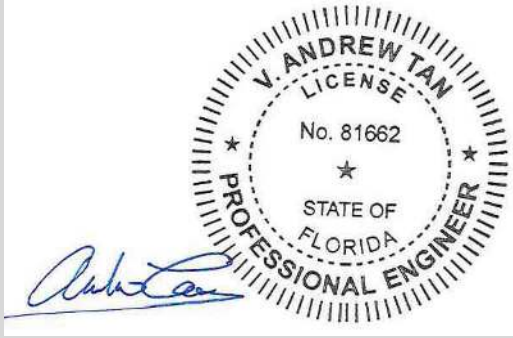

								0F13RØF0F pl nCØF17 sl n Ø X q k q z & KC8 qqKCD 7Ø NC 0F16 sl n Ø X G k q z & K8 qqKC D2Ø N			0F13RØF0F pl nC 0F17RØF16 sl n Ø X k q z & KC 8 qqKCDx K ØØ N											
								e GX/ q q K qGZqK 8qG 12F4:1:1: Z0F13 pl nC 0F0F pl n 0F17RØF16 sl n			e GX/ q q K qGZqK ® Gq 1 z 5 Z8qG 12F4:1:1 Z0F13 pl nCØF0F pl n X K0F17RØF16 sl n			n qZZGq qK	9X/ q 2 GXG X Z D					
								& Kq q GX qz			& Kq q GX qz			T¤Ø=	(					
®Ø z UØ	®Ø z UØ "GØDK[* ° ° ØUG° J	X ØØZG ØUG° J	S' ° Z [* Ø " ≤*[g]	S' ° Z [* Ø T≤' UØ=	S Ø + * " ≤*	TZ z T≤' UØ= ØUG° J	D ØØ= &* Ø G Ø Zs j * * Z]	D	b	f	D	b	f	f * ° Ø[h] ' z ®TSJ	4 ≤ D	4 ≤ b	4 ≤ f		(z	(z	7 b≤	7 b≤Ø
							BHuc	uoP	uPB	uu.	uuu	uBB	Au	HØjAro	BrI	Br. c	urBP	G , B	u	Br. c	Hu	Brg
							gB	uoP	ug,	uuc	uuu	AI	. A	HØjAro	BrI	BrA	urB.		u	Br. c	Hu	Brg
							gc	uoP	ugP	uuP	uuu	Ac	. I	HØjAro	BrI	BrAo	urug		u	Br. c	Hu	Brg
							PB	uoP	ugu	uuu	uuu	AP	. ,	HØjAro	BrI	BrA.	uru,		u	Br. c	Hu	Brg
							Pc	uoB	uuA	H	uB.	Ag	H	HØjAro	BrI P	urBu	uruA		u	Br. c	Hu	Brg
							oB	uPI	uuI	H	uB,	Au	H	HØjAro	BrI ,	urBo	urgg		u	Br. c	Hu	Brg
							oc	uPc	uu,	H	uBo	AB	H	HØjAro	BrI A	urBI	urgc		u	Br. c	Hu	Brg
							cB	uPP	uuo	H	uBP	. A	H	HØjAro	Br. u	urBA	urgI		u	Br. c	Hu	Brg
							cc	uPu	uuP	H	uBg	. .	H	HØjAro	Br. P	uruu	urgA		u	Br. c	Hu	Brg
							, B	uPB	uug	H	uBB	. I	H	HØjAro	Br. c	uruP	urPu		u	Br. c	Hu	Brg
							uBB	H	H	H	H	H	H	HØjAro	BrAA	urg,	uroP	G2, B	u	Br. c	HØj	Brg
							BHuc	uou	ug.	uu,	uBA	AA	AB	HØj. rc	BrI	Br. c	urBP	G , B	u	Br. c	Hu	Brg
							gB	uou	ugo	uuP	uBA	A,	. .	HØj. rc	BrI	BrA	urB.		u	Br. c	Hu	Brg
							gc	uou	ugu	uuu	uBA	Ao	. ,	HØj. rc	BrI	BrAo	urug		u	Br. c	Hu	Brg
							PB	uou	uuA	H	uBA	Ag	H	HØj. rc	BrI	BrA.	uru,		u	Br. c	Hu	Brg
							Pc	uP.	uuI	H	uBI	Au	H	HØj. rc	BrI P	urBu	uruA		u	Br. c	Hu	Brg
							oB	uPc	uuc	H	uBo	. A	H	HØj. rc	BrI ,	urBo	urgg		u	Br. c	Hu	Brg
							oc	uPP	uuo	H	uBP	. .	H	HØj. rc	BrI A	urBI	urgc		u	Br. c	Hu	Brg
							cB	uPu	uuP	H	uBu	. I	H	HØj. rc	Br. u	urBA	urgI		u	Br. c	Hu	Brg
							cc	ugA	uug	H	uBB	. ,	H	HØj. rc	Br. P	uruu	urgA		u	Br. c	Hu	Brg
							, B	ug.	uuu	H	AA	. ,	H	HØj. rc	Br. c	uruP	urPu		u	Br. c	Hu	Brg
							uBB	H	H	H	H	H	H	HØj. rc	BrAA	urg,	uroP	G2, B	u	Br. c	HØj	Brg
							BHuc	ugP	uug	H	Ac	. I	H	HØjurA	BrI	Br. c	urBP	G , B	u	Br. c	Hu	Brg
							gB	ugP	H	H	Ac	H	H	HØjurA	BrI	BrA	urB.		u	Br. c	Hu	Brg
							gc	ugP	H	H	Ac	H	H	HØjurA	BrI	BrAo	urug		u	Br. c	Hu	Brg
							PB	ugP	H	H	Ac	H	H	HØjurA	BrI	BrA.	uru,		u	Br. c	Hu	Brg
							Pc	ugu	H	H	AP	H	H	HØjurA	BrI P	urBu	uruA		u	Br. c	Hu	Brg
							oB	uu.	H	H	Ag	H	H	HØjurA	BrI ,	urBo	urgg		u	Br. c	Hu	Brg
							oc	uu,	H	H	AB	H	H	HØjurA	BrI A	urBI	urgc		u	Br. c	Hu	Brg
							cB	uuo	H	H	. A	H	H	HØjurA	Br. u	urBA	urgI		u	Br. c	Hu	Brg
							cc	uuP	H	H	. .	H	H	HØjurA	Br. P	uruu	urgA		u	Br. c	Hu	Brg
							, B	uug	H	H	. I	H	H	HØjurA	Br. c	uruP	urPu		u	Br. c	Hu	Brg
							uBB	H	H	H	H	H	H	HØjurA	BrAA	urg,	uroP	G2, B	u	Br. c	HØj	Brg
							BHuc	PB.	gI A	gco	gP.	gu,	uAI	HØuP, r.	BrI	Br. c	urBP	G , B	u	Br. c	Hu	Brg
							gB	PB.	gI u	go.	gP.	guB	uAg	HØuP, r.	BrI	BrA	urB.		u	Br. c	Hu	Brg
							gc	PB.	g, ,	goP	gP.	gB,	u. .	HØuP, r.	BrI	BrAo	urug		u	Br. c	Hu	Brg
							PB	PB.	g, B	gPA	gP.	gBg	u. c	HØuP, r.	BrI	BrA.	uru,		u	Br. c	Hu	Brg
							Pc	PBu	gc,	gP,	gPP	uA.	u. P	HØuP, r.	BrI P	urBu	uruA		u	Br. c	Hu	Brg
							oB	gAc	gcP	gPP	ggA	uA,	u. u	HØuP, r.	BrI ,	urBo	urgg		u	Br. c	Hu	Brg
							oc	gAu	gcB	gPu	ggc	uAP	uI A	HØuP, r.	BrI A	urBI	urgc		u	Br. c	Hu	Brg
							cB	g. ,	goI	ggA	ggg	uAu	uI I	HØuP, r.	Br. u	urBA	urgI		u	Br. c	Hu	Brg
							cc	g. P	goo	ggI	guA	u. A	uI ,	HØuP, r.	Br. P	uruu	urgA		u	Br. c	Hu	Brg
							, B	gI A	gog	ggc	gu,	u. .	uI o	HØuP, r.	Br. c	uruP	urPu		u	Br. c	Hu	Brg
							uBB	gPu	gBc	uAg	uI A	ucA	uoA	HØuP, r.	BrAA	urg,	uroP	G2, B	u	Br. c	HØj	Brg
							BHuc	gI c	gcB	ggI	guP	uAo	uI ,	HØuBArc	BrI	Br. c	urBP	G , B	u	Br. c	Hu	Brg
							gB	gI c	goP	ggg	guP	u. .	uI g	HØuBArc	BrI	BrA	urB.		u	Br. c	Hu	Brg
							gc	gI c	gP.	gu.	guP	u. o	u, A	HØuBArc	BrI	BrAo	urug		u	Br. c	Hu	Brg
							PB	gI c	gPP	guo	guP	u. B	u, ,	HØuBArc	BrI	BrA.	uru,		u	Br. c	Hu	Brg
							Pc	gI B	ggA	guu	gBA	uI .	u, o	HØuBArc	BrI P	urBu	uruA		u	Br. c	Hu	Brg
							oB	g, o	gg,	gBA	gBc	uI c	u, g	HØuBArc	BrI ,	urBo	urgg		u	Br. c	Hu	Brg
							oc	g, B	ggP	gB,	gBu	uI P	u, B	HØuBArc	BrI A	urBI	urgc		u	Br. c	Hu	Brg
							cB	gc,	ggu	gBo	uA.	uI u	uc.	HØuBArc	Br. u	urBA	urgI		u	Br. c	Hu	Brg
							cc	gcP	guA	gBP	uA,	u, A	ucI	HØuBArc	Br. P	uruu	urgA		u	Br. c	Hu	Brg
							, B	gcB	guI	gBu	uAo	u, .	uc,	HØuBArc	Br. c	uruP	urPu		u	Br. c	Hu	Brg
							uBB	gBI	u. P	uI g	u, B	uog	uPP	HØuBArc	BrAA	urg,	uroP	G2, B	u	Br. c	HØj	Brg
							BHuc	gcu	gg.	gBI	uAc	uI I	u, B	HAØurg	BrI	Br. c	urBP	G , B	u	Br. c	Hu	Brg
							gB	gcu	ggg	gBg	uAc	uI g	ucI	HAØurg	BrI	BrA	urB.		u	Br. c	Hu	Brg
							gc	gcu	guI	uAA	uAc	u, .	uco	HAØurg	BrI	BrAo	urug		u	Br. c	Hu	Brg
							PB	gcu	gug	uAc	uAc	u, c	ucu	HAØurg	BrI	BrA.	uru,		u	Br. c	Hu	Brg
							Pc	go,	gBA	uAP	uAu	u, g	uoA	HAØurg	BrI P	urBu	uruA		u	Br. c	Hu	Brg
							oB	gou	gB,	uAB	u. I	u, B	uoI	HAØurg	BrI ,	urBo	urgg		u	Br. c	Hu	Brg
							oc	gPI	gBo	u. .	u. o	uc.	uo,	HAØurg	BrI A	urBI	urgc		u	Br. c	Hu	Brg
							cB	gPo	gBu	u. I	u. u	uc,	uoc	HAØurg	Br. u	urBA	urgI		u	Br. c	Hu	Brg
							cc	gPu	gBB	u. c	uI A	ucc	uoP	HAØurg	Br. P	uruu	urgA		u	Br. c	Hu	Brg
							, B	gg.	uA.	u. o	uI I	ucP	uog	HAØurg	Br. c	uruP	urPu		u	Br. c	Hu	Brg
							uBB	u. A	u, I	ucI	uo,	uPB	ugg	HAØurg	BrAA	urg,	uroP	G2, B	u	Br. c	HØj	Brg

b;Ø[ÆF' + * ° &' Ø¢Ø D Ø¢Φ= ®Φz UZ s¢[U-
b - 4 4 [=Φ* * ØΦ= 9 * ≤] Ø¢5] rEgBBuHuBrgru
f * U' + M' ØusgBgB
®' =* gg] j oo

9el c®3 Pt e"st , t &s/k 8b®®k8 Ø bmNme wks®bcevu ceb 8sks/g[1]

V. ANDREW TAN
LICENSE
No. 81662
STATE OF FLORIDA
PROFESSIONAL ENGINEER

0F13®0F0F pl nC0F17 sl n Ø X q k q z & KC8 qqKCD 7Ø NC 0F16 sl n Ø X G k q z & K8 qqKC D2Ø N	0F13®0F0F pl nC 0F17®0F16 sl n Ø X k q z & KC 8 qqKCDx K ØØ N
e GX/ q q K qGZqK 8qG 12F4:1:1: Z0F13 pl nC 0F0F pl n 0F17®0F16 sl n	e GX/ q q K qGZqK ® Gq 1 z 5 Z8qG 12F4:1:1 Z0F13 pl nC0F0F pl n X K0F17®0F16 sl n

n qZZGq qK 9X/ q 2 GX G X Z D

®Φz UZ	®Φz UZ "GØK[* ° ° ØUG° ° J	X ØZG ØUG° ° J	S' ° Z [* Θ " ≤* g	S' ° Z [* Θ T≤' UØ=	S Θ + * " ≤*	TZ z T≤' UØ= ØUG° ° J	D Ø¢Φ= &* ΘØ Z s j * * Z J	D	b	f	D	b	f	f * ° Θ[h] ' z ®TSJ	4 ≤ D	4 ≤ b	4 ≤ f		(z	(z	7 b s	7 b sØ
							BHuc	qo,	qqP	qBP	uAu	ul P	ucI	H I r,	BrI	Br. c	urBP	G , B	u	Br. c	Hu	Brg
							gB	go,	guI	uA.	uAu	u, .	uco	H I r,	BrI	BrA	urB.		u	Br. c	Hu	Brg
							gc	go,	gug	uAc	uAu	u, c	ucu	H I r,	BrI	BrAo	urug		u	Br. c	Hu	Brg
							PB	go,	gB.	uAu	uAu	u, u	uo.	H I r,	BrI	BrA.	uru,		u	Br. c	Hu	Brg
							Pc	gou	gBc	u. A	u. I	ucA	uo,	H I r,	BrI P	urBu	uruA		u	Br. c	Hu	Brg
							oB	qP,	gBg	u. I	u. P	uc,	uoo	H I r,	BrI ,	urBo	urgg		u	Br. c	Hu	Brg
							oc	qPP	gBB	u. c	u. B	ucc	uoP	H I r,	BrI A	urBI	urgc		u	Br. c	Hu	Brg
							cB	ggA	uAI	u. P	ul I	ucP	uog	H I r,	Br. u	urBA	urgI		u	Br. c	Hu	Brg
							cc	gg,	uA,	u. u	ul c	ucu	uou	H I r,	Br. P	uruu	urgA		u	Br. c	Hu	Brg
							, B	ggP	uAo	u. B	ul P	ucB	uPA	H I r,	Br. c	uruP	urPu		u	Br. c	Hu	Brg
							uBB	u. c	u, o	uco	uoP	ugI	uuA	H I r,	BrAA	urg,	uroP	G2, B	u	Br. c	Hg	Brg
							BHuc	gPI	guc	uAc	u. o	u, I	ucu	H uru	BrI	Br. c	urBP	G , B	u	Br. c	Hu	Brg
							gB	gPI	gBA	uAu	u. o	u, g	uo.	H uru	BrI	BrA	urB.		u	Br. c	Hu	Brg
							gc	gPI	gBo	u. I	u. o	uc.	uoc	H uru	BrI	BrAo	urug		u	Br. c	Hu	Brg
							PB	gPI	gBB	u. o	u. o	ucc	uoP	H uru	BrI	BrA.	uru,		u	Br. c	Hu	Brg
							Pc	gPg	uAI	u. g	u. B	ucP	uou	H uru	BrI P	urBu	uruA		u	Br. c	Hu	Brg
							oB	ggI	uAo	ul A	ul ,	ucu	uPA	H uru	BrI ,	urBo	urgg		u	Br. c	Hu	Brg
							oc	ggo	uAg	ul .	ul P	uoA	uP.	H uru	BrI A	urBI	urgc		u	Br. c	Hu	Brg
							cB	ggB	uAB	ul ,	ul u	uoI	uP,	H uru	Br. u	urBA	urgI		u	Br. c	Hu	Brg
							cc	gu.	u. .	ul c	u, A	uo,	uPc	H uru	Br. P	uruu	urgA		u	Br. c	Hu	Brg
							, B	guc	u. ,	ul P	u, I	uoo	uPo	H uru	Br. c	uruP	urPu		u	Br. c	Hu	Brg
							uBB	ul .	uc.	uo.	uP.	ugg	uuc	H uru	BrAA	urg,	uroP	G2, B	u	Br. c	Hg	Brg
							BHuc	qPP	quu	uAq	u. B	u, o	uoA	H I . rg	BrI	Br. c	urBP	G , B	u	Br. c	Hu	Brg
							gB	qPP	gBc	u. I	u. B	ucA	uoc	H I . rg	BrI	BrA	urB.		u	Br. c	Hu	Brg
							gc	qPP	gBu	u. o	u. B	uc,	uog	H I . rg	BrI	BrAo	urug		u	Br. c	Hu	Brg
							PB	qPP	uAI	u. u	u. B	ucg	uoB	H I . rg	BrI	BrA.	uru,		u	Br. c	Hu	Brg
							Pc	gg.	uAo	ul .	ul ,	ucB	uP.	H I . rg	BrI P	urBu	uruA		u	Br. c	Hu	Brg
							oB	ggP	uAu	ul ,	ul P	uo.	uPI	H I . rg	BrI ,	urBo	urgg		u	Br. c	Hu	Brg
							oc	ggB	u. A	ul o	ul B	uo,	uPc	H I . rg	BrI A	urBI	urgc		u	Br. c	Hu	Brg
							cB	gu,	u. ,	ul P	u, .	uoo	uPo	H I . rg	Br. u	urBA	urgI		u	Br. c	Hu	Brg
							cc	guo	u. c	ul u	u, ,	uoP	uPP	H I . rg	Br. P	uruu	urgA		u	Br. c	Hu	Brg
							, B	guu	u. P	ul B	u, o	uog	uPg	H I . rg	Br. c	uruP	urPu		u	Br. c	Hu	Brg
							uBB	ul c	ucc	uoc	uPc	ugB	uuP	H I . rg	BrAA	urg,	uroP	G2, B	u	Br. c	Hg	Brg
							BHuc	qu.	uA.	ul A	u, A	ucP	uPA	H J . ro	BrI	Br. c	urBP	G , B	u	Br. c	Hu	Brg
							gB	gu.	uAg	ul c	u, A	uoA	uP,	H J . ro	BrI	BrA	urB.		u	Br. c	Hu	Brg
							gc	gu.	u. .	ul g	u, A	uoc	uPP	H J . ro	BrI	BrAo	urug		u	Br. c	Hu	Brg
							PB	gu.	u. o	u, A	u, A	uog	uPu	H J . ro	BrI	BrA.	uru,		u	Br. c	Hu	Brg
							Pc	guP	u. u	u, I	u, c	uoB	ugA	H J . ro	BrI P	urBu	uruA		u	Br. c	Hu	Brg
							oB	gBA	ul A	u, c	u, g	uP.	ug.	H J . ro	BrI ,	urBo	urgg		u	Br. c	Hu	Brg
							oc	gB,	ul ,	u, P	ucA	uPI	ug,	H J . ro	BrI A	urBI	urgc		u	Br. c	Hu	Brg
							cB	gBg	ul o	u, g	ucI	uPc	ugc	H J . ro	Br. u	urBA	urgI		u	Br. c	Hu	Brg
							cc	gBB	ul P	u, B	ucc	uPo	ugo	H J . ro	Br. P	uruu	urgA		u	Br. c	Hu	Brg
							, B	uA.	ul u	ucA	ucP	uPP	ugP	H J . ro	Br. c	uruP	urPu		u	Br. c	Hu	Brg
							uBB	u, P	uoc	uP,	ugI	uug	uBc	H J . ro	BrAA	urg,	uroP	G2, B	u	Br. c	Hg	Brg
							BHuc	quo	uAc	ul I	u, .	ucu	uPI	H J , rP	BrI	Br. c	urBP	G , B	u	Br. c	Hu	Brg
							gB	guo	u. A	ul P	u, ,	uo,	uPo	H J , rP	BrI	BrA	urB.		u	Br. c	Hu	Brg
							gc	guo	u. c	u, A	u, ,	uoP	uPu	H J , rP	BrI	BrAo	urug		u	Br. c	Hu	Brg
							PB	guo	u. u	u, ,	u, ,	uoB	ugA	H J , rP	BrI	BrA.	uru,		u	Br. c	Hu	Brg
							Pc	guB	ul .	u, o	u, P	uP.	ugI	H J , rP	BrI P	urBu	uruA		u	Br. c	Hu	Brg
							oB	gB,	ul ,	u, g	ucA	uP,	ug,	H J , rP	BrI ,	urBo	urgg		u	Br. c	Hu	Brg
							oc	gBg	ul o	u, u	ucI	uPc	ugo	H J , rP	BrI A	urBI	urgc		u	Br. c	Hu	Brg
							cB	uAA	ul g	ucA	uco	uPP	ugP	H J , rP	Br. u	urBA	urgI		u	Br. c	Hu	Brg
							cc	uAI	ul B	uc.	ucg	uPg	ugg	H J , rP	Br. P	uruu	urgA		u	Br. c	Hu	Brg
							, B	uAc	u, A	ucI	ucu	uPu	ugu	H J , rP	Br. c	uruP	urPu		u	Br. c	Hu	Brg
							uBB	u, u	uoP	uPo	ugc	uuu	uBo	H J , rP	BrAA	urg,	uroP	G2, B	u	Br. c	Hg	Brg
							BHuc	u. .	ul B	ucc	uoc	uPg	ugB	HtBrA	BrI	Br. c	urBP	G , B	u	Br. c	Hu	Brg
							gB	u. .	u, ,	ucu	uoc	ug.	uuI	HtBrA	BrI	BrA	urB.		u	Br. c	Hu	Brg
							gc	u. .	u, g	uo.	uoc	ug,	uuc	HtBrA	BrI	BrAo	urug		u	Br. c	Hu	Brg
							PB	u. .	ucA	uo,	uoc	ugP	uuP	HtBrA	BrI	BrA.	uru,		u	Br. c	Hu	Brg
							Pc	u. o	uc,	uoo	uog	ugu	uug	HtBrA	BrI P	urBu	uruA		u	Br. c	Hu	Brg
							oB	u. B	uco	uog	uoB	uuA	uuB	HtBrA	BrI ,	urBo	urgg		u	Br. c	Hu	Brg
							oc	ul I	ucg	uou	uPI	uu.	uBA	HtBrA	BrI A	urBI	urgc		u	Br. c	Hu	Brg
							cB	ul c	ucB	uPA	uPc	uuI	uB.	HtBrA	Br. u	urBA	urgI		u	Br. c	Hu	Brg
							cc	ul g	uoA	uP.	uPo	uuc	uBI	HtBrA	Br. P	uruu	urgA		u	Br. c	Hu	Brg
							, B	ul B	uo.	uPI	uPg	uuo	uB,	HtBrA	Br. c	uruP	urPu		u	Br. c	Hu	Brg
							uBB	uou	ugc	uuI	uBA	AI	Au	HtBrA	BrAA	urg,	uroP	G2, B	u	Br. c	Hg	Brg

9el c®3 Pt e"st , t &s/k 8b®®k8 Ø bmNme wks®bcevu ceb 8sks/g[1]

V. ANDREW TAN
LICENSE
No. 81662
STATE OF FLORIDA
PROFESSIONAL ENGINEER

								0F13RØF0F pl nCØF17 sl n Ø X q k q z & KC8 qqKCD 7Ø NC 0F16 sl n Ø X G k q z & K8 qqKC D2Ø N			0F13RØF0F pl nC 0F17RØF16 sl n Ø X k q z & KC 8 qqKCDx K ØØ N									
								e GX/ q q K qGZqK 8qG 12F4:1:1: Z0F13 pl nC 0F0F pl n 0F17RØF16 sl n			e GX/ q q K qGZqK ® Gq 1 z 5 Z8qG 12F4:1:1 Z0F13 pl nCØF0F pl n X K0F17RØF16 sl n			n qZZGq qK 9X/ q 2 GXG X Z D						
								& Kq q GX qz			& Kq q GX qz			T¤Ø=	(					
®Ø z UZ	®Ø z UZ " GØK[* ° ° ØUG ° J	X ØZG ØUG ° J	S' ° Z [* Θ " ≤ * g	S' ° Z [* G T≤' UØ=	SΘ + * " ≤*	TZ z T≤' UØ= ØUG ° J	D ¤Ø= &* ΘØ Z s j * * Z]	D	b	f	D	b	f	f * ° Θ [h] ' z ®TSJ	4 ≤ D	4 ≤ b	4 ≤ f		(z	(z	7 b s	7 b sØ
							BHuc	qcu	qg.	qBl	uAc	ul l	u, B	HAurg	Brl	Br. c	urBP	G , B	u	Br. c	Hu	Brg
							gB	gcu	ggg	gBg	uAc	ul g	ucl	HAurg	Brl	BrA	urB.		u	Br. c	Hu	Brg
							gc	gcu	gul	uAA	uAc	u, .	uco	HAurg	Brl	BrAo	urug		u	Br. c	Hu	Brg
							PB	gcu	gug	uAc	uAc	u, c	ucu	HAurg	Brl	BrA.	uru,		u	Br. c	Hu	Brg
							Pc	go,	gBA	uAP	uAu	u, g	uoA	HAurg	Brl P	urBu	uruA		u	Br. c	Hu	Brg
							oB	gou	gB,	uAB	u. l	u, B	uol	HAurg	Brl ,	urBo	urgg		u	Br. c	Hu	Brg
							oc	gPl	gBo	u. .	u. o	uc.	uo,	HAurg	Brl A	urBl	urgc		u	Br. c	Hu	Brg
							cB	gPo	gBu	u. l	u. u	uc,	uoc	HAurg	Br. u	urBA	urgl		u	Br. c	Hu	Brg
							cc	gPu	gBB	u. c	ul A	ucc	uoP	HAurg	Br. P	uruu	urgA		u	Br. c	Hu	Brg
							, B	gg.	uA.	u. o	ul l	ucP	uog	HAurg	Br. c	uruP	urPu		u	Br. c	Hu	Brg
							uBB	u. A	u, l	ucl	uo,	uPB	ugg	HAurg	BrAA	urg,	uroP	G2, B	u	Br. c	Hg	Brg
							BHuc	ggc	gBo	u. c	ul o	uc.	uoo	HI PrB	Brl	Br. c	urBP	G , B	u	Br. c	Hu	Brg
							gB	ggc	uA.	u. u	ul o	uco	uoB	HI PrB	Brl	BrA	urB.		u	Br. c	Hu	Brg
							gc	ggc	uAo	ul .	ul o	ucB	uP.	HI PrB	Brl	BrAo	urug		u	Br. c	Hu	Brg
							PB	ggc	uAB	ul c	ul o	uol	uPc	HI PrB	Brl	BrA.	uru,		u	Br. c	Hu	Brg
							Pc	ggB	u. l	ul g	ul u	uoc	uPo	HI PrB	Brl P	urBu	uruA		u	Br. c	Hu	Brg
							oB	gu,	u. o	ul B	u, l	uoP	uPg	HI PrB	Brl ,	urBo	urgg		u	Br. c	Hu	Brg
							oc	gug	u. g	u, A	u, o	uou	uPu	HI PrB	Brl A	urBl	urgc		u	Br. c	Hu	Brg
							cB	gBA	u. B	u, l	u, g	uoB	ugA	HI PrB	Br. u	urBA	urgl		u	Br. c	Hu	Brg
							cc	gB,	ul A	u, ,	u, B	uP.	ug.	HI PrB	Br. P	uruu	urgA		u	Br. c	Hu	Brg
							, B	gBo	ul l	u, o	uc.	uPl	ugl	HI PrB	Br. c	uruP	urPu		u	Br. c	Hu	Brg
							uBB	u, A	ucB	uoB	uPu	uu,	uBA	HI PrB	BrAA	urg,	uroP	G2, B	u	Br. c	Hg	Brg
							BHuc	gBc	u. ,	u, A	ucA	uoo	uPu	HJ Br.	Brl	Br. c	urBP	G , B	u	Br. c	Hu	Brg
							gB	gBc	u. u	u, c	ucA	uoB	ug.	HJ Br.	Brl	BrA	urB.		u	Br. c	Hu	Brg
							gc	gBc	ul l	u, g	ucA	uPl	ug,	HJ Br.	Brl	BrAo	urug		u	Br. c	Hu	Brg
							PB	gBc	ul P	ucA	ucA	uPo	ugP	HJ Br.	Brl	BrA.	uru,		u	Br. c	Hu	Brg
							Pc	gBu	ul u	ucl	uc,	uPg	ugg	HJ Br.	Brl P	urBu	uruA		u	Br. c	Hu	Brg
							oB	uAl	u, .	ucc	ucP	uPB	ugB	HJ Br.	Brl ,	urBo	urgg		u	Br. c	Hu	Brg
							oc	uAo	u, ,	uco	ucB	ugA	uuA	HJ Br.	Brl A	urBl	urgc		u	Br. c	Hu	Brg
							cB	uAu	u, o	ucg	uo.	ugl	uu.	HJ Br.	Br. u	urBA	urgl		u	Br. c	Hu	Brg
							cc	u. .	u, P	ucu	uo,	ug,	uul	HJ Br.	Br. P	uruu	urgA		u	Br. c	Hu	Brg
							, B	u. ,	u, g	ucB	uoo	ugc	uu,	HJ Br.	Br. c	uruP	urPu		u	Br. c	Hu	Brg
							uBB	uco	uPl	ug.	uuA	uB,	AA	HJ Br.	BrAA	urg,	uroP	G2, B	u	Br. c	Hg	Brg
							BHuc	qBu	u. g	u, ,	uc,	uou	ug.	Ht. ro	Brl	Br. c	urBP	G , B	u	Br. c	Hu	Brg
							gB	gBu	ul l	u, g	uc,	uPl	ugc	Ht. ro	Brl	BrA	urB.		u	Br. c	Hu	Brg
							gc	gBu	ul o	ucA	uc,	uPo	ugP	Ht. ro	Brl	BrAo	urug		u	Br. c	Hu	Brg
							PB	gBu	ul B	uc,	uc,	uPg	ugu	Ht. ro	Brl	BrA.	uru,		u	Br. c	Hu	Brg
							Pc	uAl	u, l	uco	ucP	uPB	uuA	Ht. ro	Brl P	urBu	uruA		u	Br. c	Hu	Brg
							oB	uAP	u, c	ucg	uoA	ug.	uu.	Ht. ro	Brl ,	urBo	urgg		u	Br. c	Hu	Brg
							oc	uAB	u, P	ucu	uol	ug,	uul	Ht. ro	Brl A	urBl	urgc		u	Br. c	Hu	Brg
							cB	u. l	u, u	uoA	uoc	ugc	uu,	Ht. ro	Br. u	urBA	urgl		u	Br. c	Hu	Brg
							cc	u. c	u, B	uo.	uoP	ugo	uuc	Ht. ro	Br. P	uruu	urgA		u	Br. c	Hu	Brg
							, B	u. g	uc.	uol	uou	ugP	uuo	Ht. ro	Br. c	uruP	urPu		u	Br. c	Hu	Brg
							uBB	ucu	uPo	ug,	uul	uBo	Al	Ht. ro	BrAA	urg,	uroP	G2, B	u	Br. c	Hg	Brg
							BHuc	uAP	ul ,	ucA	ucB	uP,	ugo	HtorB	Brl	Br. c	urBP	G , B	u	Br. c	Hu	Brg
							gB	uAP	ul u	uc,	ucB	uPg	ugu	HtorB	Brl	BrA	urB.		u	Br. c	Hu	Brg
							gc	uAP	u, l	ucP	ucB	ugA	uu.	HtorB	Brl	BrAo	urug		u	Br. c	Hu	Brg
							PB	uAP	u, o	ucB	ucB	ugl	uu,	HtorB	Brl	BrA.	uru,		u	Br. c	Hu	Brg
							Pc	u. A	u, u	uo.	uol	ugc	uuc	HtorB	Brl P	urBu	uruA		u	Br. c	Hu	Brg
							oB	u. ,	ucA	uol	uoo	ugP	uuo	HtorB	Brl ,	urBo	urgg		u	Br. c	Hu	Brg
							oc	u. P	ucl	uoc	uog	ugu	uug	HtorB	Brl A	urBl	urgc		u	Br. c	Hu	Brg
							cB	u. B	ucc	uoo	uPA	ugB	uuu	HtorB	Br. u	urBA	urgl		u	Br. c	Hu	Brg
							cc	ul .	uco	uoP	uP.	uuA	uuB	HtorB	Br. P	uruu	urgA		u	Br. c	Hu	Brg
							, B	ul ,	ucg	uou	uP,	uu.	uuB	HtorB	Br. c	uruP	urPu		u	Br. c	Hu	Brg
							uBB	uoc	ugA	ugu	uuP	uBB	Ao	HtorB	BrAA	urg,	uroP	G2, B	u	Br. c	Hg	Brg
							BHuc	uAB	ul g	ucl	uol	uPo	ugu	Htgru	Brl	Br. c	urBP	G , B	u	Br. c	Hu	Brg
							gB	uAB	u, .	ucP	uol	uPB	uu.	Htgru	Brl	BrA	urB.		u	Br. c	Hu	Brg
							gc	uAB	u, o	ucB	uol	ugl	uu,	Htgru	Brl	BrAo	urug		u	Br. c	Hu	Brg
							PB	uAB	u, u	uo.	uol	ugo	uuo	Htgru	Brl	BrA.	uru,		u	Br. c	Hu	Brg
							Pc	u. ,	uc.	uo,	uoo	ugP	uuP	Htgru	Brl P	urBu	uruA		u	Br. c	Hu	Brg
							oB	u. g	uc,	uoo	uou	ugu	uuu	Htgru	Brl ,	urBo	urgg		u	Br. c	Hu	Brg
							oc	ul A	uco	uog	uPA	uuA	uuB	Htgru	Brl A	urBl	urgc		u	Br. c	Hu	Brg
							cB	ul l	ucg	uou	uPl	uu.	uBA	Htgru	Br. u	urBA	urgl		u	Br. c	Hu	Brg
							cc	ul o	ucu	uoB	uPc	uul	uB.	Htgru	Br. P	uruu	urgA		u	Br. c	Hu	Brg
							, B	ul g	ucB	uPA	uPo	uu,	uB.	Htgru	Br. c	uruP	urPu		u	Br. c	Hu	Brg
							uBB	uoP	ug,	uuA	uuu	A.	Ag	Htgru	BrAA	urg,	uroP	G2, B	u	Br. c	Hg	Brg

b ;Ø[ZÆF + * ° &' Ø±Ø D Ø±Ø= ®Ø z UZ s¢[U-
b - 4 4 [=Ø * * Ø= 9 * ≤] Ø75] rEgBBuHuBrgru
f * U + M Ø usgBgB
®' =* go] j oo

9el c®3 Pt e"st , t & s/k 8b®®k 8 Ø bmNme wks®bcevu ceb 8ksvg[1]

V. ANDREW TAN
LICENSE
No. 81662
STATE OF FLORIDA
PROFESSIONAL ENGINEER

0F13RØF0F pl nC0F17 sl n Ø X q k q z & KC8 qqKCD 7ØNC 0F16 sl n Ø X G k q z & K8 qqKC DØØN	0F13RØF0F pl nC 0F17RØF16 sl n Ø X k q z & KC 8 qqKCDx K ØØN
e GX/ q q K qGZqK 8qG 12F4:1:1: Z0F13 pl nC 0F0F pl n 0F17RØF16 sl n	e GX/ q q K qGZqK ® Gq 1 z 5 Z8qG 12F4:1:1 Z0F13 pl nC0F0F pl n X K0F17RØF16 sl n
& Kq q GX qz	& Kq q GX qz

								D	b	f	D	b	f	f * ° Ø[h] ' z ®TSJ	4 ≤ D	4 ≤ b	4 ≤ f		(z	(z	7 b≤	7 b≤Ø
														n qZZGq qK	9X/ q 2 GX G X Z D							
														T±Ø=	(							
®Ø z UZ	®Ø z UZ " GØK[* ° ° ØUG ° J	X ØZG ØUG ° J	S' ° Z [* Ø " ≤ * g	S' ° Z [* G T≤' UØ=	S Ø + * " ≤*	TZ z T≤' UØ= ØUG ° J	D ±Ø= &* Ø G Z s j * * Z J	D	b	f	D	b	f									
&' Ø±Ø®;' [K	cdu,	Argc	. z Uj + +] [[' Ø	S' U' [' Ø	g/ o X]] z T®S	go	BHuc	ul .	u, u	uoI	uP.	ugc	uuP	Hbcr,	BrI	Br. c	urBP	G , B	u	Br. c	Hu	Brg
							gB	ul .	ucI	uoP	uP.	ugu	uuu	Hbcr,	BrI	BrA	urB.		u	Br. c	Hu	Brg
							gc	ul .	ucP	uoB	uP.	uuA	uBA	Hbcr,	BrI	BrAo	urug		u	Br. c	Hu	Brg
							PB	ul .	ucB	uP.	uP.	uu,	uBI	Hbcr,	BrI	BrA	uru,		u	Br. c	Hu	Brg
							Pc	ul o	uo.	uP,	uPc	uuc	uB,	Hbcr,	BrI P	urBu	uruA		u	Br. c	Hu	Brg
							oB	ul u	uo,	uPc	uPg	uuP	uBo	Hbcr,	BrI ,	urBo	urgg		u	Br. c	Hu	Brg
							oc	u, .	uoo	uPP	uPB	uug	uBP	Hbcr,	BrI A	urBI	urgc		u	Br. c	Hu	Brg
							cB	u, c	uog	uPg	ug.	uuB	uBg	Hbcr,	Br. u	urBA	urgI		u	Br. c	Hu	Brg
							cc	u, P	uou	uPu	ug,	uBA	uBu	Hbcr,	Br. P	uruu	urgA		u	Br. c	Hu	Brg
							, B	u, u	uoB	uPB	ugc	uB.	uBu	Hbcr,	Br. c	uruP	urPu		u	Br. c	Hu	Brg
							uBB	uPP	uu.	uuu	uBP	Ag	. ,	Hbcr,	BrAA	urg,	uroP	G2, B	u	Br. c	Hg	Brg
&' Ø±Ø®;' [K	cdu,	Arc	. z Uj + +] [[' Ø	S' U' [' Ø	g/ o X]] z T®S	go	BHuc	ul c	ucA	uoo	uP,	ugP	uug	Hborg	BrI	Br. c	urBP	G , B	u	Br. c	Hu	Brg
							gB	ul c	uco	uou	uP,	ugB	uBA	Hborg	BrI	BrA	urB.		u	Br. c	Hu	Brg
							gc	ul c	ucu	uP.	uP,	uuI	uBI	Hborg	BrI	BrAo	urug		u	Br. c	Hu	Brg
							PB	ul c	uo.	uP,	uP,	uuc	uBc	Hborg	BrI	BrA	uru,		u	Br. c	Hu	Brg
							Pc	ul u	uo,	uPo	uPP	uuP	uBo	Hborg	BrI P	urBu	uruA		u	Br. c	Hu	Brg
							oB	u, .	uoo	uPP	uPB	uuu	uBP	Hborg	BrI ,	urBo	urgg		u	Br. c	Hu	Brg
							oc	u, c	uog	uPu	ug.	uuB	uBg	Hborg	BrI A	urBI	urgc		u	Br. c	Hu	Brg
							cB	u, P	uoB	uPB	ug,	uBA	uBu	Hborg	Br. u	urBA	urgI		u	Br. c	Hu	Brg
							cc	u, u	uPA	ugA	ugo	uB.	uBB	Hborg	Br. P	uruu	urgA		u	Br. c	Hu	Brg
							, B	ucA	uP.	ug.	ugP	uBI	AA	Hborg	Br. c	uruP	urPu		u	Br. c	Hu	Brg
							uBB	uPu	uuI	H	uBg	AB	H	Hborg	BrAA	urg,	uroP	G2, B	u	Br. c	Hg	Brg
&' Ø±Ø®;' [K	cdu,	ug	. z Uj + +] [[' Ø	S' U' [' Ø	g/ o X]] z T®S	go	BHuc	ucP	uPA	ug,	uuA	uB.	A,	HPPrA	BrI	Br. c	urBP	G , B	u	Br. c	Hu	Brg
							gB	ucP	uPc	ugP	uuA	uBc	A,	HPPrA	BrI	BrA	urB.		u	Br. c	Hu	Brg
							gc	ucP	uPg	ugu	uuA	uBg	Ao	HPPrA	BrI	BrAo	urug		u	Br. c	Hu	Brg
							PB	ucP	uPB	uuA	uuA	uBB	Ag	HPPrA	BrI	BrA	uru,		u	Br. c	Hu	Brg
							Pc	ucB	ug.	uu.	uu,	AA	Au	HPPrA	BrI P	urBu	uruA		u	Br. c	Hu	Brg
							oB	uoI	ug,	uu,	uuo	AI	AB	HPPrA	BrI ,	urBo	urgg		u	Br. c	Hu	Brg
							oc	uoc	ugo	uuc	uug	A,	. A	HPPrA	BrI A	urBI	urgc		u	Br. c	Hu	Brg
							cB	uoP	ugP	uuo	uuB	Ac	. .	HPPrA	Br. u	urBA	urgI		u	Br. c	Hu	Brg
							cc	uou	ugg	uuP	uBA	Ao	. I	HPPrA	Br. P	uruu	urgA		u	Br. c	Hu	Brg
							, B	uPA	ugu	uug	uB.	AP	. I	HPPrA	Br. c	uruP	urPu		u	Br. c	Hu	Brg
							uBB	uuc	H	H	. A	H	H	HPPrA	BrAA	urg,	uroP	G2, B	u	Br. c	Hg	Brg
&' Ø±Ø®;' [K	cdu,	crgc	. z ØØ= ° G [KM] [' Ø s BruuPl ° G [K/ Brg, Bl &*' z f Ø r / grPl cl h] [=	S' U' [' Ø	g/ o]] z f Sh	u,	BHuc	Po,	Puo	g. c	g, .	goP	ggu	HuI grl	BrI	Br. c	urBP	G , B	u	Br. c	Hu	Brg
							gB	Po,	PBc	gl .	g, .	gP,	gu,	HuI grl	BrI	BrA	urB.		u	Br. c	Hu	Brg
							gc	Po,	gA.	gl P	g, .	gPu	gug	HuI grl	BrI	BrAo	urug		u	Br. c	Hu	Brg
							PB	Po,	gAg	g, A	g, .	gg,	gB.	HuI grl	BrI	BrA	uru,		u	Br. c	Hu	Brg
							Pc	PPA	g. .	g, c	g, g	ggP	gBc	HuI grl	BrI P	urBu	uruA		u	Br. c	Hu	Brg
							oB	PPg	g. o	g, g	gcI	ggB	gBP	HuI grl	BrI ,	urBo	urgg		u	Br. c	Hu	Brg
							oc	PgI	g. B	gcA	gcP	guI	gBu	HuI grl	BrI A	urBI	urgc		u	Br. c	Hu	Brg
							cB	Pgu	gl I	gcI	goA	guc	uAA	HuI grl	Br. u	urBA	urgI		u	Br. c	Hu	Brg
							cc	Pu.	gl c	gcc	go,	guP	uAI	HuI grl	Br. P	uruu	urgA		u	Br. c	Hu	Brg
							, B	Puo	gl g	gcP	goP	guu	uA,	HuI grl	Br. c	uruP	urPu		u	Br. c	Hu	Brg
							uBB	g, B	gPB	gu,	gBu	ul .	u, I	HuI grl	BrAA	urg,	uroP	G2, B	u	Br. c	Hg	Brg
&' Ø±Ø®;' [K	cdu,	, rgc	. z ØØ= ° G [KM] [' Ø s BruuPl ° G [K/ Brg, Bl &*' z f Ø r / grPl cl h] [=	S' U' [' Ø	g/ o]] z f Sh	u,	BHuc	PBA	g. u	gcc	goB	guI	uA.	HuP. ru	BrI	Br. c	urBP	G , B	u	Br. c	Hu	Brg
							gB	PBA	gl P	goA	goB	guu	uAP	HuP. ru	BrI	BrA	urB.		u	Br. c	Hu	Brg
							gc	PBA	g, I	goc	goB	gBI	u. A	HuP. ru	BrI	BrAo	urug		u	Br. c	Hu	Brg
							PB	PBA	g, u	goB	goB	gBg	u. ,	HuP. ru	BrI	BrA	uru,		u	Br. c	Hu	Brg
							Pc	PBP	gcI	gPI	gPc	uAA	u. o	HuP. ru	BrI P	urBu	uruA		u	Br. c	Hu	Brg
							oB	gAI	gco	gPo	gPB	uAI	u. u	HuP. ru	BrI ,	urBo	urgg		u	Br. c	Hu	Brg
							oc	gAg	gcu	gPg	gg,	uAo	u. B	HuP. ru	BrI A	urBI	urgc		u	Br. c	Hu	Brg
							cB	g. .	go.	gPB	ggP	uAg	ul .	HuP. ru	Br. u	urBA	urgI		u	Br. c	Hu	Brg
							cc	g. o	go,	gg.	ggB	uAB	ul ,	HuP. ru	Br. P	uruu	urgA		u	Br. c	Hu	Brg
							, B	g. u	goP	gg,	guI	u. A	ul c	HuP. ru	Br. c	uruP	urPu		u	Br. c	Hu	Brg
							uBB	gPg	gB,	uAP	u. B	u, B	ucB	HuP. ru	BrAA	urg,	uroP	G2, B	u	Br. c	Hg	Brg
&' Ø±Ø®;' [K	cdu,	I rgc	. z ØØ= ° G [KM] [' Ø s BruuPl ° G [K/ Brg, Bl &*' z f Ø r / grPl cl h] [=	S' U' [' Ø	g/ o]] z f Sh	u,	BHuc	g. g	gc,	gPP	guA	uA.	u. B	Hiucru	BrI	Br. c	urBP	G , B	u	Br. c	Hu	Brg
							gB	g. g	goA	ggI	guA	uAP	ul ,	Hiucru	BrI	BrA	urB.		u	Br. c	Hu	Brg
							gc	g. g	goo	ggP	guA	u. A	ul P	Hiucru	BrI	BrAo	urug		u	Br. c	Hu	Brg
							PB	g. g	gPA	guA	guA	u. c	ul B	Hiucru	BrI	BrA	uru,		u	Br. c	Hu	Brg
							Pc	gI ,	gPc	guI	guo	u. g	u, .	Hiucru	BrI P	urBu	uruA		u	Br. c	Hu	Brg
							oB	gI u	gPg	guo	guB	ul A	u, ,	Hiucru	BrI ,	urBo	urgg		u	Br. c	Hu	Brg
							oc	g, I	ggA	gug	gBI	ul I	u, o	Hiucru	BrI A	urBI	urgc		u	Br. c	Hu	Brg
							cB	g, g	gg,	guB	gBP	ul c	u, g	Hiucru	Br. u	urBA	urgI		u	Br. c	Hu	Brg
							cc	gcA	ggo	gB.	gBu	ul o	u, u	Hiucru	Br. P	uruu	urgA		u	Br. c	Hu	Brg
							, B	gc,	ggg	gB,	uA.	ul g	u, B	Hiucru	Br. c	uruP	urPu		u	Br. c	Hu	Brg
							uBB	gug	u. .	ul ,	u, o	uo,	uPI	Hiucru	BrAA	urg,	uroP	G2, B	u	Br. c	Hg	Brg

b ;Ø[ZÆF + * ° &' Ø2Ø D Ø2Ø= ®Ø z UZ sq UÞ
b - 4 4 [= Ø * * ØØ= 9 * ≤] Ø25] rEgBBuHuBrgru
f * U + M Ø usgBgB
®' =* gc] j oo

9el c®3 Pt e"st , t &s/k 8b®®k8 Ø bmNme wks®bcevu ceb 8ksvg[1]

V. ANDREW TAN
LICENSE
No. 81662
STATE OF FLORIDA
PROFESSIONAL ENGINEER

								0F13RØF0F pl nCØF17 sl n Ø X q k q z & KC8 qqKCD 7ØNC 0F16 sl n Ø X G k q z & K8 qqKC DØØN			0F13RØF0F pl nC 0F17RØF16 sl n Ø X k q z & KC 8 qqKCDx K ØØN										
								e GX/ q q K qGZqK 8qG 12F4:1:1: Z0F13 pl nC 0F0F pl n 0F17RØF16 sl n			e GX/ q q K qGZqK ® Gq 1 z 5 Z8qG 12F4:1:1 Z0F13 pl nCØF0F pl n X K0F17RØF16 sl n			n qZZGq qK	9X/ q 2 GX G X Z D					
								& K q q GX qz			& K q q GX qz			T Ø=	(					
®Ø z UZ	®Ø z UZ " GØUK[* ° ° ØUG ° J	X ØZG ØUG ° J	S' ° Z [* Ø " ≤ * g	S' ° Z [* G T ≤' UØ=	SØ + * " ≤*	TZ z T ≤' UØ= ØUG ° J	D Ø2Ø= &* ØØ Zs j * * Z]	D	b	f	D	b	f	f * ° Ø[h] ' z ®TSJ	4 ≤ D	4 ≤ b	4 ≤ f		(z	(z	7 b ≤	7 b ≤ C
							BHuc	gl l	gcu	gg.	guo	uAo	ul l	HuuBrc	Brl	Br. c	urBP	G , B	u	Br. c	Hu	Brg
							gB	gl l	goo	ggP	guo	u. A	ul P	HuuBrc	Brl	BrA	urB.		u	Br. c	Hu	Brg
							gc	gl l	gPA	guA	guo	u. c	u, A	HuuBrc	Brl	BrAo	urug		u	Br. c	Hu	Brg
							PB	gl l	gPo	guc	guo	u. u	u, ,	HuuBrc	Brl	BrA	uru,		u	Br. c	Hu	Brg
							Pc	gl u	gPB	gug	guB	ul .	u, o	HuuBrc	Brl P	urBu	uruA		u	Br. c	Hu	Brg
							oB	g, c	ggl	guB	gB,	ul ,	u, g	HuuBrc	Brl ,	urBo	urgg		u	Br. c	Hu	Brg
							oc	g, u	ggo	gBl	gBg	ul o	u, u	HuuBrc	Brl A	urBl	urgc		u	Br. c	Hu	Brg
							cB	gcl	ggg	gBc	uAA	ul g	ucA	HuuBrc	Br. u	urBA	urgl		u	Br. c	Hu	Brg
							cc	gco	ggB	gBo	uAl	ul B	uc.	HuuBrc	Br. P	uruu	urgA		u	Br. c	Hu	Brg
							, B	gcu	gu.	gBg	uAo	u, A	ucl	HuuBrc	Br. c	uruP	urPu		u	Br. c	Hu	Brg
							uBB	gB.	u. o	ul P	u, u	uoP	uPo	HuuBrc	BrAA	urg,	uroP	G2, B	u	Br. c	Hu	Brg
							BHuc	g, ,	gog	guA	gB,	u. l	ul B	HuBgrP	Brl	Br. c	urBP	G , B	u	Br. c	Hu	Brg
							gB	g, ,	gPc	guo	gB,	u. g	u, ,	HuBgrP	Brl	BrA	urB.		u	Br. c	Hu	Brg
							gc	g, ,	gPB	guB	gB,	ul .	u, P	HuBgrP	Brl	BrAo	urug		u	Br. c	Hu	Brg
							PB	g, ,	ggc	gBl	gB,	ul o	u, B	HuBgrP	Brl	BrA	uru,		u	Br. c	Hu	Brg
							Pc	g, u	ggg	gBo	gBg	ul g	uc.	HuBgrP	Brl P	urBu	uruA		u	Br. c	Hu	Brg
							oB	gcc	gu.	gBg	uA.	u, A	uc,	HuBgrP	Brl ,	urBo	urgg		u	Br. c	Hu	Brg
							oc	gcu	gu,	gBB	uAc	u, l	ucc	HuBgrP	Brl A	urBl	urgc		u	Br. c	Hu	Brg
							cB	gol	guP	uA.	uAg	u, c	ucP	HuBgrP	Br. u	urBA	urgl		u	Br. c	Hu	Brg
							cc	goo	guu	uA,	u. A	u, o	ucg	HuBgrP	Br. P	uruu	urgA		u	Br. c	Hu	Brg
							, B	gog	guB	uAc	u. l	u, g	ucu	HuBgrP	Br. c	uruP	urPu		u	Br. c	Hu	Brg
							uBB	gBB	ul l	u, ,	ucc	uPl	ugA	HuBgrP	BrAA	urg,	uroP	G2, B	u	Br. c	Hu	Brg
							BHuc	g, u	gPl	guc	gBg	u. o	u, l	HA rl	Brl	Br. c	urBP	G , B	u	Br. c	Hu	Brg
							gB	g, u	gPu	guB	gBg	ul A	u, P	HA rl	Brl	BrA	urB.		u	Br. c	Hu	Brg
							gc	g, u	gg,	gBl	gBg	ul c	u, B	HA rl	Brl	BrAo	urug		u	Br. c	Hu	Brg
							PB	g, u	ggu	gBP	gBg	ul u	ucl	HA rl	Brl	BrA	uru,		u	Br. c	Hu	Brg
							Pc	gc,	gu.	gBB	uA.	u, A	ucc	HA rl	Brl P	urBu	uruA		u	Br. c	Hu	Brg
							oB	gcu	guo	uA.	uAo	u, ,	ucP	HA rl	Brl ,	urBo	urgg		u	Br. c	Hu	Brg
							oc	gol	gug	uA,	uAu	u, o	ucg	HA rl	Brl A	urBl	urgc		u	Br. c	Hu	Brg
							cB	goP	gBA	uAo	u. .	u, g	ucB	HA rl	Br. u	urBA	urgl		u	Br. c	Hu	Brg
							cc	goB	gB.	uAP	u. ,	u, u	uoA	HA rl	Br. P	uruu	urgA		u	Br. c	Hu	Brg
							, B	gPl	gB,	uAu	u. o	ucA	uo.	HA rl	Br. c	uruP	urPu		u	Br. c	Hu	Brg
							uBB	uA,	ul o	u, P	ucg	uPc	ugl	HA rl	BrAA	urg,	uroP	G2, B	u	Br. c	Hu	Brg
							BHuc	goc	ggg	gBg	u. A	ul g	uc,	H , rP	Brl	Br. c	urBP	G , B	u	Br. c	Hu	Brg
							gB	goc	gu,	uAl	u. A	u, l	ucg	H , rP	Brl	BrA	urB.		u	Br. c	Hu	Brg
							gc	goc	guu	uAP	u. A	u, P	ucB	H , rP	Brl	BrAo	urug		u	Br. c	Hu	Brg
							PB	goc	gBl	uAB	u. A	u, B	uol	H , rP	Brl	BrA	uru,		u	Br. c	Hu	Brg
							Pc	gPA	gBo	u. .	u. c	uc.	uoc	H , rP	Brl P	urBu	uruA		u	Br. c	Hu	Brg
							oB	gPc	gBu	u. c	u. g	ucc	uoP	H , rP	Brl ,	urBo	urgg		u	Br. c	Hu	Brg
							oc	gPu	uA.	u. P	ul A	uco	uog	H , rP	Brl A	urBl	urgc		u	Br. c	Hu	Brg
							cB	ggl	uA,	u. g	ul ,	ucg	uou	H , rP	Br. u	urBA	urgl		u	Br. c	Hu	Brg
							cc	ggc	uAo	u. B	ul o	ucB	uoB	H , rP	Br. P	uruu	urgA		u	Br. c	Hu	Brg
							, B	ggg	uAg	ul A	ul g	uoA	uP.	H , rP	Br. c	uruP	urPu		u	Br. c	Hu	Brg
							uBB	u. o	u, P	ucP	uog	ug,	uu.	H , rP	BrAA	urg,	uroP	G2, B	u	Br. c	Hu	Brg
							BHuc	gou	guA	uA.	u. l	u, A	uco	H Prl	Brl	Br. c	urBP	G , B	u	Br. c	Hu	Brg
							gB	gou	gug	uAo	u. l	u, o	ucB	H Prl	Brl	BrA	urB.		u	Br. c	Hu	Brg
							gc	gou	gB.	uAB	u. l	u, u	uol	H Prl	Brl	BrAo	urug		u	Br. c	Hu	Brg
							PB	gou	gBP	u. l	u. l	uc.	uoc	H Prl	Brl	BrA	uru,		u	Br. c	Hu	Brg
							Pc	gP,	gBB	u. c	u. P	ucc	uoP	H Prl	Brl P	urBu	uruA		u	Br. c	Hu	Brg
							oB	gPu	uA.	u. g	ul A	ucP	uou	H Prl	Brl ,	urBo	urgg		u	Br. c	Hu	Brg
							oc	ggl	uAc	u. u	ul ,	ucu	uoB	H Prl	Brl A	urBl	urgc		u	Br. c	Hu	Brg
							cB	ggo	uAP	ul A	ul P	uoA	uP.	H Prl	Br. u	urBA	urgl		u	Br. c	Hu	Brg
							cc	ggu	uAu	ul l	ul u	uo.	uPl	H Prl	Br. P	uruu	urgA		u	Br. c	Hu	Brg
							, B	guA	uAB	ul ,	u, A	uol	uP,	H Prl	Br. c	uruP	urPu		u	Br. c	Hu	Brg
							uBB	u. u	u, B	ucB	uoB	ugo	uul	H Prl	BrAA	urg,	uroP	G2, B	u	Br. c	Hu	Brg
							BHuc	guu	uAu	ul o	u, P	uo.	uPc	H org	Brl	Br. c	urBP	G , B	u	Br. c	Hu	Brg
							gB	guu	u. ,	ul B	u, P	uoo	uPg	H org	Brl	BrA	urB.		u	Br. c	Hu	Brg
							gc	guu	u. g	u, l	u, P	uou	ugA	H org	Brl	BrAo	urug		u	Br. c	Hu	Brg
							PB	guu	ul .	u, o	u, P	uP.	ugl	H org	Brl	BrA	uru,		u	Br. c	Hu	Brg
							Pc	gBl	ul ,	u, g	u, B	uP,	ugc	H org	Brl P	urBu	uruA		u	Br. c	Hu	Brg
							oB	gBg	ul P	u, B	ucl	uPo	ugo	H org	Brl ,	urBo	urgg		u	Br. c	Hu	Brg
							oc	uAA	ul u	uc.	uco	uPg	ugP	H org	Brl A	urBl	urgc		u	Br. c	Hu	Brg
							cB	uA,	u, A	ucl	ucg	uPu	ugu	H org	Br. u	urBA	urgl		u	Br. c	Hu	Brg
							cc	uAo	u, .	ucc	ucB	uPB	ugB	H org	Br. P	uruu	urgA		u	Br. c	Hu	Brg
							, B	uAu	u, ,	uco	uo.	ugA	uuA	H org	Br. c	uruP	urPu		u	Br. c	Hu	Brg
							uBB	uc.	uoB	uPg	ugP	uBA	uBg	H org	BrAA	urg,	uroP	G2, B	u	Br. c	Hu	Brg

9el c®3 Pt e"st , t &s/k 8b®®k 8 Ø bmNme wks®bcevu ceb 8ksvg[1]

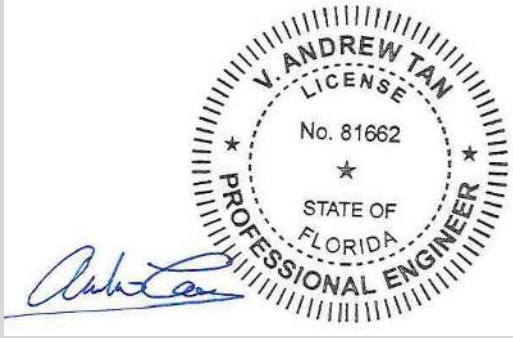

								0F13RØF0F pl nCØF17 sl n Ø X q k q z & KC8 qqKCD 7ØNC 0F16 sl n Ø X G k q z & K8 qqKC DØØN			0F13RØF0F pl nC 0F17RØF16 sl n Ø X k q z & KC 8 qqKCDx K ØØN										
								e GX/ q q K qGZqK 8qG 12F4:1:1: Z0F13 pl nC 0F0F pl n 0F17RØF16 sl n			e GX/ q q K qGZqK ® Gq 1 z 5 Z8qG 12F4:1:1 Z0F13 pl nCØF0F pl n X K0F17RØF16 sl n			n qZZGq qK	9X/ q 2 GX G X Z D					
								& K q q GX qz			& K q q GX qz			T Ø Ø=	(					
®Ø z UÆ	®Ø z UÆ " GØDK[* ° ° ØUG ° J	X Ø ZG ØUG ° J	S' ° Æ [* Ø " ≤ * g	S' ° Æ [* G T ≤' UØ=	S Ø + * " ≤*	TZ z T ≤' UØ= ØUG ° J	D Ø Ø= &* Ø G Æ s j * * Æ j	D	b	f	D	b	f	f * ° Ø [h] ' z ®TSJ	4 ≤ D	4 ≤ b	4 ≤ f		(z	(z	7 b ≤	7 b ≤ Ø
							BHuc	g, g	gc,	gPP	guA	uA	u, B	Hiucru	Brl	Br. c	urBP	G , B	u	Br. c	Hu	Brg
							gB	g, g	goA	ggI	guA	uAP	ul ,	Hiucru	Brl	BrA	urB.		u	Br. c	Hu	Brg
							gc	g, g	goo	ggP	guA	u, A	ul P	Hiucru	Brl	BrAo	urug		u	Br. c	Hu	Brg
							PB	g, g	gPA	guA	guA	u, c	ul B	Hiucru	Brl	BrA	uru,		u	Br. c	Hu	Brg
							Pc	gI ,	gPc	guI	guo	u, g	u, .	Hiucru	Brl P	urBu	uruA		u	Br. c	Hu	Brg
							oB	gI u	gPg	guo	guB	ul A	u, ,	Hiucru	Brl ,	urBo	urgg		u	Br. c	Hu	Brg
							oc	g, I	ggA	gug	gBl	ul I	u, o	Hiucru	Brl A	urBl	urgc		u	Br. c	Hu	Brg
							cB	g, g	gg,	guB	gBP	ul c	u, g	Hiucru	Br. u	urBA	urgI		u	Br. c	Hu	Brg
							cc	gcA	ggo	gB.	gBu	ul o	u, u	Hiucru	Br. P	uruu	urgA		u	Br. c	Hu	Brg
							, B	gc,	ggg	gB,	uA	ul g	u, B	Hiucru	Br. c	uruP	urPu		u	Br. c	Hu	Brg
							uBB	gug	u. .	ul ,	u, o	uo,	uPl	Hiucru	BrAA	urg,	uroP	G2, B	u	Br. c	Hg	Brg
							BHuc	gcP	ggA	gB.	uA	ul .	u, u	HAgru	Brl	Br. c	urBP	G , B	u	Br. c	Hu	Brg
							gB	gcP	ggP	gBP	uA	ul P	ucI	HAgru	Brl	BrA	urB.		u	Br. c	Hu	Brg
							gc	gcP	gu.	gBB	uA	u, A	ucc	HAgru	Brl	BrAo	urug		u	Br. c	Hu	Brg
							PB	gcP	guP	uA	uA	u, c	ucg	HAgru	Brl	BrA	uru,		u	Br. c	Hu	Brg
							Pc	goI	guB	uAo	uAg	u, P	ucB	HAgru	Brl P	urBu	uruA		u	Br. c	Hu	Brg
							oB	gog	gBl	uAu	u. .	u, B	uo.	HAgru	Brl ,	urBo	urgg		u	Br. c	Hu	Brg
							oc	gP.	gBc	u. A	u. c	ucA	uoI	HAgru	Brl A	urBl	urgc		u	Br. c	Hu	Brg
							cB	gPc	gBg	u. I	u. g	ucI	uoc	HAgru	Br. u	urBA	urgI		u	Br. c	Hu	Brg
							cc	gPg	gBu	u. ,	u. B	ucc	uoo	HAgru	Br. P	uruu	urgA		u	Br. c	Hu	Brg
							, B	ggA	uAA	u. c	ul .	uco	uoP	HAgru	Br. c	uruP	urPu		u	Br. c	Hu	Brg
							uBB	uAB	u, .	uc.	uoI	uPB	ugg	HAgru	BrAA	urg,	uroP	G2, B	u	Br. c	Hg	Brg
							BHuc	gPu	gBA	uAB	ul A	u, g	uoI	HI , rl	Brl	Br. c	urBP	G , B	u	Br. c	Hu	Brg
							gB	gPu	gBP	u. ,	ul A	ucI	uoo	HI , rl	Brl	BrA	urB.		u	Br. c	Hu	Brg
							gc	gPu	uAA	u. g	ul A	uco	uou	HI , rl	Brl	BrAo	urug		u	Br. c	Hu	Brg
							PB	gPu	uAc	ul A	ul A	ucu	uPA	HI , rl	Brl	BrA	uru,		u	Br. c	Hu	Brg
							Pc	gg,	uAg	ul I	ul c	uoA	uPl	HI , rl	Brl P	urBu	uruA		u	Br. c	Hu	Brg
							oB	ggu	u. A	ul c	ul u	uoI	uPc	HI , rl	Brl ,	urBo	urgg		u	Br. c	Hu	Brg
							oc	gu.	u. I	ul P	u, A	uoc	uPo	HI , rl	Brl A	urBl	urgc		u	Br. c	Hu	Brg
							cB	guo	u. c	ul u	u, ,	uoP	uPP	HI , rl	Br. u	urBA	urgI		u	Br. c	Hu	Brg
							cc	gug	u. P	ul B	u, o	uog	uPg	HI , rl	Br. P	uruu	urgA		u	Br. c	Hu	Brg
							, B	gBA	u. u	u, A	u, g	uou	uPu	HI , rl	Br. c	uruP	urPu		u	Br. c	Hu	Brg
							uBB	ul P	ucP	uoo	uPo	uuA	uug	HI , rl	BrAA	urg,	uroP	G2, B	u	Br. c	Hg	Brg
							BHuc	gg,	gBc	u. ,	ul c	ucA	uoo	HI Prl	Brl	Br. c	urBP	G , B	u	Br. c	Hu	Brg
							gB	gg,	uAA	u. g	ul c	uco	uou	HI Prl	Brl	BrA	urB.		u	Br. c	Hu	Brg
							gc	gg,	uAc	ul A	ul c	ucu	uP.	HI Prl	Brl	BrAo	urug		u	Br. c	Hu	Brg
							PB	gg,	uAu	ul c	ul c	uo.	uP,	HI Prl	Brl	BrA	uru,		u	Br. c	Hu	Brg
							Pc	ggu	u. .	ul P	ul u	uo,	uPo	HI Prl	Brl P	urBu	uruA		u	Br. c	Hu	Brg
							oB	guI	u. c	ul u	u, .	uoo	uPP	HI Prl	Brl ,	urBo	urgg		u	Br. c	Hu	Brg
							oc	guP	u. P	u, A	u, c	uog	uPu	HI Prl	Brl A	urBl	urgc		u	Br. c	Hu	Brg
							cB	guB	u. u	u, .	u, P	uoB	uPB	HI Prl	Br. u	urBA	urgI		u	Br. c	Hu	Brg
							cc	gBl	ul A	u, ,	u, u	uPA	ugA	HI Prl	Br. P	uruu	urgA		u	Br. c	Hu	Brg
							, B	gBc	ul .	u, c	ucA	uP.	ug.	HI Prl	Br. c	uruP	urPu		u	Br. c	Hu	Brg
							uBB	ul B	ucB	uou	uPu	uu,	uBA	HI Prl	BrAA	urg,	uroP	G2, B	u	Br. c	Hg	Brg
							BHuc	guI	uAl	ul A	u, .	ucP	uPA	H . rg	Brl	Br. c	urBP	G , B	u	Br. c	Hu	Brg
							gB	guI	uAg	ul c	u, .	uo.	uP,	H . rg	Brl	BrA	urB.		u	Br. c	Hu	Brg
							gc	guI	u. .	ul g	u, .	uoc	uPP	H . rg	Brl	BrAo	urug		u	Br. c	Hu	Brg
							PB	guI	u. o	u, A	u, .	uog	uPu	H . rg	Brl	BrA	uru,		u	Br. c	Hu	Brg
							Pc	guP	u. u	u, I	u, c	uoB	ugA	H . rg	Brl P	urBu	uruA		u	Br. c	Hu	Brg
							oB	gBA	ul .	u, c	u, g	uP.	ug.	H . rg	Brl ,	urBo	urgg		u	Br. c	Hu	Brg
							oc	gBc	ul ,	u, P	ucA	uP,	ug,	H . rg	Brl A	urBl	urgc		u	Br. c	Hu	Brg
							cB	gBg	ul o	u, u	ucI	uPc	ugc	H . rg	Br. u	urBA	urgI		u	Br. c	Hu	Brg
							cc	gBB	ul P	u, B	ucc	uPo	ugo	H . rg	Br. P	uruu	urgA		u	Br. c	Hu	Brg
							, B	uAI	ul u	ucA	ucP	uPP	ugP	H . rg	Br. c	uruP	urPu		u	Br. c	Hu	Brg
							uBB	u, P	uoc	uP,	ug,	uug	uBc	H . rg	BrAA	urg,	uroP	G2, B	u	Br. c	Hg	Brg
							BHuc	guP	uAo	ul ,	u, c	ucB	uP,	H cr.	Brl	Br. c	urBP	G , B	u	Br. c	Hu	Brg
							gB	guP	u. .	ul g	u, c	uo,	uPP	H cr.	Brl	BrA	urB.		u	Br. c	Hu	Brg
							gc	guP	u. o	u, A	u, c	uoP	uPu	H cr.	Brl	BrAo	urug		u	Br. c	Hu	Brg
							PB	guP	u. B	u, ,	u, c	uoB	ug.	H cr.	Brl	BrA	uru,		u	Br. c	Hu	Brg
							Pc	gBA	ul .	u, o	u, g	uP.	ugI	H cr.	Brl P	urBu	uruA		u	Br. c	Hu	Brg
							oB	gBc	ul c	u, g	ucA	uP,	ugc	H cr.	Brl ,	urBo	urgg		u	Br. c	Hu	Brg
							oc	gBg	ul P	u, B	uc,	uPo	ugo	H cr.	Brl A	urBl	urgc		u	Br. c	Hu	Brg
							cB	uA	ul u	uc.	uco	uPg	ugP	H cr.	Br. u	urBA	urgI		u	Br. c	Hu	Brg
							cc	uA	u, A	ucI	ucg	uPu	ugg	H cr.	Br. P	uruu	urgA		u	Br. c	Hu	Brg
							, B	uAo	u, .	uc,	ucB	uPB	ugu	H cr.	Br. c	uruP	urPu		u	Br. c	Hu	Brg
							uBB	u, B	uog	uPP	ugo	uuB	uBP	H cr.	BrAA	urg,	uroP	G2, B	u	Br. c	Hg	Brg

9el c®3 Pt e"st , t &s/k 8b®®k8 Ø bmNme wks®bcevu ceb 8ksvg[1]

V. ANDREW TAN
LICENSE
No. 81662
STATE OF FLORIDA
PROFESSIONAL ENGINEER

®Ø z UÆ	®Ø z UÆ " GØ DK[* ° ° ØUG ° J	X Ø±ZG ØUG ° J	S' ° Æ [* Ø " ≤ * g	S' ° Æ [* G T≤' UØ=	S Ø + * " ≤*	TÆ z T≤' UØ= ØUG ° J	D Ø±Ø= &* Ø G Æ s j * * Æ J	0F13RØF0F pl nC0F17 sl n Ø X q k q z & KC8 qqKCD 7Ø NC 0F16 sl n Ø X G k q z & K8 qqKC D Ø N			0F13RØF0F pl nC 0F17RØF16 sl n Ø X k q z & KC 8 qqKCD X K Ø N			T Ø Ø=	n qZZGq qK 9X/ q 2 GXG X Z D (						
								e GX/ q q K qGZqK 8qG 12F4:1:1: Z0F13 pl nC 0F0F pl n 0F17RØF16 sl n			e GX/ q q K qGZqK ® Gq 1 z 5 Z8qG 12F4:1:1 Z0F13 pl nC0F0F pl n X K0F17RØF16 sl n											
								& K q GX qz			& K q GX qz											
								D	b	f	D	b	f		4 ≤ D	4 ≤ b	4 ≤ f		(z	(z	7 b ≤	7 b ≤ C
							BHuic	gBB	u. u	u, c	ucc	uoB	ugI	HtI r,	BrI	Br. c	urBP	G , B	u	Br. c	Hu	Brg
							gB	gBB	uI ,	u, u	ucc	uP,	ugc	HtI r,	BrI	BrA	urB.		u	Br. c	Hu	Brg
							gc	gBB	uI g	uc.	ucc	uPP	ugg	HtI r,	BrI	BrAo	urug		u	Br. c	Hu	Brg
							PB	gBB	u, A	ucc	ucc	uPu	ugB	HtI r,	BrI	BrA	uru,		u	Br. c	Hu	Brg
							Pc	uA,	u, ,	ucP	ucu	ugA	uuA	HtI r,	BrI P	urBu	uruA		u	Br. c	Hu	Brg
							oB	uAg	u, o	ucu	uo.	ugI	uuI	HtI r,	BrI ,	urBo	urgg		u	Br. c	Hu	Brg
							oc	u. A	u, g	ucB	uo,	ugc	uu,	HtI r,	BrI A	urBI	urgc		u	Br. c	Hu	Brg
							cB	u. ,	u, B	uo.	uoo	ugo	uuc	HtI r,	Br. u	urBA	urgI		u	Br. c	Hu	Brg
							cc	u. P	ucA	uoI	uog	ugP	uuo	HtI r,	Br. P	uruu	urgA		u	Br. c	Hu	Brg
							, B	u. u	ucI	uo,	uoB	ugg	uuP	HtI r,	Br. c	uruP	urPu		u	Br. c	Hu	Brg
							uBB	ucB	uPP	ugc	uu,	uBP	AI	HtI r,	BrAA	urg,	uroP	G2, B	u	Br. c	Hg	Brg
							BHuic	uAI	uI .	u, g	ucg	uP.	ug,	Htcr.	BrI	Br. c	urBP	G , B	u	Br. c	Hu	Brg
							gB	uAI	uI P	uc.	ucg	uPo	ugP	Htcr.	BrI	BrA	urB.		u	Br. c	Hu	Brg
							gc	uAI	uI B	ucc	ucg	uPu	ugB	Htcr.	BrI	BrAo	urug		u	Br. c	Hu	Brg
							PB	uAI	u, ,	ucP	ucg	ugA	uu.	Htcr.	BrI	BrA	uru,		u	Br. c	Hu	Brg
							Pc	uAP	u, o	ucu	uoA	ugI	uuI	Htcr.	BrI P	urBu	uruA		u	Br. c	Hu	Brg
							oB	u. A	u, u	uoA	uo,	ugc	uuc	Htcr.	BrI ,	urBo	urgg		u	Br. c	Hu	Brg
							oc	u. ,	ucA	uoI	uoo	ugP	uuo	Htcr.	BrI A	urBI	urgc		u	Br. c	Hu	Brg
							cB	u. P	uc.	uo,	uog	ugg	uuP	Htcr.	Br. u	urBA	urgI		u	Br. c	Hu	Brg
							cc	u. u	uc,	uoc	uoB	ugu	uug	Htcr.	Br. P	uruu	urgA		u	Br. c	Hu	Brg
							, B	uI .	ucc	uoo	uP.	ugB	uuu	Htcr.	Br. c	uruP	urPu		u	Br. c	Hu	Brg
							uBB	uo.	uPu	ugP	uuo	uBu	Ac	Htcr.	BrAA	urg,	uroP	G2, B	u	Br. c	Hg	Brg
							BHuic	uI g	uc,	uog	uPP	ugu	uuB	Htogr.	BrI	Br. c	urBP	G , B	u	Br. c	Hu	Brg
							gB	uI g	ucg	uPA	uPP	uu.	uBI	Htogr.	BrI	BrA	urB.		u	Br. c	Hu	Brg
							gc	uI g	uoA	uP,	uPP	uuc	uBc	Htogr.	BrI	BrAo	urug		u	Br. c	Hu	Brg
							PB	uI g	uo,	uPo	uPP	uuP	uBo	Htogr.	BrI	BrA	uru,		u	Br. c	Hu	Brg
							Pc	u, A	uoP	uPg	uPu	uuu	uBg	Htogr.	BrI P	urBu	uruA		u	Br. c	Hu	Brg
							oB	u, c	uou	uPB	ug.	uBA	uBu	Htogr.	BrI ,	urBo	urgg		u	Br. c	Hu	Brg
							oc	u, P	uoB	ugA	ug,	uB.	uBB	Htogr.	BrI A	urBI	urgc		u	Br. c	Hu	Brg
							cB	u, B	uP.	ug.	ugo	uBI	AA	Htogr.	Br. u	urBA	urgI		u	Br. c	Hu	Brg
							cc	uc.	uPI	ugI	ugP	uB,	A.	Htogr.	Br. P	uruu	urgA		u	Br. c	Hu	Brg
							, B	uc,	uP,	ug,	ugu	uBc	A.	Htogr.	Br. c	uruP	urPu		u	Br. c	Hu	Brg
							uBB	ugA	uuc	H	uBB	. A	H	Htogr.	BrAA	urg,	uroP	G2, B	u	Br. c	Hg	Brg
							BHuic	PgB	gAB	g, o	go.	ggc	gBo	HtIol r,	BrI	Br. c	urBP	G , B	u	Br. c	Hu	Brg
							gB	PgB	g. g	gcI	go.	gu.	uAA	HtIol r,	BrI	BrA	urB.		u	Br. c	Hu	Brg
							gc	PgB	gI ,	gcP	go.	guo	uA,	HtIol r,	BrI	BrAo	urug		u	Br. c	Hu	Brg
							PB	PgB	gI B	go.	go.	gBA	uAg	HtIol r,	BrI	BrA	uru,		u	Br. c	Hu	Brg
							Pc	PuP	g, ,	goc	gog	gB,	uAB	HtIol r,	BrI P	urBu	uruA		u	Br. c	Hu	Brg
							oB	PBI	g, g	gog	gP.	gBP	u. .	HtIol r,	BrI ,	urBo	urgg		u	Br. c	Hu	Brg
							oc	PBg	gcA	goB	gPo	gBu	u. ,	HtIol r,	BrI A	urBI	urgc		u	Br. c	Hu	Brg
							cB	gAI	gc,	gPI	gPB	uA.	u. o	HtIol r,	Br. u	urBA	urgI		u	Br. c	Hu	Brg
							cc	gAo	gco	gPc	ggI	uAI	u. g	HtIol r,	Br. P	uruu	urgA		u	Br. c	Hu	Brg
							, B	gAB	gcg	gPo	ggc	uAc	u. u	HtIol r,	Br. c	uruP	urPu		u	Br. c	Hu	Brg
							uBB	goB	guP	gBB	u. ,	u, c	ucc	HtIol r,	BrAA	urg,	uroP	G2, B	u	Br. c	Hg	Brg
							BHuic	g. ,	gcA	gP,	ggu	gBu	u. P	Htiu. ru	BrI	Br. c	urBP	G , B	u	Br. c	Hu	Brg
							gB	g. ,	gcg	gPB	ggu	uAc	uI .	Htiu. ru	BrI	BrA	urB.		u	Br. c	Hu	Brg
							gc	g. ,	goI	gg,	ggu	uAu	uI c	Htiu. ru	BrI	BrAo	urug		u	Br. c	Hu	Brg
							PB	g. ,	gog	ggg	ggu	u. I	uI g	Htiu. ru	BrI	BrA	uru,		u	Br. c	Hu	Brg
							Pc	g. B	gP.	guA	guI	u. o	uI B	Htiu. ru	BrI P	urBu	uruA		u	Br. c	Hu	Brg
							oB	gI o	gPc	guI	guP	u. g	u, .	Htiu. ru	BrI ,	urBo	urgg		u	Br. c	Hu	Brg
							oc	gI B	gPg	guo	gBA	u. B	u, ,	Htiu. ru	BrI A	urBI	urgc		u	Br. c	Hu	Brg
							cB	g, ,	ggA	gug	gB,	uI .	u, o	Htiu. ru	Br. u	urBA	urgI		u	Br. c	Hu	Brg
							cc	g, P	ggI	guu	gBP	uI ,	u, P	Htiu. ru	Br. P	uruu	urgA		u	Br. c	Hu	Brg
							, B	gcA	ggc	gBA	gBu	uI o	u, g	Htiu. ru	Br. c	uruP	urPu		u	Br. c	Hu	Brg
							uBB	guc	uAB	uI A	u, ,	uoI	uP.	Htiu. ru	BrAA	urg,	uroP	G2, B	u	Br. c	Hg	Brg
							BHuic	g, u	gPI	guc	gBg	u. P	u, I	HA ro	BrI	Br. c	urBP	G , B	u	Br. c	Hu	Brg
							gB	g, u	gPB	guB	gBg	uI .	u, P	HA ro	BrI	BrA	urB.		u	Br. c	Hu	Brg
							gc	g, u	ggc	gB,	gBg	uI o	u, B	HA ro	BrI	BrAo	urug		u	Br. c	Hu	Brg
							PB	g, u	ggu	gBP	gBg	uI u	ucI	HA ro	BrI	BrA	uru,		u	Br. c	Hu	Brg
							Pc	gc,	guI	gBB	uA.	u, .	ucc	HA ro	BrI P	urBu	uruA		u	Br. c	Hu	Brg
							oB	gcu	guo	uA.	uAo	u, ,	ucP	HA ro	BrI ,	urBo	urgg		u	Br. c	Hu	Brg
							oc	go,	gug	uA,	uAu	u, o	ucg	HA ro	BrI A	urBI	urgc		u	Br. c	Hu	Brg
							cB	goP	gBA	uAo	u. .	u, g	ucB	HA ro	Br. u	urBA	urgI		u	Br. c	Hu	Brg
							cc	goB	gBI	uAg	u. ,	u, u	uoA	HA ro	Br. P	uruu	urgA		u	Br. c	Hu	Brg
							, B	gPI	gBc	uAu	u. P	ucA	uo.	HA ro	Br. c	uruP	urPu		u	Br. c	Hu	Brg
							uBB	uA,	uI o	u, P	ucg	uPc	ug,	HA ro	BrAA	urg,	uroP	G2, B	u	Br. c	Hg	Brg

b ;©[ZÆF + * ° &' @©© D @©© = ®©z UZ sq[U-
b - 4 4 [= © * * © © = 9 * ≤] © 5] rEgBBuHuBrgru
f * U + M ©usgBgB
®' = * g.] j oo

9el c®3 Pt e"st , t & s/k 8b®®k 8 © bmNme wks®bcevu ceb 8ksvg[1]

V. ANDREW TAN
LICENSE
No. 81662
STATE OF FLORIDA
PROFESSIONAL ENGINEER

								0F13®0F0F pl nC0F17 sl n © X q k q z & KC8 qqKCD 7©NC 0F16 sl n © X G k q z & K8 qqKC D©N			0F13®0F0F pl nC 0F17®0F16 sl n © X k q z & KC 8 qqKCD x K ©©N								
								e GX/ q q K qGZqK 8qG 12F4:1:1: Z0F13 pl nC 0F0F pl n 0F17®0F16 sl n			e GX/ q q K qGZqK ® Gq 1 z 5 Z8qG 12F4:1:1 Z0F13 pl nC0F0F pl n X K0F17®0F16 sl n			n qZZGq qK	9X/ q 2 GXG X Z D				
								& K q q GX qz			& K q q GX qz			T©© =	(				
®©z UZ	®©z UZ " GDK[* ° ° ©UG ° J	X©ZG ©UG ° J	S' ° Z [* © " ≤ * g	S' ° Z [* © T≤' U© =	S© + * " ≤ *	TZ z T≤' U© = ©UG ° J	D©© = & * © G Z s j * * Z j	D	b	f	D	b	f	f * ° © [h] ' z ®TSJ	4 ≤ D	4 ≤ b	4 ≤ f		(z	(z	7 b s	7 b s ©
							BHuc	gc,	gPg	guu	uA	u. B	u, P	HAorc	Brl	Br. c	urBP	G , B	u	Br. c	Hu	Brg
							gB	gc,	gg,	gB,	uA	ul c	ucA	HAorc	Brl	BrA	urB.		u	Br. c	Hu	Brg
							gc	gc,	ggu	gBg	uA	ul u	ucI	HAorc	Brl	BrAo	urug		u	Br. c	Hu	Brg
							PB	gc,	gu,	uAA	uA	u, I	uco	HAorc	Brl	BrA	uru,		u	Br. c	Hu	Brg
							Pc	gcB	guP	uA,	uAo	u, c	ucg	HAorc	Brl P	urBu	uruA		u	Br. c	Hu	Brg
							oB	goc	guB	uAo	uAB	u, P	ucB	HAorc	Brl ,	urBo	urgg		u	Br. c	Hu	Brg
							oc	gog	gBl	uAg	u. I	u, u	uoA	HAorc	Brl A	urBl	urgc		u	Br. c	Hu	Brg
							cB	gP.	gBc	uAB	u. o	ucA	uoI	HAorc	Br. u	urBA	urgI		u	Br. c	Hu	Brg
							cc	gPc	gBP	u. .	u. g	ucI	uo,	HAorc	Br. P	uruu	urgA		u	Br. c	Hu	Brg
							, B	gPg	gBu	u. I	u. B	uc,	uoc	HAorc	Br. c	uruP	urPu		u	Br. c	Hu	Brg
							uBB	uAg	ul B	u, B	uoA	uPg	ugo	HAorc	BrAA	urg,	uroP	G2, B	u	Br. c	Hg	Brg
							BHuc	go,	ggP	gBP	uAu	ul P	ucI	H I rc	Brl	Br. c	urBP	G , B	u	Br. c	Hu	Brg
							gB	go,	guI	uA	uAu	u, .	ucP	H I rc	Brl	BrA	urB.		u	Br. c	Hu	Brg
							gc	go,	gug	uAc	uAu	u, c	ucu	H I rc	Brl	BrAo	urug		u	Br. c	Hu	Brg
							PB	go,	gB.	uAu	uAu	u, u	uo.	H I rc	Brl	BrA	uru,		u	Br. c	Hu	Brg
							Pc	gou	gBc	u. A	u. I	ucA	uo,	H I rc	Brl P	urBu	uruA		u	Br. c	Hu	Brg
							oB	gP,	gBg	u. ,	u. P	uc,	uoo	H I rc	Brl ,	urBo	urgg		u	Br. c	Hu	Brg
							oc	gPg	gBB	u. c	u. B	ucc	uoP	H I rc	Brl A	urBl	urgc		u	Br. c	Hu	Brg
							cB	ggA	uAI	u. P	ul I	ucP	uog	H I rc	Br. u	urBA	urgI		u	Br. c	Hu	Brg
							cc	gg,	uAc	u. u	ul c	ucu	uoB	H I rc	Br. P	uruu	urgA		u	Br. c	Hu	Brg
							, B	ggP	uAo	u. B	ul P	ucB	uPA	H I rc	Br. c	uruP	urPu		u	Br. c	Hu	Brg
							uBB	u. c	u, o	uco	uoP	ugI	uuA	H I rc	BrAA	urg,	uroP	G2, B	u	Br. c	Hg	Brg
							BHuc	gog	guA	uAA	u. I	ul B	uco	H orP	Brl	Br. c	urBP	G , B	u	Br. c	Hu	Brg
							gB	gog	guP	uAc	u. I	u, c	ucu	H orP	Brl	BrA	urB.		u	Br. c	Hu	Brg
							gc	gog	gBA	uAu	u. I	u, g	uo.	H orP	Brl	BrAo	urug		u	Br. c	Hu	Brg
							PB	gog	gBo	u. .	u. I	uc.	uoc	H orP	Brl	BrA	uru,		u	Br. c	Hu	Brg
							Pc	gPI	gBu	u. c	u. P	uc,	uoo	H orP	Brl P	urBu	uruA		u	Br. c	Hu	Brg
							oB	gPg	uA	u. P	u. B	uco	uog	H orP	Brl ,	urBo	urgg		u	Br. c	Hu	Brg
							oc	gg.	uA,	u. u	ul I	ucg	uoB	H orP	Brl A	urBl	urgc		u	Br. c	Hu	Brg
							cB	ggc	uAo	ul A	ul o	ucB	uPA	H orP	Br. u	urBA	urgI		u	Br. c	Hu	Brg
							cc	ggg	uAg	ul .	ul g	uoA	uP.	H orP	Br. P	uruu	urgA		u	Br. c	Hu	Brg
							, B	guA	uAB	ul I	ul B	uoI	uPI	H orP	Br. c	uruP	urPu		u	Br. c	Hu	Brg
							uBB	u. g	u, u	ucu	uou	ugc	uuI	H orP	BrAA	urg,	uroP	G2, B	u	Br. c	Hg	Brg
							BHuc	gg,	gBc	u. ,	ul c	ucA	uoo	HI Pr.	Brl	Br. c	urBP	G , B	u	Br. c	Hu	Brg
							gB	gg,	uAA	u. g	ul c	uco	uou	HI Pr.	Brl	BrA	urB.		u	Br. c	Hu	Brg
							gc	gg,	uAc	ul A	ul c	ucu	uP.	HI Pr.	Brl	BrAo	urug		u	Br. c	Hu	Brg
							PB	gg,	uAu	ul ,	ul c	uo.	uP,	HI Pr.	Brl	BrA	uru,		u	Br. c	Hu	Brg
							Pc	ggu	u. .	ul P	ul u	uo,	uPo	HI Pr.	Brl P	urBu	uruA		u	Br. c	Hu	Brg
							oB	guI	u. c	ul u	u, .	uoo	uPP	HI Pr.	Brl ,	urBo	urgg		u	Br. c	Hu	Brg
							oc	guP	u. P	ul B	u, c	uog	uPu	HI Pr.	Brl A	urBl	urgc		u	Br. c	Hu	Brg
							cB	guB	u. u	u, .	u, P	uoB	uPB	HI Pr.	Br. u	urBA	urgI		u	Br. c	Hu	Brg
							cc	gB.	u. B	u, I	u, u	uPA	ugA	HI Pr.	Br. P	uruu	urgA		u	Br. c	Hu	Brg
							, B	gBc	ul .	u, c	ucA	uP.	ug.	HI Pr.	Br. c	uruP	urPu		u	Br. c	Hu	Brg
							uBB	ul B	ucu	uou	uPg	uuI	uBA	HI Pr.	BrAA	urg,	uroP	G2, B	u	Br. c	Hg	Brg
							BHuc	ggP	gBg	u. o	ul g	uc,	uog	HI ur,	Brl	Br. c	urBP	G , B	u	Br. c	Hu	Brg
							gB	ggP	uA,	ul A	ul g	ucg	uPA	HI ur,	Brl	BrA	urB.		u	Br. c	Hu	Brg
							gc	ggP	uAg	ul ,	ul g	uoA	uP,	HI ur,	Brl	BrAo	urug		u	Br. c	Hu	Brg
							PB	ggP	u. .	ul P	ul g	uo,	uPo	HI ur,	Brl	BrA	uru,		u	Br. c	Hu	Brg
							Pc	gu.	u. c	ul u	u, A	uoo	uPg	HI ur,	Brl P	urBu	uruA		u	Br. c	Hu	Brg
							oB	guo	u. P	u, A	u, c	uou	uPu	HI ur,	Brl ,	urBo	urgg		u	Br. c	Hu	Brg
							oc	guB	u. B	u, I	u, P	uoB	ugA	HI ur,	Brl A	urBl	urgc		u	Br. c	Hu	Brg
							cB	gBI	ul .	u, c	u, B	uP.	ug.	HI ur,	Br. u	urBA	urgI		u	Br. c	Hu	Brg
							cc	gBo	ul I	u, o	uc.	uPI	ugI	HI ur,	Br. P	uruu	urgA		u	Br. c	Hu	Brg
							, B	gBg	ul c	u, P	uc,	uP,	ug,	HI ur,	Br. c	uruP	urPu		u	Br. c	Hu	Brg
							uBB	u, I	uo.	uPA	uPB	uuc	uB.	HI ur,	BrAA	urg,	uroP	G2, B	u	Br. c	Hg	Brg
							BHuc	uAc	ul I	u, u	ucu	uPI	ugc	HtorA	Brl	Br. c	urBP	G , B	u	Br. c	Hu	Brg
							gB	uAc	ul g	ucI	ucu	uPP	ugg	HtorA	Brl	BrA	urB.		u	Br. c	Hu	Brg
							gc	uAc	u, .	uco	ucu	uPB	uuA	HtorA	Brl	BrAo	urug		u	Br. c	Hu	Brg
							PB	uAc	u, c	ucu	ucu	ug.	uuI	HtorA	Brl	BrA	uru,		u	Br. c	Hu	Brg
							Pc	uAu	u, g	ucB	uo.	ug,	uu,	HtorA	Brl P	urBu	uruA		u	Br. c	Hu	Brg
							oB	u. I	u, B	uo.	uoc	ugo	uuo	HtorA	Brl ,	urBo	urgg		u	Br. c	Hu	Brg
							oc	u. o	uc.	uo,	uoP	ugg	uuP	HtorA	Brl A	urBl	urgc		u	Br. c	Hu	Brg
							cB	u. u	uc,	uoc	uoB	ugu	uug	HtorA	Br. u	urBA	urgI		u	Br. c	Hu	Brg
							cc	ul A	ucc	uoo	uPA	ugB	uuu	HtorA	Br. P	uruu	urgA		u	Br. c	Hu	Brg
							, B	ul I	ucP	uoP	uPI	uuA	uuB	HtorA	Br. c	uruP	urPu		u	Br. c	Hu	Brg
							uBB	uo,	uPB	ugg	uuP	uBu	Ao	HtorA	BrAA	urg,	uroP	G2, B	u	Br. c	Hg	Brg

9el c®3 Pt e"st , t &s/k 8b®®k8 Ø bmNme wks®bcevu ceb 8sks/g[1]

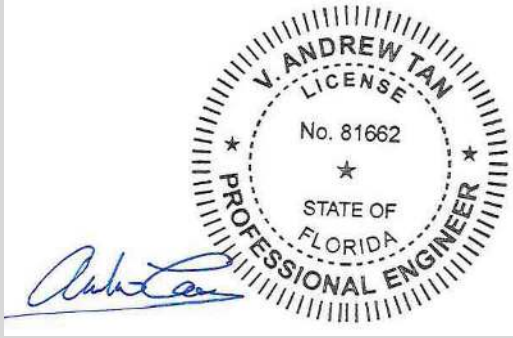

							0F13RØF0F pl nCØF17 sl n Ø X q k q z & KC8 qqKCD 7ØNC 0F16 sl n Ø X G k q z & K8 qqKC DØØN			0F13RØF0F pl nC 0F17RØF16 sl n Ø X k q z & KC 8 qqKCDx K ØØN										
							e GX/ q q K qGZqK 8qG 12F4:1:1: Z0F13 pl nC 0F0F pl n 0F17RØF16 sl n			e GX/ q q K qGZqK ® Gq 1 z 5 Z8qG 12F4:1:1 Z0F13 pl nCØF0F pl n X K0F17RØF16 sl n			n qZZGq qK 9X/ q 2 GXG X Z D							
							& Kq q GX qz			& Kq q GX qz			T2Ø=	(						
®Ø z UZ	®Ø z UZ " GØDK[* ° ° ØUG ° J	X ØZG ØUG ° J	S' ° Z [* Ø " ≤ * g	S' ° Z [* G T≤' UØ=	SØ + * " ≤*	TZ z T≤' UØ= ØUG ° J	D Ø2Ø= &* ØØ2s j * * ZJ	D	b	f	D	b	f	f * ° Ø[h] ' z ®TSJ	4 ≤ D	4 ≤ b	4 ≤ f		(z	(z	7 b≤	7 b≤0
&' Ø2Ø®;' [K	cdu,	crgc	BrBAgl ° G [K/ Brgggl &f / grcl ;] [= T2Ø= [' O	S' U' [' O	g/ o]] z f Sh	go	BHuc	g, u	gPl	guc	gBg	u. P	u, l	HA ro	Brl	Br. c	urBP	G , B	u	Br. c	Hu	Brg
							gB	g, u	gPB	guB	gBg	ul .	u, P	HA ro	Brl	BrA	urB.		u	Br. c	Hu	Brg
							gc	g, u	ggc	gB,	gBg	ul o	u, B	HA ro	Brl	BrAo	urug		u	Br. c	Hu	Brg
							PB	g, u	ggu	gBP	gBg	ul u	ucl	HA ro	Brl	BrA	uru,		u	Br. c	Hu	Brg
							Pc	gc,	gul	gBB	uA	u, .	ucc	HA ro	Brl P	urBu	uruA		u	Br. c	Hu	Brg
							oB	gcu	guo	uA	uAo	u, ,	ucP	HA ro	Brl ,	urBo	urgg		u	Br. c	Hu	Brg
							oc	go,	gug	uA,	uAu	u, o	ucg	HA ro	Brl A	urBl	urgc		u	Br. c	Hu	Brg
							cB	goP	gBA	uAo	u. .	u, g	ucB	HA ro	Br. u	urBA	urgl		u	Br. c	Hu	Brg
							cc	goB	gBl	uAg	u. ,	u, u	uoA	HA ro	Br. P	uruu	urgA		u	Br. c	Hu	Brg
							, B	gPl	gBc	uAu	u. P	ucA	uo.	HA ro	Br. c	uruP	urPu		u	Br. c	Hu	Brg
							uBB	uA,	ul o	u, P	ucg	uPc	ug,	HA ro	BrAA	urg,	uroP	G2, B	u	Br. c	Hg	Brg
&' Ø2Ø®;' [K	cdu,	, rgc	BrBAgl ° G [K/ Brgggl &f / grcl ;] [= T2Ø= [' O	S' U' [' O	g/ o]] z f Sh	go	BHuc	gPP	gug	uAg	u. u	u, o	uoA	HI . rl	Brl	Br. c	urBP	G , B	u	Br. c	Hu	Brg
							gB	gPP	gB,	u. .	u. u	ucA	uo,	HI . rl	Brl	BrA	urB.		u	Br. c	Hu	Brg
							gc	gPP	gBu	u. c	u. u	uc,	uoP	HI . rl	Brl	BrAo	urug		u	Br. c	Hu	Brg
							PB	gPP	uAl	u. u	u. u	ucP	uoB	HI . rl	Brl	BrA	uru,		u	Br. c	Hu	Brg
							Pc	ggA	uAo	ul A	ul I	ucu	uPA	HI . rl	Brl P	urBu	uruA		u	Br. c	Hu	Brg
							oB	ggo	uAg	ul I	ul o	uo.	uPl	HI . rl	Brl ,	urBo	urgg		u	Br. c	Hu	Brg
							oc	ggB	u. A	ul c	ul u	uol	uP,	HI . rl	Brl A	urBl	urgc		u	Br. c	Hu	Brg
							cB	gul	u. I	ul P	u, .	uoc	uPo	HI . rl	Br. u	urBA	urgl		u	Br. c	Hu	Brg
							cc	guo	u. c	ul g	u, ,	uoo	uPP	HI . rl	Br. P	uruu	urgA		u	Br. c	Hu	Brg
							, B	gug	u. o	ul u	u, o	uog	uPg	HI . rl	Br. c	uruP	urPu		u	Br. c	Hu	Brg
							uBB	ul c	ucc	uo,	uP,	ugB	uuP	HI . rl	BrAA	urg,	uroP	G2, B	u	Br. c	Hg	Brg
&' Ø2Ø®;' [K	cdu,	I rgc	BrBAgl ° G [K/ Brgggl &f / grcl ;] [= T2Ø= [' O	S' U' [' O	g/ o]] z f Sh	go	BHuc	guP	uAP	ul ,	u, c	ucB	uP,	HJ cr,	Brl	Br. c	urBP	G , B	u	Br. c	Hu	Brg
							gB	guP	u. .	ul g	u, c	uo,	uPP	HJ cr,	Brl	BrA	urB.		u	Br. c	Hu	Brg
							gc	guP	u. o	u, .	u, c	uog	uPu	HJ cr,	Brl	BrAo	urug		u	Br. c	Hu	Brg
							PB	guP	u. B	u, ,	u, c	uoB	ug.	HJ cr,	Brl	BrA	uru,		u	Br. c	Hu	Brg
							Pc	gBA	ul I	u, P	u, g	uPl	ugl	HJ cr,	Brl P	urBu	uruA		u	Br. c	Hu	Brg
							oB	gBc	ul c	u, u	uc.	uPc	ugc	HJ cr,	Brl ,	urBo	urgg		u	Br. c	Hu	Brg
							oc	gBu	ul P	u, B	uc,	uPo	ugo	HJ cr,	Brl A	urBl	urgc		u	Br. c	Hu	Brg
							cB	uA	ul u	uc.	ucP	uPg	ugP	HJ cr,	Br. u	urBA	urgl		u	Br. c	Hu	Brg
							cc	uA,	u, A	ucl	ucg	uPu	ugg	HJ cr,	Br. P	uruu	urgA		u	Br. c	Hu	Brg
							, B	uAP	u, .	uc,	ucB	uPB	ugu	HJ cr,	Br. c	uruP	urPu		u	Br. c	Hu	Brg
							uBB	u, B	uog	uPP	ugo	uuB	uBP	HJ cr,	BrAA	urg,	uroP	G2, B	u	Br. c	Hg	Brg
&' Ø2Ø®;' [K	cdu,	I rc	BrBAgl ° G [K/ Brgggl &f / grcl ;] [= T2Ø= [' O	S' U' [' O	g/ o]] z f Sh	go	BHuc	gBA	uAB	ul g	u, g	uol	uPP	HJ PrB	Brl	Br. c	urBP	G , B	u	Br. c	Hu	Brg
							gB	gBA	u. o	u, .	u, g	uoP	uPB	HJ PrB	Brl	BrA	urB.		u	Br. c	Hu	Brg
							gc	gBA	u. B	u, c	u, g	uoB	ug.	HJ PrB	Brl	BrAo	urug		u	Br. c	Hu	Brg
							PB	gBA	ul ,	u, g	u, g	uPl	ug,	HJ PrB	Brl	BrA	uru,		u	Br. c	Hu	Brg
							Pc	gBo	ul o	u, B	uc.	uPc	ugo	HJ PrB	Brl P	urBu	uruA		u	Br. c	Hu	Brg
							oB	gBB	ul u	uc.	ucc	uPP	ugP	HJ PrB	Brl ,	urBo	urgg		u	Br. c	Hu	Brg
							oc	uAl	u, A	ucl	ucP	uPu	ugu	HJ PrB	Brl A	urBl	urgc		u	Br. c	Hu	Brg
							cB	uAo	u, I	ucc	ucB	uPB	ugB	HJ PrB	Br. u	urBA	urgl		u	Br. c	Hu	Brg
							cc	uAg	u, ,	uco	uoA	ug.	uuA	HJ PrB	Br. P	uruu	urgA		u	Br. c	Hu	Brg
							, B	uAB	u, o	ucP	uol	ugl	uu.	HJ PrB	Br. c	uruP	urPu		u	Br. c	Hu	Brg
							uBB	ucl	uPA	uPu	ugg	uB.	uBu	HJ PrB	BrAA	urg,	uroP	G2, B	u	Br. c	Hg	Brg
&' Ø2Ø®;' [K	cdu,	.	BrBAgl ° G [K/ Brgggl &f / grcl ;] [= T2Ø= [' O	S' U' [' O	g/ o]] z f Sh	go	BHuc	gBu	u. g	u, ,	uc,	uou	ug.	Hc. rP	Brl	Br. c	urBP	G , B	u	Br. c	Hu	Brg
							gB	gBu	ul I	u, g	uc,	uPl	ugc	Hc. rP	Brl	BrA	urB.		u	Br. c	Hu	Brg
							gc	gBu	ul P	ucA	uc,	uPo	ugP	Hc. rP	Brl	BrAo	urug		u	Br. c	Hu	Brg
							PB	gBu	ul B	uc,	uc,	uPg	ugu	Hc. rP	Brl	BrA	uru,		u	Br. c	Hu	Brg
							Pc	uAl	u, I	uco	ucg	uPB	uuA	Hc. rP	Brl P	urBu	uruA		u	Br. c	Hu	Brg
							oB	uAP	u, c	ucg	uoA	ug.	uu.	Hc. rP	Brl ,	urBo	urgg		u	Br. c	Hu	Brg
							oc	uAB	u, P	ucu	uol	ug,	uul	Hc. rP	Brl A	urBl	urgc		u	Br. c	Hu	Brg
							cB	u. I	u, u	uoA	uoc	ugc	uu,	Hc. rP	Br. u	urBA	urgl		u	Br. c	Hu	Brg
							cc	u. c	u, B	uo.	uoP	ugo	uuc	Hc. rP	Br. P	uruu	urgA		u	Br. c	Hu	Brg
							, B	u. g	uc.	uol	uou	ugP	uuo	Hc. rP	Br. c	uruP	urPu		u	Br. c	Hu	Brg
							uBB	ucu	uPo	ug,	uul	uBo	Al	Hc. rP	BrAA	urg,	uroP	G2, B	u	Br. c	Hg	Brg
&' Ø2Ø®;' [K	cdu,	. rgc	BrBAgl ° G [K/ Brgggl &f / grcl ;] [= T2Ø= [' O	S' U' [' O	g/ o]] z f Sh	go	BHuc	uAl	ul A	u, P	ucP	uPA	ug,	Hc, rg	Brl	Br. c	urBP	G , B	u	Br. c	Hu	Brg
							gB	uAl	ul o	ucA	ucP	uPc	ugP	Hc, rg	Brl	BrA	urB.		u	Br. c	Hu	Brg
							gc	uAl	ul B	uc,	ucP	uPg	ugu	Hc, rg	Brl	BrAo	urug		u	Br. c	Hu	Brg
							PB	uAl	u, I	ucP	ucP	ugA	uuA	Hc, rg	Brl	BrA	uru,		u	Br. c	Hu	Brg
							Pc	uAP	u, o	ucu	ucB	ugl	uul	Hc, rg	Brl P	urBu	uruA		u	Br. c	Hu	Brg
							oB	u. A	u, g	uoA	uol	ugc	uu,	Hc, rg	Brl ,	urBo	urgg		u	Br. c	Hu	Brg
							oc	u. ,	u, B	uo.	uoo	ugo	uuc	Hc, rg	Brl A	urBl	urgc		u	Br. c	Hu	Brg
							cB	u. P	uc.	uo,	uog	ugg	uuP	Hc, rg	Br. u	urBA	urgl		u	Br. c	Hu	Brg
							cc	u. u	ucl	uoc	uoB	ugu	uuP	Hc, rg	Br. P	uruu	urgA		u	Br. c	Hu	Brg
							, B	ul A	ucc	uoo	uPA	ugB	uug	Hc, rg	Br. c	uruP	urPu		u	Br. c	Hu	Brg
							uBB	uo.	uPu	ugP	uuc	uBg	A,	Hc, rg	BrAA	urg,	uroP	G2, B	u	Br. c	Hg	Brg

9el c®3 Pt e"st , t &sv k 8b®®k 8 Ø bmNme wks®bcevu ceb 8ksvg[1]

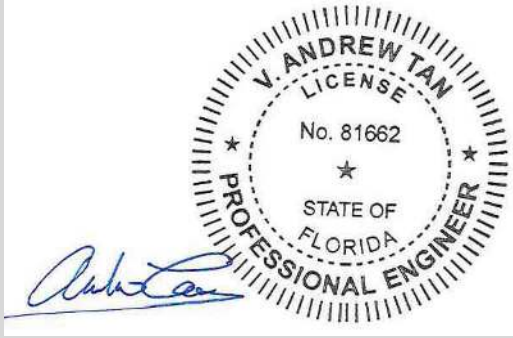

0F13RØF0F pl nCØF17 sl n Ø X q k q z & KC8 qqKCD 7ØNC 0F16 sl n Ø X G k q z & K8 qqKC DØØN	0F13RØF0F pl nC 0F17RØF16 sl n Ø X k q z & KC 8 qqKCDx K ØØN
e GX/ q q K qGZqK 8qG 12F4:1:1: ZØF13 pl nC 0F0F pl n 0F17RØF16 sl n	e GX/ q q K qGZqK ® Gq 1 z 5 Z8qG 12F4:1:1 ZØF13 pl nCØF0F pl n X K0F17RØF16 sl n
& K q q GX qz	& K q q GX qz

®Ø z UØ	®Ø z UØ " GØDK[* ° ° ØUG° J	X ØØZG ØUG° J	S' °Ø [* Ø " ≤* g	S' °Ø [* Ø Ts' UØ=	S Ø + * " ≤*	TØ z Ts' UØ= ØUG° J	D Ø¤Ø= &* Ø¤Ø Zs j * * Ø	D	b	f	D	b	f	f * ° Ø[h] ' z ®TSJ	4 ≤ D	4 ≤ b	4 ≤ f		(z	(z	7 b≤	7 b≤Ø
							BHuic	u. c	u, l	ucg	uoP	uPB	uu.	HbArg	Brl	Br. c	urBP	G , B	u	Br. c	Hu	Brg
							gB	u. c	u, P	uoA	uoP	ug,	uuc	HbArg	Brl	BrA	urB.		u	Br. c	Hu	Brg
							gc	u. c	ucA	uo,	uoP	ugP	uuP	HbArg	Brl	BrAo	urug		u	Br. c	Hu	Brg
							PB	u. c	uc,	uoP	uoP	ugu	uuu	HbArg	Brl	BrA.	uru,		u	Br. c	Hu	Brg
							Pc	u. u	uco	uog	uoB	uuA	uuB	HbArg	Brl P	urBu	uruA		u	Br. c	Hu	Brg
							oB	ul l	ucu	uoB	uPl	uul	uB.	HbArg	Brl ,	urBo	urgg		u	Br. c	Hu	Brg
							oc	ul o	ucB	uP.	uPc	uu,	uBl	HbArg	Brl A	urBl	urgc		u	Br. c	Hu	Brg
							cB	ul g	uo.	uPl	uPP	uuc	uB,	HbArg	Br. u	urBA	urgl		u	Br. c	Hu	Brg
							cc	u, A	uol	uP,	uPu	uuo	uBc	HbArg	Br. P	uruu	urgA		u	Br. c	Hu	Brg
							, B	u, l	uoc	uPc	uPB	uuP	uBc	HbArg	Br. c	uruP	urPu		u	Br. c	Hu	Brg
							uBB	uPA	ugP	uuc	uBl	Ac	. A	HbArg	BrAA	urg,	uroP	G2, B	u	Br. c	Hg	Brg
							BHuic	u. g	u, c	ucB	uou	ug.	uu,	Hbl rl	Brl	Br. c	urBP	G , B	u	Br. c	Hu	Brg
							gB	u. g	u, B	uo,	uou	ugo	uuP	Hbl rl	Brl	BrA	urB.		u	Br. c	Hu	Brg
							gc	u. g	ucl	uoo	uou	ugu	uuu	Hbl rl	Brl	BrAo	urug		u	Br. c	Hu	Brg
							PB	u. g	uco	uou	uou	uuA	uBA	Hbl rl	Brl	BrA.	uru,		u	Br. c	Hu	Brg
							Pc	ul .	ucu	uPA	uP.	uul	uB.	Hbl rl	Brl P	urBu	uruA		u	Br. c	Hu	Brg
							oB	ul o	uoA	uP.	uPc	uu,	uBl	Hbl rl	Brl ,	urBo	urgg		u	Br. c	Hu	Brg
							oc	ul g	uol	uP,	uPP	uuo	uB,	Hbl rl	Brl A	urBl	urgc		u	Br. c	Hu	Brg
							cB	u, A	uo,	uPc	uPu	uuP	uBc	Hbl rl	Br. u	urBA	urgl		u	Br. c	Hu	Brg
							cc	u, l	uoo	uPo	ugA	uug	uBo	Hbl rl	Br. P	uruu	urgA		u	Br. c	Hu	Brg
							, B	u, c	uoP	uPP	ug.	uuu	uBP	Hbl rl	Br. c	uruP	urPu		u	Br. c	Hu	Brg
							uBB	uPl	ugu	uuo	uB,	Ao	. .	Hbl rl	BrAA	urg,	uroP	G2, B	u	Br. c	Hg	Brg
							BHuic	ucA	uoo	uPu	ugP	uug	uBg	HP, r,	Brl	Br. c	urBP	G , B	u	Br. c	Hu	Brg
							gB	ucA	uoB	ug.	ugP	uBA	AA	HP, r,	Brl	BrA	urB.		u	Br. c	Hu	Brg
							gc	ucA	uPl	ug,	ugP	uB,	A.	HP, r,	Brl	BrAo	urug		u	Br. c	Hu	Brg
							PB	ucA	uPc	ugo	ugP	uBo	A,	HP, r,	Brl	BrA.	uru,		u	Br. c	Hu	Brg
							Pc	uc,	uPP	ugg	ugu	uBP	Ac	HP, r,	Brl P	urBu	uruA		u	Br. c	Hu	Brg
							oB	ucP	uPu	ugu	uu.	uBu	AP	HP, r,	Brl ,	urBo	urgg		u	Br. c	Hu	Brg
							oc	ucB	ugA	uuA	uu,	uBB	Ag	HP, r,	Brl A	urBl	urgc		u	Br. c	Hu	Brg
							cB	uo.	ug.	uu.	uuc	AA	Ag	HP, r,	Br. u	urBA	urgl		u	Br. c	Hu	Brg
							cc	uo,	ug,	uul	uuP	A.	Au	HP, r,	Br. P	uruu	urgA		u	Br. c	Hu	Brg
							, B	uoo	ugc	uu,	uug	Al	AB	HP, r,	Br. c	uruP	urPu		u	Br. c	Hu	Brg
							uBB	ugB	H	H	AP	H	H	HP, r,	BrAA	urg,	uroP	G2, B	u	Br. c	Hg	Brg
							BHuic	gc.	gPo	guP	gBB	u. u	u, c	HA, rP	Brl	Br. c	urBP	G , B	u	Br. c	Hu	Brg
							gB	gc.	gg.	gB.	gBB	ul ,	u, u	HA, rP	Brl	BrA	urB.		u	Br. c	Hu	Brg
							gc	gc.	ggP	gBo	gBB	ul P	uc.	HA, rP	Brl	BrAo	urug		u	Br. c	Hu	Brg
							PB	gc.	gu.	gBu	gBB	u, A	ucc	HA, rP	Brl	BrA.	uru,		u	Br. c	Hu	Brg
							Pc	gcP	guc	uA.	uA,	u, ,	ucP	HA, rP	Brl P	urBu	uruA		u	Br. c	Hu	Brg
							oB	go.	gug	uA,	uAg	u, o	ucu	HA, rP	Brl ,	urBo	urgg		u	Br. c	Hu	Brg
							oc	goo	gBA	uAo	u. A	u, g	ucB	HA, rP	Brl A	urBl	urgc		u	Br. c	Hu	Brg
							cB	goB	gBl	uAg	u. ,	u, B	uo.	HA, rP	Br. u	urBA	urgl		u	Br. c	Hu	Brg
							cc	gPl	gBc	uAB	u. o	ucA	uol	HA, rP	Br. P	uruu	urgA		u	Br. c	Hu	Brg
							, B	gPo	gBP	u. A	u. u	ucl	uo,	HA, rP	Br. c	uruP	urPu		u	Br. c	Hu	Brg
							uBB	uAo	ul g	u, u	ucB	uPP	ugc	HA, rP	BrAA	urg,	uroP	G2, B	u	Br. c	Hg	Brg
							BHuic	gPu	guB	uAB	ul A	u, g	uol	Hl l rB	Brl	Br. c	urBP	G , B	u	Br. c	Hu	Brg
							gB	gPu	gBo	u. ,	ul A	uc.	uoo	Hl l rB	Brl	BrA	urB.		u	Br. c	Hu	Brg
							gc	gPu	uAA	u. P	ul A	uco	uou	Hl l rB	Brl	BrAo	urug		u	Br. c	Hu	Brg
							PB	gPu	uAc	ul A	ul A	ucu	uPA	Hl l rB	Brl	BrA.	uru,		u	Br. c	Hu	Brg
							Pc	gg,	uAg	ul l	ul c	uoA	uPl	Hl l rB	Brl P	urBu	uruA		u	Br. c	Hu	Brg
							oB	ggg	u. A	ul c	ul g	uol	uPc	Hl l rB	Brl ,	urBo	urgg		u	Br. c	Hu	Brg
							oc	gu.	u. l	ul P	u, A	uoc	uPo	Hl l rB	Brl A	urBl	urgc		u	Br. c	Hu	Brg
							cB	guc	u. c	ul u	u, ,	uoP	uPP	Hl l rB	Br. u	urBA	urgl		u	Br. c	Hu	Brg
							cc	gug	u. P	ul B	u, o	uog	uPg	Hl l rB	Br. P	uruu	urgA		u	Br. c	Hu	Brg
							, B	guB	u. g	u, A	u, g	uou	uPu	Hl l rB	Br. c	uruP	urPu		u	Br. c	Hu	Brg
							uBB	ul P	uco	uoo	uPo	uuA	uug	Hl l rB	BrAA	urg,	uroP	G2, B	u	Br. c	Hg	Brg
							BHuic	guu	uAu	ul o	u, P	uo.	uPc	Hj org	Brl	Br. c	urBP	G , B	u	Br. c	Hu	Brg
							gB	guu	u. ,	ul B	u, P	uoo	uPu	Hj org	Brl	BrA	urB.		u	Br. c	Hu	Brg
							gc	guu	u. g	u, l	u, P	uou	ugA	Hj org	Brl	BrAo	urug		u	Br. c	Hu	Brg
							PB	guu	ul .	u, o	u, P	uP.	ugl	Hj org	Brl	BrA.	uru,		u	Br. c	Hu	Brg
							Pc	gB,	ul c	u, g	u, B	uP,	ugc	Hj org	Brl P	urBu	uruA		u	Br. c	Hu	Brg
							oB	gBg	ul P	u, B	ucl	uPo	ugo	Hj org	Brl ,	urBo	urgg		u	Br. c	Hu	Brg
							oc	uAA	ul u	uc.	uco	uPg	ugg	Hj org	Brl A	urBl	urgc		u	Br. c	Hu	Brg
							cB	uA,	u, A	ucl	ucg	uPu	ugu	Hj org	Br. u	urBA	urgl		u	Br. c	Hu	Brg
							cc	uAo	u, l	ucc	ucB	uPB	ugB	Hj org	Br. P	uruu	urgA		u	Br. c	Hu	Brg
							, B	uAu	u, ,	uco	uo.	ugA	uuA	Hj org	Br. c	uruP	urPu		u	Br. c	Hu	Brg
							uBB	uc.	uoB	uPg	ugP	uBA	uBg	Hj org	BrAA	urg,	uroP	G2, B	u	Br. c	Hg	Brg

9el c®3 Pt e"st , t &s/k 8b®®k 8 Ø bmNme wks®bcevu ceb 8sks/g[1]

V. ANDREW TAN
LICENSE
No. 81662
STATE OF FLORIDA
PROFESSIONAL ENGINEER

								0F13RØF0F pl nCØF17 sl n Ø X q k q z & KC8 qqKCD 7Ø NC 0F16 sl n Ø X G k q z & K8 qqKC D2Ø N			0F13RØF0F pl nC 0F17RØF16 sl n Ø X k q z & KC 8 qqKCDx K ØØ N										
								e GX/ q q K qGZqK 8qG 12F4:1:1: Z0F13 pl nC 0F0F pl n 0F17RØF16 sl n			e GX/ q q K qGZqK ® Gq 1 z 5 Z8qG 12F4:1:1 Z0F13 pl nCØF0F pl n X K0F17RØF16 sl n			n qZZGq qK 9X/ q 2 GXG X Z D						
								& K q q GX qz			& K q q GX qz			T Ø¤Ø=	(					
®Ø z UØ	®Ø z UØ " GØDK[* ° ° ØUG ° J	X Ø ZG ØUG ° J	S' ° Z [* Ø " ≤ * g	S' ° Z [* Ø Ts' UØ=	SØ + * " ≤*	TZ z Ts' UØ= ØUG ° J	D Ø¤Ø= &* ØØ Z2s j * * Z]	D	b	f	D	b	f	f * ° Ø[h] ' z ®TSJ	4 ≤ D	4 ≤ b	4 ≤ f		(z	(z	7 b s	7 b sØ
							BHuc	qBl	u. l	ul B	u, B	uoc	uPg	H ur,	Brl	Br. c	urBP	G , B	u	Br. c	Hu	Brg
							gB	gBl	u. g	u, ,	u, B	uou	ugA	H ur,	Brl	BrA	urB.		u	Br. c	Hu	Brg
							gc	gBl	ul .	u, P	u, B	uP.	ug,	H ur,	Brl	BrAo	urug		u	Br. c	Hu	Brg
							PB	gBl	ul c	u, B	u, B	uPc	ugo	H ur,	Brl	BrA.	uru,		u	Br. c	Hu	Brg
							Pc	gBg	ul g	uc.	ucl	uPP	ugP	H ur,	Brl P	urBu	uruA		u	Br. c	Hu	Brg
							oB	uA.	u, A	uc,	uco	uPu	ugu	H ur,	Brl ,	urBo	urgg		u	Br. c	Hu	Brg
							oc	uAc	u, l	ucc	ucu	uPB	ugB	H ur,	Brl A	urBl	urgc		u	Br. c	Hu	Brg
							cB	uAg	u, ,	ucP	uoA	ug.	uuA	H ur,	Br. u	urBA	urgl		u	Br. c	Hu	Brg
							cc	uAB	u, o	ucg	uol	ugl	uu.	H ur,	Br. P	uruu	urgA		u	Br. c	Hu	Brg
							, B	u. l	u, P	ucu	uoc	ug,	uul	H ur,	Br. c	uruP	urPu		u	Br. c	Hu	Brg
							uBB	ucc	uP.	ugA	ugB	uBl	uBB	H ur,	BrAA	urg,	uroP	G2, B	u	Br. c	Hg	Brg
							BHuc	uAA	u. B	u, o	uco	uoB	ugl	H cl rB	Brl	Br. c	urBP	G , B	u	Br. c	Hu	Brg
							gB	uAA	ul c	u, B	uco	uP,	ugo	H cl rB	Brl	BrA	urB.		u	Br. c	Hu	Brg
							gc	uAA	ul g	ucl	uco	uPP	ugg	H cl rB	Brl	BrAo	urug		u	Br. c	Hu	Brg
							PB	uAA	u, .	uco	uco	uPB	ugB	H cl rB	Brl	BrA.	uru,		u	Br. c	Hu	Brg
							Pc	uAc	u, c	ucg	ucu	ug.	uu.	H cl rB	Brl P	urBu	uruA		u	Br. c	Hu	Brg
							oB	uAu	u, P	ucu	uo.	ug,	uul	H cl rB	Brl ,	urBo	urgg		u	Br. c	Hu	Brg
							oc	u. .	u, u	uoA	uoc	ugc	uuc	H cl rB	Brl A	urBl	urgc		u	Br. c	Hu	Brg
							cB	u. c	ucA	uo.	uoP	ugP	uuo	H cl rB	Br. u	urBA	urgl		u	Br. c	Hu	Brg
							cc	u. P	uc.	uo,	uou	ugg	uuP	H cl rB	Br. P	uruu	urgA		u	Br. c	Hu	Brg
							, B	u. B	uc,	uoc	uoB	ugu	uuP	H cl rB	Br. c	uruP	urPu		u	Br. c	Hu	Brg
							uBB	uoA	uPg	ugo	uu,	uBP	A,	H cl rB	BrAA	urg,	uroP	G2, B	u	Br. c	Hg	Brg
							BHuc	uAc	ul l	u, u	ucu	uPl	ugc	H ccrB	Brl	Br. c	urBP	G , B	u	Br. c	Hu	Brg
							gB	uAc	ul g	ucl	ucu	uPP	ugg	H ccrB	Brl	BrA	urB.		u	Br. c	Hu	Brg
							gc	uAc	u, .	uco	ucu	uPB	ugB	H ccrB	Brl	BrAo	urug		u	Br. c	Hu	Brg
							PB	uAc	u, c	ucg	ucu	ug.	uul	H ccrB	Brl	BrA.	uru,		u	Br. c	Hu	Brg
							Pc	uAu	u, g	ucB	uo.	ug,	uu,	H ccrB	Brl P	urBu	uruA		u	Br. c	Hu	Brg
							oB	u. l	u, B	uo.	uoc	ugo	uuc	H ccrB	Brl ,	urBo	urgg		u	Br. c	Hu	Brg
							oc	u. o	uc.	uo,	uoP	ugP	uuP	H ccrB	Brl A	urBl	urgc		u	Br. c	Hu	Brg
							cB	u. u	uc,	uoc	uou	ugu	uug	H ccrB	Br. u	urBA	urgl		u	Br. c	Hu	Brg
							cc	ul A	ucc	uoo	uPA	ugB	uuu	H ccrB	Br. P	uruu	urgA		u	Br. c	Hu	Brg
							, B	ul l	uco	uoP	uPl	uuA	uuu	H ccrB	Br. c	uruP	urPu		u	Br. c	Hu	Brg
							uBB	uol	uPB	ugg	uuo	uBu	Ao	H ccrB	BrAA	urg,	uroP	G2, B	u	Br. c	Hg	Brg
							BHuc	u. P	u, ,	ucu	uou	ug.	uul	H b. ru	Brl	Br. c	urBP	G , B	u	Br. c	Hu	Brg
							gB	u. P	u, u	uol	uou	ugc	uuo	H b. ru	Brl	BrA	urB.		u	Br. c	Hu	Brg
							gc	u. P	uc.	uoo	uou	ugg	uug	H b. ru	Brl	BrAo	urug		u	Br. c	Hu	Brg
							PB	u. P	uco	uog	uou	ugB	uuB	H b. ru	Brl	BrA.	uru,		u	Br. c	Hu	Brg
							Pc	ul A	ucg	uoB	uP.	uu.	uB.	H b. ru	Brl P	urBu	uruA		u	Br. c	Hu	Brg
							oB	ul c	ucB	uP.	uP,	uu,	uBl	H b. ru	Brl ,	urBo	urgg		u	Br. c	Hu	Brg
							oc	ul g	uo.	uPl	uPo	uuc	uB,	H b. ru	Brl A	urBl	urgc		u	Br. c	Hu	Brg
							cB	ul B	uo,	uP,	uPu	uuP	uBc	H b. ru	Br. u	urBA	urgl		u	Br. c	Hu	Brg
							cc	u, .	uoc	uPo	uPB	uug	uBo	H b. ru	Br. P	uruu	urgA		u	Br. c	Hu	Brg
							, B	u, ,	uoo	uPP	ug.	uuu	uBP	H b. ru	Br. c	uruP	urPu		u	Br. c	Hu	Brg
							uBB	uPl	ugg	uuo	uB,	Ao	. .	H b. ru	BrAA	urg,	uroP	G2, B	u	Br. c	Hg	Brg
							BHuc	u. B	u, P	uo.	uPA	ug,	uuc	H b, rl	Brl	Br. c	urBP	G , B	u	Br. c	Hu	Brg
							gB	u. B	ucA	uoc	uPA	ugP	uug	H b, rl	Brl	BrA	urB.		u	Br. c	Hu	Brg
							gc	u. B	ucc	uog	uPA	ugB	uuB	H b, rl	Brl	BrAo	urug		u	Br. c	Hu	Brg
							PB	u. B	ucg	uoB	uPA	uu.	uB.	H b, rl	Brl	BrA.	uru,		u	Br. c	Hu	Brg
							Pc	ul ,	ucB	uP.	uP,	uu,	uBl	H b, rl	Brl P	urBu	uruA		u	Br. c	Hu	Brg
							oB	ul P	uol	uP,	uPo	uuo	uBc	H b, rl	Brl ,	urBo	urgg		u	Br. c	Hu	Brg
							oc	ul B	uo,	uPc	uPg	uuP	uBo	H b, rl	Brl A	urBl	urgc		u	Br. c	Hu	Brg
							cB	u, l	uoo	uPP	ugA	uug	uBP	H b, rl	Br. u	urBA	urgl		u	Br. c	Hu	Brg
							cc	u, c	uoP	uPg	ug.	uuu	uBP	H b, rl	Br. P	uruu	urgA		u	Br. c	Hu	Brg
							, B	u, P	uou	uPu	ug,	uuB	uBg	H b, rl	Br. c	uruP	urPu		u	Br. c	Hu	Brg
							uBB	uPc	ugB	uug	uBc	AP	. l	H b, rl	BrAA	urg,	uroP	G2, B	u	Br. c	Hg	Brg
							BHuc	ucl	uoP	uPB	ugg	uuu	uBu	HPcr.	Brl	Br. c	urBP	G , B	u	Br. c	Hu	Brg
							gB	ucl	uPA	ugl	ugg	uB.	A.	HPcr.	Brl	BrA	urB.		u	Br. c	Hu	Brg
							gc	ucl	uP,	ugo	ugg	uBc	A,	HPcr.	Brl	BrAo	urug		u	Br. c	Hu	Brg
							PB	ucl	uPP	ugg	ugg	uBP	Ac	HPcr.	Brl	BrA.	uru,		u	Br. c	Hu	Brg
							Pc	uco	uPu	ugu	uuA	uBg	Ao	HPcr.	Brl P	urBu	uruA		u	Br. c	Hu	Brg
							oB	ucu	ugA	uuA	uul	uBB	Ag	HPcr.	Brl ,	urBo	urgg		u	Br. c	Hu	Brg
							oc	uoA	ug.	uu.	uuc	AA	Au	HPcr.	Brl A	urBl	urgc		u	Br. c	Hu	Brg
							cB	uo,	ug,	uul	uuP	A,	Au	HPcr.	Br. u	urBA	urgl		u	Br. c	Hu	Brg
							cc	uoc	ugc	uu,	uug	Al	AB	HPcr.	Br. P	uruu	urgA		u	Br. c	Hu	Brg
							, B	uoP	ugo	uuc	uuu	A,	. A	HPcr.	Br. c	uruP	urPu		u	Br. c	Hu	Brg
							uBB	uu.	H	H	Ag	H	H	HPcr.	BrAA	urg,	uroP	G2, B	u	Br. c	Hg	Brg

b;Ø[ZÆF' + * ° &' Ø¤Ø D Ø¤Ø= ®Ø z UZ s¢[U-
b - 4 4 [=Ø * * ØØ= 9 * ≤] Ø¤5] rEgBBuHuBrgru
f * U' + M' ØusgBgB
®' =* Pg] j oo

9el c®3 Pt e"st , t &s/k 8b®®k8 Ø bmNme wks®bcevu ceb 8sks/g[1]

V. ANDREW TAN
LICENSE
No. 81662
STATE OF FLORIDA
PROFESSIONAL ENGINEER

0F13RØF0F pl nCØF17 sl n Ø X q k q z & KC8 qqKCD 7ØNC 0F16 sl n Ø X G k q z & K8 qqKC DØØN	0F13RØF0F pl nC 0F17RØF16 sl n Ø X k q z & KC 8 qqKCD x K ØØN
e GX/ q q K qGZqK 8qG 12F4:1:1: Z0F13 pl nC 0F0F pl n 0F17RØF16 sl n	e GX/ q q K qGZqK ® Gq 1 z 5 Z8qG 12F4:1:1 Z0F13 pl nCØF0F pl n X K0F17RØF16 sl n
& K q q GX qz	& K q q GX qz

®Ø z UZ	®Ø z UZ "GØK[* ° ° ØUG° ° J	X ØZG ØUG° ° J	S' ° Z [* Ø " ≤*g	S' ° Z [* Ø Ts' UØ=	SØ + * " ≤*	TZ z Ts' UØ= ØUG° ° J	D Ø¤Ø= &* ØØ Zs j * * Z]	D	b	f	D	b	f	f * ° Ø[h] ' z ®TSJ	4 ≤ D	4 ≤ b	4 ≤ f		(z	(z	7 b s	7 b sØ
							BHuc	quu	uAu	ul o	u, P	uo.	uPc	H org	Brl	Br. c	urBP	G , B	u	Br. c	Hu	Brg
							gB	guu	u. ,	ul B	u, P	uoo	uPu	H org	Brl	BrA	urB.		u	Br. c	Hu	Brg
							gc	guu	u. g	u, l	u, P	uou	ugA	H org	Brl	BrAo	urug		u	Br. c	Hu	Brg
							PB	guu	ul .	u, o	u, P	uP.	ugl	H org	Brl	BrA.	uru,		u	Br. c	Hu	Brg
							Pc	gB,	ul c	u, g	u, B	uP,	ugc	H org	Brl P	urBu	uruA		u	Br. c	Hu	Brg
							oB	gBg	ul P	u, B	ucl	uPo	ugo	H org	Brl ,	urBo	urgg		u	Br. c	Hu	Brg
							oc	uAA	ul u	uc.	uco	uPg	ugg	H org	Brl A	urBl	urgc		u	Br. c	Hu	Brg
							cB	uA,	u, A	ucl	ucg	uPu	ugu	H org	Br. u	urBA	urgl		u	Br. c	Hu	Brg
							cc	uAo	u, l	ucc	ucB	uPB	ugB	H org	Br. P	uruu	urgA		u	Br. c	Hu	Brg
							, B	uAu	u, ,	uco	uo.	ugA	uuA	H org	Br. c	uruP	urPu		u	Br. c	Hu	Brg
							uBB	uc.	uoB	uPg	ugP	uBA	uBg	H org	BrAA	urg,	uroP	G2, B	u	Br. c	Hg	Brg
							BHuc	u. A	ul u	ucc	uo,	uPP	ugB	H turP	Brl	Br. c	urBP	G , B	u	Br. c	Hu	Brg
							gB	u. A	u, ,	ucg	uo,	ugA	uu.	H turP	Brl	BrA	urB.		u	Br. c	Hu	Brg
							gc	u. A	u, P	uoA	uo,	ug,	uuc	H turP	Brl	BrAo	urug		u	Br. c	Hu	Brg
							PB	u. A	ucA	uo,	uo,	ugP	uuP	H turP	Brl	BrA.	uru,		u	Br. c	Hu	Brg
							Pc	u. c	ucl	uoc	uoP	ugg	uug	H turP	Brl P	urBu	uruA		u	Br. c	Hu	Brg
							oB	u. u	ucc	uoP	uoB	ugB	uuu	H turP	Brl ,	urBo	urgg		u	Br. c	Hu	Brg
							oc	ul .	ucP	uou	uP.	uu.	uuB	H turP	Brl A	urBl	urgc		u	Br. c	Hu	Brg
							cB	ul c	ucu	uoB	uP,	uul	uB.	H turP	Br. u	urBA	urgl		u	Br. c	Hu	Brg
							cc	ul P	ucB	uPA	uPo	uu,	uB.	H turP	Br. P	uruu	urgA		u	Br. c	Hu	Brg
							, B	ul u	uo.	uP.	uPP	uuc	uBl	H turP	Br. c	uruP	urPu		u	Br. c	Hu	Brg
							uBB	uog	ug,	uu.	uuB	Al	Au	H turP	BrAA	urg,	uroP	G2, B	u	Br. c	Hg	Brg
							BHuc	ul g	uc.	uog	uPP	ugu	uuB	H ogr.	Brl	Br. c	urBP	G , B	u	Br. c	Hu	Brg
							gB	ul g	ucg	uPA	uPP	uu.	uBl	H ogr.	Brl	BrA	urB.		u	Br. c	Hu	Brg
							gc	ul g	uoA	uP,	uPP	uuc	uBc	H ogr.	Brl	BrAo	urug		u	Br. c	Hu	Brg
							PB	ul g	uoc	uPo	uPP	uuP	uBo	H ogr.	Brl	BrA.	uru,		u	Br. c	Hu	Brg
							Pc	u, A	uoP	uPg	uPu	uuu	uBg	H ogr.	Brl P	urBu	uruA		u	Br. c	Hu	Brg
							oB	u, c	uou	uPB	ug.	uBA	uBu	H ogr.	Brl ,	urBo	urgg		u	Br. c	Hu	Brg
							oc	u, P	uoB	ugA	ug,	uB.	uBB	H ogr.	Brl A	urBl	urgc		u	Br. c	Hu	Brg
							cB	u, B	uP.	ug.	ugo	uBl	AA	H ogr.	Br. u	urBA	urgl		u	Br. c	Hu	Brg
							cc	uc.	uPl	ugl	ugg	uB,	A.	H ogr.	Br. P	uruu	urgA		u	Br. c	Hu	Brg
							, B	uc,	uPc	ug,	ugu	uBc	Al	H ogr.	Br. c	uruP	urPu		u	Br. c	Hu	Brg
							uBB	ugA	uuc	H	uBB	. A	H	H ogr.	BrAA	urg,	uroP	G2, B	u	Br. c	Hg	Brg
							BHuc	u, A	ucP	uPA	uPu	uuA	uB.	H ouru	Brl	Br. c	urBP	G , B	u	Br. c	Hu	Brg
							gB	u, A	uoA	uP,	uPu	uuc	uBc	H ouru	Brl	BrA	urB.		u	Br. c	Hu	Brg
							gc	u, A	uo,	uPP	uPu	uuP	uBP	H ouru	Brl	BrAo	urug		u	Br. c	Hu	Brg
							PB	u, A	uoP	uPu	uPu	uuB	uBu	H ouru	Brl	BrA.	uru,		u	Br. c	Hu	Brg
							Pc	u, c	uoB	ugA	ug.	uBA	uBB	H ouru	Brl P	urBu	uruA		u	Br. c	Hu	Brg
							oB	u, g	uP.	ug.	ugc	uBl	AA	H ouru	Brl ,	urBo	urgg		u	Br. c	Hu	Brg
							oc	ucA	uPl	ug,	ugP	uB,	A.	H ouru	Brl A	urBl	urgc		u	Br. c	Hu	Brg
							cB	ucl	uPc	ugc	ugu	uBc	Al	H ouru	Br. u	urBA	urgl		u	Br. c	Hu	Brg
							cc	ucc	uPo	ugo	ugB	uBo	A,	H ouru	Br. P	uruu	urgA		u	Br. c	Hu	Brg
							, B	ucP	uPP	ugP	uuA	uBP	Ac	H ouru	Br. c	uruP	urPu		u	Br. c	Hu	Brg
							uBB	ugl	uug	H	A.	. l	H	H ouru	BrAA	urg,	uroP	G2, B	u	Br. c	Hg	Brg
							BHuc	u, g	uol	uPo	ug,	uuo	uBo	HP. rB	Brl	Br. c	urBP	G , B	u	Br. c	Hu	Brg
							gB	u, g	uoP	uPu	ug,	uuu	uBu	HP. rB	Brl	BrA	urB.		u	Br. c	Hu	Brg
							gc	u, g	uoB	ug.	ug,	uB.	AA	HP. rB	Brl	BrAo	urug		u	Br. c	Hu	Brg
							PB	u, g	uPl	ug,	ug,	uB,	A.	HP. rB	Brl	BrA.	uru,		u	Br. c	Hu	Brg
							Pc	ucA	uPc	ugo	ugP	uBc	A,	HP. rB	Brl P	urBu	uruA		u	Br. c	Hu	Brg
							oB	uc,	uPP	ugP	ugu	uBP	Ac	HP. rB	Brl ,	urBo	urgg		u	Br. c	Hu	Brg
							oc	ucP	uPg	ugg	uuA	uBg	Ao	HP. rB	Brl A	urBl	urgc		u	Br. c	Hu	Brg
							cB	ucu	uPB	ugB	uul	uBu	AP	HP. rB	Br. u	urBA	urgl		u	Br. c	Hu	Brg
							cc	uoA	ugA	ugB	uuc	uBB	AP	HP. rB	Br. P	uruu	urgA		u	Br. c	Hu	Brg
							, B	uol	ug.	uuA	uuo	AA	Ag	HP. rB	Br. c	uruP	urPu		u	Br. c	Hu	Brg
							uBB	ugg	H	H	Ao	H	H	HP. rB	BrAA	urg,	uroP	G2, B	u	Br. c	Hg	Brg
							BHuc	ucA	uoc	uPu	ugP	uug	uBg	HP, rl	Brl	Br. c	urBP	G , B	u	Br. c	Hu	Brg
							gB	ucA	uou	ug.	ugP	uBA	AA	HP, rl	Brl	BrA	urB.		u	Br. c	Hu	Brg
							gc	ucA	uP.	ug,	ugP	uBl	A.	HP, rl	Brl	BrAo	urug		u	Br. c	Hu	Brg
							PB	ucA	uPc	ugo	ugP	uBo	A,	HP, rl	Brl	BrA.	uru,		u	Br. c	Hu	Brg
							Pc	uc,	uPP	ugg	ugu	uBP	Ac	HP, rl	Brl P	urBu	uruA		u	Br. c	Hu	Brg
							oB	ucP	uPu	ugu	uu.	uBu	Ao	HP, rl	Brl ,	urBo	urgg		u	Br. c	Hu	Brg
							oc	ucB	ugA	uuA	uul	uBB	AP	HP, rl	Brl A	urBl	urgc		u	Br. c	Hu	Brg
							cB	uo.	ug.	uu.	uuc	AA	Ag	HP, rl	Br. u	urBA	urgl		u	Br. c	Hu	Brg
							cc	uo,	ugl	uul	uuP	A.	Au	HP, rl	Br. P	uruu	urgA		u	Br. c	Hu	Brg
							, B	uoc	ugc	uu,	uug	Al	AB	HP, rl	Br. c	uruP	urPu		u	Br. c	Hu	Brg
							uBB	ugB	H	H	AP	H	H	HP, rl	BrAA	urg,	uroP	G2, B	u	Br. c	Hg	Brg

9el c®3 Pt e"st , t &s/k 8b®®k8 Ø bmNme wks®bcevu ceb 8sks/g[1]

V. ANDREW TAN
LICENSE
No. 81662
STATE OF FLORIDA
PROFESSIONAL ENGINEER

								0F13RØF0F pl nCØF17 sl n Ø X q k q z & KC8 qqKCD 7ØNC 0F16 sl n Ø X G k q z & K8 qqKC DØØN			0F13RØF0F pl nC 0F17RØF16 sl n Ø X k q z & KC 8 qqKCDx K ØØN									
								e GX/ q q K qGZqK 8qG 12F4:1:1: Z0F13 pl nC 0F0F pl n 0F17RØF16 sl n			e GX/ q q K qGZqK ® Gq 1 z 5 Z8qG 12F4:1:1 Z0F13 pl nCØF0F pl n X K0F17RØF16 sl n			n qZZGq qK 9X/ q 2 GXG X Z D						
								& K q q GX qz			& K q q GX qz			T Ø¤Ø=	(					
®Ø z UØ	®Ø z UØ " GØDK[* ° ° ØUG ° J	X Ø¤ZG ØUG ° J	S' ° Z [* Ø " ≤ * g	S' ° Z [* Ø T≤' UØ=	S Ø + * " ≤ *	TZ z T≤' UØ= ØUG ° J	D Ø¤Ø= &* Ø G Ø Zs j * * Z]	D	b	f	D	b	f	f * ° Ø [h] ' z ®TSJ	4 ≤ D	4 ≤ b	4 ≤ f		(z	(z	7 b s	7 b sØ
							BHuc	uoA	uPc	uqP	uuc	uBc	Ac	HPgru	BrI	Br. c	urBP	G , B	u	Br. c	Hu	Brg
							gB	uoA	uPu	ugB	uuc	uBg	AP	HPgru	BrI	BrA	urB.		u	Br. c	Hu	Brg
							gc	uoA	ugA	uu.	uuc	uBB	Au	HPgru	BrI	BrAo	urug		u	Br. c	Hu	Brg
							PB	uoA	ug,	uu,	uuc	A.	AB	HPgru	BrI	BrA.	uru,		u	Br. c	Hu	Brg
							Pc	uo,	ugo	uuo	uuP	A,	. A	HPgru	BrI P	urBu	uruA		u	Br. c	Hu	Brg
							oB	uoP	ugg	uuP	uuu	Ac	. I	HPgru	BrI ,	urBo	urgg		u	Br. c	Hu	Brg
							oc	uou	ugu	uug	uBA	Ao	. I	HPgru	BrI A	urBI	urgc		u	Br. c	Hu	Brg
							cB	uPA	uuA	uuu	uBI	AP	. ,	HPgru	Br. u	urBA	urgI		u	Br. c	Hu	Brg
							cc	uPI	uu.	H	uB,	Ag	H	HPgru	Br. P	uruu	urgA		u	Br. c	Hu	Brg
							, B	uPc	uuI	H	uBc	Au	H	HPgru	Br. c	uruP	urPu		u	Br. c	Hu	Brg
							uBB	uug	H	H	. I	H	H	HPgru	BrAA	urg,	uroP	G2, B	u	Br. c	Hu	Brg
							BHuc	uoI	uPP	ugu	uuo	uBP	Ao	HPuru	BrI	Br. c	urBP	G , B	u	Br. c	Hu	Brg
							gB	uoI	ugA	uu.	uuo	uBB	Ag	HPuru	BrI	BrA	urB.		u	Br. c	Hu	Brg
							gc	uoI	ugI	uu,	uuo	A.	AB	HPuru	BrI	BrAo	urug		u	Br. c	Hu	Brg
							PB	uoI	ugo	uuo	uuo	A,	. .	HPuru	BrI	BrA.	uru,		u	Br. c	Hu	Brg
							Pc	uoo	ugg	uuP	uuu	Ac	. I	HPuru	BrI P	urBu	uruA		u	Br. c	Hu	Brg
							oB	uou	ugB	uuu	uBA	AP	. ,	HPuru	BrI ,	urBo	urgg		u	Br. c	Hu	Brg
							oc	uPA	uuA	uuB	uBI	Ag	. c	HPuru	BrI A	urBI	urgc		u	Br. c	Hu	Brg
							cB	uP,	uu.	H	uB,	Au	H	HPuru	Br. u	urBA	urgI		u	Br. c	Hu	Brg
							cc	uPc	uuI	H	uBo	AB	H	HPuru	Br. P	uruu	urgA		u	Br. c	Hu	Brg
							, B	uPP	uu,	H	uBP	. A	H	HPuru	Br. c	uruP	urPu		u	Br. c	Hu	Brg
							uBB	uuB	H	H	. c	H	H	HPuru	BrAA	urg,	uroP	G2, B	u	Br. c	Hu	Brg
							BHuc	uqA	uuI	H	uBB	AB	H	HuPrA	BrI	Br. c	urBP	G , B	u	Br. c	Hu	Brg
							gB	uqA	uuP	H	uBB	. .	H	HuPrA	BrI	BrA	urB.		u	Br. c	Hu	Brg
							gc	uqA	uuu	H	uBB	. ,	H	HuPrA	BrI	BrAo	urug		u	Br. c	Hu	Brg
							PB	uqA	H	H	uBB	H	H	HuPrA	BrI	BrA.	uru,		u	Br. c	Hu	Brg
							Pc	ug,	H	H	A.	H	H	HuPrA	BrI P	urBu	uruA		u	Br. c	Hu	Brg
							oB	uqP	H	H	A,	H	H	HuPrA	BrI ,	urBo	urgg		u	Br. c	Hu	Brg
							oc	ugu	H	H	Ao	H	H	HuPrA	BrI A	urBI	urgc		u	Br. c	Hu	Brg
							cB	uqB	H	H	AP	H	H	HuPrA	Br. u	urBA	urgI		u	Br. c	Hu	Brg
							cc	uu.	H	H	Au	H	H	HuPrA	Br. P	uruu	urgA		u	Br. c	Hu	Brg
							, B	uuI	H	H	AB	H	H	HuPrA	Br. c	uruP	urPu		u	Br. c	Hu	Brg
							uBB	H	H	H	H	H	H	HuPrA	BrAA	urg,	uroP	G2, B	u	Br. c	Hu	Brg
							BHuc	qcA	qPc	quP	qBu	u. q	u, c	HA, r.	BrI	Br. c	urBP	G , B	u	Br. c	Hu	Brg
							gB	qcA	qg.	qB.	qBu	uI I	u, u	HA, r.	BrI	BrA	urB.		u	Br. c	Hu	Brg
							gc	qcA	qqP	qBc	qBu	uI P	ucA	HA, r.	BrI	BrAo	urug		u	Br. c	Hu	Brg
							PB	qcA	quA	qBu	qBu	u, A	uc,	HA, r.	BrI	BrA.	uru,		u	Br. c	Hu	Brg
							Pc	qco	qu,	uAA	uA,	u, I	uco	HA, r.	BrI P	urBu	uruA		u	Br. c	Hu	Brg
							oB	qo.	qug	uA,	uAg	u, c	ucg	HA, r.	BrI ,	urBo	urgg		u	Br. c	Hu	Brg
							oc	qoo	guB	uAo	u. A	u, P	ucB	HA, r.	BrI A	urBI	urgc		u	Br. c	Hu	Brg
							cB	gou	gBI	uAg	u. ,	u, u	uoA	HA, r.	Br. u	urBA	urgI		u	Br. c	Hu	Brg
							cc	gP.	gB,	uAu	u. o	ucA	uo.	HA, r.	Br. P	uruu	urgA		u	Br. c	Hu	Brg
							, B	gPc	gBo	u. A	u. g	uc.	uoI	HA, r.	Br. c	uruP	urPu		u	Br. c	Hu	Brg
							uBB	uAo	uI g	u, g	ucu	uPo	ugc	HA, r.	BrAA	urg,	uroP	G2, B	u	Br. c	Hu	Brg
							BHuc	qPg	quB	uAu	uI A	u, P	uo.	HI I ro	BrI	Br. c	urBP	G , B	u	Br. c	Hu	Brg
							gB	qPg	gBo	u. ,	uI A	uc.	uoo	HI I ro	BrI	BrA	urB.		u	Br. c	Hu	Brg
							gc	qPg	gBB	u. P	uI A	ucc	uog	HI I ro	BrI	BrAo	urug		u	Br. c	Hu	Brg
							PB	qPg	uA,	u. B	uI A	ucg	uPA	HI I ro	BrI	BrA.	uru,		u	Br. c	Hu	Brg
							Pc	ggI	uAP	uI .	uI ,	uoA	uP.	HI I ro	BrI P	urBu	uruA		u	Br. c	Hu	Brg
							oB	ggg	uAB	uI c	uI g	uoI	uP,	HI I ro	BrI ,	urBo	urgg		u	Br. c	Hu	Brg
							oc	guA	u. .	uI o	u, A	uoc	uPo	HI I ro	BrI A	urBI	urgc		u	Br. c	Hu	Brg
							cB	guc	u. ,	uI g	u, I	uoo	uPP	HI I ro	Br. u	urBA	urgI		u	Br. c	Hu	Brg
							cc	guP	u. o	uI u	u, c	uog	uPg	HI I ro	Br. P	uruu	urgA		u	Br. c	Hu	Brg
							, B	guB	u. g	u, A	u, P	uou	uPu	HI I ro	Br. c	uruP	urPu		u	Br. c	Hu	Brg
							uBB	uI o	uco	uoc	uPc	uuA	uug	HI I ro	BrAA	urg,	uroP	G2, B	u	Br. c	Hu	Brg
							BHuc	guu	uAg	uI o	u, o	uoA	uPc	HJ orc	BrI	Br. c	urBP	G , B	u	Br. c	Hu	Brg
							gB	guu	u. ,	uI B	u, o	uoo	uPg	HJ orc	BrI	BrA	urB.		u	Br. c	Hu	Brg
							gc	guu	u. g	u, I	u, o	uou	ugA	HJ orc	BrI	BrAo	urug		u	Br. c	Hu	Brg
							PB	guu	uI A	u, o	u, o	uP.	ugI	HJ orc	BrI	BrA.	uru,		u	Br. c	Hu	Brg
							Pc	gBI	uI ,	u, g	u, B	uP,	ug,	HJ orc	BrI P	urBu	uruA		u	Br. c	Hu	Brg
							oB	gBP	uI P	u, B	ucI	uPo	ugo	HJ orc	BrI ,	urBo	urgg		u	Br. c	Hu	Brg
							oc	gBB	uI u	uc.	ucc	uPP	ugP	HJ orc	BrI A	urBI	urgc		u	Br. c	Hu	Brg
							cB	uA,	u, A	ucI	ucg	uPu	ugg	HJ orc	Br. u	urBA	urgI		u	Br. c	Hu	Brg
							cc	uAo	u, .	uc,	ucB	uPB	ugu	HJ orc	Br. P	uruu	urgA		u	Br. c	Hu	Brg
							, B	uAg	u, ,	uco	uoA	ugA	ugB	HJ orc	Br. c	uruP	urPu		u	Br. c	Hu	Brg
							uBB	ucA	uou	uPg	ugP	uBA	uBg	HJ orc	BrAA	urg,	uroP	G2, B	u	Br. c	Hu	Brg

9el c®3 Pt e"st , t &s/k 8b®®k 8 Ø bmNme wks®bcevu ceb 8sks/g[1]

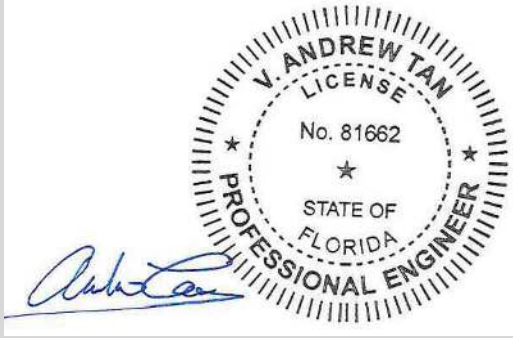

0F13RØF0F pl nCØF17 sl n Ø X q k q z & KC8 qqKCD 7Ø NC 0F16 sl n Ø X G k q z & K8 qqKC D2Ø N	0F13RØF0F pl nC 0F17RØF16 sl n Ø X k q z & KC 8 qqKCDx K ØØ N
e GX/ q q K qGZqK 8qG 12F4:1:1: Z0F13 pl nC 0F0F pl n 0F17RØF16 sl n	e GX/ q q K qGZqK ® Gq 1 z 5 Z8qG 12F4:1:1 Z0F13 pl nCØF0F pl n X K0F17RØF16 sl n
& Kq q GX qz	& Kq q GX qz

®Ø z UØ	®Ø z UØ "GØDK[* ° ° ØUG° ° J	X Ø¤ZG ØUG° ° J	S' ° Z [* Ø " ≤* g	S' ° Z [* Ø T≤' UØ=	S Ø + * " ≤*	TZ z T≤' UØ= ØUG° ° J	D Ø¤Ø= &* ØØ G2p Zs j * * Z]	D	b	f	D	b	f	f * ° Ø[h] ' z ®TSJ	4 ≤ D	4 ≤ b	4 ≤ f		(z	(z	7 b≤	7 b≤Ø
								n qZZGq		qK	9X/ q 2 GX G X		Z D								
								& Kq q GX qz			& Kq q GX qz			T¤Ø=	(						
							BHuc	qBl	u. .	ul u	u, B	uo,	uPg	HJ urA	Brl	Br. c	urBP	G , B	u	Br. c	Hu	Brg
							gB	gBl	u. P	u, l	u, B	uou	ugA	HJ urA	Brl	BrA	urB.		u	Br. c	Hu	Brg
							gc	gBl	ul A	u, o	u, B	uP.	ugI	HJ urA	Brl	BrAo	urug		u	Br. c	Hu	Brg
							PB	gBl	ul c	u, u	u, B	uP,	ugc	HJ urA	Brl	BrA.	uru,		u	Br. c	Hu	Brg
							Pc	gBP	ul g	ucA	ucI	uPo	ugP	HJ urA	Brl P	urBu	uruA		u	Br. c	Hu	Brg
							oB	uAA	ul B	ucI	uco	uPg	ugu	HJ urA	Brl ,	urBo	urgg		u	Br. c	Hu	Brg
							oc	uA,	u, .	ucc	ucu	uPB	ugB	HJ urA	Brl A	urBl	urgc		u	Br. c	Hu	Brg
							cB	uAg	u, ,	uco	uoA	ugA	uuA	HJ urA	Br. u	urBA	urgI		u	Br. c	Hu	Brg
							cc	uAB	u, o	ucP	uoI	ugI	uu.	HJ urA	Br. P	uruu	urgA		u	Br. c	Hu	Brg
							, B	u. .	u, P	ucu	uo,	ug,	uuI	HJ urA	Br. c	uruP	urPu		u	Br. c	Hu	Brg
							uBB	uc,	uP.	ugA	ugB	uBl	uBB	HJ urA	BrAA	urg,	uroP	G2, B	u	Br. c	Hg	Brg
							BHuc	uAA	u. u	u, o	uco	uoB	ugI	Hcl rP	Brl	Br. c	urBP	G , B	u	Br. c	Hu	Brg
							gB	uAA	ul ,	u, B	uco	uP,	ugo	Hcl rP	Brl	BrA	urB.		u	Br. c	Hu	Brg
							gc	uAA	ul g	ucI	uco	uPP	ugg	Hcl rP	Brl	BrAo	urug		u	Br. c	Hu	Brg
							PB	uAA	u, .	ucc	uco	uPB	ugB	Hcl rP	Brl	BrA.	uru,		u	Br. c	Hu	Brg
							Pc	uAc	u, ,	ucP	ucu	ug.	uu.	Hcl rP	Brl P	urBu	uruA		u	Br. c	Hu	Brg
							oB	uAu	u, P	ucu	uo.	ugI	uuI	Hcl rP	Brl ,	urBo	urgg		u	Br. c	Hu	Brg
							oc	u. .	u, u	uoA	uo,	ugc	uu,	Hcl rP	Brl A	urBl	urgc		u	Br. c	Hu	Brg
							cB	u. c	u, B	uo.	uoP	ugo	uuc	Hcl rP	Br. u	urBA	urgI		u	Br. c	Hu	Brg
							cc	u. P	uc.	uoI	uog	ugP	uuo	Hcl rP	Br. P	uruu	urgA		u	Br. c	Hu	Brg
							, B	u. u	ucI	uo,	uoB	ugu	uuP	Hcl rP	Br. c	uruP	urPu		u	Br. c	Hu	Brg
							uBB	ucB	uPP	ugc	uu,	uBP	A,	Hcl rP	BrAA	urg,	uroP	G2, B	u	Br. c	Hg	Brg
							BHuc	uA,	ul .	u, u	ucg	uP.	ugc	HcrP	Brl	Br. c	urBP	G , B	u	Br. c	Hu	Brg
							gB	uA,	ul P	uc.	ucg	uPo	ugg	HcrP	Brl	BrA	urB.		u	Br. c	Hu	Brg
							gc	uA,	u, A	ucc	ucg	uPu	ugB	HcrP	Brl	BrAo	urug		u	Br. c	Hu	Brg
							PB	uA,	u, c	ucg	ucg	ug.	uu.	HcrP	Brl	BrA.	uru,		u	Br. c	Hu	Brg
							Pc	uAg	u, P	ucB	uo.	ug,	uu,	HcrP	Brl P	urBu	uruA		u	Br. c	Hu	Brg
							oB	u. .	u, u	uo.	uoc	ugo	uuc	HcrP	Brl ,	urBo	urgg		u	Br. c	Hu	Brg
							oc	u. c	ucA	uoI	uoP	ugP	uuo	HcrP	Brl A	urBl	urgc		u	Br. c	Hu	Brg
							cB	u. g	ucI	uoc	uou	ugu	uuP	HcrP	Br. u	urBA	urgI		u	Br. c	Hu	Brg
							cc	u. B	ucc	uoo	uPA	ugB	uug	HcrP	Br. P	uruu	urgA		u	Br. c	Hu	Brg
							, B	ul .	uco	uoP	uP.	uuA	uuu	HcrP	Br. c	uruP	urPu		u	Br. c	Hu	Brg
							uBB	uoI	uPB	ugg	uuo	uBu	Ac	HcrP	BrAA	urg,	uroP	G2, B	u	Br. c	Hg	Brg
							BHuc	u. P	u, ,	ucu	uog	ugA	uuI	Hb. ro	Brl	Br. c	urBP	G , B	u	Br. c	Hu	Brg
							gB	u. P	u, u	uoI	uog	ugc	uuo	Hb. ro	Brl	BrA	urB.		u	Br. c	Hu	Brg
							gc	u. P	uc.	uoc	uog	ugg	uug	Hb. ro	Brl	BrAo	urug		u	Br. c	Hu	Brg
							PB	u. P	ucc	uog	uog	ugB	uuB	Hb. ro	Brl	BrA.	uru,		u	Br. c	Hu	Brg
							Pc	ul A	ucg	uoB	uPA	uu.	uBA	Hb. ro	Brl P	urBu	uruA		u	Br. c	Hu	Brg
							oB	ul ,	ucB	uPA	uP,	uu,	uBl	Hb. ro	Brl ,	urBo	urgg		u	Br. c	Hu	Brg
							oc	ul P	uo.	uPl	uPo	uuc	uB,	Hb. ro	Brl A	urBl	urgc		u	Br. c	Hu	Brg
							cB	ul B	uoI	uP,	uPg	uuo	uBc	Hb. ro	Br. u	urBA	urgI		u	Br. c	Hu	Brg
							cc	u, .	uoc	uPc	uPB	uuP	uBo	Hb. ro	Br. P	uruu	urgA		u	Br. c	Hu	Brg
							, B	u, ,	uoo	uPo	ugA	uug	uBo	Hb. ro	Br. c	uruP	urPu		u	Br. c	Hu	Brg
							uBB	uP.	ugg	uuo	uBl	Ao	. A	Hb. ro	BrAA	urg,	uroP	G2, B	u	Br. c	Hg	Brg
							BHuc	u. B	u, o	uoA	uoB	ugI	uuc	Hb, rA	Brl	Br. c	urBP	G , B	u	Br. c	Hu	Brg
							gB	u. B	ucA	uoc	uoB	ugP	uug	Hb, rA	Brl	BrA	urB.		u	Br. c	Hu	Brg
							gc	u. B	uc,	uog	uoB	ugB	uuB	Hb, rA	Brl	BrAo	urug		u	Br. c	Hu	Brg
							PB	u. B	ucg	uoB	uoB	uu.	uB.	Hb, rA	Brl	BrA.	uru,		u	Br. c	Hu	Brg
							Pc	ul ,	ucB	uP.	uPl	uu,	uBl	Hb, rA	Brl P	urBu	uruA		u	Br. c	Hu	Brg
							oB	ul P	uo.	uPl	uPo	uuc	uB,	Hb, rA	Brl ,	urBo	urgg		u	Br. c	Hu	Brg
							oc	ul B	uo,	uPc	uPg	uuP	uBc	Hb, rA	Brl A	urBl	urgc		u	Br. c	Hu	Brg
							cB	u, .	uoo	uPo	uPB	uug	uBo	Hb, rA	Br. u	urBA	urgI		u	Br. c	Hu	Brg
							cc	u, ,	uoP	uPP	ug.	uuu	uBP	Hb, rA	Br. P	uruu	urgA		u	Br. c	Hu	Brg
							, B	u, o	uog	uPg	ugI	uuB	uBg	Hb, rA	Br. c	uruP	urPu		u	Br. c	Hu	Brg
							uBB	uPc	ugB	uuP	uBc	AP	. I	Hb, rA	BrAA	urg,	uroP	G2, B	u	Br. c	Hg	Brg
							BHuc	uc.	uoP	uPB	ugg	uuu	uBu	HP, rB	Brl	Br. c	urBP	G , B	u	Br. c	Hu	Brg
							gB	uc.	uPA	ugI	ugg	uB.	A.	HP, rB	Brl	BrA	urB.		u	Br. c	Hu	Brg
							gc	uc.	uP,	ugc	ugg	uB,	AI	HP, rB	Brl	BrAo	urug		u	Br. c	Hu	Brg
							PB	uc.	uPP	ugP	ugg	uBP	Ac	HP, rB	Brl	BrA.	uru,		u	Br. c	Hu	Brg
							Pc	ucc	uPu	ugu	ugB	uBg	Ao	HP, rB	Brl P	urBu	uruA		u	Br. c	Hu	Brg
							oB	ucg	uPB	ugB	uuI	uBB	AP	HP, rB	Brl ,	urBo	urgg		u	Br. c	Hu	Brg
							oc	uoA	ug.	uu.	uuc	AA	Ag	HP, rB	Brl A	urBl	urgc		u	Br. c	Hu	Brg
							cB	uoI	ugI	uuI	uuo	A,	Au	HP, rB	Br. u	urBA	urgI		u	Br. c	Hu	Brg
							cc	uoc	ugc	uu,	uug	AI	AB	HP, rB	Br. P	uruu	urgA		u	Br. c	Hu	Brg
							, B	uoP	ugo	uuc	uuu	A,	. A	HP, rB	Br. c	uruP	urPu		u	Br. c	Hu	Brg
							uBB	uuA	H	H	Ag	H	H	HP, rB	BrAA	urg,	uroP	G2, B	u	Br. c	Hg	Brg

9el c®3 Pt e"st , t &s/k 8b®®k8 Ø bmNmewks®bcevu ceb 8sks/g[1]

V. ANDREW TAN
LICENSE
No. 81662
STATE OF FLORIDA
PROFESSIONAL ENGINEER

0F13RØF0F pl nCØF17 sl n Ø X q k q z & KC8 qqKCD 7ØNC 0F16 sl n Ø X G k q z & K8 qqKC DØØN

0F13RØF0F pl nC 0F17RØF16 sl n Ø X k q z & KC 8 qqKCDx K ØØN

e GX/ q q K qGZqK 8qG 12F4:1:1: Z0F13 pl nC 0F0F pl n 0F17RØF16 sl n

e GX/ q q K qGZqK ® Gq 1 z 5 Z8qG 12F4:1:1 Z0F13 pl nCØF0F pl n X K0F17RØF16 sl n

n qZZGq qK 9X/ q 2 GXG X Z D

& Kq q GX qz

& Kq q GX qz

T®Ø= (

®Ø z UØ	®Ø z UØ " GØUK[* ° ° ØUG ° J	X ØZG ØUG ° J	S' ° Z [* Ø " ≤ * g	S' ° Z [* G T≤' UØ=	SØ + * " ≤*	TZ z T≤' UØ= ØUG ° J	D Ø¤Ø= &* ØG Z s j * * Z J	D	b	f	D	b	f	f * ° Ø [h] ' z ®TSJ	4 ≤ D	4 ≤ b	4 ≤ f		(z	(z	7 b s	7 b sØ
							BHuc	quu	uAq	ul o	u, o	uoA	uPc	H, orc	Brl	Br. c	urBP	G , B	u	Br. c	Hu	Brg
							gB	guu	u. ,	ul B	u, o	uoo	uPg	H, orc	Brl	BrA	urB.		u	Br. c	Hu	Brg
							gc	guu	u. g	u, l	u, o	uou	ugA	H, orc	Brl	BrAo	urug		u	Br. c	Hu	Brg
							PB	guu	ul A	u, o	u, o	uP.	ugl	H, orc	Brl	BrA.	uru,		u	Br. c	Hu	Brg
							Pc	gBl	ul ,	u, g	u, B	uP,	ug,	H, orc	Brl P	urBu	uruA		u	Br. c	Hu	Brg
							oB	gBP	ul P	u, B	ucl	uPo	ugo	H, orc	Brl ,	urBo	urgg		u	Br. c	Hu	Brg
							oc	gBB	ul u	uc.	ucc	uPP	ugP	H, orc	Brl A	urBl	urgc		u	Br. c	Hu	Brg
							cB	uA,	u, A	ucl	ucg	uPu	ugg	H, orc	Br. u	urBA	urgl		u	Br. c	Hu	Brg
							cc	uAo	u, .	uc,	ucB	uPB	ugu	H, orc	Br. P	uruu	urgA		u	Br. c	Hu	Brg
							, B	uAg	u, ,	uco	uoA	ugA	ugB	H, orc	Br. c	uruP	urPu		u	Br. c	Hu	Brg
							uBB	ucA	uou	uPg	ugP	uBA	uBg	H, orc	BrAA	urg,	uroP	G2, B	u	Br. c	Hu	Brg
							BHuc	u. A	ul g	uc,	uo,	uPP	ugu	Hcur,	Brl	Br. c	urBP	G , B	u	Br. c	Hu	Brg
							gB	u. A	u, l	ucg	uo,	ugA	uu.	Hcur,	Brl	BrA	urB.		u	Br. c	Hu	Brg
							gc	u. A	u, P	uoA	uo,	ug,	uu,	Hcur,	Brl	BrAo	urug		u	Br. c	Hu	Brg
							PB	u. A	u, B	uol	uo,	ugo	uuo	Hcur,	Brl	BrA.	uru,		u	Br. c	Hu	Brg
							Pc	u. c	ucl	uoc	uoP	ugg	uug	Hcur,	Brl P	urBu	uruA		u	Br. c	Hu	Brg
							oB	u. u	ucc	uoP	uou	ugB	uuu	Hcur,	Brl ,	urBo	urgg		u	Br. c	Hu	Brg
							oc	ul A	ucP	uog	uP.	uuA	uuB	Hcur,	Brl A	urBl	urgc		u	Br. c	Hu	Brg
							cB	ul ,	ucu	uoB	uP,	uul	uBA	Hcur,	Br. u	urBA	urgl		u	Br. c	Hu	Brg
							cc	ul o	ucB	uPA	uPo	uu,	uB.	Hcur,	Br. P	uruu	urgA		u	Br. c	Hu	Brg
							, B	ul g	uoA	uP.	uPP	uuc	uBl	Hcur,	Br. c	uruP	urPu		u	Br. c	Hu	Brg
							uBB	uog	ug,	uu.	uuB	Al	Ag	Hcur,	BrAA	urg,	uroP	G2, B	u	Br. c	Hg	Brg
							BHuc	ul P	ucl	uog	uPo	ugu	uuB	HbPrB	Brl	Br. c	urBP	G , B	u	Br. c	Hu	Brg
							gB	ul P	ucg	uPA	uPo	uu.	uB.	HbPrB	Brl	BrA	urB.		u	Br. c	Hu	Brg
							gc	ul P	uoA	uP,	uPo	uuc	uB,	HbPrB	Brl	BrAo	urug		u	Br. c	Hu	Brg
							PB	ul P	uo,	uPo	uPo	uuP	uBo	HbPrB	Brl	BrA.	uru,		u	Br. c	Hu	Brg
							Pc	u, A	uoo	uPg	uPu	uuu	uBP	HbPrB	Brl P	urBu	uruA		u	Br. c	Hu	Brg
							oB	u, ,	uog	uPu	ug.	uuB	uBu	HbPrB	Brl ,	urBo	urgg		u	Br. c	Hu	Brg
							oc	u, P	uoB	ugA	ug,	uB.	uBB	HbPrB	Brl A	urBl	urgc		u	Br. c	Hu	Brg
							cB	u, B	uP.	ug.	ugo	uBl	AA	HbPrB	Br. u	urBA	urgl		u	Br. c	Hu	Brg
							cc	uc.	uPl	ugl	ugP	uB,	A.	HbPrB	Br. P	uruu	urgA		u	Br. c	Hu	Brg
							, B	ucl	uP,	ug,	ugu	uBc	A.	HbPrB	Br. c	uruP	urPu		u	Br. c	Hu	Brg
							uBB	uPB	uuc	H	uBB	. A	H	HbPrB	BrAA	urg,	uroP	G2, B	u	Br. c	Hg	Brg
							BHuc	u, A	ucP	uPA	uPu	uuA	uB.	HburP	Brl	Br. c	urBP	G , B	u	Br. c	Hu	Brg
							gB	u, A	uoA	uP,	uPu	uu,	uBc	HburP	Brl	BrA	urB.		u	Br. c	Hu	Brg
							gc	u, A	uo,	uPo	uPu	uuP	uBo	HburP	Brl	BrAo	urug		u	Br. c	Hu	Brg
							PB	u, A	uoP	uPu	uPu	uuu	uBg	HburP	Brl	BrA.	uru,		u	Br. c	Hu	Brg
							Pc	u, ,	uou	uPB	ug.	uBA	uBB	HburP	Brl P	urBu	uruA		u	Br. c	Hu	Brg
							oB	u, g	uPA	ug.	ug,	uBl	AA	HburP	Brl ,	urBo	urgg		u	Br. c	Hu	Brg
							oc	u, B	uPl	ugl	ugo	uB,	A.	HburP	Brl A	urBl	urgc		u	Br. c	Hu	Brg
							cB	ucl	uP,	ug,	ugg	uBc	Al	HburP	Br. u	urBA	urgl		u	Br. c	Hu	Brg
							cc	ucc	uPo	ugc	ugB	uBo	A,	HburP	Br. P	uruu	urgA		u	Br. c	Hu	Brg
							, B	ucP	uPP	ugo	uuA	uBP	A,	HburP	Br. c	uruP	urPu		u	Br. c	Hu	Brg
							uBB	ugl	uuP	H	A.	. l	H	HburP	BrAA	urg,	uroP	G2, B	u	Br. c	Hg	Brg
							BHuc	u, P	uo.	uPo	ug,	uuo	uBo	HP. rg	Brl	Br. c	urBP	G , B	u	Br. c	Hu	Brg
							gB	u, P	uoP	uPu	ug,	uuu	uBu	HP. rg	Brl	BrA	urB.		u	Br. c	Hu	Brg
							gc	u, P	uoB	ugA	ug,	uBA	uBB	HP. rg	Brl	BrAo	urug		u	Br. c	Hu	Brg
							PB	u, P	uPl	ug,	ug,	uB,	A.	HP. rg	Brl	BrA.	uru,		u	Br. c	Hu	Brg
							Pc	ucA	uPc	ugc	ugP	uBc	Al	HP. rg	Brl P	urBu	uruA		u	Br. c	Hu	Brg
							oB	uc,	uPP	ugP	ugu	uBP	Ac	HP. rg	Brl ,	urBo	urgg		u	Br. c	Hu	Brg
							oc	uco	uPg	ugg	uuA	uBg	Ao	HP. rg	Brl A	urBl	urgc		u	Br. c	Hu	Brg
							cB	ucu	uPB	ugu	uul	uBu	Ao	HP. rg	Br. u	urBA	urgl		u	Br. c	Hu	Brg
							cc	uoA	ugA	ugB	uu,	uBB	AP	HP. rg	Br. P	uruu	urgA		u	Br. c	Hu	Brg
							, B	uo.	ug.	uuA	uuo	AA	Ag	HP. rg	Br. c	uruP	urPu		u	Br. c	Hu	Brg
							uBB	ugg	H	H	Ac	H	H	HP. rg	BrAA	urg,	uroP	G2, B	u	Br. c	Hg	Brg
							BHuc	u, B	uoc	uPg	ugo	uug	uBg	HP, rA	Brl	Br. c	urBP	G , B	u	Br. c	Hu	Brg
							gB	u, B	uou	ugA	ugo	uBA	uBB	HP, rA	Brl	BrA	urB.		u	Br. c	Hu	Brg
							gc	u, B	uP.	ug,	ugo	uBl	A.	HP, rA	Brl	BrAo	urug		u	Br. c	Hu	Brg
							PB	u, B	uPc	ugo	ugo	uBc	A,	HP, rA	Brl	BrA.	uru,		u	Br. c	Hu	Brg
							Pc	ucl	uPP	ugP	ugu	uBP	Ac	HP, rA	Brl P	urBu	uruA		u	Br. c	Hu	Brg
							oB	ucP	uPu	ugu	uuA	uBg	Ao	HP, rA	Brl ,	urBo	urgg		u	Br. c	Hu	Brg
							oc	ucu	uPB	ugB	uul	uBB	AP	HP, rA	Brl A	urBl	urgc		u	Br. c	Hu	Brg
							cB	uoA	ug.	uuA	uuc	AA	Ag	HP, rA	Br. u	urBA	urgl		u	Br. c	Hu	Brg
							cc	uol	ugl	uu.	uuo	A.	Au	HP, rA	Br. P	uruu	urgA		u	Br. c	Hu	Brg
							, B	uoc	ug,	uul	uug	Al	Au	HP, rA	Br. c	uruP	urPu		u	Br. c	Hu	Brg
							uBB	ugB	H	H	AP	H	H	HP, rA	BrAA	urg,	uroP	G2, B	u	Br. c	Hg	Brg

9el c®3 Pt e"st , t &s/k 8b®®k8 Ø bmNme wks®bcevu ceb 8sks/g[1]

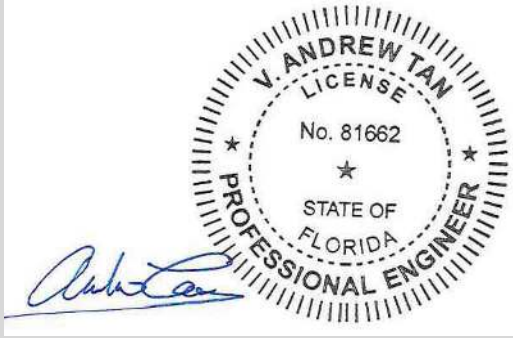

								0F13RØF0F pl nCØF17 sl n Ø X q k q z & KC8 qqKCD 7ØNC 0F16 sl n Ø X G k q z & K8 qqKC DØØN			0F13RØF0F pl nC 0F17RØF16 sl n Ø X k q z & KC 8 qqKCDx K ØØN			n qZZGq qK 9X/ q 2 GXG X Z D							
								e GX/ q q K qGZqK 8qG 12F4:1:1: Z0F13 pl nC 0F0F pl n 0F17RØF16 sl n			e GX/ q q K qGZqK ® Gq 1 z 5 Z8qG 12F4:1:1 Z0F13 pl nCØF0F pl n X K0F17RØF16 sl n										
								& Kq q GX qz			& Kq q GX qz			T®Ø=	(						
®Ø z UZ	®Ø z UZ " GØK[* ° ° ØUG ° J	X ØZG ØUG ° J	S' ° Z [* Θ " ≤ * g	S' ° Z [* Θ T≤' UØ=	SΘ + * " ≤ *	TZ z T≤' UØ= ØUG ° J	D Ø2Ø= &* ΘG Z s j * * Z]	D	b	f	D	b	f	f * ° Θ [h] ' z ®TSJ	4 ≤ D	4 ≤ b	4 ≤ f		(z	(z	7 b s	7 b sØ
							BHuc	ucB	uP,	ugP	uu,	uBc	A,	HPgrP	Brl	Br. c	urBP	G , B	u	Br. c	Hu	Brg
							gB	ucB	uPg	ugB	uu,	uBg	AP	HPgrP	Brl	BrA	urB.		u	Br. c	Hu	Brg
							gc	ucB	ugA	uu.	uu,	uBB	Ag	HPgrP	Brl	BrAo	urug		u	Br. c	Hu	Brg
							PB	ucB	ug,	uu,	uu,	A.	AB	HPgrP	Brl	BrA.	uru,		u	Br. c	Hu	Brg
							Pc	uo,	ugc	uuc	uuP	A,	. A	HPgrP	Brl P	urBu	uruA		u	Br. c	Hu	Brg
							oB	uoo	ugP	uuP	uuu	Ac	. .	HPgrP	Brl ,	urBo	urgg		u	Br. c	Hu	Brg
							oc	uou	ugu	uug	uBA	Ao	. I	HPgrP	Brl A	urBl	urgc		u	Br. c	Hu	Brg
							cB	uPA	ugB	uuu	uB.	AP	. ,	HPgrP	Br. u	urBA	urgl		u	Br. c	Hu	Brg
							cc	uPl	uuA	uuB	uB,	Ag	. c	HPgrP	Br. P	uruu	urgA		u	Br. c	Hu	Brg
							, B	uP,	uu.	H	uBc	Au	H	HPgrP	Br. c	uruP	urPu		u	Br. c	Hu	Brg
							uBB	uug	H	H	. I	H	H	HPgrP	BrAA	urg,	uroP	G2, B	u	Br. c	Hg	Brg
							BHuc	uoI	uPo	ugu	uuo	uBP	Ao	HPurP	Brl	Br. c	urBP	G , B	u	Br. c	Hu	Brg
							gB	uoI	uPB	uuA	uuo	uBu	Ag	HPurP	Brl	BrA	urB.		u	Br. c	Hu	Brg
							gc	uoI	ugI	uu,	uuo	A.	AB	HPurP	Brl	BrAo	urug		u	Br. c	Hu	Brg
							PB	uoI	ugo	uuo	uuo	A,	. A	HPurP	Brl	BrA.	uru,		u	Br. c	Hu	Brg
							Pc	uoo	ugP	uuP	uug	Ac	. I	HPurP	Brl P	urBu	uruA		u	Br. c	Hu	Brg
							oB	uou	ugu	uug	uBA	Ao	. ,	HPurP	Brl ,	urBo	urgg		u	Br. c	Hu	Brg
							oc	uPA	uuA	uuB	uB.	Ag	. ,	HPurP	Brl A	urBl	urgc		u	Br. c	Hu	Brg
							cB	uPl	uu.	H	uB,	Au	H	HPurP	Br. u	urBA	urgl		u	Br. c	Hu	Brg
							cc	uPc	uuI	H	uBc	Au	H	HPurP	Br. P	uruu	urgA		u	Br. c	Hu	Brg
							, B	uPo	uu,	H	uBP	AB	H	HPurP	Br. c	uruP	urPu		u	Br. c	Hu	Brg
							uBB	uuu	H	H	. ,	H	H	HPurP	BrAA	urg,	uroP	G2, B	u	Br. c	Hg	Brg
							BHuc	ugA	uuI	H	uBB	Au	H	HgorB	Brl	Br. c	urBP	G , B	u	Br. c	Hu	Brg
							gB	ugA	uuo	H	uBB	. .	H	HgorB	Brl	BrA	urB.		u	Br. c	Hu	Brg
							gc	ugA	uuu	H	uBB	. ,	H	HgorB	Brl	BrAo	urug		u	Br. c	Hu	Brg
							PB	ugA	H	H	uBB	H	H	HgorB	Brl	BrA.	uru,		u	Br. c	Hu	Brg
							Pc	ug,	H	H	A.	H	H	HgorB	Brl P	urBu	uruA		u	Br. c	Hu	Brg
							oB	ugo	H	H	A,	H	H	HgorB	Brl ,	urBo	urgg		u	Br. c	Hu	Brg
							oc	ugg	H	H	Ao	H	H	HgorB	Brl A	urBl	urgc		u	Br. c	Hu	Brg
							cB	ugB	H	H	AP	H	H	HgorB	Br. u	urBA	urgl		u	Br. c	Hu	Brg
							cc	uu.	H	H	Ag	H	H	HgorB	Br. P	uruu	urgA		u	Br. c	Hu	Brg
							, B	uuI	H	H	Au	H	H	HgorB	Br. c	uruP	urPu		u	Br. c	Hu	Brg
							uBB	H	H	H	H	H	H	HgorB	BrAA	urg,	uroP	G2, B	u	Br. c	Hg	Brg
							BHuc	PBg	ql o	goA	gPo	guP	uAP	HuPgru	Brl	Br. c	urBP	G , B	u	Br. c	Hu	Brg
							gB	PBg	g, I	goP	gPo	gBl	u. A	HuPgru	Brl	BrA	urB.		u	Br. c	Hu	Brg
							gc	PBg	g, u	gPA	gPo	gBg	u. c	HuPgru	Brl	BrAo	urug		u	Br. c	Hu	Brg
							PB	PBg	gc,	gPc	gPo	uA.	u. g	HuPgru	Brl	BrA.	uru,		u	Br. c	Hu	Brg
							Pc	gA,	gcg	gPg	ggA	uAc	u. B	HuPgru	Brl P	urBu	uruA		u	Br. c	Hu	Brg
							oB	gAB	go.	ggA	ggc	uAg	ul I	HuPgru	Brl ,	urBo	urgg		u	Br. c	Hu	Brg
							oc	g. ,	goc	ggI	ggu	uAB	ul ,	HuPgru	Brl A	urBl	urgc		u	Br. c	Hu	Brg
							cB	g. u	gog	ggc	gu.	u. .	ul o	HuPgru	Br. u	urBA	urgl		u	Br. c	Hu	Brg
							cc	gl .	goB	ggP	guc	u. ,	ul P	HuPgru	Br. P	uruu	urgA		u	Br. c	Hu	Brg
							, B	gl o	gP.	ggu	guP	u. o	ul u	HuPgru	Br. c	uruP	urPu		u	Br. c	Hu	Brg
							uBB	ggI	gBu	u. A	ul ,	uc,	uo,	HuPgru	BrAA	urg,	uroP	G2, B	u	Br. c	Hg	Brg
							BHuc	gl u	goc	ggP	guB	uAB	ul P	HuBcrl	Brl	Br. c	urBP	G , B	u	Br. c	Hu	Brg
							gB	gl u	gPA	gu.	guB	u. c	u, A	HuBcrl	Brl	BrA	urB.		u	Br. c	Hu	Brg
							gc	gl u	gPP	guo	guB	u. u	u, ,	HuBcrl	Brl	BrAo	urug		u	Br. c	Hu	Brg
							PB	gl u	ggA	guB	guB	ul I	u, P	HuBcrl	Brl	BrA.	uru,		u	Br. c	Hu	Brg
							Pc	g, c	ggc	gBl	gBc	ul o	u, u	HuBcrl	Brl P	urBu	uruA		u	Br. c	Hu	Brg
							oB	g, B	ggg	gBc	gBu	ul g	ucA	HuBcrl	Brl ,	urBo	urgg		u	Br. c	Hu	Brg
							oc	gcc	guA	gBP	uA.	ul B	ucI	HuBcrl	Brl A	urBl	urgc		u	Br. c	Hu	Brg
							cB	gcu	guI	gBu	uAc	u, .	uc,	HuBcrl	Br. u	urBA	urgl		u	Br. c	Hu	Brg
							cc	go.	guc	uAA	uAg	u, ,	uco	HuBcrl	Br. P	uruu	urgA		u	Br. c	Hu	Brg
							, B	goc	guP	uA.	uAB	u, c	ucP	HuBcrl	Br. c	uruP	urPu		u	Br. c	Hu	Brg
							uBB	gBP	u. B	u, A	ucI	uoB	uPu	HuBcrl	BrAA	urg,	uroP	G2, B	u	Br. c	Hg	Brg
							BHuc	goI	ggo	gBo	uAu	ul o	uc.	H . ru	Brl	Br. c	urBP	G , B	u	Br. c	Hu	Brg
							gB	goI	gu.	uAA	uAu	u, A	uco	H . ru	Brl	BrA	urB.		u	Br. c	Hu	Brg
							gc	goI	guP	uAc	uAu	u, c	ucu	H . ru	Brl	BrAo	urug		u	Br. c	Hu	Brg
							PB	goI	gBA	uAg	uAu	u, g	uoA	H . ru	Brl	BrA.	uru,		u	Br. c	Hu	Brg
							Pc	gog	gB,	u. A	u. I	ucA	uoI	H . ru	Brl P	urBu	uruA		u	Br. c	Hu	Brg
							oB	gPl	gBP	u. I	u. o	ucI	uoc	H . ru	Brl ,	urBo	urgg		u	Br. c	Hu	Brg
							oc	gPP	gBB	u. c	u. u	ucc	uoP	H . ru	Brl A	urBl	urgc		u	Br. c	Hu	Brg
							cB	gPB	uA.	u. P	ul .	ucP	uog	H . ru	Br. u	urBA	urgl		u	Br. c	Hu	Brg
							cc	ggI	uA,	u. g	ul ,	ucg	uou	H . ru	Br. P	uruu	urgA		u	Br. c	Hu	Brg
							, B	ggo	uAo	u. u	ul o	ucu	uoB	H . ru	Br. c	uruP	urPu		u	Br. c	Hu	Brg
							uBB	u. c	u, o	uco	uoo	ugI	ugB	H . ru	BrAA	urg,	uroP	G2, B	u	Br. c	Hg	Brg

b ;Ⓞ[ƵƵ' + * ° &' ⓪Ⓞ D ⓪Ⓠ= ®Ⓠz UƵ s⓪[U-
b - 4 4 [=Ⓠ* * ⓪Ⓠ= 9 * ≤] ⓪Ƶ5] rEgBBuHuBrgru
f * U' + M' ⓪usgBgB
®' =* Pl] j oo

9el c®3 Pt e"st , t &s/k 8b®®k 8 ⓪ bmNme wks®bcevu ceb 8sks/g[1]

V. ANDREW TAN
LICENSE
No. 81662
STATE OF FLORIDA
PROFESSIONAL ENGINEER

0F13R0F0F pl nC0F17 sl n Q X q k q z & KC8 qqKCD 7ⓆNC 0F16 sl n ⓪ X G k q z & K8 qqKC D2ⓆN

0F13R0F0F pl nC 0F17R0F16 sl n ⓪ X k q z & KC 8 qqKCDx K ⓪ⓆN

e GX/ q q K qGZqK 8qG 12F4:1:1: Z0F13 pl nC 0F0F pl n 0F17R0F16 sl n

e GX/ q q K qGZqK ® Gq 1 z 5 Z8qG 12F4:1:1 Z0F13 pl nC0F0F pl n X K0F17R0F16 sl n

n qZZGq qK 9X/ q 2 GXG X Z D

& K q q GX qz

& K q q GX qz

T⓪Ⓠ= (

®Ⓠz UƵ	®Ⓠz UƵ " GⓄK[* ° ° ⓪UG' ° J	X ⓪ƵG ⓪UG' ° J	S' ° Z [* Θ " ≤* g	S' ° Z [* Θ T≤' UⓄ=	SΘ + * " ≤*	TZ z T≤' UⓄ= ⓪UG' ° J	D ⓪Ⓠ= &* ΘⓄ2s j * * Z]	D	b	f	D	b	f	f * ° Θ[h] ' z ®TSJ	4 ≤ D	4 ≤ b	4 ≤ f		(z	(z	7 b s	7 b sⓄ
							BHuc	qog	qgB	uAA	u. l	ul B	ucc	H orc	Brl	Br. c	urBP	G , B	u	Br. c	Hu	Brg
							gB	gog	guP	uAc	u. l	u, c	ucu	H orc	Brl	BrA	urB.		u	Br. c	Hu	Brg
							gc	gog	gBA	uAu	u. l	u, g	uo.	H orc	Brl	BrAo	urug		u	Br. c	Hu	Brg
							PB	gog	gBo	u. .	u. l	uc.	uo,	H orc	Brl	BrA.	uru,		u	Br. c	Hu	Brg
							Pc	gPl	gBu	u. ,	u. o	uc,	uoo	H orc	Brl P	urBu	uruA		u	Br. c	Hu	Brg
							oB	gPg	uA.	u. P	u. B	uco	uog	H orc	Brl ,	urBo	urgg		u	Br. c	Hu	Brg
							oc	gg.	uA,	u. u	ul I	ucg	uou	H orc	Brl A	urBl	urgc		u	Br. c	Hu	Brg
							cB	ggc	uAo	u. B	ul o	ucB	uPA	H orc	Br. u	urBA	urgl		u	Br. c	Hu	Brg
							cc	ggg	uAg	ul .	ul g	uoA	uP.	H orc	Br. P	uruu	urgA		u	Br. c	Hu	Brg
							, B	ggB	uAB	ul I	ul B	uo.	uPl	H orc	Br. c	uruP	urPu		u	Br. c	Hu	Brg
							uBB	u. g	u, u	ucu	uou	ugc	uul	H orc	BrAA	urg,	uroP	G2, B	u	Br. c	Hg	Brg
							BHuc	gPP	guu	uAg	u. B	u, o	uoA	H l. rP	Brl	Br. c	urBP	G , B	u	Br. c	Hu	Brg
							gB	gPP	gBc	u. l	u. B	ucA	uoc	H l. rP	Brl	BrA	urB.		u	Br. c	Hu	Brg
							gc	gPP	gBu	u. o	u. B	uc,	uoP	H l. rP	Brl	BrAo	urug		u	Br. c	Hu	Brg
							PB	gPP	uAl	u. u	u. B	ucg	uoB	H l. rP	Brl	BrA.	uru,		u	Br. c	Hu	Brg
							Pc	gg.	uAo	ul A	ul I	ucB	uP.	H l. rP	Brl P	urBu	uruA		u	Br. c	Hu	Brg
							oB	ggP	uAu	ul ,	ul P	uo.	uPl	H l. rP	Brl ,	urBo	urgg		u	Br. c	Hu	Brg
							oc	ggB	u. A	ul c	ul B	uo,	uPc	H l. rP	Brl A	urBl	urgc		u	Br. c	Hu	Brg
							cB	gu,	u. l	ul P	u, .	uoc	uPo	H l. rP	Br. u	urBA	urgl		u	Br. c	Hu	Brg
							cc	guo	u. c	ul g	u, ,	uoP	uPP	H l. rP	Br. P	uruu	urgA		u	Br. c	Hu	Brg
							, B	guu	u. P	ul B	u, o	uog	uPg	H l. rP	Br. c	uruP	urPu		u	Br. c	Hu	Brg
							uBB	ul c	ucc	uo,	uPc	ugB	uuP	H l. rP	BrAA	urg,	uroP	G2, B	u	Br. c	Hg	Brg
							BHuc	gqA	gBl	u. .	ul I	u, u	uo,	H l crc	Brl	Br. c	urBP	G , B	u	Br. c	Hu	Brg
							gB	gqA	gBg	u. o	ul I	uc,	uoP	H l crc	Brl	BrA	urB.		u	Br. c	Hu	Brg
							gc	gqA	uAl	u. u	ul I	ucP	uoB	H l crc	Brl	BrAo	urug		u	Br. c	Hu	Brg
							PB	gqA	uAP	ul .	ul I	ucB	uP.	H l crc	Brl	BrA.	uru,		u	Br. c	Hu	Brg
							Pc	ggo	uAB	ul c	ul P	uoI	uP,	H l crc	Brl P	urBu	uruA		u	Br. c	Hu	Brg
							oB	guA	u. .	ul P	ul B	uoc	uPo	H l crc	Brl ,	urBo	urgg		u	Br. c	Hu	Brg
							oc	gu,	u. c	ul u	u, I	uoo	uPP	H l crc	Brl A	urBl	urgc		u	Br. c	Hu	Brg
							cB	guP	u. P	ul B	u, c	uog	uPu	H l crc	Br. u	urBA	urgl		u	Br. c	Hu	Brg
							cc	guB	u. g	u, .	u, P	uou	uPB	H l crc	Br. P	uruu	urgA		u	Br. c	Hu	Brg
							, B	gBl	u. B	u, I	u, u	uPA	ugA	H l crc	Br. c	uruP	urPu		u	Br. c	Hu	Brg
							uBB	ul g	ucg	uoP	uPP	uu.	uuu	H l crc	BrAA	urg,	uroP	G2, B	u	Br. c	Hg	Brg
							BHuc	quo	uAo	ul ,	u, ,	ucB	uPl	H , rB	Brl	Br. c	urBP	G , B	u	Br. c	Hu	Brg
							gB	guo	u. A	ul g	u, ,	uo,	uPP	H , rB	Brl	BrA	urB.		u	Br. c	Hu	Brg
							gc	guo	u. c	u, A	u, ,	uoP	uPu	H , rB	Brl	BrAo	urug		u	Br. c	Hu	Brg
							PB	guo	u. u	u, ,	u, ,	uoB	ugA	H , rB	Brl	BrA.	uru,		u	Br. c	Hu	Brg
							Pc	gBA	ul .	u, o	u, g	uP.	ugI	H , rB	Brl P	urBu	uruA		u	Br. c	Hu	Brg
							oB	gBc	ul c	u, g	ucA	uP,	ugc	H , rB	Brl ,	urBo	urgg		u	Br. c	Hu	Brg
							oc	gBg	ul P	u, B	uc,	uPo	ugo	H , rB	Brl A	urBl	urgc		u	Br. c	Hu	Brg
							cB	uAA	ul u	ucA	uco	uPP	ugP	H , rB	Br. u	urBA	urgl		u	Br. c	Hu	Brg
							cc	uA,	ul B	uc.	ucg	uPg	ugg	H , rB	Br. P	uruu	urgA		u	Br. c	Hu	Brg
							, B	uAo	u, .	uc,	ucB	uPB	ugu	H , rB	Br. c	uruP	urPu		u	Br. c	Hu	Brg
							uBB	u, u	uog	uPo	ugo	uuB	uBo	H , rB	BrAA	urg,	uroP	G2, B	u	Br. c	Hg	Brg
							BHuc	quu	uAu	ul o	u, P	uo.	uPo	H orB	Brl	Br. c	urBP	G , B	u	Br. c	Hu	Brg
							gB	guu	u. ,	ul B	u, P	uoo	uPu	H orB	Brl	BrA	urB.		u	Br. c	Hu	Brg
							gc	guu	u. g	u, ,	u, P	uou	ugA	H orB	Brl	BrAo	urug		u	Br. c	Hu	Brg
							PB	guu	ul .	u, o	u, P	uP.	ugI	H orB	Brl	BrA.	uru,		u	Br. c	Hu	Brg
							Pc	gB,	ul c	u, g	u, B	uP,	ugc	H orB	Brl P	urBu	uruA		u	Br. c	Hu	Brg
							oB	gBg	ul P	u, B	ucI	uPo	ugo	H orB	Brl ,	urBo	urgg		u	Br. c	Hu	Brg
							oc	uAA	ul u	uc.	uco	uPg	ugg	H orB	Brl A	urBl	urgc		u	Br. c	Hu	Brg
							cB	uA,	u, A	uc,	ucg	uPu	ugu	H orB	Br. u	urBA	urgl		u	Br. c	Hu	Brg
							cc	uAP	u, I	ucc	ucB	uPB	ugB	H orB	Br. P	uruu	urgA		u	Br. c	Hu	Brg
							, B	uAu	u, ,	uco	uo.	ug.	uuA	H orB	Br. c	uruP	urPu		u	Br. c	Hu	Brg
							uBB	uc.	uoB	uPg	ugP	uBA	uBg	H orB	BrAA	urg,	uroP	G2, B	u	Br. c	Hg	Brg
							BHuc	u. I	u, A	uco	uoc	uPu	uuA	H tBrP	Brl	Br. c	urBP	G , B	u	Br. c	Hu	Brg
							gB	u. I	u, c	ucB	uoc	ug.	uu,	H tBrP	Brl	BrA	urB.		u	Br. c	Hu	Brg
							gc	u. I	u, u	uo.	uoc	ugc	uuo	H tBrP	Brl	BrAo	urug		u	Br. c	Hu	Brg
							PB	u. I	uc.	uoc	uoc	ugg	uug	H tBrP	Brl	BrA.	uru,		u	Br. c	Hu	Brg
							Pc	u. P	ucc	uoP	uog	ugB	uuu	H tBrP	Brl P	urBu	uruA		u	Br. c	Hu	Brg
							oB	ul A	ucP	uou	uPA	uuA	uuB	H tBrP	Brl ,	urBo	urgg		u	Br. c	Hu	Brg
							oc	ul ,	ucu	uoB	uPl	uuI	uB.	H tBrP	Brl A	urBl	urgc		u	Br. c	Hu	Brg
							cB	ul o	ucB	uPA	uPo	uu,	uBl	H tBrP	Br. u	urBA	urgl		u	Br. c	Hu	Brg
							cc	ul u	uo.	uP.	uPP	uuc	uBl	H tBrP	Br. P	uruu	urgA		u	Br. c	Hu	Brg
							, B	u, A	uoI	uP,	uPu	uuo	uB,	H tBrP	Br. c	uruP	urPu		u	Br. c	Hu	Brg
							uBB	uoB	ugo	uuI	uBA	A,	AB	H tBrP	BrAA	urg,	uroP	G2, B	u	Br. c	Hg	Brg

9el c®3 Pt e"st , t &s/k 8b®®k8 Ø bmNme wks®bcevu ceb 8ksvg[1]

V. ANDREW TAN
LICENSE
No. 81662
STATE OF FLORIDA
PROFESSIONAL ENGINEER

0F13RØF0F pl nCØF17 sl n Ø X q k q z & KC8 qqKCD 7ØNC 0F16 sl n Ø X G k q z & K8 qqKC DØØN

0F13RØF0F pl nC 0F17RØF16 sl n Ø X k q z & KC 8 qqKCD x K ØØN

e GX/ q q K qGZqK 8qG 12F4:1:1: Z0F13 pl nC 0F0F pl n 0F17RØF16 sl n

e GX/ q q K qGZqK ® Gq 1 z 5 Z8qG 12F4:1:1 Z0F13 pl nCØF0F pl n X K0F17RØF16 sl n

n qZZGq qK 9X/ q 2 GXG X Z D

& Kq q GX qz

& Kq q GX qz

TØØ= (

®Ø z UZ	®Ø z UZ " GØDK[* ° ° ØUG ° J	X ØZG ØUG ° J	S' ° Z [* Θ " ≤ * ª	S' ° Z [* Θ T≤' UØ=	SΘ + * " ≤ *	TZ z T≤' UØ= ØUG ° J	D ØØ= &* ΘØ ª Zs j * * Z]	D	b	f	D	b	f	f * ° Θ [h] ' z ®TSJ	4 ≤ D	4 ≤ b	4 ≤ f		(z	(z	7 b s	7 b sØ
&' ØØ®;' [K	cdu,	crgc	4" t S BruBB K[Ø' z °G [K zØ + * Z Θ BrgcB &f urc ;] [=	S' U' [' Θ	gB=' r TZ *; PP+ Øsj N PP K° Ø	go	BHuc	qqP	qBP	u. o	ul P	ucI	uoP	HIgru	BrI	Br. c	urBP	G , B	u	Br. c	Hu	Brg
							gB	ggP	uAI	u. B	ul P	ucP	uPA	HIgru	BrI	BrA	urB.		u	Br. c	Hu	Brg
							gc	ggP	uAP	ul I	ul P	uoA	uPI	HIgru	BrI	BrAo	urug		u	Br. c	Hu	Brg
							PB	ggP	u. A	ul o	ul P	uo,	uPo	HIgru	BrI	BrA.	uru,		u	Br. c	Hu	Brg
							Pc	guA	u. ,	ul u	u, A	uoo	uPP	HIgru	BrI P	urBu	uruA		u	Br. c	Hu	Brg
							oB	quo	u. P	u, A	u, ,	uog	uPu	HIgru	BrI ,	urBo	urgg		u	Br. c	Hu	Brg
							oc	guu	u. u	u, .	u, P	uoB	uPB	HIgru	BrI A	urBI	urgc		u	Br. c	Hu	Brg
							cB	gB.	ul A	u, ,	u, u	uPA	ug.	HIgru	Br. u	urBA	urgI		u	Br. c	Hu	Brg
							cc	gBc	ul I	u, c	ucA	uPI	ugI	HIgru	Br. P	uruu	urgA		u	Br. c	Hu	Brg
							, B	gBP	ul ,	u, P	ucI	uP,	ugI	HIgru	Br. c	uruP	urPu		u	Br. c	Hu	Brg
							uBB	u, .	uoA	uoB	uPB	uuc	uB.	HIgru	BrAA	urg,	uroP	G2, B	u	Br. c	Hg	Brg
&' ØØ®;' [K	cdu,	, rgc	4" t S BruBB K[Ø' z °G [K zØ + * Z Θ BrgcB &f urc ;] [=	S' U' [' Θ	gB=' r TZ *; PP+ Øsj N PP K° Ø	go	BHuc	gBB	u. u	u, c	ucc	uoB	ug.	HtI rI	BrI	Br. c	urBP	G , B	u	Br. c	Hu	Brg
							gB	gBB	ul ,	u, u	ucc	uPI	ugc	HtI rI	BrI	BrA	urB.		u	Br. c	Hu	Brg
							gc	gBB	ul g	uc.	ucc	uPo	ugg	HtI rI	BrI	BrAo	urug		u	Br. c	Hu	Brg
							PB	gBB	u, A	ucc	ucc	uPu	ugB	HtI rI	BrI	BrA.	uru,		u	Br. c	Hu	Brg
							Pc	uA,	u, ,	ucP	ucg	ugA	uuA	HtI rI	BrI P	urBu	uruA		u	Br. c	Hu	Brg
							oB	uAg	u, o	ucu	uoA	ugI	uuI	HtI rI	BrI ,	urBo	urgg		u	Br. c	Hu	Brg
							oc	u. A	u, g	ucB	uo,	ugc	uu,	HtI rI	BrI A	urBI	urgc		u	Br. c	Hu	Brg
							cB	u. ,	u, B	uo.	uoo	ugo	uuc	HtI rI	Br. u	urBA	urgI		u	Br. c	Hu	Brg
							cc	u. o	ucA	uoI	uog	ugP	uuo	HtI rI	Br. P	uruu	urgA		u	Br. c	Hu	Brg
							, B	u. u	ucI	uo,	uoB	ugg	uuP	HtI rI	Br. c	uruP	urPu		u	Br. c	Hu	Brg
							uBB	ucB	uPP	ugc	uu,	uBP	AI	HtI rI	BrAA	urg,	uroP	G2, B	u	Br. c	Hg	Brg
&' ØØ®;' [K	cdu,	I rgc	4" t S BruBB K[Ø' z °G [K zØ + * Z Θ BrgcB &f urc ;] [=	S' U' [' Θ	gB=' r TZ *; PP+ Øsj N PP K° Ø	go	BHuc	u. g	u, .	ucB	uou	ug.	uu,	Hb. ru	BrI	Br. c	urBP	G , B	u	Br. c	Hu	Brg
							gB	u. g	u, u	uoI	uou	ugc	uuo	Hb. ru	BrI	BrA	urB.		u	Br. c	Hu	Brg
							gc	u. g	ucI	uoo	uou	ugg	uug	Hb. ru	BrI	BrAo	urug		u	Br. c	Hu	Brg
							PB	u. g	uco	uog	uou	uuA	uuB	Hb. ru	BrI	BrA.	uru,		u	Br. c	Hu	Brg
							Pc	ul A	ucg	uoB	uP.	uu.	uB.	Hb. ru	BrI P	urBu	uruA		u	Br. c	Hu	Brg
							oB	ul c	ucB	uP.	uP,	uu,	uBI	Hb. ru	BrI ,	urBo	urgg		u	Br. c	Hu	Brg
							oc	ul g	uo.	uPI	uPP	uuc	uB,	Hb. ru	BrI A	urBI	urgc		u	Br. c	Hu	Brg
							cB	ul B	uo,	uPc	uPu	uuP	uBc	Hb. ru	Br. u	urBA	urgI		u	Br. c	Hu	Brg
							cc	u, .	uoc	uPo	uPB	uug	uBo	Hb. ru	Br. P	uruu	urgA		u	Br. c	Hu	Brg
							, B	u, ,	uoo	uPP	ug.	uuu	uBP	Hb. ru	Br. c	uruP	urPu		u	Br. c	Hu	Brg
							uBB	uPI	ugu	uuo	uB,	Ao	. .	Hb. ru	BrAA	urg,	uroP	G2, B	u	Br. c	Hg	Brg
&' ØØ®;' [K	cdu,	I rc	4" t S BruBB K[Ø' z °G [K zØ + * Z Θ BrgcB &f urc ;] [=	S' U' [' Θ	gB=' r TZ *; PP+ Øsj N PP K° Ø	go	BHuc	ul A	u, g	uoI	uP.	ug,	uuo	Hb, ru	BrI	Br. c	urBP	G , B	u	Br. c	Hu	Brg
							gB	ul A	uc.	uoo	uP.	ugg	uuu	Hb, ru	BrI	BrA	urB.		u	Br. c	Hu	Brg
							gc	ul A	uco	uou	uP.	uuA	uBA	Hb, ru	BrI	BrAo	urug		u	Br. c	Hu	Brg
							PB	ul A	ucu	uPA	uP.	uuI	uB.	Hb, ru	BrI	BrA.	uru,		u	Br. c	Hu	Brg
							Pc	ul c	uoA	uPI	uP,	uuc	uB,	Hb, ru	BrI P	urBu	uruA		u	Br. c	Hu	Brg
							oB	ul g	uoI	uPc	uPP	uuo	uBc	Hb, ru	BrI ,	urBo	urgg		u	Br. c	Hu	Brg
							oc	u, A	uoc	uPo	uPu	uug	uBo	Hb, ru	BrI A	urBI	urgc		u	Br. c	Hu	Brg
							cB	u, ,	uoP	uPP	ugA	uuu	uBP	Hb, ru	Br. u	urBA	urgI		u	Br. c	Hu	Brg
							cc	u, o	uog	uPg	ugI	uuB	uBg	Hb, ru	Br. P	uruu	urgA		u	Br. c	Hu	Brg
							, B	u, g	uou	uPu	ug,	uBA	uBu	Hb, ru	Br. c	uruP	urPu		u	Br. c	Hu	Brg
							uBB	uPo	uuA	uug	uBo	Ag	. I	Hb, ru	BrAA	urg,	uroP	G2, B	u	Br. c	Hg	Brg
&' ØØ®;' [K	cdu,	.	4" t S BruBB K[Ø' z °G [K zØ + * Z Θ BrgcB &f urc ;] [=	S' U' [' Θ	gB=' r TZ *; PP+ Øsj N PP K° Ø	go	BHuc	ul g	uc,	uog	uPP	ugu	uuB	Hbgrl	BrI	Br. c	urBP	G , B	u	Br. c	Hu	Brg
							gB	ul g	ucg	uP.	uPP	uuI	uBI	Hbgrl	BrI	BrA	urB.		u	Br. c	Hu	Brg
							gc	ul g	uo.	uP,	uPP	uuc	uBc	Hbgrl	BrI	BrAo	urug		u	Br. c	Hu	Brg
							PB	ul g	uoc	uPo	uPP	uuP	uBP	Hbgrl	BrI	BrA.	uru,		u	Br. c	Hu	Brg
							Pc	u, .	uoP	uPg	uPB	uuu	uBg	Hbgrl	BrI P	urBu	uruA		u	Br. c	Hu	Brg
							oB	u, c	uou	uPB	ug.	uBA	uBu	Hbgrl	BrI ,	urBo	urgg		u	Br. c	Hu	Brg
							oc	u, g	uPA	ugA	ug,	uB.	uBB	Hbgrl	BrI A	urBI	urgc		u	Br. c	Hu	Brg
							cB	u, B	uP.	ug.	ugo	uBI	AA	Hbgrl	Br. u	urBA	urgI		u	Br. c	Hu	Brg
							cc	uc.	uPI	ugI	ugg	uB,	A.	Hbgrl	Br. P	uruu	urgA		u	Br. c	Hu	Brg
							, B	uc,	uPc	ug,	ugu	uBc	AI	Hbgrl	Br. c	uruP	urPu		u	Br. c	Hu	Brg
							uBB	ugA	uuc	H	uBB	. A	H	Hbgrl	BrAA	urg,	uroP	G2, B	u	Br. c	Hg	Brg
&' ØØ®;' [K	cdu,	. rgc	4" t S BruBB K[Ø' z °G [K zØ + * Z Θ BrgcB &f urc ;] [=	S' U' [' Θ	gB=' r TZ *; PP+ Øsj N PP K° Ø	go	BHuc	u, A	ucP	uPA	uPu	uuA	uB.	Hburg	BrI	Br. c	urBP	G , B	u	Br. c	Hu	Brg
							gB	u, A	uoA	uP,	uPu	uuc	uBc	Hburg	BrI	BrA	urB.		u	Br. c	Hu	Brg
							gc	u, A	uo,	uPo	uPu	uuP	uBP	Hburg	BrI	BrAo	urug		u	Br. c	Hu	Brg
							PB	u, A	uoP	uPu	uPu	uuu	uBg	Hburg	BrI	BrA.	uru,		u	Br. c	Hu	Brg
							Pc	u, c	uou	uPB	ug.	uBA	uBB	Hburg	BrI P	urBu	uruA		u	Br. c	Hu	Brg
							oB	u, g	uPA	ug.	ug,	uBI	AA	Hburg	BrI ,	urBo	urgg		u	Br. c	Hu	Brg
							oc	ucA	uPI	ugI	ugo	uB,	A.	Hburg	BrI A	urBI	urgc		u	Br. c	Hu	Brg
							cB	ucI	uPc	ugc	ugg	uBc	AI	Hburg	Br. u	urBA	urgI		u	Br. c	Hu	Brg
							cc	ucc	uPo	ugo	ugB	uBo	A,	Hburg	Br. P	uruu	urgA		u	Br. c	Hu	Brg
							, B	ucP	uPP	ugP	uuA	uBP	A,	Hburg	Br. c	uruP	urPu		u	Br. c	Hu	Brg
							uBB	ugI	uug	H	A.	. I	H	Hburg	BrAA	urg,	uroP	G2, B	u	Br. c	Hg	Brg

9el c®3 Pt e"st , t &s/k 8b®®k8 Ø bmNme wks®bcevu ceb 8ksvg[1]

V. ANDREW TAN
LICENSE
No. 81662
STATE OF FLORIDA
PROFESSIONAL ENGINEER

								0F13RØF0F pl nCØF17 sl n Ø X q k q z & KC8 qqKCD 7ØNC 0F16 sl n Ø X G k q z & K8 qqKC DØØN			0F13RØF0F pl nC 0F17RØF16 sl n Ø X k q z & KC 8 qqKCDx K ØØN			n qZZGq qK 9X/ q 2 GX G X Z D						
								e GX/ q q K qGZqK 8qG 12F4:1:1: Z0F13 pl nC 0F0F pl n 0F17RØF16 sl n			e GX/ q q K qGZqK ® Gq 1 z 5 Z8qG 12F4:1:1 Z0F13 pl nCØF0F pl n X K0F17RØF16 sl n									
								& Kq q GX qz			& Kq q GX qz			T Ø=	(					
®Ø z UZ	®Ø z UZ " GØK[* ° ° ØUG ° J	X Ø ZG ØUG ° J	S' ° Z [* Θ " ≤ * g	S' ° Z [* Θ T ≤' UØ=	SΘ + * " ≤*	TZ z T ≤' UØ= ØUG ° J	D Ø¤Ø= &* ΘØ Z s j * * Z j	D	b	f	D	b	f	f * ° Θ [h] ' z ®TSJ	4 ≤ D	4 ≤ b	4 ≤ f		(z	(z	7 b s	7 b sØ
							BHuc	uc.	uoP	uPB	ugg	uuu	uBu	HP, rB	Brl	Br. c	urBP	G , B	u	Br. c	Hu	Brg
							gB	uc.	uPA	ugl	ugg	uB.	AA	HP, rB	Brl	BrA	urB.		u	Br. c	Hu	Brg
							gc	uc.	uP,	ugc	ugg	uB,	Al	HP, rB	Brl	BrAo	urug		u	Br. c	Hu	Brg
							PB	uc.	uPo	ugP	ugg	uBP	Ac	HP, rB	Brl	BrA	uru,		u	Br. c	Hu	Brg
							Pc	ucc	uPg	ugu	ugB	uBg	Ao	HP, rB	Brl P	urBu	uruA		u	Br. c	Hu	Brg
							oB	ucg	uPB	ugB	uul	uBB	AP	HP, rB	Brl ,	urBo	urgg		u	Br. c	Hu	Brg
							oc	uoA	ug.	uu.	uu,	AA	Ag	HP, rB	Brl A	urBl	urgc		u	Br. c	Hu	Brg
							cB	uol	ugl	uul	uuo	A.	Au	HP, rB	Br. u	urBA	urgl		u	Br. c	Hu	Brg
							cc	uoc	ugc	uu,	uug	Al	AB	HP, rB	Br. P	uruu	urgA		u	Br. c	Hu	Brg
							, B	uoP	ugo	uuc	uuu	A,	. A	HP, rB	Br. c	uruP	urPu		u	Br. c	Hu	Brg
							uBB	uuA	H	H	Ag	H	H	HP, rB	BrAA	urg,	uroP	G2, B	u	Br. c	Hg	Brg
							BHuc	uc,	uou	ug.	ugu	uBA	AA	HPcrB	Brl	Br. c	urBP	G , B	u	Br. c	Hu	Brg
							gB	uc,	uPl	ugc	ugu	uB,	Al	HPcrB	Brl	BrA	urB.		u	Br. c	Hu	Brg
							gc	uc,	uPo	ugP	ugu	uBo	Ac	HPcrB	Brl	BrAo	urug		u	Br. c	Hu	Brg
							PB	uc,	uPu	ugu	ugu	uBg	Ao	HPcrB	Brl	BrA	uru,		u	Br. c	Hu	Brg
							Pc	ucg	uPB	uuA	uu.	uBB	Ag	HPcrB	Brl P	urBu	uruA		u	Br. c	Hu	Brg
							oB	uoA	ug.	uu.	uu,	AA	Au	HPcrB	Brl ,	urBo	urgg		u	Br. c	Hu	Brg
							oc	uol	ug,	uul	uuo	A.	AB	HPcrB	Brl A	urBl	urgc		u	Br. c	Hu	Brg
							cB	uoc	ugc	uu,	uug	Al	. A	HPcrB	Br. u	urBA	urgl		u	Br. c	Hu	Brg
							cc	uoP	ugo	uuc	uuu	A,	. A	HPcrB	Br. P	uruu	urgA		u	Br. c	Hu	Brg
							, B	uou	ugg	uuo	uBA	Ac	. .	HPcrB	Br. c	uruP	urPu		u	Br. c	Hu	Brg
							uBB	uul	H	H	Au	H	H	HPcrB	BrAA	urg,	uroP	G2, B	u	Br. c	Hg	Brg
							BHuc	uPl	ugo	uuP	uB,	A,	. l	HgI rB	Brl	Br. c	urBP	G , B	u	Br. c	Hu	Brg
							gB	uPl	ugu	uuB	uB,	AP	. c	HgI rB	Brl	BrA	urB.		u	Br. c	Hu	Brg
							gc	uPl	uu.	H	uB,	Au	H	HgI rB	Brl	BrAo	urug		u	Br. c	Hu	Brg
							PB	uPl	uu,	H	uB,	AB	H	HgI rB	Brl	BrA	uru,		u	Br. c	Hu	Brg
							Pc	uPo	uuo	H	uBo	. .	H	HgI rB	Brl P	urBu	uruA		u	Br. c	Hu	Brg
							oB	uPu	uug	H	uBg	. l	H	HgI rB	Brl ,	urBo	urgg		u	Br. c	Hu	Brg
							oc	ugA	uuu	H	uBB	. ,	H	HgI rB	Brl A	urBl	urgc		u	Br. c	Hu	Brg
							cB	ugl	H	H	A.	H	H	HgI rB	Br. u	urBA	urgl		u	Br. c	Hu	Brg
							cc	ug,	H	H	Al	H	H	HgI rB	Br. P	uruu	urgA		u	Br. c	Hu	Brg
							, B	ugo	H	H	A,	H	H	HgI rB	Br. c	uruP	urPu		u	Br. c	Hu	Brg
							uBB	H	H	H	H	H	H	HgI rB	BrAA	urg,	uroP	G2, B	u	Br. c	Hg	Brg
							BHuc	u, u	uo,	uPP	ugc	uuP	uBP	HPI rP	Brl	Br. c	urBP	G , B	u	Br. c	Hu	Brg
							gB	u, u	uog	ugA	ugc	uuB	uBB	HPI rP	Brl	BrA	urB.		u	Br. c	Hu	Brg
							gc	u, u	uPA	ugl	ugc	uBl	A.	HPI rP	Brl	BrAo	urug		u	Br. c	Hu	Brg
							PB	u, u	uP,	ugc	ugc	uBc	Al	HPI rP	Brl	BrA	uru,		u	Br. c	Hu	Brg
							Pc	ucl	uPo	ugP	ugg	uBo	A,	HPI rP	Brl P	urBu	uruA		u	Br. c	Hu	Brg
							oB	uco	uPg	ugg	ugB	uBg	Ao	HPI rP	Brl ,	urBo	urgg		u	Br. c	Hu	Brg
							oc	ucg	uPB	ugu	uu.	uBu	AP	HPI rP	Brl A	urBl	urgc		u	Br. c	Hu	Brg
							cB	uoA	ugA	uuA	uu,	uBB	Ag	HPI rP	Br. u	urBA	urgl		u	Br. c	Hu	Brg
							cc	uo.	ug.	uu.	uuo	AA	Ag	HPI rP	Br. P	uruu	urgA		u	Br. c	Hu	Brg
							, B	uo,	ugl	uu.	uuP	A.	Au	HPI rP	Br. c	uruP	urPu		u	Br. c	Hu	Brg
							uBB	ugu	H	H	Ao	H	H	HPI rP	BrAA	urg,	uroP	G2, B	u	Br. c	Hg	Brg
							BHuc	uoo	uPu	uuA	uuu	uBu	Ag	HgArA	Brl	Br. c	urBP	G , B	u	Br. c	Hu	Brg
							gB	uoo	ugl	uu,	uuu	A.	AB	HgArA	Brl	BrA	urB.		u	Br. c	Hu	Brg
							gc	uoo	ugo	uuo	uuu	A,	. .	HgArA	Brl	BrAo	urug		u	Br. c	Hu	Brg
							PB	uoo	ugg	uug	uuu	Ao	. l	HgArA	Brl	BrA	uru,		u	Br. c	Hu	Brg
							Pc	uou	ugB	uuB	uBA	AP	. c	HgArA	Brl P	urBu	uruA		u	Br. c	Hu	Brg
							oB	uP.	uu.	H	uBl	Au	H	HgArA	Brl ,	urBo	urgg		u	Br. c	Hu	Brg
							oc	uP,	uul	H	uBc	AB	H	HgArA	Brl A	urBl	urgc		u	Br. c	Hu	Brg
							cB	uPo	uuc	H	uBo	. A	H	HgArA	Br. u	urBA	urgl		u	Br. c	Hu	Brg
							cc	uPg	uuo	H	uBg	. .	H	HgArA	Br. P	uruu	urgA		u	Br. c	Hu	Brg
							, B	uPu	uuP	H	uBu	. .	H	HgArA	Br. c	uruP	urPu		u	Br. c	Hu	Brg
							uBB	H	H	H	H	H	H	HgArA	BrAA	urg,	uroP	G2, B	u	Br. c	Hg	Brg
							BHuc	uPu	uuA	H	uBg	Ag	H	HgorA	Brl	Br. c	urBP	G , B	u	Br. c	Hu	Brg
							gB	uPu	uu,	H	uBg	AB	H	HgorA	Brl	BrA	urB.		u	Br. c	Hu	Brg
							gc	uPu	uuP	H	uBg	. .	H	HgorA	Brl	BrAo	urug		u	Br. c	Hu	Brg
							PB	uPu	uuu	H	uBg	. ,	H	HgorA	Brl	BrA	uru,		u	Br. c	Hu	Brg
							Pc	ugA	H	H	uBB	H	H	HgorA	Brl P	urBu	uruA		u	Br. c	Hu	Brg
							oB	ug,	H	H	A.	H	H	HgorA	Brl ,	urBo	urgg		u	Br. c	Hu	Brg
							oc	ugo	H	H	A,	H	H	HgorA	Brl A	urBl	urgc		u	Br. c	Hu	Brg
							cB	ugg	H	H	Ac	H	H	HgorA	Br. u	urBA	urgl		u	Br. c	Hu	Brg
							cc	ugu	H	H	AP	H	H	HgorA	Br. P	uruu	urgA		u	Br. c	Hu	Brg
							, B	uuA	H	H	Ag	H	H	HgorA	Br. c	uruP	urPu		u	Br. c	Hu	Brg
							uBB	H	H	H	H	H	H	HgorA	BrAA	urg,	uroP	G2, B	u	Br. c	Hg	Brg

9el c®3 Pt e"st , t &s/k 8b®®k8 Ø bmNme wks®bcevu ceb 8sks/g[1]

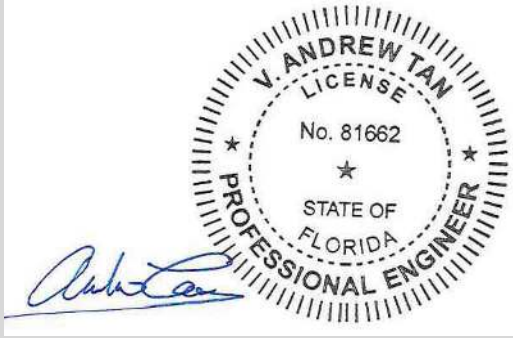

								0F13RØF0F pl nCØF17 sl n Ø X q k q z & KC8 qqKCD 7ØNC 0F16 sl n Ø X G k q z & K8 qqKC DØØN			0F13RØF0F pl nC 0F17RØF16 sl n Ø X k q z & KC 8 qqKCDx K ØØN													
								e GX/ q q K qGZqK 8qG 12F4:1:1: Z0F13 pl nC 0F0F pl n 0F17RØF16 sl n			e GX/ q q K qGZqK ® Gq 1 z 5 Z8qG 12F4:1:1 Z0F13 pl nCØF0F pl n X K0F17RØF16 sl n													
								& Kq q GX qz			& Kq q GX qz													
®Ø z UZ	®Ø z UZ " GØK[* ° ° ØUG ° J	X ØZG ØUG ° J	S' ° Z [* Θ " ≤ * g	S' ° Z [* Θ T≤' UØ=	S Θ + * " ≤*	TZ z T≤' UØ= ØUG ° J	D Ø2Ø= &* ΘGØ2s j * * Z]	D	b	f	D	b	f	f * ° Θ [h] ' z ®TSJ	4 ≤ D	4 ≤ b	4 ≤ f		(z	(z	7 b s	7 b sØ
							BHuc	ugA	uuI	H	uBB	AB	H	HgPrA	BrI	Br. c	urBP	G , B	u	Br. c	Hu	Brg
							gB	ugA	uuP	H	uBB	. .	H	HgPrA	BrI	BrA	urB.		u	Br. c	Hu	Brg
							gc	ugA	uuu	H	uBB	. ,	H	HgPrA	BrI	BrAo	urug		u	Br. c	Hu	Brg
							PB	ugA	H	H	uBB	H	H	HgPrA	BrI	BrA.	uru,		u	Br. c	Hu	Brg
							Pc	ug,	H	H	A.	H	H	HgPrA	BrI P	urBu	uruA		u	Br. c	Hu	Brg
							oB	ugP	H	H	A,	H	H	HgPrA	BrI ,	urBo	urgg		u	Br. c	Hu	Brg
							oc	ugu	H	H	Ao	H	H	HgPrA	BrI A	urBI	urgc		u	Br. c	Hu	Brg
							cB	ugB	H	H	AP	H	H	HgPrA	Br. u	urBA	urgI		u	Br. c	Hu	Brg
							cc	uu.	H	H	Au	H	H	HgPrA	Br. P	uruu	urgA		u	Br. c	Hu	Brg
							, B	uuI	H	H	AB	H	H	HgPrA	Br. c	uruP	urPu		u	Br. c	Hu	Brg
							uBB	H	H	H	H	H	H	HgPrA	BrAA	urg,	uroP	G2, B	u	Br. c	Hg	Brg
							BHuc	ugo	uug	H	A,	. I	H	Hggru	BrI	Br. c	urBP	G , B	u	Br. c	Hu	Brg
							gB	ugo	H	H	A,	H	H	Hggru	BrI	BrA	urB.		u	Br. c	Hu	Brg
							gc	ugo	H	H	A,	H	H	Hggru	BrI	BrAo	urug		u	Br. c	Hu	Brg
							PB	ugo	H	H	A,	H	H	Hggru	BrI	BrA.	uru,		u	Br. c	Hu	Brg
							Pc	ugu	H	H	Ao	H	H	Hggru	BrI P	urBu	uruA		u	Br. c	Hu	Brg
							oB	uuA	H	H	Ag	H	H	Hggru	BrI ,	urBo	urgg		u	Br. c	Hu	Brg
							oc	uuI	H	H	Au	H	H	Hggru	BrI A	urBI	urgc		u	Br. c	Hu	Brg
							cB	uuc	H	H	. A	H	H	Hggru	Br. u	urBA	urgI		u	Br. c	Hu	Brg
							cc	uuo	H	H	. .	H	H	Hggru	Br. P	uruu	urgA		u	Br. c	Hu	Brg
							, B	uug	H	H	. I	H	H	Hggru	Br. c	uruP	urPu		u	Br. c	Hu	Brg
							uBB	H	H	H	H	H	H	Hggru	BrAA	urg,	uroP	G2, B	u	Br. c	Hg	Brg
							BHuc	ugg	uuB	H	Ao	. c	H	HgurP	BrI	Br. c	urBP	G , B	u	Br. c	Hu	Brg
							gB	ugg	H	H	Ao	H	H	HgurP	BrI	BrA	urB.		u	Br. c	Hu	Brg
							gc	ugg	H	H	Ao	H	H	HgurP	BrI	BrAo	urug		u	Br. c	Hu	Brg
							PB	ugg	H	H	Ao	H	H	HgurP	BrI	BrA.	uru,		u	Br. c	Hu	Brg
							Pc	uuA	H	H	Ag	H	H	HgurP	BrI P	urBu	uruA		u	Br. c	Hu	Brg
							oB	uuI	H	H	AB	H	H	HgurP	BrI ,	urBo	urgg		u	Br. c	Hu	Brg
							oc	uuc	H	H	. A	H	H	HgurP	BrI A	urBI	urgc		u	Br. c	Hu	Brg
							cB	uuP	H	H	. .	H	H	HgurP	Br. u	urBA	urgI		u	Br. c	Hu	Brg
							cc	uug	H	H	. ,	H	H	HgurP	Br. P	uruu	urgA		u	Br. c	Hu	Brg
							, B	uuB	H	H	. c	H	H	HgurP	Br. c	uruP	urPu		u	Br. c	Hu	Brg
							uBB	H	H	H	H	H	H	HgurP	BrAA	urg,	uroP	G2, B	u	Br. c	Hg	Brg
							BHuc	uuo	H	H	. .	H	H	Hu. rI	BrI	Br. c	urBP	G , B	u	Br. c	Hu	Brg
							gB	uuo	H	H	. .	H	H	Hu. rI	BrI	BrA	urB.		u	Br. c	Hu	Brg
							gc	uuo	H	H	. .	H	H	Hu. rI	BrI	BrAo	urug		u	Br. c	Hu	Brg
							PB	uuo	H	H	. .	H	H	Hu. rI	BrI	BrA.	uru,		u	Br. c	Hu	Brg
							Pc	uuu	H	H	. ,	H	H	Hu. rI	BrI P	urBu	uruA		u	Br. c	Hu	Brg
							oB	H	H	H	H	H	H	Hu. rI	BrI ,	urBo	urgg		u	Br. c	Hu	Brg
							oc	H	H	H	H	H	H	Hu. rI	BrI A	urBI	urgc		u	Br. c	Hu	Brg
							cB	H	H	H	H	H	H	Hu. rI	Br. u	urBA	urgI		u	Br. c	Hu	Brg
							cc	H	H	H	H	H	H	Hu. rI	Br. P	uruu	urgA		u	Br. c	Hu	Brg
							, B	H	H	H	H	H	H	Hu. rI	Br. c	uruP	urPu		u	Br. c	Hu	Brg
							uBB	H	H	H	H	H	H	Hu. rI	BrAA	urg,	uroP	G2, B	u	Br. c	Hg	Brg
							BHuc	uug	H	H	. I	H	H	Hu. ru	BrI	Br. c	urBP	G , B	u	Br. c	Hu	Brg
							gB	uug	H	H	. I	H	H	Hu. ru	BrI	BrA	urB.		u	Br. c	Hu	Brg
							gc	uug	H	H	. I	H	H	Hu. ru	BrI	BrAo	urug		u	Br. c	Hu	Brg
							PB	uug	H	H	. I	H	H	Hu. ru	BrI	BrA.	uru,		u	Br. c	Hu	Brg
							Pc	H	H	H	H	H	H	Hu. ru	BrI P	urBu	uruA		u	Br. c	Hu	Brg
							oB	H	H	H	H	H	H	Hu. ru	BrI ,	urBo	urgg		u	Br. c	Hu	Brg
							oc	H	H	H	H	H	H	Hu. ru	BrI A	urBI	urgc		u	Br. c	Hu	Brg
							cB	H	H	H	H	H	H	Hu. ru	Br. u	urBA	urgI		u	Br. c	Hu	Brg
							cc	H	H	H	H	H	H	Hu. ru	Br. P	uruu	urgA		u	Br. c	Hu	Brg
							, B	H	H	H	H	H	H	Hu. ru	Br. c	uruP	urPu		u	Br. c	Hu	Brg
							uBB	H	H	H	H	H	H	Hu. ru	BrAA	urg,	uroP	G2, B	u	Br. c	Hg	Brg
							BHuc	uoP	uPB	uu.	uuu	uBu	Ag	HgArI	BrI	Br. c	urBP	G , B	u	Br. c	Hu	Brg
							gB	uoP	ug,	uuc	uuu	A.	. A	HgArI	BrI	BrA	urB.		u	Br. c	Hu	Brg
							gc	uoP	ugo	uuP	uuu	A,	. .	HgArI	BrI	BrAo	urug		u	Br. c	Hu	Brg
							PB	uoP	ugu	uuu	uuu	Ao	. ,	HgArI	BrI	BrA.	uru,		u	Br. c	Hu	Brg
							Pc	uoB	uuA	H	uBA	Ag	H	HgArI	BrI P	urBu	uruA		u	Br. c	Hu	Brg
							oB	uP.	uu.	H	uBI	Au	H	HgArI	BrI ,	urBo	urgg		u	Br. c	Hu	Brg
							oc	uPc	uu,	H	uBc	AB	H	HgArI	BrI A	urBI	urgc		u	Br. c	Hu	Brg
							cB	uPP	uuc	H	uBP	. A	H	HgArI	Br. u	urBA	urgI		u	Br. c	Hu	Brg
							cc	uPg	uuo	H	uBg	. .	H	HgArI	Br. P	uruu	urgA		u	Br. c	Hu	Brg
							, B	uPB	uuP	H	uBu	. I	H	HgArI	Br. c	uruP	urPu		u	Br. c	Hu	Brg
							uBB	H	H	H	H	H	H	HgArI	BrAA	urg,	uroP	G2, B	u	Br. c	Hg	Brg

4" t S BruBB K[Ø' z °G [K zØ+ * Z Θ BrPuP &f urc ;] [=

D;Ø z 5' Ø

gB=' r TZ *; PP+ Ø sj N PP K° Ø

&' Ø2Ø®;' [K cdu, I rc

&' Ø2Ø®;' [K cdu, . rgc

&' Ø2Ø®;' [K cdu, Argc

&' Ø2Ø®;' [K cdu, Arc

&' Ø2Ø®;' [K cdu, crgc

u, go

b;Ø[ZÆF + * ° &' Ø2Ø D Ø2Ø= ®Ø z UZ sq[U-
b - 4 4 [=Ø * * Ø= 9 * ≤] Ø25] rEgBBuHuBrgru
f * U + M Ø usgBgB
®' =* ou] j oo

9el c®3 Pt e"st , t &s/k 8b®®k8 Ø bmNme wks®bcevu ceb 8sks/g[1]

V. ANDREW TAN
LICENSE
No. 81662
STATE OF FLORIDA
PROFESSIONAL ENGINEER

0F13RØF0F pl nCØF17 sl n Ø X q k q z & KC8 qqKCD 7ØNC 0F16 sl n Ø X G k q z & K8 qqKC DØØN	0F13RØF0F pl nC 0F17RØF16 sl n Ø X k q z & KC 8 qqKCD x K ØØN
e GX/ q q K qGZqK 8qG 12F4:1:1: Z0F13 pl nC 0F0F pl n 0F17RØF16 sl n	e GX/ q q K qGZqK ® Gq 1 z 5 Z8qG 12F4:1:1 Z0F13 pl nCØF0F pl n X K0F17RØF16 sl n
& K q q GX qz	& K q q GX qz

®Ø z UZ	"GØDK[* ° ° ØUG° J	X ØZG ØUG° J	S' ° Z [* Θ " ≤* g	S' ° Z [* Θ T≤' UØ=	S Θ + * " ≤*	TZ z T≤' UØ= ØUG° J	D Ø2Ø= &* ΘØ2s j * * Z]	D	b	f	D	b	f	f * ° Θ[h] ' z ®TSJ	4 ≤ D	4 ≤ b	4 ≤ f		(z	(z	7 b≤	7 b≤C
														T Ø2Ø=	n qZZGq	qK	9X/ q 2 GX G X		Z	D		
& ' Ø2Ø®;' [K	cdu,	, rgc	4" t S BruBB K[Ø' z ° G [K zØ + * Z Θ BrPuP &f urc ;] [=	D;Ø z 5 ' Ø	gB=' r TZ * ; PP+ Ø sj N PP K° Ø	go	BHuc	ugI	uuc	H	A.	. A	H	HgPrP	BrI	Br. c	urBP	G , B	u	Br. c	Hu	Brg
							gB	ugI	uug	H	A.	. I	H	HgPrP	BrI	BrA	urB.		u	Br. c	Hu	Brg
							gc	ugI	H	H	A.	H	H	HgPrP	BrI	BrAo	urug		u	Br. c	Hu	Brg
							PB	ugI	H	H	A.	H	H	HgPrP	BrI	BrA.	uru,		u	Br. c	Hu	Brg
							Pc	ugo	H	H	A,	H	H	HgPrP	BrI P	urBu	uruA		u	Br. c	Hu	Brg
							oB	ugg	H	H	Ao	H	H	HgPrP	BrI ,	urBo	urgg		u	Br. c	Hu	Brg
							oc	ugB	H	H	AP	H	H	HgPrP	BrI A	urBI	urgc		u	Br. c	Hu	Brg
							cB	uu.	H	H	Ag	H	H	HgPrP	Br. u	urBA	urgI		u	Br. c	Hu	Brg
							cc	uuI	H	H	AB	H	H	HgPrP	Br. P	uruu	urgA		u	Br. c	Hu	Brg
							, B	uuc	H	H	. A	H	H	HgPrP	Br. c	uruP	urPu		u	Br. c	Hu	Brg
							uBB	H	H	H	H	H	H	HgPrP	BrAA	urg,	uroP	G2, B	u	Br. c	Hg	Brg
& ' Ø2Ø®;' [K	cdu,	I rgc	4" t S BruBB K[Ø' z ° G [K zØ + * Z Θ BrPuP &f urc ;] [=	D;Ø z 5 ' Ø	gB=' r TZ * ; PP+ Ø sj N PP K° Ø	go	BHuc	uu,	H	H	AB	H	H	HuAro	BrI	Br. c	urBP	G , B	u	Br. c	Hu	Brg
							gB	uu,	H	H	AB	H	H	HuAro	BrI	BrA	urB.		u	Br. c	Hu	Brg
							gc	uu,	H	H	AB	H	H	HuAro	BrI	BrAo	urug		u	Br. c	Hu	Brg
							PB	uu,	H	H	AB	H	H	HuAro	BrI	BrA.	uru,		u	Br. c	Hu	Brg
							Pc	uuo	H	H	. .	H	H	HuAro	BrI P	urBu	uruA		u	Br. c	Hu	Brg
							oB	uuu	H	H	. ,	H	H	HuAro	BrI ,	urBo	urgg		u	Br. c	Hu	Brg
							oc	H	H	H	H	H	H	HuAro	BrI A	urBI	urgc		u	Br. c	Hu	Brg
							cB	H	H	H	H	H	H	HuAro	Br. u	urBA	urgI		u	Br. c	Hu	Brg
							cc	H	H	H	H	H	H	HuAro	Br. P	uruu	urgA		u	Br. c	Hu	Brg
							, B	H	H	H	H	H	H	HuAro	Br. c	uruP	urPu		u	Br. c	Hu	Brg
							uBB	H	H	H	H	H	H	HuAro	BrAA	urg,	uroP	G2, B	u	Br. c	Hg	Brg
& ' Ø2Ø®;' [K	cdu,	I rc	4" t S BruBB K[Ø' z ° G [K zØ + * Z Θ BrPuP &f urc ;] [=	D;Ø z 5 ' Ø	gB=' r TZ * ; PP+ Ø sj N PP K° Ø	go	BHuc	uuo	H	H	. .	H	H	Hu. rI	BrI	Br. c	urBP	G , B	u	Br. c	Hu	Brg
							gB	uuo	H	H	. .	H	H	Hu. rI	BrI	BrA	urB.		u	Br. c	Hu	Brg
							gc	uuo	H	H	. .	H	H	Hu. rI	BrI	BrAo	urug		u	Br. c	Hu	Brg
							PB	uuo	H	H	. .	H	H	Hu. rI	BrI	BrA.	uru,		u	Br. c	Hu	Brg
							Pc	uuu	H	H	. ,	H	H	Hu. rI	BrI P	urBu	uruA		u	Br. c	Hu	Brg
							oB	H	H	H	H	H	H	Hu. rI	BrI ,	urBo	urgg		u	Br. c	Hu	Brg
							oc	H	H	H	H	H	H	Hu. rI	BrI A	urBI	urgc		u	Br. c	Hu	Brg
							cB	H	H	H	H	H	H	Hu. rI	Br. u	urBA	urgI		u	Br. c	Hu	Brg
							cc	H	H	H	H	H	H	Hu. rI	Br. P	uruu	urgA		u	Br. c	Hu	Brg
							, B	H	H	H	H	H	H	Hu. rI	Br. c	uruP	urPu		u	Br. c	Hu	Brg
							uBB	H	H	H	H	H	H	Hu. rI	BrAA	urg,	uroP	G2, B	u	Br. c	Hg	Brg
& ' Ø2Ø®;' [K	cdu,	crgc	5] r . / urgcI ;] [= / BrPI cI G' z zØ + * Z Θ ØØMf z ' j * Θ G' z ° UØ	D;Ø z 5 ' Ø	gB=' r TZ * ; PP+ Ø sj N PP K° Ø	u,	BHuc	q. o	qc.	qPo	qqB	qBB	u. u	Huu, rP	BrI	Br. c	urBP	G , B	u	Br. c	Hu	Brg
							gB	g. o	gcB	ggA	ggB	uAo	uI I	Huu, rP	BrI	BrA	urB.		u	Br. c	Hu	Brg
							gc	g. o	goc	ggo	ggB	uAB	uI o	Huu, rP	BrI	BrAo	urug		u	Br. c	Hu	Brg
							PB	g. o	goB	ggB	ggB	u. ,	uI u	Huu, rP	BrI	BrA.	uru,		u	Br. c	Hu	Brg
							Pc	gI .	gP,	gu.	guc	u. P	u, A	Huu, rP	BrI P	urBu	uruA		u	Br. c	Hu	Brg
							oB	gI g	gPP	guc	guu	u. B	u, I	Huu, rP	BrI ,	urBo	urgg		u	Br. c	Hu	Brg
							oc	g, .	gPB	guP	gB.	uI .	u, c	Huu, rP	BrI A	urBI	urgc		u	Br. c	Hu	Brg
							cB	g, o	ggI	guu	gBo	uI ,	u, P	Huu, rP	Br. u	urBA	urgI		u	Br. c	Hu	Brg
							cc	g, u	ggc	gBA	gBg	uI c	u, g	Huu, rP	Br. P	uruu	urgA		u	Br. c	Hu	Brg
							, B	gc.	ggP	gBI	gBB	uI P	u, u	Huu, rP	Br. c	uruP	urPu		u	Br. c	Hu	Brg
							uBB	guP	u. A	uI I	u, c	uo,	uPI	Huu, rP	BrAA	urg,	uroP	G2, B	u	Br. c	Hg	Brg
& ' Ø2Ø®;' [K	cdu,	, rgc	5] r . / urgcI ;] [= / BrPI cI G' z zØ + * Z Θ ØØMf z ' j * Θ G' z ° UØ	D;Ø z 5 ' Ø	gB=' r TZ * ; PP+ Ø sj N PP K° Ø	u,	BHuc	qco	qPB	qBA	uAI	uI .	u, g	HAPru	BrI	Br. c	urBP	G , B	u	Br. c	Hu	Brg
							gB	qco	qgo	qBo	uAI	uI P	uc.	HAPru	BrI	BrA	urB.		u	Br. c	Hu	Brg
							gc	qco	guA	qBu	uAI	uI B	ucc	HAPru	BrI	BrAo	urug		u	Br. c	Hu	Brg
							PB	qco	guc	uAI	uAI	u, ,	ucP	HAPru	BrI	BrA.	uru,		u	Br. c	Hu	Brg
							Pc	goA	guu	uAc	uAP	u, o	ucu	HAPru	BrI P	urBu	uruA		u	Br. c	Hu	Brg
							oB	goo	gB.	uAg	u. A	u, u	uoA	HAPru	BrI ,	urBo	urgg		u	Br. c	Hu	Brg
							oc	goB	gB,	uAB	u. ,	ucA	uoI	HAPru	BrI A	urBI	urgc		u	Br. c	Hu	Brg
							cB	gP,	gBP	u. .	u. P	uc.	uo,	HAPru	Br. u	urBA	urgI		u	Br. c	Hu	Brg
							cc	gPP	gBg	u. I	u. u	uc,	uoc	HAPru	Br. P	uruu	urgA		u	Br. c	Hu	Brg
							, B	gPB	gBB	u. ,	uI .	ucc	uoo	HAPru	Br. c	uruP	urPu		u	Br. c	Hu	Brg
							uBB	uAu	u, A	ucA	uo.	uPu	ugP	HAPru	BrAA	urg,	uroP	G2, B	u	Br. c	Hg	Brg
& ' Ø2Ø®;' [K	cdu,	I rgc	5] r . / urgcI ;] [= / BrPI cI G' z zØ + * Z Θ ØØMf z ' j * Θ G' z ° UØ	D;Ø z 5 ' Ø	gB=' r TZ * ; PP+ Ø sj N PP K° Ø	u,	BHuc	gPg	guB	uAu	u. B	u, P	uo.	HI I r,	BrI	Br. c	urBP	G , B	u	Br. c	Hu	Brg
							gB	gPg	gBo	u. I	u. B	uc.	uoc	HI I r,	BrI	BrA	urB.		u	Br. c	Hu	Brg
							gc	gPg	gBB	u. P	u. B	ucc	uog	HI I r,	BrI	BrAo	urug		u	Br. c	Hu	Brg
							PB	gPg	uA,	u. B	u. B	ucg	uPA	HI I r,	BrI	BrA.	uru,		u	Br. c	Hu	Brg
							Pc	ggI	uAP	uI .	uI ,	uoA	uP.	HI I r,	BrI P	urBu	uruA		u	Br. c	Hu	Brg
							oB	ggg	uAB	uI ,	uI g	uoI	uP,	HI I r,	BrI ,	urBo	urgg		u	Br. c	Hu	Brg
							oc	guA	u. .	uI o	uI B	uo,	uPc	HI I r,	BrI A	urBI	urgc		u	Br. c	Hu	Brg
							cB	guc	u. ,	uI g	u, I	uoo	uPP	HI I r,	Br. u	urBA	urgI		u	Br. c	Hu	Brg
							cc	guP	u. o	uI u	u, c	uoP	uPg	HI I r,	Br. P	uruu	urgA		u	Br. c	Hu	Brg
							, B	guB	u. g	u, A	u, P	uou	uPu	HI I r,	Br. c	uruP	urPu		u	Br. c	Hu	Brg
							uBB	uI o	uco	uoc	uPc	ugB	uug	HI I r,	BrAA	urg,	uroP	G2, B	u	Br. c	Hg	Brg

9el c®3 Pt e"st , t &s/k 8b®®k8 Ø bmNme wks®bcevu ceb 8sks/g[1]

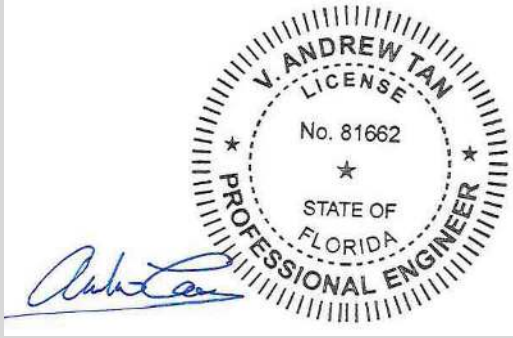

								0F13RØF0F pl nCØF17 sl n Ø X q k q z & KC8 qqKCD 7ØNC 0F16 sl n Ø X G k q z & K8 qqKC DØØN			0F13RØF0F pl nC 0F17RØF16 sl n Ø X k q z & KC 8 qqKCDx K ØØN			n qZZGq qK 9X/ q 2 GXG X Z D						
								e GX/ q q K qGZqK 8qG 12F4:1:1: Z0F13 pl nC 0F0F pl n 0F17RØF16 sl n			e GX/ q q K qGZqK ® Gq 1 z 5 Z8qG 12F4:1:1 Z0F13 pl nCØF0F pl n X K0F17RØF16 sl n									
								& Kq q GX qz			& Kq q GX qz			TØØ=	(					
®Ø z UZ	®Ø z UZ " GØK[* ° ° ØUG ° J	X ØZG ØUG ° J	S' ° Z [* Θ " ≤ * g	S' ° Z [* Θ T≤' UØ=	SΘ + * " ≤*	TZ z T≤' UØ= ØUG ° J	D Ø2Ø= &* ΘØ2s j * * Z]	D	b	f	D	b	f	f * ° Θ [h] ' z ®TSJ	4 ≤ D	4 ≤ b	4 ≤ f		(z	(z	7 b s	7 b sØ
							BHuc	qgI	qB,	u. I	uI ,	u, B	uoc	HIorc	BrI	Br. c	urBP	G , B	u	Br. c	Hu	Brg
							gB	ggI	gBB	u. P	uI ,	ucc	uog	HIorc	BrI	BrA	urB.		u	Br. c	Hu	Brg
							gc	ggI	uA,	u. B	uI ,	ucg	uPA	HIorc	BrI	BrAo	urug		u	Br. c	Hu	Brg
							PB	ggI	uAg	uI ,	uI ,	uoA	uPI	HIorc	BrI	BrA	uru,		u	Br. c	Hu	Brg
							Pc	ggg	u. A	uI o	uI g	uo,	uPc	HIorc	BrI P	urBu	uruA		u	Br. c	Hu	Brg
							oB	gu.	u. ,	uI g	u, A	uoo	uPP	HIorc	BrI ,	urBo	urgg		u	Br. c	Hu	Brg
							oc	guo	u. o	uI B	u, ,	uoP	uPg	HIorc	BrI A	urBI	urgc		u	Br. c	Hu	Brg
							cB	guu	u. g	u, A	u, o	uou	uPu	HIorc	Br. u	urBA	urgI		u	Br. c	Hu	Brg
							cc	gBA	u. B	u, I	u, g	uoB	uPB	HIorc	Br. P	uruu	urgA		u	Br. c	Hu	Brg
							, B	gB,	uI A	u, ,	u, B	uP.	ugA	HIorc	Br. c	uruP	urPu		u	Br. c	Hu	Brg
							uBB	uI u	ucu	uog	uPg	uuI	uuB	HIorc	BrAA	urg,	uroP	G2, B	u	Br. c	Hg	Brg
							BHuc	gu.	uA.	u. B	u, A	uco	uoB	H . rA	BrI	Br. c	urBP	G , B	u	Br. c	Hu	Brg
							gB	gu.	uAP	uI ,	u, A	uoA	uP,	H . rA	BrI	BrA	urB.		u	Br. c	Hu	Brg
							gc	gu.	u. A	uI P	u, A	uo,	uPo	H . rA	BrI	BrAo	urug		u	Br. c	Hu	Brg
							PB	gu.	u. c	uI B	u, A	uoP	uPu	H . rA	BrI	BrA	uru,		u	Br. c	Hu	Brg
							Pc	guo	u. g	u, .	u, ,	uou	uPB	H . rA	BrI P	urBu	uruA		u	Br. c	Hu	Brg
							oB	guB	uI A	u, c	u, g	uPA	ug.	H . rA	BrI ,	urBo	urgg		u	Br. c	Hu	Brg
							oc	gB,	uI I	u, o	u, B	uPI	ugI	H . rA	BrI A	urBI	urgc		u	Br. c	Hu	Brg
							cB	gBP	uI c	u, g	ucI	uP,	ug,	H . rA	Br. u	urBA	urgI		u	Br. c	Hu	Brg
							cc	gBu	uI o	u, u	ucc	uPo	ugc	H . rA	Br. P	uruu	urgA		u	Br. c	Hu	Brg
							, B	uA.	uI g	u, B	uco	uPP	ugo	H . rA	Br. c	uruP	urPu		u	Br. c	Hu	Brg
							uBB	u, o	uoc	uPI	ugI	uuP	uB,	H . rA	BrAA	urg,	uroP	G2, B	u	Br. c	Hg	Brg
							BHuc	quc	uAc	uI I	u, ,	ucu	uPI	H , rc	BrI	Br. c	urBP	G , B	u	Br. c	Hu	Brg
							gB	quc	u. A	uI P	u, ,	uoI	uPo	H , rc	BrI	BrA	urB.		u	Br. c	Hu	Brg
							gc	quc	u. c	uI B	u, ,	uoP	uPu	H , rc	BrI	BrAo	urug		u	Br. c	Hu	Brg
							PB	guc	u. u	u, I	u, ,	uoB	ugA	H , rc	BrI	BrA	uru,		u	Br. c	Hu	Brg
							Pc	guB	uI A	u, c	u, P	uP.	ugI	H , rc	BrI P	urBu	uruA		u	Br. c	Hu	Brg
							oB	gB,	uI ,	u, P	ucA	uP,	ug,	H , rc	BrI ,	urBo	urgg		u	Br. c	Hu	Brg
							oc	gBP	uI o	u, u	ucI	uPc	ugc	H , rc	BrI A	urBI	urgc		u	Br. c	Hu	Brg
							cB	uAA	uI g	ucA	uco	uPP	ugP	H , rc	Br. u	urBA	urgI		u	Br. c	Hu	Brg
							cc	uAI	uI B	uc.	ucP	uPg	ugg	H , rc	Br. P	uruu	urgA		u	Br. c	Hu	Brg
							, B	uAc	u, A	ucI	ucu	uPu	ugu	H , rc	Br. c	uruP	urPu		u	Br. c	Hu	Brg
							uBB	u, u	uoP	uPo	ugc	uuu	uBo	H , rc	BrAA	urg,	uroP	G2, B	u	Br. c	Hg	Brg
							BHuc	qBu	u. g	u, c	ucc	uou	ug.	H . rg	BrI	Br. c	urBP	G , B	u	Br. c	Hu	Brg
							gB	gBu	uI I	u, g	ucc	uPI	ugc	H . rg	BrI	BrA	urB.		u	Br. c	Hu	Brg
							gc	gBu	uI P	ucA	ucc	uPo	ugP	H . rg	BrI	BrAo	urug		u	Br. c	Hu	Brg
							PB	gBu	uI B	uc,	ucc	uPu	ugu	H . rg	BrI	BrA	uru,		u	Br. c	Hu	Brg
							Pc	uAI	u, I	uco	ucg	ugA	uuA	H . rg	BrI P	urBu	uruA		u	Br. c	Hu	Brg
							oB	uAP	u, c	ucg	uoA	ug.	uu.	H . rg	BrI ,	urBo	urgg		u	Br. c	Hu	Brg
							oc	uAB	u, P	ucB	uoI	ug,	uuI	H . rg	BrI A	urBI	urgc		u	Br. c	Hu	Brg
							cB	u. I	u, u	uoA	uoc	ugc	uuc	H . rg	Br. u	urBA	urgI		u	Br. c	Hu	Brg
							cc	u. o	ucA	uo.	uoP	ugP	uuc	H . rg	Br. P	uruu	urgA		u	Br. c	Hu	Brg
							, B	u. g	uc.	uoI	uou	ugg	uuo	H . rg	Br. c	uruP	urPu		u	Br. c	Hu	Brg
							uBB	ucu	uPo	ugc	uuI	uBo	AI	H . rg	BrAA	urg,	uroP	G2, B	u	Br. c	Hg	Brg
							BHuc	uA.	uI A	u, P	ucP	uPA	ug,	H . ro	BrI	Br. c	urBP	G , B	u	Br. c	Hu	Brg
							gB	uA.	uI o	ucA	ucP	uPc	ugP	H . ro	BrI	BrA	urB.		u	Br. c	Hu	Brg
							gc	uA.	uI u	uc,	ucP	uPg	ugu	H . ro	BrI	BrAo	urug		u	Br. c	Hu	Brg
							PB	uA.	u, I	uco	ucP	ugA	uuA	H . ro	BrI	BrA	uru,		u	Br. c	Hu	Brg
							Pc	uAo	u, c	ucg	ucB	ugI	uuI	H . ro	BrI P	urBu	uruA		u	Br. c	Hu	Brg
							oB	uAB	u, g	ucB	uoI	ug,	uu,	H . ro	BrI ,	urBo	urgg		u	Br. c	Hu	Brg
							oc	u. I	u, B	uo.	uoc	ugo	uuc	H . ro	BrI A	urBI	urgc		u	Br. c	Hu	Brg
							cB	u. o	uc.	uoI	uog	ugP	uuo	H . ro	Br. u	urBA	urgI		u	Br. c	Hu	Brg
							cc	u. u	ucI	uo,	uou	ugg	uuP	H . ro	Br. P	uruu	urgA		u	Br. c	Hu	Brg
							, B	uI A	uc,	uoo	uPA	ugB	uug	H . ro	Br. c	uruP	urPu		u	Br. c	Hu	Brg
							uBB	uo.	uPg	ugo	uuc	uBg	A,	H . ro	BrAA	urg,	uroP	G2, B	u	Br. c	Hg	Brg
							BHuc	uI P	ucI	uoP	uPo	ugg	uuu	HØPrP	BrI	Br. c	urBP	G , B	u	Br. c	Hu	Brg
							gB	uI P	ucP	uPA	uPo	uu.	uB.	HØPrP	BrI	BrA	urB.		u	Br. c	Hu	Brg
							gc	uI P	uoA	uPI	uPo	uu,	uB,	HØPrP	BrI	BrAo	urug		u	Br. c	Hu	Brg
							PB	uI P	uo,	uPo	uPo	uuP	uBo	HØPrP	BrI	BrA	uru,		u	Br. c	Hu	Brg
							Pc	uI B	uoo	uPP	uPu	uug	uBP	HØPrP	BrI P	urBu	uruA		u	Br. c	Hu	Brg
							oB	u, ,	uog	uPu	ugA	uuB	uBg	HØPrP	BrI ,	urBo	urgg		u	Br. c	Hu	Brg
							oc	u, P	uoB	uPB	ugI	uBA	uBu	HØPrP	BrI A	urBI	urgc		u	Br. c	Hu	Brg
							cB	u, u	uPA	ugA	ugc	uBI	uBB	HØPrP	Br. u	urBA	urgI		u	Br. c	Hu	Brg
							cc	ucA	uPI	ug.	ugP	uB,	AA	HØPrP	Br. P	uruu	urgA		u	Br. c	Hu	Brg
							, B	ucI	uP,	ugI	ugg	uB,	A.	HØPrP	Br. c	uruP	urPu		u	Br. c	Hu	Brg
							uBB	uPB	uuc	H	uBu	. A	H	HØPrP	BrAA	urg,	uroP	G2, B	u	Br. c	Hg	Brg

9el c®3 Pt e"st , t &s/k 8b®®k8 Ø bmNme wks®bcevu ceb 8ksvg[1]

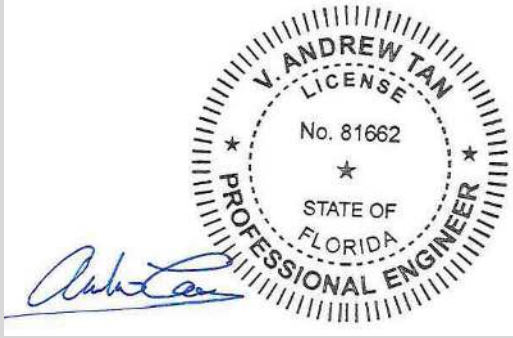

0F13R0F0F pl nC0F17 sl n Q X q k q z & KC8 qqKCD 7ØNC 0F16 sl n Ø X G k q z & K8 qqKC D2ØN	0F13R0F0F pl nC 0F17R0F16 sl n Ø X k q z & KC 8 qqKCDx K ØØN
e GX/ q q K qGZqK 8qG 12F4:1:1: Z0F13 pl nC 0F0F pl n 0F17R0F16 sl n	e GX/ q q K qGZqK ® Gq 1 z 5 Z8qG 12F4:1:1 Z0F13 pl nC0F0F pl n X K0F17R0F16 sl n
& K q q GX qz	& K q q GX qz

n qZZGq qK 9X/ q 2 GX G X Z D																					
®Ø z UZ	®Ø z UZ " GØK[* ° ° ØUG ° J	X ØZG ØUG ° J	S' ° Z [* Θ " ≤ * g	S' ° Z [* Θ T≤' UØ=	S Θ + * " ≤ *	TZ z T≤' UØ= ØUG ° J	D Ø2Ø= &* ΘØ2s j * * Z]	D	b	f	D	b	f	f * ° Θ [h] ' z ®TSJ	T Ø2Ø=	4 ≤ D	4 ≤ b	4 ≤ f	(	(z	(z	7 b s	7 b sØ
&' Ø2Ø®;' [K	cdu,	crgc	5] r . / urgcl ;] [= / BrPl cl G' z zØ + * Z Θ ØØM z ' j * Θ G' z ° UØ	D;Øz 5' Ø	gB=' r TZ *; PP+ Øsj N PP K° Ø	go	BHuc	qPg	quB	uAu	u. B	u, P	uo.	H l r,	Brl	Br. c	urBP	G , B	u	Br. c	Hu	Brg
							gB	gPg	gBo	u. l	u. B	uc.	uoc	H l r,	Brl	BrA	urB.		u	Br. c	Hu	Brg
							gc	gPg	gBB	u. P	u. B	ucc	uog	H l r,	Brl	BrAo	urug		u	Br. c	Hu	Brg
							PB	gPg	uA,	u. B	u. B	ucg	uPA	H l r,	Brl	BrA.	uru,		u	Br. c	Hu	Brg
							Pc	ggl	uAP	ul .	ul ,	uoA	uP.	H l r,	Brl P	urBu	uruA		u	Br. c	Hu	Brg
							oB	qgg	uAB	ul ,	ul g	uol	uP,	H l r,	Brl ,	urBo	urgg		u	Br. c	Hu	Brg
							oc	guA	u. .	ul o	ul B	uo,	uPc	H l r,	Brl A	urBl	urgc		u	Br. c	Hu	Brg
							cB	guc	u. ,	ul g	u, l	uoo	uPP	H l r,	Br. u	urBA	urgl		u	Br. c	Hu	Brg
							cc	guP	u. o	ul u	u, c	uoP	uPg	H l r,	Br. P	uruu	urgA		u	Br. c	Hu	Brg
							, B	guB	u. g	u, A	u, P	uou	uPu	H l r,	Br. c	uruP	urPu		u	Br. c	Hu	Brg
							uBB	ul o	uco	uoc	uPc	ugB	uug	H l r,	BrAA	urg,	uroP	G2, B	u	Br. c	Hg	Brg
&' Ø2Ø®;' [K	cdu,	, rgc	5] r . / urgcl ;] [= / BrPl cl G' z zØ + * Z Θ ØØM z ' j * Θ G' z ° UØ	D;Øz 5' Ø	gB=' r TZ *; PP+ Øsj N PP K° Ø	go	BHuc	gBl	u. .	ul u	u, u	uo,	uPg	H grB	Brl	Br. c	urBP	G , B	u	Br. c	Hu	Brg
							gB	gBl	u. P	u, l	u, u	uog	ugA	H grB	Brl	BrA	urB.		u	Br. c	Hu	Brg
							gc	gBl	ul A	u, o	u, u	uPA	ugl	H grB	Brl	BrAo	urug		u	Br. c	Hu	Brg
							PB	gBl	ul c	u, u	u, u	uP,	ugc	H grB	Brl	BrA.	uru,		u	Br. c	Hu	Brg
							Pc	gBP	ul P	ucA	ucl	uPo	ugP	H grB	Brl P	urBu	uruA		u	Br. c	Hu	Brg
							oB	uAA	ul B	ucl	uco	uPg	ugg	H grB	Brl ,	urBo	urgg		u	Br. c	Hu	Brg
							oc	uA,	u, .	ucc	ucg	uPB	ugB	H grB	Brl A	urBl	urgc		u	Br. c	Hu	Brg
							cB	uAP	u, ,	uco	uoA	ugA	uuA	H grB	Br. u	urBA	urgl		u	Br. c	Hu	Brg
							cc	uAB	u, c	ucP	uol	ug.	uu.	H grB	Br. P	uruu	urgA		u	Br. c	Hu	Brg
							, B	u. .	u, P	ucg	uo,	ug,	uul	H grB	Br. c	uruP	urPu		u	Br. c	Hu	Brg
							uBB	uc,	uP.	uPB	ugu	uBl	uBB	H grB	BrAA	urg,	uroP	G2, B	u	Br. c	Hg	Brg
&' Ø2Ø®;' [K	cdu,	l rgc	5] r . / urgcl ;] [= / BrPl cl G' z zØ + * Z Θ ØØM z ' j * Θ G' z ° UØ	D;Øz 5' Ø	gB=' r TZ *; PP+ Øsj N PP K° Ø	go	BHuc	u. A	ul g	uc,	uol	uPP	ugu	Hturl	Brl	Br. c	urBP	G , B	u	Br. c	Hu	Brg
							gB	u. A	u, l	ucg	uol	ugA	uu.	Hturl	Brl	BrA	urB.		u	Br. c	Hu	Brg
							gc	u. A	u, P	ucB	uol	ug,	uu,	Hturl	Brl	BrAo	urug		u	Br. c	Hu	Brg
							PB	u. A	u, B	uol	uol	ugo	uuo	Hturl	Brl	BrA.	uru,		u	Br. c	Hu	Brg
							Pc	u. c	uc.	uoc	uoo	ugg	uug	Hturl	Brl P	urBu	uruA		u	Br. c	Hu	Brg
							oB	u. g	ucc	uoP	uou	ugB	uuu	Hturl	Brl ,	urBo	urgg		u	Br. c	Hu	Brg
							oc	ul A	ucP	uog	uP.	uuA	uuB	Hturl	Brl A	urBl	urgc		u	Br. c	Hu	Brg
							cB	ul ,	ucg	uoB	uP,	uul	uBA	Hturl	Br. u	urBA	urgl		u	Br. c	Hu	Brg
							cc	ul o	ucB	uPA	uPc	uu,	uB.	Hturl	Br. P	uruu	urgA		u	Br. c	Hu	Brg
							, B	ul g	uoA	uP.	uPP	uuc	uBl	Hturl	Br. c	uruP	urPu		u	Br. c	Hu	Brg
							uBB	uog	ug,	uu.	uuB	A.	Ag	Hturl	BrAA	urg,	uroP	G2, B	u	Br. c	Hg	Brg
&' Ø2Ø®;' [K	cdu,	l rc	5] r . / urgcl ;] [= / BrPl cl G' z zØ + * Z Θ ØØM z ' j * Θ G' z ° UØ	D;Øz 5' Ø	gB=' r TZ *; PP+ Øsj N PP K° Ø	go	BHuc	u. c	u, .	ucP	uoo	uPB	uu.	HvAr,	Brl	Br. c	urBP	G , B	u	Br. c	Hu	Brg
							gB	u. c	u, P	uoA	uoo	ugl	uu,	HvAr,	Brl	BrA	urB.		u	Br. c	Hu	Brg
							gc	u. c	u, B	uol	uoo	ugo	uuo	HvAr,	Brl	BrAo	urug		u	Br. c	Hu	Brg
							PB	u. c	ucl	uoo	uoo	ugu	uug	HvAr,	Brl	BrA.	uru,		u	Br. c	Hu	Brg
							Pc	u. g	uco	uog	uou	ugB	uuB	HvAr,	Brl P	urBu	uruA		u	Br. c	Hu	Brg
							oB	ul .	ucg	uoB	uP.	uu.	uBA	HvAr,	Brl ,	urBo	urgg		u	Br. c	Hu	Brg
							oc	ul c	ucB	uPA	uP,	uu,	uB.	HvAr,	Brl A	urBl	urgc		u	Br. c	Hu	Brg
							cB	ul g	uoA	uP.	uPP	uuc	uBl	HvAr,	Br. u	urBA	urgl		u	Br. c	Hu	Brg
							cc	ul B	uol	uPl	uPg	uuo	uB,	HvAr,	Br. P	uruu	urgA		u	Br. c	Hu	Brg
							, B	u, .	uo,	uP,	uPB	uuP	uBc	HvAr,	Br. c	uruP	urPu		u	Br. c	Hu	Brg
							uBB	uPA	ugP	uu,	uB.	A,	AB	HvAr,	BrAA	urg,	uroP	G2, B	u	Br. c	Hg	Brg
&' Ø2Ø®;' [K	cdu,	.	5] r . / urgcl ;] [= / BrPl cl G' z zØ + * Z Θ ØØM z ' j * Θ G' z ° UØ	D;Øz 5' Ø	gB=' r TZ *; PP+ Øsj N PP K° Ø	go	BHuc	ul .	u, g	uol	uP.	ugc	uuo	Hv, rB	Brl	Br. c	urBP	G , B	u	Br. c	Hu	Brg
							gB	ul .	ucl	uoo	uP.	ugg	uuu	Hv, rB	Brl	BrA	urB.		u	Br. c	Hu	Brg
							gc	ul .	uco	uou	uP.	uuA	uBA	Hv, rB	Brl	BrAo	urug		u	Br. c	Hu	Brg
							PB	ul .	ucu	uPA	uP.	uul	uBl	Hv, rB	Brl	BrA.	uru,		u	Br. c	Hu	Brg
							Pc	ul c	uoA	uPl	uPc	uuc	uB,	Hv, rB	Brl P	urBu	uruA		u	Br. c	Hu	Brg
							oB	ul u	uo,	uPc	uPP	uuP	uBc	Hv, rB	Brl ,	urBo	urgg		u	Br. c	Hu	Brg
							oc	u, .	uoc	uPo	uPB	uug	uBo	Hv, rB	Brl A	urBl	urgc		u	Br. c	Hu	Brg
							cB	u, ,	uoP	uPg	ug.	uuu	uBP	Hv, rB	Br. u	urBA	urgl		u	Br. c	Hu	Brg
							cc	u, o	uog	uPu	ugl	uuB	uBg	Hv, rB	Br. P	uruu	urgA		u	Br. c	Hu	Brg
							, B	u, g	uoB	uPB	ugc	uBA	uBu	Hv, rB	Br. c	uruP	urPu		u	Br. c	Hu	Brg
							uBB	uPo	uuA	uug	uBo	Ag	. ,	Hv, rB	BrAA	urg,	uroP	G2, B	u	Br. c	Hg	Brg
&' Ø2Ø®;' [K	cdu,	. rgc	5] r . / urgcl ;] [= / BrPl cl G' z zØ + * Z Θ ØØM z ' j * Θ G' z ° UØ	D;Øz 5' Ø	gB=' r TZ *; PP+ Øsj N PP K° Ø	go	BHuc	ul c	ucA	uoo	uP,	ugP	uug	HvorP	Brl	Br. c	urBP	G , B	u	Br. c	Hu	Brg
							gB	ul c	uco	uou	uP,	ugB	uBA	HvorP	Brl	BrA	urB.		u	Br. c	Hu	Brg
							gc	ul c	ucu	uP.	uP,	uul	uBl	HvorP	Brl	BrAo	urug		u	Br. c	Hu	Brg
							PB	ul c	uo.	uP,	uP,	uuc	uBc	HvorP	Brl	BrA.	uru,		u	Br. c	Hu	Brg
							Pc	ul g	uo,	uPo	uPP	uuP	uBo	HvorP	Brl P	urBu	uruA		u	Br. c	Hu	Brg
							oB	u, .	uoo	uPP	uPB	uuu	uBP	HvorP	Brl ,	urBo	urgg		u	Br. c	Hu	Brg
							oc	u, c	uog	uPu	ug.	uuB	uBg	HvorP	Brl A	urBl	urgc		u	Br. c	Hu	Brg
							cB	u, P	uoB	uPB	ug,	uBA	uBu	HvorP	Br. u	urBA	urgl		u	Br. c	Hu	Brg
							cc	u, u	uPA	ugA	ugc	uB.	uBB	HvorP	Br. P	uruu	urgA		u	Br. c	Hu	Brg
							, B	ucA	uP.	ug.	ugP	uBl	AA	HvorP	Br. c	uruP	urPu		u	Br. c	Hu	Brg
							uBB	uPg	uul	H	uBg	AB	H	HvorP	BrAA	urg,	uroP	G2, B	u	Br. c	Hg	Brg

b ;Ø[ZEF' + * ° &' Ø¤Ø D Ø¤Ø= ®Ø¤z UZ s¢[U·
b - 4 4 [=Ø* * Ø= 9 * ≤] Ø¤5] rEgBBuHuBrgru
f * U' + M' ØusgBgB
®' =* oo] j oo

9e l c®3 Pt e"st , t & s/v k 8b®®k 8 Ø bmNme wk s®bcevu ceb 8sk s/g[1]

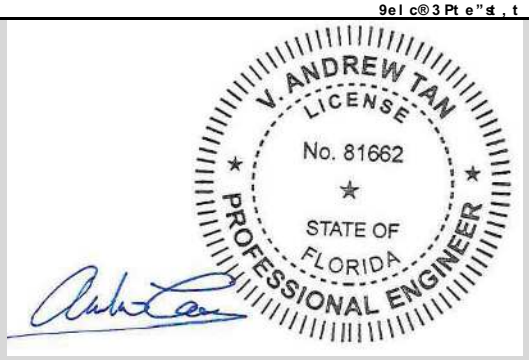

0F13®0F0F pl nC0F17 sl n Ø X q k q z & KC8 qqKCD 7Ø NC 0F16 sl n Ø X G k q z & K8 qqKC D2Ø N	0F13®0F0F pl nC 0F17®0F16 sl n Ø X k q z & KC 8 qqKCD x K Ø N
e GX/ q q K qGZqK 8qG 12F4:1:1: Z0F13 pl nC 0F0F pl n 0F17®0F16 sl n	e GX/ q q K qGZqK ® Gq 1 z 5 Z8qG 12F4:1:1 Z0F13 pl nC0F0F pl n X K0F17®0F16 sl n
& Kq q GX qz	& Kq q GX qz

®Ø¤z UZ	®Ø¤z UZ "GØ¤K[* ° ° ØUG' ° J	X Ø¤ZG ØUG' ° J	S' ° Z [* Ø " ≤* g	S' ° Z [* Ø Ts' UØ=	SØ+ * " ≤*	TZ z Ts' UØ= ØUG' ° J	D Ø¤Ø= &* ØG Z s j * * Z]	D	b	f	D	b	f	f * ° Ø[h] ' z ®TSJ	4 ≤ D	4 ≤ b	4 ≤ f		(z	(z	7 b s	7 b s0
								n qZZGq		qK	9X/ q 2 GX G X		Z D								
								& Kq q GX qz			& Kq q GX qz			T Ø¤Ø=	(						
&' Ø¤Ø®;' [K	cdu,	Argc	5] r . / urgcl ;] [= / BrPl cl G' ' z zØ+ * Z Ø ØØM' z ' j * Ø G' ' z ° UØ	D;Ø¤z 5 ' Ø	gB=' r TZ *; PP+ Ø¤sj N PP K° Ø	go	BHuc	u, o	uoA	uPc	ugI	uuc	uBc	HP. r.	Brl	Br. c	urBP	G , B	u	Br. c	Hu	Brg
							gB	u, o	uoc	uPg	ugI	uug	uBg	HP. r.	Brl	BrA	urB.		u	Br. c	Hu	Brg
							gc	u, o	uou	uPB	ugI	uuB	uBB	HP. r.	Brl	BrAo	urug		u	Br. c	Hu	Brg
							PB	u, o	uPA	ugI	ugI	uBI	AA	HP. r.	Brl	BrA	uru,		u	Br. c	Hu	Brg
							Pc	u, B	uP,	ug,	ugo	uB,	AI	HP. r.	Brl P	urBu	uruA		u	Br. c	Hu	Brg
							oB	ucI	uPo	ugo	ugg	uBo	A,	HP. r.	Brl ,	urBo	urgg		u	Br. c	Hu	Brg
							oc	ucc	uPP	ugP	ugB	uBP	Ac	HP. r.	Brl A	urBI	urgc		u	Br. c	Hu	Brg
							cB	ucg	uPu	ugg	uu.	uBg	Ao	HP. r.	Br. u	urBA	urgI		u	Br. c	Hu	Brg
							cc	ucB	uPB	ugu	uuI	uBu	Ao	HP. r.	Br. P	uruu	urgA		u	Br. c	Hu	Brg
							, B	uoA	ugA	ugB	uuc	uBB	AP	HP. r.	Br. c	uruP	urPu		u	Br. c	Hu	Brg
							uBB	ugP	H	H	Ac	H	H	HP. r.	BrAA	urg,	uroP	G2, B	u	Br. c	Hg	Brg
&' Ø¤Ø®;' [K	cdu,	Arc	5] r . / urgcl ;] [= / BrPl cl G' ' z zØ+ * Z Ø ØØM' z ' j * Ø G' ' z ° UØ	D;Ø¤z 5 ' Ø	gB=' r TZ *; PP+ Ø¤sj N PP K° Ø	go	BHuc	u, u	uo,	uPP	ugc	uuP	uBP	HPl r,	Brl	Br. c	urBP	G , B	u	Br. c	Hu	Brg
							gB	u, u	uog	uPB	ugc	uuB	uBu	HPl r,	Brl	BrA	urB.		u	Br. c	Hu	Brg
							gc	u, u	uPA	ug.	ugc	uB.	AA	HPl r,	Brl	BrAo	urug		u	Br. c	Hu	Brg
							PB	u, u	uP,	ugc	ugc	uB,	AI	HPl r,	Brl	BrA	uru,		u	Br. c	Hu	Brg
							Pc	uc.	uPo	ugo	ugg	uBo	A,	HPl r,	Brl P	urBu	uruA		u	Br. c	Hu	Brg
							oB	ucc	uPg	ugg	ugB	uBP	Ac	HPl r,	Brl ,	urBo	urgg		u	Br. c	Hu	Brg
							oc	ucg	uPu	ugu	uu.	uBu	Ao	HPl r,	Brl A	urBI	urgc		u	Br. c	Hu	Brg
							cB	ucB	ugA	ugB	uu,	uBB	AP	HPl r,	Br. u	urBA	urgI		u	Br. c	Hu	Brg
							cc	uo.	ug.	uuA	uuc	AA	Ag	HPl r,	Br. P	uruu	urgA		u	Br. c	Hu	Brg
							, B	uo,	ugI	uu.	uuP	A.	Au	HPl r,	Br. c	uruP	urPu		u	Br. c	Hu	Brg
							uBB	ugu	H	H	Ao	H	H	HPl r,	BrAA	urg,	uroP	G2, B	u	Br. c	Hg	Brg
&' Ø¤Ø®;' [K	cdu,	ug	5] r . / urgcl ;] [= / BrPl cl G' ' z zØ+ * Z Ø ØØM' z ' j * Ø G' ' z ° UØ	D;Ø¤z 5 ' Ø	gB=' r TZ *; PP+ Ø¤sj N PP K° Ø	go	BHuc	uou	ug.	uuI	uuB	AA	AB	Hg. rA	Brl	Br. c	urBP	G , B	u	Br. c	Hu	Brg
							gB	uou	ugc	uuo	uuB	AI	. .	Hg. rA	Brl	BrA	urB.		u	Br. c	Hu	Brg
							gc	uou	ugg	uug	uuB	Ao	. I	Hg. rA	Brl	BrAo	urug		u	Br. c	Hu	Brg
							PB	uou	uuA	H	uuB	AP	H	Hg. rA	Brl	BrA	uru,		u	Br. c	Hu	Brg
							Pc	uP.	uu.	H	uBI	Au	H	Hg. rA	Brl P	urBu	uruA		u	Br. c	Hu	Brg
							oB	uP,	uu,	H	uBc	AB	H	Hg. rA	Brl ,	urBo	urgg		u	Br. c	Hu	Brg
							oc	uPP	uuc	H	uBP	. A	H	Hg. rA	Brl A	urBI	urgc		u	Br. c	Hu	Brg
							cB	uPu	uuP	H	uBg	. .	H	Hg. rA	Br. u	urBA	urgI		u	Br. c	Hu	Brg
							cc	uPB	uug	H	uBu	. I	H	Hg. rA	Br. P	uruu	urgA		u	Br. c	Hu	Brg
							, B	ug.	uuu	H	AA	. ,	H	Hg. rA	Br. c	uruP	urPu		u	Br. c	Hu	Brg
							uBB	H	H	H	H	H	H	Hg. rA	BrAA	urg,	uroP	G2, B	u	Br. c	Hg	Brg

ur ®[° Z ;;' ZØ[+ ° ZM' Ø ' UUJØ¤' [U· ØG ° Ø¤Ø= + ' [j' UZ Ø Ø' Ø ° ZØ UØ[° r
gr TUØ ° ° G ;; ≤* [* ZØ Z ZG' + * Z ; jØ + Ø= ' Z;*' ° ZZGØ * j ;; ZGØ' z ° r ([Ø z ° G [K ≤ Ø° + ° Z ≤* [* ZØ Z ° Z * ; jØ + Ø= ' Z;*' ° Zu ob ØUG·
Pr D Ø¤Ø= G' Ø GZN + * ' [Ø] j G' Ø GZ Ø j * * Z] j ' M Ø¤Ø=s* U· ≤ ZZG Z*' * G' Ø GZ ° G ;; M' ° * z j] Ø Ø] j ' [=;* ;* ° ° ZG [ ] Ø' > ' ; Z] uB gHug Ø] j ° ;] ≤* Jr
or x ·+z N [ ] + Ø' ; z * ° Ø[Øz ° ≤* * z
cr x z N ;ZØ ' Z z * ° Ø[Øz ° ≤* * z
, r X Øz ° ≤* * z z * ° Ø[U] * jjØUØ[Z' ° ° + ≤ ZØ[° ≤* ØT * UØ[PBro] j - Tb 4 I HuB ' [z - Tb 4 I Hu, E(z Nus(z NBr. cs7 b s NHuro G , BJs7 b s NHur. G2, BJs7 b s0 NBru. r
I r gBul ' [z gBgB SDb T * UØ[u, BArPru 4 > r u, HPPsx ·+z N x z Br, J Ø
. r x N M ° ØUz * ° Ø[Øz ° ≤* * z
Ar gBu. ØDb T * UØ[u, BArPru 4 > r u, HPPsx ·+z N x Br, J Ø

cst s9e 9shv 8 hp , 8®B

uJS' ° Z [* Ø≤ ;;] Z+ ° ZM' * ' ; ' Z' z G' [Ø° Z ;;* z ' ° ≤* UØ°] j]] z ° Z z °] ZG' ØZG [ZG Z GØUG ' ° Z ° Z zr
gJ ®[& Ø G x * ;] UZ & ØØU [* w] [* ° &x & wJ Ø° Z ;; ≤* Ø) O + Ø ' z * b] [Z S;] Ø2' s5 8 - ul HBoB, rB,

D- / mb/ ' ov G I b u W Dh'

) q 7 94 q 9 I 7 M

Wq 9) q 7 9 4 7 6 ' q79 Gq 9 6 9 97 X 9 q q r
®@q"=h @≤=K 4 "q"<GsD=V [@≤=K 4 "q"<Gsh ;=G@K h @≤=K4 "q"<G

D- / mb/ ' ov G I h v 4 Dr

- 4 D8 I HuB @≤q - 4 D8 I Hu,
gBuI f K+;"q@3 >"Kq"<GD+q= , ≤X 8 q"≤+<J @≤q gBgB f K+;"q@3 >"Kq"<GD+q= I ≤X 8 q"≤+<J
gBuc @≤q gBu. S<≤=;<@≤+<@K3 >"Kq"<GD+q=

D- / mb/ ' ov G 4 b w4 v I Dr

OX"Z @≤@KZZ "Z ≤+ q=≤=;V "<= ≤X= V @ "V >V q=Z"G< PHZ=' +<q G>Z≤° "<q Z[==q ≤+ j = ;=ZZ≤=q j @≤ @ZZ=V j K +x®@q"=h @≤=K D=V [@≤=K≤h ;=G@Kh @≤=K≤Z"q"<Gx@Z≤=<=q ≤+ ° ++q x>;;"<GZ +< ="≤X=; ° ++q +; V =≤@K x@V "<G° "≤X <@ZZ +; Z ;=° Zr

wD, DwDGh D wD4 v w' I r

. : S<≤=;≤=* k =[+;≤uBgBgoP, PD( ) HBBu- sO,@ZO=;Z= K+@q ≤=Z≤+< ®@q"=h @≤=K

' DI ' wDI b m I r

' q5 9 . / Pw9 &' q 9 9 m q7 ' 9 M										
k =[+;≤F >V j =;	O=Z≤- G=<'	OX" * <=ZZ "<rJ	y "q≤X "<rJ	f ;@V = O [= u	f ;@V = 4 [@"<G "<rJ	f @Z≤=<=; 4 [@"<G "<rJ	f @Z≤=<=; O [= @≤q b "V =<Z"+<Z	QK≤V @≤= 7+@q h 4 f J	- KK° @K≤ b =Z"G< 7+@q9 h 4 f J	f @K≤;= 6 +q=
uBgBgoP, PD( ) HBBu-	S<≤=;≤=*	BrPugc	o.	gWb ° ++q Z≤>qsPdb ≤X" * j Prc ° "q= 4 h f x>;;"<G	u,	,	F +r . Wurgc K+<GWBrPgP ®b ;"j j =q j >G+ X=@q Z ;=° Z	Hu, Brl	HcPr,	[>KK≤X;+>GX dq@≤>;=
uBgBgoP, PD( ) HBBu-	S<≤=;≤=*	BrPugc	o.	gWb ° ++q Z≤>qsPdb ≤X" * j Prc ° "q= 4 h f x>;;"<G	u,	.	F +r . Wurgc K+<GWBrPgP ®b ;"j j =q j >G+ X=@q Z ;=° Z	HuPuro	HbPr.	[>KK≤X;+>GX
uBgBgoP, PD( ) HBBu-	S<≤=;≤=*	BrPugc	o.	gWb ° ++q Z≤>qsPdb ≤X" * j Prc ° "q= 4 h f x>;;"<G	u,	ug	F +r . Wurgc K+<GWBrPgP ®b ;"j j =q j >G+ X=@q Z ;=° Z	HuB, ru	HPcro	[>KK≤X;+>GX
uBgBgoP, PD( ) HBBu-	S<≤=;≤=*	BrPugc	o.	gWb ° ++q Z≤>qsPdb ≤X" * j Prc ° "q= 4 h f x>;;"<G	u,	,	BrBAB ZX@≤* WBrguc ®b urc K+<G;"<GZX@≤* <@K	HuIoI r,	HbArg	[>KK≤X;+>GX dq@≤>;=
uBgBgoP, PD( ) HBBu-	S<≤=;≤=*	BrPugc	o.	gWb ° ++q Z≤>qsPdb ≤X" * j Prc ° "q= 4 h f x>;;"<G	go	.	F +r . Wurgc K+<GWBrPgP ®b ;"j j =q j >G+ X=@q Z ;=° Z	H grI	HgI r,	[>KK≤X;+>GX dq@≤>;=

ur - KKx@Z≤=<=;Z ° =;= "<Z≤@K≤q +< x>;;"<G° "≤X+>≤[=<=≤@Z≤+< "<≤+ ≤X= x@V "<GV =V j =;Zr
gr - KK° @K≤ K+@q "Z q=≤=;V "<=q x+V >K≤V @≤= K+@q "G≤q=q j @≤@≤+; +xZ@≤=≤ +xPr
Pr ®@q"=h @≤=K4 "q"<G' +V [K≤Z ° "≤X - 4 O6 Duu. , s)) 2 gf H 1 w o 6 oq 6) G

' q5 9 . u P/ q &/ q5 9 m q7 & Ae I 6 9 q . 1Vv :h:			
	i . 4 ' ;=° 4 [@"<G		
f @Z≤=<=; 4 [@"<G "<rJ	.	ug	uB
f ;@V = Z[@"<G "<rJ	u,	u,	u,
f @Z≤=<=; O,"] >≤@ @=@ x≤J	Br. A	urPP	uruu
- KK° @K≤ K+@q [ZxI	oPr.	Pcro	**8e:e**
S<q"≤q>@K≤@Z≤=<=; K+@q K,rJ	P. rA	oI rg	oPru

OX= x@Z≤=<=; K+@q x+; i . Z ;=° @≤uBI (rDr ° @Z' @K>K@≤=q @Z ≤X= @≤=;@≤= +x≤X= ≤=Z≤;=Z>K≤Z x+; . I @≤q ugI (rDr

OX= @KK° @K≤ K+@q x+; i . Z ;=° @≤≤X= Z[@"<G+xuBI (rDr "<≤+ x>;;"<G' @≤ j = ' @K>K@≤=q j "<≤=;[+K@≤<G≤X= ;=Z>K≤Z +xZ@V = x@Z≤=<=; @≤. I @≤q ugI (rDrsZ"<' = j +≤X ≤=Z≤Z X@q Z@V = x@K≤;= V +q= +xx@Z≤=<=; [>KK ≤X;+>GX x+V ≤X= [@≤=K≤Zr - Z ZX+° < "< ≤X= ≤@K≤s≤X= @KK° @K≤ K+@q x+; i . Z ;=° Z "<Z≤@K≤q @≤uBI (rDr ≤+ ° ++q x>;;"<G"Z **8e:e &**

OX= x@Z≤=<=; K+@q @Z ≤=Z≤=q j @Z=q +< ≤X= @KK° @K≤ q=Z"G< K+@qZ "< O@K≤ u- @+O= @= O=;"X=q ≤+ <+≤= ' ==q ≤X= F b 4 HgBu. ' @K>K@≤=q @KK° @K≤ x@Z≤=<=; ° "≤Xq;@ @KK+@q @Z Z>V V @" =q "< O@K≤ uD j =K+° E

' q5 9 . h P, q 9 9 m q7 / q										
, q 9 9 ' 9 q 7 I q6 MR I Xq k q:C I 7 I q6 M	k O :N	, q 9 9 49 9 q B 7 , M²C4 O :N	m q7 k q , q6 h7	B 7 , q M I 96 &6 (q C (F	Gk I / 7 97 B X7 q q hq q6 · B I O5:N	' 9 97 k 9 M 4 9 9 O& ' q5 9 . / q5 9N O &N	, q 9 9 ' 5 q / 9q O&³N	I M9 , q 9 9 m q7 Cq 9 97⁸ O5:N	, q 9 9 m q7 g k 9 M 4 9 9 D 6997 B I O9 RG N	D
F +r. 4 ' ;=° Z 1 , I du, I +'	Bru, o	BrI cB	ur,	Brog	A. rA	HcPr,	Br, I	Pcrl	F +	
F +r. 4 ' ;=° Z 1 . I du, I +'	Bru, o	BrI cB	ur,	Brog	A. rA	HbPr.	Br. A	P. rA	F +	
F +r. 4 ' ;=° Z 1 ugI du, I +'	Bru, o	BrI cB	ur,	Brog	A. rA	HPcro	urPP	oI rg	F +	
F +r. 4 ' ;=° Z 1 . I dgoI +'	Bru, o	BrI cB	ur,	Brog	A. rA	HgI r,	urPP	P, r.	F +	
k "<G4 X@≤* F @ZZ 1 , I du, I +'	BrBAB	BrI cB	ur,	Brog	PorP	HbArg	Br, I	Pgr.	F +	

uJ OX= @Z≤=q x@Z≤=<=; K+@q y :J "Z' @K>K@≤=q >Z"<G≤X= x+KK° "<G=] >@≤+<Z "< F b 4 HgBu. E
8] >r ugrgHcb q=x+;V =q ZX@≤* <@ZZJEy : N u. BB 5 g b h Dq
8] >r ugrgHg ° ++q Z ;=° ZJEy : N g. cB 5 g b h Dq
° X=;= Dq N ur, x+; ° "<q @≤q =@≤X] >@=
gJ f @Z≤=<=; [=<=≤@Z≤+< "Z "<≤+ ≤X= x>KK≤q=[≤X +x≤X= x>;;"<G Z≤"[Z
PJ f @Z≤=<=; K+@q @Z ≤=Z≤=q "Z q=≤=;V "<=q j V >K≤[K"<G≤X= ≤X= q=Z"G< [;=ZZ>;= j ≤X= x@Z≤=<=; ≤"] >≤@ @=@
oJ S≤x@Z≤=<=; K+@q @Z ≤=Z≤=q = ' ==qZ y :s≤X= @KK° @K≤ q=Z"G< K+@q "Z @qz>Z≤=q @Z x+KK° ZE- qz>Z≤=q b =Z"G< 7+@q N y :d @Z≤=<=; O,"] >≤@ - ;=@

DK=<<Ev@V =Z ®@q"= 3 >"Kq"<Gh ;+q>' ≤ZsS<' r
D- 8 k =[+;≤F +rEgBBuHuBrPru
b @=Eb =' =V j =; . sgBgB
h @= g +xc

W &6q &b M X9 w9 mMX (q M9 l 99 , q M

S< ≤X= Z>j z=' ≤' +<x'G>;@=+<Zs@KX@Z≤=<=;Z ° =;= @=@X=q ≤ x>;;"<G+<KsZ+ ° X=≤X=; ≤X= x>;;"<G'Z @=@X=q ≤ ° ++q +; Z≤==Kx@V "<Gq+=Z <+≤@x=' ≤[@<=KZ ≤@<ZO=;Z= K<@q ' @@"≤ r S≤° "Kj = ≤X= [;+z=' ≤=<G'<==;Z ;=Z[+<Z] "K≤ ≤ =<Z>;= ≤X= x>;;"<G@=@XV =<≤≤ ≤X= x@V "<G V =V j =;Z X@= Z>x" "=<≤K<@q ' @@"≤=Zr

k Dl q G B cGk mv / k 4wv h Dk b wDl r

f "j =;H=V =<≤Z"q"<G≤@ZO=;Z= K<@q ' @@"≤ ° "<q K<@q ' @@"≤ J'Z q=≤=;V "<=q x+V ≤@<ZO=;Z= K<@q ≤=Z≤<G"< @' +;q@<' = ° "≤X - 4 O6 8 PPB +; 8 l g @Z <+≤=q "< 4 =' ≤+< orB +x≤X= SDD 8 4 - DABs- ' ' =[≤@<' = D;"≤=;"@x+; f "j =; D=V =<≤4 "q"<G QZ=q @Z 8 ≤=;"+; y @KX4 "q"<G @[; +O=q (' ≤j =; gBu. Jr OX= @K<° @K<q=Z'G< ' @@"≤ x+V ≤X= ≤=Z≤<G"Z j @Z=q +< @x@≤; +xZ@=≤ +xP @[[K=q ≤ ≤X= >K≤V @= ≤=Z≤K<@q [=; - DABr OX= ° "<q K<@q O@K=Z @= q=≤=;V "<=q x+V ≤X= - 4 D8 l =] >@=+<Zr

4 "<' = ≤X= @K<° @K< q=Z'G< K<@q "Z j @Z=q +< x@≤; +xZ@=≤ +xPs@K<° @K< q=Z'G< K<@q Z +< xj =;H=V =<≤Z"q"<G' +;;=K@= q";=' ≤K ≤ ;=] >";=q q=Z'G< [;=ZZ>;=Z x+; - K<° @K< 4 ≤=ZZ b =Z'G<s@q ≤X=;=x+;= ZX+>Kq j = >Z=q ° "≤X ' +V j "<@=+< K<@q"<G=] >@=+<Z x+; - K<° @K< 4 ≤=ZZ b =Z'G< - 4 b Jr

3 >Z"<G≤X= ' +V j "<@=+< K<@q"<G=] >@=+<Z x+; - K<° @K< 4 ≤=ZZ b =Z'G< - 4 b Js≤X= ≤=Z≤=q @K<° @K< q=Z'G< K<@q Z x+; xj =;H=V =<≤Z"q"<G @= @K'G<=q ° "≤X ≤X= ° "<q Z[==q ;=] >";=V =<≤Z"< - 4 D8 l HuB f "G>;=Z g, rcH u- sg, rcHu3s@q g, rcHuDJ @q - 4 D8 l Hu, f "G>;=Z g, rcHu- ≤ Hubsgcrchg- ≤ Hgb Js+; ≤X= x'G>;=Z "< ≤X= j >"Kq"<G' +q= @Z @[[K' @K<r

D q . C] NBrBBgc, a™a™aT^g — *G1) q} boT, } GA, @AoT*
] NBrBBgc, a™a™aT^g — *G1) q} boTs } GysG', oT*
] sO=K<' "≤ [;=ZZ>;= @=X="G≤
™ sO=K<' "≤ [;=ZZ>;= = [+Z>;= ' +=x" "=<≤=O@K<@=q @=X="G≤

™ s≤=[+G @X" x@≤;
™ s° "<q q";=' ≤+<@K≤ x@≤;
™ sG +><q =K<O@=+< x@≤;s[=;V "≤=q ≤ ≤@= ™ NurB
T sj @Z" ° "<q Z[==q PHZ=' +<q G>Z≤6 h®J @Z q=≤=;V "<=q x+V E

- 4 D8 l HuB f "G>;=Z g, rcHu- s3s+; D
- 4 D8 l Hu, f "G>;=Z g, rcHu- s3s+; g, rcHg- s3sD +; b
gBu. S3D f "G>;=Z u, BArP uJ Hu, BArP . J

D q 3C
T NT >K≤
T >K≤ s>K≤V @= q=Z'G< ° "<q Z[==qZ PHZ=' +<q G>Z≤6 h®J q=≤=;V "<=q x+V gBuI f 3D f "G>;=Z u, BArP uJ Hu, BArP PJRgBgB f 3D f "G>;=Z
u, ABrP uJ Hu, BArP oJ

D q 8C [N] xa 5 D[H5 D[X pN , B x≤ — *G1) q} boT, } GA, @AbT 1) q} boTs } GA, @AoT*
] X sO=K<' "≤ [;=ZZ>;= =O@K<@=q @≤V =@≤ ;++x X="G≤
5 D[s[;+q>' ≤+x= ≤=;<@K[;=ZZ>;= ' +=x" "=<≤@≤q G>Z≤H+x=' ≤x@≤; — *G1) q} boT, 6 GA, @AbT 1) q} boTs 6 GA, @AoT*
5 D[° s[;+q>' ≤+x"<≤=;<@K[;=ZZ>;= ' +=x" "=<≤@≤q G>Z≤H+x=' ≤x@≤; — *G1) q} boT, 6 GA, @AbT 1) q} boTs 6 GA, @AoT*
[sq=Z'G< [;=ZZ>;= h4 f J x+; Z"q"<G @K<° @K< q=Z'G< K<@q x+; Z"q"<GJ

H f } Af
D q FC [NBrBBgc, a™a™aT^g a 5 D[H5 D[J — *Gy, T- y, TF g0q*
+; [NBrBBgc, a™a™aT >K≤^g a 5 D[H5 D[J — *Gy, Tb y, y, 60q*

1) 3 f 1) q} boT,) yGAGTf bf
D q aC Br, b mBr, y — *G1) q} boT, 1) q} boTs yGAGTf b*
b sq=@q K<@q
y s° "<q K<@q K<@q q>= ≤ ° "<q [;=ZZ>;=J

H 1) 3 P f x p e } N p e N
D q sC [@q N Br, aJ/

D q t C [@q N Br, aBrBBgc, a™a™aT >K≤^g a 5 D[H5 D[J/

} b H Nf - f sG

H 4) H bf } b V f
D q eC T >K≤N [@q dBr, aBrBBgc, a™a™aT^g a 5 D[H5 D[JJ^prc

1 } T A y, T- g0q f y, Tb 60q) Ts, OGTGTG pV e 4) H bf
f
D q nC T @q N T >K≤a Br, J^prc — *Gy, T- g0q f y, Tb y, y, 60q } GTsoAA*
T @q N T a Br, J^prc — *Gy, TF g0q } GTsoAA*
T @q sF +V "<@Kq=Z'G< ° "<q Z[==q PHZ=' +<q G>Z≤sV [XJ
T s3 @Z" q=Z'G< ° "<q Z[==q PHZ=' +<q G>Z≤sV [XJ

DK=<≤Ev@V =Z ®@q"= 3 >"K q"<Gh ; +q>' ≤ZsS<' r
D- 8 k =[+;≤F +rEgBBuHuBrPru
b @=Eb =' =V j =; . sgBgB
h @D= P +xc

' q5 9 3Ch 9&&6 9 q 7 h q 97 k9 9 M- q 7 C								
	™						y @KL +<= c	
®="GX≤ xsJ	D u O I hD t P sN	8 [3	8 [D	8 [b		™s	™q	5 Dj	5 Dj=
BHuc	BrcI	BrI	Br. c	urBP	X , B	u	Br. c	Huro	Bru.
gB	Br, g	BrI	BrA	urB.		u	Br. c	Huro	Bru.
gc	Br, ,	BrI	BrAo	urug		u	Br. c	Huro	Bru.
PB	BrI B	BrI	BrA.	uru,		u	Br. c	Huro	Bru.
Pc	BrI P	BrI P	urBu	uruA		u	Br. c	Huro	Bru.
oB	BrI ,	BrI ,	urBo	urgg		u	Br. c	Huro	Bru.
oc	BrI . c	BrI . c	urB, c	urgoc		u	Br. c	Huro	Bru.
cB	Br. u	Br. u	urBA	urgI		u	Br. c	Huro	Bru.
cc	Br. P	Br. P	uruu	urgA		u	Br. c	Huro	Bru.
, B	Br. c	Br. c	uruP	urPu		u	Br. c	Huro	Bru.
uBB	BrAA	BrAA	urg,	uroP	X2, B	u	Br. c	Hur.	Bru.

OX= ' +=xx" "=<≤Z @≤q ' +<Z≤@≤<≤Z K Z≤=q "< O@ K≤ g @ +O= ° =;= ' +<Z Z≤=<≤x+; - 4 D8 I HuB @≤q - 4 D8 I Hu, = ' =[≤x+; ™ @≤8 [+Z>;= 3 ><q=; PB x≤s
° X=;= - 4 D8 I Hu, @KK° Z ≤= >Z= K° =; = [+Z>;= ' +=xx" "=<≤≤X@≤[;=O+>Z ' +q=Z >Z=q @V +;= ' +<Z=;O@≤O= O@K≤=Z ;=Z>K≤=q "< X GX=; q=Z G<
[;=ZZ>;=Jr f +; ≤X= Z V [K "≤ +x≤X= ≤@ K≤Zs≤X= ≤@ K≤Z "< ≤X= x+KK° "<G ZX==≤° @Z [+[>K@=q >Z"<G≤X= V +;= ' +<Z=;O@≤O= - 4 D8 I HuB ' +=xx" "=<≤Zr

' q5 9 8C/ q5 9 I 9 k9 M Ph 9 q 7 h q77 MOnThN4 9 9 OI , N 59 w9 97 q - q B 7 I 997 PB 7 D 9 hq 9M uC															
y "<q 4 [==q PhZ=' +<q G>Z≤J	uBB	uBc	uuB	uuc	ugB	uPB	uoB	ucB	u, B	uI B	u. B	uAB	gBB	guB	
®="GX≤ xsJ	3	3	3	3	3	3	3	3	3	3	3	3	3	3	
BHuc	Huoro	HucrA	HuI rc	HuArU	HgBr.	Hgoro	Hg. rP	HPgrc	HPI rB	HoburI	Ho, r.	HcgruI	HcI r.	HJ PrI	
gB	Huoro	HucrA	HuI rc	HuArU	HgBr.	Hgoro	Hg. rP	HPgrc	HPI rB	HoburI	Ho, r.	HcgruI	HcI r.	HJ PrI	
gc	Huoro	HucrA	HuI rc	HuArU	HgBr.	Hgoro	Hg. rP	HPgrc	HPI rB	HoburI	Ho, r.	HcgruI	HcI r.	HJ PrI	
PB	Huoro	HucrA	HuI rc	HuArU	HgBr.	Hgoro	Hg. rP	HPgrc	HPI rB	HoburI	Ho, r.	HcgruI	HcI r.	HJ PrI	
Pc	Hucru	Hu, r,	Hu. rg	HuArA	HgurI	HgcroI	HgArc	HPPrA	HP. r,	HoPrc	Ho. r.	HcoroI	HJ Brg	HJ , ro	
oB	HucrI	HuI rP	HuArB	HgBrI	HggrI	Hg, rc	HPBrI	HPcrP	HoBru	HocrP	HcBr.	Hc, r,	HJ grI	HJ Aru	
oc	Hu, rg	HuI rA	HuAr,	HguroI	HgPrP	HgI ro	HPurI	HP, ro	HoBurc	Ho, r.	HcgrC	Hc. rc	HJ or.	HI uro	
cB	Hu, rI	Hu. ro	HgBrg	HggruI	HgoruI	Hg. rg	HPgrI	HPI r,	HogrI	Ho. rP	HcoruI	HJ BrP	HJ , r.	HI PrI	
cc	HuI ru	Hu. rA	HgBrI	HggrI	HgorI	Hg. rA	HPPr,	HP. rc	HoPr.	HoArc	HccrC	HJ ur.	HJ . rc	HI crc	
, B	HuI rc	HuArP	HgurG	HgPrg	HgcrG	HgAr,	HPoro	HPArc	HoorA	HcBrI	Hc, r.	HJ PrP	HI Bru	HI I rP	
uBB	HgcrI	Hg. rg	HPurB	HPPr.	HP, rA	HoPrP	HcBrg	HcI r,	HJ crc	HI orB	HJ grA	HAgro	HuBgro	HuugrA	

' q5 9 FC/ q5 9 I 9 k9 M Ph 9 q 7 h q77 MOnThN4 9 9 OI , N 59 w9 97 q - q B 7 I 997 PB 7 D 9 hq 9M hC

y "<q 4 [==q PhZ=' +<q G>Z≤J	uBB	uBc	uuB	uuc	ugB	uPB	uoB	ucB	u, B	uI B	u. B	uAB	gBB	guB
®="GX≤ xsJ	D	D	D	D	D	D	D	D	D	D	D	D	D	D
BHuc	HuI rc	HuArP	HgurG	HgPrg	HgcrG	HgAr,	HPoro	HPArc	HoorA	HcBrI	Hc, r.	HJ PrP	HI Bru	HI I rP
gB	Hu. r,	HgBrc	HggrC	HgorI	Hg, rI	HPuro	HP, ro	HoBur.	HoI rc	HcPrI	HJ Brg	HJ I rB	HI orP	HJ urA
gc	HuArO	HguroI	HgPrc	HgcrI	HgI rA	HPgr.	HP. rB	HoPr,	HoAr,	Hc, rB	HJ gr.	HI BrB	HI I r,	HJ crc
PB	HgBrg	HggrP	HgorC	Hg, rI	HgArU	HPorg	HPAr,	HocrC	HcBr.	Hc. ro	HJ crc	HI PrB	HJ BrA	HJ Arg
Pc	HgBr.	HgPrB	HgcrG	HgI r,	HPBrB	HPcrG	HoBr.	Ho, rA	HcPrP	HJ Brg	HJ I rc	HI crg	HJ PrP	HAurA
oB	HgurC	HgPrI	Hg, rB	Hg. ro	HPBrA	HP, rP	HogrB	Ho. rP	HcorA	HJ grB	HJ Arc	HI I ro	HJ cr.	HAor,
oc	HggrB	HgorG	Hg, r,	HgArU	HPur,	HPI ru	HoPru	HoAro	Hc, rg	HJ Prc	HI urg	HI ArP	HJ I rA	HA, rA
cB	HggrC	HgoR.	HgI rg	HgArI	HPgro	HP. rB	HoboruI	HcBr,	HcI r,	HJ crB	HI grA	HJ urg	HJ ArA	HAArg
cc	HggrA	HgcrG	HgI rI	HPBrP	HPPrB	HP. rI	HoorA	HcurC	Hc. r,	HJ , rg	HI org	HJ grI	HAur,	HuBurB
, B	HgPrP	HgcrI	Hg. rg	HPBr.	HPPr,	HPAro	HocrI	HcgroI	HcArI	HJ I ro	HI crc	HJ oru	HAPrg	HuBgr.
uBB	HPgr,	HPcrA	HPAro	HoPru	Ho, rA	HccrB	HJ Pr.	HI PrP	HJ Pro	HAoru	HuBcrc	HuuI r,	HuPBrP	HuoPr,

' q5 9 aC/ q5 9 I 9 k9 M Ph 9 q 7 h q77 MOnThN4 9 9 OI , N 59 w9 97 q - q B 7 I 997 PB 7 D 9 hq 9M kC

y "<q 4 [==q PhZ=' +<q G>Z≤J	uBB	uBc	uuB	uuc	ugB	uPB	uoB	ucB	u, B	uI B	u. B	uAB	gBB	guB
®="GX≤ xsJ	b	b	b	b	b	b	b	b	b	b	b	b	b	b
BHuc	HgurG	HgPro	HgcrI	Hg. ru	HPBr,	HPcrA	HobuI r.	HcoroI	HJ uro	HJ . r.	HI , rI	HJ crB	HAPrI	
gB	HggrP	HgorI	HgI rB	HgArc	HPgru	HPI rI	HoPrI	HcBru	HcI rB	HJ oro	HI grg	HJ Bro	HJ Aru	HA. rg
gc	HgPru	HgcrC	Hg, rB	HPBr,	HPPrP	HPArB	HocrP	HcgrB	HcAru	HJ , r.	HI orA	HJ Pro	HAgro	HuBurA
PB	HgPrA	Hg, ro	HgArB	HPur,	HPorc	HoBro	Ho, rA	HcPr.	HJ urP	HJ Arg	HI I rc	HJ , ro	HAcrI	HuBcrc
Pc	HgorC	HgI ru	HgArI	HPgrc	HPcrP	HoburC	Ho. ru	HccrG	HJ gr.	HI BrA	HI Arc	HJ . r,	HA. rg	HuB. rP
oB	HgcrG	HgI rI	HPBrc	HPPrP	HP, rg	HogrC	HoArP	Hc, r,	HJ oro	HI grI	HJ urc	HABrA	HuBBrI	HuuurB
oc	HgcrI	Hg. rP	HPuru	HPorB	HPI rB	HoPro	HcBrP	HcI r.	HJ crI	HI org	HJ Prg	HAgrI	HuBgrI	HuuPrP
cB	Hg, rg	Hg. rA	HPurI	HPor,	HPI rI	HoorP	HcurP	Hc. rA	HJ I ru	HI crI	HJ orA	HAor,	HuBor.	HuucrC
cc	Hg, r,	HgArP	HPgrg	HPcrg	HP. rP	HocrB	HcgrG	HcArA	HJ . ru	HI , rA	HJ , rg	HA, ru	HuB, ro	HuuI ro
, B	HgI rB	HgAr.	HPgrI	HPcrI	HP. rA	HocrI	HcPrB	HJ Br.	HJ Arg	HI . ru	HJ I r,	HAI r,	HuB. ru	HuuArg
uBB	HPI rB	HoBr.	HoorI	Ho. rA	HcPrg	HJ grC	HI grC	HJ Prg	HAor,	HuB, r.	HuuAr.	HuPPro	HuoI rA	Hu, PrB

O@ K≤Z Psos@≤q c @= j @Z=q +< - 4 D8 I HuB @≤q - 4 D8 I Hu, s@≤q ' +<Z Z≤=<≤° "≤X ≤X= gBucdgBu. S DsgBuI f 3 D @≤q gBgB f 3 D

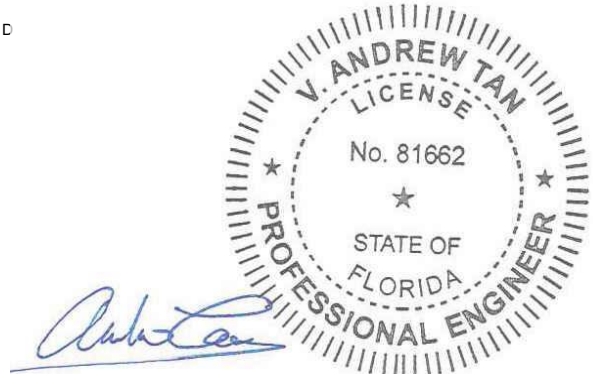

DK=<≤Ev@V =Z ®@q"= 3 >"Kq"<Gh ;+q>' ≤ZsS<" r
D- 8 k =[+;≤F +rEgBBuHuBrPru
b @≤=Eb =' =V j =; . sgBgB
h @≤= o +xc

' / umD s Pf / #ó bf B ó Gk l 4DDk l Ó 4) N, v w) / wk ó D4 / GDml ck ó G(

V. ANDREW TAN
LICENSE
No. 81662
STATE OF FLORIDA
PROFESSIONAL ENGINEER

31. a ouh C31. t R3131 , uh Ob q 9 k 9 M B 7Cl 997C- aG NC 31. e ouh Ob q 6 k 9 M B 7 l 997C - sG N	31. t , uh R3131 , uh / Gk 31. a R31. e ouh OG q k 9 M B 7C l 997C- q 7 FG N	
/ 6q5 9 9 X 7 96 &97 l 96 . s1n:. :. : & 31. t R3131 , uh 31. a R31. e ouh	/ 6q5 9 9 X 7 96 &97 D 69 . X MK 8 &l 96 . s1n:. :. &31. t R3131 , uh C31. a R31. e ouh	h 9&&6 9 97 & 6q 6 q s
y "<q = [+Z>;= ' @≤=G+;	y "<q = [+Z>;= ' @≤=G+;	4 "q"<G ™

h ;+q>' ≤	6 "<"V >V OX" * <=ZZ "<rJ	y "q≤X "<rJ	f @≤≤<=; O [=	f @≤≤<=; 4 [@"<G "<rJ	f ;@V = O [=	4 ≤>q 4 [@"<G "<rJ	3 >"Kq"<G ®="GX≤ x≤J	3	D	b	3	D	b	b =Z"G< 7+@q [ZxJ	8 [3	8 [D	8 [b		™≤	™q	5 D[	5 D[
®@q"=h @≤=K	cdu,	o.	F +r . W urgc K<G WBrPgP ®b ;"j j =q j >GK≤ X=@q Z ;=° Z	, l (rDr "<≤ x>;;"<G +<K	gWb ° ++q +; gB G@Z≤=K x@V "<GsPdb ≤X" * j Prc ° "q= ° ++q x>;;"<G gsuBauu	u,	BHuc	uAP	ul c	ucA	uoA	uPc	ugP	HtPr,	Brl B	Br. c	urBP	X , B	u	Br. c	Hu	Brg
							gB	uAP	ul B	ucc	uoA	uPg	ugB	HtPr,	Brl B	BrAB	urB.		u	Br. c	Hu	Brg
							gc	uAP	u, ,	ucg	uoA	ugA	uu.	HtPr,	Brl B	BrAo	urug		u	Br. c	Hu	Brg
							PB	uAP	u, P	ucB	uoA	ug,	uu,	HtPr,	Brl B	BrA	uru,		u	Br. c	Hu	Brg
							Pc	u. A	u, B	uo.	uo,	ugo	uuo	HtPr,	Brl P	urBu	uruA		u	Br. c	Hu	Brg
							oB	u. c	uc.	uo,	uoP	ugg	uuP	HtPr,	Brl ,	urBo	urgg		u	Br. c	Hu	Brg
							oc	ul g	ucB	uoB	uPP	uu,	uB.	HtPr,	Br. .	uruc	urPP		u	Br. c	Hu	Brg
							cB	ul A	uco	uoP	uPA	ugB	uuu	HtPr,	Br. u	urBA	urgl		u	Br. c	Hu	Brg
							cc	ul l	ucP	uog	uPl	uuA	uuB	HtPr,	Br. P	uruu	urgA		u	Br. c	Hu	Brg
							, B	ul c	ucg	uou	uPc	uul	uBA	HtPr,	Br. c	uruP	urPu		u	Br. c	Hu	Brg
							uBB	uoc	ug,	ugB	uug	AA	AP	HtPr,	BrAA	urg,	uroP	X2, B	u	Br. c	Hg	Brg
®@q"=h @≤=K	cdu,	o.	F +r . W urgc K<G WBrPgP ®b ;"j j =q j >GK≤ X=@q Z ;=° Z	. l (rDr "<≤ x>;;"<G +<K	gWb ° ++q +; gB G@Z≤=K x@V "<GsPdb ≤X" * j Prc ° "q= ° ++q x>;;"<G gsuBauu	u,	BHuc	ul o	uc.	uoo	uPc	ugg	uuu	HbPr.	Brl B	Br. c	urBP	X , B	u	Br. c	Hu	Brg
							gB	ul o	uco	uoB	uPc	uuA	uBA	HbPr.	Brl B	BrAB	urB.		u	Br. c	Hu	Brg
							gc	ul o	ucB	uP.	uPc	uu,	uBl	HbPr.	Brl B	BrAo	urug		u	Br. c	Hu	Brg
							PB	ul o	uoI	uPc	uPc	uuo	uBc	HbPr.	Brl B	BrA	uru,		u	Br. c	Hu	Brg
							Pc	ul u	uoc	uPo	uPg	uug	uBP	HbPr.	Brl P	urBu	uruA		u	Br. c	Hu	Brg
							oB	u, l	uoP	uPg	ugA	uuu	uBg	HbPr.	Brl ,	urBo	urgg		u	Br. c	Hu	Brg
							oc	u, o	uou	uPu	ugI	uBA	uBu	HbPr.	Brl A	urBl	urgc		u	Br. c	Hu	Brg
							cB	u, g	uoB	ugA	ugc	uB.	uBB	HbPr.	Br. u	urBA	urgI		u	Br. c	Hu	Brg
							cc	u, B	uP.	ug.	ugo	uBl	AA	HbPr.	Br. P	uruu	urgA		u	Br. c	Hu	Brg
							, B	uc.	uPl	ugI	ugg	uB,	AA	HbPr.	Br. c	uruP	urPu		u	Br. c	Hu	Brg
							uBB	uPu	uu,	H	uBu	AB	H	HbPr.	BrAA	urg,	uroP	X2, B	u	Br. c	Hg	Brg
®@q"=h @≤=K	cdu,	o.	F +r . W urgc K<G WBrPgP ®b ;"j j =q j >GK≤ X=@q Z ;=° Z	uBl (rDr "<≤ x>;;"<G +<K	gWb ° ++q +; gB G@Z≤=K x@V "<GsPdb ≤X" * j Prc ° "q= ° ++q x>;;"<G gsuBauu	u,	BHuc	u, o	uoA	uPc	ugI	uuc	uBc	HP. r.	Brl B	Br. c	urBP	X , B	u	Br. c	Hu	Brg
							gB	u, o	uoc	uPg	ugI	uug	uBg	HP. r.	Brl B	BrAB	urB.		u	Br. c	Hu	Brg
							gc	u, o	uou	uPB	ugI	uuB	uBB	HP. r.	Brl B	BrAo	urug		u	Br. c	Hu	Brg
							PB	u, o	uPA	ugI	ugI	uBl	AA	HP. r.	Brl B	BrA	uru,		u	Br. c	Hu	Brg
							Pc	u, u	uP,	ug,	ugo	uB,	Al	HP. r.	Brl P	urBu	uruA		u	Br. c	Hu	Brg
							oB	ucI	uPo	ugo	ugg	uBo	A,	HP. r.	Brl ,	urBo	urgg		u	Br. c	Hu	Brg
							oc	ucc	uPP	ugP	ugB	uBP	Ac	HP. r.	Brl A	urBl	urgc		u	Br. c	Hu	Brg
							cB	ucg	uPu	ugg	uu.	uBg	Ao	HP. r.	Br. u	urBA	urgI		u	Br. c	Hu	Brg
							cc	ucu	uPB	ugu	uul	uBu	Ao	HP. r.	Br. P	uruu	urgA		u	Br. c	Hu	Brg
							, B	uoA	ugA	ugB	uuc	uBB	AP	HP. r.	Br. c	uruP	urPu		u	Br. c	Hu	Brg
							uBB	ugP	H	H	Ac	H	H	HP. r.	BrAA	urg,	uroP	X2, B	u	Br. c	Hg	Brg
®@q"=h @≤=K	cdu,	o.	F +r . W urgc K<G WBrPgP ®b ;"j j =q j >GK≤ X=@q Z ;=° Z	ugI (rDr "<≤ x>;;"<G +<K	gWb ° ++q +; gB G@Z≤=K x@V "<GsPdb ≤X" * j Prc ° "q= ° ++q x>;;"<G gsuBauu	u,	BHuc	ucI	uog	ugA	ugu	uuB	uBB	HPcro	Brl B	Br. c	urBP	X , B	u	Br. c	Hu	Brg
							gB	ucI	uP.	ug,	ugu	uBl	A.	HPcro	Brl B	BrAB	urB.		u	Br. c	Hu	Brg
							gc	ucI	uPc	ugo	ugu	uBc	A,	HPcro	Brl B	BrAo	urug		u	Br. c	Hu	Brg
							PB	ucI	uPg	ugg	ugu	uBP	Ao	HPcro	Brl B	BrA	uru,		u	Br. c	Hu	Brg
							Pc	ucP	uPB	ugB	uuA	uBu	AP	HPcro	Brl P	urBu	uruA		u	Br. c	Hu	Brg
							oB	ucB	ug.	uuA	uu,	uBB	Ag	HPcro	Brl ,	urBo	urgg		u	Br. c	Hu	Brg
							oc	uo.	ugI	uuI	uuc	A.	Au	HPcro	Brl A	urBl	urgc		u	Br. c	Hu	Brg
							cB	uo,	ugc	uu,	uuP	Al	AB	HPcro	Br. u	urBA	urgI		u	Br. c	Hu	Brg
							cc	uoo	ugo	uuc	uuu	A,	. A	HPcro	Br. P	uruu	urgA		u	Br. c	Hu	Brg
							, B	uog	ugP	uuo	uuB	Ac	. A	HPcro	Br. c	uruP	urPu		u	Br. c	Hu	Brg
							uBB	uu.	H	H	Au	H	H	HPcro	BrAA	urg,	uroP	X2, B	u	Br. c	Hg	Brg

DK=<≤Ev@V =Z ®@q"= 3 >"Kq"<Gh ;+q>' ≤ZsS<" r
D- 8 k =[+;≤F +rEgBBuHuBrPru
b @≤=Eb =' =V j =; . sgBgB
h @G= c +xc

' / umD s Pf / #ó bf B ó Gk l 4DDk l G 4) N, v w) / wk ó D4 / GDml ck ó G(

V. ANDREW TAN
LICENSE
No. 81662
STATE OF FLORIDA
PROFESSIONAL ENGINEER

31. a ouh C31. t R3131 , uh Ob q 9 k 9 M B 7Cl 997C- aG NC 31. e ouh Ou q 6 k 9 M B 7 l 997C - sG N

31. t , uh R3131 , uh / Gk 31. a R31. e ouh OG q k 9 M B 7C l 997C- q 7 FG N

/ 6q5 9 9 X 7 96 &97 l 96 . s1n:. :. : & 31. t R3131 , uh 31. a R31. e ouh

/ 6q5 9 9 X 7 96 &97 D 69 . X MK 8 &l 96 . s1n:. :. &31. t R3131 , uh C31. a R31. e ouh

h 9&&6 9 97 & 6q 6 q s

y "<q = [+Z>;= ' @=G+;

y "<q = [+Z>;= ' @=G+;

4 "q"<G

™

h ;+q>' ≤	6 "<"V >V OX" * <=ZZ "<rJ	y "q≤X "<rJ	f @≤ <=; O [=	f @≤ <=; 4 [@"<G "<rJ	f ;@V = O [=	4 ≤>q 4 [@"<G "<rJ	3 >"Kq"<G ®="GX≤ x≤J	3	D	b	3	D	b	b =Z"G< 7+@q [ZxJ	8 [3	8 [D	8 [b		™≤	™q	5 D[	5 D[
							BHuc	uP.	ugc	uuo	uBl	Al	. .	Hgl r,	Brl B	Br. c	urBP	X , B	u	Br. c	Hu	Brg
							gB	uP.	ugg	uuu	uBl	Ao	. ,	Hgl r,	Brl B	BrAB	urB.		u	Br. c	Hu	Brg
							gc	uP.	uuA	H	uBl	Ag	H	Hgl r,	Brl B	BrAo	urug		u	Br. c	Hu	Brg
							PB	uP.	uul	H	uBl	Au	H	Hgl r,	Brl B	BrA.	uru,		u	Br. c	Hu	Brg
							Pc	uPc	uuc	H	uBc	. A	H	Hgl r,	Brl P	urBu	uruA		u	Br. c	Hu	Brg
®@q"=h @≤=K	cdu,	o.	F +r . W urgc K<G WBrPgP ®b ;"] j =q j >G< X=@q Z ;=° Z	. l (rDr "<≤ x>;;"<G +<K	gWb ° ++q +; gB G@ Z≤=K x@V "<GsPdb ≤X" * j Prc ° "q= ° ++q x>;;"<G gsuBauu	go	oB	uPP	uuP	H	uBP	. .	H	Hgl r,	Brl ,	urBo	urgg		u	Br. c	Hu	Brg
							oc	uPu	uug	H	uBu	. l	H	Hgl r,	Brl A	urBl	urgc		u	Br. c	Hu	Brg
							cB	ugA	uuu	H	uBB	. ,	H	Hgl r,	Br. u	urBA	urgl		u	Br. c	Hu	Brg
							cc	ugl	H	H	A.	H	H	Hgl r,	Br. P	uruu	urgA		u	Br. c	Hu	Brg
							, B	ugc	H	H	Al	H	H	Hgl r,	Br. c	uruP	urPu		u	Br. c	Hu	Brg
							uBB	H	H	H	H	H	H	Hgl r,	BrAA	urg,	uroP	X2, B	u	Br. c	Hg	Brg
							BHuc	u. c	u, .	ucg	uoP	uPB	uu.	HoArg	Brl B	Br. c	urBP	X , B	u	Br. c	Hu	Brg
							gB	u. c	u, P	uoA	uoP	ug,	uuc	HoArg	Brl B	BrAB	urB.		u	Br. c	Hu	Brg
							gc	u. c	ucA	uo,	uoP	ugP	uuP	HoArg	Brl B	BrAo	urug		u	Br. c	Hu	Brg
							PB	u. c	uc,	uoP	uoP	ugu	uuu	HoArg	Brl B	BrA.	uru,		u	Br. c	Hu	Brg
							Pc	u. u	uco	uog	uoB	uuA	uuB	HoArg	Brl P	urBu	uruA		u	Br. c	Hu	Brg
®@q"=h @≤=K	cdu,	o.	BrBAB ZX@≤* W Brguc ®b urc K<G ;"<G ZX@≤* <@K	, l (rDr "<≤ x>;;"<G +<K	gWb ° ++q +; gB G@ Z≤=K x@V "<GsPdb ≤X" * j Prc ° "q= ° ++q x>;;"<G gsuBauu	u,	oB	ul l	ucu	uoB	uPl	uul	uB.	HoArg	Brl ,	urBo	urgg		u	Br. c	Hu	Brg
							oc	ul o	ucB	uP.	uPc	uu,	uBl	HoArg	Brl A	urBl	urgc		u	Br. c	Hu	Brg
							cB	ul g	uo.	uPl	uPP	uuc	uB.	HoArg	Br. u	urBA	urgl		u	Br. c	Hu	Brg
							cc	ul B	uol	uP,	uPu	uuo	uBc	HoArg	Br. P	uruu	urgA		u	Br. c	Hu	Brg
							, B	u, .	uoc	uPc	uPB	uuP	uBc	HoArg	Br. c	uruP	urPu		u	Br. c	Hu	Brg
							uBB	uPA	ugP	uuc	uBl	Ac	. A	HoArg	BrAA	urg,	uroP	X2, B	u	Br. c	Hg	Brg

ur S<Z≤@K@≤+< V >Z≤j = "< @' +;q@≤' = ° "≤X Z"q"<GV @≤>x@≤>;=;;Z "<Z≤≤>' ≤+<Zr f >;;"<G @≤=@XV =<≤≤+ Z≤≤>' ≤>;@Kx@V "<GV =V j =;Z +; @K≤=;<@≤"G= x>;;"<G ° "q≤X ZX@K≤j = q=Z"G<=q j @≤ =<G'<==; ≤+ ;=Z"Z≤≤X= ° "<q K<@qZ <+≤=q "< ≤X= ≤@K<r

gr OX= [=<=≤@≤+< +x≤X= x@Z≤=<=;Z ZX@K≤j = ≤X= x>KKx>;;"<GZ≤"[q=[≤X +x V "<"V >V Brl c "<' X

Pr 3 >"Kq"<G X="GX≤N V =@≤ ;++x X="GX≤ "< x==≤J +x@j >"Kq"<Gs= ' =[≤≤X@≤=@D= X="GX≤ZX@K≤j = >Z=q x+; ;++x@≤G< K<ZZ ≤X@≤ +; =] >@K≤+ uB gHuig ;++x Z<+[=Jr 7"<=@"<≤;[+K@≤+< +xj >"Kq"<G X="GX≤ , B xJ@≤q ° "<q Z[==q "Z [=;V "≤≤=qr

or T@q N <+V "<@Kq=Z"G< ° "<q Z[==q

cr T>K≤N >K≤V @≤= q=Z"G< ° "<q Z[==q

, r y "<q Z[==q q=Z"G<' +=x" "=<≤@ZZ>V [≤'+<Z [=; 4 =' ≤'+< PBro +x- 4 D8 l HuB @≤q - 4 D8 l Hu, E™ JNus™q NBr. cs 5 D[NHuro X , BJs 5 D[NHur. X2, BJs 5 D[NBru. r

l r gBul @≤q gBgB f 3 D 4 =' ≤'+< u, BArPru 8] r u, HPPs T@q N T>K≤ Br, J Brc

. r T N j @Z" q=Z"G< ° "<q Z[==q

Ar gBu. S3 D 4 =' ≤'+< u, BArPru 8] r u, HPPs T@q N T Br, J Brc

uBr y ++q x>;;"<G ZX@K≤j = [;=Z=;G@≤"G= ≤;=@≤=q [=; - y h- r

uur y ++q x>;;"<G ZX@K≤j = Z[=' "x" G;@D≤ +x Brog +; G;=@≤=; [=; - f h- dF b 4 R+; ° ++q Z≤≤>' ≤>;@X[@≤=K≤' +<x+;V "<G≤+ b (D h 4 Hu +; b (D h 4 Hg +; - h- h k h HuB. r

mó ó / ' ov Gl v , b l Dr

uJ S< ®"GX T=K<' "≤ ®>;;" @≤= L+<=Z ®T®LJ "<Z≤@K≤[=; 6 "@V "Hb @q= D+><≤ f K<;"q@≤F (- ul HBoB, rB,

REVISIONS			
REV	DESCRIPTION	DATE	APPROVED
A	REVISED NOTES	08/06/19	R.L.

NOTES:

1. THE PRODUCT SHOWN HEREIN IS DESIGNED AND MANUFACTURED TO COMPLY WITH REQUIREMENTS OF THE FLORIDA BUILDING CODE.
2. WOOD FRAMING AND MASONRY OPENING TO BE DESIGNED AND ANCHORED TO PROPERLY TRANSFER ALL LOADS TO STRUCTURE. FRAMING AND MASONRY OPENING IS THE RESPONSIBILITY OF THE ARCHITECT OR ENGINEER OF RECORD.
3. 1X BUCK OVER MASONRY/CONCRETE IS OPTIONAL.
4. WHERE SHIM OR BUCK THICKNESS IS LESS THAN 1–1/2" WINDOW UNITS MUST BE ANCHORED THROUGH THE FRAME IN ACCORDANCE WITH MANUFACTURER'S PUBLISHED INSTALLATION INSTRUCTIONS. ANCHORS SHALL BE SECURELY FASTENED DIRECTLY INTO MASONRY, CONCRETE OR OTHER STRUCTURAL SUBSTRATE MATERIAL.
5. WHERE WOOD BUCK THICKNESS IS 1–1/2" OR GREATER, BUCK SHALL BE SECURELY FASTENED TO MASONRY, CONCRETE OR OTHER STRUCTURAL SUBSTRATE. WINDOW UNITS MAY BE ANCHORED THROUGH FRAME TO SECURED WOOD BUCK IN ACCORDANCE WITH MANUFACTURER'S PUBLISHED INSTALLATION INSTRUCTIONS.
6. WHERE 1X BUCK IS NOT USED DISSIMILAR MATERIALS MUST BE SEPARATED WITH APPROVED COATING OR MEMBRANE. SELECTION OF COATING OR MEMBRANE IS THE RESPONSIBILITY OF THE ARCHITECT OR ENGINEER OF RECORD.
7. BUCKS SHALL EXTEND BEYOND WINDOW INTERIOR FACE SO THAT FULL FRAME SUPPORT IS PROVIDED.
8. SHIM AS REQUIRED AT WITH LOAD BEARING SHIM. SHIM WHERE SPACE OF 1/16" OR GREATER OCCURS. MAXIMUM ALLOWABLE SHIM STACK TO BE 1/4".
9. SHIMS SHALL BE MADE FROM MATERIALS CAPABLE OF SUSTAINING APPLICABLE LOADS, LOCATED AND APPLIED IN A THICKNESS CAPABLE OF SUSTAINING APPLICABLE LOADS.
10. WIND LOAD DURATION FACTOR Cd=1.6 WAS USED FOR WOOD ANCHOR CALCULATIONS.
11. FRAME MATERIAL: EXTRUDED PVC.
12. UNITS MUST BE GLAZED PER ASTM E1300–04/09.
13. APPROVED IMPACT PROTECTIVE SYSTEM <u>IS REQUIRED</u> FOR THIS PRODUCT IN WIND BORNE DEBRIS REGIONS.
14. FOR ANCHORING THROUGH FIN INTO WOOD FRAMING OR 2X BUCK USE #6 WOOD SCREWS WITH SUFFICIENT LENGTH TO ACHIEVE A 1 1/2" MINIMUM EMBEDMENT INTO SUBSTRATE. LOCATE ANCHORS AS SHOWN IN ELEVATIONS AND INSTALLATION DETAILS.
15. FOR ANCHORING THROUGH FIN INTO METAL STRUCTURE USE #6 SELF DRILLING SCREWS WITH SUFFICIENT LENGTH TO ACHIEVE 3 THREADS MINIMUM BEYOND STRUCTURE INTERIOR WALL. LOCATE ANCHORS AS SHOWN IN ELEVATIONS AND INSTALLATION DETAILS.
16. ALL FASTENERS TO BE CORROSION RESISTANT.
17. INSTALLATION ANCHORS SHALL BE INSTALLED IN ACCORDANCE WITH ANCHOR MANUFACTURER'S INSTALLATION INSTRUCTIONS AND ANCHORS SHALL NOT BE USED IN SUBSTRATES WITH STRENGTHS LESS THAN THE MINIMUM STRENGTH SPECIFIED BELOW:
    A. WOOD – MINIMUM SPECIFIC GRAVITY OF G=0.42
    B. METAL STRUCTURE: STEEL 18GA, 33KSI OR ALUMINUM 6063–T5 .048" THICK MINIMUM
19. GEOMETRIC SHAPES ARE ALSO APPROVED. APPROVED GEOMETRIC SHAPES DIMENSIONS SHALL NOT EXCEED INSCRIBED DIMENSIONS OF APPROVED RECTANGULAR ASSEMBLY SHOWN IN SHEET 2.

SIGNED: 08/06/2019

TABLE OF CONTENTS

SHEET NO.	DESCRIPTION
1	NOTES
2	ELEVATION
3 – 6	INSTALLATION DETAILS
7	COMPONENTS

MI WINDOWS & DOORS, LLC
650 WEST MARKET STREET
GRATZ, PA 17030–0370

SERIES 3540 PVC SINGLE HUNG WINDOW
REINFORCED NON–IMPACT 36" x74"
NOTES

DRAWN:	DWG NO.	REV
A.R.	08–03347	A

SCALE	DATE	SHEET
NTS	11/06/18	1 OF 7

L. ROBERTO LOMAS P.E.
1432 WOODFORD RD LEWISVILLE, NC 27023
434-688-0609 rllomas@lrlomaspe.com

LUIS R. LOMAS
LICENSE
No. 62514
STATE OF
FLORIDA
PROFESSIONAL ENGINEER

Luis R. Lomas P.E.
FL No.: 62514

REVISIONS			
REV	DESCRIPTION	DATE	APPROVED
A	REVISED NOTES	08/06/19	R.L.

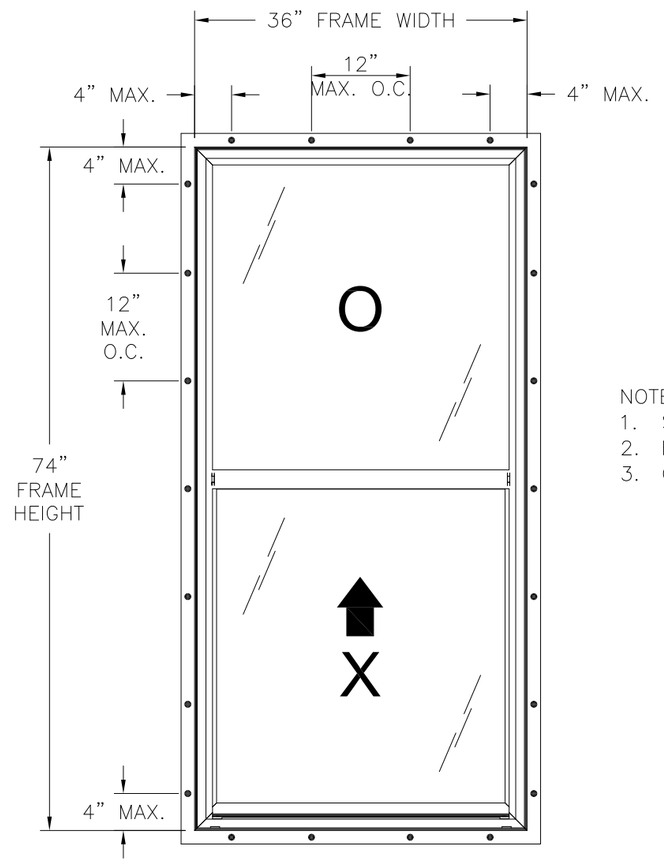

NOTES:
1. SASH SIZE: 33 7/8" X 34 3/16"
2. FIXED SASH D.L.O.: 31 7/8" X 33"
3. OPERABLE SASH D.L.O.: 30 7/8" X 33 5/16"

SERIES 3540 PVC SINGLE HUNG WINDOW
EXTERIOR VIEW

DESIGN PRESSURE RATING	*IMPACT RATING*
±50.0PSF	*NONE*

FOR AREAS WHERE WATER INFILTRATION RESISTANCE IS NOT REQUIRED

DESIGN PRESSURE RATING	*IMPACT RATING*
+35.0/-50.0PSF	*NONE*

FOR AREAS WHERE WATER INFILTRATION RESISTANCE IS REQUIRED

36" X 74" UNIT SHOWN. OTHER SIZES APPROVED AS LONG AS FRAME AREA DOES NOT EXCEED 18.5 FT²

HARDWARE SCHEDULE	
A.	(2 PER SASH) METAL CAM LOCK WITH KEEPER AT INTERIOR MEETING RAIL, 7" FROM EACH END
B.	(2 PER SASH) PVC SURFACE MOUNT TILT LATCH AT INTERIOR MEETING RAIL ENDS
C.	(2 PER SASH) COIL BALANCES, ONE IN EACH JAMB
D.	(2 PER SASH) METAL PIVOT BAR AT BOTTOM RAIL ENDS
E.	STEEL REINFORCEMENT (GVL-451-020) AT SASH RAILS AND STILES
F.	STEEL REINFORCEMENT (RF-104S-020) AT FIXED MEETING RAIL

SIGNED: 08/06/2019

MI WINDOWS & DOORS, LLC
650 WEST MARKET STREET
GRATZ, PA 17030-0370

SERIES 3540 PVC SINGLE HUNG WINDOW
REINFORCED NON-IMPACT 36" x74"
ELEVATION

DRAWN:	DWG NO.	REV
A.R.	08-03347	A

SCALE	DATE	SHEET
NTS	11/06/18	2 OF 7

L. ROBERTO LOMAS P.E.
1432 WOODFORD RD LEWISVILLE, NC 27023
434-688-0609 rllomas@lrlomaspe.com

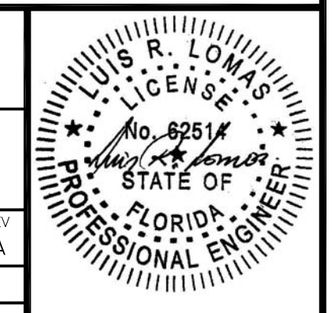

Luis R. Lomas P.E.
FL No.: 62514

REVISIONS			
REV	DESCRIPTION	DATE	APPROVED
A	REVISED NOTES	08/06/19	R.L.

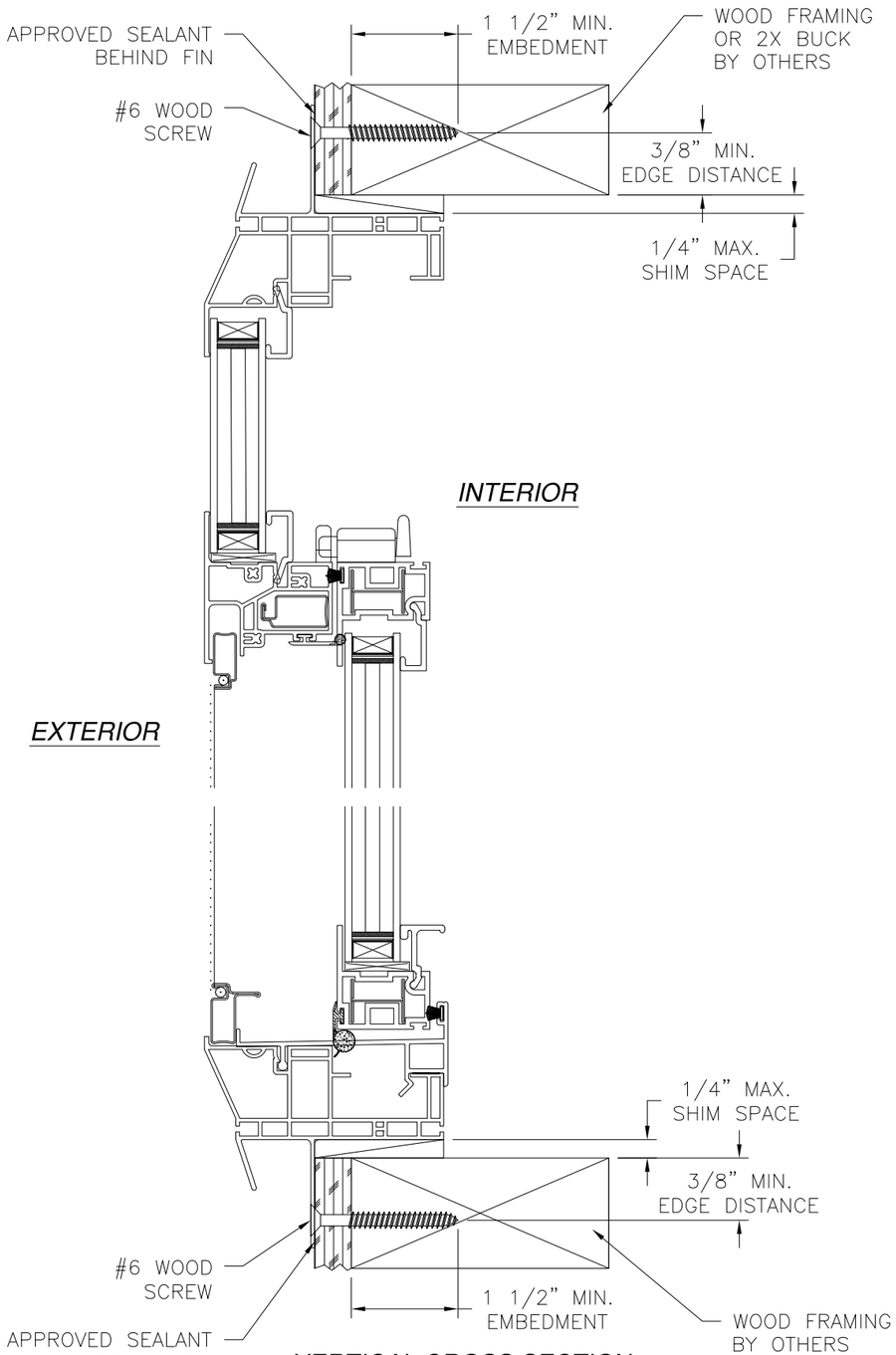

VERTICAL CROSS SECTION

WOOD FRAMING OR 2X BUCK INSTALLATION

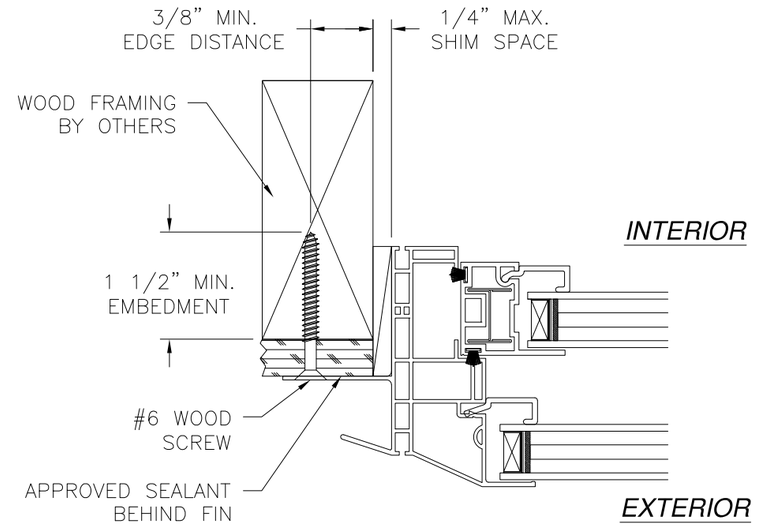

JAMB INSTALLATION DETAIL

WOOD FRAMING OR 2X BUCK INSTALLATION

NOTES:
1. INTERIOR AND EXTERIOR FINISHES, BY OTHERS, NOT SHOWN FOR CLARITY.
2. PERIMETER AND JOINT SEALANT BY OTHERS TO BE DESIGNED IN ACCORDANCE WITH ASTM E2112

SIGNED: 08/06/2019

MI WINDOWS & DOORS, LLC
650 WEST MARKET STREET
GRATZ, PA 17030-0370

SERIES 3540 PVC SINGLE HUNG WINDOW
REINFORCED NON-IMPACT 36" x74"
INSTALLATION DETAILS WITH "J" CHANNEL

DRAWN:	DWG NO.	REV
A.R.	08-03347	A

SCALE	DATE	SHEET
NTS	11/06/18	3 OF 7

L. ROBERTO LOMAS P.E.
1432 WOODFORD RD LEWISVILLE, NC 27023
434-688-0609 rllomas@lrlomaspe.com

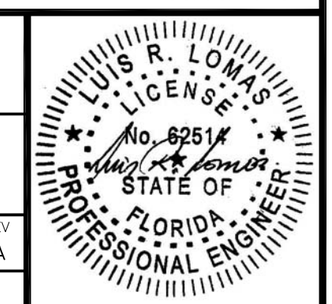

Luis R. Lomas P.E.
FL No.: 62514

REVISIONS			
REV	DESCRIPTION	DATE	APPROVED
A	REVISED NOTES	08/06/19	R.L.

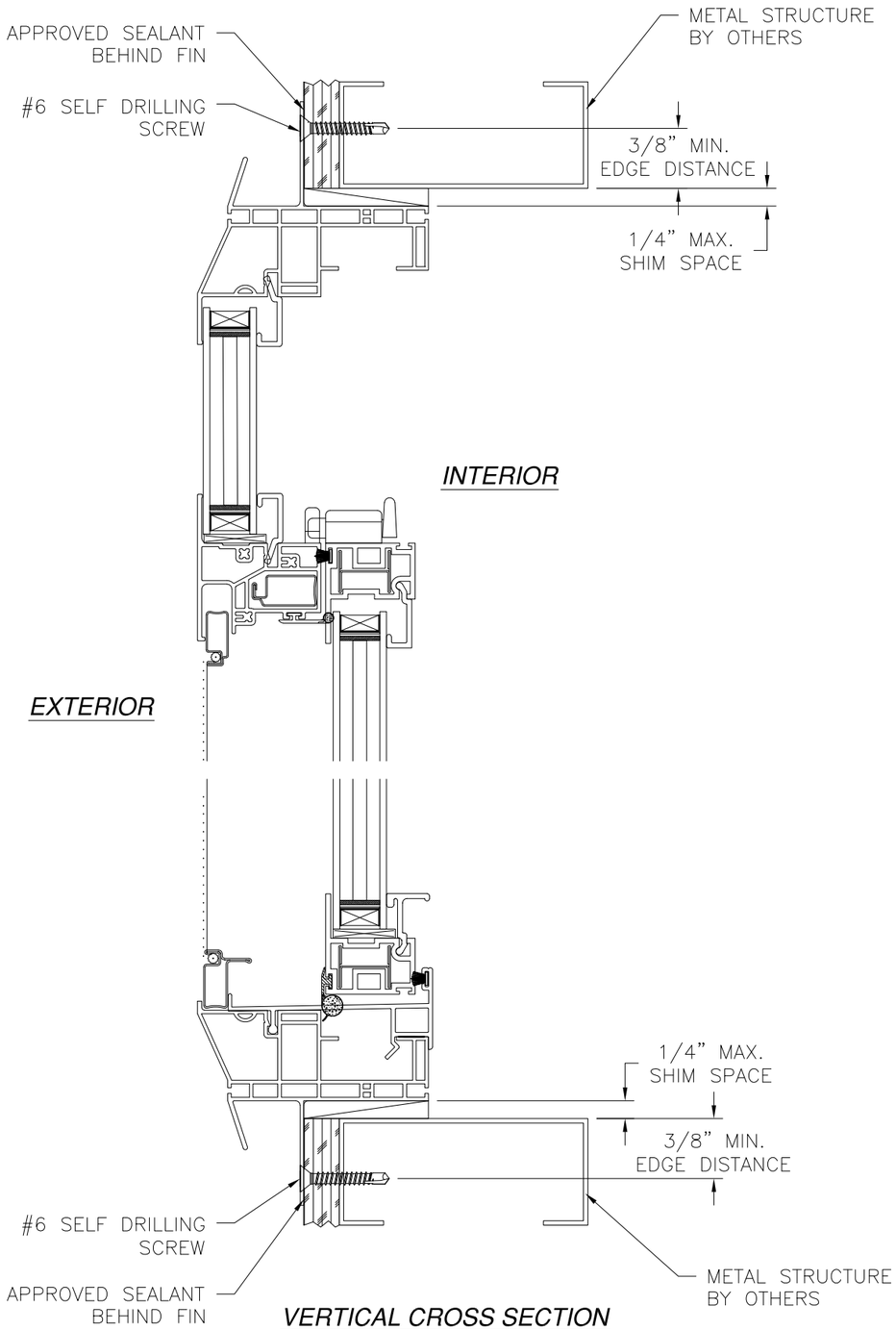

VERTICAL CROSS SECTION
METAL STRUCTURE INSTALLATION

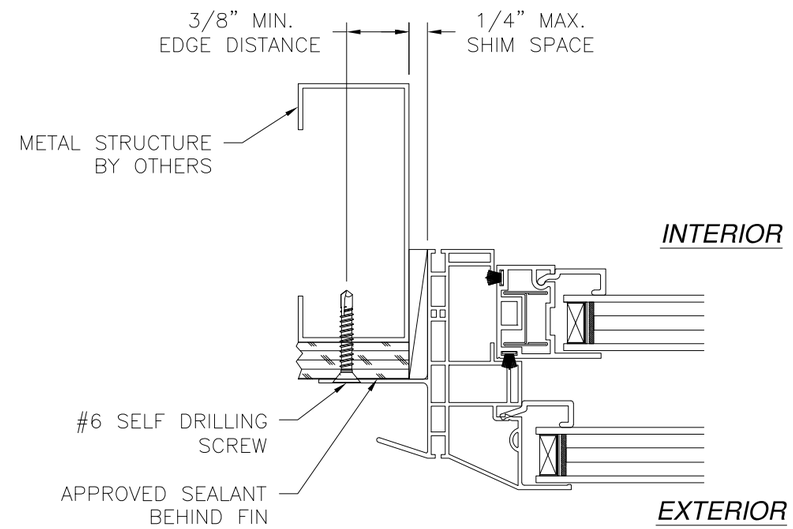

JAMB INSTALLATION DETAIL
METAL STRUCTURE INSTALLATION

NOTES:
1. INTERIOR AND EXTERIOR FINISHES, BY OTHERS, NOT SHOWN FOR CLARITY.
2. PERIMETER AND JOINT SEALANT BY OTHERS TO BE DESIGNED IN ACCORDANCE WITH ASTM E2112

SIGNED: 08/06/2019

MI WINDOWS & DOORS, LLC
650 WEST MARKET STREET
GRATZ, PA 17030-0370

SERIES 3540 PVC SINGLE HUNG WINDOW
REINFORCED NON-IMPACT 36" x74"
INSTALLATION DETAILS WITH "J" CHANNEL

DRAWN:	DWG NO.	REV
A.R.	08-03347	A

SCALE	DATE	SHEET
NTS	11/06/18	4 OF 7

L. ROBERTO LOMAS P.E.
1432 WOODFORD RD LEWISVILLE, NC 27023
434-688-0609 rllomas@lrlomaspe.com

LUIS R. LOMAS LICENSE No. 62514 STATE OF FLORIDA PROFESSIONAL ENGINEER

Luis R. Lomas P.E.
FL No.: 62514

REVISIONS			
REV	DESCRIPTION	DATE	APPROVED
A	REVISED NOTES	08/06/19	R.L.

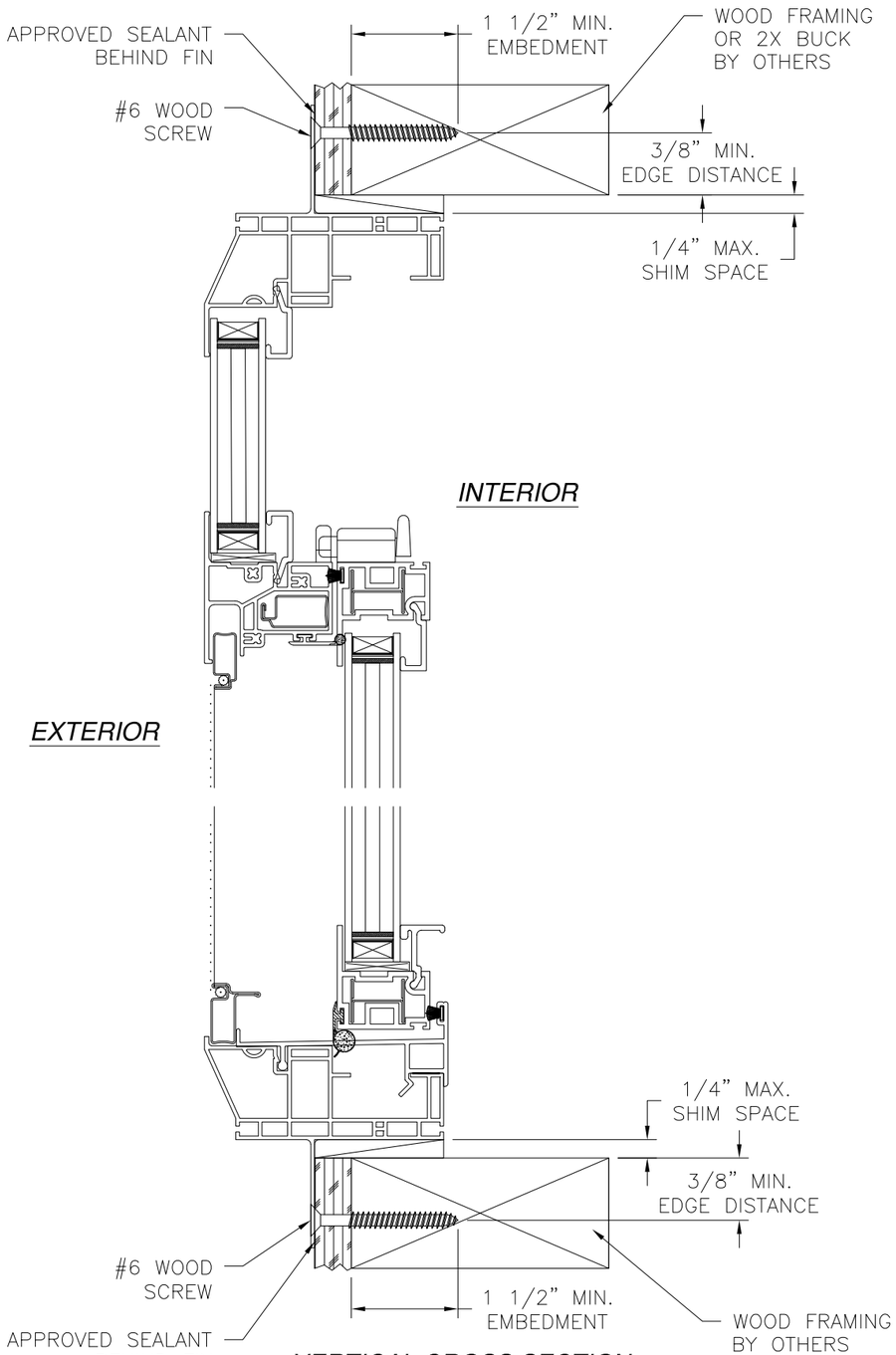

VERTICAL CROSS SECTION

WOOD FRAMING OR 2X BUCK INSTALLATION

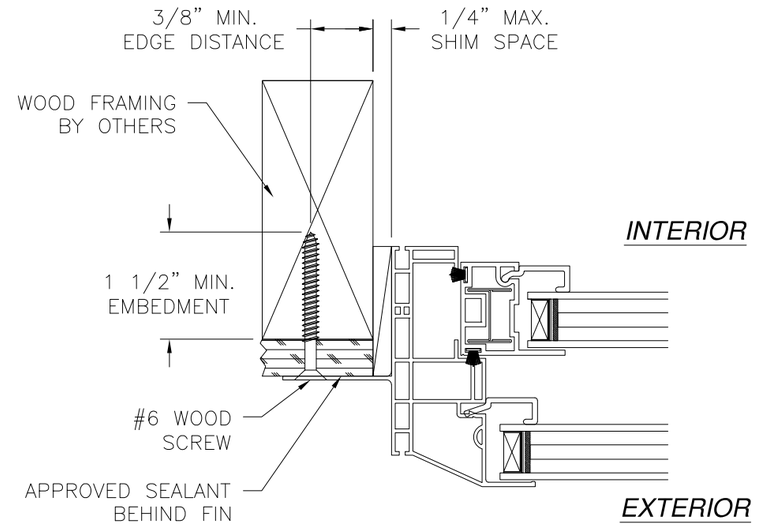

JAMB INSTALLATION DETAIL

WOOD FRAMING OR 2X BUCK INSTALLATION

NOTES:
1. INTERIOR AND EXTERIOR FINISHES, BY OTHERS, NOT SHOWN FOR CLARITY.
2. PERIMETER AND JOINT SEALANT BY OTHERS TO BE DESIGNED IN ACCORDANCE WITH ASTM E2112

SIGNED: 08/06/2019

MI WINDOWS & DOORS, LLC
650 WEST MARKET STREET
GRATZ, PA 17030-0370

SERIES 3540 PVC SINGLE HUNG WINDOW
REINFORCED NON-IMPACT 36" x74"
INSTALLATION DETAILS STANDARD FRAME

DRAWN:	DWG NO.	REV
A.R.	08-03347	A

SCALE	DATE	SHEET
NTS	11/06/18	5 OF 7

L. ROBERTO LOMAS P.E.
1432 WOODFORD RD LEWISVILLE, NC 27023
434-688-0609 rllomas@lrlomaspe.com

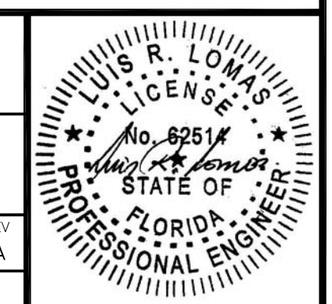

Luis R. Lomas P.E.
FL No.: 62514

REVISIONS			
REV	DESCRIPTION	DATE	APPROVED
A	REVISED NOTES	08/06/19	R.L.

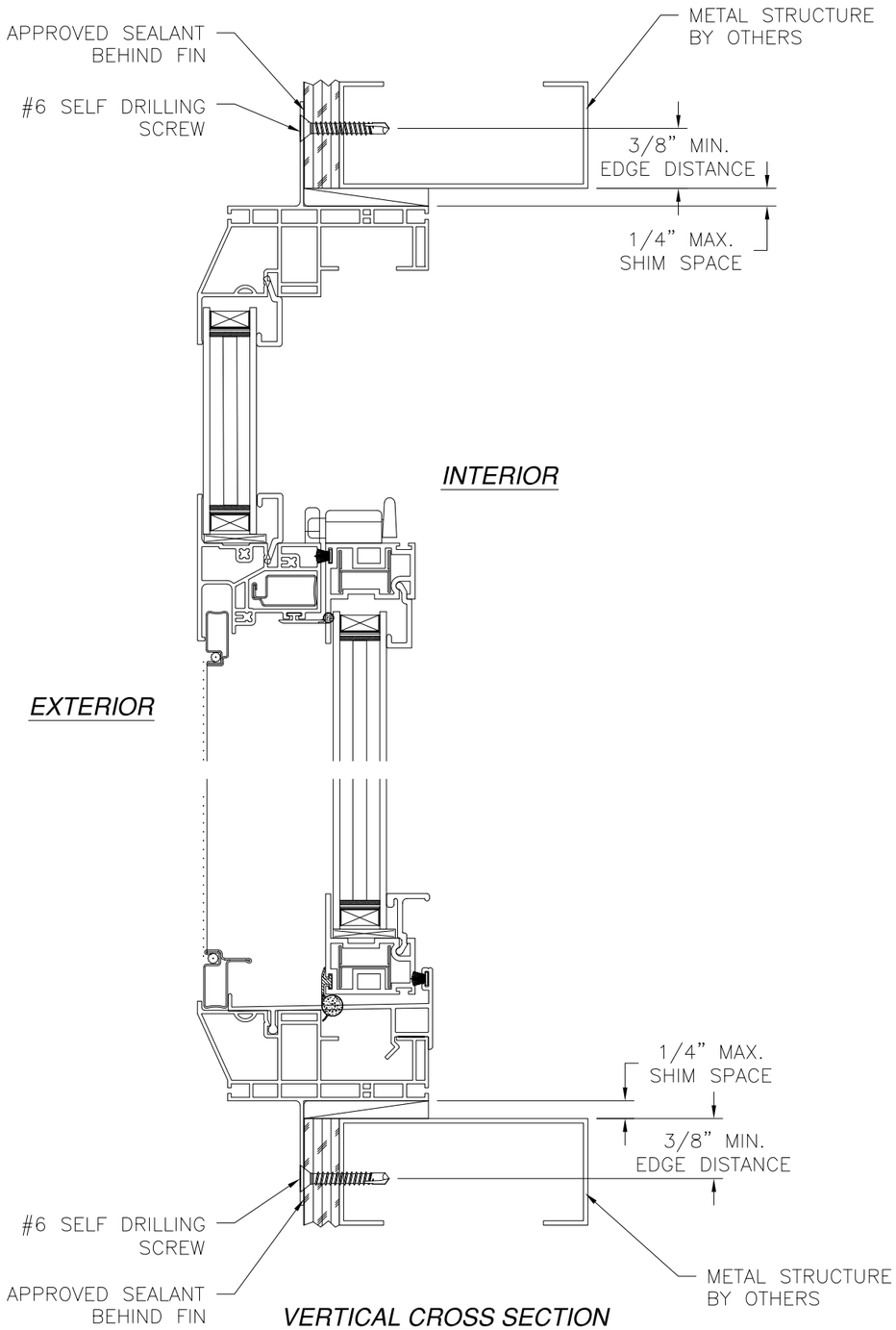

VERTICAL CROSS SECTION
METAL STRUCTURE INSTALLATION

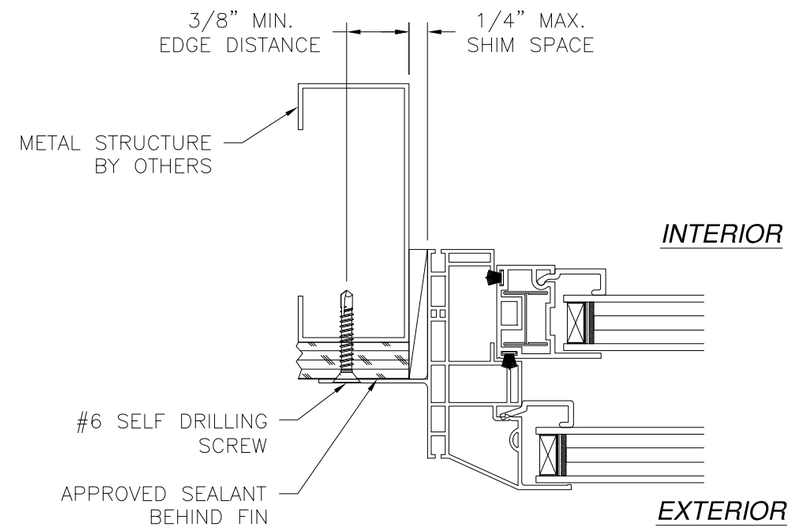

JAMB INSTALLATION DETAIL
METAL STRUCTURE INSTALLATION

NOTES:
1. INTERIOR AND EXTERIOR FINISHES, BY OTHERS, NOT SHOWN FOR CLARITY.
2. PERIMETER AND JOINT SEALANT BY OTHERS TO BE DESIGNED IN ACCORDANCE WITH ASTM E2112

SIGNED: 08/06/2019

MI WINDOWS & DOORS, LLC
650 WEST MARKET STREET
GRATZ, PA 17030-0370

SERIES 3540 PVC SINGLE HUNG WINDOW
REINFORCED NON-IMPACT 36" x74"
INSTALLATION DETAILS STANDARD FRAME

DRAWN:	DWG NO.	REV
A.R.	08-03347	A

SCALE	DATE	SHEET
NTS	11/06/18	6 OF 7

L. ROBERTO LOMAS P.E.
1432 WOODFORD RD LEWISVILLE, NC 27023
434-688-0609 rllomas@lrlomaspe.com

LUIS R. LOMAS LICENSE No. 62514 STATE OF FLORIDA PROFESSIONAL ENGINEER

Luis R. Lomas P.E.
FL No.: 62514

REVISIONS			
REV	DESCRIPTION	DATE	APPROVED
A	REVISED NOTES	08/06/19	R.L.

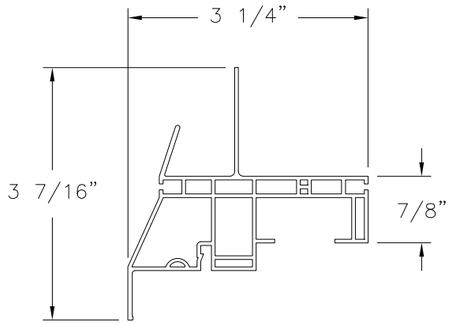

MAIN FRAME WITH "J" CHANNEL
PVC (V-538)

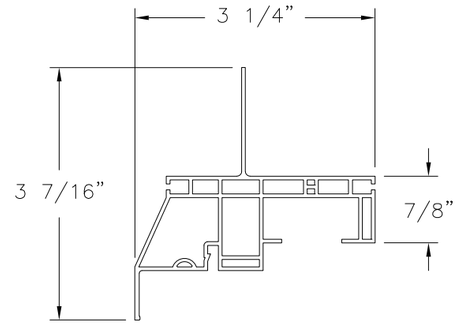

MAIN FRAME
PVC (V-634)

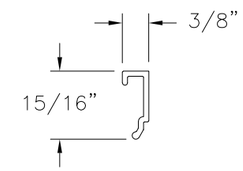

GLAZING BEAD
PVC (V-816)

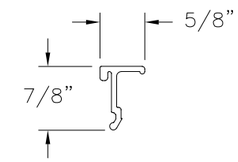

LIFT BEAD
PVC (V-817)

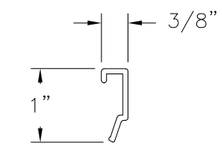

GLAZING BEAD
PVC (V-819)

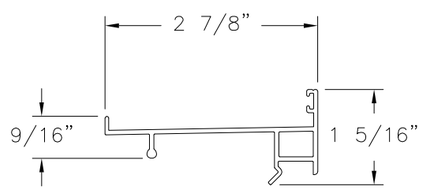

SNAP IN SILL
PVC (V-661)

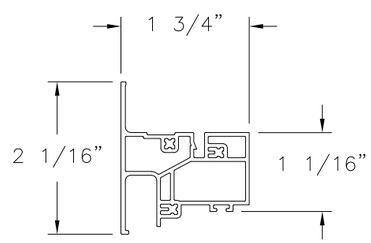

FIXED MEETING RAIL
PVC (V-321)

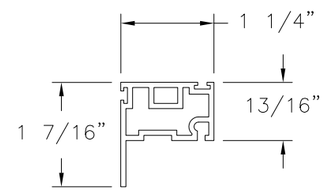

SASH RAIL
PVC (V-451)

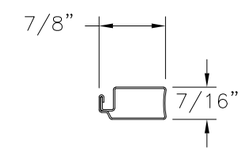

MEETING RAIL LINER
STEEL .019" THICK (RF-104S)

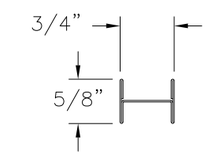

SASH LINER
STEEL .020" THICK (GVL-451)

SIGNED: 08/06/2019

MI WINDOWS & DOORS, LLC
650 WEST MARKET STREET
GRATZ, PA 17030-0370

SERIES 3540 PVC SINGLE HUNG WINDOW
REINFORCED NON-IMPACT 36" x74"
COMPONENTS

DRAWN:	DWG NO.	REV
A.R.	08-03347	A

SCALE	DATE	SHEET
NTS	11/06/18	7 OF 7

L. ROBERTO LOMAS P.E.
1432 WOODFORD RD LEWISVILLE, NC 27023
434-688-0609 rllomas@lrlomaspe.com

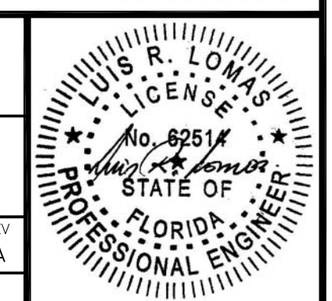

Luis R. Lomas P.E.
FL No.: 62514

NEMO|etc.
Certificate of Authorization #32455
353 Christian Street, Unit #13
Oxford, CT 06478
(203) 262-9245

ENGINEER **EVALUATE** **TEST** **CONSULT**

EVALUATION REPORT

Owens Corning Roofing and Asphalt, LLC
One Owens Corning Parkway
Toledo, OH 43659
(740) 321-6345

Evaluation Report I40510.02.12-R9
FL15216-R8
Date of Issuance: 02/17/2012
Revision 9: 12/15/2020

SCOPE:
This Evaluation Report is issued under **Rule 61G20-3** and the applicable rules and regulations governing the use of construction materials in the State of Florida. The documentation submitted has been reviewed by Robert Nieminen, P.E. for use of the product under the Florida Building Code. The products described herein have been evaluated for compliance with the **7th Edition (2020) Florida Building Code** sections noted herein.

DESCRIPTION: RhinoRoof U20, ABC Pro Guard 20 and SRS TopShield TS20 Roof Underlayments

LABELING: Labeling shall be in accordance with the requirements of the Accredited Quality Assurance Agency noted herein and FBC 1507.1.1.

CONTINUED COMPLIANCE: This Evaluation Report is valid until such time as the named product(s) changes, the referenced Quality Assurance or production facility location(s) changes, or Code provisions that relate to the product(s) change. Acceptance of our Evaluation Reports by the named client constitutes agreement to notify NEMO ETC, LLC of any changes to the product(s), the Quality Assurance or the production facility location(s). NEMO ETC, LLC requires a complete review of its Evaluation Report relative to updated Code requirements with each Code Cycle.

ADVERTISEMENT: The Florida Product Approval Number (FL#) preceded by the words "NEMO|etc. Evaluated" may be displayed in advertising literature. If any portion of the Evaluation Report is displayed, then it shall be done in its entirety.

INSPECTION: Upon request, a copy of this entire Evaluation Report shall be provided to the user by the manufacturer or its distributors and shall be available for inspection at the job site at the request of the Building Official.

This Evaluation Report consists of pages 1 through 4.

Prepared by:

Robert J.M. Nieminen, P.E.
Florida Registration No. 59166, Florida DCA ANE1983

The facsimile seal appearing was authorized by Robert Nieminen, P.E. on 12/15/2020. This does not serve as an electronically signed document.

CERTIFICATION OF INDEPENDENCE:

1. NEMO ETC, LLC does not have, nor does it intend to acquire or will it acquire, a financial interest in any company manufacturing or distributing products it evaluates.
2. NEMO ETC, LLC is not owned, operated or controlled by any company manufacturing or distributing products it evaluates.
3. Robert Nieminen, P.E. does not have nor will acquire, a financial interest in any company manufacturing or distributing products for which the evaluation reports are being issued.
4. Robert Nieminen, P.E. does not have, nor will acquire, a financial interest in any other entity involved in the approval process of the product.
5. This is a building code evaluation. Neither NEMO ETC, LLC nor Robert Nieminen, P.E. are, in any way, the Designer of Record for any project on which this Evaluation Report, or previous versions thereof, is/was used for permitting or design guidance unless retained specifically for that purpose.

©2019 NEMO ETC, LLC

ROOFING COMPONENT EVALUATION:

1. SCOPE:

Product Category: Roofing
Sub-Category: Underlayment

Compliance Statement: RhinoRoof U20, ABC Pro Guard 20 and SRS TopShield TS20 Roof Underlayments, as produced by **Owens Corning Roofing and Asphalt, LLC**, have demonstrated compliance with the following sections of the **7th Edition (2020) Florida Building Code** through testing in accordance with applicable sections of the following Standards. Compliance is subject to the Installation Requirements and Limitations / Conditions of Use set forth herein.

2. STANDARDS:

Section	Properties	Standard	Year
1507.1.1.1(2&3, Exception), 1507.1.1.1(5) / R905.1.1.1(2&3, Exception), R905.1.1.1(5)	Tear strength	ASTM D4533	2015
1507.1.1.1(2&3, Exception), 1507.1.1.1(5) / R905.1.1.1(2&3, Exception), R905.1.1.1(5)	Tensile strength	ASTM D5035	2011
1507.1.1.1(5) / R905.1.1.1(5)	Liquid water transmission	ASTM D4869	2016
1518.4, RAS 115	Unrolling, Breaking Strength, Pliability	ASTM D226	2009
TAS 110	Accelerated Weathering	ASTM D4798	2011

3. REFERENCES:

Entity	Examination	Reference	Date
ITS (TST1509)	ASTM D226	100539395COQ-006	10/26/2011
ITS (TST1509)	ASTM D4869	100539395COQ-002	10/26/2011
PRI (TST5878)	ASTM D226 / D4798 / D4869	OCF-394-02-07.4	01/06/2020
PRI (TST5878)	ASTM D226 / D4798	OCF-464-02-02.2	01/06/2020
PRI (TST5878)	ASTM D4533 / D5035 / D4798	1378T0109	10/15/2020
PRI (TST5878)	ASTM D4533 / D5035	1378T0127	10/15/2020
ITS (QUA1673)	Quality Control	Service Confirmation	12/09/2020
ITS (QUA1673)	Quality Control	Florida BCIS	Current

4. PRODUCT DESCRIPTION:

	Product	Specification	Plant(s)	Description
4.1	RhinoRoof U20	1507.1.1.1(2&3, Exception), 1507.1.1.1(5) / R905.1.1.1(2&3, Exception), R905.1.1.1(5)	Qingdao, China	Multilayered polymer woven coated synthetic roof underlayment
4.2	ABC Pro Guard 20	1507.1.1.1(2&3, Exception), 1507.1.1.1(5) / R905.1.1.1(2&3, Exception), R905.1.1.1(5)	Silvassa, India	Multilayered polymer woven coated synthetic roof underlayment
43	SRS TopShield TS20	1507.1.1.1(2&3, Exception), 1507.1.1.1(5) / R905.1.1.1(2&3, Exception), R905.1.1.1(5)	Silvassa, India	Multilayered polymer woven coated synthetic roof underlayment

5. LIMITATIONS:

5.1 This is a building code evaluation. Neither NEMO ETC, LLC nor Robert Nieminen, P.E. are, in any way, the Designer of Record for any project on which this Evaluation Report, or previous versions thereof, is/was used for permitting or design guidance unless retained specifically for that purpose.

5.2 This Evaluation Report pertains to above-deck roof components. Roof decks and structural members shall be in accordance with FBC requirements to the satisfaction of the Authority Having Jurisdiction.

5.3 This Evaluation Report does not include evaluation of fire classification. Refer to **FBC 1505** or **FBC HVHZ 1516** for requirements and limitations regarding roof assembly fire classification. Refer to **FBC 2603** for requirements and limitations concerning the use of foam plastic insulation.

5.4 **RhinoRoof U20, ABC Pro Guard 20 and SRS TopShield TS20 Roof Underlayments** may be used with any prepared roof cover where the product is specifically referenced within FBC approval documents. If not listed, a request may be made to the Authority Having Jurisdiction for approval based on this evaluation combined with supporting data for the prepared roof covering.

5.5 Allowable roof covers:

TABLE 1: ROOF COVER OPTIONS

FBC NON-HVHZ:	*1507.2*	*1507.3*	*1507.4 & 1507.5*	*1507.7*	*1507.8 & 1507.9*
FBC HVHZ:	*TAS 110(S10), RAS 115*	*TAS 110(S11), RAS 118, 119 & 120*	*RAS 133*	*TAS 110(S11)*	*RAS 130*
Underlayment	**Asphalt Shingles**	**Clay and Concrete Tile**	**Metal**	**Slate or Slate-Type Shingles**	**Wood**
RhinoRoof U20	Yes	No	Yes	No	NON-HVHZ: No HVHZ: Yes
ABC Pro Guard 20	Yes	No	Yes	No	NON-HVHZ: No HVHZ: Yes
SRS TopShield TS20	Yes	No	Yes	No	NON-HVHZ: No HVHZ: Yes

5.6 Exposure Limitations:

TABLE 2: EXPOSURE LIMITATIONS

Underlayment	Maximum Exposure (days)
RhinoRoof U20	60
ABC Pro Guard 20	30
SRS TopShield TS20	30

6. INSTALLATION:

6.1 **RhinoRoof U20, ABC Pro Guard 20 and SRS TopShield TS20 Roof Underlayments** shall be installed in accordance with the manufacturer's published installation instructions subject to the Limitations set forth in Section 5 herein and the specifics noted below.

6.2 Re-fasten any loose decking panels, and check for protruding nail heads. Sweep the substrate thoroughly to remove any dust and debris prior to application.

6.3 **RhinoRoof U20, ABC Pro Guard 20 and SRS TopShield TS20 Roof Underlayments:**

6.3.1 **NON-HVHZ Jurisdictions:**

6.3.1.1 Shall be installed in compliance with requirements for a synthetic underlayment in **FBC 1507.1.1.1(2, Exception), 1507.1.1.1(3, Exception)** or **1507.1.1.1(5)** or **FBC Residential R905.1.1.1(2, Exception), R905.1.1.1(3, Exception)** or **R905.1.1.1(5)** for the type of prepared roof covering to be installed, and the manufacturer's installation instructions. FBC requirements take precedence over the manufacturer's installation instructions.

6.3.1.2 Fasteners:

Minimum fasteners shall be corrosion resistant, ring-shank cap nails shall be as set forth in **FBC 1507.1.1.1** or **1507.1.1.3** or **FBC Residential R905.1.1.1** or **R905.1.1.3**.

6.3.2 **HVHZ Jurisdictions:**

6.3.2.1 Shall be installed in a shingle fashion with minimum 4-inch wide side (horizontal) laps and minimum 6-inch wide end laps, and fastened in accordance with FBC HVHZ 1518.2.

7. BUILDING PERMIT REQUIREMENTS:

As required by the Building Official or Authority Having Jurisdiction to properly evaluate the installation of this product.

8. MANUFACTURING PLANTS:

Contact the named QA entity for manufacturing facilities covered by **F.A.C. Rule 61G20-3** QA requirements. Refer to Section 4 herein for products and production locations having met codified material standards.

9. QUALITY ASSURANCE ENTITY:

Intertek Testing Services NA Inc. – QUA1673; (312) 906-7779; maura.norlander@intertek.com

- END OF EVALUATION REPORT -

c c c c c
c c
c c

P lNNMEbEb

l“ lZ c
Ekbfl l l lfEflV NM lEbb
NM l-kbU-

/ lUbblZ P l
J l-)E

l l l lZ /

P l l l l“ lZ NMl l l l l l l
l l l l l dll l l l l l lP
l dNM l l l NM l l l dll l l
l l l l l l l l- l” l4EbEbWV lV lZ c

l l l l l l l l l l l l l l
l l l l dl l l l NM l l
l l l l l l l l l l l l l
l d

l l l l l l l lP l”r((brnEbbEl lP q“P P
fb3rnEbbEl4 lfb3rnEbfEl lrnEbf-WM

l l ll l l l lX XI l l lJ l NM l
l l l“ lZ c

(b3ff)l d”lX lUbblZ rnP l“ XI l ll)fqn)fl l
/l)fl l“ NM l l lfUFNM l l lfUFI
l l l l l l l d l l l l c

---

l l l lP l l l4P WV lf(bl“ lZ NM NMPc
l l dP lbfn)f((fcfb

| | | | l4 | | | W | | | | | |
d | | | | | | | | | | | | | | M | |
| | | | | | | | | | | | c

| | | | | | | | | | | M | | | | |
| | | lZ | lPdl

| | | | | | | | | | dl | | | | | | |
| | | | | | | | lJ | | | | | | l4 | W

| | | | | | | | | | | | | | | | | | lZ | |
| | | | | | | | | | dl

P | | | | | | | | | | | | | |
| | | | | | | | | | | | | | | | | | | |
| | | | | | | | | | dl | | | | | | | | |
| | | M | M | | | | M | | | | | | | lZ
| | | | | VnV c

Digitally signed by John E. Scates P.E.
Date: 2020.08.09 13:08:13 -05'00'

l" d M c" c

THERMA-TRU® DOORS

Fiber-Classic® & Smooth-Star®

COMPOSITE EDGE OPAQUE FIBERGLASS SINGLE DOOR

INSWING/OUTSWING "NON-IMPACT"

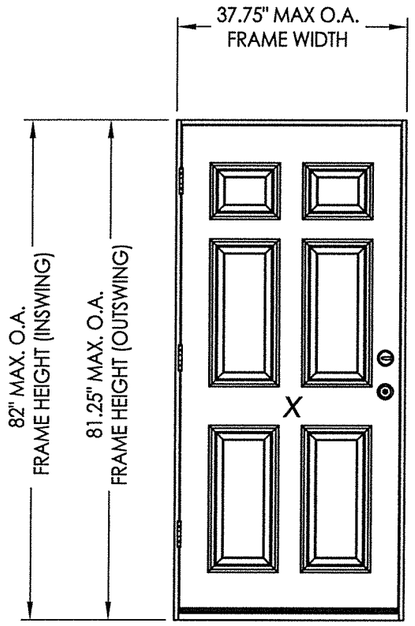

GENERAL NOTES

1. This product has been evaluated and is in compliance with the 7th Edition (2020) Florida Building Code (FBC) structural requirements excluding the "High Velocity Hurricane Zone" (HVHZ).
2. Product anchors shall be as listed and spaced as shown on details. Anchor embedment to base material shall be beyond wall dressing or stucco.
3. For 2x stud framing construction, anchoring of these units shall be the same as that shown for 2x buck masonry construction.
4. Site conditions that deviate from the details of this drawing require further engineering analysis by a licensed engineer or registered architect.
5. Fiber-Classic & Smooth-Star Door panels require the use of "J" part numbers and must be stained or painted within six months of installation.

TABLE OF CONTENTS

SHEET #	DESCRIPTION
1	Typical Elevations, Design Pressures & General Notes
2	Door Panel Details
3	Elevations
4	Horizontal & Vertical Cross Sections (2X Buck)
5	Horizontal & Vertical Cross Sections (1X Buck)
6	Horizontal & Vertical Cross Sections (Direct to Masonry)
7	Vertical Cross Sections (Thresholds)
8	Buck & Frame Anchoring
9	Hardware Details
10	Components
11	Bill of Materials

CONFIGURATION	LOCK HARDWARE	DESIGN PRESSURE (PSF) INSWING		DESIGN PRESSURE (PSF) OUTSWING	
		POSITIVE	NEGATIVE	POSITIVE	NEGATIVE
X	Latch & Deadbolt	+70.0	-75.0	+67.0	-67.0
X	Multipoint	+80.0	-80.0	+80.0	-80.0

See Sheet 3 for Hardware Specifications

L. F. SCHMIDT LICENSE No. 43409 STATE OF FLORIDA PROFESSIONAL ENGINEER

July 22, 2020

Documents Prepared By:
Lyndon F. Schmidt
P.E. No. 43409

R.W. BUILDING CONSULTANTS, INC.
P.O. Box 230, Valrico, FL 33595
Phone No.: 813.659.9197
FBPE Registry No. 9813

PRODUCT: THERMA-TRU FIBERGLASS DOOR

PART OR ASSEMBLY: TYPICAL ELEVATION, DESIGN PRESSURES & GENERAL NOTES

NO.	DATE	REVISIONS	BY
4	7/21/20	UPDATE TO 7th ED (2020) FBC	LFS
3	10/09/18	REV. DOOR PANEL OPTION NOTE	MT
2	11/15/17	RECESSED PANEL NOTATION	JK
1	7/7/17	UPDATE TO 6th ED (2017) FBC	JK

DATE: 5/26/16
SCALE: N.T.S.
DWG. BY: JK
CHK. BY: LFS
DRAWING NO.: FL-20461.1
SHEET 1 OF 11

© 2016 R.W. BUILDING CONSULTANTS INC.

R:\Clients\Therma Tru PERMANENT\A - Florida Product Approvals\FL-20461 Structural TT SS\C - Drawings\FL 20461 (2020)\FL-20461.1-5.dwg, FL-20461.1

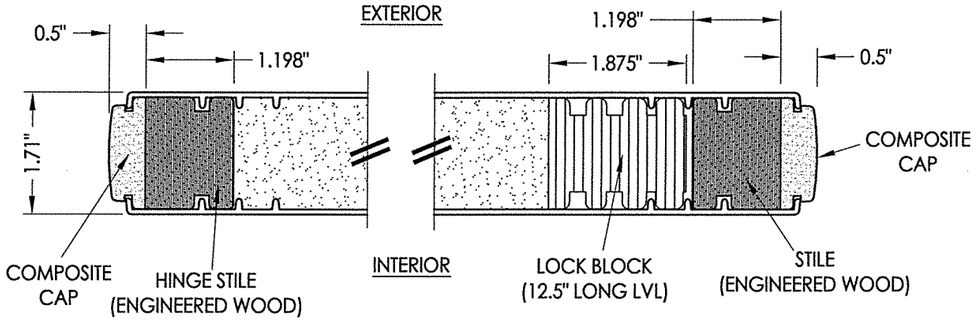

1/2 **HORIZONTAL CROSS SECTION**

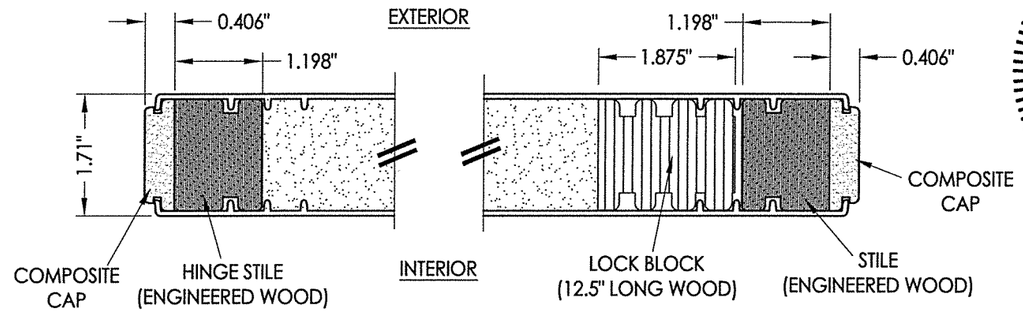

2/2 **HORIZONTAL CROSS SECTION**

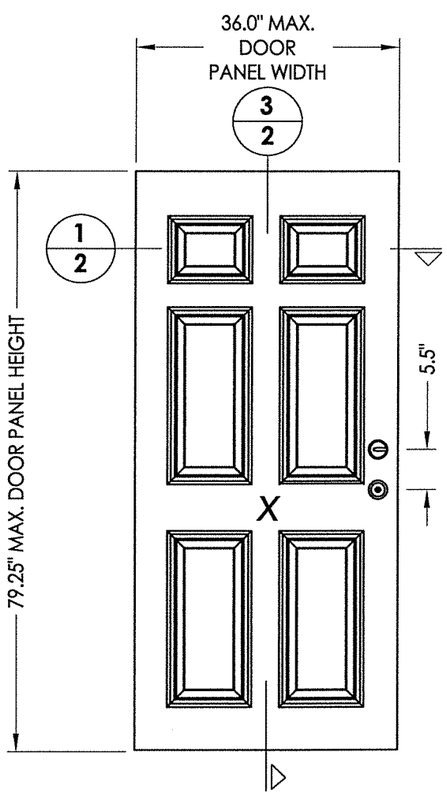

40 **DOOR PANEL** BOOK

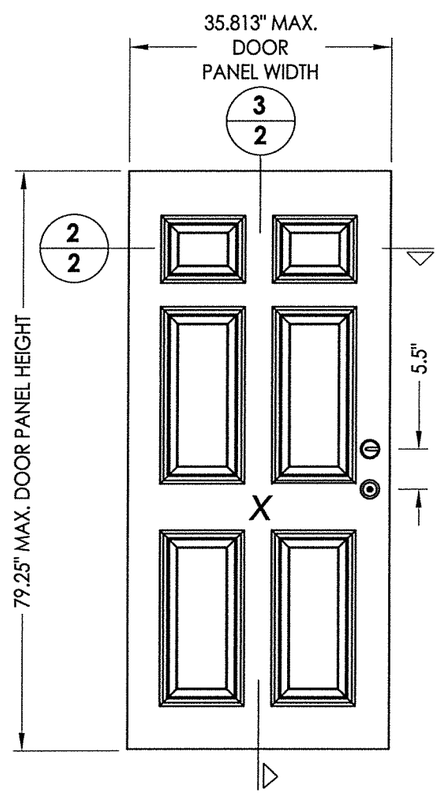

41 **DOOR PANEL** Hybrid Door

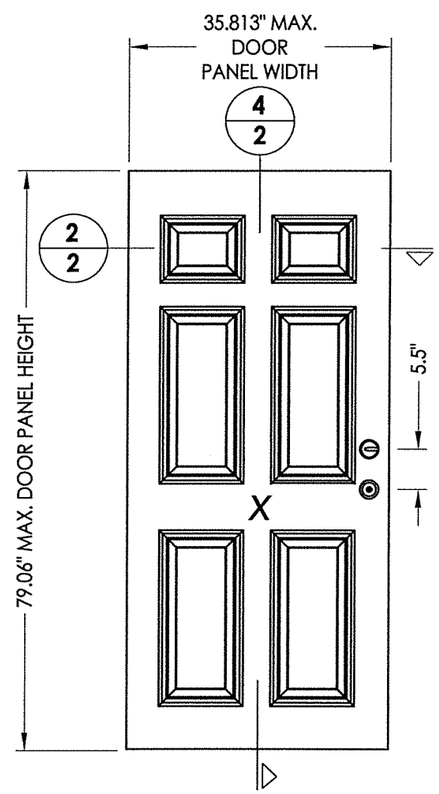

42 **DOOR PANEL** U1 Door

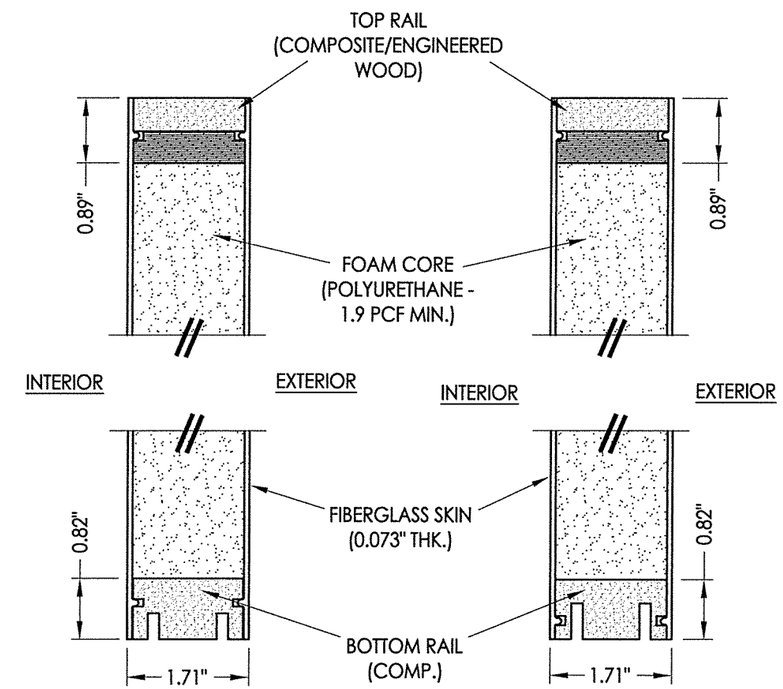

3/2 **VERTICAL CROSS SECTION**

4/2 **VERTICAL CROSS SECTION**

STATE OF FLORIDA
L. F. SCHMIDT
LICENSE No. 43409
PROFESSIONAL ENGINEER

July 22, 2020

Documents Prepared By:
Lyndon F. Schmidt
P.E. No. 43409

R.W. BUILDING CONSULTANTS, INC.
P.O. Box 230, Valrico, FL 33595
Phone No.: 813.659.9197
FBPE Registry No. 9813

PRODUCT: THERMA-TRU FIBERGLASS DOOR

PART OR ASSEMBLY: DOOR PANEL DETAILS

NO.	DATE	REVISIONS	BY
4	7/21/20	UPDATE TO 7th ED (2020) FBC	LFS
3	10/09/18	REV. DOOR PANEL OPTION NOTE	MT
2	11/15/17	RECESSED PANEL NOTATION	JK
1	7/7/17	UPDATE TO 6th ED (2017) FBC	JK

DATE: 5/26/16
SCALE: N.T.S.
DWG. BY: JK
CHK. BY: LFS
DRAWING NO.: FL-20461.1
SHEET 2 OF 11

© 2016 R.W. BUILDING CONSULTANTS INC.

R:\Clients\Therma Tru PERMANENT\A - Florida Product Approvals\FL-20461 Structural TT SS\C - Drawings\FL 20461 (2020)\FL-20461.1-5.dwg, 2.1

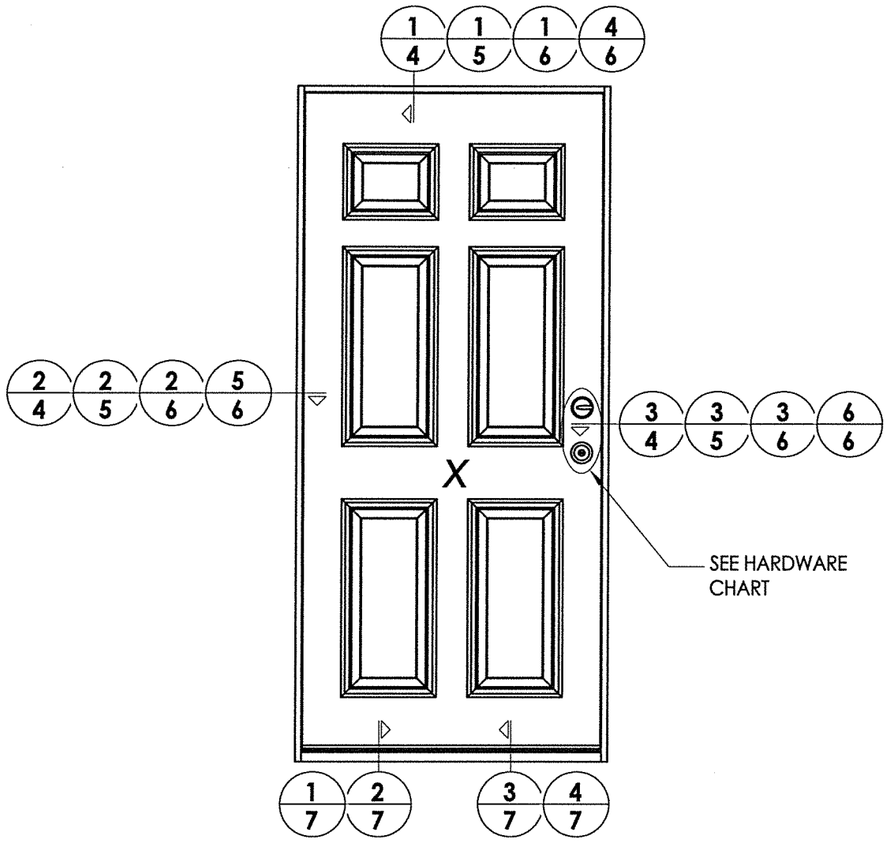

HARDWARE TABLE	
MANUFACTURER	**MODEL**
SCHLAGE	**KNOB: F51** **DEADBOLT: B60**
KWIKSET	**KNOB: SIGNATURE SERIES** **DEADBOLT: SIGNATURE SERIES (980)**
HOPPE (THERMA-TRU)	**MULTIPOINT : MPDGART (3 pt. Manual Tongue)**

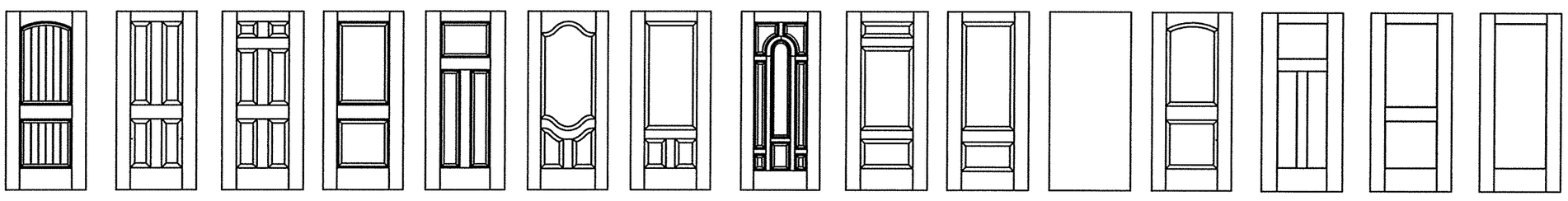

Fiber-Classic/Smooth-Star Door Panel Options

Products approved include all embossed and recessed panel doors.
Similar glazed panel configurations are allowed.
Panels shown are for illustration and are representative only.

LYNDON F. SCHMIDT LICENSE No. 43409 STATE OF FLORIDA PROFESSIONAL ENGINEER

July 22, 2020

Documents Prepared By:
Lyndon F. Schmidt
P.E. No. 43409

R.W. BUILDING CONSULTANTS, INC.
P.O. Box 230, Valrico, FL 33595
Phone No.: 813.659.9197
FBPE Registry No. 9813

PRODUCT: THERMA-TRU FIBERGLASS DOOR

PART OR ASSEMBLY: ELEVATIONS

REVISIONS

NO.	DATE		BY
4	7/21/20	UPDATE TO 7th ED (2020) FBC	LFS
3	10/09/18	REV. DOOR PANEL OPTION NOTE	MT
2	11/15/17	RECESSED PANEL NOTATION	JK
1	7/7/17	UPDATE TO 6th ED (2017) FBC	JK

DATE: 5/26/16
SCALE: N.T.S.
DWG. BY: JK
CHK. BY: LFS
DRAWING NO.: FL-20461.1
SHEET 3 OF 11

© 2016 R.W. BUILDING CONSULTANTS INC.

R:\Clients\Therma Tru PERMANENT\A - Florida Product Approvals\FL-20461 Structural TT SS\C - Drawings\FL 20461 (2020)\FL-20461.1-5.dwg, 3.1

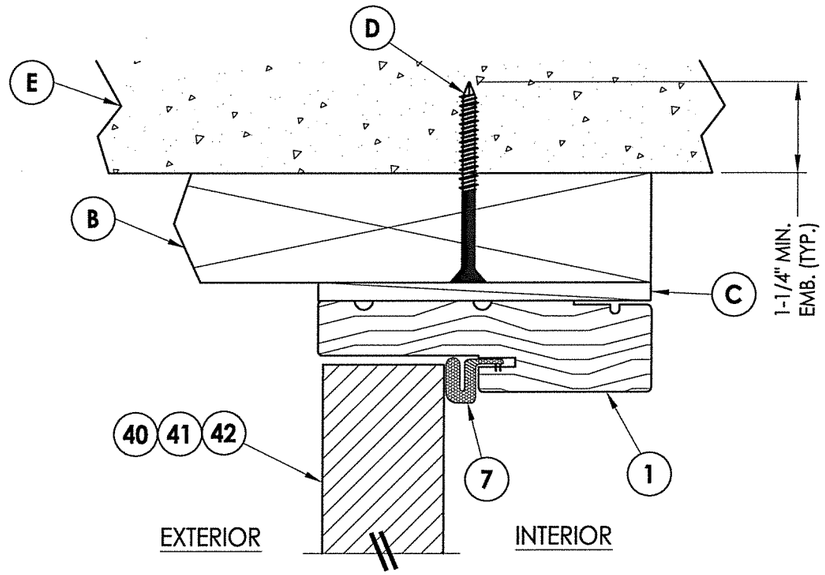

1/4 VERTICAL CROSS SECTION
Shown w/ 2X Buck
Outswing shown (Inswing similar)

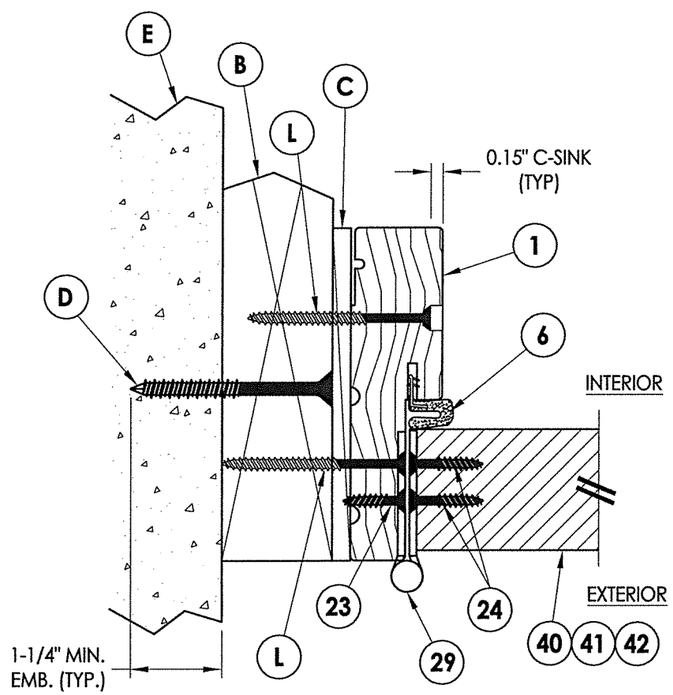

2/4 HORIZONTAL CROSS SECTION
Shown w/ 2X Buck
Outswing shown (Inswing similar)

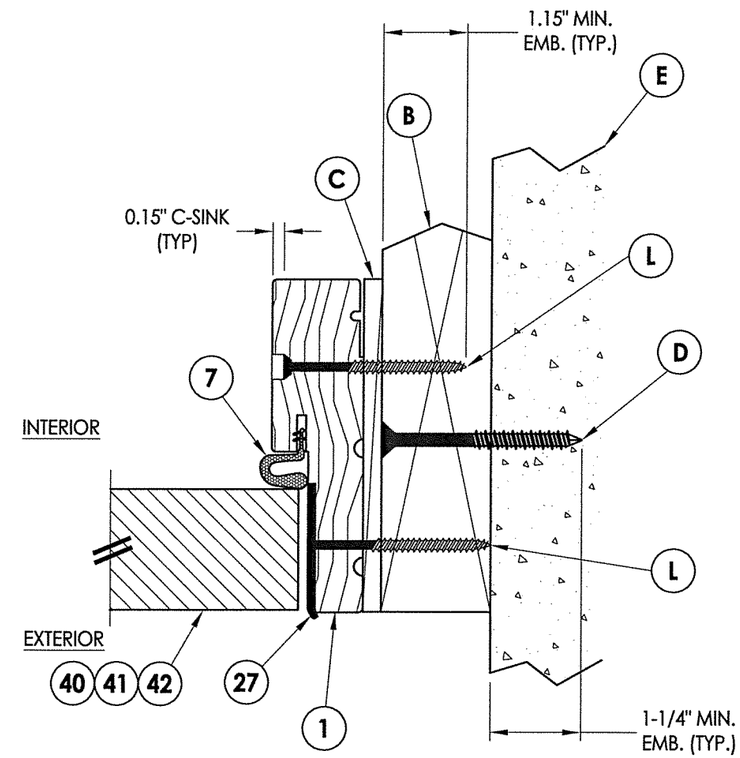

3/4 HORIZONTAL CROSS SECTION
Shown w/ 2X Buck
Outswing shown (Inswing similar)

STATE OF FLORIDA
PROFESSIONAL ENGINEER
LICENSE
No. 43409
L. F. SCHMIDT

July 22, 2020

Documents Prepared By:
Lyndon F. Schmidt
P.E. No. 43409

R.W. BUILDING CONSULTANTS, INC.
P.O. Box 230, Valrico, FL 33595
Phone No.: 813.659.9197
FBPE Registry No. 9813

PRODUCT: THERMA-TRU FIBERGLASS DOOR

PART OR ASSEMBLY: HORIZONTAL & VERTICAL CROSS SECTIONS (2X BUCK)

NO.	DATE	BY
4	7/21/20	UPDATE TO 7th ED (2020) FBC	LFS
3	10/09/18	REV. DOOR PANEL OPTION NOTE	MT
2	11/15/17	RECESSED PANEL NOTATION	JK
1	7/7/17	UPDATE TO 6th ED (2017) FBC	JK

REVISIONS

DATE: 5/26/16
SCALE: N.T.S.
DWG. BY: JK
CHK. BY: LFS
DRAWING NO.: FL-20461.1
SHEET 4 OF 11

© 2016 R.W. BUILDING CONSULTANTS INC.

R:\Clients\Therma Tru PERMANENT\A - Florida Product Approvals\FL-20461 Structural TT SS\C - Drawings\FL 20461 (2020)\FL-20461.1-5.dwg, 4.1

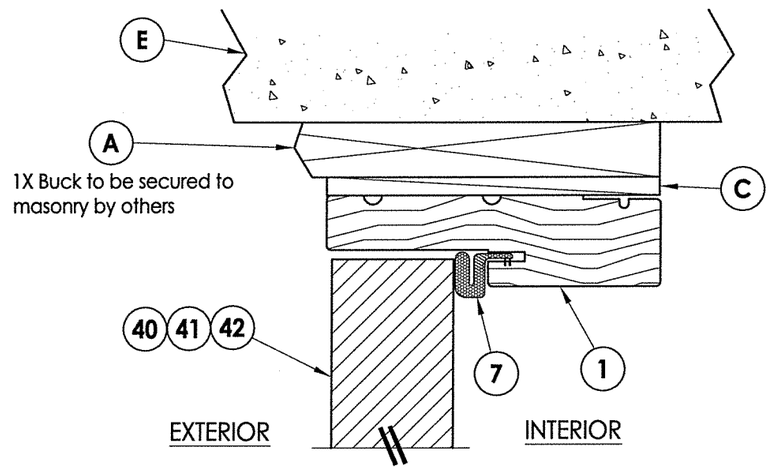

1/5 VERTICAL CROSS SECTION
Shown w/ 1X sub-buck
Outswing shown (Inswing similar)

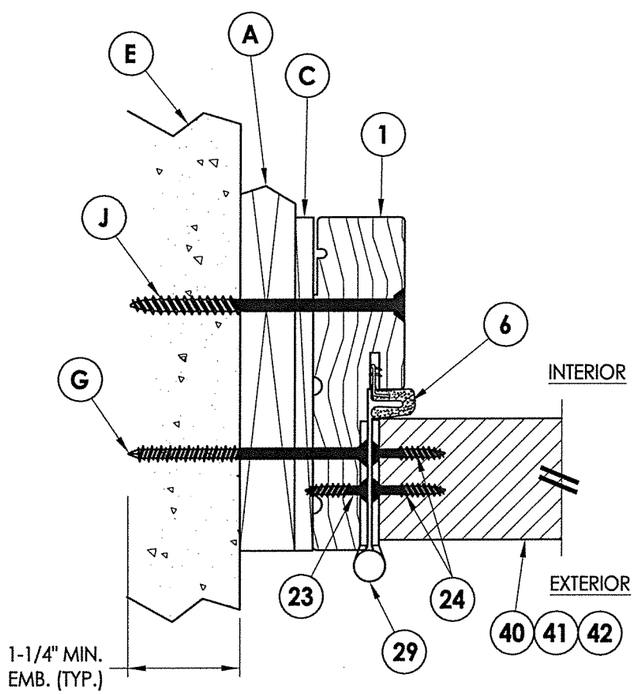

2/5 HORIZONTAL CROSS SECTION
Shown w/ 1X sub-buck
Outswing shown (Inswing similar)

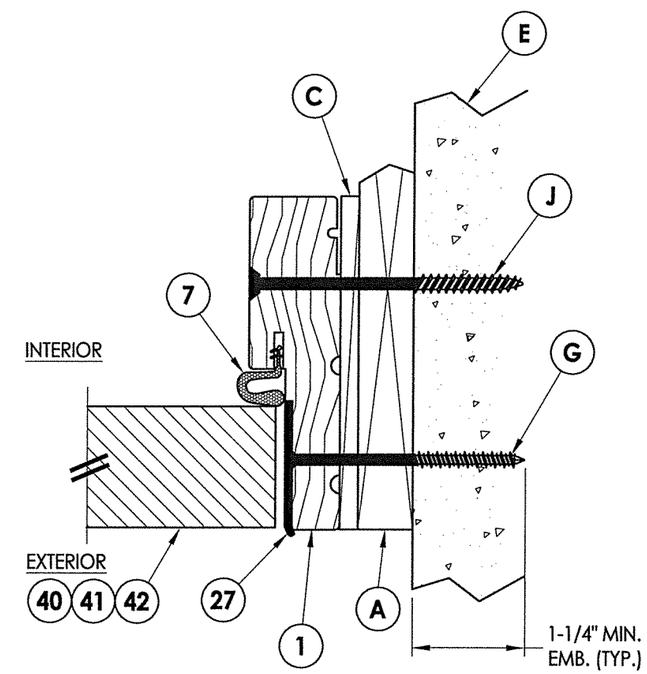

3/5 HORIZONTAL CROSS SECTION
Shown w/ 1X sub-buck
Outswing shown (Inswing similar)

L. F. SCHMIDT
LICENSE
No. 43409
STATE OF FLORIDA
PROFESSIONAL ENGINEER

July 22, 2020

Documents Prepared By:
Lyndon F. Schmidt
P.E. No. 43409

BUILDING CONSULTANTS, INC.
P.O. Box 230, Valrico, FL 33595
Phone No.: 813.659.9197
FBPE Registry No. 9813

PRODUCT: THERMA-TRU FIBERGLASS DOOR

PART OR ASSEMBLY: HORIZONTAL & VERTICAL CROSS SECTIONS (1X BUCK)

NO.	DATE	REVISIONS	BY
4	7/21/20	UPDATE TO 7th ED (2020) FBC	LFS
3	10/09/18	REV. DOOR PANEL OPTION NOTE	MT
2	11/15/17	RECESSED PANEL NOTATION	JK
1	7/7/17	UPDATE TO 6th ED (2017) FBC	JK

DATE: 5/26/16
SCALE: N.T.S.
DWG. BY: JK
CHK. BY: LFS
DRAWING NO.: FL-20461.1
SHEET 5 OF 11

© 2016 R.W. BUILDING CONSULTANTS INC.

R:\Clients\Therma Tru PERMANENT\A - Florida Product Approvals\FL-20461 Structural TT SS\C - Drawings\FL 20461 (2020)\FL-20461.1-5.dwg, 5.1

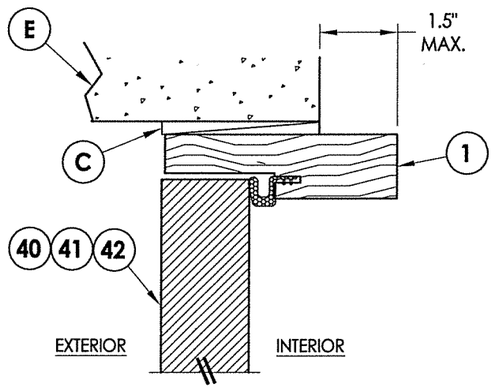

1/6 VERTICAL CROSS SECTION
Shown Direct to Masonry
Outswing only w/ 4-9/16" jamb

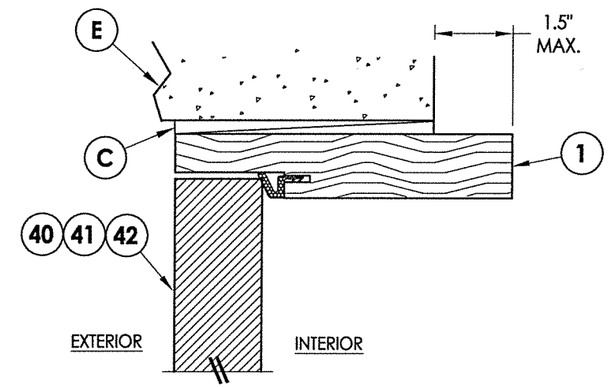

4/6 VERTICAL CROSS SECTION
Shown Direct to Masonry
Outswing only w/ 6-9/16" jamb

DIRECT TO MASONRY MAX. DESIGN PRESSURE:
w/ STANDARD STRIKE = ± 55 PSF
w/ SECURITY STRIKE = ± 65 PSF

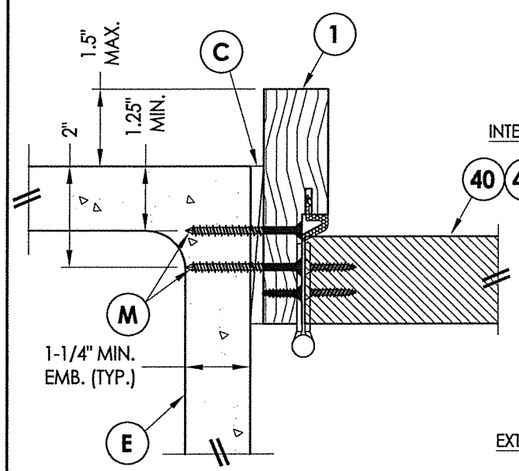

2/6 HORIZONTAL CROSS SECTION
Shown Direct to Masonry
Outswing only w/ 4-9/16" jamb

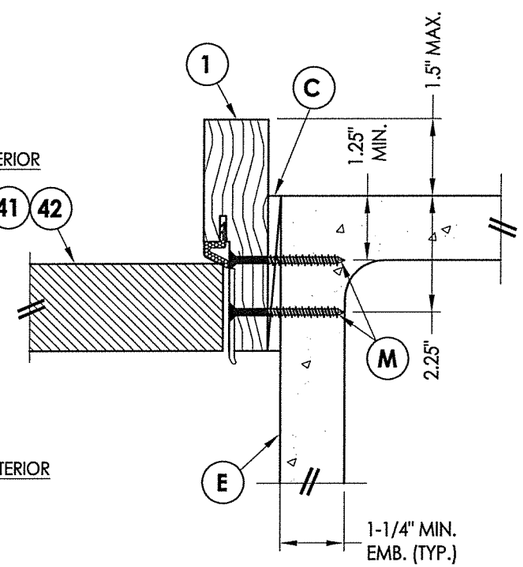

3/6 HORIZONTAL CROSS SECTION
Shown Direct to Masonry
Outswing only w/ 4-9/16" jamb

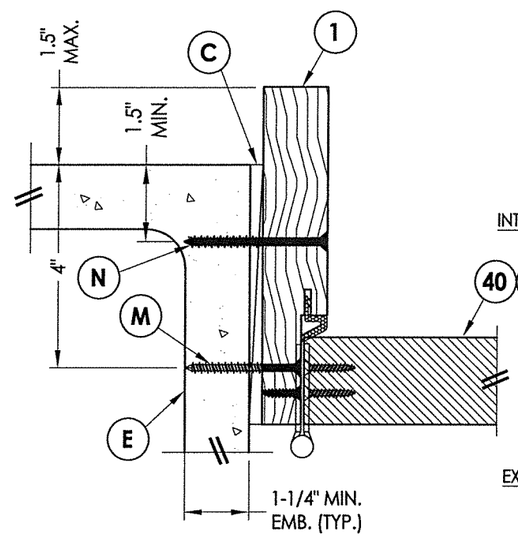

5/6 HORIZONTAL CROSS SECTION
Shown Direct to Masonry
Outswing only w/ 6-9/16" jamb

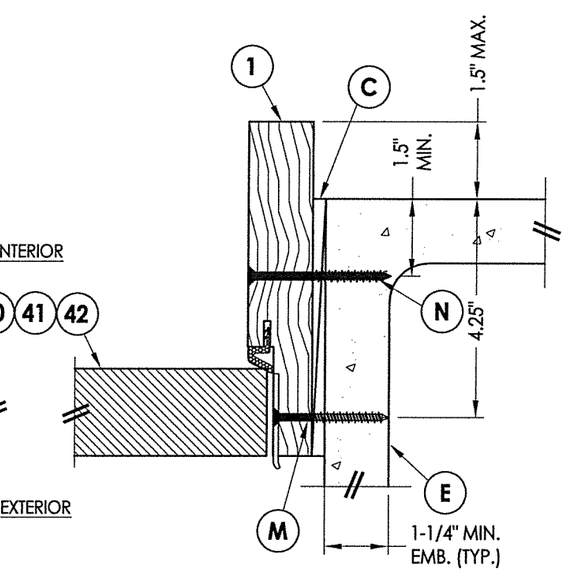

6/6 HORIZONTAL CROSS SECTION
Shown Direct to Masonry
Outswing only w/ 6-9/16" jamb

L. F. SCHMIDT
LICENSE
No. 43409
STATE OF FLORIDA
PROFESSIONAL ENGINEER

July 22, 2020

Documents Prepared By:
Lyndon F. Schmidt
P.E. No. 43409

R.W. BUILDING CONSULTANTS, INC.
P.O. Box 230, Valrico, FL 33595
Phone No.: 813.659.9197
FBPE Registry No. 9813

PRODUCT: THERMA-TRU FIBERGLASS DOOR

PART OR ASSEMBLY: HORIZONTAL & VERTICAL SECTIONS (DIRECT TO MASONRY)

REVISIONS

NO.	DATE		BY
4	7/21/20	UPDATE TO 7th ED (2020) FBC	LFS
3	10/09/18	REV. DOOR PANEL OPTION NOTE	MT
2	11/15/17	RECESSED PANEL NOTATION	JK
1	7/7/17	UPDATE TO 6th ED (2017) FBC	JK

DATE: 5/26/16
SCALE: N.T.S.
DWG. BY: JK
CHK. BY: LFS
DRAWING NO.: FL-20461.1
SHEET 6 OF 11

© 2016 R.W. BUILDING CONSULTANTS INC.

R:\Clients\Therma Tru PERMANENT\A - Florida Product Approvals\FL-20461 Structural TT SS\C - Drawings\FL 20461 (2020)\FL-20461.1-5.dwg, 6.1

Notes:
1. Sill Item #'s 17, 18, 32, 34, 35, 36, 37, 38 & 39 are attached to jambs w/ (3) #8 X 2-1/2" pfh screws at each end.
   Sill Item #'s 16 & 33 are attached to jambs w/ (2) #8 X 2-1/2" pfh screws at each end.
   Sill Item #15 is attached to jambs utilizing (2) #10 X 2" pph SMS at each end.

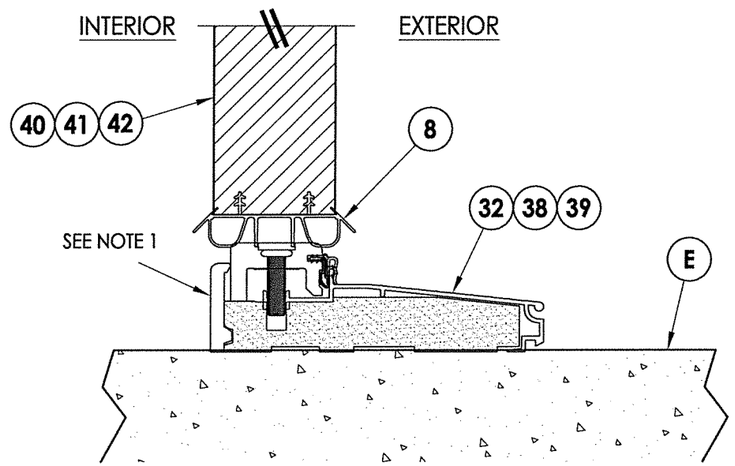

1/7 **VERTICAL CROSS SECTION**
Inswing Sill

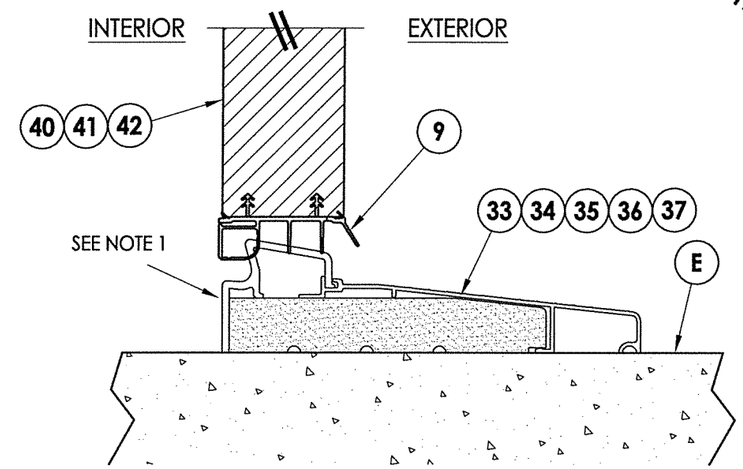

2/7 **VERTICAL CROSS SECTION**
Inswing Sill

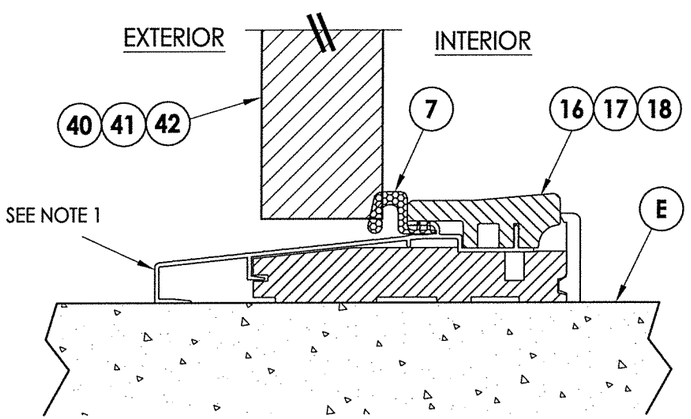

3/7 **VERTICAL CROSS SECTION**
Outswing Sill

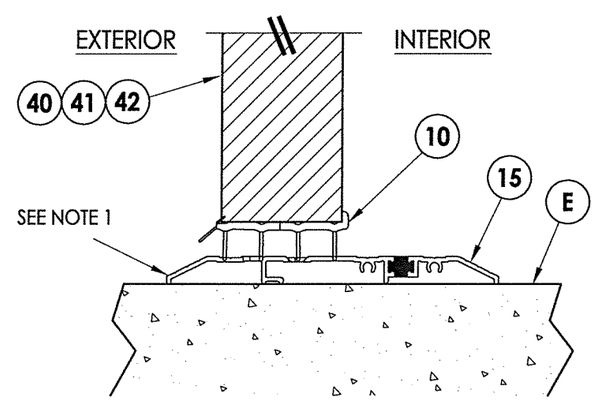

4/7 **VERTICAL CROSS SECTION**
Public Access Sill

L. F. SCHMIDT
LICENSE
No. 43409
STATE OF FLORIDA
PROFESSIONAL ENGINEER

July 22, 2020

Documents Prepared By:
Lyndon F. Schmidt
P.E. No. 43409

RW BUILDING CONSULTANTS, INC.
P.O. Box 230, Valrico, FL 33595
Phone No.: 813.659.9197
FBPE Registry No. 9813

PRODUCT: THERMA-TRU FIBERGLASS DOOR

PART OR ASSEMBLY: VERTICAL CROSS SECTIONS (THRESHOLDS)

NO.	DATE	BY
4	7/21/20	LFS
3	10/09/18	MT
2	11/15/17	JK
1	7/7/17	JK

REVISIONS

DATE: 5/26/16
SCALE: N.T.S.
DWG. BY: JK
CHK. BY: LFS
DRAWING NO.: FL-20461.1
SHEET 7 OF 11

© 2016 R.W. BUILDING CONSULTANTS INC.

R:\Clients\Therma Tru PERMANENT\A - Florida Product Approvals\FL-20461 Structural TT SS\C - Drawings\FL 20461 (2020)\FL-20461.1-5.dwg, 7.1

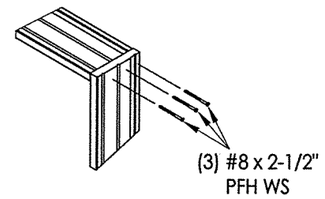

JAMB TO HEAD DETAIL
(TYP.)

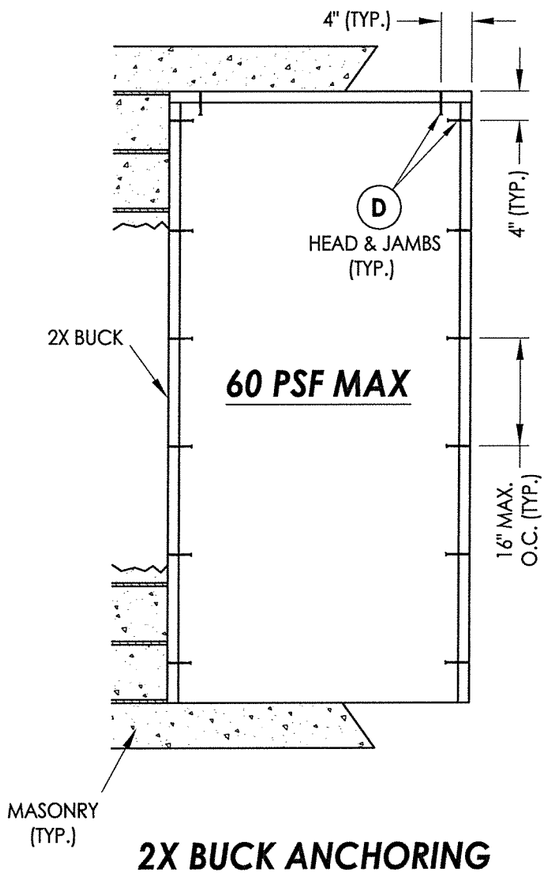

2X BUCK ANCHORING

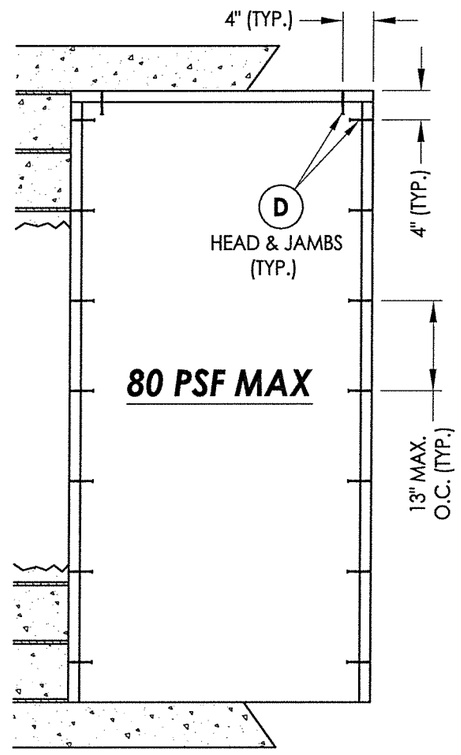

2X BUCK ANCHORING

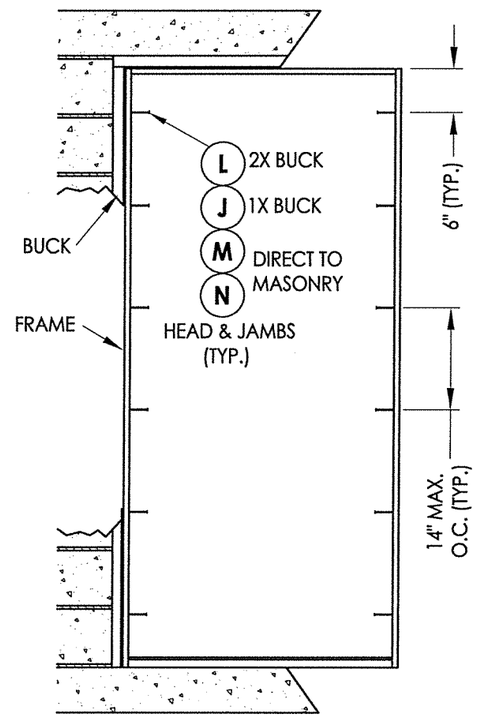

FRAME ANCHORING

L. F. SCHMIDT
LICENSE
No. 43409
STATE OF FLORIDA
PROFESSIONAL ENGINEER

July 22, 2020

Documents Prepared By:
Lyndon F. Schmidt
P.E. No. 43409

BUILDING CONSULTANTS, INC.
P.O. Box 230, Valrico, FL 33595
Phone No.: 813.659.9197
FBPE Registry No. 9813

PRODUCT: THERMA-TRU FIBERGLASS DOOR

PART OR ASSEMBLY: BUCK & FRAME ANCHORING

NO.	DATE	REVISIONS	BY
4	7/21/20	UPDATE TO 7th ED (2020) FBC	LFS
3	10/09/18	REV. DOOR PANEL OPTION NOTE	MT
2	11/15/17	RECESSED PANEL NOTATION	JK
1	7/7/17	UPDATE TO 6th ED (2017) FBC	JK

DATE: 5/26/16
SCALE: N.T.S.
DWG. BY: JK
CHK. BY: LFS
DRAWING NO.: FL-20461.1
SHEET 8 OF 11

© 2016 R.W. BUILDING CONSULTANTS INC.

R:\Clients\Therma Tru PERMANENT\A - Florida Product Approvals\FL-20461 Structural TT SS\C - Drawings\FL 20461 (2020)\FL-20461.1-5.dwg, 8.1

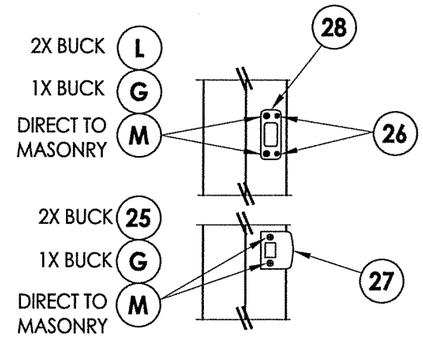

LATCH & DEADBOLT DETAIL
Kwikset

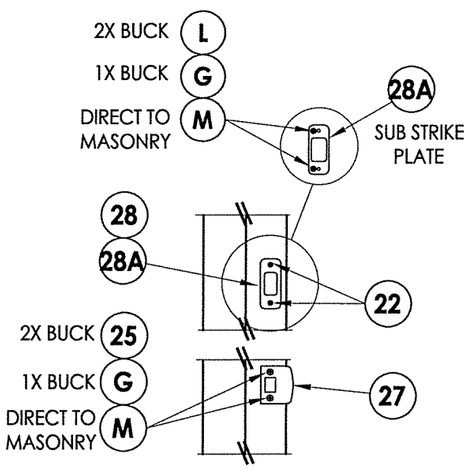

LATCH & DEADBOLT DETAIL
Schlage

LATCH & DEADBOLT STRIKE DETAILS
(Standard Deadbolt Strike Plate)

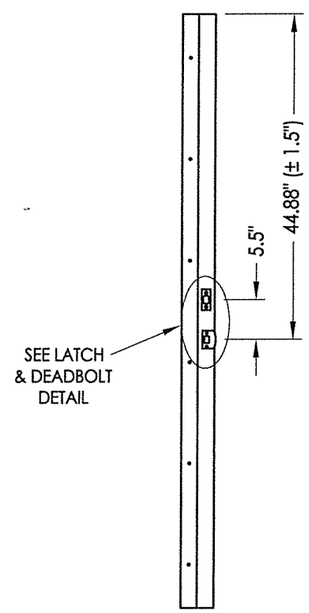

STRIKE JAMB
Latch and Deadbolt

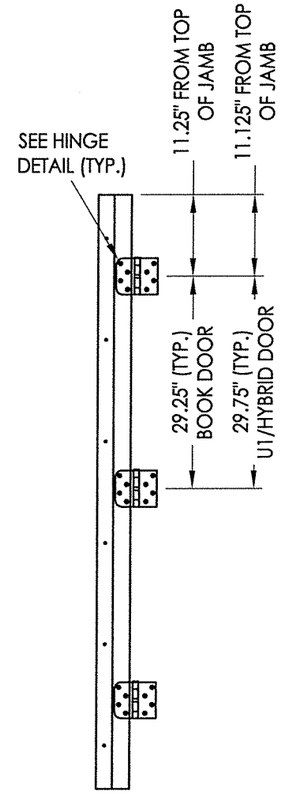

HINGE JAMB

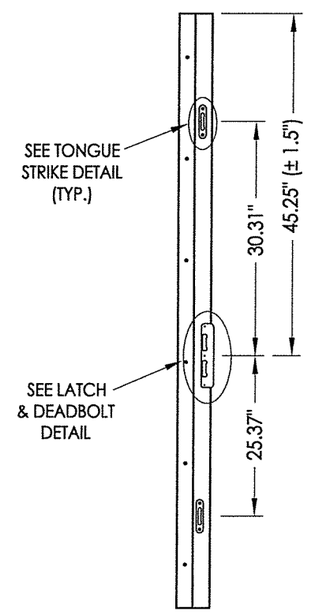

STRIKE JAMB
Multipoint Lock

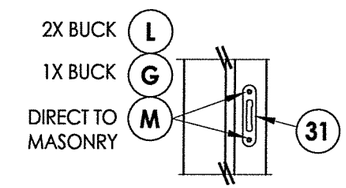

TONGUE STRIKE DETAIL
Multipoint Lock

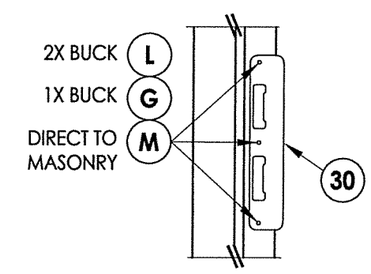

LATCH & DEADBOLT DETAIL
Multipoint Lock

MULTIPOINT LOCK STRIKE DETAILS

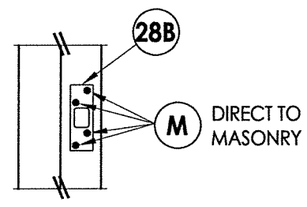

DEADBOLT STRIKE DETAILS
(Security Deadbolt Strike Plate)

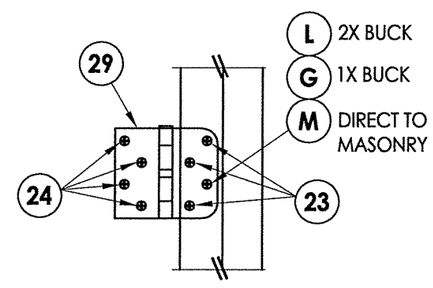

HINGE DETAIL

L. F. SCHMIDT
LICENSE
No. 43409
STATE OF FLORIDA
PROFESSIONAL ENGINEER

July 22, 2020

Documents Prepared By:
Lyndon F. Schmidt
P.E. No. 43409
BUILDING CONSULTANTS, INC.
P.O. Box 230, Valrico, FL 33595
Phone No.: 813.659.9197
FBPE Registry No. 9813

PRODUCT: THERMA-TRU FIBERGLASS DOOR

PART OR ASSEMBLY: HARDWARE DETAILS

NO.	DATE	REVISIONS	BY
4	7/21/20	UPDATE TO 7th ED (2020) FBC	LFS
3	10/09/18	REV. DOOR PANEL OPTION NOTE	MT
2	11/15/17	RECESSED PANEL NOTATION	JK
1	7/7/17	UPDATE TO 6th ED (2017) FBC	JK

DATE: 5/26/16
SCALE: N.T.S.
DWG. BY: JK
CHK. BY: LFS
DRAWING NO.: FL-20461.1
SHEET 9 OF 11

© 2016 R.W. BUILDING CONSULTANTS INC.

R:\Clients\Therma Tru PERMANENT\A - Florida Product Approvals\FL-20461 Structural TT SS\C - Drawings\FL 20461 (2020)\FL-20461.1-5.dwg, 9.1

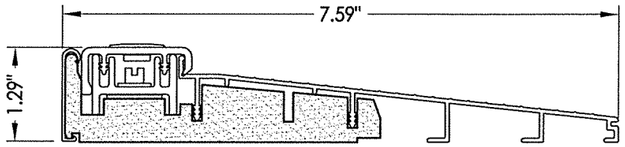

32 INSWING THRESHOLD
Inswing Basic Composite Adjustable Sill 7-1/2"

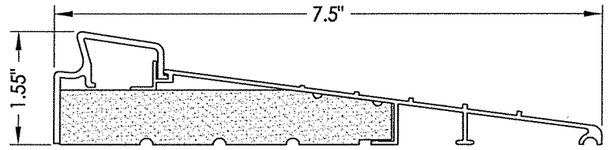

37 INSWING THRESHOLD
Inswing Basic Fixed 7-1/2" Sill

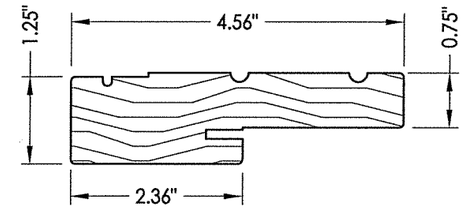

1 WOOD JAMB

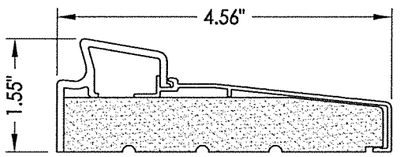

33 INSWING THRESHOLD
Inswing Basic Fixed Sill

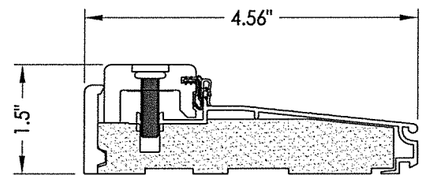

38 INSWING THRESHOLD
Inswing Composite Adjustable Sill

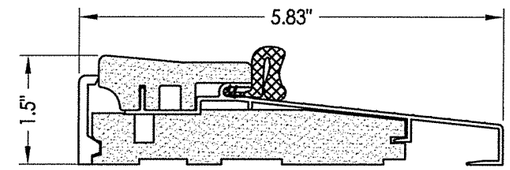

16 OUTSWING THRESHOLD
Composite Sill

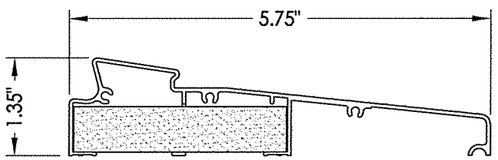

34 INSWING THRESHOLD
Inswing Moderate Climate Sill 1-3/8"

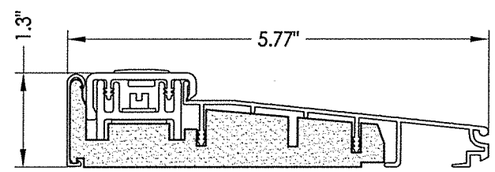

39 INSWING THRESHOLD
Inswing Basic Composite Adjustable Sill

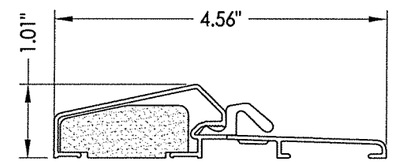

17 OUTSWING THRESHOLD
Composite / Aluminum Sill

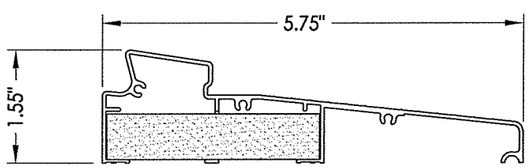

35 INSWING THRESHOLD
Inswing Moderate Climate Sill

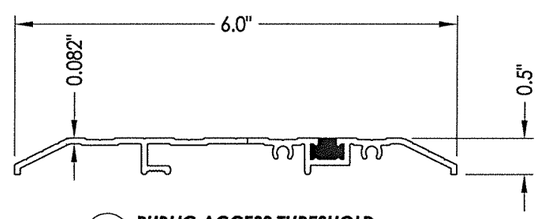

15 PUBLIC ACCESS THRESHOLD

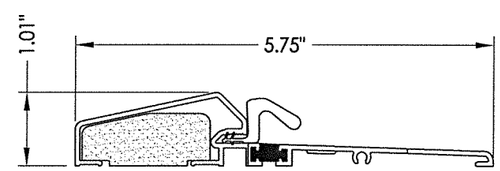

18 OUTSWING THRESHOLD
Composite / Aluminum Sill
(Thermal Break)

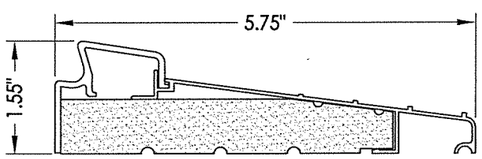

36 INSWING THRESHOLD
Inswing Basic Fixed 5-3/4" Sill

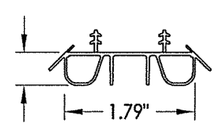

8 SWEEP

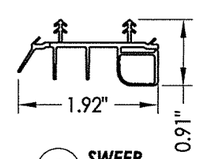

9 SWEEP

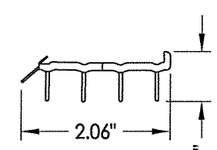

10 SWEEP

STATE OF FLORIDA
L. F. SCHMIDT
LICENSE No. 43409
PROFESSIONAL ENGINEER

July 22, 2020

Documents Prepared By:
Lyndon F. Schmidt
P.E. No. 43409

BUILDING CONSULTANTS, INC.
P.O. Box 230, Valrico, FL 33595
Phone No.: 813.659.9197
FBPE Registry No. 9813

PRODUCT: THERMA-TRU FIBERGLASS DOOR

PART OR ASSEMBLY: COMPONENTS

REVISIONS

NO.	DATE		BY
4	7/21/20	UPDATE TO 7th ED (2020) FBC	LFS
3	10/09/18	REV. DOOR PANEL OPTION NOTE	MT
2	11/15/17	RECESSED PANEL NOTATION	JK
1	7/7/17	UPDATE TO 6th ED (2017) FBC	JK

DATE: 5/26/16
SCALE: N.T.S.
DWG. BY: JK
CHK. BY: LFS
DRAWING NO.: FL-20461.1
SHEET 10 OF 11

© 2016 R.W. BUILDING CONSULTANTS INC.

R:\Clients\Therma Tru PERMANENT\A - Florida Product Approvals\FL-20461 Structural TT SSVC - Drawings\FL 20461 (2020)\FL-20461.1-5.dwg, 10.1

BILL OF MATERIALS

ITEM #	DESCRIPTION	MATERIAL
A	1X BUCK (SG >= 0.42)	WOOD
B	2X BUCK (SG >= 0.42)	WOOD
C	1/4" MAX. SHIM SPACE	-
D	1/4" X 2-3/4" PFH ELCO OR ITW CONCRETE SCREW	STEEL
E	MASONRY - 3,000 PSI MIN. CONCRETE CONFORMING TO ACI 301 OR HOLLOW BLOCK CONFORMING TO ASTM C90	CONCRETE
G	3/16" X 3-1/4" ITW CONCRETE SCREW	STEEL
J	1/4" X 3-3/4" PFH ELCO OR ITW CONCRETE SCREW	STEEL
L	#10 X 2-1/2" PFH WOOD SCREW (1.15" MIN. EMBEDMENT)	STEEL
M	3/16" X 2-1/4" ITW CONCRETE SCREW	STEEL
N	3/16" X 2-3/4" ITW CONCRETE SCREW	STEEL
1	JAMB (FINGER JOINT PINE)	WOOD
6	WEATHERSTRIP (MEDIUM REACH)	FOAM
7	WEATHERSTRIP (LONG REACH)	FOAM
8	SWEEP	VINYL
9	SWEEP (USE w/ MODERATE CLIMATE THRESHOLD)	VINYL
10	SWEEP (USE w/ PUBLIC ACCESS THRESHOLD)	VINYL
15	PUBLIC ACCESS THRESHOLD	ALUM
16	OUTSWING THRESHOLD	ALUM/COMP
17	OUTSWING THRESHOLD	ALUM/COMP
18	OUTSWING THRESHOLD	ALUM/COMP
22	#8 x 3/4" PFH WOOD SCREW	STEEL
23	#10 x 3/4" PFH WOOD SCREW	STEEL
24	#10 x 1" PFH WOOD SCREW	STEEL

BILL OF MATERIALS

ITEM #	DESCRIPTION	MATERIAL
25	#8 x 2-1/2" PFH WOOD SCREW	STEEL
26	#8 x 5/8" PFH WOOD SCREW	STEEL
27	LATCH STRIKE PLATE	STEEL
28	DEADBOLT STRIKE PLATE (STANDARD)	STEEL
28A	DEADBOLT SUB STRIKE PLATE	STEEL
28B	DEADBOLT STRIKE PLATE (SECURITY)	STEEL
29	4" X 4" HINGE	STEEL
30	LATCH & DEADBOLT STRIKE PLATE (TONGUE SYSTEM)	ALUM/COMP
31	MULTIPOINT STRIKE PLATE (TONGUE SYSTEM)	ALUM/COMP
32	INSWING THRESHOLD	ALUM/COMP
33	INSWING THRESHOLD	ALUM/COMP
34	INSWING THRESHOLD	ALUM/COMP
35	INSWING THRESHOLD	ALUM/COMP
36	INSWING THRESHOLD	ALUM/COMP
37	INSWING THRESHOLD	ALUM/COMP
38	INSWING THRESHOLD	ALUM/COMP
39	INSWING THRESHOLD	ALUM/COMP
40	DOOR PANEL (BOOK)	-
41	DOOR PANEL (HYBRID)	-
42	DOOR PANEL (U1)	-

CONCRETE ANCHOR NOTES:

1. *Concrete anchor locations at the corners may be adjusted to maintain the min. edge distance to mortar joints.*
2. *Concrete anchor locations noted as "MAX. ON CENTER" must be adjusted to maintain the min. edge distance to mortar joints, additional concrete anchors may be required to ensure the "MAX. ON CENTER" dimension are not exceeded.*
3. *Concrete anchor table:*

ANCHOR TYPE	ANCHOR SIZE	MIN. EMBEDMENT	MIN. CLEARANCE TO MASONRY EDGE	MIN. CLEARANCE TO ADJACENT ANCHOR
ITW TAPCON®	1/4"	1-1/4"	2"	4"
ELCO ULTRACON®	1/4"	1-1/4"	1"	4"
ITW TAPCON®	3/16"	1-1/4"	AS SHOWN	1-1/2"

WOOD SCREW INSTALLATION NOTES:

1. *Maintain a minimum 5/8" edge distance, 1" end distance, & 1" o.c. spacing of wood screws to prevent the splitting of wood.*

L.F. SCHMIDT LICENSE No. 43409 STATE OF FLORIDA PROFESSIONAL ENGINEER

July 22, 2020

Documents Prepared By:
Lyndon F. Schmidt
P.E. No. 43409

RW BUILDING CONSULTANTS, INC.
P.O. Box 230, Valrico, FL 33595
Phone No.: 813.659.9197
FBPE Registry No. 9813

PRODUCT: *THERMA-TRU FIBERGLASS DOOR*

PART OR ASSEMBLY: *BILL OF MATERIALS*

REVISIONS

NO.	DATE		BY
4	7/21/20	UPDATE TO 7th ED (2020) FBC	LFS
3	10/09/18	REV. DOOR PANEL OPTION NOTE	MT
2	11/15/17	RECESSED PANEL NOTATION	JK
1	7/7/17	UPDATE TO 6th ED (2017) FBC	JK

DATE: 5/26/16
SCALE: N.T.S.
DWG. BY: JK
CHK. BY: LFS
DRAWING NO.: FL-20461.1
SHEET 11 OF 11

© 2016 R.W. BUILDING CONSULTANTS INC.

R:\Clients\Therma Tru PERMANENT\A - Florida Product Approvals\FL-20461 Structural TT SS\C - Drawings\FL 20461 (2020)\FL-20461.1-5.dwg, 11.1