ITW Building Components Group, Inc.

1950 Marley Drive Haines City, FL 33844
Florida Engineering Certificate of Authorization Number 0 278
Florida Certificate of Product Approval # FL1999
Page 1 of 1 Document ID 1UUP487-Z0220133321

WILLIAM H. KRICK LICENSE No. 70861 STATE OF FLORIDA PROFESSIONAL ENGINEER
03/20/2013

Truss Fabricator	Anderson Truss Company
Job Identification	13-105--Trademark Construction McDuffie Residence -- Lake City, FL
Truss Count	44
Model Code	Florida Building Code 2010
Truss Criteria	FBC2010Res/TPI-2007(STD)
Engineering Software	Alpine Software,Version 10.03.
Structural Engineer of Record	The identity of the structural EOR did not exist as of
Address	the seal date per section 61G15-31.003(5a) of the FAC
Minimum Design Loads	Roof - 37.0 PSF @ 1.25 Duration
	Floor - N/A
	Wind - 120 MPH ASCE 7-10 -Closed

Notes

1. Determination as to the suitability of these truss components for the structure is the responsibility of the building designer/engineer of record, as defined in ANSI/TPI 1
2. The drawing date shown on this index sheet must match the date shown on the individual truss component drawing.
3. As shown on attached drawings; the drawing number is preceded by: HCUSR487

William H Krick
-Truss Design Engineer-

1950 Marley Drive
Haines City, FL 33844

Details: BRCLBSUB-12015EC1-GBLLETIN-GABRST10-PB140-VAL16010-VAL140-12030EC1-

#	Ref Description	Drawing#	Date
1	09646-A 47'4" Stepdown	13079042	03/20/13
2	09647-A1 47'4" Stepdow	13079043	03/20/13
3	09648-A1PB 17'3"15 Com	13079044	03/20/13
4	09649-A2 47'4" Stepdow	13079045	03/20/13
5	09650-A2PB 17'3"15 Ste	13079046	03/20/13
6	09651-A3 47'4" Stepdow	13079047	03/20/13
7	09652-A3PB 17'3"15 Ste	13079048	03/20/13
8	09653-A3PB2 17'3"15 St	13079049	03/20/13
9	09654-A3PB3 17'3"15 St	13079050	03/20/13
10	09655-AS 35'10" Stepdo	13079051	03/20/13
11	09656--B 21'8" Common	13079052	03/20/13
12	09657--B1 21'8" Common	13079053	03/20/13
13	09658--B2 18'7" Common	13079054	03/20/13
14	09659--BDG 21'8" Gable	13079055	03/20/13
15	09660--C 13'2" Common	13079056	03/20/13
16	09661--CDG 13'2" Gable	13079057	03/20/13
17	09662-CG 13'2" Common	13079058	03/20/13
18	09663--CJ1 1' Jack	13079059	03/20/13
19	09664--CJ3 3' Jack	13079060	03/20/13
20	09665--CJ5 5' Jack	13079061	03/20/13
21	09666--D 9'10" Common	13079062	03/20/13
22	09667--DDG 9'10" Gable	13079063	03/20/13
23	09668--EJ7 7' End Jack	13079064	03/20/13
24	09669-EJ7A 7' End Jack	13079065	03/20/13
25	09670-H11AE 31'6" Spec	13079066	03/20/13
26	09671-H11AW 47'4" Spec	13079067	03/20/13
27	09672-H13AE 31'6" Spec	13079068	03/20/13
28	09673-H13AW 47'4" Spec	13079084	03/20/13
29	09674-H15AE 31'6" Spec	13079069	03/20/13
30	09675-H15AW 47'4" Step	13079085	03/20/13
31	09676-H17AE 31'6" Mono	13079070	03/20/13
32	09677-H17PB 16'6" Step	13079071	03/20/13
33	09678-H19AE 35'10" Ste	13079072	03/20/13
34	09679-H7AE 31'6" Mono	13079073	03/20/13
35	09680-H7AW 47'4" Speci	13079074	03/20/13
36	09681-H9AE 31'6" Mono	13079075	03/20/13
37	09682-H9AW 47'4" Speci	13079076	03/20/13
38	09683-HJ7 9'10"13 Hip	13079077	03/20/13
39	09684-V1 16'3"8 Valley	13079078	03/20/13
40	09685-V2 13'2"3 Valley	13079079	03/20/13
41	09686-V3 10'0"14 Valle	13079080	03/20/13
42	09687-V4 6'11"8 Valley	13079081	03/20/13
43	09688-V5 3'10"3 Valley	13079082	03/20/13
44	09689-VDG 19'4"14 Vall	13079083	03/20/13

ALPINE

COLUMBIA COUNTY BUILDING DEPT. Received for FILE COPY Code Compliance PLANS EXAMINER

(13-105--Trademark Construction McDuffie Residence -- Lake City, FL - A 47 4" Stepdown Hip)

Top chord 2x4 SP_#1_12A
Bot chord 2x4 SP_#1_12A
Webs 2x4 SP_#3__12A

Lumber grades designated with "12A' use design values approved 1/5/2012 by ALSC

Roof overhang supports 2 00 psf soffit load

In lieu of structural panels use purlins to brace all flat TC @ 24' OC

WARNING Furnish a copy of this DWG to the installation contractor Special care must be taken during handling, shipping and installation of trusses See "WARNING" note below

120 mph wind, 15 00 ft mean hgt, ASCE 7-10, CLOSED bldg, not located within 13 00 ft from roof edge, RISK CAT II, EXP B, wind TC DL=3 5 psf, wind BC DL=5 0 psf GCpi(+/-)=0 18

Wind loads and reactions based on MWFRS with additional C&C member design

(a) Continuous lateral bracing equally spaced on member

Bottom chord checked for 10 00 psf non-concurrent live load

Deflection meets L/240 live and L/180 total load Creep increase factor for dead load is 1 50

MWFRS loads based on trusses located at least 15 00 ft from roof edge

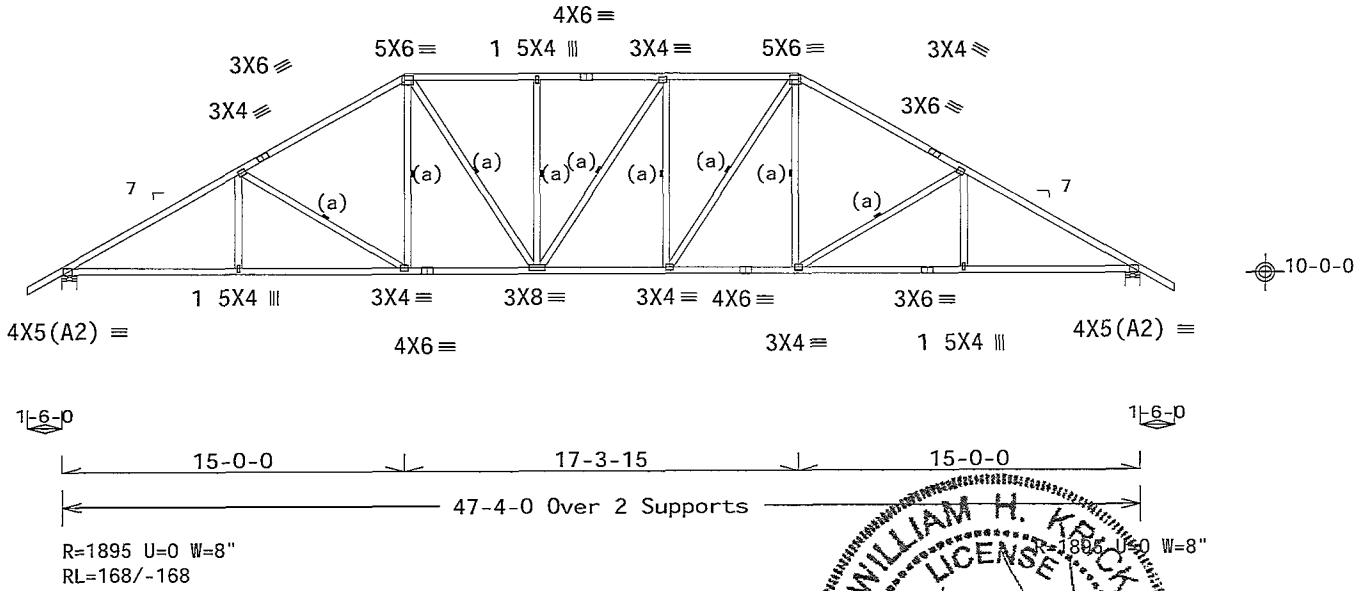

Design Crit FBC2010Res/TPI-2007(STD)
FT/RT=10%(0%)/0(0)

PLT TYP. Wave

10.03 11 0209.20 / 1 QTY 1

FL/-/4/-/-/R/-

Scale =.125"/Ft

WILLIAM H. KRUCK LICENSE No. 70861 STATE OF FLORIDA PROFESSIONAL ENGINEER
03/20/2013

ALPINE
ITW Building Components Group Inc.
Haines City, FL 33844
FL COA #0 278

WARNING READ AND FOLLOW ALL NOTES ON THIS SHEET!
IMPORTANT FURNISH THIS DESIGN TO ALL CONTRACTORS INCLUDING INSTALLERS

Trusses requ re extreme care in fabricating handling shipping installing and bracing Refer to and follow the latest edition of BCSI (Building Component Safety Information by TPI and WTCA) for safety practices pr or to performing these functions Installers shall provide temporary bracing per BCSI Unless noted otherw se top chord shall have properly attached structural sheathing and bottom chord shall have a properly attached r gid ceiling Locations shown for permanent lateral restraint of webs shall have brac ng installed per BCSI sections B3 B7 or B10 as applicable

ITW Building Components Group Inc (ITWBCG) shall not be respons ble for any deviation from this design any fa lure to build the truss in conformance with ANSI/TPI 1 or for handling sh pping installation & bracing of trusses Apply plates to each face of truss and pos t on as shown above and on the Joint Deta ls unless noted otherwise Refer to drawings 160A-Z for standard plate positions A seal on this draw ng or cover page listing this draw ng indicates acceptance of professional engineering respons b l ty solely for the design shown The suitab lity and use of this design for any structure is the respons bility of the Building Designer per ANSI/TPI 1 Sec 2 For more information see Th s job s general notes page ITW-BCG www itwbcg com TPI www tpinst org WTCA www sbcindustry com ICC www ccsafe org

TC LL	20.0 PSF	REF	R487-- 9646
TC DL	7 0 PSF	DATE	03/20/13
BC DL	10.0 PSF	DRW	HCUSR487 13079042
BC LL	0.0 PSF	HC-ENG	WHK/WHK
TOT.LD.	37 0 PSF	SEQN-	69630
DUR.FAC.	1.25		
SPACING	24.0"	JREF-	1UUP487_Z02

(13-105--Trademark Construction McDuffie Residence -- Lake City, FL - A1 47 4" Stepdown Hip)

Top chord 2x4 SP_#1_12A
Bot chord 2x4 SP_#1_12A
Webs 2x4 SP_#3__12A

Lumber grades designated with "12A" use design values approved 1/5/2012 by ALSC

Roof overhang supports 2 00 psf soffit load

In lieu of structural panels use purlins to brace all flat TC @ 24" OC

Bottom chord checked for 10 00 psf non-concurrent live load

WARNING Furnish a copy of this DWG to the installation contractor Special care must be taken during handling, shipping and installation of trusses See "WARNING" note below

120 mph wind, 15 00 ft mean hgt, ASCE 7-10, CLOSED bldg, not located within 13 00 ft from roof edge, RISK CAT II, EXP B, wind TC DL=3 5 psf, wind BC DL=5 0 psf GCpi(+/-)=0 18

Wind loads and reactions based on MWFRS with additional C&C member design

(a) Continuous lateral bracing equally spaced on member

Truss passed check for 20 psf additional bottom chord live load in areas with 42"-high x 24"-wide clearance

Deflection meets L/240 live and L/180 total load Creep increase factor for dead load is 1 50

MWFRS loads based on trusses located at least 15 00 ft from roof edge

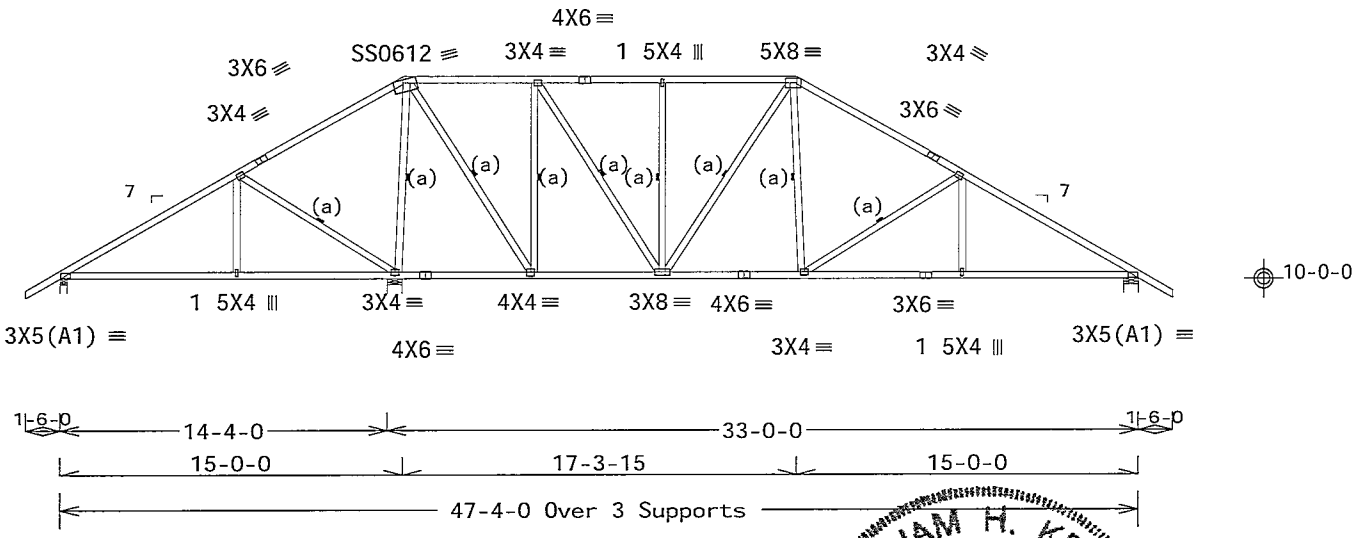

Design Crit· FBC2010Res/TPI-2007(STD)
PLT TYP. 18 Gauge HS,Wave FT/RT=10%(0%)/0(0) 10.03 11.0209.20 QTY 6 FL/-/4/-/-/R/- Scale =.125"/Ft.

ALPINE
ITW Building Components Group Inc.
Haines City, FL 33844
FL COA #0 278

WARNING READ AND FOLLOW ALL NOTES ON THIS SHEET!
IMPORTANT FURNISH THIS DESIGN TO ALL CONTRACTORS INCLUDING INSTALLERS

Trusses require extreme care in fabr cat ng handl ng sh pp ng nstalling and bracing Refer to and follow the latest edition of BCSI (Bu ld ng Component Safety Information by TPI and WTCA) for safety pract ces prior to performing these functions Installers shall provide temporary bracing per BCSI Unless noted otherwise top chord shall have properly attached structural sheath ng and bottom chord shall have a properly attached rigid ce l ng Locat ons shown for permanent lateral restra nt shall have bracing nstalled per BCSI sect ons B3 B7 or B10 as appl cable

ITW Building Components Group Inc (ITWBCG) shall not be responsible for any deviat on from th s draw ng any failure to build the truss n conformance with ANSI/TPI 1 or for handling shipp ng installation brac ng of trusses Apply plates to each face of truss and position as shown above and on the Jo nt Deta ls unless noted otherwise Refer to drawings 160A-Z for standard plate positions A seal on this draw ng or cover page listing this draw ng indicates acceptance of professional engineering responsibil ty solely for the design shown The suitab lity and use of this design for any structure s the respons b lity of the Building Designer per ANSI/TPI 1 Sec 2 For more nformat on see Th s job s general notes page ITW-BCG www itwbcg com TPI www tpinst org WTCA www sbcindustry com ICC www ccsafe org

WILLIAM H. KRECK LICENSE No. 70861 STATE OF FLORIDA PROFESSIONAL ENGINEER
03/20/2013

TC LL	20.0 PSF	REF	R487-- 9647
TC DL	7.0 PSF	DATE	03/20/13
BC DL	10.0 PSF	DRW	HCUSR487 13079043
BC LL	0 0 PSF	HC-ENG	WHK/WHK
TOT LD.	37.0 PSF	SEQN-	69631
DUR.FAC.	1.25		
SPACING	24.0"	JREF-	1UUP487_Z02

(13-105--Trademark Construction McDuffie Residence -- Lake City, FL - A1PB 17'3'15 Common)

Top chord 2x4 SP_#1_12A
Bot chord 2x4 SP_#1_12A
Webs 2x4 SP_#3__12A

Lumber grades designated with "12A use design values approved 1/5/2012 by ALSC

Wind loads and reactions based on MWFRS with additional C&C member design

In lieu of rigid ceiling use purlins to brace BC @ 24' OC

MWFRS loads based on trusses located at least 21 65 ft from roof edge

Special loads
------(Lumber Dur Fac =1 25 / Plate Dur Fac =1 25)
TC- From 56 plf at -0 83 to 56 plf at 7 80
TC- From 56 plf at 7 80 to 56 plf at 16 43
BC- From 4 plf at -0 83 to 4 plf at 16 43

120 mph wind, 21 65 ft mean hgt, ASCE 7-10, CLOSED bldg, not located within 9 00 ft from roof edge, RISK CAT II, EXP B, wind TC DL=3 5 psf, wind BC DL=2 0 psf GCpi(+/-)=0 18

Deflection meets L/240 live and L/180 total load Creep increase factor for dead load is 1 50

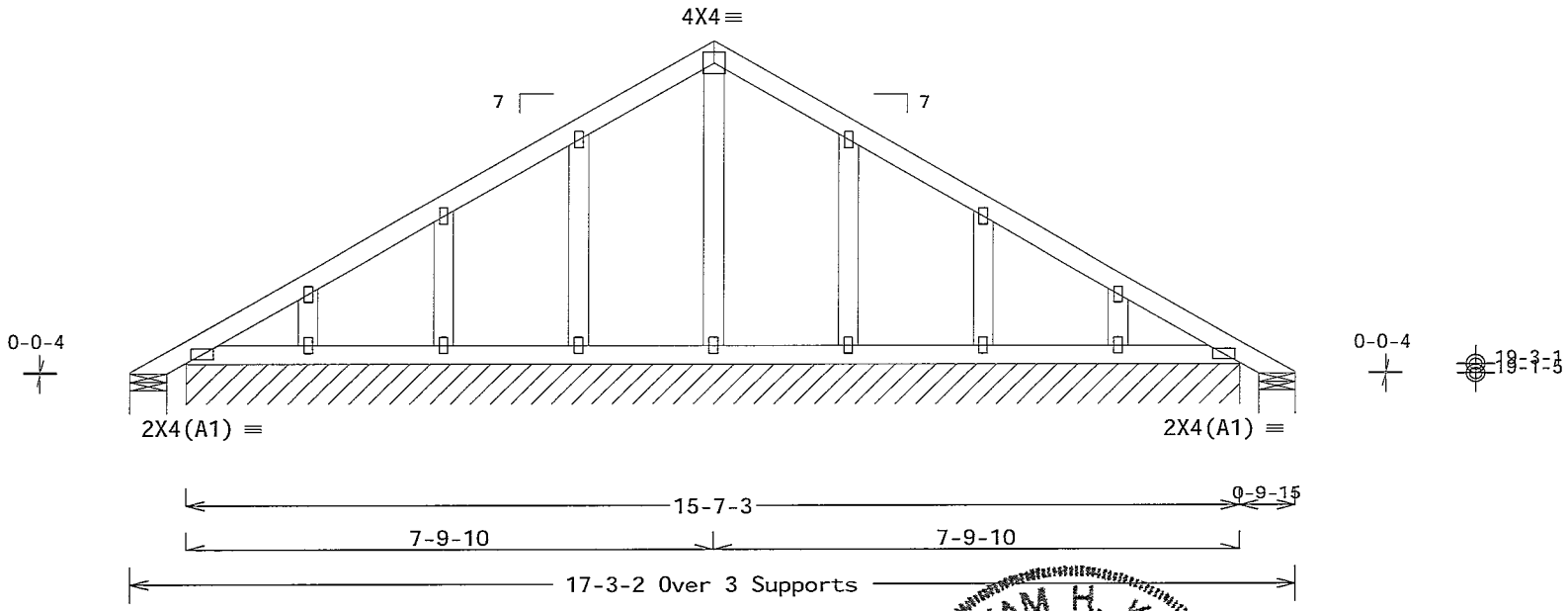

R=16 Rw=51 U=39 W=6 518"
RL=80 R=60 PLF U=4 PLF W=15-7-3

R=6 U=0 W=6 517"

Note All Plates Are 1 5X3 Except As Shown

Design Crit: FBC2010Res/TPI-2007(STD)

PLT TYP. Wave FT/RT=10%(0%)/0(0) 10 03 11.0209.20 QTY:7 FL/-/4/-/-/R/- Scale =.375"/Ft

ALPINE
ITW Building Components Group Inc.
Haines City, FL 33844
FL COA #0 278

WARNING READ AND FOLLOW ALL NOTES ON THIS SHEET!
IMPORTANT FURNISH THIS DESIGN TO ALL CONTRACTORS INCLUDING INSTALLERS

Trusses require extreme care in fabricating handl ng shipp ng install ng and brac ng Refer to and follow the latest edition of BCSI (Bu ld ng Component Safety Informat on by TPI and WTCA) for safety practices prior to perform ng these functions Installers shall prov de temporary brac ng per BCSI Unless noted otherwise top chord shall have properly attached structural sheathing and bottom chord shall have a properly attached rig d ce l ng Locat ons shown for permanent lateral restra nt are shall have bracing nstalled per BCSI sect ons B3 B7 or B10 as appl cable

ITW Bu ld ng Components Group Inc (ITWBCG) shall not be responsible for any dev ation from th s des gn any failure to build the truss in conformance with ANSI/TPI 1 or for handling shipp ng installation brac ng of trusses Apply plates to each face of truss and position as shown above and on the Jo nt Deta ls unless noted otherwise Refer to drawings 160A-Z for standard plate posit ons A seal on this draw ng or cover page listing this draw ng indicates acceptance of professional eng neering respons b l ty solely for the design shown The su tab lity and use of this design for any structure is the respons bility of the Building Des gner per ANSI/TPI 1 Sec 2 For more informat on see Th s job s general notes page ITW BCG www itwbcg com TPI www tpinst org WTCA www sbcindustry com ICC www ccsafe org

WILLIAM H. KRICK LICENSE No. 70861 STATE OF FLORIDA PROFESSIONAL ENGINEER
03/20/2013

TC LL	20 0 PSF	REF	R487-- 9648
TC DL	7.0 PSF	DATE	03/20/13
BC DL	10.0 PSF	DRW	HCUSR487 13079044
BC LL	0.0 PSF	HC-ENG	WHK/WHK
TOT LD.	37 0 PSF	SEQN-	69632
DUR FAC.	1.25		
SPACING	24.0"	JREF-	1UUP487_Z02

(13-105--Trademark Construction McDuffie Residence -- Lake City, FL - A2 47'4" Stepdown Hip)

Top chord 2x4 SP_#1_12A
Bot chord 2x4 SP_#1_12A
Webs 2x4 SP_#3__12A

Lumber grades designated with "12A' use design values approved 1/5/2012 by ALSC

Roof overhang supports 2 00 psf soffit load

In lieu of structural panels use purlins to brace all flat TC @ 24" OC

WARNING Furnish a copy of this DWG to the installation contractor Special care must be taken during handling, shipping and installation of trusses See "WARNING" note below

120 mph wind, 15 00 ft mean hgt, ASCE 7-10, CLOSED bldg, not located within 13 00 ft from roof edge, RISK CAT II, EXP B, wind TC DL=3 5 psf, wind BC DL=5 0 psf GCpi(+/-)=0 18

Wind loads and reactions based on MWFRS with additional C&C member design

(a) Continuous lateral bracing equally spaced on member

Bottom chord checked for 10 00 psf non-concurrent live load

Deflection meets L/240 live and L/180 total load Creep increase factor for dead load is 1 50

MWFRS loads based on trusses located at least 15 00 ft from roof edge

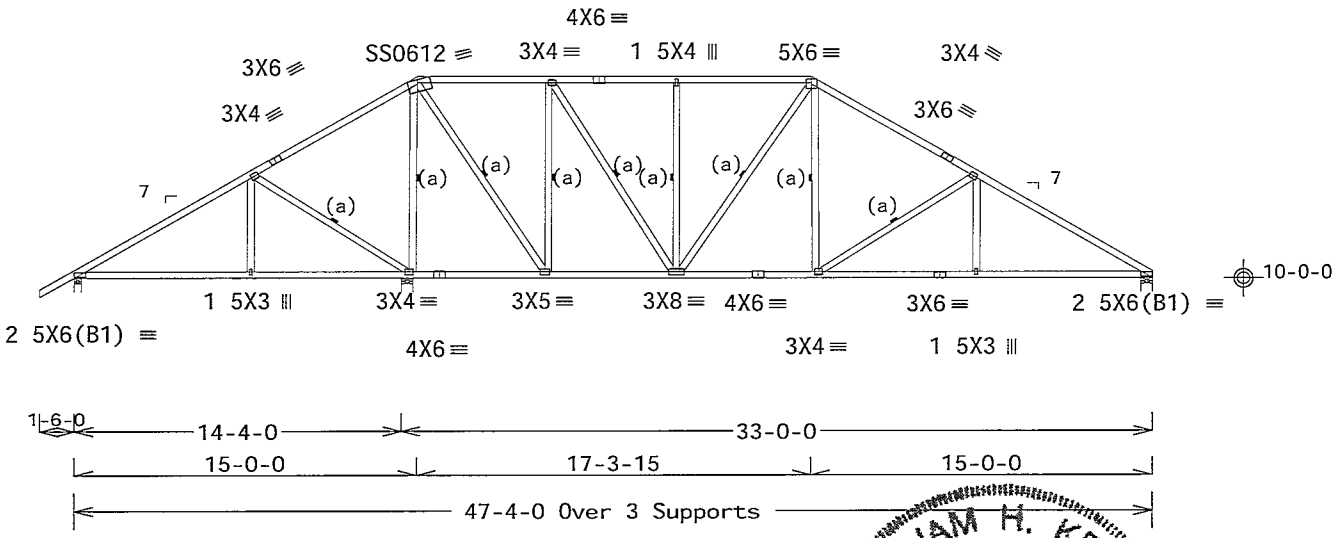

Design Crit FBC2010Res/TPI-2007(STD)
FT/RT=10%(0%)/0(0)

PLT TYP 18 Gauge HS,Wave

10 03.11.0209.20 QTY 1

FL/-/4/-/-/R/-

Scale =.125"/Ft.

WILLIAM H. KRUCK LICENSE No. 70861 STATE OF FLORIDA PROFESSIONAL ENGINEER

03/20/2013

ALPINE
ITW Building Components Group Inc.
Haines City, FL 33844
FL COA #0 278

WARNING READ AND FOLLOW ALL NOTES ON THIS SHEET!
IMPORTANT FURNISH THIS DESIGN TO ALL CONTRACTORS INCLUDING INSTALLERS

Trusses require extreme care n fabricating handling sh pp ng install ng and brac ng Refer to and follow the latest edition of BCSI (Bu ldng Component Safety Informat on by TPI and WTCA) for safety pract ces prior to perform ng these functions Installers shall prov de temporary brac ng per BCSI Unless noted otherwise top chord shall have properly attached structural sheathing and bottom chord shall have a properly attached rig d ce l ng Locat ons shown for permanent lateral restra nt of webs shall have bracing nstalled per BCSI sect ons B3 B7 or B10 as appl cable

ITW Build ng Components Group Inc (ITWBCG) shall not be respons ble for any dev ation from th s design any failure to build the truss in conformance with ANSI/TPI 1 or for handling shipp ng installation brac ng of trusses Apply plates to each face of truss and posit on as shown above and on the Joint Deta ls unless noted otherwise Refer to drawings 160A-Z for standard plate posit ons A seal on this draw ng or cover page l sting this draw ng ind cates acceptance of professional eng neering responsib l ty solely for the design shown The suitab lity and use of this design for any structure s the respons b l ty of the Build ng Des gner per ANSI/TPI 1 Sec 2 For more informat on see Th s job s general notes page ITW-BCG www itwbcg com TPI www tp nst org WTCA www sbcindustry com ICC www ccsafe org

TC LL	20.0 PSF	REF	R487-- 9649
TC DL	7.0 PSF	DATE	03/20/13
BC DL	10 0 PSF	DRW	HCUSR487 13079045
BC LL	0.0 PSF	HC-ENG	WHK/WHK
TOT.LD	37.0 PSF	SEQN-	69633
DUR FAC	1.25		
SPACING	24.0"	JREF-	1UUP487_Z02

(13-105--Trademark Construction McDuffie Residence -- Lake City, FL - A2PB 17'3'15 Stepdown Hip)

Top chord 2x4 SP_#1_12A
Bot chord 2x4 SP_#1_12A
Webs 2x4 SP_#3__12A

Lumber grades designated with "12A" use design values approved 1/5/2012 by ALSC

120 mph wind, 21 45 ft mean hgt, ASCE 7-10, CLOSED bldg, not located within 9 00 ft from roof edge, RISK CAT II, EXP B, wind TC DL=3 5 psf, wind BC DL=2 0 psf GCpi(+/-)=0 18

Wind loads and reactions based on MWFRS with additional C&C member design

Special loads
------(Lumber Dur Fac =1 25 / Plate Dur Fac =1 25)
TC- From 56 plf at -0 83 to 56 plf at 7 13
TC- From 56 plf at 7 13 to 56 plf at 8 47
TC- From 56 plf at 8 47 to 56 plf at 16 43
BC- From 4 plf at -0 83 to 4 plf at 16 43

In lieu of structural panels or rigid ceiling use purlins to brace all flat TC @ 24' OC, all BC @ 24" OC

Deflection meets L/240 live and L/180 total load Creep increase factor for dead load is 1 50

MWFRS loads based on trusses located at least 21 45 ft from roof edge

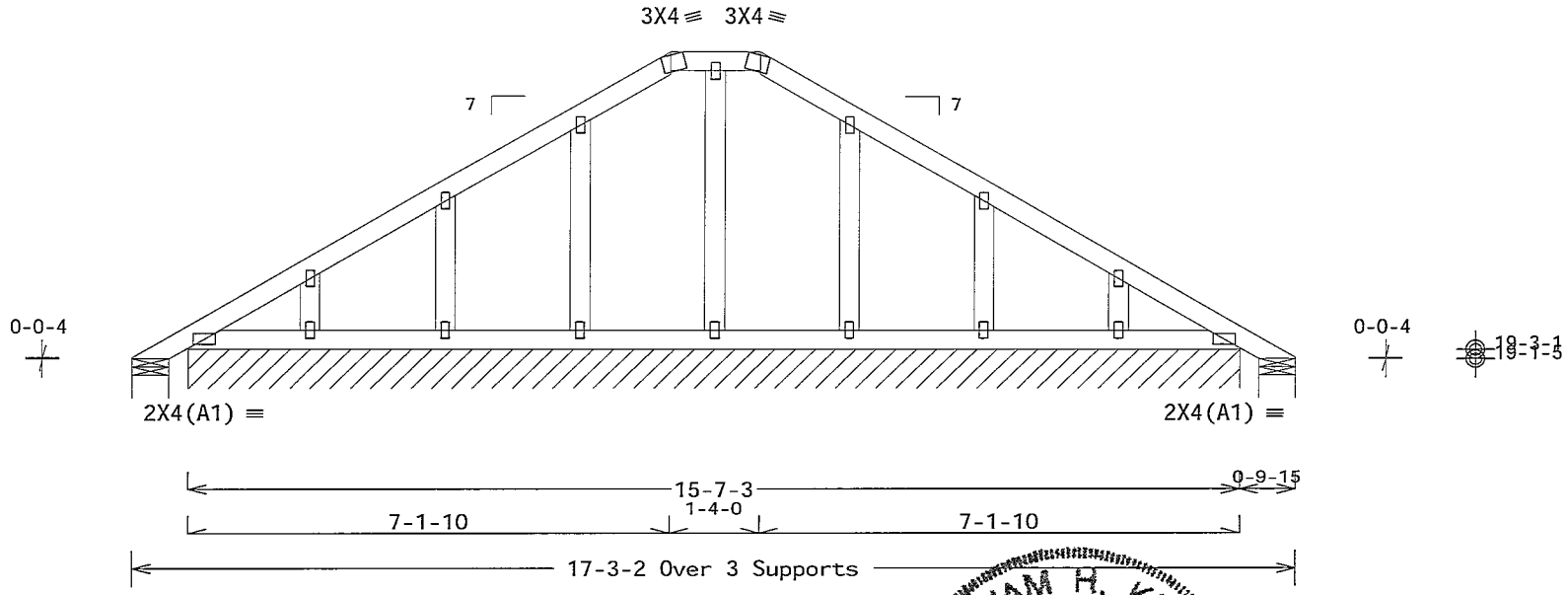

R=17 Rw=48 U=35 W=6 518'
RL=74 R=04 PLF U=4 PLF W=15-7-3

R= U=0 W=6 517"

Note All Plates Are 1 5X3 Except As Shown

Design Crit FBC2010Res/TPI-2007(STD)

PLT TYP Wave

FT/RT=10%(0%)/0(0) 10.03 1.0209.20 OTE 2 FL/-/4/-/-/R/- Scale =.375"/Ft.

WILLIAM H. KRICK LICENSE No. 70861 STATE OF FLORIDA PROFESSIONAL ENGINEER
03/20/2013

ALPINE
ITW Building Components Group Inc.
Haines City, FL 33844
FL COA #0 278

WARNING READ AND FOLLOW ALL NOTES ON THIS SHEET!
IMPORTANT FURNISH THIS DESIGN TO ALL CONTRACTORS INCLUDING INSTALLERS

Trusses require extreme care in fabr cat ng handling sh pp ng install ng and brac ng Refer to and follow the latest edition of BCSI (Bu ld ng Component Safety Informat on by TPI and WTCA) for safety pract ces prior to performing these funct ons Installers shall provide temporary brac ng per BCSI Unless noted otherwise top chord shall have properly attached structural sheathing and bottom chord shall have a properly attached rigid ce l ng Locat ons shown for permanent lateral restraint shall have bracing nstalled per BCSI sect ons B3 B7 or B10 as appl cable

ITW Build ng Components Group Inc (ITWBCG) shall not be respons ble for any deviat on from this design any failure to build the truss in conformance with ANSI/TPI 1 or for handling sh pping installation brac ng of trusses Apply plates to each face of truss and position as shown above and on the Jo nt Details unless noted otherwise Refer to drawings 160A-Z for standard plate posit ons A seal on this draw ng or cover page listing this drawing indicates acceptance of professional eng neer ng responsib l ty solely for the design shown The suitab l ty and use of this design for any structure s the respons b l ty of the Building Designer per ANSI/TPI 1 Sec 2 For more nformat on see Th s job s general notes page ITW BCG www twbcg com TPI www tp nst org WTCA www sbc ndustry com ICC www ccsafe org

TC LL	20.0 PSF	REF	R487-- 9650
TC DL	7.0 PSF	DATE	03/20/13
BC DL	10.0 PSF	DRW	HCUSR487 13079046
BC LL	0.0 PSF	HC-ENG	WHK/WHK
TOT.LD	37.0 PSF	SEQN-	69634
DUR.FAC.	1.25		
SPACING	24.0"	JREF-	1UUP487_Z02

(13-105--Trademark Construction McDuffie Residence -- Lake City, FL - A3 47'4" Stepdown Hip)

Top chord 2x4 SP_#1_12A
Bot chord 2x4 SP_#1_12A
Webs 2x4 SP_#3__12A

Lumber grades designated with '12A" use design values approved 1/5/2012 by ALSC

Right cantilever is exposed to wind

(a) Continuous lateral bracing equally spaced on member

Truss passed check for 20 psf additional bottom chord live load in areas with 42'-high x 24'-wide clearance

Deflection meets L/240 live and L/180 total load Creep increase factor for dead load is 1 50

MWFRS loads based on trusses located at least 15 00 ft from roof edge

120 mph wind, 15 00 ft mean hgt, ASCE 7-10, CLOSED bldg, not located within 13 00 ft from roof edge, RISK CAT II, EXP B, wind TC DL=3 5 psf, wind BC DL=5 0 psf GCpi(+/-)=0 18

Wind loads and reactions based on MWFRS with additional C&C member design

Roof overhang supports 2 00 psf soffit load

In lieu of structural panels use purlins to brace all flat TC @ 24" OC

Bottom chord checked for 10 00 psf non-concurrent live load

WARNING Furnish a copy of this DWG to the installation contractor Special care must be taken during handling, shipping and installation of trusses See 'WARNING' note below

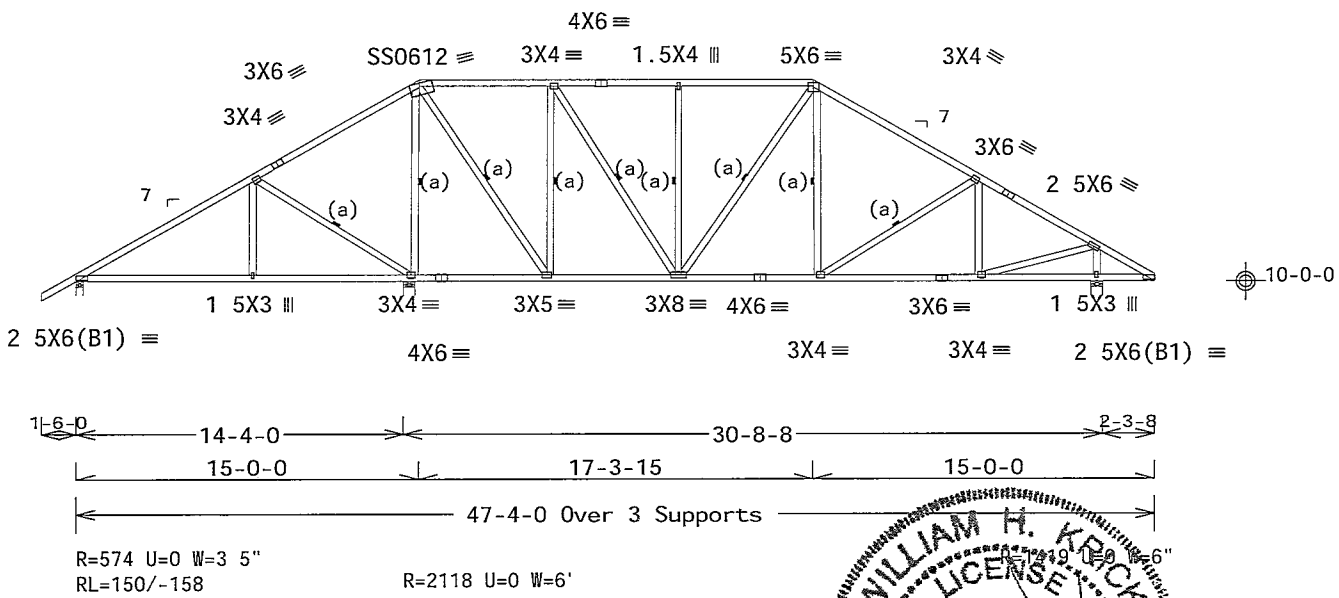

Design Crit. FBC2010Res/TPI-2007(STD)
FT/RT=10%(0%)/0(0)

PLT TYP. 18 Gauge HS,Wave

10.03.11.0209.20 QTY 4

FL/-/4/-/-/R/-

Scale =.125"/Ft.

ALPINE
ITW Building Components Group Inc.
Haines City, FL 33844
FL COA #0 278

WARNING READ AND FOLLOW ALL NOTES ON THIS SHEET!
IMPORTANT FURNISH THIS DESIGN TO ALL CONTRACTORS INCLUDING INSTALLERS

Trusses requ re extreme care in fabricating handl ng shipping nstalling and bracing Refer to and follow the latest ed t on of BCSI (Build ng Component Safety Information by TPI and WTCA) for safety practices pr or to performing these funct ons Installers shall provide temporary bracing per BCSI Unless noted otherw se top chord shall have properly attached structural sheath ng and bottom chord shall have a properly attached r g d ceil ng Locat ons shown for permanent lateral restraint of webs shall have brac ng installed per BCSI sect ons B3 B7 or B10 as appl cable

ITW Bu ldng Components Group Inc (ITWBCG) shall not be respons ble for any dev at on from this design, any fa lure to bu ld the truss n conformance w th ANSI/TPI 1 or for hand ng sh pp ng nstallat on, bracing of trusses Apply plates to each face of truss and pos t on as shown above and on the Jo nt Details unless noted otherw se Refer to draw ngs 160A-Z for standard plate pos t ons A seal on th s drawing or cover page list ng th s draw ng nd cates acceptance of profess onal eng neer ng responsibility solely for the des gn shown The su tabil ty and use of th s des gn for any structure s the responsibil ty of the Bu ld ng Des gner per ANSI/TPI 1 Sec 2 For more nformation see This job s general notes page ITW BCG www twbcg com TPI www tp nst org WTCA www sbc ndustry com ICC www iccsafe org

WILLIAM H. KRICK
LICENSED
No. 70861
STATE OF FLORIDA
PROFESSIONAL ENGINEER
03/20/2013

TC LL	20 0 PSF	REF	R487-- 9651
TC DL	7 0 PSF	DATE	03/20/13
BC DL	10.0 PSF	DRW	HCUSR487 13079047
BC LL	0.0 PSF	HC-ENG	WHK/WHK
TOT.LD.	37.0 PSF	SEQN-	69635
DUR FAC.	1 25		
SPACING	24 0"	JREF-	1UUP487_Z02

(13-105--Trademark Construction McDuffie Residence -- Lake City, FL - A3PB 17'3"15 Stepdown Hip)

Top chord 2x4 SP_#1_12A
Bot chord 2x4 SP_#1_12A
Webs 2x4 SP_#3__12A

Lumber grades designated with '12A' use design values approved 1/5/2012 by ALSC

120 mph wind, 20 87 ft mean hgt, ASCE 7-10, CLOSED bldg, not located within 9 00 ft from roof edge, RISK CAT II, EXP B, wind TC DL=3 5 psf, wind BC DL=2 0 psf GCpi(+/-)=0 18

Wind loads and reactions based on MWFRS with additional C&C member design

Special loads
------(Lumber Dur Fac =1 25 / Plate Dur Fac =1 25)
TC- From 56 plf at -0 83 to 56 plf at 5 13
TC- From 56 plf at 5 13 to 56 plf at 10 47
TC- From 56 plf at 10 47 to 56 plf at 16 43
BC- From 4 plf at -0 83 to 4 plf at 16 43

In lieu of structural panels or rigid ceiling use purlins to brace all flat TC @ 24 OC, all BC @ 24' OC

Deflection meets L/240 live and L/180 total load Creep increase factor for dead load is 1 50

MWFRS loads based on trusses located at least 20 87 ft from roof edge

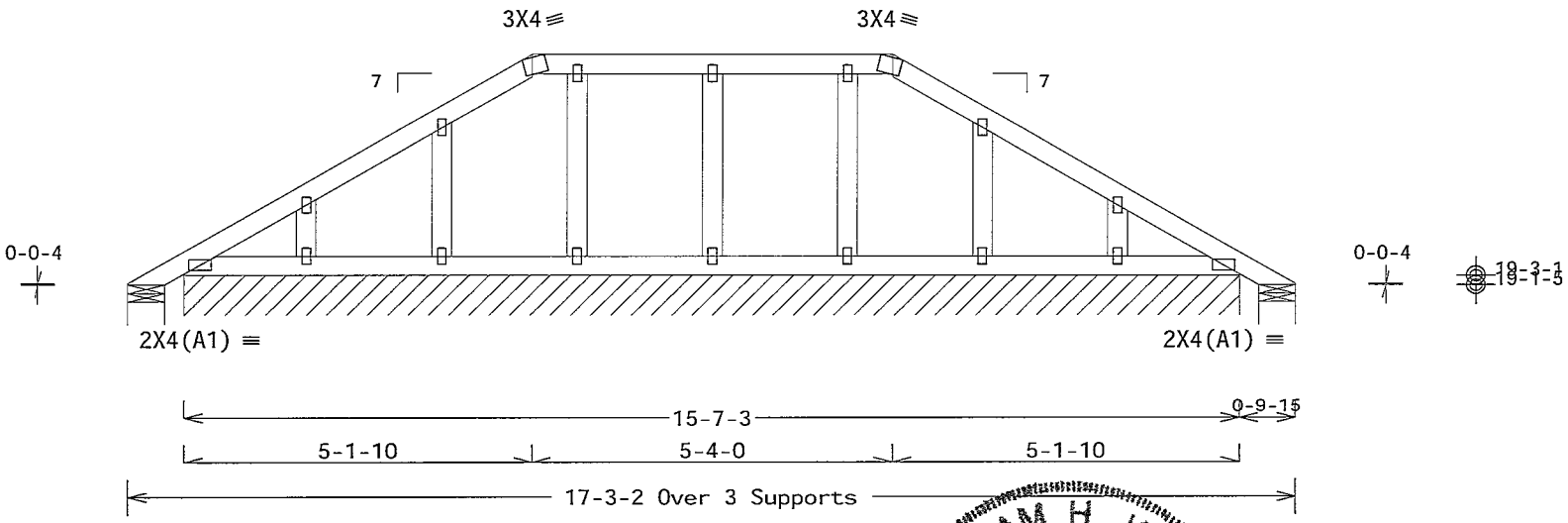

Note All Plates Are 1.5X3 Except As Shown

Design Crit FBC2010Res/TPI-2007(STD)

PLT TYP Wave FT/RT=10%(0%)/0(0) 10.03 in 0209 20 1 QTY 2 FL/-/4/-/-/R/- Scale =.375"/Ft.

ALPINE
ITW Building Components Group Inc.
Haines City, FL 33844
FL COA #0 278

WARNING READ AND FOLLOW ALL NOTES ON THIS SHEET
IMPORTANT FURNISH THIS DESIGN TO ALL CONTRACTORS INCLUDING INSTALLERS

Trusses require extreme care in fabr cat ng handl ng sh pp ng nstall ng and bracing Refer to and follow the latest edition of BCSI (Bu ld ng Component Safety Information by TPI and WTCA) for safety pract ces prior to perform ng these funct ons Installers shall provide temporary brac ng per BCSI Unless noted otherwise top chord shall have properly attached structural sheath ng and bottom chord shall have a properly attached rig d ce l ng Locat ons shown for permanent lateral restraint of webs shall have brac ng nstalled per BCSI sect ons B3 B7 or B10 as appl cable

ITW Bu ld ng Components Group Inc (ITWBCG) shall not be respons ble for any deviat on from th s design any failure to build the truss n conformance with ANSI/TPI 1 or for handling shipp ng installation and brac ng of trusses Apply plates to each face of truss and pos tion as shown above and on the Jo nt Details unless noted otherwise Refer to drawings 160A-Z for standard plate posit ons A seal on th s draw ng or cover page listing this draw ng indicates acceptance of profess onal eng neering responsib l ty solely for the design shown The su tab lity and use of this design for any structure s the respons b lity of the Building Designer per ANSI/TPI 1 Sec 2 For more informat on see Th s job s general notes page ITW-BCG www itwbcg com TPI www tpinst org WTCA www sbcindustry com ICC www ccsafe org

WILLIAM H. KRICK LICENSE No 70861 STATE OF FLORIDA PROFESSIONAL ENGINEER
03/20/2013

TC LL	20.0 PSF	REF	R487-- 9652
TC DL	7 0 PSF	DATE	03/20/13
BC DL	10.0 PSF	DRW	HCUSR487 13079048
BC LL	0.0 PSF	HC-ENG	WHK/WHK
TOT LD.	37 0 PSF	SEQN-	69636
DUR.FAC.	1.25		
SPACING	24.0"	JREF-	1UUP487_Z02

(13-105--Trademark Construction McDuffie Residence -- Lake City, FL - A3PB2 17 3'15 Stepdown Hip)

Top chord 2x4 SP_#1_12A
Bot chord 2x4 SP_#1_12A
Webs 2x4 SP_#3__12A

Lumber grades designated with "12A' use design values approved 1/5/2012 by ALSC

120 mph wind, 20 29 ft mean hgt, ASCE 7-10, CLOSED bldg, not located within 9 00 ft from roof edge, RISK CAT II, EXP B, wind TC DL=3 5 psf, wind BC DL=2 0 psf GCpi(+/-)=0 18

Wind loads and reactions based on MWFRS with additional C&C member design

Special loads
------(Lumber Dur Fac =1 25 / Plate Dur Fac =1 25)
TC- From 56 plf at -0 83 to 56 plf at 3 13
TC- From 56 plf at 3 13 to 56 plf at 12 47
TC- From 56 plf at 12 47 to 56 plf at 16 43
BC- From 4 plf at -0 83 to 4 plf at 16 43

In lieu of structural panels or rigid ceiling use purlins to brace all flat TC @ 24' OC, all BC @ 24' OC

Deflection meets L/240 live and L/180 total load Creep increase factor for dead load is 1 50

MWFRS loads based on trusses located at least 10 14 ft from roof edge

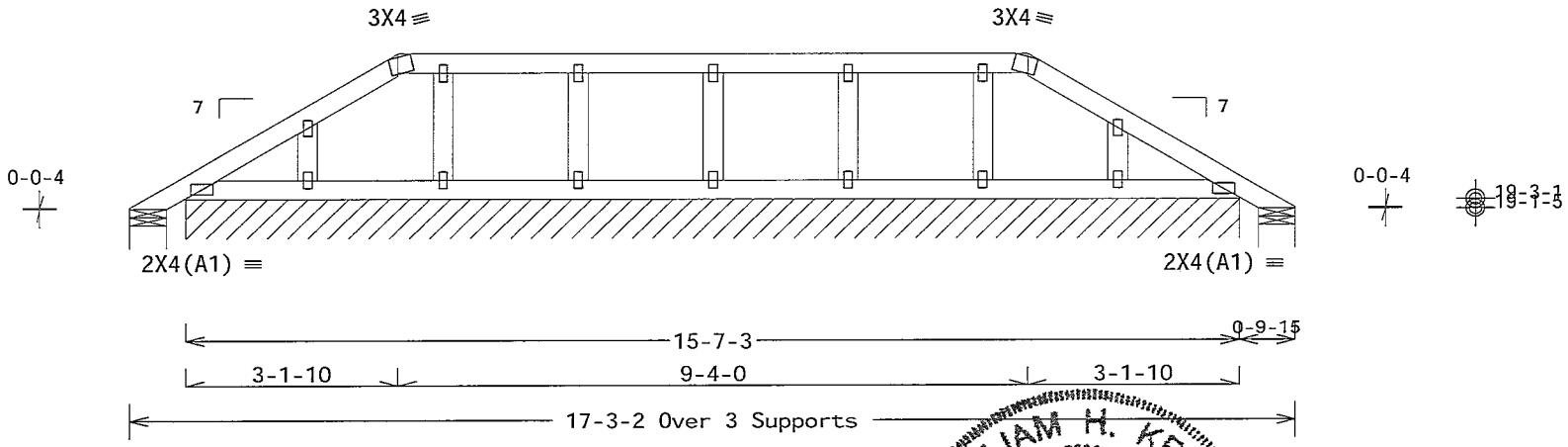

R=16 Rw=27 U=15 W=6 518
RL=35 R=63 PLF U=10 PLF W=15-7-3

R=16 U=2 W=6 518'

Note All Plates Are 1.5X3 Except As Shown

Design Crit FBC2010Res/TPI-2007(STD)

PLT TYP. Wave FT/RT=10%(0%)/0(0) 10 03 11 0209 20 TOTY 2 FL/-/4/-/-/R/- Scale =.375"/Ft

WILLIAM H. KRUCK LICENSE No. 70861 STATE OF FLORIDA PROFESSIONAL ENGINEER
03/20/2013

ALPINE
ITW Building Components Group Inc.
Haines City, FL 33844
FL COA #0 278

WARNING READ AND FOLLOW ALL NOTES ON THIS SHEET!
IMPORTANT FURNISH THIS DESIGN TO ALL CONTRACTORS INCLUDING INSTALLERS

Trusses require extreme care n fabr cat ng handl ng shipping nstalling and bracing Refer to and follow the latest ed t on of BCSI (Bu ld ng Component Safety Information by TPI and WTCA) for safety practices pr or to performing these funct ons Installers shall provide temporary bracing per BCSI Unless noted otherw se top chord shall have proper y attached structural sheath ng and bottom chord shall have a properly attached r gid ceil ng Locat ons shown for permanent lateral restraint of webs shall have brac ng nstalled per BCSI sect ons B3 B7 or B10 as applicable

ITW Building Components Group Inc (ITWBCG) shall not be responsible for any deviat on from th s design any failure to bu ld the truss n conformance w th ANSI/TPI 1 or for handl ng shipp ng nstallat on & brac ng of trusses Apply plates to each face of truss and posit on as shown above and on the Jo nt Deta ls unless noted otherwise Refer to drawings 160A-Z for standard plate posit ons A seal on th s draw ng or cover page l sting th s drawing indicates acceptance of profess onal eng neering responsibil ty solely for the design shown The suitabil ty and use of th s design for any structure s the respons b l ty of the Build ng Designer per ANSI/TPI 1 Sec 2 For more nformat on see Th s job s general notes page ITW-BCG www itwbcg com TPI www tp nst org WTCA www sbc ndustry com ICC www ccsafe org

TC LL	20 0 PSF	REF	R487-- 9653
TC DL	7 0 PSF	DATE	03/20/13
BC DL	10 0 PSF	DRW	HCUSR487 13079049
BC LL	0.0 PSF	HC-ENG	WHK/WHK
TOT.LD.	37 0 PSF	SEQN-	69637
DUR.FAC.	1.25		
SPACING	24.0"	JREF-	1UUP487_Z02

(13-105--Trademark Construction McDuffie Residence -- Lake City, FL - A3PB3 17 3'15 Stepdown Hip)

Top chord 2x4 SP_#1_12A
Bot chord 2x4 SP_#1_12A
Webs 2x4 SP_#3__12A

Lumber grades designated with 12A' use design values approved 1/5/2012 by ALSC

120 mph wind, 19 70 ft mean hgt, ASCE 7-10, CLOSED bldg, not located within 9 00 ft from roof edge, RISK CAT II, EXP B, wind TC DL=3 5 psf, wind BC DL=2 0 psf GCpi(+/-)=0 18

Wind loads and reactions based on MWFRS with additional C&C member design

Special loads
------(Lumber Dur Fac =1 25 / Plate Dur Fac =1 25)
TC- From 56 plf at -0 83 to 56 plf at 1 13
TC- From 56 plf at 1 13 to 56 plf at 14 47
TC- From 56 plf at 14 47 to 56 plf at 16 43
BC- From 4 plf at -0 83 to 4 plf at 16 43

In lieu of structural panels or rigid ceiling use purlins to brace all flat TC @ 24 OC, all BC @ 24" OC

Deflection meets L/240 live and L/180 total load Creep increase factor for dead load is 1 50

MWFRS loads based on trusses located at least 9 85 ft from roof edge

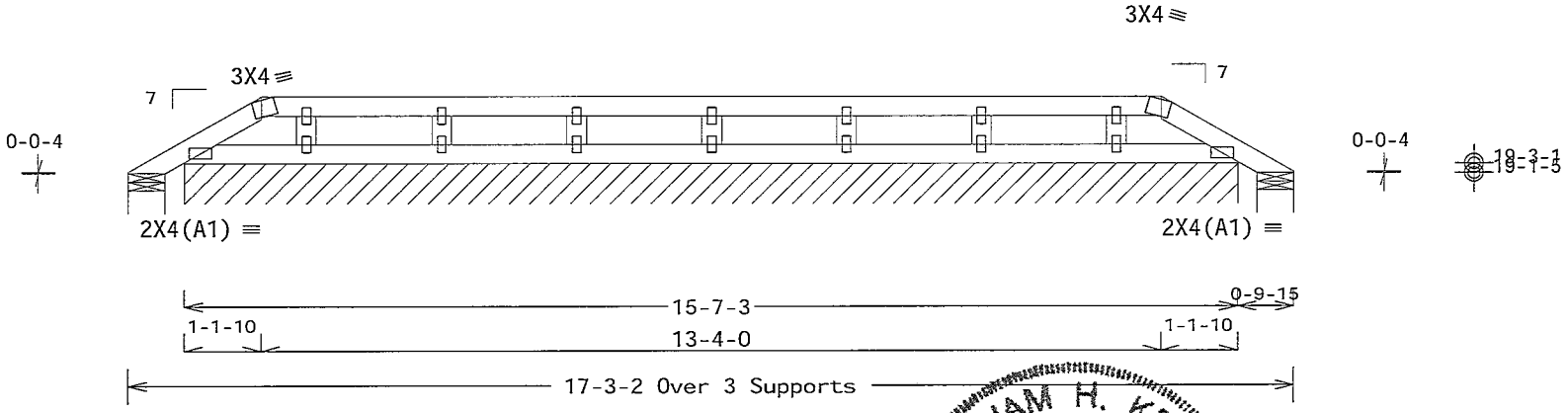

R=15 Rw=17 U=6 W=6 518'
R=63 PLF U=12 PLF W=15-7-3

R=16 U=4 W=6 518'

Note. All Plates Are 1 5X3 Except As Shown
Design Crit. FBC2010Res/TPI-2007(STD)
PLT TYP. Wave FT/RT=10%(0%)/0(0) 10 03 11.0209 20 QTY 1 FL/-/4/-/-/R/- Scale =.375"/Ft.

WILLIAM H. KRICK LICENSE No. 70861 STATE OF FLORIDA PROFESSIONAL ENGINEER
03/20/2013

ALPINE
ITW Building Components Group Inc.
Haines City, FL 33844
FL COA #0 278

WARNING READ AND FOLLOW ALL NOTES ON THIS SHEET!
IMPORTANT FURNISH THIS DESIGN TO ALL CONTRACTORS INCLUDING INSTALLERS

Trusses requ re extreme care n fabricat ng handling shipping nstalling and bracing fer to and follow the latest ed t on of BCSI (Building Component Safety Information by TPI and WTCA) for safety practices pr or to performing these functions Installers shall provide temporary bracing per BCSI Unless noted otherw se top chord shall have properly attached structural sheathing and bottom chord shall have a properly attached r gid ceiling Locations shown for permanent lateral restra nt shall have brac ng installed per BCSI sections B3 B7 or B10 as applicable

ITW Building Components Group Inc (ITWBCG) shall not be respons ble for any dev ation from this design any fa lure to build the truss n conformance w th ANSI/TPI 1 or for handl ng sh pping nstallation bracing of trusses Apply plates to each face of truss and pos t on as shown above and on the Joint Details unless noted otherw se Refer to draw ngs 160A-Z for standard plate pos tions A seal on this drawing or cover page list ng this draw ng nd cates acceptance of profess onal engineering responsibility solely for the des gn shown The su tab l ty and use of this des gn for any structure s the responsibility of the Bu lding Des gner per ANSI/TPI 1 Sec 2 For more nformation see This job s general notes page ITW-BCG www twbcg com TPI www tp nst org WTCA www sbc ndustry com ICC www iccsafe org

TC LL	20.0 PSF	REF	R487-- 9654
TC DL	7.0 PSF	DATE	03/20/13
BC DL	10.0 PSF	DRW	HCUSR487 13079050
BC LL	0 0 PSF	HC-ENG	WHK/WHK
TOT.LD	37 0 PSF	SEQN-	69638
DUR.FAC.	1.25		
SPACING	24.0"	JREF-	1UUP487_Z02

(13-105--Trademark Construction McDuffie Residence -- Lake City, FL - AS 35'10' Stepdown Hip)

Top chord 2x4 SP_#1_12A
Bot chord 2x4 SP_#1_12A
Webs 2x4 SP_#3__12A

Lumber grades designated with '12A' use design values approved 1/5/2012 by ALSC

Roof overhang supports 2 00 psf soffit load

(a) Continuous lateral bracing equally spaced on member

Bottom chord checked for 10 00 psf non-concurrent live load

MWFRS loads based on trusses located at least 15 00 ft from roof edge

120 mph wind, 15 00 ft mean hgt, ASCE 7-10, CLOSED bldg, not located within 9 00 ft from roof edge, RISK CAT II, EXP B, wind TC DL=3 5 psf, wind BC DL=5 0 psf GCpi(+/-)=0 18

Wind loads and reactions based on MWFRS with additional C&C member design

Right end vertical not exposed to wind pressure

In lieu of structural panels use purlins to brace all flat TC @ 24" OC

Deflection meets L/240 live and L/180 total load Creep increase factor for dead load is 1 50

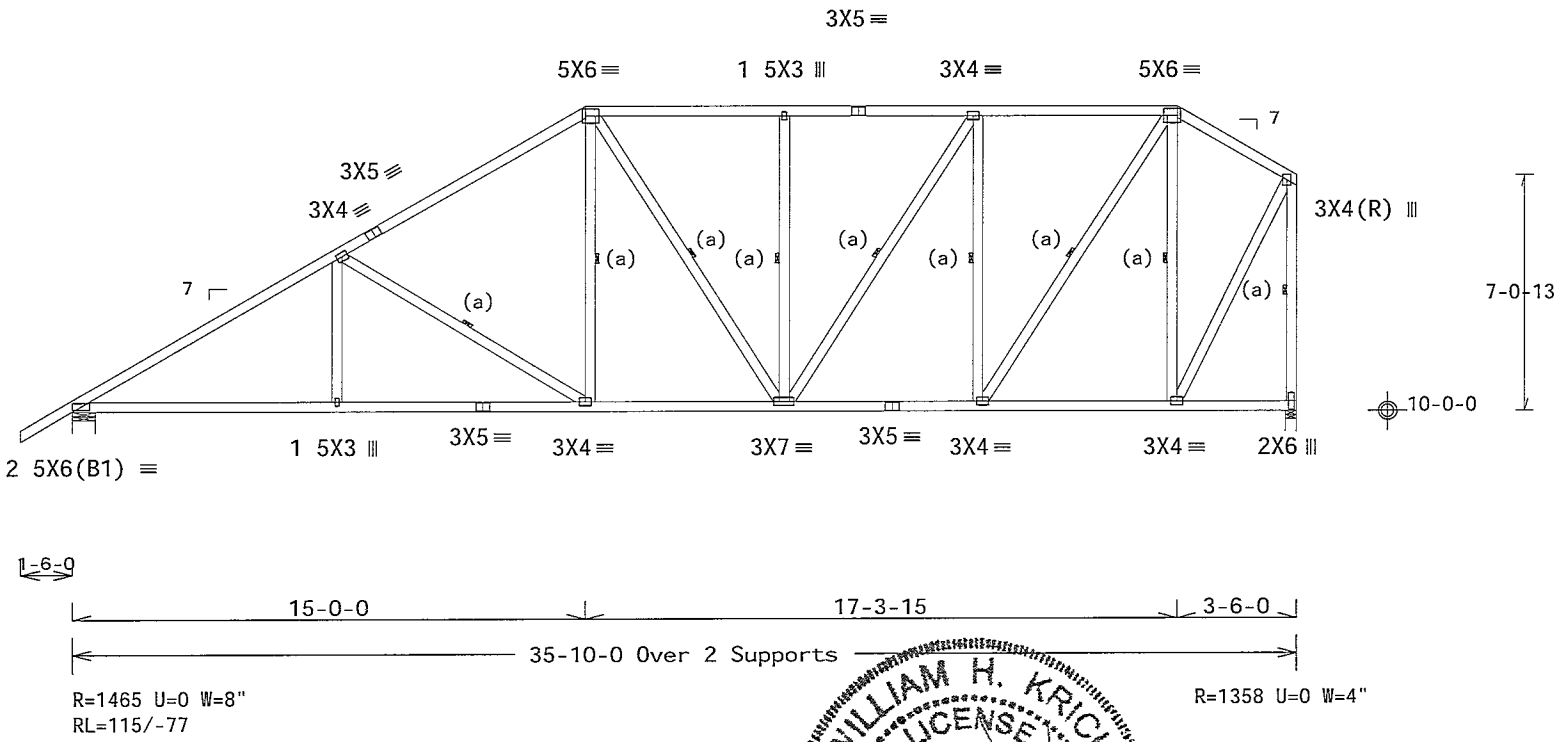

Design Crit· FBC2010Res/TPI-2007(STD)
FT/RT=10%(0%)/0(0) TC 03 Pr.0209 20 QTY 1 FL/-/4/-/-/R/- Scale =.1875"/Ft

PLT TYP. Wave

ALPINE
ITW Building Components Group Inc.
Haines City, FL 33844
FL COA #0 278

WARNING READ AND FOLLOW ALL NOTES ON THIS SHEET!
IMPORTANT FURNISH THIS DESIGN TO ALL CONTRACTORS INCLUDING INSTALLERS

Trusses require extreme care in fabr cat ng handl ng sh pping nstall ng and bracing Refer to and follow the latest edition of BCSI (Bu ld ng Component Safety Information by TPI and WTCA) for safety pract ces prior to performing these funct ons Installers shall provide temporary bracing per BCSI Unless noted otherwise top chord shall have properly attached structural sheath ng and bottom chord shall have a properly attached rigid ce l ng Locations shown for permanent lateral restraint of webs shall have bracing installed per BCSI sect ons B3 B7 or B10 as applicable

ITW Building Components Group Inc (ITWBCG) shall not be responsible for any deviat on from this design any failure to build the truss n conformance with ANSI/TPI 1 or for handling shipp ng installation brac ng of trusses Apply plates to each face of truss and position as shown above and on the Jo nt Deta ls unless noted otherwise Refer to drawings 160A-Z for standard plate posit ons A seal on this drawing or cover page listing this drawing indicates acceptance of professional engineer ng responsibil ty solely for the design shown The suitability and use of this design for any structure is the respons b l ty of the Build ng Designer per ANSI/TPI 1 Sec 2 For more information see Th s job s general notes page ITW-BCG www itwbcg com TPI www tpinst org WTCA www sbcindustry com ICC www ccsafe org

WILLIAM H. KRICK LICENSE No. 70861 STATE OF FLORIDA PROFESSIONAL ENGINEER
03/20/2013

TC LL	20.0 PSF	REF	R487-- 9655
TC DL	7.0 PSF	DATE	03/20/13
BC DL	10.0 PSF	DRW	HCUSR487 13079051
BC LL	0.0 PSF	HC-ENG	WHK/WHK
TOT.LD.	37.0 PSF	SEQN-	69639
DUR.FAC.	1.25		
SPACING	24.0"	JREF-	1UUP487_Z02

(13-105--Trademark Construction McDuffie Residence -- Lake City, FL - B 21 8' Common)

Top chord 2x4 SP_#1_12A
Bot chord 2x4 SP_#1_12A
Webs 2x4 SP_#3__12A

Lumber grades designated with "12A" use design values approved 1/5/2012 by ALSC

Roof overhang supports 2 00 psf soffit load

Deflection meets L/240 live and L/180 total load Creep increase factor for dead load is 1 50

120 mph wind, 15 00 ft mean hgt, ASCE 7-10, CLOSED bldg, Located anywhere in roof, RISK CAT II, EXP B, wind TC DL=3 5 psf, wind BC DL=5 0 psf GCpi(+/-)=0 18

Wind loads and reactions based on MWFRS with additional C&C member design

Bottom chord checked for 10 00 psf non-concurrent live load

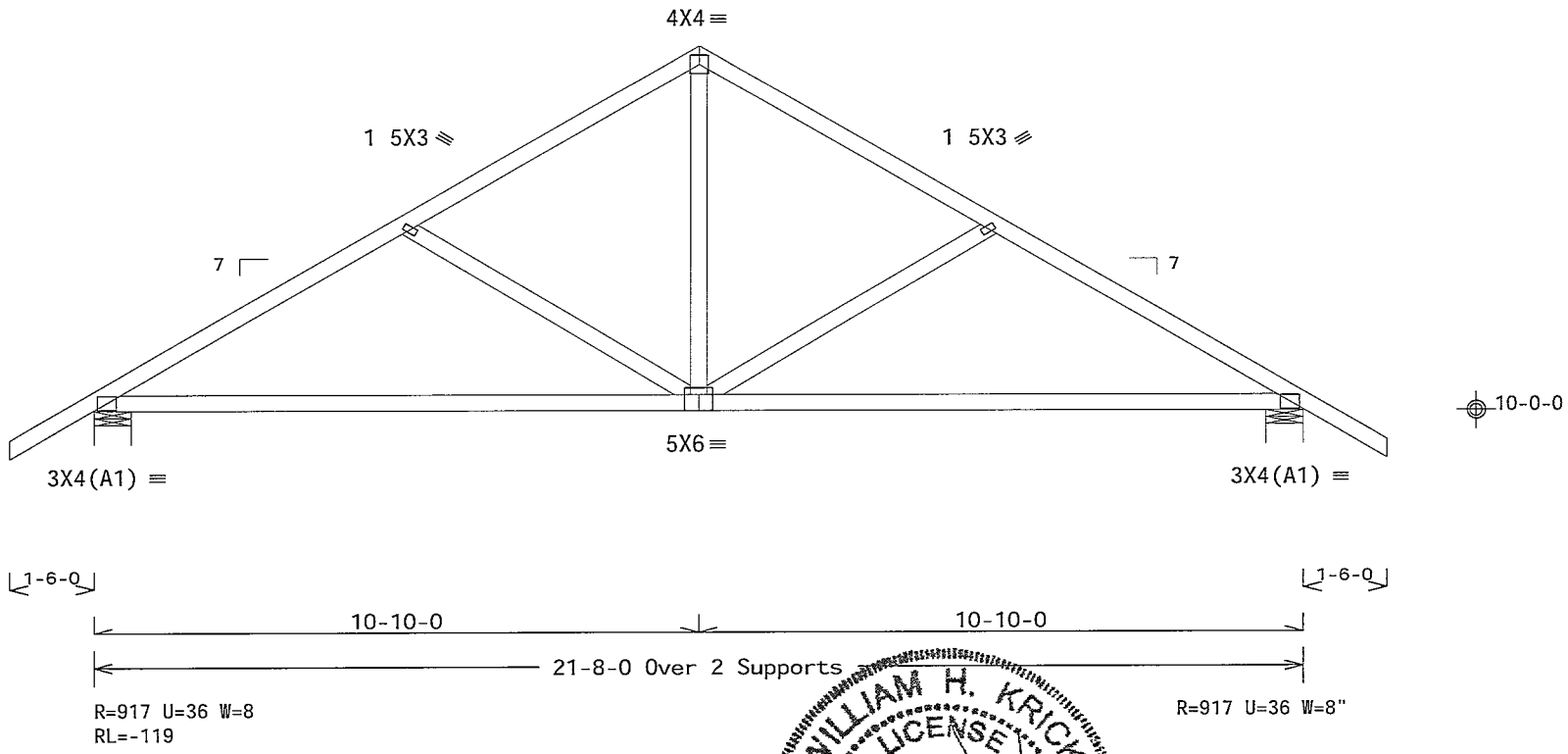

Design Crit: FBC2010Res/TPI-2007(STD)

PLT TYP. Wave FT/RT=10%(0%)/0(0) 10.03.11.0209.20 QTY:1 FL/-/4/-/-/R/- Scale =.3125"/Ft.

ALPINE
ITW Building Components Group Inc.
Haines City, FL 33844
FL COA #0 278

WARNING READ AND FOLLOW ALL NOTES ON THIS SHEET!
IMPORTANT FURNISH THIS DESIGN TO ALL CONTRACTORS INCLUDING INSTALLERS

Trusses require extreme care in fabricat ng handl ng shipping nstalling and bracing refer to and follow the latest edition of BCSI (Build ng Component Safety Information by TPI and WTCA) for safety practices pr or to performing these funct ons Installers shall provide temporary bracing per BCSI Unless noted otherw se top chord shall have properly attached structural sheathing and bottom chord shall have a properly attached rigid ceil ng Locat ons shown for permanent lateral restraint of webs shall have bracing nstalled per BCSI sections B3 B7 or B10 as applicable

ITW Building Components Group Inc (ITWBCG) shall not be responsible for any deviat on from th s design any failure to bu ld the truss n conformance with ANSI/TPI 1 or for handling shipp ng installation bracing of trusses Apply plates to each face of truss and position as shown above and on the Jo nt Details unless noted otherwise Refer to drawings 160A-Z for standard plate posit ons A seal on this drawing or cover page l sting this drawing ndicates acceptance of professional eng neering responsibility solely for the des gn shown The suitability and use of th s design for any structure s the respons b l ty of the Build ng Designer per ANSI/TPI 1 Sec 2 For more informat on see Th s job s general notes page ITW-BCG www itwbcg com TPI www tpinst org WTCA www sbcindustry com ICC www ccsafe org

WILLIAM H. KRICK LICENSE No. 70861 STATE OF FLORIDA PROFESSIONAL ENGINEER
03/20/2013

TC LL	20.0 PSF	REF R487-- 9656
TC DL	7.0 PSF	DATE 03/20/13
BC DL	10.0 PSF	DRW HCUSR487 13079052
BC LL	0.0 PSF	HC-ENG WHK/WHK
TOT.LD.	37 0 PSF	SEQN- 69640
DUR.FAC	1.25	
SPACING	24.0"	JREF- 1UUP487_Z02

(13-105--Trademark Construction McDuffie Residence -- Lake City, FL - B1 21'8' Common)

Top chord 2x4 SP M-30
Bot chord 2x4 SP_#1_12A
Webs 2x4 SP_#3__12A

Lumber grades designated with "12A" use design values approved 1/5/2012 by ALSC

Left cantilever is exposed to wind

Calculated horizontal deflection is 0 15' due to live load and 0 15 due to dead load

Bottom chord checked for 10 00 psf non-concurrent live load

120 mph wind, 15 00 ft mean hgt, ASCE 7-10, CLOSED bldg, not located within 4 50 ft from roof edge, RISK CAT II, EXP B, wind TC DL=3 5 psf, wind BC DL=5 0 psf GCpi(+/-)=0 18

Wind loads and reactions based on MWFRS with additional C&C member design

Roof overhang supports 2 00 psf soffit load

Truss passed check for 20 psf additional bottom chord live load in areas with 42"-high x 24"-wide clearance

Deflection meets L/240 live and L/180 total load Creep increase factor for dead load is 1 50

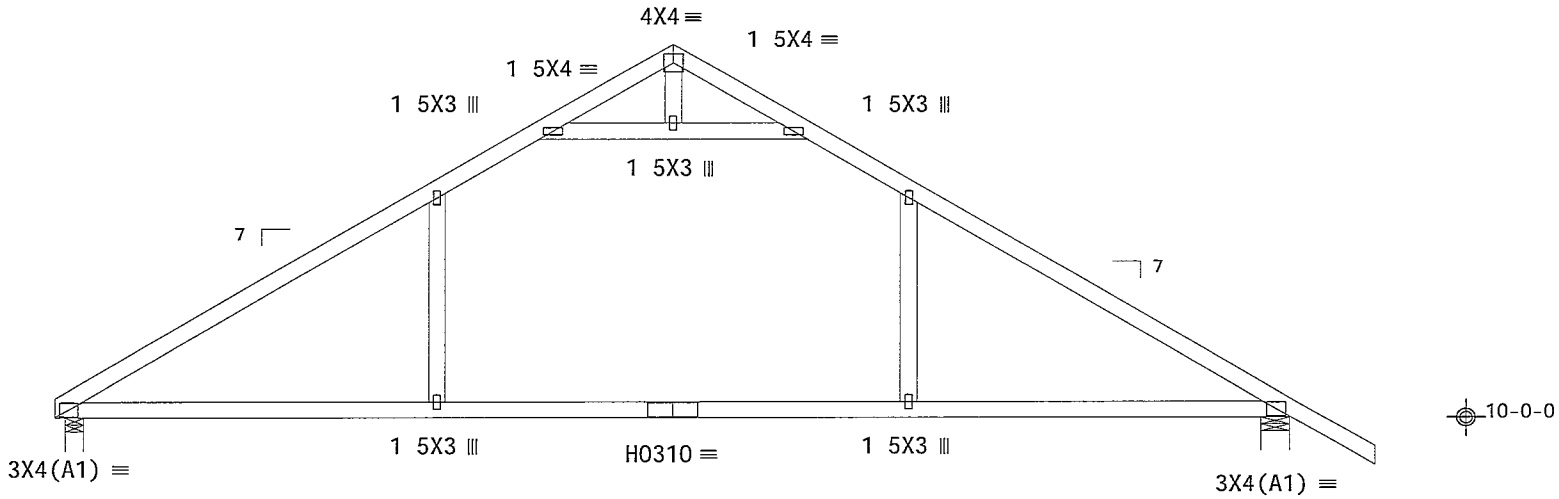

Design Crit. FBC2010Res/TPI-2007(STD)
FT/RT=10%(0%)/0(0)

PLT TYP 20 Gauge HS,Wave

10.03.11.0809.20 QTY 6 FL/-/4/-/-/R/- Scale =.3125"/Ft.

WILLIAM H. KRICK LICENSE No. 70861 STATE OF FLORIDA PROFESSIONAL ENGINEER
03/20/2013

ALPINE
ITW Building Components Group Inc.
Haines City, FL 33844
FL COA #0 278

WARNING READ AND FOLLOW ALL NOTES ON THIS SHEET!
IMPORTANT FURNISH THIS DESIGN TO ALL CONTRACTORS INCLUDING INSTALLERS

Trusses require extreme care in fabr cating handl ng shipping install ng and bracing Refer to and follow the latest edition of BCSI (Build ng Component Safety Information by TPI and WTCA) for safety practices prior to performing these funct ons Installers shall provide temporary brac ng per BCSI Unless noted otherwise top chord shall have property attached structural sheath ng and bottom chord shall have a properly attached rigid ce l ng Locat ons shown for permanent lateral restraint of webs shall have bracing nstalled per BCSI sect ons B3 B7 or B10 as appl cable

ITW Building Components Group Inc (ITWBCG) shall not be responsible for any deviat on from this drawing, any failure to build the truss n conformance with ANSI/TPI 1 or for handling shipping installation and brac ng of trusses Apply plates to each face of truss and position as shown above and on the Joint Details unless noted otherwise Refer to drawings 160A-Z for standard plate positions A seal on this drawing or cover page l sting this drawing indicates acceptance of professional eng neering responsibil ty solely for the design shown The suitab lity and use of this design for any structure is the respons b l ty of the Building Designer per ANSI/TPI 1 Sec 2 For more informat on see Th s job s general notes page ITW-BCG www itwbcg com TPI www tpinst org WTCA www sbcindustry com ICC www ccsafe org

TC LL	20.0 PSF	REF	R487-- 9657
TC DL	7.0 PSF	DATE	03/20/13
BC DL	10.0 PSF	DRW	HCUSR487 13079053
BC LL	0.0 PSF	HC-ENG	WHK/WHK
TOT.LD.	37.0 PSF	SEQN-	69641
DUR.FAC	1 25		
SPACING	24.0"	JREF-	1UUP487_Z02

(13-105--Trademark Construction McDuffie Residence -- Lake City, FL - B2 18'7' Common)

Top chord 2x4 SP_#1_12A
Bot chord 2x4 SP_#1_12A
Webs 2x4 SP_#3__12A

Lumber grades designated with "12A" use design values approved 1/5/2012 by ALSC

Left end vertical not exposed to wind pressure

Bottom chord checked for 10 00 psf non-concurrent live load

MWFRS loads based on trusses located at least 15 00 ft from roof edge

120 mph wind, 15 00 ft mean hgt, ASCE 7-10, CLOSED bldg, not located within 9 00 ft from roof edge, RISK CAT II, EXP B, wind TC DL=3 5 psf, wind BC DL=5 0 psf GCpi(+/-)=0 18

Wind loads and reactions based on MWFRS with additional C&C member design

Roof overhang supports 2 00 psf soffit load

Deflection meets L/240 live and L/180 total load Creep increase factor for dead load is 1 50

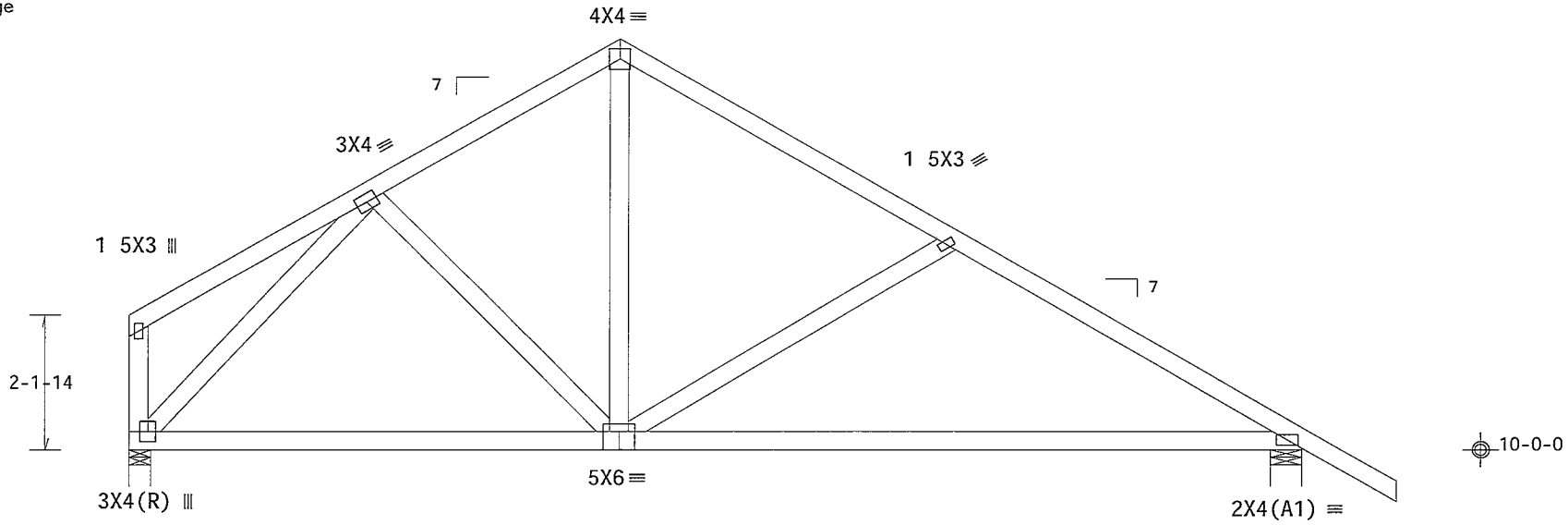

R=698 U=0 W=4'
RL=89/-96

R=809 U=0 W=6"

Design Crit: FBC2010Res/TPI-2007(STD)

PLT TYP. Wave FT/RT=10%(0%)/0(0) 10.03.11.0209 20 QTY:2 FL/-/4/-/-/R/- Scale =.375"/Ft.

WILLIAM H. KRICK LICENSE No. 70861 STATE OF FLORIDA PROFESSIONAL ENGINEER

03/20/2013

ALPINE
ITW Building Components Group Inc.
Haines City, FL 33844
FL COA #0 278

WARNING READ AND FOLLOW ALL NOTES ON THIS SHEET!
IMPORTANT FURNISH THIS DESIGN TO ALL CONTRACTORS INCLUDING INSTALLERS

Trusses require extreme care in fabr cating handl ng sh pp ng install ng and brac ng Refer to and follow the latest edition of BCSI (Bu ld ng Component Safety Information by TPI and WTCA) for safety pract ces prior to perform ng these functions Installers shall prov de temporary brac ng per BCSI. Unless noted otherwise top chord shall have properly attached structural sheath ng and bottom chord shall have a properly attached rig d ce l ng Locat ons shown for permanent lateral restra nt of webs shall have bracing nstalled per BCSI sect ons B3 B7 or B10 as appl cable

ITW Build ng Components Group Inc (ITWBCG) shall not be respons ble for any dev ation from this design, any failure to build the truss n conformance with ANSI/TPI 1 or for handling shipping installation brac ng of trusses Apply plates to each face of truss and position as shown above and on the Jo nt Deta ls unless noted otherwise Refer to drawings 160A-Z for standard plate posit ons A seal on th s draw ng or cover page l sting th s drawing indicates acceptance of professional eng neer ng responsib l ty solely for the design shown The suitab lity and use of this design for any structure s the respons bility of the Build ng Designer per ANSI/TPI 1 Sec 2 For more nformat on see Th s job s general notes page ITW BCG www itwbcg com TPI www tpinst org WTCA www sbcindustry com ICC www iccsafe org

TC LL	20.0 PSF	REF	R487-- 9658
TC DL	7.0 PSF	DATE	03/20/13
BC DL	10 0 PSF	DRW	HCUSR487 13079054
BC LL	0.0 PSF	HC-ENG	WHK/WHK
TOT.LD	37.0 PSF	SEQN-	69642
DUR FAC	1.25		
SPACING	24 0"	JREF-	1UUP487_Z02

(13-105--Trademark Construction McDuffie Residence -- Lake City, FL - BDG 21 8" Gable)

Top chord 2x4 SP_#1_12A
Bot chord 2x4 SP_#1_12A
Webs 2x4 SP_#3__12A
Stack Chord SC1 2x4 SP_#1_12A Stack Chord SC2 2x4 SP_#1_12A

Lumber grades designated with 12A" use design values approved 1/5/2012 by ALSC

Gable end supports 8" max rake overhang

Stacked top chord must NOT be notched or cut in area (NNL) Dropped top chord braced at 24" o c intervals Attach stacked top chord (SC) to dropped top chord in notchable area using 3x4 tie-plates 24 o c Center plate on stacked/dropped chord interface, plate length perpendicular to chord length Splice top chord in notchable area using 3x6

120 mph wind, 15 00 ft mean hgt, ASCE 7-10, CLOSED bldg, Located anywhere in roof, RISK CAT II, EXP B, wind TC DL=3 5 psf, wind BC DL=5 0 psf GCpi(+/-)=0 18

Wind loads and reactions based on MWFRS with additional C&C member design

Roof overhang supports 2 00 psf soffit load

See DWGS A12015ENC100212, GBLLETIN0212, & GABRST100212 for more requirements

Bottom chord checked for 10 00 psf non-concurrent live load

Deflection meets L/240 live and L/180 total load Creep increase factor for dead load is 1 50

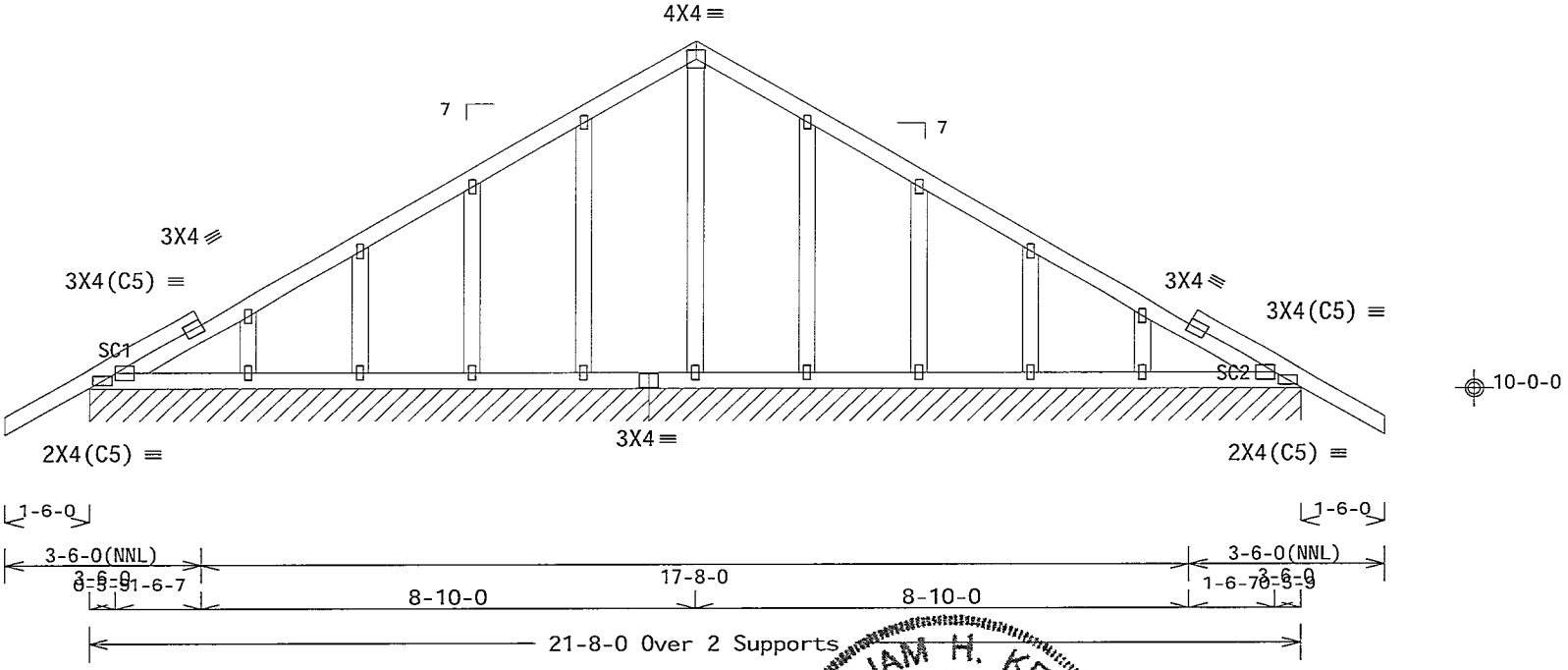

R=86 PLF U=6 PLF W=10-0-0
RL=12/-12 PLF

R=84 PLF U=1 PLF W=11-8

Note All Plates Are 1 5X3 Except As Shown

Design Crit· FBC2010Res/TPI-2007(STD)

PLT TYP. Wave FT/RT=10%(0%)/0(0) 10.03.11.0209.20 QTY 1 FL/-/4/-/-/R/- Scale =.3125"/Ft.

WILLIAM H. KRICK LICENSE No. 70861 STATE OF FLORIDA PROFESSIONAL ENGINEER

03/20/2013

ALPINE
ITW Building Components Group Inc.
Haines City, FL 33844
FL COA #0 278

WARNING READ AND FOLLOW ALL NOTES ON THIS SHEET!
IMPORTANT FURNISH THIS DESIGN TO ALL CONTRACTORS INCLUDING INSTALLERS

Trusses requ re extreme care n fabricating handling shipping installing and brac ng Refer to and follow the latest ed t on of BCSI (Building Component Safety Informat on by TPI and WTCA) for ma pract ces pr or to perform ng these functions Installers shall prov de temporary brac ng per BCSI Unless noted otherw se top chord shall have properly attached structural sheathing and bottom chord shall have a properly attached r g d ceiling Locations shown for permanent lateral restra nt of shall have bracing installed per BCSI sections B3 B7 or B10 as applicable

ITW Bu ld ng Components Group Inc (ITWBCG) shall not be respons ble for any dev ation from this design any fa lure to build the truss in conformance w th ANSI/TPI 1 or for handling sh pping nstallation brac ng of trusses Apply plates to each face of truss and pos t on as shown above and on the Joint Deta ls unless noted otherwise Refer to draw ngs 160A-Z for standard plate pos t ons A seal on this draw ng or cover page listing this draw ng nd cates acceptance of profess onal engineer ng respons b l ty solely for the design shown The su tab lity and use of this des gn for any structure is the responsibility of the Bu ld ng Des gner per ANSI/TPI 1 Sec 2 For more informat on sec This job s general notes page ITW BCG www twbcg com TPI www tp nst org WTCA www sbcindustry com ICC www iccsafe org

TC LL	20.0 PSF	REF	R487-- 9659
TC DL	7.0 PSF	DATE	03/20/13
BC DL	10.0 PSF	DRW	HCUSR487 13079055
BC LL	0 0 PSF	HC-ENG	WHK/WHK
TOT LD.	37 0 PSF	SEQN-	69643
DUR FAC	1 25		
SPACING	24.0"	JREF-	1UUP487_Z02

(13-105--Trademark Construction McDuffie Residence -- Lake City, FL - C 13 2" Common)

Top chord 2x4 SP_#1_12A
Bot chord 2x4 SP_#1_12A
Webs 2x4 SP_#3__12A

Lumber grades designated with 12A use design values approved 1/5/2012 by ALSC

Roof overhang supports 2 00 psf soffit load

Deflection meets L/240 live and L/180 total load Creep increase factor for dead load is 1 50

120 mph wind, 15 00 ft mean hgt, ASCE 7-10, CLOSED bldg, Located anywhere in roof, RISK CAT II, EXP B, wind TC DL=3 5 psf, wind BC DL=5 0 psf GCpi(+/-)=0 18

Wind loads and reactions based on MWFRS with additional C&C member design

Bottom chord checked for 10 00 psf non-concurrent live load

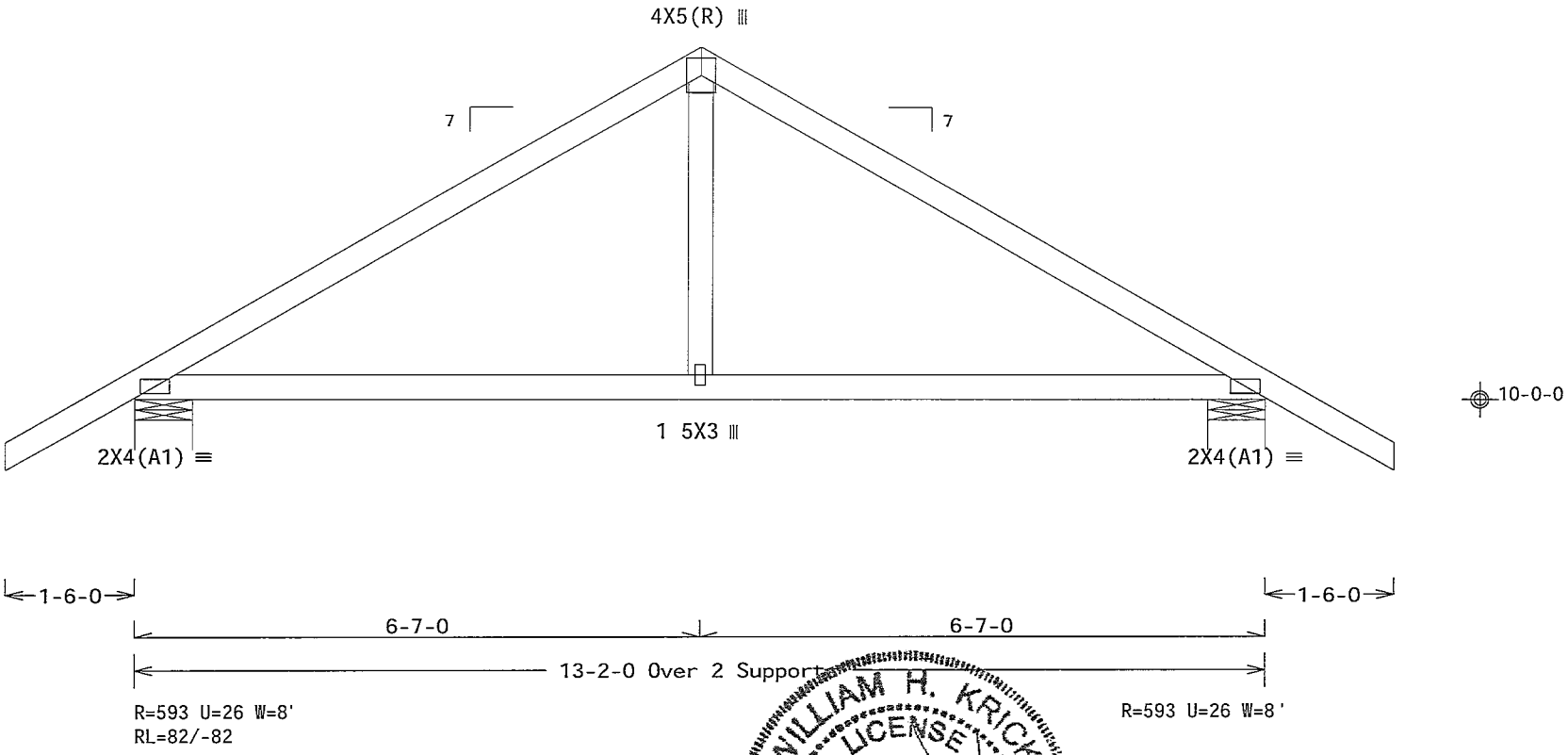

Design Crit· FBC2010Res/TPI-2007(STD)

PLT TYP Wave FT/RT=10%(0%)/0(0) ID 03 11.0209 20 QTY 1 FL/-/4/-/-/R/- Scale = 5"/Ft

ALPINE
ITW Building Components Group Inc.
Haines City, FL 33844
FL COA #0 278

WARNING READ AND FOLLOW ALL NOTES ON THIS SHEET
IMPORTANT FURNISH THIS DESIGN TO ALL CONTRACTORS INCLUDING INSTALLERS

Trusses requ re extreme care n fabr cat ng hand ng shipping nstalling and bracing refer to and follow the latest ed t on of BCSI (Build ng Component Safety Information by TPI and WTCA) for safety practices pr or to perform ng these functions Installers shall provide temporary brac ng per BCSI Unless noted otherw se top chord shall have properly attached structural sheath ng and bottom chord shall have a proper y attached r g d ce ling Locat ons shown for permanent lateral restraint shall have brac ng installed per BCSI sections B3 B7 or B10 as applicable

ITW Bu ldng Components Group Inc (ITWBCG) shall not be respons ble for any dev at on from this design any fa lure to bu ld the truss n conformance w th ANSI/TPI 1 or for handl ng sh pp ng nstallation bracing of trusses Apply plates to each face of truss and pos t on as shown above and on the Joint Deta ls unless noted otherw se Refer to draw ngs 160A-Z for standard plate pos tions A seal on th s drawing or cover page list ng this draw ng nd cates acceptance of profess onal engineer ng respons b lity solely for the design shown The su tab lity and use of this des gn for any structure is the responsibility of the Bu ldng Des gner per ANSI/TPI 1 Sec 2 For more information see This job s general notes page ITW BCG www itwbcg com TPI www tpinst org WTCA www sbc ndustry com ICC www ccsafe org

WILLIAM H. KRICK LICENSE No. 70861 STATE OF FLORIDA PROFESSIONAL ENGINEER
03/20/2013

TC LL	20 0 PSF	REF	R487-- 9660
TC DL	7 0 PSF	DATE	03/20/13
BC DL	10 0 PSF	DRW	HCUSR487 13079056
BC LL	0.0 PSF	HC-ENG	WHK/WHK
TOT.LD	37.0 PSF	SEQN-	69644
DUR FAC	1 25		
SPACING	24 0"	JREF-	1UUP487_Z02

(13-105--Trademark Construction McDuffie Residence -- Lake City, FL - CDG 13 2' Gable)

Top chord 2x4 SP_#1_12A
Bot chord 2x4 SP_#1_12A
Webs 2x4 SP_#3__12A
Stack Chord SC1 2x4 SP_#1_12A Stack Chord SC2 2x4 SP_#1_12A

Lumber grades designated with '12A' use design values approved 1/5/2012 by ALSC

See DWGS A12015ENC100212, GBLLETIN0212, & GABRST100212 for more requirements

Bottom chord checked for 10 00 psf non-concurrent live load

Deflection meets L/240 live and L/180 total load Creep increase factor for dead load is 1 50

120 mph wind, 15 00 ft mean hgt, ASCE 7-10, CLOSED bldg, Located anywhere in roof, RISK CAT II, EXP B, wind TC DL=3 5 psf, wind BC DL=5 0 psf GCpi(+/-)=0 18

Wind loads and reactions based on MWFRS with additional C&C member design

Roof overhang supports 2 00 psf soffit load

Stacked top chord must NOT be notched or cut in area (NNL) Dropped top chord braced at 24' o c intervals Attach stacked top chord (SC) to dropped top chord in notchable area using 3x4 tie-plates 24' o c Center plate on stacked/dropped chord interface, plate length perpendicular to chord length Splice top chord in notchable area using 3x6

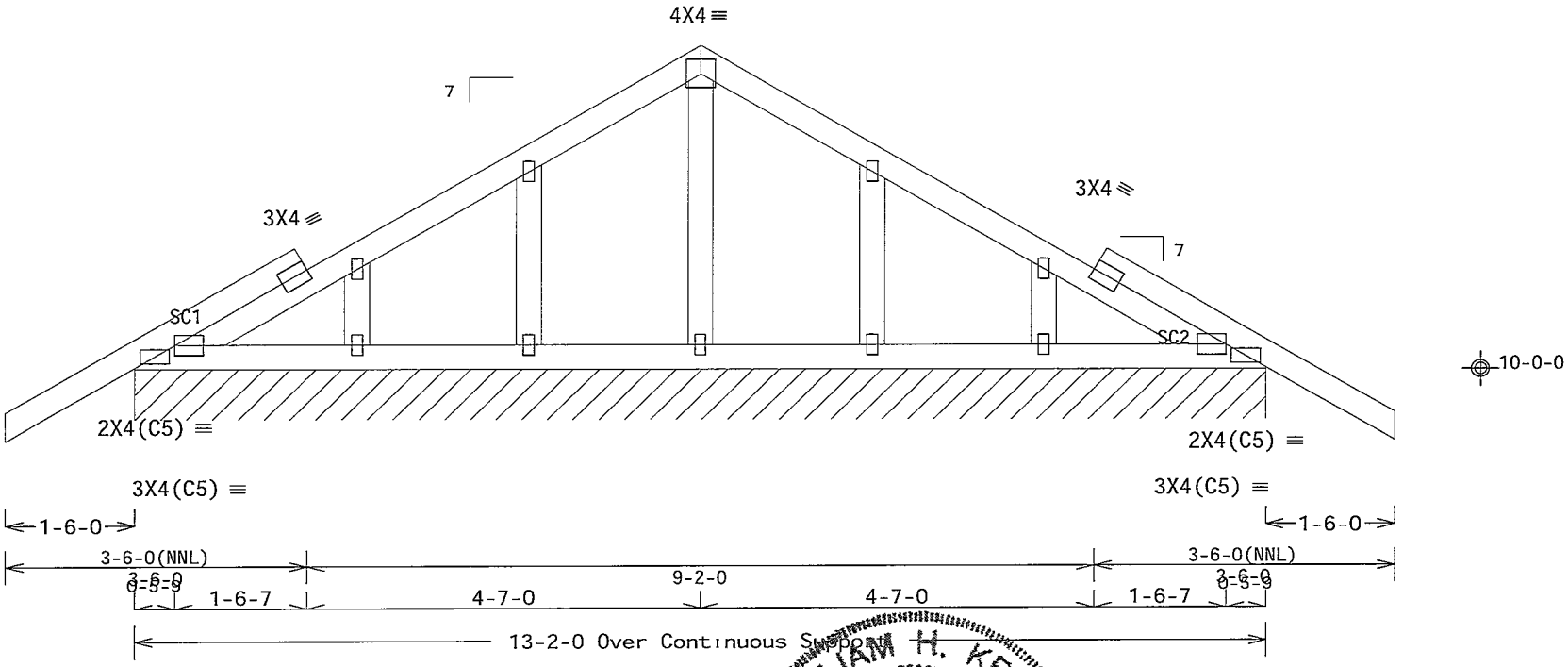

R=90 PLF U=4 PLF W=13-2-0
RL=6/-6 PLF

Note All Plates Are 1 5X3 Except As Shown

Design Crit FBC2010Res/TPI-2007(STD)

PLT TYP Wave FT/RT=10%(0%)/0(0) 10.03.11.0209 20 QTY 1 FL/-/4/-/-/R/- Scale =.5"/Ft.

WILLIAM H. KRICK LICENSE No. 70861 STATE OF FLORIDA PROFESSIONAL ENGINEER 03/20/2013

ALPINE
ITW Building Components Group Inc.
Haines City, FL 33844
FL COA #0 278

WARNING READ AND FOLLOW ALL NOTES ON THIS SHEET!
IMPORTANT FURNISH THIS DESIGN TO ALL CONTRACTORS INCLUDING INSTALLERS

Trusses requ re extreme care n fabr cat ng handling shipping installing and brac ng Refer to and follow the latest ed t on of BCSI (Building Component Safety Informat on by TPI and WTCA) for safety practices pr or to performing these funct ons Installers shall provide temporary brac ng per BCSI Unless noted otherw se top chord shall have properly attached structural sheathing and bottom chord shall have a properly attached r g d ceiling Locations shown for permanent lateral restraint of webs shall have brac ng installed per BCSI sections B3 B7 or B10 as applicable

ITW Building Components Group Inc (ITWBCG) shall not be respons ble for any deviat on from th s design any fa lure to bu ld the truss n conformance w th ANSI/TPI 1 or for handl ng shipp ng nstallat on and bracing of trusses Apply plates to each face of truss and pos t on as shown above and on the Jo nt Details unless noted otherw se Refer to draw ngs 160A-Z for standard plate pos t ons A seal on th s drawing or cover page l st ng th s draw ng nd cates acceptance of profess onal eng neer ng responsibility solely for the des gn shown The suitabil ty and use of th s design for any structure s the respons b l ty of the Bu ld ng Des gner per ANSI/TPI 1 Sec 2 For more nformat on see Th s job s general notes page ITW-BCG www twbcg com TPI www tp nst org WTCA www sbc ndustry com ICC www ccsafe org

TC LL	20.0 PSF	REF	R487-- 9661
TC DL	7 0 PSF	DATE	03/20/13
BC DL	10 0 PSF	DRW	HCUSR487 13079057
BC LL	0.0 PSF	HC-ENG	WHK/WHK
TOT LD	37.0 PSF	SEQN-	69645
DUR.FAC	1 25		
SPACING	24.0"	JREF-	1UUP487_Z02

(13-105--Trademark Construction McDuffie Residence -- Lake City, FL - CG 13'2' Common Girder)

Top chord 2x4 SP_#1_12A
Bot chord 2x6 SP_#2_12A
Webs 2x4 SP_#3__12A

Lumber grades designated with '12A' use design values approved 1/5/2012 by ALSC

Special loads
------(Lumber Dur Fac =1 25 / Plate Dur Fac =1 25)
TC- From 56 plf at -1 50 to 56 plf at 6 58
TC- From 56 plf at 6 58 to 56 plf at 13 17
BC- From 5 plf at -1 50 to 5 plf at 0 00
BC- From 20 plf at 0 00 to 20 plf at 7 06
BC- From 10 plf at 7 06 to 10 plf at 11 06
BC- From 20 plf at 11 06 to 20 plf at 13 17
BC- 2574 05 lb Conc Load at 7 06
BC- 1099 37 lb Conc Load at 9 06
BC- 1095 82 lb Conc Load at 11 06

Deflection meets L/240 live and L/180 total load Creep increase factor for dead load is 1 50

2 COMPLETE TRUSSES REQUIRED

Nail Schedule 0 131 x3 nails
Top Chord 1 Row @12 00" o c
Bot Chord 1 Row @ 4 25 o c
Webs 1 Row @ 4 o c
Use equal spacing between rows and stagger nails in each row to avoid splitting

120 mph wind, 15 00 ft mean hgt, ASCE 7-10, CLOSED bldg, Located anywhere in roof, RISK CAT II, EXP B, wind TC DL=3 5 psf, wind BC DL=5 0 psf GCpi(+/-)=0 18

Wind loads and reactions based on MWFRS with additional C&C member design

Roof overhang supports 2 00 psf soffit load

Bottom chord checked for 10 00 psf non-concurrent live load

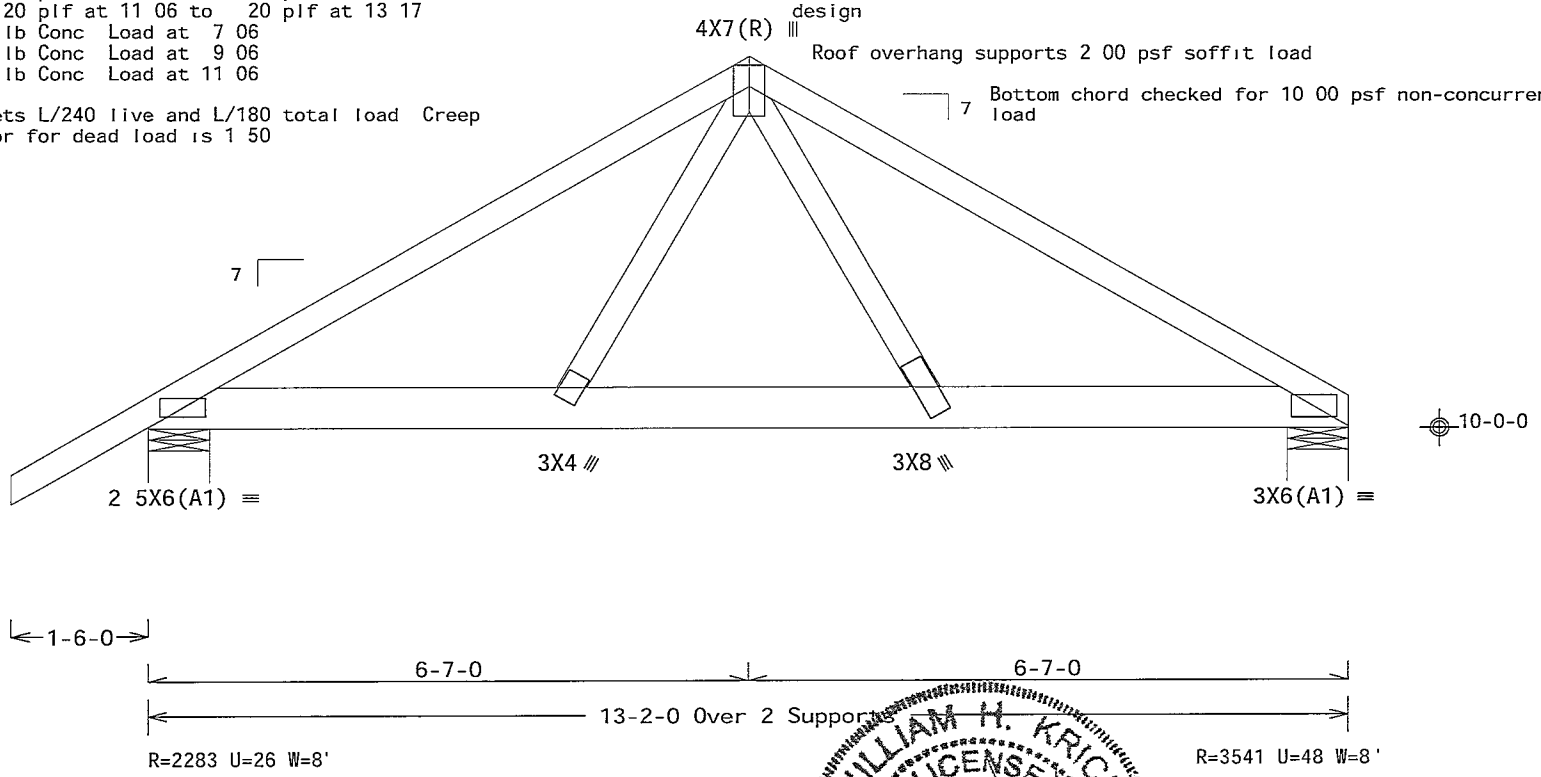

Design Crit FBC2010Res/TPI-2007(STD)
FT/RT=10%(0%)/0(0)
10.03 11 02/09 20 /TOTY1

PLT TYP Wave

FL/-/4/-/-/R/-

Scale =.5"/Ft.

ALPINE
ITW Building Components Group Inc.
Haines City, FL 33844
FL COA #0 278

WARNING READ AND FOLLOW ALL NOTES ON THIS SHEET!
IMPORTANT FURNISH THIS DESIGN TO ALL CONTRACTORS INCLUDING INSTALLERS

Trusses require extreme care in fabr cat ng handl ng sh pp ng nstall ng and bracing Refer to and follow the latest ed tion of BCSI (Bu ld ng Component Safety Information by TPI and WTCA) for recommended practices pr or to performing these funct ons Installers shall provide temporary bracing per BCSI Unless noted otherwise top chord shall have properly attached structural sheath ng and bottom chord shall have a properly attached rigid ce l ng Locat ons shown for permanent lateral restra nt of webs shall have brac ng nstalled per BCSI sect ons B3 B7 or B10 as appl cable

ITW Building Components Group Inc (ITWBCG) shall not be responsible for any deviat on from th s design any failure to bu ld the truss n conformance with ANSI/TPI 1 or for handling shipp ng installation & brac ng of trusses Apply plates to each face of truss and position as shown above and on the Jo nt Details unless noted otherwise Refer to drawings 160A-Z for standard plate posit ons A seal on this drawing or cover page l sting th s drawing indicates acceptance of professional eng neer ng responsib l ty solely for the design shown The suitability and use of this design for any structure s the respons b lity of the Building Designer per ANSI/TPI 1 Sec 2 For more informat on see Th s job s general notes page ITW-BCG www itwbcg com TPI www tpinst org WTCA www sbcindustry com ICC www ccsafe org

WILLIAM H. KRICK
LICENSE
No. 70861
STATE OF FLORIDA
PROFESSIONAL ENGINEER
03/20/2013

TC LL	20 0 PSF	REF	R487-- 9662
TC DL	7.0 PSF	DATE	03/20/13
BC DL	10 0 PSF	DRW	HCUSR487 13079058
BC LL	0.0 PSF	HC-ENG	WHK/WHK
TOT LD	37.0 PSF	SEQN-	69670
DUR.FAC	1.25		
SPACING	24.0"	JREF-	1UUP487_Z02

(13-105--Trademark Construction McDuffie Residence -- Lake City, FL - CJ1 1 Jack)

Top chord 2x4 SP_#1_12A
Bot chord 2x4 SP_#1_12A

Lumber grades designated with "12A use design values approved 1/5/2012 by ALSC

Roof overhang supports 2 00 psf soffit load

Deflection meets L/240 live and L/180 total load Creep increase factor for dead load is 1 50

120 mph wind, 15 00 ft mean hgt, ASCE 7-10, CLOSED bldg, Located anywhere in roof, RISK CAT II, EXP B, wind TC DL=3 5 psf, wind BC DL=5 0 psf GCpi(+/-)=0 18

Wind loads and reactions based on MWFRS with additional C&C member design

Bottom chord checked for 10 00 psf non-concurrent live load

Provide (2) 16d common nails(0 162"x3 5"), toe nailed at Top chord
Provide (2) 16d common nails(0 162"x3 5"), toe nailed at Bot chord

1-6-0
1-0-0 Over 3 Supports

R=232 U=30 W=3 5"
RL=24

Design Crit FBC2010Res/TPI-2007(STD)
FT/RT=10%(0%)/0(0) 10.03 11 0209 20 QTY 4 FL/-/4/-/-/R/- Scale =.5"/Ft

PLT TYP Wave

WILLIAM H. KRICK LICENSE No. 70861 STATE OF FLORIDA PROFESSIONAL ENGINEER
03/20/2013

ALPINE
ITW Building Components Group Inc.
Haines City, FL 33844
FL COA #0 278

WARNING READ AND FOLLOW ALL NOTES ON THIS SHEET!
IMPORTANT FURNISH THIS DESIGN TO ALL CONTRACTORS INCLUDING INSTALLERS

Trusses require extreme care in fabricat ng handl ng sh pp ng nstall ng and bracing refer to and follow the latest edition of BCSI (Bu ld ng Component Safety Information by TPI and WTCA) for safety practices pr or to performing these funct ons Installers shall provide temporary bracing per BCSI. Unless noted otherw se top chord shall have properly attached structural sheath ng and bottom chord shall have a properly attached rigid ce l ng Locat ons shown for permanent lateral restraint of webs shall have brac ng nstalled per BCSI sections B3 B7 or B10 as appl cable

ITW Building Components Group Inc (ITWBCG) shall not be responsible for any deviat on from th s design any failure to bu ld the truss n conformance with ANSI/TPI 1 or for handling shipping installation bracing of trusses Apply plates to each face of truss and position as shown above and on the Jo nt Details unless noted otherwise Refer to drawings 160A-Z for standard plate posit ons A seal on this drawing or cover page i st ng th s drawing ndicates acceptance of profess onal engineer ng responsibility solely for the des gn shown The suitabil ty and use of th s design for any structure s the responsib l ty of the Build ng Designer per ANSI/TPI 1 Sec 2 For more informat on see Th s job s general notes page ITW-BCG www itwbcg com TPI www tpinst org WTCA www sbcindustry com ICC www iccsafe org

TC LL	20.0 PSF	REF	R487-- 9663
TC DL	7.0 PSF	DATE	03/20/13
BC DL	10.0 PSF	DRW	HCUSR487 13079059
BC LL	0.0 PSF	HC-ENG	WHK/WHK
TOT.LD	37 0 PSF	SEQN-	69646
DUR.FAC.	1.25		
SPACING	24.0"	JREF-	1UUP487_Z02

(13-105--Trademark Construction McDuffie Residence -- Lake City, FL - CJ3 3' Jack)

Top chord 2x4 SP_#1_12A
Bot chord 2x4 SP_#1_12A

Lumber grades designated with 12A use design values approved 1/5/2012 by ALSC

Roof overhang supports 2 00 psf soffit load

Deflection meets L/240 live and L/180 total load Creep increase factor for dead load is 1 50

120 mph wind, 15 00 ft mean hgt, ASCE 7-10, CLOSED bldg, Located anywhere in roof, RISK CAT II, EXP B, wind TC DL=3 5 psf, wind BC DL=5 0 psf GCpi(+/-)=0 18

Wind loads and reactions based on MWFRS with additional C&C member design

Bottom chord checked for 10 00 psf non-concurrent live load

Provide (2) 16d common nails(0 162"x3 5"), toe nailed at Top chord
Provide (2) 16d common nails(0 162"x3 5"), toe nailed at Bot chord

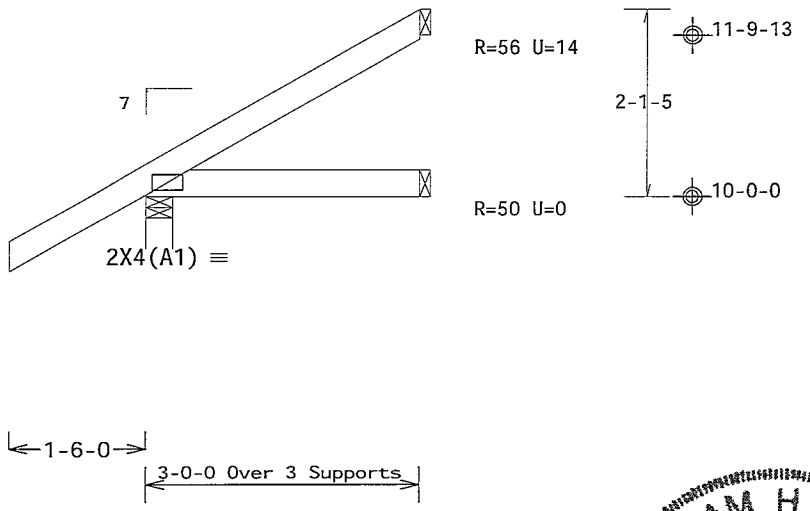

Design Crit. FBC2010Res/TPI-2007(STD)

PLT TYP. Wave FT/RT=10%(0%)/0(0) 10.03.11.0209 20 QTY:4 FL/-/4/-/-/R/- Scale =.5"/Ft.

WILLIAM H. KRICK LICENSE No. 70861 STATE OF FLORIDA PROFESSIONAL ENGINEER

03/20/2013

ALPINE
ITW Building Components Group Inc.
Haines City, FL 33844
FL COA #0 278

WARNING READ AND FOLLOW ALL NOTES ON THIS SHEET!
IMPORTANT FURNISH THIS DESIGN TO ALL CONTRACTORS INCLUDING INSTALLERS

Trusses require extreme care in fabr cat ng handl ng sh pp ng nstalling and bracing Refer to and follow the latest edition of BCSI (Bu ld ng Component Safety Information by TPI and WTCA) for safety pract ces prior to performing these funct ons Installers shall provide temporary bracing per BCSI. Unless noted otherwise top chord shall have properly attached structural sheath ng and bottom chord shall have a properly attached rigid ce l ng Locat ons shown for permanent lateral restraint of webs shall have bracing nstalled per BCSI sections B3 B7 or B10 as applicable

ITW Building Components Group Inc (ITWBCG) shall not be responsible for any deviation from this design, any failure to build the truss n conformance with ANSI/TPI 1 or for handling shipping installation and brac ng of trusses Apply plates to each face of truss and position as shown above and on the Joint Details unless noted otherwise Refer to drawings 160A-Z for standard plate posit ons A seal on this drawing or cover page listing this drawing indicates acceptance of professional engineering respons b l ty solely for the design shown The suitability and use of this design for any structure is the responsibility of the Building Designer per ANSI/TPI 1 Sec 2 For more informat on see Th s job s general notes page ITW-BCG www itwbcg com TPI www tpinst org WTCA www sbcindustry com ICC www ccsafe org

TC LL	20.0 PSF	REF	R487-- 9664
TC DL	7.0 PSF	DATE	03/20/13
BC DL	10.0 PSF	DRW	HCUSR487 13079060
BC LL	0.0 PSF	HC-ENG	WHK/WHK
TOT.LD.	37.0 PSF	SEQN-	69647
DUR.FAC.	1.25		
SPACING	24.0"	JREF-	1UUP487_Z02

(13-105--Trademark Construction McDuffie Residence -- Lake City, FL - CJ5 5 Jack)

Top chord 2x4 SP_#1_12A
Bot chord 2x4 SP_#1_12A

Lumber grades designated with '12A' use design values approved 1/5/2012 by ALSC

Roof overhang supports 2 00 psf soffit load

Deflection meets L/240 live and L/180 total load Creep increase factor for dead load is 1 50

120 mph wind, 15 00 ft mean hgt, ASCE 7-10, CLOSED bldg, not located within 4 50 ft from roof edge, RISK CAT II, EXP B, wind TC DL=3 5 psf, wind BC DL=5 0 psf GCpi(+/-)=0 18

Wind loads and reactions based on MWFRS with additional C&C member design

Bottom chord checked for 10 00 psf non-concurrent live load

Provide (2) 16d common nails(0 162"x3 5"), toe nailed at Top chord
Provide (2) 16d common nails(0 162"x3 5"), toe nailed at Bot chord

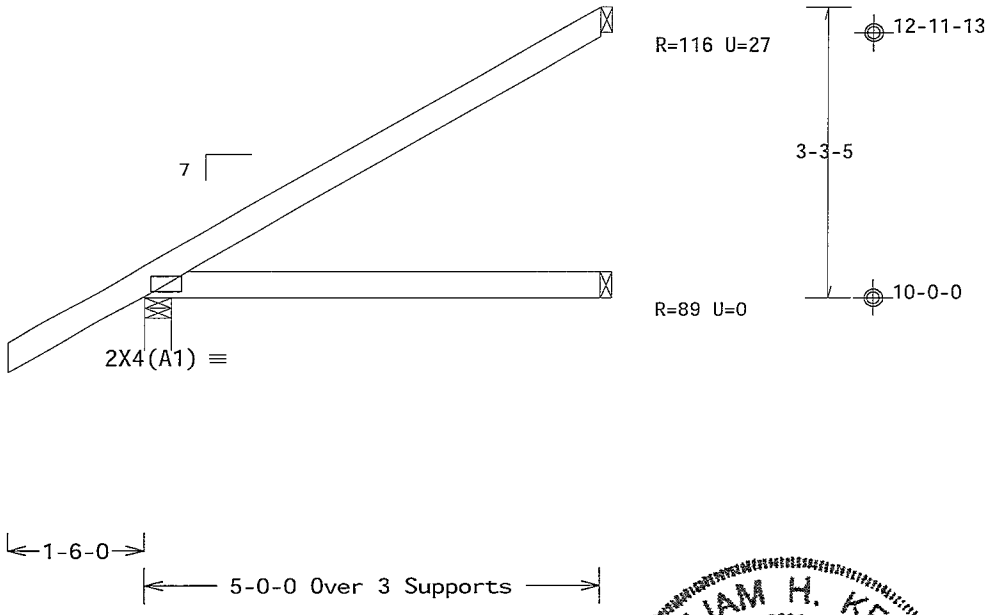

Design Crit. FBC2010Res/TPI-2007(STD)
FT/RT=10%(0%)/0(0)

PLT TYP. Wave

10.03.11.0209.20 TOTY4

FL/-/4/-/-/R/-

Scale =.5"/Ft.

WILLIAM H. KRICK
LICENSE
No. 70861
STATE OF FLORIDA
PROFESSIONAL ENGINEER
03/20/2013

ALPINE
ITW Building Components Group Inc.
Haines City FL 33844
FL COA #0 278

WARNING READ AND FOLLOW ALL NOTES ON THIS SHEET!
IMPORTANT FURNISH THIS DESIGN TO ALL CONTRACTORS INCLUDING INSTALLERS

Trusses requ re extreme care in fabr cat ng handl ng shipping nstalling and bracing Refer to and follow the latest ed tion of BCSI (Build ng Component Safety Information by TPI and WTCA) for general practices pr or to performing these funct ons Installers shall provide temporary bracing per BCSI Unless noted otherw se top chord shall have properly attached structural sheath ng and bottom chord shall have a properly attached rigid ce l ng Locat ons shown for permanent lateral restraint of webs shall have brac ng nstalled per BCSI sections B3 B7 or B10 as applicable

ITW Building Components Group Inc (ITWBCG) shall not be responsible for any deviat on from th s design any fa lure to bu ld the truss n conformance w th ANSI/TPI 1 or for handl ng shipp ng nstallat on bracing of trusses Apply plates to each face of truss and pos tion as shown above and on the Jo nt Details unless noted otherw se Refer to draw ngs 160A-Z for standard plate pos t ons A seal on th s drawing or cover page l st ng th s drawing ndicates acceptance of profess onal eng neer ng respons bility solely for the des gn shown The su tabil ty and use of th s des gn for any structure s the responsibil ty of the Build ng Designer per ANSI/TPI 1 Sec 2 For more nformat on see This job s general notes page ITW-BCG www twbcg com TPI www tp nst org WTCA www sbc ndustry com ICC www iccsafe org

TC LL	20.0 PSF	REF	R487-- 9665
TC DL	7.0 PSF	DATE	03/20/13
BC DL	10.0 PSF	DRW	HCUSR487 13079061
BC LL	0 0 PSF	HC-ENG	WHK/WHK
TOT LD	37.0 PSF	SEQN-	69648
DUR.FAC.	1.25		
SPACING	24 0"	JREF-	1UUP487_Z02

THIS DWG PREPARED FROM COMPUTER INPUT (LOADS & DIMENSIONS) SUBMITTED BY TRUSS MFR

(13-105--Trademark Construction McDuffie Residence -- Lake City, FL - D 9'10" Common)

Top chord 2x4 SP_#1_12A
Bot chord 2x4 SP_#1_12A

Lumber grades designated with "12A use design values approved 1/5/2012 by ALSC

Roof overhang supports 2 00 psf soffit load

Deflection meets L/240 live and L/180 total load Creep increase factor for dead load is 1 50

120 mph wind, 15 00 ft mean hgt, ASCE 7-10, CLOSED bldg, Located anywhere in roof, RISK CAT II, EXP B, wind TC DL=3 5 psf, wind BC DL=5 0 psf GCpi(+/-)=0 18

Wind loads and reactions based on MWFRS with additional C&C member design

Bottom chord checked for 10 00 psf non-concurrent live load

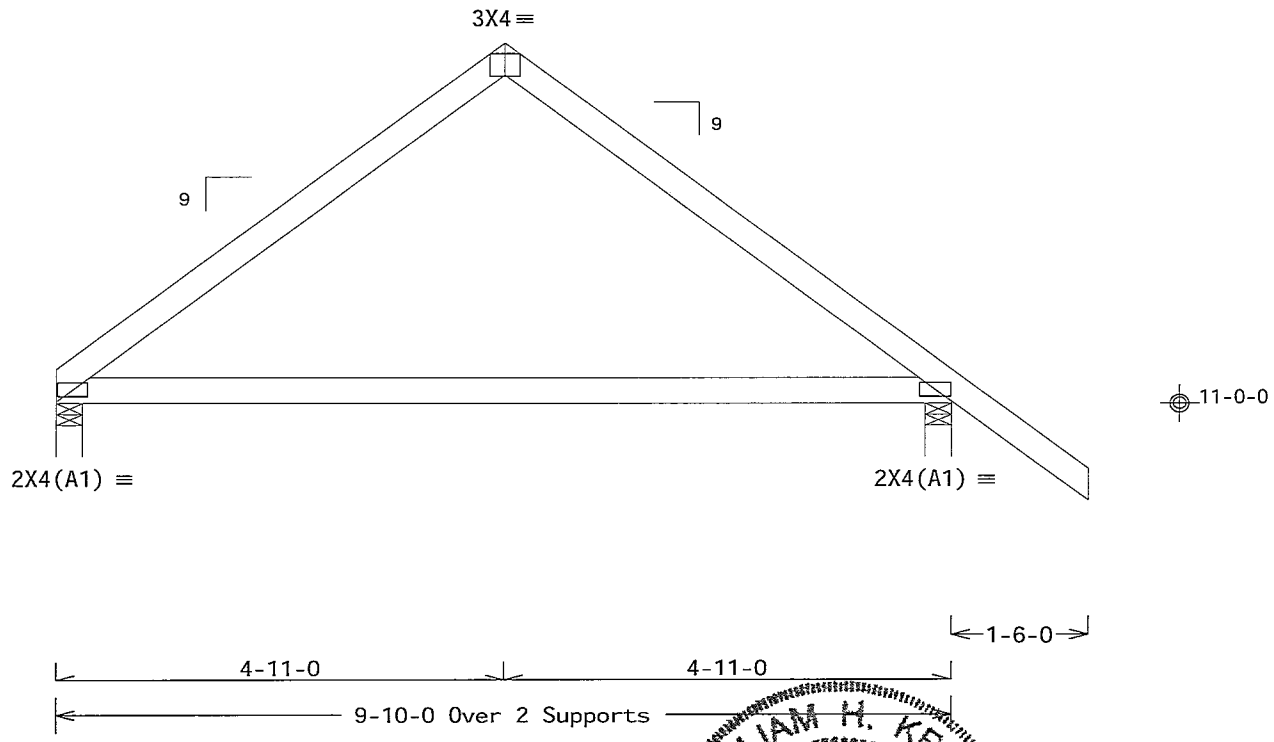

Design Crit· FBC2010Res/TPI-2007(STD) 10.03.11.0209.20 FT/RT=10%(0%)/0(0)

PLT TYP. Wave

FL/-/4/-/-/R/- Scale =.5"/Ft.

ALPINE
ITW Building Components Group Inc.
Haines City, FL 33844
FL COA #0 278

WARNING READ AND FOLLOW ALL NOTES ON THIS SHEET!
IMPORTANT FURNISH THIS DESIGN TO ALL CONTRACTORS INCLUDING INSTALLERS

Trusses require extreme care n fabricating handling sh pp ng install ng and brac ng Refer to and follow the latest ed t on of BCSI (Building Component Safety Information by TPI and WTCA) for recommended pract ces prior to perform ng these functions Installers shall prov de temporary brac ng per BCSI. Unless noted otherw se top chord shall have properly attached structural sheathing and bottom chord shall have a properly attached r g d ce ling Locations shown for permanent lateral restraint of webs shall have brac ng installed per BCSI sections B3 B7 or B10 as applicable

ITW Building Components Group Inc (ITWBCG) shall not be respons ble for any deviation from this design, any fa lure to bu ld the truss n conformance w th ANSI/TPI 1 or for handl ng sh pping nstallation & bracing of trusses Apply plates to each face of truss and pos t on as shown above and on the Joint Details unless noted otherw se Refer to draw ngs 160A-Z for standard plate pos tions A seal on this drawing or cover page list ng this draw ng nd cates acceptance of profess onal engineer ng respons bility solely for the des gn shown The su tab l ty and use of th s des gn for any structure is the responsibility of the Bu lding Des gner per ANSI/TPI 1 Sec 2 For more nformation see This job s general notes page ITW BCG www twbcg com TPI www tp nst org WTCA www sbc ndustry com ICC www iccsafe org

WILLIAM H. KRUCK
LICENSE
No. 70861
STATE OF FLORIDA
PROFESSIONAL ENGINEER
03/20/2013

TC LL	20.0 PSF	REF	R487-- 9666
TC DL	7.0 PSF	DATE	03/20/13
BC DL	10.0 PSF	DRW	HCUSR487 13079062
BC LL	0.0 PSF	HC-ENG	WHK/WHK
TOT.LD.	37.0 PSF	SEQN-	69649
DUR.FAC	1.25		
SPACING	24.0"	JREF-	1UUP487_Z02

(13-105--Trademark Construction McDuffie Residence -- Lake City, FL - DDG 9 10" Gable)

Top chord 2x4 SP_#1_12A
Bot chord 2x4 SP_#1_12A
Webs 2x4 SP_#3__12A
Stack Chord SC1 2x4 SP_#1_12A Stack Chord SC2 2x4 SP_#1_12A

Lumber grades designated with "12A" use design values approved 1/5/2012 by ALSC

See DWGS A12015ENC100212, GBLLETIN0212, & GABRST100212 for more requirements

Bottom chord checked for 10 00 psf non-concurrent live load

Deflection meets L/240 live and L/180 total load Creep increase factor for dead load is 1 50

120 mph wind, 15 00 ft mean hgt, ASCE 7-10, CLOSED bldg, Located anywhere in roof, RISK CAT II, EXP B, wind TC DL=3 5 psf, wind BC DL=5 0 psf GCpi(+/-)=0 18

Wind loads and reactions based on MWFRS with additional C&C member design

Roof overhang supports 2 00 psf soffit load

Stacked top chord must NOT be notched or cut in area (NNL) Dropped top chord braced at 24" o c intervals Attach stacked top chord (SC) to dropped top chord in notchable area using 3x4 tie-plates 24" o c Center plate on stacked/dropped chord interface, plate length perpendicular to chord length Splice top chord in notchable area using 3x6

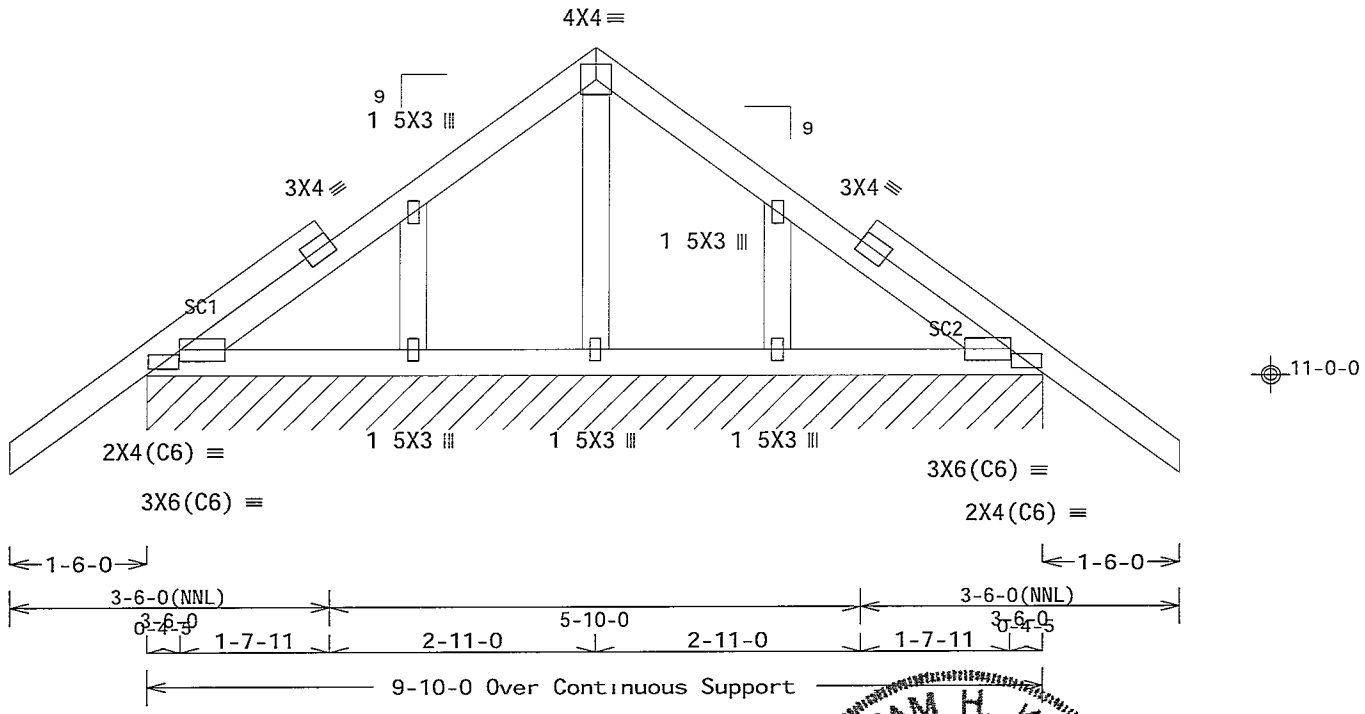

11-0-0

R=97 PLF U=3 PLF W=9-10-0
RL=10/-10 PLF

Design Crit. FBC2010Res/TPI-2007(STD)
FT/RT=10%(0%)/0(0) 10 03 11.0209 20 QTY 1 FL/-/4/-/-/R/- Scale =.5"/Ft.

PLT TYP. Wave

WILLIAM H. KRICK LICENSE No. 70861 STATE OF FLORIDA PROFESSIONAL ENGINEER
03/20/2013

ALPINE
ITW Building Components Group Inc.
Haines City FL 33844
FL COA #0 278

WARNING READ AND FOLLOW ALL NOTES ON THIS SHEET!
IMPORTANT FURNISH THIS DESIGN TO ALL CONTRACTORS INCLUDING INSTALLERS

Trusses requ re extreme care n fabricating handling shipping installing and bracing Refer to and follow the latest ed t on of BCSI (Building Component Safety Informat on by TPI and WTCA) for safety practices pr or to performing these functions Installers shall provide temporary bracing per BCSI. Unless noted otherw se top chord shall have properly attached structural sheathing and bottom chord shall have a properly attached r g d ceil ng Locations shown for permanent lateral restraint of webs shall have brac ng nstalled per BCSI sections B3 B7 or B10 as applicable

ITW Bu ldng Components Group Inc (ITWBCG) shall not be respons ble for any dev ation from this design any fa lure to bu ld the truss in conformance w th ANSI/TPI 1 or for handl ng sh pping nstallation bracing of trusses Apply plates to each face of truss and pos t on as shown above and on the Joint Details unless noted otherw se Refer to draw ngs 160A-Z for standard plate pos tions A seal on this drawing or cover page list ng th s draw ng nd cates acceptance of profess onal engineer ng respons bility solely for the des gn shown The su tabil ty and use of th s des gn for any structure s the responsibil ty of the Bu ld ng Designer per ANSI/TPI 1 Sec 2 For more nformat on see This job s general notes page ITW-BCG www twbcg com TPI www tp nst org WTCA www sbc ndustry com ICC www ccsafe org

TC LL	20 0 PSF	REF	R487-- 9667
TC DL	7.0 PSF	DATE	03/20/13
BC DL	10 0 PSF	DRW	HCUSR487 13079063
BC LL	0.0 PSF	HC-ENG	WHK/WHK
TOT LD	37 0 PSF	SEQN-	69650
DUR FAC	1 25		
SPACING	24 0"	JREF-	1UUP487_Z02

(13-105--Trademark Construction McDuffie Residence -- Lake City, FL - EJ7 7' End Jack)

Top chord 2x4 SP_#1_12A
Bot chord 2x4 SP_#1_12A

Lumber grades designated with '12A use design values approved 1/5/2012 by ALSC

Roof overhang supports 2 00 psf soffit load

Deflection meets L/240 live and L/180 total load Creep increase factor for dead load is 1 50

120 mph wind, 15 00 ft mean hgt, ASCE 7-10, CLOSED bldg, not located within 4 50 ft from roof edge, RISK CAT II, EXP B, wind TC DL=3 5 psf, wind BC DL=5 0 psf GCpi(+/-)=0 18

Wind loads and reactions based on MWFRS with additional C&C member design

Bottom chord checked for 10 00 psf non-concurrent live load

Provide (2) 16d common nails(0 162 x3 5), toe nailed at Top chord
Provide (2) 16d common nails(0 162"x3 5'), toe nailed at Bot chord

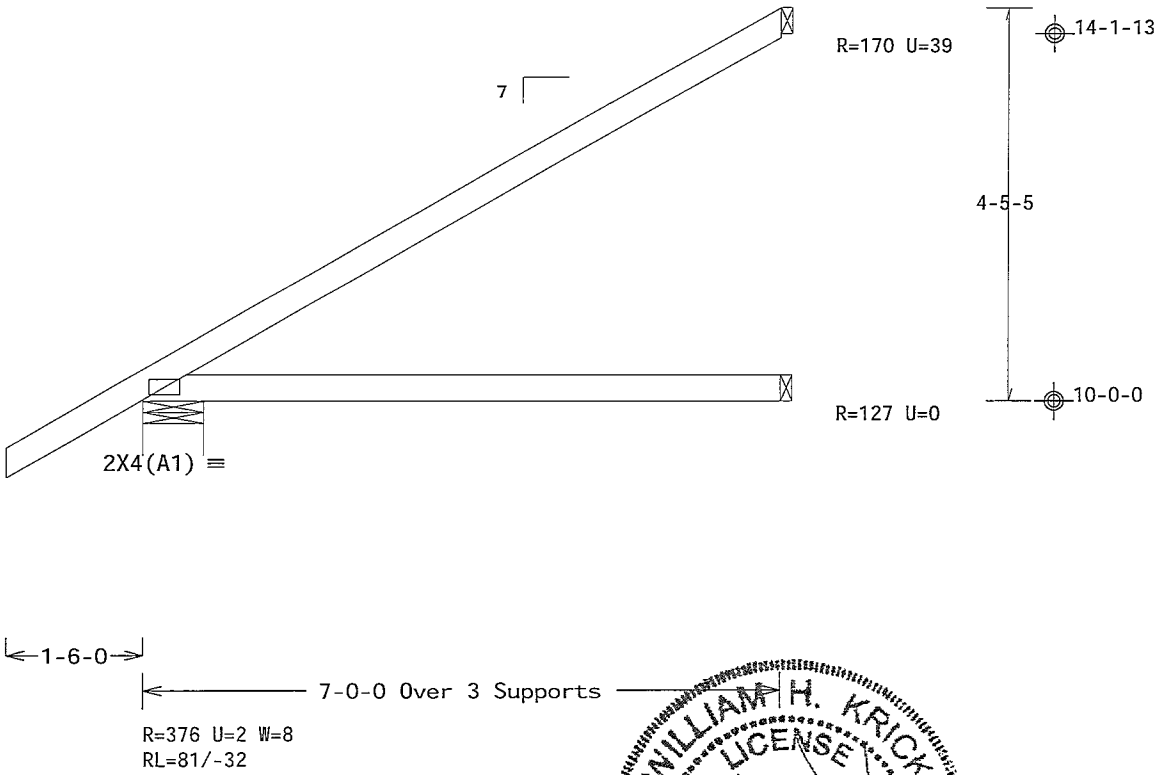

Design Crit. FBC2010Res/TPI-2007(STD)
FT/RT=10%(0%)/0(0) 10 03 11 0209 20 QTY 30 FL/-/4/-/-/R/-

PLT TYP Wave

Scale =.5"/Ft

WILLIAM H. KRICK LICENSE No. 70861 STATE OF FLORIDA PROFESSIONAL ENGINEER
03/20/2013

ALPINE
ITW Building Components Group Inc.
Haines City, FL 33844
FL COA #0 278

WARNING READ AND FOLLOW ALL NOTES ON THIS SHEET!
IMPORTANT FURNISH THIS DESIGN TO ALL CONTRACTORS INCLUDING INSTALLERS

Trusses require extreme care n fabr cating handling sh pping install ng and brac ng Refer to and follow the latest edit on of BCSI (Building Component Safety Informat on by TPI and WTCA) for handling practices prior to perform ng these functions Installers shall prov de temporary brac ng per BCSI Unless noted otherwise top chord shall have properly attached structural sheathing and bottom chord shall have a properly attached r g d ce ling Locat ons shown for permanent lateral restra nt of webs shall have bracing nstalled per BCSI sect ons B3 B7 or B10 as applicable

ITW Bu ld ng Components Group Inc (ITWBCG) shall not be respons ble for any dev ation from this design, any failure to build the truss n conformance with ANSI/TPI 1 or for handling shipping installation or brac ng of trusses Apply plates to each face of truss and position as shown above and on the Joint Deta ls unless noted otherwise Refer to drawings 160A-Z for standard plate positions A seal on this draw ng or cover page listing this draw ng indicates acceptance of professional engineering responsibil ty solely for the design shown The suitab lity and use of this design for any structure is the respons b lity of the Building Designer per ANSI/TPI 1 Sec 2 For more informat on see Th s job s general notes page ITW-BCG www itwbcg com TPI www tpinst org WTCA www sbcindustry com ICC www ccsafe org

TC LL	20 0 PSF	REF	R487-- 9668
TC DL	7.0 PSF	DATE	03/20/13
BC DL	10.0 PSF	DRW	HCUSR487 13079064
BC LL	0.0 PSF	HC-ENG	WHK/WHK
TOT.LD.	37.0 PSF	SEQN-	69651
DUR.FAC.	1.25		
SPACING	24.0"	JREF-	1UUP487_Z02

(13-105--Trademark Construction McDuffie Residence -- Lake City, FL - EJ7A 7 End Jack)

Top chord 2x4 SP_#1_12A
Bot chord 2x4 SP_#1_12A
Webs 2x4 SP_#3__12A

Lumber grades designated with "12A" use design values approved 1/5/2012 by ALSC

Roof overhang supports 2 00 psf soffit load

Bottom chord checked for 10 00 psf non-concurrent live load

Provide (2) 16d common nails(0 162'x3 5"), toe nailed at Top chord
Provide (2) 16d common nails(0 162"x3 5"), toe nailed at Bot chord

120 mph wind, 15 00 ft mean hgt, ASCE 7-10, CLOSED bldg, not located within 4 50 ft from roof edge, RISK CAT II, EXP B, wind TC DL=3 5 psf, wind BC DL=5 0 psf GCpi(+/-)=0 18

Wind loads and reactions based on MWFRS with additional C&C member design

Right end vertical not exposed to wind pressure

Deflection meets L/240 live and L/180 total load Creep increase factor for dead load is 1 50

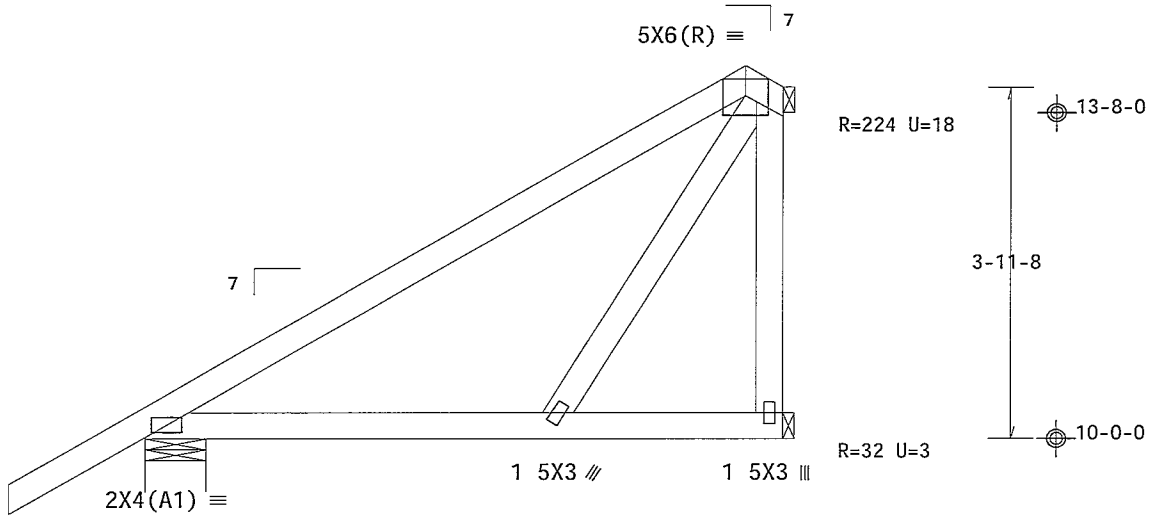

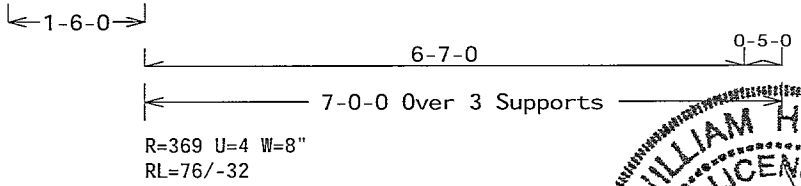

R=369 U=4 W=8"
RL=76/-32

Design Crit· FBC2010Res/TPI-2007(STD)
FT/RT=10%(0%)/0(0) 10.03.11 0209 20 QTY:4 FL/-/4/-/-/R/-

PLT TYP. Wave

Scale =.5"/Ft.

WILLIAM H. KRICK LICENSE No. 70861 STATE OF FLORIDA PROFESSIONAL ENGINEER
03/20/2013

ALPINE
ITW Building Components Group Inc.
Haines City, FL 33844
FL COA #0 278

WARNING READ AND FOLLOW ALL NOTES ON THIS SHEET!
IMPORTANT FURNISH THIS DESIGN TO ALL CONTRACTORS INCLUDING INSTALLERS

Trusses require extreme care n fabr cating handling sh pp ng install ng and brac ng Refer to and follow the latest edition of BCSI (Bu ld ng Component Safety Informat on by TPI and WTCA) for safety pract ces prior to perform ng these functions Installers shall prov de temporary brac ng per safety Unless noted otherwise top chord shall have properly attached structural sheathing and bottom chord shall have a properly attached rigid ce l ng Locat ons shown for permanent lateral restra nt of webs shall have bracing nstalled per BCSI sect ons B3 B7 or B10 as appl cable

ITW Building Components Group Inc (ITWBCG) shall not be responsible for any deviat on from this design any failure to bu ld the truss n conformance with ANSI/TPI 1 or for handling shipp ng installation & bracing of trusses Apply plates to each face of truss and position as shown above and on the Joint Details unless noted otherwise Refer to drawings 160A-Z for standard plate positions A seal on this drawing or cover page l sting this drawing indicates acceptance of professional eng neering responsibil ty solely for the design shown The suitab lity and use of this design for any structure is the respons bility of the Building Designer per ANSI/TPI 1 Sec 2 For more information see This job s general notes page ITW BCG www itwbcg com TPI www tpinst org WTCA www sbcindustry com ICC www ccsafe org

TC LL	20 0 PSF	REF	R487-- 9669
TC DL	7.0 PSF	DATE	03/20/13
BC DL	10.0 PSF	DRW	HCUSR487 13079065
BC LL	0 0 PSF	HC-ENG	WHK/WHK
TOT.LD.	37 0 PSF	SEQN-	69652
DUR.FAC	1.25		
SPACING	24.0"	JREF-	1UUP487_Z02

(13-105--Trademark Construction McDuffie Residence -- Lake City, FL - H11AE 31'6" Special)

Top chord 2x4 SP_#1_12A
Bot chord 2x4 SP_#1_12A
Webs 2x4 SP_#3__12A

Lumber grades designated with '12A" use design values approved 1/5/2012 by ALSC

Roof overhang supports 2 00 psf soffit load

(a) Continuous lateral bracing equally spaced on member

In lieu of structural panels use purlins to brace all flat TC @ 24' OC

Deflection meets L/240 live and L/180 total load Creep increase factor for dead load is 1 50

Negative reaction(s) of -234# MAX (See below) from a non-wind load case requires uplift connection

120 mph wind, 15 00 ft mean hgt, ASCE 7-10, CLOSED bldg, not located within 9 00 ft from roof edge, RISK CAT II, EXP B, wind TC DL=3 5 psf, wind BC DL=5 0 psf GCpi(+/-)=0 18

Wind loads and reactions based on MWFRS with additional C&C member design

Right end vertical not exposed to wind pressure

Bottom chord checked for 10 00 psf non-concurrent live load

MWFRS loads based on trusses located at least 7 50 ft from roof edge

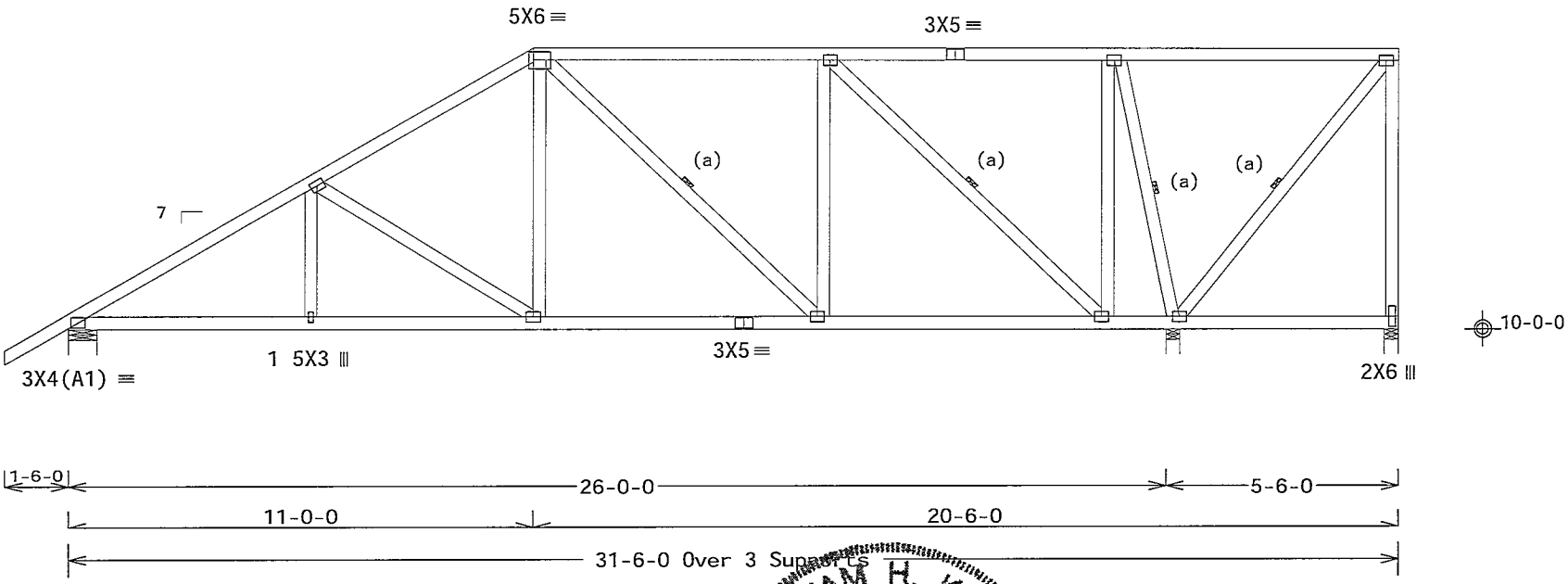

R=1038 U=31 W=8'
RL=120/-42

R=1602 U=87 W=4"
R=26/-234 U=75 W=4"

Note· All Plates Are 3X4 Except As Shown.

Design Crit FBC2010Res/TPI-2007(STD)

PLT TYP. Wave FT/RT=10%(0%)/0(0) 10.03.11.0209.20 QTY:1 FL/-/4/-/-/R/- Scale =.25"/Ft.

WILLIAM H. KRICK LICENSE No. 70861 STATE OF FLORIDA PROFESSIONAL ENGINEER

03/20/2013

ALPINE
ITW Building Components Group Inc.
Haines City, FL 33844
FL COA #0 278

WARNING READ AND FOLLOW ALL NOTES ON THIS SHEET!
IMPORTANT FURNISH THIS DESIGN TO ALL CONTRACTORS INCLUDING INSTALLERS

Trusses require extreme care n fabricating handling sh pp ng install ng and brac ng Refer to and follow the latest edit on of BCSI (Building Component Safety Informat on by TPI and WTCA) for safety pract ces prior to perform ng these functions Installers shall prov de temporary brac ng per BCSI. Unless noted otherwise top chord shall have properly attached structural sheathing and bottom chord shall have a properly attached rig d ceiling Locations shown for permanent lateral restraint of webs shall have bracing installed per BCSI sect ons B3 B7 or B10 as appl cable

ITW Bu lding Components Group Inc (ITWBCG) shall not be respons ble for any dev ation from this design, any fa lure to build the truss in conformance w th ANSI/TPI 1 or for handl ng sh pping nstallation and brac ng of trusses Apply plates to each face of truss and pos t on as shown above and on the Joint Details unless noted otherw se Refer to draw ngs 160A-Z for standard plate pos tions A seal on this draw ng or cover page list ng this draw ng nd cates acceptance of profess onal engineering respons b lity solely for the design shown The su tab lity and use of this design for any structure is the responsibil ty of the Bu lding Des gner per ANSI/TPI 1 Sec 2 For more nformation see This job s general notes page ITW-BCG www twbcg com TPI www tp nst org WTCA www sbc ndustry com ICC www iccsafe org

TC LL	20.0 PSF	REF	R487-- 9670
TC DL	7.0 PSF	DATE	03/20/13
BC DL	10.0 PSF	DRW	HCUSR487 13079066
BC LL	0.0 PSF	HC-ENG	WHK/WHK
TOT LD	37.0 PSF	SEQN-	69653
DUR FAC	1 25		
SPACING	24.0"	JREF-	1UUP487_Z02

(13-105--Trademark Construction McDuffie Residence -- Lake City, FL - H11AW 47'4" Special)

Top chord 2x4 SP_#1_12A
Bot chord 2x4 SP_#1_12A
Webs 2x4 SP_#3__12A

Lumber grades designated with "12A" use design values approved 1/5/2012 by ALSC

Roof overhang supports 2 00 psf soffit load

In lieu of structural panels use purlins to brace all flat TC @ 24' OC

WARNING Furnish a copy of this DWG to the installation contractor Special care must be taken during handling, shipping and installation of trusses See 'WARNING' note below

120 mph wind, 15 00 ft mean hgt, ASCE 7-10, CLOSED bldg, not located within 6 50 ft from roof edge, RISK CAT II, EXP B, wind TC DL=3 5 psf, wind BC DL=5 0 psf GCpi(+/-)=0 18

Wind loads and reactions based on MWFRS with additional C&C member design

(a) Continuous lateral bracing equally spaced on member

Bottom chord checked for 10 00 psf non-concurrent live load

Deflection meets L/240 live and L/180 total load Creep increase factor for dead load is 1 50

MWFRS loads based on trusses located at least 7 50 ft from roof edge

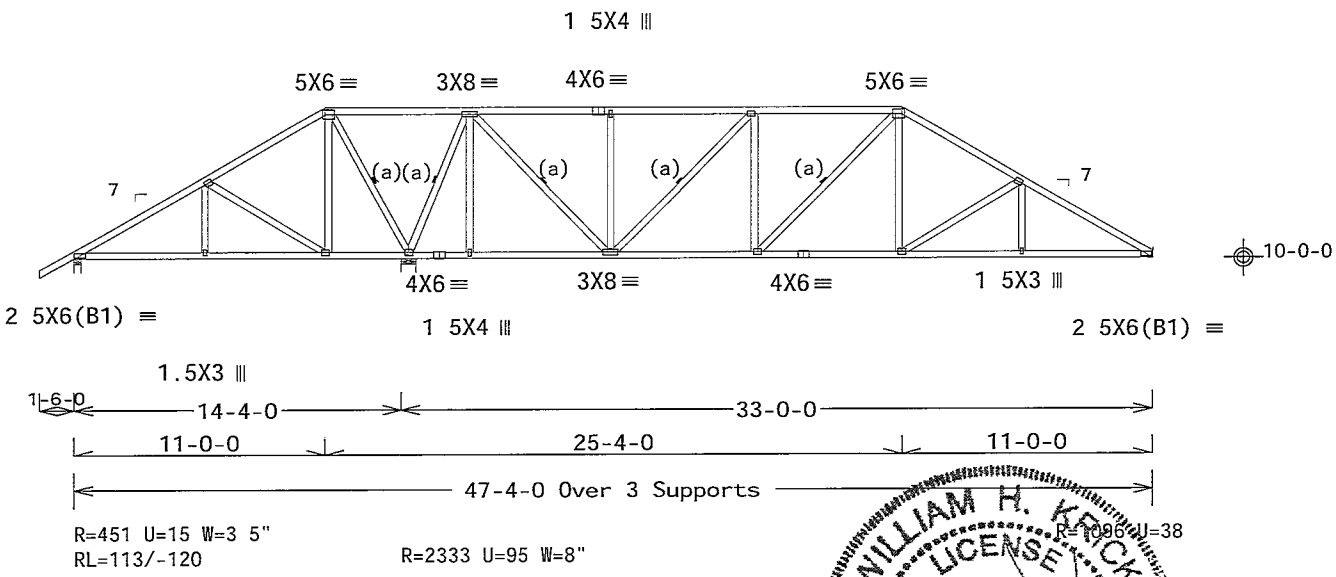

Note All Plates Are 3X4 Except As Shown.

Design Crit. FBC2010Res/TPI-2007(STD)

PLT TYP Wave FT/RT=10%(0%)/0(0) 10.03 11.0209 20 QTY 1 FL/-/4/-/-/R/- Scale =.125"/Ft.

WILLIAM H. KEECK LICENSE No. 70861 STATE OF FLORIDA PROFESSIONAL ENGINEER

03/20/2013

ALPINE

ITW Building Components Group Inc.

Haines City FL 33844
FL COA #0 278

WARNING READ AND FOLLOW ALL NOTES ON THIS SHEET!
IMPORTANT FURNISH THIS DESIGN TO ALL CONTRACTORS INCLUDING INSTALLERS

Trusses requ re extreme care n fabricating handling sh pping install ng and bracing Refer to and follow the latest ed t on of BCSI (Building Component Safety Informat on by TPI and WTCA) for safety practices pr or to performing these funct ons Installers shall provide temporary brac ng per BCSI Unless noted otherw se top chord shall have properly attached structural sheath ng and bottom chord shall have a properly attached r g d ceiling Locations shown for permanent lateral restra nt of webs shall have bracing installed per BCSI sections B3 B7 or B10 as applicable

ITW Building Components Group Inc (ITWBCG) shall not be responsible for any deviat on from th s drawing any fa lure to bu ld the truss in conformance w th ANSI/TPI 1 or for handl ng shipp ng nstallat on bracing of trusses Apply plates to each face of truss and pos tion as shown above and on the Jo nt Details unless noted otherwise Refer to draw ngs 160A-Z for standard plate posit ons A seal on th s drawing or cover page l st ng th s drawing nd cates acceptance of profess onal eng neer ng responsibility solely for the des gn shown The suitabil ty and use of th s des gn for any structure s the responsibil ty of the Build ng Designer per ANSI/TPI 1 Sec 2 For more nformat on see Th s job s general notes page ITW-BCG www itwbcg com TPI www tp nst org WTCA www sbc ndustry com ICC www iccsafe org

TC LL	20 0 PSF	REF	R487-- 9671
TC DL	7 0 PSF	DATE	03/20/13
BC DL	10 0 PSF	DRW	HCUSR487 13079067
BC LL	0 0 PSF	HC-ENG	WHK/WHK
TOT LD.	37.0 PSF	SEQN-	69654
DUR FAC.	1.25		
SPACING	24 0"	JREF-	1UUP487_Z02

(13-105--Trademark Construction McDuffie Residence -- Lake City, FL - H13AE 31'6' Special)

Top chord 2x4 SP_#1_12A
Bot chord 2x4 SP_#1_12A
Webs 2x4 SP_#3__12A

Lumber grades designated with "12A" use design values approved 1/5/2012 by ALSC

Roof overhang supports 2 00 psf soffit load

(a) Continuous lateral bracing equally spaced on member

Bottom chord checked for 10 00 psf non-concurrent live load

MWFRS loads based on trusses located at least 7 50 ft from roof edge

120 mph wind, 15 00 ft mean hgt, ASCE 7-10, CLOSED bldg, not located within 9 00 ft from roof edge, RISK CAT II, EXP B, wind TC DL=3 5 psf, wind BC DL=5 0 psf GCpi(+/-)=0 18

Wind loads and reactions based on MWFRS with additional C&C member design

Right end vertical not exposed to wind pressure

In lieu of structural panels use purlins to brace all flat TC @ 24" OC

Deflection meets L/240 live and L/180 total load Creep increase factor for dead load is 1 50

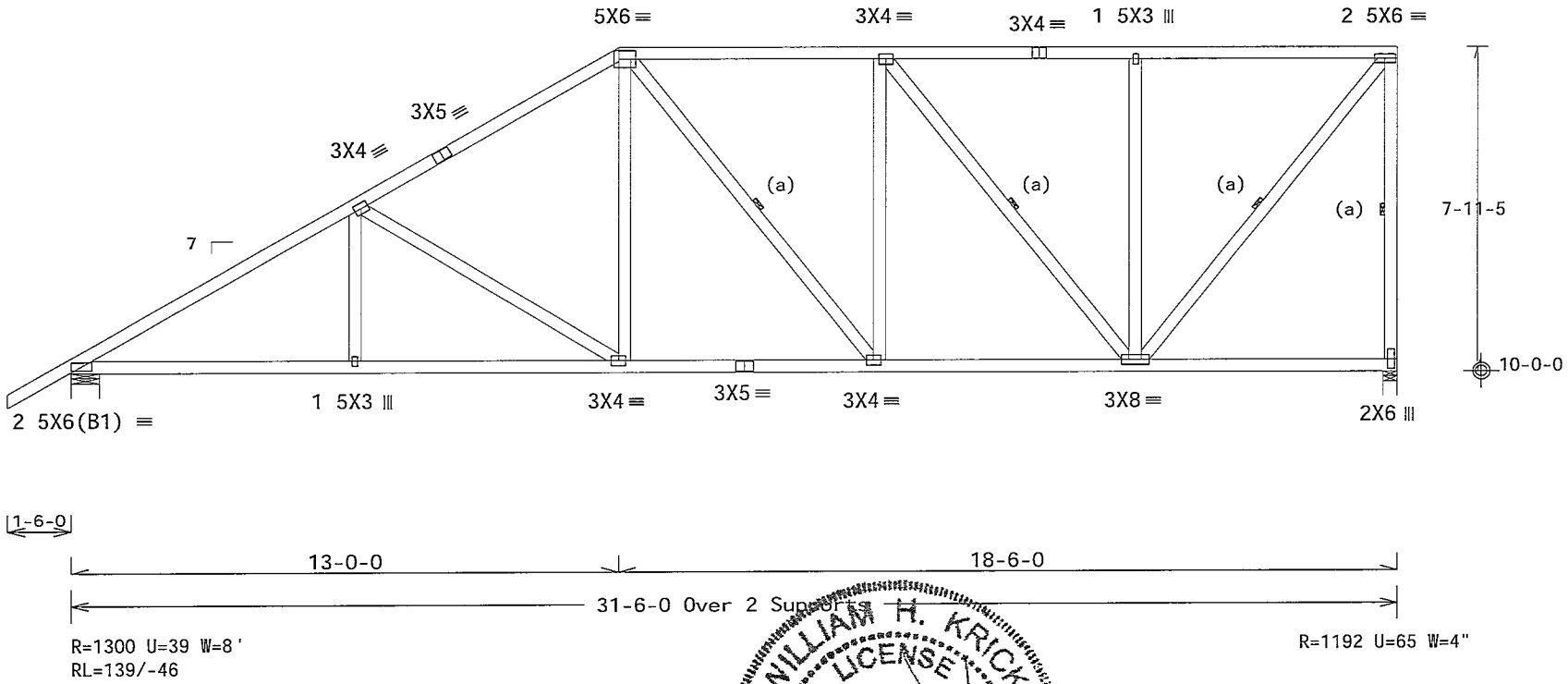

Design Crit. FBC2010Res/TPI-2007(STD)
FT/RT=10%(0%)/0(0) 10 03 11.0109 20 QTY 1 FL/-/4/-/-/R/- Scale =.25"/Ft.

PLT TYP. Wave

WILLIAM H. KRICK LICENSE No. 70861 STATE OF FLORIDA PROFESSIONAL ENGINEER
03/20/2013

ALPINE
ITW Building Components Group Inc.
Haines City, FL 33844
FL COA #0 278

WARNING READ AND FOLLOW ALL NOTES ON THIS SHEET!
IMPORTANT FURNISH THIS DESIGN TO ALL CONTRACTORS INCLUDING INSTALLERS

Trusses require extreme care in fabr cating hand ng sh pp ng install ng and bracing Refer to and follow the latest edit on of BCSI (Building Component Safety Informat on by TPI and WTCA) for safety practices prior to perform ng these functions Installers shall prov de temporary brac ng per BCSI Unless noted otherwise top chord shall have properly attached structural sheathing and bottom chord shall have a properly attached r g d ceiling Locations shown for permanent lateral restraint of webs shall have bracing installed per BCSI sections B3 B7 or B10 as applicable

ITW Bu lding Components Group Inc (ITWBCG) shall not be respons ble for any dev ation from this design any failure to build the truss in conformance with ANSI/TPI 1 or for hand ng sh pping installation bracing of trusses Apply plates to each face of truss and pos t on as shown above and on the Joint Details unless noted otherw se Refer to draw ngs 160A-Z for standard plate pos tions A seal on this drawing or cover page list ng this draw ng ind cates acceptance of profess onal engineer ng respons b lity solely for the design shown The su tability and use of th s des gn for any structure is the responsibility of the Bu ld ng Designer per ANSI/TPI 1 Sec 2 For more nformation see This job s general notes page ITW-BCG www twbcg com TPI www tp nst org WTCA www sbc ndustry com ICC www ccsafe org

TC LL	20.0 PSF	REF	R487-- 9672
TC DL	7.0 PSF	DATE	03/20/13
BC DL	10 0 PSF	DRW	HCUSR487 13079068
BC LL	0.0 PSF	HC-ENG	WHK/WHK
TOT.LD.	37.0 PSF	SEQN-	69655
DUR.FAC.	1.25		
SPACING	24.0"	JREF-	1UUP487_Z02

(13-105--Trademark Construction McDuffie Residence -- Lake City, FL - H13AW 47'4 Special)

Top chord 2x4 SP_#1_12A
Bot chord 2x4 SP_#1_12A
Webs 2x4 SP_#3__12A

Lumber grades designated with "12A" use design values approved 1/5/2012 by ALSC

Roof overhang supports 2 00 psf soffit load

In lieu of structural panels use purlins to brace all flat TC @ 24" OC

WARNING Furnish a copy of this DWG to the installation contractor Special care must be taken during handling, shipping and installation of trusses See "WARNING" note below

120 mph wind, 15 00 ft mean hgt, ASCE 7-10, CLOSED bldg, not located within 13 00 ft from roof edge, RISK CAT II, EXP B, wind TC DL=3 5 psf, wind BC DL=5 0 psf GCpi(+/-)=0 18

Wind loads and reactions based on MWFRS with additional C&C member design

(a) Continuous lateral bracing equally spaced on member

Bottom chord checked for 10 00 psf non-concurrent live load

Deflection meets L/240 live and L/180 total load Creep increase factor for dead load is 1 50

MWFRS loads based on trusses located at least 7 50 ft from roof edge

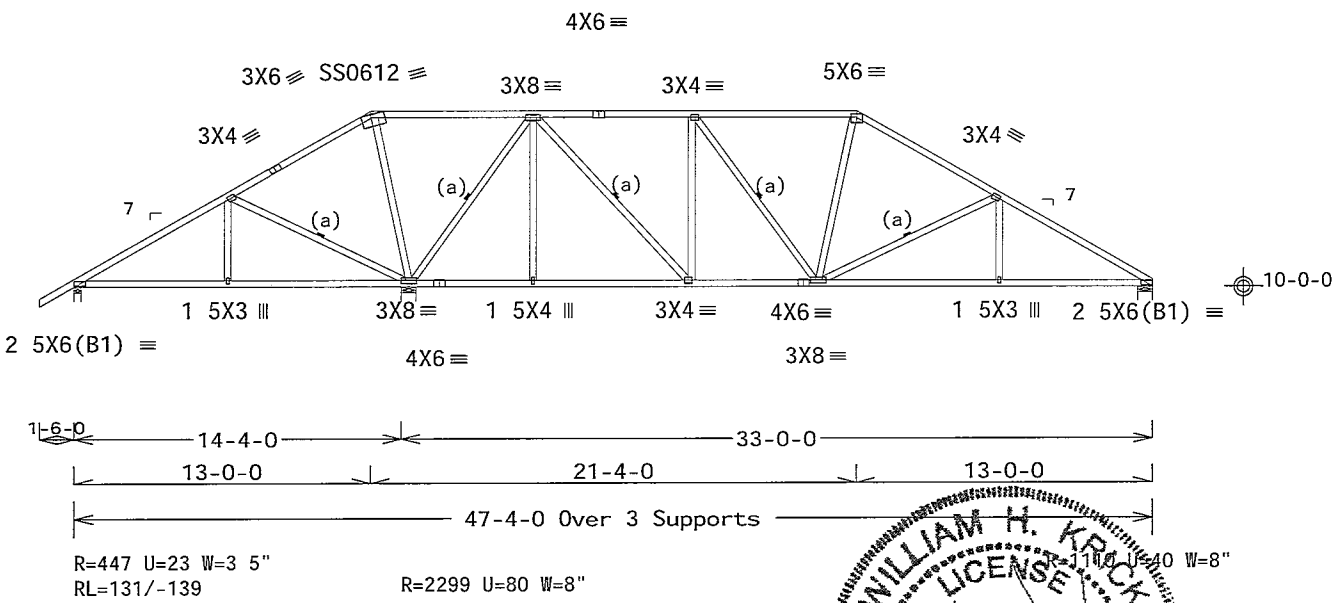

Design Crit FBC2010Res/TPI-2007(STD)
FT/RT=10%(0%)/0(0)

PLT TYP. 18 Gauge HS,Wave

10.03.11.0209.20 QTY 1

FL/-/4/-/-/R/- Scale =.125"/Ft.

WILLIAM H. KRICK LICENSE No. 70861 STATE OF FLORIDA PROFESSIONAL ENGINEER
03/20/2013

TC LL	20.0 PSF	REF	R487-- 9673
TC DL	7.0 PSF	DATE	03/20/13
BC DL	10.0 PSF	DRW	HCUSR487 13079084
BC LL	0.0 PSF	HC-ENG	WHK/WHK
TOT.LD	37.0 PSF	SEQN-	69656
DUR FAC	1 25		
SPACING	24.0"	JREF-	1UUP487_Z02

ALPINE
ITW Building Components Group Inc.
Haines City, FL 33844
FL COA #0 278

WARNING READ AND FOLLOW ALL NOTES ON THIS SHEET!
IMPORTANT FURNISH THIS DESIGN TO ALL CONTRACTORS INCLUDING INSTALLERS

Trusses require extreme care n fabr cating handling sh pping install ng and brac ng Refer to and follow the latest edit on of BCSI (Building Component Safety Informat on by TPI and WTCA) for handling pract ces prior to perform ng these functions Installers shall prov de temporary brac ng per BCSI Unless noted otherwise top chord shall have properly attached structural sheathing and bottom chord shall have a properly attached r g d ceiling Locat ons shown for permanent lateral restra nt of webs shall have bracing installed per BCSI sect ons B3 B7 or B10 as applicable

ITW Bu lding Components Group Inc (ITWBCG) shall not be respons ble for any dev ation from this design any fa lure to build the truss in conformance w th ANSI/TPI 1 or for handling sh pping nstallation and brac ng of trusses Apply plates to each face of truss and pos t on as shown above and on the Joint Details unless noted otherw se Refer to draw ngs 160A-Z for standard plate pos tions A seal on th s drawing or cover page list ng this draw ng ind cates acceptance of profess onal engineer ng respons bility solely for the design shown The su tab l ty and use of th s des gn for any structure s the responsibil ty of the Bu ld ng Des gner per ANSI/TPI 1 Sec 2 For more nformation see This job s general notes page ITW BCG www twbcg com TPI www tp nst org WTCA www sbc ndustry com ICC www iccsafe org

THIS DWG PREPARED FROM COMPUTER INPUT (LOADS & DIMENSIONS) SUBMITTED BY TRUSS MFR

(13-105--Trademark Construction McDuffie Residence -- Lake City, FL - H15AE 31'6 Special)

Top chord 2x4 SP_#1_12A
Bot chord 2x4 SP_#1_12A
Webs 2x4 SP_#3__12A

Lumber grades designated with '12A' use design values approved 1/5/2012 by ALSC

Roof overhang supports 2 00 psf soffit load

(a) Continuous lateral bracing equally spaced on member

Bottom chord checked for 10 00 psf non-concurrent live load

MWFRS loads based on trusses located at least 15 00 ft from roof edge

120 mph wind, 15 00 ft mean hgt, ASCE 7-10, CLOSED bldg, not located within 9 00 ft from roof edge, RISK CAT II, EXP B, wind TC DL=3 5 psf, wind BC DL=5 0 psf GCpi(+/-)=0 18

Wind loads and reactions based on MWFRS with additional C&C member design

Right end vertical not exposed to wind pressure

In lieu of structural panels use purlins to brace all flat TC @ 24" OC

Deflection meets L/240 live and L/180 total load Creep increase factor for dead load is 1 50

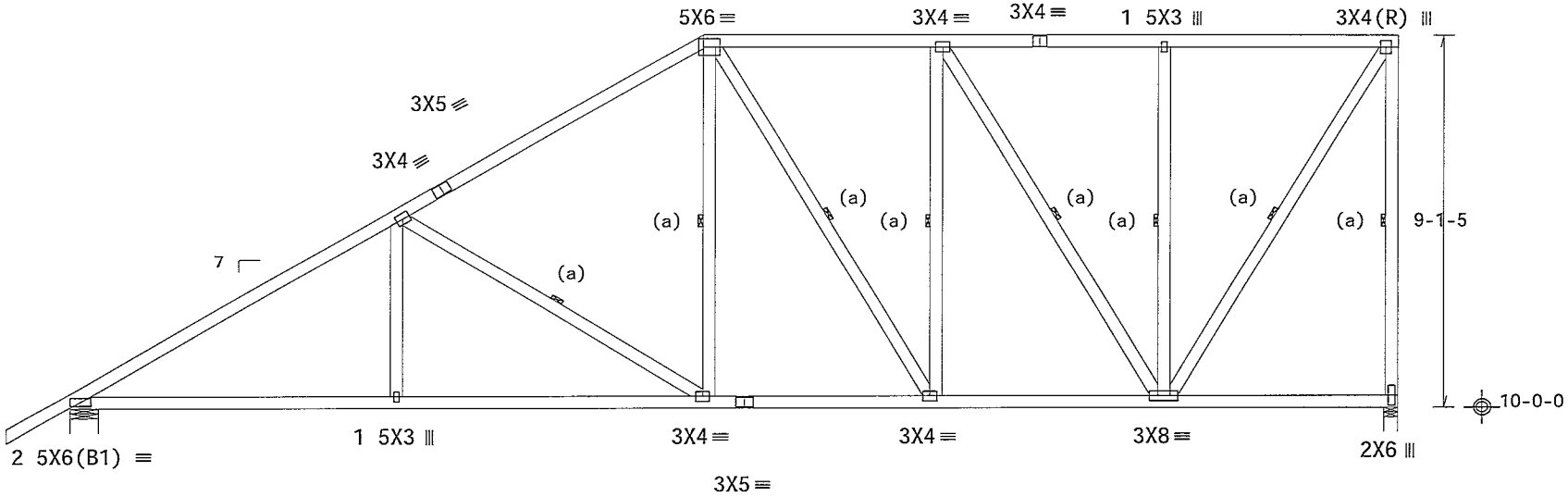

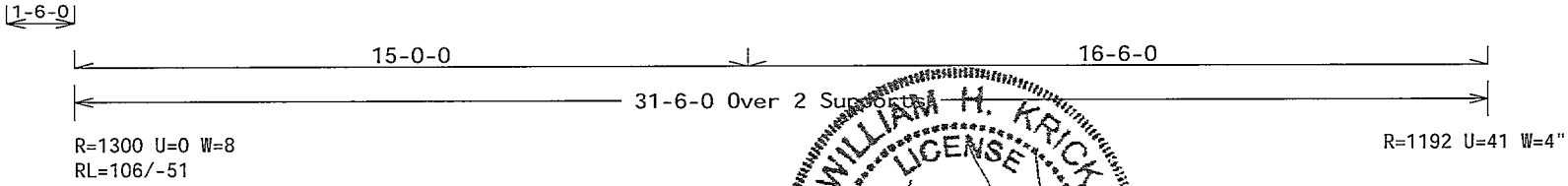

Design Crit FBC2010Res/TPI-2007(STD)
FT/RT=10%(0%)/0(0)

PLT TYP Wave

10.03 11 0209 20 10TY

FL/-/4/-/-/R/-

Scale =.25"/Ft

TC LL	20.0 PSF	REF	R487-- 9674
TC DL	7 0 PSF	DATE	03/20/13
BC DL	10.0 PSF	DRW	HCUSR487 13079069
BC LL	0.0 PSF	HC-ENG	WHK/WHK
TOT.LD.	37.0 PSF	SEQN-	69657
DUR FAC	1 25		
SPACING	24.0"	JREF-	1UUP487_Z02

WILLIAM H. KRICK
LICENSE
No. 70861
STATE OF FLORIDA
PROFESSIONAL ENGINEER
03/20/2013

ALPINE
ITW Building Components Group Inc.
Haines City, FL 33844
FL COA #0 278

WARNING READ AND FOLLOW ALL NOTES ON THIS SHEET!
IMPORTANT FURNISH THIS DESIGN TO ALL CONTRACTORS INCLUDING INSTALLERS

Trusses require extreme care in fabr cat ng handl ng sh pp ng nstall ng and brac ng Refer to and follow the latest ed tion of BCSI (Bu ld ng Component Safety Informat on by TPI and WTCA) for recommended pract ces prior to perform ng these funct ons Installers shall prov de temporary brac ng per BCSI. Unless noted otherwise top chord shall have properly attached structural sheath ng and bottom chord shall have a properly attached rig d ce l ng Locat ons shown for permanent lateral restra nt of webs shall have bracing nstalled per BCSI sect ons B3 B7 or B10 as appl cable

ITW Bu ld ng Components Group Inc (ITWBCG) shall not be respons ble for any dev ation from this design, any failure to build the truss n conformance with ANSI/TPI 1 or for handling sh pping installation & brac ng of trusses Apply plates to each face of truss and pos t on as shown above and on the Joint Deta ls unless noted otherwise Refer to draw ngs 160A-Z for standard plate pos t ons A seal on this draw ng or cover page listing this draw ng indicates acceptance of professional engineering respons b l ty solely for the design shown The su tab lity and use of this design for any structure is the responsibility of the Bu lding Des gner per ANSI/TPI 1 Sec 2 For more information see Th s job s general notes page ITW BCG www twbcg com TPI www tpinst org WTCA www sbcindustry com ICC www iccsafe org

(13-105--Trademark Construction McDuffie Residence -- Lake City, FL - H15AW 47 4' Stepdown Hip)

Top chord 2x4 SP_#1_12A
Bot chord 2x4 SP_#1_12A
Webs 2x4 SP_#3__12A

Lumber grades designated with "12A" use design values approved 1/5/2012 by ALSC

Roof overhang supports 2 00 psf soffit load

In lieu of structural panels use purlins to brace all flat TC @ 24' OC

WARNING Furnish a copy of this DWG to the installation contractor Special care must be taken during handling, shipping and installation of trusses See "WARNING" note below

120 mph wind, 15 00 ft mean hgt, ASCE 7-10, CLOSED bldg, not located within 13 00 ft from roof edge, RISK CAT II, EXP B, wind TC DL=3 5 psf, wind BC DL=5 0 psf GCpi(+/-)=0 18

Wind loads and reactions based on MWFRS with additional C&C member design

(a) Continuous lateral bracing equally spaced on member

Bottom chord checked for 10 00 psf non-concurrent live load

Deflection meets L/240 live and L/180 total load Creep increase factor for dead load is 1 50

MWFRS loads based on trusses located at least 15 00 ft from roof edge

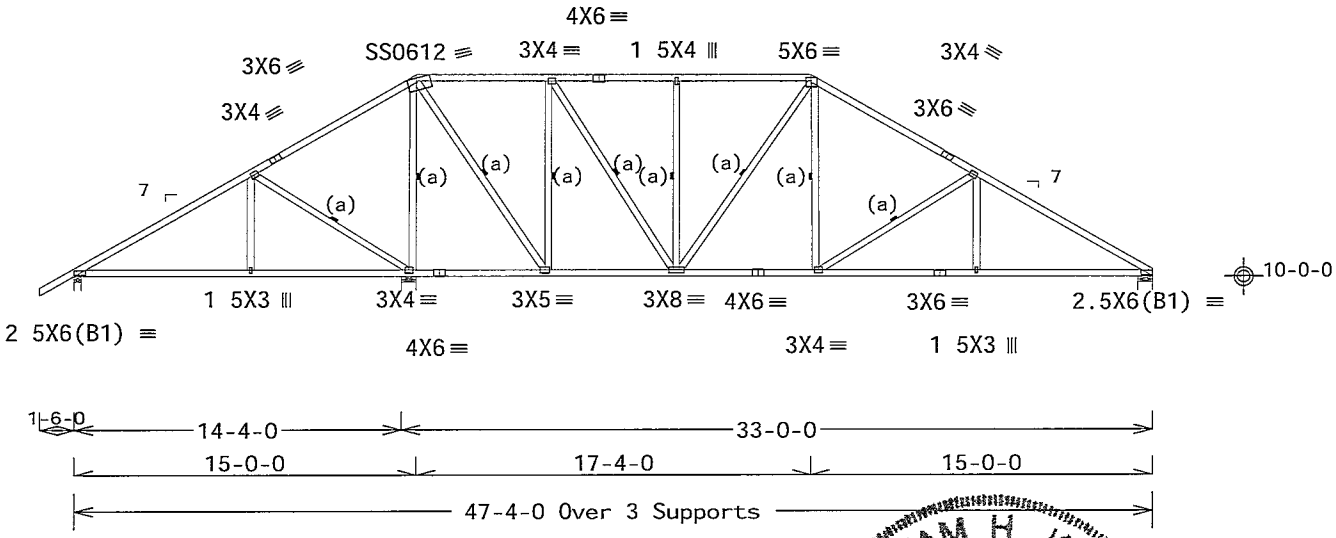

Design Crit FBC2010Res/TPI-2007(STD)
FT/RT=10%(0%)/0(0)

PLT TYP 18 Gauge HS,Wave

TO 03.11 0209 20 QTY:1 FL/-/4/-/-/R/- Scale =.125"/Ft.

ALPINE
ITW Building Components Group Inc.
Haines City, FL 33844
FL COA #0 278

WARNING READ AND FOLLOW ALL NOTES ON THIS SHEET!
IMPORTANT FURNISH THIS DESIGN TO ALL CONTRACTORS INCLUDING INSTALLERS

Trusses require extreme care n fabricating handling shipping install ng and brac ng Refer to and follow the latest edit on of BCSI (Bu ld ng Component Safety Informat on by TPI and WTCA) for safety practices prior to perform ng these functions Installers shall prov de temporary brac ng per BCSI. Unless noted otherwise top chord shall have properly attached structural sheathing and bottom chord shall have a properly attached r g d ceiling Locat ons shown for permanent lateral restra nt of webs shall have bracing installed per BCSI sections B3 B7 or B10 as applicable

ITW Bu ld ng Components Group Inc (ITWBCG) shall not be respons ble for any dev ation from this design, any fa lure to build the truss in conformance with ANSI/TPI 1 or for handl ng sh pping nstallation and bracing of trusses Apply plates to each face of truss and pos t on as shown above and on the Joint Details unless noted otherw se Refer to draw ngs 160A-Z for standard plate pos tions A seal on this draw ng or cover page listing this draw ng nd cates acceptance of professional engineer ng respons b lity solely for the design shown The su tab l ty and use of this des gn for any structure is the respons bility of the Building Des gner per ANSI/TPI 1 Sec 2 For more information see This job s general notes page ITW BCG www itwbcg com TPI www tpinst org WTCA www sbcindustry com ICC www iccsafe org

WILLIAM H. KRICK LICENSE No 70861 STATE OF FLORIDA PROFESSIONAL ENGINEER
03/20/2013

TC LL	20.0 PSF	REF	R487-- 9675
TC DL	7.0 PSF	DATE	03/20/13
BC DL	10 0 PSF	DRW	HCUSR487 13079085
BC LL	0.0 PSF	HC-ENG	WHK/WHK
TOT.LD.	37 0 PSF	SEQN-	69658
DUR.FAC.	1.25		
SPACING	24.0"	JREF-	1UUP487_Z02

(13-105--Trademark Construction McDuffie Residence -- Lake City, FL - H17AE 31'6" Mono Hip)

Top chord 2x4 SP_#1_12A
Bot chord 2x4 SP_#1_12A
Webs 2x4 SP_#3__12A

Lumber grades designated with "12A" use design values approved 1/5/2012 by ALSC

Roof overhang supports 2 00 psf soffit load

(a) Continuous lateral bracing equally spaced on member

Bottom chord checked for 10 00 psf non-concurrent live load

MWFRS loads based on trusses located at least 15 00 ft from roof edge

120 mph wind, 15 00 ft mean hgt, ASCE 7-10, CLOSED bldg, not located within 9 00 ft from roof edge, RISK CAT II, EXP B, wind TC DL=3 5 psf, wind BC DL=5 0 psf GCpi(+/-)=0 18

Wind loads and reactions based on MWFRS with additional C&C member design

Right end vertical not exposed to wind pressure

In lieu of structural panels use purlins to brace all flat TC @ 24" OC

Deflection meets L/240 live and L/180 total load Creep increase factor for dead load is 1 50

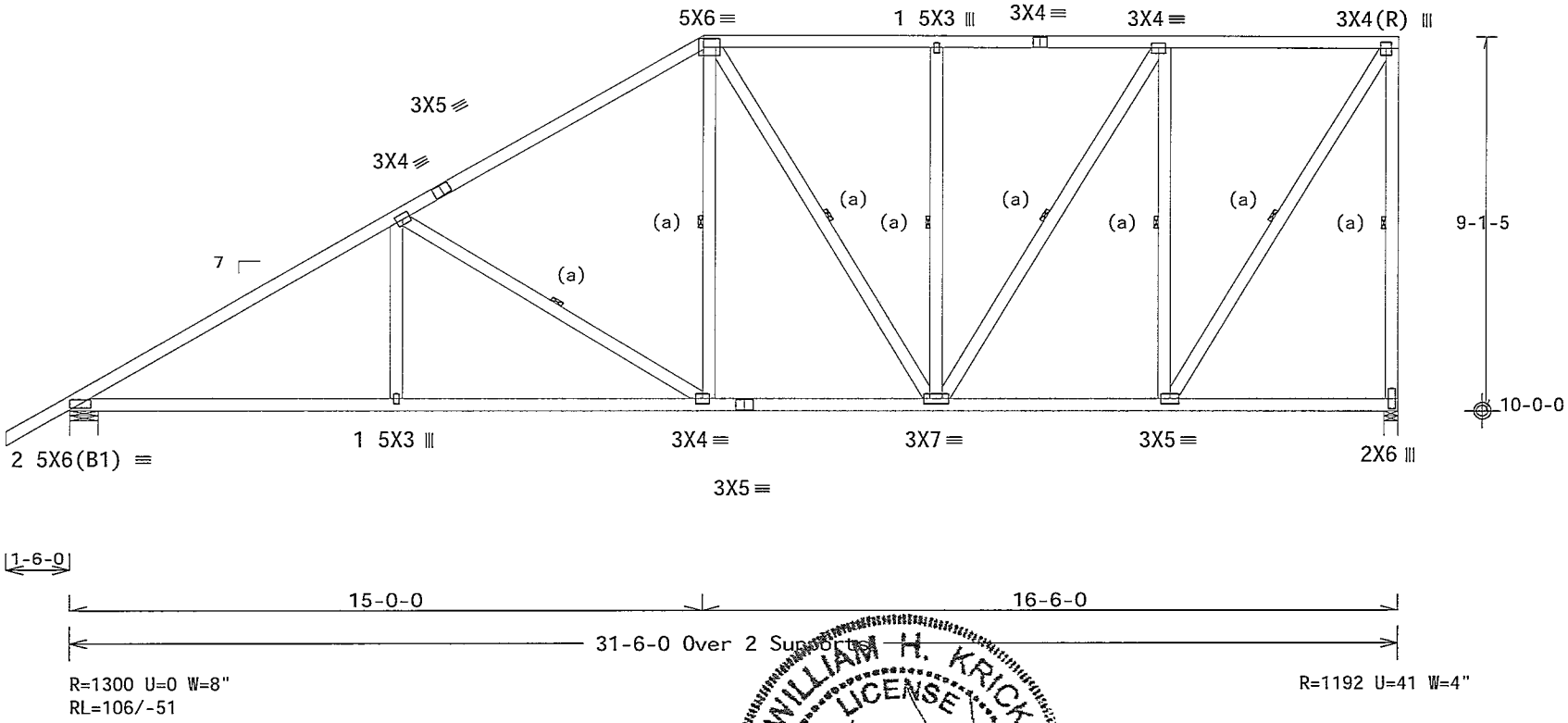

Design Crit. FBC2010Res/TPI-2007(STD)
FT/RT=10%(0%)/0(0)

PLT TYP. Wave

10.03.11.0209.20 QTY 1

FL/-/4/-/-/R/-

Scale =.25"/Ft.

WILLIAM H. KRICK LICENSE No. 70861 STATE OF FLORIDA PROFESSIONAL ENGINEER

03/20/2013

ALPINE
ITW Building Components Group Inc.
Haines City, FL 33844
FL COA #0 278

WARNING READ AND FOLLOW ALL NOTES ON THIS SHEET!
IMPORTANT FURNISH THIS DESIGN TO ALL CONTRACTORS INCLUDING INSTALLERS

Trusses require extreme care in fabr cating handling sh pping install ng and bracing Refer to and follow the latest edition of BCSI (Bu ld ng Component Safety Information by TPI and WTCA) for safety pract ces prior to perform ng these functions Installers shall provide temporary brac ng per BCSI Unless noted otherwise top chord shall have properly attached structural sheathing and bottom chord shall have a properly attached rigid ce ling Locat ons shown for permanent lateral restra nt of webs shall have bracing nstalled per BCSI sect ons B3 B7 or B10 as appl cable

ITW Building Components Group Inc (ITWBCG) shall not be respons ble for any deviation from this design any failure to build the truss n conformance with ANSI/TPI 1 or for handling shipping installat on & brac ng of trusses Apply plates to each face of truss and position as shown above and on the Jo nt Details unless noted otherwise Refer to drawings 160A-Z for standard plate posit ons A seal on this drawing or cover page listing this drawing indicates acceptance of professional engineer ng responsib l ty solely for the design shown The suitability and use of this design for any structure s the respons bility of the Building Designer per ANSI/TPI 1 Sec 2 For more informat on see Th s job s general notes page ITW-BCG www itwbcg com TPI www tpinst org WTCA www sbcindustry com ICC www iccsafe org

TC LL	20.0 PSF	REF	R487-- 9676
TC DL	7.0 PSF	DATE	03/20/13
BC DL	10.0 PSF	DRW	HCUSR487 13079070
BC LL	0.0 PSF	HC-ENG	WHK/WHK
TOT.LD.	37.0 PSF	SEQN-	69659
DUR FAC.	1.25		
SPACING	24.0"	JREF-	1UUP487_Z02

(13-105--Trademark Construction McDuffie Residence -- Lake City FL - H17PB 16 6' Stepdown Hip)

Top chord 2x4 SP_#1_12A
Bot chord 2x4 SP_#1_12A
Webs 2x4 SP_#3__12A

Lumber grades designated with '12A' use design values approved 1/5/2012 by ALSC

120 mph wind, 19 70 ft mean hgt, ASCE 7-10, CLOSED bldg, not located within 9 00 ft from roof edge, RISK CAT II EXP B, wind TC DL=3 5 psf, wind BC DL=2 0 psf GCpi(+/-)=0 18

Wind loads and reactions based on MWFRS with additional C&C member design

Refer to DWG PB1400310 for piggyback details

Special loads
------(Lumber Dur Fac =1 25 / Plate Dur Fac =1 25)
TC- From 56 plf at -0 83 to 56 plf at 1 13
TC- From 56 plf at 1 13 to 56 plf at 14 47
TC- From 56 plf at 14 47 to 56 plf at 15 60
BC- From 4 plf at -0 83 to 4 plf at 15 60

In lieu of structural panels or rigid ceiling use purlins to brace all flat TC @ 24" OC, all BC @ 24" OC

Deflection meets L/240 live and L/180 total load Creep increase factor for dead load is 1 50

MWFRS loads based on trusses located at least 9 85 ft from roof edge

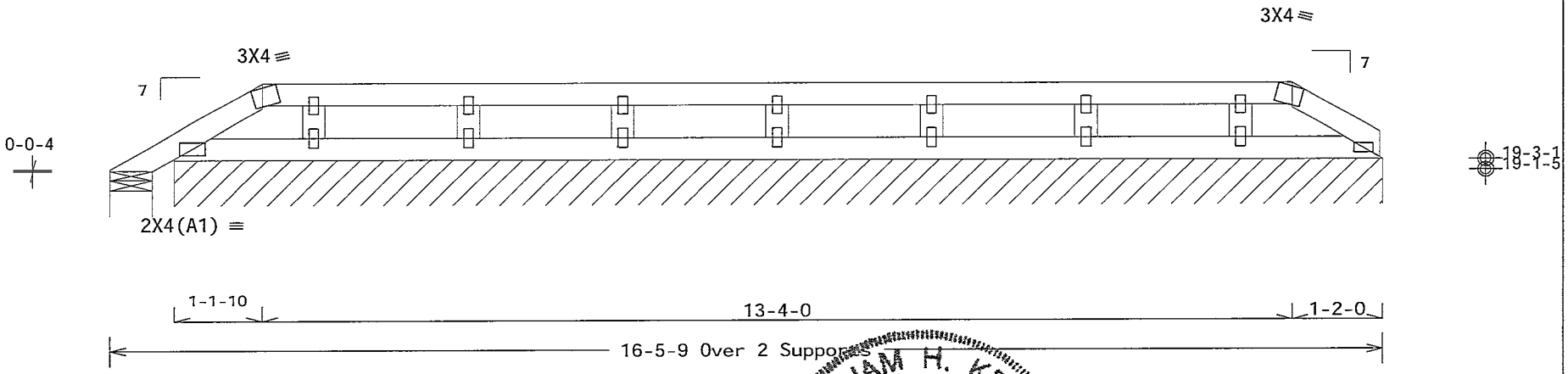

R=15 Rw=16 U=2 W=6 518"
R=61 PLF U=12 PLF W=15-7-10

Note: All Plates Are 1 5X3 Except As Shown

Design Crit FBC2010Res/TPI-2007(STD)
PLT TYP Wave FT/RT=10%(0%)/0(0) 15 03 11 0209.20 QTY 1 FL/-/4/-/-/R/- Scale =.5"/Ft.

WILLIAM H. KRICK LICENSE No. 70861 STATE OF FLORIDA PROFESSIONAL ENGINEER
03/20/2013

ALPINE
ITW Building Components Group Inc.
Haines City, FL 33844
FL COA #0 278

WARNING READ AND FOLLOW ALL NOTES ON THIS SHEET!
IMPORTANT FURNISH THIS DESIGN TO ALL CONTRACTORS INCLUDING INSTALLERS

Trusses require extreme care n fabricating handling sh pping install ng and brac ng Refer to and follow the latest edition of BCSI (Bu lding Component Safety Informat on by TPI and WTCA) for safety pract ces prior to perform ng these functions Installers shall prov de temporary brac ng per BCSI Unless noted otherwise top chord shall have properly attached structural sheath ng and bottom chord shall have a properly attached r g d ce ling Locations shown for permanent lateral restra nt shall have brac ng installed per BCSI sect ons B3 B7 or B10 as applicable

ITW Bu ld ng Components Group Inc (ITWBCG) shall not be respons ble for any dev ation from this design any fa lure to build the truss in conformance w th ANSI/TPI 1 or for handl ng sh pping nstallation bracing of trusses Apply plates to each face of truss and pos t on as shown above and on the Joint Details unless noted otherw se Refer to draw ngs 160A-Z for standard plate pos tions A seal on this drawing or cover page list ng this draw ng nd cates acceptance of profess onal engineer ng respons b lity solely for the des gn shown The su tab l ty and use of th s des gn for any structure s the responsibility of the Bu ld ng Des gner per ANSI/TPI 1 Sec 2 For more nformation see This job s general notes page ITW-BCG www twbcg com TPI www tp nst org WTCA www sbc ndustry com ICC www iccsafe org

TC LL	20 0 PSF	REF	R487-- 9677
TC DL	7 0 PSF	DATE	03/20/13
BC DL	10.0 PSF	DRW	HCUSR487 13079071
BC LL	0 0 PSF	HC-ENG	WHK/WHK
TOT LD	37.0 PSF	SEQN-	69660
DUR FAC.	1.25		
SPACING	24 0"	JREF-	1UUP487_Z02

(13-105--Trademark Construction McDuffie Residence -- Lake City, FL - H19AE 35'10' Stepdown Hip)

Top chord 2x4 SP_#1_12A
Bot chord 2x4 SP_#1_12A
Webs 2x4 SP_#3__12A

Lumber grades designated with '12A' use design values approved 1/5/2012 by ALSC

Roof overhang supports 2 00 psf soffit load

(a) Continuous lateral bracing equally spaced on member

Bottom chord checked for 10 00 psf non-concurrent live load

MWFRS loads based on trusses located at least 15 00 ft from roof edge

120 mph wind, 15 00 ft mean hgt, ASCE 7-10, CLOSED bldg, not located within 9 00 ft from roof edge, RISK CAT II, EXP B, wind TC DL=3 5 psf, wind BC DL=5 0 psf GCpi(+/-)=0 18

Wind loads and reactions based on MWFRS with additional C&C member design

Right end vertical not exposed to wind pressure

In lieu of structural panels use purlins to brace all flat TC @ 24" OC

Deflection meets L/240 live and L/180 total load Creep increase factor for dead load is 1 50

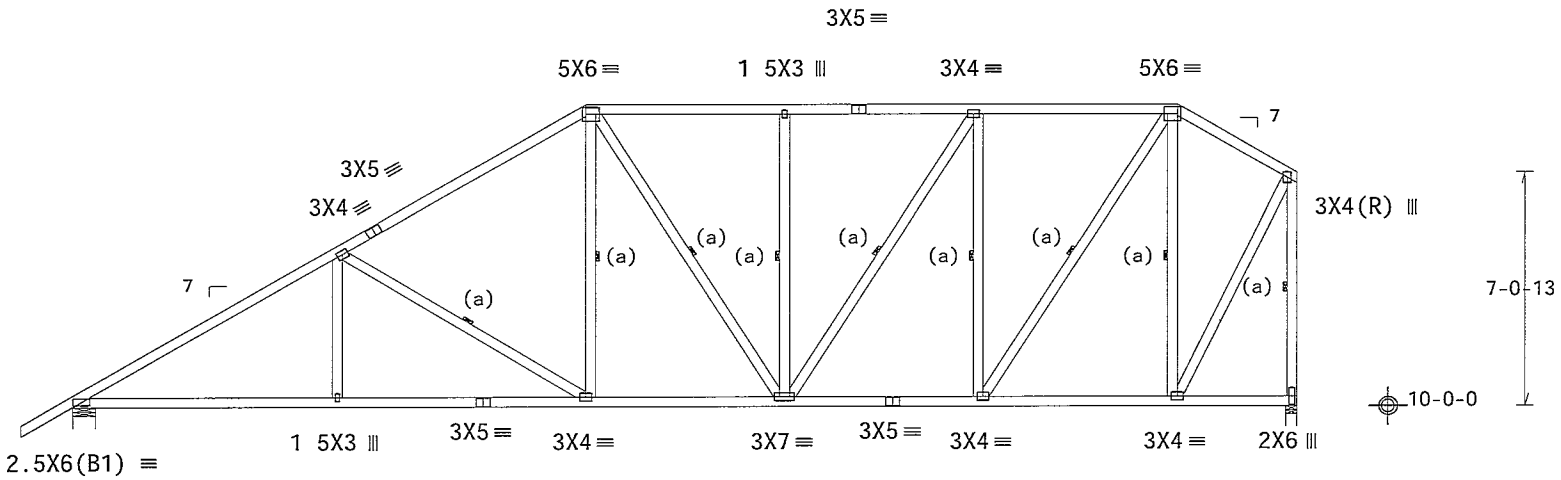

Design Crit: FBC2010Res/TPI-2007(STD)
FT/RT=10%(0%)/0(0) 10.03.11.0209 20 QTY:1 FL/-/4/-/-/R/- Scale =.1875"/Ft.

PLT TYP. Wave

ALPINE
ITW Building Components Group Inc.
Haines City, FL 33844
FL COA #0 278

WARNING READ AND FOLLOW ALL NOTES ON THIS SHEET!
IMPORTANT FURNISH THIS DESIGN TO ALL CONTRACTORS INCLUDING INSTALLERS

Trusses require extreme care n fabricating handling sh pping installing and brac ng Refer to and follow the latest edit on of BCSI (Building Component Safety Informat on by TPI and WTCA) for safety practices pr or to performing these functions Installers shall provide temporary brac ng per BCSI. Unless noted otherwise top chord shall have properly attached structural sheathing and bottom chord shall have a properly attached r g d ceiling Locations shown for permanent lateral restraint of webs shall have brac ng installed per BCSI sections B3 B7 or B10 as applicable

ITW Building Components Group Inc (ITWBCG) shall not be responsible for any deviat on from this design any failure to bu ld the truss n conformance w th ANSI/TPI 1 or for handling shipp ng nstallation bracing of trusses Apply plates to each face of truss and position as shown above and on the Jo nt Details unless noted otherwise Refer to drawings 160A-Z for standard plate posit ons A seal on th s drawing or cover page i sting th s drawing indicates acceptance of profess onal eng neer ng responsibil ty solely for the des gn shown The suitability and use of th s design for any structure s the respons b l ty of the Build ng Designer per ANSI/TPI 1 Sec 2 For more nformat on see Th s job s general notes page ITW-BCG www itwbcg com TPI www tp nst org WTCA www sbcindustry com ICC www ccsafe org

WILLIAM H. KRICK
LICENSE
No. 70861
STATE OF FLORIDA
PROFESSIONAL ENGINEER
03/20/2013

TC LL	20.0 PSF	REF	R487-- 9678
TC DL	7.0 PSF	DATE	03/20/13
BC DL	10.0 PSF	DRW	HCUSR487 13079072
BC LL	0 0 PSF	HC-ENG	WHK/WHK
TOT.LD.	37 0 PSF	SEQN-	69661
DUR.FAC	1 25		
SPACING	24 0"	JREF-	1UUP487_Z02

(13-105--Trademark Construction McDuffie Residence -- Lake City, FL - H7AE 31 6 Mono Hip Girder)

Top chord 2x4 SP_#1_12A
Bot chord 2x4 SP_#1_12A
Webs 2x4 SP_#3__12A W6 2x4 SP_#1_12A

Lumber grades designated with '12A' use design values approved 1/5/2012 by ALSC

120 mph wind, 15 00 ft mean hgt, ASCE 7-10, CLOSED bldg, Located anywhere in roof, RISK CAT II, EXP B, wind TC DL=3 5 psf, wind BC DL=5 0 psf GCpi(+/-)=0 18

Wind loads and reactions based on MWFRS with additional C&C member design

Right cantilever is exposed to wind

Roof overhang supports 2 00 psf soffit load

(a) Continuous lateral bracing equally spaced on member

Bottom chord checked for 10 00 psf non-concurrent live load

Special loads
------(Lumber Dur Fac =1 25 / Plate Dur Fac =1 25)
TC- From 56 plf at -1 50 to 56 plf at 7 00
TC- From 28 plf at 7 00 to 28 plf at 17 00
TC- From 28 plf at 17 00 to 28 plf at 31 50
BC- From 5 plf at -1 50 to 5 plf at 0 00
BC- From 20 plf at 0 00 to 20 plf at 7 03
BC- From 10 plf at 7 03 to 10 plf at 16 00
BC- From 10 plf at 16 00 to 10 plf at 31 50
TC- 255 07 lb Conc Load at 7 03
TC- 169 84 lb Conc Load at 9 06,11 06,13 06,15 06 17 06,19 06,21 06,23 06,25 06,27 06,29 06,31 06
BC- 461 61 lb Conc Load at 7 03
BC- 127 38 lb Conc Load at 9 06,11 06,13 06,15 06 17 06,19 06,21 06,23 06,25 06,27 06,29 06,31 06

Right end vertical not exposed to wind pressure

In lieu of structural panels use purlins to brace all flat TC @ 24" OC

Deflection meets L/240 live and L/180 total load Creep increase factor for dead load is 1 50

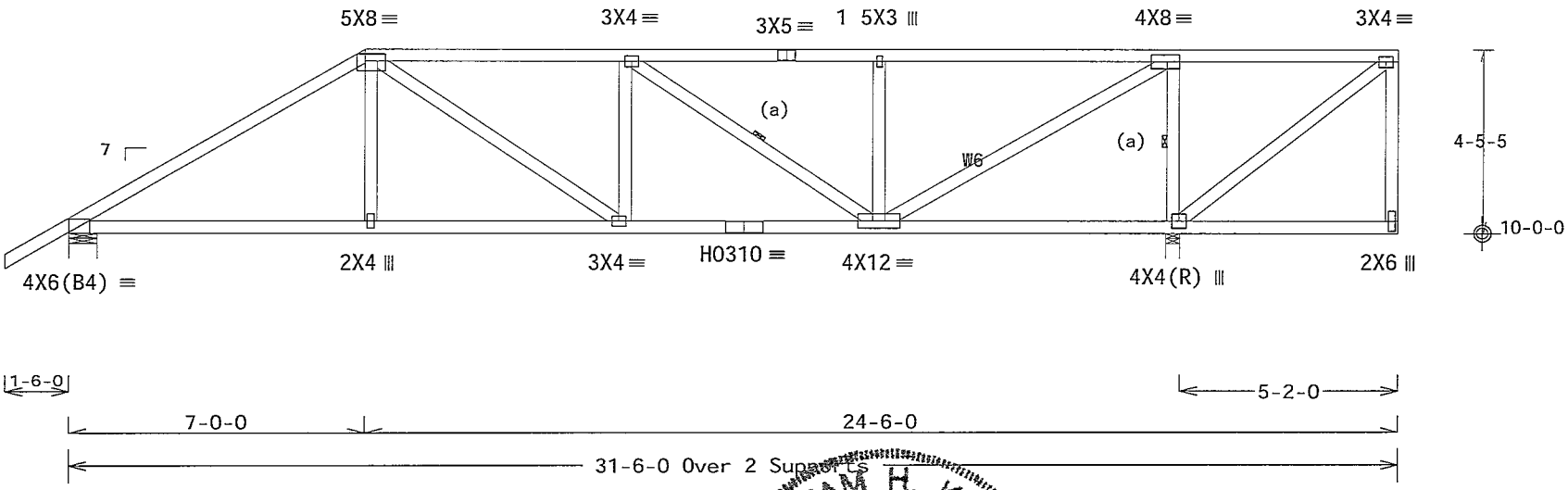

Design Crit FBC2010Res/TPI-2007(STD)
PLT TYP. 20 Gauge HS,Wave FT/RT=10%(0%)/0(0) 10.03 11 0209.20 OT 1 FL/-/4/-/-/R/- Scale =.25"/Ft.

WILLIAM H. KRICK LICENSE No. 70861 STATE OF FLORIDA PROFESSIONAL ENGINEER
03/20/2013

ALPINE
ITW Building Components Group Inc.
Haines City FL 33844
FL COA #0 278

WARNING READ AND FOLLOW ALL NOTES ON THIS SHEET!
IMPORTANT FURNISH THIS DESIGN TO ALL CONTRACTORS INCLUDING INSTALLERS

Trusses requ re extreme care in fabr cat ng handl ng shipping nstalling and bracing Refer to and follow the latest ed tion of BCSI (Build ng Component Safety Information by TPI and WTCA) for safety practices pr or to performing these funct ons Installers shall provide temporary bracing per BCSI Unless noted otherw se top chord shall have properly attached structural sheath ng and bottom chord shall have a properly attached rigid ceil ng Locat ons shown for permanent lateral restraint of webs shall have brac ng installed per BCSI sect ons B3 B7 or B10 as applicable

ITW Bu lding Components Group Inc (ITWBCG) shall not be respons ble for any dev at on from th s design any fa lure to bu ld the truss n conformance w th ANSI/TPI 1 or for handl ng sh pp ng nstallation and bracing of trusses Apply plates to each face of truss and pos t on as shown above and on the Joint Details unless noted otherw se Refer to draw ngs 160A-Z for standard plate pos tions A seal on this drawing or cover page l st ng this draw ng nd cates acceptance of profess onal engineer ng responsibility solely for the des gn shown The su tabil ty and use of th s des gn for any structure is the responsibil ty of the Bu ld ng Designer per ANSI/TPI 1 Sec 2 For more nformation see This job s general notes page ITW-BCG www twbcg com TPI www tp nst org WTCA www sbc ndustry com ICC www iccsafe org

TC LL	20.0 PSF	REF	R487-- 9679
TC DL	7.0 PSF	DATE	03/20/13
BC DL	10.0 PSF	DRW	HCUSR487 13079073
BC LL	0.0 PSF	HC-ENG	WHK/WHK
TOT LD	37 0 PSF	SEQN-	69671
DUR FAC	1 25		
SPACING	24.0"	JREF-	1UUP487_Z02

(13-105--Trademark Construction McDuffie Residence -- Lake City, FL - H7AW 47'4" Special Girder)

Top chord 2x4 SP_#1_12A T2 2x6 SP_#1_Dense_12A
T3, T4 2x6 SP_#2_12A
Bot chord 2x6 SP_#2_12A
Webs 2x4 SP_#3__12A W5, W7 2x4 SP_#1_12A

Lumber grades designated with "12A" use design values approved 1/5/2012 by ALSC

(a) Continuous lateral bracing equally spaced on member

#1 hip supports 7-0-0 jacks with no webs

Deflection meets L/240 live and L/180 total load Creep increase factor for dead load is 1 50

120 mph wind, 15 00 ft mean hgt, ASCE 7-10, CLOSED bldg, Located anywhere in roof, RISK CAT II, EXP B, wind TC DL=3 5 psf, wind BC DL=5 0 psf GCpi(+/-)=0 18

Wind loads and reactions based on MWFRS with additional C&C member design

Roof overhang supports 2 00 psf soffit load

In lieu of structural panels use purlins to brace all flat TC @ 24" OC

WARNING Furnish a copy of this DWG to the installation contractor Special care must be taken during handling, shipping and installation of trusses See "WARNING" note below

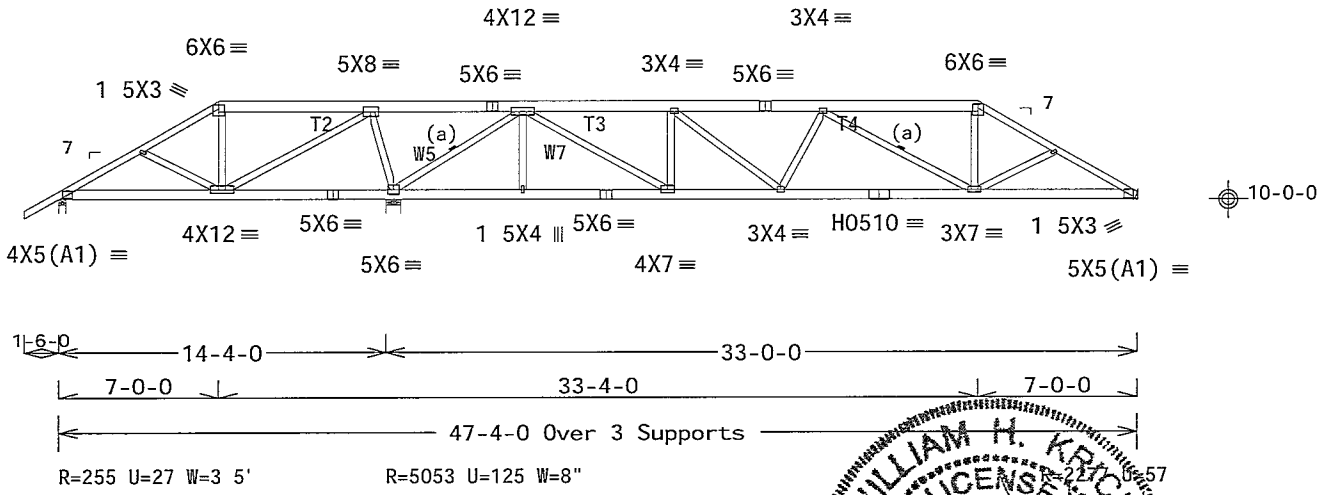

Design Crit. FBC2010Res/TPI-2007(STD) 10.03.11.0209.20 JOB QTY 1

PLT TYP. 20 Gauge HS,Wave FT/RT=10%(0%)/0(0)

FL/-/4/-/-/R/- Scale =.125"/Ft.

ALPINE
ITW Building Components Group Inc.
Haines City, FL 33844
FL COA #0 278

WARNING READ AND FOLLOW ALL NOTES ON THIS SHEET!
IMPORTANT FURNISH THIS DESIGN TO ALL CONTRACTORS INCLUDING INSTALLERS

Trusses require extreme care in fabricating handling sh pping install ng and brac ng Refer to and follow the latest edition of BCSI (Bu lding Component Safety Informat on by TPI and WTCA) for safety practices prior to perform ng these functions Installers shall provide temporary brac ng per BCSI Unless noted otherwise top chord shall have properly attached structural sheath ng and bottom chord shall have a properly attached rig d ce l ng Locations shown for permanent lateral restra nt of webs shall have bracing nstalled per BCSI sections B3 B7 or B10 as appl cable

ITW Build ng Components Group Inc (ITWBCG) shall not be responsible for any deviation from this design, any failure to build the truss in conformance with ANSI/TPI 1 or for handling shipping installation & brac ng of trusses Apply plates to each face of truss and position as shown above and on the Joint Details unless noted otherwise Refer to drawings 160A-Z for standard plate posit ons A seal on this drawing or cover page listing this drawing indicates acceptance of professional engineering responsibil ty solely for the design shown The suitab lity and use of this design for any structure is the respons b lity of the Building Designer per ANSI/TPI 1 Sec 2 For more informat on see Th s job s general notes page ITW BCG www itwbcg com TPI www tpinst org WTCA www sbcindustry com ICC www ccsafe org

WILLIAM H. KRICK LICENSE No. 70861 STATE OF FLORIDA PROFESSIONAL ENGINEER
03/20/2013

TC LL	20.0 PSF	REF	R487-- 9680
TC DL	7.0 PSF	DATE	03/20/13
BC DL	10.0 PSF	DRW	HCUSR487 13079074
BC LL	0.0 PSF	HC-ENG	WHK/WHK
TOT.LD.	37.0 PSF	SEQN-	69672
DUR.FAC.	1.25		
SPACING	24.0"	JREF-	1UUP487_Z02

(13-105--Trademark Construction McDuffie Residence -- Lake City, FL - H9AE 31'6' Mono Hip)

Top chord 2x4 SP_#1_12A
Bot chord 2x4 SP_#1_12A
Webs 2x4 SP_#3__12A

Lumber grades designated with "12A" use design values approved 1/5/2012 by ALSC

Right cantilever is exposed to wind

Roof overhang supports 2 00 psf soffit load

In lieu of structural panels use purlins to brace all flat TC @ 24' OC

MWFRS loads based on trusses located at least 7 50 ft from roof edge

120 mph wind, 15 00 ft mean hgt, ASCE 7-10, CLOSED bldg, not located within 9 00 ft from roof edge, RISK CAT II, EXP B, wind TC DL=3 5 psf, wind BC DL=5 0 psf GCpi(+/-)=0 18

Wind loads and reactions based on MWFRS with additional C&C member design

Right end vertical not exposed to wind pressure

(a) Continuous lateral bracing equally spaced on member

Bottom chord checked for 10 00 psf non-concurrent live load

Deflection meets L/240 live and L/180 total load Creep increase factor for dead load is 1 50

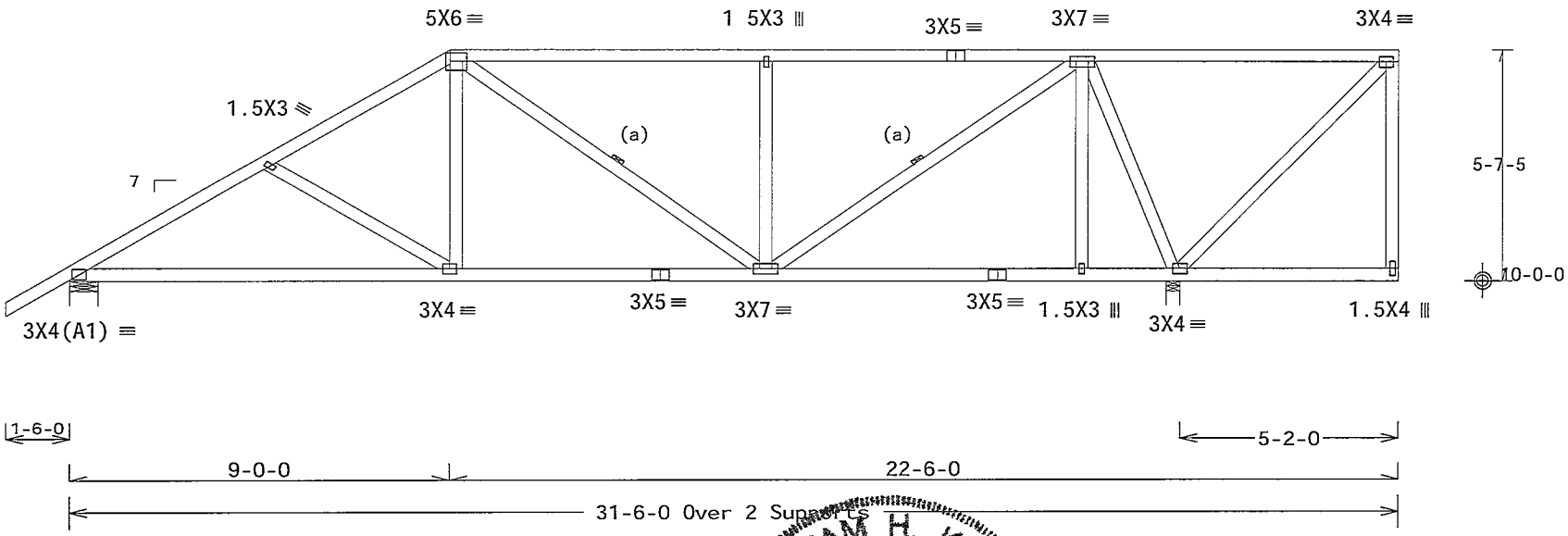

Design Crit FBC2010Res/TPI-2007(STD)
FT/RT=10%(0%)/0(0)

PLT TYP Wave

10.03 11 0209.20 QTY 1 FL/-/4/-/-/R/- Scale =.25"/Ft

ALPINE
ITW Building Components Group Inc.
Haines City, FL 33844
FL COA #0 278

WARNING READ AND FOLLOW ALL NOTES ON THIS SHEET!
IMPORTANT FURNISH THIS DESIGN TO ALL CONTRACTORS INCLUDING INSTALLERS

Trusses require extreme care in fabr cat ng handl ng sh pp ng nstall ng and brac ng Refer to and follow the latest edition of BCSI (Bu ld ng Component Safety Information by TPI and WTCA) for safety practices prior to perform ng these funct ons Installers shall prov de temporary brac ng per BCSI. Unless noted otherwise top chord shall have properly attached structural sheath ng and bottom chord shall have a properly attached rig d ce l ng Locat ons shown for permanent lateral restra nt of webs shall have bracing nstalled per BCSI sect ons B3 B7 or B10 as appl cable

ITW Build ng Components Group Inc (ITWBCG) shall not be responsible for any dev at on from this design, any failure to bu ld the truss in conformance with ANSI/TPI 1 or for handling shipp ng installation & brac ng of trusses Apply plates to each face of truss and position as shown above and on the Jo nt Details unless noted otherwise Refer to drawings 160A-Z for standard plate posit ons A seal on th s draw ng or cover page l sting th s drawing indicates acceptance of professional eng neering responsibility solely for the design shown The suitab lity and use of this design for any structure s the respons b l ty of the Build ng Designer per ANSI/TPI 1 Sec 2 For more informat on see Th s job s general notes page ITW-BCG www itwbcg com TPI www tpinst org WTCA www sbcindustry com ICC www ccsafe org

WILLIAM H. KRICK
LICENSE
No. 70861
STATE OF FLORIDA
PROFESSIONAL ENGINEER
03/20/2013

TC LL	20 0 PSF	REF	R487-- 9681
TC DL	7 0 PSF	DATE	03/20/13
BC DL	10 0 PSF	DRW	HCUSR487 13079075
BC LL	0 0 PSF	HC-ENG	WHK/WHK
TOT LD.	37.0 PSF	SEQN-	69662
DUR FAC.	1.25		
SPACING	24.0"	JREF-	1UUP487_Z02

(13-105--Trademark Construction McDuffie Residence -- Lake City, FL - H9AW 47'4" Special)

Top chord 2x4 SP_#1_12A
Bot chord 2x4 SP_#1_12A
Webs 2x4 SP_#3__12A

Lumber grades designated with "12A" use design values approved 1/5/2012 by ALSC

Roof overhang supports 2 00 psf soffit load

In lieu of structural panels use purlins to brace all flat TC @ 24" OC

WARNING Furnish a copy of this DWG to the installation contractor Special care must be taken during handling, shipping and installation of trusses See "WARNING" note below

120 mph wind, 15 00 ft mean hgt, ASCE 7-10, CLOSED bldg, not located within 6 50 ft from roof edge, RISK CAT II, EXP B, wind TC DL=3 5 psf, wind BC DL=5 0 psf GCpi(+/-)=0 18

Wind loads and reactions based on MWFRS with additional C&C member design

(a) Continuous lateral bracing equally spaced on member

Bottom chord checked for 10 00 psf non-concurrent live load

Deflection meets L/240 live and L/180 total load Creep increase factor for dead load is 1 50

MWFRS loads based on trusses located at least 7 50 ft from roof edge

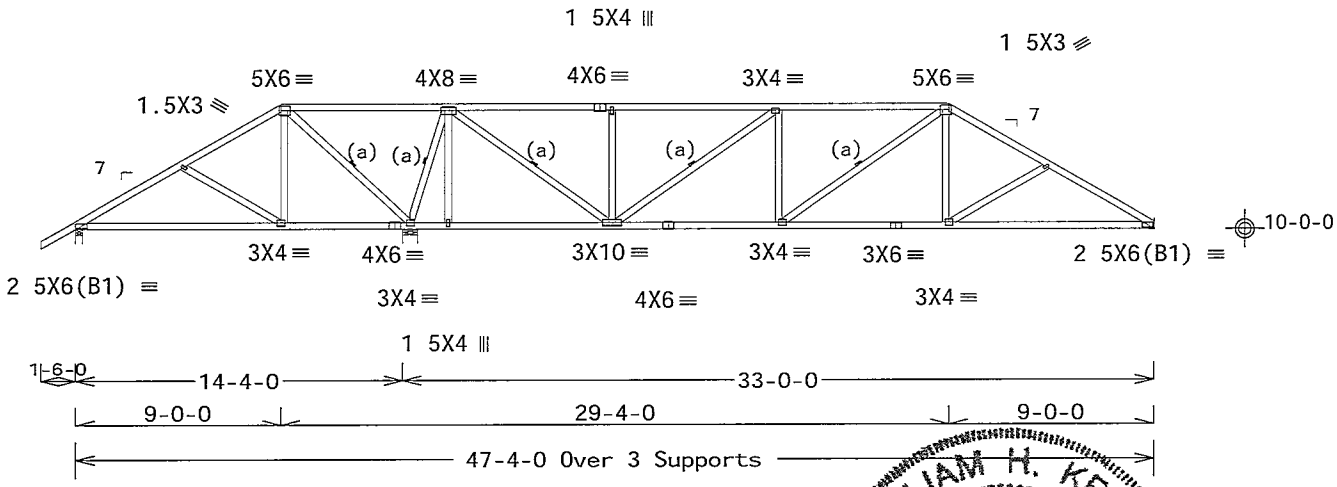

Design Crit: FBC2010Res/TPI-2007(STD)
FT/RT=10%(0%)/0(0)

PLT TYP. Wave

10.03.11.0209.20 1 1 FL/-/4/-/-/R/- Scale =.125"/Ft.

WILLIAM H. KRUCK LICENSE No. 70861 STATE OF FLORIDA PROFESSIONAL ENGINEER
03/20/2013

ALPINE
ITW Building Components Group Inc.
Haines City, FL 33844
FL COA #0 278

WARNING READ AND FOLLOW ALL NOTES ON THIS SHEET!
IMPORTANT FURNISH THIS DESIGN TO ALL CONTRACTORS INCLUDING INSTALLERS

Trusses require extreme care in fabricating handl ng sh pping nstalling and bracing Refer to and follow the latest edition of BCSI (Build ng Component Safety Information by TPI and WTCA) for safety practices prior to performing these functions Installers shall provide temporary brac ng per BCSI Unless noted otherwise top chord shall have properly attached structural sheathing and bottom chord shall have a properly attached rigid ceil ng Locat ons shown for permanent lateral restra nt of webs shall have bracing installed per BCSI sect ons B3 B7 or B10 as appl cable

ITW Build ng Components Group Inc (ITWBCG) shall not be respons ble for any deviation from this design, any fa lure to build the truss in conformance with ANSI/TPI 1 or for handling sh pping installation & bracing of trusses Apply plates to each face of truss and pos t on as shown above and on the Joint Details unless noted otherw se Refer to draw ngs 160A-Z for standard plate pos tions A seal on this drawing or cover page listing this draw ng ndicates acceptance of professional engineering respons bility solely for the design shown The su tab lity and use of this design for any structure is the responsibility of the Bu ilding Des gner per ANSI/TPI 1 Sec 2 For more information see This job s general notes page ITW BCG www twbcg com TPI www tpinst org WTCA www sbc ndustry com ICC www iccsafe org

TC LL	20.0 PSF	REF	R487-- 9682
TC DL	7.0 PSF	DATE	03/20/13
BC DL	10.0 PSF	DRW	HCUSR487 13079076
BC LL	0.0 PSF	HC-ENG	WHK/WHK
TOT.LD.	37.0 PSF	SEQN-	69663
DUR.FAC	1.25		
SPACING	24.0"	JREF-	1UUP487_Z02

THIS DWG PREPARED FROM COMPUTER INPUT (LOADS & DIMENSIONS) SUBMITTED BY TRUSS MFR

(13-105--Trademark Construction McDuffie Residence -- Lake City, FL - HJ7 9'10"13 Hip Jack Girder)

Top chord 2x4 SP_#1_12A
Bot chord 2x4 SP_#1_12A
Webs 2x4 SP_#3__12A

Lumber grades designated with 12A use design values approved 1/5/2012 by ALSC

120 mph wind 15 00 ft mean hgt ASCE 7-10 CLOSED bldg Located anywhere in roof RISK CAT II, EXP B wind TC DL=3 5 psf wind BC DL=5 0 psf GCpi(+/-)=0 18

Wind loads and reactions based on MWFRS with additional C&C member design

Bottom chord checked for 10 00 psf non-concurrent live load

Deflection meets L/240 live and L/180 total load Creep increase factor for dead load is 1 50

Provide (2) 16d common nails(0 162 x3 5) toe nailed at Top chord
Provide (3) 16d common nails(0 162 x3 5) toe nailed at Bot chord

Special loads
------(Lumber Dur Fac =1 25 / Plate Dur Fac =1 25)
TC- From 0 plf at -2 12 to 55 plf at 0 00
TC- From 2 plf at 0 00 to 2 plf at 9 90
BC- From 0 plf at -2 12 to 4 plf at 0 00
BC- From 2 plf at 0 00 to 2 plf at 9 90
TC- -34 50 lb Conc Load at 1 48
TC- 112 23 lb Conc Load at 4 31
TC- 231 20 lb Conc Load at 7 13
BC- 15 56 lb Conc Load at 1 48
BC- 100 05 lb Conc Load at 4 31
BC- 178 17 lb Conc Load at 7 13

Roof overhang supports 2 00 psf soffit load

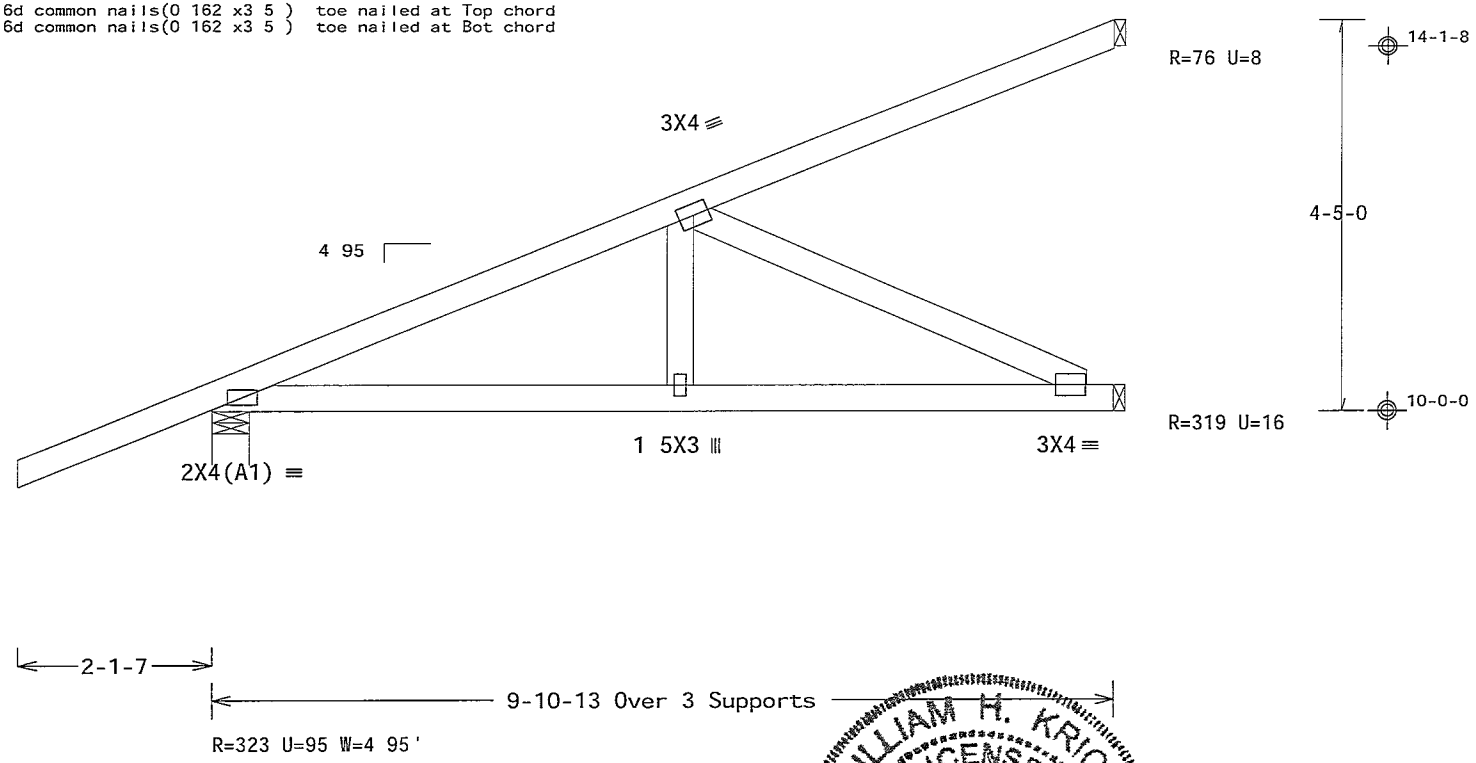

Design Crit FBC2010Res/TPI-2007(STD)
FT/RT=10%(0%)/0(0) 10.03.11 0209.20 QTY 2 FL/-/4/-/-/R/-

PLT TYP. Wave

Scale =.5"/Ft.

WILLIAM H. KRICK LICENSE No. 70861 STATE OF FLORIDA PROFESSIONAL ENGINEER
03/20/2013

ALPINE
ITW Building Components Group Inc.
Haines City, FL 33844
FL COA #0 278

WARNING READ AND FOLLOW ALL NOTES ON THIS SHEET!
IMPORTANT FURNISH THIS DESIGN TO ALL CONTRACTORS INCLUDING INSTALLERS

Trusses require extreme care n fabricat ng handl ng shipping nstalling and brac ng Refer to and follow the latest ed t on of BCSI (Bu ld ng Component Safety Information by TPI and WTCA) for safety practices pr or to performing these funct ons Installers shall provide temporary bracing per BCSI Unless noted otherw se top chord shall have properly attached structural sheath ng and bottom chord shall have a properly attached r gid ceiling Locat ons shown for permanent lateral restraint of webs shall have brac ng nstalled per BCSI sections B3 B7 or B10 as applicable

ITW Building Components Group Inc (ITWBCG) shall not be responsible for any deviat on from th s design any failure to bu ld the truss n conformance w th ANSI/TPI 1 or for handl ng sh pp ng nstallat on bracing of trusses Apply plates to each face of truss and position as shown above and on the Jo nt Deta ls unless noted otherwise Refer to drawings 160A-Z for standard plate posit ons A seal on th s drawing or cover page l sting th s drawing ndicates acceptance of profess onal eng neer ng responsibil ty solely for the des gn shown The suitabil ty and use of th s design for any structure s the respons b l ty of the Build ng Designer per ANSI/TPI 1 Sec 2 For more nformat on see Th s job s general notes page ITW BCG www itwbcg com TPI www tp nst org WTCA www sbcindustry com ICC www ccsafe org

TC LL	20 0 PSF	REF	R487-- 9683
TC DL	7.0 PSF	DATE	03/20/13
BC DL	10 0 PSF	DRW	HCUSR487 13079077
BC LL	0.0 PSF	HC-ENG	WHK/WHK
TOT LD.	37.0 PSF	SEQN-	69673
DUR FAC.	1 25		
SPACING	24.0"	JREF-	1UUP487_Z02

(13-105--Trademark Construction McDuffie Residence -- Lake City, FL - V1 16'3 8 Valley)

Top chord 2x4 SP_#1_12A
Bot chord 2x4 SP_#1_12A
Webs 2x4 SP_#3__12A

Lumber grades designated with '12A' use design values approved 1/5/2012 by ALSC

Bottom chord checked for 10 00 psf non-concurrent live load

See DWG VAL160100212 for valley details

120 mph wind, 16 56 ft mean hgt, ASCE 7-10, CLOSED bldg, not located within 9 00 ft from roof edge, RISK CAT II, EXP B, wind TC DL=3 5 psf, wind BC DL=5 0 psf GCpi(+/-)=0 18

Wind loads and reactions based on MWFRS with additional C&C member design

Deflection meets L/240 live and L/180 total load Creep increase factor for dead load is 1 50

MWFRS loads based on trusses located at least 16 56 ft from roof edge

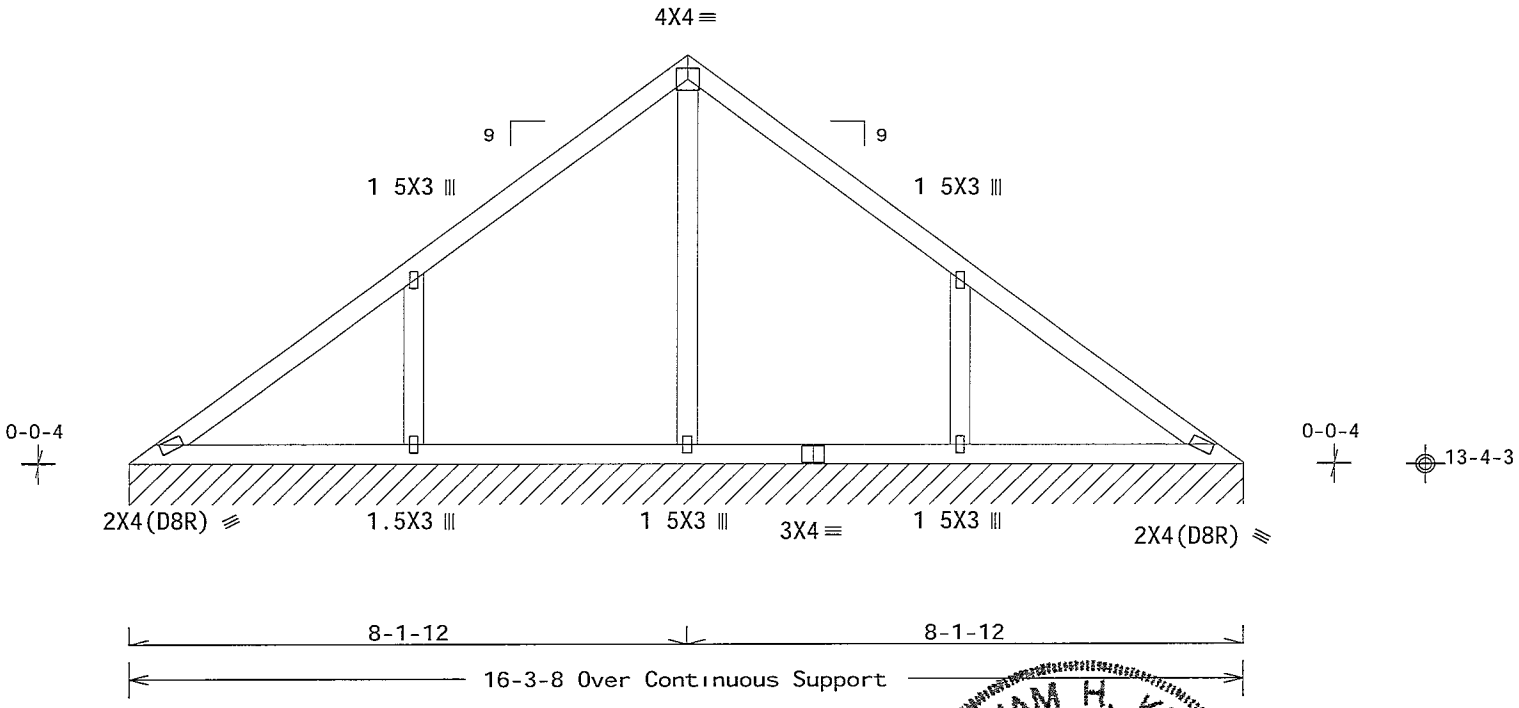

R=77 PLF U=0 PLF W=16-3-8
RL=6/-6 PLF

Design Crit FBC2010Res/TPI-2007(STD)
FT/RT=10%(0%)/0(0) 10.03 H.0209120 QTY 1 FL/-/4/-/-/R/- Scale =.375"/Ft

PLT TYP Wave

WILLIAM H. KRICK LICENSE No. 70861 STATE OF FLORIDA PROFESSIONAL ENGINEER
03/20/2013

ALPINE
ITW Building Components Group Inc.
Haines City, FL 33844
FL COA #0 278

WARNING READ AND FOLLOW ALL NOTES ON THIS SHEET!
IMPORTANT FURNISH THIS DESIGN TO ALL CONTRACTORS INCLUDING INSTALLERS

Trusses requ re extreme care n fabricating handling shipping install ng and brac ng Refer to and follow the latest edition of BCSI (Building Component Safety Informat on by TPI and WTCA) for safety practices prior to perform ng these functions Installers shall prov de temporary brac ng per BCSI Unless noted otherwise top chord shall have properly attached structural sheathing and bottom chord shall have a properly attached rig d ceiling Locations shown for permanent lateral restra nt shall have bracing installed per BCSI sections B3 B7 or B10 as applicable

ITW Bu ld ng Components Group Inc (ITWBCG) shall not be respons ble for any deviation from this design any failure to build the truss in conformance with ANSI/TPI 1 or for handling shipping installation & brac ng of trusses Apply plates to each face of truss and position as shown above and on the Joint Deta ls unless noted otherwise Refer to drawings 160A-Z for standard plate posit ons A seal on this draw ng or cover page listing this drawing indicates acceptance of professional engineering responsibil ty solely for the design shown The suitab lity and use of this design for any structure is the respons bility of the Building Designer per ANSI/TPI 1 Sec 2 For more informat on see Th s job s general notes page ITW-BCG www itwbcg com TPI www tpinst org WTCA www sbcindustry com ICC www ccsafe org

TC LL	20.0 PSF	REF	R487-- 9684
TC DL	7.0 PSF	DATE	03/20/13
BC DL	10.0 PSF	DRW	HCUSR487 13079078
BC LL	0.0 PSF	HC-ENG	WHK/WHK
TOT.LD.	37 0 PSF	SEQN-	69664
DUR.FAC.	1.25		
SPACING	24.0"	JREF-	1UUP487_Z02

(13-105--Trademark Construction McDuffie Residence -- Lake City, FL - V2 13 2'3 Valley)

Top chord 2x4 SP_#1_12A
Bot chord 2x4 SP_#1_12A
Webs 2x4 SP_#3__12A

Lumber grades designated with '12A' use design values approved 1/5/2012 by ALSC

Bottom chord checked for 10 00 psf non-concurrent live load

See DWG VAL160100212 for valley details

120 mph wind, 17 14 ft mean hgt, ASCE 7-10, CLOSED bldg, not located within 9 00 ft from roof edge, RISK CAT II, EXP B, wind TC DL=3 5 psf, wind BC DL=5 0 psf GCpi(+/-)=0 18

Wind loads and reactions based on MWFRS with additional C&C member design

Deflection meets L/240 live and L/180 total load Creep increase factor for dead load is 1 50

MWFRS loads based on trusses located at least 17 14 ft from roof edge

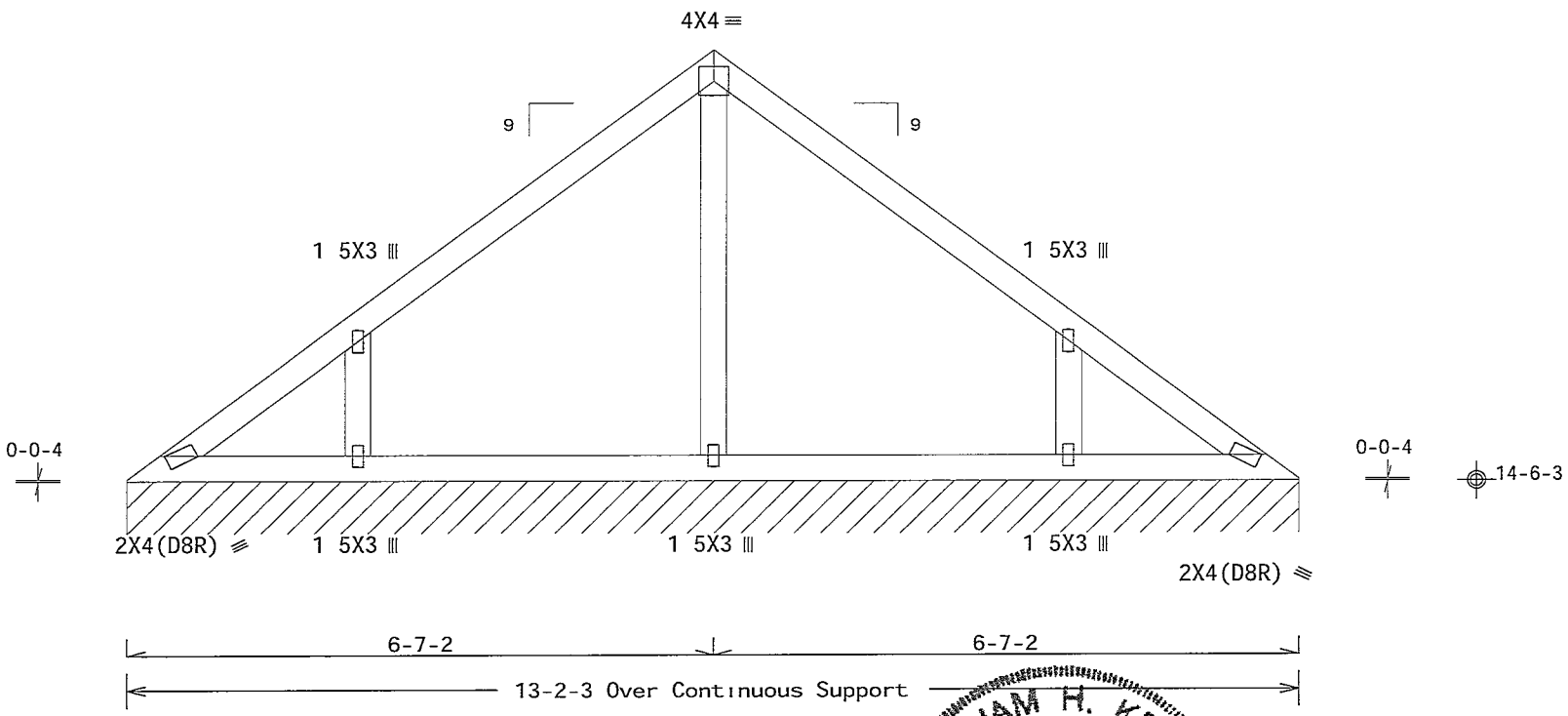

R=77 PLF U=0 PLF W=13-2-3
RL=6/-6 PLF

Design Crit FBC2010Res/TPI-2007(STD)
FT/RT=10%(0%)/0(0)

PLT TYP. Wave

15.03.11.0809.20 QTY 1 FL/-/4/-/-/R/- Scale =.5"/Ft.

WILLIAM H. KRICK LICENSE No. 70861 STATE OF FLORIDA PROFESSIONAL ENGINEER
03/20/2013

ALPINE
ITW Building Components Group Inc.
Haines City, FL 33844
FL COA #0 278

WARNING READ AND FOLLOW ALL NOTES ON THIS SHEET!
IMPORTANT FURNISH THIS DESIGN TO ALL CONTRACTORS INCLUDING INSTALLERS

Trusses require extreme care in fabr cating handling sh pp ng install ng and brac ng Refer to and follow the latest edition of BCSI (Bu lding Component Safety Informat on by TPI and WTCA) for safety pract ces prior to perform ng these functions Installers shall prov de temporary bracing per BCSI Unless noted otherwise top chord shall have properly attached structural sheathing and bottom chord shall have a properly attached r g d ceiling Locations shown for permanent lateral restra nt of webs shall have bracing installed per BCSI sections B3 B7 or B10 as applicable

ITW Bu lding Components Group Inc (ITWBCG) shall not be respons ble for any dev ation from this design or any failure to build the truss in conformance w th ANSI/TPI 1 or for handling sh pping installation brac ng of trusses Apply plates to each face of truss and pos t on as shown above and on the Joint Details unless noted otherwise Refer to draw ngs 160A-Z for standard plate pos tions A seal on th s draw ng or cover page list ng this draw ng nd cates acceptance of profess onal engineering respons b l ty solely for the des gn shown The su tability and use of this des gn for any structure is the responsibility of the Building Des gner per ANSI/TPI 1 Sec 2 For more nformation see This job s general notes page ITW BCG www twbcg com TPI www tp nst org WTCA www sbc ndustry com ICC www iccsafe org

TC LL	20.0 PSF	REF	R487-- 9685
TC DL	7.0 PSF	DATE	03/20/13
BC DL	10.0 PSF	DRW	HCUSR487 13079079
BC LL	0 0 PSF	HC-ENG	WHK/WHK
TOT.LD.	37.0 PSF	SEQN-	69665
DUR.FAC.	1.25		
SPACING	24.0"	JREF-	1UUP487_Z02

(13-105--Trademark Construction McDuffie Residence -- Lake City, FL - V3 10'0"14 Valley)

Top chord 2x4 SP_#1_12A
Bot chord 2x4 SP_#1_12A
Webs 2x4 SP_#3__12A

Lumber grades designated with "12A" use design values approved 1/5/2012 by ALSC

Bottom chord checked for 10 00 psf non-concurrent live load

See DWG VAL160100212 for valley details

120 mph wind, 17 73 ft mean hgt, ASCE 7-10, CLOSED bldg, not located within 9 00 ft from roof edge, RISK CAT II, EXP B, wind TC DL=3 5 psf, wind BC DL=5 0 psf GCpi(+/-)=0 18

Wind loads and reactions based on MWFRS with additional C&C member design

Deflection meets L/240 live and L/180 total load Creep increase factor for dead load is 1 50

MWFRS loads based on trusses located at least 17 73 ft from roof edge

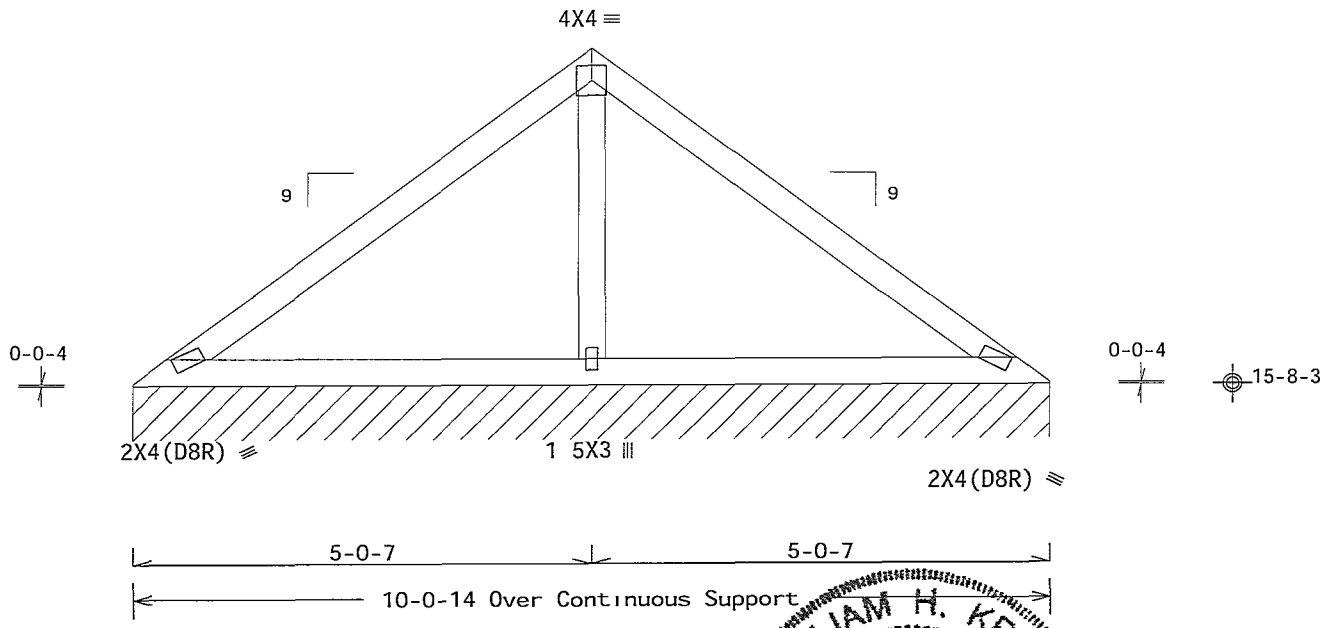

R=77 PLF U=0 PLF W=10-0-14
RL=6/-6 PLF

Design Crit. FBC2010Res/TPI-2007(STD)
FT/RT=10%(0%)/0(0)

10.03.11.0209.20 QTY 1

FL/-/4/-/-/R/-

Scale =.5"/Ft.

PLT TYP Wave

ALPINE
ITW Building Components Group Inc.
Haines City, FL 33844
FL COA #0 278

WARNING READ AND FOLLOW ALL NOTES ON THIS SHEET!
IMPORTANT FURNISH THIS DESIGN TO ALL CONTRACTORS INCLUDING INSTALLERS

Trusses require extreme care in fabricat ng handling shipping nstalling and bracing Refer to and follow the latest ed tion of BCSI (Build ng Component Safety Information by TPI and WTCA) for general practices pr or to performing these funct ons Installers shall provide temporary bracing per BCSI Unless noted otherw se top chord shall have properly attached structural sheathing and bottom chord shall have a properly attached rigid ceiling Locations shown for permanent lateral restraint of webs shall have brac ng installed per BCSI sections B3 B7 or B10 as applicable

ITW Bu lding Components Group Inc (ITWBCG) shall not be responsible for any deviation from this design any fa lure to build the truss in conformance with ANSI/TPI 1 or for handling sh pping nstallation and brac ng of trusses Apply plates to each face of truss and pos t on as shown above and on the Joint Deta ls unless noted otherwise Refer to draw ngs 160A-Z for standard plate pos tions A seal on this drawing or cover page list ng this draw ng nd cates acceptance of professional engineering respons b lity solely for the design shown The su tability and use of this des gn for any structure is the responsibility of the Bu lding Des gner per ANSI/TPI 1 Sec 2 For more information see Th s job s general notes page ITW BCG www itwbcg com TPI www tpinst org WTCA www sbcindustry com ICC www iccsafe org

WILLIAM H. KRICK
LICENSE
No. 70861
STATE OF FLORIDA
PROFESSIONAL ENGINEER
03/20/2013

TC LL	20.0 PSF	REF	R487-- 9686
TC DL	7.0 PSF	DATE	03/20/13
BC DL	10 0 PSF	DRW	HCUSR487 13079080
BC LL	0.0 PSF	HC-ENG	WHK/WHK
TOT LD.	37.0 PSF	SEQN-	69666
DUR FAC.	1 25		
SPACING	24 0"	JREF-	1UUP487_Z02

(13-105--Trademark Construction McDuffie Residence -- Lake City, FL - V4 6'11"8 Valley)

Top chord 2x4 SP_#1_12A
Bot chord 2x4 SP_#1_12A
Webs 2x4 SP_#3__12A

Lumber grades designated with "12A" use design values approved 1/5/2012 by ALSC

Bottom chord checked for 10 00 psf non-concurrent live load

See DWG VAL160100212 for valley details

120 mph wind, 18 31 ft mean hgt, ASCE 7-10, CLOSED bldg, Located anywhere in roof, RISK CAT II, EXP B, wind TC DL=3 5 psf, wind BC DL=5 0 psf GCpi(+/-)=0 18

Wind loads and reactions based on MWFRS with additional C&C member design

Deflection meets L/240 live and L/180 total load Creep increase factor for dead load is 1 50

MWFRS loads based on trusses located at least 18 31 ft from roof edge

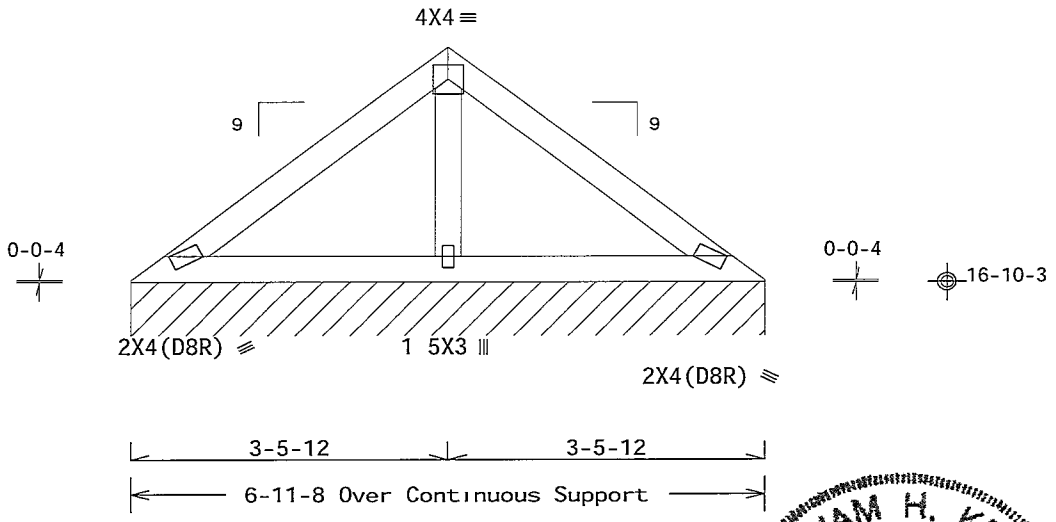

R=77 PLF U=0 PLF W=6-11-8
RL=6/-6 PLF

Design Crit: FBC2010Res/TPI-2007(STD)
FT/RT=10%(0%)/0(0) 1D.03.11.0909.20 QTY:1 FL/-/4/-/-/R/-

PLT TYP. Wave

Scale =.5"/Ft

WILLIAM H. KRICK LICENSE No. 70861 STATE OF FLORIDA PROFESSIONAL ENGINEER

03/20/2013

ALPINE
ITW Building Components Group Inc.
Haines City, FL 33844
FL COA #0 278

WARNING READ AND FOLLOW ALL NOTES ON THIS SHEET!
IMPORTANT FURNISH THIS DESIGN TO ALL CONTRACTORS INCLUDING INSTALLERS

Trusses requ re extreme care n fabricating handling shipping installing and bracing refer to and follow the latest ed t on of BCSI (Building Component Safety Information by TPI and WTCA) for safety practices pr or to performing these functions Installers shall provide temporary bracing per BCSI. Unless noted otherwise top chord shall have properly attached structural sheathing and bottom chord shall have a properly attached r g d ceiling Locations shown for permanent lateral restraint shall have bracing installed per BCSI sections B3 B7 or B10 as applicable

ITW Bu lding Components Group Inc (ITWBCG) shall not be respons ble for any deviat on from this design any fa lure to build the truss in conformance w th ANSI/TPI 1 or for handl ng sh pp ng nstallat on bracing of trusses Apply plates to each face of truss and pos t on as shown above and on the Jo nt Details unless noted otherw se Refer to draw ngs 160A-Z for standard plate pos tions A seal on th s drawing or cover page list ng this draw ng nd cates acceptance of profess onal eng neer ng respons b lity solely for the des gn shown The su tabil ty and use of th s des gn for any structure s the responsibil ty of the Bu ld ng Des gner per ANSI/TPI 1 Sec 2 For more nformat on see This job s general notes page ITW-BCG www twbcg com TPI www tp nst org WTCA www sbc ndustry com ICC www iccsafe org

TC LL	20 0 PSF	REF	R487-- 9687
TC DL	7 0 PSF	DATE	03/20/13
BC DL	10.0 PSF	DRW	HCUSR487 13079081
BC LL	0.0 PSF	HC-ENG	WHK/WHK
TOT LD.	37 0 PSF	SEQN-	69667
DUR FAC	1 25		
SPACING	24.0"	JREF-	1UUP487_Z02

(13-105--Trademark Construction McDuffie Residence -- Lake City, FL - V5 3'10'3 Valley)

Top chord 2x4 SP_#1_12A
Bot chord 2x4 SP_#1_12A

Lumber grades designated with "12A" use design values approved 1/5/2012 by ALSC

Bottom chord checked for 10 00 psf non-concurrent live load

See DWG VAL160100212 for valley details

MWFRS loads based on trusses located at least 18 89 ft from roof edge

120 mph wind, 18 89 ft mean hgt, ASCE 7-10, CLOSED bldg, Located anywhere in roof, RISK CAT II, EXP B, wind TC DL=3 5 psf, wind BC DL=5 0 psf GCpi(+/-)=0 18

Wind loads and reactions based on MWFRS with additional C&C member design

Deflection meets L/240 live and L/180 total load Creep increase factor for dead load is 1 50

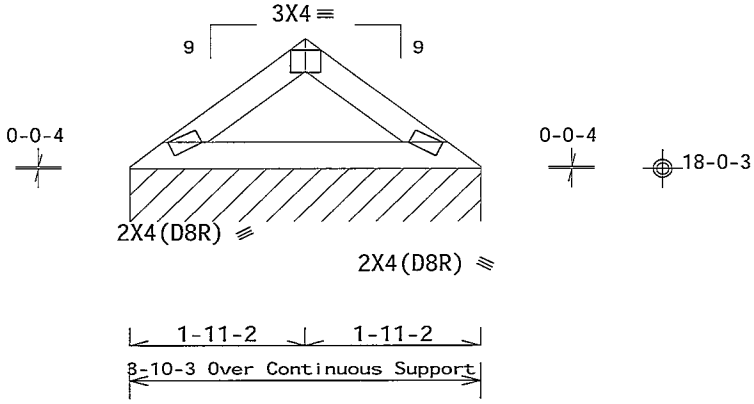

R=77 PLF U=0 PLF W=3-10-3

Design Crit: FBC2010Res/TPI-2007(STD)
FT/RT=10%(0%)/0(0)

PLT TYP. Wave

10.03.11.0209 20 QTY 1

FL/-/4/-/-/R/-

Scale =.5"/Ft.

WILLIAM H. KRICK
LICENSE
No. 70861
STATE OF FLORIDA
PROFESSIONAL ENGINEER
03/20/2013

ALPINE
ITW Building Components Group Inc.
Haines City FL 33844
FL COA #0 278

WARNING READ AND FOLLOW ALL NOTES ON THIS SHEET!
IMPORTANT FURNISH THIS DESIGN TO ALL CONTRACTORS INCLUDING INSTALLERS

Trusses requ re extreme care n fabricating handl ng shipping installing and brac ng refer to and follow the latest ed t on of BCSI (Building Component Safety Information by TPI and WTCA) for safety practices pr or to performing these funct ons Installers shall provide temporary bracing per BCSI Unless noted otherw se top chord shall have properly attached structural sheathing and bottom chord shall have a properly attached r g d ceiling Locations shown for permanent lateral restraint of web shall have brac ng installed per BCSI sections B3 B7 or B10 as applicable

ITW Bu ldng Components Group Inc (ITWBCG) shall not be respons ble for any dev at on from this design any fa lure to build the truss n conformance w th ANSI/TPI 1 or for handl ng sh pp ng nstallat on bracing of trusses Apply plates to each face of truss and pos t on as shown above and on the Joint Details unless noted otherw se Refer to draw ngs 160A-Z for standard plate pos t ons A seal on th s drawing or cover page l st ng th s drawing nd cates acceptance of profess onal eng neer ng responsibility solely for the des gn shown The suitabil ty and use of th s des gn for any structure s the respons b l ty of the Bu ld ng Designer per ANSI/TPI 1 Sec 2 For more nformat on see This job s general notes page ITW BCG www twbcg com TPI www tp nst org WTCA www sbc ndustry com ICC www ccsafe org

TC LL	20.0 PSF	REF	R487-- 9688
TC DL	7 0 PSF	DATE	03/20/13
BC DL	10 0 PSF	DRW	HCUSR487 13079082
BC LL	0 0 PSF	HC-ENG	WHK/WHK
TOT.LD.	37 0 PSF	SEQN-	69668
DUR FAC	1 25		
SPACING	24 0"	JREF-	1UUP487_Z02

(13-105--Trademark Construction McDuffie Residence -- Lake City, FL - VDG 19 4 14 Valley)

Top chord 2x4 SP_#1_12A
Bot chord 2x4 SP_#1_12A
Webs 2x4 SP_#3__12A

Lumber grades designated with '12A" use design values approved 1/5/2012 by ALSC

See DWGS A12030ENC100212, GBLLETIN0212, & GABRST100212 for more requirements

120 mph wind, 15 79 ft mean hgt, ASCE 7-10, CLOSED bldg, Located anywhere in roof, RISK CAT II, EXP B, wind TC DL=3 5 psf, wind BC DL=5 0 psf GCpi(+/-)=0 18

Wind loads and reactions based on MWFRS with additional C&C member design

Bottom chord checked for 10 00 psf non-concurrent live load

Deflection meets L/240 live and L/180 total load Creep increase factor for dead load is 1 50

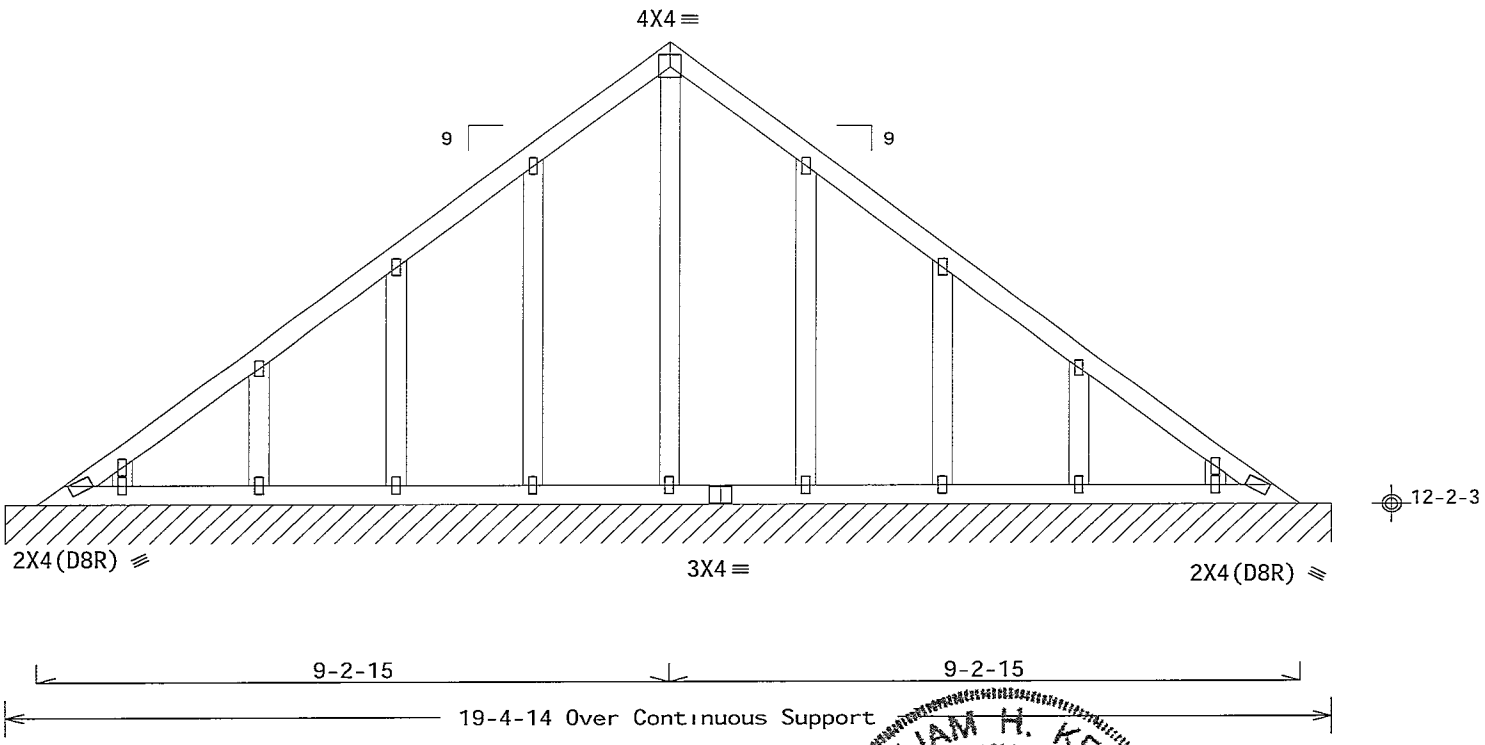

R=74 PLF U=2 PLF W=19-4-14
RL=6/-6 PLF

Note· All Plates Are 1 5X3 Except As Shown

Design Crit FBC2010Res/TPI-2007(STD)
PLT TYP. Wave FT/RT=10%(0%)/0(0) 10 03 11 0209 20 QTY 1 FL/-/4/-/-/R/- Scale = 375"/Ft

WILLIAM H. KRICK LICENSE No. 70861 STATE OF FLORIDA PROFESSIONAL ENGINEER
03/20/2013

ALPINE
ITW Building Components Group Inc.
Haines City, FL 33844
FL COA #0 278

WARNING READ AND FOLLOW ALL NOTES ON THIS SHEET!
IMPORTANT FURNISH THIS DESIGN TO ALL CONTRACTORS INCLUDING INSTALLERS

Trusses require extreme care in fabr cating hand ng sh pp ng nstall ng and brac ng Refer to and follow the latest edition of BCSI (Bu ld ng Component Safety Information by TPI and WTCA) for safety pract ces prior to perform ng these funct ons Installers shall prov de temporary brac ng per BCSI Unless noted otherwise top chord shall have properly attached structural sheath ng and bottom chord shall have a properly attached r g d ce l ng Locat ons shown for permanent lateral restra nt of webs shall have brac ng nstalled per BCSI sect ons B3 B7 or B10 as appl cable

ITW Build ng Components Group Inc (ITWBCG) shall not be respons ble for any dev ation from this design any failure to build the truss n conformance with ANSI/TPI 1 or for handling shipping installation and brac ng of trusses Apply plates to each face of truss and pos t on as shown above and on the Joint Deta is unless noted otherwise Refer to drawings 160A-Z for standard plate pos tions A seal on this draw ng or cover page listing this draw ng indicates acceptance of professional engineering respons b l ty solely for the design shown The su tab lity and use of this des gn for any structure is the respons bility of the Bu lding Des gner per ANSI/TPI 1 Sec 2 For more information see This job s general notes page ITW BCG www itwbcg com TPI www tpinst org WTCA www sbc ndustry com ICC www ccsafe org

TC LL	20 0 PSF	REF	R487-- 9689
TC DL	7 0 PSF	DATE	03/20/13
BC DL	10.0 PSF	DRW	HCUSR487 13079083
BC LL	0.0 PSF	HC-ENG	WHK/WHK
TOT LD	37.0 PSF	SEQN-	69669
DUR FAC.	1.25		
SPACING	24 0"	JREF-	1UUP487_Z02

CLB WEB BRACE SUBSTITUTION

THIS DETAIL IS TO BE USED WHEN CONTINUOUS LATERAL BRACING (CLB) IS SPECIFIED ON A TRUSS DESIGN BUT AN ALTERNATIVE WEB BRACING METHOD IS DESIRED

NOTES

THIS DETAIL IS ONLY APPLICABLE FOR CHANGING THE SPECIFIED CLB SHOWN ON SINGLE PLY SEALED DESIGNS TO T-BRACING OR SCAB BRACING

ALTERNATIVE BRACING SPECIFIED IN CHART BELOW MAY BE CONSERVATIVE FOR MINIMUM ALTERNATIVE BRACING RE-RUN DESIGN WITH APPROPRIATE BRACING

WEB MEMBER SIZE	SPECIFIED CLB BRACING	ALTERNATIVE BRACING T OR L BRACE	ALTERNATIVE BRACING SCAB BRACE
2X3 OR 2X4	1 ROW	2X4	1 2X4
2X3 OR 2X4	2 ROWS	2X6	2 2X4
2X6	1 ROW	2X4	1-2X6
2X6	2 ROWS	2X6	2-2X4(*)
2X8	1 ROW	2X6	1-2X8
2X8	2 ROWS	2X6	2-2X6(*)

T BRACE L BRACE AND SCAB BRACE TO BE SAME SPECIES AND GRADE OR BETTER THAN WEB MEMBER UNLESS SPECIFIED OTHERWISE ON ENGINEER'S SEALED DESIGN

(*) CENTER CAB ON WIDE FACE OF WEB APPLY (1) SCAB TO EACH FACE OF WEB

T-BRACING OR L-BRACING

APPLY TO EITHER SIDE OF WEB NARROW FACE
ATTACH WITH 10d BOX OR GUN
(0128"x 3 MIN) NAILS
AT 6" OC
BRACE IS A
MINIMUM 80% OF WEB
MEMBER LENGTH

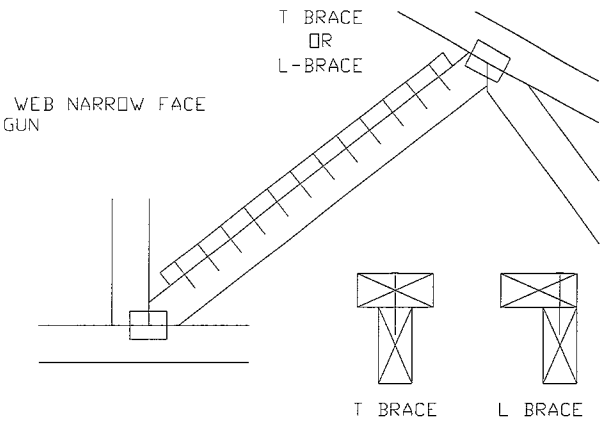

SCAB BRACING

APPLY SCAB(S) TO WIDE FACE OF WEB
NO MORE THAN (1) SCAB PER FACE
ATTACH WITH 10d BOX OR GUN
(0128"x 3 MIN) NAILS
AT 6" OC
BRACE IS A MINIMUM
80% OF WEB MEMBER LENGTH

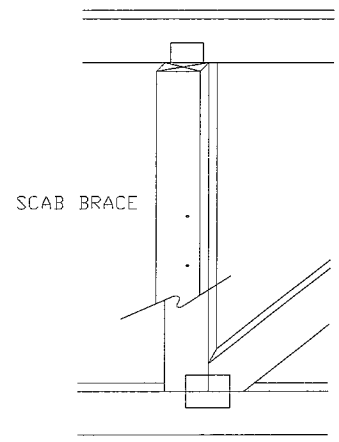

WILLIAM H. KRICK
LICENSE
No. 70861
STATE OF FLORIDA
PROFESSIONAL ENGINEER

03/20/2013

Mar 20 '13

TW
Building Components Group Inc.

Earth City MO 63045

WARNING READ AND FOLLOW ALL NOTES ON THIS SHEET
Trusses require extreme care in fabricating handling shipping installing and bracing. Refer to and follow BCSI (Building Component Safety Information by TPI and WTCA) for safety practices prior to performing these functions. Installer shall provide temporary bracing per BCSI. Unless noted otherwise top chord shall have properly attached structural panels and bottom chord shall have properly attached rigid ceiling. Locations shown for permanent lateral restraint of webs shall be braced installed per BCSI section B3 & B7 see this job's general notes page for more information.

IMPORTANT FURNISH COPY OF THIS DESIGN TO INSTALLATION CONTRACTOR
ITW Building Components Group Inc (ITWBCG) shall not be responsible for any deviation from this design any failure to build the truss in conformance with TPI or fabricating, handling shipping installing & bracing of trusses. ITWBCG connector plates are made of 20/18/16GA W,H/S/K) ASTM A653 grade 37/40/60 K/W/H,S) galv steel. Apply plates to each face of truss positioned as shown above and on Joint Details.
A seal on this drawing or cover page indicates acceptance and professional engineering responsibility solely for the truss component design shown. The suitability and use of this component for any building is the responsibility of the Building Designer per ANST/TPI Sec 2
ITW BCG: www.twbcg.com, TPI www.tpinst.com WTCA: www.sbcindustry.com ICC www.ccsafe.org

TC LL	PSF	REF CLB SUBST
TC DL	PSF	DATE 1/1/09
BC DL	PSF	DRWG BRCLBSUB0109
BC LL	PSF	
TOT LD	PSF	
DUR FAC		
SPACING		

Gable Stud Reinforcement Detail

ASCE 7 10 120 mph Wind Speed, 15 Mean Height Enclosed, Exposure C Kzt = 100

Or 100 mph Wind Speed 15 Mean Height Partially Enclosed Exposure C Kzt 100
O 100 mph Wind Speed 15 Mean Height Enclosed Exposure D Kzt 100

Max Gable Vertical Length

2x4 Gable Vertical Spacing	Species	Brace Grade	No Braces	(1) 1x4 L Brace * Group A	(1) 1x4 L Brace * Group B	(1) 2x4 L Brace * Group A	(1) 2x4 L Brace * Group B	(1) 2x4 L Brace ** Group A	(1) 2x4 L Brace ** Group B	(1) 2x6 L Brace * Group A	(1) 2x6 L Brace * Group B	(2) 2x6 L Brace ** Group A	(2) 2x6 L Brace ** Group B
24" oc	SPF HF	#1 / #2	4 10	8 2	8 6	9 8"	10 1	11 6	12 0"	14 0"	14 0	14 0	14 0
		#3	4 7	7 9	8 3	9 7	9 11	11 5	11 10	14 0	14 0	14 0"	14 0
		Stud	4 7	8 1	8 4	9 7	9 11"	11 5	11 10	14 0"	14 0	14 0"	14 0"
		Standard	4 7	8 1"	8 4"	9 7"	9 11"	11 5"	11 10"	14 0	14 0	14 0	14 0"
	SP DFL	#1	4 11	8 3	8 7	9 9	10 1"	11 7	12 1"	14 0	14 0	14 0	14 0"
		#2	4 10	8 2	8 6	9 8"	10 1"	11 6"	12 0	14 0"	14 0"	14 0	14 0
		#3	4 7	6 11	7 4	9 3"	9 10"	11 5"	11 10"	14 0"	14 0"	14 0	14 0
		Stud	4 7	6 11	7 4"	9 3"	9 10	11 5"	11 10"	14 0"	14 0"	14 0	14 0
		Standard	4 7	6 0	6 4	8 0"	8 6	10 10	11 7"	12 6"	13 5"	14 0"	14 0"
16" oc	SPF HF	#1 / #2	5 6	9 5	9 9	11 1	11 6	13 2"	13 9"	14 0"	14 0"	14 0	14 0
		#3	5 3	9 3	9 9"	10 11"	11 4"	13 0"	13 7"	14 0"	14 0"	14 0"	14 0
		Stud	5 3	9 3	9 7"	10 11"	11 4"	13 0"	13 7"	14 0"	14 0"	14 0"	14 0"
		Standard	5 3	9 3	9 7"	10 11"	11 4"	13 0	13 7"	14 0"	14 0"	14 0"	14 0"
	SP DFL	#1	5 8	9 5	9 10	11 2"	11 7"	13 3"	13 10	14 0"	14 0"	14 0	14 0
		#2	5 6	9 5"	9 9	11 1"	11 6"	13 2	13 9"	14 0"	14 0"	14 0"	14 0"
		#3	5 3"	8 6"	9 0	10 11"	11 4"	13 0"	13 7"	14 0"	14 0"	14 0"	14 0"
		Stud	5 3"	8 6"	9 0	10 11	11 4	13 0	13 7	14 0"	14 0"	14 0"	14 0
		Standard	5 3	7 4	7 10	9 9	10 5"	13 0"	13 7"	14 0	14 0	14 0"	14 0"
12" oc	SPF HF	#1 / #2	6 1	10 4"	10 8	12 2"	12 8"	13 2"	14 0"	14 0"	14 0"	14 0"	14 0
		#3	5 9"	10 2	10 7	12 0"	12 6"	14 0"	14 0"	14 0"	14 0	14 0"	14 0
		Stud	5 9	10 2	10 7	12 0	12 6	14 0	14 0"	14 0"	14 0"	14 0"	14 0
		Standard	5 9	10 2	10 7	12 0"	12 6	14 0"	14 0	14 0	14 0	14 0"	14 0
	SP DFL	#1	6 2"	10 5	10 9	12 3"	12 9"	14 0	14 0"	14 0"	14 0"	14 0"	14 0
		#2	6 1	10 4	10 8	12 2	12 8	14 0	14 0	14 0"	14 0"	14 0	14 0
		#3	5 9"	9 9"	10 5	12 0	12 6	14 0"	14 0"	14 0	14 0	14 0"	14 0"
		Stud	5 9	9 9	10 5	12 0"	12 6	14 0	14 0"	14 0	14 0	14 0"	14 0
		Standard	5 9	8 6"	9 0"	11 3"	12 1	14 0	14 0"	14 0"	14 0"	14 0"	14 0"

Bracing Group Species and Grades

Group A

Spruce Pine-Fir

#1 / #2	Standard
#3	Stud

Hem-Fir

#2	Stud
#3	Standard

Douglas Fir Larch

#3
Stud
Standard

Southern Pine***

#3
Stud
Standard

Group B

Hem Fir

#1 & Btr
#1

Douglas Fir Larch

#1
#2

Southern Pine***

#1
#2

1x4 Braces shall be SRB (Stress Rated Board)

***For 1x4 So. Pine use only Industrial 55 or Industrial 45 Stress-Rated Boards Group B values may be used with these grades

Gable Truss Detail Notes

Wind Load deflection criterion is L/240

Provide uplift connections for 35 plf over continuous bearing (5 psf TC Dead Load)

Gable end supports load from 4 0 outlookers with 2 0 overhang or 12" plywood overhang.

So Pine lumber design values based on the ALSC January 2012 rulin

Attach L" braces with 10d (0128"x3.0" min) nails

* For (1) L brace space nails at 2 oc in 18 end zones and 4 oc between zones

** For (2) L braces space nails at 3 oc in 18 end zones and 6" oc between zones

L bracing must be a minimum of 80% of web member length

Gable Vertical Plate Sizes	
Vertical Length	Nail Splice
Less than 4 0	1X4 or 2X3
Greater than 4 0 but less than 11 6	2X4
Greather than 11 6	2 5X4

Refer to common truss design for peak splice and heel plates

Refer to the Building Designer for conditions not addressed by this detail

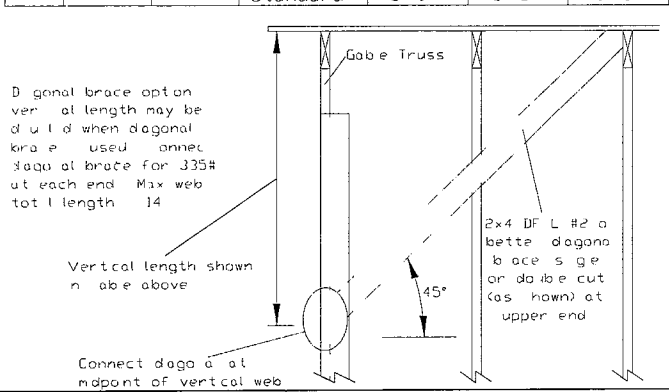

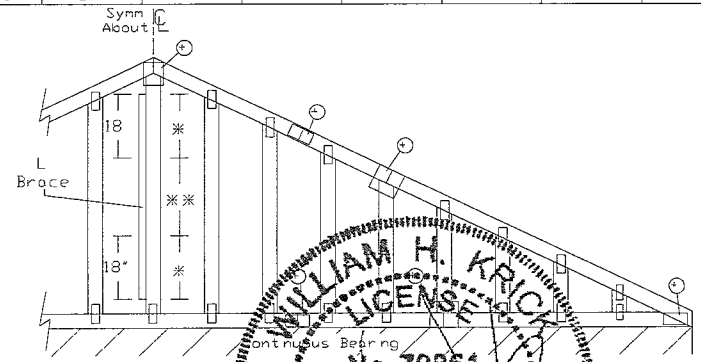

Refer to chart above for max gable vertical length

WILLIAM H. KRICK LICENSED No. 70861 STATE OF FLORIDA PROFESSIONAL ENGINEER 03/20/2013

Mar 20 '13

TW Building Components Group Inc.

Earth City MO 63045

WARNING READ AND FOLLOW ALL NOTES ON THIS DRAWING!
IMPORTANT FURNISH THIS DRAWING TO ALL CONTRACTORS INCLUDING THE INSTALLERS

Trusses require extreme care in fabricating handling, shipping, installing and bracing. Refer to and follow the latest edition of BCSI (Building Component Safety Information by TPI and WTCA) for safety practices prior to performing these functions. Installers shall provide temporary bracing per BCSI. Unless noted otherwise top chord shall have properly attached structural sheathing and bottom chord shall have a properly attached rigid ceiling. Locations shown for permanent lateral restraint of webs shall have bracing installed per BCSI sections B3 B7 or B10 as applicable. Apply plates to each face of truss and position as shown above and on the Joint Details unless noted otherwise. Refer to drawings 160A Z for standard plate positions.

TW Building Components Group Inc shall not be responsible for any deviation from this drawing, any failure to build the truss in conformance with ANSI/TPI 1 or for handling shipping installation & bracing of trusses. A seal on this drawing or cover page stating this drawing, indicates acceptance of professional engineering responsibility solely for the design shown. The suitability and use of this drawing for any structure is the responsibility of the Building Designer per ANSI/TPI 1 Sec 2. For more information see this jobs general notes page and these web sites
ITWBCG www.twbcg.com TPI www.tpinst.org WTCA www.sbcindustry.org ICC www.iccsafe.org

MAX TOT LD 60 PSF

MAX SPACING 24 0

REF	ASCE7-10-GAB12015
DATE	2/14/12
DRWG	A12015ENC100212

Gable Detail
For Let-in Verticals

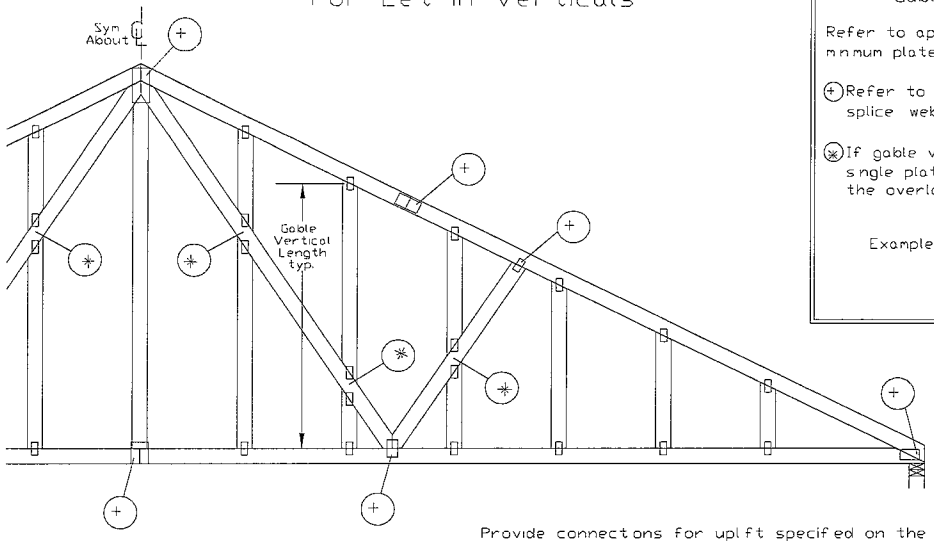

Gable Truss Plate Sizes

Refer to appropriate ITW gable detail for minimum plate sizes for vertical studs

(+) Refer to Engineered truss design for peak splice web and heel plates

(*) If gable vertical plates overlap use a single plate that covers the total area of the overlapped plates to span the web

Example

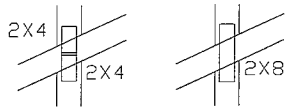

"T" Reinforcement Attachment Detail

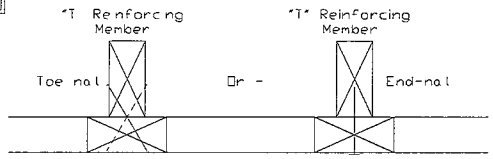

Provide connections for uplift specified on the engineered truss design

Attach each "T" reinforcing member with

End Driven Nails
- 10d Common (0.148 x 3" min) Nails at 4" o.c. plus
- (4) nails in the top and bottom chords

Toenailed Nails
- 10d Common (0.148 x 3" min) Toenails at 4" o.c. plus
- (4) toenails in the top and bottom chords

This detail to be used with the appropriate ITW gable detail for ASCE wind load

ASCE 7-98 Gable Detail Drawings
A13015980109 A12015980109 A11015980109 A10015980109
A13030980109 A12030980109 A11030980109 A10030980109

ASCE 7-02 Gable Detail Drawings
A13015020109 A12015020109 A11015020109 A10015020109 A14015020109
A13030020109 A12030020109 A11030020109 A10030020109 A14030020109

ASCE 7-05 Gable Detail Drawings
A13015050109 A12015050109 A11015050109 A10015050109 A14015050109
A13030050109 A12030050109 A11030050109 A10030050109 A14030050109

ASCE 7-10 Gable Detail Drawings
A11515ENC100212 A12015ENC100212 A14015ENC100212 A16015ENC100212
A18015ENC100212 A20015ENC100212 A20015ENC100212 A20015ENC100212
A11530ENC100212 A12030ENC100212 A14030ENC100212 A16030ENC100212
A18030ENC100212 A20030ENC100212 A20030ENC100212 A20030ENC100212

See appropriate ITW gable detail for maximum unreinforced vertical length

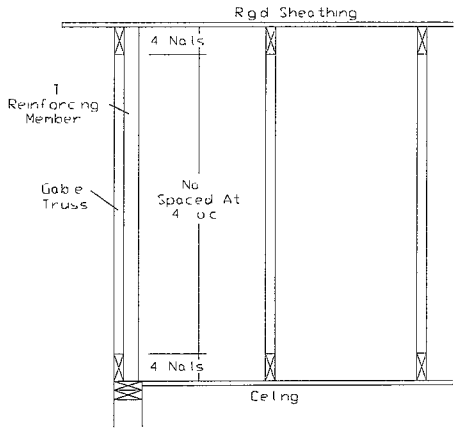

"T" Reinforcing Member Attachment Detail

To convert from "L" to "T" reinforcing members multiply "T" increase by length (based on appropriate ITW gable detail)

Maximum allowable "T" reinforced gable vertical length is 14' from top to bottom chord

"T" reinforcing member material must match size species and grade of the "L" reinforcing member

Web Length Increase w/ "T" Brace

"T" Reinf Mbr Size	"T" Increase
2x4	30 %
2x6	20 %

Example
- ASCE 7-10 Wind Speed 120 mph
- Mean Roof Height 30 ft Kzt 1.00
- Gable Vertical 24" o.c. SP #3
- "T" Reinforcing Member Size 2x4
- "T" Brace Increase (From Above) = 30% - 1.30
- (1) 2x4 "L" Brace Length = 8' 7"
- Maximum "T" Reinforced Gable Vertical Length
  1.30 x 8' 7" - 11' 2"

WILLIAM H. YRICK
LICENSE
No. 70861
STATE OF FLORIDA
PROFESSIONAL ENGINEER
03/20/2013

Mar 20 '13

ITW
Building Components Group Inc.
Earth City MO 63045

WARNING. READ AND FOLLOW ALL NOTES ON THIS DRAWING!
IMPORTANT FURNISH THIS DRAWING TO ALL CONTRACTORS INCLUDING THE INSTALLERS.

Trusses require extreme care in fabricating, handling, shipping, installing and bracing. Refer to and follow the latest edition of BCSI "Building Component Safety Information", by TPI and WTCA) for safety practices prior to performing these functions. Installers shall provide temporary bracing per BCSI. Unless noted otherwise, top chord shall have properly attached structural sheathing and bottom chord shall have a properly attached rigid ceiling. Locations shown for permanent lateral restraint of webs shall have bracing installed per BCSI sections B3, B7 or B10 as applicable. Apply plates to each face of truss and position as shown above and on the Joint Details unless noted otherwise. Refer to drawings 160A Z for standard plate positions.

ITW Building Components Group Inc. shall not be responsible for any deviation from this drawing, any failure to build the truss in conformance with ANSI/TPI 1 or for handling, shipping, installation & bracing of trusses. A seal on this drawing or cover page listing this drawing, indicates acceptance of professional engineering responsibility solely for the design shown. The suitability and use of this drawing for any structure is the responsibility of the Building Designer per ANSI/TPI 1 Sec.2. For more information see this jobs general notes page and these web sites:
ITWBCG: www.twbcg.com TPI: www.tpinst.org WTCA: www.sbcindustry.org ICC: www.iccsafe.org

MAX TOT LD	60 PSF
DUR FAC	ANY
MAX SPACING	24.0

REF	LET-IN VERT
DATE	2/16/12
DRWG	GBLLETIN0212

ASCE 7-10 120 mph, 30' Mean Height, Closed, Exposure C
Common Residential Gable End Wind Bracing Requirements - Stiffeners

120 mph 30ft Mean Hgt ASCE 7-10 Enclosed Exp C or
100 mph 30ft Mean Hgt ASCE 7 10 Enclosed Exp D or
100 mph 30ft Mean Hgt ASCE 7-10 Part Enclosed Exp C,
kzt = 1 00, Wind TC DL=5 0 psf, Wnd BC DL-5 0 psf

Lateral chord bracng requirements
Top Continuous roof sheathing
Bot Continuous ceiling diaphragm

ee Engineer s sealed design referencing this detail for lumber plates and other information not shown on this detail

Nails 10d box or gun (0 128 x3 mn) nails

H Less than 4 6 - no stud bracng required

H Greater than 4 6 to 7 6 n length
provde a 2x6 stiffback at md-height and brace stiffback to roof diaphragm every 6 0 (see detail below or refer to DRWG A12030ENC10)

H Greater than 7 6 to 12 0 max
provide a 2x6 stiffback at mid-height and brace to roof diaphragm every 4 0 (see detail below or refer to DRWG A12030ENC10)

✳ Optional 2x L reinforcement attached to stiffback with 10d box or gun (0 128 x 3 min) nails @ 6 oc

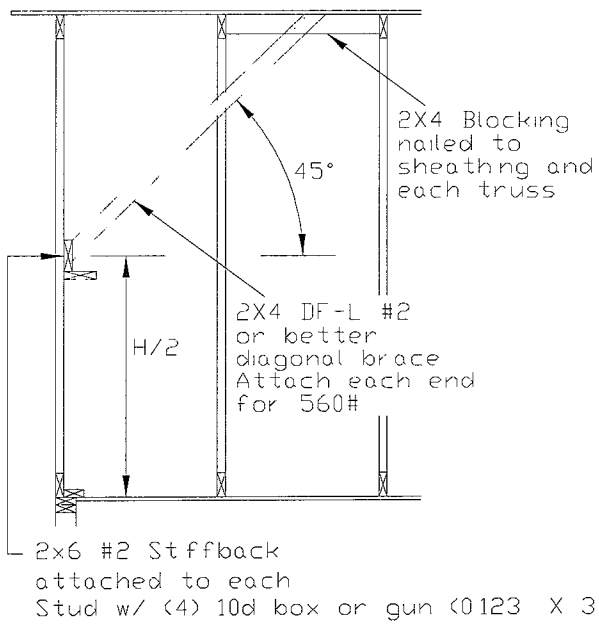

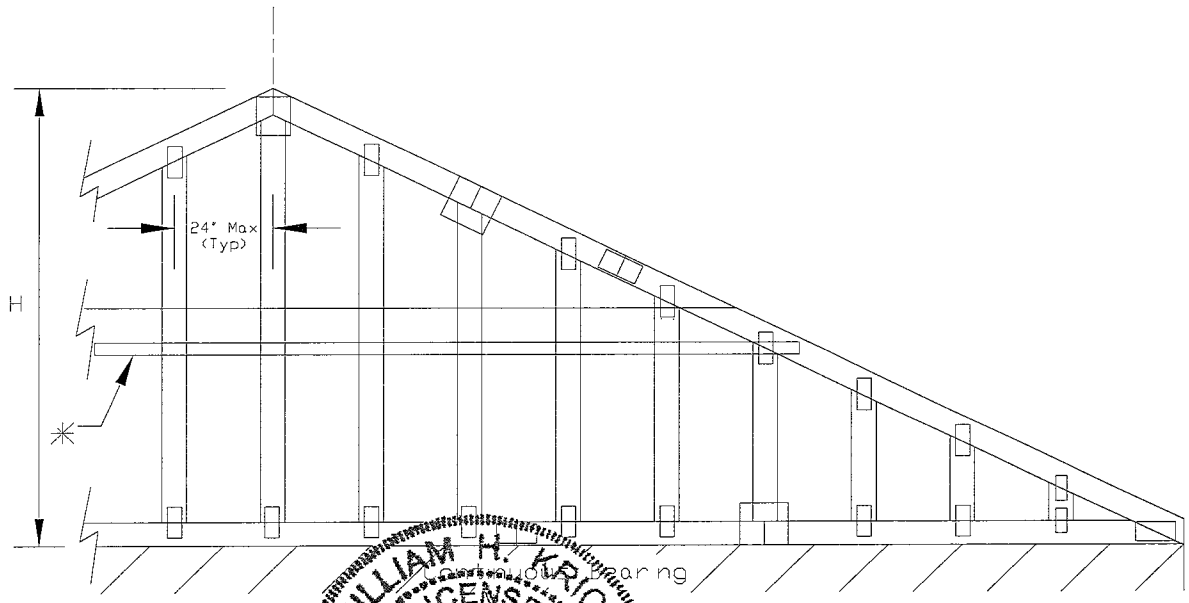

WILLIAM H. KRICK
LICENSE
No. 70861
STATE OF FLORIDA
PROFESSIONAL ENGINEER
03/20/2013

Building Components Group Inc.

Earth City MO 63045

WARNING READ AND FOLLOW ALL NOTES ON THIS DRAWING
IMPORTANT FURNISH THIS DRAWING TO ALL CON RACTORS INCLUDING THE INSTALLERS

Trusses require extreme care in fabricating handling, shipping nstalling and bracing Refer to and o ow the atest edition of BCSI (Building Component Safety Information by TPI and WTCA) for ad practices pr or to per orming these functions. Installers sha provide tenporary bracing per BCSI Unless noted otherwise top chord shal have proper y attached structura shea hng and bott chord sha have a proper y attached rigid ce ng. Locations shown for permanent atera restr of webs shall have bracing insta led per BCSI sections B3 B7 or B10 as applicable Apply plates each face of truss and position as shown above and on the Joint Deta s unless noted otherwise Refer to drawings 160A Z for standard plate pos tions

ITW Building Components Group Inc shall not be responsible for any deviation from this drawing, any failure to build the truss in conformance with ANSI/TPI 1 or for handling shipping, installation & bracing o trusses A seal on this drawing or cover page s ing this drawing indicates acceptance o professiona engineering responsib ty so ely for the design shown. The suitabi y and use of this drawing for any structure is the responsib ty of the Bu ding Designer per ANSI/TPI 1 Sec.2.
For more nformation see this job s general notes page and these web s tes:
ITWBCG: www twbcg.com TPI www tpinst.org WTCA: www sbc'ndustry.org ICC www iccsafe.or

Mar 20 '13

MAX TOT LD 60 PSF

MAX SPACING

REF	GE WHALER
DATE	2/14/12
DRWG	GABRST100212

140 PIGGYBACK DETAIL

140 MPH WIND 30 00 FT MEAN HGT ASCE 7 02 OR ASCE
7 05 PARTIALLY ENCLOSED BLDG LOCATED ANYWHERE IN ROOF CAT II
EXP C WIND DL 5 0 PSF (MIN) Kzt = 100

MAXIMUM TRUSS SPACING IS 24" OC
DETAIL IS NOT APPLICABLE IF CAP SUPPORTS ADDITIONAL LOADS SUCH AS
CUPOLA STEEPLE CHIMNEY OR DRAG STRUT LOADS

NOTE TOP CHORDS OF TRUSSES SUPPORTING PIGGYBACK CAP TRUSSES MUST BE ADEQUATELY BRACED BY SHEATHING OR PURLINS THE BUILDING ENGINEER OF RECORD SHALL PROVIDE DIAGONAL BRACING OR ANY OTHER SUITABLE ANCHORAGE TO PERMANENTLY RESTRAIN PURLINS AND LATERAL BRACING FOR OUT OF PLANE LOADS OVER GABLE ENDS

** REFER TO ENGINEER S SEALED TRUSS DESIGN DRAWING FOR PIGGYBACK AND BASE TRUSS SPECIFICATIONS

PIGGYBACK CAP TRUSS SLANT NAILED TO ALL TOP CHORD PURLIN BRACING WITH (2) 16d BOX NAILS (0135 x3 5") AND SECURE TOP CHORD WITH 2X4 #3 GRADE SCAB (1 SIDE ONLY AT EACH END) ATTACHED WITH 2 ROWS OF 10d BOX NAILS (0128 x3") AT 4" O

++ FLAT TOP CHORD PURLINS REQUIRED AT BOTH ENDS AND AT A MAXIMUM OF 24 INTERVALS UNLESS OTHERWISE NOTED ON BASE TRUSS DESIGN DRAWING ATTACH PURLIN BRACING TO THE FLAT TOP CHORD USING A MINIMUM OF (2) 16d BOX NAILS (0135 x3 5")

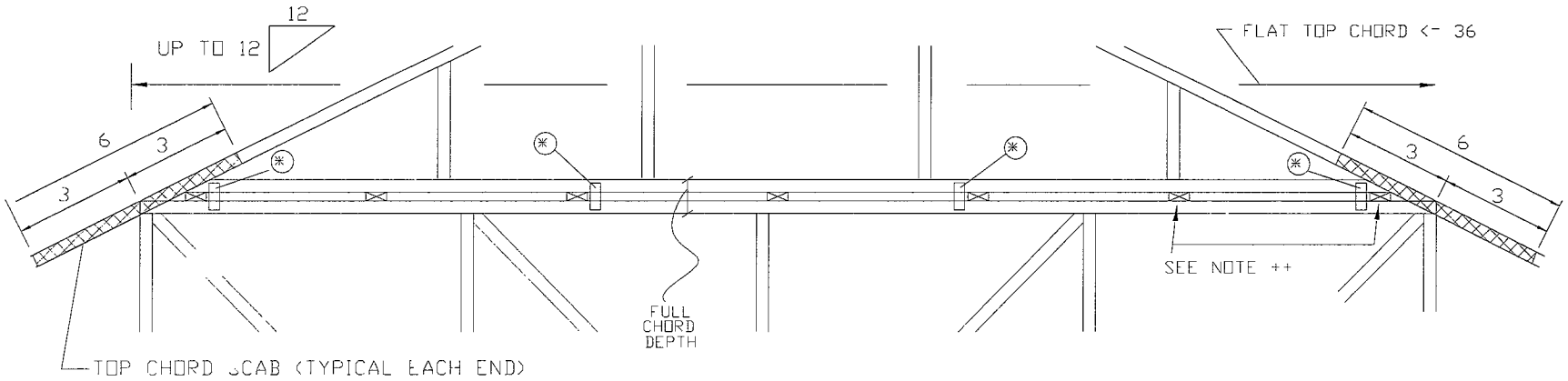

* IN ADDITION PROVIDE CONNECTION WITH ONE OF THE FOLLOWING METHODS	
TRULOX USE 3x8 TRULOX PLATES FOR 2x4 CHORD MEMBER AND 3x10 TRULOX PLATES FOR 2x6 AND LARGER CHORD MEMBERS ATTACH TO EACH FACE @ 4 OC WITH (4) 0120"x1 375 NAILS INTO CAP BOTTOM CHORD AND (4) IN BASE TRUSS TOP CHORD TRULOX PLATES MAY BE STAGGERED 2 OC FRONT TO BACK FACES	28PB WAVE PIGGYBACK PLATE ONE 28PB WAVE PIGGYBACK PLATE TO EACH FACE @ 4 OC ATTACH TEETH TO PIGGYBACK AT TIME OF FABRICATION ATTACH TO SUPPORTING TRUSS WITH (4) 0120 x1 375" NAILS PER FACE PER PLY PIGGYBACK PLATES MAY BE STAGGERED 2 OC FRONT TO BACK FACES
APA RATED GUSSET 8 x8"x7/16" (MIN) APA RATED SHEATHING GUSSETS (EACH FACE) ATTACH @ 4 OC WITH (8) 6d COMMON (0113 x2) NAILS PER GUSSET (4) IN CAP BOTTOM CHORD AND (4) IN BASE TRUSS TOP CHORD GUSSETS MAY BE STAGGERED 2 OC FRONT TO BACK FACES	2x4 VERTICAL SCABS 2x4 SPF#2 FULL CHORD DEPTH SCABS (EACH FACE) ATTACH @ 4 [illegible] (6) 10d BOX NAILS (0128"x3") PER SCAB [illegible] IN CAP BOTTOM CHORD AND (3) IN BASE TRUSS TOP CHORD SCABS MAY BE STAGGERED 2 OC FRONT TO BACK FACES

WILLIAM PATRICK LICENSE No. 70861 STATE OF FLORIDA PROFESSIONAL ENGINEER

03/20/2013

Mar 20 '13

TW
Building Components Group Inc.

Earth City MO 63045

WARNING READ AND FOLLOW ALL NOTES ON THIS SHEET
Trusses require extreme care n fabricating handling shipping instal ng and bracing Refer to and follow BCSI (Building Component Sa ety Information by TPI and WTCA) for safety practices prior to per orming these functions Instal ers shal provide temporary bracing per BCSI Un ess n ted otherwise top chord shal have properly attached structural panels and bottom chord shal have properly attached rigid ceiling. Locations shown for permanent latera restraint of webs shall be bracing insta ed per BCSI sections B3 & B7 See this job's genera notes page for more information

IMPORTANT FURNISH COPY OF THIS DESIGN TO INSTALLATION CONTRACTOR
ITW Bu ding Components Group Inc (ITWBCG) shall no be responsible for any deviation rom this design any f a ure to build the truss n conformance w th TPI or fabricating, hand ng shipping, instal ng & brac ng of trusses ITWBCG connector plates are made of 20/18/16GA (W,H/S/K) ASTM A653 grade 37/40/60 K/W/H S) ga v steel Apply plates to each face of truss pos toned as shown above and on Joint Details
A s o on this drawing or cover page nd icate acceptanc and professiona engineering responsibi ty so e y for the truss componen design shown. The suitabi ty and use of this component for any bu ding is the responsibi ty of the Bu ding Designer per ANSI/TPI 1 Sec 2
ITW BCG www twbcg com TPI www tpinst com WTCA www sbcindustry com ICC www iccsafe org

SPACING 24 0

REF	PIGGYBACK
DATE	3/15/10
DRWG	PB1400310

Valley Detail - ASCE 7-10 160 mph, 30' Mean Height, Enclosed, Exp C Kzt=100

Top Chord 2x4 SP #2N SPF #1/#2 DF L #2 or better
Bot Chord 2x4 SP #2N or SPF #1/#2 or better
Webs 2x4 SP #3 SPF #1/#2 DF-L #2 or better

** Attach each valley to every supporting truss with
(2) 16d box (0135 x 3 5) nails toe-nailed for
ASCE 7 10 160 mph 30 Mean Height Enclosed
Building Exp C Wind TC DL=5 psf Kzt - 100
Or
ASCE 7-10 140 mph 30 Mean Height Enclosed
Building Exp D Wind TC DL-5 psf Kzt - 100

Unless specified on engineer s sealed design apply 1x4 T brace 80% length of web same species and SRB grade or better attached with 8d box (0113 x 2 5) nails at 6 oc or continuous lateral bracing equally spaced for vertical valley webs greater than 7 -9

For verticals over 10 -0 tall apply (2) 1x4 T braces, 80% length of web same species and SRB grade or better attached with 8d box (0113 x 2 5) nails @ 6 o

Top chord of truss beneath valley set must be braced with properly attached rated sheathing applied prior to valley truss installation
Or
Purlins at 24 oc or as otherwise specified on Engineer s sealed design
Or
By valley trusses used in lieu of purlin spacing as specified on Engineer s sealed design

*** Note that the purlin spacing for bracing the top chord of the truss beneath the valley s measured along the slope of the top chord

++ Larger spans may be built as long as the vertical height does not exceed 14 -0

Bottom chord may be square or pitched cut as shown

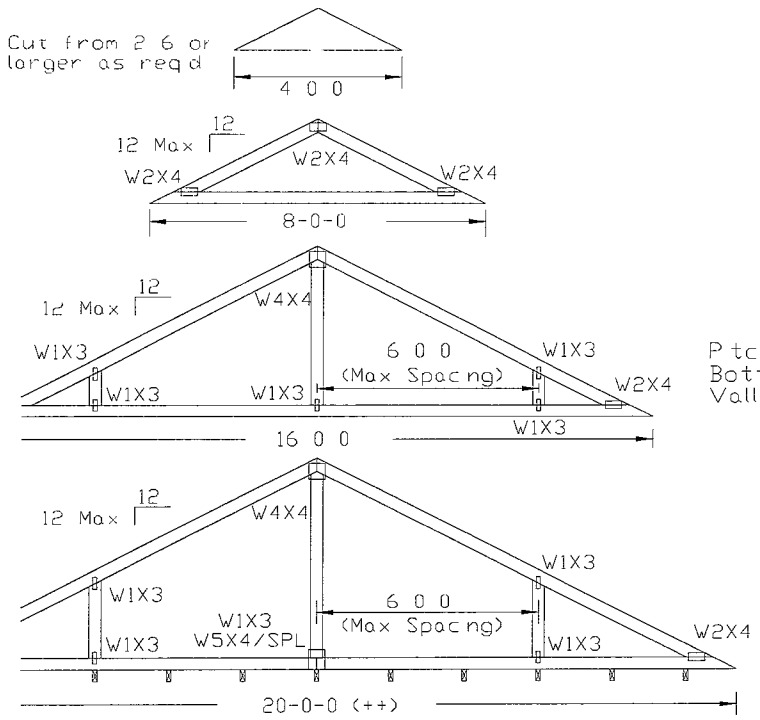

Supporting trusses at 24 oc maximum spacing

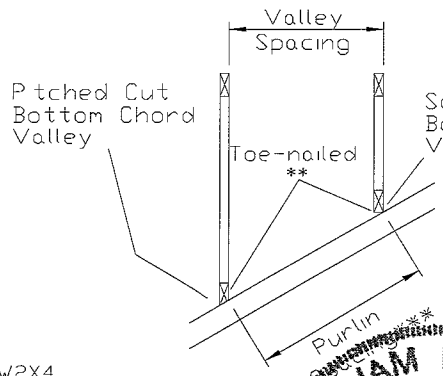

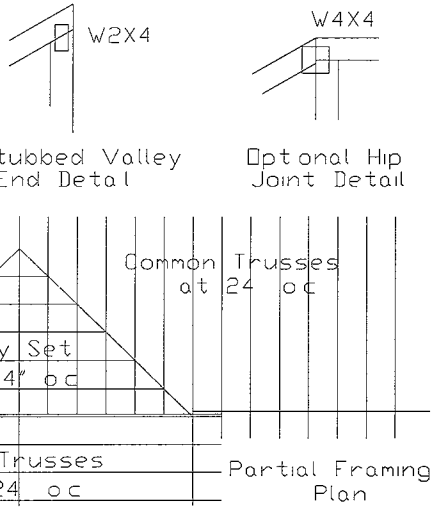

WILLIAM H. KRICK
LICENSE
No. 70861
STATE OF FLORIDA
PROFESSIONAL ENGINEER
03/20/2013
Mar 20 '13

TW
Building Components Group Inc.
Earth City MO 63045

WARNING READ AND FOLLOW ALL NOTES ON THIS DRAWING!
IMPORTANT FURNISH THIS DRAWING TO ALL CONTRACTORS INCLUDING THE INSTALLERS

Trusses require extreme care in fabricating, handling shipping installing and bracing Refer to and follow the latest edition of BCSI Building Component Safety Information by TPI and WTCA) for safety practices prior to performing these functions Installers shall provide temporary bracing per BCSI Unless noted otherwise top chord shall have properly attached structural sheathing and bottom chord shall have a properly attached rigid ceiling. Locations shown for permanent lateral restraint of webs shall have bracing installed per BCSI sections B3 B7 or B10 as applicable Apply plates to each face of truss and position as shown above and on the Joint Details unless noted otherwise Refer to drawings 160A Z or standard plate positions

TW Building Components Group Inc shall not be responsible for any deviation from this drawing any failure to build the truss in conformance with ANSI/TPI 1 or for handling shipping installation & bracing of trusses A seal on this drawing or cover page stating this drawing, indicates acceptance of professional engineering responsibility solely for the design shown The suitability and use of this drawing for any structure is the responsibility of the Building Designer per ANSI/TPI 1 Sec 2
For more information see this jobs general notes page and these web sites
ITWBCG: www twbcg com TPI www tpinst org WTCA www bcindustry org ICC www iccsafe org

TC LL	30	30	40PSF	
TC DL	20	15	7PSF	
BC DL	10	10	10 PSF	
BC LL	0	0	0PSF	
TOT LD	60	55	57PSF	
DUR FAC	1 25/1 33	1 15	1 15	
SPACING		24 0		

REF	VALLEY DETAIL
DATE	2/14/12
DRWG	VAL160100212

VALLEY DETAIL 140MPH

TOP CHORD 2x4 SP #2
BOT CHORD 2x4 SP #2N 2x4 SPF #2
WEBS 2X4 SP #3

** ATTACH EACH VALLEY TO EVERY SUPPORTING TRUSS WITH 560# CONNECTION OR WITH (2) SIMPSON H5 CONNECTORS OR EQUIVALENT

++ LARGER SPANS MAY BE BUILT AS LONG AS THE VERTICAL HEIGHT DOES NOT EXCEED 14-0-0

NOTE BOTTOM CHORD MAY BE SQUARE CUT OR PITCHED CUT

(X) 2x6 SP/DFL #2 OR BETTER SLEEPER ATTACH THROUGH SHEATHING TO TRUSSES BENEATH WITH (3) 16d (0162 x3 1/2) COMMON OR (4) GUN NAILS (0128 x3)

(Y) ATTACH BOTTOM CHORD OF VALLEY GABLE TO SLEEPER WITH 16d COMMON (0162 x3 1/2) NAILS @ 6" OC OR GUN NAILS @ 4 OC

(Z) VALLEY GABLE TRUSS FOR ENCLOSED BUILDING REFER TO A14030050109 (ASCE 7 05) OR A14030020109 (ASCE 7-02) FOR PART ENCLOSED BUILDING REFER TO A140GC0109 FOR GABLE END DETAIL

IN LIEU OF 1x4 T BRACING 1x4 #3 HEM-FIR (OR BETTER) CONTINUOUS LATERAL BRACING MAY BE USED ATTACH WITH (2) 8d BOX (0113 x2 1/2) OR (2) 0128 x3 GUN NAILS BRACING MATERIAL TO BE ATTACHED AT BOTH ENDS TO A SUITABLE SUPPORT

FOR VERTICALS OVER 7 9 TALL APPLY (1) 1x4 T BRACE TO NARROW FACE SAME GRADE AS WEB MEMBER ATTACH WITH 8d BOX (0113 x2 1/2) OR 0128 x3 GUN NAILS @ 6 OC STAGGERED

TRUSS TOP CHORDS UNDER VALLEY SET MUST HAVE SHEATHING ATTACHED TO THEM WITH NAILS SPACED PER CODE REQUIREMENTS OR PROPERLY ATTACHED VALLEY TRUSSES MAY BE USED IN LIEU OF SHEATHING OR PURLINS SEE NOTE (**)

140 MPH WIND 30 FT MEAN HGT ASCE 7-05 PART ENC BLDG LOCATED ANYWHERE IN ROOF CAT II EXP C WIND TCDL-50 PSF WIND BCDL-50 PSF Kzt = 100

140 MPH WIND 30 FT MEAN HGT ASCE 7 02 PART ENC BLDG LOCATED ANYWHERE IN ROOF CAT II EXP C WIND TCDL-50 PSF WIND BCDL=50 PSF Kzt 100

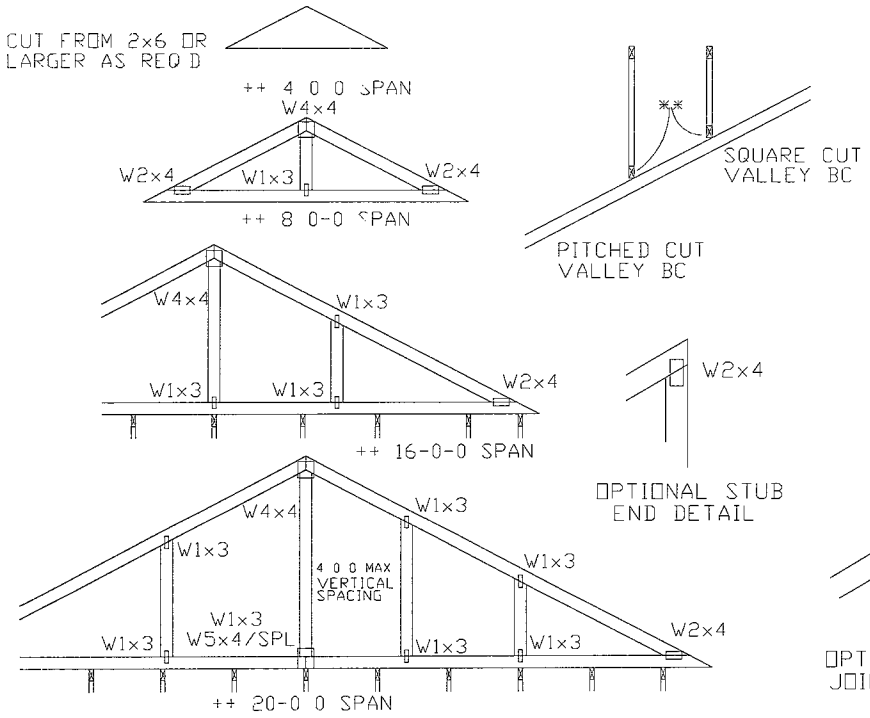

SUPPORTING TRUSSES AT 24 OC MAXIMUM SPACING

OPTIONAL JOINT DE

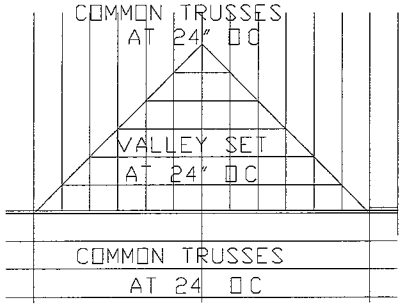

WILLIAM H. KRICK
LICENSE
No. 70861
STATE OF FLORIDA
PROFESSIONAL ENGINEER
03/20/2013

Mar 20 '13

TW
Building Components Group Inc.
Earth City MO 63045

WARNING READ AND FOLLOW ALL NOTES ON THIS SHEET
Tru ses r qure extreme care in fab icating handling shipping nsta ing and bracing Refer to and fo w BCSI (Building Component Safety Information by TPI and WTCA) for safety practices prior to perf rming these functio s. Instalers shal provide temporary bracing per BCSI Unless no d otherwise top chord shal have prope y attached structura pane s and bottom chord sha ha propery a ached igid ce ng Locations hown or permanent lateral restraint of webs shall ha bracing insta ed per BCSI ections B3 & B7 See this job genera notes page for more infor

IMPORTANT FURNISH COPY OF THIS DESIGN TO INSTALLATION CONTRACTOR
I W Building Component Group Inc (IWBCG) ha not be responsible for any deviation from this design any a ure to build the truss in conformance with TPI or fabrcating handling shipping, ns a ling & bracing of trusses IWBCG conne tor p ates are made of 20/ 8/16GA W H/S/K) ASTM A653 g ad- 37/40/60 K/W/H,S) ga v steel Apply plates to each face or truss pos tioned as shown above and on Joint Details
A sea on this drawing or cover page indi a es acceptance and professiona engineering responsibility solely for the truss component design shown. The suitabi ty and use o ths component for any building s the responsibility of the Building Designer per ANST/TPI 1 Sec 2
I W BCG: www twbcg.com TPI www tpinst.com WTCA: www sbcindustry.com ICC www ccsafe.org

TC LL	20	OR 30PSF	REF VALLEY DETAIL
TC DL	20	OR 15PSF	DATE 1/1/09
BC DL	10	OR 10 PSF	DRWG VAL1400109
BC LL	0	0 0PSF	
TOT LD	50	OR 55PSF	
DUR FAC		125	
SPACING		24	

Gable Stud Reinforcement Detail

ASCE 7-10 120 mph Wind Speed, 30 Mean Height, Enclosed, Exposure C, Kzt = 100

Or 100 Mph Wind Speed 30 Mean Height Partally Enclosed Exposure C Kzt - 100
Or 100 mph Wind Speed 30 Mean Height Enclosed Exposure D Kzt - 100

Max Gable Vertical Length

2x4 Gable Vertical Spacing	Species	Brace Grade	No Braces	(1) 1x4 "L" Brace * Group A	(1) 1x4 "L" Brace * Group B	(1) 2x4 "L" Brace * Group A	(1) 2x4 "L" Brace * Group B	(2) 2x4 "L" Brace ** Group A	(2) 2x4 "L" Brace ** Group B	(1) 2x6 "L" Brace * Group A	(1) 2x6 "L" Brace * Group B	(2) 2x6 "L" Brace ** Group A	(2) 2x6 "L" Brace ** Group B
24" oc	SPF HF	#1 / #2	4'-7"	7'-10"	8'-1"	9'-3"	9'-7"	11'-0"	11'-5"	14'-0"	14'-0"	14'-0"	14'-0"
		#3	4'-4"	7'-2"	7'-8"	9'-1"	9'-5"	10'-10"	11'-4"	14'-0"	14'-0"	14'-0"	14'-0"
		Stud	4'-4"	7'-8"	8'-0"	9'-1"	9'-5"	10'-10"	11'-4"	14'-0"	14'-0"	14'-0"	14'-0"
		Standard	4'-4"	7'-6"	8'-0"	9'-1"	9'-5"	10'-10"	11'-4"	14'-0"	14'-0"	14'-0"	14'-0"
	SP DFL	#1	4'-8"	7'-10"	8'-2"	9'-3"	9'-8"	11'-0"	11'-6"	14'-0"	14'-0"	14'-0"	14'-0"
		#2	4'-7"	7'-10"	8'-1"	9'-3"	9'-7"	11'-0"	11'-5"	14'-0"	14'-0"	14'-0"	14'-0"
		#3	4'-4"	6'-5"	6'-10"	8'-7"	9'-2"	10'-10"	11'-4"	13'-5"	14'-0"	14'-0"	14'-0"
		Stud	4'-4"	6'-5"	6'-10"	8'-7"	9'-2"	10'-10"	11'-4"	13'-5"	14'-0"	14'-0"	14'-0"
		Standard	4'-3"	5'-7"	5'-11"	7'-5"	7'-11"	10'-0"	10'-9"	11'-8"	12'-5"	14'-0"	14'-0"
16" oc	SPF HF	#1 / #2	5'-3"	8'-11"	9'-3"	10'-7"	11'-0"	12'-7"	13'-1"	14'-0"	14'-0"	14'-0"	14'-0"
		#3	5'-0"	8'-10"	9'-	10'-5"	10'-10"	12'-5"	12'-11"	14'-0"	14'-0"	14'-0"	14'-0"
		Stud	5'-0"	8'-10"	9'-2"	10'-5"	10'-10"	12'-5"	12'-11"	14'-0"	14'-0"	14'-0"	14'-0"
		Standard	5'-0"	8'-10"	9'-2"	10'-5"	10'-10"	12'-5"	12'-11"	14'-0"	14'-0"	14'-0"	14'-0"
	SP DFL	#1	5'-4"	9'-0"	9'-4"	10'-7"	11'-0"	12'-8"	13'-2"	14'-0"	14'-0"	14'-0"	14'-0"
		#2	5'-3"	8'-11"	9'-3"	10'-7"	11'-0"	12'-7"	13'-1"	14'-0"	14'-0"	14'-0"	14'-0"
		#3	5'-0"	7'-10"	8'-4"	10'-5"	10'-10"	12'-5"	12'-11"	14'-0"	14'-0"	14'-0"	14'-0"
		Stud	5'-0"	7'-10"	8'-4"	10'-5"	10'-10"	12'-5"	12'-11"	14'-0"	14'-0"	14'-0"	14'-0"
		Standard	5'-0"	6'-10"	7'-3"	9'-1"	9'-8"	12'-4"	12'-11"	14'-0"	14'-0"	14'-0"	14'-0"
12" oc	SPF HF	#1 / #2	5'-9"	9'-10"	10'-2"	11'-7"	12'-1"	12'-7"	14'-0"	14'-0"	14'-0"	14'-0"	14'-0"
		#3	5'-6"	9'-8"	10'-1"	11'-6"	11'-11"	13'-8"	14'-0"	14'-0"	14'-0"	14'-0"	14'-0"
		Stud	5'-6"	9'-8"	10'-1"	11'-6"	11'-11"	13'-8"	14'-0"	14'-0"	14'-0"	14'-0"	14'-0"
		Standard	5'-6"	9'-8"	10'-1"	11'-6"	11'-11"	13'-8"	14'-0"	14'-0"	14'-0"	14'-0"	14'-0"
	SP DFL	#1	5'-11"	9'-11"	10'-3"	11'-8"	12'-2"	13'-11"	14'-0"	14'-0"	14'-0"	14'-0"	14'-0"
		#2	5'-9"	9'-10"	10'-2"	11'-7"	12'-1"	13'-10"	14'-0"	14'-0"	14'-0"	14'-0"	14'-0"
		#3	5'-6"	9'-1"	9'-8"	11'-6"	11'-11"	13'-8"	14'-0"	14'-0"	14'-0"	14'-0"	14'-0"
		Stud	5'-6"	9'-1"	9'-8"	11'-6"	11'-11"	13'-8"	14'-0"	14'-0"	14'-0"	14'-0"	14'-0"
		Standard	5'-6"	7'-10"	8'-4"	10'-6"	11'-3"	13'-8"	14'-0"	14'-0"	14'-0"	14'-0"	14'-0"

Bracing Group Species and Grades

Group A

Spruce Pine Fir: #1 / #2 Standard; #3 Stud

Hem-Fir: #2 Stud; #3 Standard

Douglas Fir Larch: #3; Stud; Standard

Southern Pine***: #3; Stud; Standard

Group B

Hem Fir: #1 & Btr; #1

Douglas Fir Larch: #1; #2

Southern Pine***: #1; #2

1x4 Braces shall be SRB (Stress Rated Board)

***For 1x4 So Pine use only Industrial 55 or Industrial 45 Stress-Rated Boards Group B values may be used with these grades

Gable Truss Detail Notes

Wind Load deflection criterion is L/240

Provide uplift connections for 70 plf over continuous bearing (5 psf TC Dead Load)

Gable end supports load from 4'-0" outlookers with 2'-0" overhang or 12" plywood overhang

Southern Pine lumber design values based on the ALSC January 2012 ruling

Attach "L" braces with 10d (0.128"x3.0") nails.

* For (1) "L" brace space nails at 2" o.c. in 18" end zones and 4" o.c. between zones

** For (2) "L" braces space nails at 3" o.c. in 18" end zones and 6" o.c. between zones

"L" bracing must be a minimum of 80% of web member length

Gable Vertical Plate Sizes

Vertical Length	No Splice
Less than 4'-0"	1X4 or 2X3
Greater than 4'-0" but less than 11'-6"	2X4
Greather than 11'-6"	2.5X4

+ Refer to common truss design for peak splice and heel plates

Refer to the Building Designer for conditions not addressed by this detail

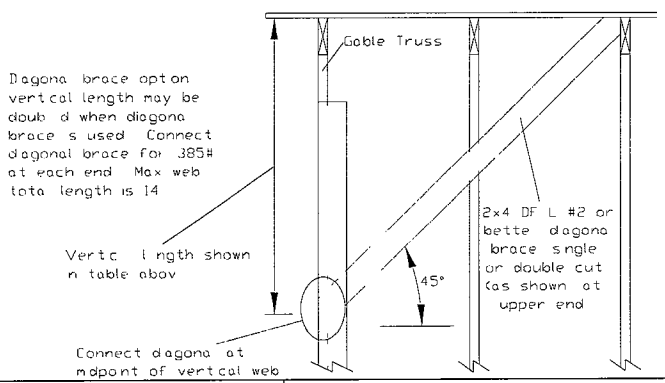

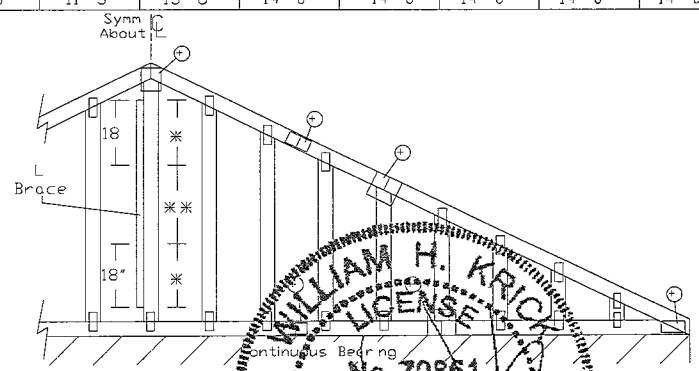

Refer to chart above for max gable vertical length.

WILLIAM H. KRICH LICENSED No. 70861 STATE OF FLORIDA PROFESSIONAL ENGINEER

03/20/2013

Mar 20 '13

TW Building Components Group Inc.

Earth City MO 63045

WARNING! READ AND FOLLOW ALL NOTES ON THIS DRAWING!
IMPORTANT FURNISH THIS DRAWING TO ALL CONTRACTORS INCLUDING THE INSTALLERS.

Trusses require extreme care in fabricating, handling, shipping, installing and bracing. Refer to and follow the latest edition of BCSI (Building Component Safety Information) by TPI and WTCA for safety practice prior to performing these functions. Installers shall provide temporary bracing per BCSI. Unless noted, the top chord shall have properly attached structural sheathing and bottom chord shall have a properly attached ceiling. Locations shown for permanent lateral restraint of webs shall have bracing installed per BCSI sections B3, B7 or B10 as applicable. Apply plates to each face of truss and position as shown above and on the joint Details unless noted otherwise. Refer to drawings 60A-Z for standard plate position.

TW Building Components Group Inc. shall not be responsible for any deviation from this drawing, any failure to build the truss in conformance with ANSI/TPI 1 or for handling, shipping, installation & bracing of trusses. A seal on this drawing or page listing this drawing indicates acceptance of professional engineering responsibility solely for the design shown. The suitability and use of this drawing for any structure is the responsibility of the Building Designer per ANSI/TPI 1 Sec. 2. For more information see this jobs general notes page and the following websites:
ITWBCG www.twbcg.com TPI www.tpi.org WTCA www.sbcindustry.org CC www.iccsafe.org
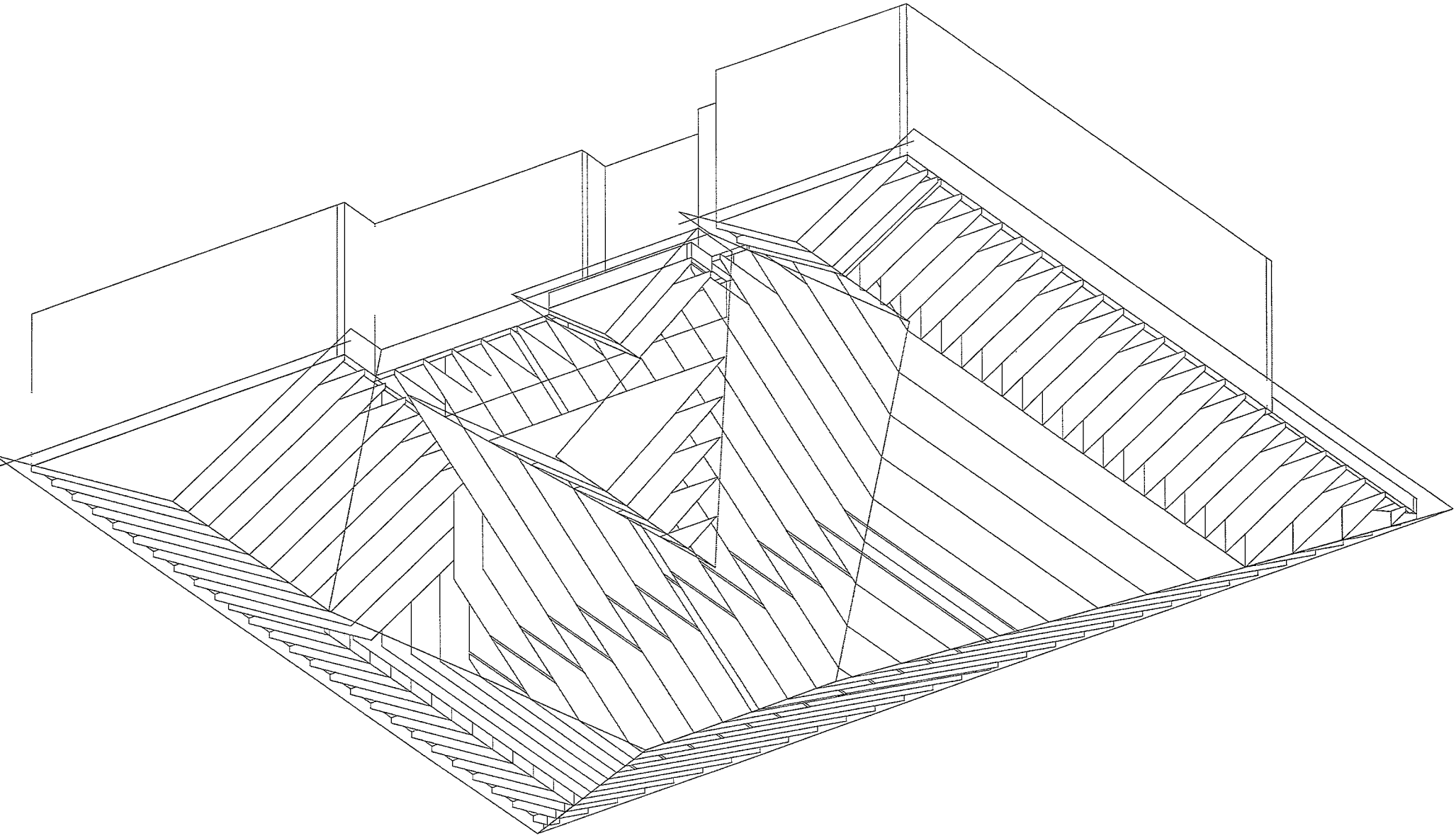
REF	ASCE7-10-GAB12030
DATE	2/14/12
DRWG	A12030ENC100212
MAX TOT LD	60 PSF
MAX SPACING	24'-0"