Lumber design values are in accordance with ANSI/TPI 1 section 6.3
These truss designs rely on lumber values established by others.

RE: 2714379 - PFS SOLUTIONS - LOT 5 AL

MiTek USA, Inc.
6904 Parke East Blvd.
Tampa, FL 33610-4115

Site Information:

Customer Info: PFS Solutions Project Name: Spec Hse Model: 1775
Lot/Block: 5 Subdivision: Amelia Landing
Address: N/A, N/A
City: Columbia Cty State: FL

Name Address and License # of Structural Engineer of Record, If there is one, for the building.

Name: License #:
Address:
City: State:

General Truss Engineering Criteria & Design Loads (Individual Truss Design Drawings Show Special Loading Conditions):

Design Code: FBC2020/TPI2014 Design Program: MiTek 20/20 8.4
Wind Code: N/A Wind Speed: 130 mph
Roof Load: 37.0 psf Floor Load: N/A psf

This package includes 55 individual, Truss Design Drawings and 0 Additional Drawings.
With my seal affixed to this sheet, I hereby certify that I am the Truss Design Engineer and this index sheet conforms to 61G15-31.003, section 5 of the Florida Board of Professional Engineers Rules.

No.	Seal#	Truss Name	Date	No.	Seal#	Truss Name	Date
1	T23468857	EJ01	4/7/21	23	T23468879	T08A	4/7/21
2	T23468858	EJ02	4/7/21	24	T23468880	T08G	4/7/21
3	T23468859	EJ03	4/7/21	25	T23468881	T09	4/7/21
4	T23468860	EJ03G	4/7/21	26	T23468882	T09G	4/7/21
5	T23468861	PB01	4/7/21	27	T23468883	T10	4/7/21
6	T23468862	PB01G	4/7/21	28	T23468884	T10G	4/7/21
7	T23468863	PB02	4/7/21	29	T23468885	T11	4/7/21
8	T23468864	PB03	4/7/21	30	T23468886	T11G	4/7/21
9	T23468865	PB03G	4/7/21	31	T23468887	T12	4/7/21
10	T23468866	PB04	4/7/21	32	T23468888	T13	4/7/21
11	T23468867	PB04G	4/7/21	33	T23468889	T14	4/7/21
12	T23468868	T01	4/7/21	34	T23468890	T15	4/7/21
13	T23468869	T01G	4/7/21	35	T23468891	T16	4/7/21
14	T23468870	T02	4/7/21	36	T23468892	T17	4/7/21
15	T23468871	T03	4/7/21	37	T23468893	T18	4/7/21
16	T23468872	T04	4/7/21	38	T23468894	T19	4/7/21
17	T23468873	T04A	4/7/21	39	T23468895	T20	4/7/21
18	T23468874	T05	4/7/21	40	T23468896	T20G	4/7/21
19	T23468875	T06	4/7/21	41	T23468897	T21	4/7/21
20	T23468876	T07	4/7/21	42	T23468898	T22	4/7/21
21	T23468877	T07G	4/7/21	43	T23468899	T23	4/7/21
22	T23468878	T08	4/7/21	44	T23468900	T25	4/7/21

The truss drawing(s) referenced above have been prepared by MiTek USA, Inc. under my direct supervision based on the parameters provided by Builders FirstSource-Jacksonville.

Truss Design Engineer's Name: Velez, Joaquin
My license renewal date for the state of Florida is February 28, 2023.

IMPORTANT NOTE: The seal on these truss component designs is a certification that the engineer named is licensed in the jurisdiction(s) identified and that the designs comply with ANSI/TPI 1. These designs are based upon parameters shown (e.g., loads, supports, dimensions, shapes and design codes), which were given to MiTek or TRENCO. Any project specific information included is for MiTek's or TRENCO's customers file reference purpose only, and was not taken into account in the preparation of these designs. MiTek or TRENCO has not independently verified the applicability of the design parameters or the designs for any particular building. Before use, the building designer should verify applicability of design parameters and properly incorporate these designs into the overall building design per ANSI/TPI 1, Chapter 2.

JOAQUIN VELEZ
LICENSE
No. 68182
STATE OF FLORIDA
PROFESSIONAL ENGINEER

Joaquin Velez PE No.68182
MiTek USA, Inc. FL Cert 6634
6904 Parke East Blvd. Tampa FL 33610
Date:
April 7,2021

RE: 2714379 - PFS SOLUTIONS - LOT 5 AL

MiTek USA, Inc.
6904 Parke East Blvd.
Tampa, FL 33610-4115

Site Information:

Customer Info: PFS Solutions Project Name: Spec Hse Model: 1775
Lot/Block: 5 Subdivision: Amelia Landing
Address: N/A, N/A
City: Columbia Cty State: FL

No.	Seal#	Truss Name	Date
45	T23468901	T26	4/7/21
46	T23468902	TG01	4/7/21
47	T23468903	V01	4/7/21
48	T23468904	V02	4/7/21
49	T23468905	V03	4/7/21
50	T23468906	V04	4/7/21
51	T23468907	V05	4/7/21
52	T23468908	V06	4/7/21
53	T23468909	V07	4/7/21
54	T23468910	V08	4/7/21
55	T23468911	V09	4/7/21

Job	Truss	Truss Type	Qty	Ply	PFS SOLUTIONS - LOT 5 AL
2714379	EJ01	Jack-Open	12	1	T23468857 Job Reference (optional)

Builders FirstSource (Jacksonville, FL), Jacksonville, FL - 32244, 8.430 s Mar 22 2021 MiTek Industries, Inc. Tue Apr 6 08:30:06 2021 Page 1
ID:7R_b7AxUtlWB3tgOsRwB2?zWJEt-jomSTuOPJ?Bagry6jDLmyhDq4q?yZVokHXBy9PzTUwV

-1-6-0 6-4-0
1-6-0 6-4-0

Scale = 1:36.6

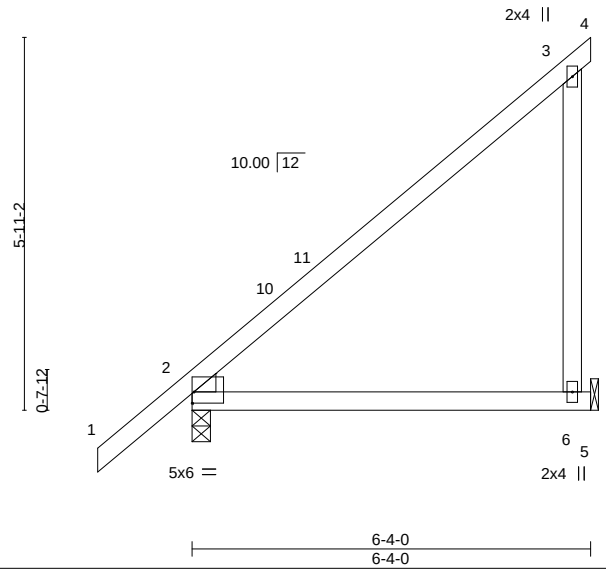

Plate Offsets (X,Y)-- [2:Edge,0-2-2]

LOADING (psf)		SPACING-	2-0-0	CSI.		DEFL.	in	(loc)	l/defl	L/d	PLATES	GRIP
TCLL	20.0	Plate Grip DOL	1.25	TC	0.53	Vert(LL)	0.10	6-9	>708	240	MT20	244/190
TCDL	7.0	Lumber DOL	1.25	BC	0.49	Vert(CT)	-0.13	6-9	>563	180		
BCLL	0.0 *	Rep Stress Incr	YES	WB	0.09	Horz(CT)	0.02	2	n/a	n/a		
BCDL	10.0	Code FBC2020/TPI2014		Matrix-MP							Weight: 33 lb	FT = 20%

LUMBER-
TOP CHORD 2x4 SP No.2
BOT CHORD 2x4 SP No.2
WEBS 2x4 SP No.3
WEDGE
Left: 2x4 SP No.3

BRACING-
TOP CHORD Structural wood sheathing directly applied or 6-0-0 oc purlins.
BOT CHORD Rigid ceiling directly applied or 10-0-0 oc bracing.

REACTIONS. (size) 2=0-3-8, 6=Mechanical
Max Horz 2=215(LC 12)
Max Uplift 2=-13(LC 12), 6=-141(LC 12)
Max Grav 2=314(LC 1), 6=247(LC 19)

FORCES. (lb) - Max. Comp./Max. Ten. - All forces 250 (lb) or less except when shown.

NOTES-
1) Wind: ASCE 7-16; Vult=130mph (3-second gust) Vasd=101mph; TCDL=4.2psf; BCDL=3.0psf; h=20ft; Cat. II; Exp B; Encl., GCpi=0.18; MWFRS (envelope) gable end zone and C-C Exterior(2E) -1-6-0 to 1-6-0, Interior(1) 1-6-0 to 6-4-0 zone;C-C for members and forces & MWFRS for reactions shown; Lumber DOL=1.60 plate grip DOL=1.60
2) Building Designer / Project engineer responsible for verifying applied roof live load shown covers rain loading requirements specific to the use of this truss component.
3) This truss has been designed for a 10.0 psf bottom chord live load nonconcurrent with any other live loads.
4) * This truss has been designed for a live load of 20.0psf on the bottom chord in all areas where a rectangle 3-6-0 tall by 2-0-0 wide will fit between the bottom chord and any other members.
5) Refer to girder(s) for truss to truss connections.
6) Provide mechanical connection (by others) of truss to bearing plate capable of withstanding 100 lb uplift at joint(s) 2 except (jt=lb) 6=141.

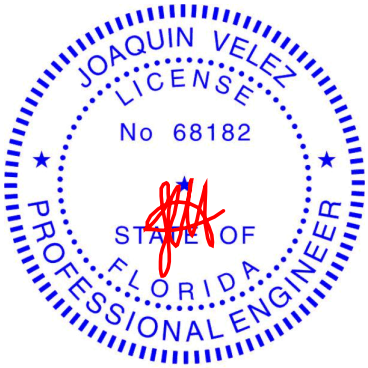

Joaquin Velez PE No.68182
MiTek USA, Inc. FL Cert 6634
6904 Parke East Blvd. Tampa FL 33610
Date:
April 7,2021

WARNING - Verify design parameters and READ NOTES ON THIS AND INCLUDED MITEK REFERENCE PAGE MII-7473 rev. 5/19/2020 BEFORE USE.
Design valid for use only with MiTek® connectors. This design is based only upon parameters shown, and is for an individual building component, not a truss system. Before use, the building designer must verify the applicability of design parameters and properly incorporate this design into the overall building design. Bracing indicated is to prevent buckling of individual truss web and/or chord members only. Additional temporary and permanent bracing is always required for stability and to prevent collapse with possible personal injury and property damage. For general guidance regarding the fabrication, storage, delivery, erection and bracing of trusses and truss systems, see ***ANSI/TPI1 Quality Criteria, DSB-89 and BCSI Building Component Safety Information*** available from Truss Plate Institute, 2670 Crain Highway, Suite 203 Waldorf, MD 20601

MiTek
6904 Parke East Blvd.
Tampa, FL 36610

Job	Truss	Truss Type	Qty	Ply	PFS SOLUTIONS - LOT 5 AL
2714379	EJ02	MONO TRUSS	8	1	T23468858 Job Reference (optional)

Builders FirstSource, Lake City, FL 32055

Run: 8.420 s Nov 10 2020 Print: 8.430 s Mar 22 2021 MiTek Industries, Inc. Wed Apr 7 10:28:10 2021 Page 1
ID:7R_b7AxUtlWB3tgOsRwB2?zWJEt-n7?8RKo5V?NkgBvPVfWptvxNPdKoXAHt4iWDxbzT9_3

-1-6-0 | 6-0-0
1-6-0 | 6-0-0

Scale = 1:14.4

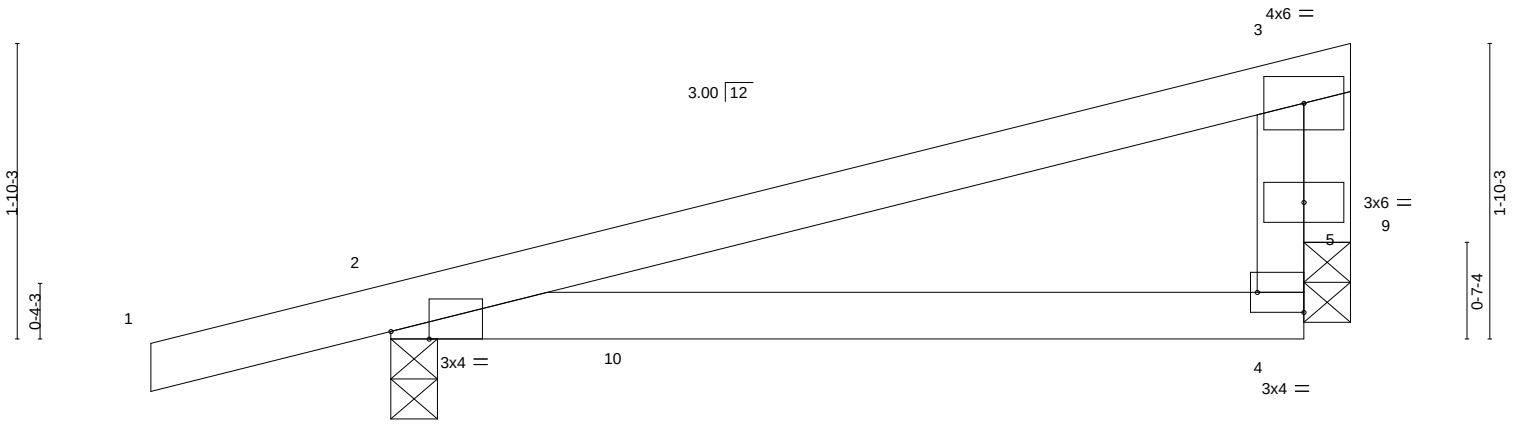

Plate Offsets (X,Y)-- [2:0-2-14,Edge], [4:Edge,0-1-8]

LOADING (psf)		SPACING-	2-0-0	CSI.		DEFL.	in	(loc)	l/defl	L/d	PLATES	GRIP
TCLL	20.0	Plate Grip DOL	1.25	TC	0.48	Vert(LL)	0.06	4-8	>999	240	MT20	244/190
TCDL	7.0	Lumber DOL	1.25	BC	0.28	Vert(CT)	0.05	4-8	>999	180		
BCLL	0.0 *	Rep Stress Incr	YES	WB	0.30	Horz(CT)	-0.00	2	n/a	n/a		
BCDL	10.0	Code FBC2020/TPI2014		Matrix-MR							Weight: 23 lb	FT = 20%

LUMBER-
TOP CHORD 2x4 SP No.2
BOT CHORD 2x4 SP No.2
WEBS 2x4 SP No.3
OTHERS 2x4 SP No.3

BRACING-
TOP CHORD Structural wood sheathing directly applied or 6-0-0 oc purlins, except end verticals.
BOT CHORD Rigid ceiling directly applied or 9-8-11 oc bracing.

REACTIONS. (lb/size) 2=307/0-3-8, 9=185/0-3-8
Max Horz 2=65(LC 8)
Max Uplift 2=-164(LC 8), 9=-95(LC 8)

FORCES. (lb) - Max. Comp./Max. Ten. - All forces 250 (lb) or less except when shown.
TOP CHORD 2-3=-216/286
BOT CHORD 2-10=-322/194, 4-10=-322/194

NOTES-
1) Wind: ASCE 7-16; Vult=130mph (3-second gust) Vasd=101mph; TCDL=4.2psf; BCDL=3.0psf; h=20ft; Cat. II; Exp B; Encl., GCpi=0.18; MWFRS (envelope) gable end zone and C-C Exterior(2E) -1-6-0 to 1-6-0, Interior(1) 1-6-0 to 5-6-12 zone; porch left and right exposed;C-C for members and forces & MWFRS for reactions shown; Lumber DOL=1.60 plate grip DOL=1.60
2) Building Designer / Project engineer responsible for verifying applied roof live load shown covers rain loading requirements specific to the use of this truss component.
3) This truss has been designed for a 10.0 psf bottom chord live load nonconcurrent with any other live loads.
4) * This truss has been designed for a live load of 20.0psf on the bottom chord in all areas where a rectangle 3-6-0 tall by 2-0-0 wide will fit between the bottom chord and any other members.
5) Bearing at joint(s) 9 considers parallel to grain value using ANSI/TPI 1 angle to grain formula. Building designer should verify capacity of bearing surface.
6) Provide mechanical connection (by others) of truss to bearing plate capable of withstanding 164 lb uplift at joint 2 and 95 lb uplift at joint 9.

LOAD CASE(S) Standard

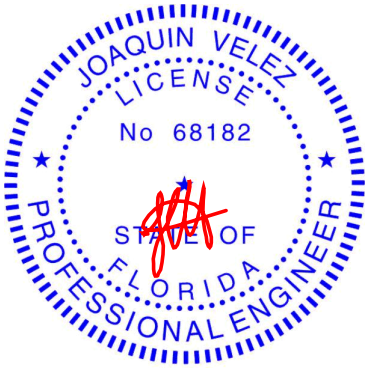

Joaquin Velez PE No.68182
MiTek USA, Inc. FL Cert 6634
6904 Parke East Blvd. Tampa FL 33610
Date:
April 7,2021

WARNING - Verify design parameters and READ NOTES ON THIS AND INCLUDED MITEK REFERENCE PAGE MII-7473 rev. 5/19/2020 BEFORE USE.
Design valid for use only with MiTek® connectors. This design is based only upon parameters shown, and is for an individual building component, not a truss system. Before use, the building designer must verify the applicability of design parameters and properly incorporate this design into the overall building design. Bracing indicated is to prevent buckling of individual truss web and/or chord members only. Additional temporary and permanent bracing is always required for stability and to prevent collapse with possible personal injury and property damage. For general guidance regarding the fabrication, storage, delivery, erection and bracing of trusses and truss systems, see ***ANSI/TPI1 Quality Criteria, DSB-89 and BCSI Building Component Safety Information*** available from Truss Plate Institute, 2670 Crain Highway, Suite 203 Waldorf, MD 20601

MiTek
6904 Parke East Blvd.
Tampa, FL 36610

Job	Truss	Truss Type	Qty	Ply	PFS SOLUTIONS - LOT 5 AL
2714379	EJ03	Monopitch	6	1	T23468859 Job Reference (optional)

Builders FirstSource, Lake City, FL 32055

Run: 8.420 s Nov 10 2020 Print: 8.430 s Mar 22 2021 MiTek Industries, Inc. Wed Apr 7 10:28:10 2021 Page 1
ID:7R_b7AxUtlWB3tgOsRwB2?zWJEt-n7?8RKo5V?NkgBvPVfWptvxJAdEIXB7t4iWDxbzT9_3

-1-6-0 | 5-0-0 | 9-3-8
1-6-0 | 5-0-0 | 4-3-8

Scale = 1:19.6

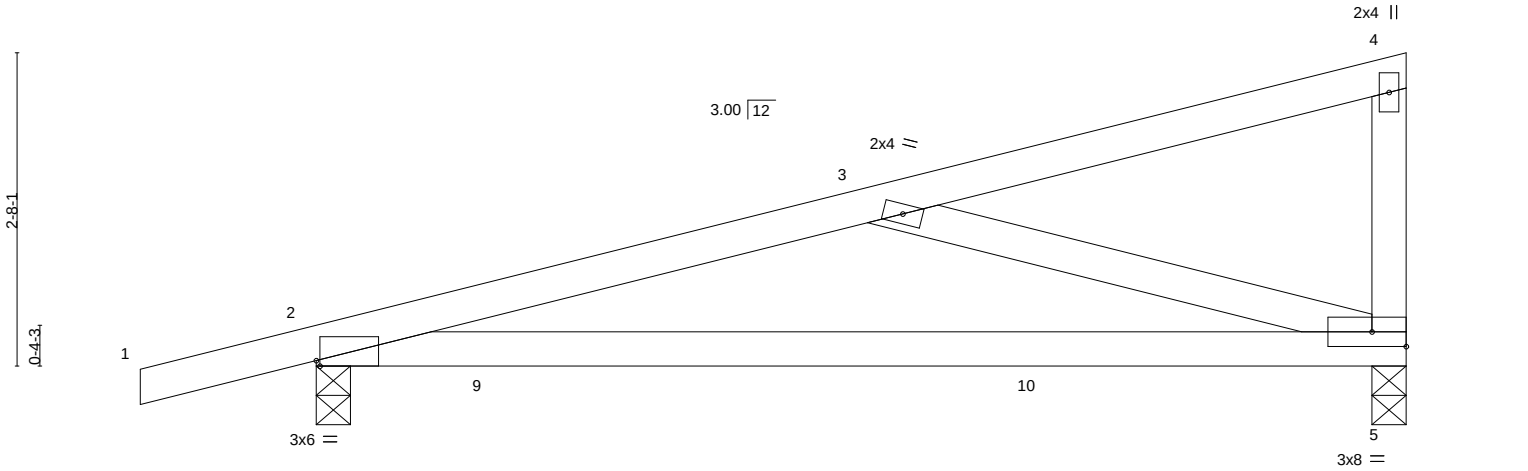

Plate Offsets (X,Y)-- [2:0-0-6,Edge]

LOADING (psf)		SPACING-	2-0-0	CSI.		DEFL.	in	(loc)	l/defl	L/d	PLATES	GRIP
TCLL	20.0	Plate Grip DOL	1.25	TC	0.75	Vert(LL)	0.34	5-8	>326	240	MT20	244/190
TCDL	7.0	Lumber DOL	1.25	BC	0.70	Vert(CT)	-0.30	5-8	>371	180		
BCLL	0.0 *	Rep Stress Incr	YES	WB	0.24	Horz(CT)	-0.01	5	n/a	n/a		
BCDL	10.0	Code FBC2020/TPI2014		Matrix-MS							Weight: 40 lb	FT = 20%

LUMBER-
TOP CHORD 2x4 SP No.2
BOT CHORD 2x4 SP No.2
WEBS 2x4 SP No.3

BRACING-
TOP CHORD Structural wood sheathing directly applied or 6-0-0 oc purlins, except end verticals.
BOT CHORD Rigid ceiling directly applied or 4-5-10 oc bracing.

REACTIONS. (lb/size) 2=426/0-3-8, 5=332/0-3-8
Max Horz 2=96(LC 8)
Max Uplift 2=-217(LC 8), 5=-172(LC 8)

FORCES. (lb) - Max. Comp./Max. Ten. - All forces 250 (lb) or less except when shown.
TOP CHORD 2-3=-648/692
BOT CHORD 2-9=-782/625, 9-10=-782/625, 5-10=-782/625
WEBS 3-5=-605/727

NOTES-
1) Wind: ASCE 7-16; Vult=130mph (3-second gust) Vasd=101mph; TCDL=4.2psf; BCDL=3.0psf; h=20ft; Cat. II; Exp B; Encl., GCpi=0.18; MWFRS (envelope) gable end zone and C-C Exterior(2E) -1-6-0 to 1-6-0, Interior(1) 1-6-0 to 9-1-12 zone; porch left and right exposed;C-C for members and forces & MWFRS for reactions shown; Lumber DOL=1.60 plate grip DOL=1.60
2) Building Designer / Project engineer responsible for verifying applied roof live load shown covers rain loading requirements specific to the use of this truss component.
3) This truss has been designed for a 10.0 psf bottom chord live load nonconcurrent with any other live loads.
4) * This truss has been designed for a live load of 20.0psf on the bottom chord in all areas where a rectangle 3-6-0 tall by 2-0-0 wide will fit between the bottom chord and any other members.
5) Provide mechanical connection (by others) of truss to bearing plate capable of withstanding 217 lb uplift at joint 2 and 172 lb uplift at joint 5.

LOAD CASE(S) Standard

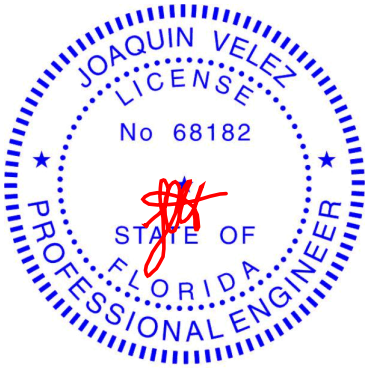

Joaquin Velez PE No.68182
MiTek USA, Inc. FL Cert 6634
6904 Parke East Blvd. Tampa FL 33610
Date:
April 7,2021

WARNING - Verify design parameters and READ NOTES ON THIS AND INCLUDED MITEK REFERENCE PAGE MII-7473 rev. 5/19/2020 BEFORE USE.
Design valid for use only with MiTek® connectors. This design is based only upon parameters shown, and is for an individual building component, not a truss system. Before use, the building designer must verify the applicability of design parameters and properly incorporate this design into the overall building design. Bracing indicated is to prevent buckling of individual truss web and/or chord members only. Additional temporary and permanent bracing is always required for stability and to prevent collapse with possible personal injury and property damage. For general guidance regarding the fabrication, storage, delivery, erection and bracing of trusses and truss systems, see ***ANSI/TPI1 Quality Criteria, DSB-89 and BCSI Building Component Safety Information*** available from Truss Plate Institute, 2670 Crain Highway, Suite 203 Waldorf, MD 20601

MiTek
6904 Parke East Blvd.
Tampa, FL 36610

Job	Truss	Truss Type	Qty	Ply	PFS SOLUTIONS - LOT 5 AL
2714379	EJ03G	Monopitch Supported Gable	1	1	T23468860 Job Reference (optional)

Builders FirstSource (Jacksonville, FL), Jacksonville, FL - 32244, 8.430 s Mar 22 2021 MiTek Industries, Inc. Tue Apr 6 08:30:09 2021 Page 1
ID:7R_b7AxUtlWB3tgOsRwB2?zWJEt-7NSb5wQHcwZ8XIggPLuTaKrRh28imtwBzVPclkzTUwS

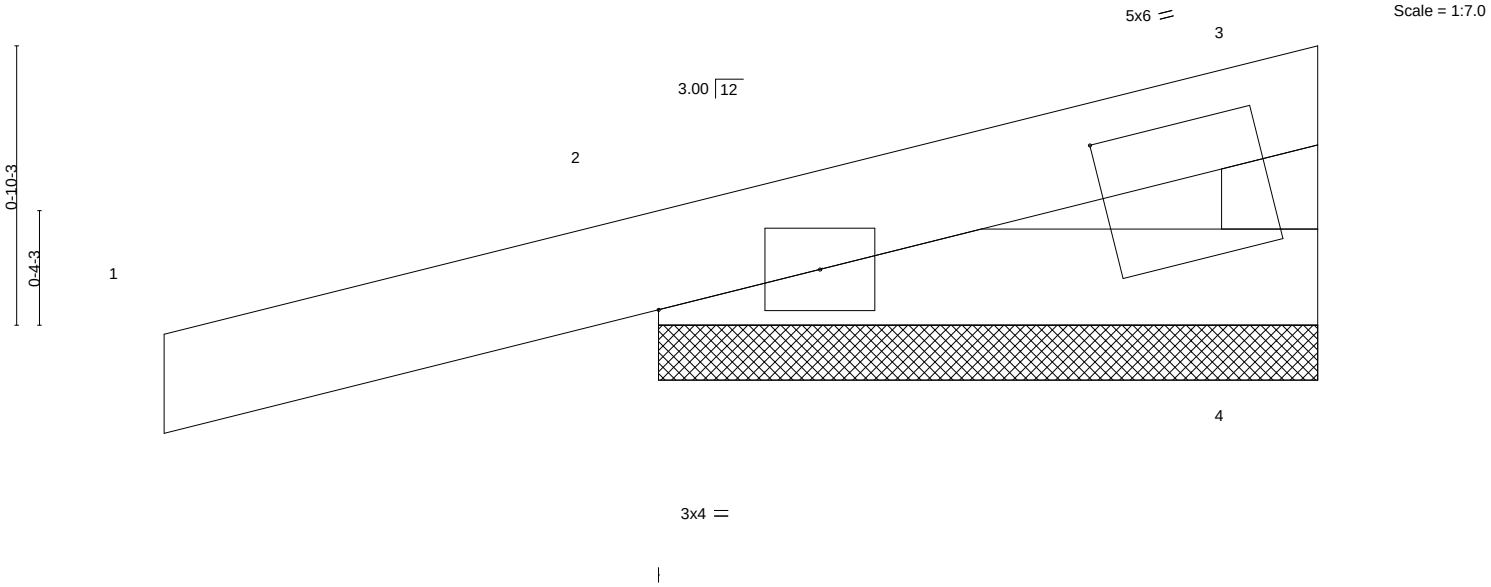

Plate Offsets (X,Y)-- [3:1-4-11,0-2-0]

LOADING (psf)		SPACING- 2-0-0		CSI.		DEFL. in (loc) l/defl L/d		PLATES GRIP
TCLL	20.0	Plate Grip DOL	1.25	TC	0.19	Vert(LL) 0.00 1 n/r 120		MT20 244/190
TCDL	7.0	Lumber DOL	1.25	BC	0.04	Vert(CT) -0.00 1 n/r 120		
BCLL	0.0 *	Rep Stress Incr	YES	WB	0.00	Horz(CT) 0.00 n/a n/a		
BCDL	10.0	Code FBC2020/TPI2014		Matrix-P				Weight: 9 lb FT = 20%

LUMBER-
TOP CHORD 2x4 SP No.2
BOT CHORD 2x4 SP No.2
WEBS 2x4 SP No.3

BRACING-
TOP CHORD Structural wood sheathing directly applied or 2-0-0 oc purlins, except end verticals.
BOT CHORD Rigid ceiling directly applied or 10-0-0 oc bracing.

REACTIONS. (size) 4=2-0-0, 2=2-0-0
Max Horz 2=33(LC 8)
Max Uplift 4=-7(LC 12), 2=-96(LC 8)
Max Grav 4=42(LC 3), 2=182(LC 1)

FORCES. (lb) - Max. Comp./Max. Ten. - All forces 250 (lb) or less except when shown.

NOTES-
1) Wind: ASCE 7-16; Vult=130mph (3-second gust) Vasd=101mph; TCDL=4.2psf; BCDL=3.0psf; h=20ft; Cat. II; Exp B; Encl., GCpi=0.18; MWFRS (envelope) gable end zone and C-C Corner(3E) -1-6-0 to 1-6-0, Exterior(2N) 1-6-0 to 1-10-4 zone;C-C for members and forces & MWFRS for reactions shown; Lumber DOL=1.60 plate grip DOL=1.60
2) Truss designed for wind loads in the plane of the truss only. For studs exposed to wind (normal to the face), see Standard Industry Gable End Details as applicable, or consult qualified building designer as per ANSI/TPI 1.
3) Building Designer / Project engineer responsible for verifying applied roof live load shown covers rain loading requirements specific to the use of this truss component.
4) Gable requires continuous bottom chord bearing.
5) Gable studs spaced at 2-0-0 oc.
6) This truss has been designed for a 10.0 psf bottom chord live load nonconcurrent with any other live loads.
7) * This truss has been designed for a live load of 20.0psf on the bottom chord in all areas where a rectangle 3-6-0 tall by 2-0-0 wide will fit between the bottom chord and any other members.
8) Provide mechanical connection (by others) of truss to bearing plate capable of withstanding 100 lb uplift at joint(s) 4, 2.
9) Beveled plate or shim required to provide full bearing surface with truss chord at joint(s) 2.

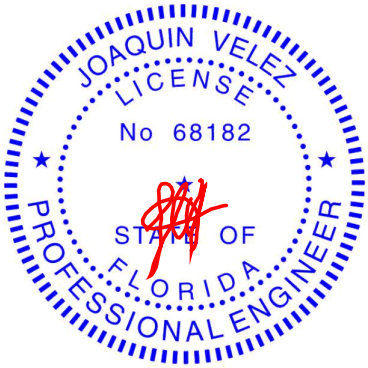

Joaquin Velez PE No.68182
MiTek USA, Inc. FL Cert 6634
6904 Parke East Blvd. Tampa FL 33610
Date:
April 7,2021

WARNING - Verify design parameters and READ NOTES ON THIS AND INCLUDED MITEK REFERENCE PAGE MII-7473 rev. 5/19/2020 BEFORE USE.
Design valid for use only with MiTek® connectors. This design is based only upon parameters shown, and is for an individual building component, not a truss system. Before use, the building designer must verify the applicability of design parameters and properly incorporate this design into the overall building design. Bracing indicated is to prevent buckling of individual truss web and/or chord members only. Additional temporary and permanent bracing is always required for stability and to prevent collapse with possible personal injury and property damage. For general guidance regarding the fabrication, storage, delivery, erection and bracing of trusses and truss systems, see ***ANSI/TPI1 Quality Criteria, DSB-89 and BCSI Building Component Safety Information*** available from Truss Plate Institute, 2670 Crain Highway, Suite 203 Waldorf, MD 20601

MiTek
6904 Parke East Blvd.
Tampa, FL 36610

Job	Truss	Truss Type	Qty	Ply	PFS SOLUTIONS - LOT 5 AL
2714379	PB01	Piggyback	11	1	T23468861 Job Reference (optional)

Builders FirstSource (Jacksonville, FL), Jacksonville, FL - 32244, 8.430 s Mar 22 2021 MiTek Industries, Inc. Tue Apr 6 08:30:10 2021 Page 1
ID:7R_b7AxUtlWB3tgOsRwB2?zWJEt-bZ?zIGRvNEh?8SFty2Pi6XOZ0RQ5VI2KC999IAzTUwR

Scale = 1:26.2

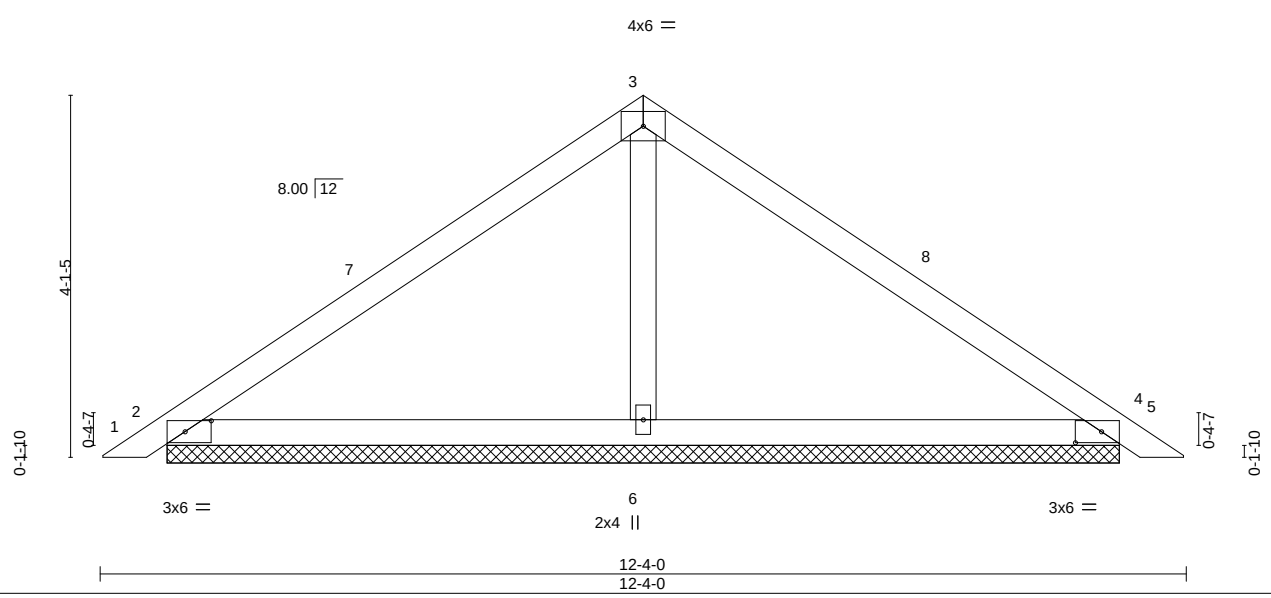

Plate Offsets (X,Y)-- [2:0-3-9,0-1-8], [4:0-3-9,0-1-8]

LOADING (psf)		SPACING- 2-0-0		CSI.		DEFL. in (loc) l/defl L/d		PLATES GRIP
TCLL	20.0	Plate Grip DOL	1.25	TC	0.34	Vert(LL) 0.01 5 n/r 120		MT20 244/190
TCDL	7.0	Lumber DOL	1.25	BC	0.28	Vert(CT) 0.02 5 n/r 120		
BCLL	0.0 *	Rep Stress Incr	YES	WB	0.07	Horz(CT) 0.00 4 n/a n/a		
BCDL	10.0	Code FBC2020/TPI2014		Matrix-S				Weight: 43 lb FT = 20%

LUMBER-
TOP CHORD 2x4 SP No.2
BOT CHORD 2x4 SP No.2
OTHERS 2x4 SP No.3

BRACING-
TOP CHORD Structural wood sheathing directly applied or 6-0-0 oc purlins.
BOT CHORD Rigid ceiling directly applied or 10-0-0 oc bracing.

REACTIONS. (size) 2=10-9-12, 4=10-9-12, 6=10-9-12
Max Horz 2=-86(LC 10)
Max Uplift 2=-62(LC 12), 4=-73(LC 13), 6=-55(LC 12)
Max Grav 2=222(LC 1), 4=222(LC 1), 6=408(LC 1)

FORCES. (lb) - Max. Comp./Max. Ten. - All forces 250 (lb) or less except when shown.

NOTES-
1) Unbalanced roof live loads have been considered for this design.
2) Wind: ASCE 7-16; Vult=130mph (3-second gust) Vasd=101mph; TCDL=4.2psf; BCDL=3.0psf; h=20ft; Cat. II; Exp B; Encl., GCpi=0.18; MWFRS (envelope) gable end zone and C-C Exterior(2E) 0-3-5 to 3-3-5, Interior(1) 3-3-5 to 6-2-0, Exterior(2R) 6-2-0 to 9-2-0, Interior(1) 9-2-0 to 12-0-11 zone;C-C for members and forces & MWFRS for reactions shown; Lumber DOL=1.60 plate grip DOL=1.60
3) Building Designer / Project engineer responsible for verifying applied roof live load shown covers rain loading requirements specific to the use of this truss component.
4) Gable requires continuous bottom chord bearing.
5) This truss has been designed for a 10.0 psf bottom chord live load nonconcurrent with any other live loads.
6) * This truss has been designed for a live load of 20.0psf on the bottom chord in all areas where a rectangle 3-6-0 tall by 2-0-0 wide will fit between the bottom chord and any other members.
7) Provide mechanical connection (by others) of truss to bearing plate capable of withstanding 100 lb uplift at joint(s) 2, 4, 6.
8) See Standard Industry Piggyback Truss Connection Detail for Connection to base truss as applicable, or consult qualified building designer.

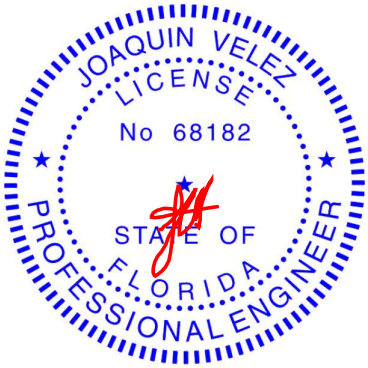

Joaquin Velez PE No.68182
MiTek USA, Inc. FL Cert 6634
6904 Parke East Blvd. Tampa FL 33610
Date:
April 7,2021

WARNING - Verify design parameters and READ NOTES ON THIS AND INCLUDED MITEK REFERENCE PAGE MII-7473 rev. 5/19/2020 BEFORE USE.
Design valid for use only with MiTek® connectors. This design is based only upon parameters shown, and is for an individual building component, not a truss system. Before use, the building designer must verify the applicability of design parameters and properly incorporate this design into the overall building design. Bracing indicated is to prevent buckling of individual truss web and/or chord members only. Additional temporary and permanent bracing is always required for stability and to prevent collapse with possible personal injury and property damage. For general guidance regarding the fabrication, storage, delivery, erection and bracing of trusses and truss systems, see ***ANSI/TPI1 Quality Criteria, DSB-89 and BCSI Building Component Safety Information*** available from Truss Plate Institute, 2670 Crain Highway, Suite 203 Waldorf, MD 20601

MiTek
6904 Parke East Blvd.
Tampa, FL 36610

Job	Truss	Truss Type	Qty	Ply	PFS SOLUTIONS - LOT 5 AL
2714379	PB01G	GABLE	1	1	T23468862 Job Reference (optional)

Builders FirstSource (Jacksonville, FL), Jacksonville, FL - 32244, 8.430 s Mar 22 2021 MiTek Industries, Inc. Tue Apr 6 08:30:11 2021 Page 1
ID:7R_b7AxUtlWB3tgOsRwB2?zWJEt-3mZLWcSX8Ypsmcq3WmwxflwnorqpEmlURpujqdzTUwQ

Scale: 1/2"=1'

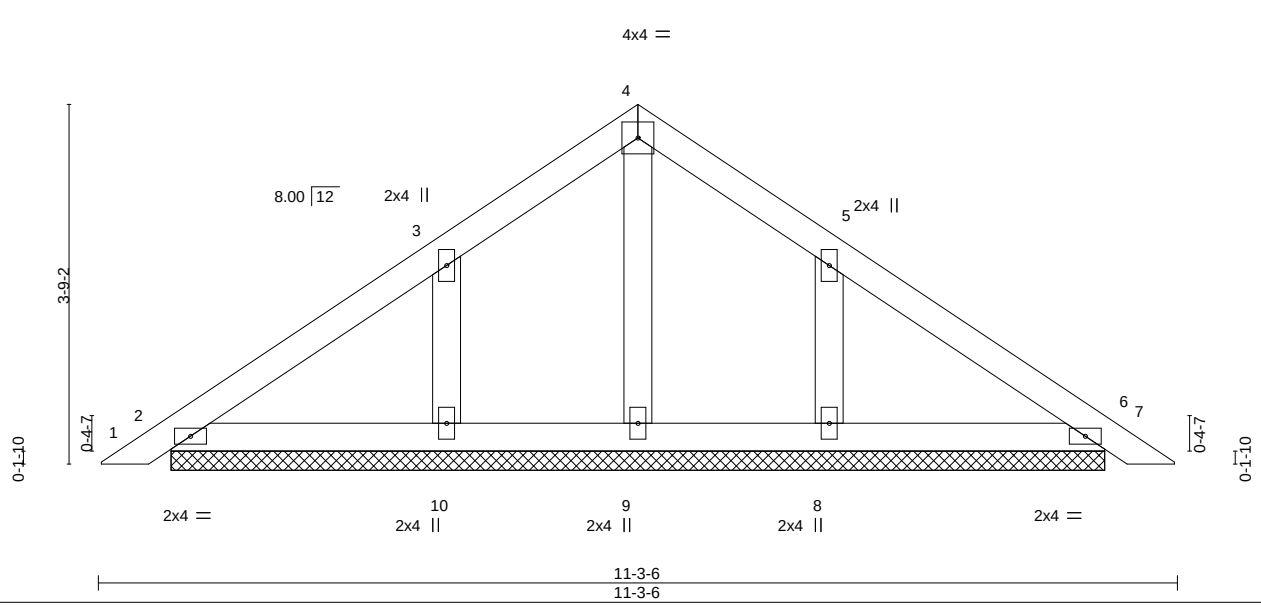

LOADING (psf)		SPACING-	2-0-0	CSI.		DEFL.	in	(loc)	l/defl	L/d	PLATES	GRIP
TCLL	20.0	Plate Grip DOL	1.25	TC	0.07	Vert(LL)	0.00	7	n/r	120	MT20	244/190
TCDL	7.0	Lumber DOL	1.25	BC	0.06	Vert(CT)	0.00	7	n/r	120		
BCLL	0.0 *	Rep Stress Incr	YES	WB	0.04	Horz(CT)	0.00	6	n/a	n/a		
BCDL	10.0	Code FBC2020/TPI2014		Matrix-S							Weight: 44 lb	FT = 20%

LUMBER-
TOP CHORD 2x4 SP No.2
BOT CHORD 2x4 SP No.2
OTHERS 2x4 SP No.3

BRACING-
TOP CHORD Structural wood sheathing directly applied or 6-0-0 oc purlins.
BOT CHORD Rigid ceiling directly applied or 10-0-0 oc bracing.

REACTIONS. All bearings 9-9-2.
(lb) - Max Horz 2=-79(LC 10)
Max Uplift All uplift 100 lb or less at joint(s) 2, 6 except 10=-108(LC 12), 8=-108(LC 13)
Max Grav All reactions 250 lb or less at joint(s) 2, 6, 9, 10, 8

FORCES. (lb) - Max. Comp./Max. Ten. - All forces 250 (lb) or less except when shown.

NOTES-
1) Unbalanced roof live loads have been considered for this design.
2) Wind: ASCE 7-16; Vult=130mph (3-second gust) Vasd=101mph; TCDL=4.2psf; BCDL=3.0psf; h=20ft; Cat. II; Exp B; Encl., GCpi=0.18; MWFRS (envelope) gable end zone and C-C Exterior(2E) 0-3-5 to 3-3-5, Interior(1) 3-3-5 to 5-7-11, Exterior(2R) 5-7-11 to 8-7-11, Interior(1) 8-7-11 to 11-0-1 zone;C-C for members and forces & MWFRS for reactions shown; Lumber DOL=1.60 plate grip DOL=1.60
3) Truss designed for wind loads in the plane of the truss only. For studs exposed to wind (normal to the face), see Standard Industry Gable End Details as applicable, or consult qualified building designer as per ANSI/TPI 1.
4) Building Designer / Project engineer responsible for verifying applied roof live load shown covers rain loading requirements specific to the use of this truss component.
5) Gable requires continuous bottom chord bearing.
6) Gable studs spaced at 2-0-0 oc.
7) This truss has been designed for a 10.0 psf bottom chord live load nonconcurrent with any other live loads.
8) * This truss has been designed for a live load of 20.0psf on the bottom chord in all areas where a rectangle 3-6-0 tall by 2-0-0 wide will fit between the bottom chord and any other members.
9) Provide mechanical connection (by others) of truss to bearing plate capable of withstanding 100 lb uplift at joint(s) 2, 6 except (jt=lb) 10=108, 8=108.
10) See Standard Industry Piggyback Truss Connection Detail for Connection to base truss as applicable, or consult qualified building designer.

JOAQUIN VELEZ
LICENSE
No 68182
STATE OF FLORIDA
PROFESSIONAL ENGINEER

Joaquin Velez PE No.68182
MiTek USA, Inc. FL Cert 6634
6904 Parke East Blvd. Tampa FL 33610
Date:
April 7,2021

WARNING - Verify design parameters and READ NOTES ON THIS AND INCLUDED MITEK REFERENCE PAGE MII-7473 rev. 5/19/2020 BEFORE USE.
Design valid for use only with MiTek® connectors. This design is based only upon parameters shown, and is for an individual building component, not a truss system. Before use, the building designer must verify the applicability of design parameters and properly incorporate this design into the overall building design. Bracing indicated is to prevent buckling of individual truss web and/or chord members only. Additional temporary and permanent bracing is always required for stability and to prevent collapse with possible personal injury and property damage. For general guidance regarding the fabrication, storage, delivery, erection and bracing of trusses and truss systems, see ***ANSI/TPI1 Quality Criteria, DSB-89 and BCSI Building Component Safety Information*** available from Truss Plate Institute, 2670 Crain Highway, Suite 203 Waldorf, MD 20601

MiTek
6904 Parke East Blvd.
Tampa, FL 36610

Job	Truss	Truss Type	Qty	Ply	PFS SOLUTIONS - LOT 5 AL
2714379	PB02	Piggyback	7	1	T23468863 Job Reference (optional)

Builders FirstSource (Jacksonville, FL), Jacksonville, FL - 32244, 8.430 s Mar 22 2021 MiTek Industries, Inc. Tue Apr 6 08:30:12 2021 Page 1
ID:7R_b7AxUtlWB3tgOsRwB2?zWJEt-Yy7kjxS9vrxjOmPF4TRACyTsLF60zDudfTeGM3zTUwP

Scale = 1:26.5

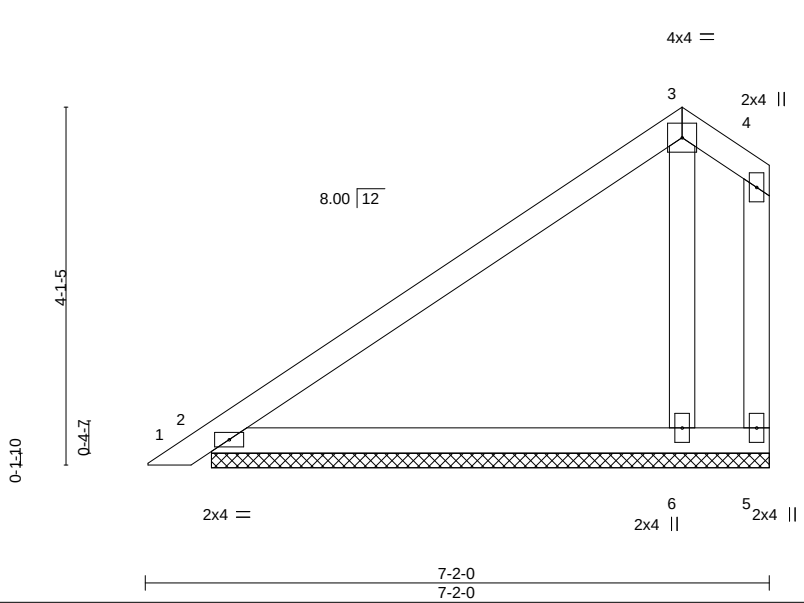

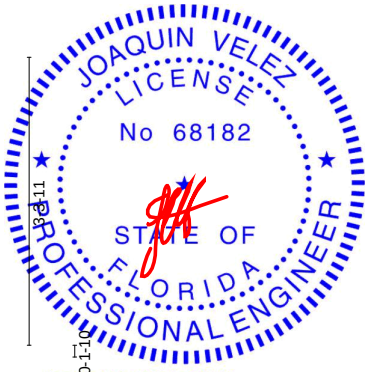

Joaquin Velez PE No.68182
MiTek USA, Inc. FL Cert 6634
6904 Parke East Blvd. Tampa FL 33610
Date:

LOADING (psf)		SPACING-	2-0-0	CSI.		DEFL.	in	(loc)	l/defl	L/d	PLATES	GRIP
TCLL	20.0	Plate Grip DOL	1.25	TC	0.48	Vert(LL)	0.00	1	n/r	120	MT20	244/190
TCDL	7.0	Lumber DOL	1.25	BC	0.25	Vert(CT)	0.01	1	n/r	120		
BCLL	0.0 *	Rep Stress Incr	YES	WB	0.05	Horz(CT)	0.00		n/a	n/a		
BCDL	10.0	Code FBC2020/TPI2014		Matrix-P							Weight: 32 lb	FT = 20%

LUMBER-
TOP CHORD 2x4 SP No.2
BOT CHORD 2x4 SP No.2
WEBS 2x4 SP No.3
OTHERS 2x4 SP No.3

BRACING-
TOP CHORD Structural wood sheathing directly applied or 6-0-0 oc purlins, except end verticals.
BOT CHORD Rigid ceiling directly applied or 10-0-0 oc bracing.

REACTIONS. (size) 5=6-4-14, 2=6-4-14, 6=6-4-14
Max Horz 2=123(LC 12)
Max Uplift 5=-125(LC 3), 2=-33(LC 12), 6=-61(LC 12)
Max Grav 2=215(LC 1), 6=340(LC 3)

FORCES. (lb) - Max. Comp./Max. Ten. - All forces 250 (lb) or less except when shown.

NOTES-
1) Unbalanced roof live loads have been considered for this design.
2) Wind: ASCE 7-16; Vult=130mph (3-second gust) Vasd=101mph; TCDL=4.2psf; BCDL=3.0psf; h=20ft; Cat. II; Exp B; Encl., GCpi=0.18; MWFRS (envelope) gable end zone and C-C Exterior(2E) 0-3-5 to 3-3-5, Interior(1) 3-3-5 to 6-2-0, Exterior(2E) 6-2-0 to 7-0-4 zone;C-C for members and forces & MWFRS for reactions shown; Lumber DOL=1.60 plate grip DOL=1.60
3) Building Designer / Project engineer responsible for verifying applied roof live load shown covers rain loading requirements specific to the use of this truss component.
4) Gable requires continuous bottom chord bearing.
5) This truss has been designed for a 10.0 psf bottom chord live load nonconcurrent with any other live loads.
6) * This truss has been designed for a live load of 20.0psf on the bottom chord in all areas where a rectangle 3-6-0 tall by 2-0-0 wide will fit between the bottom chord and any other members.
7) Provide mechanical connection (by others) of truss to bearing plate capable of withstanding 100 lb uplift at joint(s) 2, 6 except (jt=lb) 5=125.
8) See Standard Industry Piggyback Truss Connection Detail for Connection to base truss as applicable, or consult qualified building designer.

April 7,2021

WARNING - Verify design parameters and READ NOTES ON THIS AND INCLUDED MITEK REFERENCE PAGE MII-7473 rev. 5/19/2020 BEFORE USE.
Design valid for use only with MiTek® connectors. This design is based only upon parameters shown, and is for an individual building component, not a truss system. Before use, the building designer must verify the applicability of design parameters and properly incorporate this design into the overall building design. Bracing indicated is to prevent buckling of individual truss web and/or chord members only. Additional temporary and permanent bracing is always required for stability and to prevent collapse with possible personal injury and property damage. For general guidance regarding the fabrication, storage, delivery, erection and bracing of trusses and truss systems, see ***ANSI/TPI1 Quality Criteria, DSB-89 and BCSI Building Component Safety Information*** available from Truss Plate Institute, 2670 Crain Highway, Suite 203 Waldorf, MD 20601

MiTek
6904 Parke East Blvd.
Tampa, FL 36610

Job	Truss	Truss Type	Qty	Ply	PFS SOLUTIONS - LOT 5 AL
2714379	PB03	PIGGYBACK	10	1	T23468864 Job Reference (optional)

Builders FirstSource (Jacksonville, FL), Jacksonville, FL - 32244, 8.430 s Mar 22 2021 MiTek Industries, Inc. Tue Apr 6 08:30:13 2021 Page 1
ID:7R_b7AxUtIWB3tgOsRwB2?zWJEt-08h6xHTog93a?v_SeBzPkA08hfVligkmu7NquVzTUwO

Scale = 1:11.8

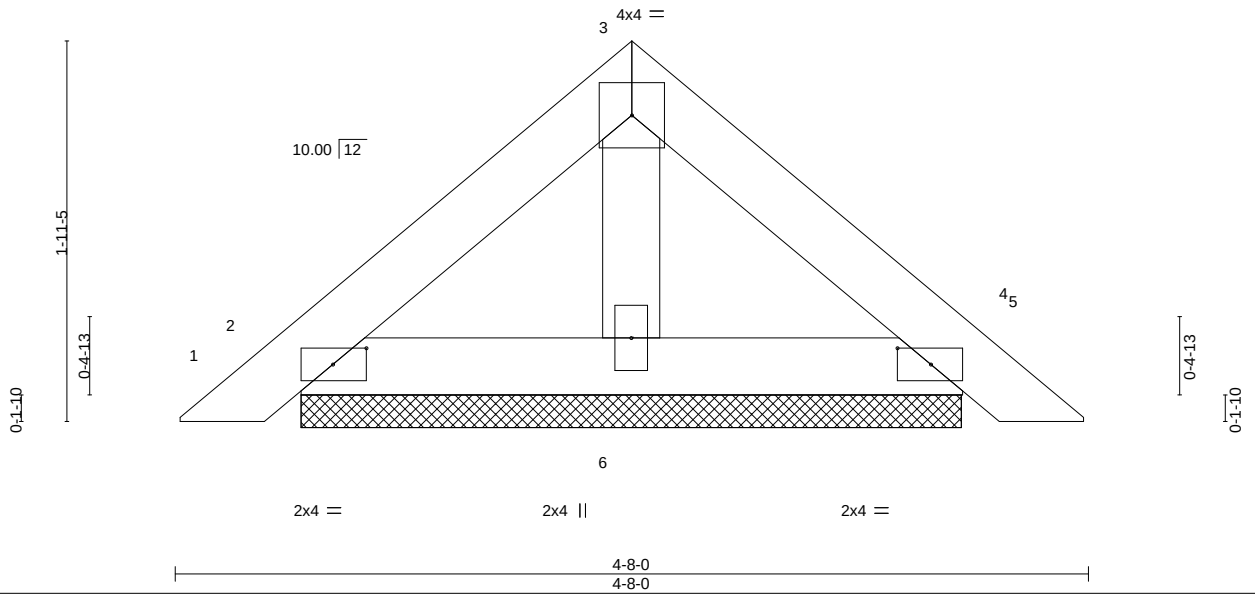

Plate Offsets (X,Y)-- [2:0-2-1,0-1-0], [4:0-2-1,0-1-0]

LOADING (psf)		SPACING- 2-0-0		CSI.		DEFL. in (loc) l/defl L/d		PLATES GRIP
TCLL	20.0	Plate Grip DOL	1.25	TC	0.06	Vert(LL) 0.00 4 n/r 120		MT20 244/190
TCDL	7.0	Lumber DOL	1.25	BC	0.03	Vert(CT) 0.00 4 n/r 120		
BCLL	0.0 *	Rep Stress Incr	YES	WB	0.01	Horz(CT) 0.00 4 n/a n/a		
BCDL	10.0	Code FBC2020/TPI2014		Matrix-P				Weight: 16 lb FT = 20%

LUMBER-
TOP CHORD 2x4 SP No.2
BOT CHORD 2x4 SP No.2
OTHERS 2x4 SP No.3

BRACING-
TOP CHORD Structural wood sheathing directly applied or 4-8-0 oc purlins.
BOT CHORD Rigid ceiling directly applied or 10-0-0 oc bracing.

REACTIONS. (size) 2=3-4-8, 4=3-4-8, 6=3-4-8
Max Horz 2=-38(LC 10)
Max Uplift 2=-30(LC 12), 4=-35(LC 13), 6=-3(LC 12)
Max Grav 2=95(LC 1), 4=95(LC 1), 6=104(LC 1)

FORCES. (lb) - Max. Comp./Max. Ten. - All forces 250 (lb) or less except when shown.

NOTES-
1) Unbalanced roof live loads have been considered for this design.
2) Wind: ASCE 7-16; Vult=130mph (3-second gust) Vasd=101mph; TCDL=4.2psf; BCDL=3.0psf; h=20ft; Cat. II; Exp B; Encl., GCpi=0.18; MWFRS (envelope) gable end zone and C-C Exterior(2E) zone;C-C for members and forces & MWFRS for reactions shown; Lumber DOL=1.60 plate grip DOL=1.60
3) Building Designer / Project engineer responsible for verifying applied roof live load shown covers rain loading requirements specific to the use of this truss component.
4) This truss has been designed for a 10.0 psf bottom chord live load nonconcurrent with any other live loads.
5) * This truss has been designed for a live load of 20.0psf on the bottom chord in all areas where a rectangle 3-6-0 tall by 2-0-0 wide will fit between the bottom chord and any other members.
6) Provide mechanical connection (by others) of truss to bearing plate capable of withstanding 100 lb uplift at joint(s) 2, 4, 6.
7) na
8) See Standard Industry Piggyback Truss Connection Detail for Connection to base truss as applicable, or consult qualified building designer.

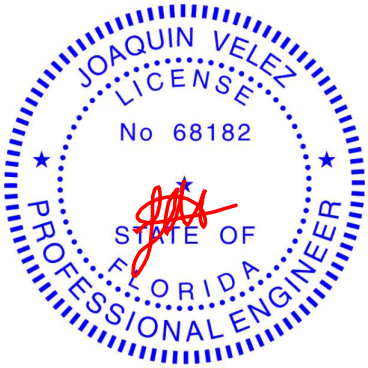

Joaquin Velez PE No.68182
MiTek USA, Inc. FL Cert 6634
6904 Parke East Blvd. Tampa FL 33610
Date:
April 7,2021

WARNING - Verify design parameters and READ NOTES ON THIS AND INCLUDED MITEK REFERENCE PAGE MII-7473 rev. 5/19/2020 BEFORE USE.
Design valid for use only with MiTek® connectors. This design is based only upon parameters shown, and is for an individual building component, not a truss system. Before use, the building designer must verify the applicability of design parameters and properly incorporate this design into the overall building design. Bracing indicated is to prevent buckling of individual truss web and/or chord members only. Additional temporary and permanent bracing is always required for stability and to prevent collapse with possible personal injury and property damage. For general guidance regarding the fabrication, storage, delivery, erection and bracing of trusses and truss systems, see ***ANSI/TPI1 Quality Criteria, DSB-89 and BCSI Building Component Safety Information*** available from Truss Plate Institute, 2670 Crain Highway, Suite 203 Waldorf, MD 20601

MiTek
6904 Parke East Blvd.
Tampa, FL 36610

Job	Truss	Truss Type	Qty	Ply	PFS SOLUTIONS - LOT 5 AL
2714379	PB03G	GABLE	1	1	T23468865 Job Reference (optional)

Builders FirstSource (Jacksonville, FL), Jacksonville, FL - 32244, 8.430 s Mar 22 2021 MiTek Industries, Inc. Tue Apr 6 08:30:14 2021 Page 1
ID:7R_b7AxUtlWB3tgOsRwB2?zWJEt-ULFU8dUQRTBRd3ZeBuUeHNYJr3qNR79w7n7NRxzTUwN

Scale = 1:9.9

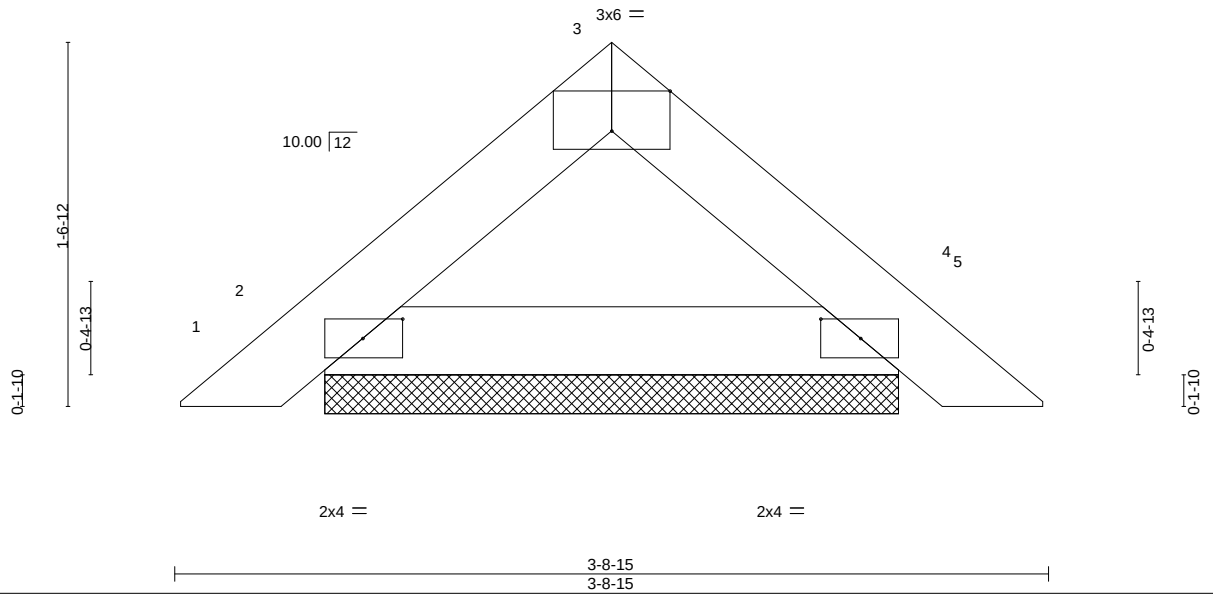

Plate Offsets (X,Y)-- [2:0-2-1,0-1-0], [3:0-3-0,Edge], [4:0-2-1,0-1-0]

LOADING (psf)		SPACING-	2-0-0	CSI.		DEFL.	in	(loc)	l/defl	L/d	PLATES	GRIP
TCLL	20.0	Plate Grip DOL	1.25	TC	0.03	Vert(LL)	0.00	4	n/r	120	MT20	244/190
TCDL	7.0	Lumber DOL	1.25	BC	0.07	Vert(CT)	0.00	4	n/r	120		
BCLL	0.0 *	Rep Stress Incr	YES	WB	0.00	Horz(CT)	0.00	4	n/a	n/a		
BCDL	10.0	Code FBC2020/TPI2014		Matrix-P							Weight: 11 lb	FT = 20%

LUMBER-
TOP CHORD 2x4 SP No.2
BOT CHORD 2x4 SP No.2

BRACING-
TOP CHORD Structural wood sheathing directly applied or 3-8-15 oc purlins.
BOT CHORD Rigid ceiling directly applied or 10-0-0 oc bracing.

REACTIONS. (size) 2=2-5-8, 4=2-5-8
Max Horz 2=-30(LC 10)
Max Uplift 2=-26(LC 12), 4=-26(LC 13)
Max Grav 2=113(LC 1), 4=113(LC 1)

FORCES. (lb) - Max. Comp./Max. Ten. - All forces 250 (lb) or less except when shown.

NOTES-
1) Unbalanced roof live loads have been considered for this design.
2) Wind: ASCE 7-16; Vult=130mph (3-second gust) Vasd=101mph; TCDL=4.2psf; BCDL=3.0psf; h=20ft; Cat. II; Exp B; Encl., GCpi=0.18; MWFRS (envelope) gable end zone and C-C Exterior(2E) zone;C-C for members and forces & MWFRS for reactions shown; Lumber DOL=1.60 plate grip DOL=1.60
3) Truss designed for wind loads in the plane of the truss only. For studs exposed to wind (normal to the face), see Standard Industry Gable End Details as applicable, or consult qualified building designer as per ANSI/TPI 1.
4) Building Designer / Project engineer responsible for verifying applied roof live load shown covers rain loading requirements specific to the use of this truss component.
5) Gable requires continuous bottom chord bearing.
6) Gable studs spaced at 2-0-0 oc.
7) This truss has been designed for a 10.0 psf bottom chord live load nonconcurrent with any other live loads.
8) * This truss has been designed for a live load of 20.0psf on the bottom chord in all areas where a rectangle 3-6-0 tall by 2-0-0 wide will fit between the bottom chord and any other members.
9) Provide mechanical connection (by others) of truss to bearing plate capable of withstanding 100 lb uplift at joint(s) 2, 4.
10) See Standard Industry Piggyback Truss Connection Detail for Connection to base truss as applicable, or consult qualified building designer.

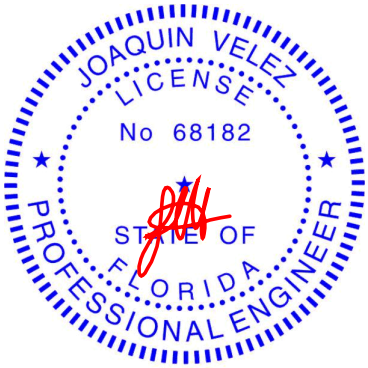

Joaquin Velez PE No.68182
MiTek USA, Inc. FL Cert 6634
6904 Parke East Blvd. Tampa FL 33610
Date:
April 7,2021

WARNING - Verify design parameters and READ NOTES ON THIS AND INCLUDED MITEK REFERENCE PAGE MII-7473 rev. 5/19/2020 BEFORE USE.
Design valid for use only with MiTek® connectors. This design is based only upon parameters shown, and is for an individual building component, not a truss system. Before use, the building designer must verify the applicability of design parameters and properly incorporate this design into the overall building design. Bracing indicated is to prevent buckling of individual truss web and/or chord members only. Additional temporary and permanent bracing is always required for stability and to prevent collapse with possible personal injury and property damage. For general guidance regarding the fabrication, storage, delivery, erection and bracing of trusses and truss systems, see ***ANSI/TPI1 Quality Criteria, DSB-89 and BCSI Building Component Safety Information*** available from Truss Plate Institute, 2670 Crain Highway, Suite 203 Waldorf, MD 20601

MiTek
6904 Parke East Blvd.
Tampa, FL 36610

Job	Truss	Truss Type	Qty	Ply	PFS SOLUTIONS - LOT 5 AL
2714379	PB04	PIGGYBACK	1	1	T23468866 Job Reference (optional)

Builders FirstSource (Jacksonville, FL), Jacksonville, FL - 32244, 8.430 s Mar 22 2021 MiTek Industries, Inc. Tue Apr 6 08:30:14 2021 Page 1
ID:7R_b7AxUtIWB3tgOsRwB2?zWJEt-ULFU8dUQRTBRd3ZeBuUeHNYI53qQR79w7n7NRxzTUwN

Scale = 1:13.3

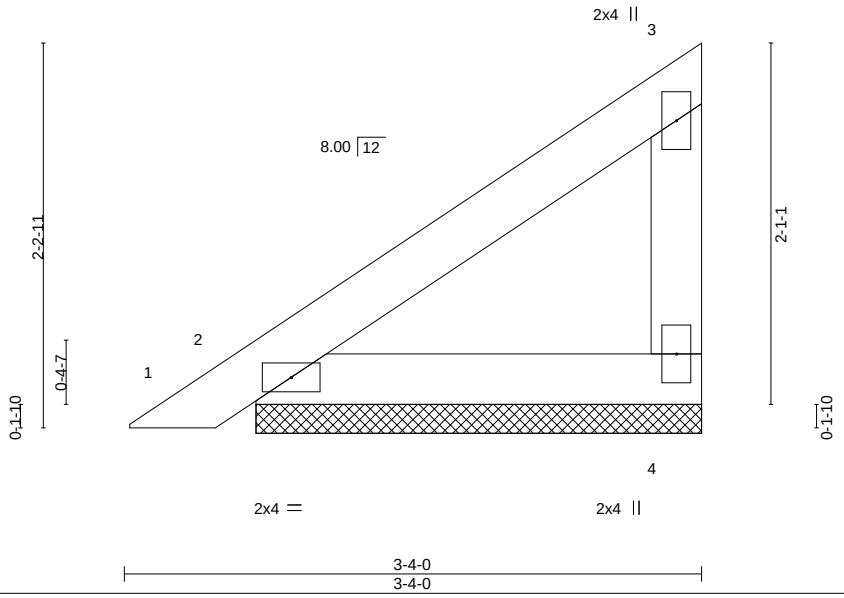

LOADING (psf)		SPACING- 2-0-0		CSI.		DEFL. in (loc) l/defl L/d		PLATES GRIP
TCLL	20.0	Plate Grip DOL	1.25	TC	0.08	Vert(LL) -0.00 1 n/r 120		MT20 244/190
TCDL	7.0	Lumber DOL	1.25	BC	0.07	Vert(CT) 0.00 1 n/r 120		
BCLL	0.0 *	Rep Stress Incr	YES	WB	0.00	Horz(CT) 0.00 n/a n/a		
BCDL	10.0	Code FBC2020/TPI2014		Matrix-P				Weight: 12 lb FT = 20%

LUMBER-
TOP CHORD 2x4 SP No.2
BOT CHORD 2x4 SP No.2
WEBS 2x4 SP No.3

BRACING-
TOP CHORD Structural wood sheathing directly applied or 3-4-0 oc purlins, except end verticals.
BOT CHORD Rigid ceiling directly applied or 10-0-0 oc bracing.

REACTIONS. (size) 4=2-6-14, 2=2-6-14
Max Horz 2=65(LC 12)
Max Uplift 4=-43(LC 12), 2=-16(LC 12)
Max Grav 4=92(LC 19), 2=118(LC 1)

FORCES. (lb) - Max. Comp./Max. Ten. - All forces 250 (lb) or less except when shown.

NOTES-
1) Wind: ASCE 7-16; Vult=130mph (3-second gust) Vasd=101mph; TCDL=4.2psf; BCDL=3.0psf; h=20ft; Cat. II; Exp B; Encl., GCpi=0.18; MWFRS (envelope) gable end zone and C-C Exterior(2E) zone;C-C for members and forces & MWFRS for reactions shown; Lumber DOL=1.60 plate grip DOL=1.60
2) Building Designer / Project engineer responsible for verifying applied roof live load shown covers rain loading requirements specific to the use of this truss component.
3) Gable requires continuous bottom chord bearing.
4) This truss has been designed for a 10.0 psf bottom chord live load nonconcurrent with any other live loads.
5) * This truss has been designed for a live load of 20.0psf on the bottom chord in all areas where a rectangle 3-6-0 tall by 2-0-0 wide will fit between the bottom chord and any other members.
6) Provide mechanical connection (by others) of truss to bearing plate capable of withstanding 100 lb uplift at joint(s) 4, 2.
7) See Standard Industry Piggyback Truss Connection Detail for Connection to base truss as applicable, or consult qualified building designer.

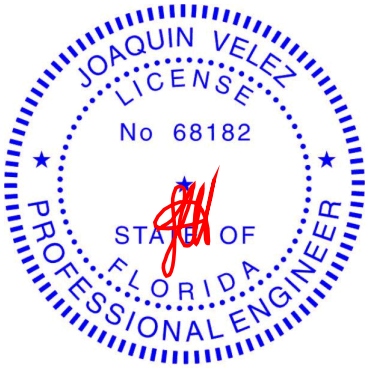

Joaquin Velez PE No.68182
MiTek USA, Inc. FL Cert 6634
6904 Parke East Blvd. Tampa FL 33610
Date:
April 7,2021

WARNING - Verify design parameters and READ NOTES ON THIS AND INCLUDED MITEK REFERENCE PAGE MII-7473 rev. 5/19/2020 BEFORE USE.
Design valid for use only with MiTek® connectors. This design is based only upon parameters shown, and is for an individual building component, not a truss system. Before use, the building designer must verify the applicability of design parameters and properly incorporate this design into the overall building design. Bracing indicated is to prevent buckling of individual truss web and/or chord members only. Additional temporary and permanent bracing is always required for stability and to prevent collapse with possible personal injury and property damage. For general guidance regarding the fabrication, storage, delivery, erection and bracing of trusses and truss systems, see ***ANSI/TPI1 Quality Criteria, DSB-89 and BCSI Building Component Safety Information*** available from Truss Plate Institute, 2670 Crain Highway, Suite 203 Waldorf, MD 20601

MiTek
6904 Parke East Blvd.
Tampa, FL 36610

Job	Truss	Truss Type	Qty	Ply	PFS SOLUTIONS - LOT 5 AL
2714379	PB04G	PIGGYBACK	1	1	T23468867 Job Reference (optional)

Builders FirstSource (Jacksonville, FL), Jacksonville, FL - 32244, 8.430 s Mar 22 2021 MiTek Industries, Inc. Tue Apr 6 08:30:15 2021 Page 1
ID:7R_b7AxUtlWB3tgOsRwB2?zWJEt-yXpsMzV2CmJIFD8qlc?tpb5UOSB4AaP3MQtwzOzTUwM

Scale = 1:11.5

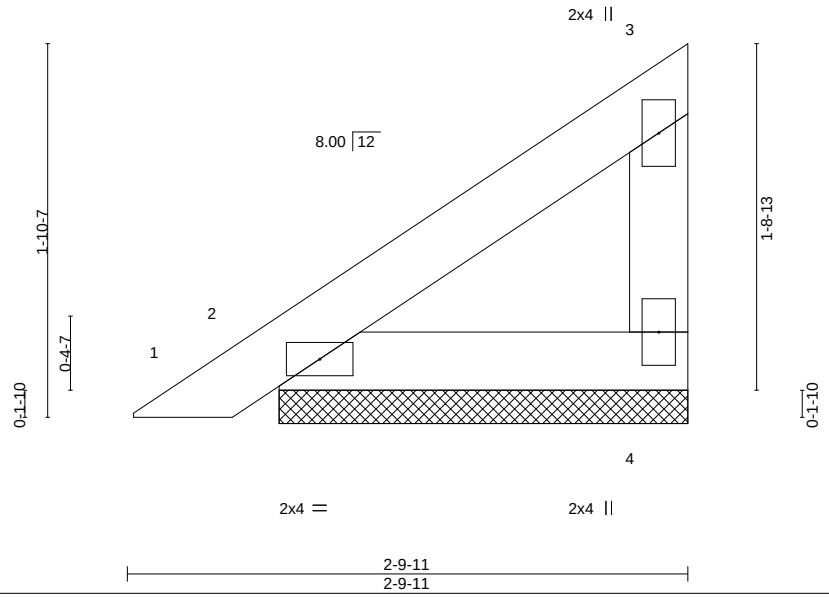

LOADING (psf)		SPACING-	2-0-0	CSI.		DEFL.	in	(loc)	l/defl	L/d	PLATES	GRIP
TCLL	20.0	Plate Grip DOL	1.25	TC	0.05	Vert(LL)	-0.00	1	n/r	120	MT20	244/190
TCDL	7.0	Lumber DOL	1.25	BC	0.04	Vert(CT)	0.00	1	n/r	120		
BCLL	0.0 *	Rep Stress Incr	YES	WB	0.00	Horz(CT)	0.00		n/a	n/a		
BCDL	10.0	Code FBC2020/TPI2014		Matrix-P							Weight: 10 lb	FT = 20%

LUMBER-
TOP CHORD 2x4 SP No.2
BOT CHORD 2x4 SP No.2
WEBS 2x4 SP No.3

BRACING-
TOP CHORD Structural wood sheathing directly applied or 2-9-11 oc purlins, except end verticals.
BOT CHORD Rigid ceiling directly applied or 10-0-0 oc bracing.

REACTIONS. (size) 4=2-0-9, 2=2-0-9
Max Horz 2=53(LC 12)
Max Uplift 4=-33(LC 12), 2=-15(LC 12)
Max Grav 4=71(LC 19), 2=100(LC 1)

FORCES. (lb) - Max. Comp./Max. Ten. - All forces 250 (lb) or less except when shown.

NOTES-
1) Wind: ASCE 7-16; Vult=130mph (3-second gust) Vasd=101mph; TCDL=4.2psf; BCDL=3.0psf; h=20ft; Cat. II; Exp B; Encl., GCpi=0.18; MWFRS (envelope) gable end zone and C-C Exterior(2E) zone;C-C for members and forces & MWFRS for reactions shown; Lumber DOL=1.60 plate grip DOL=1.60
2) Building Designer / Project engineer responsible for verifying applied roof live load shown covers rain loading requirements specific to the use of this truss component.
3) Gable requires continuous bottom chord bearing.
4) This truss has been designed for a 10.0 psf bottom chord live load nonconcurrent with any other live loads.
5) * This truss has been designed for a live load of 20.0psf on the bottom chord in all areas where a rectangle 3-6-0 tall by 2-0-0 wide will fit between the bottom chord and any other members.
6) Provide mechanical connection (by others) of truss to bearing plate capable of withstanding 100 lb uplift at joint(s) 4, 2.
7) See Standard Industry Piggyback Truss Connection Detail for Connection to base truss as applicable, or consult qualified building designer.

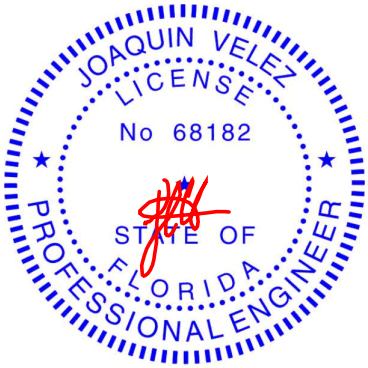

Joaquin Velez PE No.68182
MiTek USA, Inc. FL Cert 6634
6904 Parke East Blvd. Tampa FL 33610
Date:
April 7,2021

WARNING - Verify design parameters and READ NOTES ON THIS AND INCLUDED MITEK REFERENCE PAGE MII-7473 rev. 5/19/2020 BEFORE USE.
Design valid for use only with MiTek® connectors. This design is based only upon parameters shown, and is for an individual building component, not a truss system. Before use, the building designer must verify the applicability of design parameters and properly incorporate this design into the overall building design. Bracing indicated is to prevent buckling of individual truss web and/or chord members only. Additional temporary and permanent bracing is always required for stability and to prevent collapse with possible personal injury and property damage. For general guidance regarding the fabrication, storage, delivery, erection and bracing of trusses and truss systems, see ***ANSI/TPI1 Quality Criteria, DSB-89 and BCSI Building Component Safety Information*** available from Truss Plate Institute, 2670 Crain Highway, Suite 203 Waldorf, MD 20601

MiTek
6904 Parke East Blvd.
Tampa, FL 36610

Job	Truss	Truss Type	Qty	Ply	PFS SOLUTIONS - LOT 5 AL
2714379	T01	Attic	2	1	T23468868 Job Reference (optional)

Builders FirstSource (Jacksonville, FL), Jacksonville, FL - 32244, 8.430 s Mar 22 2021 MiTek Industries, Inc. Tue Apr 6 08:30:17 2021 Page 1
ID:7R_b7AxUtlWB3tgOsRwB2?zWJEt-uvwdmfWIjOa0UXHDt01Lv0AihGmyeN8MpkM12GzTUwK

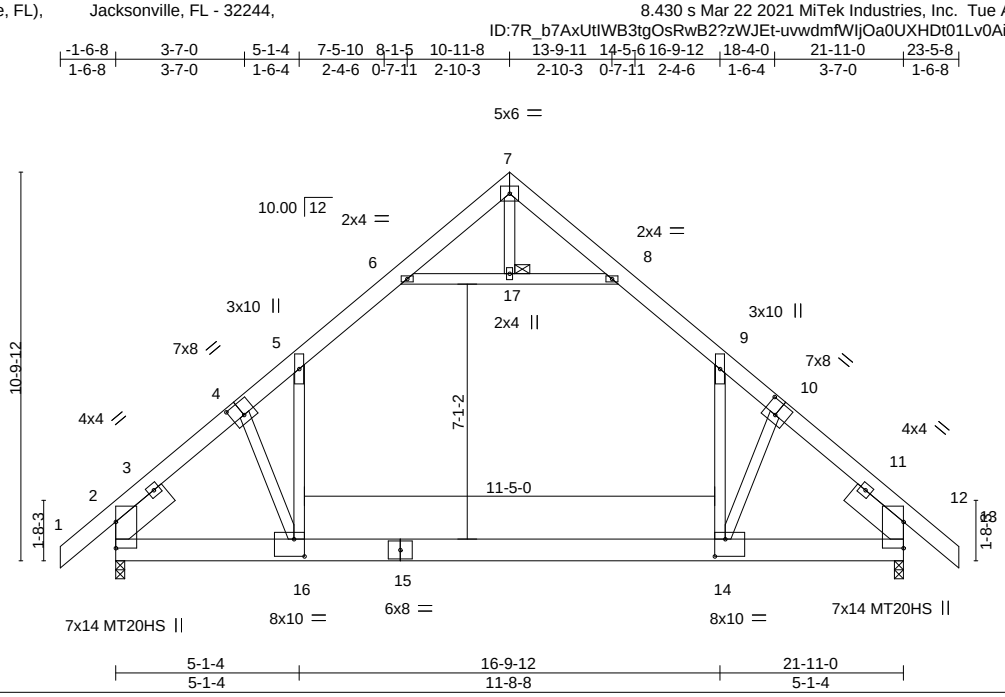

Plate Offsets (X,Y)-- [4:0-4-0,0-4-8], [10:0-4-0,0-4-8], [14:0-3-8,0-5-12], [16:0-3-8,0-5-12]

LOADING (psf)		SPACING- 2-0-0		CSI.		DEFL.	in	(loc)	l/defl	L/d	PLATES	GRIP
TCLL	20.0	Plate Grip DOL	1.25	TC	0.57	Vert(LL)	-0.27	14-16	>977	240	MT20	244/190
TCDL	7.0	Lumber DOL	1.25	BC	0.46	Vert(CT)	-0.44	14-16	>600	180	MT20HS	187/143
BCLL	0.0 *	Rep Stress Incr	YES	WB	0.50	Horz(CT)	0.02	2	n/a	n/a		
BCDL	10.0	Code FBC2020/TPI2014		Matrix-MS		Attic	-0.18	14-16	785	360	Weight: 195 lb	FT = 20%

LUMBER-

TOP CHORD	2x6 SP M 26 *Except* 1-4,10-13: 2x6 SP No.2
BOT CHORD	2x8 SP 2400F 2.0E
WEBS	2x4 SP No.3
SLIDER	Left 2x8 SP 2400F 2.0E -t 1-11-8, Right 2x8 SP 2400F 2.0E -t 1-11-8

BRACING-

TOP CHORD	Structural wood sheathing directly applied or 4-9-2 oc purlins.
BOT CHORD	Rigid ceiling directly applied or 10-0-0 oc bracing.
JOINTS	1 Brace at Jt(s): 17

REACTIONS. (size) 2=0-3-0, 12=0-3-0
Max Horz 2=-229(LC 10)
Max Uplift 2=-18(LC 12), 12=-18(LC 13)
Max Grav 2=1376(LC 20), 12=1376(LC 21)

FORCES. (lb) - Max. Comp./Max. Ten. - All forces 250 (lb) or less except when shown.

TOP CHORD	2-4=-1680/210, 4-5=-1625/2, 5-6=-1022/103, 8-9=-1021/103, 9-10=-1624/1, 10-12=-1680/211
BOT CHORD	2-16=-6/1205, 14-16=0/1105, 12-14=0/1131
WEBS	6-17=-1217/65, 8-17=-1217/65, 9-14=0/1043, 10-14=-256/176, 5-16=0/1043, 4-16=-255/175

NOTES-

1) Unbalanced roof live loads have been considered for this design.
2) Wind: ASCE 7-16; Vult=130mph (3-second gust) Vasd=101mph; TCDL=4.2psf; BCDL=3.0psf; h=20ft; Cat. II; Exp B; Encl., GCpi=0.18; MWFRS (envelope) gable end zone and C-C Exterior(2E) -1-6-8 to 1-5-8, Interior(1) 1-5-8 to 10-11-8, Exterior(2R) 10-11-8 to 14-1-9, Interior(1) 14-1-9 to 23-5-8 zone; end vertical left and right exposed;C-C for members and forces & MWFRS for reactions shown; Lumber DOL=1.60 plate grip DOL=1.60
3) Building Designer / Project engineer responsible for verifying applied roof live load shown covers rain loading requirements specific to the use of this truss component.
4) All plates are MT20 plates unless otherwise indicated.
5) This truss has been designed for a 10.0 psf bottom chord live load nonconcurrent with any other live loads.
6) * This truss has been designed for a live load of 20.0psf on the bottom chord in all areas where a rectangle 3-6-0 tall by 2-0-0 wide will fit between the bottom chord and any other members.
7) Ceiling dead load (5.0 psf) on member(s). 5-6, 8-9, 6-17, 8-17; Wall dead load (5.0psf) on member(s).9-14, 5-16
8) Bottom chord live load (40.0 psf) and additional bottom chord dead load (10.0 psf) applied only to room. 14-16
9) Provide mechanical connection (by others) of truss to bearing plate capable of withstanding 100 lb uplift at joint(s) 2, 12.
10) Attic room checked for L/360 deflection.

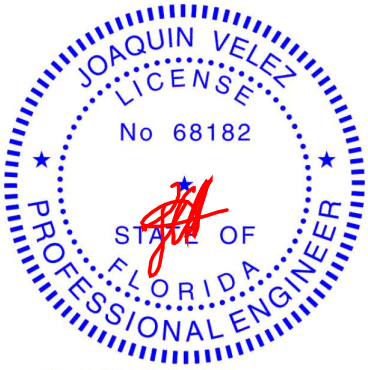

Joaquin Velez PE No.68182
MiTek USA, Inc. FL Cert 6634
6904 Parke East Blvd. Tampa FL 33610
Date:
April 7,2021

WARNING - Verify design parameters and READ NOTES ON THIS AND INCLUDED MITEK REFERENCE PAGE MII-7473 rev. 5/19/2020 BEFORE USE.
Design valid for use only with MiTek® connectors. This design is based only upon parameters shown, and is for an individual building component, not a truss system. Before use, the building designer must verify the applicability of design parameters and properly incorporate this design into the overall building design. Bracing indicated is to prevent buckling of individual truss web and/or chord members only. Additional temporary and permanent bracing is always required for stability and to prevent collapse with possible personal injury and property damage. For general guidance regarding the fabrication, storage, delivery, erection and bracing of trusses and truss systems, see ***ANSI/TPI1 Quality Criteria, DSB-89 and BCSI Building Component Safety Information*** available from Truss Plate Institute, 2670 Crain Highway, Suite 203 Waldorf, MD 20601

MiTek
6904 Parke East Blvd.
Tampa, FL 36610

Job	Truss	Truss Type	Qty	Ply	PFS SOLUTIONS - LOT 5 AL
2714379	T01G	GABLE	1	1	T23468869 Job Reference (optional)

Builders FirstSource (Jacksonville, FL), Jacksonville, FL - 32244, 8.430 s Mar 22 2021 MiTek Industries, Inc. Tue Apr 6 08:30:20 2021 Page 1
ID:7R_b7AxUtlWB3tgOsRwB2?zWJEt-JUclPhZB0JyaL_0oY9b2WeoIhTsfrqloViahebzTUwH

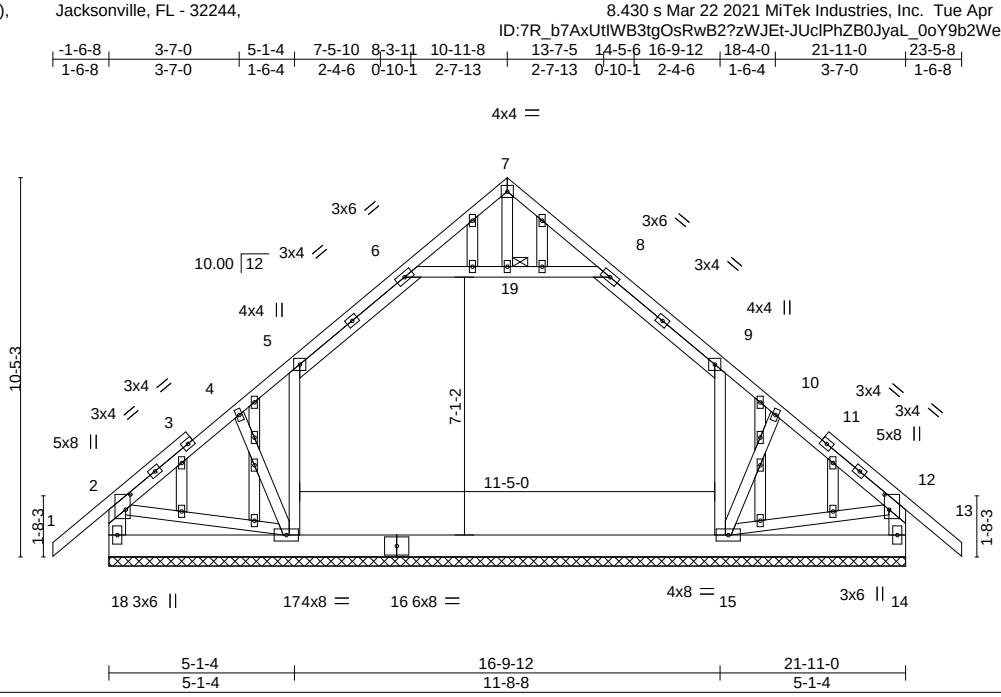

Plate Offsets (X,Y)-- [2:0-5-0,0-1-8], [12:0-5-0,0-1-8]

LOADING (psf)		SPACING-	2-0-0	CSI.		DEFL.	in	(loc)	l/defl	L/d	PLATES	GRIP
TCLL	20.0	Plate Grip DOL	1.25	TC	0.20	Vert(LL)	-0.01	13	n/r	120	MT20	244/190
TCDL	7.0	Lumber DOL	1.25	BC	0.14	Vert(CT)	-0.02	13	n/r	120		
BCLL	0.0 *	Rep Stress Incr	YES	WB	0.12	Horz(CT)	0.00	14	n/a	n/a		
BCDL	10.0	Code FBC2020/TPI2014		Matrix-S							Weight: 209 lb	FT = 20%

LUMBER-

TOP CHORD	2x4 SP No.2
BOT CHORD	2x8 SP 2400F 2.0E
WEBS	2x4 SP No.3 *Except* 2-18,12-14: 2x6 SP No.2
OTHERS	2x4 SP No.3

BRACING-

TOP CHORD	Structural wood sheathing directly applied or 6-0-0 oc purlins, except end verticals.
BOT CHORD	Rigid ceiling directly applied or 6-0-0 oc bracing.
JOINTS	1 Brace at Jt(s): 19

REACTIONS. All bearings 21-11-0.
(lb) - Max Horz 18=-259(LC 10)
Max Uplift All uplift 100 lb or less at joint(s) 18, 14 except 15=-129(LC 13), 17=-130(LC 12)
Max Grav All reactions 250 lb or less at joint(s) except 18=577(LC 1), 15=791(LC 21), 17=792(LC 20), 14=577(LC 1)

FORCES. (lb) - Max. Comp./Max. Ten. - All forces 250 (lb) or less except when shown.

TOP CHORD	2-4=-520/80, 4-5=-454/112, 5-6=-493/126, 8-9=-493/126, 9-10=-453/111, 10-12=-520/79, 2-18=-569/107, 12-14=-569/107
BOT CHORD	15-17=-31/371
WEBS	9-15=-292/141, 5-17=-292/142, 2-17=-34/371, 12-15=-41/378

NOTES-

1) Unbalanced roof live loads have been considered for this design.
2) Wind: ASCE 7-16; Vult=130mph (3-second gust) Vasd=101mph; TCDL=4.2psf; BCDL=3.0psf; h=20ft; Cat. II; Exp B; Encl., GCpi=0.18; MWFRS (envelope) gable end zone and C-C Exterior(2E) -1-6-8 to 1-5-8, Interior(1) 1-5-8 to 10-11-8, Exterior(2R) 10-11-8 to 13-10-1, Interior(1) 13-10-1 to 23-5-8 zone; end vertical left and right exposed;C-C for members and forces & MWFRS for reactions shown; Lumber DOL=1.60 plate grip DOL=1.60
3) Truss designed for wind loads in the plane of the truss only. For studs exposed to wind (normal to the face), see Standard Industry Gable End Details as applicable, or consult qualified building designer as per ANSI/TPI 1.
4) Building Designer / Project engineer responsible for verifying applied roof live load shown covers rain loading requirements specific to the use of this truss component.
5) All plates are 2x4 MT20 unless otherwise indicated.
6) Gable requires continuous bottom chord bearing.
7) Gable studs spaced at 2-0-0 oc.
8) This truss has been designed for a 10.0 psf bottom chord live load nonconcurrent with any other live loads.
9) * This truss has been designed for a live load of 20.0psf on the bottom chord in all areas where a rectangle 3-6-0 tall by 2-0-0 wide will fit between the bottom chord and any other members, with BCDL = 10.0psf.
10) Ceiling dead load (5.0 psf) on member(s). 5-6, 8-9, 6-19, 8-19; Wall dead load (5.0psf) on member(s).9-15, 5-17
11) Provide mechanical connection (by others) of truss to bearing plate capable of withstanding 100 lb uplift at joint(s) 18, 14 except (jt=lb) 15=129, 17=130.
12) Attic room checked for L/360 deflection.

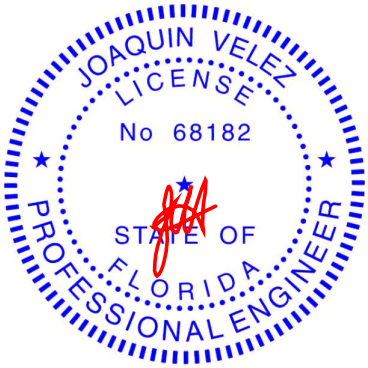

Joaquin Velez PE No.68182
MiTek USA, Inc. FL Cert 6634
6904 Parke East Blvd. Tampa FL 33610
Date:
April 7,2021

WARNING - Verify design parameters and READ NOTES ON THIS AND INCLUDED MITEK REFERENCE PAGE MII-7473 rev. 5/19/2020 BEFORE USE.
Design valid for use only with MiTek® connectors. This design is based only upon parameters shown, and is for an individual building component, not a truss system. Before use, the building designer must verify the applicability of design parameters and properly incorporate this design into the overall building design. Bracing indicated is to prevent buckling of individual truss web and/or chord members only. Additional temporary and permanent bracing is always required for stability and to prevent collapse with possible personal injury and property damage. For general guidance regarding the fabrication, storage, delivery, erection and bracing of trusses and truss systems, see ***ANSI/TPI1 Quality Criteria, DSB-89 and BCSI Building Component Safety Information*** available from Truss Plate Institute, 2670 Crain Highway, Suite 203 Waldorf, MD 20601

MiTek
6904 Parke East Blvd.
Tampa, FL 36610

Job	Truss	Truss Type	Qty	Ply	PFS SOLUTIONS - LOT 5 AL
2714379	T02	Attic	8	1	T23468870 Job Reference (optional)

Builders FirstSource (Jacksonville, FL), Jacksonville, FL - 32244, 8.430 s Mar 22 2021 MiTek Industries, Inc. Tue Apr 6 08:30:21 2021 Page 1
ID:7R_b7AxUtlWB3tgOsRwB2?zWJEt-nhA7c0Zpnc4Rz8b_6s6H3rLOgt7waBwykMKFB1zTUwG

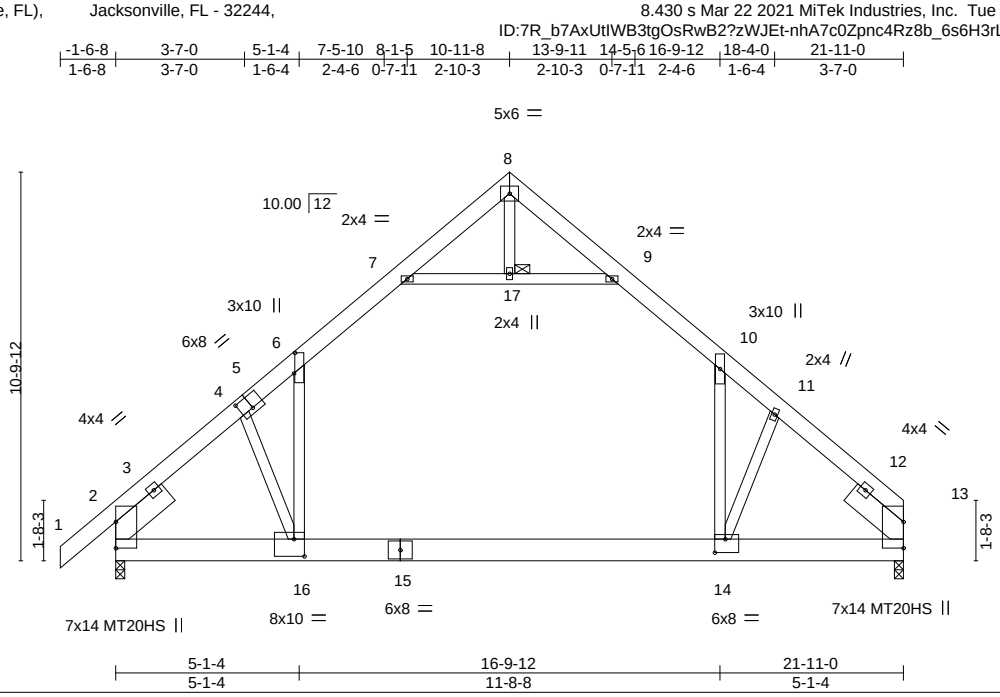

Plate Offsets (X,Y)-- [5:0-4-0,0-4-4], [6:0-6-14,0-0-5], [14:0-3-8,0-4-8], [16:0-3-8,0-5-12]

LOADING (psf)		**SPACING-** 2-0-0	**CSI.**		**DEFL.**	in	(loc)	l/defl	L/d	**PLATES**	**GRIP**
TCLL	20.0	Plate Grip DOL 1.25	TC	0.57	Vert(LL)	-0.27	14-16	>986	240	MT20	244/190
TCDL	7.0	Lumber DOL 1.25	BC	0.46	Vert(CT)	-0.43	14-16	>607	180	MT20HS	187/143
BCLL	0.0 *	Rep Stress Incr YES	WB	0.51	Horz(CT)	0.02	2	n/a	n/a		
BCDL	10.0	Code FBC2020/TPI2014	Matrix-MS		Attic	-0.18	14-16	790	360	Weight: 191 lb	FT = 20%

LUMBER-
TOP CHORD 2x6 SP M 26 *Except*
1-5: 2x6 SP No.2
BOT CHORD 2x8 SP 2400F 2.0E
WEBS 2x4 SP No.3
SLIDER Left 2x8 SP 2400F 2.0E -t 1-11-8, Right 2x8 SP 2400F 2.0E -t 1-11-8

BRACING-
TOP CHORD Structural wood sheathing directly applied or 4-8-15 oc purlins.
BOT CHORD Rigid ceiling directly applied or 10-0-0 oc bracing.
JOINTS 1 Brace at Jt(s): 17

REACTIONS. (size) 13=0-3-0, 2=0-3-0
Max Horz 2=220(LC 11)
Max Uplift 2=-18(LC 12)
Max Grav 13=1297(LC 21), 2=1378(LC 20)

FORCES. (lb) - Max. Comp./Max. Ten. - All forces 250 (lb) or less except when shown.
TOP CHORD 2-4=-1688/200, 4-6=-1638/2, 6-7=-1027/103, 9-10=-1023/103, 10-11=-1647/0, 11-13=-1698/193
BOT CHORD 2-16=-22/1197, 14-16=0/1095, 13-14=0/1126
WEBS 7-17=-1222/67, 9-17=-1222/67, 10-14=0/1073, 11-14=-286/186, 6-16=0/1060, 4-16=-274/176

NOTES-
1) Unbalanced roof live loads have been considered for this design.
2) Wind: ASCE 7-16; Vult=130mph (3-second gust) Vasd=101mph; TCDL=4.2psf; BCDL=3.0psf; h=20ft; Cat. II; Exp B; Encl., GCpi=0.18; MWFRS (envelope) gable end zone and C-C Exterior(2E) -1-6-8 to 1-5-8, Interior(1) 1-5-8 to 10-11-8, Exterior(2R) 10-11-8 to 14-1-9, Interior(1) 14-1-9 to 21-11-0 zone; end vertical left and right exposed;C-C for members and forces & MWFRS for reactions shown; Lumber DOL=1.60 plate grip DOL=1.60
3) Building Designer / Project engineer responsible for verifying applied roof live load shown covers rain loading requirements specific to the use of this truss component.
4) All plates are MT20 plates unless otherwise indicated.
5) This truss has been designed for a 10.0 psf bottom chord live load nonconcurrent with any other live loads.
6) * This truss has been designed for a live load of 20.0psf on the bottom chord in all areas where a rectangle 3-6-0 tall by 2-0-0 wide will fit between the bottom chord and any other members.
7) Ceiling dead load (5.0 psf) on member(s). 6-7, 9-10, 7-17, 9-17; Wall dead load (5.0psf) on member(s).10-14, 6-16
8) Bottom chord live load (40.0 psf) and additional bottom chord dead load (10.0 psf) applied only to room. 14-16
9) Provide mechanical connection (by others) of truss to bearing plate capable of withstanding 100 lb uplift at joint(s) 2.
10) Attic room checked for L/360 deflection.

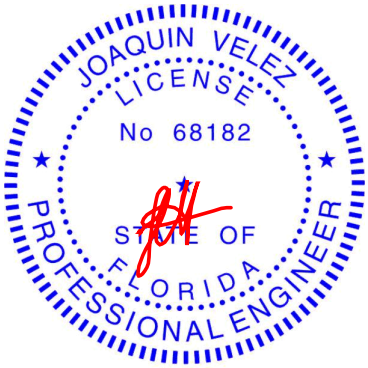

Joaquin Velez PE No.68182
MiTek USA, Inc. FL Cert 6634
6904 Parke East Blvd. Tampa FL 33610
Date:
April 7,2021

WARNING - Verify design parameters and READ NOTES ON THIS AND INCLUDED MITEK REFERENCE PAGE MII-7473 rev. 5/19/2020 BEFORE USE.
Design valid for use only with MiTek® connectors. This design is based only upon parameters shown, and is for an individual building component, not a truss system. Before use, the building designer must verify the applicability of design parameters and properly incorporate this design into the overall building design. Bracing indicated is to prevent buckling of individual truss web and/or chord members only. Additional temporary and permanent bracing is always required for stability and to prevent collapse with possible personal injury and property damage. For general guidance regarding the fabrication, storage, delivery, erection and bracing of trusses and truss systems, see ***ANSI/TPI1 Quality Criteria, DSB-89 and BCSI Building Component Safety Information*** available from Truss Plate Institute, 2670 Crain Highway, Suite 203 Waldorf, MD 20601

MiTek
6904 Parke East Blvd.
Tampa, FL 36610

Job	Truss	Truss Type	Qty	Ply	PFS SOLUTIONS - LOT 5 AL
2714379	T03	ATTIC GIRDER	1	2	T23468871 Job Reference (optional)

Builders FirstSource (Jacksonville, FL), Jacksonville, FL - 32244, 8.430 s Mar 22 2021 MiTek Industries, Inc. Tue Apr 6 08:30:22 2021 Page 1
ID:7R_b7AxUtlWB3tgOsRwB2?zWJEt-FtkVqMaRYwCIbIAAfadWc3tahHVNJgB5z03ojUzTUwF

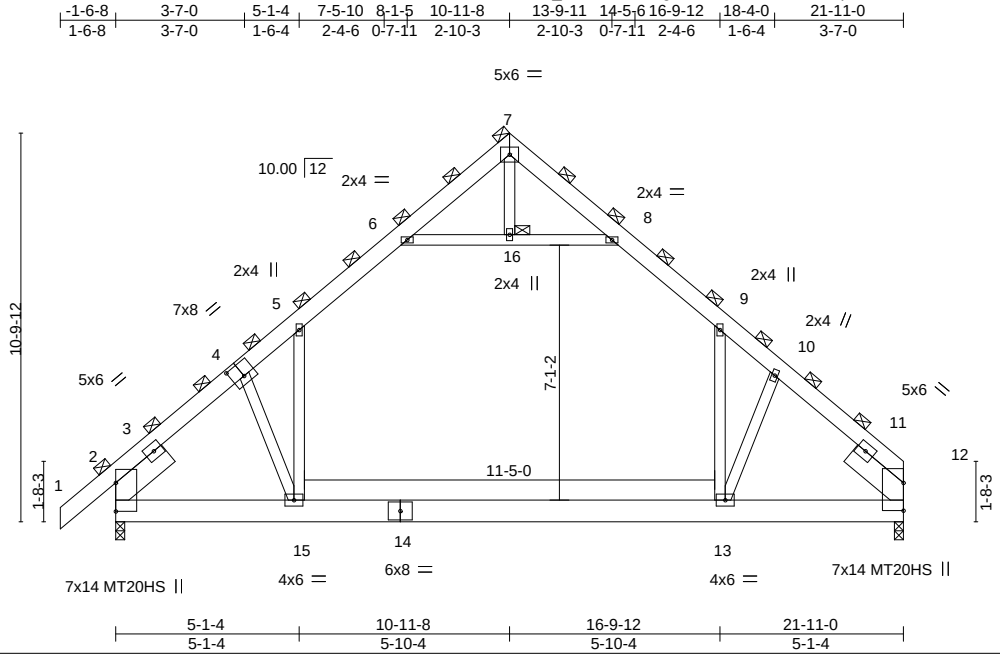

Plate Offsets (X,Y)-- [4:0-4-0,0-4-8]

LOADING (psf)		SPACING- 3-0-0		CSI.		DEFL.	in	(loc)	l/defl	L/d	PLATES	GRIP
TCLL	20.0	Plate Grip DOL	1.25	TC	0.49	Vert(LL)	-0.20	13-15	>999	240	MT20	244/190
TCDL	7.0	Lumber DOL	1.25	BC	0.38	Vert(CT)	-0.33	13-15	>790	180	MT20HS	187/143
BCLL	0.0 *	Rep Stress Incr	NO	WB	0.38	Horz(CT)	0.01	12	n/a	n/a		
BCDL	10.0	Code FBC2020/TPI2014		Matrix-MS		Attic	-0.13	13-15	1047	360	Weight: 381 lb	FT = 20%

LUMBER-

TOP CHORD	2x6 SP M 26 *Except* 1-4: 2x6 SP No.2
BOT CHORD	2x8 SP 2400F 2.0E
WEBS	2x4 SP No.3
SLIDER	Left 2x8 SP 2400F 2.0E -t 1-11-8, Right 2x8 SP 2400F 2.0E -t 1-11-8

BRACING-

TOP CHORD	2-0-0 oc purlins (6-0-0 max.) (Switched from sheeted: Spacing > 2-0-0).
BOT CHORD	Rigid ceiling directly applied or 10-0-0 oc bracing.
JOINTS	1 Brace at Jt(s): 7, 16

REACTIONS. (size) 12=0-3-0, 2=0-3-0
Max Horz 2=330(LC 5)
Max Uplift 12=-1(LC 9), 2=-105(LC 8)
Max Grav 12=1970(LC 35), 2=2149(LC 34)

FORCES. (lb) - Max. Comp./Max. Ten. - All forces 250 (lb) or less except when shown.

TOP CHORD	2-4=-2597/152, 4-5=-2514/88, 5-6=-1565/179, 6-7=-124/289, 7-8=-132/288, 8-9=-1569/188, 9-10=-2503/46, 10-12=-2593/125
BOT CHORD	2-15=-90/1829, 13-15=0/1680, 12-13=0/1711
WEBS	6-16=-1888/145, 8-16=-1888/145, 9-13=0/1600, 10-13=-413/294, 5-15=-17/1584, 4-15=-378/301

NOTES-

1) 2-ply truss to be connected together with 10d (0.131"x3") nails as follows:
   Top chords connected as follows: 2x6 - 2 rows staggered at 0-9-0 oc.
   Bottom chords connected as follows: 2x8 - 2 rows staggered at 0-9-0 oc.
   Webs connected as follows: 2x4 - 1 row at 0-9-0 oc.
2) All loads are considered equally applied to all plies, except if noted as front (F) or back (B) face in the LOAD CASE(S) section. Ply to ply connections have been provided to distribute only loads noted as (F) or (B), unless otherwise indicated.
3) Unbalanced roof live loads have been considered for this design.
4) Wind: ASCE 7-16; Vult=130mph (3-second gust) Vasd=101mph; TCDL=4.2psf; BCDL=3.0psf; h=20ft; Cat. II; Exp B; Encl., GCpi=0.18; MWFRS (envelope) gable end zone; end vertical left exposed; Lumber DOL=1.60 plate grip DOL=1.60
5) Building Designer / Project engineer responsible for verifying applied roof live load shown covers rain loading requirements specific to the use of this truss component.
6) All plates are MT20 plates unless otherwise indicated.
7) This truss has been designed for a 10.0 psf bottom chord live load nonconcurrent with any other live loads.
8) * This truss has been designed for a live load of 20.0psf on the bottom chord in all areas where a rectangle 3-6-0 tall by 2-0-0 wide will fit between the bottom chord and any other members.
9) Ceiling dead load (5.0 psf) on member(s). 5-6, 8-9, 6-16, 8-16; Wall dead load (5.0psf) on member(s).9-13, 5-15
10) Bottom chord live load (40.0 psf) and additional bottom chord dead load (10.0 psf) applied only to room. 13-15
11) Provide mechanical connection (by others) of truss to bearing plate capable of withstanding 100 lb uplift at joint(s) 12 except (jt=lb) 2=105.
12) Graphical purlin representation does not depict the size or the orientation of the purlin along the top and/or bottom chord.
13) Hanger(s) or other connection device(s) shall be provided sufficient to support concentrated load(s) 134 lb down and 123 lb up at 4-10-12 on bottom chord. The design/selection of such connection device(s) is the responsibility of others.

Continued on page 2

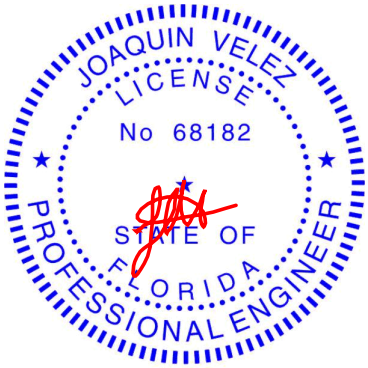

Joaquin Velez PE No.68182
MiTek USA, Inc. FL Cert 6634
6904 Parke East Blvd. Tampa FL 33610
Date: April 7,2021

WARNING - Verify design parameters and READ NOTES ON THIS AND INCLUDED MITEK REFERENCE PAGE MII-7473 rev. 5/19/2020 BEFORE USE.
Design valid for use only with MiTek® connectors. This design is based only upon parameters shown, and is for an individual building component, not a truss system. Before use, the building designer must verify the applicability of design parameters and properly incorporate this design into the overall building design. Bracing indicated is to prevent buckling of individual truss web and/or chord members only. Additional temporary and permanent bracing is always required for stability and to prevent collapse with possible personal injury and property damage. For general guidance regarding the fabrication, storage, delivery, erection and bracing of trusses and truss systems, see ***ANSI/TPI1 Quality Criteria, DSB-89 and BCSI Building Component Safety Information*** available from Truss Plate Institute, 2670 Crain Highway, Suite 203 Waldorf, MD 20601

MiTek
6904 Parke East Blvd.
Tampa, FL 36610

NOTES-

14) Attic room checked for L/360 deflection.

LOAD CASE(S) Standard

1) Dead + Roof Live (balanced): Lumber Increase=1.25, Plate Increase=1.25
   Uniform Loads (plf)
   Vert: 1-5=-81, 5-6=-96, 6-7=-81, 7-8=-81, 8-9=-96, 9-12=-81, 15-21=-30, 13-15=-60, 13-17=-30, 6-8=-15
   Drag: 9-13=-15, 5-15=-15
   Concentrated Loads (lb)
   Vert: 15=-134(B)

WARNING - Verify design parameters and READ NOTES ON THIS AND INCLUDED MITEK REFERENCE PAGE MII-7473 rev. 5/19/2020 BEFORE USE.
Design valid for use only with MiTek® connectors. This design is based only upon parameters shown, and is for an individual building component, not a truss system. Before use, the building designer must verify the applicability of design parameters and properly incorporate this design into the overall building design. Bracing indicated is to prevent buckling of individual truss web and/or chord members only. Additional temporary and permanent bracing is always required for stability and to prevent collapse with possible personal injury and property damage. For general guidance regarding the fabrication, storage, delivery, erection and bracing of trusses and truss systems, see ***ANSI/TPI1 Quality Criteria, DSB-89 and BCSI Building Component Safety Information*** available from Truss Plate Institute, 2670 Crain Highway, Suite 203 Waldorf, MD 20601

MiTek
6904 Parke East Blvd.
Tampa, FL 36610

Job	Truss	Truss Type	Qty	Ply	PFS SOLUTIONS - LOT 5 AL
2714379	T04	MONOPITCH GIRDER	1	2	T23468872 Job Reference (optional)

Builders FirstSource (Jacksonville, FL), Jacksonville, FL - 32244, 8.430 s Mar 22 2021 MiTek Industries, Inc. Tue Apr 6 08:30:23 2021 Page 1
ID:7R_b7AxUtlWB3tgOsRwB2?zWJEt-j3Iu1ib3JEK9CSlNDH8l8GQr8hvN2BxFBgpLFwzTUwE

Scale = 1:56.0

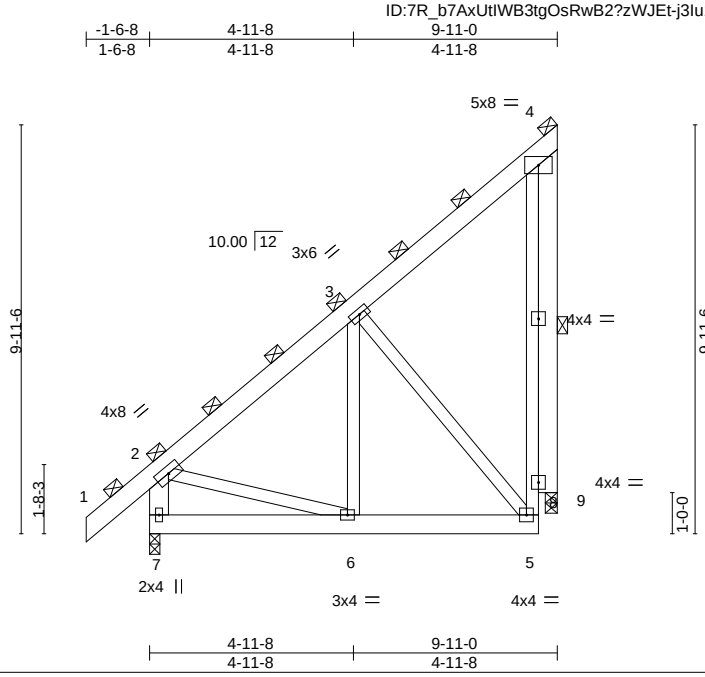

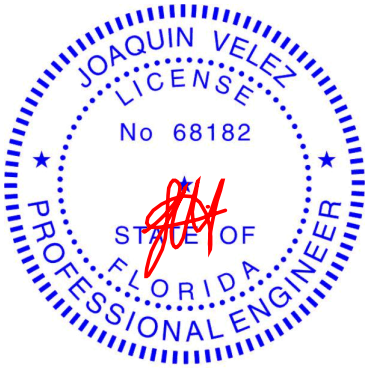

Joaquin Velez PE No.68182
MiTek USA, Inc. FL Cert 6634
6904 Parke East Blvd. Tampa FL 33610
Date:

LOADING (psf)		SPACING-	3-0-0	CSI.		DEFL.	in	(loc)	l/defl	L/d	PLATES	GRIP
TCLL	20.0	Plate Grip DOL	1.25	TC	0.13	Vert(LL)	0.01	6	>999	240	MT20	244/190
TCDL	7.0	Lumber DOL	1.25	BC	0.08	Vert(CT)	-0.01	5-6	>999	180		
BCLL	0.0 *	Rep Stress Incr	NO	WB	0.09	Horz(CT)	-0.00	9	n/a	n/a		
BCDL	10.0	Code FBC2020/TPI2014		Matrix-MS							Weight: 231 lb	FT = 20%

LUMBER-
TOP CHORD 2x6 SP No.2
BOT CHORD 2x6 SP No.2
WEBS 2x4 SP No.3 *Except*
2-7: 2x6 SP No.2
OTHERS 2x6 SP No.2

BRACING-
TOP CHORD 2-0-0 oc purlins (6-0-0 max.), except end verticals
(Switched from sheeted: Spacing > 2-0-0).
BOT CHORD Rigid ceiling directly applied or 10-0-0 oc bracing.
WEBS 1 Row at midpt 4-9

REACTIONS. (size) 7=0-3-0, 9=0-3-8
Max Horz 7=432(LC 8)
Max Uplift 7=-45(LC 8), 9=-390(LC 8)
Max Grav 7=754(LC 1), 9=578(LC 29)

FORCES. (lb) - Max. Comp./Max. Ten. - All forces 250 (lb) or less except when shown.
TOP CHORD 2-3=-543/13, 5-8=-276/443, 4-8=-276/443, 2-7=-683/63
BOT CHORD 6-7=-436/216, 5-6=-260/350
WEBS 3-6=-102/324, 3-5=-493/369, 2-6=-44/331, 4-9=-579/391

NOTES-
1) 2-ply truss to be connected together with 10d (0.131"x3") nails as follows:
Top chords connected as follows: 2x6 - 2 rows staggered at 0-9-0 oc, 2x4 - 1 row at 0-9-0 oc.
Bottom chords connected as follows: 2x6 - 2 rows staggered at 0-9-0 oc.
Webs connected as follows: 2x4 - 1 row at 0-9-0 oc.
2) All loads are considered equally applied to all plies, except if noted as front (F) or back (B) face in the LOAD CASE(S) section. Ply to ply connections have been provided to distribute only loads noted as (F) or (B), unless otherwise indicated.
3) Wind: ASCE 7-16; Vult=130mph (3-second gust) Vasd=101mph; TCDL=4.2psf; BCDL=3.0psf; h=20ft; Cat. II; Exp B; Encl., GCpi=0.18; MWFRS (envelope) gable end zone; end vertical left exposed; Lumber DOL=1.60 plate grip DOL=1.60
4) Building Designer / Project engineer responsible for verifying applied roof live load shown covers rain loading requirements specific to the use of this truss component.
5) This truss has been designed for a 10.0 psf bottom chord live load nonconcurrent with any other live loads.
6) * This truss has been designed for a live load of 20.0psf on the bottom chord in all areas where a rectangle 3-6-0 tall by 2-0-0 wide will fit between the bottom chord and any other members.
7) Bearing at joint(s) 9 considers parallel to grain value using ANSI/TPI 1 angle to grain formula. Building designer should verify capacity of bearing surface.
8) Provide mechanical connection (by others) of truss to bearing plate capable of withstanding 100 lb uplift at joint(s) 7 except (jt=lb) 9=390.
9) Graphical purlin representation does not depict the size or the orientation of the purlin along the top and/or bottom chord.
10) Hanger(s) or other connection device(s) shall be provided sufficient to support concentrated load(s) 137 lb down and 127 lb up at 4-10-12 on bottom chord. The design/selection of such connection device(s) is the responsibility of others.

LOAD CASE(S) Standard

April 7,2021

Continued on page 2

WARNING - Verify design parameters and READ NOTES ON THIS AND INCLUDED MITEK REFERENCE PAGE MII-7473 rev. 5/19/2020 BEFORE USE.
Design valid for use only with MiTek® connectors. This design is based only upon parameters shown, and is for an individual building component, not a truss system. Before use, the building designer must verify the applicability of design parameters and properly incorporate this design into the overall building design. Bracing indicated is to prevent buckling of individual truss web and/or chord members only. Additional temporary and permanent bracing is always required for stability and to prevent collapse with possible personal injury and property damage. For general guidance regarding the fabrication, storage, delivery, erection and bracing of trusses and truss systems, see ***ANSI/TPI1 Quality Criteria, DSB-89 and BCSI Building Component Safety Information*** available from Truss Plate Institute, 2670 Crain Highway, Suite 203 Waldorf, MD 20601

MiTek
6904 Parke East Blvd.
Tampa, FL 36610

LOAD CASE(S) Standard

1) Dead + Roof Live (balanced): Lumber Increase=1.25, Plate Increase=1.25
   Uniform Loads (plf)
   Vert: 1-2=-81, 2-4=-81, 5-7=-30
   Concentrated Loads (lb)
   Vert: 6=-137(F)

WARNING - Verify design parameters and READ NOTES ON THIS AND INCLUDED MITEK REFERENCE PAGE MII-7473 rev. 5/19/2020 BEFORE USE.
Design valid for use only with MiTek® connectors. This design is based only upon parameters shown, and is for an individual building component, not a truss system. Before use, the building designer must verify the applicability of design parameters and properly incorporate this design into the overall building design. Bracing indicated is to prevent buckling of individual truss web and/or chord members only. Additional temporary and permanent bracing is always required for stability and to prevent collapse with possible personal injury and property damage. For general guidance regarding the fabrication, storage, delivery, erection and bracing of trusses and truss systems, see ***ANSI/TPI1 Quality Criteria, DSB-89 and BCSI Building Component Safety Information*** available from Truss Plate Institute, 2670 Crain Highway, Suite 203 Waldorf, MD 20601

MiTek
6904 Parke East Blvd.
Tampa, FL 36610

Job	Truss	Truss Type	Qty	Ply	PFS SOLUTIONS - LOT 5 AL
2714379	T04A	Jack-Open	1	1	T23468873 Job Reference (optional)

Builders FirstSource (Jacksonville, FL), Jacksonville, FL - 32244, 8.430 s Mar 22 2021 MiTek Industries, Inc. Tue Apr 6 08:30:24 2021 Page 1
ID:7R_b7AxUtlWB3tgOsRwB2?zWJEt-BGsGE2ch4XS0qcKZn_f_hUzxO5Dtne5OQKYvnMzTUwD

Scale = 1:31.6

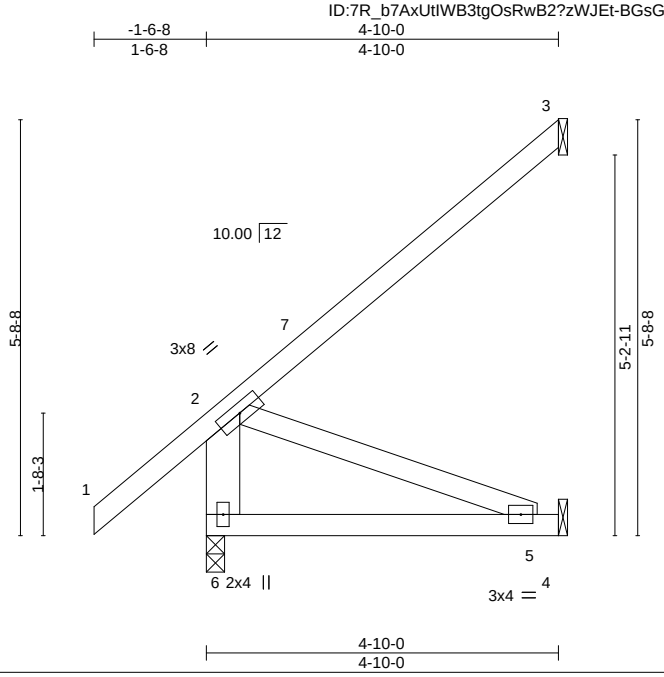

LOADING (psf)		SPACING- 2-0-0		CSI.		DEFL.	in	(loc)	l/defl	L/d	PLATES	GRIP
TCLL	20.0	Plate Grip DOL	1.25	TC	0.41	Vert(LL)	-0.03	5-6	>999	240	MT20	244/190
TCDL	7.0	Lumber DOL	1.25	BC	0.25	Vert(CT)	-0.05	5-6	>999	180		
BCLL	0.0 *	Rep Stress Incr	YES	WB	0.10	Horz(CT)	-0.01	3	n/a	n/a		
BCDL	10.0	Code FBC2020/TPI2014		Matrix-MP							Weight: 30 lb	FT = 20%

LUMBER-
TOP CHORD 2x4 SP No.2
BOT CHORD 2x4 SP No.2
WEBS 2x6 SP No.2 *Except*
2-5: 2x4 SP No.3

BRACING-
TOP CHORD Structural wood sheathing directly applied or 4-10-0 oc purlins, except end verticals.
BOT CHORD Rigid ceiling directly applied or 10-0-0 oc bracing.

REACTIONS. (size) 6=0-3-0, 3=Mechanical, 4=Mechanical
Max Horz 6=156(LC 12)
Max Uplift 3=-99(LC 12), 4=-42(LC 12)
Max Grav 6=282(LC 1), 3=117(LC 19), 4=91(LC 3)

FORCES. (lb) - Max. Comp./Max. Ten. - All forces 250 (lb) or less except when shown.
BOT CHORD 5-6=-311/139
WEBS 2-5=-148/330

NOTES-
1) Wind: ASCE 7-16; Vult=130mph (3-second gust) Vasd=101mph; TCDL=4.2psf; BCDL=3.0psf; h=20ft; Cat. II; Exp B; Encl., GCpi=0.18; MWFRS (envelope) gable end zone and C-C Exterior(2E) -1-6-8 to 1-5-8, Interior(1) 1-5-8 to 4-9-4 zone; end vertical left exposed;C-C for members and forces & MWFRS for reactions shown; Lumber DOL=1.60 plate grip DOL=1.60
2) Building Designer / Project engineer responsible for verifying applied roof live load shown covers rain loading requirements specific to the use of this truss component.
3) This truss has been designed for a 10.0 psf bottom chord live load nonconcurrent with any other live loads.
4) * This truss has been designed for a live load of 20.0psf on the bottom chord in all areas where a rectangle 3-6-0 tall by 2-0-0 wide will fit between the bottom chord and any other members.
5) Refer to girder(s) for truss to truss connections.
6) Provide mechanical connection (by others) of truss to bearing plate capable of withstanding 100 lb uplift at joint(s) 3, 4.

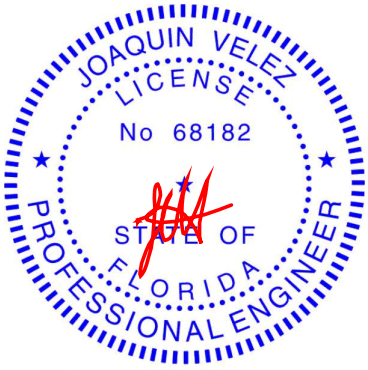

Joaquin Velez PE No.68182
MiTek USA, Inc. FL Cert 6634
6904 Parke East Blvd. Tampa FL 33610
Date:
April 7,2021

WARNING - Verify design parameters and READ NOTES ON THIS AND INCLUDED MITEK REFERENCE PAGE MII-7473 rev. 5/19/2020 BEFORE USE.
Design valid for use only with MiTek® connectors. This design is based only upon parameters shown, and is for an individual building component, not a truss system. Before use, the building designer must verify the applicability of design parameters and properly incorporate this design into the overall building design. Bracing indicated is to prevent buckling of individual truss web and/or chord members only. Additional temporary and permanent bracing is always required for stability and to prevent collapse with possible personal injury and property damage. For general guidance regarding the fabrication, storage, delivery, erection and bracing of trusses and truss systems, see ***ANSI/TPI1 Quality Criteria, DSB-89 and BCSI Building Component Safety Information*** available from Truss Plate Institute, 2670 Crain Highway, Suite 203 Waldorf, MD 20601

MiTek
6904 Parke East Blvd.
Tampa, FL 36610

Job	Truss	Truss Type	Qty	Ply	PFS SOLUTIONS - LOT 5 AL
2714379	T05	Monopitch	1	1	T23468874 Job Reference (optional)

Builders FirstSource (Jacksonville, FL), Jacksonville, FL - 32244, 8.430 s Mar 22 2021 MiTek Industries, Inc. Tue Apr 6 08:30:25 2021 Page 1
ID:7R_b7AxUtlWB3tgOsRwB2?zWJEt-fSPeSOdJrratSlvlLiADDhV9mUYPW2VXf_ISKpzTUwC

Scale = 1:53.1

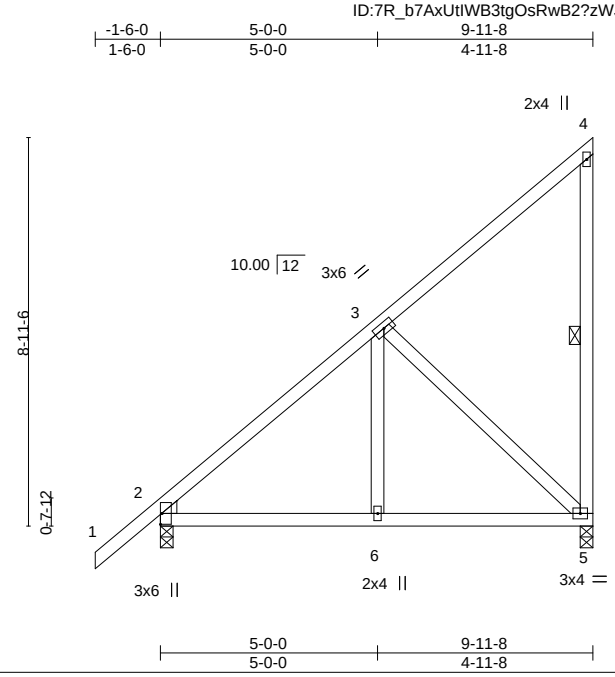

LOADING (psf)		SPACING- 2-0-0		CSI.		DEFL. in (loc) l/defl L/d		PLATES GRIP
TCLL	20.0	Plate Grip DOL	1.25	TC	0.25	Vert(LL) 0.02 6-9 >999 240		MT20 244/190
TCDL	7.0	Lumber DOL	1.25	BC	0.23	Vert(CT) -0.03 5-6 >999 180		
BCLL	0.0 *	Rep Stress Incr	YES	WB	0.28	Horz(CT) 0.01 2 n/a n/a		
BCDL	10.0	Code FBC2020/TPI2014		Matrix-MS				Weight: 66 lb FT = 20%

LUMBER-
TOP CHORD 2x4 SP No.2
BOT CHORD 2x4 SP No.2
WEBS 2x4 SP No.3
WEDGE
Left: 2x4 SP No.3

BRACING-
TOP CHORD Structural wood sheathing directly applied or 6-0-0 oc purlins, except end verticals.
BOT CHORD Rigid ceiling directly applied or 10-0-0 oc bracing.
WEBS 1 Row at midpt 4-5

REACTIONS. (size) 2=0-3-8, 5=0-3-8
Max Horz 2=318(LC 12)
Max Uplift 2=-7(LC 12), 5=-221(LC 12)
Max Grav 2=450(LC 1), 5=388(LC 19)

FORCES. (lb) - Max. Comp./Max. Ten. - All forces 250 (lb) or less except when shown.
TOP CHORD 2-3=-372/0
BOT CHORD 2-6=-186/257, 5-6=-186/257
WEBS 3-5=-346/250

NOTES-
1) Wind: ASCE 7-16; Vult=130mph (3-second gust) Vasd=101mph; TCDL=4.2psf; BCDL=3.0psf; h=20ft; Cat. II; Exp B; Encl., GCpi=0.18; MWFRS (envelope) gable end zone and C-C Exterior(2E) -1-6-0 to 1-6-0, Interior(1) 1-6-0 to 9-9-12 zone;C-C for members and forces & MWFRS for reactions shown; Lumber DOL=1.60 plate grip DOL=1.60
2) Building Designer / Project engineer responsible for verifying applied roof live load shown covers rain loading requirements specific to the use of this truss component.
3) This truss has been designed for a 10.0 psf bottom chord live load nonconcurrent with any other live loads.
4) * This truss has been designed for a live load of 20.0psf on the bottom chord in all areas where a rectangle 3-6-0 tall by 2-0-0 wide will fit between the bottom chord and any other members.
5) Provide mechanical connection (by others) of truss to bearing plate capable of withstanding 100 lb uplift at joint(s) 2 except (jt=lb) 5=221.

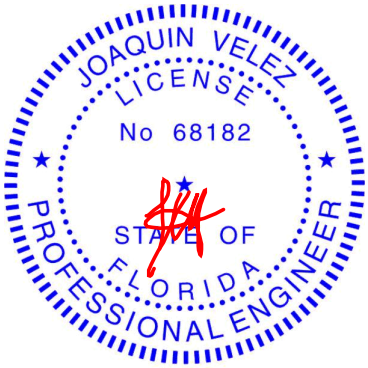

Joaquin Velez PE No.68182
MiTek USA, Inc. FL Cert 6634
6904 Parke East Blvd. Tampa FL 33610
Date:
April 7,2021

WARNING - Verify design parameters and READ NOTES ON THIS AND INCLUDED MITEK REFERENCE PAGE MII-7473 rev. 5/19/2020 BEFORE USE.
Design valid for use only with MiTek® connectors. This design is based only upon parameters shown, and is for an individual building component, not a truss system. Before use, the building designer must verify the applicability of design parameters and properly incorporate this design into the overall building design. Bracing indicated is to prevent buckling of individual truss web and/or chord members only. Additional temporary and permanent bracing is always required for stability and to prevent collapse with possible personal injury and property damage. For general guidance regarding the fabrication, storage, delivery, erection and bracing of trusses and truss systems, see ***ANSI/TPI1 Quality Criteria, DSB-89 and BCSI Building Component Safety Information*** available from Truss Plate Institute, 2670 Crain Highway, Suite 203 Waldorf, MD 20601

MiTek
6904 Parke East Blvd.
Tampa, FL 36610

Job	Truss	Truss Type	Qty	Ply	PFS SOLUTIONS - LOT 5 AL
2714379	T06	Monopitch Girder	1	1	T23468875 Job Reference (optional)

Builders FirstSource (Jacksonville, FL), Jacksonville, FL - 32244, 8.430 s Mar 22 2021 MiTek Industries, Inc. Tue Apr 6 08:30:26 2021 Page 1
ID:7R_b7AxUtIWB3tgOsRwB2?zWJEt-7ez0fkdxc9ik3vTyuPiSmv2LXusQFKuhte10sFzTUwB

Scale = 1:53.1

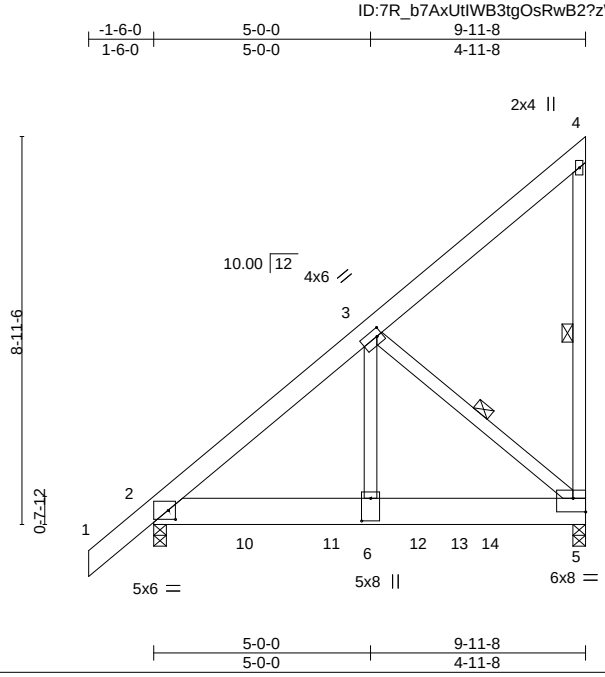

Plate Offsets (X,Y)-- [2:0-2-0,0-2-8], [3:0-1-8,0-2-0], [5:Edge,0-3-12], [6:0-6-4,0-2-8]

LOADING (psf)		SPACING- 2-0-0		CSI.		DEFL.	in	(loc)	l/defl	L/d	PLATES	GRIP
TCLL	20.0	Plate Grip DOL	1.25	TC	0.18	Vert(LL)	-0.04	5-6	>999	240	MT20	244/190
TCDL	7.0	Lumber DOL	1.25	BC	0.37	Vert(CT)	-0.07	5-6	>999	180		
BCLL	0.0 *	Rep Stress Incr	NO	WB	0.98	Horz(CT)	0.01	5	n/a	n/a		
BCDL	10.0	Code FBC2020/TPI2014		Matrix-MS							Weight: 92 lb	FT = 20%

LUMBER-
TOP CHORD 2x6 SP No.2
BOT CHORD 2x8 SP 2400F 2.0E
WEBS 2x4 SP No.3

BRACING-
TOP CHORD Structural wood sheathing directly applied or 4-9-7 oc purlins, except end verticals.
BOT CHORD Rigid ceiling directly applied or 10-0-0 oc bracing.
WEBS 1 Row at midpt 4-5, 3-5

REACTIONS. (size) 2=0-3-8, 5=0-3-8
Max Horz 2=318(LC 8)
Max Uplift 2=-413(LC 8), 5=-741(LC 8)
Max Grav 2=1997(LC 1), 5=2153(LC 1)

FORCES. (lb) - Max. Comp./Max. Ten. - All forces 250 (lb) or less except when shown.
TOP CHORD 2-3=-2228/464
BOT CHORD 2-6=-543/1688, 5-6=-543/1688
WEBS 3-6=-652/2561, 3-5=-2235/718

NOTES-
1) Wind: ASCE 7-16; Vult=130mph (3-second gust) Vasd=101mph; TCDL=4.2psf; BCDL=3.0psf; h=20ft; Cat. II; Exp B; Encl., GCpi=0.18; MWFRS (envelope) gable end zone; Lumber DOL=1.60 plate grip DOL=1.60
2) Building Designer / Project engineer responsible for verifying applied roof live load shown covers rain loading requirements specific to the use of this truss component.
3) This truss has been designed for a 10.0 psf bottom chord live load nonconcurrent with any other live loads.
4) * This truss has been designed for a live load of 20.0psf on the bottom chord in all areas where a rectangle 3-6-0 tall by 2-0-0 wide will fit between the bottom chord and any other members.
5) Provide mechanical connection (by others) of truss to bearing plate capable of withstanding 100 lb uplift at joint(s) except (jt=lb) 2=413, 5=741.
6) Hanger(s) or other connection device(s) shall be provided sufficient to support concentrated load(s) 656 lb down and 163 lb up at 2-0-12, 677 lb down and 164 lb up at 4-0-12, 677 lb down and 164 lb up at 6-0-12, and 733 lb down and 256 lb up at 6-4-12, and 741 lb down and 249 lb up at 7-8-12 on bottom chord. The design/selection of such connection device(s) is the responsibility of others.
7) In the LOAD CASE(S) section, loads applied to the face of the truss are noted as front (F) or back (B).

LOAD CASE(S) Standard
1) Dead + Roof Live (balanced): Lumber Increase=1.25, Plate Increase=1.25
Uniform Loads (plf)
Vert: 1-4=-54, 5-7=-20
Concentrated Loads (lb)
Vert: 10=-656(B) 11=-677(B) 12=-677(B) 13=-664(B) 14=-669(B)

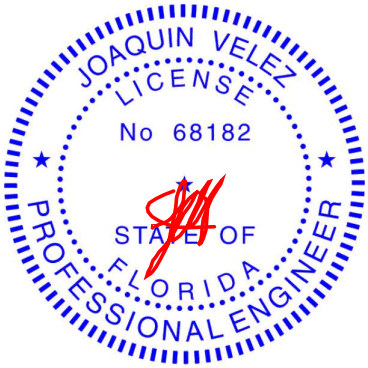

Joaquin Velez PE No.68182
MiTek USA, Inc. FL Cert 6634
6904 Parke East Blvd. Tampa FL 33610
Date:
April 7,2021

WARNING - Verify design parameters and READ NOTES ON THIS AND INCLUDED MITEK REFERENCE PAGE MII-7473 rev. 5/19/2020 BEFORE USE.
Design valid for use only with MiTek® connectors. This design is based only upon parameters shown, and is for an individual building component, not a truss system. Before use, the building designer must verify the applicability of design parameters and properly incorporate this design into the overall building design. Bracing indicated is to prevent buckling of individual truss web and/or chord members only. Additional temporary and permanent bracing is always required for stability and to prevent collapse with possible personal injury and property damage. For general guidance regarding the fabrication, storage, delivery, erection and bracing of trusses and truss systems, see ***ANSI/TPI1 Quality Criteria, DSB-89 and BCSI Building Component Safety Information*** available from Truss Plate Institute, 2670 Crain Highway, Suite 203 Waldorf, MD 20601

MiTek
6904 Parke East Blvd.
Tampa, FL 36610

Job	Truss	Truss Type	Qty	Ply	PFS SOLUTIONS - LOT 5 AL
2714379	T07	Common	2	1	T23468876 Job Reference (optional)

Builders FirstSource (Jacksonville, FL), Jacksonville, FL - 32244, 8.430 s Mar 22 2021 MiTek Industries, Inc. Tue Apr 6 08:30:27 2021 Page 1
ID:7R_b7AxUtIWB3tgOsRwB2?zWJEt-brXOt4eaNSqbh328S7DhJ6bRtICj_?jq6InZOhzTUwA

Scale = 1:38.4

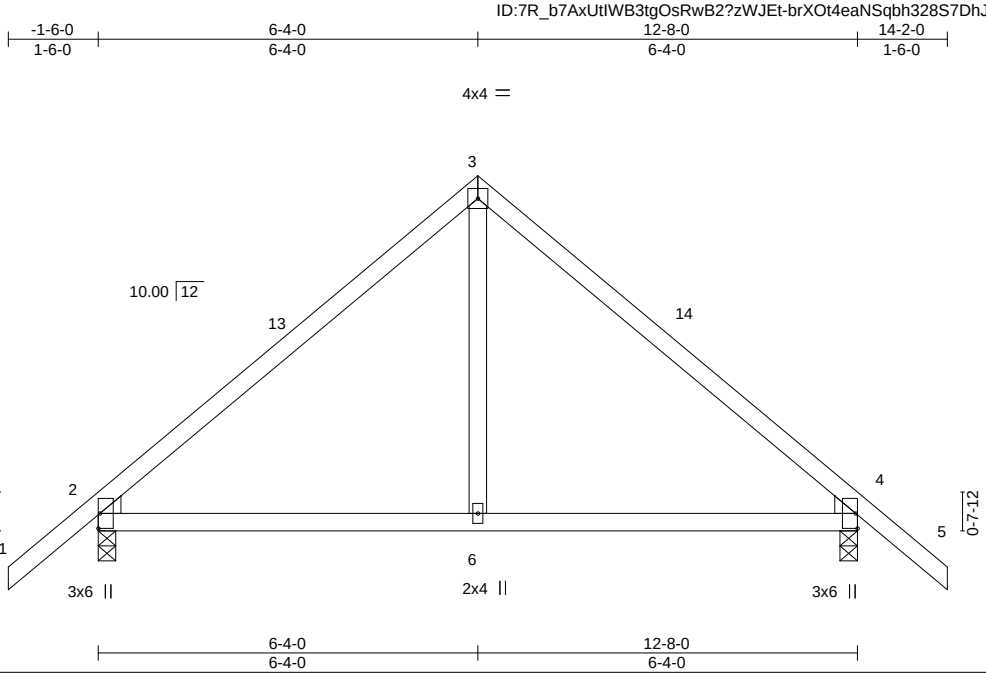

LOADING (psf)		SPACING-	2-0-0	CSI.		DEFL.	in	(loc)	l/defl	L/d	PLATES	GRIP
TCLL	20.0	Plate Grip DOL	1.25	TC	0.40	Vert(LL)	0.06	6-9	>999	240	MT20	244/190
TCDL	7.0	Lumber DOL	1.25	BC	0.37	Vert(CT)	-0.07	6-12	>999	180		
BCLL	0.0 *	Rep Stress Incr	YES	WB	0.11	Horz(CT)	0.01	4	n/a	n/a		
BCDL	10.0	Code FBC2020/TPI2014		Matrix-MS							Weight: 59 lb	FT = 20%

LUMBER-
TOP CHORD 2x4 SP No.2
BOT CHORD 2x4 SP No.2
WEBS 2x4 SP No.3
WEDGE
Left: 2x4 SP No.3 , Right: 2x4 SP No.3

BRACING-
TOP CHORD Structural wood sheathing directly applied or 6-0-0 oc purlins.
BOT CHORD Rigid ceiling directly applied or 10-0-0 oc bracing.

REACTIONS. (size) 2=0-3-8, 4=0-3-8
Max Horz 2=144(LC 11)
Max Uplift 2=-118(LC 12), 4=-118(LC 13)
Max Grav 2=550(LC 1), 4=550(LC 1)

FORCES. (lb) - Max. Comp./Max. Ten. - All forces 250 (lb) or less except when shown.
TOP CHORD 2-3=-488/162, 3-4=-488/162
BOT CHORD 2-6=-12/316, 4-6=-12/316
WEBS 3-6=-14/281

NOTES-
1) Unbalanced roof live loads have been considered for this design.
2) Wind: ASCE 7-16; Vult=130mph (3-second gust) Vasd=101mph; TCDL=4.2psf; BCDL=3.0psf; h=20ft; Cat. II; Exp B; Encl., GCpi=0.18; MWFRS (envelope) gable end zone and C-C Exterior(2E) -1-6-0 to 1-6-0, Interior(1) 1-6-0 to 6-4-0, Exterior(2R) 6-4-0 to 9-4-0, Interior(1) 9-4-0 to 14-2-0 zone;C-C for members and forces & MWFRS for reactions shown; Lumber DOL=1.60 plate grip DOL=1.60
3) Building Designer / Project engineer responsible for verifying applied roof live load shown covers rain loading requirements specific to the use of this truss component.
4) This truss has been designed for a 10.0 psf bottom chord live load nonconcurrent with any other live loads.
5) * This truss has been designed for a live load of 20.0psf on the bottom chord in all areas where a rectangle 3-6-0 tall by 2-0-0 wide will fit between the bottom chord and any other members.
6) Provide mechanical connection (by others) of truss to bearing plate capable of withstanding 100 lb uplift at joint(s) except (jt=lb) 2=118, 4=118.

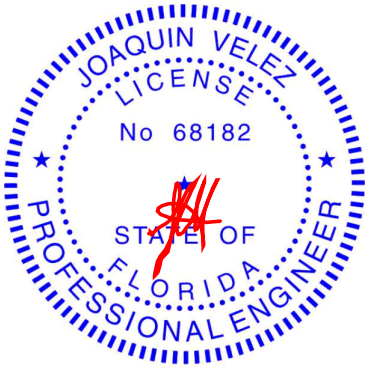

Joaquin Velez PE No.68182
MiTek USA, Inc. FL Cert 6634
6904 Parke East Blvd. Tampa FL 33610
Date:
April 7,2021

WARNING - Verify design parameters and READ NOTES ON THIS AND INCLUDED MITEK REFERENCE PAGE MII-7473 rev. 5/19/2020 BEFORE USE.
Design valid for use only with MiTek® connectors. This design is based only upon parameters shown, and is for an individual building component, not a truss system. Before use, the building designer must verify the applicability of design parameters and properly incorporate this design into the overall building design. Bracing indicated is to prevent buckling of individual truss web and/or chord members only. Additional temporary and permanent bracing is always required for stability and to prevent collapse with possible personal injury and property damage. For general guidance regarding the fabrication, storage, delivery, erection and bracing of trusses and truss systems, see ***ANSI/TPI1 Quality Criteria, DSB-89 and BCSI Building Component Safety Information*** available from Truss Plate Institute, 2670 Crain Highway, Suite 203 Waldorf, MD 20601

MiTek
6904 Parke East Blvd.
Tampa, FL 36610

Job	Truss	Truss Type	Qty	Ply	PFS SOLUTIONS - LOT 5 AL
2714379	T07G	Common Supported Gable	1	1	T23468877 Job Reference (optional)

Builders FirstSource (Jacksonville, FL), Jacksonville, FL - 32244, 8.430 s Mar 22 2021 MiTek Industries, Inc. Tue Apr 6 08:30:28 2021 Page 1
ID:7R_b7AxUtIWB3tgOsRwB2?zWJEt-415n4QfC8mySJDdK0qkwrK7fnid0jSq_LyW6w7zTUw9

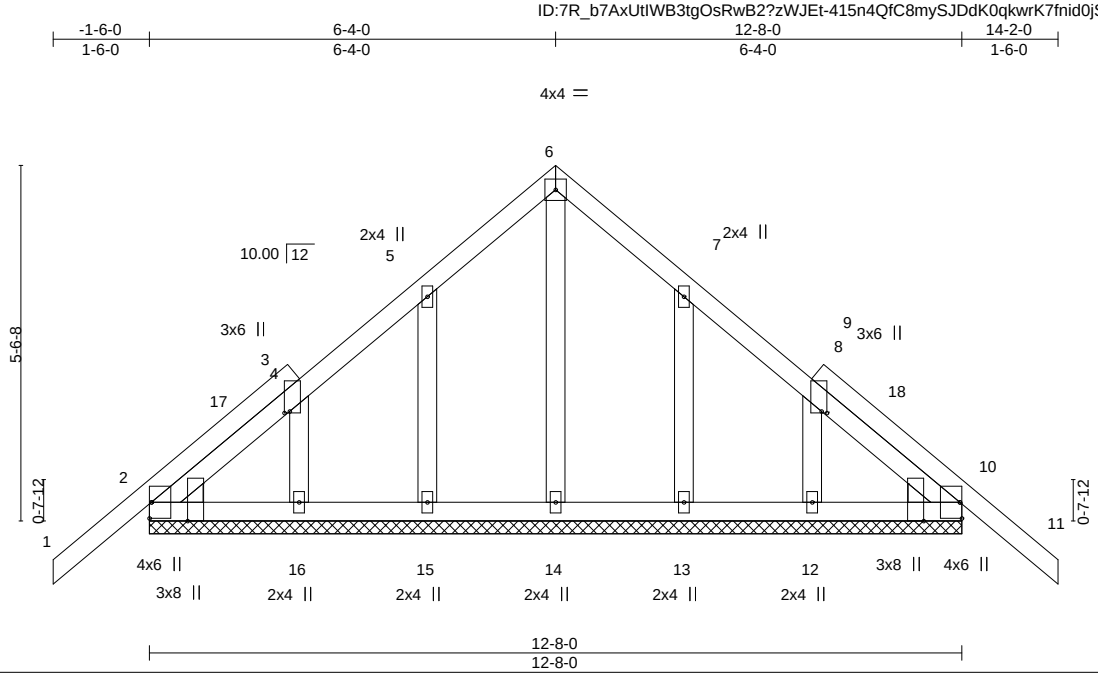

Plate Offsets (X,Y)-- [2:0-3-8,Edge], [3:0-0-5,0-1-0], [9:0-0-5,0-1-0], [10:0-3-8,Edge]

LOADING (psf)		**SPACING-** 2-0-0	**CSI.**		**DEFL.** in (loc) l/defl L/d	**PLATES**	**GRIP**
TCLL	20.0	Plate Grip DOL 1.25	TC	0.20	Vert(LL) -0.01 11 n/r 120	MT20	244/190
TCDL	7.0	Lumber DOL 1.25	BC	0.05	Vert(CT) -0.01 11 n/r 120		
BCLL	0.0 *	Rep Stress Incr YES	WB	0.05	Horz(CT) 0.00 10 n/a n/a		
BCDL	10.0	Code FBC2020/TPI2014	Matrix-S			Weight: 81 lb	FT = 20%

LUMBER-
TOP CHORD 2x4 SP No.2
BOT CHORD 2x4 SP No.2
OTHERS 2x4 SP No.3
WEDGE
Left: 2x4 SP No.3 , Right: 2x4 SP No.3

BRACING-
TOP CHORD Structural wood sheathing directly applied or 6-0-0 oc purlins.
BOT CHORD Rigid ceiling directly applied or 10-0-0 oc bracing.

REACTIONS. All bearings 12-8-0.
(lb) - Max Horz 2=-135(LC 10)
Max Uplift All uplift 100 lb or less at joint(s) 2, 10, 15, 16, 13, 12
Max Grav All reactions 250 lb or less at joint(s) 2, 10, 14, 15, 16, 13, 12

FORCES. (lb) - Max. Comp./Max. Ten. - All forces 250 (lb) or less except when shown.

NOTES-
1) Unbalanced roof live loads have been considered for this design.
2) Wind: ASCE 7-16; Vult=130mph (3-second gust) Vasd=101mph; TCDL=4.2psf; BCDL=3.0psf; h=20ft; Cat. II; Exp B; Encl., GCpi=0.18; MWFRS (envelope) gable end zone and C-C Corner(3E) -1-6-0 to 1-6-0, Exterior(2N) 1-6-0 to 6-4-0, Corner(3R) 6-4-0 to 9-4-0, Exterior(2N) 9-4-0 to 14-2-0 zone;C-C for members and forces & MWFRS for reactions shown; Lumber DOL=1.60 plate grip DOL=1.60
3) Truss designed for wind loads in the plane of the truss only. For studs exposed to wind (normal to the face), see Standard Industry Gable End Details as applicable, or consult qualified building designer as per ANSI/TPI 1.
4) Building Designer / Project engineer responsible for verifying applied roof live load shown covers rain loading requirements specific to the use of this truss component.
5) Gable requires continuous bottom chord bearing.
6) Gable studs spaced at 2-0-0 oc.
7) This truss has been designed for a 10.0 psf bottom chord live load nonconcurrent with any other live loads.
8) * This truss has been designed for a live load of 20.0psf on the bottom chord in all areas where a rectangle 3-6-0 tall by 2-0-0 wide will fit between the bottom chord and any other members.
9) Provide mechanical connection (by others) of truss to bearing plate capable of withstanding 100 lb uplift at joint(s) 2, 10, 15, 16, 13, 12.

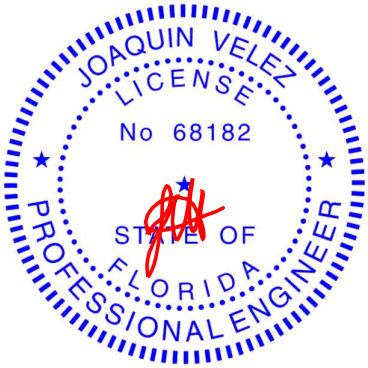

Joaquin Velez PE No.68182
MiTek USA, Inc. FL Cert 6634
6904 Parke East Blvd. Tampa FL 33610
Date:
April 7,2021

WARNING - Verify design parameters and READ NOTES ON THIS AND INCLUDED MITEK REFERENCE PAGE MII-7473 rev. 5/19/2020 BEFORE USE.
Design valid for use only with MiTek® connectors. This design is based only upon parameters shown, and is for an individual building component, not a truss system. Before use, the building designer must verify the applicability of design parameters and properly incorporate this design into the overall building design. Bracing indicated is to prevent buckling of individual truss web and/or chord members only. Additional temporary and permanent bracing is always required for stability and to prevent collapse with possible personal injury and property damage. For general guidance regarding the fabrication, storage, delivery, erection and bracing of trusses and truss systems, see ***ANSI/TPI1 Quality Criteria, DSB-89 and BCSI Building Component Safety Information*** available from Truss Plate Institute, 2670 Crain Highway, Suite 203 Waldorf, MD 20601

MiTek
6904 Parke East Blvd.
Tampa, FL 36610

Job	Truss	Truss Type	Qty	Ply	PFS SOLUTIONS - LOT 5 AL
2714379	T08	Common	3	1	T23468878 Job Reference (optional)

Builders FirstSource (Jacksonville, FL), Jacksonville, FL - 32244, 8.430 s Mar 22 2021 MiTek Industries, Inc. Tue Apr 6 08:30:29 2021 Page 1
ID:7R_b7AxUtIWB3tgOsRwB2?zWJEt-YDf9Ilgqv44JwNCWaYF9OXgn_6u6SuC7acGgTazTUw8

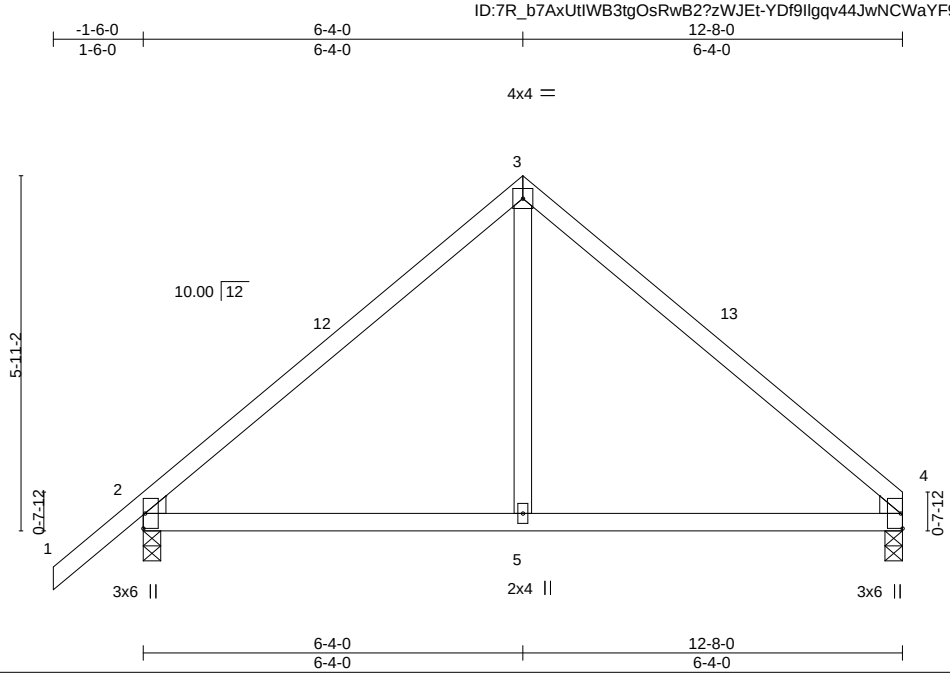

LOADING (psf)		SPACING-	2-0-0	CSI.		DEFL.	in	(loc)	l/defl	L/d	PLATES	GRIP
TCLL	20.0	Plate Grip DOL	1.25	TC	0.42	Vert(LL)	0.07	5-11	>999	240	MT20	244/190
TCDL	7.0	Lumber DOL	1.25	BC	0.37	Vert(CT)	-0.09	5-11	>999	180		
BCLL	0.0 *	Rep Stress Incr	YES	WB	0.11	Horz(CT)	0.02	4	n/a	n/a		
BCDL	10.0	Code FBC2020/TPI2014		Matrix-MS							Weight: 56 lb	FT = 20%

LUMBER-
TOP CHORD 2x4 SP No.2
BOT CHORD 2x4 SP No.2
WEBS 2x4 SP No.3
WEDGE
Left: 2x4 SP No.3 , Right: 2x4 SP No.3

BRACING-
TOP CHORD Structural wood sheathing directly applied or 6-0-0 oc purlins.
BOT CHORD Rigid ceiling directly applied or 10-0-0 oc bracing.

REACTIONS. (size) 2=0-3-8, 4=0-3-8
Max Horz 2=134(LC 11)
Max Uplift 2=-119(LC 12), 4=-84(LC 13)
Max Grav 2=554(LC 1), 4=464(LC 1)

FORCES. (lb) - Max. Comp./Max. Ten. - All forces 250 (lb) or less except when shown.
TOP CHORD 2-3=-498/167, 3-4=-495/170
BOT CHORD 2-5=-32/307, 4-5=-32/307
WEBS 3-5=-23/283

NOTES-
1) Unbalanced roof live loads have been considered for this design.
2) Wind: ASCE 7-16; Vult=130mph (3-second gust) Vasd=101mph; TCDL=4.2psf; BCDL=3.0psf; h=20ft; Cat. II; Exp B; Encl., GCpi=0.18; MWFRS (envelope) gable end zone and C-C Exterior(2E) -1-6-0 to 1-6-0, Interior(1) 1-6-0 to 6-4-0, Exterior(2R) 6-4-0 to 9-4-0, Interior(1) 9-4-0 to 12-8-0 zone;C-C for members and forces & MWFRS for reactions shown; Lumber DOL=1.60 plate grip DOL=1.60
3) Building Designer / Project engineer responsible for verifying applied roof live load shown covers rain loading requirements specific to the use of this truss component.
4) This truss has been designed for a 10.0 psf bottom chord live load nonconcurrent with any other live loads.
5) * This truss has been designed for a live load of 20.0psf on the bottom chord in all areas where a rectangle 3-6-0 tall by 2-0-0 wide will fit between the bottom chord and any other members.
6) Provide mechanical connection (by others) of truss to bearing plate capable of withstanding 100 lb uplift at joint(s) 4 except (jt=lb) 2=119.

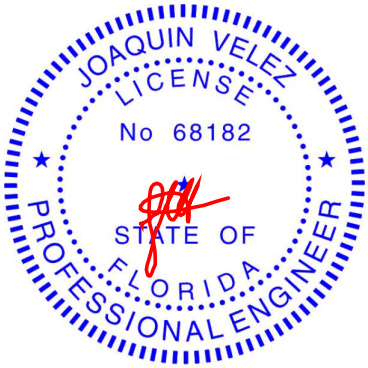

Joaquin Velez PE No.68182
MiTek USA, Inc. FL Cert 6634
6904 Parke East Blvd. Tampa FL 33610
Date:
April 7,2021

WARNING - Verify design parameters and READ NOTES ON THIS AND INCLUDED MITEK REFERENCE PAGE MII-7473 rev. 5/19/2020 BEFORE USE.
Design valid for use only with MiTek® connectors. This design is based only upon parameters shown, and is for an individual building component, not a truss system. Before use, the building designer must verify the applicability of design parameters and properly incorporate this design into the overall building design. Bracing indicated is to prevent buckling of individual truss web and/or chord members only. Additional temporary and permanent bracing is always required for stability and to prevent collapse with possible personal injury and property damage. For general guidance regarding the fabrication, storage, delivery, erection and bracing of trusses and truss systems, see ***ANSI/TPI1 Quality Criteria, DSB-89 and BCSI Building Component Safety Information*** available from Truss Plate Institute, 2670 Crain Highway, Suite 203 Waldorf, MD 20601

MiTek
6904 Parke East Blvd.
Tampa, FL 36610

Job	Truss	Truss Type	Qty	Ply	PFS SOLUTIONS - LOT 5 AL
2714379	T08A	Common Girder	1	2	T23468879 Job Reference (optional)

Builders FirstSource (Jacksonville, FL), Jacksonville, FL - 32244, 8.430 s Mar 22 2021 MiTek Industries, Inc. Tue Apr 6 08:30:31 2021 Page 1
ID:7R_b7AxUtIWB3tgOsRwB2?zWJEt-UcnviRh4QhK1AhMvhzHdTylBvvX?wglQ1wlnXSzTUw6

Scale = 1:37.7

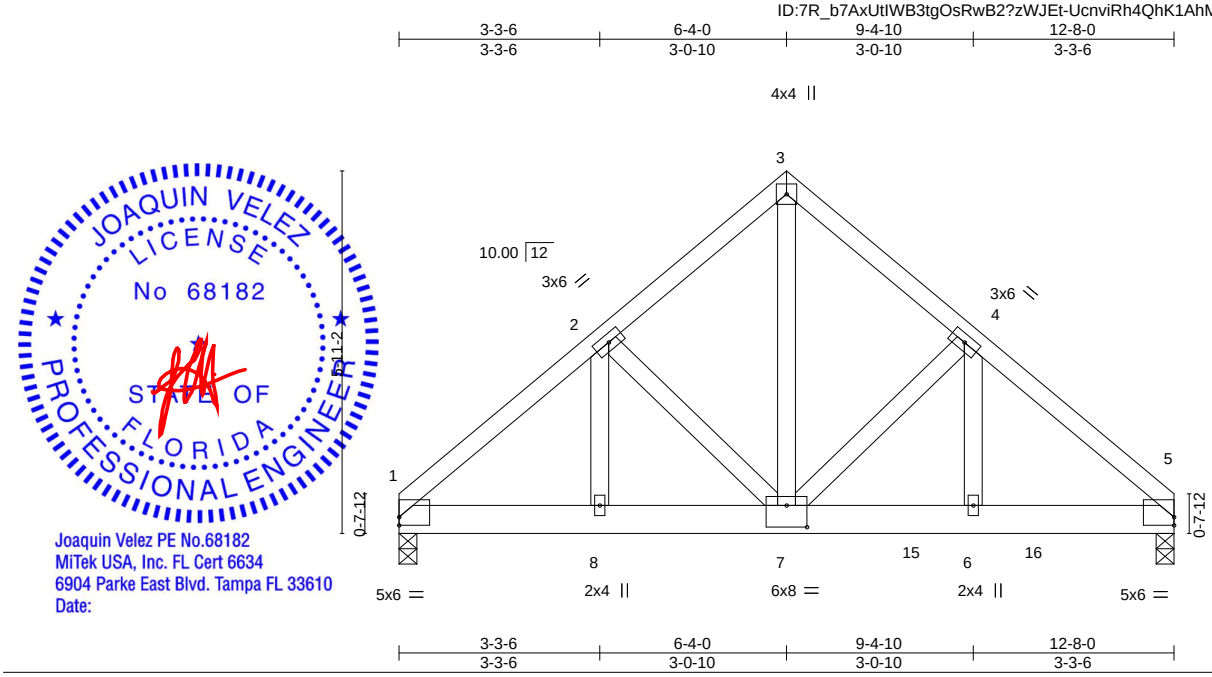

Plate Offsets (X,Y)-- [1:0-0-0,0-1-10], [5:0-0-0,0-1-10], [7:0-4-0,0-4-4]

LOADING (psf)		SPACING-	2-0-0	CSI.		DEFL.	in	(loc)	l/defl	L/d	PLATES	GRIP
TCLL	20.0	Plate Grip DOL	1.25	TC	0.14	Vert(LL)	-0.03	6-7	>999	240	MT20	244/190
TCDL	7.0	Lumber DOL	1.25	BC	0.48	Vert(CT)	-0.06	6-7	>999	180		
BCLL	0.0 *	Rep Stress Incr	NO	WB	0.62	Horz(CT)	0.01	5	n/a	n/a		
BCDL	10.0	Code FBC2020/TPI2014		Matrix-MS							Weight: 163 lb	FT = 20%

LUMBER-
TOP CHORD 2x4 SP No.2
BOT CHORD 2x6 SP No.2
WEBS 2x4 SP No.3

BRACING-
TOP CHORD Structural wood sheathing directly applied or 6-0-0 oc purlins.
BOT CHORD Rigid ceiling directly applied or 10-0-0 oc bracing.

REACTIONS. (size) 1=0-3-8, 5=0-3-8
Max Horz 1=-116(LC 23)
Max Uplift 1=-701(LC 8), 5=-1056(LC 9)
Max Grav 1=1983(LC 1), 5=3972(LC 2)

FORCES. (lb) - Max. Comp./Max. Ten. - All forces 250 (lb) or less except when shown.
TOP CHORD 1-2=-2676/973, 2-3=-2686/1051, 3-4=-2686/1051, 4-5=-3858/1179
BOT CHORD 1-8=-761/1995, 7-8=-761/1995, 6-7=-866/2918, 5-6=-866/2918
WEBS 3-7=-1260/3232, 4-7=-1220/271, 4-6=-207/1490

NOTES-
1) 2-ply truss to be connected together with 10d (0.131"x3") nails as follows:
Top chords connected as follows: 2x4 - 1 row at 0-9-0 oc.
Bottom chords connected as follows: 2x6 - 2 rows staggered at 0-9-0 oc.
Webs connected as follows: 2x4 - 1 row at 0-9-0 oc.
2) All loads are considered equally applied to all plies, except if noted as front (F) or back (B) face in the LOAD CASE(S) section. Ply to ply connections have been provided to distribute only loads noted as (F) or (B), unless otherwise indicated.
3) Unbalanced roof live loads have been considered for this design.
4) Wind: ASCE 7-16; Vult=130mph (3-second gust) Vasd=101mph; TCDL=4.2psf; BCDL=3.0psf; h=20ft; Cat. II; Exp B; Encl., GCpi=0.18; MWFRS (envelope) gable end zone; Lumber DOL=1.60 plate grip DOL=1.60
5) Building Designer / Project engineer responsible for verifying applied roof live load shown covers rain loading requirements specific to the use of this truss component.
6) This truss has been designed for a 10.0 psf bottom chord live load nonconcurrent with any other live loads.
7) * This truss has been designed for a live load of 20.0psf on the bottom chord in all areas where a rectangle 3-6-0 tall by 2-0-0 wide will fit between the bottom chord and any other members.
8) Provide mechanical connection (by others) of truss to bearing plate capable of withstanding 100 lb uplift at joint(s) except (jt=lb) 1=701, 5=1056.
9) Hanger(s) or other connection device(s) shall be provided sufficient to support concentrated load(s) 2084 lb down and 1066 lb up at 6-4-12, 974 lb down and 167 lb up at 8-4-12, and 1051 lb down and 205 lb up at 10-4-12, and 1059 lb down and 198 lb up at 12-8-0 on bottom chord. The design/selection of such connection device(s) is the responsibility of others.

LOAD CASE(S) Standard
1) Dead + Roof Live (balanced): Lumber Increase=1.25, Plate Increase=1.25
Uniform Loads (plf)
Vert: 1-3=-54, 3-5=-54, 9-12=-20

April 7,2021

Continued on page 2

WARNING - Verify design parameters and READ NOTES ON THIS AND INCLUDED MITEK REFERENCE PAGE MII-7473 rev. 5/19/2020 BEFORE USE.
Design valid for use only with MiTek® connectors. This design is based only upon parameters shown, and is for an individual building component, not a truss system. Before use, the building designer must verify the applicability of design parameters and properly incorporate this design into the overall building design. Bracing indicated is to prevent buckling of individual truss web and/or chord members only. Additional temporary and permanent bracing is always required for stability and to prevent collapse with possible personal injury and property damage. For general guidance regarding the fabrication, storage, delivery, erection and bracing of trusses and truss systems, see ***ANSI/TPI1 Quality Criteria, DSB-89 and BCSI Building Component Safety Information*** available from Truss Plate Institute, 2670 Crain Highway, Suite 203 Waldorf, MD 20601

MiTek
6904 Parke East Blvd.
Tampa, FL 36610

LOAD CASE(S) Standard
Concentrated Loads (lb)
Vert: 7=-2084(F) 14=-951(B) 15=-847(F) 16=-943(B)

WARNING - Verify design parameters and READ NOTES ON THIS AND INCLUDED MITEK REFERENCE PAGE MII-7473 rev. 5/19/2020 BEFORE USE.
Design valid for use only with MiTek® connectors. This design is based only upon parameters shown, and is for an individual building component, not a truss system. Before use, the building designer must verify the applicability of design parameters and properly incorporate this design into the overall building design. Bracing indicated is to prevent buckling of individual truss web and/or chord members only. Additional temporary and permanent bracing is always required for stability and to prevent collapse with possible personal injury and property damage. For general guidance regarding the fabrication, storage, delivery, erection and bracing of trusses and truss systems, see ***ANSI/TPI1 Quality Criteria, DSB-89 and BCSI Building Component Safety Information*** available from Truss Plate Institute, 2670 Crain Highway, Suite 203 Waldorf, MD 20601

MiTek
6904 Parke East Blvd.
Tampa, FL 36610

Job	Truss	Truss Type	Qty	Ply	PFS SOLUTIONS - LOT 5 AL
2714379	T08G	Common Supported Gable	1	1	T23468880 Job Reference (optional)

Builders FirstSource (Jacksonville, FL), Jacksonville, FL - 32244, 8.430 s Mar 22 2021 MiTek Industries, Inc. Tue Apr 6 08:30:32 2021 Page 1
ID:7R_b7AxUtlWB3tgOsRwB2?zWJEt-yoLHwniiB?Ttnqx5Fgos0AIMpJ_AfFHZGaUK3vzTUw5

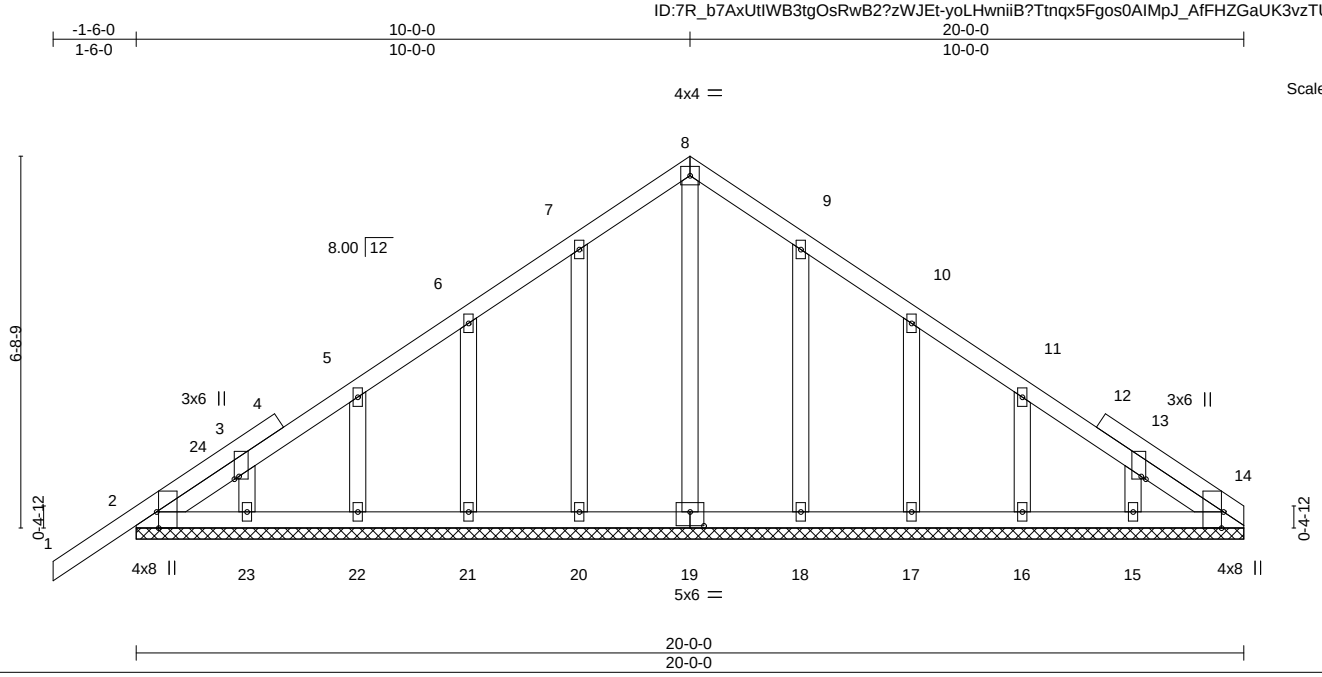

Plate Offsets (X,Y)-- [2:0-3-8,Edge], [3:0-0-9,0-1-0], [13:0-0-9,0-1-0], [14:0-3-8,Edge], [19:0-3-0,0-3-0]

LOADING (psf)		SPACING- 2-0-0		CSI.		DEFL. in (loc) l/defl L/d		PLATES	GRIP
TCLL	20.0	Plate Grip DOL	1.25	TC	0.13	Vert(LL) -0.00 1 n/r 120		MT20	244/190
TCDL	7.0	Lumber DOL	1.25	BC	0.03	Vert(CT) -0.00 1 n/r 120			
BCLL	0.0 *	Rep Stress Incr	YES	WB	0.09	Horz(CT) 0.00 14 n/a n/a			
BCDL	10.0	Code FBC2020/TPI2014		Matrix-S				Weight: 119 lb	FT = 20%

LUMBER-
TOP CHORD 2x4 SP No.2
BOT CHORD 2x4 SP No.2
OTHERS 2x4 SP No.3

BRACING-
TOP CHORD Structural wood sheathing directly applied or 6-0-0 oc purlins.
BOT CHORD Rigid ceiling directly applied or 10-0-0 oc bracing.

REACTIONS. All bearings 20-0-0.
(lb) - Max Horz 2=154(LC 9)
Max Uplift All uplift 100 lb or less at joint(s) 2, 20, 21, 22, 23, 18, 17, 16, 15
Max Grav All reactions 250 lb or less at joint(s) 2, 14, 19, 20, 21, 22, 23, 18, 17, 16, 15

FORCES. (lb) - Max. Comp./Max. Ten. - All forces 250 (lb) or less except when shown.

NOTES-
1) Unbalanced roof live loads have been considered for this design.
2) Wind: ASCE 7-16; Vult=130mph (3-second gust) Vasd=101mph; TCDL=4.2psf; BCDL=3.0psf; h=20ft; Cat. II; Exp B; Encl., GCpi=0.18; MWFRS (envelope) gable end zone and C-C Corner(3E) -1-6-0 to 1-6-0, Exterior(2N) 1-6-0 to 10-0-0, Corner(3R) 10-0-0 to 13-0-0, Exterior(2N) 13-0-0 to 20-0-0 zone;C-C for members and forces & MWFRS for reactions shown; Lumber DOL=1.60 plate grip DOL=1.60
3) Truss designed for wind loads in the plane of the truss only. For studs exposed to wind (normal to the face), see Standard Industry Gable End Details as applicable, or consult qualified building designer as per ANSI/TPI 1.
4) Building Designer / Project engineer responsible for verifying applied roof live load shown covers rain loading requirements specific to the use of this truss component.
5) All plates are 2x4 MT20 unless otherwise indicated.
6) Gable requires continuous bottom chord bearing.
7) Gable studs spaced at 2-0-0 oc.
8) This truss has been designed for a 10.0 psf bottom chord live load nonconcurrent with any other live loads.
9) * This truss has been designed for a live load of 20.0psf on the bottom chord in all areas where a rectangle 3-6-0 tall by 2-0-0 wide will fit between the bottom chord and any other members.
10) Provide mechanical connection (by others) of truss to bearing plate capable of withstanding 100 lb uplift at joint(s) 2, 20, 21, 22, 23, 18, 17, 16, 15.

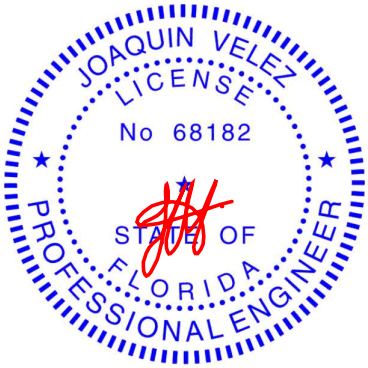

Joaquin Velez PE No.68182
MiTek USA, Inc. FL Cert 6634
6904 Parke East Blvd. Tampa FL 33610
Date:
April 7,2021

WARNING - Verify design parameters and READ NOTES ON THIS AND INCLUDED MITEK REFERENCE PAGE MII-7473 rev. 5/19/2020 BEFORE USE.
Design valid for use only with MiTek® connectors. This design is based only upon parameters shown, and is for an individual building component, not a truss system. Before use, the building designer must verify the applicability of design parameters and properly incorporate this design into the overall building design. Bracing indicated is to prevent buckling of individual truss web and/or chord members only. Additional temporary and permanent bracing is always required for stability and to prevent collapse with possible personal injury and property damage. For general guidance regarding the fabrication, storage, delivery, erection and bracing of trusses and truss systems, see ***ANSI/TPI1 Quality Criteria, DSB-89 and BCSI Building Component Safety Information*** available from Truss Plate Institute, 2670 Crain Highway, Suite 203 Waldorf, MD 20601

MiTek
6904 Parke East Blvd.
Tampa, FL 36610

Job	Truss	Truss Type	Qty	Ply	PFS SOLUTIONS - LOT 5 AL
2714379	T09	Roof Special	2	1	T23468881 Job Reference (optional)

Builders FirstSource (Jacksonville, FL), Jacksonville, FL - 32244, 8.430 s Mar 22 2021 MiTek Industries, Inc. Tue Apr 6 08:30:33 2021 Page 1
ID:7R_b7AxUtlWB3tgOsRwB2?zWJEt-Q_ug77jKylbkP_WIpNK5YNrQgj90OXqjUEEtcLzTUw4

-1-6-0	7-6-0	14-3-6	19-0-0	23-9-13	29-0-0
1-6-0	7-6-0	6-9-6	4-8-10	4-9-13	5-2-3

Scale = 1:52.6

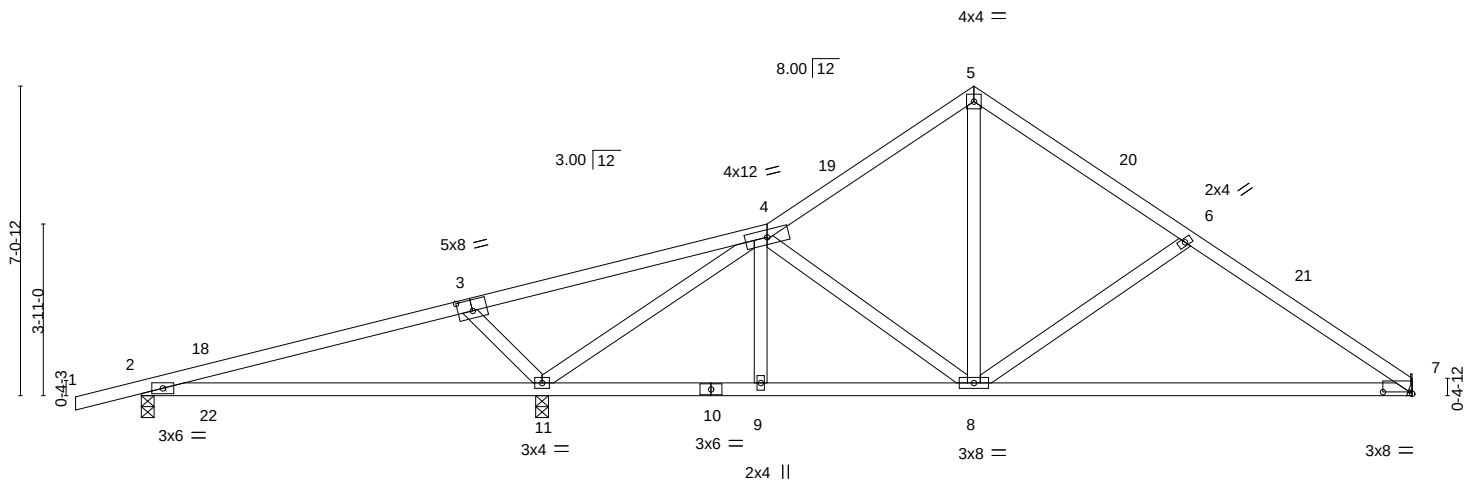

9-1-12	14-3-6	19-0-0	29-0-0
9-1-12	5-1-10	4-8-10	10-0-0

Plate Offsets (X,Y)-- [3:0-4-0,0-3-0], [7:0-8-0,0-0-7]

LOADING (psf)		SPACING- 2-0-0		CSI.		DEFL.	in	(loc)	l/defl	L/d	PLATES	GRIP
TCLL	20.0	Plate Grip DOL	1.25	TC	0.63	Vert(LL)	0.34	11-17	>326	240	MT20	244/190
TCDL	7.0	Lumber DOL	1.25	BC	0.76	Vert(CT)	0.28	11-17	>390	180		
BCLL	0.0 *	Rep Stress Incr	YES	WB	0.77	Horz(CT)	0.02	7	n/a	n/a		
BCDL	10.0	Code FBC2020/TPI2014		Matrix-MS							Weight: 138 lb	FT = 20%

LUMBER-
TOP CHORD 2x4 SP No.2
BOT CHORD 2x4 SP No.2
WEBS 2x4 SP No.3

BRACING-
TOP CHORD Structural wood sheathing directly applied or 5-6-9 oc purlins.
BOT CHORD Rigid ceiling directly applied or 10-0-0 oc bracing, Except:
6-0-0 oc bracing: 2-11.

REACTIONS. (size) 7=Mechanical, 2=0-3-8, 11=0-3-8
Max Horz 2=163(LC 9)
Max Uplift 7=-144(LC 13), 2=-209(LC 8), 11=-285(LC 12)
Max Grav 7=697(LC 1), 2=358(LC 23), 11=1184(LC 1)

FORCES. (lb) - Max. Comp./Max. Ten. - All forces 250 (lb) or less except when shown.
TOP CHORD 3-4=-95/270, 4-5=-692/239, 5-6=-707/242, 6-7=-941/285
BOT CHORD 9-11=-116/633, 8-9=-117/633, 7-8=-168/759
WEBS 3-11=-487/290, 4-11=-1053/243, 5-8=-116/485, 6-8=-318/198

NOTES-
1) Unbalanced roof live loads have been considered for this design.
2) Wind: ASCE 7-16; Vult=130mph (3-second gust) Vasd=101mph; TCDL=4.2psf; BCDL=3.0psf; h=20ft; Cat. II; Exp B; Encl., GCpi=0.18; MWFRS (envelope) gable end zone and C-C Exterior(2E) -1-6-0 to 1-6-0, Interior(1) 1-6-0 to 19-0-0, Exterior(2R) 19-0-0 to 22-0-0, Interior(1) 22-0-0 to 29-0-0 zone; porch left exposed;C-C for members and forces & MWFRS for reactions shown; Lumber DOL=1.60 plate grip DOL=1.60
3) Building Designer / Project engineer responsible for verifying applied roof live load shown covers rain loading requirements specific to the use of this truss component.
4) This truss has been designed for a 10.0 psf bottom chord live load nonconcurrent with any other live loads.
5) * This truss has been designed for a live load of 20.0psf on the bottom chord in all areas where a rectangle 3-6-0 tall by 2-0-0 wide will fit between the bottom chord and any other members.
6) Refer to girder(s) for truss to truss connections.
7) Provide mechanical connection (by others) of truss to bearing plate capable of withstanding 100 lb uplift at joint(s) except (jt=lb) 7=144, 2=209, 11=285.

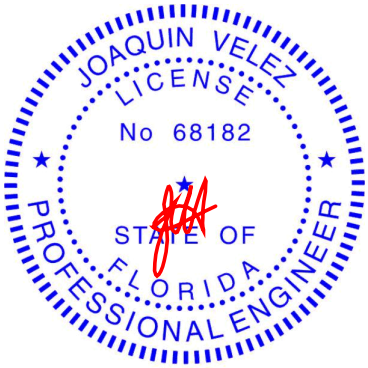

Joaquin Velez PE No.68182
MiTek USA, Inc. FL Cert 6634
6904 Parke East Blvd. Tampa FL 33610
Date:
April 7,2021

WARNING - Verify design parameters and READ NOTES ON THIS AND INCLUDED MITEK REFERENCE PAGE MII-7473 rev. 5/19/2020 BEFORE USE.
Design valid for use only with MiTek® connectors. This design is based only upon parameters shown, and is for an individual building component, not a truss system. Before use, the building designer must verify the applicability of design parameters and properly incorporate this design into the overall building design. Bracing indicated is to prevent buckling of individual truss web and/or chord members only. Additional temporary and permanent bracing is always required for stability and to prevent collapse with possible personal injury and property damage. For general guidance regarding the fabrication, storage, delivery, erection and bracing of trusses and truss systems, see ***ANSI/TPI1 Quality Criteria, DSB-89 and BCSI Building Component Safety Information*** available from Truss Plate Institute, 2670 Crain Highway, Suite 203 Waldorf, MD 20601

MiTek
6904 Parke East Blvd.
Tampa, FL 36610

Job	Truss	Truss Type	Qty	Ply	PFS SOLUTIONS - LOT 5 AL
2714379	T09G	GABLE	1	1	T23468882
					Job Reference (optional)

Builders FirstSource (Jacksonville, FL), Jacksonville, FL - 32244, 8.430 s Mar 22 2021 MiTek Industries, Inc. Tue Apr 6 08:30:34 2021 Page 1
ID:7R_b7AxUtlWB3tgOsRwB2?zWJEt-uBS2LTkzjcjb185UM5rK5bNbP7VM7y3sjuzR8nzTUw3

-1-6-0	7-6-0	14-3-6	19-0-0	23-9-13	29-0-0
1-6-0	7-6-0	6-9-6	4-8-10	4-9-13	5-2-3

Scale = 1:56.0

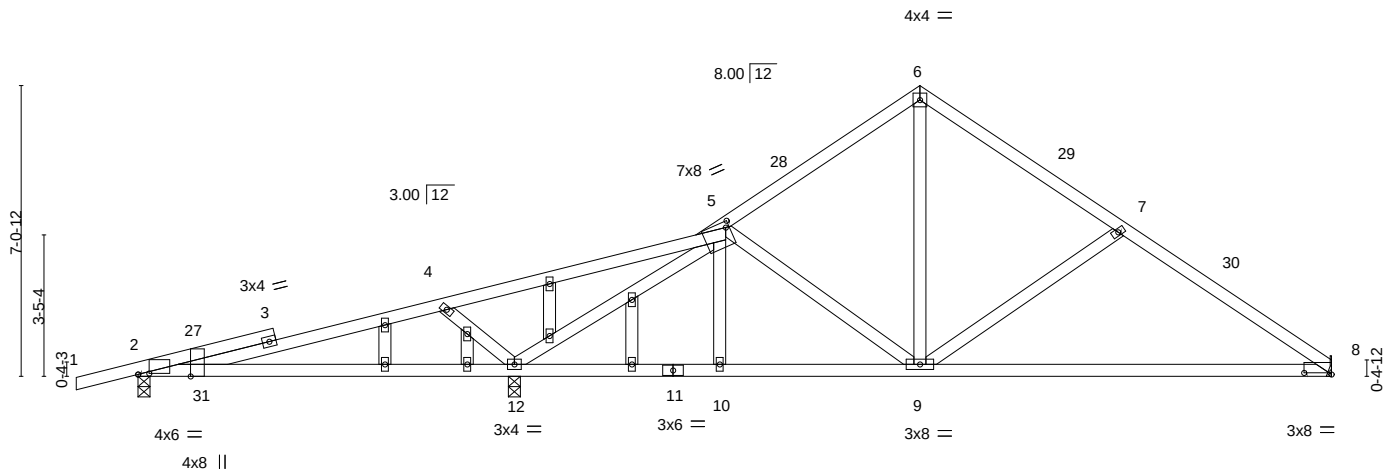

9-1-12	9-3-8	14-3-6	19-0-0	29-0-0
9-1-12	0-1-12	4-11-14	4-8-10	10-0-0

Plate Offsets (X,Y)-- [2:0-3-4,0-0-5], [2:0-0-9,Edge], [5:0-1-0,0-1-12], [8:0-8-0,0-0-7]

LOADING (psf)		SPACING-	2-0-0	CSI.		DEFL.	in	(loc)	l/defl	L/d	PLATES	GRIP
TCLL	20.0	Plate Grip DOL	1.25	TC	0.64	Vert(LL)	0.24	12-23	>458	240	MT20	244/190
TCDL	7.0	Lumber DOL	1.25	BC	0.75	Vert(CT)	-0.42	9-26	>562	180		
BCLL	0.0 *	Rep Stress Incr	YES	WB	0.90	Horz(CT)	0.01	8	n/a	n/a		
BCDL	10.0	Code FBC2020/TPI2014		Matrix-MS							Weight: 149 lb	FT = 20%

LUMBER-
TOP CHORD 2x4 SP No.2
BOT CHORD 2x4 SP No.2
WEBS 2x4 SP No.3
OTHERS 2x4 SP No.3

BRACING-
TOP CHORD Structural wood sheathing directly applied or 5-7-13 oc purlins.
BOT CHORD Rigid ceiling directly applied or 10-0-0 oc bracing, Except:
6-0-0 oc bracing: 2-12.

REACTIONS. (size) 2=0-3-8, 8=Mechanical, 12=0-3-8
Max Horz 2=162(LC 11)
Max Uplift 2=-187(LC 8), 8=-143(LC 13), 12=-295(LC 12)
Max Grav 2=310(LC 23), 8=676(LC 1), 12=1248(LC 1)

FORCES. (lb) - Max. Comp./Max. Ten. - All forces 250 (lb) or less except when shown.
TOP CHORD 4-5=-337/554, 5-6=-672/190, 6-7=-668/186, 7-8=-902/229
BOT CHORD 10-12=-112/578, 9-10=-111/580, 8-9=-121/727
WEBS 4-12=-513/327, 5-12=-1295/399, 6-9=-103/456, 7-9=-318/198

NOTES-
1) Unbalanced roof live loads have been considered for this design.
2) Wind: ASCE 7-16; Vult=130mph (3-second gust) Vasd=101mph; TCDL=4.2psf; BCDL=3.0psf; h=20ft; Cat. II; Exp B; Encl., GCpi=0.18; MWFRS (envelope) gable end zone and C-C Exterior(2E) -1-6-0 to 1-6-0, Interior(1) 1-6-0 to 19-0-0, Exterior(2R) 19-0-0 to 22-0-0, Interior(1) 22-0-0 to 29-0-0 zone; porch left exposed;C-C for members and forces & MWFRS for reactions shown; Lumber DOL=1.60 plate grip DOL=1.60
3) Truss designed for wind loads in the plane of the truss only. For studs exposed to wind (normal to the face), see Standard Industry Gable End Details as applicable, or consult qualified building designer as per ANSI/TPI 1.
4) Building Designer / Project engineer responsible for verifying applied roof live load shown covers rain loading requirements specific to the use of this truss component.
5) All plates are 2x4 MT20 unless otherwise indicated.
6) Gable studs spaced at 2-0-0 oc.
7) This truss has been designed for a 10.0 psf bottom chord live load nonconcurrent with any other live loads.
8) * This truss has been designed for a live load of 20.0psf on the bottom chord in all areas where a rectangle 3-6-0 tall by 2-0-0 wide will fit between the bottom chord and any other members.
9) Refer to girder(s) for truss to truss connections.
10) Provide mechanical connection (by others) of truss to bearing plate capable of withstanding 100 lb uplift at joint(s) except (jt=lb) 2=187, 8=143, 12=295.

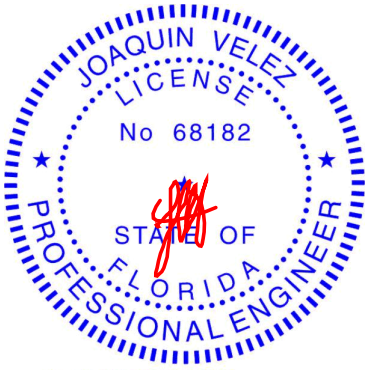

Joaquin Velez PE No.68182
MiTek USA, Inc. FL Cert 6634
6904 Parke East Blvd. Tampa FL 33610
Date:
April 7,2021

WARNING - Verify design parameters and READ NOTES ON THIS AND INCLUDED MITEK REFERENCE PAGE MII-7473 rev. 5/19/2020 BEFORE USE.
Design valid for use only with MiTek® connectors. This design is based only upon parameters shown, and is for an individual building component, not a truss system. Before use, the building designer must verify the applicability of design parameters and properly incorporate this design into the overall building design. Bracing indicated is to prevent buckling of individual truss web and/or chord members only. Additional temporary and permanent bracing is always required for stability and to prevent collapse with possible personal injury and property damage. For general guidance regarding the fabrication, storage, delivery, erection and bracing of trusses and truss systems, see ***ANSI/TPI1 Quality Criteria, DSB-89 and BCSI Building Component Safety Information*** available from Truss Plate Institute, 2670 Crain Highway, Suite 203 Waldorf, MD 20601

MiTek
6904 Parke East Blvd.
Tampa, FL 36610

Job	Truss	Truss Type	Qty	Ply	PFS SOLUTIONS - LOT 5 AL
2714379	T10	Piggyback Base	1	1	T23468883 Job Reference (optional)

Builders FirstSource (Jacksonville, FL), Jacksonville, FL - 32244, 8.430 s Mar 22 2021 MiTek Industries, Inc. Tue Apr 6 08:30:35 2021 Page 1
ID:7R_b7AxUtIWB3tgOsRwB2?zWJEt-MN0QYpkbUwrSeIfgwoMZdowluWtOsRO0yYj_gEzTUw2

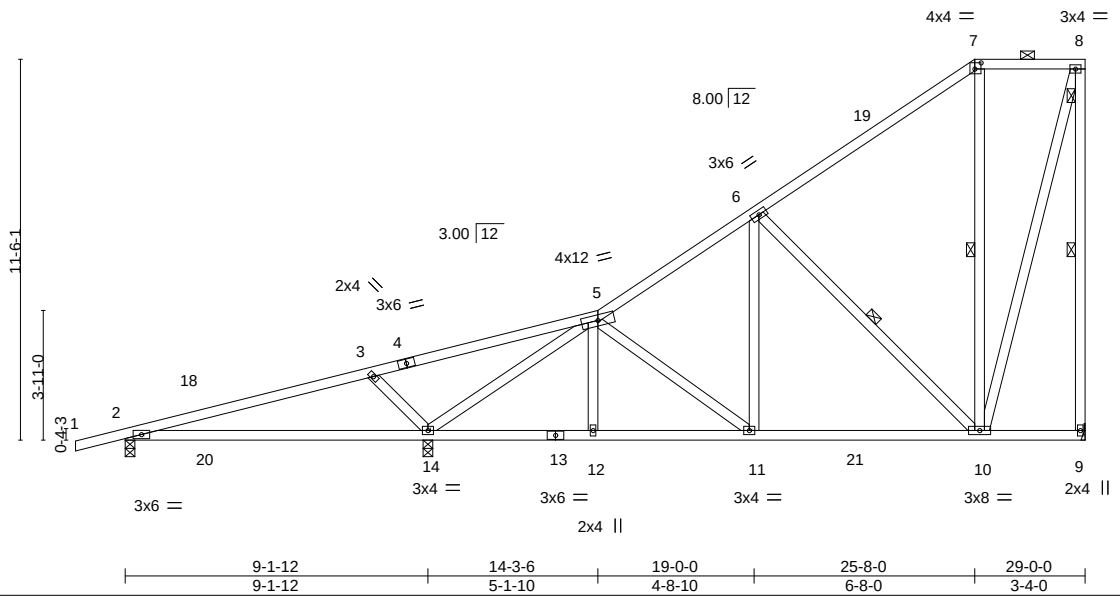

Plate Offsets (X,Y)-- [7:0-2-4,0-2-4]

LOADING (psf)		SPACING- 2-0-0		CSI.		DEFL.	in	(loc)	l/defl	L/d	PLATES	GRIP
TCLL	20.0	Plate Grip DOL	1.25	TC	0.65	Vert(LL)	0.33	14-17	>331	240	MT20	244/190
TCDL	7.0	Lumber DOL	1.25	BC	0.64	Vert(CT)	-0.31	14-17	>359	180		
BCLL	0.0 *	Rep Stress Incr	YES	WB	0.83	Horz(CT)	0.02	9	n/a	n/a		
BCDL	10.0	Code FBC2020/TPI2014		Matrix-MS							Weight: 191 lb	FT = 20%

LUMBER-
TOP CHORD 2x4 SP No.2
BOT CHORD 2x4 SP No.2
WEBS 2x4 SP No.3

BRACING-
TOP CHORD Structural wood sheathing directly applied or 6-0-0 oc purlins, except end verticals, and 2-0-0 oc purlins (6-0-0 max.): 7-8.
BOT CHORD Rigid ceiling directly applied or 10-0-0 oc bracing, Except: 7-7-10 oc bracing: 2-14.
WEBS 1 Row at midpt 8-9, 6-10, 7-10

REACTIONS. (size) 9=Mechanical, 2=0-3-8, 14=0-3-8
Max Horz 2=395(LC 12)
Max Uplift 9=-229(LC 12), 2=-200(LC 8), 14=-281(LC 12)
Max Grav 9=779(LC 19), 2=340(LC 2), 14=1289(LC 2)

FORCES. (lb) - Max. Comp./Max. Ten. - All forces 250 (lb) or less except when shown.
TOP CHORD 3-5=-255/309, 5-6=-738/10, 6-7=-318/12, 8-9=-761/276
BOT CHORD 2-14=-348/86, 12-14=-238/727, 11-12=-239/723, 10-11=-218/641
WEBS 3-14=-507/306, 5-14=-1139/233, 6-11=0/366, 6-10=-615/216, 8-10=-264/774

NOTES-
1) Unbalanced roof live loads have been considered for this design.
2) Wind: ASCE 7-16; Vult=130mph (3-second gust) Vasd=101mph; TCDL=4.2psf; BCDL=3.0psf; h=20ft; Cat. II; Exp B; Encl., GCpi=0.18; MWFRS (envelope) gable end zone and C-C Exterior(2E) -1-6-0 to 1-6-0, Interior(1) 1-6-0 to 25-8-0, Exterior(2E) 25-8-0 to 28-10-4 zone; porch left exposed;C-C for members and forces & MWFRS for reactions shown; Lumber DOL=1.60 plate grip DOL=1.60
3) Building Designer / Project engineer responsible for verifying applied roof live load shown covers rain loading requirements specific to the use of this truss component.
4) Provide adequate drainage to prevent water ponding.
5) This truss has been designed for a 10.0 psf bottom chord live load nonconcurrent with any other live loads.
6) * This truss has been designed for a live load of 20.0psf on the bottom chord in all areas where a rectangle 3-6-0 tall by 2-0-0 wide will fit between the bottom chord and any other members, with BCDL = 10.0psf.
7) Refer to girder(s) for truss to truss connections.
8) Provide mechanical connection (by others) of truss to bearing plate capable of withstanding 100 lb uplift at joint(s) except (jt=lb) 9=229, 2=200, 14=281.
9) Graphical purlin representation does not depict the size or the orientation of the purlin along the top and/or bottom chord.

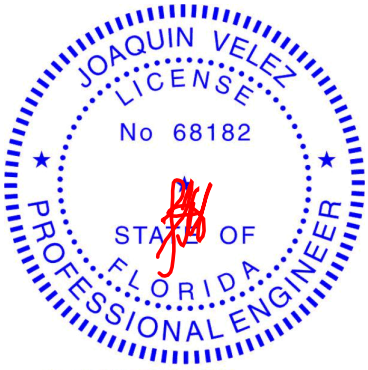

Joaquin Velez PE No.68182
MiTek USA, Inc. FL Cert 6634
6904 Parke East Blvd. Tampa FL 33610
Date:
April 7,2021

WARNING - Verify design parameters and READ NOTES ON THIS AND INCLUDED MITEK REFERENCE PAGE MII-7473 rev. 5/19/2020 BEFORE USE.
Design valid for use only with MiTek® connectors. This design is based only upon parameters shown, and is for an individual building component, not a truss system. Before use, the building designer must verify the applicability of design parameters and properly incorporate this design into the overall building design. Bracing indicated is to prevent buckling of individual truss web and/or chord members only. Additional temporary and permanent bracing is always required for stability and to prevent collapse with possible personal injury and property damage. For general guidance regarding the fabrication, storage, delivery, erection and bracing of trusses and truss systems, see ***ANSI/TPI1 Quality Criteria, DSB-89 and BCSI Building Component Safety Information*** available from Truss Plate Institute, 2670 Crain Highway, Suite 203 Waldorf, MD 20601

MiTek
6904 Parke East Blvd.
Tampa, FL 36610

Job	Truss	Truss Type	Qty	Ply	PFS SOLUTIONS - LOT 5 AL
2714379	T10G	GABLE	1	1	T23468884 Job Reference (optional)

Builders FirstSource (Jacksonville, FL), Jacksonville, FL - 32244, 8.430 s Mar 22 2021 MiTek Industries, Inc. Tue Apr 6 08:30:36 2021 Page 1
ID:7R_b7AxUtlWB3tgOsRwB2?zWJEt-rZaom9lDFDzJGSEtUWtoA0TxdwCHbty9BCSXCgzTUw1

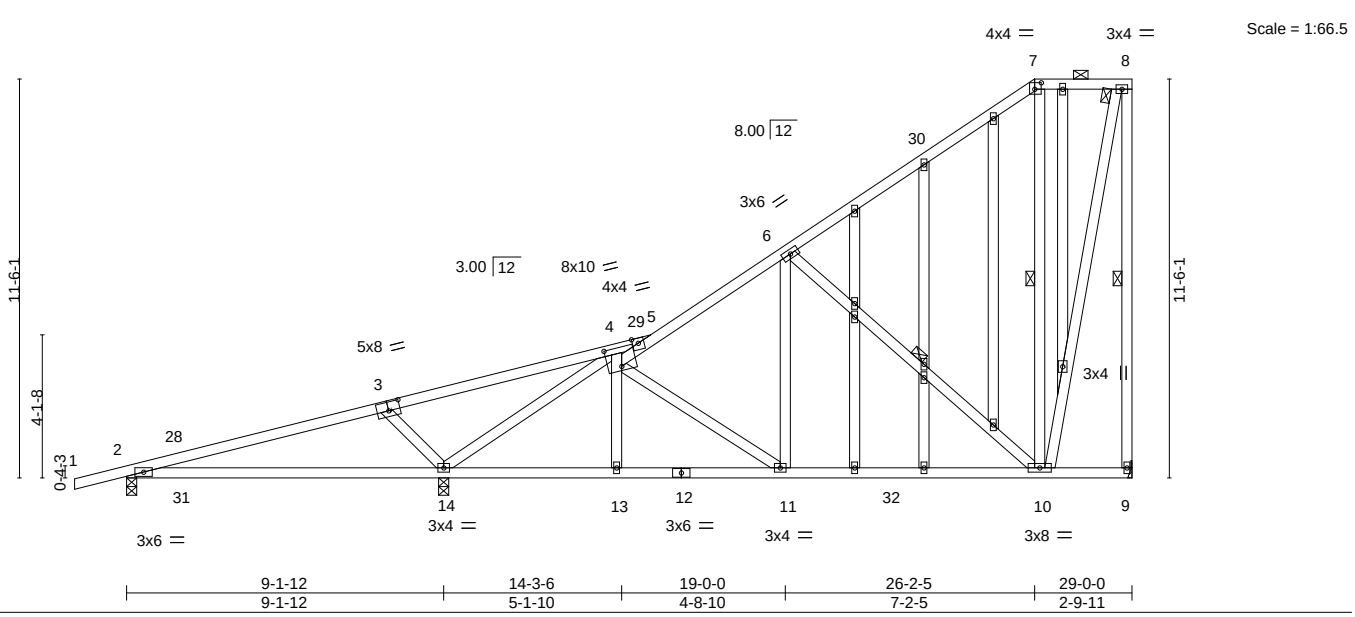

Plate Offsets (X,Y)-- [3:0-4-0,0-3-0], [4:0-4-12,0-6-9], [7:0-2-4,0-2-4]

LOADING (psf)		SPACING- 2-0-0		CSI.		DEFL. in (loc) l/defl L/d		PLATES GRIP
TCLL	20.0	Plate Grip DOL	1.25	TC	0.59	Vert(LL) 0.34 14-27 >323 240		MT20 244/190
TCDL	7.0	Lumber DOL	1.25	BC	0.66	Vert(CT) -0.32 14-27 >338 180		
BCLL	0.0 *	Rep Stress Incr	YES	WB	0.87	Horz(CT) 0.02 9 n/a n/a		
BCDL	10.0	Code FBC2020/TPI2014		Matrix-MS				Weight: 242 lb FT = 20%

LUMBER-
TOP CHORD 2x4 SP No.2
BOT CHORD 2x4 SP No.2
WEBS 2x4 SP No.3
OTHERS 2x4 SP No.3

BRACING-
TOP CHORD Structural wood sheathing directly applied or 6-0-0 oc purlins, except end verticals, and 2-0-0 oc purlins (6-0-0 max.): 7-8.
BOT CHORD Rigid ceiling directly applied or 10-0-0 oc bracing, Except: 6-0-0 oc bracing: 2-14.
WEBS 1 Row at midpt 8-9, 6-10, 7-10

REACTIONS. (size) 9=Mechanical, 2=0-3-8, 14=0-3-8
Max Horz 2=395(LC 12)
Max Uplift 9=-238(LC 12), 2=-208(LC 8), 14=-274(LC 12)
Max Grav 9=774(LC 19), 2=328(LC 1), 14=1314(LC 2)

FORCES. (lb) - Max. Comp./Max. Ten. - All forces 250 (lb) or less except when shown.
TOP CHORD 3-4=-227/370, 4-5=-700/0, 5-6=-732/9, 6-7=-298/0, 8-9=-781/271
BOT CHORD 2-14=-347/41, 13-14=-253/686, 11-13=-254/684, 10-11=-229/661
WEBS 3-14=-456/294, 4-14=-1194/220, 6-11=-9/355, 6-10=-641/227, 8-10=-274/804

NOTES-
1) Unbalanced roof live loads have been considered for this design.
2) Wind: ASCE 7-16; Vult=130mph (3-second gust) Vasd=101mph; TCDL=4.2psf; BCDL=3.0psf; h=20ft; Cat. II; Exp B; Encl., GCpi=0.18; MWFRS (envelope) gable end zone and C-C Exterior(2E) -1-6-0 to 1-6-0, Interior(1) 1-6-0 to 26-2-5, Exterior(2E) 26-2-5 to 28-10-4 zone; porch left exposed;C-C for members and forces & MWFRS for reactions shown; Lumber DOL=1.60 plate grip DOL=1.60
3) Truss designed for wind loads in the plane of the truss only. For studs exposed to wind (normal to the face), see Standard Industry Gable End Details as applicable, or consult qualified building designer as per ANSI/TPI 1.
4) Building Designer / Project engineer responsible for verifying applied roof live load shown covers rain loading requirements specific to the use of this truss component.
5) Provide adequate drainage to prevent water ponding.
6) All plates are 2x4 MT20 unless otherwise indicated.
7) Gable studs spaced at 2-0-0 oc.
8) This truss has been designed for a 10.0 psf bottom chord live load nonconcurrent with any other live loads.
9) * This truss has been designed for a live load of 20.0psf on the bottom chord in all areas where a rectangle 3-6-0 tall by 2-0-0 wide will fit between the bottom chord and any other members, with BCDL = 10.0psf.
10) Refer to girder(s) for truss to truss connections.
11) Provide mechanical connection (by others) of truss to bearing plate capable of withstanding 100 lb uplift at joint(s) except (jt=lb) 9=238, 2=208, 14=274.
12) Graphical purlin representation does not depict the size or the orientation of the purlin along the top and/or bottom chord.

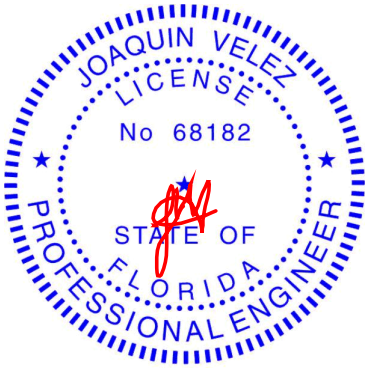

Joaquin Velez PE No.68182
MiTek USA, Inc. FL Cert 6634
6904 Parke East Blvd. Tampa FL 33610
Date:
April 7,2021

WARNING - Verify design parameters and READ NOTES ON THIS AND INCLUDED MITEK REFERENCE PAGE MII-7473 rev. 5/19/2020 BEFORE USE.
Design valid for use only with MiTek® connectors. This design is based only upon parameters shown, and is for an individual building component, not a truss system. Before use, the building designer must verify the applicability of design parameters and properly incorporate this design into the overall building design. Bracing indicated is to prevent buckling of individual truss web and/or chord members only. Additional temporary and permanent bracing is always required for stability and to prevent collapse with possible personal injury and property damage. For general guidance regarding the fabrication, storage, delivery, erection and bracing of trusses and truss systems, see ***ANSI/TPI1 Quality Criteria, DSB-89 and BCSI Building Component Safety Information*** available from Truss Plate Institute, 2670 Crain Highway, Suite 203 Waldorf, MD 20601

MiTek
6904 Parke East Blvd.
Tampa, FL 36610

Job	Truss	Truss Type	Qty	Ply	PFS SOLUTIONS - LOT 5 AL
2714379	T11	Piggyback Base	3	1	T23468885 Job Reference (optional)

Builders FirstSource (Jacksonville, FL), Jacksonville, FL - 32244, 8.430 s Mar 22 2021 MiTek Industries, Inc. Tue Apr 6 08:30:37 2021 Page 1
ID:7R_b7AxUtlWB3tgOsRwB2?zWJEt-Jm8AzVmr0X5Aucp32DO1iD?8VKdKKOgIPsC5l6zTUw0

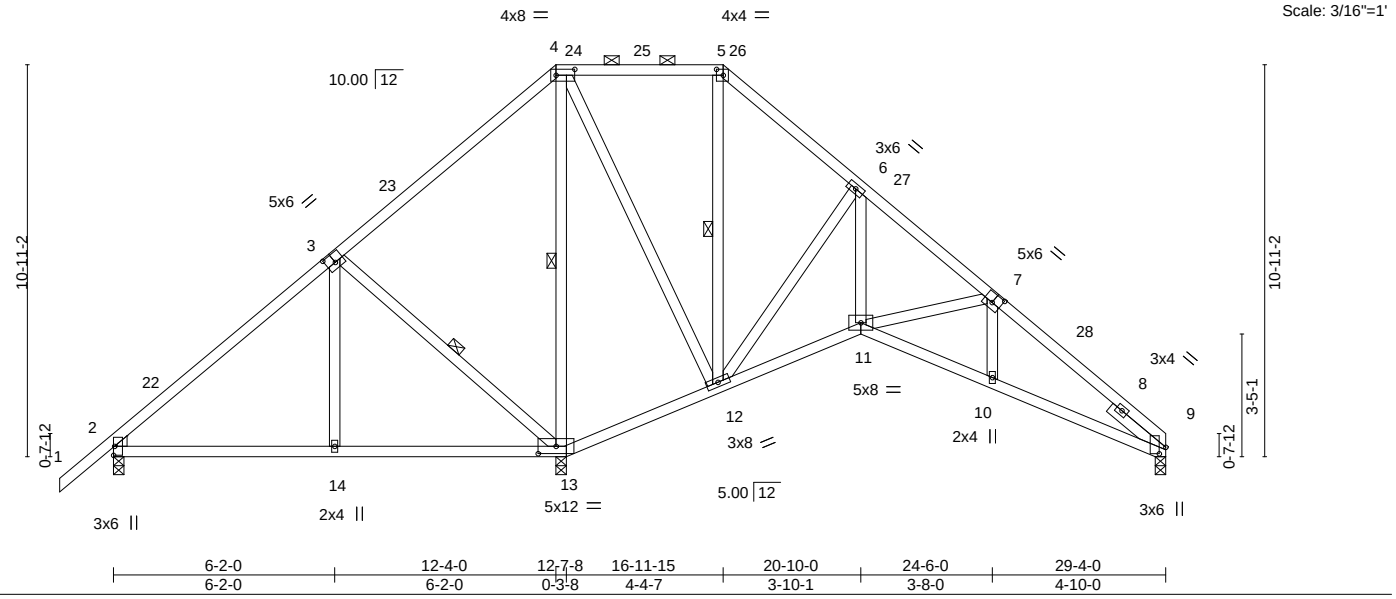

Plate Offsets (X,Y)-- [3:0-3-0,0-3-0], [4:0-6-4,0-2-0], [5:0-2-4,0-2-0], [7:0-3-0,0-3-0], [9:0-2-3,0-2-3], [13:0-6-0,0-2-7]

LOADING (psf)		SPACING-	2-0-0	CSI.		DEFL.	in	(loc)	l/defl	L/d	PLATES	GRIP
TCLL	20.0	Plate Grip DOL	1.25	TC	0.45	Vert(LL)	-0.04	13-14	>999	240	MT20	244/190
TCDL	7.0	Lumber DOL	1.25	BC	0.35	Vert(CT)	-0.07	13-14	>999	180		
BCLL	0.0 *	Rep Stress Incr	YES	WB	0.59	Horz(CT)	0.05	9	n/a	n/a		
BCDL	10.0	Code FBC2020/TPI2014		Matrix-MS							Weight: 193 lb	FT = 20%

LUMBER-
TOP CHORD 2x4 SP No.2
BOT CHORD 2x4 SP No.2
WEBS 2x4 SP No.3
WEDGE
Left: 2x4 SP No.3
SLIDER Right 2x4 SP No.3 -t 1-11-8

BRACING-
TOP CHORD Structural wood sheathing directly applied or 6-0-0 oc purlins, except 2-0-0 oc purlins (6-0-0 max.): 4-5.
BOT CHORD Rigid ceiling directly applied or 6-0-0 oc bracing.
WEBS 1 Row at midpt 3-13, 4-13, 5-12

REACTIONS. (size) 2=0-3-8, 9=0-3-8, 13=0-3-8
Max Horz 2=246(LC 11)
Max Uplift 2=-114(LC 12), 9=-138(LC 13), 13=-226(LC 12)
Max Grav 2=433(LC 23), 9=457(LC 24), 13=1475(LC 1)

FORCES. (lb) - Max. Comp./Max. Ten. - All forces 250 (lb) or less except when shown.
TOP CHORD 2-3=-325/151, 3-4=0/416, 6-7=-485/141, 7-9=-762/236
BOT CHORD 12-13=-364/239, 11-12=-22/365, 10-11=-109/650, 9-10=-117/650
WEBS 3-14=0/290, 3-13=-451/249, 4-13=-1000/86, 4-12=-63/581, 6-12=-555/168, 6-11=-20/508, 7-11=-309/194

NOTES-
1) Unbalanced roof live loads have been considered for this design.
2) Wind: ASCE 7-16; Vult=130mph (3-second gust) Vasd=101mph; TCDL=4.2psf; BCDL=3.0psf; h=20ft; Cat. II; Exp B; Encl., GCpi=0.18; MWFRS (envelope) gable end zone and C-C Exterior(2E) -1-6-0 to 1-6-0, Interior(1) 1-6-0 to 12-4-0, Exterior(2R) 12-4-0 to 16-6-15, Interior(1) 16-6-15 to 16-11-15, Exterior(2R) 16-11-15 to 21-2-14, Interior(1) 21-2-14 to 29-4-0 zone;C-C for members and forces & MWFRS for reactions shown; Lumber DOL=1.60 plate grip DOL=1.60
3) Building Designer / Project engineer responsible for verifying applied roof live load shown covers rain loading requirements specific to the use of this truss component.
4) Provide adequate drainage to prevent water ponding.
5) This truss has been designed for a 10.0 psf bottom chord live load nonconcurrent with any other live loads.
6) * This truss has been designed for a live load of 20.0psf on the bottom chord in all areas where a rectangle 3-6-0 tall by 2-0-0 wide will fit between the bottom chord and any other members.
7) Bearing at joint(s) 9 considers parallel to grain value using ANSI/TPI 1 angle to grain formula. Building designer should verify capacity of bearing surface.
8) Provide mechanical connection (by others) of truss to bearing plate capable of withstanding 100 lb uplift at joint(s) except (jt=lb) 2=114, 9=138, 13=226.
9) Graphical purlin representation does not depict the size or the orientation of the purlin along the top and/or bottom chord.

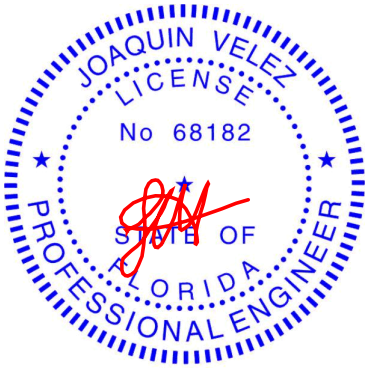

Joaquin Velez PE No.68182
MiTek USA, Inc. FL Cert 6634
6904 Parke East Blvd. Tampa FL 33610
Date:
April 7,2021

WARNING - Verify design parameters and READ NOTES ON THIS AND INCLUDED MITEK REFERENCE PAGE MII-7473 rev. 5/19/2020 BEFORE USE.
Design valid for use only with MiTek® connectors. This design is based only upon parameters shown, and is for an individual building component, not a truss system. Before use, the building designer must verify the applicability of design parameters and properly incorporate this design into the overall building design. Bracing indicated is to prevent buckling of individual truss web and/or chord members only. Additional temporary and permanent bracing is always required for stability and to prevent collapse with possible personal injury and property damage. For general guidance regarding the fabrication, storage, delivery, erection and bracing of trusses and truss systems, see ***ANSI/TPI1 Quality Criteria, DSB-89 and BCSI Building Component Safety Information*** available from Truss Plate Institute, 2670 Crain Highway, Suite 203 Waldorf, MD 20601

MiTek
6904 Parke East Blvd.
Tampa, FL 36610

Job	Truss	Truss Type	Qty	Ply	PFS SOLUTIONS - LOT 5 AL
2714379	T11G	GABLE	1	1	T23468886 Job Reference (optional)

Builders FirstSource (Jacksonville, FL), Jacksonville, FL - 32244, 8.430 s Mar 22 2021 MiTek Industries, Inc. Tue Apr 6 08:30:40 2021 Page 1
ID:7R_b7AxUtIWB3tgOsRwB2?zWJEt-jLpJbWokJSTll3YejMykKsdfYXizXswl5pQlLRzTUvz

-1-6-0	6-2-0	12-9-8	16-6-7	20-10-0	24-10-0	29-4-0
1-6-0	6-2-0	6-7-8	3-8-15	4-3-9	4-0-0	4-6-0

Scale = 1:69.4

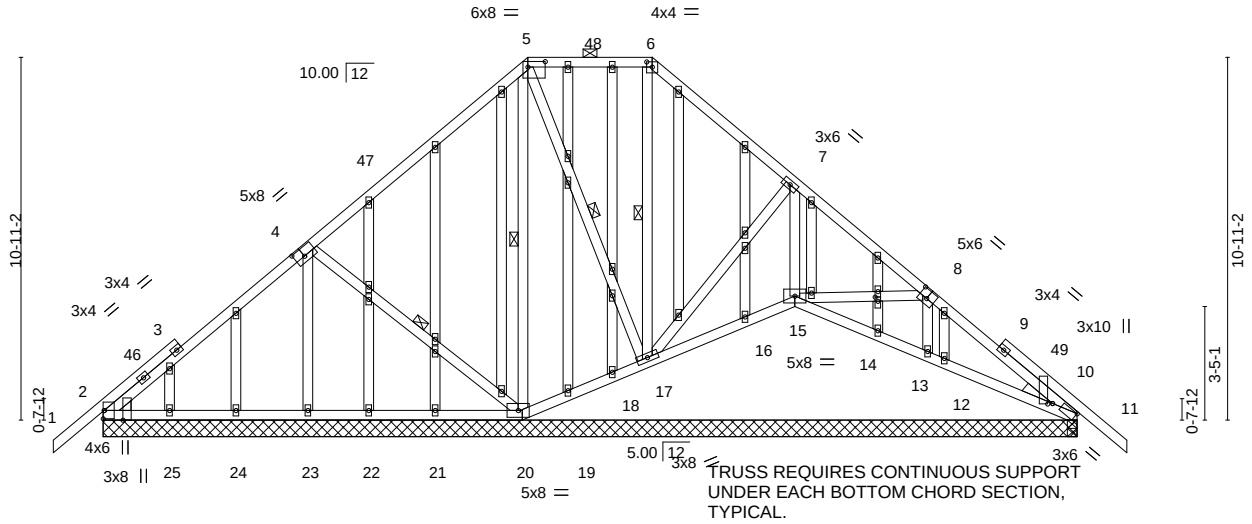

6-2-0	12-7-8	16-6-7	20-10-0	24-10-0	29-4-0
6-2-0	6-5-8	3-10-15	4-3-9	4-0-0	4-6-0

Plate Offsets (X,Y)-- [2:0-3-8,Edge], [4:0-3-8,0-3-0], [5:0-6-4,0-2-0], [6:0-2-0,0-1-14], [8:0-3-0,0-3-0], [10:0-0-3,0-1-12], [10:Edge,0-2-13], [28:0-1-8,0-1-0]

LOADING (psf)		**SPACING-** 2-0-0	**CSI.**		**DEFL.** in (loc) l/defl L/d	**PLATES**	**GRIP**
TCLL	20.0	Plate Grip DOL 1.25	TC	0.47	Vert(LL) -0.00 10-12 >999 240	MT20	244/190
TCDL	7.0	Lumber DOL 1.25	BC	0.10	Vert(CT) -0.01 10-12 >999 180		
BCLL	0.0 *	Rep Stress Incr YES	WB	0.17	Horz(CT) 0.01 10 n/a n/a		
BCDL	10.0	Code FBC2020/TPI2014	Matrix-S			Weight: 299 lb	FT = 20%

LUMBER-
TOP CHORD 2x4 SP No.2
BOT CHORD 2x4 SP No.2
WEBS 2x4 SP No.3
OTHERS 2x4 SP No.3
WEDGE
Left: 2x4 SP No.3
SLIDER Right 2x4 SP No.3 -t 0-11-6

BRACING-
TOP CHORD Structural wood sheathing directly applied or 6-0-0 oc purlins, except 2-0-0 oc purlins (6-0-0 max.): 5-6.
BOT CHORD Rigid ceiling directly applied or 10-0-0 oc bracing, Except: 6-0-0 oc bracing: 16-17,15-16,12-13.
WEBS 1 Row at midpt 4-20, 5-20, 5-17, 6-17

REACTIONS. All bearings 29-4-0.
(lb) - Max Horz 2=-256(LC 10)
Max Uplift All uplift 100 lb or less at joint(s) 17, 13, 2, 25 except 23=-183(LC 12), 20=-159(LC 12), 10=-145(LC 13)
Max Grav All reactions 250 lb or less at joint(s) 20, 15, 13, 12, 14, 16, 18, 25, 24, 22, 21, 19 except 23=395(LC 19), 17=415(LC 1), 2=264(LC 23), 10=285(LC 24), 10=283(LC 1)

FORCES. (lb) - Max. Comp./Max. Ten. - All forces 250 (lb) or less except when shown.
BOT CHORD 19-20=-132/270, 18-19=-132/269, 17-18=-124/270
WEBS 4-23=-351/194

NOTES-
1) Unbalanced roof live loads have been considered for this design.
2) Wind: ASCE 7-16; Vult=130mph (3-second gust) Vasd=101mph; TCDL=4.2psf; BCDL=3.0psf; h=20ft; Cat. II; Exp B; Encl., GCpi=0.18; MWFRS (envelope) gable end zone and C-C Exterior(2E) -1-6-0 to 1-6-0, Interior(1) 1-6-0 to 12-9-8, Exterior(2E) 12-9-8 to 16-6-7, Exterior(2R) 16-6-7 to 20-10-0, Interior(1) 20-10-0 to 30-10-0 zone;C-C for members and forces & MWFRS for reactions shown; Lumber DOL=1.60 plate grip DOL=1.60
3) Truss designed for wind loads in the plane of the truss only. For studs exposed to wind (normal to the face), see Standard Industry Gable End Details as applicable, or consult qualified building designer as per ANSI/TPI 1.
4) Building Designer / Project engineer responsible for verifying applied roof live load shown covers rain loading requirements specific to the use of this truss component.
5) Provide adequate drainage to prevent water ponding.
6) All plates are 2x4 MT20 unless otherwise indicated.
7) Gable studs spaced at 2-0-0 oc.
8) This truss has been designed for a 10.0 psf bottom chord live load nonconcurrent with any other live loads.
9) * This truss has been designed for a live load of 20.0psf on the bottom chord in all areas where a rectangle 3-6-0 tall by 2-0-0 wide will fit between the bottom chord and any other members.
10) Provide mechanical connection (by others) of truss to bearing plate capable of withstanding 100 lb uplift at joint(s) 17, 13, 2, 25 except (jt=lb) 23=183, 20=159, 10=145.
11) Graphical purlin representation does not depict the size or the orientation of the purlin along the top and/or bottom chord.

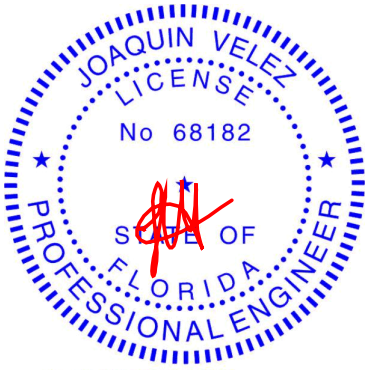

Joaquin Velez PE No.68182
MiTek USA, Inc. FL Cert 6634
6904 Parke East Blvd. Tampa FL 33610
Date:
April 7,2021

WARNING - Verify design parameters and READ NOTES ON THIS AND INCLUDED MITEK REFERENCE PAGE MII-7473 rev. 5/19/2020 BEFORE USE.
Design valid for use only with MiTek® connectors. This design is based only upon parameters shown, and is for an individual building component, not a truss system. Before use, the building designer must verify the applicability of design parameters and properly incorporate this design into the overall building design. Bracing indicated is to prevent buckling of individual truss web and/or chord members only. Additional temporary and permanent bracing is always required for stability and to prevent collapse with possible personal injury and property damage. For general guidance regarding the fabrication, storage, delivery, erection and bracing of trusses and truss systems, see ***ANSI/TPI1 Quality Criteria, DSB-89 and BCSI Building Component Safety Information*** available from Truss Plate Institute, 2670 Crain Highway, Suite 203 Waldorf, MD 20601

MiTek
6904 Parke East Blvd.
Tampa, FL 36610

Job	Truss	Truss Type	Qty	Ply	PFS SOLUTIONS - LOT 5 AL
2714379	T12	Piggyback Base	1	1	T23468887 Job Reference (optional)

Builders FirstSource (Jacksonville, FL), Jacksonville, FL - 32244, 8.430 s Mar 22 2021 MiTek Industries, Inc. Tue Apr 6 08:30:41 2021 Page 1
ID:7R_b7AxUtlWB3tgOsRwB2?zWJEt-BXNhpspM4mbcMD7qH3Tzt3AmVxyXG85uKTAlttzTUvy

-1-6-0	6-2-0	12-4-0	16-11-15	20-10-0	26-8-5	29-0-8	34-10-8	41-0-0
1-6-0	6-2-0	6-2-0	4-7-15	3-10-1	5-10-5	2-4-3	5-10-0	6-1-8

Scale = 1:75.4

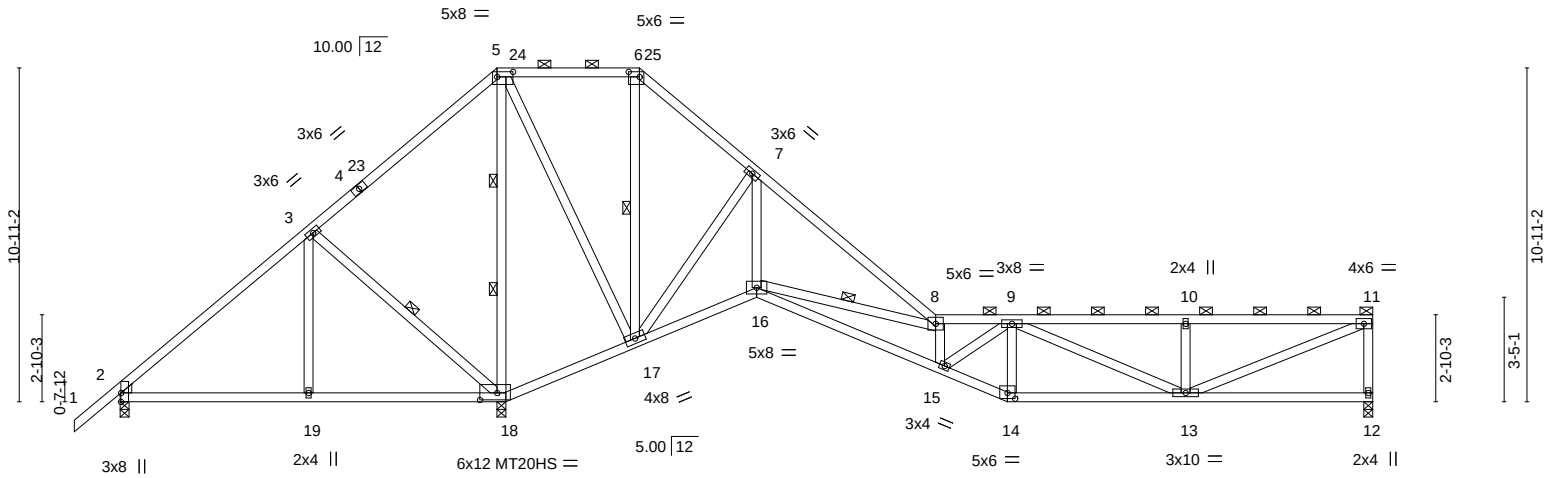

6-2-0	12-4-0	12-7-8	16-11-15	20-10-0	26-8-5	29-0-8	34-10-8	41-0-0
6-2-0	6-2-0	0-3-8	4-4-7	3-10-1	5-10-5	2-4-3	5-10-0	6-1-8

Plate Offsets (X,Y)-- [2:0-3-8,Edge], [5:0-6-4,0-2-0], [6:0-4-4,0-2-0], [14:0-3-0,0-2-4], [18:0-6-12,0-2-12]

LOADING (psf)		SPACING- 2-0-0		CSI.		DEFL. in (loc) l/defl L/d		PLATES GRIP	
TCLL	20.0	Plate Grip DOL	1.25	TC	0.71	Vert(LL) -0.13 15 >999 240		MT20	244/190
TCDL	7.0	Lumber DOL	1.25	BC	0.46	Vert(CT) -0.25 15-16 >999 180		MT20HS	187/143
BCLL	0.0 *	Rep Stress Incr	YES	WB	0.88	Horz(CT) 0.03 12 n/a n/a			
BCDL	10.0	Code FBC2020/TPI2014		Matrix-MS				Weight: 258 lb	FT = 20%

LUMBER-
TOP CHORD 2x4 SP No.2
BOT CHORD 2x4 SP No.2
WEBS 2x4 SP No.3
WEDGE
Left: 2x4 SP No.3

BRACING-
TOP CHORD Structural wood sheathing directly applied or 10-0-0 oc purlins, except end verticals, and 2-0-0 oc purlins (5-2-0 max.): 5-6, 8-11.
BOT CHORD Rigid ceiling directly applied or 5-4-14 oc bracing.
WEBS 1 Row at midpt 3-18, 6-17, 8-16
2 Rows at 1/3 pts 5-18

REACTIONS. (size) 12=0-3-8, 2=0-3-8, 18=0-3-8
Max Horz 2=240(LC 9)
Max Uplift 12=-169(LC 13), 2=-648(LC 24), 18=-546(LC 13)
Max Grav 12=649(LC 24), 2=141(LC 13), 18=2795(LC 1)

FORCES. (lb) - Max. Comp./Max. Ten. - All forces 250 (lb) or less except when shown.
TOP CHORD 2-3=-239/1137, 3-5=-217/1422, 5-6=-41/652, 6-7=-111/882, 7-8=-206/666, 8-9=-1158/264, 9-10=-1091/280, 10-11=-1091/280, 11-12=-593/183
BOT CHORD 2-19=-837/296, 18-19=-837/296, 17-18=-1181/434, 16-17=-474/245, 15-16=-300/1286, 14-15=-267/1105, 13-14=-254/1031
WEBS 3-19=0/315, 3-18=-482/256, 5-18=-1959/336, 5-17=-168/937, 6-17=-730/116, 7-17=-389/165, 8-16=-1596/497, 9-14=-352/113, 10-13=-348/171, 11-13=-292/1142

NOTES-
1) Unbalanced roof live loads have been considered for this design.
2) Wind: ASCE 7-16; Vult=130mph (3-second gust) Vasd=101mph; TCDL=4.2psf; BCDL=3.0psf; h=20ft; Cat. II; Exp B; Encl., GCpi=0.18; MWFRS (envelope) gable end zone and C-C Exterior(2E) -1-6-0 to 2-7-3, Interior(1) 2-7-3 to 12-4-0, Exterior(2R) 12-4-0 to 16-5-4, Interior(1) 16-5-4 to 16-11-15, Exterior(2R) 16-11-15 to 20-10-0, Interior(1) 20-10-0 to 40-10-4 zone;C-C for members and forces & MWFRS for reactions shown; Lumber DOL=1.60 plate grip DOL=1.60
3) Building Designer / Project engineer responsible for verifying applied roof live load shown covers rain loading requirements specific to the use of this truss component.
4) Provide adequate drainage to prevent water ponding.
5) All plates are MT20 plates unless otherwise indicated.
6) This truss has been designed for a 10.0 psf bottom chord live load nonconcurrent with any other live loads.
7) * This truss has been designed for a live load of 20.0psf on the bottom chord in all areas where a rectangle 3-6-0 tall by 2-0-0 wide will fit between the bottom chord and any other members.
8) Provide mechanical connection (by others) of truss to bearing plate capable of withstanding 100 lb uplift at joint(s) except (jt=lb) 12=169, 2=648, 18=546.
9) Graphical purlin representation does not depict the size or the orientation of the purlin along the top and/or bottom chord.

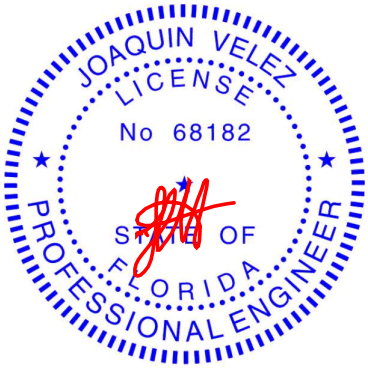

Joaquin Velez PE No.68182
MiTek USA, Inc. FL Cert 6634
6904 Parke East Blvd. Tampa FL 33610
Date:
April 7,2021

WARNING - Verify design parameters and READ NOTES ON THIS AND INCLUDED MITEK REFERENCE PAGE MII-7473 rev. 5/19/2020 BEFORE USE.
Design valid for use only with MiTek® connectors. This design is based only upon parameters shown, and is for an individual building component, not a truss system. Before use, the building designer must verify the applicability of design parameters and properly incorporate this design into the overall building design. Bracing indicated is to prevent buckling of individual truss web and/or chord members only. Additional temporary and permanent bracing is always required for stability and to prevent collapse with possible personal injury and property damage. For general guidance regarding the fabrication, storage, delivery, erection and bracing of trusses and truss systems, see ***ANSI/TPI1 Quality Criteria, DSB-89 and BCSI Building Component Safety Information*** available from Truss Plate Institute, 2670 Crain Highway, Suite 203 Waldorf, MD 20601

MiTek
6904 Parke East Blvd.
Tampa, FL 36610

Job	Truss	Truss Type	Qty	Ply	PFS SOLUTIONS - LOT 5 AL
2714379	T13	Piggyback Base	1	1	T23468888 Job Reference (optional)

Builders FirstSource (Jacksonville, FL), Jacksonville, FL - 32244, 8.430 s Mar 22 2021 MiTek Industries, Inc. Tue Apr 6 08:30:43 2021 Page 1
ID:7R_b7AxUtIWB3tgOsRwB2?zWJEt-7wVSEYrccNrKcXHDOUVRyUF6KlfSk23BonfPxmzTUvw

-1-6-0	6-2-0	12-4-0	16-11-15	20-10-0	26-1-2	29-0-8	34-10-8	41-0-0
1-6-0	6-2-0	6-2-0	4-7-15	3-10-1	5-3-2	2-11-6	5-10-0	6-1-8

Scale = 1:75.4

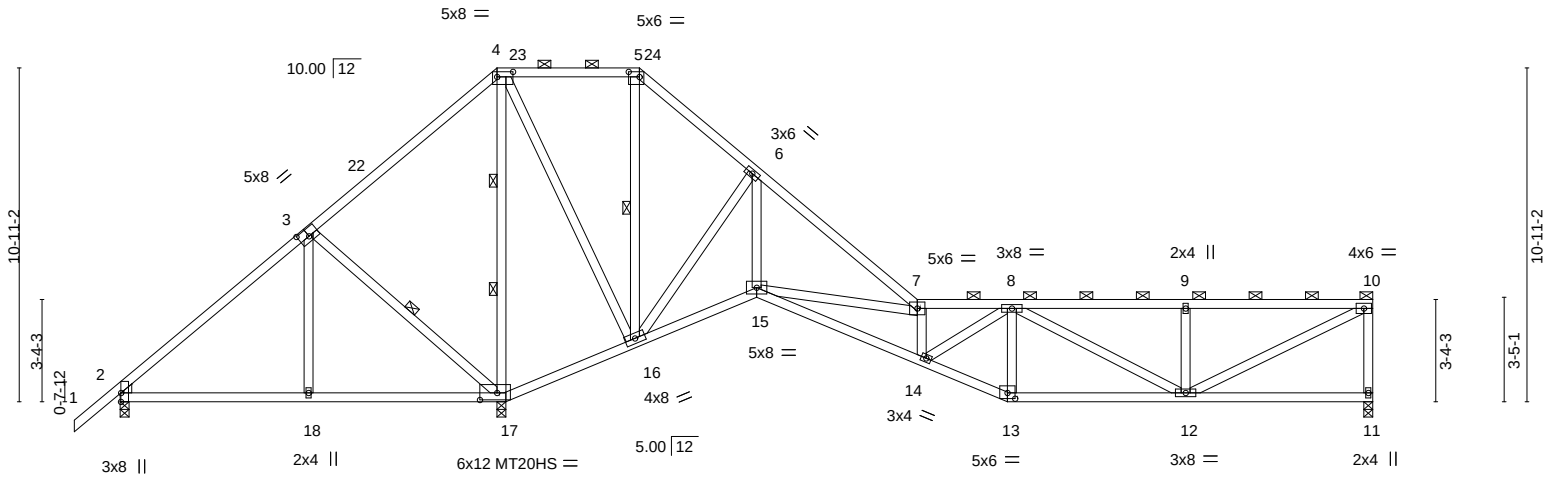

6-2-0	12-4-0	12-7-8	16-11-15	20-10-0	26-1-2	29-0-8	34-10-8	41-0-0
6-2-0	6-2-0	0-3-8	4-4-7	3-10-1	5-3-2	2-11-6	5-10-0	6-1-8

Plate Offsets (X,Y)-- [2:0-3-8,Edge], [3:0-4-0,0-3-0], [4:0-6-4,0-2-0], [5:0-4-4,0-2-0], [13:0-3-0,0-2-4], [17:0-6-12,0-2-12]

LOADING (psf)		**SPACING-** 2-0-0		**CSI.**		**DEFL.**	in	(loc)	l/defl	L/d	**PLATES**	**GRIP**
TCLL	20.0	Plate Grip DOL	1.25	TC	0.69	Vert(LL)	-0.11	14	>999	240	MT20	244/190
TCDL	7.0	Lumber DOL	1.25	BC	0.43	Vert(CT)	-0.21	14-15	>999	180	MT20HS	187/143
BCLL	0.0 *	Rep Stress Incr	YES	WB	0.85	Horz(CT)	0.04	11	n/a	n/a		
BCDL	10.0	Code FBC2020/TPI2014		Matrix-MS							Weight: 261 lb	FT = 20%

LUMBER-
TOP CHORD 2x4 SP No.2
BOT CHORD 2x4 SP No.2
WEBS 2x4 SP No.3
WEDGE
Left: 2x4 SP No.3

BRACING-
TOP CHORD Structural wood sheathing directly applied or 10-0-0 oc purlins, except end verticals, and 2-0-0 oc purlins (5-4-9 max.): 4-5, 7-10.
BOT CHORD Rigid ceiling directly applied or 5-7-14 oc bracing.
WEBS 1 Row at midpt 3-17, 5-16
2 Rows at 1/3 pts 4-17

REACTIONS. (size) 11=0-3-8, 2=0-3-8, 17=0-3-8
Max Horz 2=244(LC 12)
Max Uplift 11=-178(LC 13), 2=-571(LC 24), 17=-522(LC 13)
Max Grav 11=683(LC 24), 2=153(LC 23), 17=2685(LC 1)

FORCES. (lb) - Max. Comp./Max. Ten. - All forces 250 (lb) or less except when shown.
TOP CHORD 2-3=-216/1023, 3-4=-194/1307, 4-5=-39/559, 5-6=-87/767, 6-7=-140/443, 7-8=-1133/256, 8-9=-982/252, 9-10=-982/252, 10-11=-628/191
BOT CHORD 2-18=-749/260, 17-18=-747/260, 16-17=-1082/395, 15-16=-298/182, 14-15=-289/1256, 13-14=-263/1073, 12-13=-247/995
WEBS 3-18=0/311, 3-17=-481/255, 4-17=-1891/330, 4-16=-176/942, 5-16=-661/105, 6-16=-503/197, 6-15=0/371, 7-15=-1392/425, 8-13=-332/117, 9-12=-349/171, 10-12=-273/1068

NOTES-
1) Unbalanced roof live loads have been considered for this design.
2) Wind: ASCE 7-16; Vult=130mph (3-second gust) Vasd=101mph; TCDL=4.2psf; BCDL=3.0psf; h=20ft; Cat. II; Exp B; Encl., GCpi=0.18; MWFRS (envelope) gable end zone and C-C Exterior(2E) -1-6-0 to 2-7-3, Interior(1) 2-7-3 to 12-4-0, Exterior(2R) 12-4-0 to 16-5-4, Interior(1) 16-5-4 to 16-11-15, Exterior(2R) 16-11-15 to 20-10-0, Interior(1) 20-10-0 to 40-10-4 zone;C-C for members and forces & MWFRS for reactions shown; Lumber DOL=1.60 plate grip DOL=1.60
3) Building Designer / Project engineer responsible for verifying applied roof live load shown covers rain loading requirements specific to the use of this truss component.
4) Provide adequate drainage to prevent water ponding.
5) All plates are MT20 plates unless otherwise indicated.
6) This truss has been designed for a 10.0 psf bottom chord live load nonconcurrent with any other live loads.
7) * This truss has been designed for a live load of 20.0psf on the bottom chord in all areas where a rectangle 3-6-0 tall by 2-0-0 wide will fit between the bottom chord and any other members.
8) Provide mechanical connection (by others) of truss to bearing plate capable of withstanding 100 lb uplift at joint(s) except (jt=lb) 11=178, 2=571, 17=522.
9) Graphical purlin representation does not depict the size or the orientation of the purlin along the top and/or bottom chord.

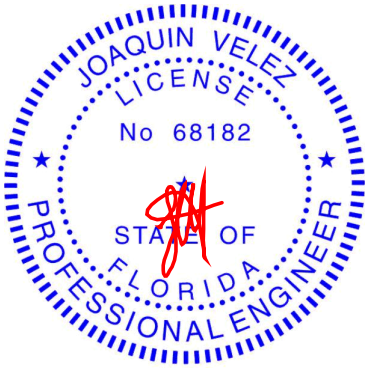

Joaquin Velez PE No.68182
MiTek USA, Inc. FL Cert 6634
6904 Parke East Blvd. Tampa FL 33610
Date:
April 7,2021

WARNING - Verify design parameters and READ NOTES ON THIS AND INCLUDED MITEK REFERENCE PAGE MII-7473 rev. 5/19/2020 BEFORE USE.
Design valid for use only with MiTek® connectors. This design is based only upon parameters shown, and is for an individual building component, not a truss system. Before use, the building designer must verify the applicability of design parameters and properly incorporate this design into the overall building design. Bracing indicated is to prevent buckling of individual truss web and/or chord members only. Additional temporary and permanent bracing is always required for stability and to prevent collapse with possible personal injury and property damage. For general guidance regarding the fabrication, storage, delivery, erection and bracing of trusses and truss systems, see ***ANSI/TPI1 Quality Criteria, DSB-89 and BCSI Building Component Safety Information*** available from Truss Plate Institute, 2670 Crain Highway, Suite 203 Waldorf, MD 20601

MiTek
6904 Parke East Blvd.
Tampa, FL 36610

Job	Truss	Truss Type	Qty	Ply	PFS SOLUTIONS - LOT 5 AL
2714379	T14	Piggyback Base	1	1	T23468889 Job Reference (optional)

Builders FirstSource (Jacksonville, FL), Jacksonville, FL - 32244, 8.430 s Mar 22 2021 MiTek Industries, Inc. Tue Apr 6 08:30:44 2021 Page 1
ID:7R_b7AxUtIWB3tgOsRwB2?zWJEt-c63qRurEMhzBDgsPyB0gVioHT9_kTWiK0ROzUCzTUvv

-1-6-0	6-2-0	12-4-0	16-11-15	20-10-0	25-5-14	29-0-8	34-10-8	41-0-0
1-6-0	6-2-0	6-2-0	4-7-15	3-10-1	4-7-14	3-6-10	5-10-0	6-1-8

Scale = 1:75.4

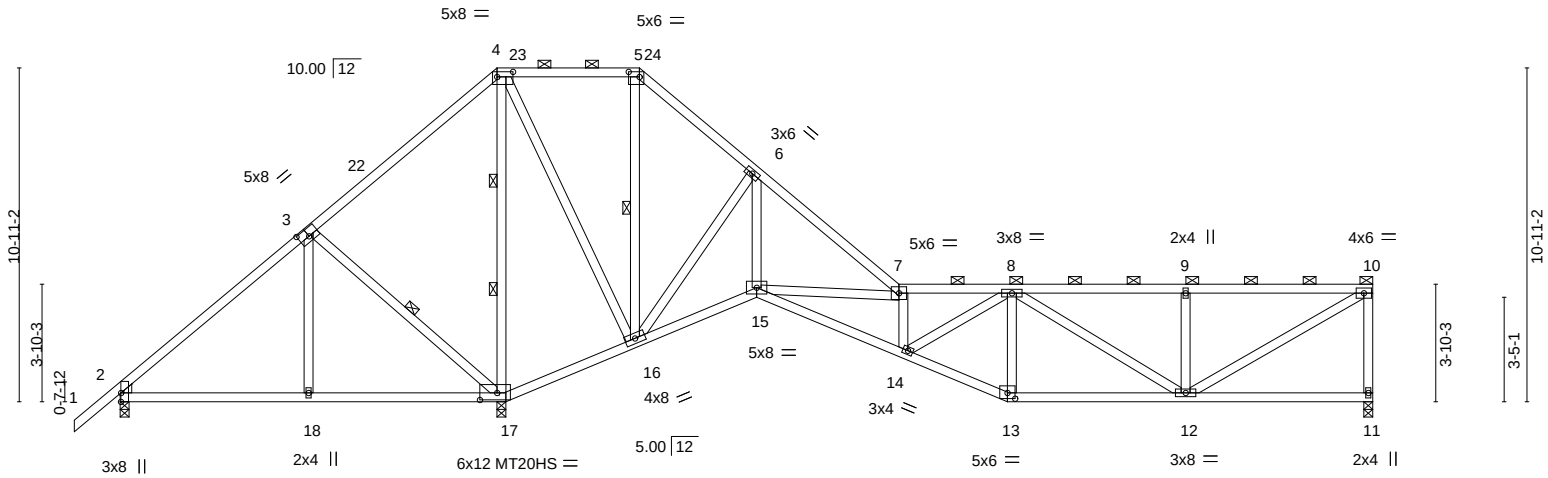

6-2-0	12-4-0	12-7-8	16-11-15	20-10-0	25-5-14	29-0-8	34-10-8	41-0-0
6-2-0	6-2-0	0-3-8	4-4-7	3-10-1	4-7-14	3-6-10	5-10-0	6-1-8

Plate Offsets (X,Y)-- [2:0-3-8,Edge], [3:0-4-0,0-3-0], [4:0-6-4,0-2-0], [5:0-4-4,0-2-0], [13:0-3-0,0-2-4], [17:0-6-12,0-2-12]

LOADING (psf)		**SPACING-** 2-0-0		**CSI.**		**DEFL.** in (loc) l/defl L/d		**PLATES**	**GRIP**
TCLL	20.0	Plate Grip DOL	1.25	TC	0.66	Vert(LL) -0.09 14 >999 240		MT20	244/190
TCDL	7.0	Lumber DOL	1.25	BC	0.43	Vert(CT) -0.18 14-15 >999 180		MT20HS	187/143
BCLL	0.0 *	Rep Stress Incr	YES	WB	0.82	Horz(CT) 0.05 11 n/a n/a			
BCDL	10.0	Code FBC2020/TPI2014		Matrix-MS				Weight: 264 lb	FT = 20%

LUMBER-
TOP CHORD 2x4 SP No.2
BOT CHORD 2x4 SP No.2
WEBS 2x4 SP No.3
WEDGE
Left: 2x4 SP No.3

BRACING-
TOP CHORD Structural wood sheathing directly applied or 10-0-0 oc purlins, except end verticals, and 2-0-0 oc purlins (5-6-4 max.): 4-5, 7-10.
BOT CHORD Rigid ceiling directly applied or 5-10-10 oc bracing.
WEBS 1 Row at midpt 3-17, 5-16
2 Rows at 1/3 pts 4-17

REACTIONS. (size) 11=0-3-8, 2=0-3-8, 17=0-3-8
Max Horz 2=254(LC 12)
Max Uplift 11=-185(LC 13), 2=-508(LC 24), 17=-504(LC 13)
Max Grav 11=711(LC 24), 2=182(LC 23), 17=2595(LC 1)

FORCES. (lb) - Max. Comp./Max. Ten. - All forces 250 (lb) or less except when shown.
TOP CHORD 2-3=-199/931, 3-4=-177/1213, 4-5=-37/483, 5-6=-70/674, 6-7=-87/261, 7-8=-1077/239, 8-9=-892/228, 9-10=-892/228, 10-11=-657/199
BOT CHORD 2-18=-680/230, 17-18=-677/230, 16-17=-1003/362, 14-15=-268/1190, 13-14=-254/1029, 12-13=-236/950
WEBS 3-18=0/309, 3-17=-478/255, 4-17=-1835/327, 4-16=-183/947, 5-16=-606/98, 6-16=-602/223, 6-15=-39/524, 7-15=-1198/358, 8-13=-307/118, 9-12=-349/170, 10-12=-257/1009

NOTES-
1) Unbalanced roof live loads have been considered for this design.
2) Wind: ASCE 7-16; Vult=130mph (3-second gust) Vasd=101mph; TCDL=4.2psf; BCDL=3.0psf; h=20ft; Cat. II; Exp B; Encl., GCpi=0.18; MWFRS (envelope) gable end zone and C-C Exterior(2E) -1-6-0 to 2-7-3, Interior(1) 2-7-3 to 12-4-0, Exterior(2R) 12-4-0 to 16-5-4, Interior(1) 16-5-4 to 16-11-15, Exterior(2R) 16-11-15 to 20-10-0, Interior(1) 20-10-0 to 40-10-4 zone;C-C for members and forces & MWFRS for reactions shown; Lumber DOL=1.60 plate grip DOL=1.60
3) Building Designer / Project engineer responsible for verifying applied roof live load shown covers rain loading requirements specific to the use of this truss component.
4) Provide adequate drainage to prevent water ponding.
5) All plates are MT20 plates unless otherwise indicated.
6) This truss has been designed for a 10.0 psf bottom chord live load nonconcurrent with any other live loads.
7) * This truss has been designed for a live load of 20.0psf on the bottom chord in all areas where a rectangle 3-6-0 tall by 2-0-0 wide will fit between the bottom chord and any other members.
8) Provide mechanical connection (by others) of truss to bearing plate capable of withstanding 100 lb uplift at joint(s) except (jt=lb) 11=185, 2=508, 17=504.
9) Graphical purlin representation does not depict the size or the orientation of the purlin along the top and/or bottom chord.

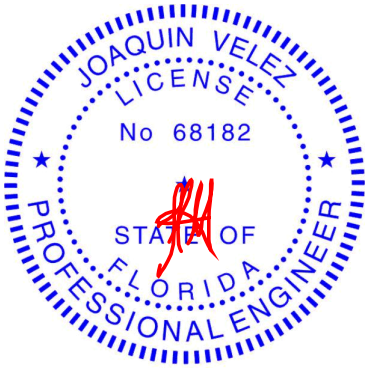

Joaquin Velez PE No.68182
MiTek USA, Inc. FL Cert 6634
6904 Parke East Blvd. Tampa FL 33610
Date:
April 7,2021

WARNING - Verify design parameters and READ NOTES ON THIS AND INCLUDED MITEK REFERENCE PAGE MII-7473 rev. 5/19/2020 BEFORE USE.
Design valid for use only with MiTek® connectors. This design is based only upon parameters shown, and is for an individual building component, not a truss system. Before use, the building designer must verify the applicability of design parameters and properly incorporate this design into the overall building design. Bracing indicated is to prevent buckling of individual truss web and/or chord members only. Additional temporary and permanent bracing is always required for stability and to prevent collapse with possible personal injury and property damage. For general guidance regarding the fabrication, storage, delivery, erection and bracing of trusses and truss systems, see ***ANSI/TPI1 Quality Criteria, DSB-89 and BCSI Building Component Safety Information*** available from Truss Plate Institute, 2670 Crain Highway, Suite 203 Waldorf, MD 20601

MiTek
6904 Parke East Blvd.
Tampa, FL 36610

Job	Truss	Truss Type	Qty	Ply	PFS SOLUTIONS - LOT 5 AL
2714379	T15	Piggyback Base	1	1	T23468890 Job Reference (optional)

Builders FirstSource (Jacksonville, FL), Jacksonville, FL - 32244, 8.430 s Mar 22 2021 MiTek Industries, Inc. Tue Apr 6 08:30:45 2021 Page 1
ID:7R_b7AxUtlWB3tgOsRwB2?zWJEt-4ldCfEss7_51rqQbWvXv1vKT0YKDCzfUF58W0ezTUvu

-1-6-0	6-2-0	12-4-0	16-11-15	20-10-0	24-0-6	29-0-8	34-10-8	41-0-0
1-6-0	6-2-0	6-2-0	4-7-15	3-10-1	3-2-6	5-0-2	5-10-0	6-1-8

Scale = 1:76.8

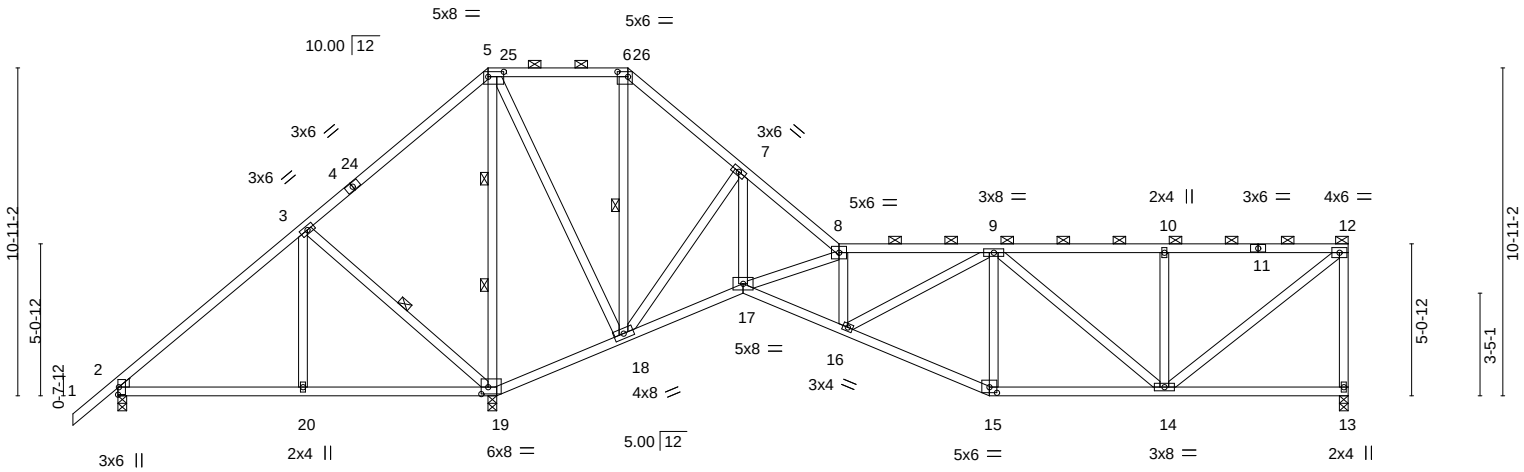

6-2-0	12-4-0	12-7-8	16-11-15	20-10-0	24-0-6	29-0-8	34-10-8	41-0-0
6-2-0	6-2-0	0-3-8	4-4-7	3-10-1	3-2-6	5-0-2	5-10-0	6-1-8

Plate Offsets (X,Y)-- [5:0-6-4,0-2-0], [6:0-4-4,0-2-0], [15:0-3-0,0-2-4], [19:0-2-12,0-2-12]

LOADING (psf)		SPACING- 2-0-0		CSI.		DEFL.	in	(loc)	l/defl	L/d	PLATES	GRIP
TCLL	20.0	Plate Grip DOL	1.25	TC	0.61	Vert(LL)	-0.07	16	>999	240	MT20	244/190
TCDL	7.0	Lumber DOL	1.25	BC	0.41	Vert(CT)	-0.14	15-16	>999	180		
BCLL	0.0 *	Rep Stress Incr	YES	WB	0.78	Horz(CT)	0.06	13	n/a	n/a		
BCDL	10.0	Code FBC2020/TPI2014		Matrix-MS							Weight: 272 lb	FT = 20%

LUMBER-
TOP CHORD 2x4 SP No.2
BOT CHORD 2x4 SP No.2
WEBS 2x4 SP No.3
WEDGE
Left: 2x4 SP No.3

BRACING-
TOP CHORD Structural wood sheathing directly applied or 6-0-0 oc purlins, except end verticals, and 2-0-0 oc purlins (5-11-0 max.): 5-6, 8-12.
BOT CHORD Rigid ceiling directly applied or 6-0-0 oc bracing.
WEBS 1 Row at midpt 3-19, 6-18
2 Rows at 1/3 pts 5-19

REACTIONS. (size) 13=0-3-8, 2=0-3-8, 19=0-3-8
Max Horz 2=278(LC 12)
Max Uplift 13=-198(LC 13), 2=-399(LC 24), 19=-477(LC 13)
Max Grav 13=760(LC 24), 2=233(LC 23), 19=2439(LC 1)

FORCES. (lb) - Max. Comp./Max. Ten. - All forces 250 (lb) or less except when shown.
TOP CHORD 2-3=-182/772, 3-5=-155/1049, 5-6=-35/351, 6-7=-56/512, 8-9=-890/188, 9-10=-726/185, 10-12=-726/185, 12-13=-707/211
BOT CHORD 2-20=-560/192, 19-20=-560/192, 18-19=-863/299, 16-17=-209/973, 15-16=-230/918, 14-15=-211/837
WEBS 3-20=0/305, 3-19=-469/255, 5-19=-1735/327, 5-18=-198/957, 6-18=-511/91, 7-18=-773/263, 7-17=-140/805, 8-17=-838/234, 10-14=-341/166, 12-14=-231/907

NOTES-
1) Unbalanced roof live loads have been considered for this design.
2) Wind: ASCE 7-16; Vult=130mph (3-second gust) Vasd=101mph; TCDL=4.2psf; BCDL=3.0psf; h=20ft; Cat. II; Exp B; Encl., GCpi=0.18; MWFRS (envelope) gable end zone and C-C Exterior(2E) -1-6-0 to 2-7-3, Interior(1) 2-7-3 to 12-4-0, Exterior(2R) 12-4-0 to 16-5-4, Interior(1) 16-5-4 to 16-11-15, Exterior(2R) 16-11-15 to 20-10-0, Interior(1) 20-10-0 to 40-10-4 zone;C-C for members and forces & MWFRS for reactions shown; Lumber DOL=1.60 plate grip DOL=1.60
3) Building Designer / Project engineer responsible for verifying applied roof live load shown covers rain loading requirements specific to the use of this truss component.
4) Provide adequate drainage to prevent water ponding.
5) This truss has been designed for a 10.0 psf bottom chord live load nonconcurrent with any other live loads.
6) * This truss has been designed for a live load of 20.0psf on the bottom chord in all areas where a rectangle 3-6-0 tall by 2-0-0 wide will fit between the bottom chord and any other members.
7) Provide mechanical connection (by others) of truss to bearing plate capable of withstanding 100 lb uplift at joint(s) except (jt=lb) 13=198, 2=399, 19=477.
8) Graphical purlin representation does not depict the size or the orientation of the purlin along the top and/or bottom chord.

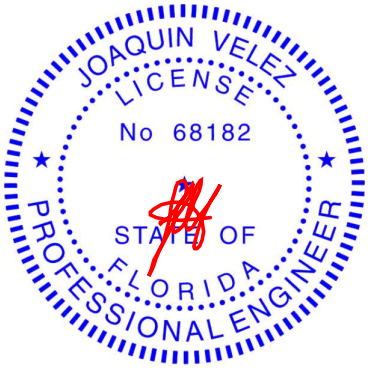

Joaquin Velez PE No.68182
MiTek USA, Inc. FL Cert 6634
6904 Parke East Blvd. Tampa FL 33610
Date:
April 7,2021

WARNING - Verify design parameters and READ NOTES ON THIS AND INCLUDED MITEK REFERENCE PAGE MII-7473 rev. 5/19/2020 BEFORE USE.
Design valid for use only with MiTek® connectors. This design is based only upon parameters shown, and is for an individual building component, not a truss system. Before use, the building designer must verify the applicability of design parameters and properly incorporate this design into the overall building design. Bracing indicated is to prevent buckling of individual truss web and/or chord members only. Additional temporary and permanent bracing is always required for stability and to prevent collapse with possible personal injury and property damage. For general guidance regarding the fabrication, storage, delivery, erection and bracing of trusses and truss systems, see ***ANSI/TPI1 Quality Criteria, DSB-89 and BCSI Building Component Safety Information*** available from Truss Plate Institute, 2670 Crain Highway, Suite 203 Waldorf, MD 20601

MiTek
6904 Parke East Blvd.
Tampa, FL 36610

Job	Truss	Truss Type	Qty	Ply	PFS SOLUTIONS - LOT 5 AL
2714379	T16	Piggyback Base	1	1	T23468891 Job Reference (optional)

Builders FirstSource (Jacksonville, FL), Jacksonville, FL - 32244, 8.430 s Mar 22 2021 MiTek Industries, Inc. Tue Apr 6 08:30:47 2021 Page 1
ID:7R_b7AxUtIWB3tgOsRwB2?zWJEt-0hly3vu7fcMl58a_dKaN6KQpsM0Ggr?niPdd4XzTUvs

1-6-0	6-2-0	12-4-0	16-11-15	20-10-0	22-5-3	29-0-8	34-10-8	41-0-0
1-6-0	6-2-0	6-2-0	4-7-15	3-10-1	1-7-3	6-7-5	5-10-0	6-1-8

Scale = 1:76.8

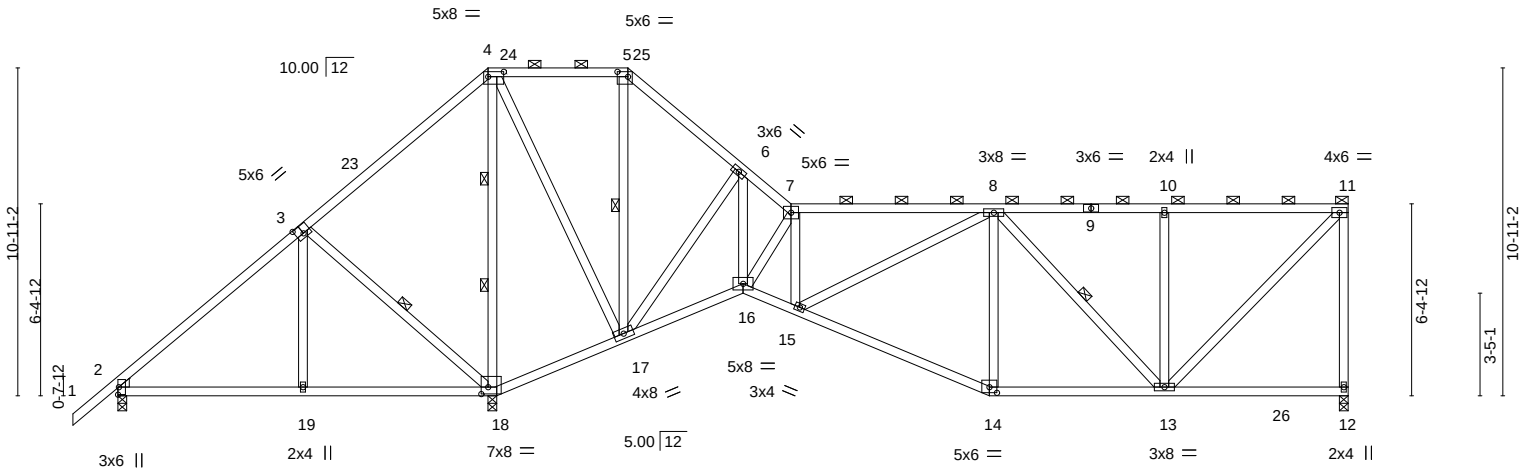

6-2-0	12-4-0	12-7-8	16-11-15	20-10-0	22-5-3	29-0-8	34-10-8	41-0-0
6-2-0	6-2-0	0-3-8	4-4-7	3-10-1	1-7-3	6-7-5	5-10-0	6-1-8

Plate Offsets (X,Y)-- [3:0-3-0,0-3-4], [4:0-6-4,0-2-0], [5:0-4-4,0-2-0], [14:0-3-0,0-2-4], [18:0-2-12,0-2-12]

LOADING (psf)		SPACING-	2-0-0	CSI.		DEFL.	in	(loc)	l/defl	L/d	PLATES	GRIP
TCLL	20.0	Plate Grip DOL	1.25	TC	0.59	Vert(LL)	-0.10	14-15	>999	240	MT20	244/190
TCDL	7.0	Lumber DOL	1.25	BC	0.44	Vert(CT)	-0.20	14-15	>999	180		
BCLL	0.0 *	Rep Stress Incr	YES	WB	0.85	Horz(CT)	0.06	12	n/a	n/a		
BCDL	10.0	Code FBC2020/TPI2014		Matrix-MS							Weight: 283 lb	FT = 20%

LUMBER-
TOP CHORD 2x4 SP No.2
BOT CHORD 2x4 SP No.2
WEBS 2x4 SP No.3
WEDGE
Left: 2x4 SP No.3

BRACING-
TOP CHORD Structural wood sheathing directly applied or 6-0-0 oc purlins, except end verticals, and 2-0-0 oc purlins (6-0-0 max.): 4-5, 7-11.
BOT CHORD Rigid ceiling directly applied or 6-0-0 oc bracing.
WEBS 1 Row at midpt 3-18, 5-17, 8-13
2 Rows at 1/3 pts 4-18

REACTIONS. (size) 12=0-3-8, 2=0-3-8, 18=0-3-8
Max Horz 2=304(LC 12)
Max Uplift 12=-208(LC 13), 2=-320(LC 24), 18=-463(LC 13)
Max Grav 12=878(LC 26), 2=270(LC 23), 18=2490(LC 2)

FORCES. (lb) - Max. Comp./Max. Ten. - All forces 250 (lb) or less except when shown.
TOP CHORD 2-3=-190/655, 3-4=-167/976, 4-5=-34/280, 5-6=-54/404, 6-7=-410/93, 7-8=-721/136, 8-10=-645/154, 10-11=-645/154, 11-12=-762/222
BOT CHORD 2-19=-471/172, 18-19=-469/173, 17-18=-828/246, 16-17=-65/335, 15-16=-153/752, 14-15=-209/884, 13-14=-189/776
WEBS 3-19=0/302, 3-18=-561/255, 4-18=-1713/335, 4-17=-210/1028, 5-17=-436/87, 6-17=-956/292, 6-16=-224/1133, 7-16=-808/182, 7-15=-10/285, 10-13=-326/158, 11-13=-215/902

NOTES-
1) Unbalanced roof live loads have been considered for this design.
2) Wind: ASCE 7-16; Vult=130mph (3-second gust) Vasd=101mph; TCDL=4.2psf; BCDL=3.0psf; h=20ft; Cat. II; Exp B; Encl., GCpi=0.18; MWFRS (envelope) gable end zone and C-C Exterior(2E) -1-6-0 to 2-7-3, Interior(1) 2-7-3 to 12-4-0, Exterior(2R) 12-4-0 to 16-5-4, Interior(1) 16-5-4 to 16-11-15, Exterior(2R) 16-11-15 to 20-10-0, Interior(1) 20-10-0 to 40-10-4 zone;C-C for members and forces & MWFRS for reactions shown; Lumber DOL=1.60 plate grip DOL=1.60
3) Building Designer / Project engineer responsible for verifying applied roof live load shown covers rain loading requirements specific to the use of this truss component.
4) Provide adequate drainage to prevent water ponding.
5) This truss has been designed for a 10.0 psf bottom chord live load nonconcurrent with any other live loads.
6) * This truss has been designed for a live load of 20.0psf on the bottom chord in all areas where a rectangle 3-6-0 tall by 2-0-0 wide will fit between the bottom chord and any other members, with BCDL = 10.0psf.
7) Provide mechanical connection (by others) of truss to bearing plate capable of withstanding 100 lb uplift at joint(s) except (jt=lb) 12=208, 2=320, 18=463.
8) Graphical purlin representation does not depict the size or the orientation of the purlin along the top and/or bottom chord.

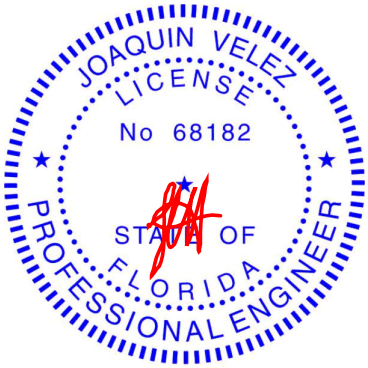

Joaquin Velez PE No.68182
MiTek USA, Inc. FL Cert 6634
6904 Parke East Blvd. Tampa FL 33610
Date:
April 7,2021

WARNING - Verify design parameters and READ NOTES ON THIS AND INCLUDED MITEK REFERENCE PAGE MII-7473 rev. 5/19/2020 BEFORE USE.
Design valid for use only with MiTek® connectors. This design is based only upon parameters shown, and is for an individual building component, not a truss system. Before use, the building designer must verify the applicability of design parameters and properly incorporate this design into the overall building design. Bracing indicated is to prevent buckling of individual truss web and/or chord members only. Additional temporary and permanent bracing is always required for stability and to prevent collapse with possible personal injury and property damage. For general guidance regarding the fabrication, storage, delivery, erection and bracing of trusses and truss systems, see ***ANSI/TPI1 Quality Criteria, DSB-89 and BCSI Building Component Safety Information*** available from Truss Plate Institute, 2670 Crain Highway, Suite 203 Waldorf, MD 20601

MiTek
6904 Parke East Blvd.
Tampa, FL 36610

Job	Truss	Truss Type	Qty	Ply	PFS SOLUTIONS - LOT 5 AL
2714379	T17	Piggyback Base	1	1	T23468892 Job Reference (optional)

Builders FirstSource (Jacksonville, FL), Jacksonville, FL - 32244, 8.430 s Mar 22 2021 MiTek Industries, Inc. Tue Apr 6 08:30:48 2021 Page 1
ID:7R_b7AxUtlWB3tgOsRwB2?zWJEt-UtILHFulQvUciI9AB15cfYy?DmHMPGYwx3MAdzzTUvr

-1-6-0	6-2-0	12-4-0	16-11-15	20-10-0	24-11-4	29-0-8	34-10-8	41-0-0
1-6-0	6-2-0	6-2-0	4-7-15	3-10-0	4-1-4	4-1-4	5-10-0	6-1-8

Scale = 1:76.8

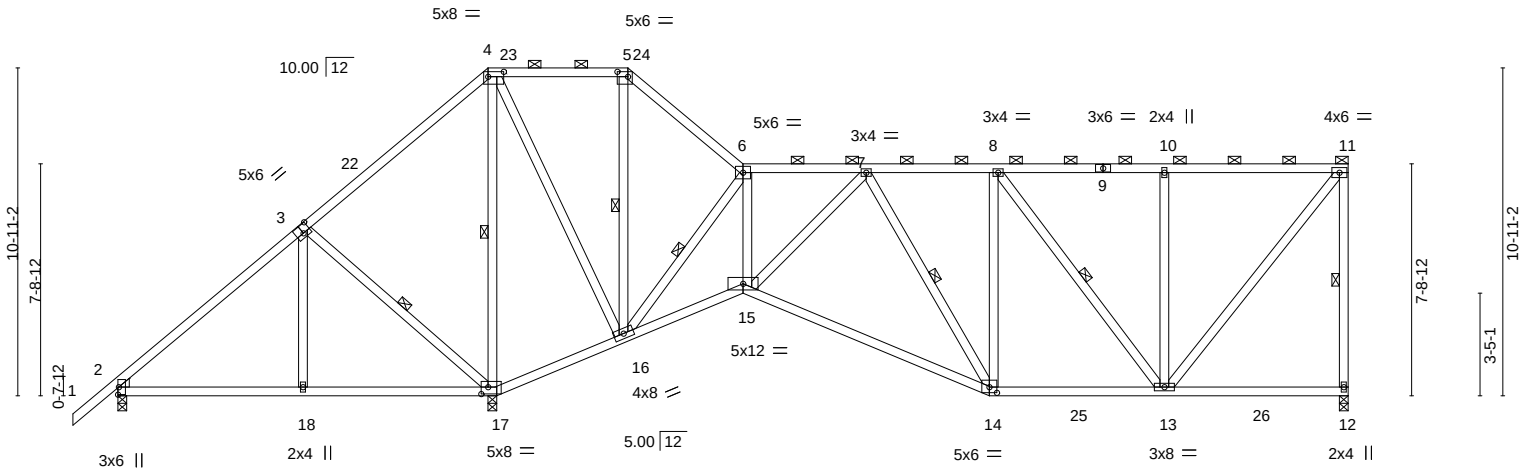

6-2-0	12-4-0	12-7-8	16-11-15	20-10-0	29-0-8	34-10-8	41-0-0
6-2-0	6-2-0	0-3-8	4-4-7	3-10-1	8-2-8	5-10-0	6-1-8

Plate Offsets (X,Y)-- [3:0-3-0,0-3-4], [4:0-6-4,0-2-0], [5:0-4-4,0-2-0], [14:0-3-0,0-2-4], [17:0-2-12,0-2-12]

LOADING (psf)		SPACING- 2-0-0		CSI.		DEFL. in (loc) l/defl L/d		PLATES GRIP
TCLL	20.0	Plate Grip DOL	1.25	TC	0.55	Vert(LL) -0.20 14-15 >999 240		MT20 244/190
TCDL	7.0	Lumber DOL	1.25	BC	0.71	Vert(CT) -0.41 14-15 >819 180		
BCLL	0.0 *	Rep Stress Incr	YES	WB	0.96	Horz(CT) 0.06 12 n/a n/a		
BCDL	10.0	Code FBC2020/TPI2014		Matrix-MS				Weight: 292 lb FT = 20%

LUMBER-
TOP CHORD 2x4 SP No.2
BOT CHORD 2x4 SP No.2
WEBS 2x4 SP No.3
WEDGE
Left: 2x4 SP No.3

BRACING-
TOP CHORD Structural wood sheathing directly applied or 6-0-0 oc purlins, except end verticals, and 2-0-0 oc purlins (6-0-0 max.): 4-5, 6-11.
BOT CHORD Rigid ceiling directly applied or 6-0-0 oc bracing.
WEBS 1 Row at midpt 11-12, 3-17, 4-17, 5-16, 6-16, 7-14, 8-13

REACTIONS. (size) 12=0-3-8, 2=0-3-8, 17=0-3-8
Max Horz 2=330(LC 12)
Max Uplift 12=-226(LC 9), 2=-217(LC 24), 17=-438(LC 13)
Max Grav 12=957(LC 26), 2=317(LC 23), 17=2371(LC 2)

FORCES. (lb) - Max. Comp./Max. Ten. - All forces 250 (lb) or less except when shown.
TOP CHORD 2-3=-188/504, 3-4=-165/835, 5-6=-21/259, 6-7=-560/123, 7-8=-735/174, 8-10=-592/143, 10-11=-592/143, 11-12=-836/240
BOT CHORD 2-18=-357/149, 17-18=-354/149, 16-17=-711/183, 15-16=-136/639, 14-15=-224/857, 13-14=-176/736
WEBS 3-18=0/298, 3-17=-555/255, 4-17=-1638/335, 4-16=-222/1045, 5-16=-335/85, 6-16=-1215/315, 6-15=-168/947, 7-15=-264/106, 10-13=-354/172, 11-13=-224/928

NOTES-
1) Unbalanced roof live loads have been considered for this design.
2) Wind: ASCE 7-16; Vult=130mph (3-second gust) Vasd=101mph; TCDL=4.2psf; BCDL=3.0psf; h=20ft; Cat. II; Exp B; Encl., GCpi=0.18; MWFRS (envelope) gable end zone and C-C Exterior(2E) -1-6-0 to 2-7-3, Interior(1) 2-7-3 to 12-4-0, Exterior(2R) 12-4-0 to 16-5-4, Interior(1) 16-5-4 to 16-11-15, Exterior(2E) 16-11-15 to 20-10-0, Interior(1) 20-10-0 to 40-10-4 zone;C-C for members and forces & MWFRS for reactions shown; Lumber DOL=1.60 plate grip DOL=1.60
3) Building Designer / Project engineer responsible for verifying applied roof live load shown covers rain loading requirements specific to the use of this truss component.
4) Provide adequate drainage to prevent water ponding.
5) This truss has been designed for a 10.0 psf bottom chord live load nonconcurrent with any other live loads.
6) * This truss has been designed for a live load of 20.0psf on the bottom chord in all areas where a rectangle 3-6-0 tall by 2-0-0 wide will fit between the bottom chord and any other members, with BCDL = 10.0psf.
7) Provide mechanical connection (by others) of truss to bearing plate capable of withstanding 100 lb uplift at joint(s) except (jt=lb) 12=226, 2=217, 17=438.
8) Graphical purlin representation does not depict the size or the orientation of the purlin along the top and/or bottom chord.

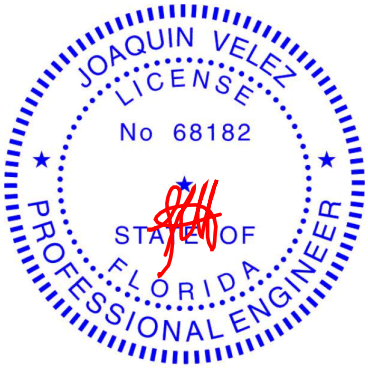

Joaquin Velez PE No.68182
MiTek USA, Inc. FL Cert 6634
6904 Parke East Blvd. Tampa FL 33610
Date:
April 7,2021

WARNING - Verify design parameters and READ NOTES ON THIS AND INCLUDED MITEK REFERENCE PAGE MII-7473 rev. 5/19/2020 BEFORE USE.
Design valid for use only with MiTek® connectors. This design is based only upon parameters shown, and is for an individual building component, not a truss system. Before use, the building designer must verify the applicability of design parameters and properly incorporate this design into the overall building design. Bracing indicated is to prevent buckling of individual truss web and/or chord members only. Additional temporary and permanent bracing is always required for stability and to prevent collapse with possible personal injury and property damage. For general guidance regarding the fabrication, storage, delivery, erection and bracing of trusses and truss systems, see ***ANSI/TPI1 Quality Criteria, DSB-89 and BCSI Building Component Safety Information*** available from Truss Plate Institute, 2670 Crain Highway, Suite 203 Waldorf, MD 20601

MiTek
6904 Parke East Blvd.
Tampa, FL 36610

Job	Truss	Truss Type	Qty	Ply	PFS SOLUTIONS - LOT 5 AL
2714379	T18	Piggyback Base	1	1	T23468893 Job Reference (optional)

Builders FirstSource (Jacksonville, FL), Jacksonville, FL - 32244, 8.430 s Mar 22 2021 MiTek Industries, Inc. Tue Apr 6 08:30:51 2021 Page 1
ID:7R_b7AxUtlWB3tgOsRwB2?zWJEt-uS_TvHxdjqsBZlols9eJHAaPszHIcdoMd1bqDIzTUvo

-1-6-0	6-2-0	12-4-0	16-11-15	19-2-12	26-4-11	33-6-9	41-0-0
1-6-0	6-2-0	6-2-0	4-7-15	2-2-13	7-1-15	7-1-15	7-5-7

Scale = 1:74.6

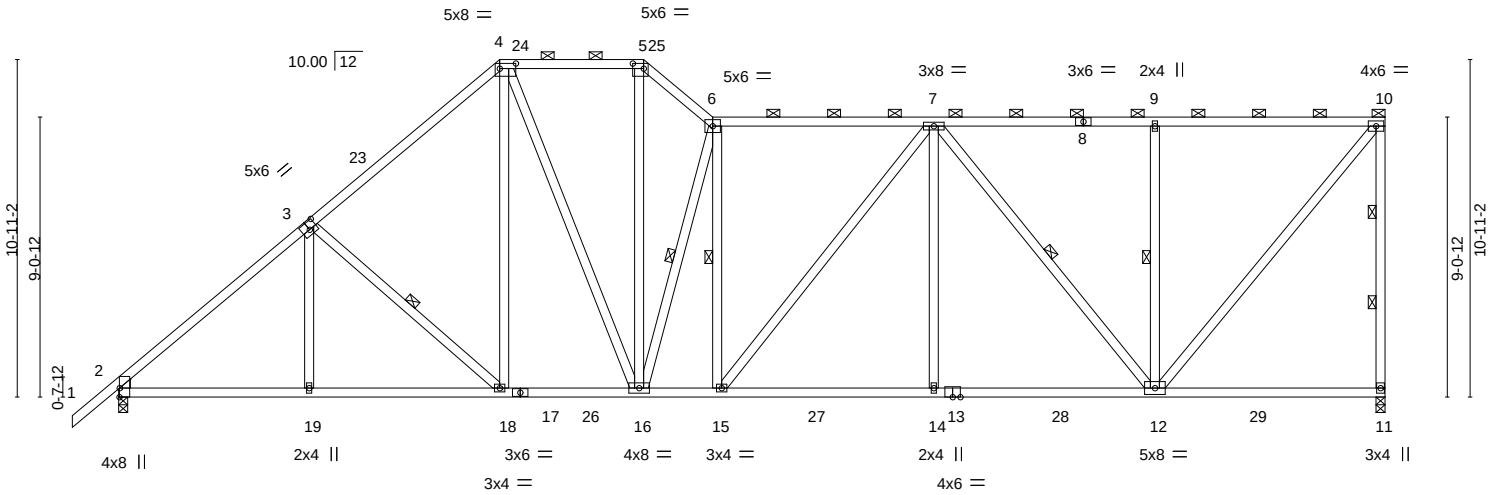

6-2-0	12-4-0	16-11-15	19-2-12	26-4-11	33-6-9	41-0-0
6-2-0	6-2-0	4-7-15	2-2-13	7-1-15	7-1-15	7-5-7

Plate Offsets (X,Y)-- [2:0-3-8,Edge], [3:0-3-0,0-3-0], [4:0-6-4,0-2-0], [5:0-4-4,0-2-0]

LOADING (psf)		**SPACING-** 2-0-0	**CSI.**		**DEFL.** in (loc) l/defl L/d	**PLATES**	**GRIP**
TCLL	20.0	Plate Grip DOL 1.25	TC	0.97	Vert(LL) -0.22 14-15 >999 240	MT20	244/190
TCDL	7.0	Lumber DOL 1.25	BC	0.82	Vert(CT) -0.38 14-15 >999 180		
BCLL	0.0 *	Rep Stress Incr YES	WB	0.99	Horz(CT) 0.10 11 n/a n/a		
BCDL	10.0	Code FBC2020/TPI2014	Matrix-MS			Weight: 312 lb	FT = 20%

LUMBER-
TOP CHORD 2x4 SP No.2
BOT CHORD 2x4 SP No.2
WEBS 2x4 SP No.3
WEDGE
Left: 2x4 SP No.3

BRACING-
TOP CHORD Structural wood sheathing directly applied or 3-2-15 oc purlins, except end verticals, and 2-0-0 oc purlins (3-3-1 max.): 4-5, 6-10.
BOT CHORD Rigid ceiling directly applied or 8-9-2 oc bracing.
WEBS 1 Row at midpt 3-18, 6-16, 6-15, 7-12, 9-12
2 Rows at 1/3 pts 10-11

REACTIONS. (size) 11=0-3-8, 2=0-3-8
Max Horz 2=356(LC 12)
Max Uplift 11=-372(LC 9), 2=-254(LC 12)
Max Grav 11=1761(LC 2), 2=1752(LC 2)

FORCES. (lb) - Max. Comp./Max. Ten. - All forces 250 (lb) or less except when shown.
TOP CHORD 2-3=-2245/368, 3-4=-1921/395, 4-5=-1607/383, 5-6=-2103/471, 6-7=-2019/403, 7-9=-1238/260, 9-10=-1238/260, 10-11=-1609/390
BOT CHORD 2-19=-452/1695, 18-19=-451/1698, 16-18=-317/1407, 15-16=-405/2018, 14-15=-387/1907, 12-14=-387/1907
WEBS 3-18=-431/242, 4-18=-118/524, 4-16=-131/581, 5-16=-234/1181, 6-16=-1631/365, 7-15=-94/269, 7-14=0/408, 7-12=-1059/211, 9-12=-420/203, 10-12=-402/1912

NOTES-
1) Unbalanced roof live loads have been considered for this design.
2) Wind: ASCE 7-16; Vult=130mph (3-second gust) Vasd=101mph; TCDL=4.2psf; BCDL=3.0psf; h=20ft; Cat. II; Exp B; Encl., GCpi=0.18; MWFRS (envelope) gable end zone and C-C Exterior(2E) -1-6-0 to 2-7-3, Interior(1) 2-7-3 to 12-4-0, Exterior(2R) 12-4-0 to 16-5-4, Interior(1) 16-5-4 to 16-11-15, Exterior(2E) 16-11-15 to 19-2-12, Interior(1) 19-2-12 to 40-10-4 zone;C-C for members and forces & MWFRS for reactions shown; Lumber DOL=1.60 plate grip DOL=1.60
3) Building Designer / Project engineer responsible for verifying applied roof live load shown covers rain loading requirements specific to the use of this truss component.
4) Provide adequate drainage to prevent water ponding.
5) This truss has been designed for a 10.0 psf bottom chord live load nonconcurrent with any other live loads.
6) * This truss has been designed for a live load of 20.0psf on the bottom chord in all areas where a rectangle 3-6-0 tall by 2-0-0 wide will fit between the bottom chord and any other members, with BCDL = 10.0psf.
7) Provide mechanical connection (by others) of truss to bearing plate capable of withstanding 100 lb uplift at joint(s) except (jt=lb) 11=372, 2=254.
8) Graphical purlin representation does not depict the size or the orientation of the purlin along the top and/or bottom chord.

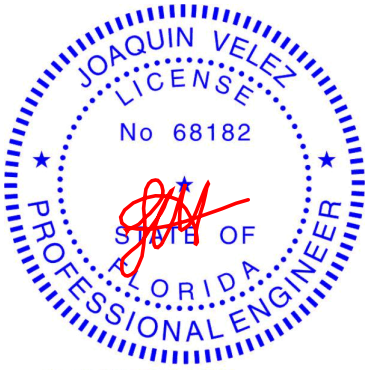

Joaquin Velez PE No.68182
MiTek USA, Inc. FL Cert 6634
6904 Parke East Blvd. Tampa FL 33610
Date:
April 7,2021

WARNING - Verify design parameters and READ NOTES ON THIS AND INCLUDED MITEK REFERENCE PAGE MII-7473 rev. 5/19/2020 BEFORE USE.
Design valid for use only with MiTek® connectors. This design is based only upon parameters shown, and is for an individual building component, not a truss system. Before use, the building designer must verify the applicability of design parameters and properly incorporate this design into the overall building design. Bracing indicated is to prevent buckling of individual truss web and/or chord members only. Additional temporary and permanent bracing is always required for stability and to prevent collapse with possible personal injury and property damage. For general guidance regarding the fabrication, storage, delivery, erection and bracing of trusses and truss systems, see ***ANSI/TPI1 Quality Criteria, DSB-89 and BCSI Building Component Safety Information*** available from Truss Plate Institute, 2670 Crain Highway, Suite 203 Waldorf, MD 20601

MiTek
6904 Parke East Blvd.
Tampa, FL 36610

Job	Truss	Truss Type	Qty	Ply	PFS SOLUTIONS - LOT 5 AL
2714379	T19	Half Hip Girder	1	3	T23468894 Job Reference (optional)

Builders FirstSource (Jacksonville, FL), Jacksonville, FL - 32244, 8.430 s Mar 22 2021 MiTek Industries, Inc. Tue Apr 6 08:30:54 2021 Page 1
ID:7R_b7AxUtlWB3tgOsRwB2?zWJEt-J1gcXJzW0lEmQDcKXIC0vpC6YBSDp1_pJ?pUqdzTUvl

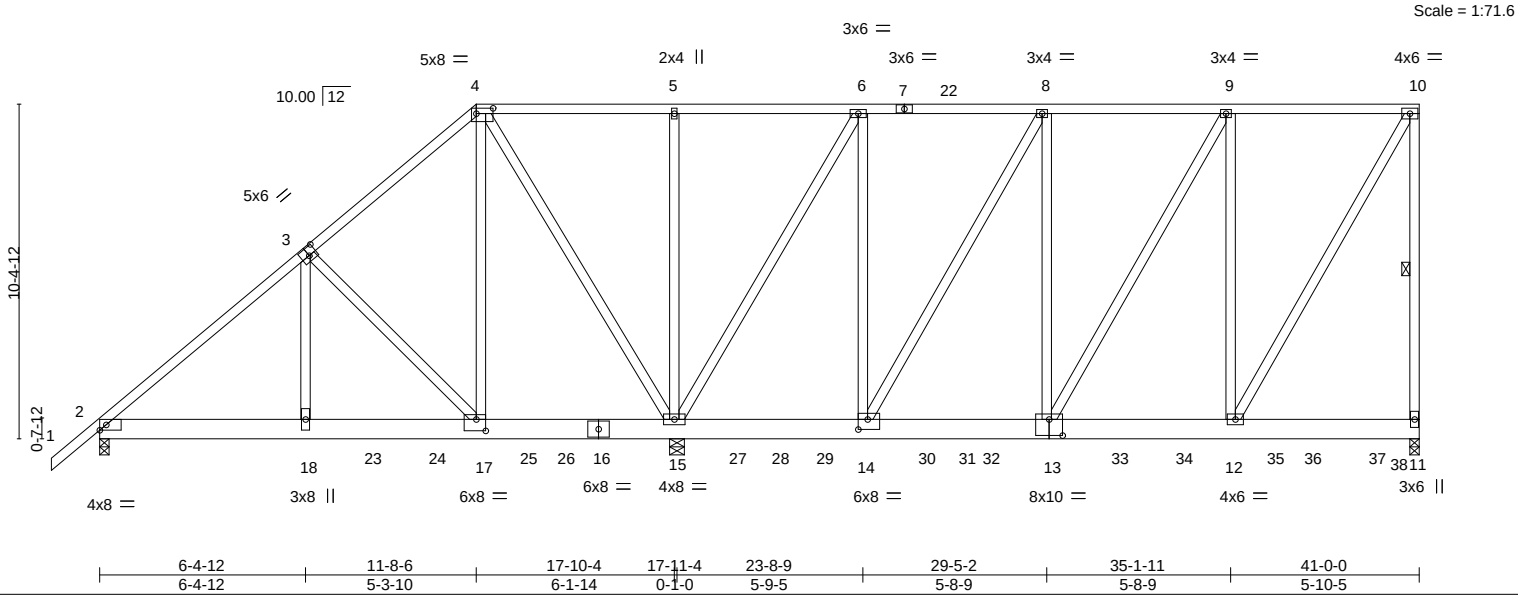

Plate Offsets (X,Y)-- [3:0-3-0,0-3-0], [4:0-6-4,0-2-0], [13:0-5-0,0-6-0], [14:0-3-8,0-3-12], [17:0-3-8,0-4-4]

LOADING (psf)		SPACING- 2-0-0		CSI.		DEFL. in (loc) l/defl L/d		PLATES GRIP
TCLL	20.0	Plate Grip DOL	1.25	TC	0.24	Vert(LL) -0.05 17-18 >999	240	MT20 244/190
TCDL	7.0	Lumber DOL	1.25	BC	0.23	Vert(CT) -0.09 17-18 >999	180	
BCLL	0.0 *	Rep Stress Incr	NO	WB	0.77	Horz(CT) 0.01 11 n/a	n/a	
BCDL	10.0	Code FBC2020/TPI2014		Matrix-MS				Weight: 1142 lb FT = 20%

LUMBER-
TOP CHORD 2x4 SP No.2
BOT CHORD 2x8 SP 2400F 2.0E
WEBS 2x4 SP No.3

BRACING-
TOP CHORD Structural wood sheathing directly applied or 6-0-0 oc purlins, except end verticals.
BOT CHORD Rigid ceiling directly applied or 10-0-0 oc bracing.
WEBS 1 Row at midpt 10-11

REACTIONS. (size) 11=0-3-8, 2=0-3-8, 15=0-5-8
Max Horz 2=374(LC 27)
Max Uplift 11=-570(LC 4), 2=-960(LC 8), 15=-2726(LC 8)
Max Grav 11=3338(LC 22), 2=2891(LC 2), 15=11000(LC 2)

FORCES. (lb) - Max. Comp./Max. Ten. - All forces 250 (lb) or less except when shown.
TOP CHORD 2-3=-4029/1342, 3-4=-1804/522, 4-5=-291/1006, 5-6=-291/1006, 6-8=-1345/231, 8-9=-1972/362, 9-10=-1422/250, 10-11=-2572/494
BOT CHORD 2-18=-1258/3025, 17-18=-1253/3014, 15-17=-477/1390, 14-15=-231/1345, 13-14=-362/1966, 12-13=-250/1422
WEBS 3-18=-1171/2882, 3-17=-2411/1134, 4-17=-1391/4761, 4-15=-4554/1405, 5-15=-371/178, 6-15=-4591/1028, 6-14=-752/3715, 8-14=-1262/276, 8-13=-107/851, 9-13=-228/1116, 9-12=-1243/362, 10-12=-497/2840

NOTES-
1) 3-ply truss to be connected together with 10d (0.131"x3") nails as follows:
Top chords connected as follows: 2x4 - 1 row at 0-9-0 oc.
Bottom chords connected as follows: 2x8 - 2 rows staggered at 0-6-0 oc.
Webs connected as follows: 2x4 - 1 row at 0-8-0 oc, Except member 17-3 2x4 - 1 row at 0-9-0 oc, member 17-4 2x4 - 1 row at 0-9-0 oc, member 15-4 2x4 - 1 row at 0-9-0 oc, member 5-15 2x4 - 1 row at 0-9-0 oc, member 15-6 2x4 - 1 row at 0-9-0 oc, member 6-14 2x4 - 1 row at 0-9-0 oc, member 14-8 2x4 - 1 row at 0-9-0 oc, member 8-13 2x4 - 1 row at 0-9-0 oc, member 13-9 2x4 - 1 row at 0-9-0 oc, member 9-12 2x4 - 1 row at 0-9-0 oc, member 12-10 2x4 - 1 row at 0-9-0 oc.
2) All loads are considered equally applied to all plies, except if noted as front (F) or back (B) face in the LOAD CASE(S) section. Ply to ply connections have been provided to distribute only loads noted as (F) or (B), unless otherwise indicated.
3) Unbalanced roof live loads have been considered for this design.
4) Wind: ASCE 7-16; Vult=130mph (3-second gust) Vasd=101mph; TCDL=4.2psf; BCDL=3.0psf; h=20ft; Cat. II; Exp B; Encl., GCpi=0.18; MWFRS (envelope) gable end zone; Lumber DOL=1.60 plate grip DOL=1.60
5) Building Designer / Project engineer responsible for verifying applied roof live load shown covers rain loading requirements specific to the use of this truss component.
6) Provide adequate drainage to prevent water ponding.
7) This truss has been designed for a 10.0 psf bottom chord live load nonconcurrent with any other live loads.
8) * This truss has been designed for a live load of 20.0psf on the bottom chord in all areas where a rectangle 3-6-0 tall by 2-0-0 wide will fit between the bottom chord and any other members, with BCDL = 10.0psf.
9) Provide mechanical connection (by others) of truss to bearing plate capable of withstanding 100 lb uplift at joint(s) except (jt=lb) 11=570, 2=960, 15=2726.

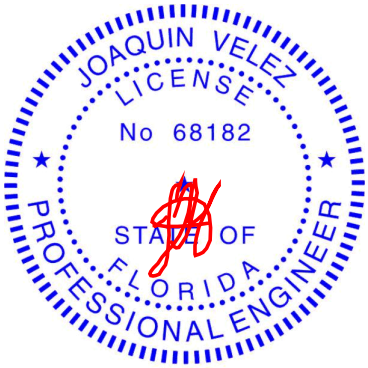

Joaquin Velez PE No.68182
MiTek USA, Inc. FL Cert 6634
6904 Parke East Blvd. Tampa FL 33610
Date:
April 7,2021

Continued on page 2

WARNING - Verify design parameters and READ NOTES ON THIS AND INCLUDED MITEK REFERENCE PAGE MII-7473 rev. 5/19/2020 BEFORE USE.
Design valid for use only with MiTek® connectors. This design is based only upon parameters shown, and is for an individual building component, not a truss system. Before use, the building designer must verify the applicability of design parameters and properly incorporate this design into the overall building design. Bracing indicated is to prevent buckling of individual truss web and/or chord members only. Additional temporary and permanent bracing is always required for stability and to prevent collapse with possible personal injury and property damage. For general guidance regarding the fabrication, storage, delivery, erection and bracing of trusses and truss systems, see ***ANSI/TPI1 Quality Criteria, DSB-89 and BCSI Building Component Safety Information*** available from Truss Plate Institute, 2670 Crain Highway, Suite 203 Waldorf, MD 20601

MiTek
6904 Parke East Blvd.
Tampa, FL 36610

NOTES-

10) Hanger(s) or other connection device(s) shall be provided sufficient to support concentrated load(s) 2054 lb down and 1092 lb up at 6-4-12, 982 lb down and 226 lb up at 8-4-12, 975 lb down and 227 lb up at 10-4-12, 965 lb down and 227 lb up at 12-4-12, 960 lb down and 227 lb up at 14-4-12, 964 lb down and 221 lb up at 15-8-12, 909 lb down and 223 lb up at 19-8-12, 898 lb down and 223 lb up at 21-7-4, 962 lb down and 221 lb up at 23-7-4, 890 lb down and 227 lb up at 25-7-4, 879 lb down and 227 lb up at 27-7-4, 327 lb down and 57 lb up at 29-7-4, 326 lb down and 57 lb up at 31-7-4, 317 lb down and 57 lb up at 33-7-4, 329 lb down and 57 lb up at 35-7-4, 323 lb down and 57 lb up at 37-7-4, and 317 lb down and 57 lb up at 39-7-4, and 328 lb down and 53 lb up at 40-3-4 on bottom chord. The design/selection of such connection device(s) is the responsibility of others.

LOAD CASE(S) Standard

1) Dead + Roof Live (balanced): Lumber Increase=1.25, Plate Increase=1.25
   Uniform Loads (plf)
   Vert: 1-4=-54, 4-10=-54, 11-19=-20
   Concentrated Loads (lb)
   Vert: 16=-836(B) 18=-2054(B) 14=-836(B) 13=-300(B) 23=-847(B) 24=-840(B) 25=-840(B) 26=-840(B) 27=-848(B) 29=-848(B) 30=-840(B) 32=-840(B) 33=-300(B) 34=-300(B) 35=-300(B) 36=-300(B) 37=-300(B) 38=-304(B)

WARNING - Verify design parameters and READ NOTES ON THIS AND INCLUDED MITEK REFERENCE PAGE MII-7473 rev. 5/19/2020 BEFORE USE.
Design valid for use only with MiTek® connectors. This design is based only upon parameters shown, and is for an individual building component, not a truss system. Before use, the building designer must verify the applicability of design parameters and properly incorporate this design into the overall building design. Bracing indicated is to prevent buckling of individual truss web and/or chord members only. Additional temporary and permanent bracing is always required for stability and to prevent collapse with possible personal injury and property damage. For general guidance regarding the fabrication, storage, delivery, erection and bracing of trusses and truss systems, see ***ANSI/TPI1 Quality Criteria, DSB-89 and BCSI Building Component Safety Information*** available from Truss Plate Institute, 2670 Crain Highway, Suite 203 Waldorf, MD 20601

MiTek
6904 Parke East Blvd.
Tampa, FL 36610

Job	Truss	Truss Type	Qty	Ply	PFS SOLUTIONS - LOT 5 AL
2714379	T20	Piggyback Base	1	1	T23468895 Job Reference (optional)

Builders FirstSource (Jacksonville, FL), Jacksonville, FL - 32244, 8.430 s Mar 22 2021 MiTek Industries, Inc. Tue Apr 6 08:30:55 2021 Page 1
ID:7R_b7AxUtIWB3tgOsRwB2?zWJEt-nDD_le_8n3Md2NBW5?jFR0lDUal5YZoyYfZ2M3zTUvk

Scale = 1:71.8

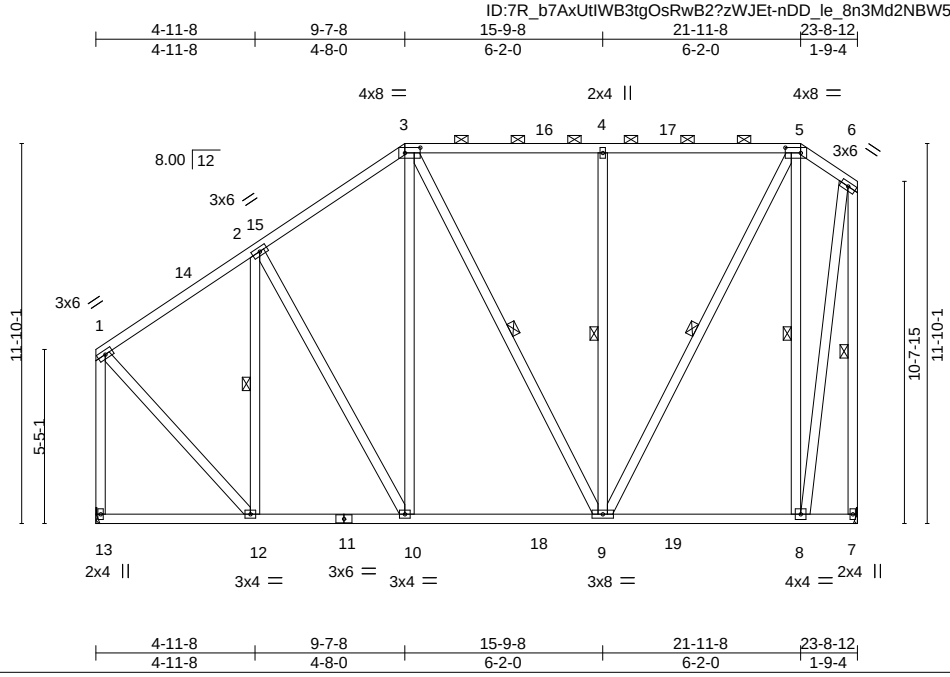

Plate Offsets (X,Y)-- [3:0-5-12,0-2-0], [5:0-5-12,0-2-0]

LOADING (psf)		SPACING-	2-0-0	CSI.		DEFL.	in	(loc)	l/defl	L/d	PLATES	GRIP
TCLL	20.0	Plate Grip DOL	1.25	TC	0.48	Vert(LL)	-0.07	8-9	>999	240	MT20	244/190
TCDL	7.0	Lumber DOL	1.25	BC	0.44	Vert(CT)	-0.11	8-9	>999	180		
BCLL	0.0 *	Rep Stress Incr	YES	WB	0.48	Horz(CT)	0.01	7	n/a	n/a		
BCDL	10.0	Code FBC2020/TPI2014		Matrix-MS							Weight: 237 lb	FT = 20%

LUMBER-
TOP CHORD 2x4 SP No.2
BOT CHORD 2x4 SP No.2
WEBS 2x4 SP No.3 *Except*
3-9,5-9: 2x4 SP No.2

BRACING-
TOP CHORD Structural wood sheathing directly applied or 6-0-0 oc purlins, except end verticals, and 2-0-0 oc purlins (6-0-0 max.): 3-5.
BOT CHORD Rigid ceiling directly applied or 10-0-0 oc bracing.
WEBS 1 Row at midpt 2-12, 3-9, 4-9, 5-9, 5-8, 6-7

REACTIONS. (size) 13=Mechanical, 7=Mechanical
Max Horz 13=197(LC 12)
Max Uplift 13=-147(LC 12), 7=-206(LC 12)
Max Grav 13=996(LC 2), 7=1018(LC 2)

FORCES. (lb) - Max. Comp./Max. Ten. - All forces 250 (lb) or less except when shown.
TOP CHORD 1-2=-630/123, 2-3=-679/197, 3-4=-486/151, 4-5=-486/151, 1-13=-923/159, 6-7=-1036/197
BOT CHORD 10-12=-243/518, 9-10=-182/514
WEBS 2-12=-337/77, 3-10=-76/272, 4-9=-389/189, 5-9=-218/725, 5-8=-703/226, 1-12=-61/695, 6-8=-192/928

NOTES-
1) Unbalanced roof live loads have been considered for this design.
2) Wind: ASCE 7-16; Vult=130mph (3-second gust) Vasd=101mph; TCDL=4.2psf; BCDL=3.0psf; h=20ft; Cat. II; Exp B; Encl., GCpi=0.18; MWFRS (envelope) gable end zone and C-C Exterior(2E) 0-1-12 to 3-1-12, Interior(1) 3-1-12 to 9-7-8, Exterior(2R) 9-7-8 to 13-10-7, Interior(1) 13-10-7 to 21-11-8, Exterior(2E) 21-11-8 to 23-7-0 zone;C-C for members and forces & MWFRS for reactions shown; Lumber DOL=1.60 plate grip DOL=1.60
3) Building Designer / Project engineer responsible for verifying applied roof live load shown covers rain loading requirements specific to the use of this truss component.
4) Provide adequate drainage to prevent water ponding.
5) This truss has been designed for a 10.0 psf bottom chord live load nonconcurrent with any other live loads.
6) * This truss has been designed for a live load of 20.0psf on the bottom chord in all areas where a rectangle 3-6-0 tall by 2-0-0 wide will fit between the bottom chord and any other members, with BCDL = 10.0psf.
7) Refer to girder(s) for truss to truss connections.
8) Provide mechanical connection (by others) of truss to bearing plate capable of withstanding 100 lb uplift at joint(s) except (jt=lb) 13=147, 7=206.
9) Graphical purlin representation does not depict the size or the orientation of the purlin along the top and/or bottom chord.

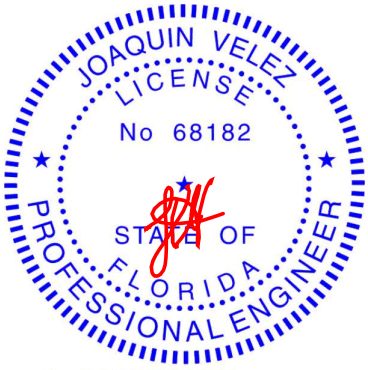

Joaquin Velez PE No.68182
MiTek USA, Inc. FL Cert 6634
6904 Parke East Blvd. Tampa FL 33610
Date:
April 7,2021

WARNING - Verify design parameters and READ NOTES ON THIS AND INCLUDED MITEK REFERENCE PAGE MII-7473 rev. 5/19/2020 BEFORE USE.
Design valid for use only with MiTek® connectors. This design is based only upon parameters shown, and is for an individual building component, not a truss system. Before use, the building designer must verify the applicability of design parameters and properly incorporate this design into the overall building design. Bracing indicated is to prevent buckling of individual truss web and/or chord members only. Additional temporary and permanent bracing is always required for stability and to prevent collapse with possible personal injury and property damage. For general guidance regarding the fabrication, storage, delivery, erection and bracing of trusses and truss systems, see ***ANSI/TPI1 Quality Criteria, DSB-89 and BCSI Building Component Safety Information*** available from Truss Plate Institute, 2670 Crain Highway, Suite 203 Waldorf, MD 20601

MiTek
6904 Parke East Blvd.
Tampa, FL 36610

Job	Truss	Truss Type	Qty	Ply	PFS SOLUTIONS - LOT 5 AL
2714379	T20G	GABLE	1	1	T23468896
					Job Reference (optional)

Builders FirstSource (Jacksonville, FL), Jacksonville, FL - 32244, 8.430 s Mar 22 2021 MiTek Industries, Inc. Tue Apr 6 08:30:57 2021 Page 1
ID:7R_b7AxUtlWB3tgOsRwB2?zWJEt-jcLkAK?OJgcKHgLvDQljWRqVJOOz0LCF0z29RyzTUvi

Scale = 1:71.3

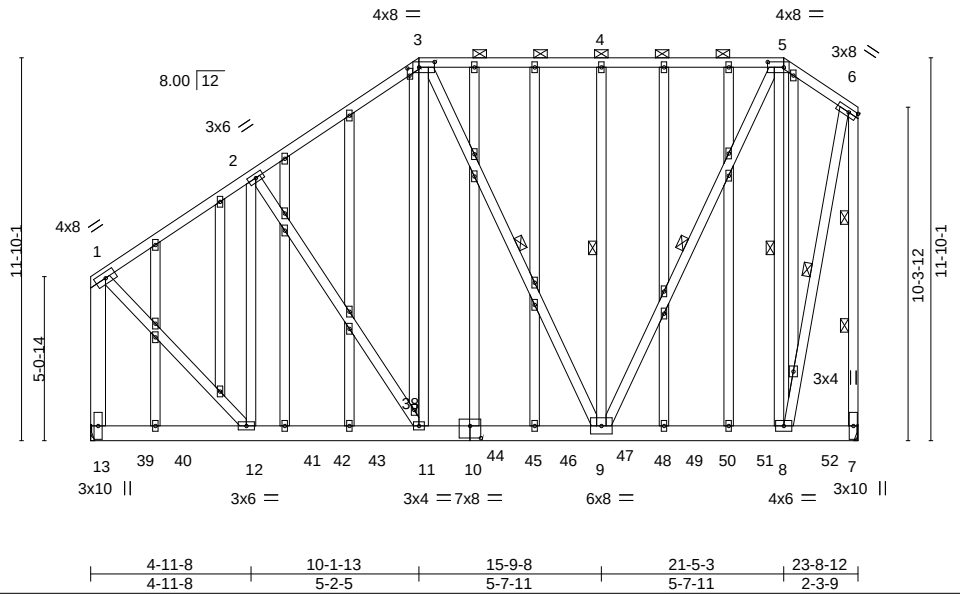

Plate Offsets (X,Y)-- [3:0-2-11,0-0-12], [3:0-5-12,0-2-0], [5:0-6-0,0-2-0], [10:0-4-0,0-4-8]

LOADING (psf)		SPACING-	2-0-0	CSI.		DEFL.	in	(loc)	l/defl	L/d	PLATES	GRIP
TCLL	20.0	Plate Grip DOL	1.25	TC	0.72	Vert(LL)	0.09	11-12	>999	240	MT20	244/190
TCDL	7.0	Lumber DOL	1.25	BC	0.55	Vert(CT)	-0.12	9-11	>999	180		
BCLL	0.0 *	Rep Stress Incr	NO	WB	1.00	Horz(CT)	0.01	7	n/a	n/a		
BCDL	10.0	Code FBC2020/TPI2014		Matrix-MS							Weight: 396 lb	FT = 20%

LUMBER-

TOP CHORD	2x4 SP No.2
BOT CHORD	2x6 SP No.2
WEBS	2x4 SP No.3 *Except*
	3-9,5-9,6-7: 2x4 SP No.2, 1-13: 2x6 SP No.2
OTHERS	2x4 SP No.3

BRACING-

TOP CHORD	Structural wood sheathing directly applied or 4-8-0 oc purlins,
	except end verticals, and 2-0-0 oc purlins (5-6-9 max.): 3-5.
BOT CHORD	Rigid ceiling directly applied or 8-10-12 oc bracing.
WEBS	1 Row at midpt 3-9, 4-9, 5-9, 5-8, 6-8
	2 Rows at 1/3 pts 6-7

REACTIONS. (size) 13=Mechanical, 7=Mechanical
Max Horz 13=221(LC 5)
Max Uplift 13=-1046(LC 8), 7=-1072(LC 8)
Max Grav 13=2226(LC 33), 7=2148(LC 33)

FORCES. (lb) - Max. Comp./Max. Ten. - All forces 250 (lb) or less except when shown.
TOP CHORD 1-2=-1383/623, 2-3=-1432/726, 3-4=-1012/561, 4-5=-1012/561, 5-6=-486/255, 1-13=-1893/871, 6-7=-2058/1021
BOT CHORD 11-12=-661/1167, 9-11=-620/1156, 8-9=-194/383
WEBS 2-12=-364/129, 11-38=-371/793, 3-38=-441/836, 3-9=-303/198, 4-9=-354/175, 5-9=-778/1450, 5-8=-1186/611, 1-12=-671/1482, 6-8=-911/1797

NOTES-
1) Unbalanced roof live loads have been considered for this design.
2) Wind: ASCE 7-16; Vult=130mph (3-second gust) Vasd=101mph; TCDL=4.2psf; BCDL=3.0psf; h=20ft; Cat. II; Exp B; Encl., GCpi=0.18; MWFRS (envelope) gable end zone; end vertical left exposed; Lumber DOL=1.60 plate grip DOL=1.60
3) Truss designed for wind loads in the plane of the truss only. For studs exposed to wind (normal to the face), see Standard Industry Gable End Details as applicable, or consult qualified building designer as per ANSI/TPI 1.
4) Building Designer / Project engineer responsible for verifying applied roof live load shown covers rain loading requirements specific to the use of this truss component.
5) Provide adequate drainage to prevent water ponding.
6) All plates are 2x4 MT20 unless otherwise indicated.
7) Gable studs spaced at 2-0-0 oc.
8) This truss has been designed for a 10.0 psf bottom chord live load nonconcurrent with any other live loads.
9) * This truss has been designed for a live load of 20.0psf on the bottom chord in all areas where a rectangle 3-6-0 tall by 2-0-0 wide will fit between the bottom chord and any other members, with BCDL = 10.0psf.
10) Refer to girder(s) for truss to truss connections.
11) Provide mechanical connection (by others) of truss to bearing plate capable of withstanding 100 lb uplift at joint(s) except (jt=lb) 13=1046, 7=1072.
12) Graphical purlin representation does not depict the size or the orientation of the purlin along the top and/or bottom chord.

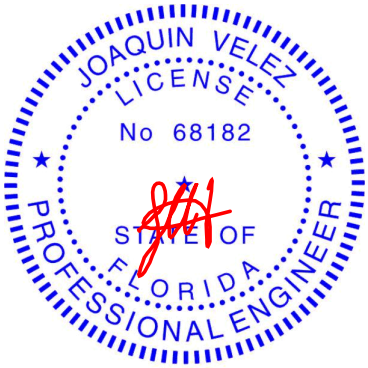

Joaquin Velez PE No.68182
MiTek USA, Inc. FL Cert 6634
6904 Parke East Blvd. Tampa FL 33610
Date:
April 7,2021

Continued on page 2

WARNING - Verify design parameters and READ NOTES ON THIS AND INCLUDED MITEK REFERENCE PAGE MII-7473 rev. 5/19/2020 BEFORE USE.
Design valid for use only with MiTek® connectors. This design is based only upon parameters shown, and is for an individual building component, not a truss system. Before use, the building designer must verify the applicability of design parameters and properly incorporate this design into the overall building design. Bracing indicated is to prevent buckling of individual truss web and/or chord members only. Additional temporary and permanent bracing is always required for stability and to prevent collapse with possible personal injury and property damage. For general guidance regarding the fabrication, storage, delivery, erection and bracing of trusses and truss systems, see ***ANSI/TPI1 Quality Criteria, DSB-89 and BCSI Building Component Safety Information*** available from Truss Plate Institute, 2670 Crain Highway, Suite 203 Waldorf, MD 20601

MiTek
6904 Parke East Blvd.
Tampa, FL 36610

NOTES-

13) Hanger(s) or other connection device(s) shall be provided sufficient to support concentrated load(s) 213 lb down and 157 lb up at 0-9-2, 209 lb down and 161 lb up at 2-9-2, 209 lb down and 161 lb up at 4-9-2, 209 lb down and 161 lb up at 6-9-2, 209 lb down and 161 lb up at 8-9-2, 209 lb down and 161 lb up at 10-9-2, 209 lb down and 161 lb up at 12-9-2, 209 lb down and 161 lb up at 14-9-2, 209 lb down and 161 lb up at 16-9-2, 209 lb down and 161 lb up at 18-9-2, and 209 lb down and 161 lb up at 20-9-2, and 210 lb down and 160 lb up at 22-9-2 on bottom chord. The design/selection of such connection device(s) is the responsibility of others.
14) In the LOAD CASE(S) section, loads applied to the face of the truss are noted as front (F) or back (B).

LOAD CASE(S) Standard

1) Dead + Roof Live (balanced): Lumber Increase=1.25, Plate Increase=1.25
   Uniform Loads (plf)
   Vert: 1-3=-54, 3-5=-54, 5-6=-54, 7-13=-20
   Concentrated Loads (lb)
   Vert: 12=-204(F) 39=-208(F) 40=-204(F) 41=-204(F) 43=-204(F) 44=-204(F) 45=-204(F) 47=-204(F) 48=-204(F) 50=-204(F) 51=-204(F) 52=-205(F)

WARNING - Verify design parameters and READ NOTES ON THIS AND INCLUDED MITEK REFERENCE PAGE MII-7473 rev. 5/19/2020 BEFORE USE.
Design valid for use only with MiTek® connectors. This design is based only upon parameters shown, and is for an individual building component, not a truss system. Before use, the building designer must verify the applicability of design parameters and properly incorporate this design into the overall building design. Bracing indicated is to prevent buckling of individual truss web and/or chord members only. Additional temporary and permanent bracing is always required for stability and to prevent collapse with possible personal injury and property damage. For general guidance regarding the fabrication, storage, delivery, erection and bracing of trusses and truss systems, see ***ANSI/TPI1 Quality Criteria, DSB-89 and BCSI Building Component Safety Information*** available from Truss Plate Institute, 2670 Crain Highway, Suite 203 Waldorf, MD 20601

MiTek
6904 Parke East Blvd.
Tampa, FL 36610

Job	Truss	Truss Type	Qty	Ply	PFS SOLUTIONS - LOT 5 AL
2714379	T21	Piggyback Base	3	1	T23468897 Job Reference (optional)

Builders FirstSource (Jacksonville, FL), Jacksonville, FL - 32244, 8.430 s Mar 22 2021 MiTek Industries, Inc. Tue Apr 6 08:30:58 2021 Page 1
ID:7R_b7AxUtlWB3tgOsRwB2?zWJEt-Bov7Ng003_kBvqw5m7Gy3fNkqomplwbOEdnizOzTUvh

Scale = 1:71.8

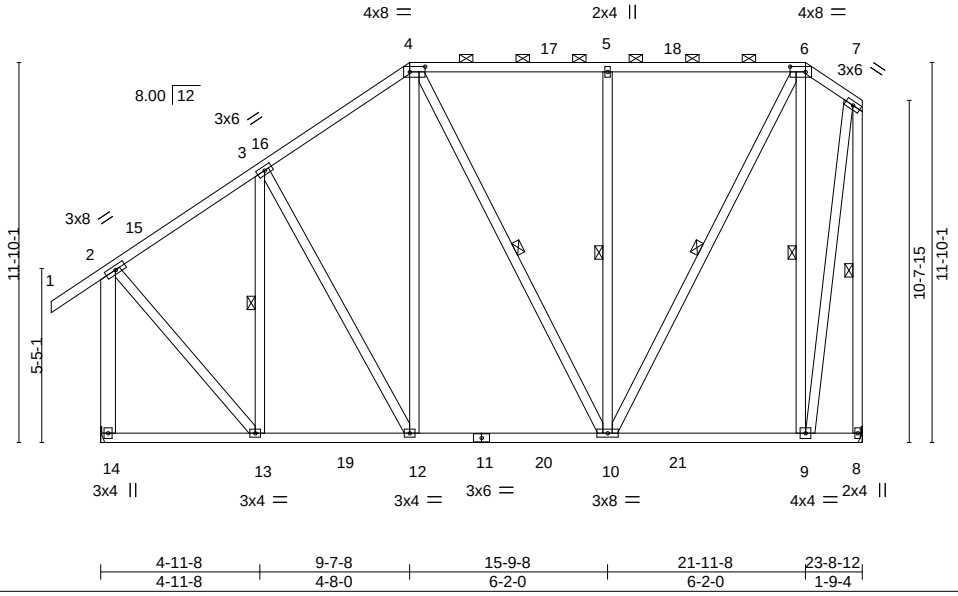

Plate Offsets (X,Y)-- [4:0-5-12,0-2-0], [6:0-5-12,0-2-0]

LOADING (psf)		SPACING-	2-0-0	CSI.		DEFL.	in	(loc)	l/defl	L/d	PLATES	GRIP
TCLL	20.0	Plate Grip DOL	1.25	TC	0.48	Vert(LL)	-0.07	9-10	>999	240	MT20	244/190
TCDL	7.0	Lumber DOL	1.25	BC	0.44	Vert(CT)	-0.11	9-10	>999	180		
BCLL	0.0 *	Rep Stress Incr	YES	WB	0.48	Horz(CT)	0.01	8	n/a	n/a		
BCDL	10.0	Code FBC2020/TPI2014		Matrix-MS							Weight: 244 lb	FT = 20%

LUMBER-
TOP CHORD 2x4 SP No.2
BOT CHORD 2x4 SP No.2
WEBS 2x4 SP No.3 *Except*
4-10,6-10: 2x4 SP No.2, 2-14: 2x6 SP No.2

BRACING-
TOP CHORD Structural wood sheathing directly applied or 6-0-0 oc purlins, except end verticals, and 2-0-0 oc purlins (6-0-0 max.): 4-6.
BOT CHORD Rigid ceiling directly applied or 10-0-0 oc bracing.
WEBS 1 Row at midpt 3-13, 4-10, 5-10, 6-10, 6-9, 7-8

REACTIONS. (size) 14=Mechanical, 8=Mechanical
Max Horz 14=239(LC 9)
Max Uplift 14=-185(LC 12), 8=-207(LC 9)
Max Grav 14=1071(LC 2), 8=1010(LC 2)

FORCES. (lb) - Max. Comp./Max. Ten. - All forces 250 (lb) or less except when shown.
TOP CHORD 2-3=-626/131, 3-4=-667/192, 4-5=-481/149, 5-6=-481/149, 2-14=-998/196, 7-8=-1028/198
BOT CHORD 12-13=-236/525, 10-12=-179/508
WEBS 3-13=-335/72, 4-12=-75/273, 5-10=-388/189, 6-10=-216/716, 6-9=-697/238, 2-13=-53/680, 7-9=-203/921

NOTES-
1) Unbalanced roof live loads have been considered for this design.
2) Wind: ASCE 7-16; Vult=130mph (3-second gust) Vasd=101mph; TCDL=4.2psf; BCDL=3.0psf; h=20ft; Cat. II; Exp B; Encl., GCpi=0.18; MWFRS (envelope) gable end zone and C-C Exterior(2E) -1-6-8 to 1-5-8, Interior(1) 1-5-8 to 9-7-8, Exterior(2R) 9-7-8 to 13-10-7, Interior(1) 13-10-7 to 21-11-8, Exterior(2E) 21-11-8 to 23-7-0 zone; end vertical left exposed;C-C for members and forces & MWFRS for reactions shown; Lumber DOL=1.60 plate grip DOL=1.60
3) Building Designer / Project engineer responsible for verifying applied roof live load shown covers rain loading requirements specific to the use of this truss component.
4) Provide adequate drainage to prevent water ponding.
5) This truss has been designed for a 10.0 psf bottom chord live load nonconcurrent with any other live loads.
6) * This truss has been designed for a live load of 20.0psf on the bottom chord in all areas where a rectangle 3-6-0 tall by 2-0-0 wide will fit between the bottom chord and any other members, with BCDL = 10.0psf.
7) Refer to girder(s) for truss to truss connections.
8) Provide mechanical connection (by others) of truss to bearing plate capable of withstanding 100 lb uplift at joint(s) except (jt=lb) 14=185, 8=207.
9) Graphical purlin representation does not depict the size or the orientation of the purlin along the top and/or bottom chord.

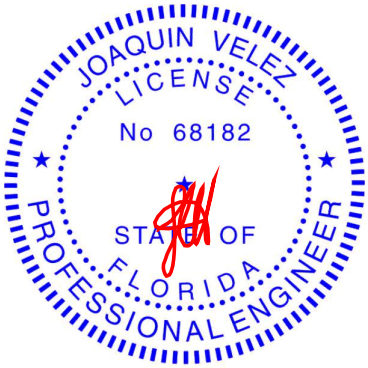

Joaquin Velez PE No.68182
MiTek USA, Inc. FL Cert 6634
6904 Parke East Blvd. Tampa FL 33610
Date:
April 7,2021

WARNING - Verify design parameters and READ NOTES ON THIS AND INCLUDED MITEK REFERENCE PAGE MII-7473 rev. 5/19/2020 BEFORE USE.
Design valid for use only with MiTek® connectors. This design is based only upon parameters shown, and is for an individual building component, not a truss system. Before use, the building designer must verify the applicability of design parameters and properly incorporate this design into the overall building design. Bracing indicated is to prevent buckling of individual truss web and/or chord members only. Additional temporary and permanent bracing is always required for stability and to prevent collapse with possible personal injury and property damage. For general guidance regarding the fabrication, storage, delivery, erection and bracing of trusses and truss systems, see ***ANSI/TPI1 Quality Criteria, DSB-89 and BCSI Building Component Safety Information*** available from Truss Plate Institute, 2670 Crain Highway, Suite 203 Waldorf, MD 20601

MiTek
6904 Parke East Blvd.
Tampa, FL 36610

Job	Truss	Truss Type	Qty	Ply	PFS SOLUTIONS - LOT 5 AL
2714379	T22	Piggyback Base	3	1	T23468898 Job Reference (optional)

Builders FirstSource (Jacksonville, FL), Jacksonville, FL - 32244, 8.430 s Mar 22 2021 MiTek Industries, Inc. Tue Apr 6 08:30:59 2021 Page 1
ID:7R_b7AxUtlWB3tgOsRwB2?zWJEt-f?TVb01eqIs2X_VHKrnBcswugC65ULbYTHXFWqzTUvg

Scale = 1:71.8

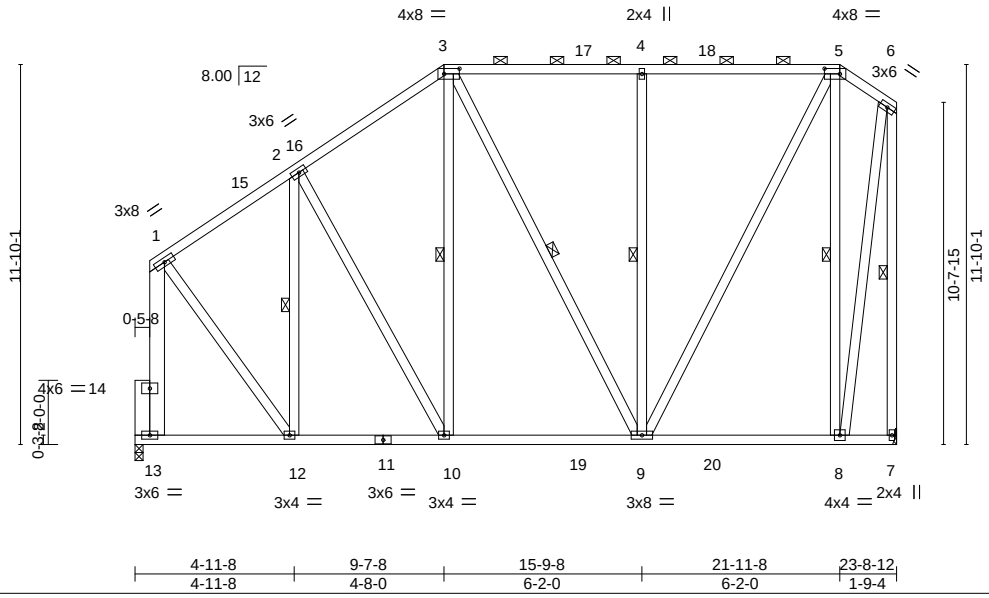

Plate Offsets (X,Y)-- [3:0-5-12,0-2-0], [5:0-5-12,0-2-0]

LOADING (psf)		SPACING- 2-0-0		CSI.		DEFL. in (loc) l/defl L/d		PLATES GRIP
TCLL	20.0	Plate Grip DOL	1.25	TC	0.47	Vert(LL) -0.07 8-9 >999 240		MT20 244/190
TCDL	7.0	Lumber DOL	1.25	BC	0.44	Vert(CT) -0.11 8-9 >999 180		
BCLL	0.0 *	Rep Stress Incr	YES	WB	0.62	Horz(CT) 0.01 7 n/a n/a		
BCDL	10.0	Code FBC2020/TPI2014		Matrix-MS				Weight: 245 lb FT = 20%

LUMBER-

TOP CHORD	2x4 SP No.2
BOT CHORD	2x4 SP No.2
WEBS	2x4 SP No.3 *Except* 3-9,5-9: 2x4 SP No.2, 1-13: 2x6 SP No.2
OTHERS	2x6 SP No.2

BRACING-

TOP CHORD	Structural wood sheathing directly applied or 6-0-0 oc purlins, except end verticals, and 2-0-0 oc purlins (6-0-0 max.): 3-5.
BOT CHORD	Rigid ceiling directly applied or 10-0-0 oc bracing.
WEBS	1 Row at midpt 2-12, 3-10, 3-9, 4-9, 5-8, 6-7

REACTIONS. (size) 13=0-3-0, 7=Mechanical
Max Horz 13=204(LC 9)
Max Uplift 13=-143(LC 12), 7=-201(LC 9)
Max Grav 13=974(LC 2), 7=1004(LC 2)

FORCES. (lb) - Max. Comp./Max. Ten. - All forces 250 (lb) or less except when shown.

TOP CHORD	1-2=-593/122, 2-3=-658/183, 3-4=-477/145, 4-5=-477/145, 1-13=-907/156, 6-7=-1023/195
BOT CHORD	10-12=-221/507, 9-10=-171/499
WEBS	2-12=-348/87, 3-10=-70/260, 4-9=-388/189, 5-9=-208/709, 5-8=-692/233, 1-12=-72/658, 6-8=-198/916

NOTES-

1) Unbalanced roof live loads have been considered for this design.
2) Wind: ASCE 7-16; Vult=130mph (3-second gust) Vasd=101mph; TCDL=4.2psf; BCDL=3.0psf; h=20ft; Cat. II; Exp B; Encl., GCpi=0.18; MWFRS (envelope) interior zone and C-C Exterior(2E) 0-8-4 to 3-8-4, Interior(1) 3-8-4 to 9-7-8, Exterior(2R) 9-7-8 to 13-10-7, Interior(1) 13-10-7 to 21-11-8, Exterior(2E) 21-11-8 to 23-7-0 zone; end vertical left exposed;C-C for members and forces & MWFRS for reactions shown; Lumber DOL=1.60 plate grip DOL=1.60
3) Building Designer / Project engineer responsible for verifying applied roof live load shown covers rain loading requirements specific to the use of this truss component.
4) Provide adequate drainage to prevent water ponding.
5) This truss has been designed for a 10.0 psf bottom chord live load nonconcurrent with any other live loads.
6) * This truss has been designed for a live load of 20.0psf on the bottom chord in all areas where a rectangle 3-6-0 tall by 2-0-0 wide will fit between the bottom chord and any other members, with BCDL = 10.0psf.
7) Refer to girder(s) for truss to truss connections.
8) Provide mechanical connection (by others) of truss to bearing plate capable of withstanding 100 lb uplift at joint(s) except (jt=lb) 13=143, 7=201.
9) Graphical purlin representation does not depict the size or the orientation of the purlin along the top and/or bottom chord.

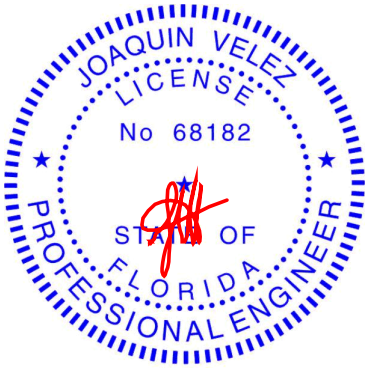

Joaquin Velez PE No.68182
MiTek USA, Inc. FL Cert 6634
6904 Parke East Blvd. Tampa FL 33610
Date:
April 7,2021

WARNING - Verify design parameters and READ NOTES ON THIS AND INCLUDED MITEK REFERENCE PAGE MII-7473 rev. 5/19/2020 BEFORE USE.
Design valid for use only with MiTek® connectors. This design is based only upon parameters shown, and is for an individual building component, not a truss system. Before use, the building designer must verify the applicability of design parameters and properly incorporate this design into the overall building design. Bracing indicated is to prevent buckling of individual truss web and/or chord members only. Additional temporary and permanent bracing is always required for stability and to prevent collapse with possible personal injury and property damage. For general guidance regarding the fabrication, storage, delivery, erection and bracing of trusses and truss systems, see ***ANSI/TPI1 Quality Criteria, DSB-89 and BCSI Building Component Safety Information*** available from Truss Plate Institute, 2670 Crain Highway, Suite 203 Waldorf, MD 20601

MiTek
6904 Parke East Blvd.
Tampa, FL 36610

Job	Truss	Truss Type	Qty	Ply	PFS SOLUTIONS - LOT 5 AL
2714379	T23	Piggyback Base	2	1	T23468899 Job Reference (optional)

Builders FirstSource (Jacksonville, FL), Jacksonville, FL - 32244, 8.430 s Mar 22 2021 MiTek Industries, Inc. Tue Apr 6 08:31:01 2021 Page 1
ID:7R_b7AxUtlWB3tgOsRwB2?zWJEt-cNbF?i2vMv6mmIfgSGqfhH?Eg?pxyFirwa0MajzTUve

Scale = 1:72.2

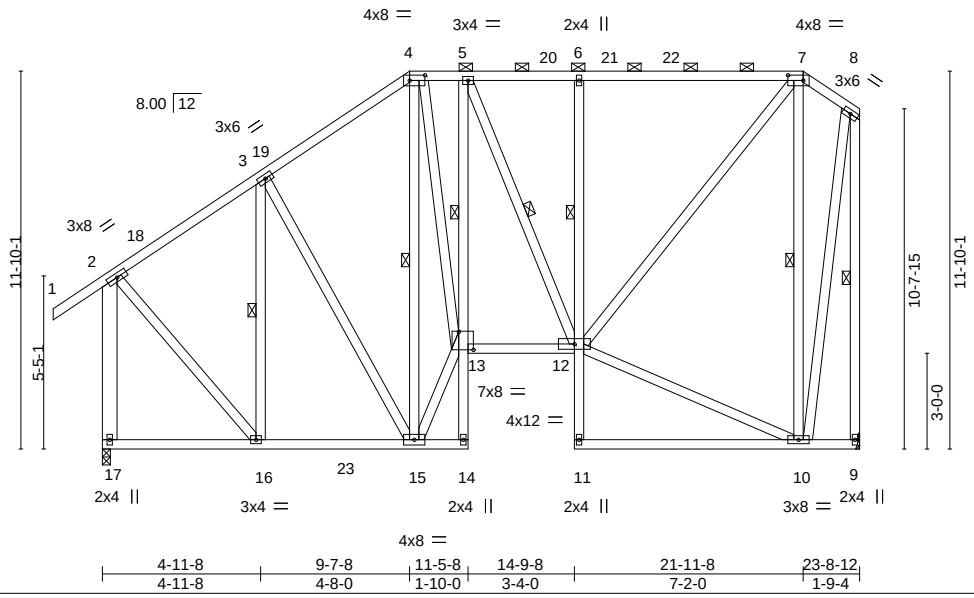

Plate Offsets (X,Y)-- [4:0-5-12,0-2-0], [7:0-5-12,0-2-0], [13:0-5-8,0-6-12]

LOADING (psf)		SPACING- 2-0-0		CSI.		DEFL.	in	(loc)	l/defl	L/d	PLATES	GRIP
TCLL	20.0	Plate Grip DOL	1.25	TC	0.50	Vert(LL)	-0.09	10-11	>999	240	MT20	244/190
TCDL	7.0	Lumber DOL	1.25	BC	0.35	Vert(CT)	-0.18	10-11	>999	180		
BCLL	0.0 *	Rep Stress Incr	YES	WB	0.58	Horz(CT)	0.10	9	n/a	n/a		
BCDL	10.0	Code FBC2020/TPI2014		Matrix-MS							Weight: 281 lb	FT = 20%

LUMBER-
TOP CHORD 2x4 SP No.2
BOT CHORD 2x4 SP No.2 *Except*
5-14,6-11: 2x4 SP No.3
WEBS 2x4 SP No.3 *Except*
2-17: 2x6 SP No.2

BRACING-
TOP CHORD Structural wood sheathing directly applied or 6-0-0 oc purlins, except end verticals, and 2-0-0 oc purlins (6-0-0 max.): 4-7.
BOT CHORD Rigid ceiling directly applied or 10-0-0 oc bracing, Except:
6-0-0 oc bracing: 13-14.
1 Row at midpt 5-13, 6-12
WEBS 1 Row at midpt 3-16, 4-15, 5-12, 7-10, 8-9

REACTIONS. (size) 17=0-3-0, 9=Mechanical
Max Horz 17=239(LC 9)
Max Uplift 17=-185(LC 12), 9=-207(LC 9)
Max Grav 17=1032(LC 2), 9=929(LC 2)

FORCES. (lb) - Max. Comp./Max. Ten. - All forces 250 (lb) or less except when shown.
TOP CHORD 2-3=-600/130, 3-4=-627/195, 4-5=-631/247, 5-6=-615/209, 6-7=-616/209, 2-17=-960/195, 8-9=-962/194
BOT CHORD 15-16=-236/504, 12-13=-227/635, 6-12=-369/176
WEBS 3-16=-340/77, 4-15=-732/243, 13-15=-365/986, 4-13=-261/893, 7-12=-255/751, 7-10=-714/268, 2-16=-54/651, 8-10=-207/873

NOTES-
1) Unbalanced roof live loads have been considered for this design.
2) Wind: ASCE 7-16; Vult=130mph (3-second gust) Vasd=101mph; TCDL=4.2psf; BCDL=3.0psf; h=20ft; Cat. II; Exp B; Encl., GCpi=0.18; MWFRS (envelope) gable end zone and C-C Exterior(2E) -1-6-8 to 1-5-8, Interior(1) 1-5-8 to 9-7-8, Exterior(2R) 9-7-8 to 13-10-7, Interior(1) 13-10-7 to 21-11-8, Exterior(2E) 21-11-8 to 23-7-0 zone; end vertical left exposed;C-C for members and forces & MWFRS for reactions shown; Lumber DOL=1.60 plate grip DOL=1.60
3) Building Designer / Project engineer responsible for verifying applied roof live load shown covers rain loading requirements specific to the use of this truss component.
4) Provide adequate drainage to prevent water ponding.
5) This truss has been designed for a 10.0 psf bottom chord live load nonconcurrent with any other live loads.
6) * This truss has been designed for a live load of 20.0psf on the bottom chord in all areas where a rectangle 3-6-0 tall by 2-0-0 wide will fit between the bottom chord and any other members, with BCDL = 10.0psf.
7) Refer to girder(s) for truss to truss connections.
8) Provide mechanical connection (by others) of truss to bearing plate capable of withstanding 100 lb uplift at joint(s) except (jt=lb) 17=185, 9=207.
9) Graphical purlin representation does not depict the size or the orientation of the purlin along the top and/or bottom chord.

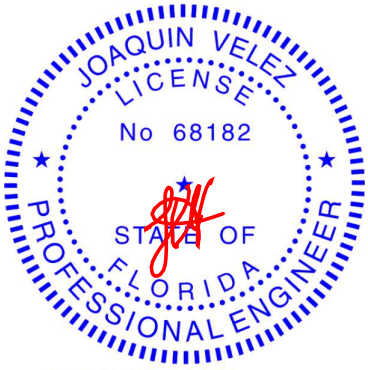

Joaquin Velez PE No.68182
MiTek USA, Inc. FL Cert 6634
6904 Parke East Blvd. Tampa FL 33610
Date:
April 7,2021

WARNING - Verify design parameters and READ NOTES ON THIS AND INCLUDED MITEK REFERENCE PAGE MII-7473 rev. 5/19/2020 BEFORE USE.
Design valid for use only with MiTek® connectors. This design is based only upon parameters shown, and is for an individual building component, not a truss system. Before use, the building designer must verify the applicability of design parameters and properly incorporate this design into the overall building design. Bracing indicated is to prevent buckling of individual truss web and/or chord members only. Additional temporary and permanent bracing is always required for stability and to prevent collapse with possible personal injury and property damage. For general guidance regarding the fabrication, storage, delivery, erection and bracing of trusses and truss systems, see ***ANSI/TPI1 Quality Criteria, DSB-89 and BCSI Building Component Safety Information*** available from Truss Plate Institute, 2670 Crain Highway, Suite 203 Waldorf, MD 20601

MiTek
6904 Parke East Blvd.
Tampa, FL 36610

Job	Truss	Truss Type	Qty	Ply	PFS SOLUTIONS - LOT 5 AL
2714379	T25	Piggyback Base	2	1	T23468900 Job Reference (optional)

Builders FirstSource (Jacksonville, FL), Jacksonville, FL - 32244, 8.430 s Mar 22 2021 MiTek Industries, Inc. Tue Apr 6 08:31:02 2021 Page 1
ID:7R_b7AxUtlWB3tgOsRwB2?zWJEt-4a9dD23X7DEdOREs?zLuDVXOFP7XhkX_9Elw69zTUvd

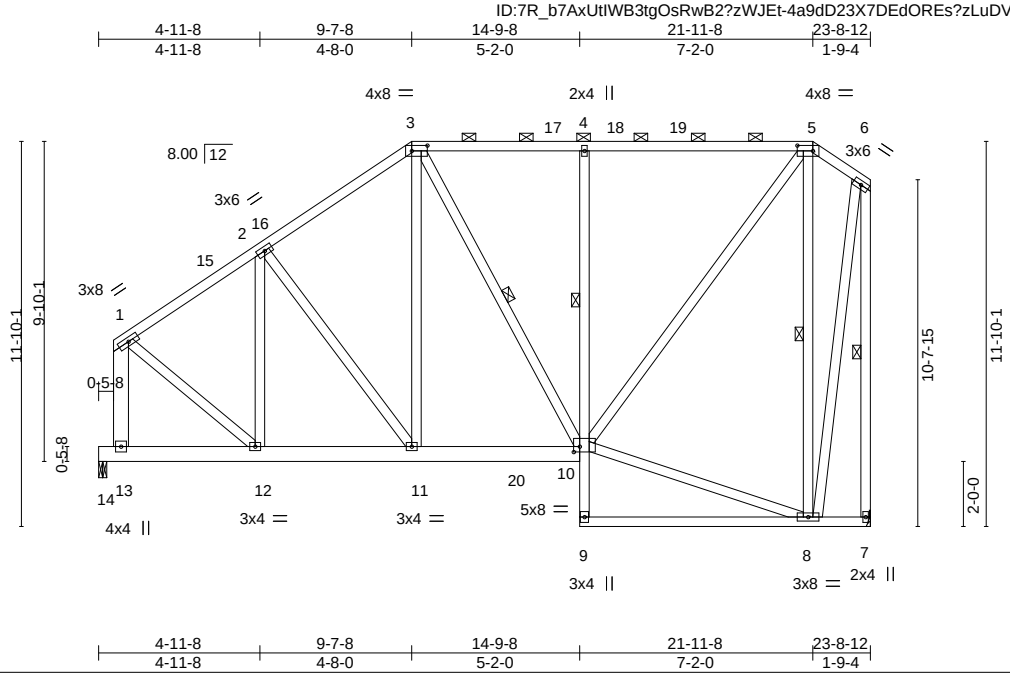

Plate Offsets (X,Y)-- [3:0-5-12,0-2-0], [5:0-5-12,0-2-0], [10:0-2-4,0-2-0]

LOADING (psf)		SPACING- 2-0-0		CSI.		DEFL.	in	(loc)	l/defl	L/d	PLATES	GRIP
TCLL	20.0	Plate Grip DOL	1.25	TC	0.51	Vert(LL)	-0.08	8-9	>999	240	MT20	244/190
TCDL	7.0	Lumber DOL	1.25	BC	0.46	Vert(CT)	-0.16	8-9	>999	180		
BCLL	0.0 *	Rep Stress Incr	YES	WB	0.48	Horz(CT)	-0.02	14	n/a	n/a		
BCDL	10.0	Code FBC2020/TPI2014		Matrix-MS							Weight: 241 lb	FT = 20%

LUMBER-
TOP CHORD 2x4 SP No.2
BOT CHORD 2x4 SP No.2 *Except*
10-14: 2x6 SP No.2, 4-9: 2x4 SP No.3
WEBS 2x4 SP No.3 *Except*
1-13: 2x6 SP No.2

BRACING-
TOP CHORD Structural wood sheathing directly applied or 6-0-0 oc purlins, except end verticals, and 2-0-0 oc purlins (6-0-0 max.): 3-5.
BOT CHORD Rigid ceiling directly applied or 10-0-0 oc bracing. Except:
1 Row at midpt 4-10
WEBS 1 Row at midpt 3-10, 5-8, 6-7

REACTIONS. (size) 14=0-3-0, 7=Mechanical
Max Horz 7=183(LC 9)
Max Uplift 14=-143(LC 12), 7=-203(LC 9)
Max Grav 14=926(LC 2), 7=948(LC 2)

FORCES. (lb) - Max. Comp./Max. Ten. - All forces 250 (lb) or less except when shown.
TOP CHORD 1-2=-780/136, 2-3=-771/188, 3-4=-573/154, 4-5=-573/154, 1-13=-921/167, 6-7=-978/189
BOT CHORD 11-12=-103/611, 10-11=-102/592, 4-10=-392/191
WEBS 3-11=-58/323, 5-10=-181/726, 5-8=-701/204, 1-12=-82/682, 6-8=-203/886

NOTES-
1) Unbalanced roof live loads have been considered for this design.
2) Wind: ASCE 7-16; Vult=130mph (3-second gust) Vasd=101mph; TCDL=4.2psf; BCDL=3.0psf; h=20ft; Cat. II; Exp B; Encl., GCpi=0.18; MWFRS (envelope) gable end zone and C-C Exterior(2E) 0-8-4 to 3-8-4, Interior(1) 3-8-4 to 9-7-8, Exterior(2R) 9-7-8 to 13-10-7, Interior(1) 13-10-7 to 21-11-8, Exterior(2E) 21-11-8 to 23-7-0 zone; end vertical left exposed;C-C for members and forces & MWFRS for reactions shown; Lumber DOL=1.60 plate grip DOL=1.60
3) Building Designer / Project engineer responsible for verifying applied roof live load shown covers rain loading requirements specific to the use of this truss component.
4) Provide adequate drainage to prevent water ponding.
5) This truss has been designed for a 10.0 psf bottom chord live load nonconcurrent with any other live loads.
6) * This truss has been designed for a live load of 20.0psf on the bottom chord in all areas where a rectangle 3-6-0 tall by 2-0-0 wide will fit between the bottom chord and any other members, with BCDL = 10.0psf.
7) Refer to girder(s) for truss to truss connections.
8) Provide mechanical connection (by others) of truss to bearing plate capable of withstanding 100 lb uplift at joint(s) except (jt=lb) 14=143, 7=203.
9) Graphical purlin representation does not depict the size or the orientation of the purlin along the top and/or bottom chord.

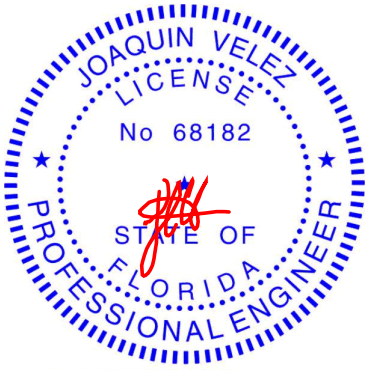

Joaquin Velez PE No.68182
MiTek USA, Inc. FL Cert 6634
6904 Parke East Blvd. Tampa FL 33610
Date:
April 7,2021

WARNING - Verify design parameters and READ NOTES ON THIS AND INCLUDED MITEK REFERENCE PAGE MII-7473 rev. 5/19/2020 BEFORE USE.
Design valid for use only with MiTek® connectors. This design is based only upon parameters shown, and is for an individual building component, not a truss system. Before use, the building designer must verify the applicability of design parameters and properly incorporate this design into the overall building design. Bracing indicated is to prevent buckling of individual truss web and/or chord members only. Additional temporary and permanent bracing is always required for stability and to prevent collapse with possible personal injury and property damage. For general guidance regarding the fabrication, storage, delivery, erection and bracing of trusses and truss systems, see ***ANSI/TPI1 Quality Criteria, DSB-89 and BCSI Building Component Safety Information*** available from Truss Plate Institute, 2670 Crain Highway, Suite 203 Waldorf, MD 20601

MiTek
6904 Parke East Blvd.
Tampa, FL 36610

Job	Truss	Truss Type	Qty	Ply	PFS SOLUTIONS - LOT 5 AL
2714379	T26	Piggyback Base	7	1	T23468901 Job Reference (optional)

Builders FirstSource (Jacksonville, FL), Jacksonville, FL - 32244, 8.430 s Mar 22 2021 MiTek Industries, Inc. Tue Apr 6 08:31:02 2021 Page 1
ID:7R_b7AxUtlWB3tgOsRwB2?zWJEt-4a9dD23X7DEdOREs?zLuDVXTQP68hpo_9Elw69zTUvd

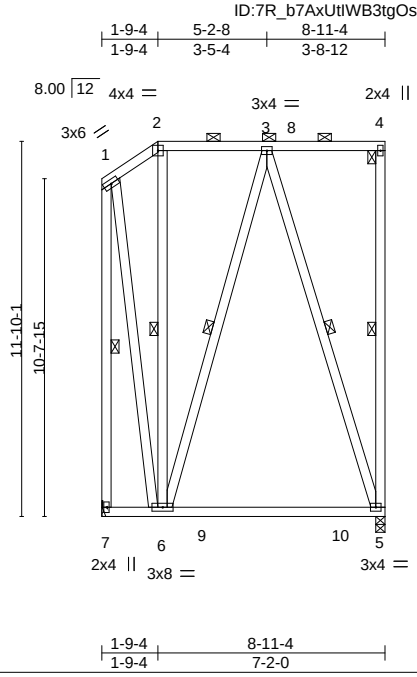

Scale = 1:72.7

LOADING (psf)		SPACING-	2-0-0	CSI.		DEFL.	in	(loc)	l/defl	L/d	PLATES	GRIP
TCLL	20.0	Plate Grip DOL	1.25	TC	0.25	Vert(LL)	-0.12	5-6	>838	240	MT20	244/190
TCDL	7.0	Lumber DOL	1.25	BC	0.55	Vert(CT)	-0.19	5-6	>539	180		
BCLL	0.0 *	Rep Stress Incr	YES	WB	0.14	Horz(CT)	0.00	5	n/a	n/a		
BCDL	10.0	Code FBC2020/TPI2014		Matrix-MS							Weight: 126 lb	FT = 20%

LUMBER-
TOP CHORD 2x4 SP No.2
BOT CHORD 2x4 SP No.2
WEBS 2x4 SP No.3

BRACING-
TOP CHORD Structural wood sheathing directly applied or 6-0-0 oc purlins, except end verticals, and 2-0-0 oc purlins (6-0-0 max.): 2-4.
BOT CHORD Rigid ceiling directly applied or 6-0-0 oc bracing.
WEBS 1 Row at midpt 4-5, 2-6, 3-6, 3-5, 1-7

REACTIONS. (size) 7=Mechanical, 5=0-3-8
Max Horz 7=38(LC 12)
Max Uplift 7=-37(LC 9), 5=-112(LC 9)
Max Grav 7=367(LC 2), 5=379(LC 2)

FORCES. (lb) - Max. Comp./Max. Ten. - All forces 250 (lb) or less except when shown.
TOP CHORD 1-7=-447/44
WEBS 1-6=-34/376

NOTES-
1) Unbalanced roof live loads have been considered for this design.
2) Wind: ASCE 7-16; Vult=130mph (3-second gust) Vasd=101mph; TCDL=4.2psf; BCDL=3.0psf; h=20ft; Cat. II; Exp B; Encl., GCpi=0.18; MWFRS (envelope) gable end zone and C-C Exterior(2E) 0-1-12 to 1-9-4, Exterior(2R) 1-9-4 to 6-0-2, Interior(1) 6-0-2 to 8-9-8 zone;C-C for members and forces & MWFRS for reactions shown; Lumber DOL=1.60 plate grip DOL=1.60
3) Building Designer / Project engineer responsible for verifying applied roof live load shown covers rain loading requirements specific to the use of this truss component.
4) Provide adequate drainage to prevent water ponding.
5) This truss has been designed for a 10.0 psf bottom chord live load nonconcurrent with any other live loads.
6) * This truss has been designed for a live load of 20.0psf on the bottom chord in all areas where a rectangle 3-6-0 tall by 2-0-0 wide will fit between the bottom chord and any other members, with BCDL = 10.0psf.
7) Refer to girder(s) for truss to truss connections.
8) Provide mechanical connection (by others) of truss to bearing plate capable of withstanding 100 lb uplift at joint(s) 7 except (jt=lb) 5=112.
9) Graphical purlin representation does not depict the size or the orientation of the purlin along the top and/or bottom chord.

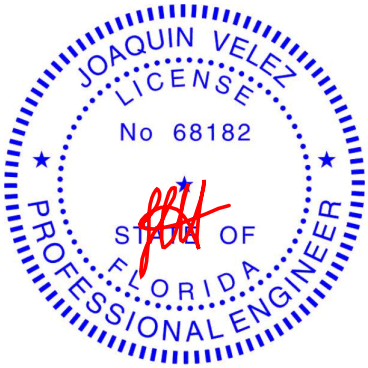

Joaquin Velez PE No.68182
MiTek USA, Inc. FL Cert 6634
6904 Parke East Blvd. Tampa FL 33610
Date:
April 7,2021

WARNING - Verify design parameters and READ NOTES ON THIS AND INCLUDED MITEK REFERENCE PAGE MII-7473 rev. 5/19/2020 BEFORE USE.
Design valid for use only with MiTek® connectors. This design is based only upon parameters shown, and is for an individual building component, not a truss system. Before use, the building designer must verify the applicability of design parameters and properly incorporate this design into the overall building design. Bracing indicated is to prevent buckling of individual truss web and/or chord members only. Additional temporary and permanent bracing is always required for stability and to prevent collapse with possible personal injury and property damage. For general guidance regarding the fabrication, storage, delivery, erection and bracing of trusses and truss systems, see ***ANSI/TPI1 Quality Criteria, DSB-89 and BCSI Building Component Safety Information*** available from Truss Plate Institute, 2670 Crain Highway, Suite 203 Waldorf, MD 20601

MiTek
6904 Parke East Blvd.
Tampa, FL 36610

Job	Truss	Truss Type	Qty	Ply	PFS SOLUTIONS - LOT 5 AL
2714379	TG01	Flat Girder	1	1	T23468902 Job Reference (optional)

Builders FirstSource (Jacksonville, FL), Jacksonville, FL - 32244, 8.430 s Mar 22 2021 MiTek Industries, Inc. Tue Apr 6 08:31:03 2021 Page 1
ID:7R_b7AxUtlWB3tgOsRwB2?zWJEt-Ymi?QO49uWNU?bo3Zhs7mi4d3pYCQIH7OuVTfczTUvc

Scale: 3/8"=1'

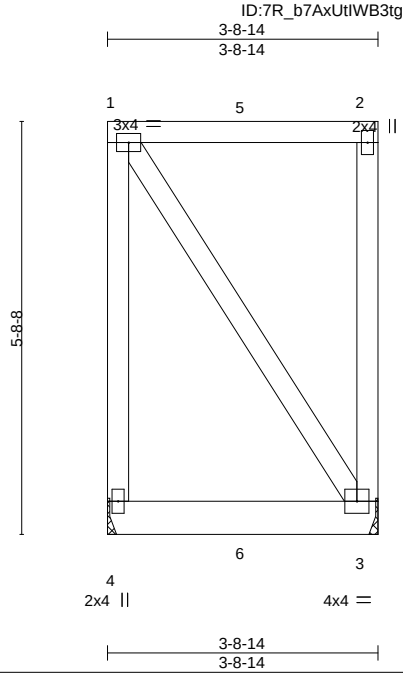

LOADING (psf)		SPACING-	2-0-0	CSI.		DEFL.	in	(loc)	l/defl	L/d	PLATES	GRIP
TCLL	20.0	Plate Grip DOL	1.25	TC	0.32	Vert(LL)	-0.00	3-4	>999	240	MT20	244/190
TCDL	7.0	Lumber DOL	1.25	BC	0.11	Vert(CT)	-0.01	3-4	>999	180		
BCLL	0.0 *	Rep Stress Incr	NO	WB	0.00	Horz(CT)	0.00	3	n/a	n/a		
BCDL	10.0	Code FBC2020/TPI2014		Matrix-MP							Weight: 38 lb	FT = 20%

LUMBER-
TOP CHORD 2x4 SP No.2
BOT CHORD 2x6 SP No.2
WEBS 2x4 SP No.3

BRACING-
TOP CHORD Structural wood sheathing directly applied or 3-8-14 oc purlins, except end verticals.
BOT CHORD Rigid ceiling directly applied or 10-0-0 oc bracing.

REACTIONS. (size) 4=Mechanical, 3=Mechanical
Max Uplift 4=-93(LC 4), 3=-97(LC 4)
Max Grav 4=164(LC 1), 3=167(LC 1)

FORCES. (lb) - Max. Comp./Max. Ten. - All forces 250 (lb) or less except when shown.

NOTES-
1) Wind: ASCE 7-16; Vult=130mph (3-second gust) Vasd=101mph; TCDL=4.2psf; BCDL=3.0psf; h=20ft; Cat. II; Exp B; Encl., GCpi=0.18; MWFRS (envelope) gable end zone; Lumber DOL=1.60 plate grip DOL=1.60
2) Building Designer / Project engineer responsible for verifying applied roof live load shown covers rain loading requirements specific to the use of this truss component.
3) Provide adequate drainage to prevent water ponding.
4) This truss has been designed for a 10.0 psf bottom chord live load nonconcurrent with any other live loads.
5) * This truss has been designed for a live load of 20.0psf on the bottom chord in all areas where a rectangle 3-6-0 tall by 2-0-0 wide will fit between the bottom chord and any other members.
6) Refer to girder(s) for truss to truss connections.
7) Provide mechanical connection (by others) of truss to bearing plate capable of withstanding 100 lb uplift at joint(s) 4, 3.
8) Hanger(s) or other connection device(s) shall be provided sufficient to support concentrated load(s) 106 lb down and 89 lb up at 1-11-4 on top chord, and 65 lb down and 56 lb up at 1-11-4 on bottom chord. The design/selection of such connection device(s) is the responsibility of others.
9) In the LOAD CASE(S) section, loads applied to the face of the truss are noted as front (F) or back (B).

LOAD CASE(S) Standard
1) Dead + Roof Live (balanced): Lumber Increase=1.25, Plate Increase=1.25
Uniform Loads (plf)
Vert: 1-2=-54, 3-4=-20
Concentrated Loads (lb)
Vert: 5=-50(B) 6=-25(B)

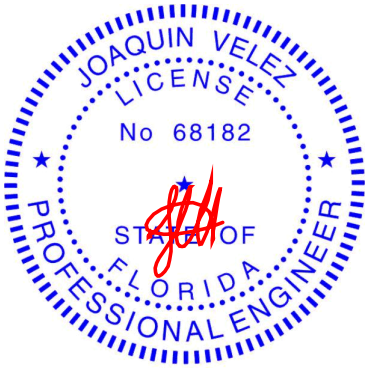

Joaquin Velez PE No.68182
MiTek USA, Inc. FL Cert 6634
6904 Parke East Blvd. Tampa FL 33610
Date:
April 7,2021

WARNING - Verify design parameters and READ NOTES ON THIS AND INCLUDED MITEK REFERENCE PAGE MII-7473 rev. 5/19/2020 BEFORE USE.
Design valid for use only with MiTek® connectors. This design is based only upon parameters shown, and is for an individual building component, not a truss system. Before use, the building designer must verify the applicability of design parameters and properly incorporate this design into the overall building design. Bracing indicated is to prevent buckling of individual truss web and/or chord members only. Additional temporary and permanent bracing is always required for stability and to prevent collapse with possible personal injury and property damage. For general guidance regarding the fabrication, storage, delivery, erection and bracing of trusses and truss systems, see ***ANSI/TPI1 Quality Criteria, DSB-89 and BCSI Building Component Safety Information*** available from Truss Plate Institute, 2670 Crain Highway, Suite 203 Waldorf, MD 20601

MiTek
6904 Parke East Blvd.
Tampa, FL 36610

Job	Truss	Truss Type	Qty	Ply	PFS SOLUTIONS - LOT 5 AL
2714379	V01	GABLE	1	1	T23468903 Job Reference (optional)

Builders FirstSource (Jacksonville, FL), Jacksonville, FL - 32244, 8.430 s Mar 22 2021 MiTek Industries, Inc. Tue Apr 6 08:31:04 2021 Page 1
ID:7R_b7AxUtIWB3tgOsRwB2?zWJEt-0yGOej5nfqVLdlNF7ONMJwdswDvi9iEHdYE0B2zTUvb

Scale = 1:59.1

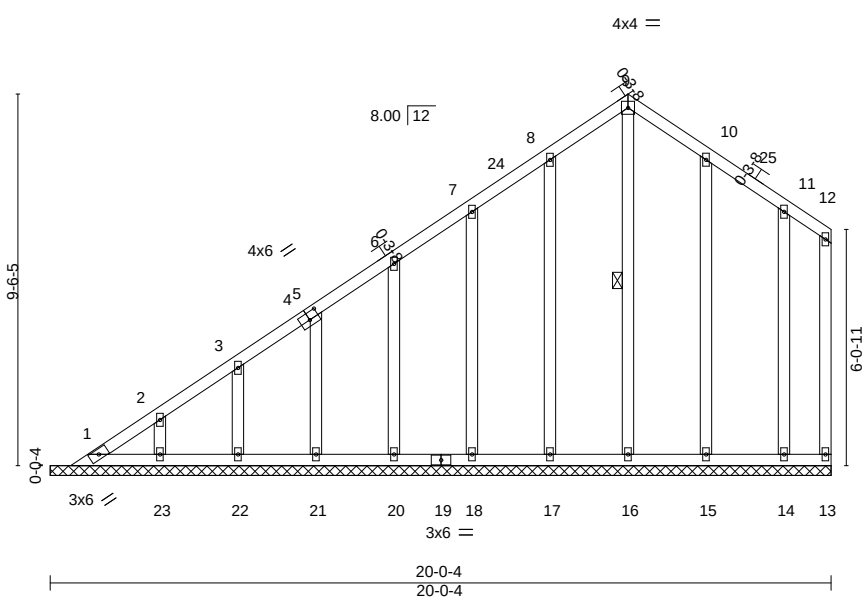

Plate Offsets (X,Y)-- [4:0-3-0,0-2-4]

LOADING (psf)		SPACING-	2-0-0	CSI.		DEFL.	in	(loc)	l/defl	L/d	PLATES	GRIP
TCLL	20.0	Plate Grip DOL	1.25	TC	0.05	Vert(LL)	n/a	-	n/a	999	MT20	244/190
TCDL	7.0	Lumber DOL	1.25	BC	0.03	Vert(CT)	n/a	-	n/a	999		
BCLL	0.0 *	Rep Stress Incr	YES	WB	0.15	Horz(CT)	0.00	13	n/a	n/a		
BCDL	10.0	Code FBC2020/TPI2014		Matrix-S							Weight: 144 lb	FT = 20%

LUMBER-

TOP CHORD	2x4 SP No.2
BOT CHORD	2x4 SP No.2
WEBS	2x4 SP No.3
OTHERS	2x4 SP No.3

BRACING-

TOP CHORD	Structural wood sheathing directly applied or 6-0-0 oc purlins, except end verticals.
BOT CHORD	Rigid ceiling directly applied or 10-0-0 oc bracing.
WEBS	1 Row at midpt 9-16

REACTIONS. All bearings 20-0-4.
(lb) - Max Horz 1=251(LC 12)
Max Uplift All uplift 100 lb or less at joint(s) 13, 1, 16, 17, 18, 20, 21, 22, 23, 15, 14
Max Grav All reactions 250 lb or less at joint(s) 13, 1, 16, 17, 18, 20, 21, 22, 23, 15, 14

FORCES. (lb) - Max. Comp./Max. Ten. - All forces 250 (lb) or less except when shown.
TOP CHORD 1-2=-284/177

NOTES-
1) Unbalanced roof live loads have been considered for this design.
2) Wind: ASCE 7-16; Vult=130mph (3-second gust) Vasd=101mph; TCDL=4.2psf; BCDL=3.0psf; h=20ft; Cat. II; Exp B; Encl., GCpi=0.18; MWFRS (envelope) gable end zone and C-C Exterior(2E) 1-0-1 to 4-0-1, Interior(1) 4-0-1 to 14-9-12, Exterior(2R) 14-9-12 to 17-9-12, Interior(1) 17-9-12 to 19-10-8 zone;C-C for members and forces & MWFRS for reactions shown; Lumber DOL=1.60 plate grip DOL=1.60
3) Building Designer / Project engineer responsible for verifying applied roof live load shown covers rain loading requirements specific to the use of this truss component.
4) All plates are 2x4 MT20 unless otherwise indicated.
5) Gable requires continuous bottom chord bearing.
6) This truss has been designed for a 10.0 psf bottom chord live load nonconcurrent with any other live loads.
7) * This truss has been designed for a live load of 20.0psf on the bottom chord in all areas where a rectangle 3-6-0 tall by 2-0-0 wide will fit between the bottom chord and any other members.
8) Provide mechanical connection (by others) of truss to bearing plate capable of withstanding 100 lb uplift at joint(s) 13, 1, 16, 17, 18, 20, 21, 22, 23, 15, 14.

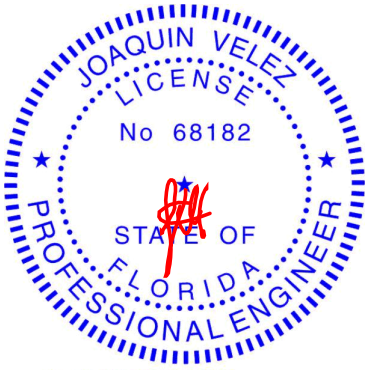

Joaquin Velez PE No.68182
MiTek USA, Inc. FL Cert 6634
6904 Parke East Blvd. Tampa FL 33610
Date:
April 7,2021

WARNING - Verify design parameters and READ NOTES ON THIS AND INCLUDED MITEK REFERENCE PAGE MII-7473 rev. 5/19/2020 BEFORE USE.
Design valid for use only with MiTek® connectors. This design is based only upon parameters shown, and is for an individual building component, not a truss system. Before use, the building designer must verify the applicability of design parameters and properly incorporate this design into the overall building design. Bracing indicated is to prevent buckling of individual truss web and/or chord members only. Additional temporary and permanent bracing is always required for stability and to prevent collapse with possible personal injury and property damage. For general guidance regarding the fabrication, storage, delivery, erection and bracing of trusses and truss systems, see ***ANSI/TPI1 Quality Criteria, DSB-89 and BCSI Building Component Safety Information*** available from Truss Plate Institute, 2670 Crain Highway, Suite 203 Waldorf, MD 20601

MiTek
6904 Parke East Blvd.
Tampa, FL 36610

Job	Truss	Truss Type	Qty	Ply	PFS SOLUTIONS - LOT 5 AL
2714379	V02	Valley	1	1	T23468904 Job Reference (optional)

Builders FirstSource (Jacksonville, FL), Jacksonville, FL - 32244, 8.430 s Mar 22 2021 MiTek Industries, Inc. Tue Apr 6 08:31:05 2021 Page 1
ID:7R_b7AxUtlWB3tgOsRwB2?zWJEt-U8qmr36PQ8dCFvyRh6ubr79?vcDcu82QrC_ajUzTUva

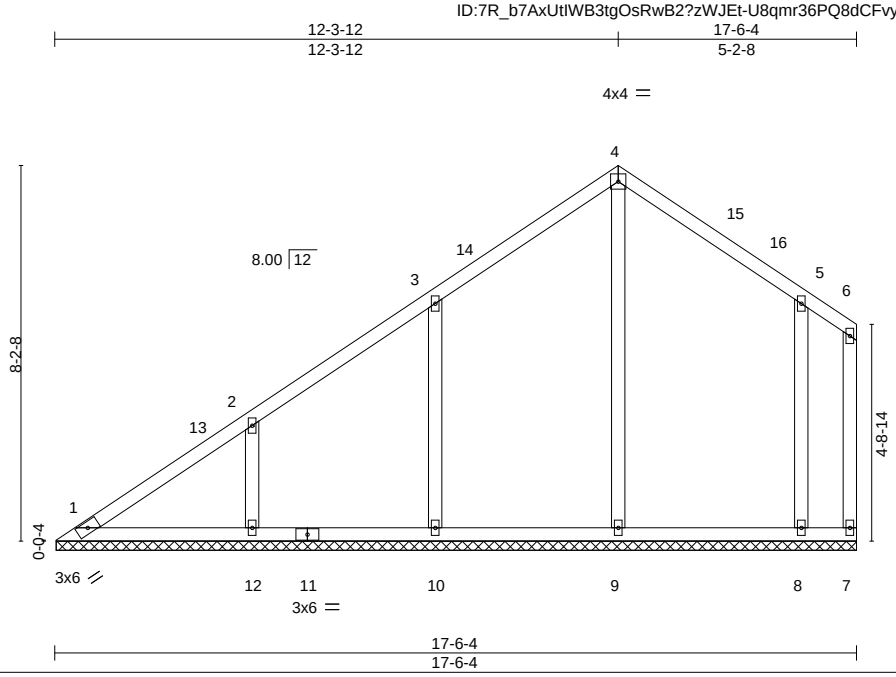

LOADING (psf)		SPACING-	2-0-0	CSI.		DEFL.	in	(loc)	l/defl	L/d	PLATES	GRIP
TCLL	20.0	Plate Grip DOL	1.25	TC	0.17	Vert(LL)	n/a	-	n/a	999	MT20	244/190
TCDL	7.0	Lumber DOL	1.25	BC	0.18	Vert(CT)	n/a	-	n/a	999		
BCLL	0.0 *	Rep Stress Incr	YES	WB	0.24	Horz(CT)	-0.00	7	n/a	n/a		
BCDL	10.0	Code FBC2020/TPI2014		Matrix-S							Weight: 93 lb	FT = 20%

LUMBER-

TOP CHORD	2x4 SP No.2
BOT CHORD	2x4 SP No.2
WEBS	2x4 SP No.3
OTHERS	2x4 SP No.3

BRACING-

TOP CHORD	Structural wood sheathing directly applied or 6-0-0 oc purlins, except end verticals.
BOT CHORD	Rigid ceiling directly applied or 6-0-0 oc bracing.

REACTIONS. All bearings 17-5-14.
(lb) - Max Horz 1=206(LC 12)
Max Uplift All uplift 100 lb or less at joint(s) 1, 7, 9 except 10=-150(LC 12), 12=-153(LC 12), 8=-142(LC 13)
Max Grav All reactions 250 lb or less at joint(s) 1, 7 except 9=412(LC 19), 10=406(LC 19), 12=400(LC 19), 8=388(LC 20)

FORCES. (lb) - Max. Comp./Max. Ten. - All forces 250 (lb) or less except when shown.

NOTES-
1) Unbalanced roof live loads have been considered for this design.
2) Wind: ASCE 7-16; Vult=130mph (3-second gust) Vasd=101mph; TCDL=4.2psf; BCDL=3.0psf; h=20ft; Cat. II; Exp B; Encl., GCpi=0.18; MWFRS (envelope) gable end zone and C-C Exterior(2E) 0-5-12 to 3-5-12, Interior(1) 3-5-12 to 12-3-12, Exterior(2R) 12-3-12 to 15-3-12, Interior(1) 15-3-12 to 17-4-8 zone;C-C for members and forces & MWFRS for reactions shown; Lumber DOL=1.60 plate grip DOL=1.60
3) Building Designer / Project engineer responsible for verifying applied roof live load shown covers rain loading requirements specific to the use of this truss component.
4) All plates are 2x4 MT20 unless otherwise indicated.
5) Gable requires continuous bottom chord bearing.
6) This truss has been designed for a 10.0 psf bottom chord live load nonconcurrent with any other live loads.
7) * This truss has been designed for a live load of 20.0psf on the bottom chord in all areas where a rectangle 3-6-0 tall by 2-0-0 wide will fit between the bottom chord and any other members, with BCDL = 10.0psf.
8) Provide mechanical connection (by others) of truss to bearing plate capable of withstanding 100 lb uplift at joint(s) 1, 7, 9 except (jt=lb) 10=150, 12=153, 8=142.

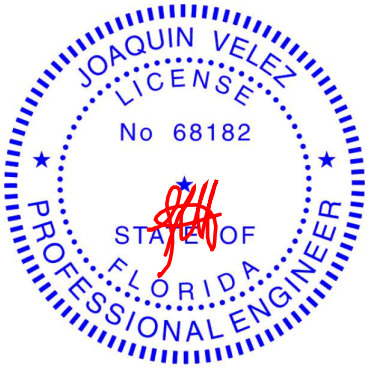

Joaquin Velez PE No.68182
MiTek USA, Inc. FL Cert 6634
6904 Parke East Blvd. Tampa FL 33610
Date:
April 7,2021

WARNING - Verify design parameters and READ NOTES ON THIS AND INCLUDED MITEK REFERENCE PAGE MII-7473 rev. 5/19/2020 BEFORE USE.
Design valid for use only with MiTek® connectors. This design is based only upon parameters shown, and is for an individual building component, not a truss system. Before use, the building designer must verify the applicability of design parameters and properly incorporate this design into the overall building design. Bracing indicated is to prevent buckling of individual truss web and/or chord members only. Additional temporary and permanent bracing is always required for stability and to prevent collapse with possible personal injury and property damage. For general guidance regarding the fabrication, storage, delivery, erection and bracing of trusses and truss systems, see ***ANSI/TPI1 Quality Criteria, DSB-89 and BCSI Building Component Safety Information*** available from Truss Plate Institute, 2670 Crain Highway, Suite 203 Waldorf, MD 20601

MiTek
6904 Parke East Blvd.
Tampa, FL 36610

Job	Truss	Truss Type	Qty	Ply	PFS SOLUTIONS - LOT 5 AL
2714379	V03	Valley	1	1	T23468905 Job Reference (optional)

Builders FirstSource (Jacksonville, FL), Jacksonville, FL - 32244, 8.430 s Mar 22 2021 MiTek Industries, Inc. Tue Apr 6 08:31:06 2021 Page 1
ID:7R_b7AxUtlWB3tgOsRwB2?zWJEt-yLO83P61BRl3s3XeEpPqOLiAV0YXdd4a4sj7FxzTUvZ

Scale = 1:64.8

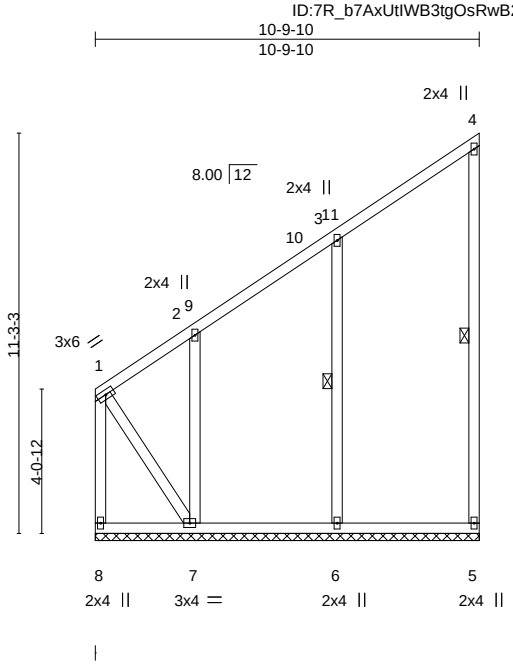

LOADING (psf)		SPACING-	2-0-0	CSI.		DEFL.	in	(loc)	l/defl	L/d	PLATES	GRIP
TCLL	20.0	Plate Grip DOL	1.25	TC	0.18	Vert(LL)	n/a	-	n/a	999	MT20	244/190
TCDL	7.0	Lumber DOL	1.25	BC	0.20	Vert(CT)	n/a	-	n/a	999		
BCLL	0.0 *	Rep Stress Incr	YES	WB	0.13	Horz(CT)	-0.00	5	n/a	n/a		
BCDL	10.0	Code FBC2020/TPI2014		Matrix-S							Weight: 83 lb	FT = 20%

LUMBER-

TOP CHORD	2x4 SP No.2
BOT CHORD	2x4 SP No.2
WEBS	2x4 SP No.3
OTHERS	2x4 SP No.3

BRACING-

TOP CHORD	Structural wood sheathing directly applied or 6-0-0 oc purlins, except end verticals.
BOT CHORD	Rigid ceiling directly applied or 10-0-0 oc bracing.
WEBS	1 Row at midpt 4-5, 3-6

REACTIONS. All bearings 10-9-10.
(lb) - Max Horz 8=209(LC 12)
Max Uplift All uplift 100 lb or less at joint(s) 5 except 8=-132(LC 10), 6=-108(LC 12), 7=-431(LC 12)
Max Grav All reactions 250 lb or less at joint(s) 5 except 8=407(LC 12), 6=477(LC 19), 7=453(LC 19)

FORCES. (lb) - Max. Comp./Max. Ten. - All forces 250 (lb) or less except when shown.
TOP CHORD 1-8=-470/215, 1-2=-267/143
WEBS 3-6=-254/195, 1-7=-211/422

NOTES-
1) Wind: ASCE 7-16; Vult=130mph (3-second gust) Vasd=101mph; TCDL=4.2psf; BCDL=3.0psf; h=20ft; Cat. II; Exp B; Encl., GCpi=0.18; MWFRS (envelope) gable end zone and C-C Exterior(2E) 0-1-12 to 3-1-12, Interior(1) 3-1-12 to 10-7-14 zone;C-C for members and forces & MWFRS for reactions shown; Lumber DOL=1.60 plate grip DOL=1.60
2) Building Designer / Project engineer responsible for verifying applied roof live load shown covers rain loading requirements specific to the use of this truss component.
3) Gable requires continuous bottom chord bearing.
4) This truss has been designed for a 10.0 psf bottom chord live load nonconcurrent with any other live loads.
5) * This truss has been designed for a live load of 20.0psf on the bottom chord in all areas where a rectangle 3-6-0 tall by 2-0-0 wide will fit between the bottom chord and any other members, with BCDL = 10.0psf.
6) Provide mechanical connection (by others) of truss to bearing plate capable of withstanding 100 lb uplift at joint(s) 5 except (jt=lb) 8=132, 6=108, 7=431.

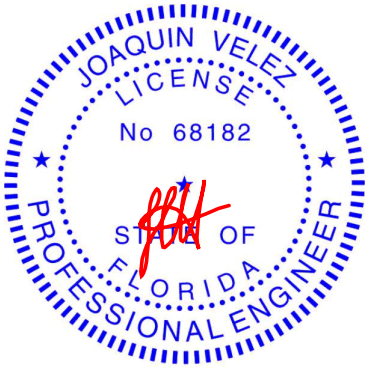

Joaquin Velez PE No.68182
MiTek USA, Inc. FL Cert 6634
6904 Parke East Blvd. Tampa FL 33610
Date:
April 7,2021

WARNING - Verify design parameters and READ NOTES ON THIS AND INCLUDED MITEK REFERENCE PAGE MII-7473 rev. 5/19/2020 BEFORE USE.
Design valid for use only with MiTek® connectors. This design is based only upon parameters shown, and is for an individual building component, not a truss system. Before use, the building designer must verify the applicability of design parameters and properly incorporate this design into the overall building design. Bracing indicated is to prevent buckling of individual truss web and/or chord members only. Additional temporary and permanent bracing is always required for stability and to prevent collapse with possible personal injury and property damage. For general guidance regarding the fabrication, storage, delivery, erection and bracing of trusses and truss systems, see ***ANSI/TPI1 Quality Criteria, DSB-89 and BCSI Building Component Safety Information*** available from Truss Plate Institute, 2670 Crain Highway, Suite 203 Waldorf, MD 20601

MiTek
6904 Parke East Blvd.
Tampa, FL 36610

Job	Truss	Truss Type	Qty	Ply	PFS SOLUTIONS - LOT 5 AL
2714379	V04	Valley	1	1	T23468906 Job Reference (optional)

Builders FirstSource (Jacksonville, FL), Jacksonville, FL - 32244, 8.430 s Mar 22 2021 MiTek Industries, Inc. Tue Apr 6 08:31:07 2021 Page 1
ID:7R_b7AxUtlWB3tgOsRwB2?zWJEt-QXyWGl7fyltwUD6qoWx3wYFLFQumM2?jJWTgoNzTUvY

10-9-10
10-9-10

Scale = 1:54.7

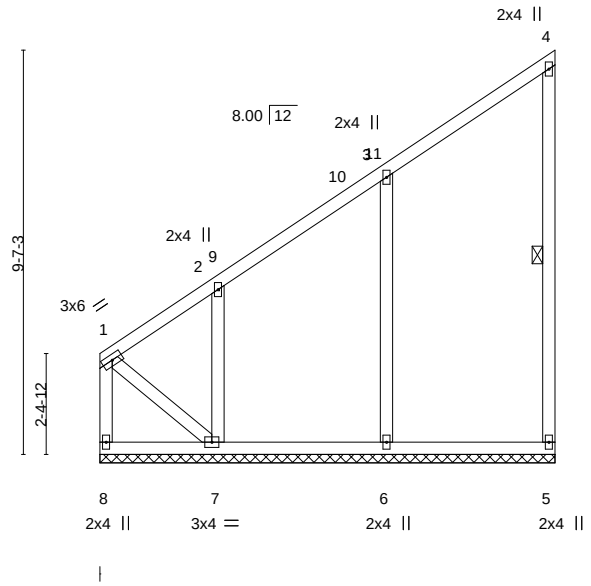

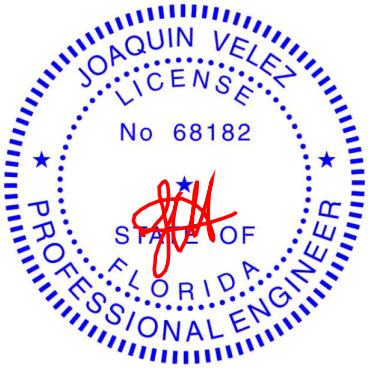

Joaquin Velez PE No.68182
MiTek USA, Inc. FL Cert 6634
6904 Parke East Blvd. Tampa FL 33610
Date:

LOADING (psf)		SPACING-	2-0-0	CSI.		DEFL.	in	(loc)	l/defl	L/d	PLATES	GRIP
TCLL	20.0	Plate Grip DOL	1.25	TC	0.18	Vert(LL)	n/a	-	n/a	999	MT20	244/190
TCDL	7.0	Lumber DOL	1.25	BC	0.20	Vert(CT)	n/a	-	n/a	999		
BCLL	0.0 *	Rep Stress Incr	YES	WB	0.21	Horz(CT)	-0.00	5	n/a	n/a		
BCDL	10.0	Code FBC2020/TPI2014		Matrix-S							Weight: 71 lb	FT = 20%

LUMBER-

TOP CHORD	2x4 SP No.2
BOT CHORD	2x4 SP No.2
WEBS	2x4 SP No.3
OTHERS	2x4 SP No.3

BRACING-

TOP CHORD	Structural wood sheathing directly applied or 6-0-0 oc purlins, except end verticals.
BOT CHORD	Rigid ceiling directly applied or 10-0-0 oc bracing.
WEBS	1 Row at midpt 4-5

REACTIONS. All bearings 10-9-10.
(lb) - Max Horz 8=209(LC 12)
Max Uplift All uplift 100 lb or less at joint(s) 8, 5 except 6=-108(LC 12), 7=-302(LC 12)
Max Grav All reactions 250 lb or less at joint(s) 5 except 8=277(LC 12), 6=476(LC 19), 7=413(LC 19)

FORCES. (lb) - Max. Comp./Max. Ten. - All forces 250 (lb) or less except when shown.
TOP CHORD 1-8=-319/141, 1-2=-267/142
WEBS 3-6=-253/194, 1-7=-157/310

NOTES-
1) Wind: ASCE 7-16; Vult=130mph (3-second gust) Vasd=101mph; TCDL=4.2psf; BCDL=3.0psf; h=20ft; Cat. II; Exp B; Encl., GCpi=0.18; MWFRS (envelope) gable end zone and C-C Exterior(2E) 0-1-12 to 3-1-12, Interior(1) 3-1-12 to 10-7-14 zone;C-C for members and forces & MWFRS for reactions shown; Lumber DOL=1.60 plate grip DOL=1.60
2) Building Designer / Project engineer responsible for verifying applied roof live load shown covers rain loading requirements specific to the use of this truss component.
3) Gable requires continuous bottom chord bearing.
4) This truss has been designed for a 10.0 psf bottom chord live load nonconcurrent with any other live loads.
5) * This truss has been designed for a live load of 20.0psf on the bottom chord in all areas where a rectangle 3-6-0 tall by 2-0-0 wide will fit between the bottom chord and any other members, with BCDL = 10.0psf.
6) Provide mechanical connection (by others) of truss to bearing plate capable of withstanding 100 lb uplift at joint(s) 8, 5 except (jt=lb) 6=108, 7=302.

April 7,2021

WARNING - Verify design parameters and READ NOTES ON THIS AND INCLUDED MITEK REFERENCE PAGE MII-7473 rev. 5/19/2020 BEFORE USE.
Design valid for use only with MiTek® connectors. This design is based only upon parameters shown, and is for an individual building component, not a truss system. Before use, the building designer must verify the applicability of design parameters and properly incorporate this design into the overall building design. Bracing indicated is to prevent buckling of individual truss web and/or chord members only. Additional temporary and permanent bracing is always required for stability and to prevent collapse with possible personal injury and property damage. For general guidance regarding the fabrication, storage, delivery, erection and bracing of trusses and truss systems, see ***ANSI/TPI1 Quality Criteria, DSB-89 and BCSI Building Component Safety Information*** available from Truss Plate Institute, 2670 Crain Highway, Suite 203 Waldorf, MD 20601

MiTek
6904 Parke East Blvd.
Tampa, FL 36610

Job	Truss	Truss Type	Qty	Ply	PFS SOLUTIONS - LOT 5 AL
2714379	V05	Valley	1	1	T23468907 Job Reference (optional)

Builders FirstSource (Jacksonville, FL), Jacksonville, FL - 32244, 8.430 s Mar 22 2021 MiTek Industries, Inc. Tue Apr 6 08:31:08 2021 Page 1
ID:7R_b7AxUtlWB3tgOsRwB2?zWJEt-vjWuT58Ij3?n6Mh0MESITmnW7qFX5XjsXACEKpzTUvX

11-10-12
11-10-12

Scale = 1:45.0

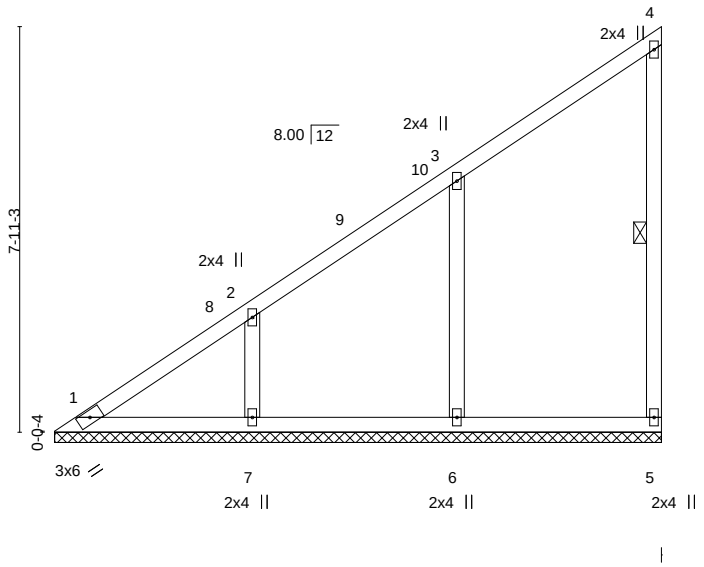

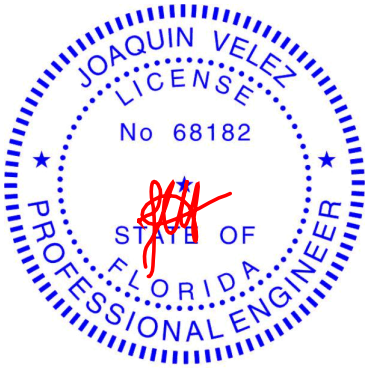

Joaquin Velez PE No.68182
MiTek USA, Inc. FL Cert 6634
6904 Parke East Blvd. Tampa FL 33610
Date:

LOADING (psf)		SPACING-	2-0-0	CSI.		DEFL.	in	(loc)	l/defl	L/d	PLATES	GRIP
TCLL	20.0	Plate Grip DOL	1.25	TC	0.17	Vert(LL)	n/a	-	n/a	999	MT20	244/190
TCDL	7.0	Lumber DOL	1.25	BC	0.16	Vert(CT)	n/a	-	n/a	999		
BCLL	0.0 *	Rep Stress Incr	YES	WB	0.12	Horz(CT)	0.00	5	n/a	n/a		
BCDL	10.0	Code FBC2020/TPI2014		Matrix-S							Weight: 59 lb	FT = 20%

LUMBER-

TOP CHORD	2x4 SP No.2
BOT CHORD	2x4 SP No.2
WEBS	2x4 SP No.3
OTHERS	2x4 SP No.3

BRACING-

TOP CHORD	Structural wood sheathing directly applied or 6-0-0 oc purlins, except end verticals.
BOT CHORD	Rigid ceiling directly applied or 10-0-0 oc bracing.
WEBS	1 Row at midpt 4-5

REACTIONS. All bearings 11-10-6.
(lb) - Max Horz 1=219(LC 12)
Max Uplift All uplift 100 lb or less at joint(s) 5, 6 except 7=-141(LC 12)
Max Grav All reactions 250 lb or less at joint(s) 1, 5 except 6=432(LC 19), 7=370(LC 19)

FORCES. (lb) - Max. Comp./Max. Ten. - All forces 250 (lb) or less except when shown.
TOP CHORD 1-2=-267/143

NOTES-
1) Wind: ASCE 7-16; Vult=130mph (3-second gust) Vasd=101mph; TCDL=4.2psf; BCDL=3.0psf; h=20ft; Cat. II; Exp B; Encl., GCpi=0.18; MWFRS (envelope) gable end zone and C-C Exterior(2E) 0-5-12 to 3-5-12, Interior(1) 3-5-12 to 11-9-0 zone;C-C for members and forces & MWFRS for reactions shown; Lumber DOL=1.60 plate grip DOL=1.60
2) Building Designer / Project engineer responsible for verifying applied roof live load shown covers rain loading requirements specific to the use of this truss component.
3) Gable requires continuous bottom chord bearing.
4) This truss has been designed for a 10.0 psf bottom chord live load nonconcurrent with any other live loads.
5) * This truss has been designed for a live load of 20.0psf on the bottom chord in all areas where a rectangle 3-6-0 tall by 2-0-0 wide will fit between the bottom chord and any other members, with BCDL = 10.0psf.
6) Provide mechanical connection (by others) of truss to bearing plate capable of withstanding 100 lb uplift at joint(s) 5, 6 except (jt=lb) 7=141.

April 7,2021

WARNING - Verify design parameters and READ NOTES ON THIS AND INCLUDED MITEK REFERENCE PAGE MII-7473 rev. 5/19/2020 BEFORE USE.
Design valid for use only with MiTek® connectors. This design is based only upon parameters shown, and is for an individual building component, not a truss system. Before use, the building designer must verify the applicability of design parameters and properly incorporate this design into the overall building design. Bracing indicated is to prevent buckling of individual truss web and/or chord members only. Additional temporary and permanent bracing is always required for stability and to prevent collapse with possible personal injury and property damage. For general guidance regarding the fabrication, storage, delivery, erection and bracing of trusses and truss systems, see ***ANSI/TPI1 Quality Criteria, DSB-89 and BCSI Building Component Safety Information*** available from Truss Plate Institute, 2670 Crain Highway, Suite 203 Waldorf, MD 20601

MiTek
6904 Parke East Blvd.
Tampa, FL 36610

Job	Truss	Truss Type	Qty	Ply	PFS SOLUTIONS - LOT 5 AL
2714379	V06	Valley	1	1	T23468908 Job Reference (optional)

Builders FirstSource (Jacksonville, FL), Jacksonville, FL - 32244, 8.430 s Mar 22 2021 MiTek Industries, Inc. Tue Apr 6 08:31:09 2021 Page 1
ID:7R_b7AxUtlWB3tgOsRwB2?zWJEt-Nw4HhR9wUM7djWGCwxzX?zKfNEawq_c0mqynsFzTUvW

9-4-12
9-4-12

Scale = 1:36.4

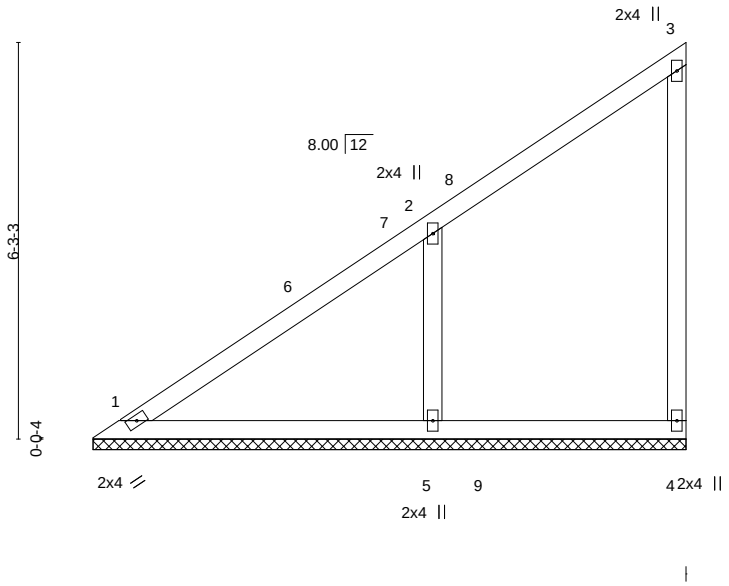

LOADING (psf)		SPACING-	2-0-0	CSI.		DEFL.	in	(loc)	l/defl	L/d	PLATES	GRIP
TCLL	20.0	Plate Grip DOL	1.25	TC	0.26	Vert(LL)	n/a	-	n/a	999	MT20	244/190
TCDL	7.0	Lumber DOL	1.25	BC	0.22	Vert(CT)	n/a	-	n/a	999		
BCLL	0.0 *	Rep Stress Incr	YES	WB	0.07	Horz(CT)	0.00	4	n/a	n/a		
BCDL	10.0	Code FBC2020/TPI2014		Matrix-S							Weight: 43 lb	FT = 20%

LUMBER-

TOP CHORD	2x4 SP No.2
BOT CHORD	2x4 SP No.2
WEBS	2x4 SP No.3
OTHERS	2x4 SP No.3

BRACING-

TOP CHORD	Structural wood sheathing directly applied or 6-0-0 oc purlins, except end verticals.
BOT CHORD	Rigid ceiling directly applied or 10-0-0 oc bracing.

REACTIONS. (size) 1=9-4-6, 4=9-4-6, 5=9-4-6
Max Horz 1=179(LC 12)
Max Uplift 4=-27(LC 14), 5=-170(LC 12)
Max Grav 1=162(LC 20), 4=148(LC 19), 5=527(LC 19)

FORCES. (lb) - Max. Comp./Max. Ten. - All forces 250 (lb) or less except when shown.
WEBS 2-5=-308/237

NOTES-

1) Wind: ASCE 7-16; Vult=130mph (3-second gust) Vasd=101mph; TCDL=4.2psf; BCDL=3.0psf; h=20ft; Cat. II; Exp B; Encl., GCpi=0.18; MWFRS (envelope) gable end zone and C-C Exterior(2E) 0-5-12 to 3-5-12, Interior(1) 3-5-12 to 9-3-0 zone;C-C for members and forces & MWFRS for reactions shown; Lumber DOL=1.60 plate grip DOL=1.60
2) Building Designer / Project engineer responsible for verifying applied roof live load shown covers rain loading requirements specific to the use of this truss component.
3) Gable requires continuous bottom chord bearing.
4) This truss has been designed for a 10.0 psf bottom chord live load nonconcurrent with any other live loads.
5) * This truss has been designed for a live load of 20.0psf on the bottom chord in all areas where a rectangle 3-6-0 tall by 2-0-0 wide will fit between the bottom chord and any other members, with BCDL = 10.0psf.
6) Provide mechanical connection (by others) of truss to bearing plate capable of withstanding 100 lb uplift at joint(s) 4 except (jt=lb) 5=170.

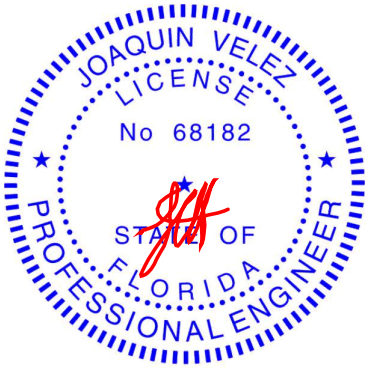

Joaquin Velez PE No.68182
MiTek USA, Inc. FL Cert 6634
6904 Parke East Blvd. Tampa FL 33610
Date:
April 7,2021

WARNING - Verify design parameters and READ NOTES ON THIS AND INCLUDED MITEK REFERENCE PAGE MII-7473 rev. 5/19/2020 BEFORE USE.
Design valid for use only with MiTek® connectors. This design is based only upon parameters shown, and is for an individual building component, not a truss system. Before use, the building designer must verify the applicability of design parameters and properly incorporate this design into the overall building design. Bracing indicated is to prevent buckling of individual truss web and/or chord members only. Additional temporary and permanent bracing is always required for stability and to prevent collapse with possible personal injury and property damage. For general guidance regarding the fabrication, storage, delivery, erection and bracing of trusses and truss systems, see ***ANSI/TPI1 Quality Criteria, DSB-89 and BCSI Building Component Safety Information*** available from Truss Plate Institute, 2670 Crain Highway, Suite 203 Waldorf, MD 20601

MiTek
6904 Parke East Blvd.
Tampa, FL 36610

Job	Truss	Truss Type	Qty	Ply	PFS SOLUTIONS - LOT 5 AL
2714379	V07	Valley	1	1	T23468909 Job Reference (optional)

Builders FirstSource (Jacksonville, FL), Jacksonville, FL - 32244, 8.430 s Mar 22 2021 MiTek Industries, Inc. Tue Apr 6 08:31:09 2021 Page 1
ID:7R_b7AxUtlWB3tgOsRwB2?zWJEt-Nw4HhR9wUM7djWGCwxzX?zKh3EcUq_k0mqynsFzTUvW

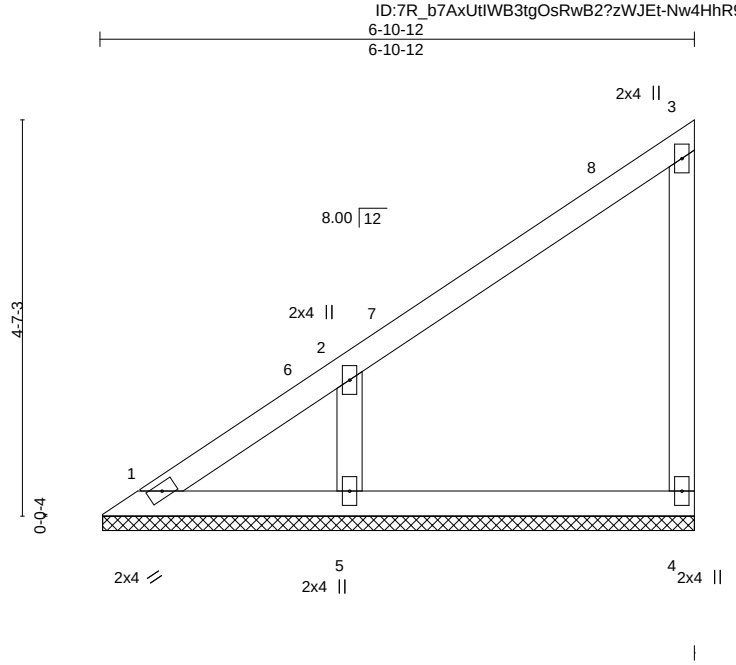

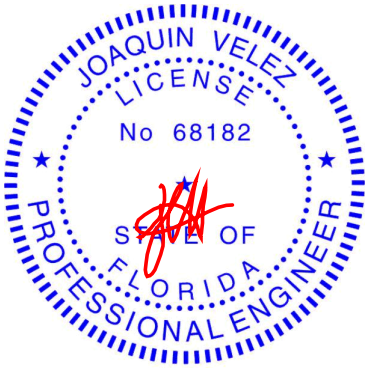

Joaquin Velez PE No.68182
MiTek USA, Inc. FL Cert 6634
6904 Parke East Blvd. Tampa FL 33610
Date:

LOADING (psf)		SPACING-	2-0-0	CSI.		DEFL.	in	(loc)	l/defl	L/d	PLATES	GRIP
TCLL	20.0	Plate Grip DOL	1.25	TC	0.16	Vert(LL)	n/a	-	n/a	999	MT20	244/190
TCDL	7.0	Lumber DOL	1.25	BC	0.12	Vert(CT)	n/a	-	n/a	999		
BCLL	0.0 *	Rep Stress Incr	YES	WB	0.07	Horz(CT)	0.00		n/a	n/a		
BCDL	10.0	Code FBC2020/TPI2014		Matrix-P							Weight: 30 lb	FT = 20%

LUMBER-

TOP CHORD	2x4 SP No.2
BOT CHORD	2x4 SP No.2
WEBS	2x4 SP No.3
OTHERS	2x4 SP No.3

BRACING-

TOP CHORD	Structural wood sheathing directly applied or 6-0-0 oc purlins, except end verticals.
BOT CHORD	Rigid ceiling directly applied or 10-0-0 oc bracing.

REACTIONS. (size) 1=6-10-6, 4=6-10-6, 5=6-10-6
Max Horz 1=139(LC 12)
Max Uplift 1=-2(LC 10), 4=-46(LC 12), 5=-142(LC 12)
Max Grav 1=71(LC 21), 4=121(LC 19), 5=316(LC 19)

FORCES. (lb) - Max. Comp./Max. Ten. - All forces 250 (lb) or less except when shown.

NOTES-

1) Wind: ASCE 7-16; Vult=130mph (3-second gust) Vasd=101mph; TCDL=4.2psf; BCDL=3.0psf; h=20ft; Cat. II; Exp B; Encl., GCpi=0.18; MWFRS (envelope) gable end zone and C-C Exterior(2E) 0-5-12 to 3-5-12, Interior(1) 3-5-12 to 6-9-0 zone;C-C for members and forces & MWFRS for reactions shown; Lumber DOL=1.60 plate grip DOL=1.60
2) Building Designer / Project engineer responsible for verifying applied roof live load shown covers rain loading requirements specific to the use of this truss component.
3) Gable requires continuous bottom chord bearing.
4) This truss has been designed for a 10.0 psf bottom chord live load nonconcurrent with any other live loads.
5) * This truss has been designed for a live load of 20.0psf on the bottom chord in all areas where a rectangle 3-6-0 tall by 2-0-0 wide will fit between the bottom chord and any other members.
6) Provide mechanical connection (by others) of truss to bearing plate capable of withstanding 100 lb uplift at joint(s) 1, 4 except (jt=lb) 5=142.

April 7,2021

WARNING - Verify design parameters and READ NOTES ON THIS AND INCLUDED MITEK REFERENCE PAGE MII-7473 rev. 5/19/2020 BEFORE USE.
Design valid for use only with MiTek® connectors. This design is based only upon parameters shown, and is for an individual building component, not a truss system. Before use, the building designer must verify the applicability of design parameters and properly incorporate this design into the overall building design. Bracing indicated is to prevent buckling of individual truss web and/or chord members only. Additional temporary and permanent bracing is always required for stability and to prevent collapse with possible personal injury and property damage. For general guidance regarding the fabrication, storage, delivery, erection and bracing of trusses and truss systems, see ***ANSI/TPI1 Quality Criteria, DSB-89 and BCSI Building Component Safety Information*** available from Truss Plate Institute, 2670 Crain Highway, Suite 203 Waldorf, MD 20601

MiTek
6904 Parke East Blvd.
Tampa, FL 36610

Job	Truss	Truss Type	Qty	Ply	PFS SOLUTIONS - LOT 5 AL
2714379	V08	Valley	1	1	T23468910 Job Reference (optional)

Builders FirstSource (Jacksonville, FL), Jacksonville, FL - 32244, 8.430 s Mar 22 2021 MiTek Industries, Inc. Tue Apr 6 08:31:10 2021 Page 1
ID:7R_b7AxUtIWB3tgOsRwB2?zWJEt-r6dfun9YFgFULgrPTfUmYBtrldwwZS09?UhLOizTUvV

Scale = 1:17.5

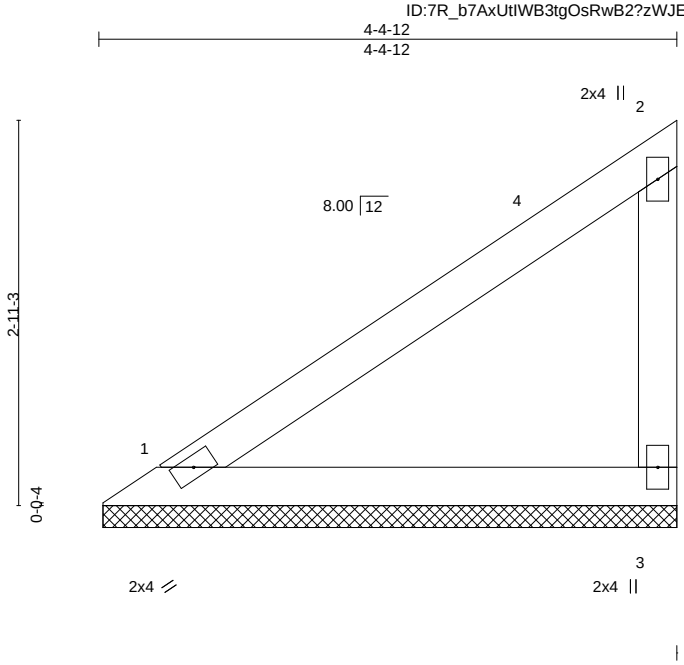

LOADING (psf)		SPACING-	2-0-0	CSI.		DEFL.	in	(loc)	l/defl	L/d	PLATES	GRIP
TCLL	20.0	Plate Grip DOL	1.25	TC	0.22	Vert(LL)	n/a	-	n/a	999	MT20	244/190
TCDL	7.0	Lumber DOL	1.25	BC	0.17	Vert(CT)	n/a	-	n/a	999		
BCLL	0.0 *	Rep Stress Incr	YES	WB	0.00	Horz(CT)	0.00		n/a	n/a		
BCDL	10.0	Code FBC2020/TPI2014		Matrix-P							Weight: 17 lb	FT = 20%

LUMBER-
TOP CHORD 2x4 SP No.2
BOT CHORD 2x4 SP No.2
WEBS 2x4 SP No.3

BRACING-
TOP CHORD Structural wood sheathing directly applied or 4-4-12 oc purlins, except end verticals.
BOT CHORD Rigid ceiling directly applied or 10-0-0 oc bracing.

REACTIONS. (size) 1=4-4-6, 3=4-4-6
Max Horz 1=86(LC 12)
Max Uplift 1=-9(LC 12), 3=-67(LC 12)
Max Grav 1=139(LC 1), 3=146(LC 19)

FORCES. (lb) - Max. Comp./Max. Ten. - All forces 250 (lb) or less except when shown.

NOTES-
1) Wind: ASCE 7-16; Vult=130mph (3-second gust) Vasd=101mph; TCDL=4.2psf; BCDL=3.0psf; h=20ft; Cat. II; Exp B; Encl., GCpi=0.18; MWFRS (envelope) gable end zone and C-C Exterior(2E) 0-5-12 to 3-5-12, Interior(1) 3-5-12 to 4-3-0 zone;C-C for members and forces & MWFRS for reactions shown; Lumber DOL=1.60 plate grip DOL=1.60
2) Building Designer / Project engineer responsible for verifying applied roof live load shown covers rain loading requirements specific to the use of this truss component.
3) Gable requires continuous bottom chord bearing.
4) This truss has been designed for a 10.0 psf bottom chord live load nonconcurrent with any other live loads.
5) * This truss has been designed for a live load of 20.0psf on the bottom chord in all areas where a rectangle 3-6-0 tall by 2-0-0 wide will fit between the bottom chord and any other members.
6) Provide mechanical connection (by others) of truss to bearing plate capable of withstanding 100 lb uplift at joint(s) 1, 3.

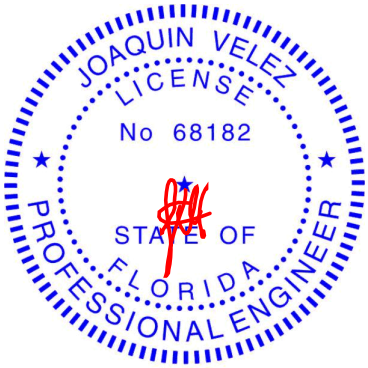

Joaquin Velez PE No.68182
MiTek USA, Inc. FL Cert 6634
6904 Parke East Blvd. Tampa FL 33610
Date:
April 7,2021

WARNING - Verify design parameters and READ NOTES ON THIS AND INCLUDED MITEK REFERENCE PAGE MII-7473 rev. 5/19/2020 BEFORE USE.
Design valid for use only with MiTek® connectors. This design is based only upon parameters shown, and is for an individual building component, not a truss system. Before use, the building designer must verify the applicability of design parameters and properly incorporate this design into the overall building design. Bracing indicated is to prevent buckling of individual truss web and/or chord members only. Additional temporary and permanent bracing is always required for stability and to prevent collapse with possible personal injury and property damage. For general guidance regarding the fabrication, storage, delivery, erection and bracing of trusses and truss systems, see ***ANSI/TPI1 Quality Criteria, DSB-89 and BCSI Building Component Safety Information*** available from Truss Plate Institute, 2670 Crain Highway, Suite 203 Waldorf, MD 20601

MiTek
6904 Parke East Blvd.
Tampa, FL 36610

Job	Truss	Truss Type	Qty	Ply	PFS SOLUTIONS - LOT 5 AL
2714379	V09	Valley	1	1	T23468911
					Job Reference (optional)

Builders FirstSource (Jacksonville, FL), Jacksonville, FL - 32244, 8.430 s Mar 22 2021 MiTek Industries, Inc. Tue Apr 6 08:31:11 2021 Page 1
ID:7R_b7AxUtlWB3tgOsRwB2?zWJEt-JIB167AA0_NLzqQb1M??5OP__1F0lvGJE8Rux8zTUvU

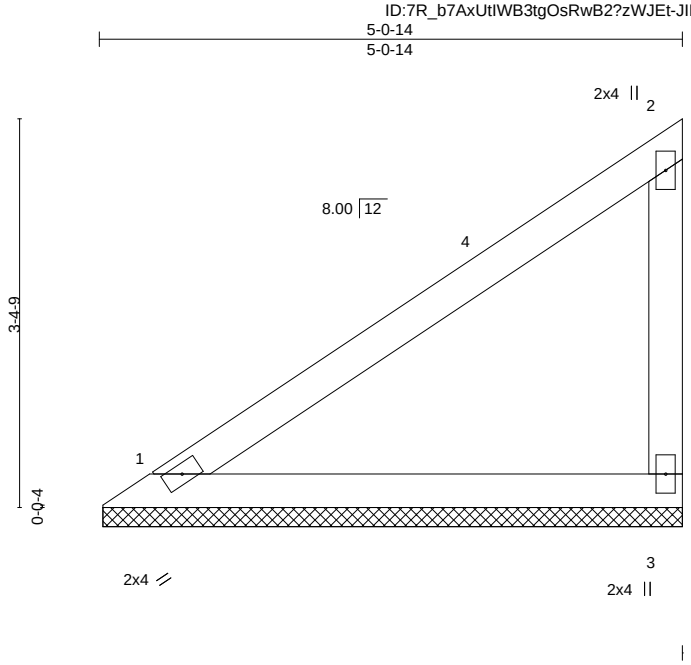

LOADING (psf)		SPACING-	2-0-0	CSI.		DEFL.	in	(loc)	l/defl	L/d	PLATES	GRIP
TCLL	20.0	Plate Grip DOL	1.25	TC	0.32	Vert(LL)	n/a	-	n/a	999	MT20	244/190
TCDL	7.0	Lumber DOL	1.25	BC	0.24	Vert(CT)	n/a	-	n/a	999		
BCLL	0.0 *	Rep Stress Incr	YES	WB	0.00	Horz(CT)	0.00		n/a	n/a		
BCDL	10.0	Code FBC2020/TPI2014		Matrix-P							Weight: 20 lb	FT = 20%

LUMBER-
TOP CHORD 2x4 SP No.2
BOT CHORD 2x4 SP No.2
WEBS 2x4 SP No.3

BRACING-
TOP CHORD Structural wood sheathing directly applied or 5-0-14 oc purlins, except end verticals.
BOT CHORD Rigid ceiling directly applied or 10-0-0 oc bracing.

REACTIONS. (size) 1=5-0-8, 3=5-0-8
Max Horz 1=102(LC 12)
Max Uplift 1=-10(LC 12), 3=-78(LC 12)
Max Grav 1=164(LC 1), 3=172(LC 19)

FORCES. (lb) - Max. Comp./Max. Ten. - All forces 250 (lb) or less except when shown.

NOTES-
1) Wind: ASCE 7-16; Vult=130mph (3-second gust) Vasd=101mph; TCDL=4.2psf; BCDL=3.0psf; h=20ft; Cat. II; Exp B; Encl., GCpi=0.18; MWFRS (envelope) gable end zone and C-C Exterior(2E) 0-5-12 to 3-5-12, Interior(1) 3-5-12 to 4-11-2 zone;C-C for members and forces & MWFRS for reactions shown; Lumber DOL=1.60 plate grip DOL=1.60
2) Building Designer / Project engineer responsible for verifying applied roof live load shown covers rain loading requirements specific to the use of this truss component.
3) Gable requires continuous bottom chord bearing.
4) This truss has been designed for a 10.0 psf bottom chord live load nonconcurrent with any other live loads.
5) * This truss has been designed for a live load of 20.0psf on the bottom chord in all areas where a rectangle 3-6-0 tall by 2-0-0 wide will fit between the bottom chord and any other members.
6) Provide mechanical connection (by others) of truss to bearing plate capable of withstanding 100 lb uplift at joint(s) 1, 3.

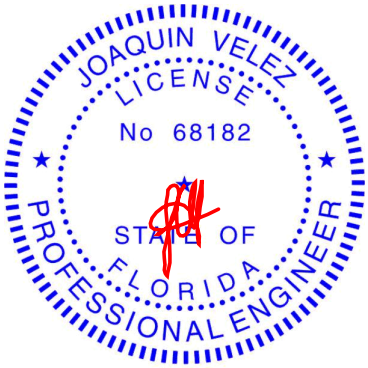

Joaquin Velez PE No.68182
MiTek USA, Inc. FL Cert 6634
6904 Parke East Blvd. Tampa FL 33610
Date:
April 7,2021

WARNING - Verify design parameters and READ NOTES ON THIS AND INCLUDED MITEK REFERENCE PAGE MII-7473 rev. 5/19/2020 BEFORE USE.
Design valid for use only with MiTek® connectors. This design is based only upon parameters shown, and is for an individual building component, not a truss system. Before use, the building designer must verify the applicability of design parameters and properly incorporate this design into the overall building design. Bracing indicated is to prevent buckling of individual truss web and/or chord members only. Additional temporary and permanent bracing is always required for stability and to prevent collapse with possible personal injury and property damage. For general guidance regarding the fabrication, storage, delivery, erection and bracing of trusses and truss systems, see ***ANSI/TPI1 Quality Criteria, DSB-89 and BCSI Building Component Safety Information*** available from Truss Plate Institute, 2670 Crain Highway, Suite 203 Waldorf, MD 20601

MiTek
6904 Parke East Blvd.
Tampa, FL 36610

Symbols

PLATE LOCATION AND ORIENTATION

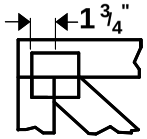

Center plate on joint unless x, y offsets are indicated. Dimensions are in ft-in-sixteenths. Apply plates to both sides of truss and fully embed teeth.

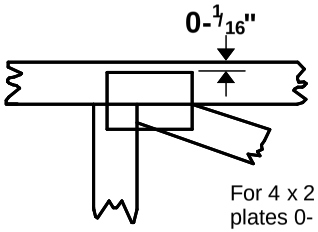

For 4 x 2 orientation, locate plates 0- 1/16" from outside edge of truss.

This symbol indicates the required direction of slots in connector plates.

*** Plate location details available in MiTek 20/20 software or upon request.**

PLATE SIZE

4 x 4

The first dimension is the plate width measured perpendicular to slots. Second dimension is the length parallel to slots.

LATERAL BRACING LOCATION

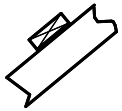

Indicated by symbol shown and/or by text in the bracing section of the output. Use T or I bracing if indicated.

BEARING

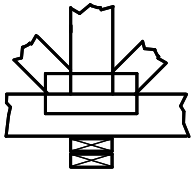

Indicates location where bearings (supports) occur. Icons vary but reaction section indicates joint number where bearings occur. Min size shown is for crushing only.

Industry Standards:

ANSI/TPI1: National Design Specification for Metal Plate Connected Wood Truss Construction.
DSB-89: Design Standard for Bracing.
BCSI: Building Component Safety Information, Guide to Good Practice for Handling, Installing & Bracing of Metal Plate Connected Wood Trusses.

Numbering System

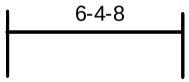

dimensions shown in ft-in-sixteenths
(Drawings not to scale)

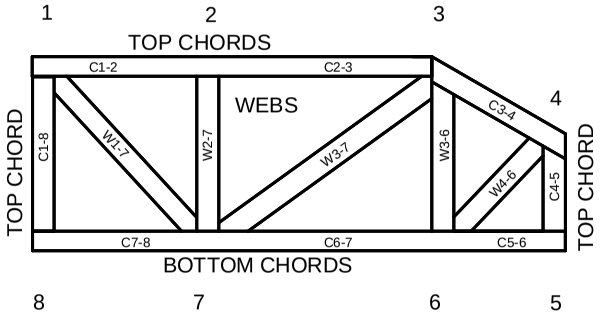

JOINTS ARE GENERALLY NUMBERED/LETTERED CLOCKWISE AROUND THE TRUSS STARTING AT THE JOINT FARTHEST TO THE LEFT.

CHORDS AND WEBS ARE IDENTIFIED BY END JOINT NUMBERS/LETTERS.

PRODUCT CODE APPROVALS

ICC-ES Reports:

ESR-1311, ESR-1352, ESR1988
ER-3907, ESR-2362, ESR-1397, ESR-3282

Trusses are designed for wind loads in the plane of the truss unless otherwise shown.

Lumber design values are in accordance with ANSI/TPI 1 section 6.3 These truss designs rely on lumber values established by others.

© 2012 MiTek® All Rights Reserved

MiTek Engineering Reference Sheet: MII-7473 rev. 5/19/2020

General Safety Notes

Failure to Follow Could Cause Property Damage or Personal Injury

1. Additional stability bracing for truss system, e.g. diagonal or X-bracing, is always required. See BCSI.
2. Truss bracing must be designed by an engineer. For wide truss spacing, individual lateral braces themselves may require bracing, or alternative Tor I bracing should be considered.
3. Never exceed the design loading shown and never stack materials on inadequately braced trusses.
4. Provide copies of this truss design to the building designer, erection supervisor, property owner and all other interested parties.
5. Cut members to bear tightly against each other.
6. Place plates on each face of truss at each joint and embed fully. Knots and wane at joint locations are regulated by ANSI/TPI 1.
7. Design assumes trusses will be suitably protected from the environment in accord with ANSI/TPI 1.
8. Unless otherwise noted, moisture content of lumber shall not exceed 19% at time of fabrication.
9. Unless expressly noted, this design is not applicable for use with fire retardant, preservative treated, or green lumber.
10. Camber is a non-structural consideration and is the responsibility of truss fabricator. General practice is to camber for dead load deflection.
11. Plate type, size, orientation and location dimensions indicated are minimum plating requirements.
12. Lumber used shall be of the species and size, and in all respects, equal to or better than that specified.
13. Top chords must be sheathed or purlins provided at spacing indicated on design.
14. Bottom chords require lateral bracing at 10 ft. spacing, or less, if no ceiling is installed, unless otherwise noted.
15. Connections not shown are the responsibility of others.
16. Do not cut or alter truss member or plate without prior approval of an engineer.
17. Install and load vertically unless indicated otherwise.
18. Use of green or treated lumber may pose unacceptable environmental, health or performance risks. Consult with project engineer before use.
19. Review all portions of this design (front, back, words and pictures) before use. Reviewing pictures alone is not sufficient.
20. Design assumes manufacture in accordance with ANSI/TPI 1 Quality Criteria.
21. The design does not take into account any dynamic or other loads other than those expressly stated.

3/12 – 8/12 – 10/12 PITCH
18" OH

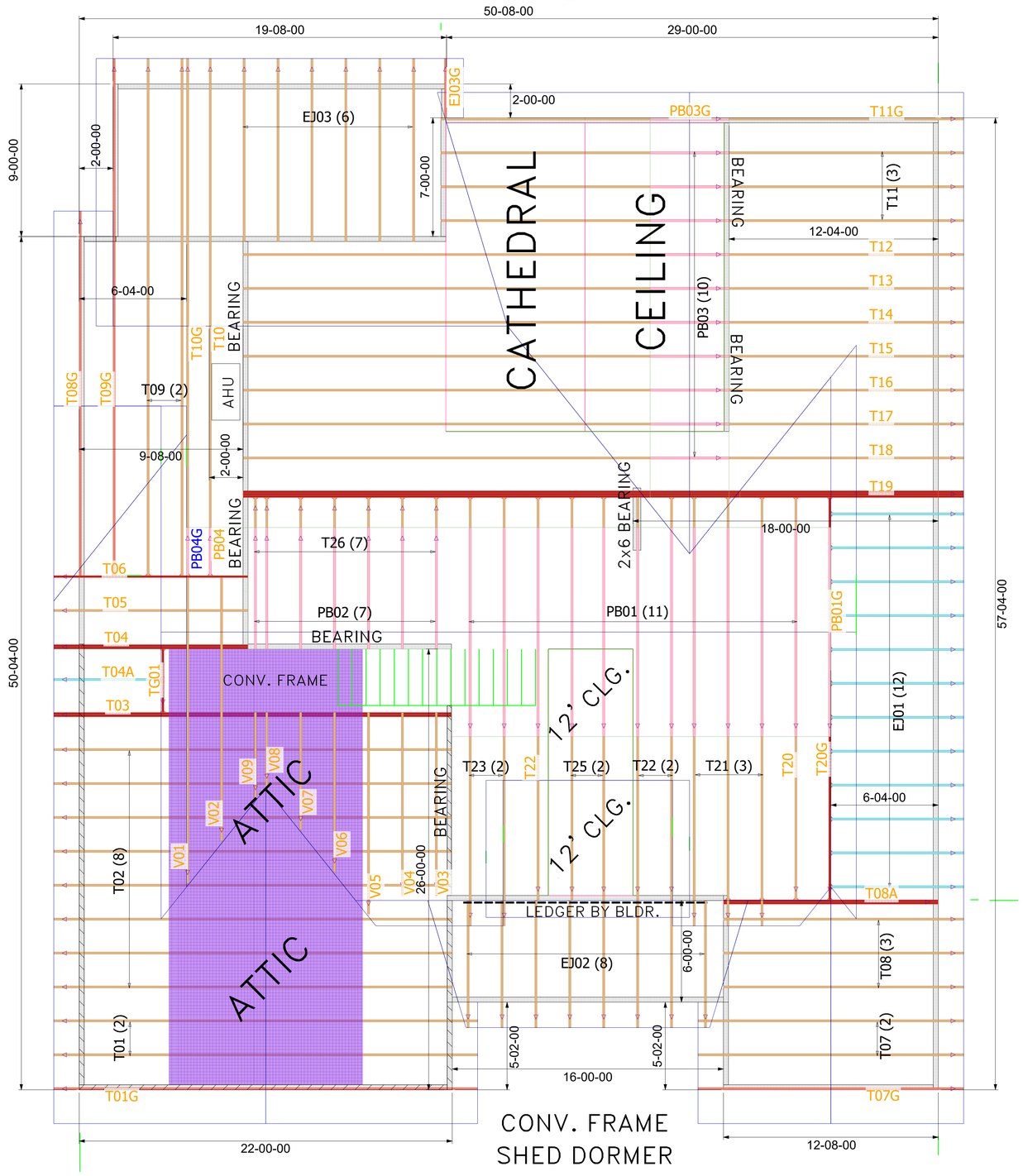

Hatch Legend

8' 1-1/8"

9' 1-1/8"

THE ARROW HEAD AT THE END OF THE TRUSS ON THE TRUSS PLACEMENT PLAN (LAYOUT) CORRESPONDS WITH THE LEFT SIDE OF THE INDIVIDUAL TRUSS DRAWING. USE THIS AS AN ORIENTATION GUIDE WHEN SETTING THE TRUSSES ON THE STRUCTURE.

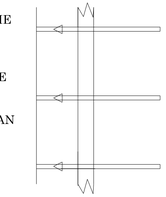

General Notes:

- Per ANSI/TPI 1-2002 all " Truss to Wall" connections are the responsibility of the Building Designer, not the Truss Manufacturer.
- Use Manufacturer's specifications for all hanger connections unless noted otherwise.
- Trusses are to be 24" o.c. U.N.O.
- All hangers are to be Simpson or equivalent U.N.O.- Use 10d x 1 1/2" Nails in hanger connections to single ply girder trusses.
- Trusses are not designed to support brick U.N.O.
- Dimensions are Feet-Inches- Sixteenths

Notes:

No back charges will be accepted by Builders FirstSource unless approved in writing first. 850-835-4541

ACQ lumber is corrisive to truss plates. Any ACQ lumber that comes in contact with truss plates (i.e. scabbed on tails) must have an approved barrier applied first.

Refer to BCSI-B1 Summary Sheet-Guide for handling, Installing and Bracing of Metal Plate Connected Wood Truss prior to and during truss installation.

It is the responsibility of the Contractor to ensure of the proper orientation of the truss placement plans as to the construction documents and field conditions of the structure orientation. If a reversed or flipped layout is required, it will be supplied at no extra cost by Builders FirstSource.

It is the responsibility of the Contractor to make sure the placement of trusses are adjusted for plumbing drops, can lights, ect..., so the trusses do not interfere with these type of items.

All common framed roof or floor systems must be designed as to NOT impose any loads on the floor trusses below. The floor trusses have not been designed to carry any additional loads from above.

This truss placement plan was not created by an engineer, but rather by the Builders FirstSource staff and is solely to be used as an installation guide and does not require a seal. Complete truss engineering and analysis can be found on the truss design drawings which may be sealed by the truss design engineer.

Gable end trusses require continuous bottom chord bearing. Refer to local codes for wall framing requirements.

Although all attempts have been made to do so, trusses may not be designed symmetrically. Please refer to the individual truss drawings and truss placement plans for proper orientation and placement.

Builders FirstSource

Lake City
PHONE: 386-755-6894
FAX: 386-755-7973

Jacksonville
PHONE: 904-772-6100
FAX: 904-772-1973

Tallahassee
PHONE: 850-576-5177

Builder: PFS SOLUTIONS		
Legal Address: Lot 5 Amelia Landing		
Model: 1775		
Date: 3-31-21	Drawn By: KLH	Original Ref #: 2714379
Floor 1 Job#: N/A	Floor 2 Job#: N/A	Roof Job #: 2714379

MITEK PLATE APPROVAL #'S 2197.2–2197.4, BOISE EWP PRODUCT #'S LVL FL1644–R2, BCI JOISTS FL1392–R2

Job	Truss	Truss Type	Qty	Ply	PFS SOLUTIONS - LOT 5 AL
2714379	EJ01	Jack-Open	12	1	Job Reference (optional)

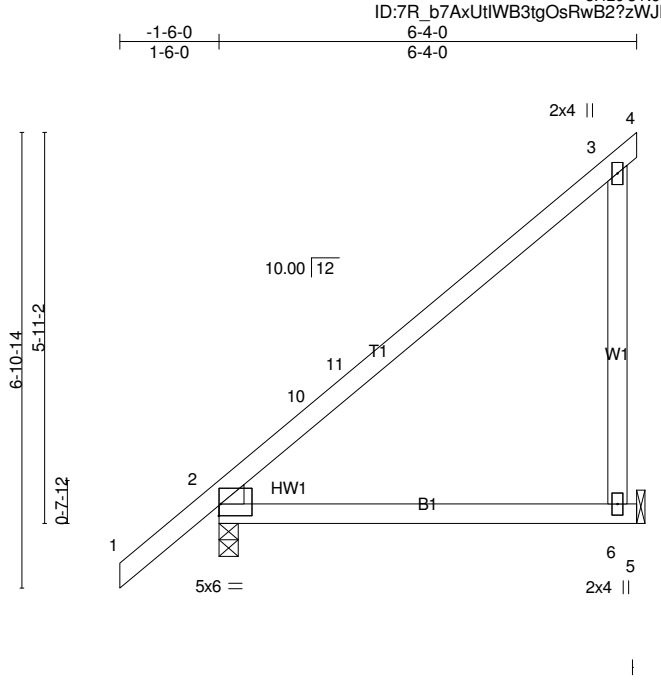

Plate Offsets (X,Y)-- [2:Edge,0-2-2]

LOADING (psf)		SPACING-	2-0-0	CSI.		DEFL.	in	(loc)	l/defl	L/d	PLATES	GRIP
TCLL	20.0	Plate Grip DOL	1.25	TC	0.53	Vert(LL)	0.10	6-9	>708	240	MT20	244/190
TCDL	7.0	Lumber DOL	1.25	BC	0.49	Vert(CT)	-0.13	6-9	>563	180		
BCLL	0.0 *	Rep Stress Incr	YES	WB	0.09	Horz(CT)	0.02	2	n/a	n/a		
BCDL	10.0	Code FBC2020/TPI2014		Matrix-MP							Weight: 33 lb	FT = 20%

LUMBER-
TOP CHORD 2x4 SP No.2
BOT CHORD 2x4 SP No.2
WEBS 2x4 SP No.3
WEDGE
Left: 2x4 SP No.3

BRACING-
TOP CHORD Structural wood sheathing directly applied or 6-0-0 oc purlins.
BOT CHORD Rigid ceiling directly applied or 10-0-0 oc bracing.

MiTek recommends that Stabilizers and required cross bracing be installed during truss erection, in accordance with Stabilizer Installation guide.

REACTIONS. (lb/size) 2=314/0-3-8, 6=224/Mechanical
Max Horz 2=215(LC 12)
Max Uplift 2=-13(LC 12), 6=-141(LC 12)
Max Grav 2=314(LC 1), 6=247(LC 19)

FORCES. (lb) - Max. Comp./Max. Ten. - All forces 250 (lb) or less except when shown.

NOTES-
1) Wind: ASCE 7-16; Vult=130mph (3-second gust) Vasd=101mph; TCDL=4.2psf; BCDL=3.0psf; h=20ft; Cat. II; Exp B; Encl., GCpi=0.18; MWFRS (envelope) gable end zone and C-C Exterior(2E) -1-6-0 to 1-6-0, Interior(1) 1-6-0 to 6-4-0 zone;C-C for members and forces & MWFRS for reactions shown; Lumber DOL=1.60 plate grip DOL=1.60
2) Building Designer / Project engineer responsible for verifying applied roof live load shown covers rain loading requirements specific to the use of this truss component.
3) This truss has been designed for a 10.0 psf bottom chord live load nonconcurrent with any other live loads.
4) * This truss has been designed for a live load of 20.0psf on the bottom chord in all areas where a rectangle 3-6-0 tall by 2-0-0 wide will fit between the bottom chord and any other members.
5) All bearings are assumed to be SP No.2 crushing capacity of 565 psi.
6) Refer to girder(s) for truss to truss connections.
7) Provide mechanical connection (by others) of truss to bearing plate capable of withstanding 100 lb uplift at joint(s) 2 except (jt=lb) 6=141.

LOAD CASE(S) Standard

Job	Truss	Truss Type	Qty	Ply	PFS SOLUTIONS - LOT 5 AL
2714379	EJ02	MONO TRUSS	8	1	Job Reference (optional)

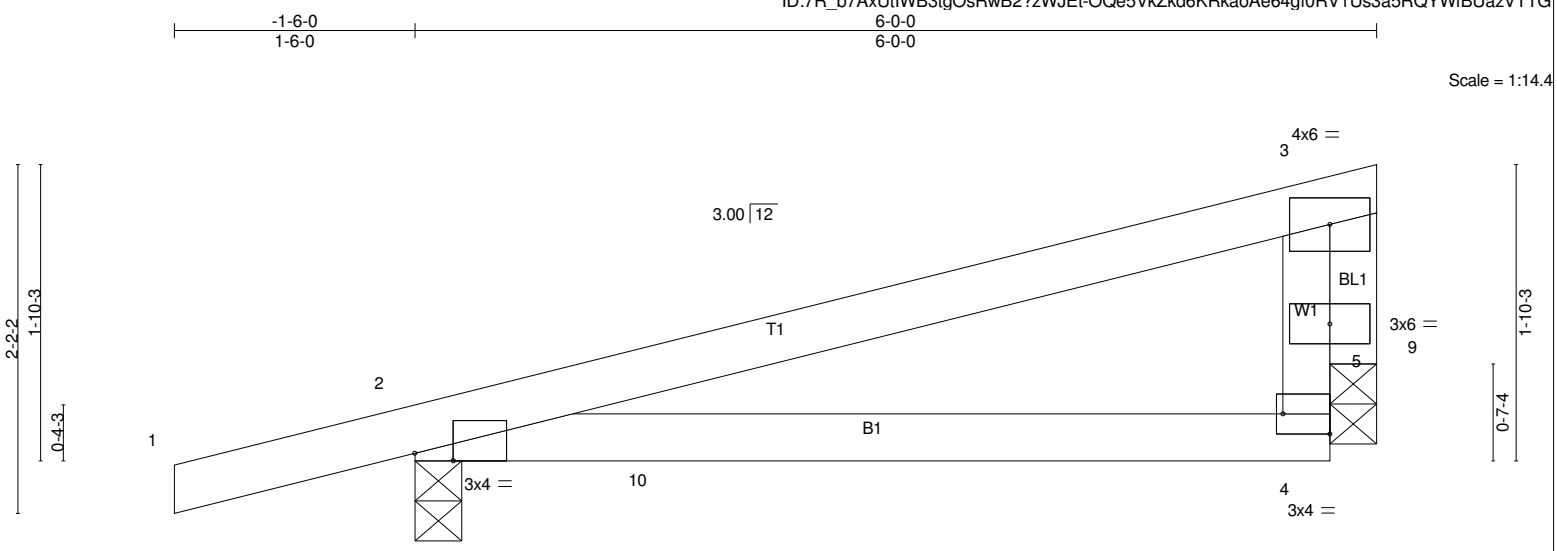

Plate Offsets (X,Y)-- [2:0-2-14,Edge], [4:Edge,0-1-8]

LOADING (psf)		SPACING-	2-0-0	CSI.		DEFL.	in	(loc)	l/defl	L/d	PLATES	GRIP
TCLL	20.0	Plate Grip DOL	1.25	TC	0.37	Vert(LL)	0.04	4-8	>999	240	MT20	244/190
TCDL	7.0	Lumber DOL	1.25	BC	0.23	Vert(CT)	-0.04	4-8	>999	180		
BCLL	0.0 *	Rep Stress Incr	YES	WB	0.26	Horz(CT)	-0.00	2	n/a	n/a		
BCDL	10.0	Code FBC2020/TPI2014		Matrix-MR							Weight: 23 lb	FT = 20%

LUMBER-
TOP CHORD 2x4 SP No.2
BOT CHORD 2x4 SP No.2
WEBS 2x4 SP No.3
OTHERS 2x4 SP No.3

BRACING-
TOP CHORD Structural wood sheathing directly applied or 6-0-0 oc purlins, except end verticals.
BOT CHORD Rigid ceiling directly applied or 10-0-0 oc bracing.

MiTek recommends that Stabilizers and required cross bracing be installed during truss erection, in accordance with Stabilizer Installation guide.

REACTIONS. (lb/size) 2=307/0-3-8, 9=185/0-3-8
Max Horz 2=65(LC 8)
Max Uplift2=-164(LC 8), 9=-95(LC 8)

FORCES. (lb) - Max. Comp./Max. Ten. - All forces 250 (lb) or less except when shown.
BOT CHORD 2-10=-257/194, 4-10=-257/194

NOTES-
1) Wind: ASCE 7-16; Vult=130mph (3-second gust) Vasd=101mph; TCDL=4.2psf; BCDL=3.0psf; h=20ft; Cat. II; Exp B; Encl., GCpi=0.18; MWFRS (envelope) gable end zone and C-C Exterior(2E) -1-6-0 to 1-6-0, Interior(1) 1-6-0 to 5-6-12 zone; porch left and right exposed;C-C for members and forces & MWFRS for reactions shown; Lumber DOL=1.60 plate grip DOL=1.60
2) Building Designer / Project engineer responsible for verifying applied roof live load shown covers rain loading requirements specific to the use of this truss component.
3) This truss has been designed for a 10.0 psf bottom chord live load nonconcurrent with any other live loads.
4) * This truss has been designed for a live load of 20.0psf on the bottom chord in all areas where a rectangle 3-6-0 tall by 2-0-0 wide will fit between the bottom chord and any other members.
5) All bearings are assumed to be SP No.2 crushing capacity of 565 psi.
6) Bearing at joint(s) 9 considers parallel to grain value using ANSI/TPI 1 angle to grain formula. Building designer should verify capacity of bearing surface.
7) Provide mechanical connection (by others) of truss to bearing plate capable of withstanding 100 lb uplift at joint(s) 9 except (jt=lb) 2=164.

LOAD CASE(S) Standard

Job	Truss	Truss Type	Qty	Ply	PFS SOLUTIONS - LOT 5 AL
2714379	EJ03	Monopitch	6	1	Job Reference (optional)

Builders FirstSource, Lake City, FL 32055, Kim Holloway

8.420 s Nov 10 2020 MiTek Industries, Inc. Wed Mar 31 09:31:26 2021 Page 1
ID:7R_b7AxUtIWB3tgOsRwB2?zWJEt-sdBTi4aMOQSIMjMMBpbvBEzcWu6PJYvanAPk00zVTTF

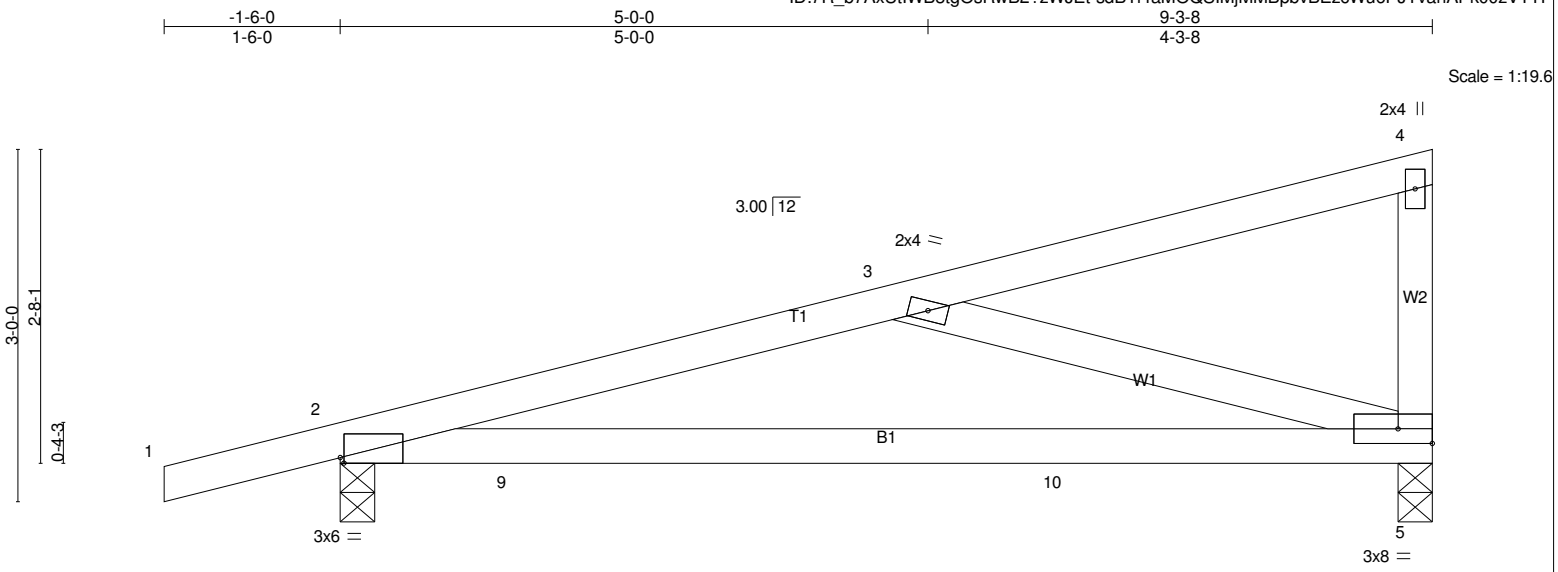

Plate Offsets (X,Y)-- [2:0-0-6,Edge]

LOADING (psf)		**SPACING-**	2-0-0	**CSI.**		**DEFL.**	in	(loc)	l/defl	L/d	**PLATES**	**GRIP**
TCLL	20.0	Plate Grip DOL	1.25	TC	0.58	Vert(LL)	0.22	5-8	>499	240	MT20	244/190
TCDL	7.0	Lumber DOL	1.25	BC	0.60	Vert(CT)	-0.30	5-8	>371	180		
BCLL	0.0 *	Rep Stress Incr	YES	WB	0.24	Horz(CT)	0.01	5	n/a	n/a		
BCDL	10.0	Code FBC2020/TPI2014		Matrix-MS							Weight: 40 lb	FT = 20%

LUMBER-
TOP CHORD 2x4 SP No.2
BOT CHORD 2x4 SP No.2
WEBS 2x4 SP No.3

BRACING-
TOP CHORD Structural wood sheathing directly applied or 6-0-0 oc purlins, except end verticals.
BOT CHORD Rigid ceiling directly applied or 6-4-11 oc bracing.

MiTek recommends that Stabilizers and required cross bracing be installed during truss erection, in accordance with Stabilizer Installation guide.

REACTIONS. (lb/size) 2=426/0-3-8, 5=332/0-3-8
Max Horz 2=96(LC 8)
Max Uplift2=-217(LC 8), 5=-172(LC 8)

FORCES. (lb) - Max. Comp./Max. Ten. - All forces 250 (lb) or less except when shown.
TOP CHORD 2-3=-648/540
BOT CHORD 2-9=-621/625, 9-10=-621/625, 5-10=-621/625
WEBS 3-5=-605/586

NOTES-
1) Wind: ASCE 7-16; Vult=130mph (3-second gust) Vasd=101mph; TCDL=4.2psf; BCDL=3.0psf; h=20ft; Cat. II; Exp B; Encl., GCpi=0.18; MWFRS (envelope) gable end zone and C-C Exterior(2E) -1-6-0 to 1-6-0, Interior(1) 1-6-0 to 9-1-12 zone; porch left and right exposed;C-C for members and forces & MWFRS for reactions shown; Lumber DOL=1.60 plate grip DOL=1.60
2) Building Designer / Project engineer responsible for verifying applied roof live load shown covers rain loading requirements specific to the use of this truss component.
3) This truss has been designed for a 10.0 psf bottom chord live load nonconcurrent with any other live loads.
4) * This truss has been designed for a live load of 20.0psf on the bottom chord in all areas where a rectangle 3-6-0 tall by 2-0-0 wide will fit between the bottom chord and any other members.
5) All bearings are assumed to be SP No.2 crushing capacity of 565 psi.
6) Provide mechanical connection (by others) of truss to bearing plate capable of withstanding 100 lb uplift at joint(s) except (jt=lb) 2=217, 5=172.

LOAD CASE(S) Standard

Job	Truss	Truss Type	Qty	Ply	PFS SOLUTIONS - LOT 5 AL
2714379	EJ03G	Monopitch Supported Gable	1	1	Job Reference (optional)

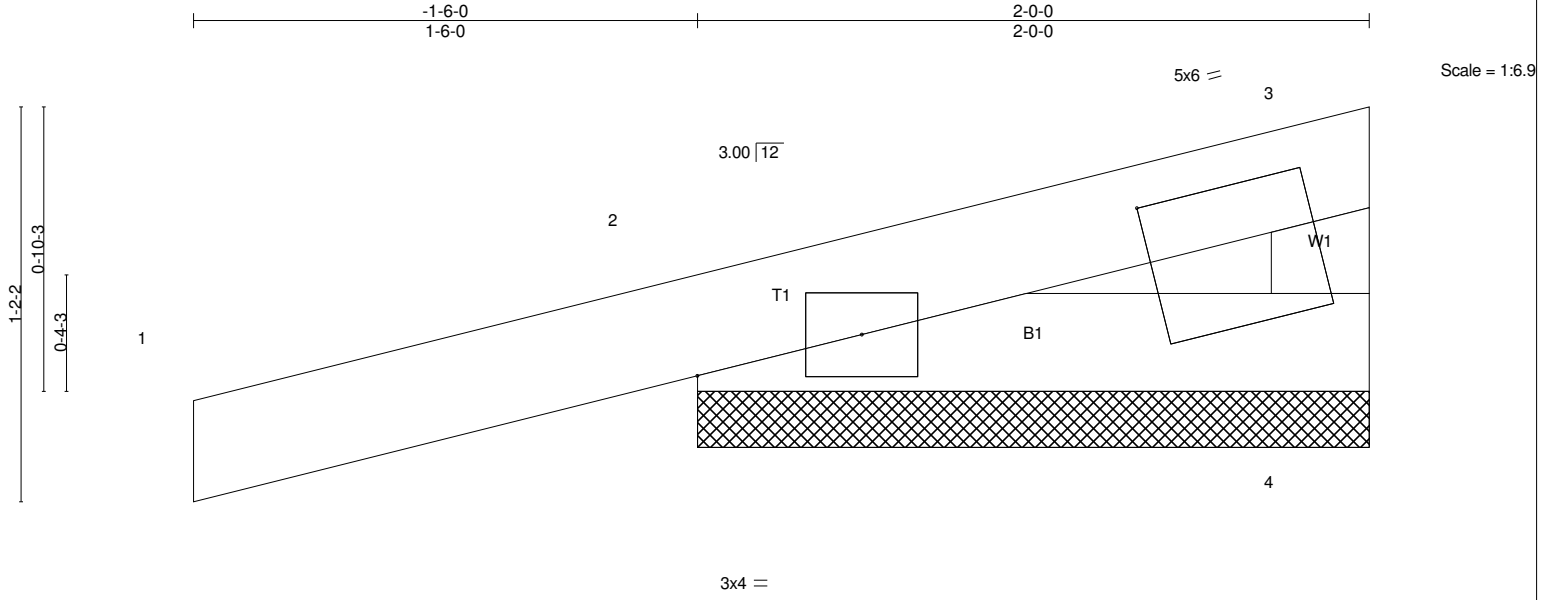

Plate Offsets (X,Y)-- [3:1-4-11,0-2-0]

LOADING (psf)		SPACING-	2-0-0	CSI.		DEFL.	in	(loc)	l/defl	L/d	PLATES	GRIP
TCLL	20.0	Plate Grip DOL	1.25	TC	0.19	Vert(LL)	0.00	1	n/r	120	MT20	244/190
TCDL	7.0	Lumber DOL	1.25	BC	0.04	Vert(CT)	-0.00	1	n/r	120		
BCLL	0.0 *	Rep Stress Incr	YES	WB	0.00	Horz(CT)	0.00		n/a	n/a		
BCDL	10.0	Code FBC2020/TPI2014		Matrix-P							Weight: 9 lb	FT = 20%

LUMBER-
TOP CHORD 2x4 SP No.2
BOT CHORD 2x4 SP No.2
WEBS 2x4 SP No.3

BRACING-
TOP CHORD Structural wood sheathing directly applied or 2-0-0 oc purlins, except end verticals.
BOT CHORD Rigid ceiling directly applied or 10-0-0 oc bracing.

MiTek recommends that Stabilizers and required cross bracing be installed during truss erection, in accordance with Stabilizer Installation guide.

REACTIONS. (lb/size) 4=36/2-0-0, 2=182/2-0-0
Max Horz 2=33(LC 8)
Max Uplift 4=-7(LC 12), 2=-96(LC 8)
Max Grav 4=42(LC 3), 2=182(LC 1)

FORCES. (lb) - Max. Comp./Max. Ten. - All forces 250 (lb) or less except when shown.

NOTES-
1) Wind: ASCE 7-16; Vult=130mph (3-second gust) Vasd=101mph; TCDL=4.2psf; BCDL=3.0psf; h=20ft; Cat. II; Exp B; Encl., GCpi=0.18; MWFRS (envelope) gable end zone and C-C Corner(3E) -1-6-0 to 1-6-0, Exterior(2N) 1-6-0 to 1-10-4 zone;C-C for members and forces & MWFRS for reactions shown; Lumber DOL=1.60 plate grip DOL=1.60
2) Truss designed for wind loads in the plane of the truss only. For studs exposed to wind (normal to the face), see Standard Industry Gable End Details as applicable, or consult qualified building designer as per ANSI/TPI 1.
3) Building Designer / Project engineer responsible for verifying applied roof live load shown covers rain loading requirements specific to the use of this truss component.
4) Gable requires continuous bottom chord bearing.
5) Gable studs spaced at 2-0-0 oc.
6) This truss has been designed for a 10.0 psf bottom chord live load nonconcurrent with any other live loads.
7) * This truss has been designed for a live load of 20.0psf on the bottom chord in all areas where a rectangle 3-6-0 tall by 2-0-0 wide will fit between the bottom chord and any other members.
8) All bearings are assumed to be SP No.2 crushing capacity of 565 psi.
9) Provide mechanical connection (by others) of truss to bearing plate capable of withstanding 100 lb uplift at joint(s) 4, 2.
10) Beveled plate or shim required to provide full bearing surface with truss chord at joint(s) 2.

LOAD CASE(S) Standard

Job	Truss	Truss Type	Qty	Ply	PFS SOLUTIONS - LOT 5 AL
2714379	PB01	Piggyback	11	1	Job Reference (optional)

Builders FirstSource, Lake City, FL 32055, Kim Holloway

8.420 s Nov 10 2020 MiTek Industries, Inc. Wed Mar 31 09:31:28 2021 Page 1
ID:7R_b7AxUtlWB3tgOsRwB2?zWJEt-p?JE7mcdw1i0b1WlJEeNHf30jisunU2sETur5vzVTTD

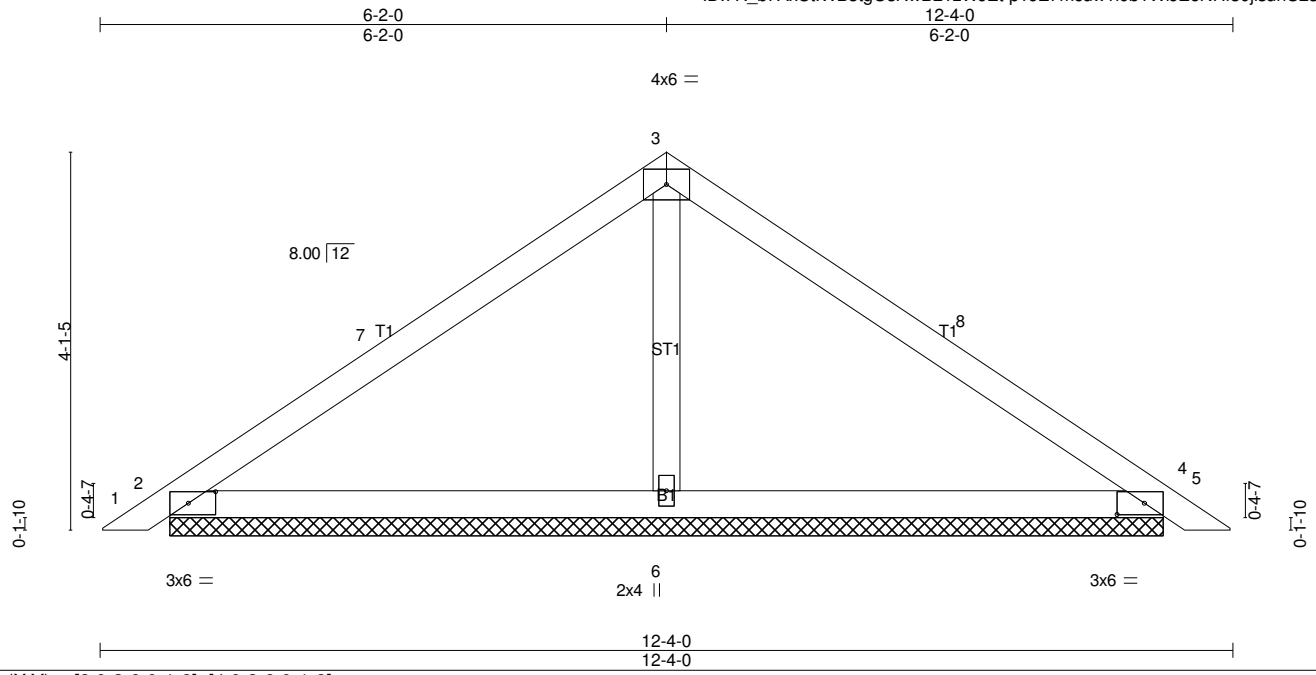

Plate Offsets (X,Y)-- [2:0-3-9,0-1-8], [4:0-3-9,0-1-8]

LOADING (psf)		**SPACING-** 2-0-0		**CSI.**		**DEFL.**	in	(loc)	l/defl	L/d	**PLATES**	**GRIP**
TCLL	20.0	Plate Grip DOL	1.25	TC	0.34	Vert(LL)	0.01	5	n/r	120	MT20	244/190
TCDL	7.0	Lumber DOL	1.25	BC	0.28	Vert(CT)	0.02	5	n/r	120		
BCLL	0.0 *	Rep Stress Incr	YES	WB	0.07	Horz(CT)	0.00	4	n/a	n/a		
BCDL	10.0	Code FBC2020/TPI2014		Matrix-S							Weight: 43 lb	FT = 20%

LUMBER-
TOP CHORD 2x4 SP No.2
BOT CHORD 2x4 SP No.2
OTHERS 2x4 SP No.3

BRACING-
TOP CHORD Structural wood sheathing directly applied or 6-0-0 oc purlins.
BOT CHORD Rigid ceiling directly applied or 10-0-0 oc bracing.

MiTek recommends that Stabilizers and required cross bracing be installed during truss erection, in accordance with Stabilizer Installation guide.

REACTIONS. (lb/size) 2=222/10-9-12, 4=222/10-9-12, 6=408/10-9-12
Max Horz 2=-86(LC 10)
Max Uplift2=-62(LC 12), 4=-73(LC 13), 6=-55(LC 12)

FORCES. (lb) - Max. Comp./Max. Ten. - All forces 250 (lb) or less except when shown.

NOTES-
1) Unbalanced roof live loads have been considered for this design.
2) Wind: ASCE 7-16; Vult=130mph (3-second gust) Vasd=101mph; TCDL=4.2psf; BCDL=3.0psf; h=20ft; Cat. II; Exp B; Encl., GCpi=0.18; MWFRS (envelope) gable end zone and C-C Exterior(2E) 0-3-5 to 3-3-5, Interior(1) 3-3-5 to 6-2-0, Exterior(2R) 6-2-0 to 9-2-0, Interior(1) 9-2-0 to 12-0-11 zone;C-C for members and forces & MWFRS for reactions shown; Lumber DOL=1.60 plate grip DOL=1.60
3) Building Designer / Project engineer responsible for verifying applied roof live load shown covers rain loading requirements specific to the use of this truss component.
4) Gable requires continuous bottom chord bearing.
5) This truss has been designed for a 10.0 psf bottom chord live load nonconcurrent with any other live loads.
6) * This truss has been designed for a live load of 20.0psf on the bottom chord in all areas where a rectangle 3-6-0 tall by 2-0-0 wide will fit between the bottom chord and any other members.
7) All bearings are assumed to be SP No.2 crushing capacity of 565 psi.
8) Provide mechanical connection (by others) of truss to bearing plate capable of withstanding 100 lb uplift at joint(s) 2, 4, 6.
9) See Standard Industry Piggyback Truss Connection Detail for Connection to base truss as applicable, or consult qualified building designer.

LOAD CASE(S) Standard

Job	Truss	Truss Type	Qty	Ply	PFS SOLUTIONS - LOT 5 AL
2714379	PB01G	GABLE	1	1	Job Reference (optional)

Builders FirstSource, Lake City, FL 32055, Kim Holloway

8.420 s Nov 10 2020 MiTek Industries, Inc. Wed Mar 31 09:31:29 2021 Page 1
ID:7R_b7AxUtIWB3tgOsRwB2?zWJEt-HCtcL6dFhLqtDB5xtx9cpsbFj5GcWyl0T7dPdLzVTTC

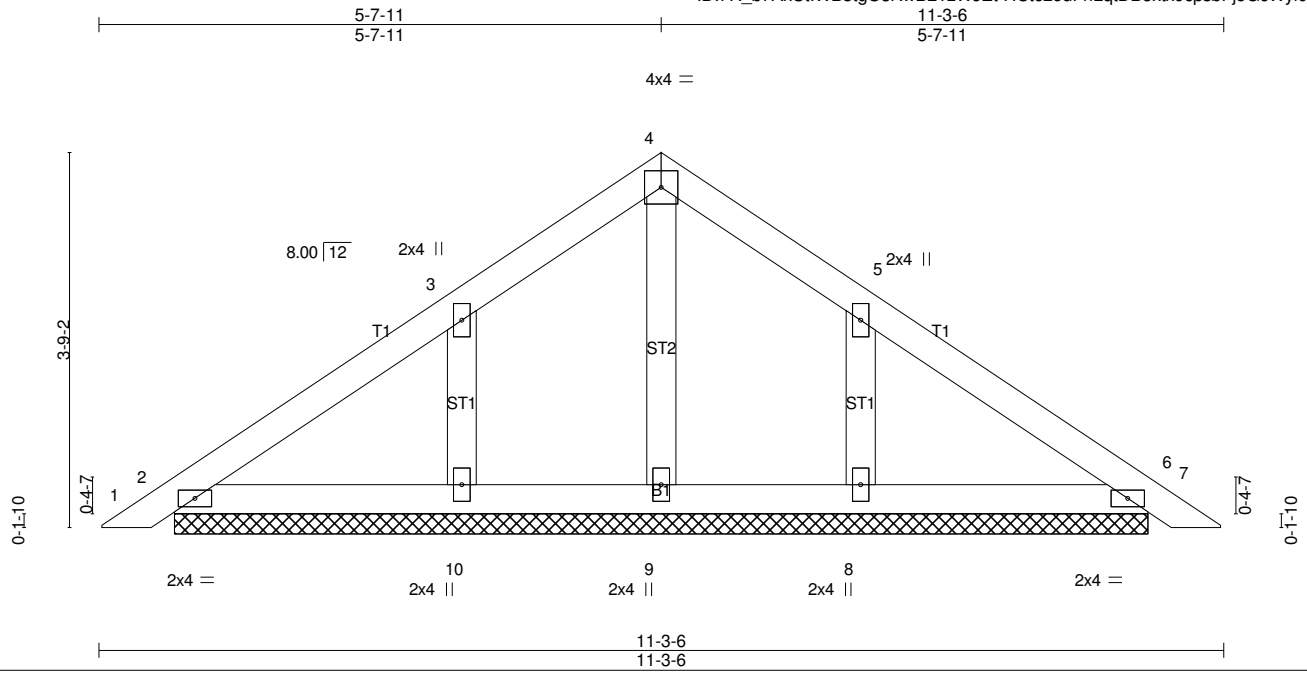

LOADING (psf)		SPACING-	2-0-0	CSI.		DEFL.	in	(loc)	l/defl	L/d	PLATES	GRIP
TCLL	20.0	Plate Grip DOL	1.25	TC	0.07	Vert(LL)	0.00	7	n/r	120	MT20	244/190
TCDL	7.0	Lumber DOL	1.25	BC	0.06	Vert(CT)	0.00	7	n/r	120		
BCLL	0.0 *	Rep Stress Incr	YES	WB	0.04	Horz(CT)	0.00	6	n/a	n/a		
BCDL	10.0	Code FBC2020/TPI2014		Matrix-S							Weight: 44 lb	FT = 20%

LUMBER-
TOP CHORD 2x4 SP No.2
BOT CHORD 2x4 SP No.2
OTHERS 2x4 SP No.3

BRACING-
TOP CHORD Structural wood sheathing directly applied or 6-0-0 oc purlins.
BOT CHORD Rigid ceiling directly applied or 10-0-0 oc bracing.

MiTek recommends that Stabilizers and required cross bracing be installed during truss erection, in accordance with Stabilizer Installation guide.

REACTIONS. All bearings 9-9-2.
(lb) - Max Horz 2=-79(LC 10)
Max Uplift All uplift 100 lb or less at joint(s) 2, 6 except 10=-108(LC 12), 8=-108(LC 13)
Max Grav All reactions 250 lb or less at joint(s) 2, 6, 9, 10, 8

FORCES. (lb) - Max. Comp./Max. Ten. - All forces 250 (lb) or less except when shown.

NOTES-
1) Unbalanced roof live loads have been considered for this design.
2) Wind: ASCE 7-16; Vult=130mph (3-second gust) Vasd=101mph; TCDL=4.2psf; BCDL=3.0psf; h=20ft; Cat. II; Exp B; Encl., GCpi=0.18; MWFRS (envelope) gable end zone and C-C Exterior(2E) 0-3-5 to 3-3-5, Interior(1) 3-3-5 to 5-7-11, Exterior(2R) 5-7-11 to 8-7-11, Interior(1) 8-7-11 to 11-0-1 zone;C-C for members and forces & MWFRS for reactions shown; Lumber DOL=1.60 plate grip DOL=1.60
3) Truss designed for wind loads in the plane of the truss only. For studs exposed to wind (normal to the face), see Standard Industry Gable End Details as applicable, or consult qualified building designer as per ANSI/TPI 1.
4) Building Designer / Project engineer responsible for verifying applied roof live load shown covers rain loading requirements specific to the use of this truss component.
5) Gable requires continuous bottom chord bearing.
6) Gable studs spaced at 2-0-0 oc.
7) This truss has been designed for a 10.0 psf bottom chord live load nonconcurrent with any other live loads.
8) * This truss has been designed for a live load of 20.0psf on the bottom chord in all areas where a rectangle 3-6-0 tall by 2-0-0 wide will fit between the bottom chord and any other members.
9) All bearings are assumed to be SP No.2 crushing capacity of 565 psi.
10) Provide mechanical connection (by others) of truss to bearing plate capable of withstanding 100 lb uplift at joint(s) 2, 6 except (jt=lb) 10=108, 8=108.
11) See Standard Industry Piggyback Truss Connection Detail for Connection to base truss as applicable, or consult qualified building designer.

LOAD CASE(S) Standard

Job	Truss	Truss Type	Qty	Ply	PFS SOLUTIONS - LOT 5 AL
2714379	PB02	Piggyback	7	1	Job Reference (optional)

Scale = 1:25.2

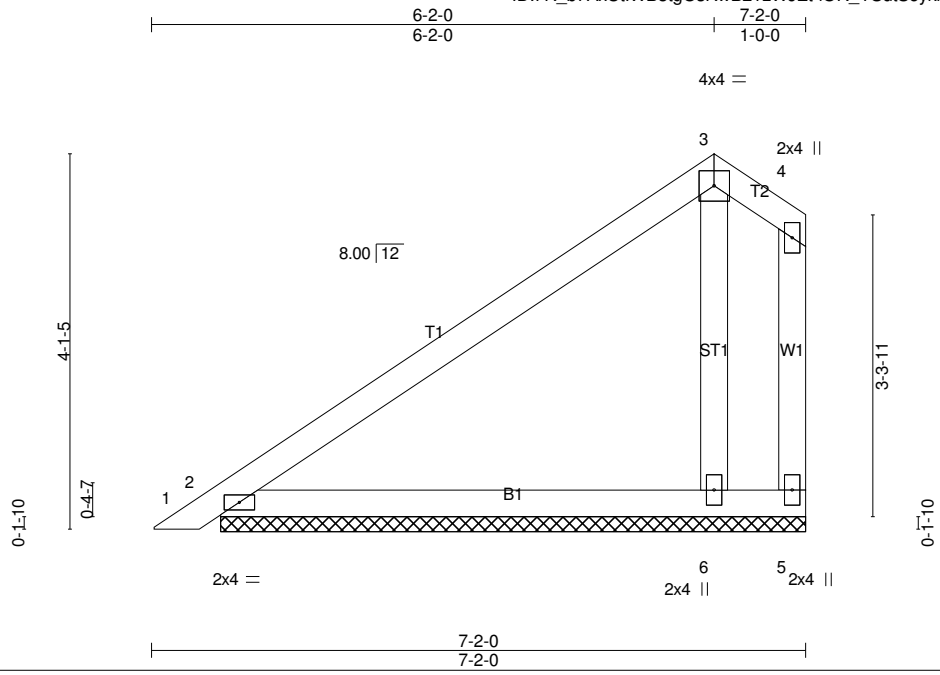

LOADING (psf)		SPACING-	2-0-0	CSI.		DEFL.	in	(loc)	l/defl	L/d	PLATES	GRIP
TCLL	20.0	Plate Grip DOL	1.25	TC	0.48	Vert(LL)	0.00	1	n/r	120	MT20	244/190
TCDL	7.0	Lumber DOL	1.25	BC	0.25	Vert(CT)	0.01	1	n/r	120		
BCLL	0.0 *	Rep Stress Incr	YES	WB	0.05	Horz(CT)	0.00		n/a	n/a		
BCDL	10.0	Code FBC2020/TPI2014		Matrix-P							Weight: 32 lb	FT = 20%

LUMBER-
TOP CHORD 2x4 SP No.2
BOT CHORD 2x4 SP No.2
WEBS 2x4 SP No.3
OTHERS 2x4 SP No.3

BRACING-
TOP CHORD Structural wood sheathing directly applied or 6-0-0 oc purlins, except end verticals.
BOT CHORD Rigid ceiling directly applied or 10-0-0 oc bracing.

MiTek recommends that Stabilizers and required cross bracing be installed during truss erection, in accordance with Stabilizer Installation guide.

REACTIONS. (lb/size) 5=-42/6-4-14, 2=215/6-4-14, 6=316/6-4-14
Max Horz 2=123(LC 12)
Max Uplift5=-125(LC 3), 2=-33(LC 12), 6=-61(LC 12)
Max Grav 2=215(LC 1), 6=340(LC 3)

FORCES. (lb) - Max. Comp./Max. Ten. - All forces 250 (lb) or less except when shown.

NOTES-
1) Unbalanced roof live loads have been considered for this design.
2) Wind: ASCE 7-16; Vult=130mph (3-second gust) Vasd=101mph; TCDL=4.2psf; BCDL=3.0psf; h=20ft; Cat. II; Exp B; Encl., GCpi=0.18; MWFRS (envelope) gable end zone and C-C Exterior(2E) 0-3-5 to 3-3-5, Interior(1) 3-3-5 to 6-2-0, Exterior(2E) 6-2-0 to 7-0-4 zone;C-C for members and forces & MWFRS for reactions shown; Lumber DOL=1.60 plate grip DOL=1.60
3) Building Designer / Project engineer responsible for verifying applied roof live load shown covers rain loading requirements specific to the use of this truss component.
4) Gable requires continuous bottom chord bearing.
5) This truss has been designed for a 10.0 psf bottom chord live load nonconcurrent with any other live loads.
6) * This truss has been designed for a live load of 20.0psf on the bottom chord in all areas where a rectangle 3-6-0 tall by 2-0-0 wide will fit between the bottom chord and any other members.
7) All bearings are assumed to be SP No.2 crushing capacity of 565 psi.
8) Provide mechanical connection (by others) of truss to bearing plate capable of withstanding 100 lb uplift at joint(s) 2, 6 except (jt=lb) 5=125.
9) See Standard Industry Piggyback Truss Connection Detail for Connection to base truss as applicable, or consult qualified building designer.

LOAD CASE(S) Standard

Job	Truss	Truss Type	Qty	Ply	PFS SOLUTIONS - LOT 5 AL
2714379	PB03	PIGGYBACK	10	1	Job Reference (optional)

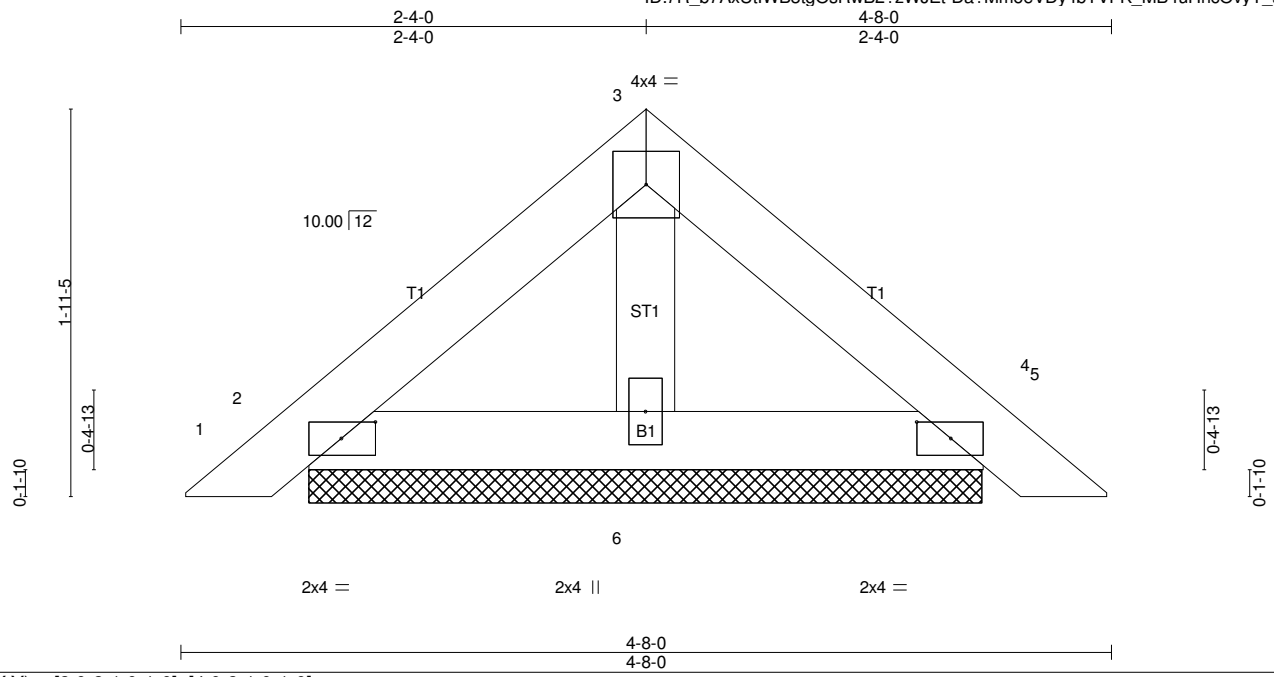

Plate Offsets (X,Y)-- [2:0-2-1,0-1-0], [4:0-2-1,0-1-0]

LOADING (psf)		**SPACING-** 2-0-0		**CSI.**		**DEFL.**	in	(loc)	l/defl	L/d	**PLATES**	**GRIP**
TCLL	20.0	Plate Grip DOL	1.25	TC	0.06	Vert(LL)	0.00	4	n/r	120	MT20	244/190
TCDL	7.0	Lumber DOL	1.25	BC	0.03	Vert(CT)	0.00	4	n/r	120		
BCLL	0.0 *	Rep Stress Incr	YES	WB	0.01	Horz(CT)	0.00	4	n/a	n/a		
BCDL	10.0	Code FBC2020/TPI2014		Matrix-P							Weight: 16 lb	FT = 20%

LUMBER-
TOP CHORD 2x4 SP No.2
BOT CHORD 2x4 SP No.2
OTHERS 2x4 SP No.3

BRACING-
TOP CHORD Structural wood sheathing directly applied or 4-8-0 oc purlins.
BOT CHORD Rigid ceiling directly applied or 10-0-0 oc bracing.

MiTek recommends that Stabilizers and required cross bracing be installed during truss erection, in accordance with Stabilizer Installation guide.

REACTIONS. (lb/size) 2=95/3-4-8, 4=95/3-4-8, 6=104/3-4-8
Max Horz 2=-38(LC 10)
Max Uplift2=-30(LC 12), 4=-35(LC 13), 6=-3(LC 12)

FORCES. (lb) - Max. Comp./Max. Ten. - All forces 250 (lb) or less except when shown.

NOTES-
1) Unbalanced roof live loads have been considered for this design.
2) Wind: ASCE 7-16; Vult=130mph (3-second gust) Vasd=101mph; TCDL=4.2psf; BCDL=3.0psf; h=20ft; Cat. II; Exp B; Encl., GCpi=0.18; MWFRS (envelope) gable end zone and C-C Exterior(2E) zone;C-C for members and forces & MWFRS for reactions shown; Lumber DOL=1.60 plate grip DOL=1.60
3) Building Designer / Project engineer responsible for verifying applied roof live load shown covers rain loading requirements specific to the use of this truss component.
4) This truss has been designed for a 10.0 psf bottom chord live load nonconcurrent with any other live loads.
5) * This truss has been designed for a live load of 20.0psf on the bottom chord in all areas where a rectangle 3-6-0 tall by 2-0-0 wide will fit between the bottom chord and any other members.
6) All bearings are assumed to be SP No.2 crushing capacity of 565 psi.
7) Provide mechanical connection (by others) of truss to bearing plate capable of withstanding 100 lb uplift at joint(s) 2, 4, 6.
8) Non Standard bearing condition. Review required.
9) See Standard Industry Piggyback Truss Connection Detail for Connection to base truss as applicable, or consult qualified building designer.

LOAD CASE(S) Standard

Job	Truss	Truss Type	Qty	Ply	PFS SOLUTIONS - LOT 5 AL
2714379	PB03G	GABLE	1	1	Job Reference (optional)

Builders FirstSource, Lake City, FL 32055, Kim Holloway

8.420 s Nov 10 2020 MiTek Industries, Inc. Wed Mar 31 09:31:32 2021 Page 1
ID:7R_b7AxUtIWB3tgOsRwB2?zWJEt-hnZlz8f7zGCS4eqWY4iJRVDmYJHAjJ9S95s3EgzVTT9

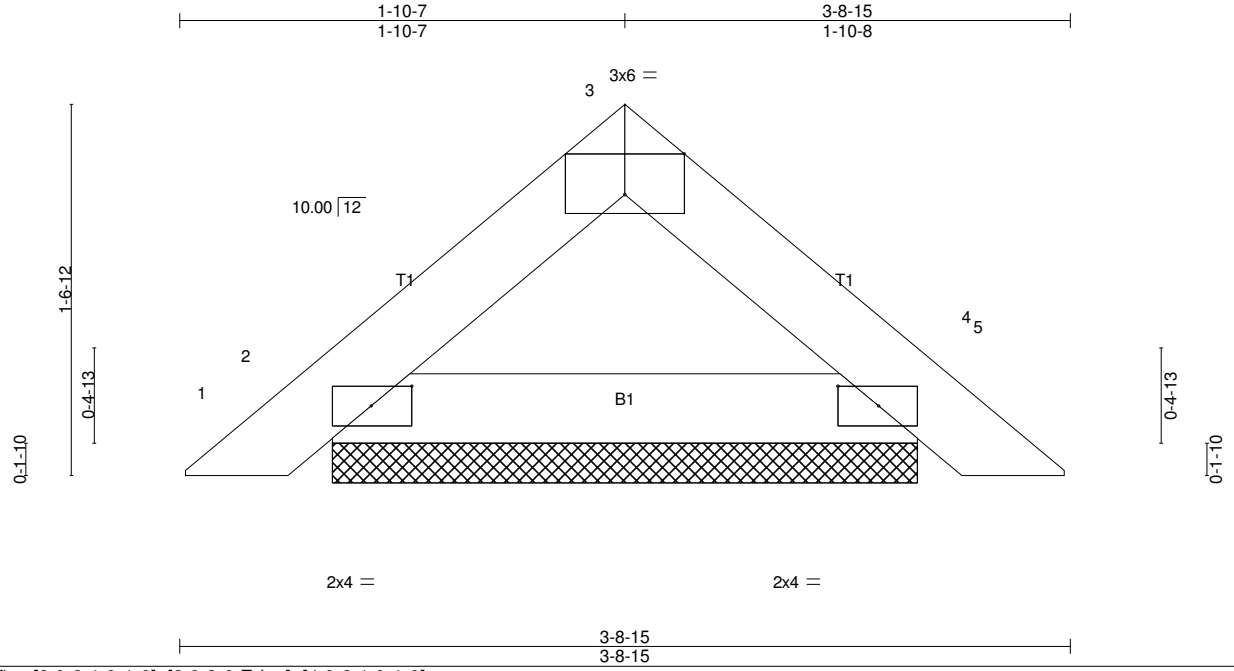

Plate Offsets (X,Y)-- [2:0-2-1,0-1-0], [3:0-3-0,Edge], [4:0-2-1,0-1-0]

LOADING (psf)		**SPACING-** 2-0-0		**CSI.**		**DEFL.**	in	(loc)	l/defl	L/d	**PLATES**	**GRIP**
TCLL	20.0	Plate Grip DOL	1.25	TC	0.03	Vert(LL)	0.00	4	n/r	120	MT20	244/190
TCDL	7.0	Lumber DOL	1.25	BC	0.07	Vert(CT)	0.00	4	n/r	120		
BCLL	0.0 *	Rep Stress Incr	YES	WB	0.00	Horz(CT)	0.00	4	n/a	n/a		
BCDL	10.0	Code FBC2020/TPI2014		Matrix-P							Weight: 11 lb	FT = 20%

LUMBER-
TOP CHORD 2x4 SP No.2
BOT CHORD 2x4 SP No.2

BRACING-
TOP CHORD Structural wood sheathing directly applied or 3-8-15 oc purlins.
BOT CHORD Rigid ceiling directly applied or 10-0-0 oc bracing.

MiTek recommends that Stabilizers and required cross bracing be installed during truss erection, in accordance with Stabilizer Installation guide.

REACTIONS. (lb/size) 2=113/2-5-8, 4=113/2-5-8
Max Horz 2=-30(LC 10)
Max Uplift2=-26(LC 12), 4=-26(LC 13)

FORCES. (lb) - Max. Comp./Max. Ten. - All forces 250 (lb) or less except when shown.

NOTES-
1) Unbalanced roof live loads have been considered for this design.
2) Wind: ASCE 7-16; Vult=130mph (3-second gust) Vasd=101mph; TCDL=4.2psf; BCDL=3.0psf; h=20ft; Cat. II; Exp B; Encl., GCpi=0.18; MWFRS (envelope) gable end zone and C-C Exterior(2E) zone;C-C for members and forces & MWFRS for reactions shown; Lumber DOL=1.60 plate grip DOL=1.60
3) Truss designed for wind loads in the plane of the truss only. For studs exposed to wind (normal to the face), see Standard Industry Gable End Details as applicable, or consult qualified building designer as per ANSI/TPI 1.
4) Building Designer / Project engineer responsible for verifying applied roof live load shown covers rain loading requirements specific to the use of this truss component.
5) Gable requires continuous bottom chord bearing.
6) Gable studs spaced at 2-0-0 oc.
7) This truss has been designed for a 10.0 psf bottom chord live load nonconcurrent with any other live loads.
8) * This truss has been designed for a live load of 20.0psf on the bottom chord in all areas where a rectangle 3-6-0 tall by 2-0-0 wide will fit between the bottom chord and any other members.
9) All bearings are assumed to be SP No.2 crushing capacity of 565 psi.
10) Provide mechanical connection (by others) of truss to bearing plate capable of withstanding 100 lb uplift at joint(s) 2, 4.
11) See Standard Industry Piggyback Truss Connection Detail for Connection to base truss as applicable, or consult qualified building designer.

LOAD CASE(S) Standard

Job	Truss	Truss Type	Qty	Ply	PFS SOLUTIONS - LOT 5 AL
2714379	PB04	PIGGYBACK	1	1	Job Reference (optional)

Builders FirstSource, Lake City, FL 32055, Kim Holloway

8.420 s Nov 10 2020 MiTek Industries, Inc. Wed Mar 31 09:31:33 2021 Page 1
ID:7R_b7AxUtIWB3tgOsRwB2?zWJEt-9z67ATglkZKIioPi6nDY_imwYjcSSmPcOlbcm6zVTT8

Scale = 1:13.1

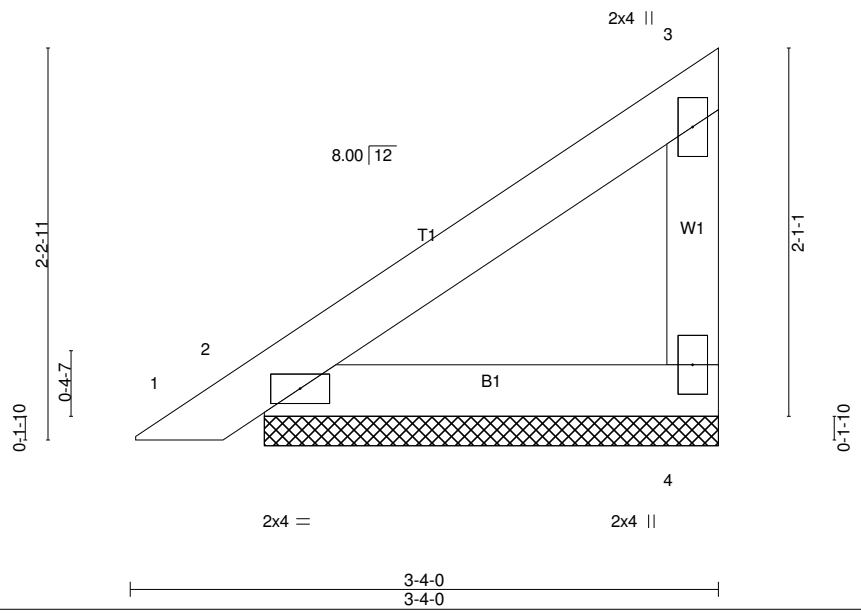

LOADING (psf)		SPACING-	2-0-0	CSI.		DEFL.	in	(loc)	l/defl	L/d	PLATES	GRIP
TCLL	20.0	Plate Grip DOL	1.25	TC	0.08	Vert(LL)	-0.00	1	n/r	120	MT20	244/190
TCDL	7.0	Lumber DOL	1.25	BC	0.07	Vert(CT)	0.00	1	n/r	120		
BCLL	0.0 *	Rep Stress Incr	YES	WB	0.00	Horz(CT)	0.00		n/a	n/a		
BCDL	10.0	Code FBC2020/TPI2014		Matrix-P							Weight: 12 lb	FT = 20%

LUMBER-
TOP CHORD 2x4 SP No.2
BOT CHORD 2x4 SP No.2
WEBS 2x4 SP No.3

BRACING-
TOP CHORD Structural wood sheathing directly applied or 3-4-0 oc purlins, except end verticals.
BOT CHORD Rigid ceiling directly applied or 10-0-0 oc bracing.

MiTek recommends that Stabilizers and required cross bracing be installed during truss erection, in accordance with Stabilizer Installation guide.

REACTIONS. (lb/size) 4=87/2-6-14, 2=118/2-6-14
Max Horz 2=65(LC 12)
Max Uplift4=-43(LC 12), 2=-16(LC 12)
Max Grav 4=92(LC 19), 2=118(LC 1)

FORCES. (lb) - Max. Comp./Max. Ten. - All forces 250 (lb) or less except when shown.

NOTES-
1) Wind: ASCE 7-16; Vult=130mph (3-second gust) Vasd=101mph; TCDL=4.2psf; BCDL=3.0psf; h=20ft; Cat. II; Exp B; Encl., GCpi=0.18; MWFRS (envelope) gable end zone and C-C Exterior(2E) zone;C-C for members and forces & MWFRS for reactions shown; Lumber DOL=1.60 plate grip DOL=1.60
2) Building Designer / Project engineer responsible for verifying applied roof live load shown covers rain loading requirements specific to the use of this truss component.
3) Gable requires continuous bottom chord bearing.
4) This truss has been designed for a 10.0 psf bottom chord live load nonconcurrent with any other live loads.
5) * This truss has been designed for a live load of 20.0psf on the bottom chord in all areas where a rectangle 3-6-0 tall by 2-0-0 wide will fit between the bottom chord and any other members.
6) All bearings are assumed to be SP No.2 crushing capacity of 565 psi.
7) Provide mechanical connection (by others) of truss to bearing plate capable of withstanding 100 lb uplift at joint(s) 4, 2.
8) See Standard Industry Piggyback Truss Connection Detail for Connection to base truss as applicable, or consult qualified building designer.

LOAD CASE(S) Standard

Job	Truss	Truss Type	Qty	Ply	PFS SOLUTIONS - LOT 5 AL
2714379	PB04G	PIGGYBACK	1	1	Job Reference (optional)

Scale = 1:11.3

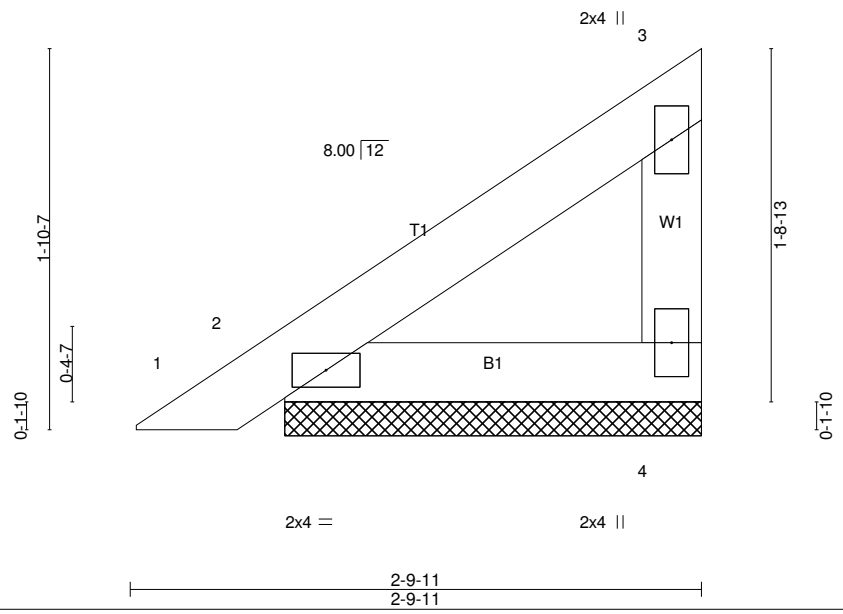

LOADING (psf)		SPACING-	2-0-0	CSI.		DEFL.	in	(loc)	l/defl	L/d	PLATES	GRIP
TCLL	20.0	Plate Grip DOL	1.25	TC	0.05	Vert(LL)	-0.00	1	n/r	120	MT20	244/190
TCDL	7.0	Lumber DOL	1.25	BC	0.04	Vert(CT)	0.00	1	n/r	120		
BCLL	0.0 *	Rep Stress Incr	YES	WB	0.00	Horz(CT)	0.00		n/a	n/a		
BCDL	10.0	Code FBC2020/TPI2014		Matrix-P							Weight: 10 lb	FT = 20%

LUMBER-
TOP CHORD 2x4 SP No.2
BOT CHORD 2x4 SP No.2
WEBS 2x4 SP No.3

BRACING-
TOP CHORD Structural wood sheathing directly applied or 2-9-11 oc purlins, except end verticals.
BOT CHORD Rigid ceiling directly applied or 10-0-0 oc bracing.

MiTek recommends that Stabilizers and required cross bracing be installed during truss erection, in accordance with Stabilizer Installation guide.

REACTIONS. (lb/size) 4=67/2-0-9, 2=100/2-0-9
Max Horz 2=53(LC 12)
Max Uplift4=-33(LC 12), 2=-15(LC 12)
Max Grav 4=71(LC 19), 2=100(LC 1)

FORCES. (lb) - Max. Comp./Max. Ten. - All forces 250 (lb) or less except when shown.

NOTES-
1) Wind: ASCE 7-16; Vult=130mph (3-second gust) Vasd=101mph; TCDL=4.2psf; BCDL=3.0psf; h=20ft; Cat. II; Exp B; Encl., GCpi=0.18; MWFRS (envelope) gable end zone and C-C Exterior(2E) zone;C-C for members and forces & MWFRS for reactions shown; Lumber DOL=1.60 plate grip DOL=1.60
2) Building Designer / Project engineer responsible for verifying applied roof live load shown covers rain loading requirements specific to the use of this truss component.
3) Gable requires continuous bottom chord bearing.
4) This truss has been designed for a 10.0 psf bottom chord live load nonconcurrent with any other live loads.
5) * This truss has been designed for a live load of 20.0psf on the bottom chord in all areas where a rectangle 3-6-0 tall by 2-0-0 wide will fit between the bottom chord and any other members.
6) All bearings are assumed to be SP No.2 crushing capacity of 565 psi.
7) Provide mechanical connection (by others) of truss to bearing plate capable of withstanding 100 lb uplift at joint(s) 4, 2.
8) See Standard Industry Piggyback Truss Connection Detail for Connection to base truss as applicable, or consult qualified building designer.

LOAD CASE(S) Standard

Job	Truss	Truss Type	Qty	Ply	PFS SOLUTIONS - LOT 5 AL
2714379	T01	Attic	2	1	Job Reference (optional)

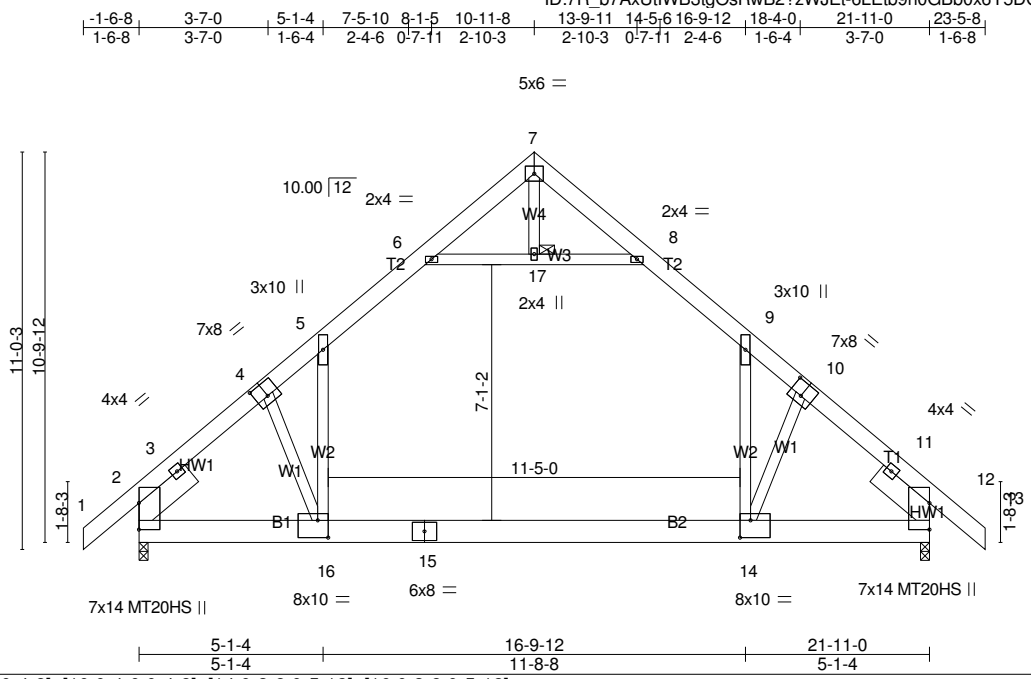

Plate Offsets (X,Y)-- [4:0-4-0,0-4-8], [10:0-4-0,0-4-8], [14:0-3-8,0-5-12], [16:0-3-8,0-5-12]

LOADING (psf)		**SPACING-**	2-0-0	**CSI.**		**DEFL.**	in	(loc)	l/defl	L/d	**PLATES**	**GRIP**
TCLL	20.0	Plate Grip DOL	1.25	TC	0.57	Vert(LL)	-0.27	14-16	>977	240	MT20	244/190
TCDL	7.0	Lumber DOL	1.25	BC	0.46	Vert(CT)	-0.44	14-16	>600	180	MT20HS	187/143
BCLL	0.0 *	Rep Stress Incr	YES	WB	0.50	Horz(CT)	0.02	2	n/a	n/a		
BCDL	10.0	Code FBC2020/TPI2014		Matrix-MS		Attic	-0.18	14-16	785	360	Weight: 195 lb	FT = 20%

LUMBER-
TOP CHORD 2x6 SP M 26 *Except*
T1: 2x6 SP No.2
BOT CHORD 2x8 SP 2400F 2.0E
WEBS 2x4 SP No.3
SLIDER Left 2x8 SP 2400F 2.0E -p 1-11-8, Right 2x8 SP 2400F 2.0E -p 1-11-8

BRACING-
TOP CHORD Structural wood sheathing directly applied or 4-9-2 oc purlins.
BOT CHORD Rigid ceiling directly applied or 10-0-0 oc bracing.
JOINTS 1 Brace at Jt(s): 17

MiTek recommends that Stabilizers and required cross bracing be installed during truss erection, in accordance with Stabilizer Installation guide.

REACTIONS. (lb/size) 2=1123/0-3-0, 12=1123/0-3-0
Max Horz 2=-229(LC 10)
Max Uplift2=-18(LC 12), 12=-18(LC 13)
Max Grav 2=1376(LC 20), 12=1376(LC 21)

FORCES. (lb) - Max. Comp./Max. Ten. - All forces 250 (lb) or less except when shown.
TOP CHORD 3-4=-1680/0, 4-5=-1625/2, 5-6=-1022/103, 8-9=-1021/103, 9-10=-1624/1, 10-11=-1680/0
BOT CHORD 2-16=-6/1205, 15-16=0/1105, 14-15=0/1105, 12-14=0/1131
WEBS 6-17=-1217/65, 8-17=-1217/65, 9-14=0/1043, 10-14=-256/176, 5-16=0/1043, 4-16=-255/175

NOTES-
1) Unbalanced roof live loads have been considered for this design.
2) Wind: ASCE 7-16; Vult=130mph (3-second gust) Vasd=101mph; TCDL=4.2psf; BCDL=3.0psf; h=20ft; Cat. II; Exp B; Encl., GCpi=0.18; MWFRS (envelope) gable end zone and C-C Exterior(2E) -1-6-8 to 1-5-8, Interior(1) 1-5-8 to 10-11-8, Exterior(2R) 10-11-8 to 14-1-9, Interior(1) 14-1-9 to 23-5-8 zone; end vertical left and right exposed;C-C for members and forces & MWFRS for reactions shown; Lumber DOL=1.60 plate grip DOL=1.60
3) Building Designer / Project engineer responsible for verifying applied roof live load shown covers rain loading requirements specific to the use of this truss component.
4) All plates are MT20 plates unless otherwise indicated.
5) This truss has been designed for a 10.0 psf bottom chord live load nonconcurrent with any other live loads.
6) * This truss has been designed for a live load of 20.0psf on the bottom chord in all areas where a rectangle 3-6-0 tall by 2-0-0 wide will fit between the bottom chord and any other members.
7) Ceiling dead load (5.0 psf) on member(s). 5-6, 8-9, 6-17, 8-17; Wall dead load (5.0psf) on member(s).9-14, 5-16
8) Bottom chord live load (40.0 psf) and additional bottom chord dead load (10.0 psf) applied only to room. 14-16
9) All bearings are assumed to be SP No.2 crushing capacity of 565 psi.
10) Provide mechanical connection (by others) of truss to bearing plate capable of withstanding 100 lb uplift at joint(s) 2, 12.
11) Attic room checked for L/360 deflection.

LOAD CASE(S) Standard

Job	Truss	Truss Type	Qty	Ply	PFS SOLUTIONS - LOT 5 AL
2714379	T01G	GABLE	1	1	Job Reference (optional)

Builders FirstSource, Lake City, FL 32055, Kim Holloway

8.420 s Nov 10 2020 MiTek Industries, Inc. Wed Mar 31 09:31:37 2021 Page 1
ID:7R_b7AxUtIWB3tgOsRwB2?zWJEt-2kMe0rjGoorkBQiULdIV8YwaeKzDOZVBJNZqvuzVTT4

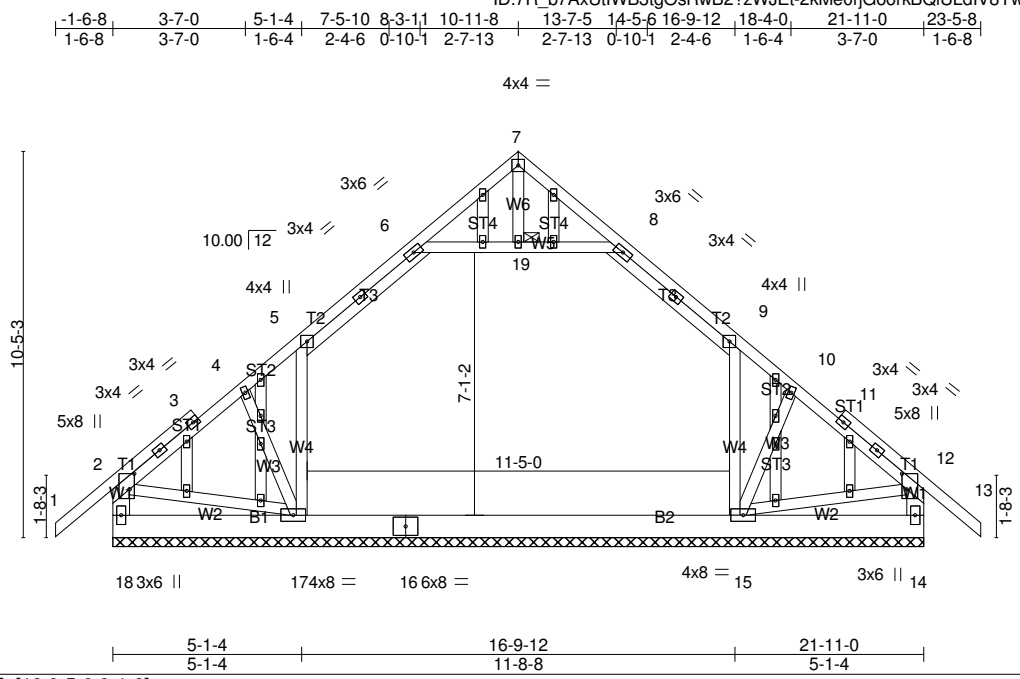

Plate Offsets (X,Y)-- [2:0-5-0,0-1-8], [12:0-5-0,0-1-8]

LOADING (psf)		SPACING-	2-0-0	CSI.		DEFL.	in	(loc)	l/defl	L/d	PLATES	GRIP
TCLL	20.0	Plate Grip DOL	1.25	TC	0.20	Vert(LL)	-0.01	13	n/r	120	MT20	244/190
TCDL	7.0	Lumber DOL	1.25	BC	0.14	Vert(CT)	-0.02	13	n/r	120		
BCLL	0.0 *	Rep Stress Incr	YES	WB	0.12	Horz(CT)	0.00	14	n/a	n/a		
BCDL	10.0	Code FBC2020/TPI2014		Matrix-S							Weight: 209 lb	FT = 20%

LUMBER-
TOP CHORD 2x4 SP No.2
BOT CHORD 2x8 SP 2400F 2.0E
WEBS 2x4 SP No.3 *Except*
W1: 2x6 SP No.2
OTHERS 2x4 SP No.3

BRACING-
TOP CHORD Structural wood sheathing directly applied or 6-0-0 oc purlins, except end verticals.
BOT CHORD Rigid ceiling directly applied or 6-0-0 oc bracing.
JOINTS 1 Brace at Jt(s): 19

MiTek recommends that Stabilizers and required cross bracing be installed during truss erection, in accordance with Stabilizer Installation guide.

REACTIONS. All bearings 21-11-0.
(lb) - Max Horz 18=-259(LC 10)
Max Uplift All uplift 100 lb or less at joint(s) 18, 14 except 15=-129(LC 13), 17=-130(LC 12)
Max Grav All reactions 250 lb or less at joint(s) except 18=577(LC 1), 15=791(LC 21), 17=792(LC 20), 14=577(LC 1)

FORCES. (lb) - Max. Comp./Max. Ten. - All forces 250 (lb) or less except when shown.
TOP CHORD 2-3=-520/65, 3-4=-462/80, 4-5=-454/112, 5-6=-493/126, 8-9=-493/126, 9-10=-453/111, 10-11=-461/79, 11-12=-520/64, 2-18=-569/107, 12-14=-569/107
BOT CHORD 16-17=-31/371, 15-16=-31/371
WEBS 9-15=-292/141, 5-17=-292/142, 2-17=-34/371, 12-15=-41/378

NOTES-
1) Unbalanced roof live loads have been considered for this design.
2) Wind: ASCE 7-16; Vult=130mph (3-second gust) Vasd=101mph; TCDL=4.2psf; BCDL=3.0psf; h=20ft; Cat. II; Exp B; Encl., GCpi=0.18; MWFRS (envelope) gable end zone and C-C Exterior(2E) -1-6-8 to 1-5-8, Interior(1) 1-5-8 to 10-11-8, Exterior(2R) 10-11-8 to 13-10-1, Interior(1) 13-10-1 to 23-5-8 zone; end vertical left and right exposed;C-C for members and forces & MWFRS for reactions shown; Lumber DOL=1.60 plate grip DOL=1.60
3) Truss designed for wind loads in the plane of the truss only. For studs exposed to wind (normal to the face), see Standard Industry Gable End Details as applicable, or consult qualified building designer as per ANSI/TPI 1.
4) Building Designer / Project engineer responsible for verifying applied roof live load shown covers rain loading requirements specific to the use of this truss component.
5) All plates are 2x4 MT20 unless otherwise indicated.
6) Gable requires continuous bottom chord bearing.
7) Gable studs spaced at 2-0-0 oc.
8) This truss has been designed for a 10.0 psf bottom chord live load nonconcurrent with any other live loads.
9) * This truss has been designed for a live load of 20.0psf on the bottom chord in all areas where a rectangle 3-6-0 tall by 2-0-0 wide will fit between the bottom chord and any other members, with BCDL = 10.0psf.
10) Ceiling dead load (5.0 psf) on member(s). 5-6, 8-9, 6-19, 8-19; Wall dead load (5.0psf) on member(s).9-15, 5-17
11) All bearings are assumed to be SP No.2 crushing capacity of 565 psi.
12) Provide mechanical connection (by others) of truss to bearing plate capable of withstanding 100 lb uplift at joint(s) 18, 14 except (jt=lb) 15=129, 17=130.
13) Attic room checked for L/360 deflection.

LOAD CASE(S) Standard

Job	Truss	Truss Type	Qty	Ply	PFS SOLUTIONS - LOT 5 AL
2714379	T02	Attic	8	1	Job Reference (optional)

Builders FirstSource, Lake City, FL 32055, Kim Holloway

8.420 s Nov 10 2020 MiTek Industries, Inc. Wed Mar 31 09:31:38 2021 Page 1

ID:7R_b7AxUtlWB3tgOsRwB2?zWJEt-Www0EBjuZ6zboaHguKpkhmTgdkEU7wgLY1JNRKzVTT3

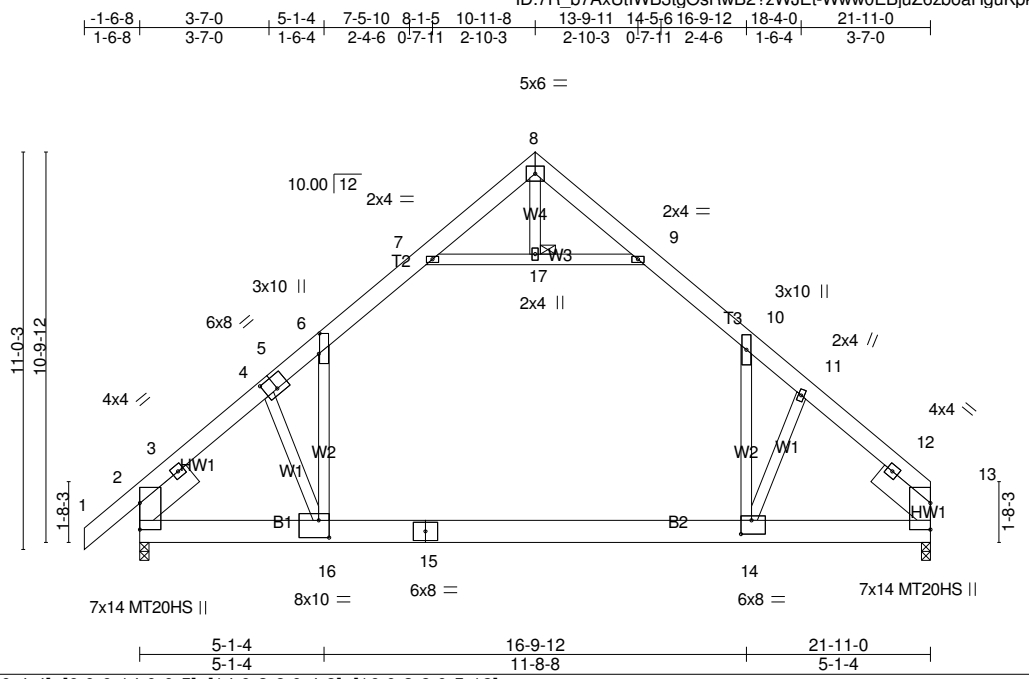

Plate Offsets (X,Y)-- [5:0-4-0,0-4-4], [6:0-6-14,0-0-5], [14:0-3-8,0-4-8], [16:0-3-8,0-5-12]

LOADING (psf)		**SPACING-**	2-0-0	**CSI.**		**DEFL.**	in	(loc)	l/defl	L/d	**PLATES**	**GRIP**
TCLL	20.0	Plate Grip DOL	1.25	TC	0.57	Vert(LL)	-0.27	14-16	>986	240	MT20	244/190
TCDL	7.0	Lumber DOL	1.25	BC	0.46	Vert(CT)	-0.43	14-16	>607	180	MT20HS	187/143
BCLL	0.0 *	Rep Stress Incr	YES	WB	0.51	Horz(CT)	0.02	2	n/a	n/a		
BCDL	10.0	Code FBC2020/TPI2014		Matrix-MS		Attic	-0.18	14-16	790	360	Weight: 191 lb	FT = 20%

LUMBER-

TOP CHORD 2x6 SP M 26 *Except*
T1: 2x6 SP No.2
BOT CHORD 2x8 SP 2400F 2.0E
WEBS 2x4 SP No.3
SLIDER Left 2x8 SP 2400F 2.0E -p 1-11-8, Right 2x8 SP 2400F 2.0E -p 1-11-8

BRACING-

TOP CHORD Structural wood sheathing directly applied or 4-8-15 oc purlins.
BOT CHORD Rigid ceiling directly applied or 10-0-0 oc bracing.
JOINTS 1 Brace at Jt(s): 17

MiTek recommends that Stabilizers and required cross bracing be installed during truss erection, in accordance with Stabilizer Installation guide.

REACTIONS. (lb/size) 13=1037/0-3-0, 2=1126/0-3-0
Max Horz 2=220(LC 11)
Max Uplift2=-18(LC 12)
Max Grav 13=1297(LC 21), 2=1378(LC 20)

FORCES. (lb) - Max. Comp./Max. Ten. - All forces 250 (lb) or less except when shown.
TOP CHORD 3-4=-1688/0, 4-5=-1638/0, 5-6=-1602/2, 6-7=-1027/103, 9-10=-1023/103, 10-11=-1647/0, 11-12=-1698/0
BOT CHORD 2-16=-22/1197, 15-16=0/1095, 14-15=0/1095, 13-14=0/1126
WEBS 7-17=-1222/67, 9-17=-1222/67, 10-14=0/1073, 11-14=-286/186, 6-16=0/1060, 4-16=-274/176

NOTES-

1) Unbalanced roof live loads have been considered for this design.
2) Wind: ASCE 7-16; Vult=130mph (3-second gust) Vasd=101mph; TCDL=4.2psf; BCDL=3.0psf; h=20ft; Cat. II; Exp B; Encl., GCpi=0.18; MWFRS (envelope) gable end zone and C-C Exterior(2E) -1-6-8 to 1-5-8, Interior(1) 1-5-8 to 10-11-8, Exterior(2R) 10-11-8 to 14-1-9, Interior(1) 14-1-9 to 21-11-0 zone; end vertical left and right exposed;C-C for members and forces & MWFRS for reactions shown; Lumber DOL=1.60 plate grip DOL=1.60
3) Building Designer / Project engineer responsible for verifying applied roof live load shown covers rain loading requirements specific to the use of this truss component.
4) All plates are MT20 plates unless otherwise indicated.
5) This truss has been designed for a 10.0 psf bottom chord live load nonconcurrent with any other live loads.
6) * This truss has been designed for a live load of 20.0psf on the bottom chord in all areas where a rectangle 3-6-0 tall by 2-0-0 wide will fit between the bottom chord and any other members.
7) Ceiling dead load (5.0 psf) on member(s). 6-7, 9-10, 7-17, 9-17; Wall dead load (5.0psf) on member(s).10-14, 6-16
8) Bottom chord live load (40.0 psf) and additional bottom chord dead load (10.0 psf) applied only to room. 14-16
9) All bearings are assumed to be SP No.2 crushing capacity of 565 psi.
10) Provide mechanical connection (by others) of truss to bearing plate capable of withstanding 100 lb uplift at joint(s) 2.
11) Attic room checked for L/360 deflection.

LOAD CASE(S) Standard

Job	Truss	Truss Type	Qty	Ply	PFS SOLUTIONS - LOT 5 AL
2714379	T03	ATTIC GIRDER	1	2	Job Reference (optional)

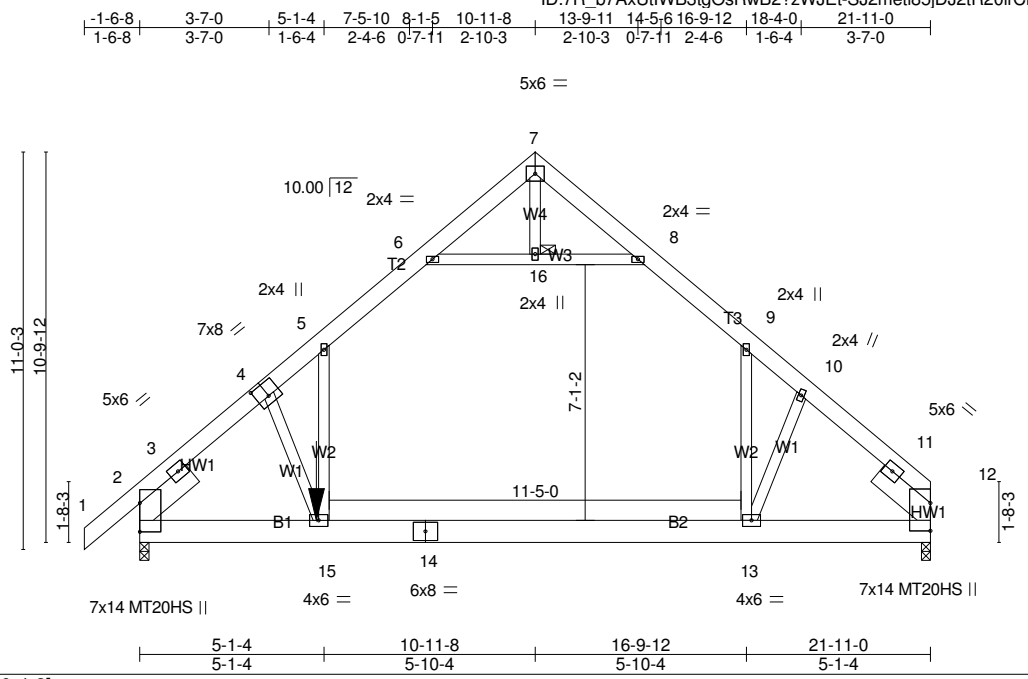

Plate Offsets (X,Y)-- [4:0-4-0,0-4-8]

LOADING (psf)		**SPACING-**	3-0-0	**CSI.**		**DEFL.**	in	(loc)	l/defl	L/d	**PLATES**	**GRIP**
TCLL	20.0	Plate Grip DOL	1.25	TC	0.49	Vert(LL)	-0.20	13-15	>999	240	MT20	244/190
TCDL	7.0	Lumber DOL	1.25	BC	0.38	Vert(CT)	-0.33	13-15	>790	180	MT20HS	187/143
BCLL	0.0 *	Rep Stress Incr	NO	WB	0.38	Horz(CT)	0.01	12	n/a	n/a		
BCDL	10.0	Code FBC2020/TPI2014		Matrix-MS		Attic	-0.13	13-15	1047	360	Weight: 381 lb	FT = 20%

LUMBER-
TOP CHORD 2x6 SP M 26 *Except*
T1: 2x6 SP No.2
BOT CHORD 2x8 SP 2400F 2.0E
WEBS 2x4 SP No.3
SLIDER Left 2x8 SP 2400F 2.0E -p 1-11-8, Right 2x8 SP 2400F 2.0E -p 1-11-8

BRACING-
TOP CHORD 2-0-0 oc purlins (6-0-0 max.)
(Switched from sheeted: Spacing > 2-0-0).
BOT CHORD Rigid ceiling directly applied or 10-0-0 oc bracing.
JOINTS 1 Brace at Jt(s): 7, 16

REACTIONS. (lb/size) 12=1587/0-3-0, 2=1792/0-3-0
Max Horz 2=330(LC 5)
Max Uplift 12=-1(LC 9), 2=-105(LC 8)
Max Grav 12=1970(LC 35), 2=2149(LC 34)

FORCES. (lb) - Max. Comp./Max. Ten. - All forces 250 (lb) or less except when shown.
TOP CHORD 3-4=-2597/59, 4-5=-2514/88, 5-6=-1565/179, 6-7=-124/289, 7-8=-132/288, 8-9=-1569/188, 9-10=-2503/46, 10-11=-2593/35
BOT CHORD 2-15=-90/1829, 14-15=0/1680, 13-14=0/1680, 12-13=0/1711
WEBS 6-16=-1888/145, 8-16=-1888/145, 9-13=0/1600, 10-13=-413/294, 5-15=-17/1584, 4-15=-378/301

NOTES-
1) 2-ply truss to be connected together with 10d (0.131"x3") nails as follows:
Top chords connected as follows: 2x6 - 2 rows staggered at 0-9-0 oc.
Bottom chords connected as follows: 2x8 - 2 rows staggered at 0-9-0 oc.
Webs connected as follows: 2x4 - 1 row at 0-9-0 oc.
2) All loads are considered equally applied to all plies, except if noted as front (F) or back (B) face in the LOAD CASE(S) section. Ply to ply connections have been provided to distribute only loads noted as (F) or (B), unless otherwise indicated.
3) Unbalanced roof live loads have been considered for this design.
4) Wind: ASCE 7-16; Vult=130mph (3-second gust) Vasd=101mph; TCDL=4.2psf; BCDL=3.0psf; h=20ft; Cat. II; Exp B; Encl., GCpi=0.18; MWFRS (envelope) gable end zone; end vertical left exposed; Lumber DOL=1.60 plate grip DOL=1.60
5) Building Designer / Project engineer responsible for verifying applied roof live load shown covers rain loading requirements specific to the use of this truss component.
6) All plates are MT20 plates unless otherwise indicated.
7) This truss has been designed for a 10.0 psf bottom chord live load nonconcurrent with any other live loads.
8) * This truss has been designed for a live load of 20.0psf on the bottom chord in all areas where a rectangle 3-6-0 tall by 2-0-0 wide will fit between the bottom chord and any other members.
9) Ceiling dead load (5.0 psf) on member(s). 5-6, 8-9, 6-16, 8-16; Wall dead load (5.0psf) on member(s).9-13, 5-15
10) Bottom chord live load (40.0 psf) and additional bottom chord dead load (10.0 psf) applied only to room. 13-15
11) All bearings are assumed to be SP No.2 crushing capacity of 565 psi.
12) Provide mechanical connection (by others) of truss to bearing plate capable of withstanding 100 lb uplift at joint(s) 12 except (jt=lb) 2=105.
13) Graphical purlin representation does not depict the size or the orientation of the purlin along the top and/or bottom chord.
14) Hanger(s) or other connection device(s) shall be provided sufficient to support concentrated load(s) 134 lb down and 123 lb up at 4-10-12 on bottom chord. The design/selection of such connection device(s) is the responsibility of others.

Continued on page 2

NOTES-

15) Attic room checked for L/360 deflection.

LOAD CASE(S) Standard

1) Dead + Roof Live (balanced): Lumber Increase=1.25, Plate Increase=1.25
   Uniform Loads (plf)
      Vert: 1-5=-81, 5-6=-96, 6-7=-81, 7-8=-81, 8-9=-96, 9-12=-81, 15-21=-30, 13-15=-60, 13-17=-30, 6-8=-15
      Drag: 9-13=-15, 5-15=-15
   Concentrated Loads (lb)
      Vert: 15=-134(B)

Job	Truss	Truss Type	Qty	Ply	PFS SOLUTIONS - LOT 5 AL
2714379	T04	MONOPITCH GIRDER	1	2	Job Reference (optional)

Builders FirstSource, Lake City, FL 32055, Kim Holloway

8.420 s Nov 10 2020 MiTek Industries, Inc. Wed Mar 31 09:31:41 2021 Page 1
ID:7R_b7AxUtlWB3tgOsRwB2?zWJEt-wVb8sCmns1LAf10FaTNRIO5IrxLAKNwnE?X12fzVTT0

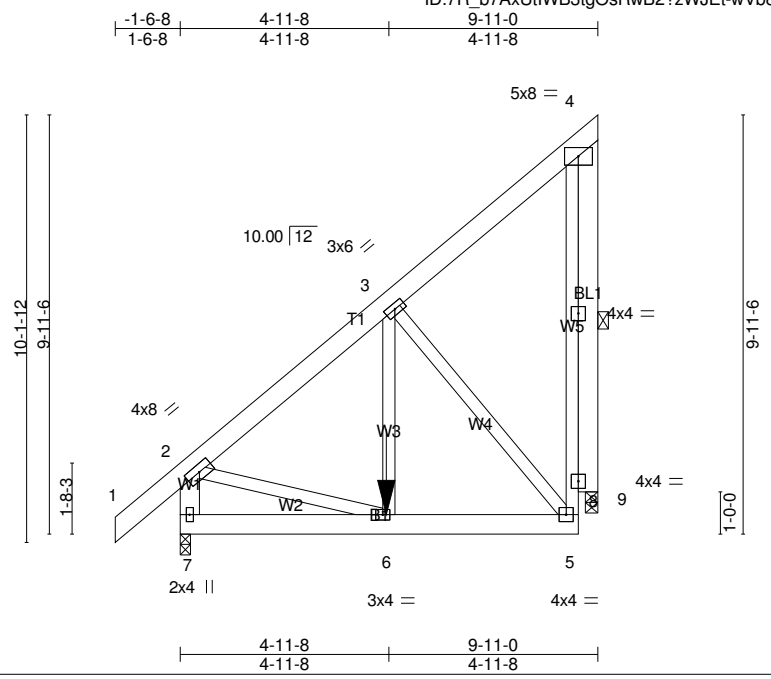

LOADING (psf)		SPACING-	3-0-0	CSI.		DEFL.	in	(loc)	l/defl	L/d	PLATES	GRIP
TCLL	20.0	Plate Grip DOL	1.25	TC	0.13	Vert(LL)	0.01	6	>999	240	MT20	244/190
TCDL	7.0	Lumber DOL	1.25	BC	0.08	Vert(CT)	-0.01	5-6	>999	180		
BCLL	0.0 *	Rep Stress Incr	NO	WB	0.09	Horz(CT)	-0.00	9	n/a	n/a		
BCDL	10.0	Code FBC2020/TPI2014		Matrix-MS							Weight: 231 lb	FT = 20%

LUMBER-

TOP CHORD	2x6 SP No.2
BOT CHORD	2x6 SP No.2
WEBS	2x4 SP No.3 *Except*
	W1: 2x6 SP No.2
OTHERS	2x6 SP No.2

BRACING-

TOP CHORD	2-0-0 oc purlins (6-0-0 max.), except end verticals (Switched from sheeted: Spacing > 2-0-0).
BOT CHORD	Rigid ceiling directly applied or 10-0-0 oc bracing.
WEBS	1 Row at midpt 4-9

REACTIONS. (lb/size) 7=754/0-3-0, 9=534/0-3-8
Max Horz 7=432(LC 8)
Max Uplift7=-45(LC 8), 9=-390(LC 8)
Max Grav 7=754(LC 1), 9=578(LC 29)

FORCES. (lb) - Max. Comp./Max. Ten. - All forces 250 (lb) or less except when shown.

TOP CHORD	2-3=-543/13, 5-8=-276/443, 4-8=-276/443, 2-7=-683/63
BOT CHORD	6-7=-436/216, 5-6=-260/350
WEBS	3-6=-102/324, 3-5=-493/369, 2-6=-44/331, 4-9=-579/391

NOTES-

1) 2-ply truss to be connected together with 10d (0.131"x3") nails as follows:
   Top chords connected as follows: 2x6 - 2 rows staggered at 0-9-0 oc, 2x4 - 1 row at 0-9-0 oc.
   Bottom chords connected as follows: 2x6 - 2 rows staggered at 0-9-0 oc.
   Webs connected as follows: 2x4 - 1 row at 0-9-0 oc.
2) All loads are considered equally applied to all plies, except if noted as front (F) or back (B) face in the LOAD CASE(S) section. Ply to ply connections have been provided to distribute only loads noted as (F) or (B), unless otherwise indicated.
3) Wind: ASCE 7-16; Vult=130mph (3-second gust) Vasd=101mph; TCDL=4.2psf; BCDL=3.0psf; h=20ft; Cat. II; Exp B; Encl., GCpi=0.18; MWFRS (envelope) gable end zone; end vertical left exposed; Lumber DOL=1.60 plate grip DOL=1.60
4) Building Designer / Project engineer responsible for verifying applied roof live load shown covers rain loading requirements specific to the use of this truss component.
5) This truss has been designed for a 10.0 psf bottom chord live load nonconcurrent with any other live loads.
6) * This truss has been designed for a live load of 20.0psf on the bottom chord in all areas where a rectangle 3-6-0 tall by 2-0-0 wide will fit between the bottom chord and any other members.
7) All bearings are assumed to be SP No.2 crushing capacity of 565 psi.
8) Bearing at joint(s) 9 considers parallel to grain value using ANSI/TPI 1 angle to grain formula. Building designer should verify capacity of bearing surface.
9) Provide mechanical connection (by others) of truss to bearing plate capable of withstanding 100 lb uplift at joint(s) 7 except (jt=lb) 9=390.
10) Graphical purlin representation does not depict the size or the orientation of the purlin along the top and/or bottom chord.
11) Hanger(s) or other connection device(s) shall be provided sufficient to support concentrated load(s) 137 lb down and 127 lb up at 4-10-12 on bottom chord. The design/selection of such connection device(s) is the responsibility of others.

LOAD CASE(S) Standard
1) Dead + Roof Live (balanced): Lumber Increase=1.25, Plate Increase=1.25

Continued on page 2

LOAD CASE(S) Standard
Uniform Loads (plf)
Vert: 1-2=-81, 2-4=-81, 5-7=-30
Concentrated Loads (lb)
Vert: 6=-137(F)

Job	Truss	Truss Type	Qty	Ply	PFS SOLUTIONS - LOT 5 AL
2714379	T04A	Jack-Open	1	1	Job Reference (optional)

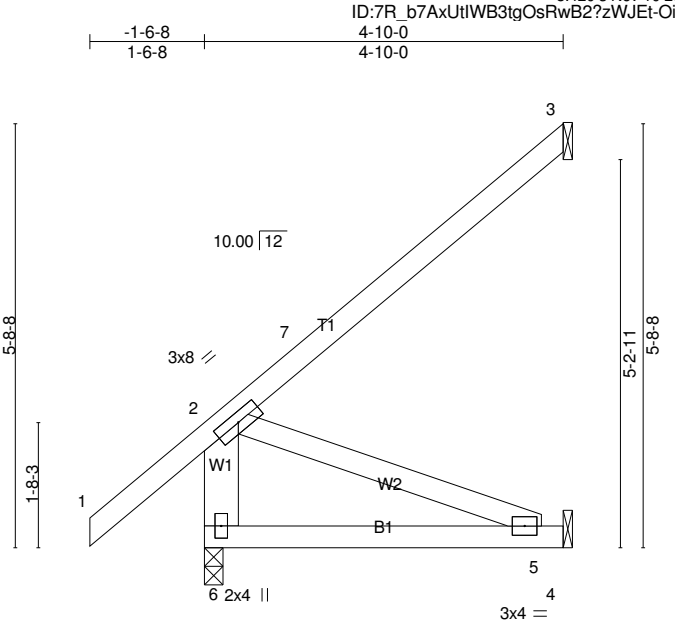

LOADING (psf)		SPACING-	2-0-0	CSI.		DEFL.	in	(loc)	l/defl	L/d	PLATES	GRIP
TCLL	20.0	Plate Grip DOL	1.25	TC	0.41	Vert(LL)	-0.03	5-6	>999	240	MT20	244/190
TCDL	7.0	Lumber DOL	1.25	BC	0.25	Vert(CT)	-0.05	5-6	>999	180		
BCLL	0.0 *	Rep Stress Incr	YES	WB	0.10	Horz(CT)	-0.01	3	n/a	n/a		
BCDL	10.0	Code FBC2020/TPI2014		Matrix-MP							Weight: 30 lb	FT = 20%

LUMBER-
TOP CHORD 2x4 SP No.2
BOT CHORD 2x4 SP No.2
WEBS 2x6 SP No.2 *Except*
W2: 2x4 SP No.3

BRACING-
TOP CHORD Structural wood sheathing directly applied or 4-10-0 oc purlins, except end verticals.
BOT CHORD Rigid ceiling directly applied or 10-0-0 oc bracing.

MiTek recommends that Stabilizers and required cross bracing be installed during truss erection, in accordance with Stabilizer Installation guide.

REACTIONS. (lb/size) 6=282/0-3-0, 3=104/Mechanical, 4=45/Mechanical
Max Horz 6=156(LC 12)
Max Uplift3=-99(LC 12), 4=-42(LC 12)
Max Grav 6=282(LC 1), 3=117(LC 19), 4=91(LC 3)

FORCES. (lb) - Max. Comp./Max. Ten. - All forces 250 (lb) or less except when shown.
BOT CHORD 5-6=-311/139
WEBS 2-5=-148/330

NOTES-
1) Wind: ASCE 7-16; Vult=130mph (3-second gust) Vasd=101mph; TCDL=4.2psf; BCDL=3.0psf; h=20ft; Cat. II; Exp B; Encl., GCpi=0.18; MWFRS (envelope) gable end zone and C-C Exterior(2E) -1-6-8 to 1-5-8, Interior(1) 1-5-8 to 4-9-4 zone; end vertical left exposed;C-C for members and forces & MWFRS for reactions shown; Lumber DOL=1.60 plate grip DOL=1.60
2) Building Designer / Project engineer responsible for verifying applied roof live load shown covers rain loading requirements specific to the use of this truss component.
3) This truss has been designed for a 10.0 psf bottom chord live load nonconcurrent with any other live loads.
4) * This truss has been designed for a live load of 20.0psf on the bottom chord in all areas where a rectangle 3-6-0 tall by 2-0-0 wide will fit between the bottom chord and any other members.
5) All bearings are assumed to be SP No.2 crushing capacity of 565 psi.
6) Refer to girder(s) for truss to truss connections.
7) Provide mechanical connection (by others) of truss to bearing plate capable of withstanding 100 lb uplift at joint(s) 3, 4.

LOAD CASE(S) Standard

Job	Truss	Truss Type	Qty	Ply	PFS SOLUTIONS - LOT 5 AL
2714379	T05	Monopitch	1	1	Job Reference (optional)

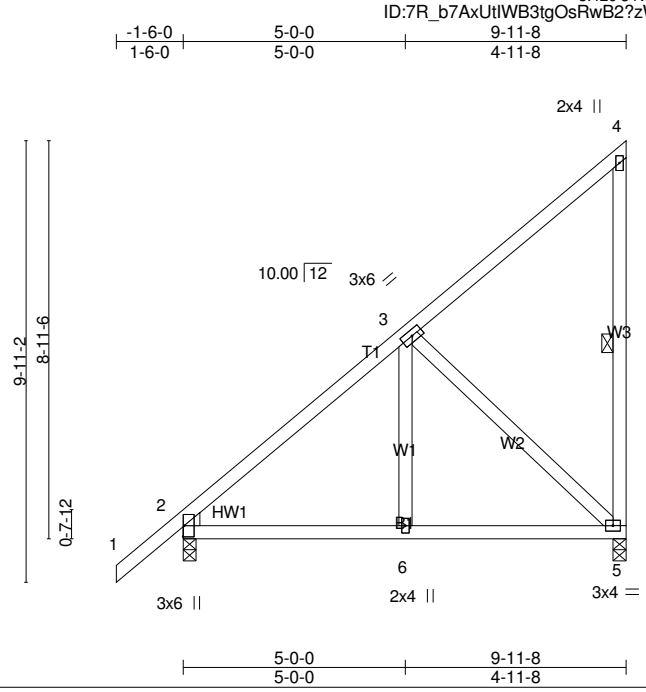

LOADING (psf)		SPACING-	2-0-0	CSI.		DEFL.	in	(loc)	l/defl	L/d	PLATES	GRIP
TCLL	20.0	Plate Grip DOL	1.25	TC	0.25	Vert(LL)	0.02	6-9	>999	240	MT20	244/190
TCDL	7.0	Lumber DOL	1.25	BC	0.23	Vert(CT)	-0.03	5-6	>999	180		
BCLL	0.0 *	Rep Stress Incr	YES	WB	0.28	Horz(CT)	0.01	2	n/a	n/a		
BCDL	10.0	Code FBC2020/TPI2014		Matrix-MS							Weight: 66 lb	FT = 20%

LUMBER-
TOP CHORD 2x4 SP No.2
BOT CHORD 2x4 SP No.2
WEBS 2x4 SP No.3
WEDGE
Left: 2x4 SP No.3

BRACING-
TOP CHORD Structural wood sheathing directly applied or 6-0-0 oc purlins, except end verticals.
BOT CHORD Rigid ceiling directly applied or 10-0-0 oc bracing.
WEBS 1 Row at midpt 4-5

MiTek recommends that Stabilizers and required cross bracing be installed during truss erection, in accordance with Stabilizer Installation guide.

REACTIONS. (lb/size) 2=450/0-3-8, 5=357/0-3-8
Max Horz 2=318(LC 12)
Max Uplift2=-7(LC 12), 5=-221(LC 12)
Max Grav 2=450(LC 1), 5=388(LC 19)

FORCES. (lb) - Max. Comp./Max. Ten. - All forces 250 (lb) or less except when shown.
TOP CHORD 2-3=-372/0
BOT CHORD 2-6=-186/257, 5-6=-186/257
WEBS 3-5=-346/250

NOTES-
1) Wind: ASCE 7-16; Vult=130mph (3-second gust) Vasd=101mph; TCDL=4.2psf; BCDL=3.0psf; h=20ft; Cat. II; Exp B; Encl., GCpi=0.18; MWFRS (envelope) gable end zone and C-C Exterior(2E) -1-6-0 to 1-6-0, Interior(1) 1-6-0 to 9-9-12 zone;C-C for members and forces & MWFRS for reactions shown; Lumber DOL=1.60 plate grip DOL=1.60
2) Building Designer / Project engineer responsible for verifying applied roof live load shown covers rain loading requirements specific to the use of this truss component.
3) This truss has been designed for a 10.0 psf bottom chord live load nonconcurrent with any other live loads.
4) * This truss has been designed for a live load of 20.0psf on the bottom chord in all areas where a rectangle 3-6-0 tall by 2-0-0 wide will fit between the bottom chord and any other members.
5) All bearings are assumed to be SP No.2 crushing capacity of 565 psi.
6) Provide mechanical connection (by others) of truss to bearing plate capable of withstanding 100 lb uplift at joint(s) 2 except (jt=lb) 5=221.

LOAD CASE(S) Standard

Job	Truss	Truss Type	Qty	Ply	PFS SOLUTIONS - LOT 5 AL
2714379	T06	Monopitch Girder	1	1	Job Reference (optional)

Scale = 1:51.9

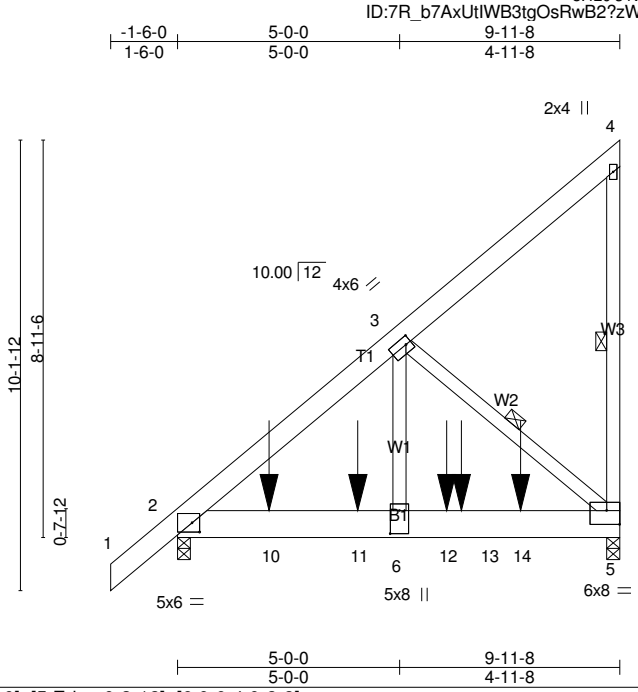

Plate Offsets (X,Y)-- [2:0-2-0,0-2-8], [3:0-1-8,0-2-0], [5:Edge,0-3-12], [6:0-6-4,0-2-8]

LOADING (psf)		**SPACING-** 2-0-0	**CSI.**		**DEFL.**	in	(loc)	l/defl	L/d	**PLATES**	**GRIP**
TCLL	20.0	Plate Grip DOL 1.25	TC	0.18	Vert(LL)	-0.04	5-6	>999	240	MT20	244/190
TCDL	7.0	Lumber DOL 1.25	BC	0.37	Vert(CT)	-0.07	5-6	>999	180		
BCLL	0.0 *	Rep Stress Incr NO	WB	0.98	Horz(CT)	0.01	5	n/a	n/a		
BCDL	10.0	Code FBC2020/TPI2014	Matrix-MS							Weight: 92 lb	FT = 20%

LUMBER-
TOP CHORD 2x6 SP No.2
BOT CHORD 2x8 SP 2400F 2.0E
WEBS 2x4 SP No.3

BRACING-
TOP CHORD Structural wood sheathing directly applied or 4-9-7 oc purlins, except end verticals.
BOT CHORD Rigid ceiling directly applied or 10-0-0 oc bracing.
WEBS 1 Row at midpt 4-5, 3-5

MiTek recommends that Stabilizers and required cross bracing be installed during truss erection, in accordance with Stabilizer Installation guide.

REACTIONS. (lb/size) 2=1997/0-3-8, 5=2153/0-3-8
Max Horz 2=318(LC 8)
Max Uplift2=-413(LC 8), 5=-741(LC 8)

FORCES. (lb) - Max. Comp./Max. Ten. - All forces 250 (lb) or less except when shown.
TOP CHORD 2-3=-2228/464
BOT CHORD 2-10=-543/1688, 10-11=-543/1688, 6-11=-543/1688, 6-12=-543/1688, 12-13=-543/1688, 13-14=-543/1688, 5-14=-543/1688
WEBS 3-6=-652/2561, 3-5=-2235/718

NOTES-
1) Wind: ASCE 7-16; Vult=130mph (3-second gust) Vasd=101mph; TCDL=4.2psf; BCDL=3.0psf; h=20ft; Cat. II; Exp B; Encl., GCpi=0.18; MWFRS (envelope) gable end zone; Lumber DOL=1.60 plate grip DOL=1.60
2) Building Designer / Project engineer responsible for verifying applied roof live load shown covers rain loading requirements specific to the use of this truss component.
3) This truss has been designed for a 10.0 psf bottom chord live load nonconcurrent with any other live loads.
4) * This truss has been designed for a live load of 20.0psf on the bottom chord in all areas where a rectangle 3-6-0 tall by 2-0-0 wide will fit between the bottom chord and any other members.
5) All bearings are assumed to be SP No.2 crushing capacity of 565 psi.
6) Provide mechanical connection (by others) of truss to bearing plate capable of withstanding 100 lb uplift at joint(s) except (jt=lb) 2=413, 5=741.
7) Hanger(s) or other connection device(s) shall be provided sufficient to support concentrated load(s) 656 lb down and 163 lb up at 2-0-12, 677 lb down and 164 lb up at 4-0-12, 677 lb down and 164 lb up at 6-0-12, and 733 lb down and 256 lb up at 6-4-12, and 741 lb down and 249 lb up at 7-8-12 on bottom chord. The design/selection of such connection device(s) is the responsibility of others.
8) In the LOAD CASE(S) section, loads applied to the face of the truss are noted as front (F) or back (B).

LOAD CASE(S) Standard
1) Dead + Roof Live (balanced): Lumber Increase=1.25, Plate Increase=1.25
Uniform Loads (plf)
Vert: 1-4=-54, 5-7=-20
Concentrated Loads (lb)
Vert: 10=-656(B) 11=-677(B) 12=-677(B) 13=-664(B) 14=-669(B)

Job	Truss	Truss Type	Qty	Ply	PFS SOLUTIONS - LOT 5 AL
2714379	T07	Common	2	1	Job Reference (optional)

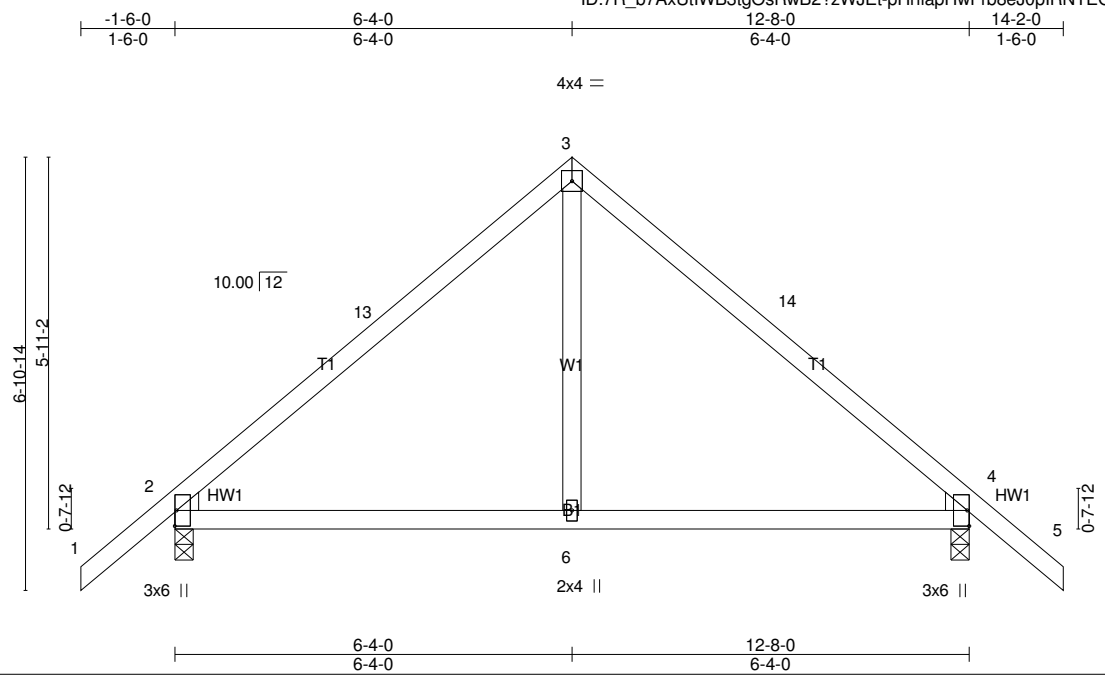

LOADING (psf)		SPACING-	2-0-0	CSI.		DEFL.	in	(loc)	l/defl	L/d	PLATES	GRIP
TCLL	20.0	Plate Grip DOL	1.25	TC	0.40	Vert(LL)	0.06	6-9	>999	240	MT20	244/190
TCDL	7.0	Lumber DOL	1.25	BC	0.37	Vert(CT)	-0.07	6-12	>999	180		
BCLL	0.0 *	Rep Stress Incr	YES	WB	0.11	Horz(CT)	0.01	4	n/a	n/a		
BCDL	10.0	Code FBC2020/TPI2014		Matrix-MS							Weight: 59 lb	FT = 20%

LUMBER-
TOP CHORD 2x4 SP No.2
BOT CHORD 2x4 SP No.2
WEBS 2x4 SP No.3
WEDGE
Left: 2x4 SP No.3 , Right: 2x4 SP No.3

BRACING-
TOP CHORD Structural wood sheathing directly applied or 6-0-0 oc purlins.
BOT CHORD Rigid ceiling directly applied or 10-0-0 oc bracing.

MiTek recommends that Stabilizers and required cross bracing be installed during truss erection, in accordance with Stabilizer Installation guide.

REACTIONS. (lb/size) 2=550/0-3-8, 4=550/0-3-8
Max Horz 2=144(LC 11)
Max Uplift2=-118(LC 12), 4=-118(LC 13)

FORCES. (lb) - Max. Comp./Max. Ten. - All forces 250 (lb) or less except when shown.
TOP CHORD 2-13=-488/146, 3-13=-383/162, 3-14=-383/162, 4-14=-488/146
BOT CHORD 2-6=-12/316, 4-6=-12/316
WEBS 3-6=-14/281

NOTES-
1) Unbalanced roof live loads have been considered for this design.
2) Wind: ASCE 7-16; Vult=130mph (3-second gust) Vasd=101mph; TCDL=4.2psf; BCDL=3.0psf; h=20ft; Cat. II; Exp B; Encl., GCpi=0.18; MWFRS (envelope) gable end zone and C-C Exterior(2E) -1-6-0 to 1-6-0, Interior(1) 1-6-0 to 6-4-0, Exterior(2R) 6-4-0 to 9-4-0, Interior(1) 9-4-0 to 14-2-0 zone;C-C for members and forces & MWFRS for reactions shown; Lumber DOL=1.60 plate grip DOL=1.60
3) Building Designer / Project engineer responsible for verifying applied roof live load shown covers rain loading requirements specific to the use of this truss component.
4) This truss has been designed for a 10.0 psf bottom chord live load nonconcurrent with any other live loads.
5) * This truss has been designed for a live load of 20.0psf on the bottom chord in all areas where a rectangle 3-6-0 tall by 2-0-0 wide will fit between the bottom chord and any other members.
6) All bearings are assumed to be SP No.2 crushing capacity of 565 psi.
7) Provide mechanical connection (by others) of truss to bearing plate capable of withstanding 100 lb uplift at joint(s) except (jt=lb) 2=118, 4=118.

LOAD CASE(S) Standard

Job	Truss	Truss Type	Qty	Ply	PFS SOLUTIONS - LOT 5 AL
2714379	T07G	Common Supported Gable	1	1	Job Reference (optional)

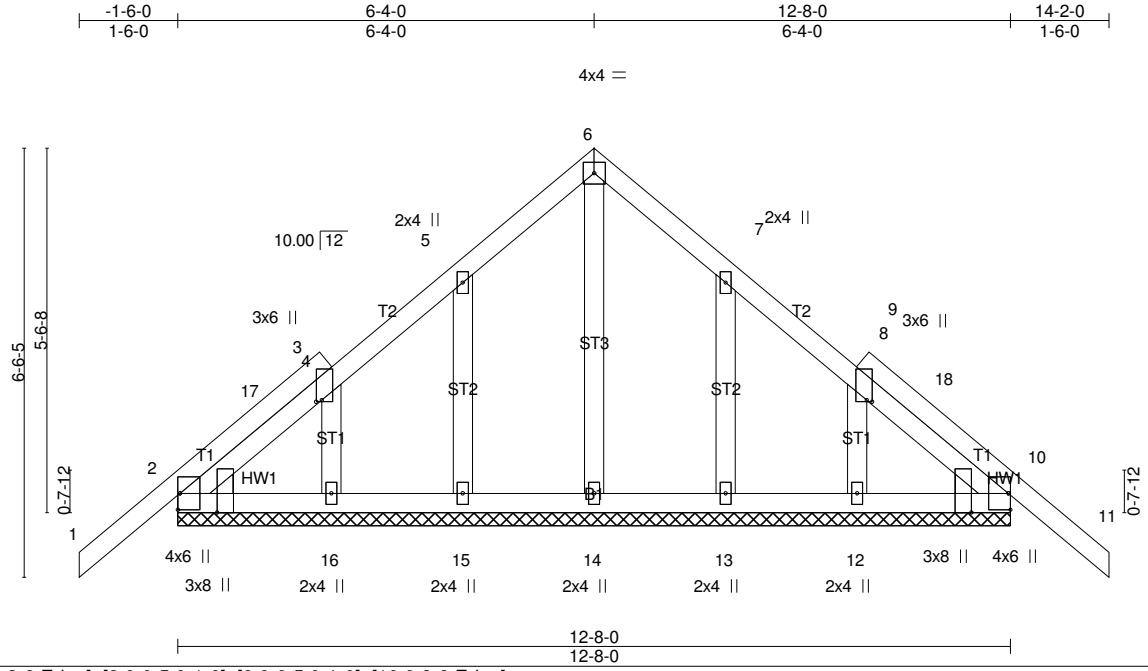

Plate Offsets (X,Y)-- [2:0-3-8,Edge], [3:0-0-5,0-1-0], [9:0-0-5,0-1-0], [10:0-3-8,Edge]

LOADING (psf)		**SPACING-**	2-0-0	**CSI.**		**DEFL.**	in	(loc)	l/defl	L/d	**PLATES**	**GRIP**
TCLL	20.0	Plate Grip DOL	1.25	TC	0.20	Vert(LL)	-0.01	11	n/r	120	MT20	244/190
TCDL	7.0	Lumber DOL	1.25	BC	0.05	Vert(CT)	-0.01	11	n/r	120		
BCLL	0.0 *	Rep Stress Incr	YES	WB	0.05	Horz(CT)	0.00	10	n/a	n/a		
BCDL	10.0	Code FBC2020/TPI2014		Matrix-S							Weight: 81 lb	FT = 20%

LUMBER-
TOP CHORD 2x4 SP No.2
BOT CHORD 2x4 SP No.2
OTHERS 2x4 SP No.3
WEDGE
Left: 2x4 SP No.3 , Right: 2x4 SP No.3

BRACING-
TOP CHORD Structural wood sheathing directly applied or 6-0-0 oc purlins.
BOT CHORD Rigid ceiling directly applied or 10-0-0 oc bracing.

MiTek recommends that Stabilizers and required cross bracing be installed during truss erection, in accordance with Stabilizer Installation guide.

REACTIONS. All bearings 12-8-0.
(lb) - Max Horz 2=-135(LC 10)
Max Uplift All uplift 100 lb or less at joint(s) 2, 10, 15, 16, 13, 12
Max Grav All reactions 250 lb or less at joint(s) 2, 10, 14, 15, 16, 13, 12

FORCES. (lb) - Max. Comp./Max. Ten. - All forces 250 (lb) or less except when shown.

NOTES-
1) Unbalanced roof live loads have been considered for this design.
2) Wind: ASCE 7-16; Vult=130mph (3-second gust) Vasd=101mph; TCDL=4.2psf; BCDL=3.0psf; h=20ft; Cat. II; Exp B; Encl., GCpi=0.18; MWFRS (envelope) gable end zone and C-C Corner(3E) -1-6-0 to 1-6-0, Exterior(2N) 1-6-0 to 6-4-0, Corner(3R) 6-4-0 to 9-4-0, Exterior(2N) 9-4-0 to 14-2-0 zone;C-C for members and forces & MWFRS for reactions shown; Lumber DOL=1.60 plate grip DOL=1.60
3) Truss designed for wind loads in the plane of the truss only. For studs exposed to wind (normal to the face), see Standard Industry Gable End Details as applicable, or consult qualified building designer as per ANSI/TPI 1.
4) Building Designer / Project engineer responsible for verifying applied roof live load shown covers rain loading requirements specific to the use of this truss component.
5) Gable requires continuous bottom chord bearing.
6) Gable studs spaced at 2-0-0 oc.
7) This truss has been designed for a 10.0 psf bottom chord live load nonconcurrent with any other live loads.
8) * This truss has been designed for a live load of 20.0psf on the bottom chord in all areas where a rectangle 3-6-0 tall by 2-0-0 wide will fit between the bottom chord and any other members.
9) All bearings are assumed to be SP No.2 crushing capacity of 565 psi.
10) Provide mechanical connection (by others) of truss to bearing plate capable of withstanding 100 lb uplift at joint(s) 2, 10, 15, 16, 13, 12.

LOAD CASE(S) Standard

Job	Truss	Truss Type	Qty	Ply	PFS SOLUTIONS - LOT 5 AL
2714379	T08	Common	3	1	Job Reference (optional)

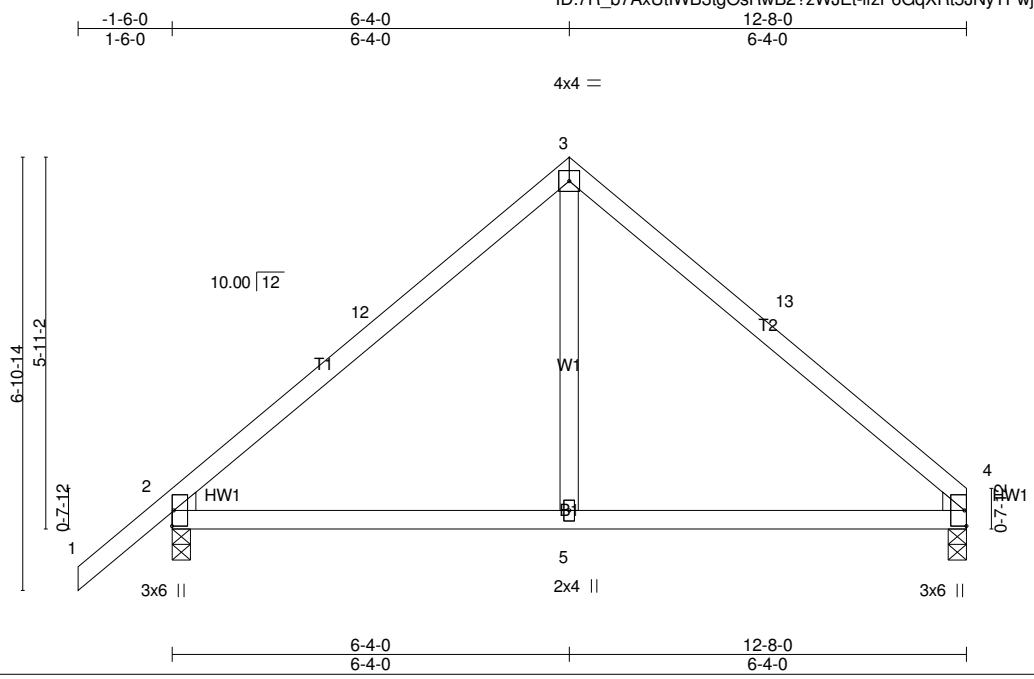

LOADING (psf)		SPACING-	2-0-0	CSI.		DEFL.	in	(loc)	l/defl	L/d	PLATES	GRIP
TCLL	20.0	Plate Grip DOL	1.25	TC	0.42	Vert(LL)	0.07	5-11	>999	240	MT20	244/190
TCDL	7.0	Lumber DOL	1.25	BC	0.37	Vert(CT)	-0.09	5-11	>999	180		
BCLL	0.0 *	Rep Stress Incr	YES	WB	0.11	Horz(CT)	0.02	4	n/a	n/a		
BCDL	10.0	Code FBC2020/TPI2014		Matrix-MS							Weight: 56 lb	FT = 20%

LUMBER-
TOP CHORD 2x4 SP No.2
BOT CHORD 2x4 SP No.2
WEBS 2x4 SP No.3
WEDGE
Left: 2x4 SP No.3 , Right: 2x4 SP No.3

BRACING-
TOP CHORD Structural wood sheathing directly applied or 6-0-0 oc purlins.
BOT CHORD Rigid ceiling directly applied or 10-0-0 oc bracing.

MiTek recommends that Stabilizers and required cross bracing be installed during truss erection, in accordance with Stabilizer Installation guide.

REACTIONS. (lb/size) 2=554/0-3-8, 4=464/0-3-8
Max Horz 2=134(LC 11)
Max Uplift2=-119(LC 12), 4=-84(LC 13)

FORCES. (lb) - Max. Comp./Max. Ten. - All forces 250 (lb) or less except when shown.
TOP CHORD 2-12=-498/151, 3-12=-393/167, 3-13=-393/170, 4-13=-495/154
BOT CHORD 2-5=-32/307, 4-5=-32/307
WEBS 3-5=-23/283

NOTES-
1) Unbalanced roof live loads have been considered for this design.
2) Wind: ASCE 7-16; Vult=130mph (3-second gust) Vasd=101mph; TCDL=4.2psf; BCDL=3.0psf; h=20ft; Cat. II; Exp B; Encl., GCpi=0.18; MWFRS (envelope) gable end zone and C-C Exterior(2E) -1-6-0 to 1-6-0, Interior(1) 1-6-0 to 6-4-0, Exterior(2R) 6-4-0 to 9-4-0, Interior(1) 9-4-0 to 12-8-0 zone;C-C for members and forces & MWFRS for reactions shown; Lumber DOL=1.60 plate grip DOL=1.60
3) Building Designer / Project engineer responsible for verifying applied roof live load shown covers rain loading requirements specific to the use of this truss component.
4) This truss has been designed for a 10.0 psf bottom chord live load nonconcurrent with any other live loads.
5) * This truss has been designed for a live load of 20.0psf on the bottom chord in all areas where a rectangle 3-6-0 tall by 2-0-0 wide will fit between the bottom chord and any other members.
6) All bearings are assumed to be SP No.2 crushing capacity of 565 psi.
7) Provide mechanical connection (by others) of truss to bearing plate capable of withstanding 100 lb uplift at joint(s) 4 except (jt=lb) 2=119.

LOAD CASE(S) Standard

Job	Truss	Truss Type	Qty	Ply	PFS SOLUTIONS - LOT 5 AL
2714379	T08A	Common Girder	1	2	Job Reference (optional)

Scale = 1:36.0

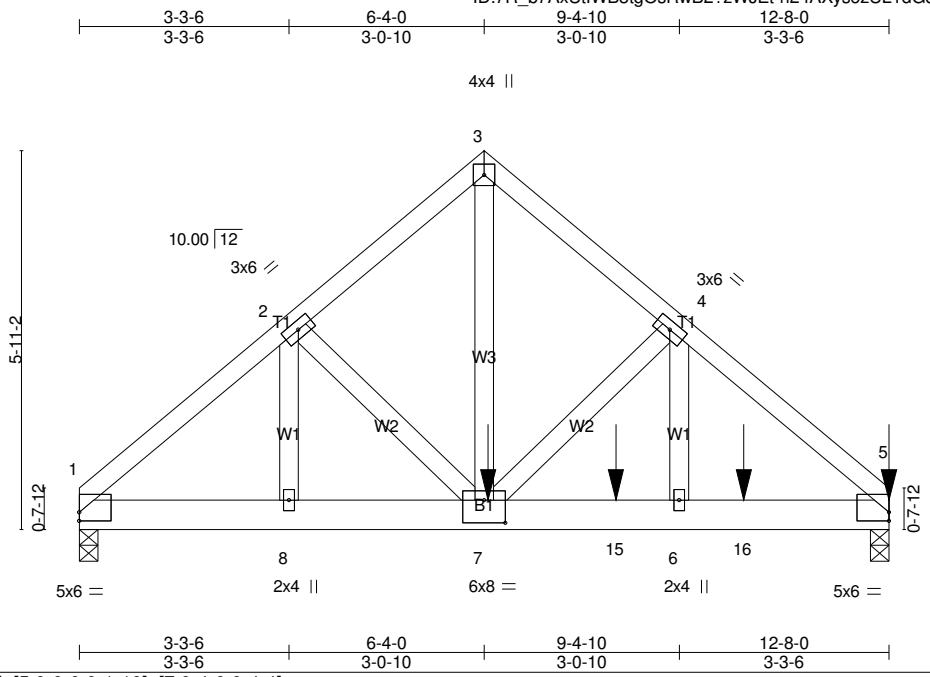

Plate Offsets (X,Y)-- [1:0-0-0,0-1-10], [5:0-0-0,0-1-10], [7:0-4-0,0-4-4]

LOADING (psf)		**SPACING-**	2-0-0	**CSI.**		**DEFL.**	in	(loc)	l/defl	L/d	**PLATES**	**GRIP**
TCLL	20.0	Plate Grip DOL	1.25	TC	0.14	Vert(LL)	-0.03	6-7	>999	240	MT20	244/190
TCDL	7.0	Lumber DOL	1.25	BC	0.48	Vert(CT)	-0.06	6-7	>999	180		
BCLL	0.0 *	Rep Stress Incr	NO	WB	0.62	Horz(CT)	0.01	5	n/a	n/a		
BCDL	10.0	Code FBC2020/TPI2014		Matrix-MS							Weight: 163 lb	FT = 20%

LUMBER-
TOP CHORD 2x4 SP No.2
BOT CHORD 2x6 SP No.2
WEBS 2x4 SP No.3

BRACING-
TOP CHORD Structural wood sheathing directly applied or 6-0-0 oc purlins.
BOT CHORD Rigid ceiling directly applied or 10-0-0 oc bracing.

REACTIONS. (lb/size) 1=1983/0-3-8, 5=3780/0-3-8
Max Horz 1=116(LC 5)
Max Uplift1=-701(LC 8), 5=-1056(LC 9)
Max Grav 1=1983(LC 1), 5=3972(LC 2)

FORCES. (lb) - Max. Comp./Max. Ten. - All forces 250 (lb) or less except when shown.
TOP CHORD 1-2=-2676/973, 2-3=-2686/1051, 3-4=-2686/1051, 4-5=-3858/1179
BOT CHORD 1-8=-761/1995, 7-8=-761/1995, 7-15=-866/2918, 6-15=-866/2918, 6-16=-866/2918, 5-16=-866/2918
WEBS 3-7=-1260/3232, 4-7=-1220/271, 4-6=-207/1490

NOTES-
1) 2-ply truss to be connected together with 10d (0.131"x3") nails as follows:
Top chords connected as follows: 2x4 - 1 row at 0-9-0 oc.
Bottom chords connected as follows: 2x6 - 2 rows staggered at 0-9-0 oc.
Webs connected as follows: 2x4 - 1 row at 0-9-0 oc.
2) All loads are considered equally applied to all plies, except if noted as front (F) or back (B) face in the LOAD CASE(S) section. Ply to ply connections have been provided to distribute only loads noted as (F) or (B), unless otherwise indicated.
3) Unbalanced roof live loads have been considered for this design.
4) Wind: ASCE 7-16; Vult=130mph (3-second gust) Vasd=101mph; TCDL=4.2psf; BCDL=3.0psf; h=20ft; Cat. II; Exp B; Encl., GCpi=0.18; MWFRS (envelope) gable end zone; Lumber DOL=1.60 plate grip DOL=1.60
5) Building Designer / Project engineer responsible for verifying applied roof live load shown covers rain loading requirements specific to the use of this truss component.
6) This truss has been designed for a 10.0 psf bottom chord live load nonconcurrent with any other live loads.
7) * This truss has been designed for a live load of 20.0psf on the bottom chord in all areas where a rectangle 3-6-0 tall by 2-0-0 wide will fit between the bottom chord and any other members.
8) All bearings are assumed to be SP No.2 crushing capacity of 565 psi.
9) Provide mechanical connection (by others) of truss to bearing plate capable of withstanding 100 lb uplift at joint(s) except (jt=lb) 1=701, 5=1056.
10) Hanger(s) or other connection device(s) shall be provided sufficient to support concentrated load(s) 2084 lb down and 1066 lb up at 6-4-12, 974 lb down and 167 lb up at 8-4-12, and 1051 lb down and 205 lb up at 10-4-12, and 1059 lb down and 198 lb up at 12-8-0 on bottom chord. The design/selection of such connection device(s) is the responsibility of others.

LOAD CASE(S) Standard
1) Dead + Roof Live (balanced): Lumber Increase=1.25, Plate Increase=1.25

Continued on page 2

LOAD CASE(S) Standard

Uniform Loads (plf)

Vert: 1-3=-54, 3-5=-54, 9-12=-20

Concentrated Loads (lb)

Vert: 7=-2084(F) 14=-951(B) 15=-847(F) 16=-943(B)

Job	Truss	Truss Type	Qty	Ply	PFS SOLUTIONS - LOT 5 AL
2714379	T08G	Common Supported Gable	1	1	Job Reference (optional)

Scale = 1:41.7

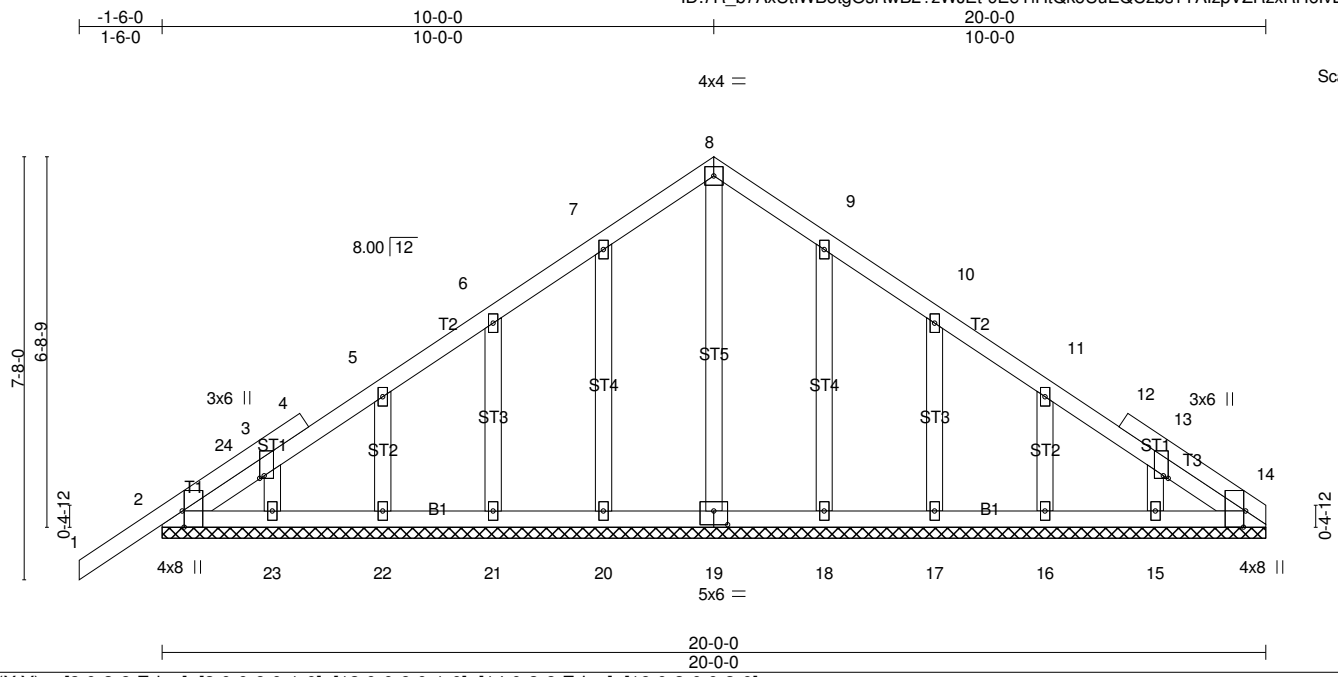

Plate Offsets (X,Y)-- [2:0-3-8,Edge], [3:0-0-9,0-1-0], [13:0-0-9,0-1-0], [14:0-3-8,Edge], [19:0-3-0,0-3-0]

LOADING (psf)		**SPACING-**	2-0-0	**CSI.**		**DEFL.**	in	(loc)	l/defl	L/d	**PLATES**	**GRIP**
TCLL	20.0	Plate Grip DOL	1.25	TC	0.13	Vert(LL)	-0.00	1	n/r	120	MT20	244/190
TCDL	7.0	Lumber DOL	1.25	BC	0.03	Vert(CT)	-0.00	1	n/r	120		
BCLL	0.0 *	Rep Stress Incr	YES	WB	0.09	Horz(CT)	0.00	14	n/a	n/a		
BCDL	10.0	Code FBC2020/TPI2014		Matrix-S							Weight: 119 lb	FT = 20%

LUMBER-
TOP CHORD 2x4 SP No.2
BOT CHORD 2x4 SP No.2
OTHERS 2x4 SP No.3

BRACING-
TOP CHORD Structural wood sheathing directly applied or 6-0-0 oc purlins.
BOT CHORD Rigid ceiling directly applied or 10-0-0 oc bracing.

MiTek recommends that Stabilizers and required cross bracing be installed during truss erection, in accordance with Stabilizer Installation guide.

REACTIONS. All bearings 20-0-0.
(lb) - Max Horz 2=154(LC 9)
Max Uplift All uplift 100 lb or less at joint(s) 2, 20, 21, 22, 23, 18, 17, 16, 15
Max Grav All reactions 250 lb or less at joint(s) 2, 14, 19, 20, 21, 22, 23, 18, 17, 16, 15

FORCES. (lb) - Max. Comp./Max. Ten. - All forces 250 (lb) or less except when shown.

NOTES-
1) Unbalanced roof live loads have been considered for this design.
2) Wind: ASCE 7-16; Vult=130mph (3-second gust) Vasd=101mph; TCDL=4.2psf; BCDL=3.0psf; h=20ft; Cat. II; Exp B; Encl., GCpi=0.18; MWFRS (envelope) gable end zone and C-C Corner(3E) -1-6-0 to 1-6-0, Exterior(2N) 1-6-0 to 10-0-0, Corner(3R) 10-0-0 to 13-0-0, Exterior(2N) 13-0-0 to 20-0-0 zone;C-C for members and forces & MWFRS for reactions shown; Lumber DOL=1.60 plate grip DOL=1.60
3) Truss designed for wind loads in the plane of the truss only. For studs exposed to wind (normal to the face), see Standard Industry Gable End Details as applicable, or consult qualified building designer as per ANSI/TPI 1.
4) Building Designer / Project engineer responsible for verifying applied roof live load shown covers rain loading requirements specific to the use of this truss component.
5) All plates are 2x4 MT20 unless otherwise indicated.
6) Gable requires continuous bottom chord bearing.
7) Gable studs spaced at 2-0-0 oc.
8) This truss has been designed for a 10.0 psf bottom chord live load nonconcurrent with any other live loads.
9) * This truss has been designed for a live load of 20.0psf on the bottom chord in all areas where a rectangle 3-6-0 tall by 2-0-0 wide will fit between the bottom chord and any other members.
10) All bearings are assumed to be SP No.2 crushing capacity of 565 psi.
11) Provide mechanical connection (by others) of truss to bearing plate capable of withstanding 100 lb uplift at joint(s) 2, 20, 21, 22, 23, 18, 17, 16, 15.

LOAD CASE(S) Standard

Job	Truss	Truss Type	Qty	Ply	PFS SOLUTIONS - LOT 5 AL
2714379	T09	Roof Special	2	1	Job Reference (optional)

Builders FirstSource, Lake City, FL 32055, Kim Holloway

8.420 s Nov 10 2020 MiTek Industries, Inc. Wed Mar 31 09:31:52 2021 Page 1
ID:7R_b7AxUtIWB3tgOsRwB2?zWJEt-6dmIAzugGPkcUjMMjH30Fj227Nx2PA4PmCi7wWzVTSr

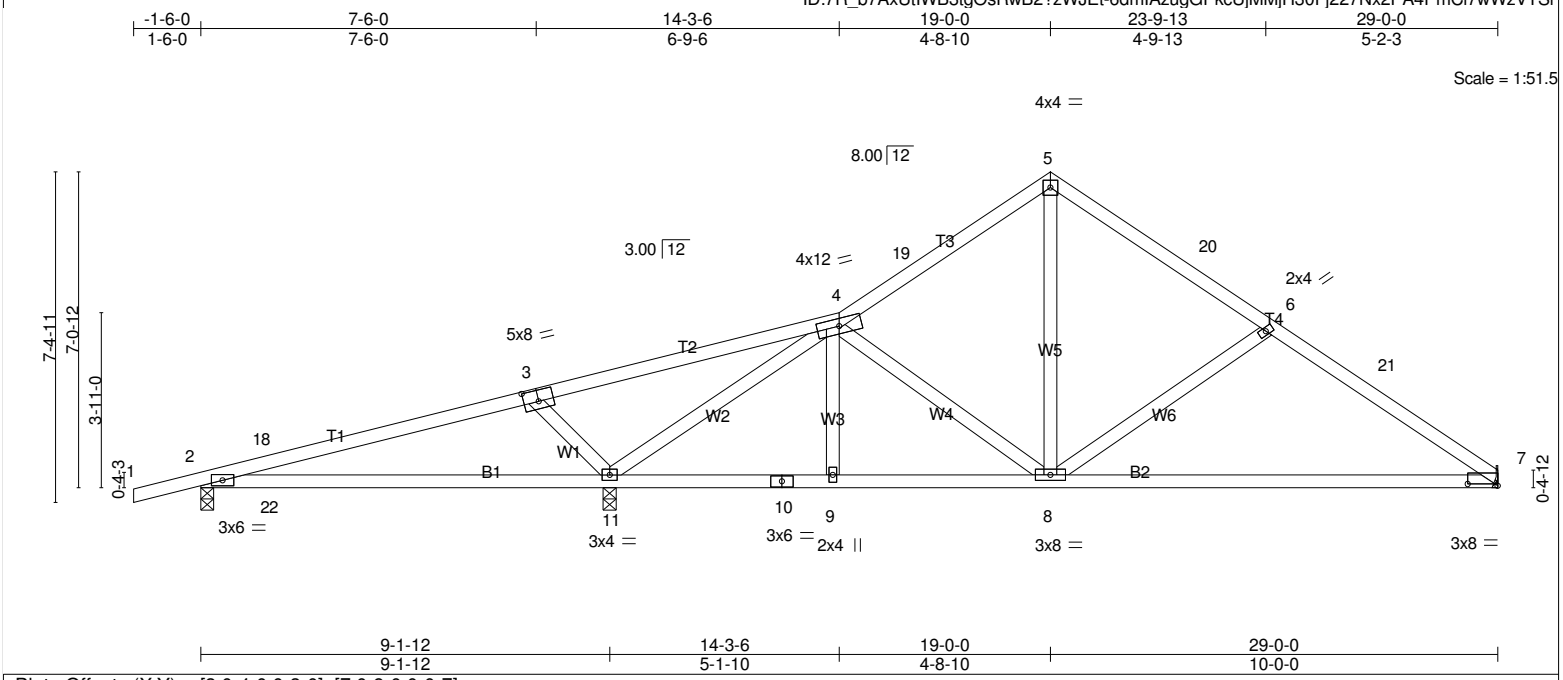

Plate Offsets (X,Y)-- [3:0-4-0,0-3-0], [7:0-8-0,0-0-7]

LOADING (psf)		**SPACING-** 2-0-0	**CSI.**		**DEFL.**	in	(loc)	l/defl	L/d	**PLATES**	**GRIP**
TCLL	20.0	Plate Grip DOL 1.25	TC	0.63	Vert(LL)	0.21	11-17	>534	240	MT20	244/190
TCDL	7.0	Lumber DOL 1.25	BC	0.76	Vert(CT)	-0.42	8-14	>565	180		
BCLL	0.0 *	Rep Stress Incr YES	WB	0.77	Horz(CT)	0.02	7	n/a	n/a		
BCDL	10.0	Code FBC2020/TPI2014	Matrix-MS							Weight: 138 lb	FT = 20%

LUMBER-
TOP CHORD 2x4 SP No.2
BOT CHORD 2x4 SP No.2
WEBS 2x4 SP No.3

BRACING-
TOP CHORD Structural wood sheathing directly applied or 5-6-9 oc purlins.
BOT CHORD Rigid ceiling directly applied or 10-0-0 oc bracing, Except:
6-0-0 oc bracing: 2-11.

MiTek recommends that Stabilizers and required cross bracing be installed during truss erection, in accordance with Stabilizer Installation guide.

REACTIONS. (lb/size) 7=697/Mechanical, 2=345/0-3-8, 11=1184/0-3-8
Max Horz 2=163(LC 9)
Max Uplift7=-144(LC 13), 2=-209(LC 8), 11=-285(LC 12)
Max Grav 7=697(LC 1), 2=358(LC 23), 11=1184(LC 1)

FORCES. (lb) - Max. Comp./Max. Ten. - All forces 250 (lb) or less except when shown.
TOP CHORD 3-4=-95/270, 4-19=-692/230, 5-19=-620/244, 5-20=-621/246, 6-20=-707/225, 6-21=-876/289, 7-21=-941/277
BOT CHORD 10-11=-116/633, 9-10=-116/633, 8-9=-117/633, 7-8=-171/759
WEBS 3-11=-487/259, 4-11=-1053/243, 5-8=-122/485, 6-8=-318/198

NOTES-
1) Unbalanced roof live loads have been considered for this design.
2) Wind: ASCE 7-16; Vult=130mph (3-second gust) Vasd=101mph; TCDL=4.2psf; BCDL=3.0psf; h=20ft; Cat. II; Exp B; Encl., GCpi=0.18; MWFRS (envelope) gable end zone and C-C Exterior(2E) -1-6-0 to 1-6-0, Interior(1) 1-6-0 to 19-0-0, Exterior(2R) 19-0-0 to 22-0-0, Interior(1) 22-0-0 to 29-0-0 zone; porch left exposed;C-C for members and forces & MWFRS for reactions shown; Lumber DOL=1.60 plate grip DOL=1.60
3) Building Designer / Project engineer responsible for verifying applied roof live load shown covers rain loading requirements specific to the use of this truss component.
4) This truss has been designed for a 10.0 psf bottom chord live load nonconcurrent with any other live loads.
5) * This truss has been designed for a live load of 20.0psf on the bottom chord in all areas where a rectangle 3-6-0 tall by 2-0-0 wide will fit between the bottom chord and any other members.
6) All bearings are assumed to be SP No.2 crushing capacity of 565 psi.
7) Refer to girder(s) for truss to truss connections.
8) Provide mechanical connection (by others) of truss to bearing plate capable of withstanding 100 lb uplift at joint(s) except (jt=lb) 7=144, 2=209, 11=285.

LOAD CASE(S) Standard

Job	Truss	Truss Type	Qty	Ply	PFS SOLUTIONS - LOT 5 AL
2714379	T09G	GABLE	1	1	Job Reference (optional)

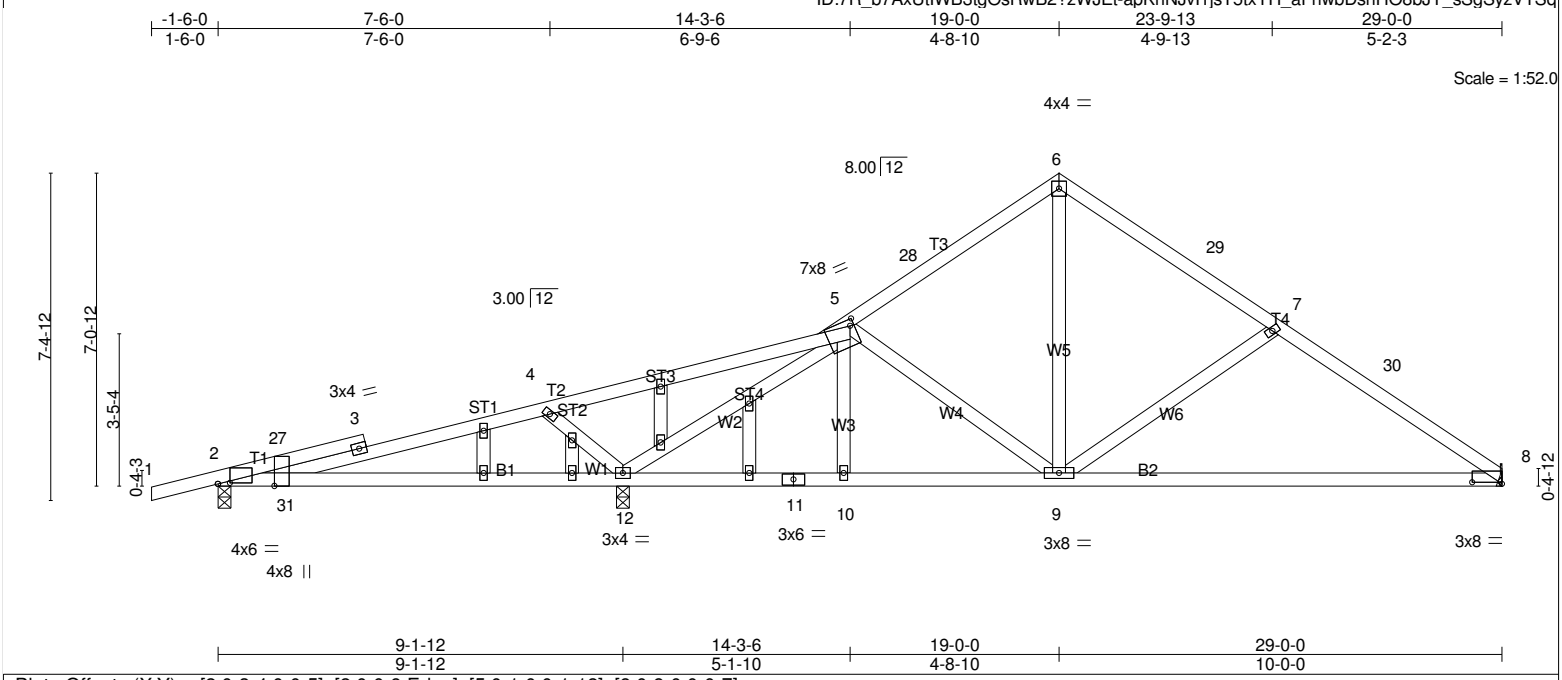

Plate Offsets (X,Y)-- [2:0-3-4,0-0-5], [2:0-0-9,Edge], [5:0-1-0,0-1-12], [8:0-8-0,0-0-7]

LOADING (psf)		**SPACING-**	2-0-0	**CSI.**		**DEFL.**	in	(loc)	l/defl	L/d	**PLATES**	**GRIP**
TCLL	20.0	Plate Grip DOL	1.25	TC	0.64	Vert(LL)	0.15	12-23	>745	240	MT20	244/190
TCDL	7.0	Lumber DOL	1.25	BC	0.75	Vert(CT)	-0.42	9-26	>562	180		
BCLL	0.0 *	Rep Stress Incr	YES	WB	0.90	Horz(CT)	0.01	8	n/a	n/a		
BCDL	10.0	Code FBC2020/TPI2014		Matrix-MS							Weight: 149 lb	FT = 20%

LUMBER-
TOP CHORD 2x4 SP No.2
BOT CHORD 2x4 SP No.2
WEBS 2x4 SP No.3
OTHERS 2x4 SP No.3

BRACING-
TOP CHORD Structural wood sheathing directly applied or 5-7-13 oc purlins.
BOT CHORD Rigid ceiling directly applied or 10-0-0 oc bracing, Except:
6-0-0 oc bracing: 2-12.

MiTek recommends that Stabilizers and required cross bracing be installed during truss erection, in accordance with Stabilizer Installation guide.

REACTIONS. (lb/size) 2=300/0-3-8, 8=676/Mechanical, 12=1248/0-3-8
Max Horz 2=162(LC 11)
Max Uplift2=-187(LC 8), 8=-143(LC 13), 12=-295(LC 12)
Max Grav 2=310(LC 23), 8=676(LC 1), 12=1248(LC 1)

FORCES. (lb) - Max. Comp./Max. Ten. - All forces 250 (lb) or less except when shown.
TOP CHORD 4-5=-248/554, 5-28=-672/197, 6-28=-592/212, 6-29=-583/212, 7-29=-668/192, 7-30=-837/255, 8-30=-902/243
BOT CHORD 11-12=-112/578, 10-11=-112/578, 9-10=-111/580, 8-9=-145/727
WEBS 4-12=-513/277, 5-12=-1295/388, 6-9=-103/456, 7-9=-318/198

NOTES-
1) Unbalanced roof live loads have been considered for this design.
2) Wind: ASCE 7-16; Vult=130mph (3-second gust) Vasd=101mph; TCDL=4.2psf; BCDL=3.0psf; h=20ft; Cat. II; Exp B; Encl., GCpi=0.18; MWFRS (envelope) gable end zone and C-C Exterior(2E) -1-6-0 to 1-6-0, Interior(1) 1-6-0 to 19-0-0, Exterior(2R) 19-0-0 to 22-0-0, Interior(1) 22-0-0 to 29-0-0 zone; porch left exposed;C-C for members and forces & MWFRS for reactions shown; Lumber DOL=1.60 plate grip DOL=1.60
3) Truss designed for wind loads in the plane of the truss only. For studs exposed to wind (normal to the face), see Standard Industry Gable End Details as applicable, or consult qualified building designer as per ANSI/TPI 1.
4) Building Designer / Project engineer responsible for verifying applied roof live load shown covers rain loading requirements specific to the use of this truss component.
5) All plates are 2x4 MT20 unless otherwise indicated.
6) Gable studs spaced at 2-0-0 oc.
7) This truss has been designed for a 10.0 psf bottom chord live load nonconcurrent with any other live loads.
8) * This truss has been designed for a live load of 20.0psf on the bottom chord in all areas where a rectangle 3-6-0 tall by 2-0-0 wide will fit between the bottom chord and any other members.
9) All bearings are assumed to be SP No.2 crushing capacity of 565 psi.
10) Refer to girder(s) for truss to truss connections.
11) Provide mechanical connection (by others) of truss to bearing plate capable of withstanding 100 lb uplift at joint(s) except (jt=lb) 2=187, 8=143, 12=295.

LOAD CASE(S) Standard

Job	Truss	Truss Type	Qty	Ply	PFS SOLUTIONS - LOT 5 AL
2714379	T10	Piggyback Base	1	1	Job Reference (optional)

Builders FirstSource, Lake City, FL 32055, Kim Holloway

8.420 s Nov 10 2020 MiTek Industries, Inc. Wed Mar 31 09:31:54 2021 Page 1
ID:7R_b7AxUtIWB3tgOsRwB2?zWJEt-2?u3afwwo0_Kj1Vlqh5UK88NLAfRt4dhDWBD?OzVTSp

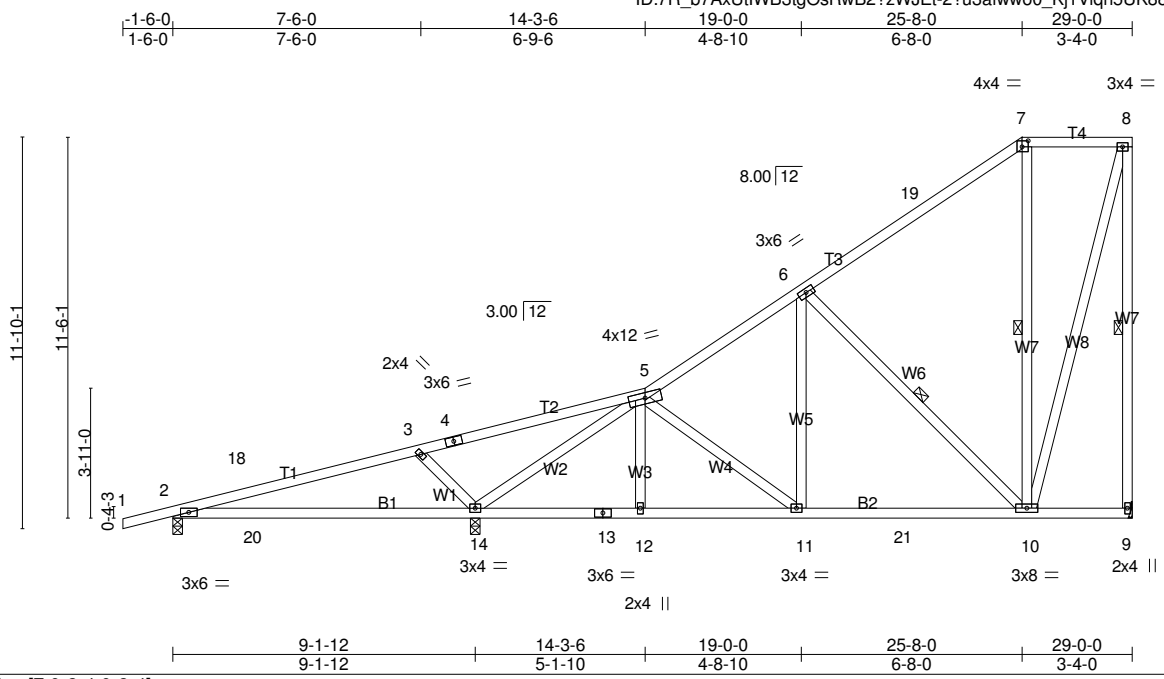

Plate Offsets (X,Y)-- [7:0-2-4,0-2-4]

LOADING (psf)		SPACING-	2-0-0	CSI.		DEFL.	in	(loc)	l/defl	L/d	PLATES	GRIP
TCLL	20.0	Plate Grip DOL	1.25	TC	0.65	Vert(LL)	0.20	14-17	>544	240	MT20	244/190
TCDL	7.0	Lumber DOL	1.25	BC	0.64	Vert(CT)	-0.31	14-17	>359	180		
BCLL	0.0 *	Rep Stress Incr	YES	WB	0.83	Horz(CT)	0.02	9	n/a	n/a		
BCDL	10.0	Code FBC2020/TPI2014		Matrix-MS							Weight: 191 lb	FT = 20%

LUMBER-
TOP CHORD 2x4 SP No.2
BOT CHORD 2x4 SP No.2
WEBS 2x4 SP No.3

BRACING-
TOP CHORD Structural wood sheathing directly applied or 6-0-0 oc purlins, except end verticals, and 2-0-0 oc purlins (6-0-0 max.): 7-8.
BOT CHORD Rigid ceiling directly applied or 9-10-2 oc bracing.
WEBS 1 Row at midpt 8-9, 6-10, 7-10

MiTek recommends that Stabilizers and required cross bracing be installed during truss erection, in accordance with Stabilizer Installation guide.

REACTIONS. (lb/size) 9=689/Mechanical, 2=339/0-3-8, 14=1188/0-3-8
Max Horz 2=395(LC 12)
Max Uplift 9=-229(LC 12), 2=-200(LC 8), 14=-281(LC 12)
Max Grav 9=779(LC 19), 2=340(LC 2), 14=1289(LC 2)

FORCES. (lb) - Max. Comp./Max. Ten. - All forces 250 (lb) or less except when shown.
TOP CHORD 3-4=-255/231, 4-5=-247/309, 5-6=-738/10, 6-19=-318/0, 8-9=-761/279
BOT CHORD 2-20=-283/86, 14-20=-283/86, 13-14=-238/727, 12-13=-238/727, 11-12=-239/723, 11-21=-218/641, 10-21=-218/641
WEBS 3-14=-507/269, 5-14=-1139/233, 6-11=0/366, 6-10=-615/216, 8-10=-268/774

NOTES-
1) Unbalanced roof live loads have been considered for this design.
2) Wind: ASCE 7-16; Vult=130mph (3-second gust) Vasd=101mph; TCDL=4.2psf; BCDL=3.0psf; h=20ft; Cat. II; Exp B; Encl., GCpi=0.18; MWFRS (envelope) gable end zone and C-C Exterior(2E) -1-6-0 to 1-6-0, Interior(1) 1-6-0 to 25-8-0, Exterior(2E) 25-8-0 to 28-10-4 zone; porch left exposed;C-C for members and forces & MWFRS for reactions shown; Lumber DOL=1.60 plate grip DOL=1.60
3) Building Designer / Project engineer responsible for verifying applied roof live load shown covers rain loading requirements specific to the use of this truss component.
4) Provide adequate drainage to prevent water ponding.
5) This truss has been designed for a 10.0 psf bottom chord live load nonconcurrent with any other live loads.
6) * This truss has been designed for a live load of 20.0psf on the bottom chord in all areas where a rectangle 3-6-0 tall by 2-0-0 wide will fit between the bottom chord and any other members, with BCDL = 10.0psf.
7) All bearings are assumed to be SP No.2 crushing capacity of 565 psi.
8) Refer to girder(s) for truss to truss connections.
9) Provide mechanical connection (by others) of truss to bearing plate capable of withstanding 100 lb uplift at joint(s) except (jt=lb) 9=229, 2=200, 14=281.
10) Graphical purlin representation does not depict the size or the orientation of the purlin along the top and/or bottom chord.

LOAD CASE(S) Standard

Job	Truss	Truss Type	Qty	Ply	PFS SOLUTIONS - LOT 5 AL
2714379	T10G	GABLE	1	1	Job Reference (optional)

Builders FirstSource, Lake City, FL 32055, Kim Holloway

8.420 s Nov 10 2020 MiTek Industries, Inc. Wed Mar 31 09:31:55 2021 Page 1
ID:7R_b7AxUtIWB3tgOsRwB2?zWJEt-WCSRo?xZZK6BLB4xOPdjtLgZ4a_KcWCrSAxnXrzVTSo

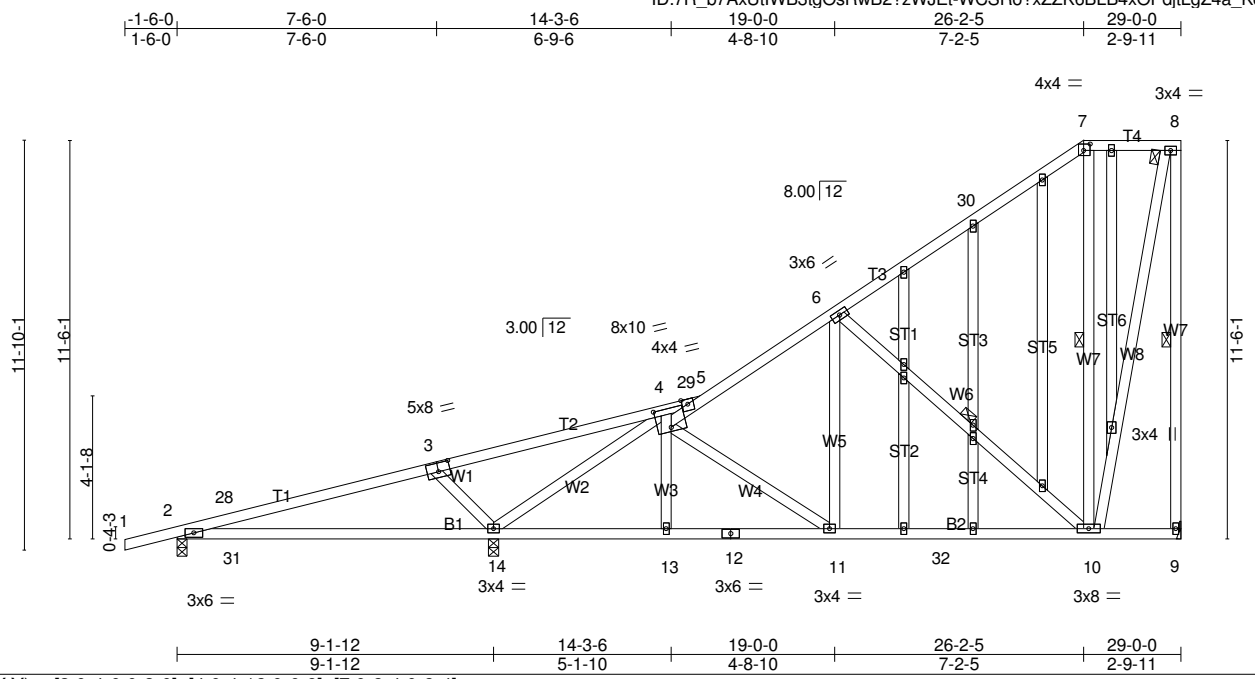

Plate Offsets (X,Y)-- [3:0-4-0,0-3-0], [4:0-4-12,0-6-9], [7:0-2-4,0-2-4]

LOADING (psf)		**SPACING-**	2-0-0	**CSI.**		**DEFL.**	in	(loc)	l/defl	L/d	**PLATES**	**GRIP**
TCLL	20.0	Plate Grip DOL	1.25	TC	0.59	Vert(LL)	0.21	14-27	>525	240	MT20	244/190
TCDL	7.0	Lumber DOL	1.25	BC	0.66	Vert(CT)	-0.32	14-27	>338	180		
BCLL	0.0 *	Rep Stress Incr	YES	WB	0.87	Horz(CT)	0.02	9	n/a	n/a		
BCDL	10.0	Code FBC2020/TPI2014		Matrix-MS							Weight: 242 lb	FT = 20%

LUMBER-

TOP CHORD	2x4 SP No.2
BOT CHORD	2x4 SP No.2
WEBS	2x4 SP No.3
OTHERS	2x4 SP No.3

BRACING-

TOP CHORD	Structural wood sheathing directly applied or 6-0-0 oc purlins, except end verticals, and 2-0-0 oc purlins (6-0-0 max.): 7-8.
BOT CHORD	Rigid ceiling directly applied or 10-0-0 oc bracing, Except: 6-0-0 oc bracing: 2-14.
WEBS	1 Row at midpt 8-9, 6-10, 7-10

MiTek recommends that Stabilizers and required cross bracing be installed during truss erection, in accordance with Stabilizer Installation guide.

REACTIONS. (lb/size) 9=684/Mechanical, 2=328/0-3-8, 14=1205/0-3-8
Max Horz 2=395(LC 12)
Max Uplift9=-238(LC 12), 2=-208(LC 8), 14=-274(LC 12)
Max Grav 9=774(LC 19), 2=328(LC 1), 14=1314(LC 2)

FORCES. (lb) - Max. Comp./Max. Ten. - All forces 250 (lb) or less except when shown.

TOP CHORD	3-4=-227/370, 4-29=-700/0, 5-29=-691/0, 5-6=-732/9, 6-30=-298/0, 8-9=-781/275
BOT CHORD	2-31=-288/41, 14-31=-288/41, 13-14=-253/686, 12-13=-254/684, 11-12=-254/684, 11-32=-229/661, 10-32=-229/661
WEBS	3-14=-456/257, 4-14=-1194/220, 6-11=-9/355, 6-10=-641/227, 8-10=-279/804

NOTES-

1) Unbalanced roof live loads have been considered for this design.
2) Wind: ASCE 7-16; Vult=130mph (3-second gust) Vasd=101mph; TCDL=4.2psf; BCDL=3.0psf; h=20ft; Cat. II; Exp B; Encl., GCpi=0.18; MWFRS (envelope) gable end zone and C-C Exterior(2E) -1-6-0 to 1-6-0, Interior(1) 1-6-0 to 26-2-5, Exterior(2E) 26-2-5 to 28-10-4 zone; porch left exposed;C-C for members and forces & MWFRS for reactions shown; Lumber DOL=1.60 plate grip DOL=1.60
3) Truss designed for wind loads in the plane of the truss only. For studs exposed to wind (normal to the face), see Standard Industry Gable End Details as applicable, or consult qualified building designer as per ANSI/TPI 1.
4) Building Designer / Project engineer responsible for verifying applied roof live load shown covers rain loading requirements specific to the use of this truss component.
5) Provide adequate drainage to prevent water ponding.
6) All plates are 2x4 MT20 unless otherwise indicated.
7) Gable studs spaced at 2-0-0 oc.
8) This truss has been designed for a 10.0 psf bottom chord live load nonconcurrent with any other live loads.
9) * This truss has been designed for a live load of 20.0psf on the bottom chord in all areas where a rectangle 3-6-0 tall by 2-0-0 wide will fit between the bottom chord and any other members, with BCDL = 10.0psf.
10) All bearings are assumed to be SP No.2 crushing capacity of 565 psi.
11) Refer to girder(s) for truss to truss connections.
12) Provide mechanical connection (by others) of truss to bearing plate capable of withstanding 100 lb uplift at joint(s) except (jt=lb) 9=238, 2=208, 14=274.
13) Graphical purlin representation does not depict the size or the orientation of the purlin along the top and/or bottom chord.

LOAD CASE(S) Standard

Job	Truss	Truss Type	Qty	Ply	PFS SOLUTIONS - LOT 5 AL
2714379	T11	Piggyback Base	3	1	Job Reference (optional)

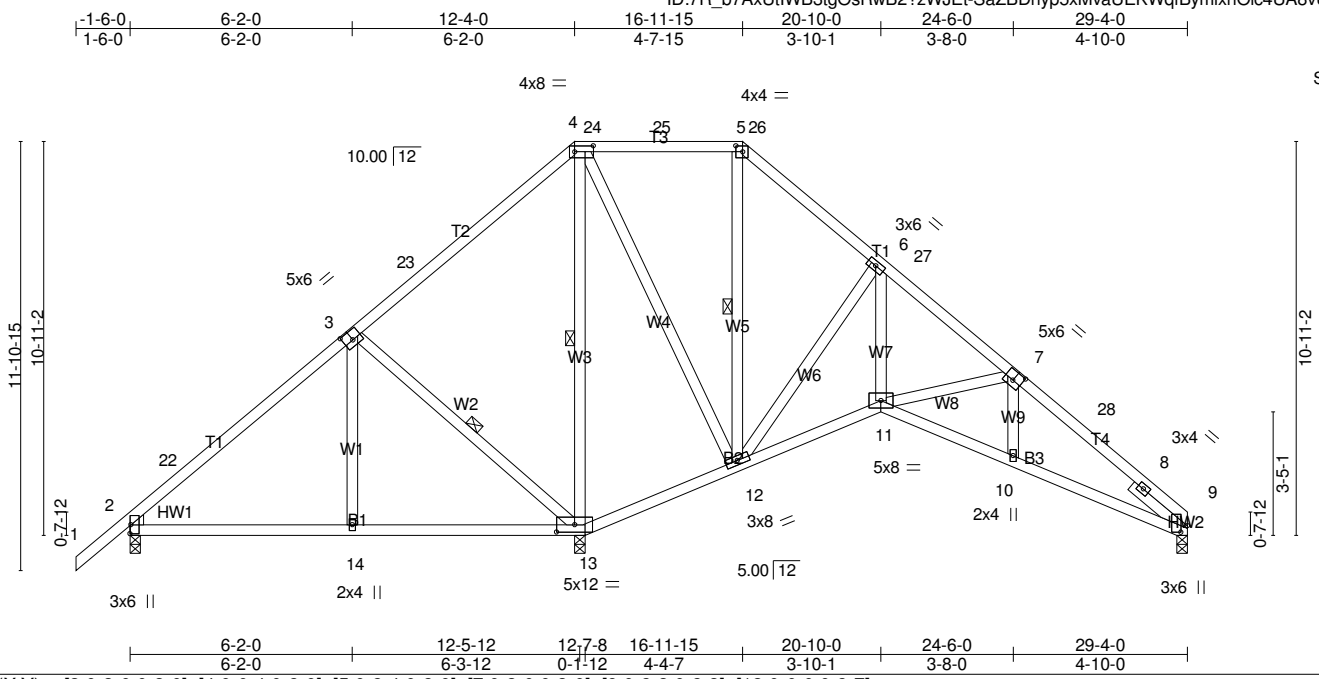

Plate Offsets (X,Y)-- [3:0-3-0,0-3-0], [4:0-6-4,0-2-0], [5:0-2-4,0-2-0], [7:0-3-0,0-3-0], [9:0-2-3,0-2-3], [13:0-6-0,0-2-7]

LOADING (psf)		**SPACING-**	2-0-0	**CSI.**		**DEFL.**	in	(loc)	l/defl	L/d	**PLATES**	**GRIP**
TCLL	20.0	Plate Grip DOL	1.25	TC	0.45	Vert(LL)	-0.04	13-14	>999	240	MT20	244/190
TCDL	7.0	Lumber DOL	1.25	BC	0.35	Vert(CT)	-0.07	13-14	>999	180		
BCLL	0.0 *	Rep Stress Incr	YES	WB	0.59	Horz(CT)	0.05	9	n/a	n/a		
BCDL	10.0	Code FBC2020/TPI2014		Matrix-MS							Weight: 193 lb	FT = 20%

LUMBER-
TOP CHORD 2x4 SP No.2
BOT CHORD 2x4 SP No.2
WEBS 2x4 SP No.3
WEDGE
Left: 2x4 SP No.3
SLIDER Right 2x4 SP No.3 -p 1-11-8

BRACING-
TOP CHORD Structural wood sheathing directly applied or 6-0-0 oc purlins, except 2-0-0 oc purlins (6-0-0 max.): 4-5.
BOT CHORD Rigid ceiling directly applied or 6-0-0 oc bracing.
WEBS 1 Row at midpt 3-13, 4-13, 5-12

MiTek recommends that Stabilizers and required cross bracing be installed during truss erection, in accordance with Stabilizer Installation guide.

REACTIONS. (lb/size) 2=328/0-3-8, 9=449/0-3-8, 13=1475/0-3-8
Max Horz 2=246(LC 11)
Max Uplift 2=-114(LC 12), 9=-138(LC 13), 13=-226(LC 12)
Max Grav 2=433(LC 23), 9=457(LC 24), 13=1475(LC 1)

FORCES. (lb) - Max. Comp./Max. Ten. - All forces 250 (lb) or less except when shown.
TOP CHORD 2-22=-325/110, 3-23=0/289, 4-23=0/416, 6-27=-368/141, 7-27=-485/123, 7-28=-759/236, 8-28=-762/224, 8-9=-382/95
BOT CHORD 12-13=-364/239, 11-12=-22/365, 10-11=-109/650, 9-10=-117/650
WEBS 3-14=0/290, 3-13=-451/249, 4-13=-1000/86, 4-12=-63/581, 6-12=-555/168, 6-11=-20/508, 7-11=-309/194

NOTES-
1) Unbalanced roof live loads have been considered for this design.
2) Wind: ASCE 7-16; Vult=130mph (3-second gust) Vasd=101mph; TCDL=4.2psf; BCDL=3.0psf; h=20ft; Cat. II; Exp B; Encl., GCpi=0.18; MWFRS (envelope) gable end zone and C-C Exterior(2E) -1-6-0 to 1-6-0, Interior(1) 1-6-0 to 12-4-0, Exterior(2R) 12-4-0 to 16-6-15, Interior(1) 16-6-15 to 16-11-15, Exterior(2R) 16-11-15 to 21-2-14, Interior(1) 21-2-14 to 29-4-0 zone;C-C for members and forces & MWFRS for reactions shown; Lumber DOL=1.60 plate grip DOL=1.60
3) Building Designer / Project engineer responsible for verifying applied roof live load shown covers rain loading requirements specific to the use of this truss component.
4) Provide adequate drainage to prevent water ponding.
5) This truss has been designed for a 10.0 psf bottom chord live load nonconcurrent with any other live loads.
6) * This truss has been designed for a live load of 20.0psf on the bottom chord in all areas where a rectangle 3-6-0 tall by 2-0-0 wide will fit between the bottom chord and any other members.
7) All bearings are assumed to be SP No.2 crushing capacity of 565 psi.
8) Bearing at joint(s) 9 considers parallel to grain value using ANSI/TPI 1 angle to grain formula. Building designer should verify capacity of bearing surface.
9) Provide mechanical connection (by others) of truss to bearing plate capable of withstanding 100 lb uplift at joint(s) except (jt=lb) 2=114, 9=138, 13=226.
10) Graphical purlin representation does not depict the size or the orientation of the purlin along the top and/or bottom chord.

LOAD CASE(S) Standard

Job	Truss	Truss Type	Qty	Ply	PFS SOLUTIONS - LOT 5 AL
2714379	T11G	GABLE	1	1	Job Reference (optional)

Builders FirstSource, Lake City, FL 32055, Kim Holloway

8.420 s Nov 10 2020 MiTek Industries, Inc. Wed Mar 31 09:31:59 2021 Page 1
ID:7R_b7AxUtlWB3tgOsRwB2?zWJEt-PzhyeM_3dZccpoOidFhf1BrH?BU0YVAQNov_gczVTSk

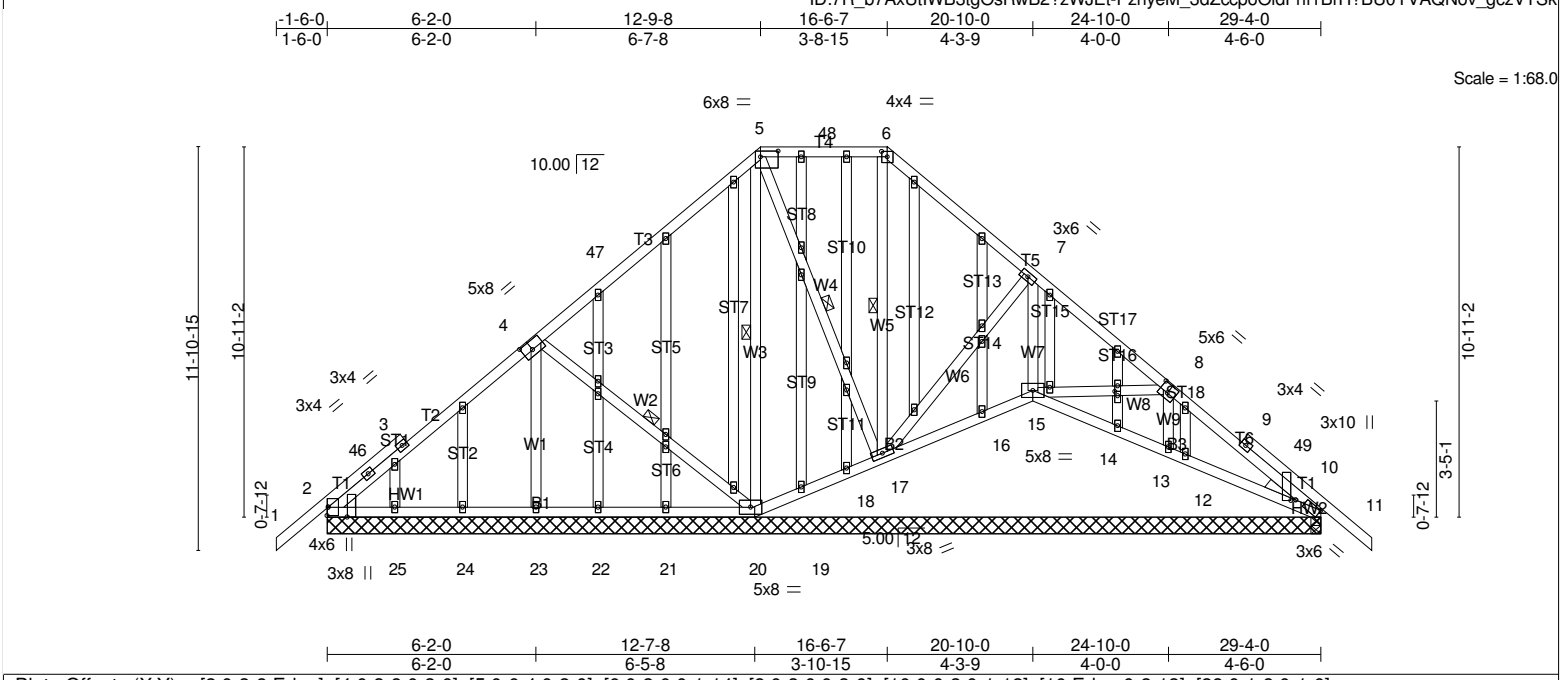

Plate Offsets (X,Y)-- [2:0-3-8,Edge], [4:0-3-8,0-3-0], [5:0-6-4,0-2-0], [6:0-2-0,0-1-14], [8:0-3-0,0-3-0], [10:0-0-3,0-1-12], [10:Edge,0-2-13], [28:0-1-8,0-1-0]

LOADING (psf)		**SPACING-**	2-0-0	**CSI.**		**DEFL.**	in	(loc)	l/defl	L/d	**PLATES**	**GRIP**
TCLL	20.0	Plate Grip DOL	1.25	TC	0.47	Vert(LL)	-0.00	10-12	>999	240	MT20	244/190
TCDL	7.0	Lumber DOL	1.25	BC	0.10	Vert(CT)	-0.01	10-12	>999	180		
BCLL	0.0 *	Rep Stress Incr	YES	WB	0.17	Horz(CT)	0.01	10	n/a	n/a		
BCDL	10.0	Code FBC2020/TPI2014		Matrix-S							Weight: 299 lb	FT = 20%

LUMBER-
TOP CHORD 2x4 SP No.2
BOT CHORD 2x4 SP No.2
WEBS 2x4 SP No.3
OTHERS 2x4 SP No.3
WEDGE
Left: 2x4 SP No.3
SLIDER Right 2x4 SP No.3 -p 0-11-6

BRACING-
TOP CHORD Structural wood sheathing directly applied or 6-0-0 oc purlins, except 2-0-0 oc purlins (6-0-0 max.): 5-6.
BOT CHORD Rigid ceiling directly applied or 10-0-0 oc bracing, Except: 6-0-0 oc bracing: 16-17,15-16,12-13.
WEBS 1 Row at midpt 4-20, 5-20, 5-17, 6-17

MiTek recommends that Stabilizers and required cross bracing be installed during truss erection, in accordance with Stabilizer Installation guide.

REACTIONS. All bearings 29-4-0.
(lb) - Max Horz 2=-256(LC 10)
Max Uplift All uplift 100 lb or less at joint(s) 17, 13, 2, 25 except 23=-183(LC 12), 20=-159(LC 12), 10=-145(LC 13)
Max Grav All reactions 250 lb or less at joint(s) 20, 15, 13, 12, 14, 16, 18, 25, 24, 22, 21, 19 except 23=395(LC 19), 17=415(LC 1), 2=264(LC 23), 10=285(LC 24), 10=283(LC 1)

FORCES. (lb) - Max. Comp./Max. Ten. - All forces 250 (lb) or less except when shown.
BOT CHORD 19-20=-132/270, 18-19=-132/269, 17-18=-124/270
WEBS 4-23=-351/194

NOTES-
1) Unbalanced roof live loads have been considered for this design.
2) Wind: ASCE 7-16; Vult=130mph (3-second gust) Vasd=101mph; TCDL=4.2psf; BCDL=3.0psf; h=20ft; Cat. II; Exp B; Encl., GCpi=0.18; MWFRS (envelope) gable end zone and C-C Exterior(2E) -1-6-0 to 1-6-0, Interior(1) 1-6-0 to 12-9-8, Exterior(2E) 12-9-8 to 16-6-7, Exterior(2R) 16-6-7 to 20-10-0, Interior(1) 20-10-0 to 30-10-0 zone;C-C for members and forces & MWFRS for reactions shown; Lumber DOL=1.60 plate grip DOL=1.60
3) Truss designed for wind loads in the plane of the truss only. For studs exposed to wind (normal to the face), see Standard Industry Gable End Details as applicable, or consult qualified building designer as per ANSI/TPI 1.
4) Building Designer / Project engineer responsible for verifying applied roof live load shown covers rain loading requirements specific to the use of this truss component.
5) Provide adequate drainage to prevent water ponding.
6) All plates are 2x4 MT20 unless otherwise indicated.
7) Gable studs spaced at 2-0-0 oc.
8) This truss has been designed for a 10.0 psf bottom chord live load nonconcurrent with any other live loads.
9) * This truss has been designed for a live load of 20.0psf on the bottom chord in all areas where a rectangle 3-6-0 tall by 2-0-0 wide will fit between the bottom chord and any other members.
10) All bearings are assumed to be SP No.2 crushing capacity of 565 psi.
11) Provide mechanical connection (by others) of truss to bearing plate capable of withstanding 100 lb uplift at joint(s) 17, 13, 2, 25 except (jt=lb) 23=183, 20=159, 10=145.
12) Graphical purlin representation does not depict the size or the orientation of the purlin along the top and/or bottom chord.

LOAD CASE(S) Standard

Job	Truss	Truss Type	Qty	Ply	PFS SOLUTIONS - LOT 5 AL
2714379	T12	Piggyback Base	1	1	Job Reference (optional)

Builders FirstSource, Lake City, FL 32055, Kim Holloway

8.420 s Nov 10 2020 MiTek Industries, Inc. Wed Mar 31 09:32:01 2021 Page 1
ID:7R_b7AxUtlWB3tgOsRwB2?zWJEt-LMpi22?J8AsK36Y5lfk76cwZi?4o0Dajq6O5kVzVTSi

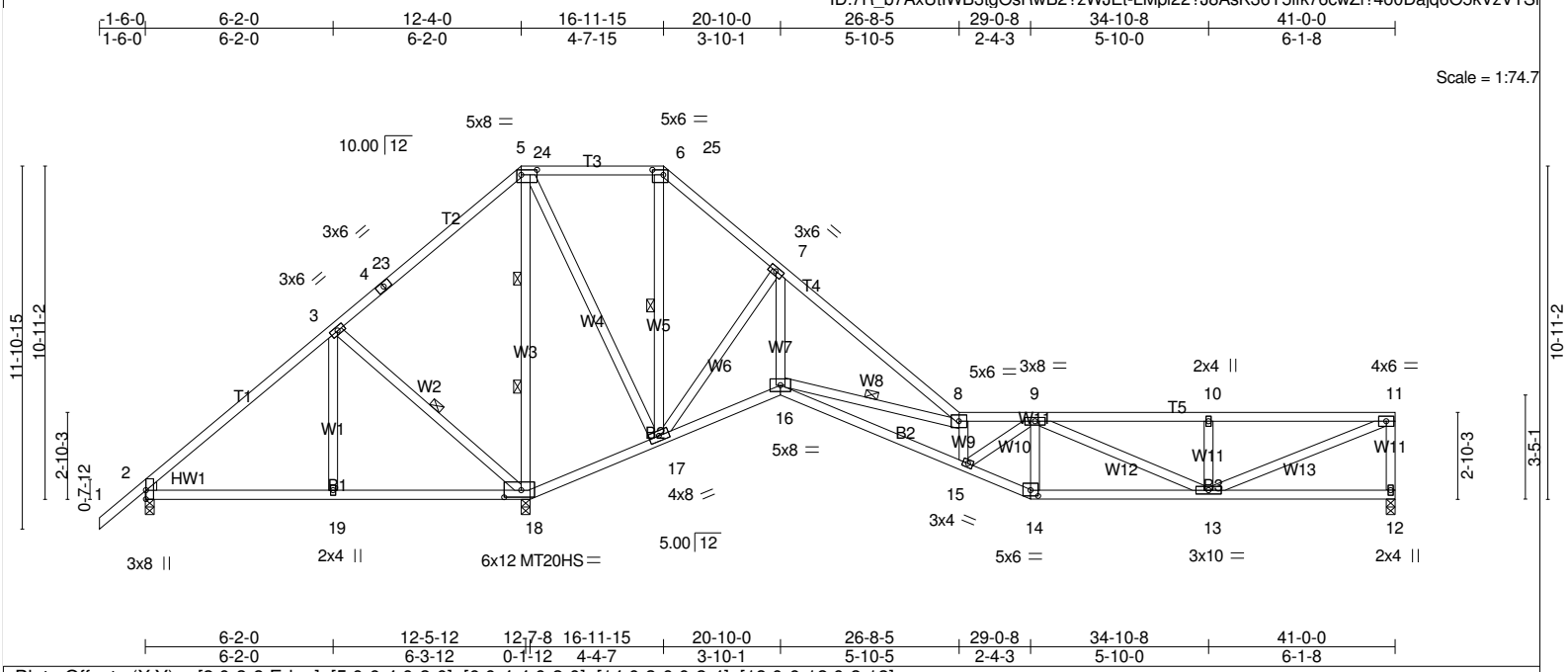

Plate Offsets (X,Y)-- [2:0-3-8,Edge], [5:0-6-4,0-2-0], [6:0-4-4,0-2-0], [14:0-3-0,0-2-4], [18:0-6-12,0-2-12]

LOADING (psf)		**SPACING-**	2-0-0	**CSI.**		**DEFL.**	in	(loc)	l/defl	L/d	**PLATES**	**GRIP**
TCLL	20.0	Plate Grip DOL	1.25	TC	0.71	Vert(LL)	-0.13	15	>999	240	MT20	244/190
TCDL	7.0	Lumber DOL	1.25	BC	0.46	Vert(CT)	-0.25	15-16	>999	180	MT20HS	187/143
BCLL	0.0 *	Rep Stress Incr	YES	WB	0.88	Horz(CT)	0.03	12	n/a	n/a		
BCDL	10.0	Code FBC2020/TPI2014		Matrix-MS							Weight: 258 lb	FT = 20%

LUMBER-
TOP CHORD 2x4 SP No.2
BOT CHORD 2x4 SP No.2
WEBS 2x4 SP No.3
WEDGE
Left: 2x4 SP No.3

BRACING-
TOP CHORD Structural wood sheathing directly applied or 10-0-0 oc purlins, except end verticals, and 2-0-0 oc purlins (5-2-0 max.): 5-6, 8-11.
BOT CHORD Rigid ceiling directly applied or 5-4-14 oc bracing.
WEBS 1 Row at midpt 3-18, 6-17, 8-16
2 Rows at 1/3 pts 5-18

MiTek recommends that Stabilizers and required cross bracing be installed during truss erection, in accordance with Stabilizer Installation guide.

REACTIONS. (lb/size) 12=646/0-3-8, 2=-337/0-3-8, 18=2795/0-3-8
Max Horz 2=240(LC 9)
Max Uplift 12=-169(LC 13), 2=-648(LC 24), 18=-546(LC 13)
Max Grav 12=649(LC 24), 2=141(LC 13), 18=2795(LC 1)

FORCES. (lb) - Max. Comp./Max. Ten. - All forces 250 (lb) or less except when shown.
TOP CHORD 2-3=-239/1137, 3-4=-217/1304, 4-23=-206/1313, 5-23=-197/1422, 5-24=-41/652, 24-25=-41/652, 6-25=-41/652, 6-7=-111/882, 7-8=-206/666, 8-9=-1158/264, 9-10=-1091/280, 10-11=-1091/280, 11-12=-593/183
BOT CHORD 2-19=-837/296, 18-19=-837/296, 17-18=-1181/434, 16-17=-474/245, 15-16=-300/1286, 14-15=-267/1105, 13-14=-254/1031
WEBS 3-19=0/315, 3-18=-482/256, 5-18=-1959/336, 5-17=-168/937, 6-17=-730/116, 7-17=-389/165, 8-16=-1596/497, 9-14=-352/113, 10-13=-348/171, 11-13=-292/1142

NOTES-
1) Unbalanced roof live loads have been considered for this design.
2) Wind: ASCE 7-16; Vult=130mph (3-second gust) Vasd=101mph; TCDL=4.2psf; BCDL=3.0psf; h=20ft; Cat. II; Exp B; Encl., GCpi=0.18; MWFRS (envelope) gable end zone and C-C Exterior(2E) -1-6-0 to 2-7-3, Interior(1) 2-7-3 to 12-4-0, Exterior(2R) 12-4-0 to 16-5-4, Interior(1) 16-5-4 to 16-11-15, Exterior(2R) 16-11-15 to 20-10-0, Interior(1) 20-10-0 to 40-10-4 zone;C-C for members and forces & MWFRS for reactions shown; Lumber DOL=1.60 plate grip DOL=1.60
3) Building Designer / Project engineer responsible for verifying applied roof live load shown covers rain loading requirements specific to the use of this truss component.
4) Provide adequate drainage to prevent water ponding.
5) All plates are MT20 plates unless otherwise indicated.
6) This truss has been designed for a 10.0 psf bottom chord live load nonconcurrent with any other live loads.
7) * This truss has been designed for a live load of 20.0psf on the bottom chord in all areas where a rectangle 3-6-0 tall by 2-0-0 wide will fit between the bottom chord and any other members.
8) All bearings are assumed to be SP No.2 crushing capacity of 565 psi.
9) Provide mechanical connection (by others) of truss to bearing plate capable of withstanding 100 lb uplift at joint(s) except (jt=lb) 12=169, 2=648, 18=546.
10) Graphical purlin representation does not depict the size or the orientation of the purlin along the top and/or bottom chord.

LOAD CASE(S) Standard

Job	Truss	Truss Type	Qty	Ply	PFS SOLUTIONS - LOT 5 AL
2714379	T13	Piggyback Base	1	1	Job Reference (optional)

Builders FirstSource, Lake City, FL 32055, Kim Holloway

8.420 s Nov 10 2020 MiTek Industries, Inc. Wed Mar 31 09:32:03 2021 Page 1
ID:7R_b7AxUtIWB3tgOsRwB2?zWJEt-HkwTTk1agn62IPhTs4mbB1?wWpnjU7Z0IQtCpNzVTSg

1-6-0	6-2-0	12-4-0	16-11-15	20-10-0	26-1-2	29-0-8	34-10-8	41-0-0
1-6-0	6-2-0	6-2-0	4-7-15	3-10-1	5-3-2	2-11-6	5-10-0	6-1-8

Scale = 1:74.7

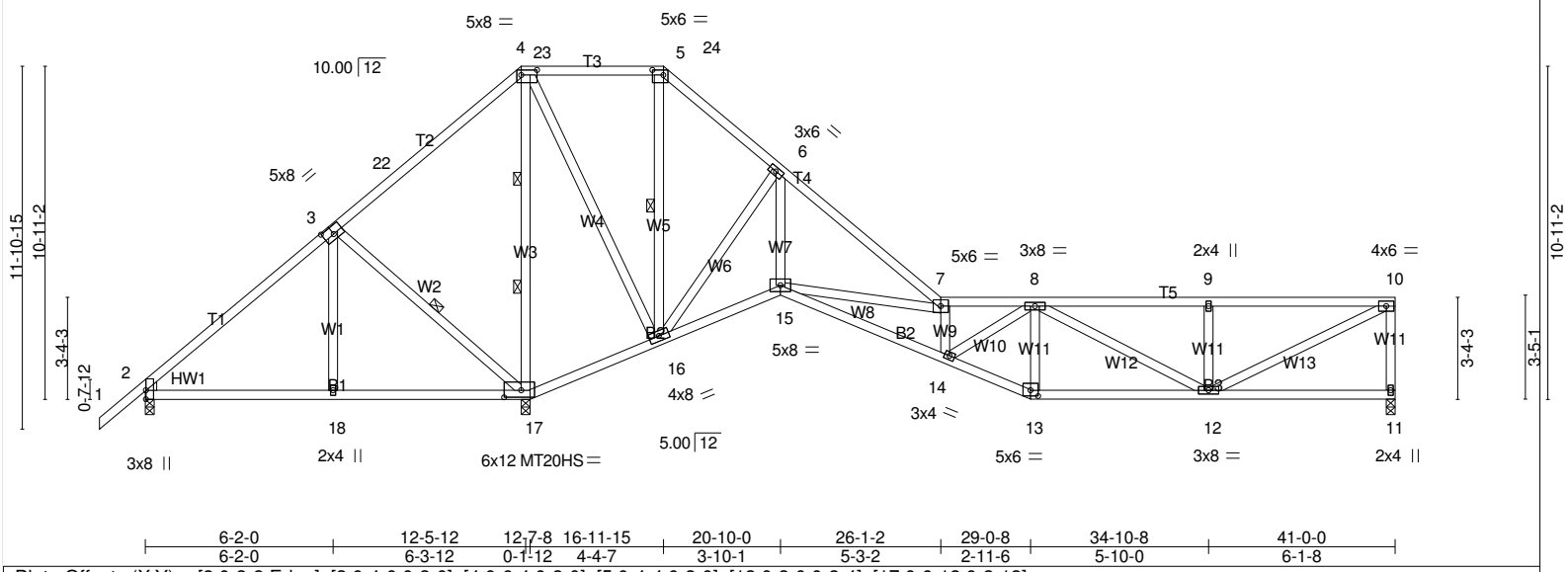

6-2-0	12-5-12	12-7-8	16-11-15	20-10-0	26-1-2	29-0-8	34-10-8	41-0-0
6-2-0	6-3-12	0-1-12	4-4-7	3-10-1	5-3-2	2-11-6	5-10-0	6-1-8

Plate Offsets (X,Y)-- [2:0-3-8,Edge], [3:0-4-0,0-3-0], [4:0-6-4,0-2-0], [5:0-4-4,0-2-0], [13:0-3-0,0-2-4], [17:0-6-12,0-2-12]

LOADING (psf)		**SPACING-**	2-0-0	**CSI.**		**DEFL.**	in	(loc)	l/defl	L/d	**PLATES**	**GRIP**
TCLL	20.0	Plate Grip DOL	1.25	TC	0.69	Vert(LL)	-0.11	14	>999	240	MT20	244/190
TCDL	7.0	Lumber DOL	1.25	BC	0.43	Vert(CT)	-0.21	14-15	>999	180	MT20HS	187/143
BCLL	0.0 *	Rep Stress Incr	YES	WB	0.85	Horz(CT)	0.04	11	n/a	n/a		
BCDL	10.0	Code FBC2020/TPI2014		Matrix-MS							Weight: 261 lb	FT = 20%

LUMBER-
TOP CHORD 2x4 SP No.2
BOT CHORD 2x4 SP No.2
WEBS 2x4 SP No.3
WEDGE
Left: 2x4 SP No.3

BRACING-
TOP CHORD Structural wood sheathing directly applied or 10-0-0 oc purlins, except end verticals, and 2-0-0 oc purlins (5-4-9 max.): 4-5, 7-10.
BOT CHORD Rigid ceiling directly applied or 5-7-14 oc bracing.
WEBS 1 Row at midpt 3-17, 5-16
2 Rows at 1/3 pts 4-17

MiTek recommends that Stabilizers and required cross bracing be installed during truss erection, in accordance with Stabilizer Installation guide.

REACTIONS. (lb/size) 11=681/0-3-8, 2=-261/0-3-8, 17=2685/0-3-8
Max Horz 2=244(LC 12)
Max Uplift 11=-178(LC 13), 2=-571(LC 24), 17=-522(LC 13)
Max Grav 11=683(LC 24), 2=153(LC 23), 17=2685(LC 1)

FORCES. (lb) - Max. Comp./Max. Ten. - All forces 250 (lb) or less except when shown.
TOP CHORD 2-3=-216/1023, 3-22=-194/1186, 4-22=-174/1307, 4-23=-39/559, 23-24=-39/559, 5-24=-39/559, 5-6=-87/767, 6-7=-140/443, 7-8=-1133/256, 8-9=-982/252, 9-10=-982/252, 10-11=-628/191
BOT CHORD 2-18=-749/260, 17-18=-747/260, 16-17=-1082/395, 15-16=-298/182, 14-15=-289/1256, 13-14=-263/1073, 12-13=-247/995
WEBS 3-18=0/311, 3-17=-481/255, 4-17=-1891/330, 4-16=-176/942, 5-16=-661/105, 6-16=-503/197, 6-15=0/371, 7-15=-1392/425, 8-13=-332/117, 9-12=-349/171, 10-12=-273/1068

NOTES-
1) Unbalanced roof live loads have been considered for this design.
2) Wind: ASCE 7-16; Vult=130mph (3-second gust) Vasd=101mph; TCDL=4.2psf; BCDL=3.0psf; h=20ft; Cat. II; Exp B; Encl., GCpi=0.18; MWFRS (envelope) gable end zone and C-C Exterior(2E) -1-6-0 to 2-7-3, Interior(1) 2-7-3 to 12-4-0, Exterior(2R) 12-4-0 to 16-5-4, Interior(1) 16-5-4 to 16-11-15, Exterior(2R) 16-11-15 to 20-10-0, Interior(1) 20-10-0 to 40-10-4 zone;C-C for members and forces & MWFRS for reactions shown; Lumber DOL=1.60 plate grip DOL=1.60
3) Building Designer / Project engineer responsible for verifying applied roof live load shown covers rain loading requirements specific to the use of this truss component.
4) Provide adequate drainage to prevent water ponding.
5) All plates are MT20 plates unless otherwise indicated.
6) This truss has been designed for a 10.0 psf bottom chord live load nonconcurrent with any other live loads.
7) * This truss has been designed for a live load of 20.0psf on the bottom chord in all areas where a rectangle 3-6-0 tall by 2-0-0 wide will fit between the bottom chord and any other members.
8) All bearings are assumed to be SP No.2 crushing capacity of 565 psi.
9) Provide mechanical connection (by others) of truss to bearing plate capable of withstanding 100 lb uplift at joint(s) except (jt=lb) 11=178, 2=571, 17=522.
10) Graphical purlin representation does not depict the size or the orientation of the purlin along the top and/or bottom chord.

LOAD CASE(S) Standard

Job	Truss	Truss Type	Qty	Ply	PFS SOLUTIONS - LOT 5 AL
2714379	T14	Piggyback Base	1	1	Job Reference (optional)

Builders FirstSource, Lake City, FL 32055, Kim Holloway

8.420 s Nov 10 2020 MiTek Industries, Inc. Wed Mar 31 09:32:04 2021 Page 1
ID:7R_b7AxUtIWB3tgOsRwB2?zWJEt-lxUrh42CR5EvwZGgQoHqkEY4fC7?DbCAW4clLpzVTSf

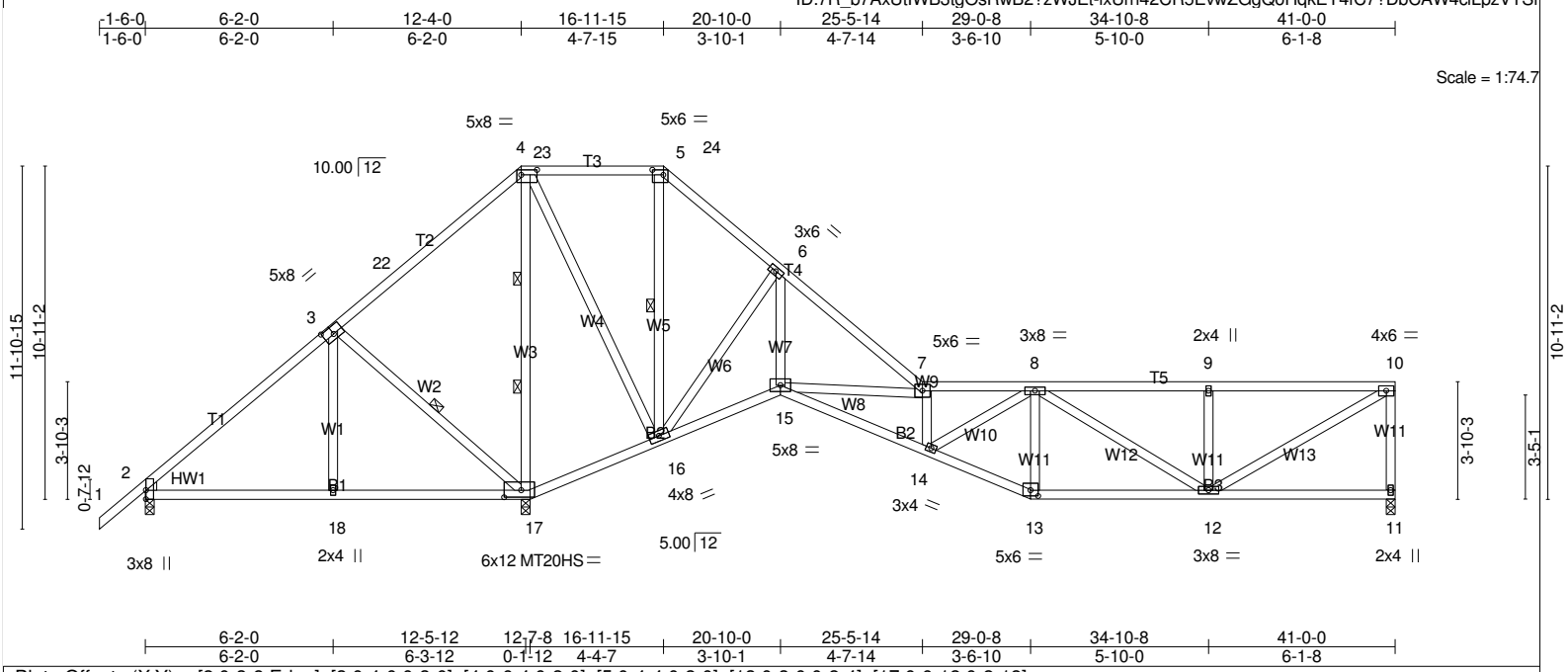

Plate Offsets (X,Y)-- [2:0-3-8,Edge], [3:0-4-0,0-3-0], [4:0-6-4,0-2-0], [5:0-4-4,0-2-0], [13:0-3-0,0-2-4], [17:0-6-12,0-2-12]

LOADING (psf)		**SPACING-**	2-0-0	**CSI.**		**DEFL.**	in	(loc)	l/defl	L/d	**PLATES**	**GRIP**
TCLL	20.0	Plate Grip DOL	1.25	TC	0.66	Vert(LL)	-0.09	14	>999	240	MT20	244/190
TCDL	7.0	Lumber DOL	1.25	BC	0.43	Vert(CT)	-0.18	14-15	>999	180	MT20HS	187/143
BCLL	0.0 *	Rep Stress Incr	YES	WB	0.82	Horz(CT)	0.05	11	n/a	n/a		
BCDL	10.0	Code FBC2020/TPI2014		Matrix-MS							Weight: 264 lb	FT = 20%

LUMBER-
TOP CHORD 2x4 SP No.2
BOT CHORD 2x4 SP No.2
WEBS 2x4 SP No.3
WEDGE
Left: 2x4 SP No.3

BRACING-
TOP CHORD Structural wood sheathing directly applied or 10-0-0 oc purlins, except end verticals, and 2-0-0 oc purlins (5-6-4 max.): 4-5, 7-10.
BOT CHORD Rigid ceiling directly applied or 5-10-10 oc bracing.
WEBS 1 Row at midpt 3-17, 5-16
2 Rows at 1/3 pts 4-17

MiTek recommends that Stabilizers and required cross bracing be installed during truss erection, in accordance with Stabilizer Installation guide.

REACTIONS. (lb/size) 11=708/0-3-8, 2=-199/0-3-8, 17=2595/0-3-8
Max Horz 2=254(LC 12)
Max Uplift 11=-185(LC 13), 2=-508(LC 24), 17=-504(LC 13)
Max Grav 11=711(LC 24), 2=182(LC 23), 17=2595(LC 1)

FORCES. (lb) - Max. Comp./Max. Ten. - All forces 250 (lb) or less except when shown.
TOP CHORD 2-3=-199/931, 3-22=-177/1092, 4-22=-158/1213, 4-23=-37/483, 23-24=-37/483, 5-24=-37/483, 5-6=-70/674, 6-7=-87/261, 7-8=-1077/239, 8-9=-892/228, 9-10=-892/228, 10-11=-657/199
BOT CHORD 2-18=-680/230, 17-18=-677/230, 16-17=-1003/362, 14-15=-268/1190, 13-14=-254/1029, 12-13=-236/950
WEBS 3-18=0/309, 3-17=-478/255, 4-17=-1835/327, 4-16=-183/947, 5-16=-606/98, 6-16=-602/223, 6-15=-39/524, 7-15=-1198/358, 8-13=-307/118, 9-12=-349/170, 10-12=-257/1009

NOTES-
1) Unbalanced roof live loads have been considered for this design.
2) Wind: ASCE 7-16; Vult=130mph (3-second gust) Vasd=101mph; TCDL=4.2psf; BCDL=3.0psf; h=20ft; Cat. II; Exp B; Encl., GCpi=0.18; MWFRS (envelope) gable end zone and C-C Exterior(2E) -1-6-0 to 2-7-3, Interior(1) 2-7-3 to 12-4-0, Exterior(2R) 12-4-0 to 16-5-4, Interior(1) 16-5-4 to 16-11-15, Exterior(2R) 16-11-15 to 20-10-0, Interior(1) 20-10-0 to 40-10-4 zone;C-C for members and forces & MWFRS for reactions shown; Lumber DOL=1.60 plate grip DOL=1.60
3) Building Designer / Project engineer responsible for verifying applied roof live load shown covers rain loading requirements specific to the use of this truss component.
4) Provide adequate drainage to prevent water ponding.
5) All plates are MT20 plates unless otherwise indicated.
6) This truss has been designed for a 10.0 psf bottom chord live load nonconcurrent with any other live loads.
7) * This truss has been designed for a live load of 20.0psf on the bottom chord in all areas where a rectangle 3-6-0 tall by 2-0-0 wide will fit between the bottom chord and any other members.
8) All bearings are assumed to be SP No.2 crushing capacity of 565 psi.
9) Provide mechanical connection (by others) of truss to bearing plate capable of withstanding 100 lb uplift at joint(s) except (jt=lb) 11=185, 2=508, 17=504.
10) Graphical purlin representation does not depict the size or the orientation of the purlin along the top and/or bottom chord.

LOAD CASE(S) Standard

Job	Truss	Truss Type	Qty	Ply	PFS SOLUTIONS - LOT 5 AL
2714379	T15	Piggyback Base	1	1	Job Reference (optional)

Builders FirstSource, Lake City, FL 32055, Kim Holloway

8.420 s Nov 10 2020 MiTek Industries, Inc. Wed Mar 31 09:32:06 2021 Page 1
ID:7R_b7AxUtIWB3tgOsRwB2?zWJEt-iJcb6m3SziVd9tQ2XDJlpfdRy0ojhVPS_O5sQizVTSd

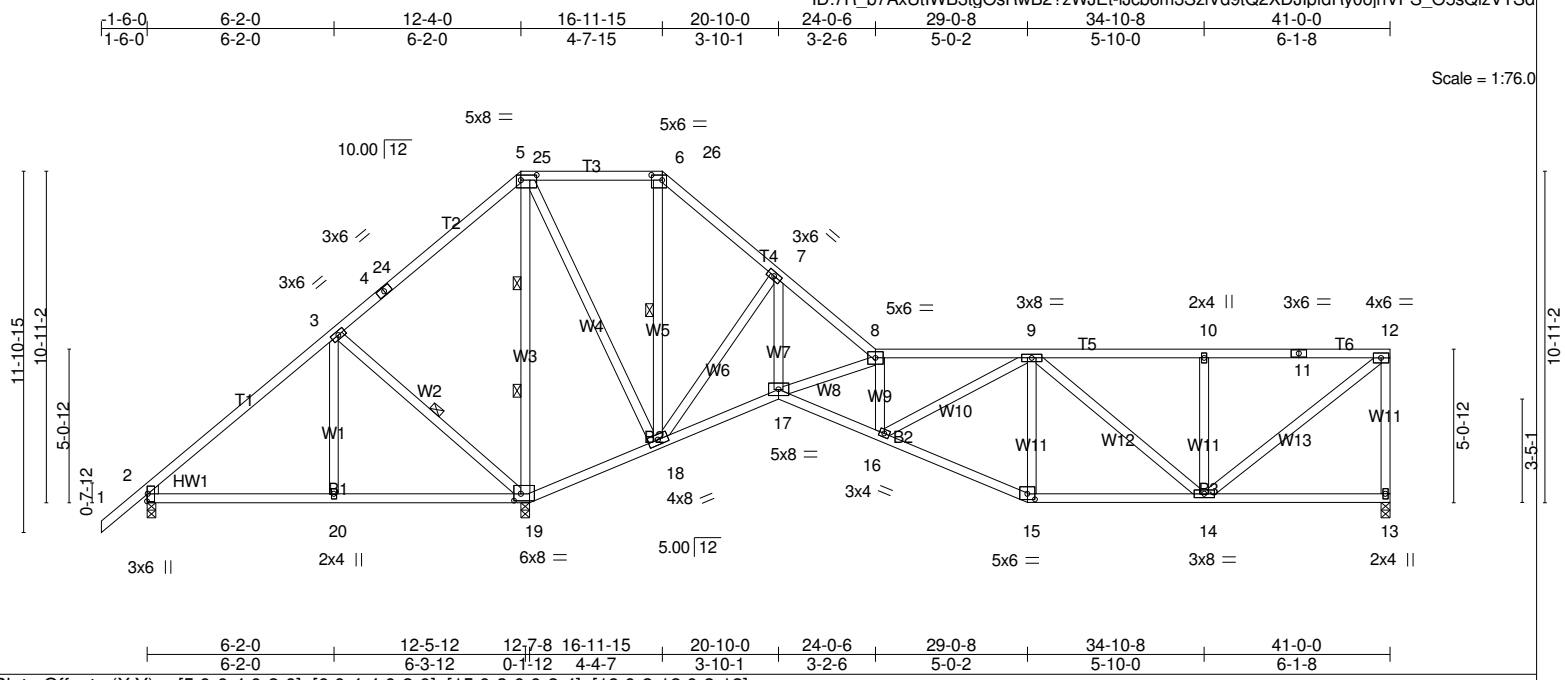

Plate Offsets (X,Y)-- [5:0-6-4,0-2-0], [6:0-4-4,0-2-0], [15:0-3-0,0-2-4], [19:0-2-12,0-2-12]

LOADING (psf)		**SPACING-**	2-0-0	**CSI.**		**DEFL.**	in	(loc)	l/defl	L/d	**PLATES**	**GRIP**
TCLL	20.0	Plate Grip DOL	1.25	TC	0.61	Vert(LL)	-0.07	16	>999	240	MT20	244/190
TCDL	7.0	Lumber DOL	1.25	BC	0.41	Vert(CT)	-0.14	15-16	>999	180		
BCLL	0.0 *	Rep Stress Incr	YES	WB	0.78	Horz(CT)	0.06	13	n/a	n/a		
BCDL	10.0	Code FBC2020/TPI2014		Matrix-MS							Weight: 272 lb	FT = 20%

LUMBER-
TOP CHORD 2x4 SP No.2
BOT CHORD 2x4 SP No.2
WEBS 2x4 SP No.3
WEDGE
Left: 2x4 SP No.3

BRACING-
TOP CHORD Structural wood sheathing directly applied or 6-0-0 oc purlins, except end verticals, and 2-0-0 oc purlins (5-11-0 max.): 5-6, 8-12.
BOT CHORD Rigid ceiling directly applied or 6-0-0 oc bracing.
WEBS 1 Row at midpt 3-19, 6-18
2 Rows at 1/3 pts 5-19

MiTek recommends that Stabilizers and required cross bracing be installed during truss erection, in accordance with Stabilizer Installation guide.

REACTIONS. (lb/size) 13=757/0-3-8, 2=-91/0-3-8, 19=2439/0-3-8
Max Horz 2=278(LC 12)
Max Uplift 13=-198(LC 13), 2=-399(LC 24), 19=-477(LC 13)
Max Grav 13=760(LC 24), 2=233(LC 23), 19=2439(LC 1)

FORCES. (lb) - Max. Comp./Max. Ten. - All forces 250 (lb) or less except when shown.
TOP CHORD 2-3=-182/772, 3-4=-155/927, 4-24=-144/936, 5-24=-135/1049, 5-25=-35/351, 25-26=-35/351, 6-26=-35/351, 6-7=-56/512, 8-9=-890/188, 9-10=-726/185, 10-11=-726/185, 11-12=-726/185, 12-13=-707/211
BOT CHORD 2-20=-560/192, 19-20=-560/192, 18-19=-863/299, 16-17=-209/973, 15-16=-230/918, 14-15=-211/837
WEBS 3-20=0/305, 3-19=-469/255, 5-19=-1735/327, 5-18=-198/957, 6-18=-511/91, 7-18=-773/263, 7-17=-140/805, 8-17=-838/234, 10-14=-341/166, 12-14=-231/907

NOTES-
1) Unbalanced roof live loads have been considered for this design.
2) Wind: ASCE 7-16; Vult=130mph (3-second gust) Vasd=101mph; TCDL=4.2psf; BCDL=3.0psf; h=20ft; Cat. II; Exp B; Encl., GCpi=0.18; MWFRS (envelope) gable end zone and C-C Exterior(2E) -1-6-0 to 2-7-3, Interior(1) 2-7-3 to 12-4-0, Exterior(2R) 12-4-0 to 16-5-4, Interior(1) 16-5-4 to 16-11-15, Exterior(2R) 16-11-15 to 20-10-0, Interior(1) 20-10-0 to 40-10-4 zone;C-C for members and forces & MWFRS for reactions shown; Lumber DOL=1.60 plate grip DOL=1.60
3) Building Designer / Project engineer responsible for verifying applied roof live load shown covers rain loading requirements specific to the use of this truss component.
4) Provide adequate drainage to prevent water ponding.
5) This truss has been designed for a 10.0 psf bottom chord live load nonconcurrent with any other live loads.
6) * This truss has been designed for a live load of 20.0psf on the bottom chord in all areas where a rectangle 3-6-0 tall by 2-0-0 wide will fit between the bottom chord and any other members.
7) All bearings are assumed to be SP No.2 crushing capacity of 565 psi.
8) Provide mechanical connection (by others) of truss to bearing plate capable of withstanding 100 lb uplift at joint(s) except (jt=lb) 13=198, 2=399, 19=477.
9) Graphical purlin representation does not depict the size or the orientation of the purlin along the top and/or bottom chord.

LOAD CASE(S) Standard

Job	Truss	Truss Type	Qty	Ply	PFS SOLUTIONS - LOT 5 AL
2714379	T16	Piggyback Base	1	1	Job Reference (optional)

Builders FirstSource, Lake City, FL 32055, Kim Holloway

8.420 s Nov 10 2020 MiTek Industries, Inc. Wed Mar 31 09:32:08 2021 Page 1

ID:7R_b7AxUtIWB3tgOsRwB2?zWJEt-eikMXR5iVKlLPBaRfeMmu4jnpqUm9OklRiazUbzVTSb

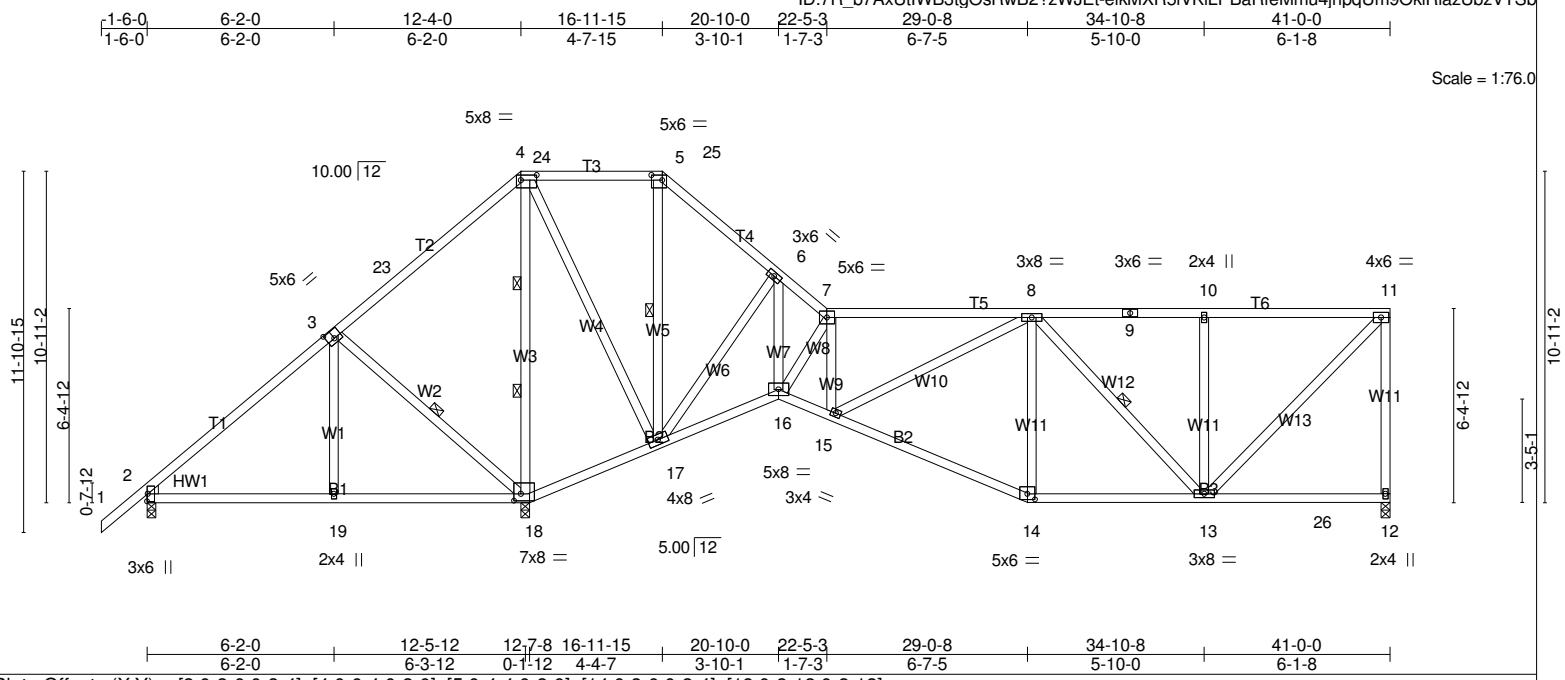

Plate Offsets (X,Y)-- [3:0-3-0,0-3-4], [4:0-6-4,0-2-0], [5:0-4-4,0-2-0], [14:0-3-0,0-2-4], [18:0-2-12,0-2-12]

LOADING (psf)		**SPACING-**	2-0-0	**CSI.**		**DEFL.**	in	(loc)	l/defl	L/d	**PLATES**	**GRIP**
TCLL	20.0	Plate Grip DOL	1.25	TC	0.59	Vert(LL)	-0.10	14-15	>999	240	MT20	244/190
TCDL	7.0	Lumber DOL	1.25	BC	0.44	Vert(CT)	-0.20	14-15	>999	180		
BCLL	0.0 *	Rep Stress Incr	YES	WB	0.85	Horz(CT)	0.06	12	n/a	n/a		
BCDL	10.0	Code FBC2020/TPI2014		Matrix-MS							Weight: 283 lb	FT = 20%

LUMBER-
TOP CHORD 2x4 SP No.2
BOT CHORD 2x4 SP No.2
WEBS 2x4 SP No.3
WEDGE
Left: 2x4 SP No.3

BRACING-
TOP CHORD Structural wood sheathing directly applied or 6-0-0 oc purlins, except end verticals, and 2-0-0 oc purlins (6-0-0 max.): 4-5, 7-11.
BOT CHORD Rigid ceiling directly applied or 6-0-0 oc bracing.
WEBS 1 Row at midpt 3-18, 5-17, 8-13
2 Rows at 1/3 pts 4-18

MiTek recommends that Stabilizers and required cross bracing be installed during truss erection, in accordance with Stabilizer Installation guide.

REACTIONS. (lb/size) 12=791/0-3-8, 2=-13/0-3-8, 18=2326/0-3-8
Max Horz 2=304(LC 12)
Max Uplift12=-208(LC 13), 2=-320(LC 24), 18=-463(LC 13)
Max Grav 12=878(LC 26), 2=270(LC 23), 18=2490(LC 2)

FORCES. (lb) - Max. Comp./Max. Ten. - All forces 250 (lb) or less except when shown.
TOP CHORD 2-3=-190/655, 3-23=-167/870, 4-23=-148/976, 4-24=-34/280, 24-25=-34/280, 5-25=-34/280, 5-6=-54/404, 6-7=-410/93, 7-8=-721/136, 8-9=-645/154, 9-10=-645/154, 10-11=-645/154, 11-12=-762/222
BOT CHORD 2-19=-471/172, 18-19=-469/173, 17-18=-828/246, 16-17=-65/335, 15-16=-153/752, 14-15=-209/884, 13-14=-189/776
WEBS 3-19=0/302, 3-18=-561/255, 4-18=-1713/335, 4-17=-210/1028, 5-17=-436/87, 6-17=-956/292, 6-16=-224/1133, 7-16=-808/182, 7-15=-10/285, 10-13=-326/158, 11-13=-215/902

NOTES-
1) Unbalanced roof live loads have been considered for this design.
2) Wind: ASCE 7-16; Vult=130mph (3-second gust) Vasd=101mph; TCDL=4.2psf; BCDL=3.0psf; h=20ft; Cat. II; Exp B; Encl., GCpi=0.18; MWFRS (envelope) gable end zone and C-C Exterior(2E) -1-6-0 to 2-7-3, Interior(1) 2-7-3 to 12-4-0, Exterior(2R) 12-4-0 to 16-5-4, Interior(1) 16-5-4 to 16-11-15, Exterior(2R) 16-11-15 to 20-10-0, Interior(1) 20-10-0 to 40-10-4 zone;C-C for members and forces & MWFRS for reactions shown; Lumber DOL=1.60 plate grip DOL=1.60
3) Building Designer / Project engineer responsible for verifying applied roof live load shown covers rain loading requirements specific to the use of this truss component.
4) Provide adequate drainage to prevent water ponding.
5) This truss has been designed for a 10.0 psf bottom chord live load nonconcurrent with any other live loads.
6) * This truss has been designed for a live load of 20.0psf on the bottom chord in all areas where a rectangle 3-6-0 tall by 2-0-0 wide will fit between the bottom chord and any other members, with BCDL = 10.0psf.
7) All bearings are assumed to be SP No.2 crushing capacity of 565 psi.
8) Provide mechanical connection (by others) of truss to bearing plate capable of withstanding 100 lb uplift at joint(s) except (jt=lb) 12=208, 2=320, 18=463.
9) Graphical purlin representation does not depict the size or the orientation of the purlin along the top and/or bottom chord.

LOAD CASE(S) Standard

Job	Truss	Truss Type	Qty	Ply	PFS SOLUTIONS - LOT 5 AL
2714379	T17	Piggyback Base	1	1	Job Reference (optional)

Builders FirstSource, Lake City, FL 32055, Kim Holloway

8.420 s Nov 10 2020 MiTek Industries, Inc. Wed Mar 31 09:32:09 2021 Page 1
ID:7R_b7AxUtIWB3tgOsRwB2?zWJEt-6uIkkn5LGdtC0K9dCLt?RIFz9DlsupHvgMKW11zVTSa

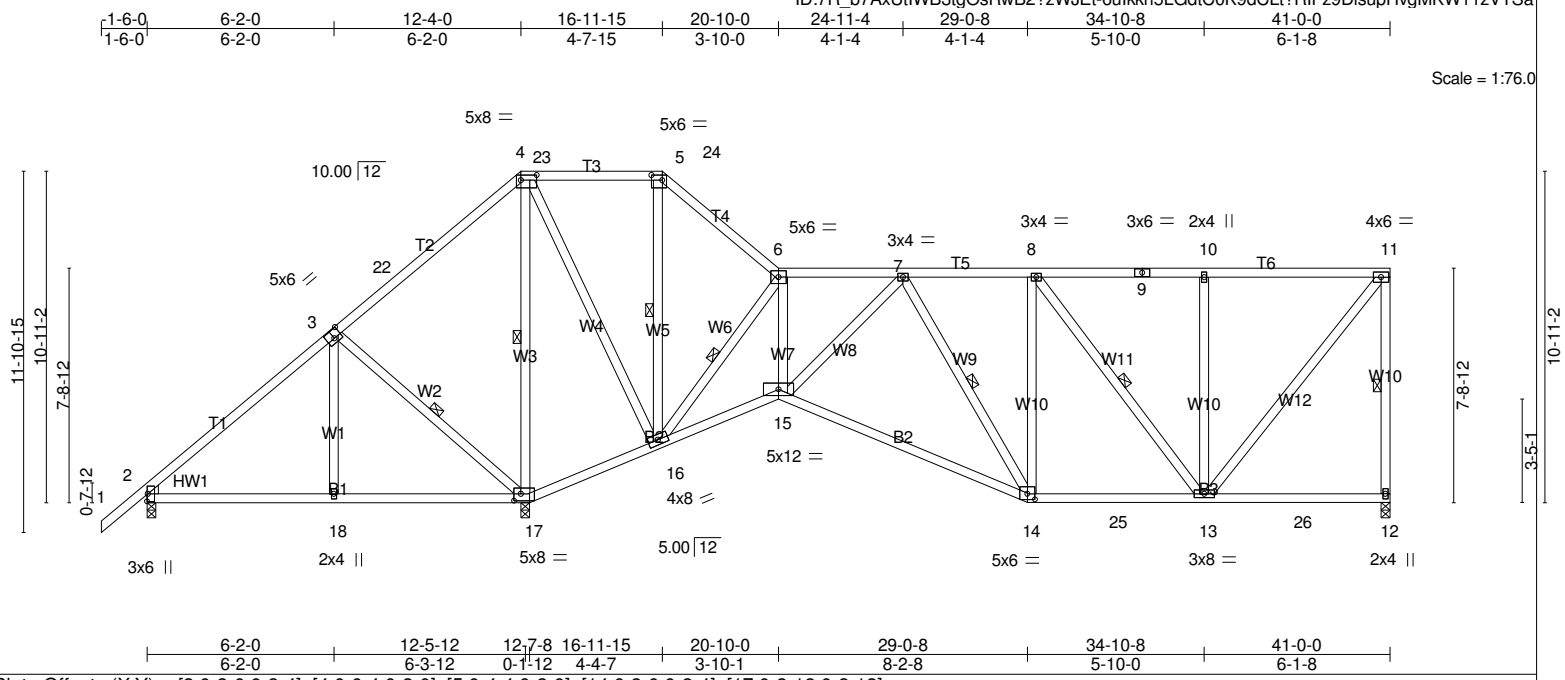

Plate Offsets (X,Y)-- [3:0-3-0,0-3-4], [4:0-6-4,0-2-0], [5:0-4-4,0-2-0], [14:0-3-0,0-2-4], [17:0-2-12,0-2-12]

LOADING (psf)		**SPACING-**	2-0-0	**CSI.**		**DEFL.**	in	(loc)	l/defl	L/d	**PLATES**	**GRIP**
TCLL	20.0	Plate Grip DOL	1.25	TC	0.55	Vert(LL)	-0.20	14-15	>999	240	MT20	244/190
TCDL	7.0	Lumber DOL	1.25	BC	0.71	Vert(CT)	-0.41	14-15	>819	180		
BCLL	0.0 *	Rep Stress Incr	YES	WB	0.96	Horz(CT)	0.06	12	n/a	n/a		
BCDL	10.0	Code FBC2020/TPI2014		Matrix-MS							Weight: 292 lb	FT = 20%

LUMBER-
TOP CHORD 2x4 SP No.2
BOT CHORD 2x4 SP No.2
WEBS 2x4 SP No.3
WEDGE
Left: 2x4 SP No.3

BRACING-
TOP CHORD Structural wood sheathing directly applied or 6-0-0 oc purlins, except end verticals, and 2-0-0 oc purlins (6-0-0 max.): 4-5, 6-11.
BOT CHORD Rigid ceiling directly applied or 6-0-0 oc bracing.
WEBS 1 Row at midpt 11-12, 3-17, 4-17, 5-16, 6-16, 7-14, 8-13

MiTek recommends that Stabilizers and required cross bracing be installed during truss erection, in accordance with Stabilizer Installation guide.

REACTIONS. (lb/size) 12=836/0-3-8, 2=87/0-3-8, 17=2181/0-3-8
Max Horz 2=330(LC 12)
Max Uplift 12=-226(LC 9), 2=-217(LC 24), 17=-438(LC 13)
Max Grav 12=957(LC 26), 2=317(LC 23), 17=2371(LC 2)

FORCES. (lb) - Max. Comp./Max. Ten. - All forces 250 (lb) or less except when shown.
TOP CHORD 2-3=-188/504, 3-22=-165/726, 4-22=-146/835, 5-6=-21/259, 6-7=-560/123, 7-8=-735/174, 8-9=-592/143, 9-10=-592/143, 10-11=-592/143, 11-12=-836/240
BOT CHORD 2-18=-357/149, 17-18=-354/149, 16-17=-711/183, 15-16=-136/639, 14-15=-224/857, 14-25=-176/736, 13-25=-176/736
WEBS 3-18=0/298, 3-17=-555/255, 4-17=-1638/335, 4-16=-222/1045, 5-16=-335/85, 6-16=-1215/315, 6-15=-168/947, 7-15=-264/106, 10-13=-354/172, 11-13=-224/928

NOTES-
1) Unbalanced roof live loads have been considered for this design.
2) Wind: ASCE 7-16; Vult=130mph (3-second gust) Vasd=101mph; TCDL=4.2psf; BCDL=3.0psf; h=20ft; Cat. II; Exp B; Encl., GCpi=0.18; MWFRS (envelope) gable end zone and C-C Exterior(2E) -1-6-0 to 2-7-3, Interior(1) 2-7-3 to 12-4-0, Exterior(2R) 12-4-0 to 16-5-4, Interior(1) 16-5-4 to 16-11-15, Exterior(2E) 16-11-15 to 20-10-0, Interior(1) 20-10-0 to 40-10-4 zone;C-C for members and forces & MWFRS for reactions shown; Lumber DOL=1.60 plate grip DOL=1.60
3) Building Designer / Project engineer responsible for verifying applied roof live load shown covers rain loading requirements specific to the use of this truss component.
4) Provide adequate drainage to prevent water ponding.
5) This truss has been designed for a 10.0 psf bottom chord live load nonconcurrent with any other live loads.
6) * This truss has been designed for a live load of 20.0psf on the bottom chord in all areas where a rectangle 3-6-0 tall by 2-0-0 wide will fit between the bottom chord and any other members, with BCDL = 10.0psf.
7) All bearings are assumed to be SP No.2 crushing capacity of 565 psi.
8) Provide mechanical connection (by others) of truss to bearing plate capable of withstanding 100 lb uplift at joint(s) except (jt=lb) 12=226, 2=217, 17=438.
9) Graphical purlin representation does not depict the size or the orientation of the purlin along the top and/or bottom chord.

LOAD CASE(S) Standard

Job	Truss	Truss Type	Qty	Ply	PFS SOLUTIONS - LOT 5 AL
2714379	T18	Piggyback Base	1	1	Job Reference (optional)

Builders FirstSource, Lake City, FL 32055, Kim Holloway

8.420 s Nov 10 2020 MiTek Industries, Inc. Wed Mar 31 09:32:11 2021 Page 1
ID:7R_b7AxUtlWB3tgOsRwB2?zWJEt-2HPU9T7boF7vGeJ0KmvTWjLC21QZMjlC7gpd5vzVTSY

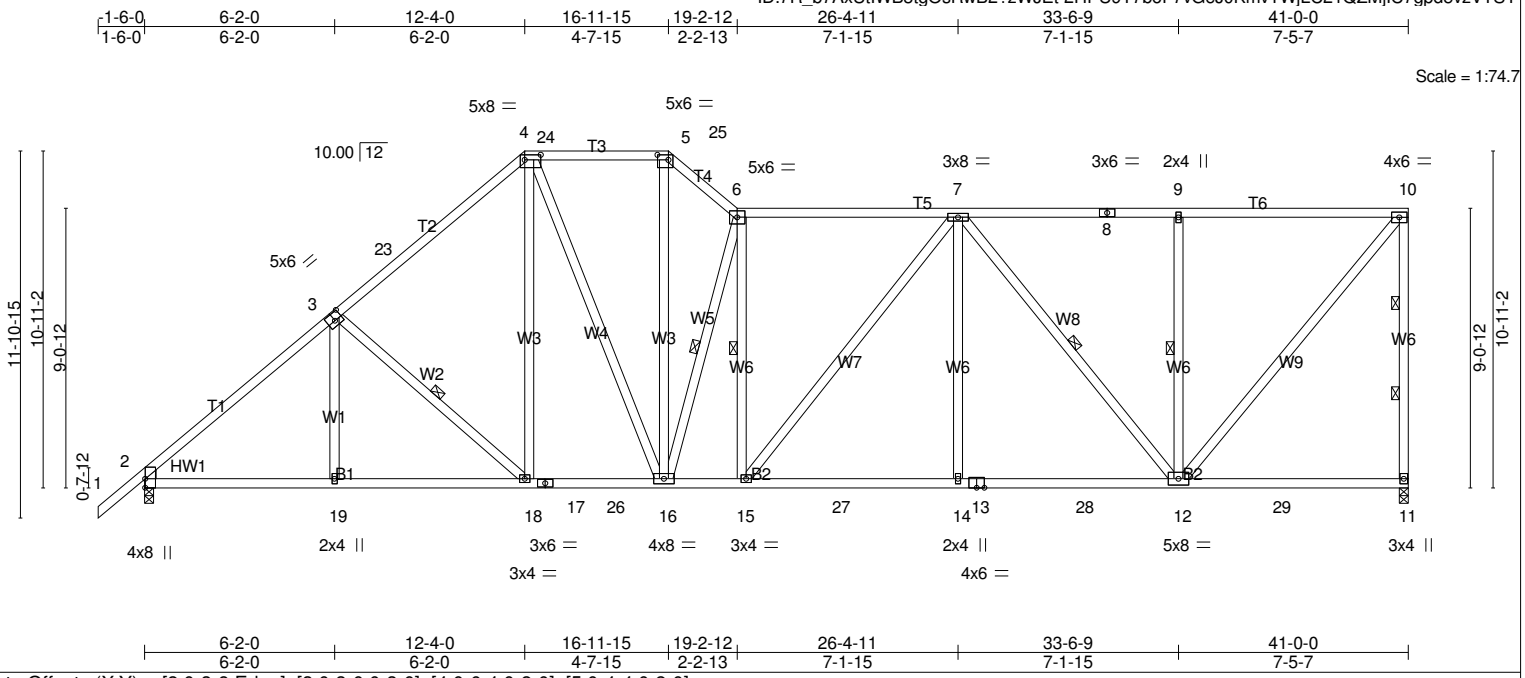

Plate Offsets (X,Y)-- [2:0-3-8,Edge], [3:0-3-0,0-3-0], [4:0-6-4,0-2-0], [5:0-4-4,0-2-0]

LOADING (psf)		**SPACING-**	2-0-0	**CSI.**		**DEFL.**	in	(loc)	l/defl	L/d	**PLATES**	**GRIP**
TCLL	20.0	Plate Grip DOL	1.25	TC	0.97	Vert(LL)	-0.22	14-15	>999	240	MT20	244/190
TCDL	7.0	Lumber DOL	1.25	BC	0.82	Vert(CT)	-0.38	14-15	>999	180		
BCLL	0.0 *	Rep Stress Incr	YES	WB	0.99	Horz(CT)	0.10	11	n/a	n/a		
BCDL	10.0	Code FBC2020/TPI2014		Matrix-MS							Weight: 312 lb	FT = 20%

LUMBER-
TOP CHORD 2x4 SP No.2
BOT CHORD 2x4 SP No.2
WEBS 2x4 SP No.3
WEDGE
Left: 2x4 SP No.3

BRACING-
TOP CHORD Structural wood sheathing directly applied or 3-2-15 oc purlins, except end verticals, and 2-0-0 oc purlins (3-3-1 max.): 4-5, 6-10.
BOT CHORD Rigid ceiling directly applied or 8-9-2 oc bracing.
WEBS 1 Row at midpt 3-18, 6-16, 6-15, 7-12, 9-12
2 Rows at 1/3 pts 10-11

MiTek recommends that Stabilizers and required cross bracing be installed during truss erection, in accordance with Stabilizer Installation guide.

REACTIONS. (lb/size) 11=1510/0-3-8, 2=1594/0-3-8
Max Horz 2=356(LC 12)
Max Uplift 11=-372(LC 9), 2=-254(LC 12)
Max Grav 11=1761(LC 2), 2=1752(LC 2)

FORCES. (lb) - Max. Comp./Max. Ten. - All forces 250 (lb) or less except when shown.
TOP CHORD 2-3=-2245/368, 3-23=-1921/373, 4-23=-1829/395, 4-24=-1607/383, 24-25=-1607/383, 5-25=-1607/383, 5-6=-2103/471, 6-7=-2019/403, 7-8=-1238/260, 8-9=-1238/260, 9-10=-1238/260, 10-11=-1609/390
BOT CHORD 2-19=-452/1695, 18-19=-451/1698, 17-18=-317/1407, 17-26=-317/1407, 16-26=-317/1407, 15-16=-405/2018, 15-27=-387/1907, 14-27=-387/1907, 13-14=-387/1907, 13-28=-387/1907, 12-28=-387/1907
WEBS 3-18=-431/242, 4-18=-118/524, 4-16=-131/581, 5-16=-234/1181, 6-16=-1631/365, 7-15=-94/269, 7-14=0/408, 7-12=-1059/211, 9-12=-420/203, 10-12=-402/1912

NOTES-
1) Unbalanced roof live loads have been considered for this design.
2) Wind: ASCE 7-16; Vult=130mph (3-second gust) Vasd=101mph; TCDL=4.2psf; BCDL=3.0psf; h=20ft; Cat. II; Exp B; Encl., GCpi=0.18; MWFRS (envelope) gable end zone and C-C Exterior(2E) -1-6-0 to 2-7-3, Interior(1) 2-7-3 to 12-4-0, Exterior(2R) 12-4-0 to 16-5-4, Interior(1) 16-5-4 to 16-11-15, Exterior(2E) 16-11-15 to 19-2-12, Interior(1) 19-2-12 to 40-10-4 zone;C-C for members and forces & MWFRS for reactions shown; Lumber DOL=1.60 plate grip DOL=1.60
3) Building Designer / Project engineer responsible for verifying applied roof live load shown covers rain loading requirements specific to the use of this truss component.
4) Provide adequate drainage to prevent water ponding.
5) This truss has been designed for a 10.0 psf bottom chord live load nonconcurrent with any other live loads.
6) * This truss has been designed for a live load of 20.0psf on the bottom chord in all areas where a rectangle 3-6-0 tall by 2-0-0 wide will fit between the bottom chord and any other members, with BCDL = 10.0psf.
7) All bearings are assumed to be SP No.2 crushing capacity of 565 psi.
8) Provide mechanical connection (by others) of truss to bearing plate capable of withstanding 100 lb uplift at joint(s) except (jt=lb) 11=372, 2=254.
9) Graphical purlin representation does not depict the size or the orientation of the purlin along the top and/or bottom chord.

LOAD CASE(S) Standard

Job	Truss	Truss Type	Qty	Ply	PFS SOLUTIONS - LOT 5 AL
2714379	T19	Half Hip Girder	1	3	Job Reference (optional)

Builders FirstSource, Lake City, FL 32055, Kim Holloway

8.420 s Nov 10 2020 MiTek Industries, Inc. Wed Mar 31 09:32:16 2021 Page 1
ID:7R_b7AxUtIWB3tgOsRwB2?zWJEt-PEDNCABkcnlCMPBz7JVeDm2FE2Gy11zxHxWOm7zVTST

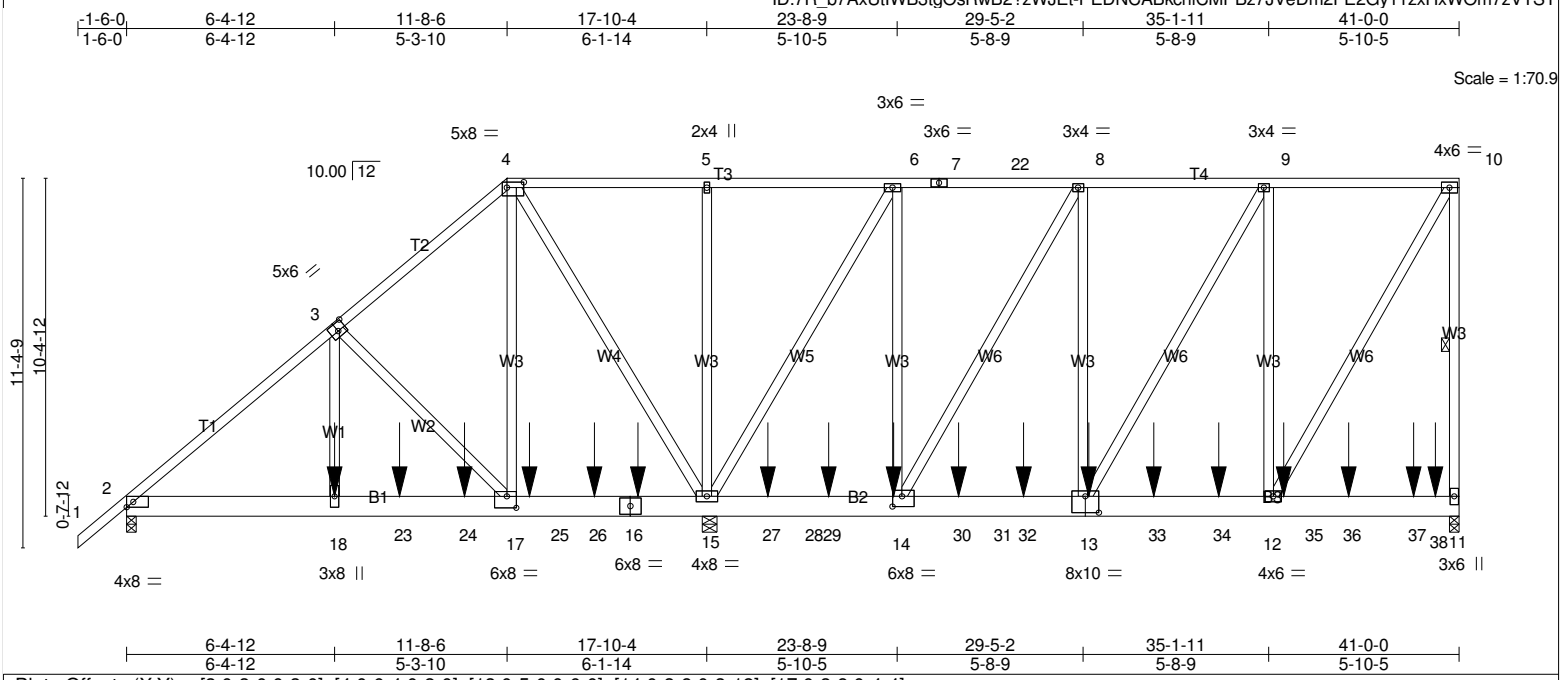

Plate Offsets (X,Y)-- [3:0-3-0,0-3-0], [4:0-6-4,0-2-0], [13:0-5-0,0-6-0], [14:0-3-8,0-3-12], [17:0-3-8,0-4-4]

LOADING (psf)		**SPACING-** 2-0-0	**CSI.**		**DEFL.**	in	(loc)	l/defl	L/d	**PLATES**	**GRIP**
TCLL	20.0	Plate Grip DOL 1.25	TC	0.24	Vert(LL)	-0.05	17-18	>999	240	MT20	244/190
TCDL	7.0	Lumber DOL 1.25	BC	0.23	Vert(CT)	-0.09	17-18	>999	180		
BCLL	0.0 *	Rep Stress Incr NO	WB	0.77	Horz(CT)	0.01	11	n/a	n/a		
BCDL	10.0	Code FBC2020/TPI2014	Matrix-MS							Weight: 1142 lb	FT = 20%

LUMBER-
TOP CHORD 2x4 SP No.2
BOT CHORD 2x8 SP 2400F 2.0E
WEBS 2x4 SP No.3

BRACING-
TOP CHORD Structural wood sheathing directly applied or 6-0-0 oc purlins, except end verticals.
BOT CHORD Rigid ceiling directly applied or 10-0-0 oc bracing.
WEBS 1 Row at midpt 10-11

REACTIONS. (lb/size) 11=2989/0-3-8, 2=2715/0-3-8, 15=9974/0-5-8
Max Horz 2=374(LC 27)
Max Uplift11=-570(LC 4), 2=-960(LC 8), 15=-2726(LC 8)
Max Grav 11=3338(LC 22), 2=2891(LC 2), 15=11000(LC 2)

FORCES. (lb) - Max. Comp./Max. Ten. - All forces 250 (lb) or less except when shown.
TOP CHORD 2-3=-4029/1342, 3-4=-1804/522, 4-5=-291/1006, 5-6=-291/1006, 6-7=-1345/231, 7-22=-1345/231, 8-22=-1345/231, 8-9=-1972/362, 9-10=-1422/250, 10-11=-2572/494
BOT CHORD 2-18=-1258/3025, 18-23=-1253/3014, 23-24=-1253/3014, 17-24=-1253/3014, 17-25=-477/1390, 25-26=-477/1390, 16-26=-477/1390, 15-16=-477/1390, 15-27=-231/1345, 27-28=-231/1345, 28-29=-231/1345, 14-29=-231/1345, 14-30=-362/1966, 30-31=-362/1966, 31-32=-362/1966, 13-32=-362/1966, 13-33=-250/1422, 33-34=-250/1422, 12-34=-250/1422
WEBS 3-18=-1171/2882, 3-17=-2411/1134, 4-17=-1391/4761, 4-15=-4554/1405, 5-15=-371/178, 6-15=-4591/1028, 6-14=-752/3715, 8-14=-1262/276, 8-13=-107/851, 9-13=-228/1116, 9-12=-1243/362, 10-12=-497/2840

NOTES-
1) 3-ply truss to be connected together with 10d (0.131"x3") nails as follows:
Top chords connected as follows: 2x4 - 1 row at 0-9-0 oc.
Bottom chords connected as follows: 2x8 - 2 rows staggered at 0-6-0 oc.
Webs connected as follows: 2x4 - 1 row at 0-8-0 oc, Except member 17-3 2x4 - 1 row at 0-9-0 oc, member 17-4 2x4 - 1 row at 0-9-0 oc, member 15-4 2x4 - 1 row at 0-9-0 oc, member 5-15 2x4 - 1 row at 0-9-0 oc, member 15-6 2x4 - 1 row at 0-9-0 oc, member 6-14 2x4 - 1 row at 0-9-0 oc, member 14-8 2x4 - 1 row at 0-9-0 oc, member 8-13 2x4 - 1 row at 0-9-0 oc, member 13-9 2x4 - 1 row at 0-9-0 oc, member 9-12 2x4 - 1 row at 0-9-0 oc, member 12-10 2x4 - 1 row at 0-9-0 oc.
2) All loads are considered equally applied to all plies, except if noted as front (F) or back (B) face in the LOAD CASE(S) section. Ply to ply connections have been provided to distribute only loads noted as (F) or (B), unless otherwise indicated.
3) Unbalanced roof live loads have been considered for this design.
4) Wind: ASCE 7-16; Vult=130mph (3-second gust) Vasd=101mph; TCDL=4.2psf; BCDL=3.0psf; h=20ft; Cat. II; Exp B; Encl., GCpi=0.18; MWFRS (envelope) gable end zone; Lumber DOL=1.60 plate grip DOL=1.60
5) Building Designer / Project engineer responsible for verifying applied roof live load shown covers rain loading requirements specific to the use of this truss component.
6) Provide adequate drainage to prevent water ponding.
7) This truss has been designed for a 10.0 psf bottom chord live load nonconcurrent with any other live loads.
8) * This truss has been designed for a live load of 20.0psf on the bottom chord in all areas where a rectangle 3-6-0 tall by 2-0-0 wide will fit between the bottom chord and any other members, with BCDL = 10.0psf.
9) All bearings are assumed to be SP No.2 crushing capacity of 565 psi.
10) Provide mechanical connection (by others) of truss to bearing plate capable of withstanding 100 lb uplift at joint(s) except (jt=lb) 11=570 , 2=960, 15=2726.

Continued on page 2

NOTES-

11) Hanger(s) or other connection device(s) shall be provided sufficient to support concentrated load(s) 2054 lb down and 1092 lb up at 6-4-12, 982 lb down and 226 lb up at 8-4-12, 975 lb down and 227 lb up at 10-4-12, 965 lb down and 227 lb up at 12-4-12, 960 lb down and 227 lb up at 14-4-12, 964 lb down and 221 lb up at 15-8-12, 909 lb down and 223 lb up at 19-8-12, 898 lb down and 223 lb up at 21-7-4, 962 lb down and 221 lb up at 23-7-4, 890 lb down and 227 lb up at 25-7-4, 879 lb down and 227 lb up at 27-7-4, 327 lb down and 57 lb up at 29-7-4, 326 lb down and 57 lb up at 31-7-4, 317 lb down and 57 lb up at 33-7-4, 329 lb down and 57 lb up at 35-7-4, 323 lb down and 57 lb up at 37-7-4, and 317 lb down and 57 lb up at 39-7-4, and 328 lb down and 53 lb up at 40-3-4 on bottom chord. The design/selection of such connection device(s) is the responsibility of others.

LOAD CASE(S) Standard

1) Dead + Roof Live (balanced): Lumber Increase=1.25, Plate Increase=1.25
   Uniform Loads (plf)
   Vert: 1-4=-54, 4-10=-54, 11-19=-20
   Concentrated Loads (lb)
   Vert: 16=-836(B) 18=-2054(B) 14=-836(B) 13=-300(B) 23=-847(B) 24=-840(B) 25=-840(B) 26=-840(B) 27=-848(B) 29=-848(B) 30=-840(B) 32=-840(B) 33=-300(B) 34=-300(B) 35=-300(B) 36=-300(B) 37=-300(B) 38=-304(B)

Job	Truss	Truss Type	Qty	Ply	PFS SOLUTIONS - LOT 5 AL
2714379	T20	Piggyback Base	1	1	Job Reference (optional)

Builders FirstSource, Lake City, FL 32055, Kim Holloway

8.420 s Nov 10 2020 MiTek Industries, Inc. Wed Mar 31 09:32:17 2021 Page 1
ID:7R_b7AxUtIWB3tgOsRwB2?zWJEt-tRnIPWCMN5t3_ZmAg10tm_aMASZqmZn4WbGxJZzVTSS

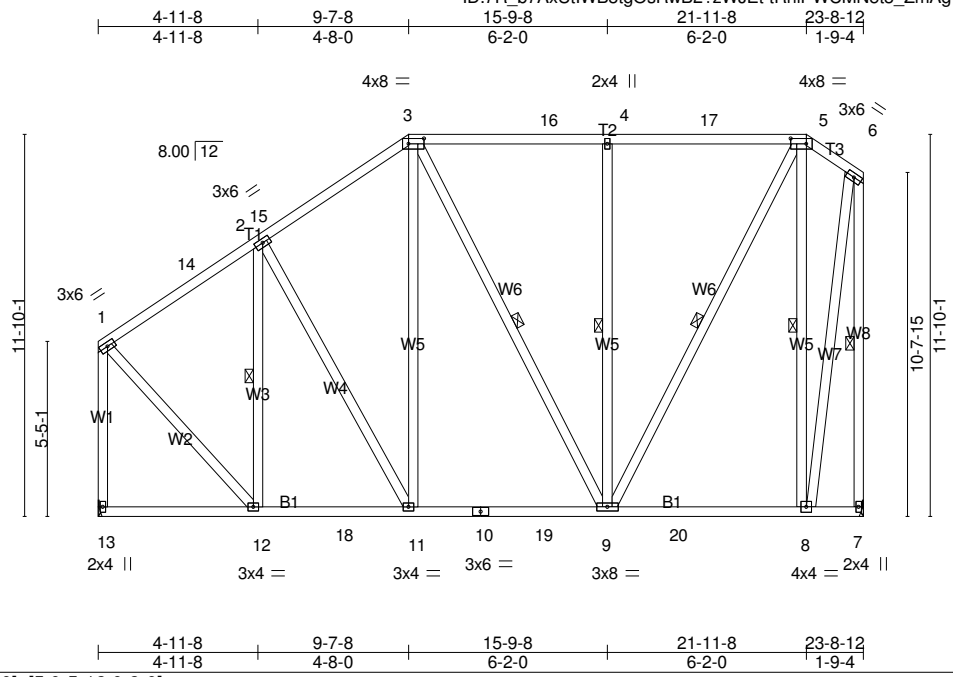

Plate Offsets (X,Y)-- [3:0-5-12,0-2-0], [5:0-5-12,0-2-0]

LOADING (psf)		**SPACING-**	2-0-0	**CSI.**		**DEFL.**	in	(loc)	l/defl	L/d	**PLATES**	**GRIP**
TCLL	20.0	Plate Grip DOL	1.25	TC	0.48	Vert(LL)	-0.07	8-9	>999	240	MT20	244/190
TCDL	7.0	Lumber DOL	1.25	BC	0.44	Vert(CT)	-0.11	8-9	>999	180		
BCLL	0.0 *	Rep Stress Incr	YES	WB	0.48	Horz(CT)	0.01	7	n/a	n/a		
BCDL	10.0	Code FBC2020/TPI2014		Matrix-MS							Weight: 237 lb	FT = 20%

LUMBER-
TOP CHORD 2x4 SP No.2
BOT CHORD 2x4 SP No.2
WEBS 2x4 SP No.3

BRACING-
TOP CHORD Structural wood sheathing directly applied or 6-0-0 oc purlins, except end verticals, and 2-0-0 oc purlins (6-0-0 max.): 3-5.
BOT CHORD Rigid ceiling directly applied or 10-0-0 oc bracing.
WEBS 1 Row at midpt 2-12, 3-9, 4-9, 5-9, 5-8, 6-7

MiTek recommends that Stabilizers and required cross bracing be installed during truss erection, in accordance with Stabilizer Installation guide.

REACTIONS. (lb/size) 13=867/Mechanical, 7=867/Mechanical
Max Horz 13=197(LC 12)
Max Uplift 13=-147(LC 12), 7=-206(LC 12)
Max Grav 13=994(LC 2), 7=1017(LC 2)

FORCES. (lb) - Max. Comp./Max. Ten. - All forces 250 (lb) or less except when shown.
TOP CHORD 1-14=-629/110, 2-14=-555/123, 2-15=-678/175, 3-15=-667/197, 3-16=-485/151, 4-16=-485/151, 4-17=-485/151, 5-17=-485/151, 1-13=-921/159, 6-7=-1035/197
BOT CHORD 12-18=-243/517, 11-18=-243/517, 10-11=-182/513, 10-19=-182/513, 9-19=-182/513
WEBS 2-12=-337/77, 3-11=-76/270, 4-9=-389/189, 5-9=-218/724, 5-8=-703/226, 1-12=-61/693, 6-8=-192/927

NOTES-
1) Unbalanced roof live loads have been considered for this design.
2) Wind: ASCE 7-16; Vult=130mph (3-second gust) Vasd=101mph; TCDL=4.2psf; BCDL=3.0psf; h=20ft; Cat. II; Exp B; Encl., GCpi=0.18; MWFRS (envelope) gable end zone and C-C Exterior(2E) 0-1-12 to 3-1-12, Interior(1) 3-1-12 to 9-7-8, Exterior(2R) 9-7-8 to 13-10-7, Interior(1) 13-10-7 to 21-11-8, Exterior(2E) 21-11-8 to 23-7-0 zone;C-C for members and forces & MWFRS for reactions shown; Lumber DOL=1.60 plate grip DOL=1.60
3) Building Designer / Project engineer responsible for verifying applied roof live load shown covers rain loading requirements specific to the use of this truss component.
4) Provide adequate drainage to prevent water ponding.
5) This truss has been designed for a 10.0 psf bottom chord live load nonconcurrent with any other live loads.
6) * This truss has been designed for a live load of 20.0psf on the bottom chord in all areas where a rectangle 3-6-0 tall by 2-0-0 wide will fit between the bottom chord and any other members, with BCDL = 10.0psf.
7) All bearings are assumed to be SP No.2 crushing capacity of 565 psi.
8) Refer to girder(s) for truss to truss connections.
9) Provide mechanical connection (by others) of truss to bearing plate capable of withstanding 100 lb uplift at joint(s) except (jt=lb) 13=147, 7=206.
10) Graphical purlin representation does not depict the size or the orientation of the purlin along the top and/or bottom chord.

LOAD CASE(S) Standard

Job	Truss	Truss Type	Qty	Ply	PFS SOLUTIONS - LOT 5 AL
2714379	T20G	GABLE	1	1	Job Reference (optional)

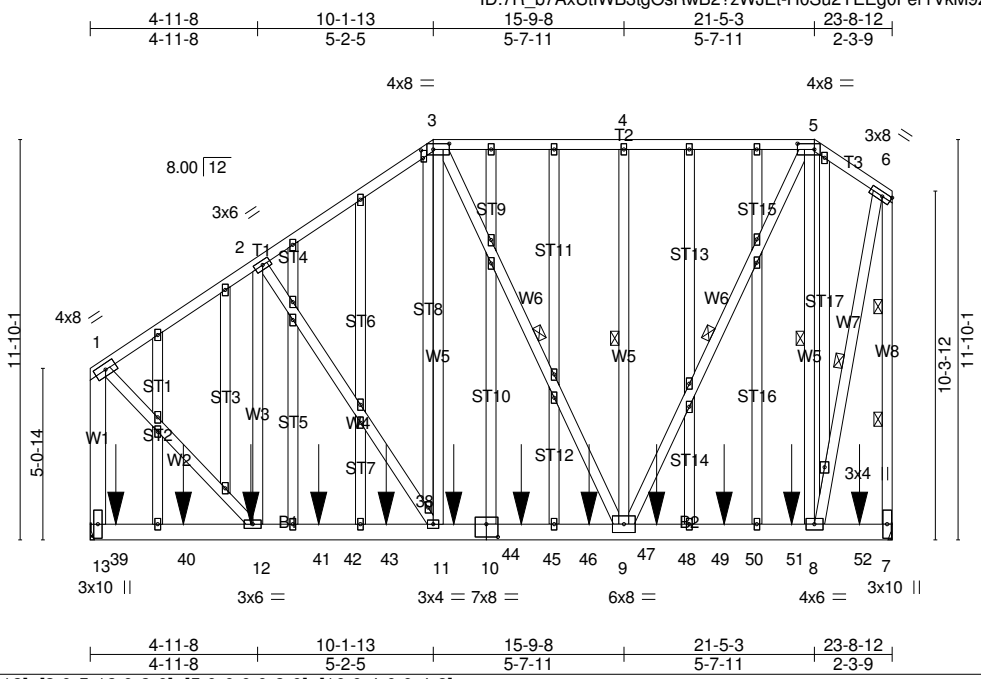

Plate Offsets (X,Y)-- [3:0-2-11,0-0-12], [3:0-5-12,0-2-0], [5:0-6-0,0-2-0], [10:0-4-0,0-4-8]

LOADING (psf)		**SPACING-** 2-0-0	**CSI.**		**DEFL.**	in	(loc)	l/defl	L/d	**PLATES**	**GRIP**
TCLL	20.0	Plate Grip DOL 1.25	TC	0.72	Vert(LL)	0.09	11-12	>999	240	MT20	244/190
TCDL	7.0	Lumber DOL 1.25	BC	0.55	Vert(CT)	-0.12	9-11	>999	180		
BCLL	0.0 *	Rep Stress Incr NO	WB	1.00	Horz(CT)	0.01	7	n/a	n/a		
BCDL	10.0	Code FBC2020/TPI2014	Matrix-MS							Weight: 396 lb	FT = 20%

LUMBER-
TOP CHORD 2x4 SP No.2
BOT CHORD 2x6 SP No.2
WEBS 2x4 SP No.3 *Except*
W6,W8: 2x4 SP No.2, W1: 2x6 SP No.2
OTHERS 2x4 SP No.3

BRACING-
TOP CHORD Structural wood sheathing directly applied or 4-8-0 oc purlins, except end verticals, and 2-0-0 oc purlins (5-6-9 max.): 3-5.
BOT CHORD Rigid ceiling directly applied or 8-10-12 oc bracing.
WEBS 1 Row at midpt 3-9, 4-9, 5-9, 5-8, 6-8
2 Rows at 1/3 pts 6-7

MiTek recommends that Stabilizers and required cross bracing be installed during truss erection, in accordance with Stabilizer Installation guide.

REACTIONS. (lb/size) 13=2104/Mechanical, 7=2074/Mechanical
Max Horz 13=221(LC 5)
Max Uplift13=-1046(LC 8), 7=-1072(LC 8)
Max Grav 13=2226(LC 33), 7=2148(LC 33)

FORCES. (lb) - Max. Comp./Max. Ten. - All forces 250 (lb) or less except when shown.
TOP CHORD 1-2=-1383/623, 2-3=-1432/726, 3-4=-1012/561, 4-5=-1012/561, 5-6=-486/255, 1-13=-1893/871, 6-7=-2058/1021
BOT CHORD 12-41=-661/1167, 41-42=-661/1167, 42-43=-661/1167, 11-43=-661/1167, 11-44=-620/1156, 10-44=-620/1156, 10-45=-620/1156, 45-46=-620/1156, 46-47=-620/1156, 9-47=-620/1156, 9-48=-194/383, 48-49=-194/383, 49-50=-194/383, 50-51=-194/383, 8-51=-194/383
WEBS 2-12=-364/129, 11-38=-371/793, 3-38=-441/836, 3-9=-303/198, 4-9=-354/175, 5-9=-778/1450, 5-8=-1186/611, 1-12=-671/1482, 6-8=-911/1797

NOTES-
1) Unbalanced roof live loads have been considered for this design.
2) Wind: ASCE 7-16; Vult=130mph (3-second gust) Vasd=101mph; TCDL=4.2psf; BCDL=3.0psf; h=20ft; Cat. II; Exp B; Encl., GCpi=0.18; MWFRS (envelope) gable end zone; end vertical left exposed; Lumber DOL=1.60 plate grip DOL=1.60
3) Truss designed for wind loads in the plane of the truss only. For studs exposed to wind (normal to the face), see Standard Industry Gable End Details as applicable, or consult qualified building designer as per ANSI/TPI 1.
4) Building Designer / Project engineer responsible for verifying applied roof live load shown covers rain loading requirements specific to the use of this truss component.
5) Provide adequate drainage to prevent water ponding.
6) All plates are 2x4 MT20 unless otherwise indicated.
7) Gable studs spaced at 2-0-0 oc.
8) This truss has been designed for a 10.0 psf bottom chord live load nonconcurrent with any other live loads.
9) * This truss has been designed for a live load of 20.0psf on the bottom chord in all areas where a rectangle 3-6-0 tall by 2-0-0 wide will fit between the bottom chord and any other members, with BCDL = 10.0psf.
10) All bearings are assumed to be SP No.2 crushing capacity of 565 psi.
11) Refer to girder(s) for truss to truss connections.
12) Provide mechanical connection (by others) of truss to bearing plate capable of withstanding 100 lb uplift at joint(s) except (jt=lb) 13=1046, 7=1072.
13) Graphical purlin representation does not depict the size or the orientation of the purlin along the top and/or bottom chord.

Continued on page 2

NOTES-

14) Hanger(s) or other connection device(s) shall be provided sufficient to support concentrated load(s) 213 lb down and 157 lb up at 0-9-2, 209 lb down and 161 lb up at 2-9-2, 209 lb down and 161 lb up at 4-9-2, 209 lb down and 161 lb up at 6-9-2, 209 lb down and 161 lb up at 8-9-2, 209 lb down and 161 lb up at 10-9-2, 209 lb down and 161 lb up at 12-9-2, 209 lb down and 161 lb up at 14-9-2, 209 lb down and 161 lb up at 16-9-2, 209 lb down and 161 lb up at 18-9-2, and 209 lb down and 161 lb up at 20-9-2, and 210 lb down and 160 lb up at 22-9-2 on bottom chord. The design/selection of such connection device(s) is the responsibility of others.
15) In the LOAD CASE(S) section, loads applied to the face of the truss are noted as front (F) or back (B).

LOAD CASE(S) Standard
1) Dead + Roof Live (balanced): Lumber Increase=1.25, Plate Increase=1.25
Uniform Loads (plf)
Vert: 1-3=-54, 3-5=-54, 5-6=-54, 7-13=-20
Concentrated Loads (lb)
Vert: 12=-204(F) 39=-208(F) 40=-204(F) 41=-204(F) 43=-204(F) 44=-204(F) 45=-204(F) 47=-204(F) 48=-204(F) 50=-204(F) 51=-204(F) 52=-205(F)

Job	Truss	Truss Type	Qty	Ply	PFS SOLUTIONS - LOT 5 AL
2714379	T21	Piggyback Base	3	1	Job Reference (optional)

Builders FirstSource, Lake City, FL 32055, Kim Holloway

8.420 s Nov 10 2020 MiTek Industries, Inc. Wed Mar 31 09:32:21 2021 Page 1
ID:7R_b7AxUtIWB3tgOsRwB2?zWJEt-lC0GFuFsRJNVSA4xvs4pwql1G3wniMqgQDE9SKzVTSO

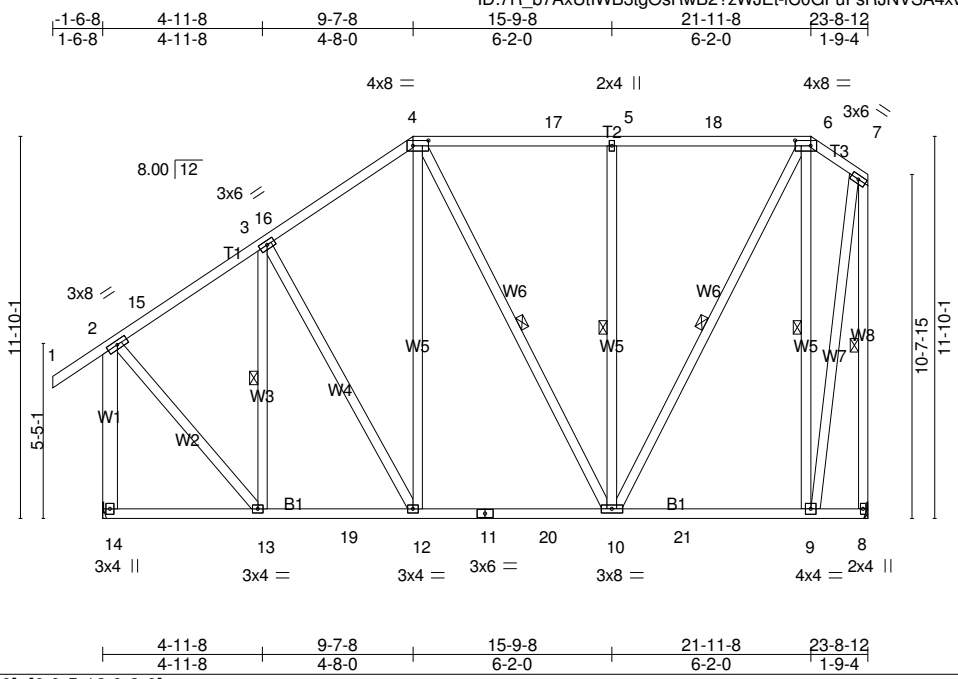

Plate Offsets (X,Y)-- [4:0-5-12,0-2-0], [6:0-5-12,0-2-0]

LOADING (psf)		**SPACING-**	2-0-0	**CSI.**		**DEFL.**	in	(loc)	l/defl	L/d	**PLATES**	**GRIP**
TCLL	20.0	Plate Grip DOL	1.25	TC	0.48	Vert(LL)	-0.07	9-10	>999	240	MT20	244/190
TCDL	7.0	Lumber DOL	1.25	BC	0.44	Vert(CT)	-0.11	9-10	>999	180		
BCLL	0.0 *	Rep Stress Incr	YES	WB	0.48	Horz(CT)	0.01	8	n/a	n/a		
BCDL	10.0	Code FBC2020/TPI2014		Matrix-MS							Weight: 244 lb	FT = 20%

LUMBER-
TOP CHORD 2x4 SP No.2
BOT CHORD 2x4 SP No.2
WEBS 2x4 SP No.3 *Except*
W6: 2x4 SP No.2, W1: 2x6 SP No.2

BRACING-
TOP CHORD Structural wood sheathing directly applied or 6-0-0 oc purlins, except end verticals, and 2-0-0 oc purlins (6-0-0 max.): 4-6.
BOT CHORD Rigid ceiling directly applied or 10-0-0 oc bracing.
WEBS 1 Row at midpt 3-13, 4-10, 5-10, 6-10, 6-9, 7-8

MiTek recommends that Stabilizers and required cross bracing be installed during truss erection, in accordance with Stabilizer Installation guide.

REACTIONS. (lb/size) 14=963/Mechanical, 8=860/Mechanical
Max Horz 14=239(LC 9)
Max Uplift 14=-185(LC 12), 8=-207(LC 9)
Max Grav 14=1071(LC 2), 8=1010(LC 2)

FORCES. (lb) - Max. Comp./Max. Ten. - All forces 250 (lb) or less except when shown.
TOP CHORD 2-15=-626/111, 3-15=-558/131, 3-16=-667/170, 4-16=-656/192, 4-17=-481/149, 5-17=-481/149, 5-18=-481/149, 6-18=-481/149, 2-14=-998/196, 7-8=-1028/198
BOT CHORD 13-19=-236/525, 12-19=-236/525, 11-12=-179/508, 11-20=-179/508, 10-20=-179/508
WEBS 3-13=-335/72, 4-12=-75/273, 5-10=-388/189, 6-10=-216/716, 6-9=-697/238, 2-13=-53/680, 7-9=-203/921

NOTES-
1) Unbalanced roof live loads have been considered for this design.
2) Wind: ASCE 7-16; Vult=130mph (3-second gust) Vasd=101mph; TCDL=4.2psf; BCDL=3.0psf; h=20ft; Cat. II; Exp B; Encl., GCpi=0.18; MWFRS (envelope) gable end zone and C-C Exterior(2E) -1-6-8 to 1-5-8, Interior(1) 1-5-8 to 9-7-8, Exterior(2R) 9-7-8 to 13-10-7, Interior(1) 13-10-7 to 21-11-8, Exterior(2E) 21-11-8 to 23-7-0 zone; end vertical left exposed;C-C for members and forces & MWFRS for reactions shown; Lumber DOL=1.60 plate grip DOL=1.60
3) Building Designer / Project engineer responsible for verifying applied roof live load shown covers rain loading requirements specific to the use of this truss component.
4) Provide adequate drainage to prevent water ponding.
5) This truss has been designed for a 10.0 psf bottom chord live load nonconcurrent with any other live loads.
6) * This truss has been designed for a live load of 20.0psf on the bottom chord in all areas where a rectangle 3-6-0 tall by 2-0-0 wide will fit between the bottom chord and any other members, with BCDL = 10.0psf.
7) All bearings are assumed to be SP No.2 crushing capacity of 565 psi.
8) Refer to girder(s) for truss to truss connections.
9) Provide mechanical connection (by others) of truss to bearing plate capable of withstanding 100 lb uplift at joint(s) except (jt=lb) 14=185, 8=207.
10) Graphical purlin representation does not depict the size or the orientation of the purlin along the top and/or bottom chord.

LOAD CASE(S) Standard

Job	Truss	Truss Type	Qty	Ply	PFS SOLUTIONS - LOT 5 AL
2714379	T22	Piggyback Base	3	1	Job Reference (optional)

Builders FirstSource, Lake City, FL 32055, Kim Holloway

8.420 s Nov 10 2020 MiTek Industries, Inc. Wed Mar 31 09:32:23 2021 Page 1
ID:7R_b7AxUtIWB3tgOsRwB2?zWJEt-ia80gaG7zxeCiUDJ1H7H?FqNrtcIAE4zuXjGWDzVTSM

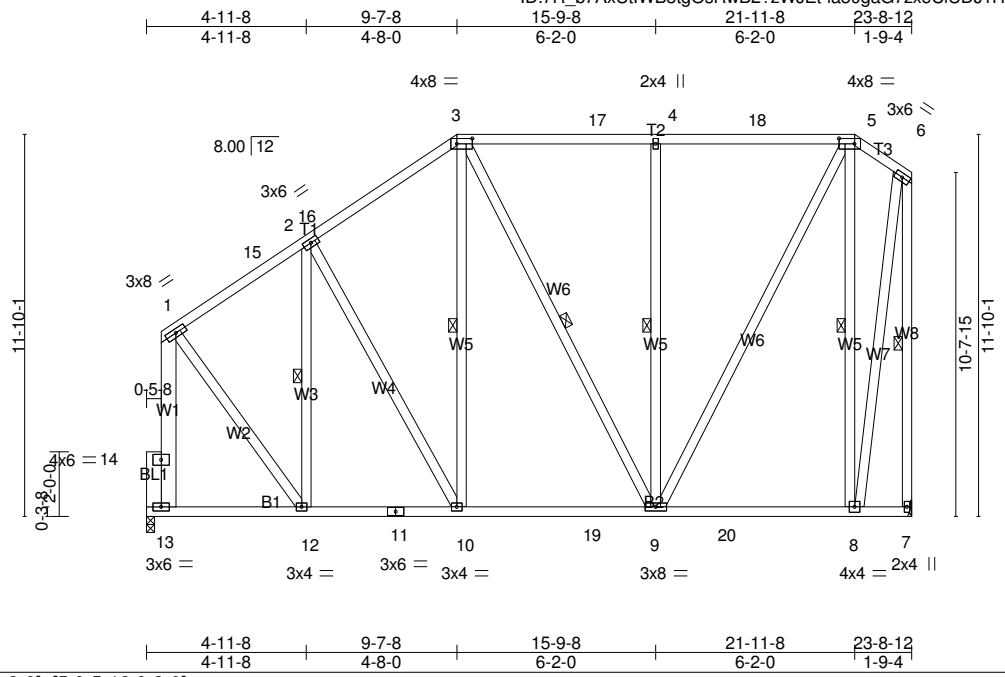

Plate Offsets (X,Y)-- [3:0-5-12,0-2-0], [5:0-5-12,0-2-0]

LOADING (psf)		SPACING-	2-0-0	CSI.		DEFL.	in	(loc)	l/defl	L/d	PLATES	GRIP
TCLL	20.0	Plate Grip DOL	1.25	TC	0.47	Vert(LL)	-0.07	8-9	>999	240	MT20	244/190
TCDL	7.0	Lumber DOL	1.25	BC	0.44	Vert(CT)	-0.11	8-9	>999	180		
BCLL	0.0 *	Rep Stress Incr	YES	WB	0.62	Horz(CT)	0.01	7	n/a	n/a		
BCDL	10.0	Code FBC2020/TPI2014		Matrix-MS							Weight: 245 lb	FT = 20%

LUMBER-
TOP CHORD 2x4 SP No.2
BOT CHORD 2x4 SP No.2
WEBS 2x4 SP No.3 *Except*
W6: 2x4 SP No.2, W1: 2x6 SP No.2
OTHERS 2x6 SP No.2

BRACING-
TOP CHORD Structural wood sheathing directly applied or 6-0-0 oc purlins, except end verticals, and 2-0-0 oc purlins (6-0-0 max.): 3-5.
BOT CHORD Rigid ceiling directly applied or 10-0-0 oc bracing.
WEBS 1 Row at midpt 2-12, 3-10, 3-9, 4-9, 5-8, 6-7

MiTek recommends that Stabilizers and required cross bracing be installed during truss erection, in accordance with Stabilizer Installation guide.

REACTIONS. (lb/size) 13=843/0-3-0, 7=856/Mechanical
Max Horz 13=204(LC 9)
Max Uplift 13=-143(LC 12), 7=-201(LC 9)
Max Grav 13=974(LC 2), 7=1004(LC 2)

FORCES. (lb) - Max. Comp./Max. Ten. - All forces 250 (lb) or less except when shown.
TOP CHORD 1-15=-593/116, 2-15=-499/122, 2-16=-658/161, 3-16=-648/183, 3-17=-477/145, 4-17=-477/145, 4-18=-477/145, 5-18=-477/145, 13-14=-906/156, 1-14=-907/155, 6-7=-1023/195
BOT CHORD 11-12=-221/507, 10-11=-221/507, 10-19=-171/499, 9-19=-171/499
WEBS 2-12=-348/87, 3-10=-70/260, 4-9=-388/189, 5-9=-208/709, 5-8=-692/233, 1-12=-72/658, 6-8=-198/916

NOTES-
1) Unbalanced roof live loads have been considered for this design.
2) Wind: ASCE 7-16; Vult=130mph (3-second gust) Vasd=101mph; TCDL=4.2psf; BCDL=3.0psf; h=20ft; Cat. II; Exp B; Encl., GCpi=0.18; MWFRS (envelope) interior zone and C-C Exterior(2E) 0-8-4 to 3-8-4, Interior(1) 3-8-4 to 9-7-8, Exterior(2R) 9-7-8 to 13-10-7, Interior(1) 13-10-7 to 21-11-8, Exterior(2E) 21-11-8 to 23-7-0 zone; end vertical left exposed;C-C for members and forces & MWFRS for reactions shown; Lumber DOL=1.60 plate grip DOL=1.60
3) Building Designer / Project engineer responsible for verifying applied roof live load shown covers rain loading requirements specific to the use of this truss component.
4) Provide adequate drainage to prevent water ponding.
5) This truss has been designed for a 10.0 psf bottom chord live load nonconcurrent with any other live loads.
6) * This truss has been designed for a live load of 20.0psf on the bottom chord in all areas where a rectangle 3-6-0 tall by 2-0-0 wide will fit between the bottom chord and any other members, with BCDL = 10.0psf.
7) All bearings are assumed to be SP No.2 crushing capacity of 565 psi.
8) Refer to girder(s) for truss to truss connections.
9) Provide mechanical connection (by others) of truss to bearing plate capable of withstanding 100 lb uplift at joint(s) except (jt=lb) 13=143, 7=201.
10) Graphical purlin representation does not depict the size or the orientation of the purlin along the top and/or bottom chord.

LOAD CASE(S) Standard

Job	Truss	Truss Type	Qty	Ply	PFS SOLUTIONS - LOT 5 AL
2714379	T23	Piggyback Base	2	1	Job Reference (optional)

Builders FirstSource, Lake City, FL 32055, Kim Holloway

8.420 s Nov 10 2020 MiTek Industries, Inc. Wed Mar 31 09:32:24 2021 Page 1
ID:7R_b7AxUtIWB3tgOsRwB2?zWJEt-AniPtvHlkEm3JeoWb?eWYSNY6Gyvvhx67BSp2fzVTSL

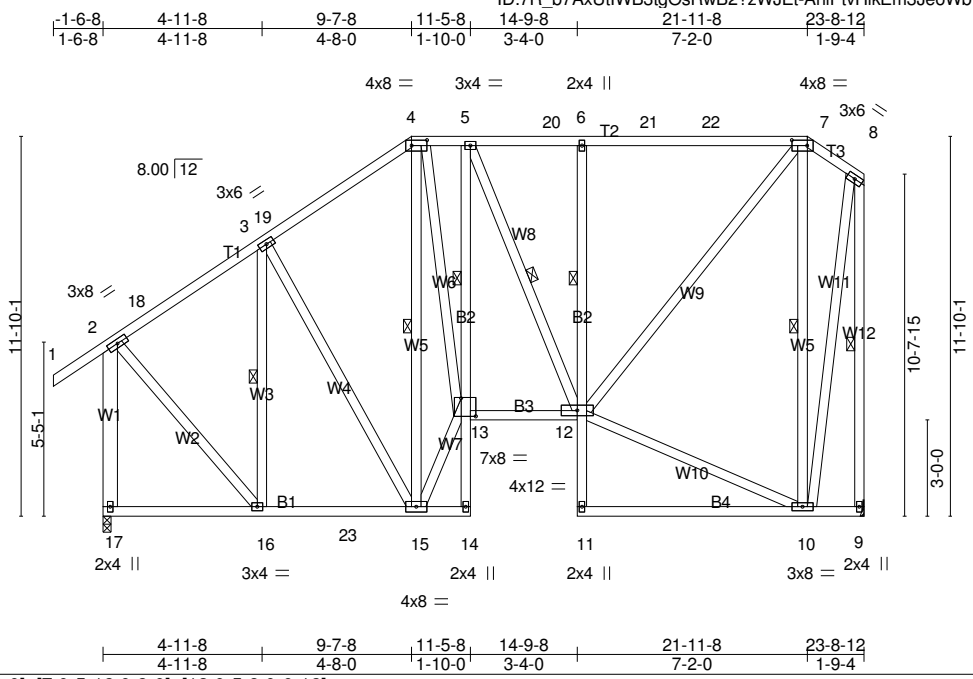

Plate Offsets (X,Y)-- [4:0-5-12,0-2-0], [7:0-5-12,0-2-0], [13:0-5-8,0-6-12]

LOADING (psf)		SPACING-	2-0-0	CSI.		DEFL.	in	(loc)	l/defl	L/d	PLATES	GRIP
TCLL	20.0	Plate Grip DOL	1.25	TC	0.50	Vert(LL)	-0.09	10-11	>999	240	MT20	244/190
TCDL	7.0	Lumber DOL	1.25	BC	0.35	Vert(CT)	-0.18	10-11	>999	180		
BCLL	0.0 *	Rep Stress Incr	YES	WB	0.58	Horz(CT)	0.10	9	n/a	n/a		
BCDL	10.0	Code FBC2020/TPI2014		Matrix-MS							Weight: 281 lb	FT = 20%

LUMBER-
TOP CHORD 2x4 SP No.2
BOT CHORD 2x4 SP No.2 *Except*
B2: 2x4 SP No.3
WEBS 2x4 SP No.3 *Except*
W1: 2x6 SP No.2

BRACING-
TOP CHORD Structural wood sheathing directly applied or 6-0-0 oc purlins, except end verticals, and 2-0-0 oc purlins (6-0-0 max.): 4-7.
BOT CHORD Rigid ceiling directly applied or 10-0-0 oc bracing, Except:
6-0-0 oc bracing: 13-14.
1 Row at midpt 5-13, 6-12
WEBS 1 Row at midpt 3-16, 4-15, 5-12, 7-10, 8-9

MiTek recommends that Stabilizers and required cross bracing be installed during truss erection, in accordance with Stabilizer Installation guide.

REACTIONS. (lb/size) 17=963/0-3-0, 9=860/Mechanical
Max Horz 17=239(LC 9)
Max Uplift 17=-185(LC 12), 9=-207(LC 9)
Max Grav 17=1032(LC 2), 9=929(LC 2)

FORCES. (lb) - Max. Comp./Max. Ten. - All forces 250 (lb) or less except when shown.
TOP CHORD 2-18=-600/110, 3-18=-496/130, 3-19=-627/173, 4-19=-617/195, 4-5=-631/247, 5-20=-615/209, 6-20=-615/209, 6-21=-616/209, 21-22=-616/209, 7-22=-616/209, 2-17=-960/195, 8-9=-962/194
BOT CHORD 16-23=-236/504, 15-23=-236/504, 12-13=-227/635, 6-12=-369/176
WEBS 3-16=-340/77, 4-15=-732/243, 13-15=-365/986, 4-13=-261/893, 7-12=-255/751, 7-10=-714/268, 2-16=-54/651, 8-10=-207/873

NOTES-
1) Unbalanced roof live loads have been considered for this design.
2) Wind: ASCE 7-16; Vult=130mph (3-second gust) Vasd=101mph; TCDL=4.2psf; BCDL=3.0psf; h=20ft; Cat. II; Exp B; Encl., GCpi=0.18; MWFRS (envelope) gable end zone and C-C Exterior(2E) -1-6-8 to 1-5-8, Interior(1) 1-5-8 to 9-7-8, Exterior(2R) 9-7-8 to 13-10-7, Interior(1) 13-10-7 to 21-11-8, Exterior(2E) 21-11-8 to 23-7-0 zone; end vertical left exposed;C-C for members and forces & MWFRS for reactions shown; Lumber DOL=1.60 plate grip DOL=1.60
3) Building Designer / Project engineer responsible for verifying applied roof live load shown covers rain loading requirements specific to the use of this truss component.
4) Provide adequate drainage to prevent water ponding.
5) This truss has been designed for a 10.0 psf bottom chord live load nonconcurrent with any other live loads.
6) * This truss has been designed for a live load of 20.0psf on the bottom chord in all areas where a rectangle 3-6-0 tall by 2-0-0 wide will fit between the bottom chord and any other members, with BCDL = 10.0psf.
7) All bearings are assumed to be SP No.2 crushing capacity of 565 psi.
8) Refer to girder(s) for truss to truss connections.
9) Provide mechanical connection (by others) of truss to bearing plate capable of withstanding 100 lb uplift at joint(s) except (jt=lb) 17=185, 9=207.
10) Graphical purlin representation does not depict the size or the orientation of the purlin along the top and/or bottom chord.

LOAD CASE(S) Standard

Job	Truss	Truss Type	Qty	Ply	PFS SOLUTIONS - LOT 5 AL
2714379	T25	Piggyback Base	2	1	Job Reference (optional)

Builders FirstSource, Lake City, FL 32055, Kim Holloway

8.420 s Nov 10 2020 MiTek Industries, Inc. Wed Mar 31 09:32:26 2021 Page 1
ID:7R_b7AxUtIWB3tgOsRwB2?zWJEt-69p9IbJ?Gs0nZyyuiQg_dtStR4ckNd0PaVxw7YzVTSJ

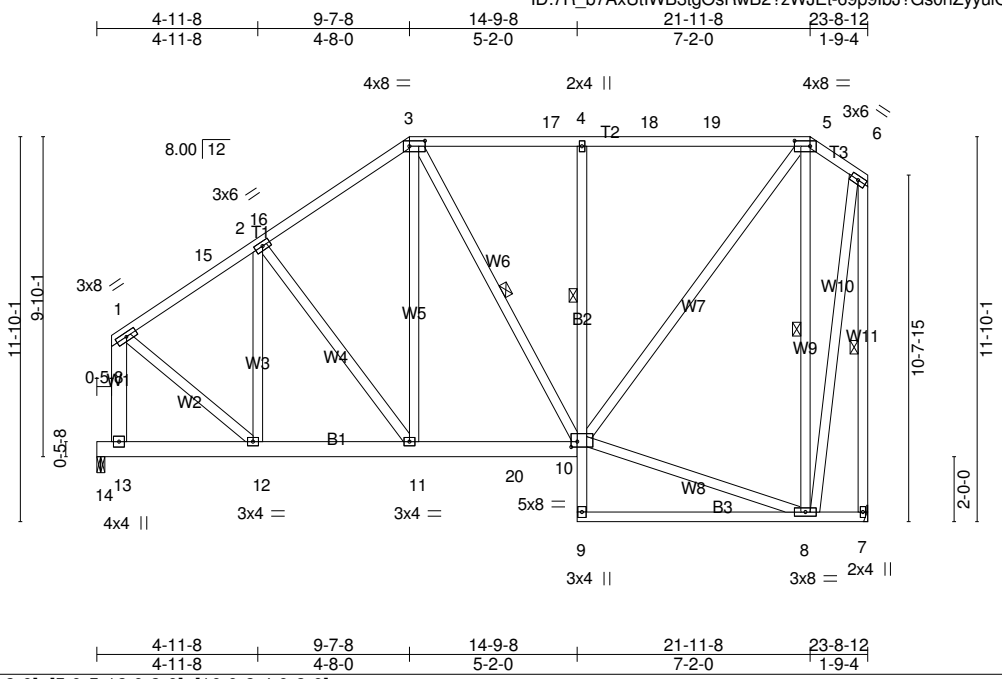

Plate Offsets (X,Y)-- [3:0-5-12,0-2-0], [5:0-5-12,0-2-0], [10:0-2-4,0-2-0]

LOADING (psf)		**SPACING-**	2-0-0	**CSI.**		**DEFL.**	in	(loc)	l/defl	L/d	**PLATES**	**GRIP**
TCLL	20.0	Plate Grip DOL	1.25	TC	0.51	Vert(LL)	-0.08	8-9	>999	240	MT20	244/190
TCDL	7.0	Lumber DOL	1.25	BC	0.46	Vert(CT)	-0.16	8-9	>999	180		
BCLL	0.0 *	Rep Stress Incr	YES	WB	0.48	Horz(CT)	-0.02	14	n/a	n/a		
BCDL	10.0	Code FBC2020/TPI2014		Matrix-MS							Weight: 241 lb	FT = 20%

LUMBER-
TOP CHORD 2x4 SP No.2
BOT CHORD 2x4 SP No.2 *Except*
B1: 2x6 SP No.2, B2: 2x4 SP No.3
WEBS 2x4 SP No.3 *Except*
W1: 2x6 SP No.2

BRACING-
TOP CHORD Structural wood sheathing directly applied or 6-0-0 oc purlins, except end verticals, and 2-0-0 oc purlins (6-0-0 max.): 3-5.
BOT CHORD Rigid ceiling directly applied or 10-0-0 oc bracing. Except:
1 Row at midpt 4-10
WEBS 1 Row at midpt 3-10, 5-8, 6-7

MiTek recommends that Stabilizers and required cross bracing be installed during truss erection, in accordance with Stabilizer Installation guide.

REACTIONS. (lb/size) 14=838/0-3-0, 7=868/Mechanical
Max Horz 7=183(LC 9)
Max Uplift14=-143(LC 12), 7=-203(LC 9)
Max Grav 14=926(LC 2), 7=948(LC 2)

FORCES. (lb) - Max. Comp./Max. Ten. - All forces 250 (lb) or less except when shown.
TOP CHORD 1-15=-780/124, 2-15=-687/136, 2-16=-771/166, 3-16=-761/188, 3-17=-573/154, 4-17=-573/154, 4-18=-573/154, 18-19=-573/154, 5-19=-573/154, 1-13=-921/167, 6-7=-978/189
BOT CHORD 11-12=-103/611, 11-20=-102/592, 10-20=-102/592, 4-10=-392/191
WEBS 3-11=-58/323, 5-10=-181/726, 5-8=-701/204, 1-12=-82/682, 6-8=-203/886

NOTES-
1) Unbalanced roof live loads have been considered for this design.
2) Wind: ASCE 7-16; Vult=130mph (3-second gust) Vasd=101mph; TCDL=4.2psf; BCDL=3.0psf; h=20ft; Cat. II; Exp B; Encl., GCpi=0.18; MWFRS (envelope) gable end zone and C-C Exterior(2E) 0-8-4 to 3-8-4, Interior(1) 3-8-4 to 9-7-8, Exterior(2R) 9-7-8 to 13-10-7, Interior(1) 13-10-7 to 21-11-8, Exterior(2E) 21-11-8 to 23-7-0 zone; end vertical left exposed;C-C for members and forces & MWFRS for reactions shown; Lumber DOL=1.60 plate grip DOL=1.60
3) Building Designer / Project engineer responsible for verifying applied roof live load shown covers rain loading requirements specific to the use of this truss component.
4) Provide adequate drainage to prevent water ponding.
5) This truss has been designed for a 10.0 psf bottom chord live load nonconcurrent with any other live loads.
6) * This truss has been designed for a live load of 20.0psf on the bottom chord in all areas where a rectangle 3-6-0 tall by 2-0-0 wide will fit between the bottom chord and any other members, with BCDL = 10.0psf.
7) All bearings are assumed to be SP No.2 crushing capacity of 565 psi.
8) Refer to girder(s) for truss to truss connections.
9) Provide mechanical connection (by others) of truss to bearing plate capable of withstanding 100 lb uplift at joint(s) except (jt=lb) 14=143, 7=203.
10) Graphical purlin representation does not depict the size or the orientation of the purlin along the top and/or bottom chord.

LOAD CASE(S) Standard

Job	Truss	Truss Type	Qty	Ply	PFS SOLUTIONS - LOT 5 AL
2714379	T26	Piggyback Base	7	1	Job Reference (optional)

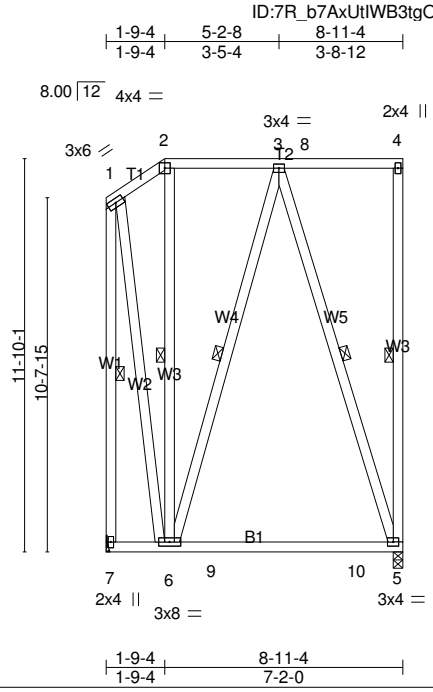

LOADING (psf)		SPACING-	2-0-0	CSI.		DEFL.	in	(loc)	l/defl	L/d	PLATES	GRIP
TCLL	20.0	Plate Grip DOL	1.25	TC	0.25	Vert(LL)	-0.12	5-6	>838	240	MT20	244/190
TCDL	7.0	Lumber DOL	1.25	BC	0.55	Vert(CT)	-0.19	5-6	>539	180		
BCLL	0.0 *	Rep Stress Incr	YES	WB	0.14	Horz(CT)	0.00	5	n/a	n/a		
BCDL	10.0	Code FBC2020/TPI2014		Matrix-MS							Weight: 126 lb	FT = 20%

LUMBER-
TOP CHORD 2x4 SP No.2
BOT CHORD 2x4 SP No.2
WEBS 2x4 SP No.3

BRACING-
TOP CHORD Structural wood sheathing directly applied or 6-0-0 oc purlins, except end verticals, and 2-0-0 oc purlins (6-0-0 max.): 2-4.
BOT CHORD Rigid ceiling directly applied or 6-0-0 oc bracing.
WEBS 1 Row at midpt 4-5, 2-6, 3-6, 3-5, 1-7

MiTek recommends that Stabilizers and required cross bracing be installed during truss erection, in accordance with Stabilizer Installation guide.

REACTIONS. (lb/size) 7=320/Mechanical, 5=320/0-3-8
Max Horz 7=38(LC 12)
Max Uplift7=-37(LC 9), 5=-112(LC 9)
Max Grav 7=367(LC 2), 5=379(LC 2)

FORCES. (lb) - Max. Comp./Max. Ten. - All forces 250 (lb) or less except when shown.
TOP CHORD 1-7=-447/44
WEBS 1-6=-34/376

NOTES-
1) Unbalanced roof live loads have been considered for this design.
2) Wind: ASCE 7-16; Vult=130mph (3-second gust) Vasd=101mph; TCDL=4.2psf; BCDL=3.0psf; h=20ft; Cat. II; Exp B; Encl., GCpi=0.18; MWFRS (envelope) gable end zone and C-C Exterior(2E) 0-1-12 to 1-9-4, Exterior(2R) 1-9-4 to 6-0-2, Interior(1) 6-0-2 to 8-9-8 zone;C-C for members and forces & MWFRS for reactions shown; Lumber DOL=1.60 plate grip DOL=1.60
3) Building Designer / Project engineer responsible for verifying applied roof live load shown covers rain loading requirements specific to the use of this truss component.
4) Provide adequate drainage to prevent water ponding.
5) This truss has been designed for a 10.0 psf bottom chord live load nonconcurrent with any other live loads.
6) * This truss has been designed for a live load of 20.0psf on the bottom chord in all areas where a rectangle 3-6-0 tall by 2-0-0 wide will fit between the bottom chord and any other members, with BCDL = 10.0psf.
7) All bearings are assumed to be SP No.2 crushing capacity of 565 psi.
8) Refer to girder(s) for truss to truss connections.
9) Provide mechanical connection (by others) of truss to bearing plate capable of withstanding 100 lb uplift at joint(s) 7 except (jt=lb) 5=112.
10) Graphical purlin representation does not depict the size or the orientation of the purlin along the top and/or bottom chord.

LOAD CASE(S) Standard

Job	Truss	Truss Type	Qty	Ply	PFS SOLUTIONS - LOT 5 AL
2714379	TG01	Flat Girder	1	1	Job Reference (optional)

Scale = 1:31.3

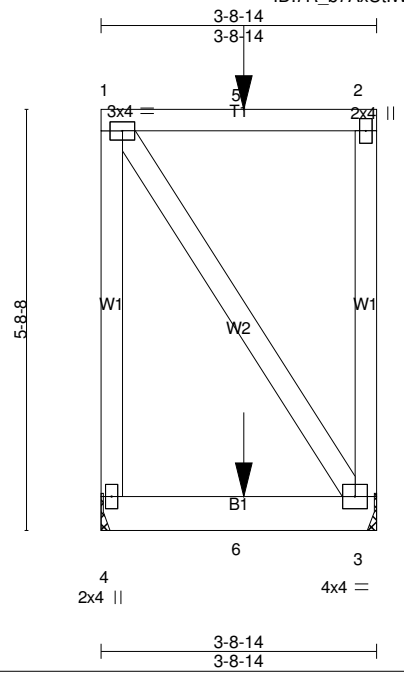

LOADING (psf)		SPACING-	2-0-0	CSI.		DEFL.	in	(loc)	l/defl	L/d	PLATES	GRIP
TCLL	20.0	Plate Grip DOL	1.25	TC	0.32	Vert(LL)	-0.00	3-4	>999	240	MT20	244/190
TCDL	7.0	Lumber DOL	1.25	BC	0.11	Vert(CT)	-0.01	3-4	>999	180		
BCLL	0.0 *	Rep Stress Incr	NO	WB	0.00	Horz(CT)	-0.00	3	n/a	n/a		
BCDL	10.0	Code FBC2020/TPI2014		Matrix-MP							Weight: 38 lb	FT = 20%

LUMBER-
TOP CHORD 2x4 SP No.2
BOT CHORD 2x6 SP No.2
WEBS 2x4 SP No.3

BRACING-
TOP CHORD Structural wood sheathing directly applied or 3-8-14 oc purlins, except end verticals.
BOT CHORD Rigid ceiling directly applied or 10-0-0 oc bracing.

MiTek recommends that Stabilizers and required cross bracing be installed during truss erection, in accordance with Stabilizer Installation guide.

REACTIONS. (lb/size) 4=164/Mechanical, 3=167/Mechanical
Max Uplift4=-93(LC 4), 3=-97(LC 4)

FORCES. (lb) - Max. Comp./Max. Ten. - All forces 250 (lb) or less except when shown.

NOTES-
1) Wind: ASCE 7-16; Vult=130mph (3-second gust) Vasd=101mph; TCDL=4.2psf; BCDL=3.0psf; h=20ft; Cat. II; Exp B; Encl., GCpi=0.18; MWFRS (envelope) gable end zone; Lumber DOL=1.60 plate grip DOL=1.60
2) Building Designer / Project engineer responsible for verifying applied roof live load shown covers rain loading requirements specific to the use of this truss component.
3) Provide adequate drainage to prevent water ponding.
4) This truss has been designed for a 10.0 psf bottom chord live load nonconcurrent with any other live loads.
5) * This truss has been designed for a live load of 20.0psf on the bottom chord in all areas where a rectangle 3-6-0 tall by 2-0-0 wide will fit between the bottom chord and any other members.
6) All bearings are assumed to be SP No.2 crushing capacity of 565 psi.
7) Refer to girder(s) for truss to truss connections.
8) Provide mechanical connection (by others) of truss to bearing plate capable of withstanding 100 lb uplift at joint(s) 4, 3.
9) Hanger(s) or other connection device(s) shall be provided sufficient to support concentrated load(s) 106 lb down and 89 lb up at 1-11-4 on top chord, and 65 lb down and 56 lb up at 1-11-4 on bottom chord. The design/selection of such connection device(s) is the responsibility of others.
10) In the LOAD CASE(S) section, loads applied to the face of the truss are noted as front (F) or back (B).

LOAD CASE(S) Standard
1) Dead + Roof Live (balanced): Lumber Increase=1.25, Plate Increase=1.25
Uniform Loads (plf)
Vert: 1-2=-54, 3-4=-20
Concentrated Loads (lb)
Vert: 5=-50(B) 6=-25(B)

Job	Truss	Truss Type	Qty	Ply	PFS SOLUTIONS - LOT 5 AL
2714379	V01	GABLE	1	1	Job Reference (optional)

Builders FirstSource, Lake City, FL 32055, Kim Holloway

8.420 s Nov 10 2020 MiTek Industries, Inc. Wed Mar 31 09:32:29 2021 Page 1
ID:7R_b7AxUtIWB3tgOsRwB2?zWJEt-WkVIxdLuYnOMQPhTNYEhFW4WrHl8a3zrGTAaktzVTSG

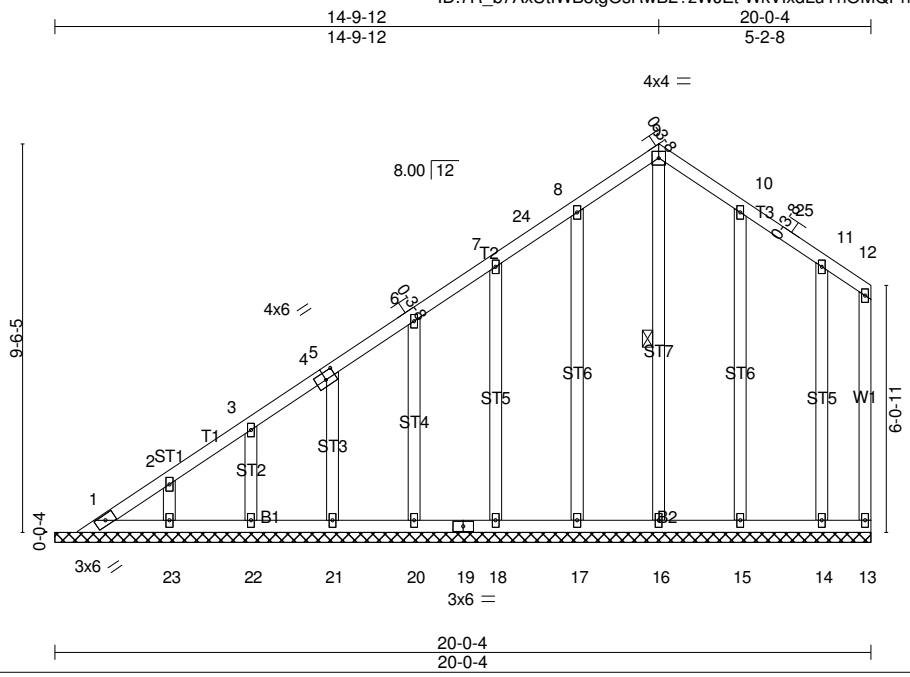

Plate Offsets (X,Y)-- [4:0-3-0,0-2-4]

LOADING (psf)		SPACING-	2-0-0	CSI.		DEFL.	in	(loc)	l/defl	L/d	PLATES	GRIP
TCLL	20.0	Plate Grip DOL	1.25	TC	0.05	Vert(LL)	n/a	-	n/a	999	MT20	244/190
TCDL	7.0	Lumber DOL	1.25	BC	0.03	Vert(CT)	n/a	-	n/a	999		
BCLL	0.0 *	Rep Stress Incr	YES	WB	0.15	Horz(CT)	0.00	13	n/a	n/a		
BCDL	10.0	Code FBC2020/TPI2014		Matrix-S							Weight: 144 lb	FT = 20%

LUMBER-
TOP CHORD 2x4 SP No.2
BOT CHORD 2x4 SP No.2
WEBS 2x4 SP No.3
OTHERS 2x4 SP No.3

BRACING-
TOP CHORD Structural wood sheathing directly applied or 6-0-0 oc purlins, except end verticals.
BOT CHORD Rigid ceiling directly applied or 10-0-0 oc bracing.
WEBS 1 Row at midpt 9-16

MiTek recommends that Stabilizers and required cross bracing be installed during truss erection, in accordance with Stabilizer Installation guide.

REACTIONS. All bearings 20-0-4.
(lb) - Max Horz 1=251(LC 12)
Max Uplift All uplift 100 lb or less at joint(s) 13, 1, 16, 17, 18, 20, 21, 22, 23, 15, 14
Max Grav All reactions 250 lb or less at joint(s) 13, 1, 16, 17, 18, 20, 21, 22, 23, 15, 14

FORCES. (lb) - Max. Comp./Max. Ten. - All forces 250 (lb) or less except when shown.
TOP CHORD 1-2=-284/177

NOTES-
1) Unbalanced roof live loads have been considered for this design.
2) Wind: ASCE 7-16; Vult=130mph (3-second gust) Vasd=101mph; TCDL=4.2psf; BCDL=3.0psf; h=20ft; Cat. II; Exp B; Encl., GCpi=0.18; MWFRS (envelope) gable end zone and C-C Exterior(2E) 1-0-1 to 4-0-1, Interior(1) 4-0-1 to 14-9-12, Exterior(2R) 14-9-12 to 17-9-12, Interior(1) 17-9-12 to 19-10-8 zone;C-C for members and forces & MWFRS for reactions shown; Lumber DOL=1.60 plate grip DOL=1.60
3) Building Designer / Project engineer responsible for verifying applied roof live load shown covers rain loading requirements specific to the use of this truss component.
4) All plates are 2x4 MT20 unless otherwise indicated.
5) Gable requires continuous bottom chord bearing.
6) This truss has been designed for a 10.0 psf bottom chord live load nonconcurrent with any other live loads.
7) * This truss has been designed for a live load of 20.0psf on the bottom chord in all areas where a rectangle 3-6-0 tall by 2-0-0 wide will fit between the bottom chord and any other members.
8) All bearings are assumed to be SP No.2 crushing capacity of 565 psi.
9) Provide mechanical connection (by others) of truss to bearing plate capable of withstanding 100 lb uplift at joint(s) 13, 1, 16, 17, 18, 20, 21, 22, 23, 15, 14.

LOAD CASE(S) Standard

Job	Truss	Truss Type	Qty	Ply	PFS SOLUTIONS - LOT 5 AL
2714379	V02	Valley	1	1	Job Reference (optional)

Scale: 1/4"=1'

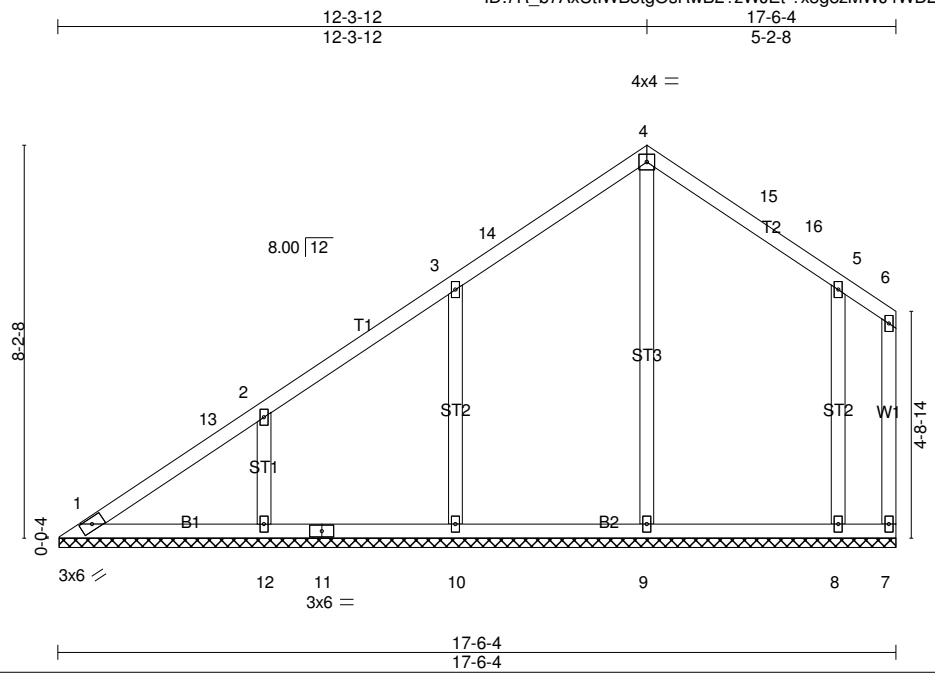

LOADING (psf)		SPACING-	2-0-0	CSI.		DEFL.	in	(loc)	l/defl	L/d	PLATES	GRIP
TCLL	20.0	Plate Grip DOL	1.25	TC	0.17	Vert(LL)	n/a	-	n/a	999	MT20	244/190
TCDL	7.0	Lumber DOL	1.25	BC	0.18	Vert(CT)	n/a	-	n/a	999		
BCLL	0.0 *	Rep Stress Incr	YES	WB	0.24	Horz(CT)	-0.00	7	n/a	n/a		
BCDL	10.0	Code FBC2020/TPI2014		Matrix-S							Weight: 93 lb	FT = 20%

LUMBER-
TOP CHORD 2x4 SP No.2
BOT CHORD 2x4 SP No.2
WEBS 2x4 SP No.3
OTHERS 2x4 SP No.3

BRACING-
TOP CHORD Structural wood sheathing directly applied or 6-0-0 oc purlins, except end verticals.
BOT CHORD Rigid ceiling directly applied or 6-0-0 oc bracing.

MiTek recommends that Stabilizers and required cross bracing be installed during truss erection, in accordance with Stabilizer Installation guide.

REACTIONS. All bearings 17-5-14.
(lb) - Max Horz 1=206(LC 12)
Max Uplift All uplift 100 lb or less at joint(s) 1, 7, 9 except 10=-150(LC 12), 12=-153(LC 12), 8=-142(LC 13)
Max Grav All reactions 250 lb or less at joint(s) 1, 7 except 9=412(LC 19), 10=406(LC 19), 12=400(LC 19), 8=388(LC 20)

FORCES. (lb) - Max. Comp./Max. Ten. - All forces 250 (lb) or less except when shown.

NOTES-
1) Unbalanced roof live loads have been considered for this design.
2) Wind: ASCE 7-16; Vult=130mph (3-second gust) Vasd=101mph; TCDL=4.2psf; BCDL=3.0psf; h=20ft; Cat. II; Exp B; Encl., GCpi=0.18; MWFRS (envelope) gable end zone and C-C Exterior(2E) 0-5-12 to 3-5-12, Interior(1) 3-5-12 to 12-3-12, Exterior(2R) 12-3-12 to 15-3-12, Interior(1) 15-3-12 to 17-4-8 zone;C-C for members and forces & MWFRS for reactions shown; Lumber DOL=1.60 plate grip DOL=1.60
3) Building Designer / Project engineer responsible for verifying applied roof live load shown covers rain loading requirements specific to the use of this truss component.
4) All plates are 2x4 MT20 unless otherwise indicated.
5) Gable requires continuous bottom chord bearing.
6) This truss has been designed for a 10.0 psf bottom chord live load nonconcurrent with any other live loads.
7) * This truss has been designed for a live load of 20.0psf on the bottom chord in all areas where a rectangle 3-6-0 tall by 2-0-0 wide will fit between the bottom chord and any other members, with BCDL = 10.0psf.
8) All bearings are assumed to be SP No.2 crushing capacity of 565 psi.
9) Provide mechanical connection (by others) of truss to bearing plate capable of withstanding 100 lb uplift at joint(s) 1, 7, 9 except (jt=lb) 10=150, 12=153, 8=142.

LOAD CASE(S) Standard

Job	Truss	Truss Type	Qty	Ply	PFS SOLUTIONS - LOT 5 AL
2714379	V03	Valley	1	1	Job Reference (optional)

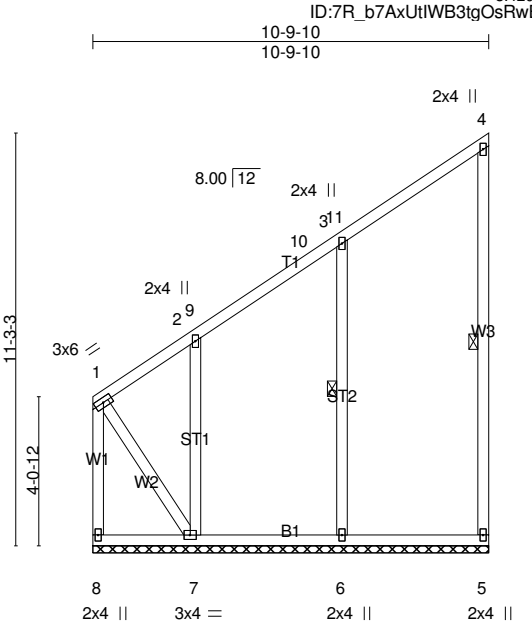

LOADING (psf)		SPACING-	2-0-0	CSI.		DEFL.	in	(loc)	l/defl	L/d	PLATES	GRIP
TCLL	20.0	Plate Grip DOL	1.25	TC	0.18	Vert(LL)	n/a	-	n/a	999	MT20	244/190
TCDL	7.0	Lumber DOL	1.25	BC	0.20	Vert(CT)	n/a	-	n/a	999		
BCLL	0.0 *	Rep Stress Incr	YES	WB	0.13	Horz(CT)	-0.00	5	n/a	n/a		
BCDL	10.0	Code FBC2020/TPI2014		Matrix-S							Weight: 83 lb	FT = 20%

LUMBER-

TOP CHORD	2x4 SP No.2
BOT CHORD	2x4 SP No.2
WEBS	2x4 SP No.3
OTHERS	2x4 SP No.3

BRACING-

TOP CHORD	Structural wood sheathing directly applied or 6-0-0 oc purlins, except end verticals.
BOT CHORD	Rigid ceiling directly applied or 10-0-0 oc bracing.
WEBS	1 Row at midpt 4-5, 3-6

MiTek recommends that Stabilizers and required cross bracing be installed during truss erection, in accordance with Stabilizer Installation guide.

REACTIONS. All bearings 10-9-10.
(lb) - Max Horz 8=209(LC 12)
Max Uplift All uplift 100 lb or less at joint(s) 5 except 8=-132(LC 10), 6=-108(LC 12), 7=-431(LC 12)
Max Grav All reactions 250 lb or less at joint(s) 5 except 8=407(LC 12), 6=477(LC 19), 7=453(LC 19)

FORCES. (lb) - Max. Comp./Max. Ten. - All forces 250 (lb) or less except when shown.
TOP CHORD 1-8=-470/215, 1-2=-267/143
WEBS 3-6=-254/195, 1-7=-211/422

NOTES-
1) Wind: ASCE 7-16; Vult=130mph (3-second gust) Vasd=101mph; TCDL=4.2psf; BCDL=3.0psf; h=20ft; Cat. II; Exp B; Encl., GCpi=0.18; MWFRS (envelope) gable end zone and C-C Exterior(2E) 0-1-12 to 3-1-12, Interior(1) 3-1-12 to 10-7-14 zone;C-C for members and forces & MWFRS for reactions shown; Lumber DOL=1.60 plate grip DOL=1.60
2) Building Designer / Project engineer responsible for verifying applied roof live load shown covers rain loading requirements specific to the use of this truss component.
3) Gable requires continuous bottom chord bearing.
4) This truss has been designed for a 10.0 psf bottom chord live load nonconcurrent with any other live loads.
5) * This truss has been designed for a live load of 20.0psf on the bottom chord in all areas where a rectangle 3-6-0 tall by 2-0-0 wide will fit between the bottom chord and any other members, with BCDL = 10.0psf.
6) All bearings are assumed to be SP No.2 crushing capacity of 565 psi.
7) Provide mechanical connection (by others) of truss to bearing plate capable of withstanding 100 lb uplift at joint(s) 5 except (jt=lb) 8=132, 6=108, 7=431.

LOAD CASE(S) Standard

Job	Truss	Truss Type	Qty	Ply	PFS SOLUTIONS - LOT 5 AL
2714379	V04	Valley	1	1	Job Reference (optional)

10-9-10
10-9-10

Scale = 1:53.4

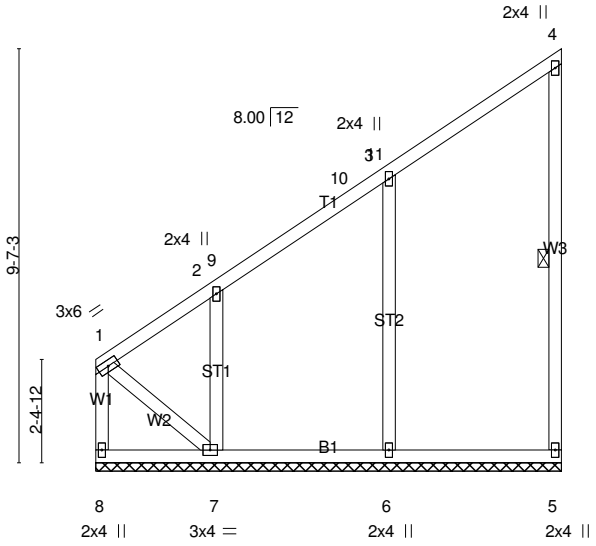

LOADING (psf)		SPACING-	2-0-0	CSI.		DEFL.	in	(loc)	l/defl	L/d	PLATES	GRIP
TCLL	20.0	Plate Grip DOL	1.25	TC	0.18	Vert(LL)	n/a	-	n/a	999	MT20	244/190
TCDL	7.0	Lumber DOL	1.25	BC	0.20	Vert(CT)	n/a	-	n/a	999		
BCLL	0.0 *	Rep Stress Incr	YES	WB	0.21	Horz(CT)	-0.00	5	n/a	n/a		
BCDL	10.0	Code FBC2020/TPI2014		Matrix-S							Weight: 71 lb	FT = 20%

LUMBER-
TOP CHORD 2x4 SP No.2
BOT CHORD 2x4 SP No.2
WEBS 2x4 SP No.3
OTHERS 2x4 SP No.3

BRACING-
TOP CHORD Structural wood sheathing directly applied or 6-0-0 oc purlins, except end verticals.
BOT CHORD Rigid ceiling directly applied or 10-0-0 oc bracing.
WEBS 1 Row at midpt 4-5

MiTek recommends that Stabilizers and required cross bracing be installed during truss erection, in accordance with Stabilizer Installation guide.

REACTIONS. All bearings 10-9-10.
(lb) - Max Horz 8=209(LC 12)
Max Uplift All uplift 100 lb or less at joint(s) 8, 5 except 6=-108(LC 12), 7=-302(LC 12)
Max Grav All reactions 250 lb or less at joint(s) 5 except 8=277(LC 12), 6=476(LC 19), 7=413(LC 19)

FORCES. (lb) - Max. Comp./Max. Ten. - All forces 250 (lb) or less except when shown.
TOP CHORD 1-8=-319/141, 1-2=-267/142
WEBS 3-6=-253/194, 1-7=-157/310

NOTES-
1) Wind: ASCE 7-16; Vult=130mph (3-second gust) Vasd=101mph; TCDL=4.2psf; BCDL=3.0psf; h=20ft; Cat. II; Exp B; Encl., GCpi=0.18; MWFRS (envelope) gable end zone and C-C Exterior(2E) 0-1-12 to 3-1-12, Interior(1) 3-1-12 to 10-7-14 zone;C-C for members and forces & MWFRS for reactions shown; Lumber DOL=1.60 plate grip DOL=1.60
2) Building Designer / Project engineer responsible for verifying applied roof live load shown covers rain loading requirements specific to the use of this truss component.
3) Gable requires continuous bottom chord bearing.
4) This truss has been designed for a 10.0 psf bottom chord live load nonconcurrent with any other live loads.
5) * This truss has been designed for a live load of 20.0psf on the bottom chord in all areas where a rectangle 3-6-0 tall by 2-0-0 wide will fit between the bottom chord and any other members, with BCDL = 10.0psf.
6) All bearings are assumed to be SP No.2 crushing capacity of 565 psi.
7) Provide mechanical connection (by others) of truss to bearing plate capable of withstanding 100 lb uplift at joint(s) 8, 5 except (jt=lb) 6=108, 7=302.

LOAD CASE(S) Standard

Job	Truss	Truss Type	Qty	Ply	PFS SOLUTIONS - LOT 5 AL
2714379	V05	Valley	1	1	Job Reference (optional)

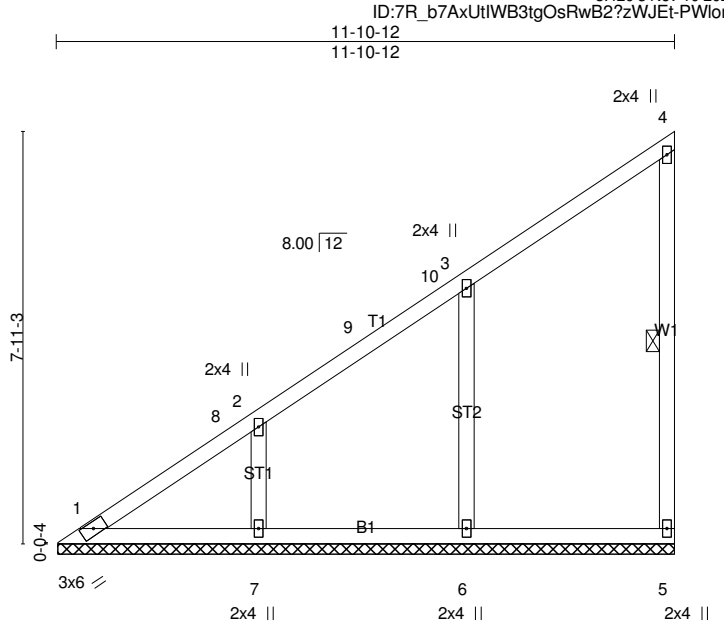

LOADING (psf)		SPACING-	2-0-0	CSI.		DEFL.	in	(loc)	l/defl	L/d	PLATES	GRIP
TCLL	20.0	Plate Grip DOL	1.25	TC	0.17	Vert(LL)	n/a	-	n/a	999	MT20	244/190
TCDL	7.0	Lumber DOL	1.25	BC	0.16	Vert(CT)	n/a	-	n/a	999		
BCLL	0.0 *	Rep Stress Incr	YES	WB	0.12	Horz(CT)	0.00	5	n/a	n/a		
BCDL	10.0	Code FBC2020/TPI2014		Matrix-S							Weight: 59 lb	FT = 20%

LUMBER-
TOP CHORD 2x4 SP No.2
BOT CHORD 2x4 SP No.2
WEBS 2x4 SP No.3
OTHERS 2x4 SP No.3

BRACING-
TOP CHORD Structural wood sheathing directly applied or 6-0-0 oc purlins, except end verticals.
BOT CHORD Rigid ceiling directly applied or 10-0-0 oc bracing.
WEBS 1 Row at midpt 4-5

MiTek recommends that Stabilizers and required cross bracing be installed during truss erection, in accordance with Stabilizer Installation guide.

REACTIONS. All bearings 11-10-6.
(lb) - Max Horz 1=219(LC 12)
Max Uplift All uplift 100 lb or less at joint(s) 5, 6 except 7=-141(LC 12)
Max Grav All reactions 250 lb or less at joint(s) 1, 5 except 6=432(LC 19), 7=370(LC 19)

FORCES. (lb) - Max. Comp./Max. Ten. - All forces 250 (lb) or less except when shown.
TOP CHORD 1-8=-267/128, 2-8=-253/143

NOTES-
1) Wind: ASCE 7-16; Vult=130mph (3-second gust) Vasd=101mph; TCDL=4.2psf; BCDL=3.0psf; h=20ft; Cat. II; Exp B; Encl., GCpi=0.18; MWFRS (envelope) gable end zone and C-C Exterior(2E) 0-5-12 to 3-5-12, Interior(1) 3-5-12 to 11-9-0 zone;C-C for members and forces & MWFRS for reactions shown; Lumber DOL=1.60 plate grip DOL=1.60
2) Building Designer / Project engineer responsible for verifying applied roof live load shown covers rain loading requirements specific to the use of this truss component.
3) Gable requires continuous bottom chord bearing.
4) This truss has been designed for a 10.0 psf bottom chord live load nonconcurrent with any other live loads.
5) * This truss has been designed for a live load of 20.0psf on the bottom chord in all areas where a rectangle 3-6-0 tall by 2-0-0 wide will fit between the bottom chord and any other members, with BCDL = 10.0psf.
6) All bearings are assumed to be SP No.2 crushing capacity of 565 psi.
7) Provide mechanical connection (by others) of truss to bearing plate capable of withstanding 100 lb uplift at joint(s) 5, 6 except (jt=lb) 7=141.

LOAD CASE(S) Standard

Job	Truss	Truss Type	Qty	Ply	PFS SOLUTIONS - LOT 5 AL
2714379	V06	Valley	1	1	Job Reference (optional)

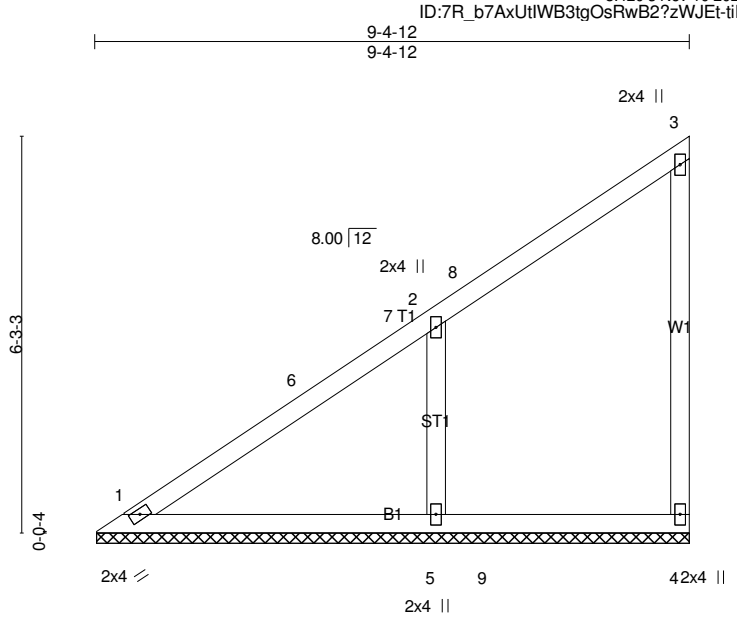

LOADING (psf)		SPACING-	2-0-0	CSI.		DEFL.	in	(loc)	l/defl	L/d	PLATES	GRIP
TCLL	20.0	Plate Grip DOL	1.25	TC	0.26	Vert(LL)	n/a	-	n/a	999	MT20	244/190
TCDL	7.0	Lumber DOL	1.25	BC	0.22	Vert(CT)	n/a	-	n/a	999		
BCLL	0.0 *	Rep Stress Incr	YES	WB	0.07	Horz(CT)	0.00	4	n/a	n/a		
BCDL	10.0	Code FBC2020/TPI2014		Matrix-S							Weight: 43 lb	FT = 20%

LUMBER-
TOP CHORD 2x4 SP No.2
BOT CHORD 2x4 SP No.2
WEBS 2x4 SP No.3
OTHERS 2x4 SP No.3

BRACING-
TOP CHORD Structural wood sheathing directly applied or 6-0-0 oc purlins, except end verticals.
BOT CHORD Rigid ceiling directly applied or 10-0-0 oc bracing.

MiTek recommends that Stabilizers and required cross bracing be installed during truss erection, in accordance with Stabilizer Installation guide.

REACTIONS. (lb/size) 1=146/9-4-6, 4=97/9-4-6, 5=405/9-4-6
Max Horz 1=179(LC 12)
Max Uplift4=-27(LC 14), 5=-170(LC 12)
Max Grav 1=162(LC 20), 4=148(LC 19), 5=527(LC 19)

FORCES. (lb) - Max. Comp./Max. Ten. - All forces 250 (lb) or less except when shown.
WEBS 2-5=-308/237

NOTES-
1) Wind: ASCE 7-16; Vult=130mph (3-second gust) Vasd=101mph; TCDL=4.2psf; BCDL=3.0psf; h=20ft; Cat. II; Exp B; Encl., GCpi=0.18; MWFRS (envelope) gable end zone and C-C Exterior(2E) 0-5-12 to 3-5-12, Interior(1) 3-5-12 to 9-3-0 zone;C-C for members and forces & MWFRS for reactions shown; Lumber DOL=1.60 plate grip DOL=1.60
2) Building Designer / Project engineer responsible for verifying applied roof live load shown covers rain loading requirements specific to the use of this truss component.
3) Gable requires continuous bottom chord bearing.
4) This truss has been designed for a 10.0 psf bottom chord live load nonconcurrent with any other live loads.
5) * This truss has been designed for a live load of 20.0psf on the bottom chord in all areas where a rectangle 3-6-0 tall by 2-0-0 wide will fit between the bottom chord and any other members, with BCDL = 10.0psf.
6) All bearings are assumed to be SP No.2 crushing capacity of 565 psi.
7) Provide mechanical connection (by others) of truss to bearing plate capable of withstanding 100 lb uplift at joint(s) 4 except (jt=lb) 5=170.

LOAD CASE(S) Standard

Job	Truss	Truss Type	Qty	Ply	PFS SOLUTIONS - LOT 5 AL
2714379	V07	Valley	1	1	Job Reference (optional)

Builders FirstSource, Lake City, FL 32055, Kim Holloway

8.420 s Nov 10 2020 MiTek Industries, Inc. Wed Mar 31 09:32:35 2021 Page 1
ID:7R_b7AxUtIWB3tgOsRwB2?zWJEt-LusZBgQe8d8V8K8dkoL5UnKWlin9_ojkePduxWzVTSA

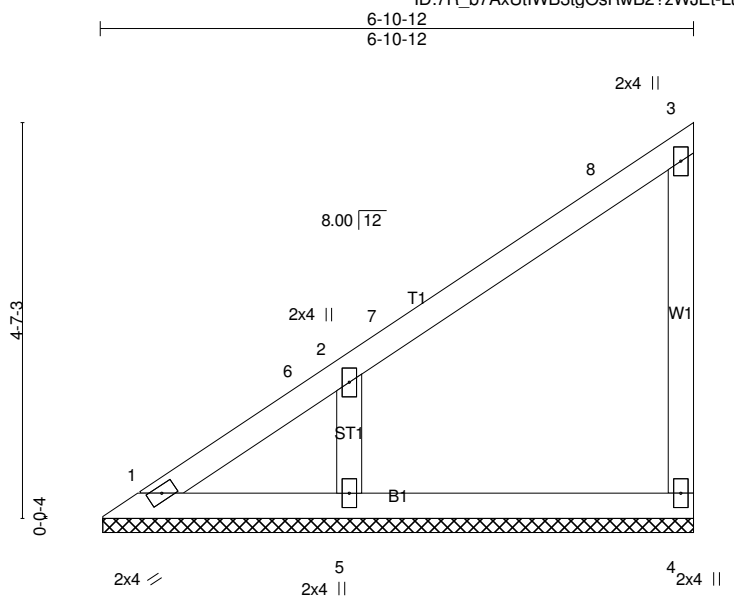

LOADING (psf)		SPACING-	2-0-0	CSI.		DEFL.	in	(loc)	l/defl	L/d	PLATES	GRIP
TCLL	20.0	Plate Grip DOL	1.25	TC	0.16	Vert(LL)	n/a	-	n/a	999	MT20	244/190
TCDL	7.0	Lumber DOL	1.25	BC	0.12	Vert(CT)	n/a	-	n/a	999		
BCLL	0.0 *	Rep Stress Incr	YES	WB	0.07	Horz(CT)	0.00		n/a	n/a		
BCDL	10.0	Code FBC2020/TPI2014		Matrix-P							Weight: 30 lb	FT = 20%

LUMBER-
TOP CHORD 2x4 SP No.2
BOT CHORD 2x4 SP No.2
WEBS 2x4 SP No.3
OTHERS 2x4 SP No.3

BRACING-
TOP CHORD Structural wood sheathing directly applied or 6-0-0 oc purlins, except end verticals.
BOT CHORD Rigid ceiling directly applied or 10-0-0 oc bracing.

MiTek recommends that Stabilizers and required cross bracing be installed during truss erection, in accordance with Stabilizer Installation guide.

REACTIONS. (lb/size) 1=46/6-10-6, 4=115/6-10-6, 5=302/6-10-6
Max Horz 1=139(LC 12)
Max Uplift 1=-2(LC 10), 4=-46(LC 12), 5=-142(LC 12)
Max Grav 1=71(LC 21), 4=121(LC 19), 5=316(LC 19)

FORCES. (lb) - Max. Comp./Max. Ten. - All forces 250 (lb) or less except when shown.

NOTES-
1) Wind: ASCE 7-16; Vult=130mph (3-second gust) Vasd=101mph; TCDL=4.2psf; BCDL=3.0psf; h=20ft; Cat. II; Exp B; Encl., GCpi=0.18; MWFRS (envelope) gable end zone and C-C Exterior(2E) 0-5-12 to 3-5-12, Interior(1) 3-5-12 to 6-9-0 zone;C-C for members and forces & MWFRS for reactions shown; Lumber DOL=1.60 plate grip DOL=1.60
2) Building Designer / Project engineer responsible for verifying applied roof live load shown covers rain loading requirements specific to the use of this truss component.
3) Gable requires continuous bottom chord bearing.
4) This truss has been designed for a 10.0 psf bottom chord live load nonconcurrent with any other live loads.
5) * This truss has been designed for a live load of 20.0psf on the bottom chord in all areas where a rectangle 3-6-0 tall by 2-0-0 wide will fit between the bottom chord and any other members.
6) All bearings are assumed to be SP No.2 crushing capacity of 565 psi.
7) Provide mechanical connection (by others) of truss to bearing plate capable of withstanding 100 lb uplift at joint(s) 1, 4 except (jt=lb) 5=142.

LOAD CASE(S) Standard

Job	Truss	Truss Type	Qty	Ply	PFS SOLUTIONS - LOT 5 AL
2714379	V08	Valley	1	1	Job Reference (optional)

Scale = 1:17.2

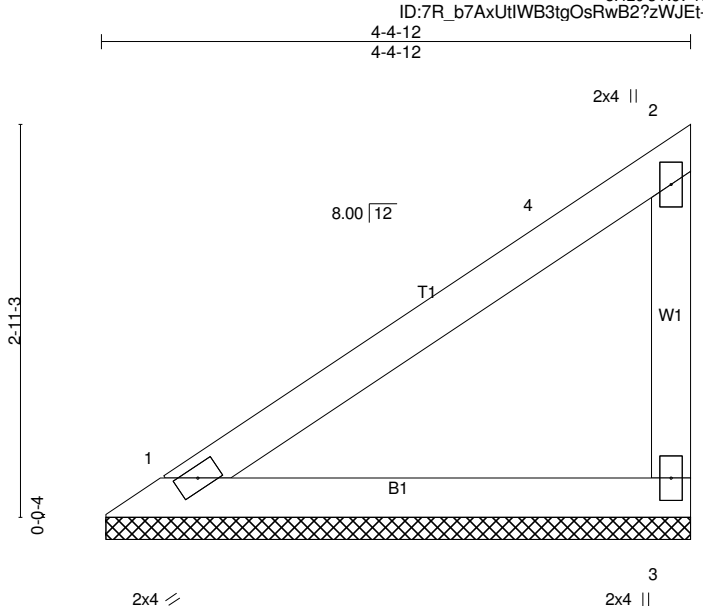

LOADING (psf)		SPACING-	2-0-0	CSI.		DEFL.	in	(loc)	l/defl	L/d	PLATES	GRIP
TCLL	20.0	Plate Grip DOL	1.25	TC	0.22	Vert(LL)	n/a	-	n/a	999	MT20	244/190
TCDL	7.0	Lumber DOL	1.25	BC	0.17	Vert(CT)	n/a	-	n/a	999		
BCLL	0.0 *	Rep Stress Incr	YES	WB	0.00	Horz(CT)	0.00		n/a	n/a		
BCDL	10.0	Code FBC2020/TPI2014		Matrix-P							Weight: 17 lb	FT = 20%

LUMBER-
TOP CHORD 2x4 SP No.2
BOT CHORD 2x4 SP No.2
WEBS 2x4 SP No.3

BRACING-
TOP CHORD Structural wood sheathing directly applied or 4-4-12 oc purlins, except end verticals.
BOT CHORD Rigid ceiling directly applied or 10-0-0 oc bracing.

MiTek recommends that Stabilizers and required cross bracing be installed during truss erection, in accordance with Stabilizer Installation guide.

REACTIONS. (lb/size) 1=139/4-4-6, 3=139/4-4-6
Max Horz 1=86(LC 12)
Max Uplift1=-9(LC 12), 3=-67(LC 12)
Max Grav 1=139(LC 1), 3=146(LC 19)

FORCES. (lb) - Max. Comp./Max. Ten. - All forces 250 (lb) or less except when shown.

NOTES-
1) Wind: ASCE 7-16; Vult=130mph (3-second gust) Vasd=101mph; TCDL=4.2psf; BCDL=3.0psf; h=20ft; Cat. II; Exp B; Encl., GCpi=0.18; MWFRS (envelope) gable end zone and C-C Exterior(2E) 0-5-12 to 3-5-12, Interior(1) 3-5-12 to 4-3-0 zone;C-C for members and forces & MWFRS for reactions shown; Lumber DOL=1.60 plate grip DOL=1.60
2) Building Designer / Project engineer responsible for verifying applied roof live load shown covers rain loading requirements specific to the use of this truss component.
3) Gable requires continuous bottom chord bearing.
4) This truss has been designed for a 10.0 psf bottom chord live load nonconcurrent with any other live loads.
5) * This truss has been designed for a live load of 20.0psf on the bottom chord in all areas where a rectangle 3-6-0 tall by 2-0-0 wide will fit between the bottom chord and any other members.
6) All bearings are assumed to be SP No.2 crushing capacity of 565 psi.
7) Provide mechanical connection (by others) of truss to bearing plate capable of withstanding 100 lb uplift at joint(s) 1, 3.

LOAD CASE(S) Standard

Job	Truss	Truss Type	Qty	Ply	PFS SOLUTIONS - LOT 5 AL
2714379	V09	Valley	1	1	Job Reference (optional)

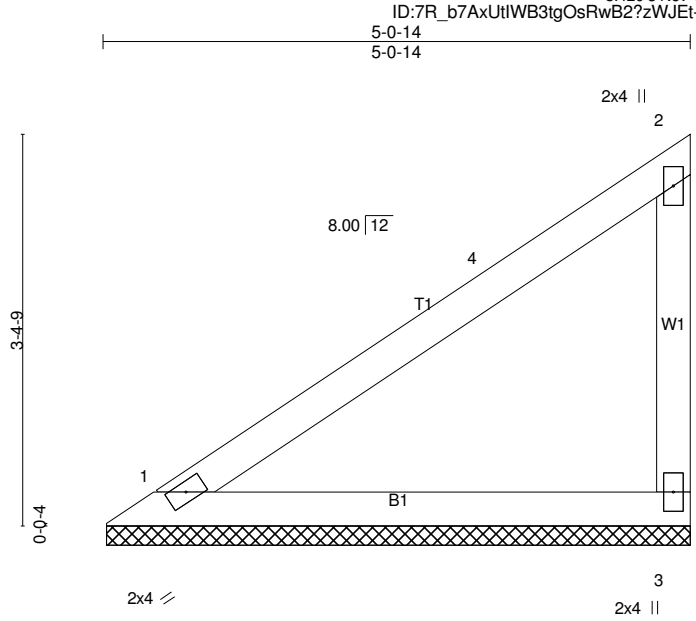

LOADING (psf)		SPACING-	2-0-0	CSI.		DEFL.	in	(loc)	l/defl	L/d	PLATES	GRIP
TCLL	20.0	Plate Grip DOL	1.25	TC	0.32	Vert(LL)	n/a	-	n/a	999	MT20	244/190
TCDL	7.0	Lumber DOL	1.25	BC	0.24	Vert(CT)	n/a	-	n/a	999		
BCLL	0.0 *	Rep Stress Incr	YES	WB	0.00	Horz(CT)	0.00		n/a	n/a		
BCDL	10.0	Code FBC2020/TPI2014		Matrix-P							Weight: 20 lb	FT = 20%

LUMBER-
TOP CHORD 2x4 SP No.2
BOT CHORD 2x4 SP No.2
WEBS 2x4 SP No.3

BRACING-
TOP CHORD Structural wood sheathing directly applied or 5-0-14 oc purlins, except end verticals.
BOT CHORD Rigid ceiling directly applied or 10-0-0 oc bracing.

MiTek recommends that Stabilizers and required cross bracing be installed during truss erection, in accordance with Stabilizer Installation guide.

REACTIONS. (lb/size) 1=164/5-0-8, 3=164/5-0-8
Max Horz 1=102(LC 12)
Max Uplift 1=-10(LC 12), 3=-78(LC 12)
Max Grav 1=164(LC 1), 3=172(LC 19)

FORCES. (lb) - Max. Comp./Max. Ten. - All forces 250 (lb) or less except when shown.

NOTES-
1) Wind: ASCE 7-16; Vult=130mph (3-second gust) Vasd=101mph; TCDL=4.2psf; BCDL=3.0psf; h=20ft; Cat. II; Exp B; Encl., GCpi=0.18; MWFRS (envelope) gable end zone and C-C Exterior(2E) 0-5-12 to 3-5-12, Interior(1) 3-5-12 to 4-11-2 zone;C-C for members and forces & MWFRS for reactions shown; Lumber DOL=1.60 plate grip DOL=1.60
2) Building Designer / Project engineer responsible for verifying applied roof live load shown covers rain loading requirements specific to the use of this truss component.
3) Gable requires continuous bottom chord bearing.
4) This truss has been designed for a 10.0 psf bottom chord live load nonconcurrent with any other live loads.
5) * This truss has been designed for a live load of 20.0psf on the bottom chord in all areas where a rectangle 3-6-0 tall by 2-0-0 wide will fit between the bottom chord and any other members.
6) All bearings are assumed to be SP No.2 crushing capacity of 565 psi.
7) Provide mechanical connection (by others) of truss to bearing plate capable of withstanding 100 lb uplift at joint(s) 1, 3.

LOAD CASE(S) Standard