DATE 04/13/2009

Columbia County Building Permit

This Permit Must Be Prominently Posted on Premises During Construction

PERMIT
000027740

APPLICANT GARY NEWSOME PHONE 386.362.9806

ADDRESS 3792 NW HWY 41 JENNINGS FL 32053

OWNER W. ROSS HAMMOCK & E. BROOKE HAMMOCK PHONE 386.208.3821

ADDRESS 437 NW CECILEY PLACE LAKE CITY FL 32053

CONTRACTOR GARY NEWSOME PHONE 386.362.9806

LOCATION OF PROPERTY 41-N TO 9 1/2 MILES TO CECILEY PLACE,TR & GO 1/4 MILE TO G&N CONSTRUCTION SIGN ON L.

TYPE DEVELOPMENT SFD/UTILITY ESTIMATED COST OF CONSTRUCTION 144350.00

HEATED FLOOR AREA 2108.00 TOTAL AREA 2887.00 HEIGHT 20.00 STORIES 1

FOUNDATION CONC WALLS FRAMED ROOF PITCH 6'12 FLOOR CONC

LAND USE & ZONING A-3 MAX. HEIGHT 35

Minimum Set Back Requirments: STREET-FRONT 30.00 REAR 25.00 SIDE 25.00

NO. EX.D.U. 0 FLOOD ZONE X DEVELOPMENT PERMIT NO.

PARCEL ID 15-2S-16-01612-003 SUBDIVISION

LOT BLOCK PHASE UNIT TOTAL ACRES 5.00

000001725		CBC1250895	Gary N	
Culvert Permit No.	Culvert Waiver	Contractor's License Number	Applicant/Owner/Contractor	
18"X32' MITERED	09-0174	BLK	WR	Y
Driveway Connection	Septic Tank Number	LU & Zoning checked by	Approved for Issuance	New Resident

COMMENTS: NOC ON FILE. 1 FOOT ABOVE ROAD.

Check # or Cash 2875

FOR BUILDING & ZONING DEPARTMENT ONLY

(footer/Slab)

Temporary Power _____ date/app. by Foundation _____ date/app. by Monolithic _____ date/app. by

Under slab rough-in plumbing _____ date/app. by Slab _____ date/app. by Sheathing/Nailing _____ date/app. by

Framing _____ date/app. by Insulation _____ date/app. by

Rough-in plumbing above slab and below wood floor _____ date/app. by Electrical rough-in _____ date/app. by

Heat & Air Duct _____ date/app. by Peri. beam (Lintel) _____ date/app. by Pool _____ date/app. by

Permanent power _____ date/app. by C.O. Final _____ date/app. by Culvert _____ date/app. by

Pump pole _____ date/app. by Utility Pole _____ date/app. by M/H tie downs, blocking, electricity and plumbing _____ date/app. by

Reconnection _____ date/app. by RV _____ date/app. by Re-roof _____ date/app. by

BUILDING PERMIT FEE $ 725.00 CERTIFICATION FEE $ 14.44 SURCHARGE FEE $ 14.44

MISC. FEES $ 0.00 ZONING CERT. FEE $ 50.00 FIRE FEE $ 0.00 WASTE FEE $

FLOOD DEVELOPMENT FEE $ FLOOD ZONE FEE $ 25.00 CULVERT FEE $ 25.00 **TOTAL FEE** 853.88

INSPECTORS OFFICE CLERKS OFFICE CH

NOTICE: IN ADDITION TO THE REQUIREMENTS OF THIS PERMIT, THERE MAY BE ADDITIONAL RESTRICTIONS APPLICABLE TO THIS PROPERTY THAT MAY BE FOUND IN THE PUBLIC RECORDS OF THIS COUNTY. AND THERE MAY BE ADDITIONAL PERMITS REQUIRED FROM OTHER GOVERNMENTAL ENTITIES SUCH AS WATER MANAGEMENT DISTRICTS, STATE AGENCIES, OR FEDERAL AGENCIES.

"WARNING TO OWNER: YOUR FAILURE TO RECORD A NOTICE OF COMMENCEMENT MAY RESULT IN YOUR PAYING TWICE FOR IMPROVEMENTS TO YOUR PROPERTY. IF YOU INTEND TO OBTAIN FINANCING, CONSULT WITH YOUR LENDER OR AN ATTORNEY BEFORE RECORDING YOUR NOTICE OF COMMENCEMENT."

EVERY PERMIT ISSUED SHALL BECOME INVALID UNLESS THE WORK AUTHORIZED BY SUCH PERMIT IS COMMENCED WITHIN 180 DAYS AFTER ITS ISSUANCE, OR IF THE WORK AUTHORIZED BY SUCH PERMIT IS SUSPENDED OR ABANDONED FOR A PERIOD OF 180 DAYS AFTER THE TIME THE WORK IS COMMENCED. A VALID PERMIT RECIEVES AN APPROVED INSPECTION EVERY 180 DAYS. WORK SHALL BE CONSIDERED NOT SUSPENDED, ABANDONED OR INVALID WHEN THE PERMIT HAS RECIEVED AN APPROVED INSPECTION WITHIN 180 DAYS OT THE PREVIOUS INSPECTION.

The Issuance of this Permit Does Not Waive Compliance by Permittee with Deed Restrictions.

Columbia County Building Permit Application

For Office Use Only Application # 0903-48 Date Received 3/27/09 By G Permit # 1725 / 27740

Zoning Official BLK Date 07.04.09 Flood Zone X Land Use A-3 Zoning A-3

FEMA Map # N/A Elevation N/A MFE 1ft Crn Rd River N/A Plans Examiner (LDR) Date 4/2/09

Comments

☑ NOC ☑ EH ☑ Deed or PA ☑ Site Plan ☐ State Road Info ☐ Parent Parcel #

☐ Dev Permit # ☐ In Floodway ☐ Letter of Auth. from Contractor ☐ F W Comp. letter ☑ well letter

IMPACT FEES: EMS Fire Corr Road/Code

School = TOTAL N/A

Septic Permit No. 09-0174 Fax 386-792-2315

Name Authorized Person Signing Permit Gary Newsome Phone (386) 362-9806

Address 3792 N.W. Hwy 41 Jennings, Fl. 32053

Owners Name Ross Hammock + E. Brooke Hammock Phone (386) 208-3821

911 Address 437 N.W. Cecilley Lake City, Fl 32055

Contractors Name G-N Construction Phone (386) 362-9806

Address 3792 N.W. Hwy 41 Jennings, Fl. 32053

Fee Simple Owner Name & Address

Bonding Co. Name & Address

Architect/Engineer Name & Address Marty J. Humphries 7932 240th St. O'Brien, Fl. 32071

Mortgage Lenders Name & Address First federal

Circle the correct power company – FL Power & Light – Clay Elec. – Suwannee Valley Elec. – Progress Energy

Property ID Number 15-2S-16-01612-003 Estimated Cost of Construction $150,000

Subdivision Name N/A Lot ____ Block ____ Unit ____ Phase ____

Driving Directions ~~Attached~~ North on U.S. 41 app 9.5 miles to N.W. Cecilley Place TR go for ¼ mile G-N construction sign on left

Number of Existing Dwellings on Property 0

Construction of Home SFD Total Acreage 5 Lot Size

Do you need a Culvert Permit or Culvert Waiver or Have an Existing Drive Total Building Height 20'

Actual Distance of Structure from Property Lines - Front 118 Side 186 Side 186 Rear 260'

Number of Stories 1 Heated Floor Area 2108 Total Floor Area 2887 Roof Pitch 6/12

Application is hereby made to obtain a permit to do work and installations as indicated. I certify that no work or installation has commenced prior to the issuance of a permit and that all work be performed to meet the standards of all laws regulating construction in this jurisdiction.

left message w/ Gary 4/7/09

TIME LIMITATIONS OF APPLICATION : An application for a permit for any proposed work shall be deemed to have been abandoned 180 days after the date of filing, unless such application has been pursued in good faith or a permit has been issued; except that the building official is authorized to grant one or more extensions of time for additional periods not exceeding 90 days each. The extension shall be requested in writing and justifiable cause demonstrated.

TIME LIMITATIONS OF PERMITS: Every permit issued shall become invalid unless the work authorized by such permit is commenced within 180 days after its issuance, or if the work authorized by such permit is suspended or abandoned for a period of 180 days after the time work is commenced. A valid permit receives an approved inspection every 180 days. Work shall be considered not suspended, abandoned or invalid when the permit has received an approved inspection within 180 days of the previous approved inspection.

FLORIDA'S CONSTRUCTION LIEN LAW: Protect Yourself and Your Investment: According to Florida Law, those who work on your property or provide materials, and are not paid-in-full, have a right to enforce their claim for payment against your property. This claim is known as a construction lien. If your contractor fails to pay subcontractors or material suppliers or neglects to make other legally required payments, the people who are owed money may look to your property for payment, even if you have paid your contractor in full.
This means if a lien is filed against your property, it could be sold against your will to pay for labor, materials or other services which your contractor may have failed to pay.

NOTICE OF RESPONSIBILITY TO BUILDING PERMITEE: ***YOU ARE HEREBY NOTIFIED*** as the recipient of a building permit from Columbia County, Florida, you will be held responsible to the County for any damage to sidewalks and/or road curbs and gutters, concrete features and structures, together with damage to drainage facilities, removal of sod, major changes to lot grades that result in ponding of water, or other damage to roadway and other public infrastructure facilities caused by you or your contractor, subcontractors, agents or representatives in the construction and/or improvement of the building and lot for which this permit is issued. No certificate of occupancy will be issued until all corrective work to these public infrastructures and facilities has been corrected.

WARNING TO OWNER: YOUR FAILURE TO RECORD A NOTICE OF COMMENCMENT MAY RESULT IN YOU PAYING TWICE FOR IMPROVEMENTS TO YOUR PROPERTY. A NOTICE OF COMMENCEMENT MUST BE RECORDED AND POSTED ON THE JOB SITE BEFORE THE FIRST INSPECTION. IF YOU INTEND TO OBTAIN FINANCING, CONSULT WITH YOUR LENDER OR ATTORNEY BEFORE RECORDING YOUR NOTICE OF COMMENCEMENT.

OWNERS CERTIFICATION: I hereby certify that all the foregoing information is accurate and all work will be done in compliance with all applicable laws and regulating construction and zoning. I further understand the above written responsibilities in Columbia County for obtaining this Building Permit.

W. Ram Hammock E. Brooke Hammock
Owners Signature

CONTRACTORS AFFIDAVIT: By my signature I understand and agree that I have informed and provided this written statement to the owner of all the above written responsibilities in Columbia County for obtaining this Building Permit including all application and permit time limitations.

Gary N
Contractor's Signature (Permitee)

Contractor's License Number CBC1250895
Columbia County
Competency Card Number_____

Affirmed under penalty of perjury to by the Contractor and subscribed before me this 24th **day of** March **20**09.

Personally known ✓ **or Produced Identification**_____

Aimee G. Hackney
State of Florida Notary Signature (For the Contractor)

SEAL: AIMEE GUDE HACKNEY
NOTARY PUBLIC - STATE OF FLORIDA
COMMISSION # DD772670
EXPIRES 5/27/2011
BONDED THRU 1-888-NOTARY1

THIS INSTRUMENT WAS PREPAR[illegible]Y:
FIRST FEDERAL BANK OF FLORI[illegible]
4705 WEST U.S. HIGHWAY 90
P.O. BOX 2029
LAKE CITY, FLORIDA 32056

Inst:200912004412 Date:3/18/2009 Time:11:43 AM
DC,P.DeWitt Cason,Columbia County Page 1 of 1 B:1169 P:1153

PERMIT NO._____ TAX FOLI [illegible]

NOTICE OF COMMENCEMENT

STATE OF FLORIDA
COUNTY OF Columbia

The undersigned hereby gives notice that improvement will be made to certain real property, and in accordance with Chapter 713, Florida Statutes, the following information is provided in this Notice of Commencement.

1. Description of property: 15-2S-16-01612-003

2. General description of improvement: Construction of Dwelling

3. Owner information:
   a. Name and address: W. Ross Hammock and E. Brooke Hammock
   2210 NW Antelope Loop, Lake City, FL 32055
   b. Interest in property: Fee Simple
   c. Name and address of fee simple title holder (if other than Owner): NONE

4. a. Contractor (name and address): G-N Construction Co. Inc.
   3792 NW US Hwy 41, Jennings, FL 32053
   b. Contractor's phone number (386) 362-9806

5. Surety:
   a. Name and address: N/A
   b. Phone Number _____
   c. Amount of bond: _____

6. Lender: FIRST FEDERAL BANK OF FLORIDA
   4705 WEST U.S. HIGHWAY 90
   P. O. BOX 2029
   LAKE CITY, FLORIDA 32056
   (386) 755-0800

7. Persons within the State of Florida designated by Owner upon whom notices or other document may be served as provided by Section 713.13 (1) (a) 7., Florida Statutes: NONE

8. In addition to himself, Owner designates PAULA HACKER of FIRST FEDERAL BANK OF FLORIDA, 4705 West U.S. Highway 90 / P. O. Box 2029, Lake City, Florida 32056 to receive a copy of the Lienor's Notice as provided in Section 713.13 (1) (b), Florida Statutes.

9. Expiration date of notice of commencement (the expiration date is 1 year from the date of recording unless a different date is specified).

WARNING TO OWNER: ANY PAYMENTS MADE BY THE OWNER AFTER THE EXPIRATION OF THE NOTICE OF COMMENCEMENT ARE CONSIDERED IMPROPER PAYMENTS UNDER CHAPTER 713, PART I, SECTION 713. 13, FLORIDA STATUTES AND CAN RESULT IN YOUR PAYING TWICE FOR IMPROVEMENTS TO YOUR PROPERTY. A NOTICE OF COMMENCEMENT MUST BE RECORDED AND POSTED ON THE JOB SITE BEFORE THE FIRST INSPECTION. IF YOU INTEND TO OBTAIN FINANCING, CONSULT WITH YOUR LENDER OR AN ATTORNEY BEFORE COMMENCING WORK OR RECORDING YOUR NOTICE OF COMMENCEMENT.

Signature of Owner or Owner's Authorized Officer/Director Partner/Manager

Owner
Signatory's Title/Office

The foregoing instrument was acknowledged before me this 13 day of March 2009 by _____, (name of person) as _____ (type of authority, e.g. officer, trustee, attorney in fact) for: W. Ross Hammock (name of party on behalf of whom instrument was executed.

Notary Public State of Florida
Judi M Lowery
My Commission DD477506
Expires 10/02/2009

Signature of Notary Public – State of Florida
Print, Type, or Stamp Commission Name of Notary
Public Commission Number: _____
Personally Known _____ or Produced Identification D.L.

Verification Pursuant to Section 92.525, Florida Statutes

Under penalties of perjury, I declare that I have read the foregoing and that the facts stated in it are true to the best of my knowledge and belief.

Signature of Natural Person Signing Above

Prepared by and return to:
Paul R. Beauchamp
P.O. Box 201
White Springs , FL 32096
386-397-2454

Inst:200812020723 Date:11/17/2008 Time:11:55 AM
Doc Stamp-Deed:0.70
DC,P.DeWitt Cason,Columbia County Page 1 of 3 B:1162 P:560

[Space Above This Line For Recording Data]

Warranty Deed

This Warranty Deed made this 17thday of **November, 2008** between **Paul R. Beauchamp, Trustee of the Paul and Barbara Beauchamp Living Trust** whose post office address is **P.O. Box 201,White Springs, FL 32096** , grantor, and W. Ross Hammock and E. Brooke Hammock, his wife, whose post office address is **P.O. Box 1053, Lake City, Florida 32056** , grantee:

(Whenever used herein the terms "grantor" and "grantee" include all the parties to this instrument and the heirs, legal representatives, and assigns of individuals, and the successors and assigns of corporations, trusts and trustees)

Witnesseth, that said grantor, for and in consideration of the sum of TEN AND NO/100 DOLLARS ($10.00) and other good and valuable considerations to said grantor in hand paid by said grantee, the receipt whereof is hereby acknowledged, has granted, bargained, and sold to the said grantee, and grantee's heirs and assigns forever, the following described land, situate, lying and being in **Columbia County, Florida** to-wit:

See Attached Exhibit "A"

This deed is being recorded between family members for love and affection, no monies or considerations have been exchanged.

This deed was prepared without an abstract of title and was not prepared incident to the issuance of title insurance.

Together with all the tenements, hereditaments and appurtenances thereto belonging or in anywise appertaining.

To Have and to Hold, the same in fee simple forever.

And the grantor hereby covenants with said grantee that the grantor is lawfully seized of said land in fee simple; that the grantor has good right and lawful authority to sell and convey said land; that the grantor hereby fully warrants the title to said land and will defend the same against the lawful claims of all persons whomsoever; and that said land is free of all encumbrances, except taxes accruing subsequent to **December 31, 2007**.

In Witness Whereof, grantor has hereunto set grantor's hand and seal the day and year first above written.

Signed, sealed and delivered in our presence:

Elizabeth Engle

Witness Name: Elizabeth Engle

Witness Name: SHEREE VANN

Paul and Barbara Beauchamp Living Trust

Paul R. Beauchamp (Seal)
Paul R. Beauchamp, Trustee

State of Florida
County of Columbia

The foregoing instrument was acknowledged before me this 17 day of November, 2008 by Paul R. Beauchamp, Trustee of the Paul and Barbara Beauchamp Living Trust who [✓] is personally known or [X] has produced a driver's license as identification.

[Notary Seal]

BARBARA BRANNON
Commission DD 722645
Expires January 31, 2012
Bonded Thru Troy Fain Insurance 800-385-7019

Barbara Brannon
Notary Public

Printed Name: Barbara Brannon

My Commission Expires: 1/31/2012

EXHIBIT "A"

BEGIN at the Northeast corner of the Southwest 1/4 of the Southwest 1/4 of Section 15, Township 2 South, Range 16 East, Columbia County, Florida and run South 00°53'52" West along the East line of said Southwest 1/4 of the Southwest 1/4 of Section 15 a distance of 626.74 feet to a point on the Northerly maintained Right-of-Way line of NW Ceciley Place; thence Northwesterly along said Northerly maintained Right-of-Way line of NW Ceciley Place a distance of 497 feet, more or less; thence North 00°53'52" East along a line parallel to the East line of the Southwest 1/4 of the Southwest 1/4 of Section 15 a distance of 433.90 feet to a point on the North line of said Southwest 1/4 of the Southwest 1/4 of Section 15; thence due East along said North line of the Southwest 1/4 of the Southwest 1/4 of Section 15 a distance of 432.05 feet to the POINT OF BEGINNING. Containing 5.00 acres, more or less.

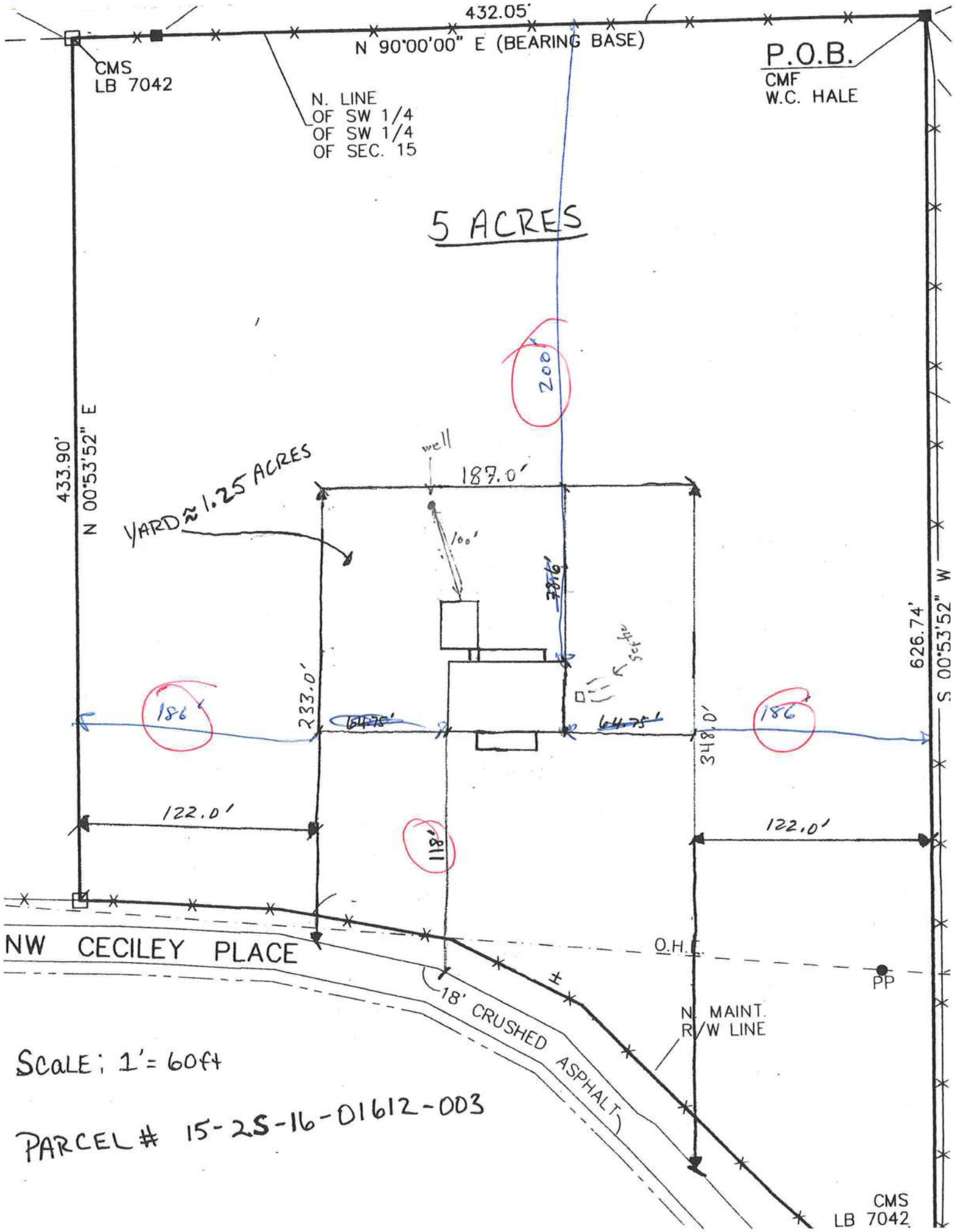

Scale: 1' = 60ft

PARCEL # 15-2S-16-01612-003

0905-48

COLUMBIA COUNTY 9-1-1 ADDRESSING

P. O. Box 1787, Lake City, FL 32056-1787
PHONE: (386) 758-1125 * FAX: (386) 758-1365 * Email: ron_croft@columbiacountyfla.com

Addressing Maintenance

To maintain the Countywide Addressing Policy you must make application for a 9-1-1 Address at the time you apply for a building permit. The established standards for assigning and posting numbers to all principal buildings, dwellings, businesses and industries are contained in Columbia County Ordinance 2001-9. The addressing system is to enable Emergency Service Agencies to locate you in an emergency, and to assist the United States Postal Service and the public in the timely and efficient provision of services to residents and businesses of Columbia County.

DATE REQUESTED: 1/30/2009 **DATE ISSUED:** 2/3/2009

ENHANCED 9-1-1 ADDRESS:

437 NW CECILEY PL

LAKE CITY FL 32055

PROPERTY APPRAISER PARCEL NUMBER:

15-2S-16-01612-003

Remarks:

Address Issued By: _____
Columbia County 9-1-1 Addressing / GIS Department

NOTICE: THIS ADDRESS WAS ISSUED BASED ON LOCATION INFORMATION RECEIVED FROM THE REQUESTER. SHOULD, AT A LATER DATE, THE LOCATION INFORMATION BE FOUND TO BE IN ERROR, THIS ADDRESS IS SUBJECT TO CHANGE.

1369

09-0174

STATE OF FLORIDA
DEPARTMENT OF HEALTH
ONSITE SEWAGE TREATMENT AND DISPOSAL SYSTEM
CONSTRUCTION PERMIT

PERMIT NO. 915790
DATE PAID: 3/19/09
FEE PAID: 310.00
RECEIPT #: 1105813

CONSTRUCTION PERMIT FOR:
[X] New System [ ] Existing System [ ] Holding Tank [ ] Innovative
[ ] Repair [ ] Abandonment [ ] Temporary [ ] _____

APPLICANT: Ross Hammock

PROPERTY ADDRESS: 437 NW Ceciley Place, Lake City, FL, 32055

LOT: na BLOCK: na SUBDIVISION: na

PROPERTY ID #: 15-2S-16-01612-003 [SECTION, TOWNSHIP, RANGE, PARCEL NUMBER] [OR TAX ID NUMBER]

SYSTEM MUST BE CONSTRUCTED IN ACCORDANCE WITH SPECIFICATIONS AND STANDARDS OF SECTION 381.0065, F.S., AND CHAPTER 64E-6, F.A.C. DEPARTMENT APPROVAL OF SYSTEM DOES NOT GUARANTEE SATISFACTORY PERFORMANCE FOR ANY SPECIFIC PERIOD OF TIME. ANY CHANGE IN MATERIAL FACTS, WHICH SERVED AS A BASIS FOR ISSUANCE OF THIS PERMIT, REQUIRE THE APPLICANT TO MODIFY THE PERMIT APPLICATION. SUCH MODIFICATIONS MAY RESULT IN THIS PERMIT BEING MADE NULL AND VOID. ISSUANCE OF THIS PERMIT DOES NOT EXEMPT THE APPLICANT FROM COMPLIANCE WITH OTHER FEDERAL, STATE, OR LOCAL PERMITTING REQUIRED FOR DEVELOPMENT OF THIS PROPERTY.

SYSTEM DESIGN AND SPECIFICATIONS

TANK
T [1050] GALLONS / GPD SEPTIC TANK/AEROBIC UNIT CAPACITY MULTI-CHAMBERED/IN-SERIES [ ]
A [ ] GALLONS / GPD _____ CAPACITY MULTI-CHAMBERED/IN-SERIES [ ]
N [ ] GALLONS GREASE INTERCEPTOR CAPACITY [MAXIMUM CAPACITY SINGLE TANK: 1250 GALLONS]
K [ ] GALLONS DOSING TANK CAPACITY [ ] GALLONS @ [ ] DOSES PER 24 HRS # PUMPS [ ]

DRAINFIELD
D [444] SQUARE FEET PRIMARY DRAINFIELD SYSTEM
R [ ] SQUARE FEET _____ SYSTEM
A TYPE SYSTEM: [ ] STANDARD [X] FILLED [ ] MOUND [ ] _____
I CONFIGURATION: [X] TRENCH [ ] BED [ ] _____
N
F LOCATION OF BENCHMARK: NAIL IN PINE TREE SE of SITE
I ELEVATION OF PROPOSED SYSTEM SITE [12] [INCHES/FT] [ABOVE/BELOW] BENCHMARK/REFERENCE POINT
E BOTTOM OF DRAINFIELD TO BE ≤ [23] [INCHES/FT] [ABOVE/BELOW] BENCHMARK/REFERENCE POINT
L
D FILL REQUIRED: [7-9] -back side INCHES EXCAVATION REQUIRED: *[65] INCHES

OTHER
*EXCAVATE SPODIC Not required. BDF @ 11" bns spodic layer would be 50" bbdf which is > 42" separation

SPECIFICATIONS BY: Rock D Z— TITLE: MASTER CONTRACTOR

APPROVED BY: Mark A Zander TITLE: Env. Manager Columbia CHD

DATE ISSUED: 3-23-09 EXPIRATION DATE: 9-23-10

DH 4016, 10/97 (Previous Editions May Be Used)

09-0174

STATE OF FLORIDA
DEPARTMENT OF HEALTH
ONSITE SEWAGE TREATMENT AND DISPOSAL SYSTEM
APPLICATION FOR CONSTRUCTION PERMIT

PERMIT NO. 915790
DATE PAID: 3/19/09
FEE PAID: 310.00
RECEIPT #: 1105813

APPLICATION FOR:
[X] New System [ ] Existing System [ ] Holding Tank [ ] Innovative
[ ] Repair [ ] Abandonment [ ] Temporary [ ] _____

APPLICANT: Ross Hammock

AGENT: ROCKY FORD, A & B CONSTRUCTION TELEPHONE: 386-497-2311

MAILING ADDRESS: P.O. BOX 39 FT. WHITE, FL, 32038

TO BE COMPLETED BY APPLICANT OR APPLICANT'S AUTHORIZED AGENT. SYSTEMS MUST BE CONSTRUCTED BY A PERSON LICENSED PURSUANT TO 489.105(3)(m) OR 489.552, FLORIDA STATUTES. IT IS THE APPLICANT'S RESPONSIBILITY TO PROVIDE DOCUMENTATION OF THE DATE THE LOT WAS CREATED OR PLATTED (MM/DD/YY) IF REQUESTING CONSIDERATION OF STATUTORY GRANDFATHER PROVISIONS.

PROPERTY INFORMATION

LOT: na BLOCK: na SUB: na PLATTED: _____

PROPERTY ID #: 15-2S-16-01612-003 ZONING: _____ I/M OR EQUIVALENT: [Y (N)]

PROPERTY SIZE: 5 ACRES WATER SUPPLY: [X] PRIVATE PUBLIC [ ]<=2000GPD [ ]>2000GPD

IS SEWER AVAILABLE AS PER 381.0065, FS? [Y (N)] DISTANCE TO SEWER: ____ FT

PROPERTY ADDRESS: 437 NW Ceciley Place, Lake City, FL, 32055

DIRECTIONS TO PROPERTY: 41 North, TR on NW Ciciley Place, Go past dead end sign, approximatley 1200 feet on left (1st cleared area on left)

BUILDING INFORMATION [X] RESIDENTIAL [ ] COMMERCIAL

Unit No	Type of Establishment	No. of Bedrooms	Building Area Sqft	Commercial/Institutional System Design Table 1, Chapter 64E-6, FAC
1	SF Residential	4	2108	
2				
3				

[N] Floor/Equipment Drains [N] Other (Specify) _____

SIGNATURE: Rocky D Ford DATE: 3/19/2009

DH 4015, 10/97 (Previous Editions May Be Used)

STATE OF FLORIDA
DEPARTMENT OF HEALTH
APPLICATION FOR ONSITE SEWAGE DISPOSAL SYSTEM CONSTRUCTION PERMIT

Permit Application Number 09-0174

Hammock

---------- PART II - SITEPLAN ----------

Scale: 1 inch = 50 feet.

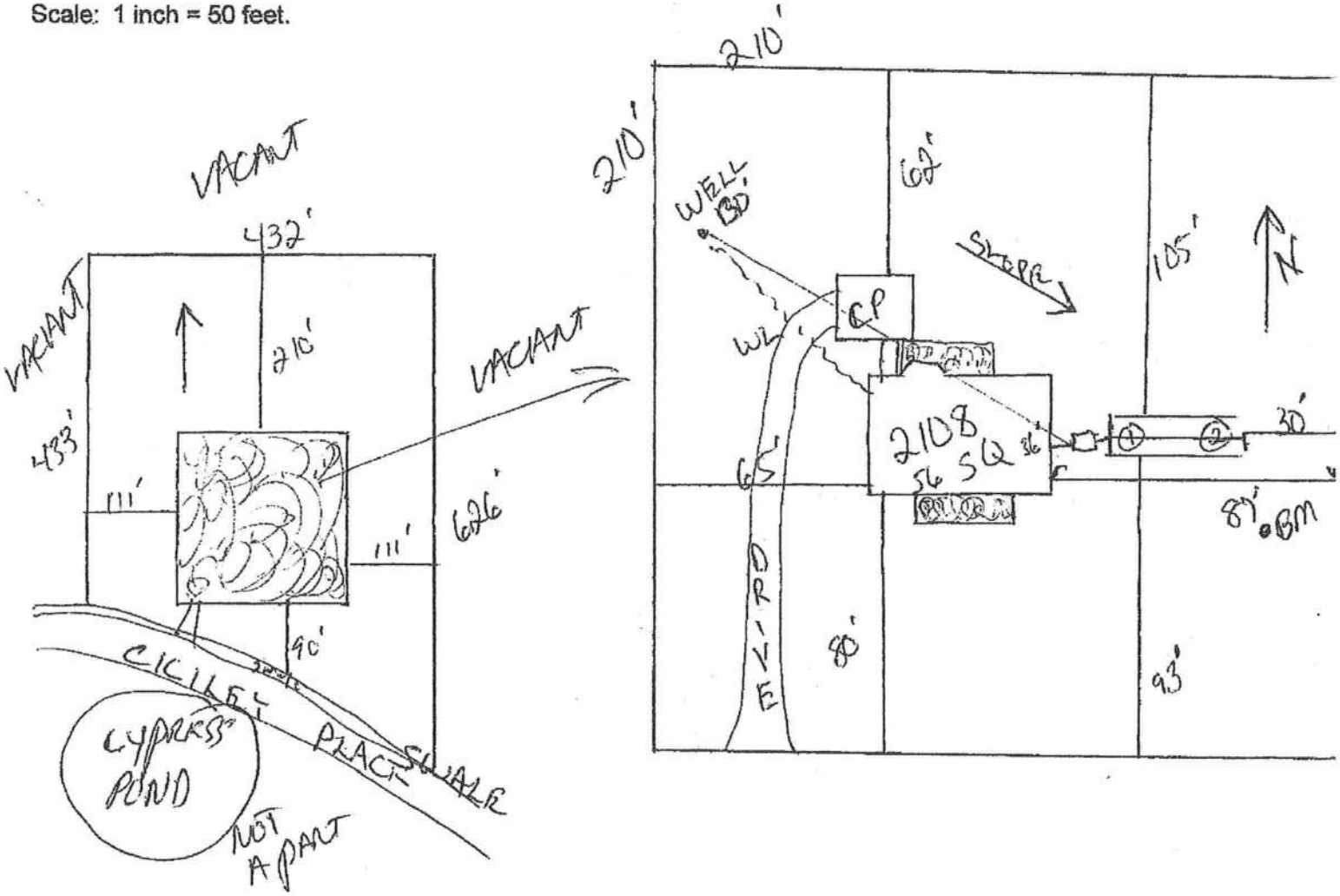

Notes: 1 of 5 ACRES

Site Plan submitted by: Rock D 7 8

MASTER CONTRACTOR

Plan Approved ✓ Not Approved ____ Date 3-23-09

By Mark A Zemlen Columbia County Health Department

ALL CHANGES MUST BE APPROVED BY THE COUNTY HEALTH DEPARTMENT

A & B Well Drilling, Inc.

5673 NW Lake Jeffery Road
Lake City, FL, 32055
386-758-3409

3/17/2009

To: Columbia County Building Department

Description of well to be installed for Customer: Ross Hammock
Located at Address: Off Lassie Black Road

1 hp 20 gpm- 1 ¼" drop over 82 gallon equivalent captive tank with cycle stop and back flow prevention. With SRWM permit.

William Bias

William Bias

Faxed on 3-17-09

FORM 1100A-08

FLORIDA ENERGY EFFICIENCY CODE FOR BUILDING CONSTRUCTION

Florida Department of Community Affairs Residential Performance Method A

Project Name:	Ross Hammock	Builder Name:	G-N Construction
Street:	437 nw Ceciley Place	Permit Office:	
City, State, Zip:	Lake City , Fl , 3205-6	Permit Number:	
Owner:	Ross Hammock	Jurisdiction:	
Design Location:	FL, Gainesville		

1. New construction or existing	New (From Plans)
2. Single family or multiple family	Single-family
3. Number of units, if multiple family	1
4. Number of Bedrooms	3
5. Is this a worst case?	No
6. Conditioned floor area (ft²)	2108

7. Windows	Description	Area
a. U-Factor:	Dbl, U=0.65	214.00 ft²
SHGC:	SHGC=0.35	
b. U-Factor:	N/A	ft²
SHGC:		
c. U-Factor:	N/A	ft²
SHGC:		
d. U-Factor:	N/A	ft²
SHGC:		
e. U-Factor:	N/A	ft²
SHGC:		

8. Floor Types	Insulation	Area
a. Slab-On-Grade Edge Insulation	R=0.0	2108.00 ft²
b. N/A	R=	ft²
c. N/A	R=	ft²

9. Wall Types	Insulation	Area
a. Frame - Wood, Exterior	R=19.0	1509.30 ft²
b. N/A	R=	ft²
c. N/A	R=	ft²
d. N/A	R=	ft²

10. Ceiling Types	Insulation	Area
a. Under Attic (Vented)	R=30.0	2108.00 ft²
b. N/A	R=	ft²
c. N/A	R=	ft²

11. Ducts
a. Sup: Attic Ret: Attic AH: Interior Sup. R= 8, 421.6 ft²

12. Cooling systems
a. Central Unit — Cap: 48 kBtu/hr, SEER: 13

13. Heating systems
a. Electric Heat Pump — Cap: 48 kBtu/hr, AFUE: 8

14. Hot water systems
a. Electric — Cap: 40 gallons, EF: 0.92

b. Conservation features
None

15. Credits — None

Glass/Floor Area: 0.102

Total As-Built Modified Loads: 33.51
Total Baseline Loads: 42.19

PASS

I hereby certify that the plans and specifications covered by this calculation are in compliance with the Florida Energy Code.

PREPARED BY: Gary N
DATE: 4-2-09

I hereby certify that this building, as designed, is in compliance with the Florida Energy Code.

OWNER/AGENT: Gary N
DATE: 4-2-09

Review of the plans and specifications covered by this calculation indicates compliance with the Florida Energy Code. Before construction is completed this building will be inspected for compliance with Section 553.908 Florida Statutes.

GREAT SEAL OF THE STATE OF FLORIDA · IN GOD WE TRUST

BUILDING OFFICIAL:
DATE:

- Compliance requires a roof absorptance test in accordance with N1104.A.4.

DOORS

√	#	Ornt	Door Type	Storms	U-Value	Area
____	1	W	Insulated	None	0.4	20 ft²

WINDOWS

Window orientation below is as entered. Actual orientation is modified by rotate angle shown in "Project" section above.

√	#	Ornt	Frame	Panes	NFRC	U-Factor	SHGC	Storms	Area	Overhang Depth	Overhang Separation	Int Shade	Screening
____	1	N	Vinyl	Low-E Double	Yes	0.65	0.35	N	30 ft²	0 ft 0 in	0 ft 0 in	HERS 2006	None
____	2	N	Vinyl	Low-E Double	Yes	0.65	0.35	N	48 ft²	0 ft 0 in	0 ft 0 in	HERS 2006	None
____	3	E	Vinyl	Low-E Double	Yes	0.65	0.35	N	20 ft²	0 ft 0 in	0 ft 0 in	HERS 2006	None
____	4	E	Vinyl	Low-E Double	Yes	0.65	0.35	N	6 ft²	0 ft 0 in	0 ft 0 in	HERS 2006	None
____	5	S	Vinyl	Low-E Double	Yes	0.65	0.35	N	40 ft²	0 ft 0 in	0 ft 0 in	HERS 2006	None
____	6	S	Vinyl	Low-E Double	Yes	0.65	0.35	N	20 ft²	0 ft 0 in	0 ft 0 in	HERS 2006	None
____	7	S	Vinyl	Low-E Double	Yes	0.65	0.35	N	9 ft²	0 ft 0 in	0 ft 0 in	HERS 2006	None
____	8	S	Vinyl	Low-E Double	Yes	0.65	0.35	N	15 ft²	0 ft 0 in	0 ft 0 in	HERS 2006	None
____	9	W	Vinyl	Low-E Double	Yes	0.65	0.35	N	20 ft²	0 ft 0 in	0 ft 0 in	HERS 2006	None
____	10	W	Vinyl	Low-E Double	Yes	0.65	0.35	N	6 ft²	0 ft 0 in	0 ft 0 in	HERS 2006	None

INFILTRATION & VENTING

√	Method	SLA	CFM 50	ACH 50	ELA	EqLA	---- Forced Ventilation ---- Supply CFM	Exhaust CFM	Run Time Fraction	Fan Watts
____	Default	0.00036	1991	7.08	109.3	205.5	0 cfm	0 cfm	0	0

COOLING SYSTEM

√	#	System Type	Subtype	Efficiency	Capacity	Air Flow	SHR	Ductless
____	1	Central Unit	None	SEER: 13	48 kBtu/hr	1440 cfm	0.75	False

HEATING SYSTEM

√	#	System Type	Subtype	Efficiency	Capacity	Ductless
____	1	Electric Heat Pump	None	AFUE: 8	48 kBtu/hr	False

HOT WATER SYSTEM

√	#	System Type	EF	Cap	Use	SetPnt	Conservation
____	1	Electric	0.92	40 gal	60 gal	120 deg	None

SOLAR HOT WATER SYSTEM

√	FSEC Cert #	Company Name	System Model #	Collector Model #	Collector Area	Storage Volume	FEF
____	None	None			ft²		

DUCTS

√	#	---- Supply ---- Location	R-Value	Area	---- Return ---- Location	Area	Leakage Type	Air Handler	CFM 25	Percent Leakage	QN	RLF
_____	1	Attic	8	421.6 ft	Attic	105.4 ft	Default Leakage	Interior				

TEMPERATURES

Programable Thermostat: None

Ceiling Fans: N

Cooling	[X] Jan	[X] Feb	[X] Mar	[X] Apr	[X] May	[X] Jun	[X] Jul	[X] Aug	[X] Sep	[X] Oct	[X] Nov	[X] Dec
Heating	[X] Jan	[X] Feb	[X] Mar	[X] Apr	[X] May	[X] Jun	[X] Jul	[X] Aug	[X] Sep	[X] Oct	[X] Nov	[X] Dec
Venting	[X] Jan	[X] Feb	[X] Mar	[X] Apr	[X] May	[X] Jun	[X] Jul	[X] Aug	[X] Sep	[X] Oct	[X] Nov	[X] Dec

Thermostat Schedule: HERS 2006 Reference

Schedule Type		Hours 1	2	3	4	5	6	7	8	9	10	11	12
Cooling (WD)	AM	78	78	78	78	78	78	78	78	78	78	78	78
	PM	78	78	78	78	78	78	78	78	78	78	78	78
Cooling (WEH)	AM	78	78	78	78	78	78	78	78	78	78	78	78
	PM	78	78	78	78	78	78	78	78	78	78	78	78
Heating (WD)	AM	68	68	68	68	68	68	68	68	68	68	68	68
	PM	68	68	68	68	68	68	68	68	68	68	68	68
Heating (WEH)	AM	68	68	68	68	68	68	68	68	68	68	68	68
	PM	68	68	68	68	68	68	68	68	68	68	68	68

FORM 1100A-08

Code Compliance Cheklist

Residential Whole Building Performance Method A - Details

ADDRESS: 437 nw Ceciley Place Lake City, Fl, 3205-6	PERMIT #:

INFILTRATION REDUCTION COMPLIANCE CHECKLIST

COMPONENTS	SECTION	REQUIREMENTS FOR EACH PRACTICE	CHECK
Exterior Windows & Doors	N1106.AB.1.1	Maximum: .3 cfm/sq.ft. window area; .5 cfm/sq.ft. door area.	
Exterior & Adjacent Walls	N1106.AB.1.2.1	Caulk, gasket, weatherstrip or seal between: windows/doors & frames, surrounding wall; foundation & wall sole or sill plate; joints between exterior wall panels at corners; utility penetrations; between wall panels & top/bottom plates; between walls and floor. EXCEPTION: Frame walls where a continuous infiltration barrier is installed that extends from, and is sealed to, the foundation to the top plate.	
Floors	N1106.AB.1.2.2	Penetrations/openings > 1/8" sealed unless backed by truss or joint members. EXCEPTION: Frame floors where a continuous infiltration barrier is installed that is sealed to the perimeter, penetrations and seams.	
Ceilings	N1106.AB.1.2.3	Between walls & ceilings; penetrations of ceiling plane to top floor; around shafts, chases, soffits, chimneys, cabinets sealed to continuous air barrier; gaps in gyp board & top plate; attic access. EXCEPTION: Frame ceilings where a continuous infiltration barrier is installed that is sealed at the perimeter, at penetrations and seams.	
Recessed Lighting Fixtures	N1106.AB.1.2.4	Type IC rated with no penetrations, sealed; or Type IC or non-IC rated, installed inside a sealed box with 1/2" clearance & 3" from insulation; or Type IC with < 2.0 cfm from conditioned space, tested.	
Multi-story Houses	N1106.AB.1.2.5	Air barrier on perimeter of floor cavity between floors.	
Additional Infiltration reqts	N1106.AB.1.3	Exhaust fans vented to outdoors, dampers; combustion space heaters comply with NFPA, have combustion air.	

OTHER PRESCRIPTIVE MEASURES (must be met or exceeded by all residences.)

COMPONENTS	SECTION	REQUIREMENTS	CHECK
Water Heaters	N1112.AB.3	Comply with efficiency requirements in Table N112.ABC.3. Switch or clearly marked circuit breaker (electric) or cutoff (gas) must be provided. External or built-in heat trap required.	
Swimming Pools & Spas	N1112.AB.2.3	Spas & heated pools must have covers (except solar heated). Non-commercial pools must have a pump timer. Gas spa & pool heaters must have a minimum thermal efficiency of 78%. Heat pump pool heaters shall have a minimum COP of 4.0.	
Shower heads	N1112.AB.2.4	Water flow must be restricted to no more than 2.5 gallons per minute at 80 PSIG.	
Air Distribution Systems	N1110.AB	All ducts, fittings, mechanical equipment and plenum chambers shall be mechanically attached, sealed, insulated and installed in accordance with the criteria of Section N1110.AB. Ducts in unconditioned attics: R-6 min. insulation.	
HVAC Controls	N1107.AB.2	Separate readily accessible manual or automatic thermostat for each system.	
Insulation	N1104.AB.1 N1102.B.1.1	Ceilings-Min. R-19. Common walls-frame R-11 or CBS R-3 both sides. Common ceiling & floors R-11.	

Columbia County Building Department
Culvert Permit

Culvert Permit No.
000001725

DATE 04/13/2009 PARCEL ID # 15-2S-16-01612-003

APPLICANT GARY NEWSOME PHONE 386.362.9806

ADDRESS 437 NW CECILEY PL LAKE CITY FL 32055

OWNER W. ROSS HAMMOCK & E. BROOKE HAMMOCK PHONE 386.208.3821

ADDRESS 437 NW CECILEY PLACE LAKE CITY FL 32055

CONTRACTOR GARY NEWSOME PHONE 386.362.9806

LOCATION OF PROPERTY 41-N TO 9 1/2 MILES TO CECILEY PLACE,TR GO 1/4 MILE TO SITE ON L.

SUBDIVISION/LOT/BLOCK/PHASE/UNIT

SIGNATURE

INSTALLATION REQUIREMENTS

[X] Culvert size will be 18 inches in diameter with a total lenght of 32 feet, leaving 24 feet of driving surface. Both ends will be mitered 4 foot with a 4 : 1 slope and poured with a 4 inch thick reinforced concrete slab.

INSTALLATION NOTE: Turnouts will be required as follows:
a) a majority of the current and existing driveway turnouts are paved, or;
b) the driveway to be served will be paved or formed with concrete.
Turnouts shall be concrete or paved a minimum of 12 feet wide or the width of the concrete or paved driveway, whichever is greater. The width shall conform to the current and existing paved or concreted turnouts.

[ ] Culvert installation shall conform to the approved site plan standards.

[ ] Department of Transportation Permit installation approved standards.

[ ] Other

ALL PROPER SAFETY REQUIREMENTS SHOULD BE FOLLOWED DURING THE INSTALATION OF THE CULVERT.

135 NE Hernando Ave., Suite B-21
Lake City, FL 32055
Phone: 386-758-1008 Fax: 386-758-2160

Amount Paid 25.00

ITW Building Components Group, Inc.

1950 Marley Drive Haines City, FL 33844
Florida Engineering Certificate of Authorization Number: 0 278
Florida Certificate of Product Approval # FL1999

Truss Fabricator:	W.B. Howland
Job Identification:	6011-/HAMMOCK RES. /G-N CONSTRUCTION -- , **
Truss Count:	19
Model Code:	Florida Building Code 2007 and 2009 Supplement
Truss Criteria:	FBC2007Res/TPI-2002(STD)
Engineering Software:	Alpine Software,Version 9.01.
Structural Engineer of Record:	The identity of the structural EOR did not exist as of
Address:	the seal date per section 61G15-31.003(5a) of the FAC
Minimum Design Loads:	Roof - 40.0 PSF @ 1.25 Duration
	Floor - N/A
	Wind - 110 MPH ASCE 7-05 -Closed

Seal Date: 03/31/2009

-Truss Design Engineer-
James F. Collins Jr.
Florida License Number: 52212
1950 Marley Drive
Haines City, FL 33844

Notes:

1. Determination as to the suitability of these truss components for the structure is the responsibility of the building designer/engineer of record, as defined in ANSI/TPI 1
2. The drawing date shown on this index sheet must match the date shown on the individual truss component drawing.
3. As shown on attached drawings; the drawing number is preceded by: HCUSR215

Details: BRCLBSUB-A1101505-GBLLETIN-

#	Ref Description	Drawing#	Date
1	55254--A1	09090019	03/31/09
2	55255--A2	09090012	03/31/09
3	55256--A3	09090013	03/31/09
4	55257--A4	09090045	03/31/09
5	55258--A5	09090014	03/31/09
6	55259--A6	09090015	03/31/09
7	55260--A7	09090016	03/31/09
8	55261--A8	09090017	03/31/09
9	55262--A9	09090028	03/31/09
10	55263--A10	09090018	03/31/09
11	55264--A12	09090030	03/31/09
12	55265--A13	09090032	03/31/09
13	55266--A14	09090046	03/31/09
14	55267--A15	09090039	03/31/09
15	55268--AT1	09090040	03/31/09
16	55269--AT2	09090041	03/31/09
17	55270--AT3	09090042	03/31/09
18	55271--G1	09090043	03/31/09
19	55272--G2	09090044	03/31/09

Top chord 2x4 SP #2 N
Bot chord 2x6 SP #2 N
Webs 2x4 SP #2 N

SPECIAL LOADS
------(LUMBER DUR.FAC.=1.25 / PLATE DUR.FAC.=1.25)
TC - From 60 PLF at 0.00 to 60 PLF at 2.50
TC - From 60 PLF at 2.50 to 60 PLF at 5.00
BC - From 20 PLF at 0.00 to 20 PLF at 5.00
BC - 1620 LB Conc. Load at 1.94, 3.94

Wind reactions based on MWFRS pressures.

Deflection meets L/240 live and L/180 total load.

2 COMPLETE TRUSSES REQUIRED

Nailing Schedule: (0.131"x3"_Gun_nails)
Top Chord: 1 Row @12.00" o.c.
Bot Chord: 2 Rows @ 5.00" o.c. (Each Row)
Webs : 1 Row @ 4" o.c.
Use equal spacing between rows and stagger nails in each row to avoid splitting.

110 mph wind, 15.00 ft mean hgt, ASCE 7-05, CLOSED bldg, not located within 4.50 ft from roof edge, CAT II, EXP B, wind TC DL=5.0 psf, wind BC DL=5.0 psf. Iw=1.00 GCpi(+/-)=0.18

The overall height of this truss excluding overhang is 1-7-3.

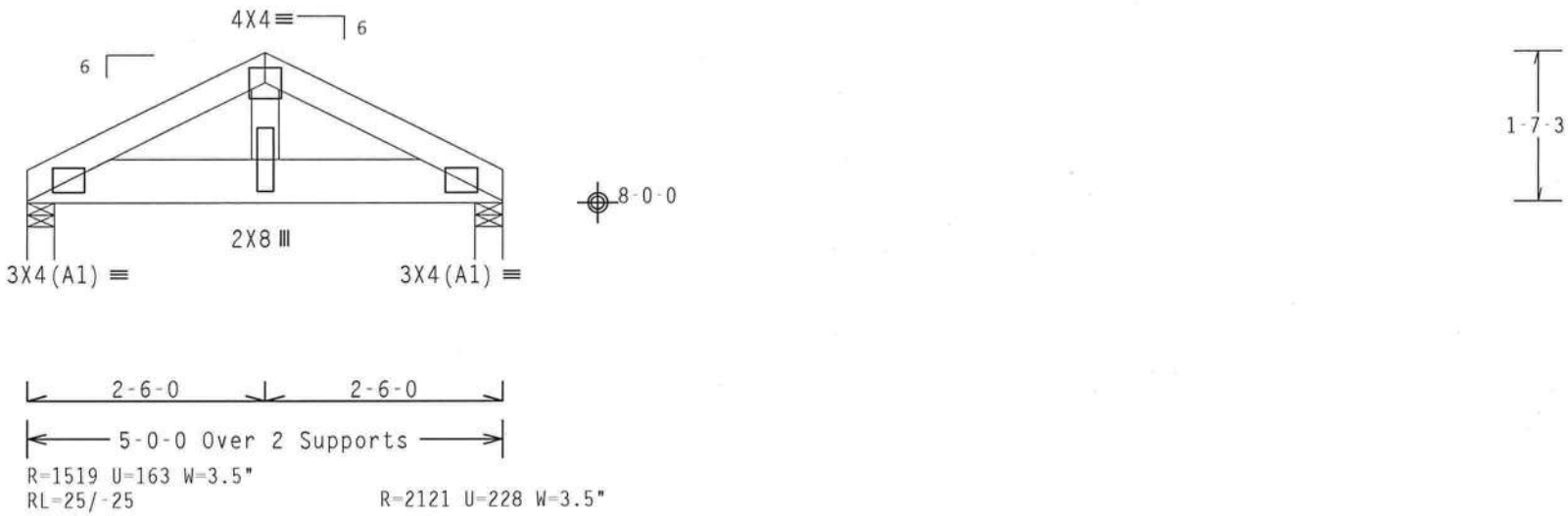

Design Crit: FBC2007Res/TPI-2002(STD)
FT/RT=20%(0%)/0(0)

PLT TYP. Wave | 9.01.00 | QTY:1 | FL/-/5/-/-/R/- | Scale =.5"/Ft.

ALPINE
ITW Building Components Group Inc.
Haines City, FL 33844
FL COA #0 278

WARNING TRUSSES REQUIRE EXTREME CARE IN FABRICATION, HANDLING, SHIPPING, INSTALLING AND BRACING. REFER TO BCSI (BUILDING COMPONENT SAFETY INFORMATION), PUBLISHED BY TPI (TRUSS PLATE INSTITUTE, 218 NORTH LEE STREET, SUITE 312, ALEXANDRIA, VA, 22314) AND WTCA (WOOD TRUSS COUNCIL OF AMERICA, 6300 ENTERPRISE LANE, MADISON, WI 53719) FOR SAFETY PRACTICES PRIOR TO PERFORMING THESE FUNCTIONS. UNLESS OTHERWISE INDICATED TOP CHORD SHALL HAVE PROPERLY ATTACHED STRUCTURAL PANELS AND BOTTOM CHORD SHALL HAVE A PROPERLY ATTACHED RIGID CEILING.

IMPORTANTFURNISH A COPY OF THIS DESIGN TO THE INSTALLATION CONTRACTOR. ITW BCG, INC. SHALL NOT BE RESPONSIBLE FOR ANY DEVIATION FROM THIS DESIGN; ANY FAILURE TO BUILD THE TRUSS IN CONFORMANCE WITH TPI; OR FABRICATING, HANDLING, SHIPPING, INSTALLING & BRACING OF TRUSSES.
DESIGN CONFORMS WITH APPLICABLE PROVISIONS OF NDS (NATIONAL DESIGN SPEC. BY AF&PA) AND TPI. ITW BCG CONNECTOR PLATES ARE MADE OF 20/18/16GA (W,H/SS/K) ASTM A653 GRADE 40/60 (W, K/H,SS) GALV. STEEL. APPLY PLATES TO EACH FACE OF TRUSS AND, UNLESS OTHERWISE LOCATED ON THIS DESIGN, POSITION PER DRAWINGS 160A-Z. ANY INSPECTION OF PLATES FOLLOWED BY (1) SHALL BE PER ANNEX A3 OF TPI1-2002 SEC.3. A SEAL ON THIS DRAWING INDICATES ACCEPTANCE OF PROFESSIONAL ENGINEERING RESPONSIBILITY SOLELY FOR THE TRUSS COMPONENT DESIGN SHOWN. THE SUITABILITY AND USE OF THIS COMPONENT FOR ANY BUILDING IS THE RESPONSIBILITY OF THE BUILDING DESIGNER PER ANSI/TPI 1 SEC. 2.

JAMES F. COLLINS, JR. LICENSE No. 52212 STATE OF FLORIDA PROFESSIONAL ENGINEER
Mar 31 09

TC LL	20.0 PSF	REF R215-- 55254
TC DL	10.0 PSF	DATE 03/31/09
BC DL	10.0 PSF	DRW HCUSR215 09090019
BC LL	0.0 PSF	HC-ENG WHK/WHK
TOT.LD.	40.0 PSF	SEQN- 185790
DUR.FAC.	1.25	FROM LRB
SPACING	SEE ABOVE	JREF- 1TQF215_Z02

(6011-/HAMMOCK RES. /G-N CONSTRUCTION -- , ** - A2)

Top chord 2x4 SP #2 N
Bot chord 2x4 SP #2 N
Webs 2x4 SP #2 N

Bottom chord checked for 10.00 psf non-concurrent live load.

Deflection meets L/240 live and L/180 total load.

MWFRS loads based on trusses located at least 15.00 ft. from roof edge.

110 mph wind, 15.00 ft mean hgt, ASCE 7-05, CLOSED bldg, not located within 4.50 ft from roof edge, CAT II, EXP B, wind TC DL=5.0 psf, wind BC DL=5.0 psf. Iw=1.00 GCpi(+/-)=0.18

Wind reactions based on MWFRS pressures.

The overall height of this truss excluding overhang is 1-7-3.

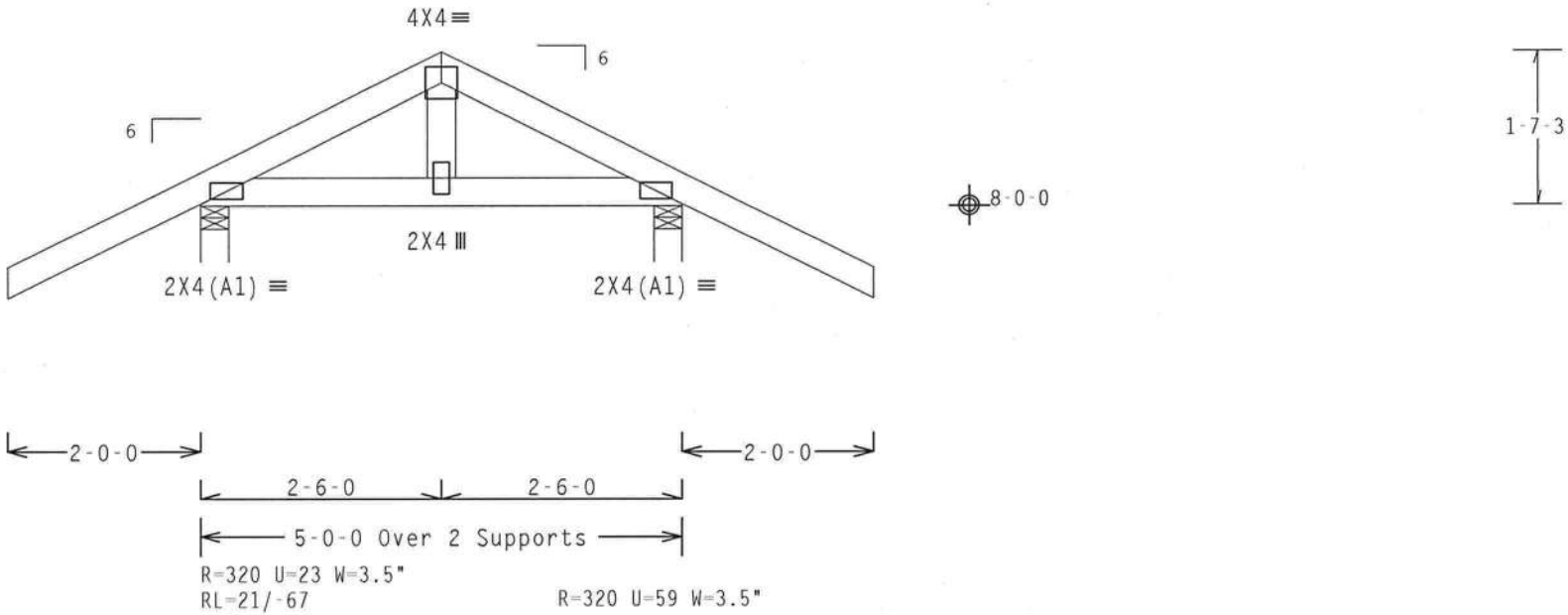

Design Crit: FBC2007Res/TPI-2002(STD)

PLT TYP. Wave | FT/RT=20%(0%)/0(0) | 9.01.00 | QTY:3 | FL/-/5/-/-/R/- | Scale =.5"/Ft.

ALPINE
ITW Building Components Group Inc.
Haines City, FL 33844
FL COA #0 278

WARNING TRUSSES REQUIRE EXTREME CARE IN FABRICATION, HANDLING, SHIPPING, INSTALLING AND BRACING. REFER TO BCSI (BUILDING COMPONENT SAFETY INFORMATION), PUBLISHED BY TPI (TRUSS PLATE INSTITUTE, 218 NORTH LEE STREET, SUITE 312, ALEXANDRIA, VA. 22314) AND WTCA (WOOD TRUSS COUNCIL OF AMERICA, 6300 ENTERPRISE LANE, MADISON, WI 53719) FOR SAFETY PRACTICES PRIOR TO PERFORMING THESE FUNCTIONS. UNLESS OTHERWISE INDICATED TOP CHORD SHALL HAVE PROPERLY ATTACHED STRUCTURAL PANELS AND BOTTOM CHORD SHALL HAVE A PROPERLY ATTACHED RIGID CEILING.

IMPORTANTFURNISH A COPY OF THIS DESIGN TO THE INSTALLATION CONTRACTOR. ITW BCG, INC. SHALL NOT BE RESPONSIBLE FOR ANY DEVIATION FROM THIS DESIGN; ANY FAILURE TO BUILD THE TRUSS IN COMFORMANCE WITH TPI; OR FABRICATING, HANDLING, SHIPPING, INSTALLING & BRACING OF TRUSSES.
DESIGN CONFORMS WITH APPLICABLE PROVISIONS OF NDS (NATIONAL DESIGN SPEC, BY AF&PA) AND TPI. ITW BCG CONNECTOR PLATES ARE MADE OF 20/18/16GA (W,H/SS/K) ASTM A653 GRADE 40/60 (W, K/H,SS) GALV. STEEL. APPLY PLATES TO EACH FACE OF TRUSS AND, UNLESS OTHERWISE LOCATED ON THIS DESIGN, POSITION PER DRAWINGS 160A-Z. ANY INSPECTION OF PLATES FOLLOWED BY (1) SHALL BE PER ANNEX A3 OF TPI1-2002 SEC.3. A SEAL ON THIS DRAWING INDICATES ACCEPTANCE OF PROFESSIONAL ENGINEERING RESPONSIBILITY SOLELY FOR THE TRUSS COMPONENT DESIGN SHOWN. THE SUITABILITY AND USE OF THIS COMPONENT FOR ANY BUILDING IS THE RESPONSIBILITY OF THE BUILDING DESIGNER PER ANSI/TPI 1 SEC. 2.

JAMES E. COLLINS JR. LICENSE No. 52212 STATE OF FLORIDA PROFESSIONAL ENGINEER
Mar 31 '09

TC LL	20.0 PSF	REF R215-- 55255
TC DL	10.0 PSF	DATE 03/31/09
BC DL	10.0 PSF	DRW HCUSR215 09090012
BC LL	0.0 PSF	HC-ENG WHK/WHK *
TOT.LD.	40.0 PSF	SEQN- 185776
DUR.FAC.	1.25	FROM LRB
SPACING	24.0"	JREF- 1TQF215_Z02

(6011-/HAMMOCK RES. /G-N CONSTRUCTION -- , ** - A3)

Top chord 2x4 SP #2 N
Bot chord 2x4 SP #2 N
Webs 2x4 SP #2 N

Bottom chord checked for 10.00 psf non-concurrent live load.

Deflection meets L/240 live and L/180 total load.

MWFRS loads based on trusses located at least 15.00 ft. from roof edge.

110 mph wind, 15.00 ft mean hgt, ASCE 7-05, CLOSED bldg, not located within 4.50 ft from roof edge, CAT II, EXP B, wind TC DL=5.0 psf, wind BC DL=5.0 psf. Iw=1.00 GCpi(+/-)=0.18

Wind reactions based on MWFRS pressures.

The overall height of this truss excluding overhang is 1-7-3.

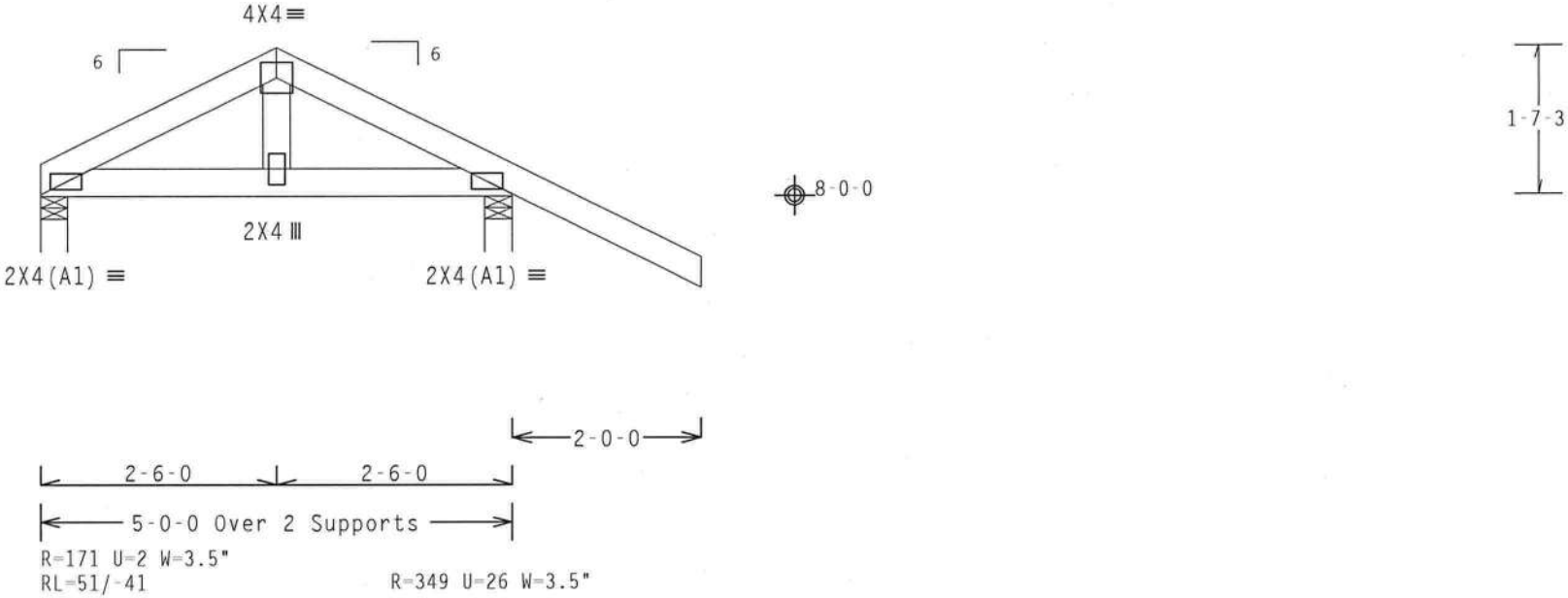

Design Crit: FBC2007Res/TPI-2002(STD)

PLT TYP. Wave | FT/RT=20%(0%)/0(0) | 9.01 00.0 | QTY:1 | FL/-/5/-/-/R/- | Scale =.5"/Ft.

ALPINE
ITW Building Components Group Inc.
Haines City, FL 33844
FL COA #0 278

WARNING TRUSSES REQUIRE EXTREME CARE IN FABRICATION, HANDLING, SHIPPING, INSTALLING AND BRACING. REFER TO BCSI (BUILDING COMPONENT SAFETY INFORMATION), PUBLISHED BY TPI (TRUSS PLATE INSTITUTE, 218 NORTH LEE STREET, SUITE 312, ALEXANDRIA, VA, 22314) AND WTCA (WOOD TRUSS COUNCIL OF AMERICA, 6300 ENTERPRISE LANE, MADISON, WI 53719) FOR SAFETY PRACTICES PRIOR TO PERFORMING THESE FUNCTIONS. UNLESS OTHERWISE INDICATED TOP CHORD SHALL HAVE PROPERLY ATTACHED STRUCTURAL PANELS AND BOTTOM CHORD SHALL HAVE A PROPERLY ATTACHED RIGID CEILING.

IMPORTANT FURNISH A COPY OF THIS DESIGN TO THE INSTALLATION CONTRACTOR. ITW BCG, INC. SHALL NOT BE RESPONSIBLE FOR ANY DEVIATION FROM THIS DESIGN; ANY FAILURE TO BUILD THE TRUSS IN CONFORMANCE WITH TPI; OR FABRICATING, HANDLING, SHIPPING, INSTALLING & BRACING OF TRUSSES.
DESIGN CONFORMS WITH APPLICABLE PROVISIONS OF NDS (NATIONAL DESIGN SPEC. BY AF&PA) AND TPI. ITW BCG CONNECTOR PLATES ARE MADE OF 20/18/16GA (W,H/SS/K) ASTM A653 GRADE 40/60 (W, K/H,SS) GALV. STEEL. APPLY PLATES TO EACH FACE OF TRUSS AND, UNLESS OTHERWISE LOCATED ON THIS DESIGN, POSITION PER DRAWINGS 160A-Z. ANY INSPECTION OF PLATES FOLLOWED BY (1) SHALL BE PER ANNEX A3 OF TPI1-2002 SEC.3. A SEAL ON THIS DRAWING INDICATES ACCEPTANCE OF PROFESSIONAL ENGINEERING RESPONSIBILITY SOLELY FOR THE TRUSS COMPONENT DESIGN SHOWN. THE SUITABILITY AND USE OF THIS COMPONENT FOR ANY BUILDING IS THE RESPONSIBILITY OF THE BUILDING DESIGNER PER ANSI/TPI 1 SEC. 2.

JAMES F. COLLINS, JR. LICENSE No. 52212 STATE OF FLORIDA PROFESSIONAL ENGINEER
Mar 31 09

TC LL	20.0 PSF	REF R215-- 55256
TC DL	10.0 PSF	DATE 03/31/09
BC DL	10.0 PSF	DRW HCUSR215 09090013
BC LL	0.0 PSF	HC-ENG WHK/WHK *
TOT.LD.	40.0 PSF	SEQN- 185777
DUR.FAC.	1.25	FROM LRB
SPACING	24.0"	JREF- 1TQF215_Z02

(6011-/HAMMOCK RES. /G-N CONSTRUCTION -- , ** - A4)

Top chord 2x4 SP #2 N :T2, T4, T5, T8 2x6 SP #2 N:
Bot chord 2x4 SP #2 N
Webs 2x4 SP #2 N

Left end vertical not exposed to wind pressure.

(A) Continuous lateral bracing equally spaced on member. Or 1x4 "T" brace. 80% length of web member. Same species & SRB grade or better, attached with 8d Box or Gun (0.113"x2.5",min.)nails @ 6" OC.

The overall height of this truss excluding overhang is 11-8-1.

THE BUILDING DESIGNER IS RESPONSIBLE FOR THE DESIGN OF THE ROOF AND CEILING DIAPHRAGMS, GABLE END SHEAR WALLS, AND SUPPORTING SHEAR WALLS. SHEAR WALLS MUST PROVIDE CONTINUOUS LATERAL RESTRAINT TO THE GABLE END. ALL CONNECTIONS TO BE DESIGNED BY THE BUILDING DESIGNER.

110 mph wind, 15.00 ft mean hgt, ASCE 7-05, CLOSED bldg, Located anywhere in roof, CAT II, EXP B, wind TC DL=5.0 psf, wind BC DL=5.0 psf. Iw=1.00 GCpi(+/-)=0.18

Wind reactions based on MWFRS pressures.

Bottom chord checked for 10.00 psf non-concurrent live load.

Deflection meets L/240 live and L/180 total load.

SEE DWGS A11015020109 and GBLLETIN0109 FOR ADDITIONAL REQUIREMENTS.

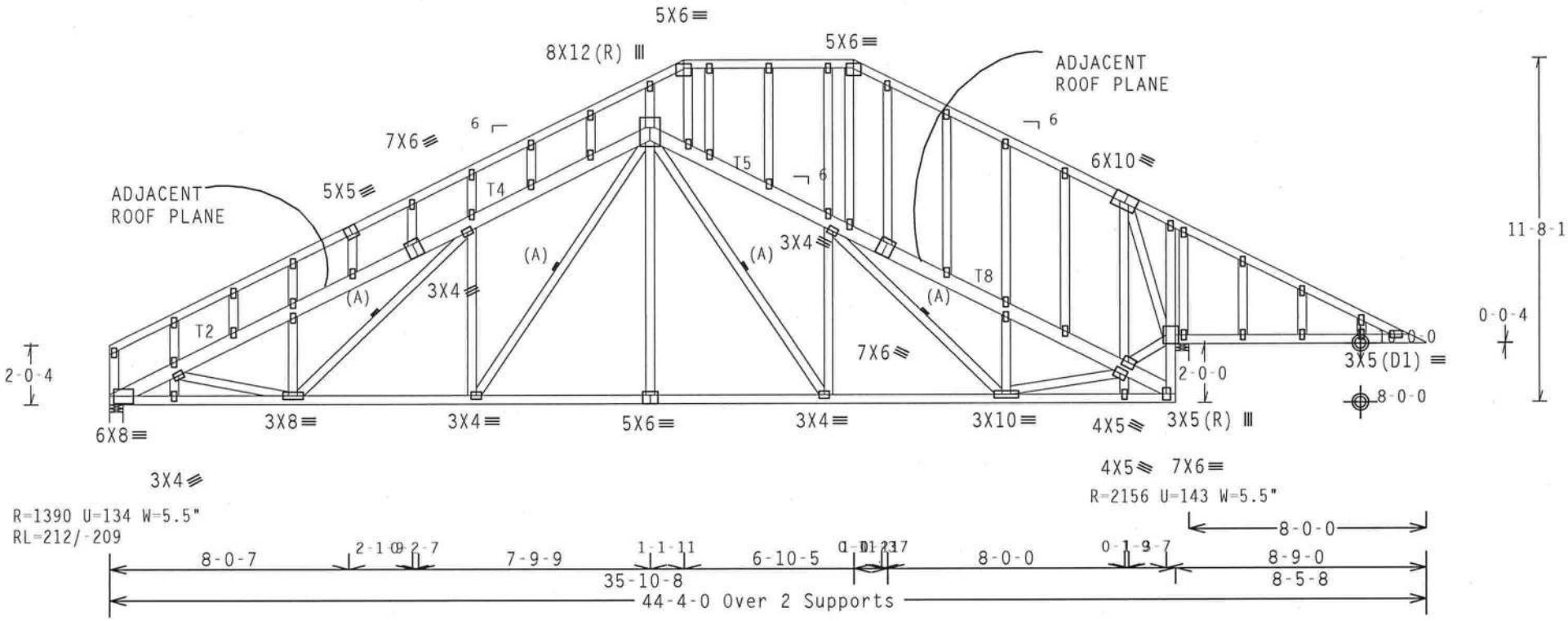

Note: All Plates Are 2X4 Except As Shown.

Design Crit: FBC2007Res/TPI-2002(STD)

PLT TYP. Wave | FT/RT=20%(0%)/0(0) | 9.01.00 | QTY:2 | FL/-/5/-/-/R/- | Scale =.1875"/Ft.

ALPINE
ITW Building Components Group Inc.
Haines City, FL 33844
FL COA #0 278

WARNING TRUSSES REQUIRE EXTREME CARE IN FABRICATION, HANDLING, SHIPPING, INSTALLING AND BRACING. REFER TO BCSI (BUILDING COMPONENT SAFETY INFORMATION), PUBLISHED BY TPI (TRUSS PLATE INSTITUTE, 218 NORTH LEE STREET, SUITE 312, ALEXANDRIA, VA, 22314) AND WTCA (WOOD TRUSS COUNCIL OF AMERICA, 6300 ENTERPRISE LANE, MADISON, WI 53719) FOR SAFETY PRACTICES PRIOR TO PERFORMING THESE FUNCTIONS. UNLESS OTHERWISE INDICATED TOP CHORD SHALL HAVE PROPERLY ATTACHED STRUCTURAL PANELS AND BOTTOM CHORD SHALL HAVE A PROPERLY ATTACHED RIGID CEILING.

IMPORTANTFURNISH A COPY OF THIS DESIGN TO THE INSTALLATION CONTRACTOR. ITW BCG, INC. SHALL NOT BE RESPONSIBLE FOR ANY DEVIATION FROM THIS DESIGN; ANY FAILURE TO BUILD THE TRUSS IN CONFORMANCE WITH TPI; OR FABRICATING, HANDLING, SHIPPING, INSTALLING & BRACING OF TRUSSES. DESIGN CONFORMS WITH APPLICABLE PROVISIONS OF NDS (NATIONAL DESIGN SPEC. BY AF&PA) AND TPI. ITW BCG CONNECTOR PLATES ARE MADE OF 20/18/16GA (W,H/SS/K) ASTM A653 GRADE 40/60 (W, K/H,SS) GALV. STEEL. APPLY PLATES TO EACH FACE OF TRUSS AND, UNLESS OTHERWISE LOCATED ON THIS DESIGN, POSITION PER DRAWINGS 160A-Z. ANY INSPECTION OF PLATES FOLLOWED BY (1) SHALL BE PER ANNEX A3 OF TPI1-2002 SEC.3. A SEAL ON THIS DRAWING INDICATES ACCEPTANCE OF PROFESSIONAL ENGINEERING RESPONSIBILITY SOLELY FOR THE TRUSS COMPONENT DESIGN SHOWN. THE SUITABILITY AND USE OF THIS COMPONENT FOR ANY BUILDING IS THE RESPONSIBILITY OF THE BUILDING DESIGNER PER ANSI/TPI 1 SEC. 2.

JAMES F. COLLINS, JR. LICENSE No. 52212 STATE OF FLORIDA PROFESSIONAL ENGINEER
Mar 31 '09

TC LL	20.0 PSF	REF R215-- 55257
TC DL	10.0 PSF	DATE 03/31/09
BC DL	10.0 PSF	DRW HCUSR215 09090045
BC LL	0.0 PSF	HC-ENG WHK/WHK
TOT.LD.	40.0 PSF	SEQN- 185778
DUR.FAC.	1.25	FROM LRB
SPACING	24.0"	JREF- 1TQF215_Z02

(6011-/HAMMOCK RES. /G-N CONSTRUCTION -- , ** - A5)

Top chord 2x4 SP #2 N
Bot chord 2x4 SP #2 N
Webs 2x4 SP #2 N

(A) Continuous lateral bracing equally spaced on member. Or 1x4 "T" brace. 80% length of web member. Same species & SRB grade or better, attached with 8d Box or Gun (0.113"x2.5",min.)nails @ 6" OC.

Bottom chord checked for 10.00 psf non-concurrent live load.

The overall height of this truss excluding overhang is 9-5-3.

110 mph wind, 15.00 ft mean hgt, ASCE 7-05, CLOSED bldg, not located within 4.50 ft from roof edge, CAT II, EXP B, wind TC DL=5.0 psf, wind BC DL=5.0 psf. Iw=1.00 GCpi(+/-)=0.18

Wind reactions based on MWFRS pressures.

Truss passed check for 20 psf additional bottom chord live load in areas with 42"-high x 24"-wide clearance.

Deflection meets L/240 live and L/180 total load.

MWFRS loads based on trusses located at least 15.00 ft. from roof edge.

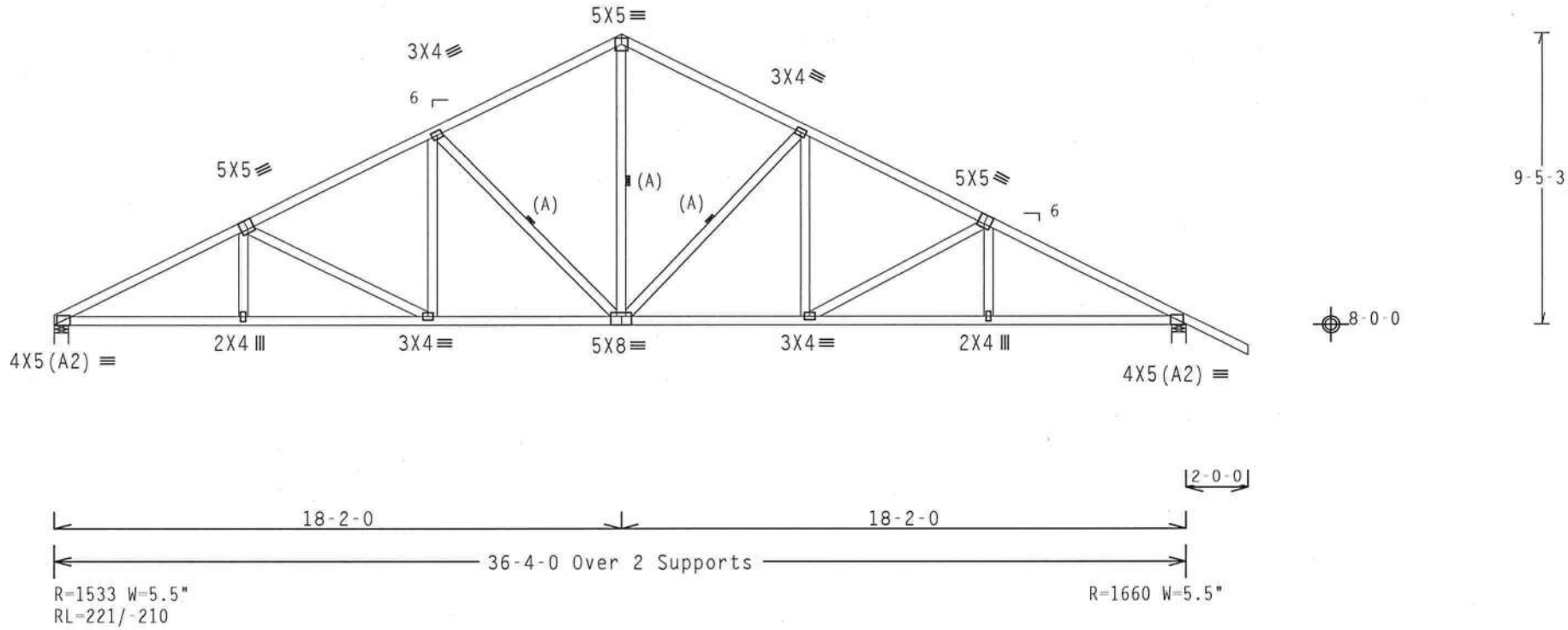

Design Crit: FBC2007Res/TPI-2002(STD)

PLT TYP. Wave | FT/RT=20%(0%)/0(0) | 9.01.00.1210.10 | QTY:1 | FL/-/5/-/-/R/- | Scale =.1875"/Ft.

WARNING TRUSSES REQUIRE EXTREME CARE IN FABRICATION, HANDLING, SHIPPING, INSTALLING AND BRACING. REFER TO BCSI (BUILDING COMPONENT SAFETY INFORMATION), PUBLISHED BY TPI (TRUSS PLATE INSTITUTE, 218 NORTH LEE STREET, SUITE 312, ALEXANDRIA, VA, 22314) AND WTCA (WOOD TRUSS COUNCIL OF AMERICA, 6300 ENTERPRISE LANE, MADISON, WI 53719) FOR SAFETY PRACTICES PRIOR TO PERFORMING THESE FUNCTIONS. UNLESS OTHERWISE INDICATED TOP CHORD SHALL HAVE PROPERLY ATTACHED STRUCTURAL PANELS AND BOTTOM CHORD SHALL HAVE A PROPERLY ATTACHED RIGID CEILING.

IMPORTANTFURNISH A COPY OF THIS DESIGN TO THE INSTALLATION CONTRACTOR. ITW BCG, INC. SHALL NOT BE RESPONSIBLE FOR ANY DEVIATION FROM THIS DESIGN; ANY FAILURE TO BUILD THE TRUSS IN CONFORMANCE WITH TPI; OR FABRICATING, HANDLING, SHIPPING, INSTALLING & BRACING OF TRUSSES.
DESIGN CONFORMS WITH APPLICABLE PROVISIONS OF NDS (NATIONAL DESIGN SPEC. BY AF&PA) AND TPI. ITW BCG CONNECTOR PLATES ARE MADE OF 20/18/16GA (W,H/SS/K) ASTM A653 GRADE 40/60 (W, K/H,SS) GALV. STEEL. APPLY PLATES TO EACH FACE OF TRUSS AND, UNLESS OTHERWISE LOCATED ON THIS DESIGN, POSITION PER DRAWINGS 160A-Z. ANY INSPECTION OF PLATES FOLLOWED BY (I) SHALL BE PER ANNEX A3 OF TPI1-2002 SEC.3. A SEAL ON THIS DRAWING INDICATES ACCEPTANCE OF PROFESSIONAL ENGINEERING RESPONSIBILITY SOLELY FOR THE TRUSS COMPONENT DESIGN SHOWN. THE SUITABILITY AND USE OF THIS COMPONENT FOR ANY BUILDING IS THE RESPONSIBILITY OF THE BUILDING DESIGNER PER ANSI/TPI 1 SEC. 2.

JAMES F. COLLINS JR. LICENSE No. 52212 STATE OF FLORIDA PROFESSIONAL ENGINEER
Mar 5, 2010

TC LL	20.0 PSF	REF	R215-- 55258
TC DL	10.0 PSF	DATE	03/31/09
BC DL	10.0 PSF	DRW	HCUSR215 09090014
BC LL	0.0 PSF	HC-ENG	WHK/WHK *
TOT.LD.	40.0 PSF	SEQN-	185779
DUR.FAC.	1.25	FROM	LRB
SPACING	24.0"	JREF-	1TQF215_Z02

(6011-/HAMMOCK RES. /G-N CONSTRUCTION -- , ** - A6)

Top chord 2x4 SP #2 N
Bot chord 2x4 SP #2 N
Webs 2x4 SP #2 N

(A) Continuous lateral bracing equally spaced on member. Or 1x4 "T" brace. 80% length of web member. Same species & SRB grade or better, attached with 8d Box or Gun (0.113"x2.5",min.)nails @ 6" OC.

Bottom chord checked for 10.00 psf non-concurrent live load.

The overall height of this truss excluding overhang is 9-5-3.

110 mph wind, 15.00 ft mean hgt, ASCE 7-05, CLOSED bldg, not located within 4.50 ft from roof edge, CAT II, EXP B, wind TC DL=5.0 psf, wind BC DL=5.0 psf. Iw=1.00 GCpi(+/-)=0.18

Wind reactions based on MWFRS pressures.

Truss passed check for 20 psf additional bottom chord live load in areas with 42"-high x 24"-wide clearance.

Deflection meets L/240 live and L/180 total load.

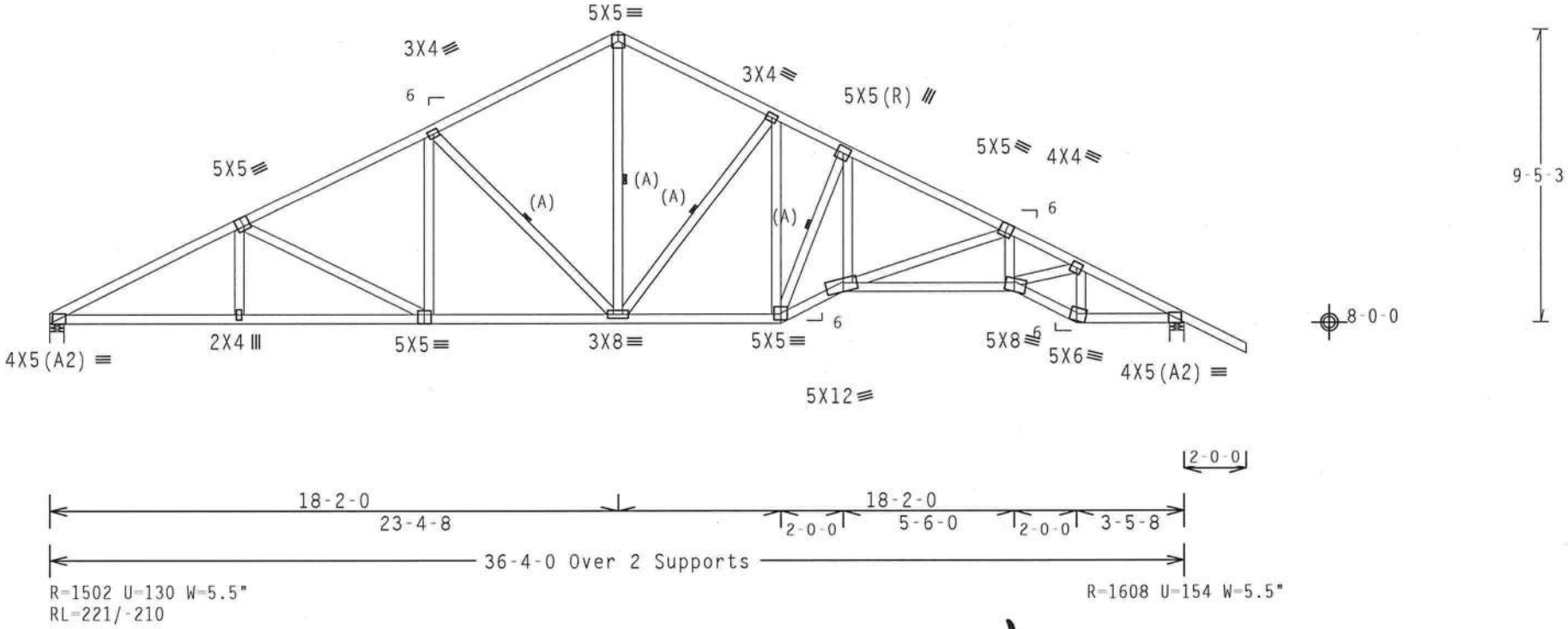

Design Crit: FBC2007Res/TPI-2002(STD)

PLT TYP. Wave | FT/RT=20%(0%)/0(0) | 9.01.00.0210 | QTY:3 | FL/-/5/-/-/R/- | Scale =.1875"/Ft.

ALPINE
ITW Building Components Group Inc.
Haines City, FL 33844
FL COA #0 278

WARNING TRUSSES REQUIRE EXTREME CARE IN FABRICATION, HANDLING, SHIPPING, INSTALLING AND BRACING. REFER TO BCSI (BUILDING COMPONENT SAFETY INFORMATION), PUBLISHED BY TPI (TRUSS PLATE INSTITUTE, 218 NORTH LEE STREET, SUITE 312, ALEXANDRIA, VA, 22314) AND WTCA (WOOD TRUSS COUNCIL OF AMERICA, 6300 ENTERPRISE LANE, MADISON, WI 53719) FOR SAFETY PRACTICES PRIOR TO PERFORMING THESE FUNCTIONS. UNLESS OTHERWISE INDICATED TOP CHORD SHALL HAVE PROPERLY ATTACHED STRUCTURAL PANELS AND BOTTOM CHORD SHALL HAVE A PROPERLY ATTACHED RIGID CEILING.

IMPORTANTFURNISH A COPY OF THIS DESIGN TO THE INSTALLATION CONTRACTOR. ITW BCG, INC. SHALL NOT BE RESPONSIBLE FOR ANY DEVIATION FROM THIS DESIGN; ANY FAILURE TO BUILD THE TRUSS IN CONFORMANCE WITH TPI; OR FABRICATING, HANDLING, SHIPPING, INSTALLING & BRACING OF TRUSSES.
DESIGN CONFORMS WITH APPLICABLE PROVISIONS OF NDS (NATIONAL DESIGN SPEC. BY AF&PA) AND TPI. ITW BCG CONNECTOR PLATES ARE MADE OF 20/18/16GA (W,H/SS/K) ASTM A653 GRADE 40/60 (W, K/H,SS) GALV. STEEL. APPLY PLATES TO EACH FACE OF TRUSS AND, UNLESS OTHERWISE LOCATED ON THIS DESIGN, POSITION PER DRAWINGS 160A-Z. ANY INSPECTION OF PLATES FOLLOWED BY (1) SHALL BE PER ANNEX A3 OF TPI1-2002 SEC.3. A SEAL ON THIS DRAWING INDICATES ACCEPTANCE OF PROFESSIONAL ENGINEERING RESPONSIBILITY SOLELY FOR THE TRUSS COMPONENT DESIGN SHOWN. THE SUITABILITY AND USE OF THIS COMPONENT FOR ANY BUILDING IS THE RESPONSIBILITY OF THE BUILDING DESIGNER PER ANSI/TPI 1 SEC. 2.

JAMES F. ROLKINS JR. LICENSE No. 52212 STATE OF FLORIDA PROFESSIONAL ENGINEER

Mar

TC LL	20.0 PSF	REF	R215-- 55259
TC DL	10.0 PSF	DATE	03/31/09
BC DL	10.0 PSF	DRW	HCUSR215 09090015
BC LL	0.0 PSF	HC-ENG	WHK/WHK *
TOT.LD.	40.0 PSF	SEQN-	185780
DUR.FAC.	1.25	FROM	LRB
SPACING	24.0"	JREF-	1TQF215_Z02

(6011-/HAMMOCK RES. /G-N CONSTRUCTION -- , ** - A7)

Top chord 2x4 SP #2 N
Bot chord 2x4 SP #2 N
Webs 2x4 SP #2 N

(A) Continuous lateral bracing equally spaced on member. Or 1x4 "T" brace. 80% length of web member. Same species & SRB grade or better, attached with 8d Box or Gun (0.113"x2.5",min.)nails @ 6" OC.

Bottom chord checked for 10.00 psf non-concurrent live load.

The overall height of this truss excluding overhang is 9-5-3.

110 mph wind, 15.00 ft mean hgt, ASCE 7-05, CLOSED bldg, not located within 4.50 ft from roof edge, CAT II, EXP B, wind TC DL=5.0 psf, wind BC DL=5.0 psf. Iw=1.00 GCpi(+/-)=0.18

Wind reactions based on MWFRS pressures.

Truss passed check for 20 psf additional bottom chord live load in areas with 42"-high x 24"-wide clearance.

Deflection meets L/240 live and L/180 total load.

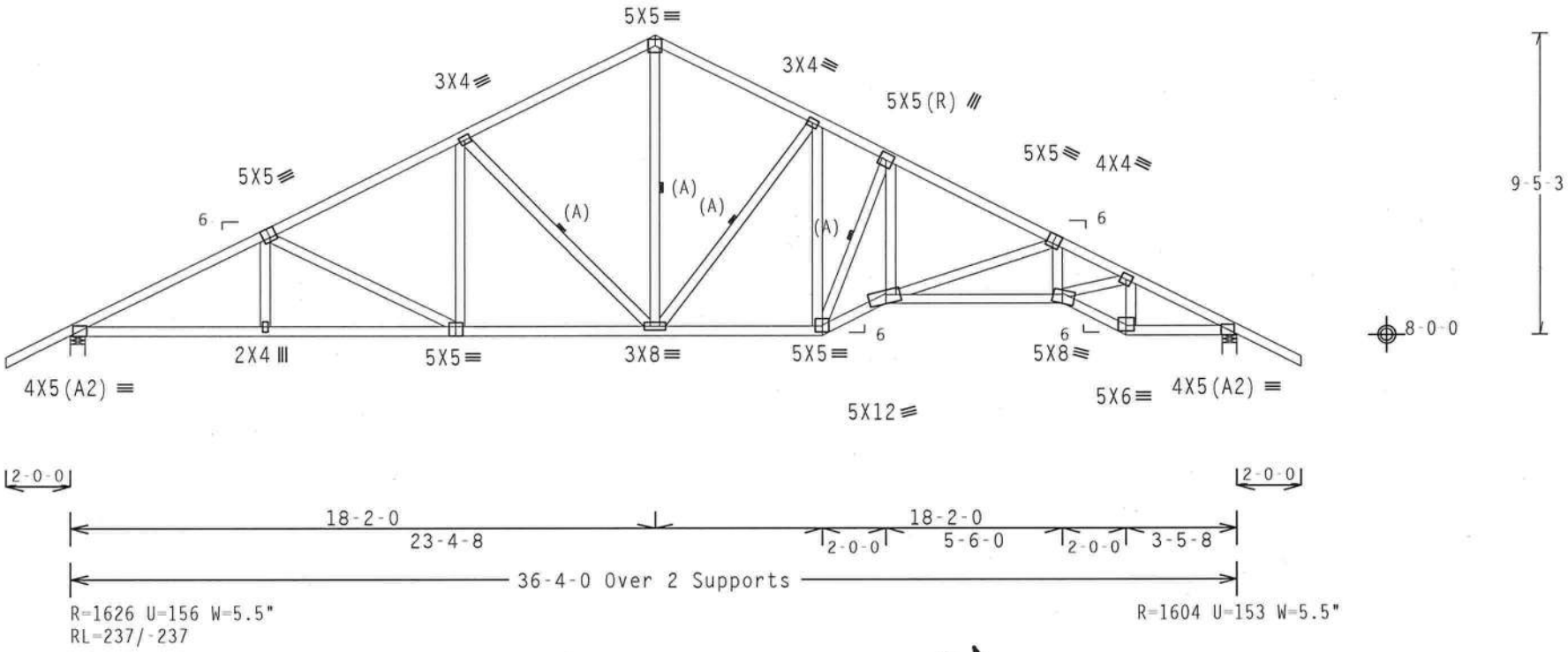

Design Crit: FBC2007Res/TPI-2002(STD)
FT/RT=20%(0%)/0(0)

PLT TYP. Wave | 9.01.00.031 | QTY:2 | FL/-/5/-/-/R/- | Scale =.1875"/Ft.

ALPINE
ITW Building Components Group Inc.
Haines City, FL 33844
FL COA #0 278

WARNING TRUSSES REQUIRE EXTREME CARE IN FABRICATION, HANDLING, SHIPPING, INSTALLING AND BRACING. REFER TO BCSI (BUILDING COMPONENT SAFETY INFORMATION), PUBLISHED BY TPI (TRUSS PLATE INSTITUTE, 218 NORTH LEE STREET, SUITE 312, ALEXANDRIA, VA. 22314) AND WTCA (WOOD TRUSS COUNCIL OF AMERICA, 6300 ENTERPRISE LANE, MADISON, WI 53719) FOR SAFETY PRACTICES PRIOR TO PERFORMING THESE FUNCTIONS. UNLESS OTHERWISE INDICATED TOP CHORD SHALL HAVE PROPERLY ATTACHED STRUCTURAL PANELS AND BOTTOM CHORD SHALL HAVE A PROPERLY ATTACHED RIGID CEILING.

IMPORTANTFURNISH A COPY OF THIS DESIGN TO THE INSTALLATION CONTRACTOR. ITW BCG, INC. SHALL NOT BE RESPONSIBLE FOR ANY DEVIATION FROM THIS DESIGN; ANY FAILURE TO BUILD THE TRUSS IN COMFORMANCE WITH TPI; OR FABRICATING, HANDLING, SHIPPING, INSTALLING & BRACING OF TRUSSES.
DESIGN CONFORMS WITH APPLICABLE PROVISIONS OF NDS (NATIONAL DESIGN SPEC, BY AF&PA) AND TPI. ITW BCG CONNECTOR PLATES ARE MADE OF 20/18/16GA (W,H/SS/K) ASTM A653 GRADE 40/60 (W, K/H,SS) GALV. STEEL. APPLY PLATES TO EACH FACE OF TRUSS AND, UNLESS OTHERWISE LOCATED ON THIS DESIGN, POSITION PER DRAWINGS 160A-Z. ANY INSPECTION OF PLATES FOLLOWED BY (1) SHALL BE PER ANNEX A3 OF TPI1-2002 SEC.3. A SEAL ON THIS DRAWING INDICATES ACCEPTANCE OF PROFESSIONAL ENGINEERING RESPONSIBILITY SOLELY FOR THE TRUSS COMPONENT DESIGN SHOWN. THE SUITABILITY AND USE OF THIS COMPONENT FOR ANY BUILDING IS THE RESPONSIBILITY OF THE BUILDING DESIGNER PER ANSI/TPI 1 SEC. 2.

JAMES F. COLLINS, JR. LICENSE No. 52212 STATE OF FLORIDA PROFESSIONAL ENGINEER
Mar 31, 2009

TC LL	20.0 PSF	REF R215-- 55260
TC DL	10.0 PSF	DATE 03/31/09
BC DL	10.0 PSF	DRW HCUSR215 09090016
BC LL	0.0 PSF	HC-ENG WHK/WHK *
TOT.LD.	40.0 PSF	SEQN- 185781
DUR.FAC.	1.25	FROM LRB
SPACING	24.0"	JREF- 1TQF215_Z02

(6011-/HAMMOCK RES. /G-N CONSTRUCTION -- , ** - A8)

Top chord 2x4 SP #2 N
Bot chord 2x4 SP #2 N
Webs 2x4 SP #2 N

(A) Continuous lateral bracing equally spaced on member. Or 1x4 "T" brace. 80% length of web member. Same species & SRB grade or better, attached with 8d Box or Gun (0.113"x2.5",min.)nails @ 6" OC.

Bottom chord checked for 10.00 psf non-concurrent live load.

The overall height of this truss excluding overhang is 9-5-3.

110 mph wind, 15.00 ft mean hgt, ASCE 7-05, CLOSED bldg, Located anywhere in roof, CAT II, EXP B, wind TC DL=5.0 psf, wind BC DL=5.0 psf. Iw=1.00 GCpi(+/-)=0.18

Wind reactions based on MWFRS pressures.

Truss passed check for 20 psf additional bottom chord live load in areas with 42"-high x 24"-wide clearance.

Deflection meets L/240 live and L/180 total load.

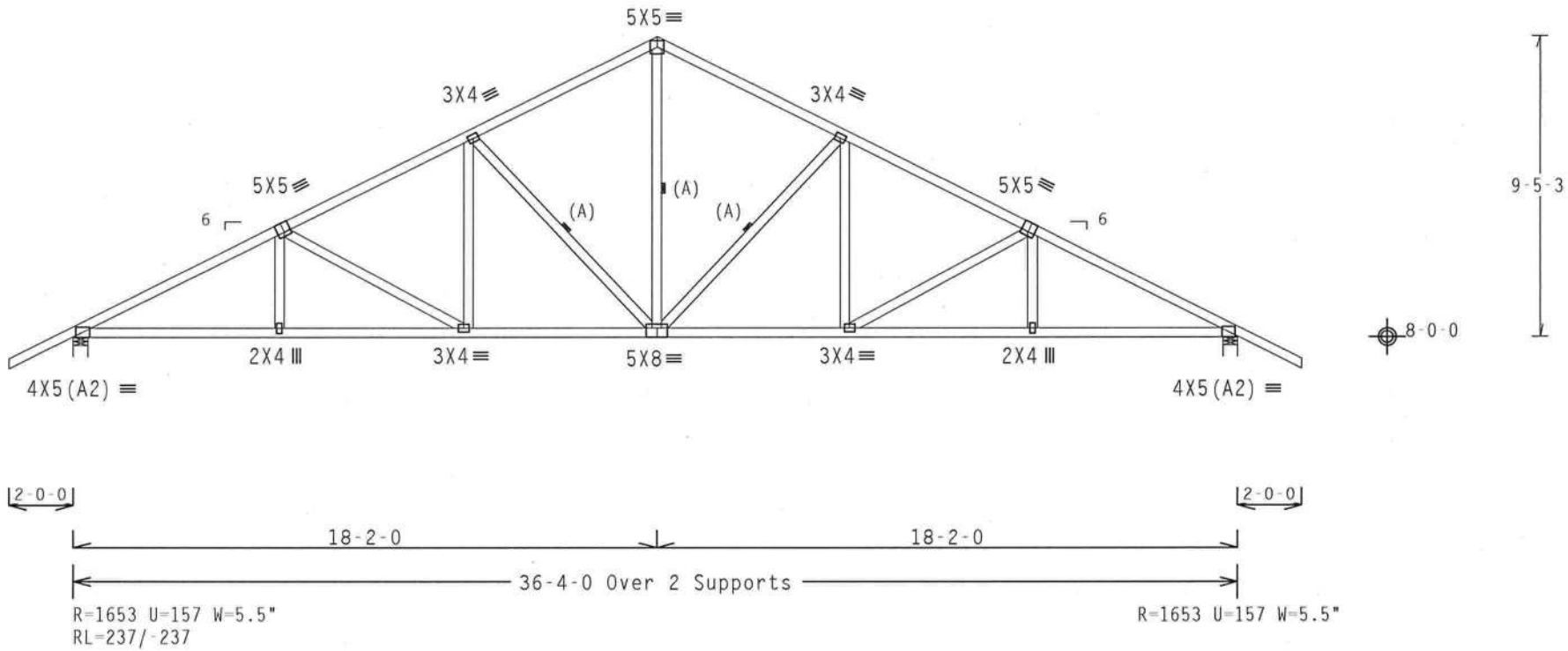

Design Crit: FBC2007Res/TPI-2002(STD)

PLT TYP. Wave | FT/RT=20%(0%)/0(0) | 9.01.00 | QTY:1 | FL/-/5/-/-/R/- | Scale =.1875"/Ft.

ALPINE
ITW Building Components Group Inc.
Haines City, FL 33844
FL COA #0 278

WARNING TRUSSES REQUIRE EXTREME CARE IN FABRICATION, HANDLING, SHIPPING, INSTALLING AND BRACING. REFER TO BCSI (BUILDING COMPONENT SAFETY INFORMATION), PUBLISHED BY TPI (TRUSS PLATE INSTITUTE, 218 NORTH LEE STREET, SUITE 312, ALEXANDRIA, VA, 22314) AND WTCA (WOOD TRUSS COUNCIL OF AMERICA, 6300 ENTERPRISE LANE, MADISON, WI 53719) FOR SAFETY PRACTICES PRIOR TO PERFORMING THESE FUNCTIONS. UNLESS OTHERWISE INDICATED TOP CHORD SHALL HAVE PROPERLY ATTACHED STRUCTURAL PANELS AND BOTTOM CHORD SHALL HAVE A PROPERLY ATTACHED RIGID CEILING.

IMPORTANTFURNISH A COPY OF THIS DESIGN TO THE INSTALLATION CONTRACTOR. ITW BCG, INC. SHALL NOT BE RESPONSIBLE FOR ANY DEVIATION FROM THIS DESIGN; ANY FAILURE TO BUILD THE TRUSS IN COMFORMANCE WITH TPI; OR FABRICATING, HANDLING, SHIPPING, INSTALLING & BRACING OF TRUSSES.
DESIGN CONFORMS WITH APPLICABLE PROVISIONS OF NDS (NATIONAL DESIGN SPEC. BY AF&PA) AND TPI. ITW BCG CONNECTOR PLATES ARE MADE OF 20/18/16GA (W,H/SS/K) ASTM A653 GRADE 40/60 (W, K/H,SS) GALV. STEEL. APPLY PLATES TO EACH FACE OF TRUSS AND, UNLESS OTHERWISE LOCATED ON THIS DESIGN, POSITION PER DRAWINGS 160A-Z. ANY INSPECTION OF PLATES FOLLOWED BY (1) SHALL BE PER ANNEX A3 OF TPI1-2002 SEC.3. A SEAL ON THIS DRAWING INDICATES ACCEPTANCE OF PROFESSIONAL ENGINEERING RESPONSIBILITY SOLELY FOR THE TRUSS COMPONENT DESIGN SHOWN. THE SUITABILITY AND USE OF THIS COMPONENT FOR ANY BUILDING IS THE RESPONSIBILITY OF THE BUILDING DESIGNER PER ANSI/TPI 1 SEC. 2.

JAMES A. COLLINS, JR. LICENSE No. 52212 STATE OF FLORIDA PROFESSIONAL ENGINEER
Mar 31 09

TC LL	20.0 PSF	REF	R215-- 55261
TC DL	10.0 PSF	DATE	03/31/09
BC DL	10.0 PSF	DRW	HCUSR215 09090017
BC LL	0.0 PSF	HC-ENG	WHK/WHK *
TOT.LD.	40.0 PSF	SEQN-	185782
DUR.FAC.	1.25	FROM	LRB
SPACING	24.0"	JREF-	1TQF215_Z02

(6011-/HAMMOCK RES. /G-N CONSTRUCTION -- , ** - A9)

Top chord 2x4 SP #2 N
Bot chord 2x4 SP #2 N
Webs 2x4 SP #2 N

110 mph wind, 20.73 ft mean hgt, ASCE 7-05, CLOSED bldg, not located within 4.50 ft from roof edge, CAT II, EXP B, wind TC DL=5.0 psf, wind BC DL=2.0 psf. Iw=1.00 GCpi(+/-)=0.18

Wind reactions based on MWFRS pressures.

The overall height of this truss excluding overhang is 1-5-3.

Refer to DWG PB1200109 for piggyback details.

SPECIAL LOADS
------(LUMBER DUR.FAC.=1.25 / PLATE DUR.FAC.=1.25)

TC - From	60 PLF	at -0.94 to	60 PLF	at	1.88
TC - From	60 PLF	at 1.88 to	60 PLF	at	4.69
BC - From	4 PLF	at -0.94 to	4 PLF	at	4.69

In lieu of rigid ceiling use purlins to brace BC @ 24" OC.

Deflection meets L/240 live and L/180 total load.

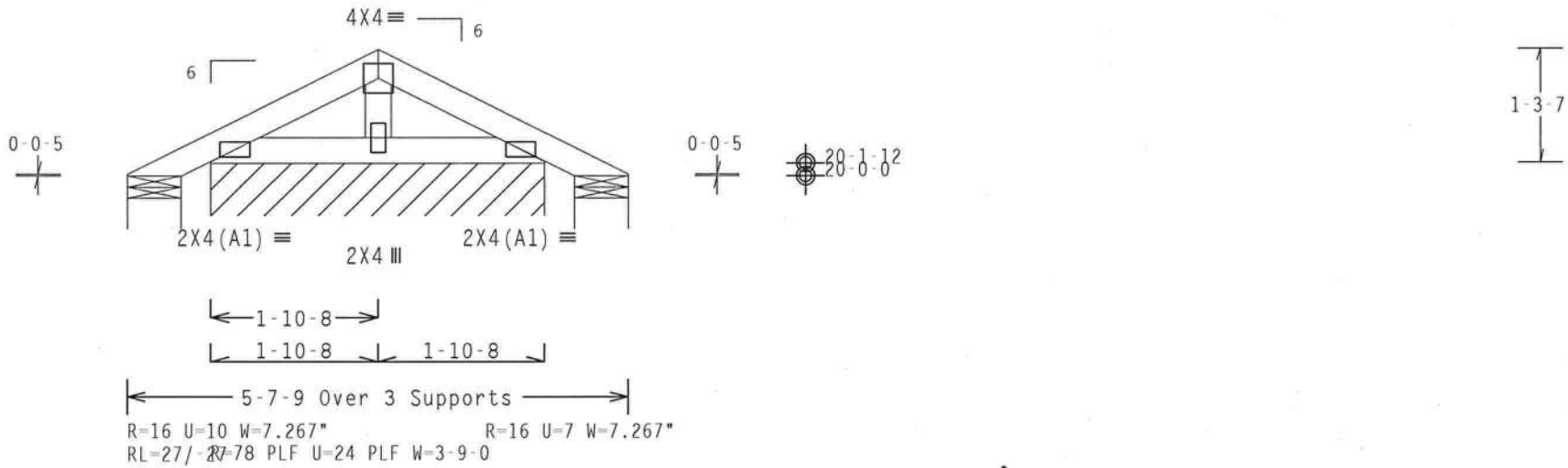

Design Crit: FBC2007Res/TPI-2002(STD)

PLT TYP. Wave | FT/RT=20%(0%)/0(0) | 9.01.00.0210 | QTY:2 | FL/-/5/-/-/R/- | Scale =.5"/Ft.

ALPINE
ITW Building Components Group Inc.
Haines City, FL 33844
FL COA #0 278

WARNING TRUSSES REQUIRE EXTREME CARE IN FABRICATION, HANDLING, SHIPPING, INSTALLING AND BRACING. REFER TO BCSI (BUILDING COMPONENT SAFETY INFORMATION), PUBLISHED BY TPI (TRUSS PLATE INSTITUTE, 218 NORTH LEE STREET, SUITE 312, ALEXANDRIA, VA, 22314) AND WTCA (WOOD TRUSS COUNCIL OF AMERICA, 6300 ENTERPRISE LANE, MADISON, WI 53719) FOR SAFETY PRACTICES PRIOR TO PERFORMING THESE FUNCTIONS. UNLESS OTHERWISE INDICATED TOP CHORD SHALL HAVE PROPERLY ATTACHED STRUCTURAL PANELS AND BOTTOM CHORD SHALL HAVE A PROPERLY ATTACHED RIGID CEILING.

IMPORTANTFURNISH A COPY OF THIS DESIGN TO THE INSTALLATION CONTRACTOR. ITW BCG, INC. SHALL NOT BE RESPONSIBLE FOR ANY DEVIATION FROM THIS DESIGN; ANY FAILURE TO BUILD THE TRUSS IN CONFORMANCE WITH TPI; OR FABRICATING, HANDLING, SHIPPING, INSTALLING & BRACING OF TRUSSES.
DESIGN CONFORMS WITH APPLICABLE PROVISIONS OF NDS (NATIONAL DESIGN SPEC, BY AF&PA) AND TPI. ITW BCG CONNECTOR PLATES ARE MADE OF 20/18/16GA (W,H/SS/K) ASTM A653 GRADE 40/60 (W, K/H,SS) GALV. STEEL. APPLY PLATES TO EACH FACE OF TRUSS AND, UNLESS OTHERWISE LOCATED ON THIS DESIGN, POSITION PER DRAWINGS 160A-Z. ANY INSPECTION OF PLATES FOLLOWED BY (1) SHALL BE PER ANNEX A3 OF TPI1-2002 SEC.3. A SEAL ON THIS DRAWING INDICATES ACCEPTANCE OF PROFESSIONAL ENGINEERING RESPONSIBILITY SOLELY FOR THE TRUSS COMPONENT DESIGN SHOWN. THE SUITABILITY AND USE OF THIS COMPONENT FOR ANY BUILDING IS THE RESPONSIBILITY OF THE BUILDING DESIGNER PER ANSI/TPI 1 SEC. 2.

JAMES F. COLLINS, JR. LICENSE No. 52212 STATE OF FLORIDA PROFESSIONAL ENGINEER

Mar

TC LL	20.0 PSF	REF R215-- 55262
TC DL	10.0 PSF	DATE 03/31/09
BC DL	10.0 PSF	DRW HCUSR215 09090028
BC LL	0.0 PSF	HC-ENG WHK/WHK
TOT.LD.	40.0 PSF	SEQN- 185789
DUR.FAC.	1.25	FROM LRB
SPACING	24.0"	JREF- 1TQF215_Z02

(6011-/HAMMOCK RES. /G-N CONSTRUCTION -- , ** - A10)

Top chord 2x4 SP #2 N
Bot chord 2x4 SP #2 N
Webs 2x4 SP #2 N

(A) Continuous lateral bracing equally spaced on member. Or 1x4 "T" brace. 80% length of web member. Same species & SRB grade or better, attached with 8d Box or Gun (0.113"x2.5",min.)nails @ 6" OC.

Bottom chord checked for 10.00 psf non-concurrent live load.

The overall height of this truss excluding overhang is 9-5-3.

110 mph wind, 15.00 ft mean hgt, ASCE 7-05, CLOSED bldg, Located anywhere in roof, CAT II, EXP B, wind TC DL=5.0 psf, wind BC DL=5.0 psf. Iw=1.00 GCpi(+/-)=0.18

Wind reactions based on MWFRS pressures.

Truss passed check for 20 psf additional bottom chord live load in areas with 42"-high x 24"-wide clearance.

Deflection meets L/240 live and L/180 total load.

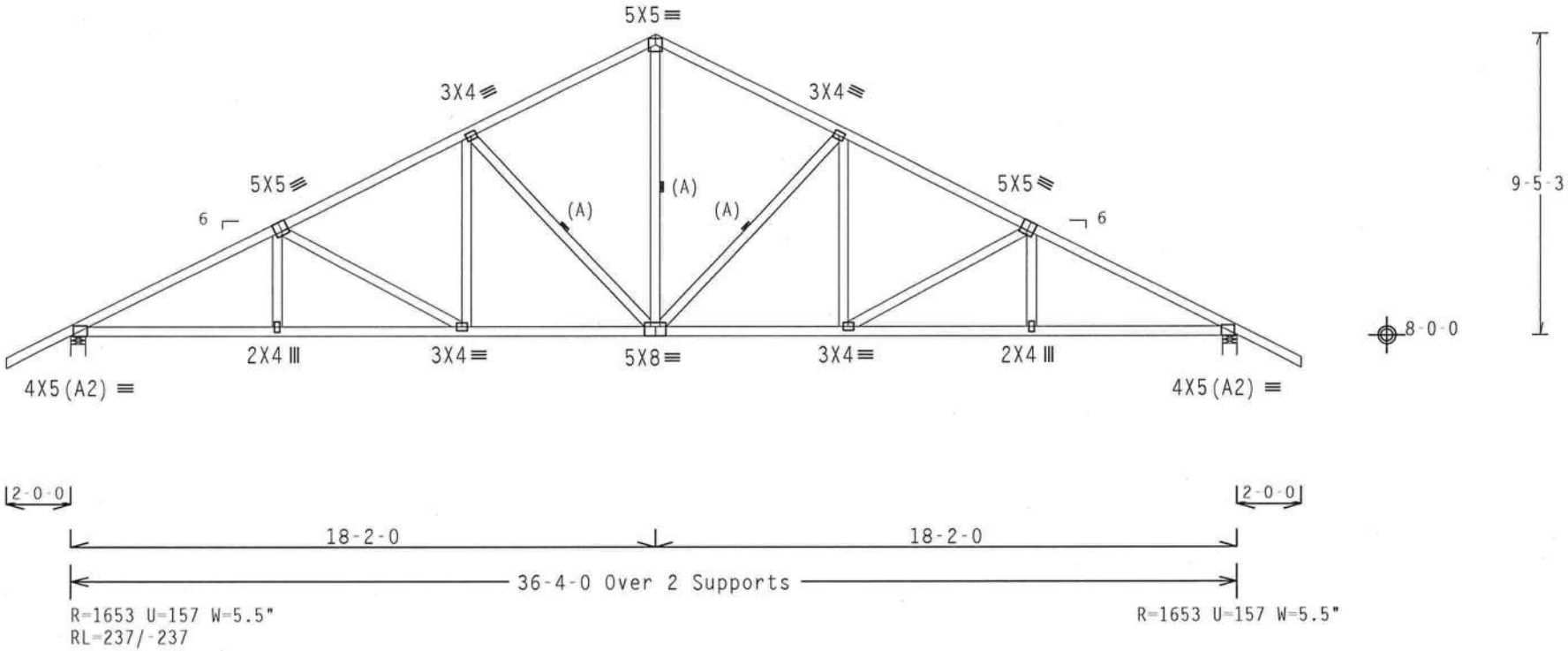

Design Crit: FBC2007Res/TPI-2002(STD)

PLT TYP. Wave | FT/RT=20%(0%)/0(0) | 9.01.00.021 | QTY:6 | FL/-/5/-/-/R/- | Scale =.1875"/Ft.

ALPINE
ITW Building Components Group Inc.
Haines City, FL 33844
FL COA #0 278

WARNING TRUSSES REQUIRE EXTREME CARE IN FABRICATION, HANDLING, SHIPPING, INSTALLING AND BRACING. REFER TO BCSI (BUILDING COMPONENT SAFETY INFORMATION), PUBLISHED BY TPI (TRUSS PLATE INSTITUTE, 218 NORTH LEE STREET, SUITE 312, ALEXANDRIA, VA, 22314) AND WTCA (WOOD TRUSS COUNCIL OF AMERICA, 6300 ENTERPRISE LANE, MADISON, WI 53719) FOR SAFETY PRACTICES PRIOR TO PERFORMING THESE FUNCTIONS. UNLESS OTHERWISE INDICATED TOP CHORD SHALL HAVE PROPERLY ATTACHED STRUCTURAL PANELS AND BOTTOM CHORD SHALL HAVE A PROPERLY ATTACHED RIGID CEILING.

IMPORTANT FURNISH A COPY OF THIS DESIGN TO THE INSTALLATION CONTRACTOR. ITW BCG, INC. SHALL NOT BE RESPONSIBLE FOR ANY DEVIATION FROM THIS DESIGN; ANY FAILURE TO BUILD THE TRUSS IN COMFORMANCE WITH TPI; OR FABRICATING, HANDLING, SHIPPING, INSTALLING & BRACING OF TRUSSES.
DESIGN CONFORMS WITH APPLICABLE PROVISIONS OF NDS (NATIONAL DESIGN SPEC, BY AF&PA) AND TPI. ITW BCG CONNECTOR PLATES ARE MADE OF 20/18/16GA (W,H/SS/K) ASTM A653 GRADE 40/60 (W, K/H,SS) GALV. STEEL. APPLY PLATES TO EACH FACE OF TRUSS AND, UNLESS OTHERWISE LOCATED ON THIS DESIGN, POSITION PER DRAWINGS 160A-Z. ANY INSPECTION OF PLATES FOLLOWED BY (1) SHALL BE PER ANNEX A3 OF TPI1-2002 SEC.3. A SEAL ON THIS DRAWING INDICATES ACCEPTANCE OF PROFESSIONAL ENGINEERING RESPONSIBILITY SOLELY FOR THE TRUSS COMPONENT DESIGN SHOWN. THE SUITABILITY AND USE OF THIS COMPONENT FOR ANY BUILDING IS THE RESPONSIBILITY OF THE BUILDING DESIGNER PER ANSI/TPI 1 SEC. 2.

JAMES F. COLLINS, JR. LICENSED No. 52212 STATE OF FLORIDA PROFESSIONAL ENGINEER
Mar 9, 2009

TC LL	20.0 PSF	REF	R215-- 55263
TC DL	10.0 PSF	DATE	03/31/09
BC DL	10.0 PSF	DRW	HCUSR215 09090018
BC LL	0.0 PSF	HC-ENG	WHK/WHK *
TOT.LD.	40.0 PSF	SEQN-	185784
DUR.FAC.	1.25	FROM	LRB
SPACING	24.0"	JREF-	1TQF215_Z02

(6011-/HAMMOCK RES. /G-N CONSTRUCTION -- , ** - A12)

Top chord 2x4 SP #2 N
Bot chord 2x4 SP #2 N :B1 2x4 SP SS:
Webs 2x4 SP #2 N

Calculated horizontal deflection is 0.20" due to live load and 0.18" due to dead load.

(A) Continuous lateral bracing equally spaced on member. Or 2x6 "T" brace. 80% length of web member. Same species & grade or better, attached with 16d Box or Gun (0.135"x3.5",min.)nails @ 6" OC.

Bottom chord checked for 10.00 psf non-concurrent live load.

Deflection meets L/240 live and L/180 total load.

The overall height of this truss excluding overhang is 10-0-0.

110 mph wind, 15.00 ft mean hgt, ASCE 7-05, CLOSED bldg, not located within 6.50 ft from roof edge, CAT II, EXP B, wind TC DL=5.0 psf, wind BC DL=5.0 psf. Iw=1.00 GCpi(+/-)=0.18

Wind reactions based on MWFRS pressures.

(B) Continuous lateral bracing equally spaced on member. Or 1x4 "T" brace. 80% length of web member. Same species & SRB grade or better, attached with 8d Box or Gun (0.113"x2.5",min.)nails @ 6" OC.

Truss passed check for 20 psf additional bottom chord live load in areas with 42"-high x 24"-wide clearance.

Shim all supports to solid bearing.

MWFRS loads based on trusses located at least 15.00 ft. from roof edge.

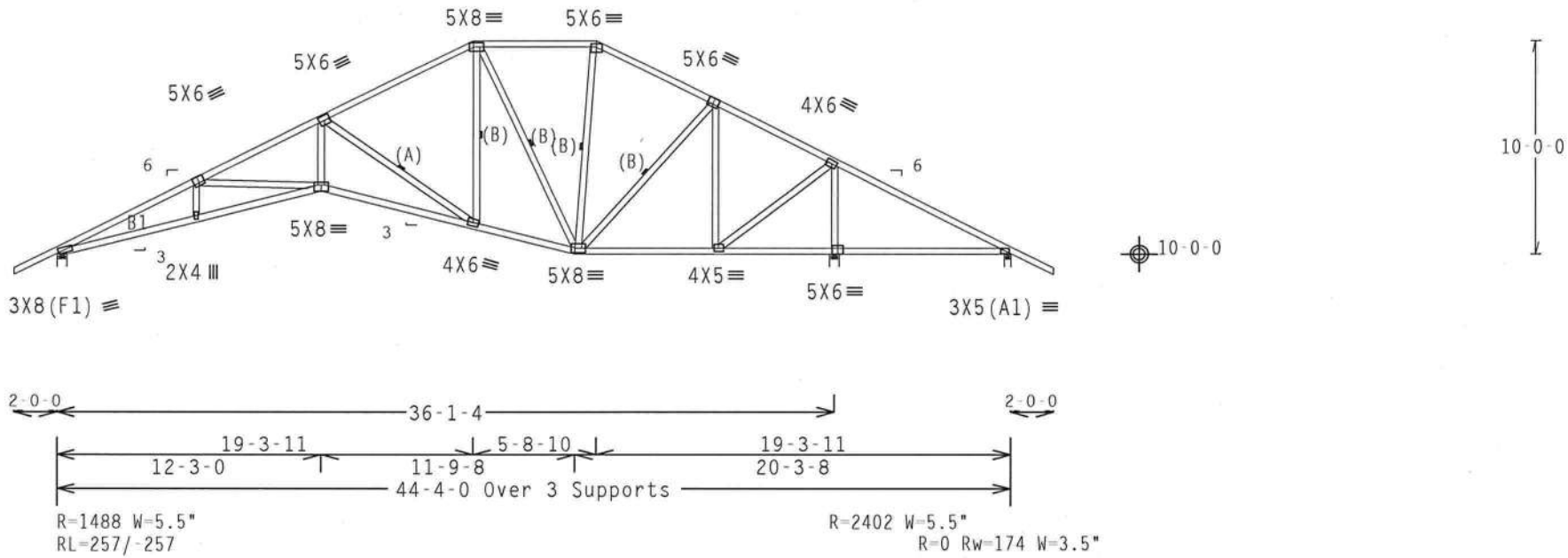

Design Crit: FBC2007Res/TPI-2002(STD)

PLT TYP. Wave | FT/RT=20%(0%)/0(0) | 9.01.00.0210 | QTY:8 | FL/-/5/-/-/R/- | Scale =.125"/Ft.

ALPINE
ITW Building Components Group Inc.
Haines City, FL 33844
FL COA #0 278

JAMES F. COLLINS, JR. LICENSE No. 52212 STATE OF FLORIDA PROFESSIONAL ENGINEER
Mar 31

TC LL	20.0 PSF	REF	R215-- 55264
TC DL	10.0 PSF	DATE	03/31/09
BC DL	10.0 PSF	DRW	HCUSR215 09090030
BC LL	0.0 PSF	HC-ENG	WHK/WHK
TOT.LD.	40.0 PSF	SEQN-	185785
DUR.FAC.	1.25	FROM	LRB
SPACING	24.0"	JREF-	1TOF215_Z02

Top chord 2x4 SP #2 N
Bot chord 2x4 SP #2 N :B1 2x4 SP #2 Dense:
Webs 2x4 SP #2 N :W6 2x4 SP SS:

Calculated horizontal deflection is 0.20" due to live load and 0.19" due to dead load.

(A) Continuous lateral bracing equally spaced on member.

Truss passed check for 20 psf additional bottom chord live load in areas with 42"-high x 24"-wide clearance.

Shim all supports to solid bearing.

(**) 1 plate(s) require special positioning. Refer to scaled plate plot details for special positioning requirements.

110 mph wind, 15.00 ft mean hgt, ASCE 7-05, CLOSED bldg, not located within 6.50 ft from roof edge, CAT II, EXP B, wind TC DL=5.0 psf, wind BC DL=5.0 psf. Iw=1.00 GCpi(+/-)=0.18

Wind reactions based on MWFRS pressures.

Bottom chord checked for 10.00 psf non-concurrent live load.

Deflection meets L/240 live and L/180 total load.

The overall height of this truss excluding overhang is 10-0-0.

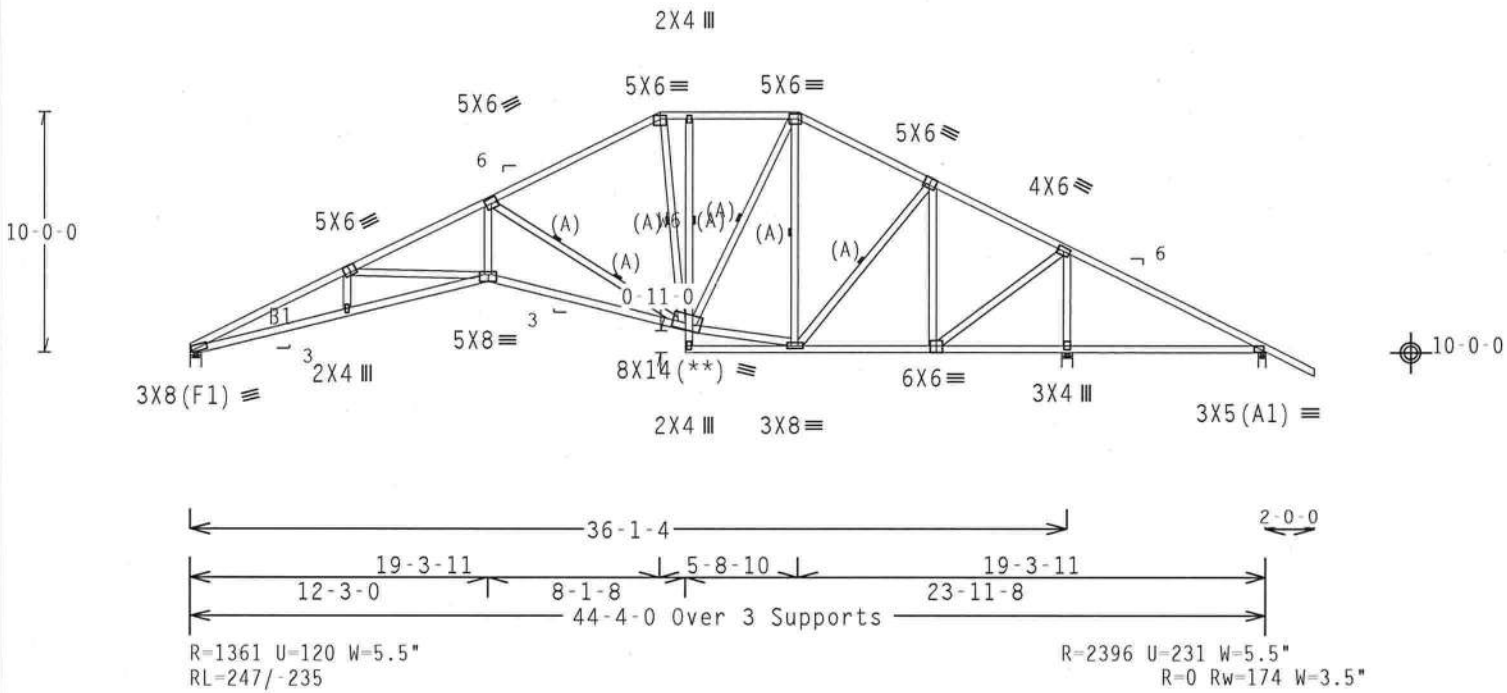

Design Crit: FBC2007Res/TPI-2002(STD)

PLT TYP. Wave | FT/RT=20%(0%)/0(0) | 9.01 00.13 | QTY:5 | FL/-/5/-/-/R/- | Scale =.125"/Ft.

ALPINE
ITW Building Components Group Inc.
Haines City, FL 33844
FL COA #0 278

WARNING TRUSSES REQUIRE EXTREME CARE IN FABRICATION, HANDLING, SHIPPING, INSTALLING AND BRACING. REFER TO BCSI (BUILDING COMPONENT SAFETY INFORMATION), PUBLISHED BY TPI (TRUSS PLATE INSTITUTE, 218 NORTH LEE STREET, SUITE 312, ALEXANDRIA, VA, 22314) AND WTCA (WOOD TRUSS COUNCIL OF AMERICA, 6300 ENTERPRISE LANE, MADISON, WI 53719) FOR SAFETY PRACTICES PRIOR TO PERFORMING THESE FUNCTIONS. UNLESS OTHERWISE INDICATED TOP CHORD SHALL HAVE PROPERLY ATTACHED STRUCTURAL PANELS AND BOTTOM CHORD SHALL HAVE A PROPERLY ATTACHED RIGID CEILING.

IMPORTANTFURNISH A COPY OF THIS DESIGN TO THE INSTALLATION CONTRACTOR. ITW BCG, INC. SHALL NOT BE RESPONSIBLE FOR ANY DEVIATION FROM THIS DESIGN; ANY FAILURE TO BUILD THE TRUSS IN COMFORMANCE WITH TPI; OR FABRICATING, HANDLING, SHIPPING, INSTALLING & BRACING OF TRUSSES.
DESIGN CONFORMS WITH APPLICABLE PROVISIONS OF NDS (NATIONAL DESIGN SPEC. BY AF&PA) AND TPI. ITW BCG CONNECTOR PLATES ARE MADE OF 20/18/16GA (W,H/SS/K) ASTM A653 GRADE 40/60 (W, K/H,SS) GALV. STEEL. APPLY PLATES TO EACH FACE OF TRUSS AND. UNLESS OTHERWISE LOCATED ON THIS DESIGN, POSITION PER DRAWINGS 160A-Z. ANY INSPECTION OF PLATES FOLLOWED BY (1) SHALL BE PER ANNEX A3 OF TPI1-2002 SEC.3. A SEAL ON THIS DRAWING INDICATES ACCEPTANCE OF PROFESSIONAL ENGINEERING RESPONSIBILITY SOLELY FOR THE TRUSS COMPONENT DESIGN SHOWN. THE SUITABILITY AND USE OF THIS COMPONENT FOR ANY BUILDING IS THE RESPONSIBILITY OF THE BUILDING DESIGNER PER ANSI/TPI 1 SEC. 2.

JAMES F. COLLINS JR. LICENSED No. 52212 STATE OF FLORIDA PROFESSIONAL ENGINEER
Mar 31 09

TC LL	20.0 PSF	REF R215-- 55265
TC DL	10.0 PSF	DATE 03/31/09
BC DL	10.0 PSF	DRW HCUSR215 09090032
BC LL	0.0 PSF	HC-ENG WHK/WHK
TOT.LD.	40.0 PSF	SEQN- 185793
DUR.FAC.	1.25	FROM LRB
SPACING	24.0"	JREF- 1TQF215_Z02

Top chord 2x4 SP #2 N :T2 2x4 SP #2 Dense:
Bot chord 2x4 SP #2 N :B1 2x4 SP #2 Dense:
Webs 2x4 SP #2 N :W6 2x4 SP SS:

Truss passed check for 20 psf additional bottom chord live load in areas with 42"-high x 24"-wide clearance.

Shim all supports to solid bearing.

The overall height of this truss excluding overhang is 10-0-0.

110 mph wind, 15.00 ft mean hgt, ASCE 7-05, CLOSED bldg, not located within 6.50 ft from roof edge, CAT II, EXP B, wind TC DL=5.0 psf, wind BC DL=5.0 psf. Iw=1.00 GCpi(+/-)=0.18

Wind reactions based on MWFRS pressures.

Calculated horizontal deflection is 0.18" due to live load and 0.17" due to dead load.

(A) Continuous lateral bracing equally spaced on member. Or 1x4 "T" brace. 80% length of web member. Same species & SRB grade or better, attached with 8d Box or Gun (0.113"x2.5",min.)nails @ 6" OC.

Bottom chord checked for 10.00 psf non-concurrent live load.

Deflection meets L/240 live and L/180 total load.

(C) scab brace. 80% length of web member. Same size, species & grade or better. Attach with 10d Box or Gun (0.128"x3",min.)nails @ 6" OC.

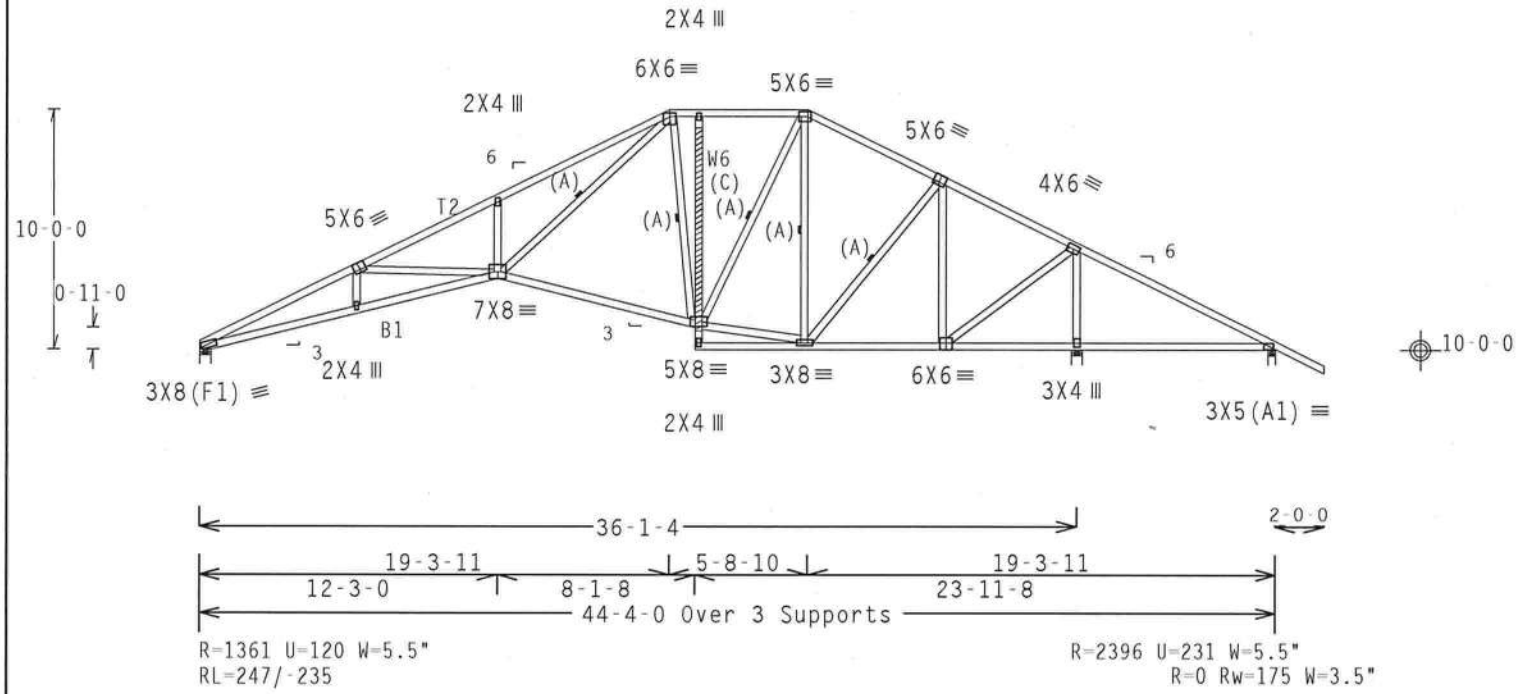

Design Crit: FBC2007Res/TPI-2002(STD)

PLT TYP. Wave | FT/RT=20%(0%)/0(0) | 9.01.00 | QTY:1 | FL/-/5/-/-/R/- | Scale =.125"/Ft.

ALPINE
ITW Building Components Group Inc.
Haines City, FL 33844
FL COA #0 278

WARNING TRUSSES REQUIRE EXTREME CARE IN FABRICATION, HANDLING, SHIPPING, INSTALLING AND BRACING. REFER TO BCSI (BUILDING COMPONENT SAFETY INFORMATION), PUBLISHED BY TPI (TRUSS PLATE INSTITUTE, 218 NORTH LEE STREET, SUITE 312, ALEXANDRIA, VA, 22314) AND WTCA (WOOD TRUSS COUNCIL OF AMERICA, 6300 ENTERPRISE LANE, MADISON, WI 53719) FOR SAFETY PRACTICES PRIOR TO PERFORMING THESE FUNCTIONS. UNLESS OTHERWISE INDICATED TOP CHORD SHALL HAVE PROPERLY ATTACHED STRUCTURAL PANELS AND BOTTOM CHORD SHALL HAVE A PROPERLY ATTACHED RIGID CEILING.

IMPORTANTFURNISH A COPY OF THIS DESIGN TO THE INSTALLATION CONTRACTOR. ITW BCG, INC. SHALL NOT BE RESPONSIBLE FOR ANY DEVIATION FROM THIS DESIGN; ANY FAILURE TO BUILD THE TRUSS IN COMFORMANCE WITH TPI; OR FABRICATING, HANDLING, SHIPPING, INSTALLING & BRACING OF TRUSSES.
DESIGN CONFORMS WITH APPLICABLE PROVISIONS OF NDS (NATIONAL DESIGN SPEC. BY AF&PA) AND TPI. ITW BCG CONNECTOR PLATES ARE MADE OF 20/18/16GA (W,H/SS/K) ASTM A653 GRADE 40/60 (W, K/H,SS) GALV. STEEL. APPLY PLATES TO EACH FACE OF TRUSS AND, UNLESS OTHERWISE LOCATED ON THIS DESIGN, POSITION PER DRAWINGS 160A-Z. ANY INSPECTION OF PLATES FOLLOWED BY (1) SHALL BE PER ANNEX A3 OF TPI1-2002 SEC.3. A SEAL ON THIS DRAWING INDICATES ACCEPTANCE OF PROFESSIONAL ENGINEERING RESPONSIBILITY SOLELY FOR THE TRUSS COMPONENT DESIGN SHOWN. THE SUITABILITY AND USE OF THIS COMPONENT FOR ANY BUILDING IS THE RESPONSIBILITY OF THE BUILDING DESIGNER PER ANSI/TPI 1 SEC. 2.

JAMES F. COLLINS JR. LICENSED No. 52212 STATE OF FLORIDA PROFESSIONAL ENGINEER
Mar 31 09

TC LL	20.0 PSF	REF	R215-- 55266
TC DL	10.0 PSF	DATE	03/31/09
BC DL	10.0 PSF	DRW	HCUSR215 09090046
BC LL	0.0 PSF	HC-ENG	WHK/WHK
TOT.LD.	40.0 PSF	SEQN-	185788
DUR.FAC.	1.25	FROM	LRB
SPACING	24.0"	JREF-	1TQF215_Z02

Top chord 2x4 SP #2 N
Bot chord 2x4 SP #2 N
Webs 2x4 SP #2 N

110 mph wind, 20.73 ft mean hgt, ASCE 7-05, CLOSED bldg, not located within 4.50 ft from roof edge, CAT II, EXP B, wind TC DL=5.0 psf, wind BC DL=2.0 psf. Iw=1.00 GCpi(+/-)=0.18

Wind reactions based on MWFRS pressures.

The overall height of this truss excluding overhang is 1-5-3.

Refer to DWG PB1200109 for piggyback details.

SPECIAL LOADS
------(LUMBER DUR.FAC.=1.25 / PLATE DUR.FAC.=1.25)

TC - From	60 PLF	at -0.94	to	60 PLF	at 1.88
TC - From	60 PLF	at 1.88	to	60 PLF	at 4.69
BC - From	4 PLF	at -0.94	to	4 PLF	at 4.69

In lieu of rigid ceiling use purlins to brace BC @ 24" OC.

Deflection meets L/240 live and L/180 total load.

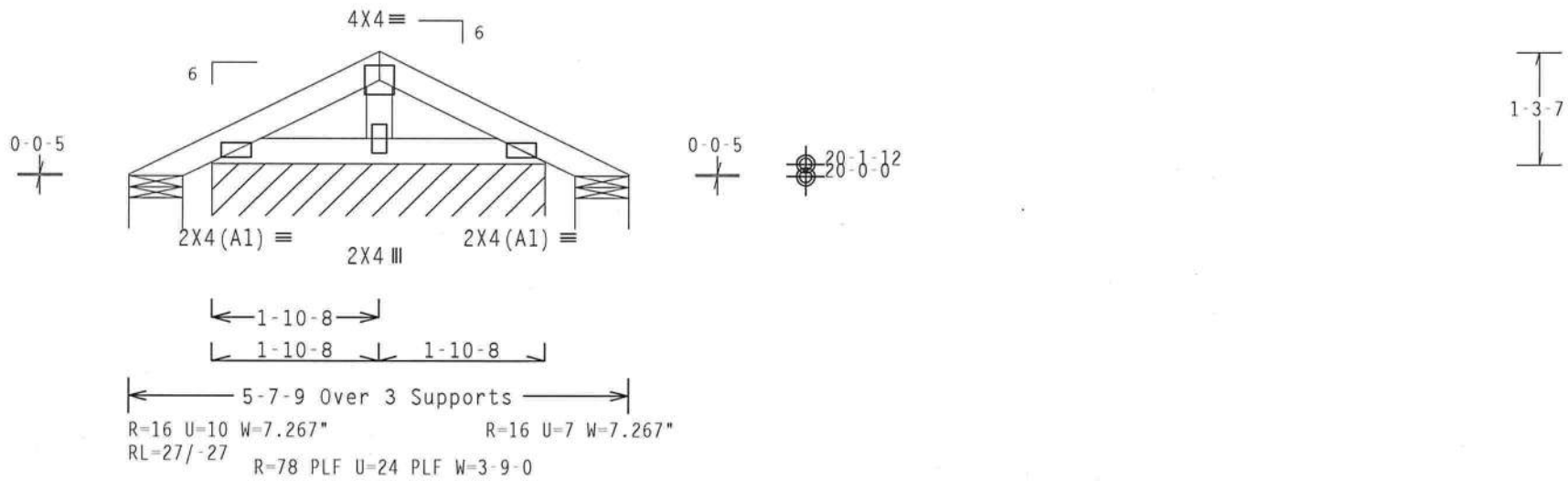

Design Crit: FBC2007Res/TPI-2002(STD)

PLT TYP. Wave | FT/RT=20%(0%)/0(0) | 9.01.00.121 | QTY:14 FL/-/5/-/-/R/- | Scale =.5"/Ft.

ALPINE
ITW Building Components Group Inc.
Haines City, FL 33844
FL COA #0 278

WARNING TRUSSES REQUIRE EXTREME CARE IN FABRICATION, HANDLING, SHIPPING, INSTALLING AND BRACING. REFER TO BCSI (BUILDING COMPONENT SAFETY INFORMATION), PUBLISHED BY TPI (TRUSS PLATE INSTITUTE, 218 NORTH LEE STREET, SUITE 312, ALEXANDRIA, VA, 22314) AND WTCA (WOOD TRUSS COUNCIL OF AMERICA, 6300 ENTERPRISE LANE, MADISON, WI 53719) FOR SAFETY PRACTICES PRIOR TO PERFORMING THESE FUNCTIONS. UNLESS OTHERWISE INDICATED TOP CHORD SHALL HAVE PROPERLY ATTACHED STRUCTURAL PANELS AND BOTTOM CHORD SHALL HAVE A PROPERLY ATTACHED RIGID CEILING.

IMPORTANTFURNISH A COPY OF THIS DESIGN TO THE INSTALLATION CONTRACTOR. ITW BCG, INC. SHALL NOT BE RESPONSIBLE FOR ANY DEVIATION FROM THIS DESIGN; ANY FAILURE TO BUILD THE TRUSS IN COMFORMANCE WITH TPI; OR FABRICATING, HANDLING, SHIPPING, INSTALLING & BRACING OF TRUSSES.
DESIGN CONFORMS WITH APPLICABLE PROVISIONS OF NDS (NATIONAL DESIGN SPEC. BY AF&PA) AND TPI. ITW BCG CONNECTOR PLATES ARE MADE OF 20/18/16GA (H,H/SS/K) ASTM A653 GRADE 40/60 (H, K/H,SS) GALV. STEEL. APPLY PLATES TO EACH FACE OF TRUSS AND, UNLESS OTHERWISE LOCATED ON THIS DESIGN, POSITION PER DRAWINGS 160A-Z. ANY INSPECTION OF PLATES FOLLOWED BY (1) SHALL BE PER ANNEX A3 OF TPI1-2002 SEC.3. A SEAL ON THIS DRAWING INDICATES ACCEPTANCE OF PROFESSIONAL ENGINEERING RESPONSIBILITY SOLELY FOR THE TRUSS COMPONENT DESIGN SHOWN. THE SUITABILITY AND USE OF THIS COMPONENT FOR ANY BUILDING IS THE RESPONSIBILITY OF THE BUILDING DESIGNER PER ANSI/TPI 1 SEC. 2.

JAMES F. COLLINS, JR. LICENSE No. 52212 STATE OF FLORIDA PROFESSIONAL ENGINEER
Mar

TC LL	20.0 PSF	REF	R215-- 55267
TC DL	10.0 PSF	DATE	03/31/09
BC DL	10.0 PSF	DRW	HCUSR215 09090039
BC LL	0.0 PSF	HC-ENG	WHK/WHK
TOT.LD.	40.0 PSF	SEQN-	185787
DUR.FAC.	1.25	FROM	LRB
SPACING	24.0"	JREF-	1TQF215_Z02

(6011-/HAMMOCK RES. /G-N CONSTRUCTION -- , ** - AT1)

Top chord 2x4 SP #2 N :T2, T3 2x6 SP SS:
Bot chord 2x6 SP SS :B3 2x4 SP #2 N: :B4 2x6 SP #2 N:
Webs 2x4 SP #2 N

SPECIAL LOADS
------(LUMBER DUR.FAC.=1.25 / PLATE DUR.FAC.=1.25)

TC - From	60 PLF	at -2.00	to	60 PLF	at 0.00
TC - From	60 PLF	at 0.00	to	60 PLF	at 5.53
TC - From	60 PLF	at 5.53	to	60 PLF	at 8.00
TC - From	82 PLF	at 8.00	to	82 PLF	at 10.75
TC - From	60 PLF	at 10.75	to	60 PLF	at 12.00
TC - From	60 PLF	at 12.00	to	60 PLF	at 12.62
TC - From	82 PLF	at 12.62	to	82 PLF	at 13.25
TC - From	105 PLF	at 13.25	to	105 PLF	at 16.00
TC - From	60 PLF	at 16.00	to	60 PLF	at 18.55
TC - From	60 PLF	at 18.55	to	60 PLF	at 24.00
PLT- From	20 PLF	at 11.25	to	20 PLF	at 12.75
BC - From	20 PLF	at 0.00	to	20 PLF	at 8.00
BC - From	120 PLF	at 8.00	to	120 PLF	at 16.00
BC - From	20 PLF	at 16.00	to	20 PLF	at 24.00

BC - 68 LB Conc. Load at 8.00, 16.00
BC - 71 LB Conc. Load at 16.29

Wind reactions based on MWFRS pressures.

Design Dead Loads based on material weight adjusted for slope: TC: 1.00 PSF

110 mph wind, 15.00 ft mean hgt, ASCE 7-05, CLOSED bldg, Located anywhere in roof, CAT II, EXP B, wind TC DL=5.0 psf, wind BC DL=5.0 psf. Iw=1.00 GCpi(+/-)=0.18

Bottom chord checked for 10.00 psf non-concurrent live load.

Collar-tie braced with continuous lateral bracing at 24" OC. or rigid ceiling.

Deflection meets L/240 live and L/180 total load.

The overall height of this truss excluding overhang is 6-4-3.

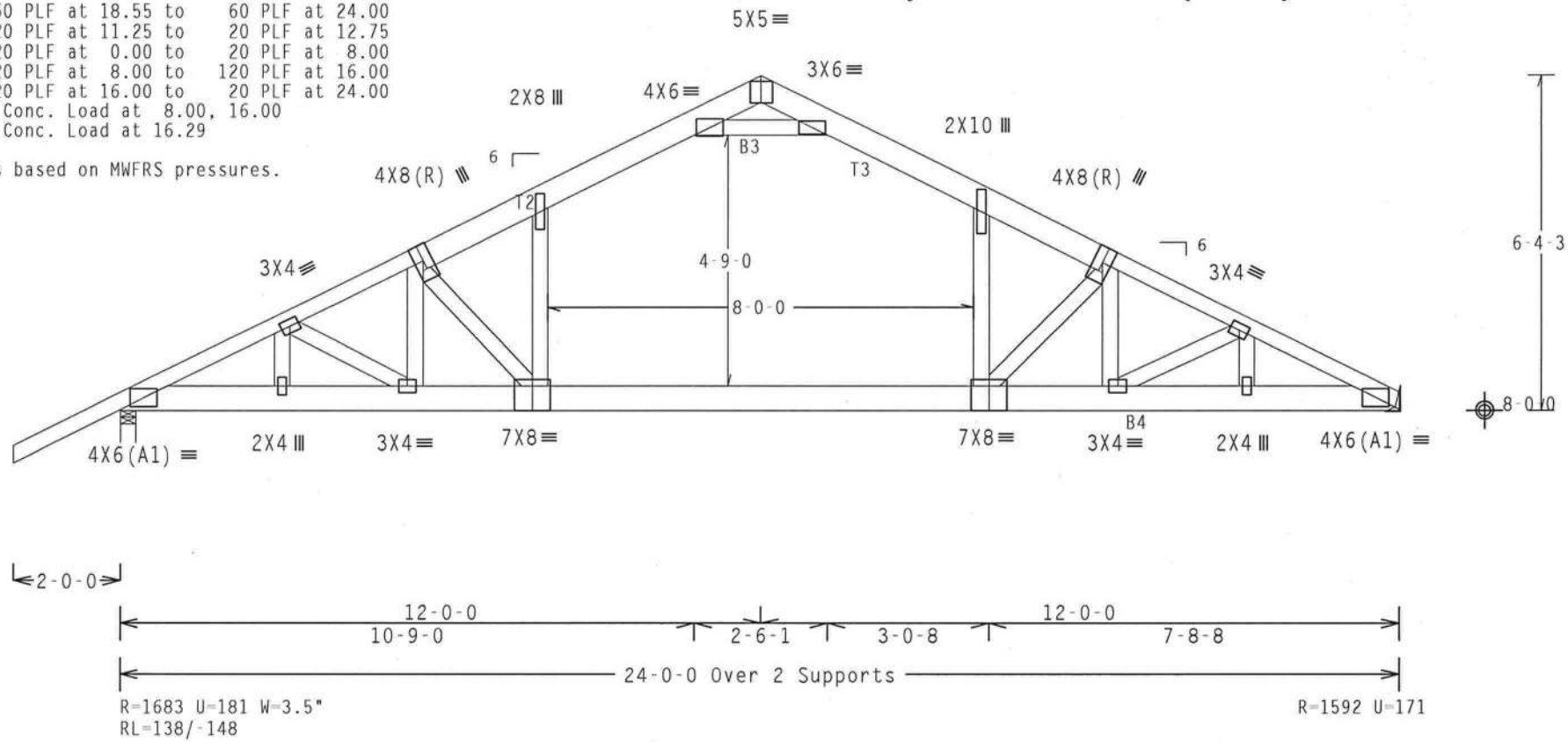

Design Crit: FBC2007Res/TPI-2002(STD)

PLT TYP. Wave FT/RT=20%(0%)/0(0) 9.01.00.12 QTY:2 FL/-/5/-/-/R/- Scale =.3125"/Ft.

ALPINE
ITW Building Components Group Inc.
Haines City, FL 33844
FL COA #0 278

WARNING TRUSSES REQUIRE EXTREME CARE IN FABRICATION, HANDLING, SHIPPING, INSTALLING AND BRACING. REFER TO BCSI (BUILDING COMPONENT SAFETY INFORMATION), PUBLISHED BY TPI (TRUSS PLATE INSTITUTE, 218 NORTH LEE STREET, SUITE 312, ALEXANDRIA, VA, 22314) AND WTCA (WOOD TRUSS COUNCIL OF AMERICA, 6300 ENTERPRISE LANE, MADISON, WI 53719) FOR SAFETY PRACTICES PRIOR TO PERFORMING THESE FUNCTIONS. UNLESS OTHERWISE INDICATED TOP CHORD SHALL HAVE PROPERLY ATTACHED STRUCTURAL PANELS AND BOTTOM CHORD SHALL HAVE A PROPERLY ATTACHED RIGID CEILING.

IMPORTANTFURNISH A COPY OF THIS DESIGN TO THE INSTALLATION CONTRACTOR. ITW BCG, INC. SHALL NOT BE RESPONSIBLE FOR ANY DEVIATION FROM THIS DESIGN; ANY FAILURE TO BUILD THE TRUSS IN CONFORMANCE WITH TPI; OR FABRICATING, HANDLING, SHIPPING, INSTALLING & BRACING OF TRUSSES.
DESIGN CONFORMS WITH APPLICABLE PROVISIONS OF NDS (NATIONAL DESIGN SPEC. BY AF&PA) AND TPI. ITW BCG CONNECTOR PLATES ARE MADE OF 20/18/16GA (W,H/SS/K) ASTM A653 GRADE 40/60 (W, K/H,SS) GALV. STEEL. APPLY PLATES TO EACH FACE OF TRUSS AND. UNLESS OTHERWISE LOCATED ON THIS DESIGN, POSITION PER DRAWINGS 160A-Z. ANY INSPECTION OF PLATES FOLLOWED BY (1) SHALL BE PER ANNEX A3 OF TPI1-2002 SEC.3. A SEAL ON THIS DRAWING INDICATES ACCEPTANCE OF PROFESSIONAL ENGINEERING RESPONSIBILITY SOLELY FOR THE TRUSS COMPONENT DESIGN SHOWN. THE SUITABILITY AND USE OF THIS COMPONENT FOR ANY BUILDING IS THE RESPONSIBILITY OF THE BUILDING DESIGNER PER ANSI/TPI 1 SEC. 2.

JAMES F. COLLINS, JR. LICENSE No. 52212 STATE OF FLORIDA PROFESSIONAL ENGINEER
Mar 31 09

TC LL	20.0 PSF	REF	R215-- 55268
TC DL	10.0 PSF	DATE	03/31/09
BC DL	10.0 PSF	DRW	HCUSR215 09090040
BC LL	0.0 PSF	HC-ENG	WHK/WHK
TOT.LD.	40.0 PSF	SEQN-	185774
DUR.FAC.	1.25	FROM	LRB
SPACING	SEE ABOVE	JREF-	1TQF215_Z02

(6011-/HAMMOCK RES. /G-N CONSTRUCTION -- , ** - AT2)

Top chord 2x4 SP #2 N :T2, T3 2x6 SP SS:
Bot chord 2x6 SP SS :B3 2x4 SP #2 N: :B4 2x6 SP #2 N:
Webs 2x4 SP #2 N

SPECIAL LOADS
------(LUMBER DUR.FAC.=1.25 / PLATE DUR.FAC.=1.25)

TC - From	60 PLF	at	-2.00	to	60 PLF	at	0.00
TC - From	60 PLF	at	0.00	to	60 PLF	at	5.53
TC - From	60 PLF	at	5.53	to	60 PLF	at	8.00
TC - From	82 PLF	at	8.00	to	82 PLF	at	10.75
TC - From	60 PLF	at	10.75	to	60 PLF	at	12.00
TC - From	60 PLF	at	12.00	to	60 PLF	at	12.62
TC - From	82 PLF	at	12.62	to	82 PLF	at	13.25
TC - From	105 PLF	at	13.25	to	105 PLF	at	16.00
TC - From	60 PLF	at	16.00	to	60 PLF	at	18.55
TC - From	60 PLF	at	18.55	to	60 PLF	at	24.00
PLT- From	20 PLF	at	11.25	to	20 PLF	at	12.75
BC - From	20 PLF	at	0.00	to	20 PLF	at	8.00
BC - From	120 PLF	at	8.00	to	120 PLF	at	16.00
BC - From	20 PLF	at	16.00	to	20 PLF	at	24.00

BC - 68 LB Conc. Load at 8.00, 16.00
BC - 71 LB Conc. Load at 16.29

Wind reactions based on MWFRS pressures.

Design Dead Loads based on material weight adjusted for slope: TC: 1.00 PSF

110 mph wind, 15.00 ft mean hgt, ASCE 7-05, CLOSED bldg, Located anywhere in roof, CAT II, EXP B, wind TC DL=5.0 psf, wind BC DL=5.0 psf. Iw=1.00 GCpi(+/-)=0.18

Bottom chord checked for 10.00 psf non-concurrent live load.

Collar-tie braced with continuous lateral bracing at 24" OC. or rigid ceiling.

Deflection meets L/240 live and L/180 total load.

The overall height of this truss excluding overhang is 6-4-3.

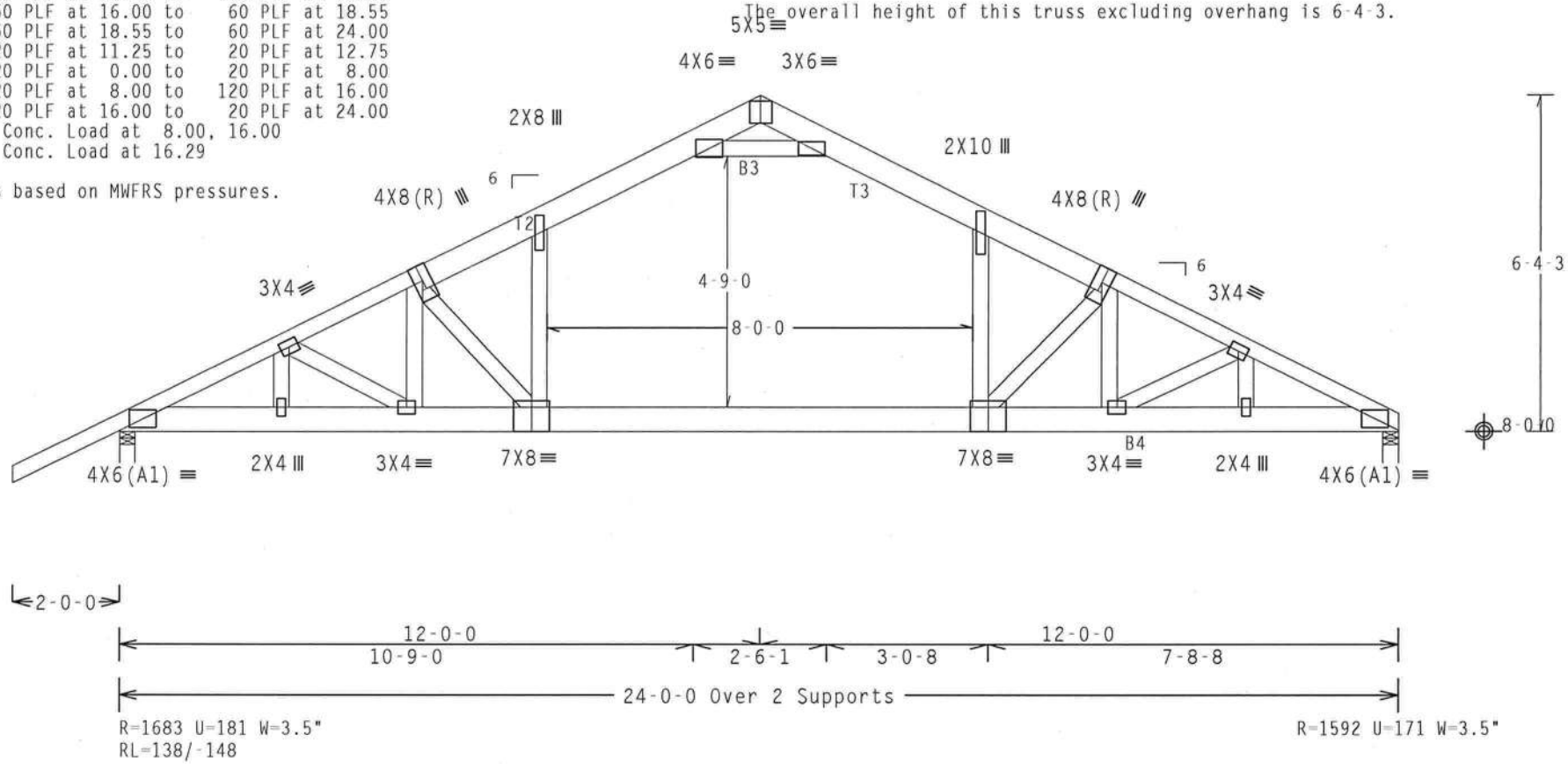

Design Crit: FBC2007Res/TPI-2002(STD)

PLT TYP. Wave | FT/RT=20%(0%)/0(0) | 9.01.00 | QTY:1 | FL/-/5/-/-/R/- | Scale =.3125"/Ft.

ALPINE
ITW Building Components Group Inc.
Haines City, FL 33844
FL COA #0 278

WARNING TRUSSES REQUIRE EXTREME CARE IN FABRICATION, HANDLING, SHIPPING, INSTALLING AND BRACING. REFER TO BCSI (BUILDING COMPONENT SAFETY INFORMATION), PUBLISHED BY TPI (TRUSS PLATE INSTITUTE, 218 NORTH LEE STREET, SUITE 312, ALEXANDRIA, VA. 22314) AND WTCA (WOOD TRUSS COUNCIL OF AMERICA, 6300 ENTERPRISE LANE, MADISON, WI 53719) FOR SAFETY PRACTICES PRIOR TO PERFORMING THESE FUNCTIONS. UNLESS OTHERWISE INDICATED TOP CHORD SHALL HAVE PROPERLY ATTACHED STRUCTURAL PANELS AND BOTTOM CHORD SHALL HAVE A PROPERLY ATTACHED RIGID CEILING.

IMPORTANTFURNISH A COPY OF THIS DESIGN TO THE INSTALLATION CONTRACTOR. ITW BCG, INC. SHALL NOT BE RESPONSIBLE FOR ANY DEVIATION FROM THIS DESIGN; ANY FAILURE TO BUILD THE TRUSS IN COMFORMANCE WITH TPI; OR FABRICATING, HANDLING, SHIPPING, INSTALLING & BRACING OF TRUSSES. DESIGN CONFORMS WITH APPLICABLE PROVISIONS OF NDS (NATIONAL DESIGN SPEC. BY AF&PA) AND TPI. ITW BCG CONNECTOR PLATES ARE MADE OF 20/18/16GA (W,H/SS/K) ASTM A653 GRADE 40/60 (W, K/H,SS) GALV. STEEL. APPLY PLATES TO EACH FACE OF TRUSS AND, UNLESS OTHERWISE LOCATED ON THIS DESIGN, POSITION PER DRAWINGS 160A-Z. ANY INSPECTION OF PLATES FOLLOWED BY (I) SHALL BE PER ANNEX A3 OF TPI1-2002 SEC.3. A SEAL ON THIS DRAWING INDICATES ACCEPTANCE OF PROFESSIONAL ENGINEERING RESPONSIBILITY SOLELY FOR THE TRUSS COMPONENT DESIGN SHOWN. THE SUITABILITY AND USE OF THIS COMPONENT FOR ANY BUILDING IS THE RESPONSIBILITY OF THE BUILDING DESIGNER PER ANSI/TPI 1 SEC. 2.

JAMES F. COLLINS, JR. LICENSE No. 52212 STATE OF FLORIDA PROFESSIONAL ENGINEER
Mar 31, 2009

TC LL	20.0 PSF	REF	R215-- 55269
TC DL	10.0 PSF	DATE	03/31/09
BC DL	10.0 PSF	DRW	HCUSR215 09090041
BC LL	0.0 PSF	HC-ENG	WHK/WHK
TOT.LD.	40.0 PSF	SEQN-	185773
DUR.FAC.	1.25	FROM	LRB
SPACING	SEE ABOVE	JREF-	1TQF215_Z02

(6011-/HAMMOCK RES. /G-N CONSTRUCTION -- , ** - AT3)

Top chord 2x4 SP #2 N :T2, T3 2x6 SP SS:
Bot chord 2x6 SP SS :B3 2x4 SP #2 N: :B4 2x6 SP #2 N:
Webs 2x4 SP #2 N

SPECIAL LOADS
------(LUMBER DUR.FAC.=1.25 / PLATE DUR.FAC.=1.25)

TC - From	60 PLF	at -2.00 to	60 PLF	at 0.00
TC - From	60 PLF	at 0.00 to	60 PLF	at 5.53
TC - From	60 PLF	at 5.53 to	60 PLF	at 8.00
TC - From	82 PLF	at 8.00 to	82 PLF	at 10.75
TC - From	60 PLF	at 10.75 to	60 PLF	at 12.00
TC - From	60 PLF	at 12.00 to	60 PLF	at 12.62
TC - From	82 PLF	at 12.62 to	82 PLF	at 13.25
TC - From	105 PLF	at 13.25 to	105 PLF	at 16.00
TC - From	60 PLF	at 16.00 to	60 PLF	at 18.55
TC - From	60 PLF	at 18.55 to	60 PLF	at 24.00
TC - From	60 PLF	at 24.00 to	60 PLF	at 26.00
PLT- From	20 PLF	at 11.25 to	20 PLF	at 12.75
BC - From	20 PLF	at 0.00 to	20 PLF	at 8.00
BC - From	120 PLF	at 8.00 to	120 PLF	at 16.00
BC - From	20 PLF	at 16.00 to	20 PLF	at 24.00

BC - 68 LB Conc. Load at 8.00, 16.00
BC - 71 LB Conc. Load at 16.29

Wind reactions based on MWFRS pressures.

Design Dead Loads based on material weight adjusted for slope: TC: 1.00 PSF

110 mph wind, 15.00 ft mean hgt, ASCE 7-05, CLOSED bldg, Located anywhere in roof, CAT II, EXP B, wind TC DL=5.0 psf, wind BC DL=5.0 psf. Iw=1.00 GCpi(+/-)=0.18

Bottom chord checked for 10.00 psf non-concurrent live load.

Collar-tie braced with continuous lateral bracing at 24" OC. or rigid ceiling.

Deflection meets L/240 live and L/180 total load.

The overall height of this truss excluding overhang is 6-4-3.

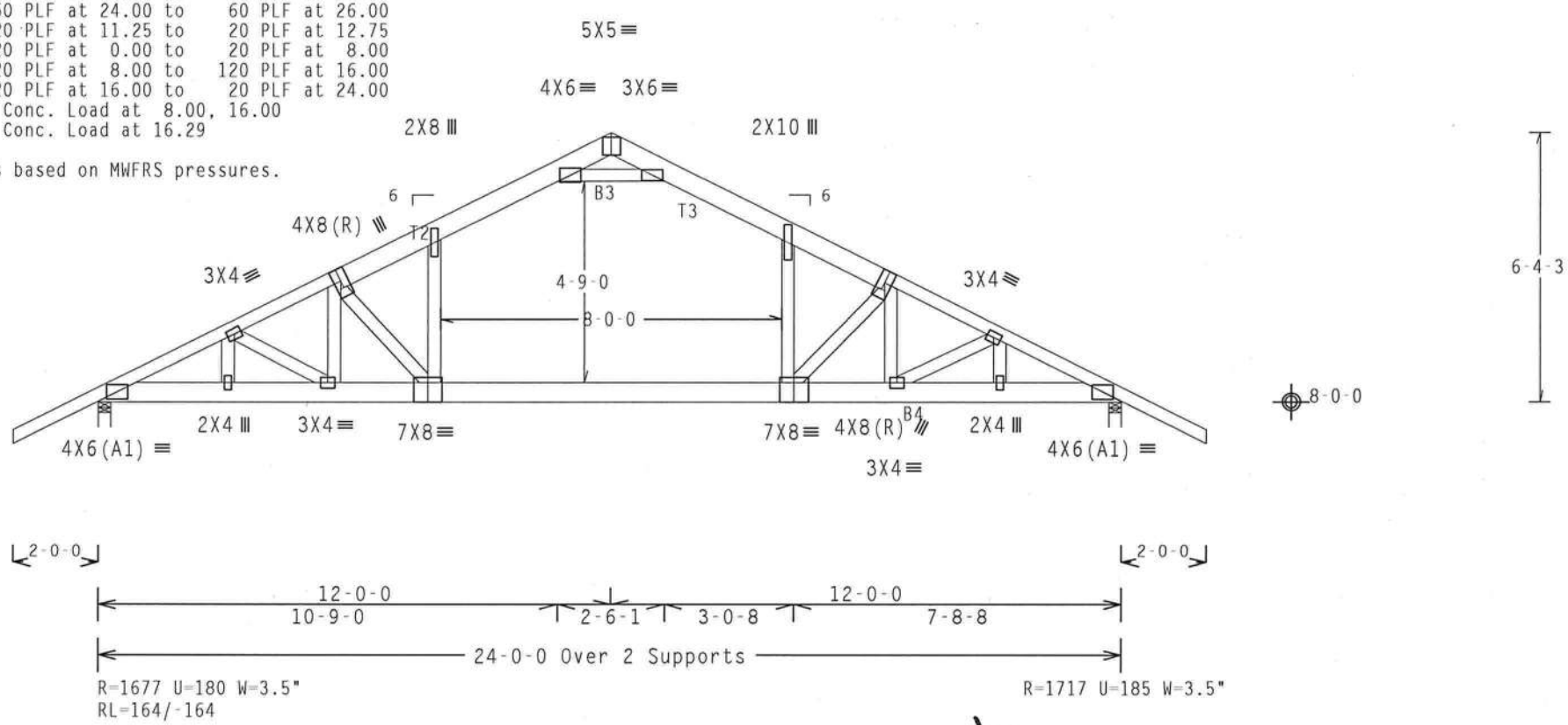

R=1677 U=180 W=3.5"
RL=164/-164

R=1717 U=185 W=3.5"

Design Crit: FBC2007Res/TPI-2002(STD)

PLT TYP. Wave — FT/RT=20%(0%)/0(0) — 9.01.00.121 — QTY:6 — FL/-/5/-/-/R/- — Scale =.25"/Ft.

ALPINE
ITW Building Components Group Inc.
Haines City, FL 33844
FL COA #0 278

WARNING TRUSSES REQUIRE EXTREME CARE IN FABRICATION, HANDLING, SHIPPING, INSTALLING AND BRACING. REFER TO BCSI (BUILDING COMPONENT SAFETY INFORMATION), PUBLISHED BY TPI (TRUSS PLATE INSTITUTE, 218 NORTH LEE STREET, SUITE 312, ALEXANDRIA, VA. 22314) AND WTCA (WOOD TRUSS COUNCIL OF AMERICA, 6300 ENTERPRISE LANE, MADISON, WI 53719) FOR SAFETY PRACTICES PRIOR TO PERFORMING THESE FUNCTIONS. UNLESS OTHERWISE INDICATED TOP CHORD SHALL HAVE PROPERLY ATTACHED STRUCTURAL PANELS AND BOTTOM CHORD SHALL HAVE A PROPERLY ATTACHED RIGID CEILING.

IMPORTANTFURNISH A COPY OF THIS DESIGN TO THE INSTALLATION CONTRACTOR. ITW BCG, INC. SHALL NOT BE RESPONSIBLE FOR ANY DEVIATION FROM THIS DESIGN; ANY FAILURE TO BUILD THE TRUSS IN CONFORMANCE WITH TPI; OR FABRICATING, HANDLING, SHIPPING, INSTALLING & BRACING OF TRUSSES.
DESIGN CONFORMS WITH APPLICABLE PROVISIONS OF NDS (NATIONAL DESIGN SPEC. BY AF&PA) AND TPI. ITW BCG CONNECTOR PLATES ARE MADE OF 20/18/16GA (W,H/SS/K) ASTM A653 GRADE 40/60 (W, K/H,SS) GALV. STEEL. APPLY PLATES TO EACH FACE OF TRUSS AND, UNLESS OTHERWISE LOCATED ON THIS DESIGN, POSITION PER DRAWINGS 160A-2. ANY INSPECTION OF PLATES FOLLOWED BY (1) SHALL BE PER ANNEX A3 OF TP11-2002 SEC.3. A SEAL ON THIS DRAWING INDICATES ACCEPTANCE OF PROFESSIONAL ENGINEERING RESPONSIBILITY SOLELY FOR THE TRUSS COMPONENT DESIGN SHOWN. THE SUITABILITY AND USE OF THIS COMPONENT FOR ANY BUILDING IS THE RESPONSIBILITY OF THE BUILDING DESIGNER PER ANSI/TPI 1 SEC. 2.

JAMES E. COLLINS, JR. LICENSE No. 52212 STATE OF FLORIDA PROFESSIONAL ENGINEER
Mar 31 09

TC LL	20.0 PSF	REF R215-- 55270
TC DL	10.0 PSF	DATE 03/31/09
BC DL	10.0 PSF	DRW HCUSR215 09090042
BC LL	0.0 PSF	HC-ENG WHK/WHK
TOT.LD.	40.0 PSF	SEQN- 185772
DUR.FAC.	1.25	FROM LRB
SPACING	SEE ABOVE	JREF- 1TQF215_Z02

(6011-/HAMMOCK RES. /G-N CONSTRUCTION -- , ** - G1)

Top chord 2x4 SP #2 N
Bot chord 2x4 SP #2 N
Webs 2x4 SP #2 N
:Stack Chord SC1 2x4 SP #2 N::Stack Chord SC2 2x4 SP #2 N:

Gable end supports 8" max rake overhang.

Stacked top chord must NOT be notched or cut in area (NNL). Dropped top chord braced at 24" o.c. intervals. Attach stacked top chord (SC) to dropped top chord in notchable area using 3x4 tie-plates 24" o.c. Center plate on stacked/dropped chord interface, plate length perpendicular to chord length. Splice top chord in notchable area using 3x6.

The overall height of this truss excluding overhang is 6-0-4.

110 mph wind, 15.00 ft mean hgt, ASCE 7-05, CLOSED bldg, Located anywhere in roof, CAT II, EXP B, wind TC DL=5.0 psf, wind BC DL=5.0 psf. Iw=1.00 GCpi(+/-)=0.18

Wind reactions based on MWFRS pressures.

See DWGS A11015050109 & GBLLETIN0109 for more requirements.

Truss passed check for 20 psf additional bottom chord live load in areas with 42"-high x 24"-wide clearance.

Bottom chord checked for 10.00 psf non-concurrent live load.

Deflection meets L/240 live and L/180 total load.

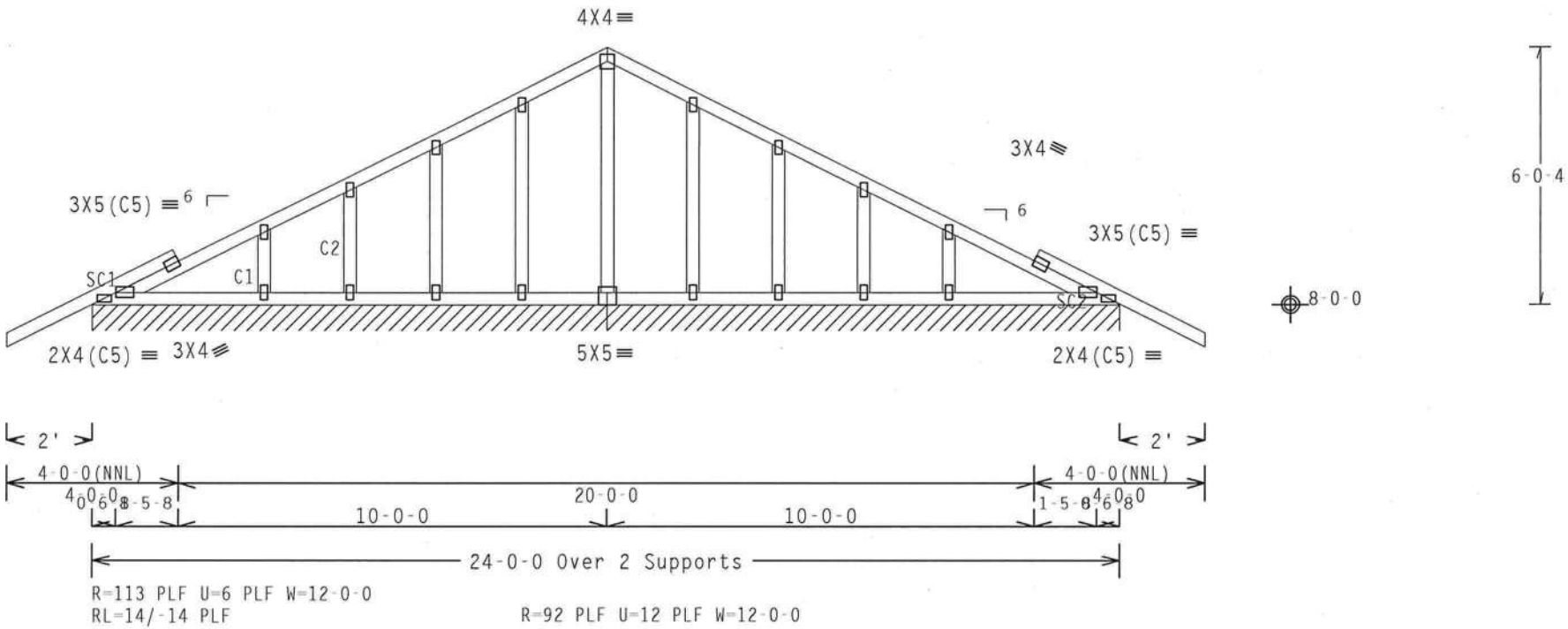

Note: All Plates Are 2X4 Except As Shown.

Design Crit: FBC2007Res/TPI-2002(STD)

PLT TYP. Wave FT/RT=20%(0%)/0(0) 9.01.00 QTY:2 FL/-/5/-/-/R/- Scale =.25"/Ft.

ALPINE
ITW Building Components Group Inc.
Haines City, FL 33844
FL COA #0 278

WARNING TRUSSES REQUIRE EXTREME CARE IN FABRICATION, HANDLING, SHIPPING, INSTALLING AND BRACING. REFER TO BCSI (BUILDING COMPONENT SAFETY INFORMATION), PUBLISHED BY TPI (TRUSS PLATE INSTITUTE, 218 NORTH LEE STREET, SUITE 312, ALEXANDRIA, VA. 22314) AND WTCA (WOOD TRUSS COUNCIL OF AMERICA, 6300 ENTERPRISE LANE, MADISON, WI 53719) FOR SAFETY PRACTICES PRIOR TO PERFORMING THESE FUNCTIONS. UNLESS OTHERWISE INDICATED TOP CHORD SHALL HAVE PROPERLY ATTACHED STRUCTURAL PANELS AND BOTTOM CHORD SHALL HAVE A PROPERLY ATTACHED RIGID CEILING.

IMPORTANTFURNISH A COPY OF THIS DESIGN TO THE INSTALLATION CONTRACTOR. ITW BCG, INC. SHALL NOT BE RESPONSIBLE FOR ANY DEVIATION FROM THIS DESIGN; ANY FAILURE TO BUILD THE TRUSS IN COMFORMANCE WITH TPI; OR FABRICATING, HANDLING, SHIPPING, INSTALLING & BRACING OF TRUSSES.
DESIGN CONFORMS WITH APPLICABLE PROVISIONS OF NDS (NATIONAL DESIGN SPEC, BY AF&PA) AND TPI. ITW BCG CONNECTOR PLATES ARE MADE OF 20/18/16GA (W,H/SS/K) ASTM A653 GRADE 40/60 (W, K/H,SS) GALV. STEEL. APPLY PLATES TO EACH FACE OF TRUSS AND, UNLESS OTHERWISE LOCATED ON THIS DESIGN, POSITION PER DRAWINGS 160A-Z. ANY INSPECTION OF PLATES FOLLOWED BY (I) SHALL BE PER ANNEX A3 OF TPI1-2002 SEC.3. A SEAL ON THIS DRAWING INDICATES ACCEPTANCE OF PROFESSIONAL ENGINEERING RESPONSIBILITY SOLELY FOR THE TRUSS COMPONENT DESIGN SHOWN. THE SUITABILITY AND USE OF THIS COMPONENT FOR ANY BUILDING IS THE RESPONSIBILITY OF THE BUILDING DESIGNER PER ANSI/TPI 1 SEC. 2.

JAMES F. COLLINS, JR. LICENSE No. 52212 STATE OF FLORIDA PROFESSIONAL ENGINEER
Mar 31 '09

TC LL	20.0 PSF	REF	R215-- 55271
TC DL	10.0 PSF	DATE	03/31/09
BC DL	10.0 PSF	DRW	HCUSR215 09090043
BC LL	0.0 PSF	HC-ENG	WHK/WHK
TOT.LD.	40.0 PSF	SEQN-	185775
DUR.FAC.	1.25	FROM	LRB
SPACING	24.0"	JREF-	1TQF215_Z02

(6011-/HAMMOCK RES. /G-N CONSTRUCTION -- , ** - G2)

Top chord 2x4 SP #2 N
Bot chord 2x4 SP #2 N
Webs 2x4 SP #2 N
:Stack Chord SC1 2x4 SP #2 N::Stack Chord SC2 2x4 SP #2 N:

See DWGS A11015050109 & GBLLETIN0109 for more requirements.

(A) Continuous lateral bracing equally spaced on member. Or 1x4 "T" brace. 80% length of web member. Same species & SRB grade or better, attached with 8d Box or Gun (0.113"x2.5",min.)nails @ 6" OC.

Truss passed check for 20 psf additional bottom chord live load in areas with 42"-high x 24"-wide clearance.

Deflection meets L/240 live and L/180 total load.

110 mph wind, 15.00 ft mean hgt, ASCE 7-05, CLOSED bldg, Located anywhere in roof, CAT II, EXP B, wind TC DL=5.0 psf, wind BC DL=5.0 psf. Iw=1.00 GCpi(+/-)=0.18

Wind reactions based on MWFRS pressures.

Stacked top chord must NOT be notched or cut in area (NNL). Dropped top chord braced at 24" o.c. intervals. Attach stacked top chord (SC) to dropped top chord in notchable area using 3x4 tie-plates 24" o.c. Center plate on stacked/dropped chord interface, plate length perpendicular to chord length. Splice top chord in notchable area using 3x6.

Bottom chord checked for 10.00 psf non-concurrent live load.

The overall height of this truss excluding overhang is 9-1-4.

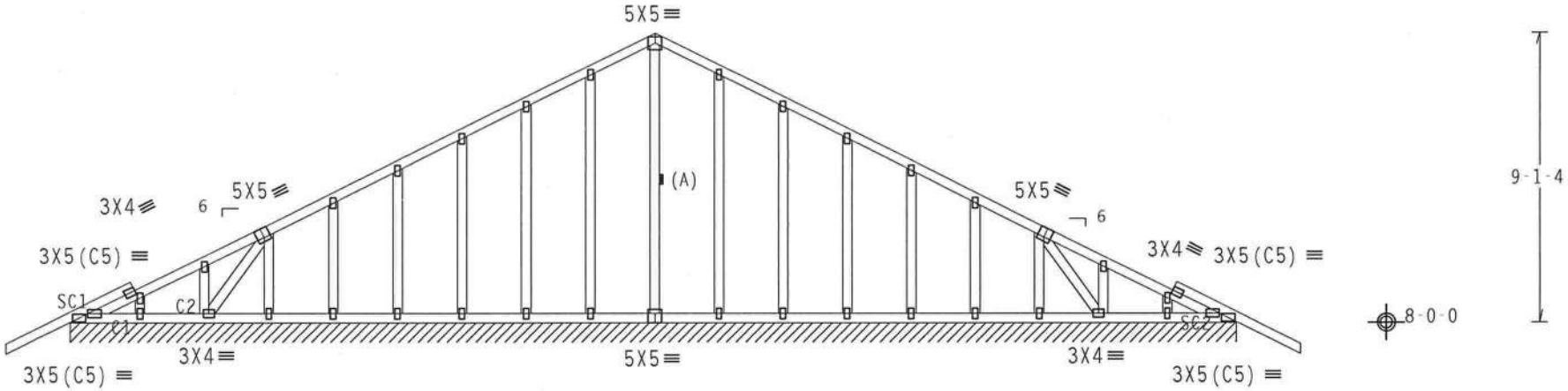

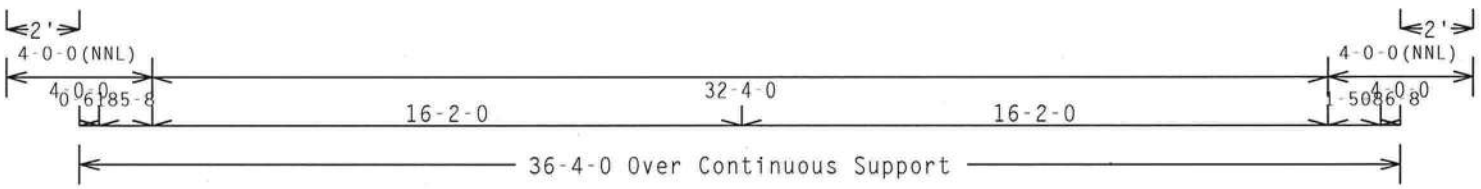

R=109 PLF U=8 PLF W=36-4-0
RL=6/-6 PLF

Note: All Plates Are 2X4 Except As Shown.

Design Crit: FBC2007Res/TPI-2002(STD)

PLT TYP. Wave FT/RT=20%(0%)/0(0) 9.01.00 [illegible] QTY:2 FL/-/5/-/-/R/- Scale =.1875"/Ft.

ALPINE
ITW Building Components Group Inc.
Haines City, FL 33844
FL COA #0 278

WARNING TRUSSES REQUIRE EXTREME CARE IN FABRICATION, HANDLING, SHIPPING, INSTALLING AND BRACING. REFER TO BCSI (BUILDING COMPONENT SAFETY INFORMATION), PUBLISHED BY TPI (TRUSS PLATE INSTITUTE, 218 NORTH LEE STREET, SUITE 312, ALEXANDRIA, VA. 22314) AND WTCA (WOOD TRUSS COUNCIL OF AMERICA, 6300 ENTERPRISE LANE, MADISON, WI 53719) FOR SAFETY PRACTICES PRIOR TO PERFORMING THESE FUNCTIONS. UNLESS OTHERWISE INDICATED TOP CHORD SHALL HAVE PROPERLY ATTACHED STRUCTURAL PANELS AND BOTTOM CHORD SHALL HAVE A PROPERLY ATTACHED RIGID CEILING.

IMPORTANTFURNISH A COPY OF THIS DESIGN TO THE INSTALLATION CONTRACTOR. ITW BCG, INC. SHALL NOT BE RESPONSIBLE FOR ANY DEVIATION FROM THIS DESIGN; ANY FAILURE TO BUILD THE TRUSS IN CONFORMANCE WITH TPI; OR FABRICATING, HANDLING, SHIPPING, INSTALLING & BRACING OF TRUSSES. DESIGN CONFORMS WITH APPLICABLE PROVISIONS OF NDS (NATIONAL DESIGN SPEC, BY AF&PA) AND TPI. ITW BCG CONNECTOR PLATES ARE MADE OF 20/18/16GA (W,H/SS/K) ASTM A653 GRADE 40/60 (W, K/H,SS) GALV. STEEL. APPLY PLATES TO EACH FACE OF TRUSS AND, UNLESS OTHERWISE LOCATED ON THIS DESIGN, POSITION PER DRAWINGS 160A-Z. ANY INSPECTION OF PLATES FOLLOWED BY (1) SHALL BE PER ANNEX A3 OF TPI1-2002 SEC.3. A SEAL ON THIS DRAWING INDICATES ACCEPTANCE OF PROFESSIONAL ENGINEERING RESPONSIBILITY SOLELY FOR THE TRUSS COMPONENT DESIGN SHOWN. THE SUITABILITY AND USE OF THIS COMPONENT FOR ANY BUILDING IS THE RESPONSIBILITY OF THE BUILDING DESIGNER PER ANSI/TPI 1 SEC. 2.

JAMES H. COLLINS, JR. LICENSE No. 52212 STATE OF FLORIDA PROFESSIONAL ENGINEER
Mar 31 [illegible]

TC LL	20.0 PSF	REF R215-- 55272
TC DL	10.0 PSF	DATE 03/31/09
BC DL	10.0 PSF	DRW HCUSR215 09090044
BC LL	0.0 PSF	HC-ENG WHK/WHK
TOT.LD.	40.0 PSF	SEQN- 185783
DUR.FAC.	1.25	FROM LRB
SPACING	24.0"	JREF- 1TQF215_Z02

CLB WEB BRACE SUBSTITUTION

THIS DETAIL IS TO BE USED WHEN CONTINUOUS LATERAL BRACING (CLB) IS SPECIFIED ON A TRUSS DESIGN BUT AN ALTERNATIVE WEB BRACING METHOD IS DESIRED.

NOTES:

THIS DETAIL IS ONLY APPLICABLE FOR CHANGING THE SPECIFIED CLB SHOWN ON SINGLE PLY SEALED DESIGNS TO T-BRACING OR SCAB BRACING.

ALTERNATIVE BRACING SPECIFIED IN CHART BELOW MAY BE CONSERVATIVE. FOR MINIMUM ALTERNATIVE BRACING, RE-RUN DESIGN WITH APPROPRIATE BRACING.

WEB MEMBER SIZE	SPECIFIED CLB BRACING	ALTERNATIVE BRACING T OR L-BRACE	ALTERNATIVE BRACING SCAB BRACE
2X3 OR 2X4	1 ROW	2X4	1-2X4
2X3 OR 2X4	2 ROWS	2X6	2-2X4
2X6	1 ROW	2X4	1-2X6
2X6	2 ROWS	2X6	2-2X4(*)
2X8	1 ROW	2X6	1-2X8
2X8	2 ROWS	2X6	2-2X6(*)

T-BRACE, L-BRACE AND SCAB BRACE TO BE SAME SPECIES AND GRADE OR BETTER THAN WEB MEMBER UNLESS SPECIFIED OTHERWISE ON ENGINEER'S SEALED DESIGN.

(*) CENTER SCAB ON WIDE FACE OF WEB. APPLY (1) SCAB TO EACH FACE OF WEB.

T-BRACING OR L-BRACING:

APPLY TO EITHER SIDE OF WEB NARROW FACE.
ATTACH WITH 10d BOX OR GUN
(0.128"x 3.",MIN) NAILS.
AT 6" O.C.
BRACE IS A
MINIMUM 80% OF WEB
MEMBER LENGTH

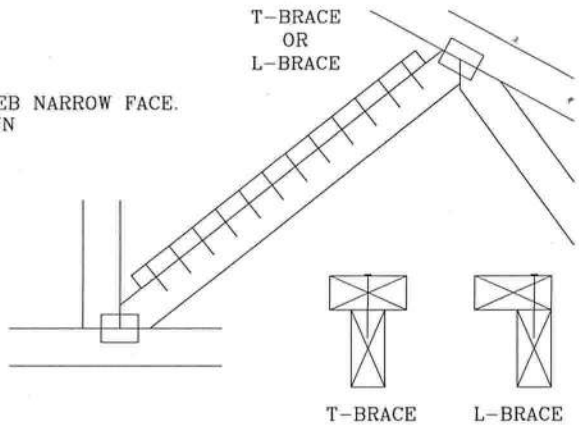

SCAB BRACING:

APPLY SCAB(S) TO WIDE FACE OF WEB.
NO MORE THAN (1) SCAB PER FACE.
ATTACH WITH 10d BOX OR GUN
(0.128"x 3.",MIN) NAILS.
AT 6" O.C.
BRACE IS A MINIMUM
80% OF WEB MEMBER LENGTH

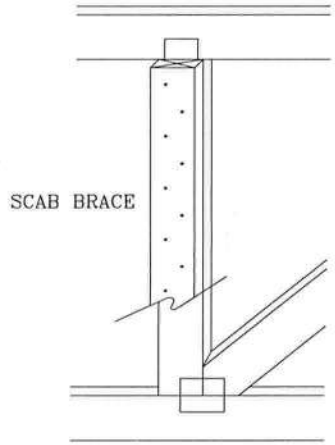

TW Building Components Group Inc.
Earth City, MO 63045

Mar 31 '09

JAMES E. COLLINS, JR. LICENSE No. 52212 STATE OF FLORIDA PROFESSIONAL ENGINEER

TC LL	PSF	REF CLB SUBST.
TC DL	PSF	DATE 1/1/09
BC DL	PSF	DRWG BRCLBSUB0109
BC LL	PSF	
TOT. LD.	PSF	
DUR. FAC.		
SPACING		

GABLE STUD REINFORCEMENT DETAIL

ASCE 7-05: 110 MPH WIND SPEED, 15' MEAN HEIGHT, ENCLOSED, I = 1.00, EXPOSURE C, Kzt = 1.00

MAX GABLE VERTICAL LENGTH

2X4 GABLE VERTICAL SPACING	SPECIES	BRACE GRADE	NO BRACES	(1) 1X4 "L" BRACE * GROUP A	(1) 1X4 "L" BRACE * GROUP B	(1) 2X4 "L" BRACE * GROUP A	(1) 2X4 "L" BRACE * GROUP B	(2) 2X4 "L" BRACE ** GROUP A	(2) 2X4 "L" BRACE ** GROUP B	(1) 2X6 "L" BRACE * GROUP A	(1) 2X6 "L" BRACE * GROUP B	(2) 2X6 "L" BRACE ** GROUP A	(2) 2X6 "L" BRACE ** GROUP B
24" O.C.	SPF HF	#1 / #2	3' 10"	6' 8"	6' 10"	7' 11"	8' 1"	9' 5"	9' 8"	12' 5"	12' 9"	14' 0"	14' 0"
		#3	3' 9"	6' 0"	6' 0"	7' 11"	7' 11"	9' 5"	9' 5"	12' 4"	12' 4"	14' 0"	14' 0"
		STUD	3' 9"	6' 0"	6' 0"	7' 11"	7' 11"	9' 5"	9' 5"	12' 3"	12' 3"	14' 0"	14' 0"
		STANDARD	3' 9"	5' 2"	5' 2"	6' 9"	6' 9"	9' 1"	9' 1"	10' 7"	10' 7"	14' 0"	14' 0"
	SP DFL	#1	4' 3"	6' 8"	7' 2"	7' 11"	8' 6"	9' 5"	10' 2"	12' 5"	13' 5"	14' 0"	14' 0"
		#2	4' 2"	6' 8"	7' 2"	7' 11"	8' 6"	9' 5"	10' 2"	12' 5"	13' 5"	14' 0"	14' 0"
		#3	4' 0"	6' 2"	6' 2"	7' 11"	8' 1"	9' 5"	9' 11"	12' 5"	12' 8"	14' 0"	14' 0"
		STUD	4' 0"	6' 1"	6' 1"	7' 11"	8' 0"	9' 5"	9' 11"	12' 5"	12' 6"	14' 0"	14' 0"
		STANDARD	3' 10"	5' 3"	5' 3"	6' 11"	6' 11"	9' 4"	9' 4"	10' 10"	10' 10"	14' 0"	14' 0"
16" O.C.	SPF HF	#1 / #2	4' 5"	7' 8"	7' 10"	9' 1"	9' 4"	10' 10"	11' 1"	14' 0"	14' 0"	14' 0"	14' 0"
		#3	4' 4"	7' 4"	7' 4"	9' 1"	9' 1"	10' 10"	10' 10"	14' 0"	14' 0"	14' 0"	14' 0"
		STUD	4' 4"	7' 4"	7' 4"	9' 1"	9' 1"	10' 10"	10' 10"	14' 0"	14' 0"	14' 0"	14' 0"
		STANDARD	4' 4"	6' 4"	6' 4"	8' 4"	8' 4"	10' 10"	10' 10"	12' 11"	12' 11"	14' 0"	14' 0"
	SP DFL	#1	4' 10"	7' 8"	8' 3"	9' 1"	9' 9"	10' 10"	11' 8"	14' 0"	14' 0"	14' 0"	14' 0"
		#2	4' 9"	7' 8"	8' 3"	9' 1"	9' 9"	10' 10"	11' 8"	14' 0"	14' 0"	14' 0"	14' 0"
		#3	4' 6"	7' 7"	7' 7"	9' 1"	9' 6"	10' 10"	11' 4"	14' 0"	14' 0"	14' 0"	14' 0"
		STUD	4' 6"	7' 6"	7' 6"	9' 1"	9' 6"	10' 10"	11' 4"	14' 0"	14' 0"	14' 0"	14' 0"
		STANDARD	4' 5"	6' 5"	6' 5"	8' 6"	8' 6"	10' 10"	11' 1"	13' 3"	13' 3"	14' 0"	14' 0"
12" O.C.	SPF HF	#1 / #2	4' 11"	8' 5"	8' 8"	10' 0"	10' 3"	11' 11"	12' 3"	14' 0"	14' 0"	14' 0"	14' 0"
		#3	4' 9"	8' 5"	8' 5"	10' 0"	10' 0"	11' 11"	11' 11"	14' 0"	14' 0"	14' 0"	14' 0"
		STUD	4' 9"	8' 5"	8' 5"	10' 0"	10' 0"	11' 11"	11' 11"	14' 0"	14' 0"	14' 0"	14' 0"
		STANDARD	4' 9"	7' 3"	7' 3"	9' 7"	9' 7"	11' 11"	11' 11"	14' 0"	14' 0"	14' 0"	14' 0"
	SP DFL	#1	5' 4"	8' 5"	9' 1"	10' 0"	10' 9"	11' 11"	12' 10"	14' 0"	14' 0"	14' 0"	14' 0"
		#2	5' 3"	8' 5"	9' 1"	10' 0"	10' 9"	11' 11"	12' 10"	14' 0"	14' 0"	14' 0"	14' 0"
		#3	5' 0"	8' 5"	8' 5"	10' 0"	10' 6"	11' 11"	12' 6"	14' 0"	14' 0"	14' 0"	14' 0"
		STUD	5' 0"	8' 5"	8' 7"	10' 0"	10' 6"	11' 11"	12' 6"	14' 0"	14' 0"	14' 0"	14' 0"
		STANDARD	4' 11"	7' 5"	7' 5"	9' 10"	9' 10"	11' 11"	12' 3"	14' 0"	14' 0"	14' 0"	14' 0"

BRACING GROUP SPECIES AND GRADES:

GROUP A:

SPRUCE-PINE-FIR

#1 / #2	STANDARD
#3	STUD

HEM-FIR

#2	STUD
#3	STANDARD

DOUGLAS FIR-LARCH

#3
STUD
STANDARD

SOUTHERN PINE

#3
STUD
STANDARD

GROUP B:

HEM-FIR

#1 & BTR
#1

SOUTHERN PINE

#1
#2

DOUGLAS FIR-LARCH

#1
#2

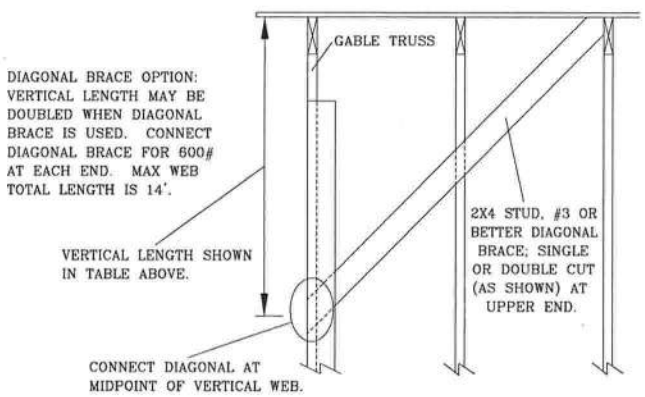

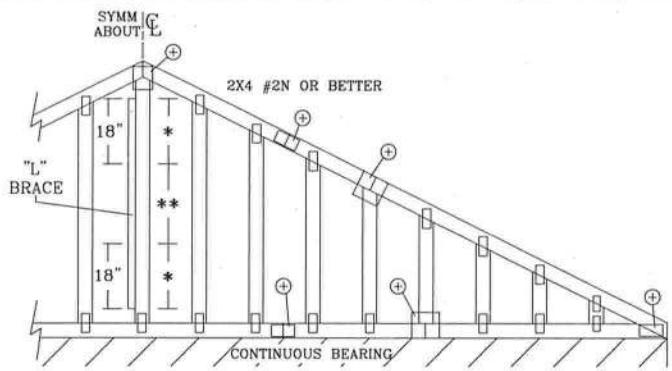

REFER TO CHART ABOVE FOR MAX GABLE VERTICAL LENGTH.

GABLE TRUSS DETAIL NOTES:

LIVE LOAD DEFLECTION CRITERIA IS L/240.

PROVIDE UPLIFT CONNECTIONS FOR 80 PLF OVER CONTINUOUS BEARING (5 PSF TC DEAD LOAD).

GABLE END SUPPORTS LOAD FROM 4' 0" OUTLOOKERS WITH 2' 0" OVERHANG, OR 12" PLYWOOD OVERHANG.

ATTACH EACH "L" BRACE WITH 10d NAILS. (0.128"x3" min)

* FOR (1) "L" BRACE: SPACE NAILS AT 2" O.C. IN 18" END ZONES AND 4" O.C. BETWEEN ZONES.

** FOR (2) "L" BRACES: SPACE NAILS AT 3" O.C. IN 18" END ZONES AND 6" O.C. BETWEEN ZONES.

"L" BRACING MUST BE A MINIMUM OF 80% OF WEB MEMBER LENGTH.

GABLE VERTICAL PLATE SIZES

VERTICAL LENGTH	NO SPLICE
LESS THAN 4' 0"	1X4 OR 2X3
GREATER THAN 4' 0", BUT LESS THAN 11' 6"	2.5X4
GREATER THAN 11' 6"	3X4

+ REFER TO COMMON TRUSS DESIGN FOR PEAK, SPLICE, AND HEEL PLATES.

TW Building Components Group Inc.

Earth City, MO 63045

WARNING READ AND FOLLOW ALL NOTES ON THIS SHEET!
Trusses require extreme care in fabricating, handling, shipping, installing and bracing. Refer to and follow BCSI (Building Component Safety Information, by TPI and WTCA) for safety practices prior to performing these functions. Installers shall provide temporary bracing per BCSI. Unless noted otherwise, top chord shall have properly attached structural panels and bottom chord shall have a properly attached rigid ceiling. Locations shown for permanent lateral restraint of webs shall have bracing installed per BCSI sections B3 & B7. See this job's general notes page for more information.

IMPORTANT FURNISH COPY OF THIS DESIGN TO INSTALLATION CONTRACTOR.
ITW Building Components Group Inc. (ITWBCG) shall not be responsible for any deviation from this design, any failure to build the truss in conformance with TPI, or fabricating, handling, shipping, installing & bracing of trusses. ITWBCG connector plates are made of 20/18/16GA (W,H/S/K) ASTM A653 grade 37/40/60 (K/W/H,S) galv. steel. Apply plates to each face of truss, positioned as shown above and on Joint Details. A seal on this drawing or cover page indicates acceptance and professional engineering responsibility solely for the truss component design shown. The suitability and use of this component for any building is the responsibility of the Building Designer per ANST/TPI 1 Sec. 2.
ITW-BCG: www.itwbcg.com; TPI: www.tpinst.com; WTCA: www.sbcindustry.com; ICC: www.iccsafe.org

JAMES F. COLLINS, JR. LICENSE No. 52212 STATE OF FLORIDA PROFESSIONAL ENGINEER

Mar 3 '09

MAX. TOT. LD. 60 PSF

MAX. SPACING 24.0"

REF	ASCE7-05-GAB11015
DATE	1/1/09
DRWG	A11015050109

GABLE DETAIL
FOR LET-IN VERTICALS

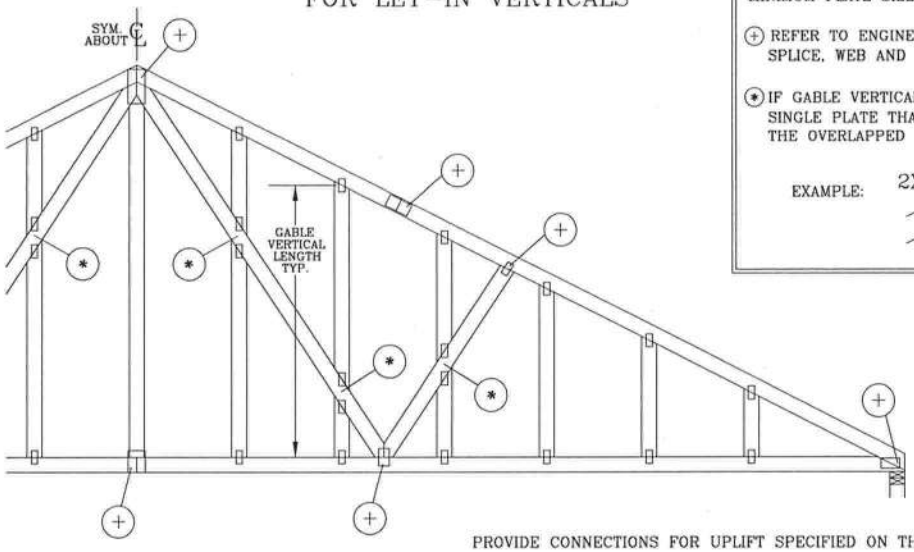

GABLE TRUSS PLATE SIZES

REFER TO APPROPRIATE ITW GABLE DETAIL FOR MINIMUM PLATE SIZES FOR VERTICAL STUDS.

(+) REFER TO ENGINEERED TRUSS DESIGN FOR PEAK, SPLICE, WEB AND HEEL PLATES.

(*) IF GABLE VERTICAL PLATES OVERLAP, USE A SINGLE PLATE THAT COVERS THE TOTAL AREA OF THE OVERLAPPED PLATES TO SPAN THE WEB.

EXAMPLE:

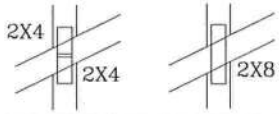

"T" REINFORCEMENT ATTACHMENT DETAIL

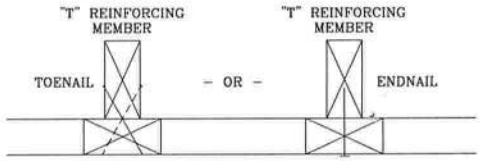

TO CONVERT FROM "L" TO "T" REINFORCING MEMBERS, MULTIPLY "T" INCREASE BY LENGTH (BASED ON APPROPRIATE ITW GABLE DETAIL).

MAXIMUM ALLOWABLE "T" REINFORCED GABLE VERTICAL LENGTH IS 14' FROM TOP TO BOTTOM CHORD.

WEB LENGTH INCREASE W/ "T" BRACE

WIND SPEED AND MRH	"T" REINF. MBR. SIZE	"T" INCREASE
140 MPH	2x4	10 %
15 FT	2x6	50 %
140 MPH	2x4	10 %
30 FT	2x6	50 %
130 MPH	2x4	10 %
15 FT	2x6	50 %
130 MPH	2x4	10 %
30 FT	2x6	50 %
120 MPH	2x4	10 %
15 FT	2x6	50 %
120 MPH	2x4	10 %
30 FT	2x6	40 %
110 MPH	2x4	10 %
15 FT	2x6	40 %
110 MPH	2x4	10 %
30 FT	2x6	50 %
100 MPH	2x4	20 %
15 FT	2x6	30 %
100 MPH	2x4	10 %
30 FT	2x6	40 %
90 MPH	2x4	20 %
15 FT	2x6	20 %
90 MPH	2x4	20 %
30 FT	2x6	30 %

EXAMPLE:
ASCE WIND SPEED = 100 MPH
MEAN ROOF HEIGHT = 30 FT, Kzt = 1.00
GABLE VERTICAL = 24" O.C. SP #3
"T" REINFORCING MEMBER SIZE = 2X4
"T" BRACE INCREASE (FROM ABOVE) = 10% = 1.10
(1) 2X4 "L" BRACE LENGTH = 6' 7"
MAXIMUM "T" REINFORCED GABLE VERTICAL LENGTH
1.10 x 6' 7" = 7' 3"

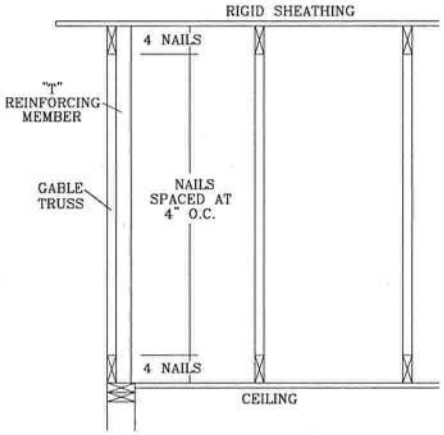

PROVIDE CONNECTIONS FOR UPLIFT SPECIFIED ON THE ENGINEERED TRUSS DESIGN.

ATTACH EACH "T" REINFORCING MEMBER WITH
END DRIVEN NAILS:
10d COMMON (0.148"X 3.",MIN) NAILS AT 4" O.C. PLUS
(4) NAILS IN TOP AND BOTTOM CHORD.

TOENAILED NAILS:
10d COMMON (0.148"x3",MIN) TOENAILS AT 4" O.C. PLUS
(4) TOENAILS IN TOP AND BOTTOM CHORD.

THIS DETAIL TO BE USED WITH THE APPROPRIATE ITW GABLE DETAIL FOR ASCE WIND LOAD.
ASCE 7-98 GABLE DETAIL DRAWINGS
A13015980109, A12015980109, A11015980109, A10015980109,
A13030980109, A12030980109, A11030980109, A10030980109
ASCE 7-02 GABLE DETAIL DRAWINGS
A13015020109, A12015020109, A11015020109, A10015020109, A14015020109,
A13030020109, A12030020109, A11030020109, A10030020109, A14030020109
ASCE 7-05 GABLE DETAIL DRAWINGS
A13015050109, A12015050109, A11015050109, A10015050109, A14015050109,
A13030050109, A12030050109, A11030050109, A10030050109, A14030050109

SEE APPROPRIATE ITW GABLE DETAIL FOR MAXIMUM UNREINFORCED GABLE VERTICAL LENGTH.

ITW
Building Components Group Inc.
Earth City, MO 63045

WARNING READ AND FOLLOW ALL NOTES ON THIS SHEET!
Trusses require extreme care in fabricating, handling, shipping, installing and bracing. Refer to and follow BCSI (Building Component Safety Information, by TPI and WTCA) for safety practices prior to performing these functions. Installers shall provide temporary bracing per BCSI. Unless noted otherwise, top chord shall have properly attached structural panels and bottom chord shall have a properly attached rigid ceiling. Locations shown for permanent lateral restraint of webs shall have bracing installed per BCSI sections B3 & B7. See this job's general notes page for more information.

IMPORTANT FURNISH COPY OF THIS DESIGN TO INSTALLATION CONTRACTOR.
ITW Building Components Group Inc. (ITWBCG) shall not be responsible for any deviation from this design, any failure to build the truss in conformance with TPI, or fabricating, handling, shipping, installing & bracing of trusses. ITWBCG connector plates are made of 20/18/16GA (W,H/S/K) ASTM A653 grade 37/40/60 (K/W/H,S) galv. steel. Apply plates to each face of truss, positioned as shown above and on Joint Details. A seal on this drawing or cover page indicates acceptance and professional engineering responsibility solely for the truss component design shown. The suitability and use of this component for any building is the responsibility of the Building Designer per ANST/TPI 1 Sec. 2.
ITW-BCG: www.itwbcg.com; TPI: www.tpinst.com; WTCA: www.sbcindustry.com; ICC: www.iccsafe.org

JAMES F. COLLINS JR. LICENSE No. 52212 STATE OF FLORIDA PROFESSIONAL ENGINEER

MAX TOT. LD. 60 PSF
DUR. FAC. ANY
MAX SPACING 24.0"

REF LET-IN VERT
DATE 1/1/09
DRWG GBLLETIN0109

paul's heating & air
158 paden place statenville, ga 31648
Phone: 559-8232 Fax: 5597533 E-mail: paden@surfsouth.com

PROPOSAL FOR:

g-n hammock
2108 sqft
,

3/19/2009

paul's heating & air

158 paden place statenville, ga 31648
Phone: 559-8232 Fax: 5597533 E-mail: paden@surfsouth.com

Heat Load Summary Report for g-n hammock

Room Name	Square Ft.	Heating Loss BTUH	Hydronic Heat Linear Ft.	Latent / Sensible Gain BTUH		Cooling Gain BTUH	Cooling Tons	Cooling CFM
utility	70	1513	2.52	63	/ 1742	1805	0.15	60
mbath	98	1347	2.24	88	/ 1298	1386	0.12	46
wic	88	611	1.02	79	/ 608	686	0.06	23
pwdr	24	201	0.34	21	/ 290	312	0.03	10
mbed	240	4224	7.04	242	/ 4412	4653	0.39	155
nook	100	2954	4.92	90	/ 5110	5199	0.43	173
kit	182	1407	2.35	204	/ 1146	1350	0.11	45
dining	144	2756	4.59	161	/ 3729	3890	0.32	130
foyer	60	4741	7.9	737	/ 2148	2886	0.24	96
great	374	8595	14.33	1088	/ 6561	7650	0.64	255
office	120	2499	4.16	134	/ 3566	3700	0.31	123
bed3	156	2813	4.69	140	/ 3016	3156	0.26	105
bath	72	1015	1.69	64	/ 1096	1161	0.1	39
bed2	144	2706	4.51	129	/ 2943	3072	0.26	102
hall	32	4561	7.6	699	/ 2014	2712	0.23	90
hall2	48	337	0.56	54	/ 538	592	0.05	20
TOTALS	**1952**	**42281**	**70.47**	**3993**	**/ 40217**	**44208**	**3.68**	**1472**

Disclaimer

These computed results should be treated as estimates only and should be viewed as only one of the many tools required for a professional installation. The installing contractor's experience and expert judgement are also major factors in sizing and installing a complete system. The weather, customer usage, duct installation, and structure design may vary on each estimate and should be taken into account. Correct system sizing is based on the systems ability to meet both latent and sensible heat requirements, not just total BTUs.

Prepared 3/19/2009 using O'Brien Quick Loads Pro - Version 1.01 - SN: QP-070101-42778

FAXED
3-31-09
10:00
386-792-2315

From: The Columbia County Building & Zoning Department
135 NE Hernando Av.
P.O. Box 1529
Lake City Florida 32056-1529

Reference to a building permit application Number: 0903-48

Applicant: GN Construction Gary Newsome/contractor/owners Ross Hammock:
Property Identification number: 15-2s-16-01612-003

On the date of March 30, 2009 application 0903-48 and plans were reviewed for compliance of the 2007 Florida building code residential. The documents and plans submitted are for construction of a Group R-3 (single family dwelling) structure.

Please review the following information so this building permit application may proceed toward issuance.

Please have the engineer of record Mr. Marty Humphries submit plans showing all the required jack and kings stud with header type and sizes for all opening in the shear walls.

Please have the engineer of record Mr. Marty Humphries submit plans showing all the required supporting headers/beams, type and sizes for the porches and the carport.

The submitted Florida Energy Efficiency Code for Building Construction (form 600B-93) is no longer an acceptable evaluation method, due to the adoption of the Florida Building Code Residential 2007 which became effective March 1, 2009. Please consult with EnergyGauge® to obtain the correct form to be utilized with the Florida Energy Efficiency Code for Building Construction.

The pre-engineered truss fabricator W. B. Howland needs to have ITW Building Components Group Inc. to declare that the submitted truss plans comply with the Florida Building Code Residential 2007 which became effective March 1, 2009.

If you should have any question please contact the above address, or call phone number (386) 758-1163.

Please include application number 0903-48 when making reference to this application.

This is a plan review for compliance with the Florida Building Code 2007only and doesn't make any consideration toward the land use and zoning requirements.

Thank You:

Joe Haltiwanger
Columbia County Building
Department

COLUMBIA COUNTY BUILDING DEPARTMENT
RESIDENTIAL CHECK LIST REQUIRMENTS

MINIMUM PLAN REQUIREMENTS FOR THE FLORIDA BUILDING CODE RESIDENTIAL 2007 ONE (1) AND TWO (2) FAMILY DWELLINGS

ALL REQUIREMENTS ARE SUBJECT TO CHANGE

ALL BUILDING PLANS MUST INDICATE COMPLIANCE with the Current 2007 FLORIDA BUILDING CODES RESIDENTIAL. ALL PLANS OR DRAWINGS SHALL PROVIDE CALCULATIONS AND DETAILS THAT HAVE THE SEAL AND SIGNATURE OF A CERTIFIED ARCHITECT OR ENGINEER REGISTERED IN THE STATE OF FLORIDA, OR ALTERNATE METHODOLOGIES, APPROVED BY THE STATE OF FLORIDA BUILDING COMMISSION FOR ONE-AND-TWO FAMILY DWELLINGS.

FOR DESIGN PURPOSES THE FOLLOWING BASIC WIND SPEEDS ARE PER FIGURE R301.2(4) of the FLORIDA BUILDING CODES RESIDENTIAL (Florida Wind speed map) **SHALL BE USED.**

WIND SPEED LINE SHALL BE DEFINED AS FOLLOWS: THE CENTERLINE OF INTERSTATE 75.

ALL BUILDINGS CONSTRUCTED EAST OF SAID LINE SHALL BE -------- 100 MPH
ALL BUILDINGS CONSTRUCTED WEST OF SAID LINE SHALL BE --------110 MPH
NO AREA IN COLUMBIA COUNTY IS IN A WIND BORNE DEBRIS REGION

	GENERAL REQUIREMENTS: APPLICANT – PLEASE CHECK ALL APPLICABLE BOXES BEFORE SUBMITTAL			Items to Include- Each Box shall be Circled as Applicable		
				Yes	No	N/A
1	Two (2) complete sets of plans containing the following:			✓		
2	All drawings must be clear, concise, drawn to scale, details that are not used shall be marked void			✓		
3	Condition space (Sq. Ft.)	2108	Total (Sq. Ft.) under roof 2887	IIIIIIII	IIIIIIII	IIIII

Designers name and signature shall be on all documents and a licensed architect or engineer, signature and official embossed seal shall be affixed to the plans and documents as per the FLORIDA BUILDING CODES RESIDENTIAL R101.2.1

Site Plan information including:

4	Dimensions of lot or parcel of land	✓		
5	Dimensions of all building set backs	✓		
6	Location of all other structures (include square footage of structures) on parcel, existing or proposed well and septic tank and all utility easements.	✓		
7	Provide a full legal description of property.	✓		

Wind-load Engineering Summary, calculations and any details required

	GENERAL REQUIREMENTS: APPLICANT – PLEASE CHECK ALL APPLICABLE BOXES BEFORE SUBMITTAL	Items to Include- Each Box shall be Circled as Applicable		
8	Plans or specifications must show compliance with FBCR Chapter 3	IIIIII	IIIII	IIIIII
		YES	NO	N/A
9	Basic wind speed (3-second gust), miles per hour	✓		
10	(Wind exposure – if more than one wind exposure is used, the wind exposure and applicable wind direction shall be indicated)	✓		
11	Wind importance factor and nature of occupancy	✓		
12	The applicable internal pressure coefficient, Components and Cladding	✓		
13	The design wind pressure in terms of psf (kN/m²), to be used for the design of exterior component, cladding materials not specifally designed by the registered design professional.	✓		

Elevations Drawing including:

14	All side views of the structure	✓		
15	Roof pitch	✓		
16	Overhang dimensions and detail with attic ventilation	✓		
17	Location, size and height above roof of chimneys	✓		
18	Location and size of skylights with Florida Product Approval	✓		
18	Number of stories	✓		
20A	Building height from the established grade to the roofs highest peak	✓		

Floor Plan including:

20	Dimensioned area plan showing rooms, attached garage, breeze ways, covered porches, deck, balconies	✓		
21	Raised floor surfaces located more than 30 inches above the floor or grade	✓		
22	All exterior and interior shear walls indicated	✓		
23	Shear wall opening shown (Windows, Doors and Garage doors)	✓		
24	Emergency escape and rescue opening shown in each bedroom (net clear opening shown)	✓		
25	Safety glazing of glass where needed	✓		
26	Fireplaces types (gas appliance) (vented or non-vented) or wood burning with Hearth (see chapter 10 of FBCR)	✓		
27	Stairs with dimensions (width, tread and riser and total run) details of guardrails, Handrails (see FBCR SECTION 311)	✓		
28	Identify accessibility of bathroom (see FBCR SECTION 322)	✓		

All materials placed within opening or onto/into exterior walls, soffits or roofs shall have Florida product approval number and mfg. installation information submitted with the plan (see Florida product approval form)

GENERAL REQUIREMENTS: APPLICANT – PLEASE CHECK ALL APPLICABLE BOXES BEFORE SUBMITTAL	Items to Include- Each Box shall be Circled as Applicable

FBCR 403: Foundation Plans

		YES	NO	N/A
29	Location of all load-bearing walls footings indicated as standard, monolithic, dimensions, size and type of reinforcing.	✓		
30	All posts and/or column footing including size and reinforcing	✓		
31	Any special support required by soil analysis such as piling.	✓		
32	Assumed load-bearing valve of soil_____ Pound Per Square Foot	/		
33	Location of horizontal and vertical steel, for foundation or walls (include # size and type)	/		

FBCR 506: CONCRETE SLAB ON GRADE

34	Show Vapor retarder (6mil. Polyethylene with joints lapped 6 inches and sealed)	/		
35	Show control joints, synthetic fiber reinforcement or welded fire fabric reinforcement and Supports	/		

FBCR 320: PROTECTION AGAINST TERMITES

36	Indicate on the foundation plan if soil treatment is used for subterranean termite prevention or submit other approved termite protection methods. **Protection shall be provided by registered termiticides**			

FBCR 606: Masonry Walls and Stem walls (load bearing & shear Walls)

37	Show all materials making up walls, wall height, and Block size, mortar type	✓		
38	Show all Lintel sizes, type, spans and tie-beam sizes and spacing of reinforcement	✓		

Metal frame shear wall and roof systems shall be designed, signed and sealed by Florida Prof. Engineer or Architect

Floor Framing System: First and/or second story

39	Floor truss package shall including layout and details, signed and sealed by Florida Registered Professional Engineer	/		
40	Show conventional floor joist type, size, span, spacing and attachment to load bearing walls, stem walls and/or priers			
41	Girder type, size and spacing to load bearing walls, stem wall and/or priers			
42	Attachment of joist to girder			
43	Wind load requirements where applicable			
44	Show required under-floor crawl space			
45	Show required amount of ventilation opening for under-floor spaces			
46	Show required covering of ventilation opening			
47	Show the required access opening to access to under-floor spaces			
	Show the sub-floor structural panel sheathing type, thickness and fastener schedule on the edges &			

48	intermediate of the areas structural panel sheathing			
49	Show Draftstopping, Fire caulking and Fire blocking			
50	Show fireproofing requirements for garages attached to living spaces, per FBCR section 309			
51	Provide live and dead load rating of floor framing systems (psf).			

FBCR CHAPTER 6 WOOD WALL FRAMING CONSTRUCTION

	GENERAL REQUIREMENTS: APPLICANT – PLEASE CHECK ALL APPLICABLE BOXES BEFORE SUBMITTAL	Items to Include- Each Box shall be Circled as Applicable		
		YES	NO	N/A
52	Stud type, grade, size, wall height and oc spacing for all load bearing or shear walls	✓		
53	Fastener schedule for structural members per table FBCR 602.3 are to be shown	✓		
54	Show Wood structural panel's sheathing attachment to studs, joist, trusses, rafters and structural members, showing fastener schedule attachment on the edges & intermediate of the areas structural panel sheathing	✓		
55	Show all required connectors with a max uplift rating and required number of connectors and oc spacing for continuous connection of structural walls to foundation and roof trusses or rafter systems	✓		
56	Show sizes, type, span lengths and required number of support jack studs, king studs for shear wall opening and girder or header per FBCR Table 502.5 (1)	✓		
57	Indicate where pressure treated wood will be placed	✓		
58	Show all wall structural panel sheathing, grade, thickness and show fastener schedule for structural panel sheathing edges & intermediate areas	✓		
59	A detail showing gable truss bracing, wall balloon framing details or/ and wall hinge bracing detail	✓		

FBCR :ROOF SYSTEMS:

60	Truss design drawing shall meet section FBCR 802.10 Wood trusses	✓		
61	Include a layout and truss details, signed and sealed by Florida Professional Engineer	✓		
62	Show types of connector's assemblies' and resistance uplift rating for all trusses and rafters	✓		
63	Show gable ends with rake beams showing reinforcement or gable truss and wall bracing details	✓		
64	Provide dead load rating of trusses	✓		

FBCR 802:Conventional Roof Framing Layout

65	Rafter and ridge beams sizes, span, species and spacing			
66	Connectors to wall assemblies' include assemblies' resistance to uplift rating			
67	Valley framing and support details			
68	Provide dead load rating of rafter system			

FBCR Table 602,3(2) & FBCR 803 ROOF SHEATHING

69	Include all materials which will make up the roof decking, identification of structural panel sheathing, grade, thickness	✓		
70	Show fastener Size and schedule for structural panel sheathing on the edges & intermediate areas	✓		

FBCR ROOF ASSEMBLIES FRC Chapter 9

71	Include all materials which will make up the roof assembles covering	✓		
72	Submit Florida Product Approval numbers for each component of the roof assembles covering	✓		

FBCR Chapter 11 Energy Efficiency Code for residential building

Residential construction shall comply with this code by using the following compliance methods in the FBCR chapter11 Residential buildings compliance methods. *Two of the required forms are to be submitted, showing dimensions condition area equal to the total condition living space area*

	GENERAL REQUIREMENTS: APPLICANT – PLEASE CHECK ALL APPLICABLE BOXES BEFORE SUBMITTAL	Items to Include- Each Box shall be Circled as Applicable		
		YES	NO	N/A
73	Show the insulation R value for the following areas of the structure	✓		
74	Attic space	✓		
75	Exterior wall cavity	✓		
76	Crawl space	✓		

HVAC information

77	Submit two copies of a Manual J sizing equipment or equivalent computation study	✓		
78	Exhaust fans locations in bathrooms	✓		
79	Show clothes dryer route and total run of exhaust duct	✓		

Plumbing Fixture layout shown

80	All fixtures waste water lines shall be shown on the foundation plan	✓		
81	Show the location of water heater	✓		

Private Potable Water

82	Pump motor horse power	✓		
83	Reservoir pressure tank gallon capacity	✓		
84	Rating of cycle stop valve if used	✓		

Electrical layout shown including

85	Switches, outlets/receptacles, lighting and all required GFCI outlets identified	✓		
86	Ceiling fans	✓		
87	Smoke detectors & Carbon dioxide detectors	✓		
88	Service panel, sub-panel, location(s) and total ampere ratings	✓		
89	On the electrical plans identify the electrical service overcurrent protection device for the main electrical service. This device shall be installed on the exterior of structures to serve as a disconnecting means for the utility company electrical service. Conductors used from the exterior disconnecting means to a panel or sub panel shall have four-wire conductors, of which one conductor shall be used as an equipment ground. Indicate if the utility company service entrance cable will be of the overhead or underground type.	✓		

90	Appliances and HVAC equipment and disconnects	✓		
91	Arc Fault Circuits (AFCI) in bedrooms	✓		

Disclosure Statement for Owner Builders *If you as the applicant will be acting as an owner/builder under section 489.103(7) of the Florida Statutes, submit the required owner builder disclosure statement form.*

Notice Of Commencement

A notice of commencement form **recorded** in the Columbia County Clerk Office is required to be filed with the building department Before Any Inspections can be preformed.

GENERAL REQUIREMENTS: APPLICANT – PLEASE CHECK ALL APPLICABLE BOXES BEFORE SUBMITTAL	Items to Include- Each Box shall be Circled as Applicable

THE FOLLOWING ITEMS MUST BE SUBMITTED WITH BUILDING PLANS

		YES	NO	N/A
92	**Building Permit Application** A current Building Permit Application form is to be completed and submitted for all residential projects	✓		
93	**Parcel Number** The parcel number (Tax ID number) from the Property Appraiser (386) 758-1084 is required. A copy of property deed is also requested	✓		
94	**Environmental Health Permit or Sewer Tap Approval** A copy of a approved Columbia County Environmental Health (386) 758-1058	✓		
95	**City of Lake City** A permit showing an approved waste water sewer tap			
96	**Toilet facilities shall be provided for all construction sites**	✓		
97	**Town of Fort White** (386) 497-2321 If the parcel in the application for building permit is within the Corporate city limits of Fort White an approval land use development letter issued by the Town of Fort is required to be submitted with the application for a building permit.			
98	**Flood Information:** All projects within the Floodway of the Suwannee or Santa Fe Rivers shall require permitting through the Suwannee River Water Management District, before submitting a application to this office. Any project located within a flood zone where the base flood elevation (100 year flood) has been established shall meet the requirements of Section 8.5.2 of the Columbia County Land Development Regulations. Any project located within a flood zone where the base flood elevation has not been established (Zone A) shall meet the requirements of Section 8.5.3 of the Columbia County Land Development Regulations			
99	CERTIFIED FINISHED FLOOR ELEVATIONS will be required on any project where the base flood elevation (100 year flood) has been established			
100	A development permit will also be required. Development permit cost is **$50.00**			
101	**Driveway Connection:** If the property does not have an existing access to a public road, then an application for a culvert permit (**$25.00**) must be made. If the applicant feels that a culvert is not needed, they may apply for a culvert waiver (**$50.00**). All culvert waivers are sent to the Columbia County Public Works Department for approval or denial.	✓		
102	**911 Address:** If the project is located in an area where a 911 address has not been issued, then application for a 911address must be applied for and **received** through the Columbia County Emergency Management Office of 911 Addressing Department (386) 758-1125	✓		

Section R101.2.1 of the Florida Building Code Residential:

The provisions of Chapter 1, Florida Building Code, Building shall govern the administration and enforcement of the Florida Building Code, Residential.

Section 105 of the Florida Building Code defines the:

Time limitation of application.

An application for a permit for any proposed work shall be deemed to have been abandoned 180 days after the date of filing, unless such application has been pursued in good faith or a permit has been issued; except that the building official is authorized to grant one or more extensions of time for additional periods not exceeding 90 days each. The extension shall be requested in writing and justifiable cause demonstrated.

Single-family residential dwelling.

Section 105.3.4 A building permit for a single-family residential dwelling must be issued within 30 working days of application therefor unless unusual circumstances require a longer time for processing the applicati or unless the permit application fails to satisfy the Florida Building Code or the enforcing agency's laws or ordinances.

Permit intent.

Section 105.4.1: A permit issued shall be constructed to be a license to proceed with the work and not as authority to violate, cancel, alter or set aside any of the provisions of the technical codes, nor shall issuance c a permit prevent the building official from thereafter requiring a correction of errors in plans, construction or violations of this code. Every permit issued shall become invalid unless the work authorized by such permit is commenced within six months after its issuance, or if the work authorized by such permit is suspended or abandoned for a period of six months after the time the work is commenced.

If work has commenced.

Section 105.4.1.1: If work has commenced and the permit is revoked, becomes null and void, or expires because of lack of progress or abandonment, a new permit covering the proposed construction shall be obtained before proceeding with the work.

New Permit.

Section 105.4.1.2: If a new permit is not obtained within 180 days from the date the initial permit became nu and void, the building official is authorized to require that any work which has been commenced or completed be removed from the building site. Alternately, a new permit may be issued on application, providing the work in place and required to complete the structure meets all applicable regulations in effect at the time the initial permit became null and void and any regulations which may have become effective between the date of expiration and the date if issuance of the new permit.

Work Shall Be:

Section 105.4.1.3: Work shall be considered to be in active progress when the permit has received an approved inspection within 180 days. This provision shall not be applicable in case of civil commotion or strike or when the building work is halted due directly to judicial injunction, order or similar process.

The Fee:

Section 105.4.1.4: The fee for renewal reissuance and extension of a permit shall be set forth by the administrative authority.

When the submitted application is approved for permitting the applican will be notified by phone as to the date and time a building permit will b prepared and issued by the Columbia County Building & Zoning Department

PRODUCT APPROVAL SPECIFICATION SHEET

Location: 439 N.W. Ceciley **Project Name:** Ross Hammock

As required by Florida Statute 553.842 and Florida Administrative Code 9B-72, please provide the information and the product approval number(s) on the building components listed below if they will be utilized on the construction project for which you are **applying for a building permit on or after April 1, 2004**. We recommend you contact your local product supplier should you not know the product approval number for any of the applicable listed products. More information about statewide product approval can be obtained at www.floridabuilding.org

Category/Subcategory	Manufacturer	Product Description	Approval Number(s)
A. EXTERIOR DOORS			
1. Swinging	Masonite	Wood Frame Metal Door	FL18
2. Sliding			
3. Sectional			
4. Roll up			
5. Automatic			
6. Other			
B. WINDOWS			
1. Single hung	YKK	vinyl single hung	FL10155
2. Horizontal Slider			
3. Casement			
4. Double Hung			
5. Fixed			
6. Awning			
7. Pass -through			
8. Projected			
9. Mullion			
10. Wind Breaker			
11 Dual Action			
12. Other			
C. PANEL WALL			
1. Siding	Hardi-Board	Concrete lap siding	FL889.5
2. Soffits	Kaycan	Aluminum soffit	FL1146
3. EIFS			
4. Storefronts			
5. Curtain walls			
6. Wall louver			
7. Glass block			
8. Membrane			
9. Greenhouse			
10. Other			
D. ROOFING PRODUCTS			
1. Asphalt Shingles	Tamko	Heritage 30 yr arch	FL673.3
2. Underlayments			
3. Roofing Fasteners			
4. Non-structural Metal Rf			
5. Built-Up Roofing			
6. Modified Bitumen			
7. Single Ply Roofing Sys			
8. Roofing Tiles			
9. Roofing Insulation			
10. Waterproofing			
11. Wood shingles /shakes			
12. Roofing Slate			

Category/Subcategory (cont.)	Manufacturer	Product Description	Approval Number(s)
13. Liquid Applied Roof Sys			
14. Cements-Adhesives – Coatings			
15. Roof Tile Adhesive			
16. Spray Applied Polyurethane Roof			
17. Other			
E. SHUTTERS			
1. Accordion			
2. Bahama			
3. Storm Panels			
4. Colonial			
5. Roll-up			
6. Equipment			
7. Others			
F. SKYLIGHTS			
1. Skylight			
2. Other			
G. STRUCTURAL COMPONENTS			
1. Wood connector/anchor			
2. Truss plates	Alpine	Truss Plate	FL1999
3. Engineered lumber			
4. Railing			
5. Coolers-freezers			
6. Concrete Admixtures			
7. Material			
8. Insulation Forms			
9. Plastics			
10. Deck-Roof			
11. Wall			
12. Sheds			
13. Other			
H. NEW EXTERIOR ENVELOPE PRODUCTS			
1.			
2.			

The products listed below did not demonstrate product approval at plan review. I understand that at the time of inspection of these products, the following information must be available to the inspector on the jobsite; 1) copy of the product approval, 2) the performance characteristics which the product was tested and certified to comply with, 3) copy of the applicable manufacturers installation requirements.

I understand these products may have to be removed if approval cannot be demonstrated during inspectio

Gary N

Contractor or Contractor's Authorized Agent Signature

437 N.W. Cealey

Gary Newsome

Print Name

3-17-09

Date

Permit # (FOR STAFF USE ONLY)

ENERGY PERFORMANCE LEVEL (EPL) DISPLAY CARD

ESTIMATED ENERGY PERFORMANCE INDEX* = 79

The lower the EnergyPerformance Index, the more efficient the home.

1. New construction or existing	New (From Plans)
2. Single family or multiple family	Single-family
3. Number of units, if multiple family	1
4. Number of Bedrooms	3
5. Is this a worst case?	No
6. Conditioned floor area (ft²)	2108

7. Windows**	Description	Area
a. U-Factor:	Dbl, U=0.65	214.00 ft²
SHGC:	SHGC=0.35	
b. U-Factor:	N/A	ft²
SHGC:		
c. U-Factor:	N/A	ft²
SHGC:		
d. U-Factor:	N/A	ft²
SHGC:		
e. U-Factor:	N/A	ft²
SHGC:		

8. Floor Types	Insulation	Area
a. Slab-On-Grade Edge Insulation	R=0.0	2108.00 ft²
b. N/A	R=	ft²
c. N/A	R=	ft²

9. Wall Types	Insulation	Area
a. Frame - Wood, Exterior	R=19.0	1509.30 ft²
b. N/A	R=	ft²
c. N/A	R=	ft²
d. N/A	R=	ft²

10. Ceiling Types	Insulation	Area
a. Under Attic (Vented)	R=30.0	2108.00 ft²
b. N/A	R=	ft²
c. N/A	R=	ft²

11. Ducts
a. Sup: Attic Ret: Attic AH: Interior Sup. R= 8, 421.6 ft²

12. Cooling systems
a. Central Unit — Cap: 48 kBtu/hr, SEER: 13

13. Heating systems
a. Electric Heat Pump — Cap: 48 kBtu/hr, AFUE: 8

14. Hot water systems
a. Electric — Cap: 40 gallons, EF: 0.92

b. Conservation features
None

15. Credits — None

I certify that this home has complied with the Florida Energy Efficiency Code for Building Construction through the above energy saving features which will be installed (or exceeded) in this home before final inspection. Otherwise, a new EPL Display Card will be completed based on installed Code compliant features.

Builder Signature: Gary N Date: 4-2-09

Address of New Home: 437 N.W. Pearley Place City/FL Zip: 32056

GREAT SEAL OF THE STATE OF FLORIDA · IN GOD WE TRUST

*Note: The home's estimated Energy Performance Index is only available through the EnergyGauge USA - FlaRes2008 computer program. This is not a Building Energy Rating. If your Index is below 100, your home may qualify for incentives if you obtain a Florida Energy Gauge Rating. Contact the Energy Gauge Hotline at (321) 638-1492 or see the Energy Gauge web site at energygauge.com for information and a list of certified Raters. For information about Florida's Energy Efficiency Code for Building Construction, contact the Department of Community Affairs at (850) 487-1824.

**Label required by Section 13-104.4.5 of the Florida Building Code, Building, or Section B2.1.1 of Appendix G of the Florida Building Code, Residential, if not DEFAULT.

From: The Columbia County Building & Zoning Department
135 NE Hernando Av.
P.O. Box 1529
Lake City Florida 32056-1529
758-1008

Reference to a building permit application Number: **0903-48**

Applicant: GN Construction Gary Newsome/contractor/owners Ross Hammock:
Property Identification number: 15-2s-16-01612-003

On the date of March 30, 2009 application 0903-48 and plans were reviewed for compliance of the 2007 Florida building code residential. The documents and plans submitted are for construction of a Group R-3 (single family dwelling) structure.

Please review the following information so this building permit application may proceed toward issuance.

Please have the engineer of record Mr. Marty Humphries submit plans showing all the required jack and kings stud with header type and sizes for all opening in the shear walls. added to sheet 5

Please have the engineer of record Mr. Marty Humphries submit plans showing all the required supporting headers/beams, type and sizes for the porches and the carport. already shown on sheet 5

The submitted Florida Energy Efficiency Code for Building Construction (form 600B-93) is no longer an acceptable evaluation method, due to the adoption of the Florida Building Code Residential 2007 which became effective March 1, 2009. Please consult with EnergyGauge® to obtain the correct form to be utilized with the Florida Energy Efficiency Code for Building Construction.

3-31-09

Ross,
I added a note indicating the number of kins + jack studs needed at openinss.

FLORIDA ENERGY EFFICIENCY CODE FOR BUILDING CONSTRUCTION

FORM 600B-93 — **Residential Component Prescriptive Method B** — **NORTH 1 2 3**

Department of Community Affairs

Compliance with Method B Chapter 6 of the Florida Energy Efficiency Code may be demonstrated by the use of Form 600B-93 for single and multifamily residences of 3 stories or less in height, and additions to existing residential buildings. To comply, a building must meet or exceed all of the energy efficiency prescriptives in any one of the prescriptive component packages and comply with the prescriptive measures listed in Table 6B-1 of this form. Compliance by this method will be, in most cases, equivalent to an EPI of 100 points or less. An alternative method is provided for additions of 600 square feet or less by use of Form 600C-93. If a building does not comply with this method, it may still comply under other sections in Chapter 6 of the Code.

PROJECT NAME:	Hammock	**BUILDER:** Gary Newsome	
AND ADDRESS:	G-N Construction	**PERMITTING OFFICE:**	**CLIMATE ZONE:** 1 ☐ 2 ☐ 3 ☐
OWNER:		**PERMIT NO.:**	**JURISDICTION NO.:**

GENERAL DIRECTIONS

1. New construction including additions which incorporates any of the following features cannot comply using this method: raised wood floors without continuous stem walls, steel stud walls, single assembly roof/ceiling construction, or skylights or other non-vertical roof glass.
2. Choose one of the component packages "A" through "E" from Table 6B-1 by which you intend to comply with the Code. Circle the column of the package you have chosen.
3. Fill in all the applicable spaces of the "To Be Installed" column on Table 6B-1 with the information requested. All "To Be Installed" values must be equal to or more efficient than the required levels.
4. Complete page 1 based on the "To Be Installed" column information.
5. Read "Minimum Requirements for All Packages", Table 6B-2 and check each box to indicate your intent to comply with all applicable items.
6. Read, sign and date the "Prepared By" certification statement at the bottom of page 1. The owner or owner's agent must also sign and date the form.

	Please Print	CK
1. Compliance package chosen (A-E)	1. A	
2. New construction or addition	2. N/C	
3. Single family detached or Multifamily attached	3. Single	
4. If Multifamily—No. of units covered by this submission	4.	
5. If Multifamily, is this a worst case (yes / no)	5.	
6. Conditioned floor area (sq. ft.)	6. 2108 sq ft	
7. Predominant eave overhang (ft.)	7. 1.5 ft	
8. Porch overhang length (ft.)	8. 29 ft	
9. Glass area and type:	Single Pane / Double Pane	
a. Clear glass	9a. _____ sq. ft. 214 sq. ft.	
b. Tint, film or solar screen	9b. _____ sq. ft. _____ sq. ft.	
10. Percentage of glass to floor area	10. _____ %	
11. Floor type and insulation:		
a. Slab on grade (R-value)	11a. R= 0 2108 sq. ft.	
b. Wood, raised (R-value)	11b. R= _____ _____ sq. ft.	
c. Wood, common (R-value)	11c. R= _____ _____ sq. ft.	
d. Concrete, raised (R-value)	11d. R= _____ _____ sq. ft.	
e. Concrete, common (R-value)	11e. R= _____ _____ sq. ft.	
12. Wall type and insulation:		
a. Exterior:		
1. Masonry (Insulation R-value)	12a-1 R= _____ _____ sq. ft.	
2. Wood frame (Insulation R-value)	12a-2 R= 11 1488 sq. ft.	
b. Adjacent:		
1. Masonry (Insulation R-value)	12b-1 R= _____ _____ sq. ft.	
2. Wood frame (Insulation R-value)	12b-2 R= _____ _____ sq. ft.	
13. Ceiling type and insulation:		
a. Under attic (Insulation R-value)	13a. R= 30 2108 sq. ft.	
b. Single assembly (Insulation R-value)	13b. R= _____ _____ sq. ft.	
14. Cooling system (Types: central, room unit, package terminal A.C., none)	14. Type: central SEER/EER: 13	
15. Heating system: (Types: heat pump, elec. strip, nat. gas, L.P. gas, room or PTAC, none)	15. Type: Heatpump HSPF/COP/AFUE: 9.0	
16. Hot water system: (Types: elec., nat. gas, L.P. gas, solar, heat rec., ded. heat pump, other, none)	16. Type: elec EF: .90	

I hereby certify that the plans and specifications covered by the calculation are in compliance with the Florida Energy Code.

PREPARED BY: Paul Kay **DATE:** 3-19-09

I hereby certify that this building is in compliance with the Florida Energy Code.

Review of plans and specifications covered by this calculation indicates compliance with the Florida Energy Code. Before construction is completed, this building will be inspected for compliance in accordance with Section 553.908, F.S.

BUILDING OFFICIAL:

TABLE 6B-1 **MINIMUM REQUIREMENTS** **Climate Zones 1 2 3**

COMPONENTS		PACKAGES FOR NEW CONSTRUCTION					TO BE INSTALLED
		A	B	C	D	E	
GLASS	Max.%of glass to Floor Area	15%	15%	20%	20%	25%	10 %
	Type	Double Clear (DC)	Double Clear (DC)	Double Clear (DC)	Double Clear (DC)	Double Tint (DT)	DC: ☒ DT: ☐
	Overhang	1½′	2′	2′	2′	2′	1.5 FEET
WALLS	Masonry	EXTERIOR AND ADJACENT MASONRY WALLS R-7 COMMON MASONRY WALLS R-3 EACH SIDE					EXT: R = ____ ADJ: R = ____ COM: R = ____
	Wood Frame	EXTERIOR, ADJACENT, AND COMMON WOOD FRAME WALLS R-11					EXT: R = 11 ADJ: R = 11 COM: R = 11
CEILINGS		CEILINGS UNDER ATTIC R-30. FRAME COMMON CEILINGS R-11. (NO SINGLE ASSEMBLY CEILINGS ALLOWED)					UNDER ATTIC: R = 30 COMMOM: R = ____
FLOORS	Slab-On-Grade	R-0					R = 0
	Raised Wood	R-19 (ONLY STEM WALL CONSTRUCTION ALLOWED)					R = ____
	Raised Concrete	R-7					R = ____
DUCTS		R-6	R-6	R-6	COND.	R-6	R = 6 COND. ☐
SPACE COOLING (SEER)		10.8	10.5	10.5	10.5	10.0*	SEER = 13
HEAT	Elect. (HSPF)	7.1	7.1	6.8*	6.8*	6.8*	HSPF = 9.0
	Gas/Oil (AFUE)	MINIMUM OF .73 (Direct heating) or .78 (Central)					AFUE = ____
HOT WATER SYSTEM	Electric Resistance**	EF .90	EF .90	NOT ALLOWED (SEE BELOW)	EF .90	NOT ALLOWED (SEE BELOW)	EF = .90
	Gas & Oil **	MINIMUM EF OF .54				NATURAL GAS ONLY (SEE BELOW)	EF = ____
	Other	Any of the following are allowed: dedicated heat pump, heat recovery unit or solar system.					DHP: ☐ EF= ____ HRU : ☐ SOLAR: ☐ EF= ____

* Single package units minimum SEER=9.7, HSPF=6.6.

** Minimum efficiencies for gas and electric hot water systems apply to to 40 gallon water heaters. Refer to Table 6-11 for minimum Code efficiencies for oil water heaters and other sizes.

DESCRIPTION OF BUILDING COMPONENTS LISTED

Percent of Glass to Floor Area: This percentage is calculated by dividing the total of all glass areas by the total conditioned floor area.

Overhang: The overhang is the distance the roof or soffit projects out horizontally from the face of the glass. All glass areas shall be under an overhang of at least the prescribed length with the following exceptions: 1) glass on the gabled ends of a house and 2) the glass in the lower stories of a multi-story house.

Wall, Ceiling and Floor Insulation Values: The R-values indicated represent the minimum acceptable insulation level added to the structural components of the wall, ceiling or floor. The R-value of the structural building materials shall not be included in this calculation. "Common" components are those separating conditioned tenancies in a multifamily building. "Adjacent" components separate conditioned space from unconditioned but enclosed space. "Exterior" components separate conditioned space from unconditioned and unenclosed space.

Floor: Slab-on-grade floors without edge insulation are acceptable. Raised wood floors shall have continuous stem walls with insulation placed on the stem wall or under the floor.

Ducts: "COND" indicates that the ducts must be installed within the conditioned space; that is, the ductwork shall be located on the conditioned side of the insulation. Ducts in conditioned space are acceptable for any prescriptive package.

Space Cooling System: Cooling systems shall have a Seasonal Energy Efficiency Ratio (SEER) for central units or Energy Efficiency Ratio (EER) for room units or PTAC's equal to or greater than the prescribed value.

Electric Space Heating Option: Heat pump systems shall be rated with a Heating Seasonal Performance Factor (HSPF) equal to or greater than the prescribed HSPF. Heat pump systems may contain electric strip backups meeting the criteria of section 608.1.ABC.3.2.2. No electric resistance space heat is allowed for these packages.

Electric Resistance Hot Water Option: For packages designated "Not Allowed", an electric resistance hot water system may be installed only in conjunction with one of the "Other Hot Water System Options". See below.

Other Hot Water System Options: Any dedicated heat pump, heat recovery unit, or solar hot water system with an EF of 1.5 or higher may be installed. Electric resistance systems having an EF of .88 or greater, or natural gas systems with EF .54 or greater may be used in conjunction with these systems.

TABLE 6B-2 MINIMUM REQUIREMENTS FOR ALL PACKAGES

COMPONENTS	SECTION	REQUIREMENTS	CHECK
Exterior Joints & Cracks	606.1	To be caulked, gasketed, weather-stripped or otherwise sealed.	
Interior Joints & Cracks	606.1	All openings in interior surfaces of ceilings and exterior walls must be sealed.	
Sole & Top Plates	606.1	Sole plates and penetrations through top plates of exterior walls must be sealed.	
Infiltration Barrier	606.1	Infiltration barrier must be installed in exterior walls & raised wood floors.	
Fireplaces	606.1	Fireplaces must have flue dampers, glass doors and outside combustion air intakes.	
Exhaust Fans	606.1	Exhaust fans vented to unconditioned space shall have dampers, except for combustion devices with integral exhaust ductwork.	
Combustion Heating	606.1	Combustion space and water heating systems must be provided with outside combustion air, except for direct vent appliances.	
Water Heaters	612.1	Comply with efficiency requirements in Table 6-12. Switch or clearly marked circuit breaker (electric) or cutoff (gas) must be provided. External or built-in heat trap required.	
Swimming Pools & Spas	612.1	Spas & heated pools must have covers (except solar heated). Non-commercial pools must have a pump timer. Gas spa & pool heaters must have minimum thermal efficiency of 78%.	
Hot Water Pipes	612.1	Insulation is required for hot water circulating systems, (including heat recovery units) and the first 8′ of piping from the water heater (or until piping enters an insulated wall or slab).	
Shower Heads	612.1	Water flow must be restricted to no more than 3 gallons per minute at 80 PSIG.	
HVAC Duct Construction, Insulation & Installation	610.1	All ducts, fittings, mechanical equipment and plenum chambers shall be mechanically attached, sealed, insulated and installed in accordance with the criteria of Section 610.1. Ducts in attics must be insulated to a minimum of R-6. Air handlers shall not be installed in attics unless in mechanical closets.	
HVAC Controls	607.1	Separate readily accessible manual or automatic thermostat for each system.	

paul's heating & air
158 paden place statenville, ga 31648
Phone: 559-8232 Fax: 5597533 E-mail: paden@surfsouth.com

PROPOSAL FOR:

g-n hammock
2108 sqft
,

3/19/2009

paul's heating & air

158 paden place statenville, ga 31648
Phone: 559-8232 Fax: 5597533 E-mail: paden@surfsouth.com

Heat Load Summary Report for g-n hammock

Room Name	Square Ft.	Heating Loss BTUH	Hydronic Heat Linear Ft.	Latent / Sensible Gain BTUH		Cooling Gain BTUH	Cooling Tons	Cooling CFM
utility	70	1513	2.52	63	/ 1742	1805	0.15	60
mbath	98	1347	2.24	88	/ 1298	1386	0.12	46
wic	88	611	1.02	79	/ 608	686	0.06	23
pwdr	24	201	0.34	21	/ 290	312	0.03	10
mbed	240	4224	7.04	242	/ 4412	4653	0.39	155
nook	100	2954	4.92	90	/ 5110	5199	0.43	173
kit	182	1407	2.35	204	/ 1146	1350	0.11	45
dining	144	2756	4.59	161	/ 3729	3890	0.32	130
foyer	60	4741	7.9	737	/ 2148	2886	0.24	96
great	374	8595	14.33	1088	/ 6561	7650	0.64	255
office	120	2499	4.16	134	/ 3566	3700	0.31	123
bed3	156	2813	4.69	140	/ 3016	3156	0.26	105
bath	72	1015	1.69	64	/ 1096	1161	0.1	39
bed2	144	2706	4.51	129	/ 2943	3072	0.26	102
hall	32	4561	7.6	699	/ 2014	2712	0.23	90
hall2	48	337	0.56	54	/ 538	592	0.05	20
TOTALS	**1952**	**42281**	**70.47**	**3993**	**/ 40217**	**44208**	**3.68**	**1472**

Disclaimer

These computed results should be treated as estimates only and should be viewed as only one of the many tools required for a professional installation. The installing contractor's experience and expert judgement are also major factors in sizing and installing a complete system. The weather, customer usage, duct installation, and structure design may vary on each estimate and should be taken into account. Correct system sizing is based on the systems ability to meet both latent and sensible heat requirements, not just total BTUs.

Prepared 3/19/2009 using O'Brien Quick Loads Pro - Version 1.01 - SN: QP-070101-42778

ITW Building Components Group, Inc.

1950 Marley Drive Haines City, FL 33844
Florida Engineering Certificate of Authorization Number: 0 278
Florida Certificate of Product Approval # FL1999
 Document ID:1TP9215-Z0117103417

Truss Fabricator: W.B. Howland
Job Identification: 6011-/HAMMOCK RES. /G-N CONSTRUCTION -- , **
Truss Count: 19
Model Code: Florida Building Code 2004 and 2006 Supplement
Truss Criteria: FBC CODE/TPI-2002(STD)
Engineering Software: Alpine Software,Version 7.38.
Structural Engineer of Record: The identity of the structural EOR did not exist as of
Address: the seal date per section 61G15-31.003(5a) of the FAC
Minimum Design Loads: Roof - 40.0 PSF @ 1.25 Duration
Floor - N/A
Wind - 110 MPH ASCE 7-02 -Closed

Seal Date: 02/17/2009

-Truss Design Engineer-
James F. Collins Jr.
Florida License Number: 52212
1950 Marley Drive
Haines City, FL 33844

Notes:

1. Determination as to the suitability of these truss components for the structure is the responsibility of the building designer/engineer of record, as defined in ANSI/TPI 1
2. The drawing date shown on this index sheet must match the date shown on the individual truss component drawing.
3. As shown on attached drawings; the drawing number is preceded by: HCUSR215

Details: A1101502-GBLLETIN-BRCLBSUB-PB120-

#	Ref Description	Drawing#	Date
1	49611--A1	09048008	02/17/09
2	49612--A2	09048001	02/17/09
3	49613--A3	09048002	02/17/09
4	49614--A4	09048009	02/17/09
5	49615--A5	09048003	02/17/09
6	49616--A6	09048004	02/17/09
7	49617--A7	09048005	02/17/09
8	49618--A8	09048006	02/17/09
9	49619--A9	09048010	02/17/09
10	49620--A10	09048007	02/17/09
11	49621--A12	09048011	02/17/09
12	49622--A13	09048012	02/17/09
13	49623--A14	09048013	02/17/09
14	49624--A15	09048014	02/17/09
15	49625--AT1	09048015	02/17/09
16	49626--AT2	09048016	02/17/09
17	49627--AT3	09048017	02/17/09
18	49628--G1	09048018	02/17/09
19	49629--G2	09048019	02/17/09

(6011-/HAMMOCK RES. /G-N CONSTRUCTION -- , ** - A1)

Top chord 2x4 SP #2 N
Bot chord 2x6 SP #2 N
Webs 2x4 SP #2 N

SPECIAL LOADS
------(LUMBER DUR.FAC.=1.25 / PLATE DUR.FAC.=1.25)
TC - From 62 PLF at 0.00 to 62 PLF at 2.50
TC - From 62 PLF at 2.50 to 62 PLF at 5.00
BC - From 20 PLF at 0.00 to 20 PLF at 5.00
BC - 1620 LB Conc. Load at 1.94, 3.94

Wind reactions based on MWFRS pressures.

Deflection meets L/240 live and L/180 total load.

2 COMPLETE TRUSSES REQUIRED

Nailing Schedule: (0.131"x3"_Gun_nails)
Top Chord: 1 Row @12.00" o.c.
Bot Chord: 2 Rows @ 5.00" o.c. (Each Row)
Webs : 1 Row @ 4" o.c.
Use equal spacing between rows and stagger nails in each row to avoid splitting.

110 mph wind, 15.00 ft mean hgt, ASCE 7-02, CLOSED bldg, not located within 4.50 ft from roof edge, CAT II, EXP B, wind TC DL=5.0 psf, wind BC DL=5.0 psf. Iw=1.00 GCpi(+/-)=0.18

The overall height of this truss excluding overhang is 1-7-3.

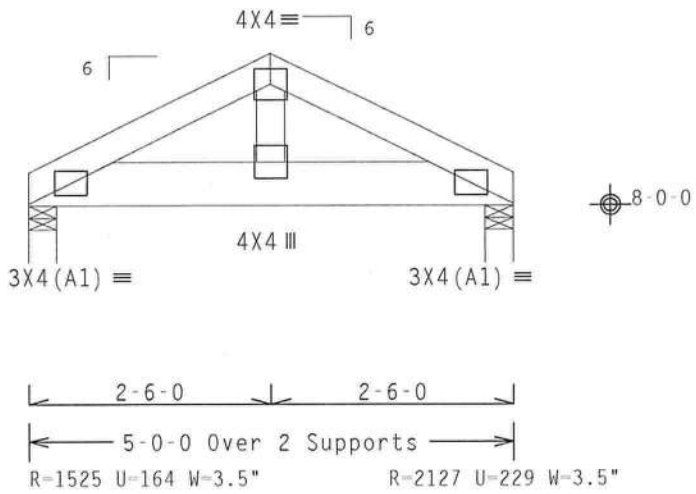

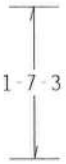

Design Crit: FBC CODE/TPI-2002(STD)

PLT TYP. Wave FT/RT=20%(0%)/0(0) 7.38.08.081[illegible] QTY:1 FL/-/5/-/-/R/- Scale =.5"/Ft.

ALPINE
ITW Building Components Group Inc.
Haines City, FL 33844
FL COA #0 278

WARNING TRUSSES REQUIRE EXTREME CARE IN FABRICATION, HANDLING, SHIPPING, INSTALLING AND BRACING. REFER TO BCSI (BUILDING COMPONENT SAFETY INFORMATION), PUBLISHED BY TPI (TRUSS PLATE INSTITUTE, 218 NORTH LEE STREET, SUITE 312, ALEXANDRIA, VA. 22314) AND WTCA (WOOD TRUSS COUNCIL OF AMERICA, 6300 ENTERPRISE LANE, MADISON, WI 53719) FOR SAFETY PRACTICES PRIOR TO PERFORMING THESE FUNCTIONS. UNLESS OTHERWISE INDICATED TOP CHORD SHALL HAVE PROPERLY ATTACHED STRUCTURAL PANELS AND BOTTOM CHORD SHALL HAVE A PROPERLY ATTACHED RIGID CEILING.

IMPORTANTFURNISH A COPY OF THIS DESIGN TO THE INSTALLATION CONTRACTOR. ITW BCG, INC. SHALL NOT BE RESPONSIBLE FOR ANY DEVIATION FROM THIS DESIGN; ANY FAILURE TO BUILD THE TRUSS IN CONFORMANCE WITH TPI; OR FABRICATING, HANDLING, SHIPPING, INSTALLING & BRACING OF TRUSSES. DESIGN CONFORMS WITH APPLICABLE PROVISIONS OF NDS (NATIONAL DESIGN SPEC. BY AF&PA) AND TPI. ITW BCG CONNECTOR PLATES ARE MADE OF 20/18/16GA (W,H/SS/K) ASTM A653 GRADE 40/60 (W, K/H,SS) GALV. STEEL. APPLY PLATES TO EACH FACE OF TRUSS AND, UNLESS OTHERWISE LOCATED ON THIS DESIGN, POSITION PER DRAWINGS 160A-Z. ANY INSPECTION OF PLATES FOLLOWED BY (1) SHALL BE PER ANNEX A3 OF TPI1-2002 SEC.3. A SEAL ON THIS DRAWING INDICATES ACCEPTANCE OF PROFESSIONAL ENGINEERING RESPONSIBILITY SOLELY FOR THE TRUSS COMPONENT DESIGN SHOWN. THE SUITABILITY AND USE OF THIS COMPONENT FOR ANY BUILDING IS THE RESPONSIBILITY OF THE BUILDING DESIGNER PER ANSI/TPI 1 SEC. 2.

JAMES R. COLLINS, JR. LICENSE No. 52212 STATE OF FLORIDA PROFESSIONAL ENGINEER

TC LL	20.0 PSF	REF	R215-- 49611
TC DL	10.0 PSF	DATE	02/17/09
BC DL	10.0 PSF	DRW	HCUSR215 09048008
BC LL	0.0 PSF	HC-ENG	DLJ/DLJ
TOT.LD.	40.0 PSF	SEQN-	172336
DUR.FAC.	1.25	FROM	LRB
SPACING	24.0"	JREF-	1TP9215_Z01

(6011-/HAMMOCK RES. /G-N CONSTRUCTION -- , ** - A2)

Top chord 2x4 SP #2 N
Bot chord 2x4 SP #2 N
Webs 2x4 SP #2 N

Deflection meets L/240 live and L/180 total load.

The overall height of this truss excluding overhang is 1-7-3.

110 mph wind, 15.00 ft mean hgt, ASCE 7-02, CLOSED bldg, not located within 4.50 ft from roof edge, CAT II, EXP B, wind TC DL=5.0 psf, wind BC DL=5.0 psf. Iw=1.00 GCpi(+/-)=0.18

Wind reactions based on MWFRS pressures.

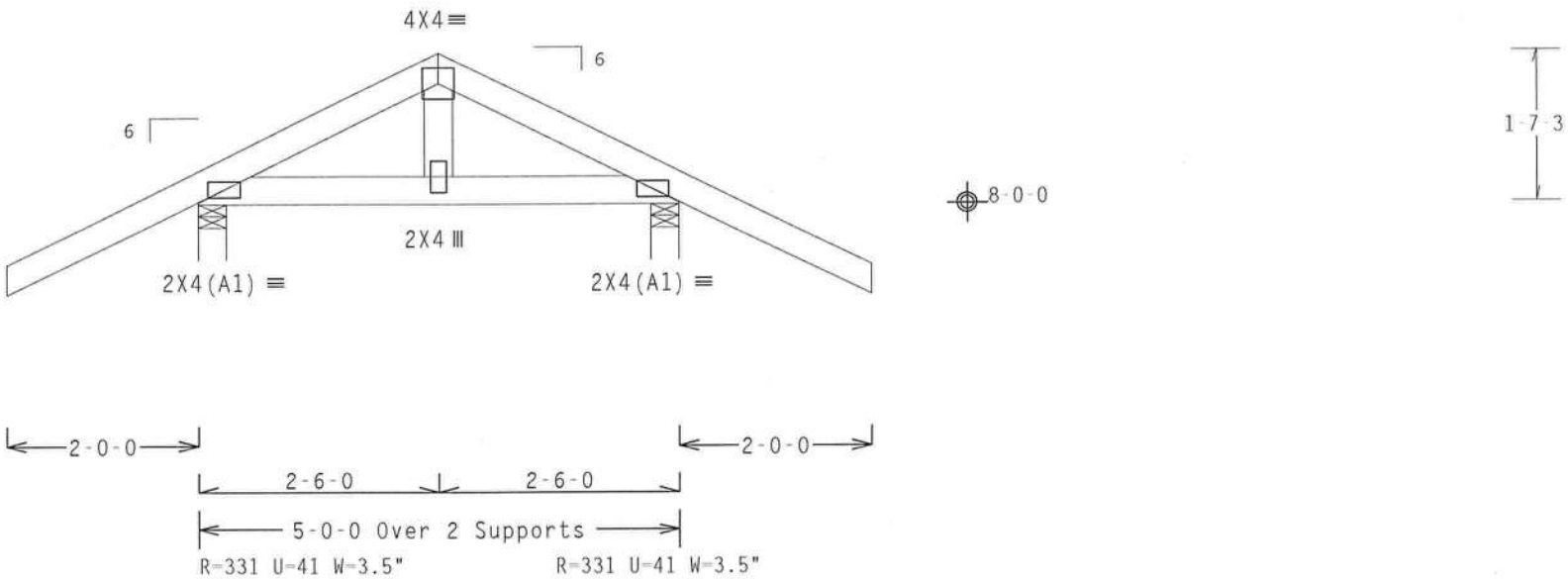

Design Crit: FBC CODE/TPI-2002(STD)

PLT TYP. Wave FT/RT=20%(0%)/0(0) 7.38.00 08.10.02 QTY:3 FL/-/5/-/-/R/- Scale =.5"/Ft.

ALPINE
ITW Building Components Group Inc.
Haines City, FL 33844
FL COA #0 278

WARNING TRUSSES REQUIRE EXTREME CARE IN FABRICATION, HANDLING, SHIPPING, INSTALLING AND BRACING. REFER TO BCSI (BUILDING COMPONENT SAFETY INFORMATION), PUBLISHED BY TPI (TRUSS PLATE INSTITUTE, 218 NORTH LEE STREET, SUITE 312, ALEXANDRIA, VA, 22314) AND WTCA (WOOD TRUSS COUNCIL OF AMERICA, 6300 ENTERPRISE LANE, MADISON, WI 53719) FOR SAFETY PRACTICES PRIOR TO PERFORMING THESE FUNCTIONS. UNLESS OTHERWISE INDICATED TOP CHORD SHALL HAVE PROPERLY ATTACHED STRUCTURAL PANELS AND BOTTOM CHORD SHALL HAVE A PROPERLY ATTACHED RIGID CEILING.

IMPORTANTFURNISH A COPY OF THIS DESIGN TO THE INSTALLATION CONTRACTOR. ITW BCG, INC. SHALL NOT BE RESPONSIBLE FOR ANY DEVIATION FROM THIS DESIGN; ANY FAILURE TO BUILD THE TRUSS IN COMFORMANCE WITH TPI; OR FABRICATING, HANDLING, SHIPPING, INSTALLING & BRACING OF TRUSSES.
DESIGN CONFORMS WITH APPLICABLE PROVISIONS OF NDS (NATIONAL DESIGN SPEC, BY AF&PA) AND TPI. ITW BCG CONNECTOR PLATES ARE MADE OF 20/18/16GA (W,H/SS/K) ASTM A653 GRADE 40/60 (W, K/H,SS) GALV. STEEL. APPLY PLATES TO EACH FACE OF TRUSS AND, UNLESS OTHERWISE LOCATED ON THIS DESIGN, POSITION PER DRAWINGS 160A-Z. ANY INSPECTION OF PLATES FOLLOWED BY (1) SHALL BE PER ANNEX A3 OF TPI1-2002 SEC.3. A SEAL ON THIS DRAWING INDICATES ACCEPTANCE OF PROFESSIONAL ENGINEERING RESPONSIBILITY SOLELY FOR THE TRUSS COMPONENT DESIGN SHOWN. THE SUITABILITY AND USE OF THIS COMPONENT FOR ANY BUILDING IS THE RESPONSIBILITY OF THE BUILDING DESIGNER PER ANSI/TPI 1 SEC. 2.

JAMES F. COLLINS, JR. LICENSE No. 52212 STATE OF FLORIDA PROFESSIONAL ENGINEER

TC LL	20.0 PSF	REF	R215-- 49612
TC DL	10.0 PSF	DATE	02/17/09
BC DL	10.0 PSF	DRW	HCUSR215 09048001
BC LL	0.0 PSF	HC-ENG	DLJ/DLJ *
TOT.LD.	40.0 PSF	SEQN-	172341
DUR.FAC.	1.25	FROM	LRB
SPACING	24.0"	JREF-	1TP9215_Z01

Top chord 2x4 SP #2 N
Bot chord 2x4 SP #2 N
Webs 2x4 SP #2 N

Deflection meets L/240 live and L/180 total load.

The overall height of this truss excluding overhang is 1-7-3.

110 mph wind, 15.00 ft mean hgt, ASCE 7-02, CLOSED bldg, not located within 4.50 ft from roof edge, CAT II, EXP B, wind TC DL=5.0 psf, wind BC DL=5.0 psf. Iw=1.00 GCpi(+/-)=0.18

Wind reactions based on MWFRS pressures.

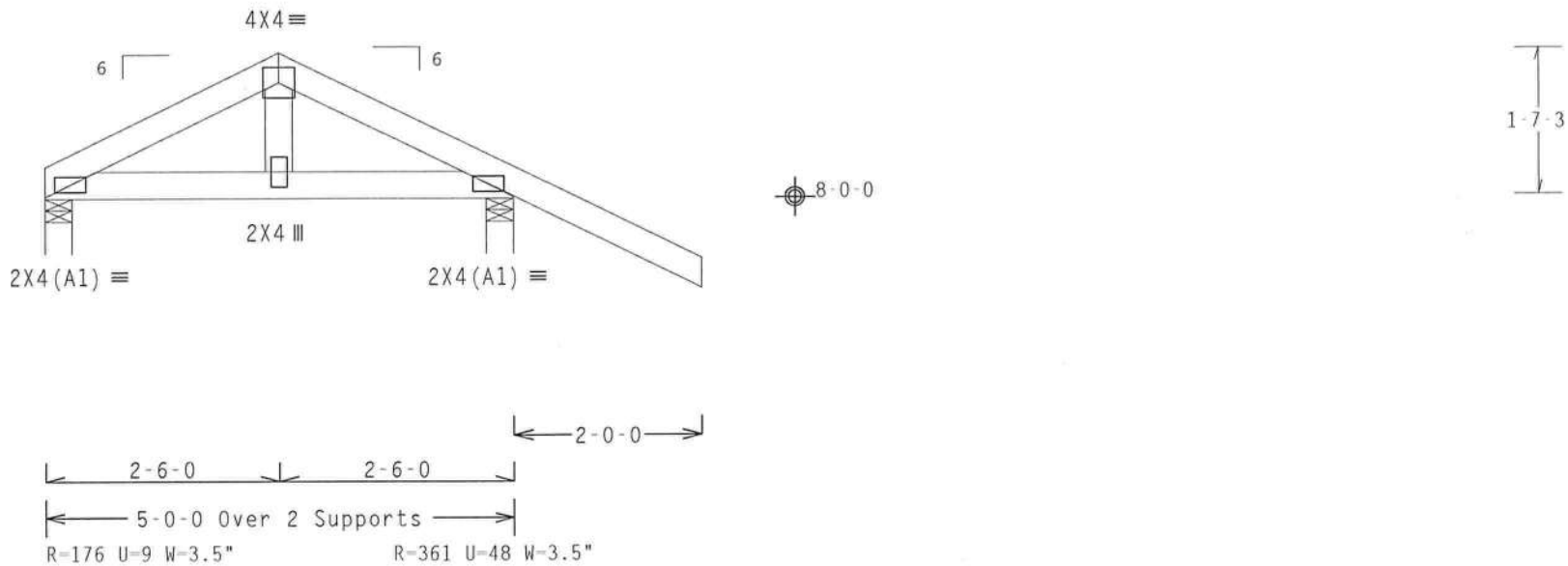

Design Crit: FBC CODE/TPI-2002(STD)

PLT TYP. Wave | FT/RT=20%(0%)/0(0) | 7.38.00.0810.02 | QTY:1 | FL/-/5/-/-/R/- | Scale =.5"/Ft.

ALPINE
ITW Building Components Group Inc.
Haines City, FL 33844
FL COA #0 278

WARNING TRUSSES REQUIRE EXTREME CARE IN FABRICATION, HANDLING, SHIPPING, INSTALLING AND BRACING. REFER TO BCSI (BUILDING COMPONENT SAFETY INFORMATION), PUBLISHED BY TPI (TRUSS PLATE INSTITUTE, 218 NORTH LEE STREET, SUITE 312, ALEXANDRIA, VA, 22314) AND WTCA (WOOD TRUSS COUNCIL OF AMERICA, 6300 ENTERPRISE LANE, MADISON, WI 53719) FOR SAFETY PRACTICES PRIOR TO PERFORMING THESE FUNCTIONS. UNLESS OTHERWISE INDICATED TOP CHORD SHALL HAVE PROPERLY ATTACHED STRUCTURAL PANELS AND BOTTOM CHORD SHALL HAVE A PROPERLY ATTACHED RIGID CEILING.

IMPORTANT FURNISH A COPY OF THIS DESIGN TO THE INSTALLATION CONTRACTOR. ITW BCG, INC. SHALL NOT BE RESPONSIBLE FOR ANY DEVIATION FROM THIS DESIGN; ANY FAILURE TO BUILD THE TRUSS IN CONFORMANCE WITH TPI; OR FABRICATING, HANDLING, SHIPPING, INSTALLING & BRACING OF TRUSSES. DESIGN CONFORMS WITH APPLICABLE PROVISIONS OF NDS (NATIONAL DESIGN SPEC, BY AF&PA) AND TPI. ITW BCG CONNECTOR PLATES ARE MADE OF 20/18/16GA (W,H/SS/K) ASTM A653 GRADE 40/60 (W, K/H,SS) GALV. STEEL. APPLY PLATES TO EACH FACE OF TRUSS AND, UNLESS OTHERWISE LOCATED ON THIS DESIGN, POSITION PER DRAWINGS 160A-Z. ANY INSPECTION OF PLATES FOLLOWED BY (1) SHALL BE PER ANNEX A3 OF TPI1-2002 SEC.3. A SEAL ON THIS DRAWING INDICATES ACCEPTANCE OF PROFESSIONAL ENGINEERING RESPONSIBILITY SOLELY FOR THE TRUSS COMPONENT DESIGN SHOWN. THE SUITABILITY AND USE OF THIS COMPONENT FOR ANY BUILDING IS THE RESPONSIBILITY OF THE BUILDING DESIGNER PER ANSI/TPI 1 SEC. 2.

JAMES F. JOLLINS, JR. LICENSE No. 52212 STATE OF FLORIDA PROFESSIONAL ENGINEER

TC LL	20.0 PSF	REF	R215-- 49613
TC DL	10.0 PSF	DATE	02/17/09
BC DL	10.0 PSF	DRW	HCUSR215 09048002
BC LL	0.0 PSF	HC-ENG	DLJ/DLJ *
TOT.LD.	40.0 PSF	SEQN-	172346
DUR.FAC.	1.25	FROM	LRB
SPACING	24.0"	JREF-	1TP9215_Z01

(6011-/HAMMOCK RES. /G-N CONSTRUCTION -- , ** - A4)

Top chord 2x4 SP #2 N :T2, T4, T5, T8 2x6 SP #2 N:
Bot chord 2x4 SP #2 N
Webs 2x4 SP #2 N

Left end vertical not exposed to wind pressure.

(A) Continuous lateral bracing equally spaced on member. Or 1x4 "T" brace. 80% length of web member. Same species & SRB grade or better, attached with 8d Box or Gun (0.113"x2.5",min.)nails @ 6" OC.

See DWGS A11015020109 & GBLLETIN0109 for more requirements.

110 mph wind, 15.00 ft mean hgt, ASCE 7-02, CLOSED bldg, Located anywhere in roof, CAT II, EXP B, wind TC DL=5.0 psf, wind BC DL=5.0 psf. Iw=1.00 GCpi(+/-)=0.18

Wind reactions based on MWFRS pressures.

Deflection meets L/240 live and L/180 total load.

The overall height of this truss excluding overhang is 11-8-1.

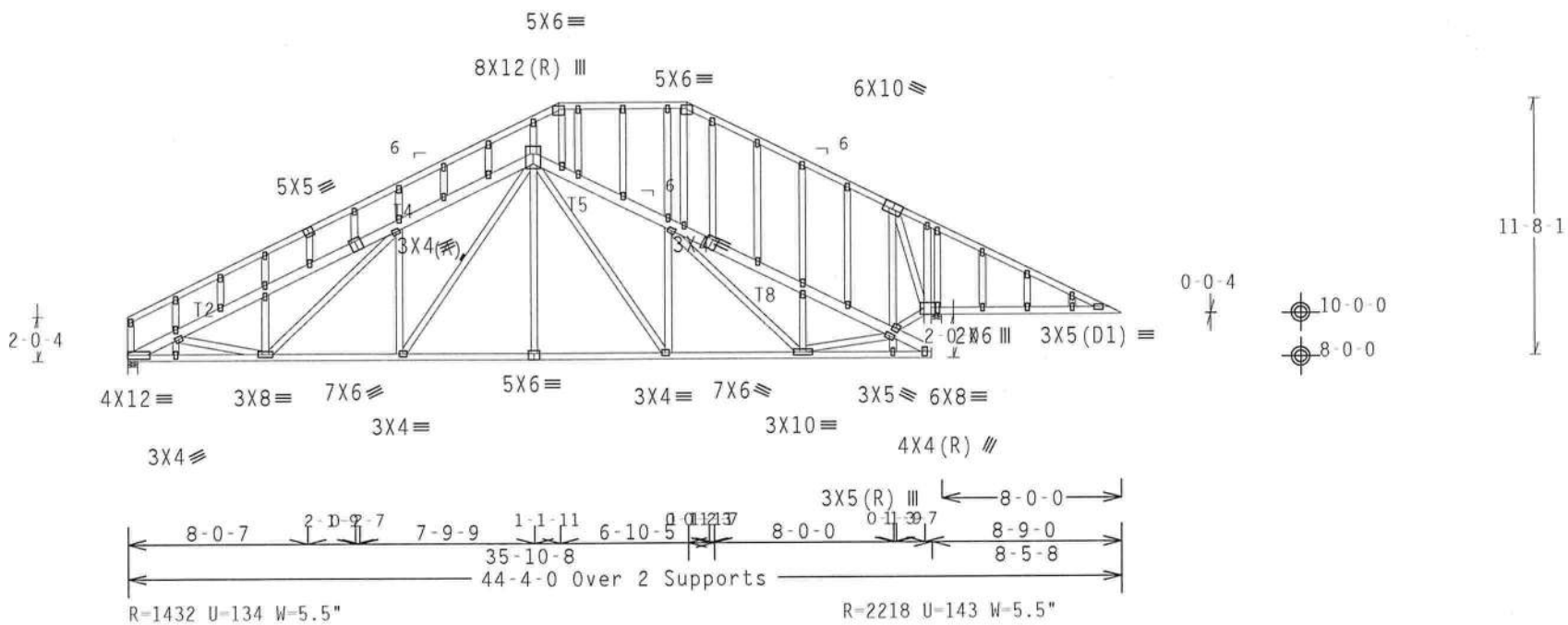

Note: All Plates Are 2X4 Except As Shown.

Design Crit: FBC CODE/TPI-2002(STD)

PLT TYP. Wave FT/RT=20%(0%)/0(0) 7.38.00.0810.02 QTY:1 FL/-/5/-/-/R/- Scale =.125"/Ft.

ALPINE
ITW Building Components Group Inc.
Haines City, FL 33844
FL COA #0 278

WARNING TRUSSES REQUIRE EXTREME CARE IN FABRICATION, HANDLING, SHIPPING, INSTALLING AND BRACING. REFER TO BCSI (BUILDING COMPONENT SAFETY INFORMATION), PUBLISHED BY TPI (TRUSS PLATE INSTITUTE, 218 NORTH LEE STREET, SUITE 312, ALEXANDRIA, VA, 22314) AND WTCA (WOOD TRUSS COUNCIL OF AMERICA, 6300 ENTERPRISE LANE, MADISON, WI 53719) FOR SAFETY PRACTICES PRIOR TO PERFORMING THESE FUNCTIONS. UNLESS OTHERWISE INDICATED TOP CHORD SHALL HAVE PROPERLY ATTACHED STRUCTURAL PANELS AND BOTTOM CHORD SHALL HAVE A PROPERLY ATTACHED RIGID CEILING.

IMPORTANT FURNISH A COPY OF THIS DESIGN TO THE INSTALLATION CONTRACTOR. ITW BCG, INC. SHALL NOT BE RESPONSIBLE FOR ANY DEVIATION FROM THIS DESIGN; ANY FAILURE TO BUILD THE TRUSS IN CONFORMANCE WITH TPI; OR FABRICATING, HANDLING, SHIPPING, INSTALLING & BRACING OF TRUSSES. DESIGN CONFORMS WITH APPLICABLE PROVISIONS OF NDS (NATIONAL DESIGN SPEC, BY AF&PA) AND TPI. ITW BCG CONNECTOR PLATES ARE MADE OF 20/18/16GA (W,H/SS/K) ASTM A653 GRADE 40/60 (W, K/H,SS) GALV. STEEL. APPLY PLATES TO EACH FACE OF TRUSS AND, UNLESS OTHERWISE LOCATED ON THIS DESIGN, POSITION PER DRAWINGS 160A-Z. ANY INSPECTION OF PLATES FOLLOWED BY (1) SHALL BE PER ANNEX A3 OF TPI1-2002 SEC.3. A SEAL ON THIS DRAWING INDICATES ACCEPTANCE OF PROFESSIONAL ENGINEERING RESPONSIBILITY SOLELY FOR THE TRUSS COMPONENT DESIGN SHOWN. THE SUITABILITY AND USE OF THIS COMPONENT FOR ANY BUILDING IS THE RESPONSIBILITY OF THE BUILDING DESIGNER PER ANSI/TPI 1 SEC. 2.

JAMES D. COLLINS, JR. LICENSED No. 52212 STATE OF FLORIDA PROFESSIONAL ENGINEER

TC LL	20.0 PSF	REF	R215-- 49614
TC DL	10.0 PSF	DATE	02/17/09
BC DL	10.0 PSF	DRW	HCUSR215 09048009
BC LL	0.0 PSF	HC-ENG	DLJ/DLJ
TOT.LD.	40.0 PSF	SEQN-	172453
DUR.FAC.	1.25	FROM	LRB
SPACING	24.0"	JREF-	1TP9215_Z01

(6011-/HAMMOCK RES. /G-N CONSTRUCTION -- , ** - A5)

Top chord 2x4 SP #2 N
Bot chord 2x4 SP #2 N
Webs 2x4 SP #2 N

(A) Continuous lateral bracing equally spaced on member. Or 1x4 "T" brace. 80% length of web member. Same species & SRB grade or better, attached with 8d Box or Gun (0.113"x2.5",min.)nails @ 6" OC.

The overall height of this truss excluding overhang is 9-5-3.

110 mph wind, 15.00 ft mean hgt, ASCE 7-02, CLOSED bldg, not located within 4.50 ft from roof edge, CAT II, EXP B, wind TC DL=5.0 psf, wind BC DL=5.0 psf. Iw=1.00 GCpi(+/-)=0.18

Wind reactions based on MWFRS pressures.

Deflection meets L/240 live and L/180 total load.

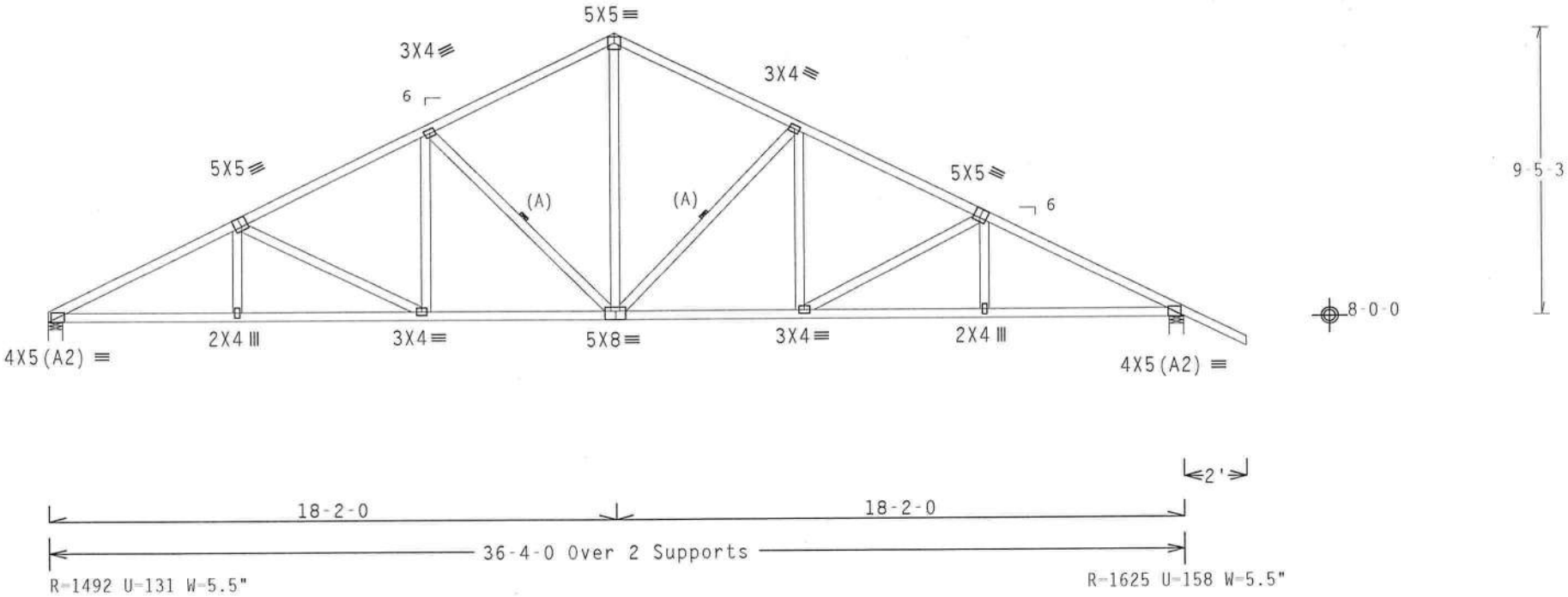

Design Crit: FBC CODE/TPI-2002(STD)
FT/RT=20%(0%)/0(0)

PLT TYP. Wave | 7.38.00.08 | QTY:1 | FL/-/5/-/-/R/- | Scale =.1875"/Ft.

ALPINE
ITW Building Components Group Inc.
Haines City, FL 33844
FL COA #0 278

WARNING TRUSSES REQUIRE EXTREME CARE IN FABRICATION, HANDLING, SHIPPING, INSTALLING AND BRACING. REFER TO BCSI (BUILDING COMPONENT SAFETY INFORMATION), PUBLISHED BY TPI (TRUSS PLATE INSTITUTE, 218 NORTH LEE STREET, SUITE 312, ALEXANDRIA, VA, 22314) AND WTCA (WOOD TRUSS COUNCIL OF AMERICA, 6300 ENTERPRISE LANE, MADISON, WI 53719) FOR SAFETY PRACTICES PRIOR TO PERFORMING THESE FUNCTIONS. UNLESS OTHERWISE INDICATED TOP CHORD SHALL HAVE PROPERLY ATTACHED STRUCTURAL PANELS AND BOTTOM CHORD SHALL HAVE A PROPERLY ATTACHED RIGID CEILING.

IMPORTANTFURNISH A COPY OF THIS DESIGN TO THE INSTALLATION CONTRACTOR. ITW BCG, INC. SHALL NOT BE RESPONSIBLE FOR ANY DEVIATION FROM THIS DESIGN; ANY FAILURE TO BUILD THE TRUSS IN COMFORMANCE WITH TPI; OR FABRICATING, HANDLING, SHIPPING, INSTALLING & BRACING OF TRUSSES.
DESIGN CONFORMS WITH APPLICABLE PROVISIONS OF NDS (NATIONAL DESIGN SPEC, BY AF&PA) AND TPI. ITW BCG CONNECTOR PLATES ARE MADE OF 20/18/16GA (W,H/SS/K) ASTM A653 GRADE 40/60 (W, K/H,SS) GALV. STEEL. APPLY PLATES TO EACH FACE OF TRUSS AND, UNLESS OTHERWISE LOCATED ON THIS DESIGN, POSITION PER DRAWINGS 160A-Z. ANY INSPECTION OF PLATES FOLLOWED BY (1) SHALL BE PER ANNEX A3 OF TPI1-2002 SEC.3. A SEAL ON THIS DRAWING INDICATES ACCEPTANCE OF PROFESSIONAL ENGINEERING RESPONSIBILITY SOLELY FOR THE TRUSS COMPONENT DESIGN SHOWN. THE SUITABILITY AND USE OF THIS COMPONENT FOR ANY BUILDING IS THE RESPONSIBILITY OF THE BUILDING DESIGNER PER ANSI/TPI 1 SEC. 2.

JAMES L. COLLINS, JR. LICENSE No. 52212 STATE OF FLORIDA PROFESSIONAL ENGINEER

TC LL	20.0 PSF	REF	R215-- 49615
TC DL	10.0 PSF	DATE	02/17/09
BC DL	10.0 PSF	DRW	HCUSR215 09048003
BC LL	0.0 PSF	HC-ENG	DLJ/DLJ *
TOT.LD.	40.0 PSF	SEQN-	172385
DUR.FAC.	1.25	FROM	LRB
SPACING	24.0"	JREF-	1TP9215_Z01

(6011-/HAMMOCK RES. /G-N CONSTRUCTION -- , ** - A6)

Top chord 2x4 SP #2 N
Bot chord 2x4 SP #2 N
Webs 2x4 SP #2 N

(A) Continuous lateral bracing equally spaced on member. Or 1x4 "T" brace. 80% length of web member. Same species & SRB grade or better, attached with 8d Box or Gun (0.113"x2.5",min.)nails @ 6" OC.

The overall height of this truss excluding overhang is 9-5-3.

110 mph wind, 15.00 ft mean hgt, ASCE 7-02, CLOSED bldg, not located within 4.50 ft from roof edge, CAT II, EXP B, wind TC DL=5.0 psf, wind BC DL=5.0 psf. Iw=1.00 GCpi(+/-)=0.18

Wind reactions based on MWFRS pressures.

Deflection meets L/240 live and L/180 total load.

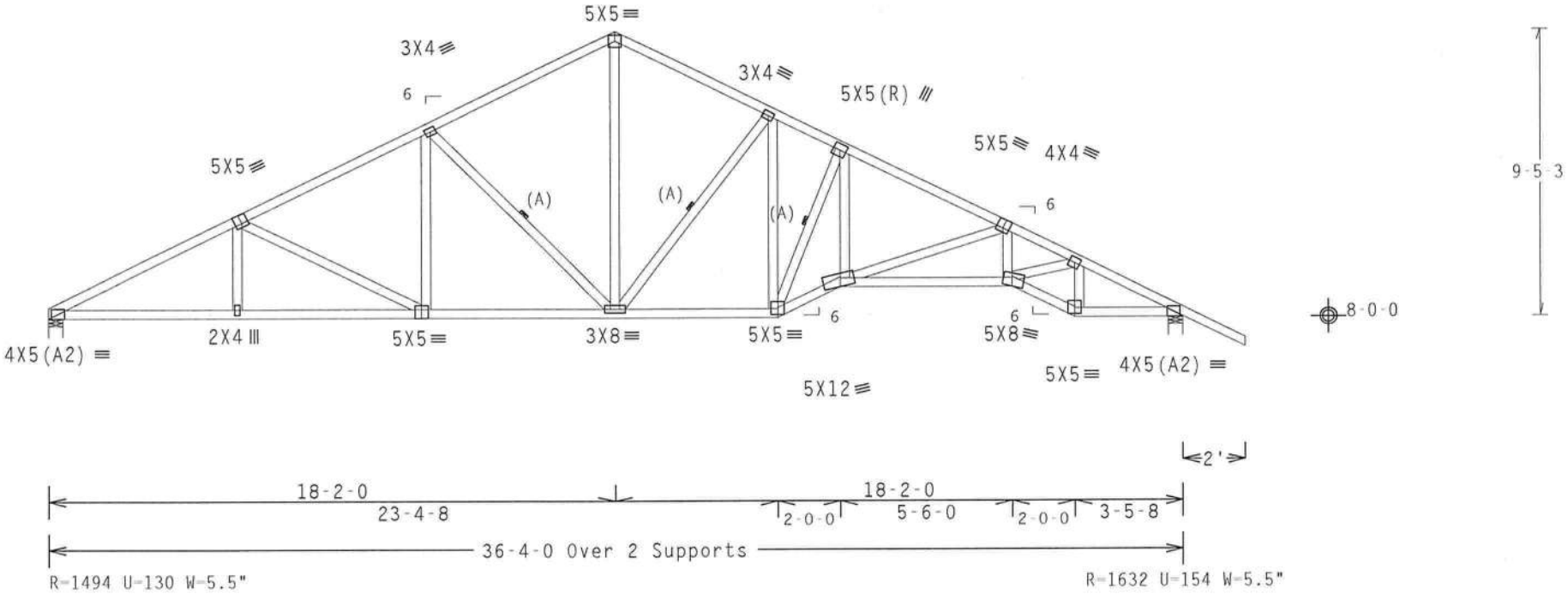

Design Crit: FBC CODE/TPI-2002(STD)

PLT TYP. Wave FT/RT=20%(0%)/0(0) 7.38.00.081 QTY:3 FL/-/5/-/-/R/- Scale =.1875"/Ft.

ALPINE
ITW Building Components Group Inc.
Haines City, FL 33844
FL COA #0 278

WARNING TRUSSES REQUIRE EXTREME CARE IN FABRICATION, HANDLING, SHIPPING, INSTALLING AND BRACING. REFER TO BCSI (BUILDING COMPONENT SAFETY INFORMATION), PUBLISHED BY TPI (TRUSS PLATE INSTITUTE, 218 NORTH LEE STREET, SUITE 312, ALEXANDRIA, VA, 22314) AND WTCA (WOOD TRUSS COUNCIL OF AMERICA, 6300 ENTERPRISE LANE, MADISON, WI 53719) FOR SAFETY PRACTICES PRIOR TO PERFORMING THESE FUNCTIONS. UNLESS OTHERWISE INDICATED TOP CHORD SHALL HAVE PROPERLY ATTACHED STRUCTURAL PANELS AND BOTTOM CHORD SHALL HAVE A PROPERLY ATTACHED RIGID CEILING.

IMPORTANTFURNISH A COPY OF THIS DESIGN TO THE INSTALLATION CONTRACTOR. ITW BCG, INC. SHALL NOT BE RESPONSIBLE FOR ANY DEVIATION FROM THIS DESIGN; ANY FAILURE TO BUILD THE TRUSS IN COMFORMANCE WITH TPI; OR FABRICATING, HANDLING, SHIPPING, INSTALLING & BRACING OF TRUSSES.
DESIGN CONFORMS WITH APPLICABLE PROVISIONS OF NDS (NATIONAL DESIGN SPEC. BY AF&PA) AND TPI. ITW BCG CONNECTOR PLATES ARE MADE OF 20/18/16GA (W,H/SS/K) ASTM A653 GRADE 40/60 (W, K/H,SS) GALV. STEEL. APPLY PLATES TO EACH FACE OF TRUSS AND, UNLESS OTHERWISE LOCATED ON THIS DESIGN, POSITION PER DRAWINGS 160A-Z. ANY INSPECTION OF PLATES FOLLOWED BY (1) SHALL BE PER ANNEX A3 OF TPI1-2002 SEC.3. A SEAL ON THIS DRAWING INDICATES ACCEPTANCE OF PROFESSIONAL ENGINEERING RESPONSIBILITY SOLELY FOR THE TRUSS COMPONENT DESIGN SHOWN. THE SUITABILITY AND USE OF THIS COMPONENT FOR ANY BUILDING IS THE RESPONSIBILITY OF THE BUILDING DESIGNER PER ANSI/TPI 1 SEC. 2.

JAMES F. COLLINS, JR. LICENSE No. 52212 STATE OF FLORIDA PROFESSIONAL ENGINEER

Feb

TC LL	20.0 PSF	REF	R215-- 49616
TC DL	10.0 PSF	DATE	02/17/09
BC DL	10.0 PSF	DRW	HCUSR215 09048004
BC LL	0.0 PSF	HC-ENG	DLJ/DLJ *
TOT.LD.	40.0 PSF	SEQN-	172379
DUR.FAC.	1.25	FROM	LRB
SPACING	24.0"	JREF-	1TP9215_Z01

(6011-/HAMMOCK RES. /G-N CONSTRUCTION -- , ** - A7)

Top chord 2x4 SP #2 N
Bot chord 2x4 SP #2 N
Webs 2x4 SP #2 N

(A) Continuous lateral bracing equally spaced on member. Or 1x4 "T" brace. 80% length of web member. Same species & SRB grade or better, attached with 8d Box or Gun (0.113"x2.5",min.)nails @ 6" OC.

The overall height of this truss excluding overhang is 9-5-3.

110 mph wind, 15.00 ft mean hgt, ASCE 7-02, CLOSED bldg, not located within 4.50 ft from roof edge, CAT II, EXP B, wind TC DL=5.0 psf, wind BC DL=5.0 psf. Iw=1.00 GCpi(+/-)=0.18

Wind reactions based on MWFRS pressures.

Deflection meets L/240 live and L/180 total load.

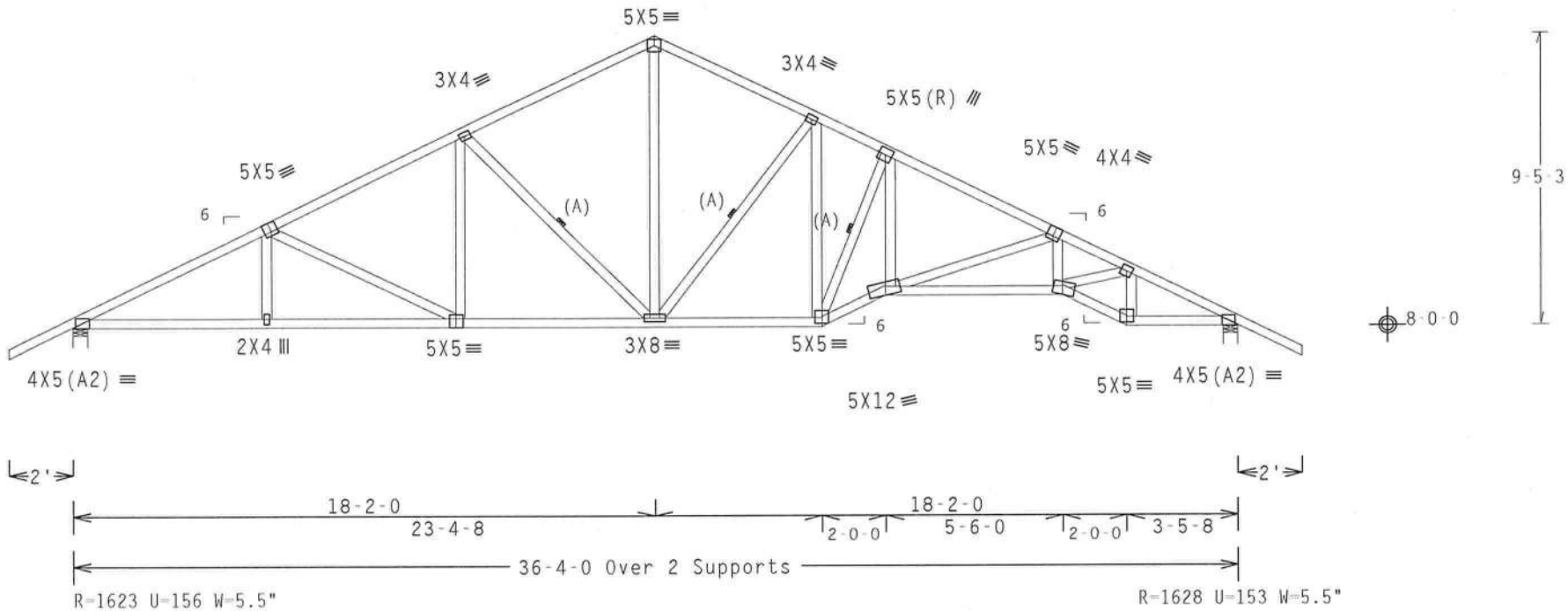

Design Crit: FBC CODE/TPI-2002(STD)
FT/RT=20%(0%)/0(0)

PLT TYP. Wave | 7.38.00.0818.02 | QTY:2 | FL/-/5/-/-/R/- | Scale =.1875"/Ft.

ALPINE
ITW Building Components Group Inc.
Haines City, FL 33844
FL COA #0 278

WARNING TRUSSES REQUIRE EXTREME CARE IN FABRICATION, HANDLING, SHIPPING, INSTALLING AND BRACING. REFER TO BCSI (BUILDING COMPONENT SAFETY INFORMATION), PUBLISHED BY TPI (TRUSS PLATE INSTITUTE, 218 NORTH LEE STREET, SUITE 312, ALEXANDRIA, VA. 22314) AND WTCA (WOOD TRUSS COUNCIL OF AMERICA, 6300 ENTERPRISE LANE, MADISON, WI 53719) FOR SAFETY PRACTICES PRIOR TO PERFORMING THESE FUNCTIONS. UNLESS OTHERWISE INDICATED TOP CHORD SHALL HAVE PROPERLY ATTACHED STRUCTURAL PANELS AND BOTTOM CHORD SHALL HAVE A PROPERLY ATTACHED RIGID CEILING.

IMPORTANT FURNISH A COPY OF THIS DESIGN TO THE INSTALLATION CONTRACTOR. ITW BCG, INC. SHALL NOT BE RESPONSIBLE FOR ANY DEVIATION FROM THIS DESIGN; ANY FAILURE TO BUILD THE TRUSS IN CONFORMANCE WITH TPI; OR FABRICATING, HANDLING, SHIPPING, INSTALLING & BRACING OF TRUSSES.
DESIGN CONFORMS WITH APPLICABLE PROVISIONS OF NDS (NATIONAL DESIGN SPEC. BY AF&PA) AND TPI. ITW BCG CONNECTOR PLATES ARE MADE OF 20/18/16GA (W,H/SS/K) ASTM A653 GRADE 40/60 (H, K/H,SS) GALV. STEEL. APPLY PLATES TO EACH FACE OF TRUSS AND, UNLESS OTHERWISE LOCATED ON THIS DESIGN, POSITION PER DRAWINGS 160A-Z. ANY INSPECTION OF PLATES FOLLOWED BY (I) SHALL BE PER ANNEX A3 OF TPI1-2002 SEC.3. A SEAL ON THIS DRAWING INDICATES ACCEPTANCE OF PROFESSIONAL ENGINEERING RESPONSIBILITY SOLELY FOR THE TRUSS COMPONENT DESIGN SHOWN. THE SUITABILITY AND USE OF THIS COMPONENT FOR ANY BUILDING IS THE RESPONSIBILITY OF THE BUILDING DESIGNER PER ANSI/TPI 1 SEC. 2.

JAMES P. COLLINS, JR. LICENSE No. 52212 STATE OF FLORIDA PROFESSIONAL ENGINEER

TC LL	20.0 PSF	REF	R215-- 49617
TC DL	10.0 PSF	DATE	02/17/09
BC DL	10.0 PSF	DRW	HCUSR215 09048005
BC LL	0.0 PSF	HC-ENG	DLJ/DLJ *
TOT.LD.	40.0 PSF	SEQN-	172373
DUR.FAC.	1.25	FROM	LRB
SPACING	24.0"	JREF-	1TP9215_Z01

(6011-/HAMMOCK RES. /G-N CONSTRUCTION -- , ** - A8)

Top chord 2x4 SP #2 N
Bot chord 2x4 SP #2 N
Webs 2x4 SP #2 N

(B) Continuous lateral bracing equally spaced on member.

(A) Continuous lateral bracing equally spaced on member. Or 1x4 "T" brace. 80% length of web member. Same species & SRB grade or better, attached with 8d Box or Gun (0.113"x2.5",min.)nails @ 6" OC.

110 mph wind, 15.00 ft mean hgt, ASCE 7-02, CLOSED bldg, Located anywhere in roof, CAT II, EXP B, wind TC DL=5.0 psf, wind BC DL=5.0 psf. Iw=1.00 GCpi(+/-)=0.18

Wind reactions based on MWFRS pressures.

Deflection meets L/240 live and L/180 total load.

The overall height of this truss excluding overhang is 9-5-3.

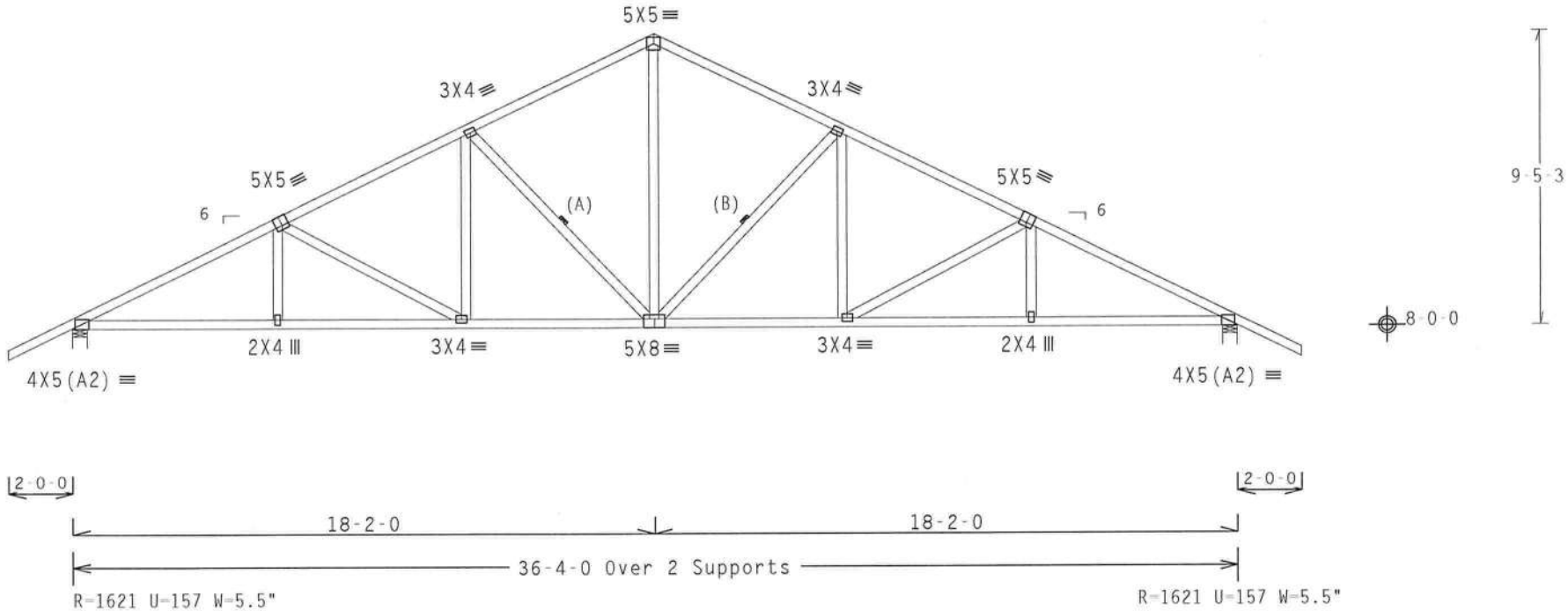

Design Crit: FBC CODE/TPI-2002(STD)

PLT TYP. Wave | FT/RT=20%(0%)/0(0) | 7.38.00.181C.06 | QTY:1 | FL/-/5/-/-/R/- | Scale =.1875"/Ft.

ALPINE
ITW Building Components Group Inc.
Haines City, FL 33844
FL COA #0 278

WARNING TRUSSES REQUIRE EXTREME CARE IN FABRICATION, HANDLING, SHIPPING, INSTALLING AND BRACING. REFER TO BCSI (BUILDING COMPONENT SAFETY INFORMATION), PUBLISHED BY TPI (TRUSS PLATE INSTITUTE, 218 NORTH LEE STREET, SUITE 312, ALEXANDRIA, VA, 22314) AND WTCA (WOOD TRUSS COUNCIL OF AMERICA, 6300 ENTERPRISE LANE, MADISON, WI 53719) FOR SAFETY PRACTICES PRIOR TO PERFORMING THESE FUNCTIONS. UNLESS OTHERWISE INDICATED TOP CHORD SHALL HAVE PROPERLY ATTACHED STRUCTURAL PANELS AND BOTTOM CHORD SHALL HAVE A PROPERLY ATTACHED RIGID CEILING.

IMPORTANTFURNISH A COPY OF THIS DESIGN TO THE INSTALLATION CONTRACTOR. ITW BCG, INC. SHALL NOT BE RESPONSIBLE FOR ANY DEVIATION FROM THIS DESIGN; ANY FAILURE TO BUILD THE TRUSS IN COMFORMANCE WITH TPI; OR FABRICATING, HANDLING, SHIPPING, INSTALLING & BRACING OF TRUSSES.
DESIGN CONFORMS WITH APPLICABLE PROVISIONS OF NDS (NATIONAL DESIGN SPEC. BY AF&PA) AND TPI. ITW BCG CONNECTOR PLATES ARE MADE OF 20/18/16GA (W,H/SS/K) ASTM A653 GRADE 40/60 (W, K/H,SS) GALV. STEEL. APPLY PLATES TO EACH FACE OF TRUSS AND, UNLESS OTHERWISE LOCATED ON THIS DESIGN, POSITION PER DRAWINGS 160A-Z. ANY INSPECTION OF PLATES FOLLOWED BY (1) SHALL BE PER ANNEX A3 OF TPI1-2002 SEC.3. A SEAL ON THIS DRAWING INDICATES ACCEPTANCE OF PROFESSIONAL ENGINEERING RESPONSIBILITY SOLELY FOR THE TRUSS COMPONENT DESIGN SHOWN. THE SUITABILITY AND USE OF THIS COMPONENT FOR ANY BUILDING IS THE RESPONSIBILITY OF THE BUILDING DESIGNER PER ANSI/TPI 1 SEC. 2.

JAMES F. COLLINS, JR. LICENSE No. 52212 STATE OF FLORIDA PROFESSIONAL ENGINEER

TC LL	20.0 PSF	REF	R215-- 49618
TC DL	10.0 PSF	DATE	02/17/09
BC DL	10.0 PSF	DRW	HCUSR215 09048006
BC LL	0.0 PSF	HC-ENG	DLJ/DLJ *
TOT.LD.	40.0 PSF	SEQN-	172360
DUR.FAC.	1.25	FROM	LRB
SPACING	24.0"	JREF-	1TP9215_Z01

(6011-/HAMMOCK RES. /G-N CONSTRUCTION -- , ** - A9)

Top chord 2x4 SP #2 N
Bot chord 2x4 SP #2 N
Webs 2x4 SP #2 N

110 mph wind, 20.73 ft mean hgt, ASCE 7-02, CLOSED bldg, not located within 4.50 ft from roof edge, CAT II, EXP B, wind TC DL=5.0 psf, wind BC DL=2.0 psf. Iw=1.00 GCpi(+/-)=0.18

Wind reactions based on MWFRS pressures.

The overall height of this truss excluding overhang is 1-5-3.

Refer to DWG PB1200109 for piggyback details.

SPECIAL LOADS
------(LUMBER DUR.FAC.=1.25 / PLATE DUR.FAC.=1.25)

TC - From	62 PLF	at	-0.94	to	62 PLF	at 1.88
TC - From	62 PLF	at	1.88	to	62 PLF	at 4.69
BC - From	4 PLF	at	-0.94	to	4 PLF	at 4.69

In lieu of rigid ceiling use purlins to brace BC @ 24" OC.

Deflection meets L/240 live and L/180 total load.

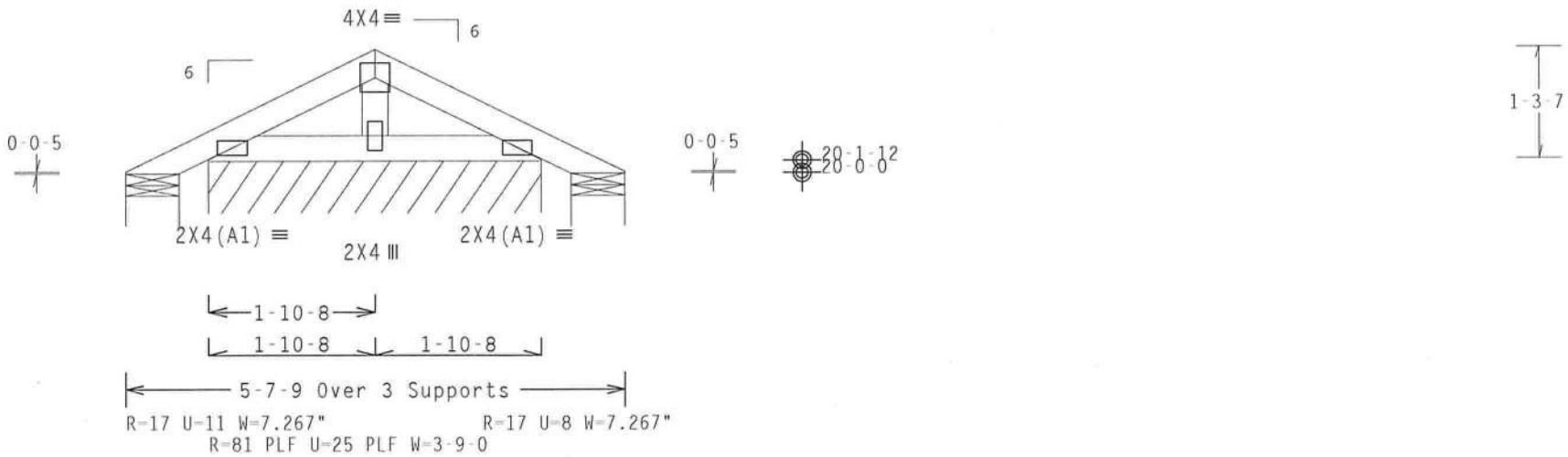

Design Crit: FBC CODE/TPI-2002(STD)

PLT TYP. Wave | FT/RT=20%(0%)/0(0) | 7.38.00-A010.02 | QTY:2 | FL/-/5/-/-/R/- | Scale =.5"/Ft.

ALPINE
ITW Building Components Group Inc.
Haines City, FL 33844
FL COA #0 278

WARNING TRUSSES REQUIRE EXTREME CARE IN FABRICATION, HANDLING, SHIPPING, INSTALLING AND BRACING. REFER TO BCSI (BUILDING COMPONENT SAFETY INFORMATION), PUBLISHED BY TPI (TRUSS PLATE INSTITUTE, 218 NORTH LEE STREET, SUITE 312, ALEXANDRIA, VA, 22314) AND WTCA (WOOD TRUSS COUNCIL OF AMERICA, 6300 ENTERPRISE LANE, MADISON, WI 53719) FOR SAFETY PRACTICES PRIOR TO PERFORMING THESE FUNCTIONS. UNLESS OTHERWISE INDICATED TOP CHORD SHALL HAVE PROPERLY ATTACHED STRUCTURAL PANELS AND BOTTOM CHORD SHALL HAVE A PROPERLY ATTACHED RIGID CEILING.

IMPORTANTFURNISH A COPY OF THIS DESIGN TO THE INSTALLATION CONTRACTOR. ITW BCG, INC. SHALL NOT BE RESPONSIBLE FOR ANY DEVIATION FROM THIS DESIGN; ANY FAILURE TO BUILD THE TRUSS IN CONFORMANCE WITH TPI; OR FABRICATING, HANDLING, SHIPPING, INSTALLING & BRACING OF TRUSSES.
DESIGN CONFORMS WITH APPLICABLE PROVISIONS OF NDS (NATIONAL DESIGN SPEC. BY AF&PA) AND TPI. ITW BCG CONNECTOR PLATES ARE MADE OF 20/18/16GA (W,H/SS/K) ASTM A653 GRADE 40/60 (H, K/H,SS) GALV. STEEL. APPLY PLATES TO EACH FACE OF TRUSS AND, UNLESS OTHERWISE LOCATED ON THIS DESIGN, POSITION PER DRAWINGS 160A-Z. ANY INSPECTION OF PLATES FOLLOWED BY (1) SHALL BE PER ANNEX A3 OF TPI1-2002 SEC.3. A SEAL ON THIS DRAWING INDICATES ACCEPTANCE OF PROFESSIONAL ENGINEERING RESPONSIBILITY SOLELY FOR THE TRUSS COMPONENT DESIGN SHOWN. THE SUITABILITY AND USE OF THIS COMPONENT FOR ANY BUILDING IS THE RESPONSIBILITY OF THE BUILDING DESIGNER PER ANSI/TPI 1 SEC. 2.

JAMES H. COLLINS, JR. LICENSE No. 52212 STATE OF FLORIDA PROFESSIONAL ENGINEER

TC LL	20.0 PSF	REF	R215-- 49619
TC DL	10.0 PSF	DATE	02/17/09
BC DL	10.0 PSF	DRW	HCUSR215 09048010
BC LL	0.0 PSF	HC-ENG	DLJ/DLJ
TOT.LD.	40.0 PSF	SEQN-	172464
DUR.FAC.	1.25	FROM	LRB
SPACING	24.0"	JREF-	1TP9215_Z01

(6011-/HAMMOCK RES. /G-N CONSTRUCTION -- , ** - A10)

Top chord 2x4 SP #2 N
Bot chord 2x4 SP #2 N
Webs 2x4 SP #2 N

(B) Continuous lateral bracing equally spaced on member.

(A) Continuous lateral bracing equally spaced on member. Or 1x4 "T" brace. 80% length of web member. Same species & SRB grade or better, attached with 8d Box or Gun (0.113"x2.5",min.)nails @ 6" OC.

110 mph wind, 15.00 ft mean hgt, ASCE 7-02, CLOSED bldg, Located anywhere in roof, CAT II, EXP B, wind TC DL=5.0 psf, wind BC DL=5.0 psf. Iw=1.00 GCpi(+/-)=0.18

Wind reactions based on MWFRS pressures.

Deflection meets L/240 live and L/180 total load.

The overall height of this truss excluding overhang is 9-5-3.

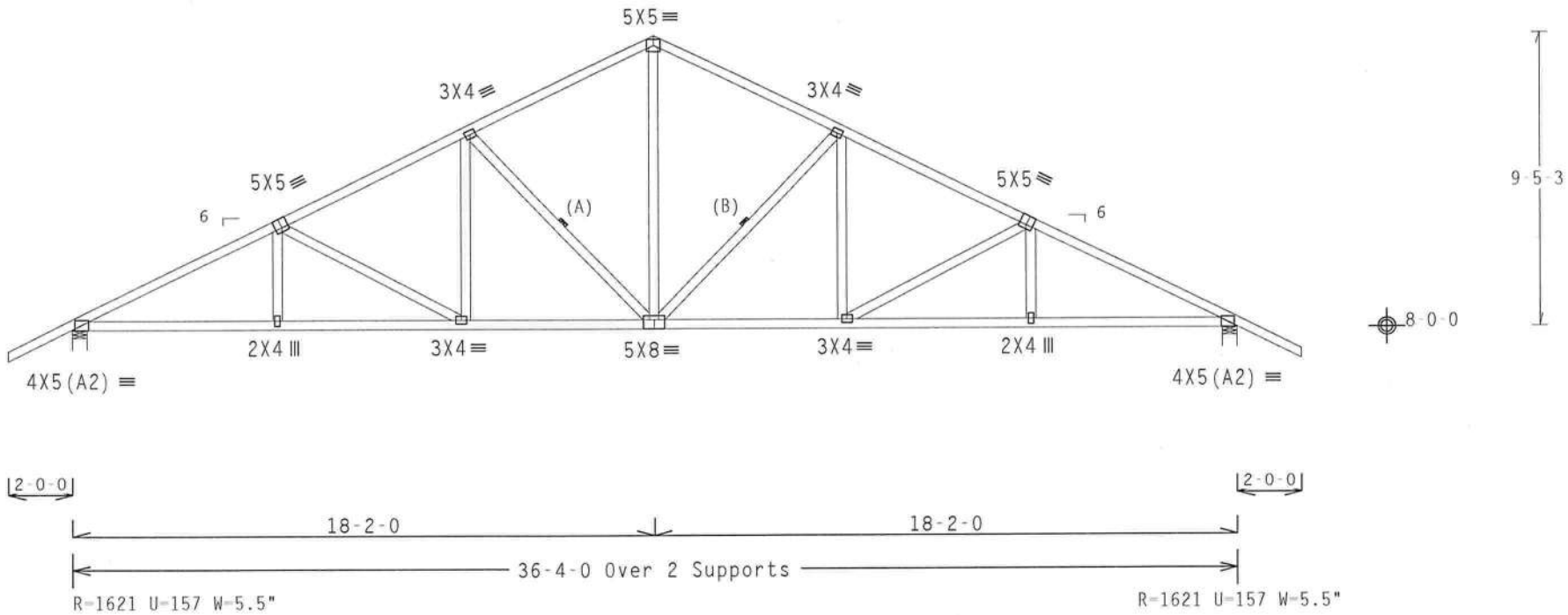

Design Crit: FBC CODE/TPI-2002(STD)

PLT TYP. Wave | FT/RT=20%(0%)/0(0) | 7.38.00.0816.02 | QTY:6 | FL/-/5/-/-/R/- | Scale =.1875"/Ft.

ALPINE
ITW Building Components Group Inc.
Haines City, FL 33844
FL COA #0 278

WARNING TRUSSES REQUIRE EXTREME CARE IN FABRICATION, HANDLING, SHIPPING, INSTALLING AND BRACING. REFER TO BCSI (BUILDING COMPONENT SAFETY INFORMATION), PUBLISHED BY TPI (TRUSS PLATE INSTITUTE, 218 NORTH LEE STREET, SUITE 312, ALEXANDRIA, VA, 22314) AND WTCA (WOOD TRUSS COUNCIL OF AMERICA, 6300 ENTERPRISE LANE, MADISON, WI 53719) FOR SAFETY PRACTICES PRIOR TO PERFORMING THESE FUNCTIONS. UNLESS OTHERWISE INDICATED TOP CHORD SHALL HAVE PROPERLY ATTACHED STRUCTURAL PANELS AND BOTTOM CHORD SHALL HAVE A PROPERLY ATTACHED RIGID CEILING.

IMPORTANT FURNISH A COPY OF THIS DESIGN TO THE INSTALLATION CONTRACTOR. ITW BCG, INC. SHALL NOT BE RESPONSIBLE FOR ANY DEVIATION FROM THIS DESIGN; ANY FAILURE TO BUILD THE TRUSS IN CONFORMANCE WITH TPI; OR FABRICATING, HANDLING, SHIPPING, INSTALLING & BRACING OF TRUSSES. DESIGN CONFORMS WITH APPLICABLE PROVISIONS OF NDS (NATIONAL DESIGN SPEC. BY AF&PA) AND TPI. ITW BCG CONNECTOR PLATES ARE MADE OF 20/18/16GA (W,H/SS/K) ASTM A653 GRADE 40/60 (W, K/H,SS) GALV. STEEL. APPLY PLATES TO EACH FACE OF TRUSS AND. UNLESS OTHERWISE LOCATED ON THIS DESIGN, POSITION PER DRAWINGS 160A-Z. ANY INSPECTION OF PLATES FOLLOWED BY (1) SHALL BE PER ANNEX A3 OF TPI1-2002 SEC.3. A SEAL ON THIS DRAWING INDICATES ACCEPTANCE OF PROFESSIONAL ENGINEERING RESPONSIBILITY SOLELY FOR THE TRUSS COMPONENT DESIGN SHOWN. THE SUITABILITY AND USE OF THIS COMPONENT FOR ANY BUILDING IS THE RESPONSIBILITY OF THE BUILDING DESIGNER PER ANSI/TPI 1 SEC. 2.

JAMES E. COLLINS, JR. LICENSE No. 52212 STATE OF FLORIDA PROFESSIONAL ENGINEER

TC LL	20.0 PSF	REF	R215-- 49620
TC DL	10.0 PSF	DATE	02/17/09
BC DL	10.0 PSF	DRW	HCUSR215 09048007
BC LL	0.0 PSF	HC-ENG	DLJ/DLJ *
TOT.LD.	40.0 PSF	SEQN-	172366
DUR.FAC.	1.25	FROM	LRB
SPACING	24.0"	JREF-	1TP9215_Z01

Top chord 2x4 SP #2 N
Bot chord 2x4 SP #2 N :B1 2x4 SP SS:
Webs 2x4 SP #2 N

Calculated horizontal deflection is 0.19" due to live load and 0.19" due to dead load.

(A) Continuous lateral bracing equally spaced on member. Or 2x6 "T" brace. 80% length of web member. Same species & grade or better, attached with 16d Box or Gun (0.135"x3.5",min.)nails @ 6" OC.

Shim all supports to solid bearing.

110 mph wind, 15.00 ft mean hgt, ASCE 7-02, CLOSED bldg, not located within 6.50 ft from roof edge, CAT II, EXP B, wind TC DL=5.0 psf, wind BC DL=5.0 psf. Iw=1.00 GCpi(+/-)=0.18

Wind reactions based on MWFRS pressures.

(B) Continuous lateral bracing equally spaced on member. Or 1x4 "T" brace. 80% length of web member. Same species & SRB grade or better, attached with 8d Box or Gun (0.113"x2.5",min.)nails @ 6" OC.

Deflection meets L/240 live and L/180 total load.

The overall height of this truss excluding overhang is 10-0-0.

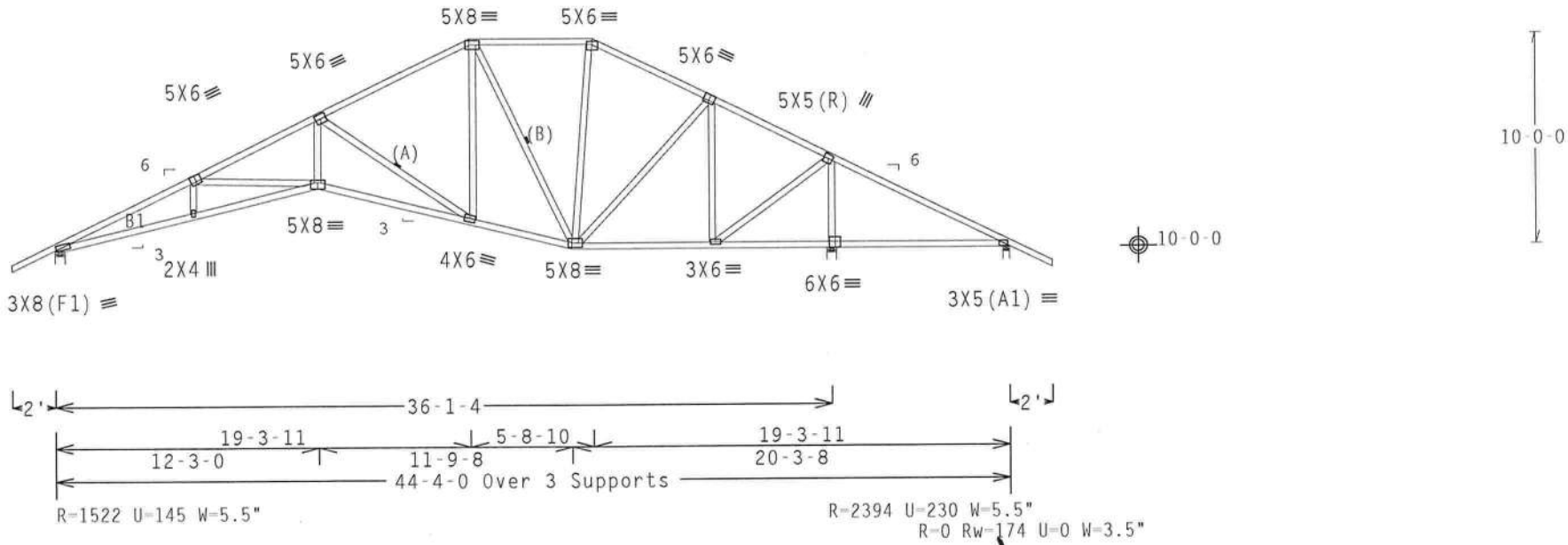

Design Crit: FBC CODE/TPI-2002(STD)
FT/RT=20%(0%)/0(0)

PLT TYP. Wave | 7.38.00.0810.0 | QTY:8 | FL/-/5/-/-/R/- | Scale =.125"/Ft.

ALPINE
ITW Building Components Group Inc.
Haines City, FL 33844
FL COA #0 278

WARNING TRUSSES REQUIRE EXTREME CARE IN FABRICATION, HANDLING, SHIPPING, INSTALLING AND BRACING. REFER TO BCSI (BUILDING COMPONENT SAFETY INFORMATION), PUBLISHED BY TPI (TRUSS PLATE INSTITUTE, 218 NORTH LEE STREET, SUITE 312, ALEXANDRIA, VA, 22314) AND WTCA (WOOD TRUSS COUNCIL OF AMERICA, 6300 ENTERPRISE LANE, MADISON, WI 53719) FOR SAFETY PRACTICES PRIOR TO PERFORMING THESE FUNCTIONS. UNLESS OTHERWISE INDICATED TOP CHORD SHALL HAVE PROPERLY ATTACHED STRUCTURAL PANELS AND BOTTOM CHORD SHALL HAVE A PROPERLY ATTACHED RIGID CEILING.

IMPORTANT FURNISH A COPY OF THIS DESIGN TO THE INSTALLATION CONTRACTOR. ITW BCG, INC. SHALL NOT BE RESPONSIBLE FOR ANY DEVIATION FROM THIS DESIGN; ANY FAILURE TO BUILD THE TRUSS IN CONFORMANCE WITH TPI; OR FABRICATING, HANDLING, SHIPPING, INSTALLING & BRACING OF TRUSSES.
DESIGN CONFORMS WITH APPLICABLE PROVISIONS OF NDS (NATIONAL DESIGN SPEC. BY AF&PA) AND TPI. ITW BCG CONNECTOR PLATES ARE MADE OF 20/18/16GA (W,H/SS/K) ASTM A653 GRADE 40/60 (H, K/H,SS) GALV. STEEL. APPLY PLATES TO EACH FACE OF TRUSS AND, UNLESS OTHERWISE LOCATED ON THIS DESIGN, POSITION PER DRAWINGS 160A-Z. ANY INSPECTION OF PLATES FOLLOWED BY (1) SHALL BE PER ANNEX A3 OF TPI1-2002 SEC.3. A SEAL ON THIS DRAWING INDICATES ACCEPTANCE OF PROFESSIONAL ENGINEERING RESPONSIBILITY SOLELY FOR THE TRUSS COMPONENT DESIGN SHOWN. THE SUITABILITY AND USE OF THIS COMPONENT FOR ANY BUILDING IS THE RESPONSIBILITY OF THE BUILDING DESIGNER PER ANSI/TPI 1 SEC. 2.

JAMES F. COLLINS, JR. LICENSE No. 52212 STATE OF FLORIDA PROFESSIONAL ENGINEER

TC LL	20.0 PSF	REF	R215-- 49621
TC DL	10.0 PSF	DATE	02/17/09
BC DL	10.0 PSF	DRW	HCUSR215 09048011
BC LL	0.0 PSF	HC-ENG	DLJ/DLJ
TOT.LD.	40.0 PSF	SEQN-	172421
DUR.FAC.	1.25	FROM	LRB
SPACING	24.0"	JREF-	1TP9215_Z01

(6011-/HAMMOCK RES. /G-N CONSTRUCTION -- , ** - A13)

Top chord 2x4 SP #2 N
Bot chord 2x4 SP #2 N :B1 2x4 SP #2 Dense:
Webs 2x4 SP #2 N

Calculated horizontal deflection is 0.19" due to live load and 0.20" due to dead load.

(A) Continuous lateral bracing equally spaced on member.

Deflection meets L/240 live and L/180 total load.

The overall height of this truss excluding overhang is 10-0-0.

(**) 1 plate(s) require special positioning. Refer to scaled plate plot details for special positioning requirements.

110 mph wind, 15.00 ft mean hgt, ASCE 7-02, CLOSED bldg, not located within 6.50 ft from roof edge, CAT II, EXP B, wind TC DL=5.0 psf, wind BC DL=5.0 psf. Iw=1.00 GCpi(+/-)=0.18

Wind reactions based on MWFRS pressures.

Shim all supports to solid bearing.

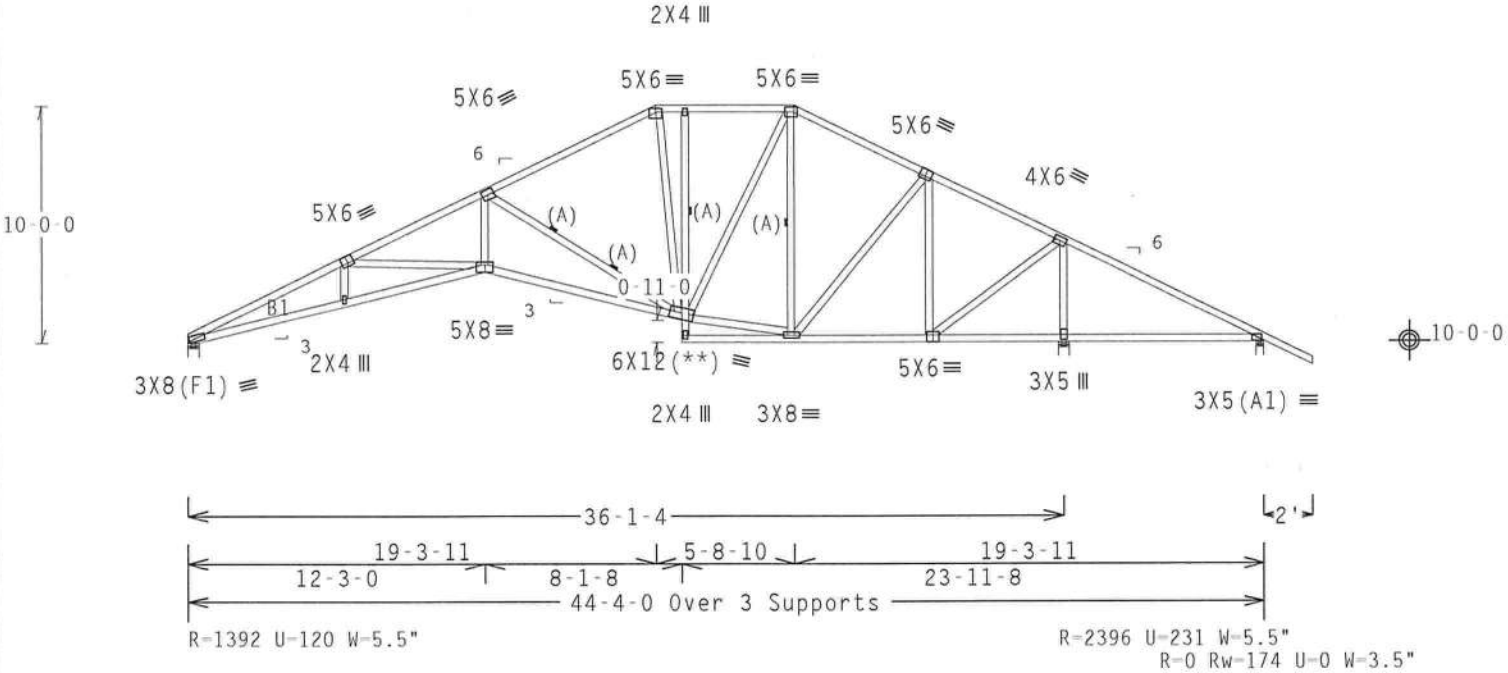

Design Crit: FBC CODE/TPI-2002(STD)

PLT TYP. Wave | FT/RT=20%(0%)/0(0) | 7.38.00 (810.02) | QTY:5 | FL/-/5/-/-/R/- | Scale =.125"/Ft.

ALPINE
ITW Building Components Group Inc.
Haines City, FL 33844
FL COA #0 278

WARNING TRUSSES REQUIRE EXTREME CARE IN FABRICATION, HANDLING, SHIPPING, INSTALLING AND BRACING. REFER TO BCSI (BUILDING COMPONENT SAFETY INFORMATION), PUBLISHED BY TPI (TRUSS PLATE INSTITUTE, 218 NORTH LEE STREET, SUITE 312, ALEXANDRIA, VA, 22314) AND WTCA (WOOD TRUSS COUNCIL OF AMERICA, 6300 ENTERPRISE LANE, MADISON, WI 53719) FOR SAFETY PRACTICES PRIOR TO PERFORMING THESE FUNCTIONS. UNLESS OTHERWISE INDICATED TOP CHORD SHALL HAVE PROPERLY ATTACHED STRUCTURAL PANELS AND BOTTOM CHORD SHALL HAVE A PROPERLY ATTACHED RIGID CEILING.

IMPORTANT FURNISH A COPY OF THIS DESIGN TO THE INSTALLATION CONTRACTOR. ITW BCG, INC. SHALL NOT BE RESPONSIBLE FOR ANY DEVIATION FROM THIS DESIGN; ANY FAILURE TO BUILD THE TRUSS IN COMFORMANCE WITH TPI; OR FABRICATING, HANDLING, SHIPPING, INSTALLING & BRACING OF TRUSSES.
DESIGN CONFORMS WITH APPLICABLE PROVISIONS OF NDS (NATIONAL DESIGN SPEC. BY AF&PA) AND TPI. ITW BCG CONNECTOR PLATES ARE MADE OF 20/18/16GA (W,H/SS/K) ASTM A653 GRADE 40/60 (H, K/H,SS) GALV. STEEL. APPLY PLATES TO EACH FACE OF TRUSS AND, UNLESS OTHERWISE LOCATED ON THIS DESIGN, POSITION PER DRAWINGS 160A-Z. ANY INSPECTION OF PLATES FOLLOWED BY (1) SHALL BE PER ANNEX A3 OF TPI1-2002 SEC.3. A SEAL ON THIS DRAWING INDICATES ACCEPTANCE OF PROFESSIONAL ENGINEERING RESPONSIBILITY SOLELY FOR THE TRUSS COMPONENT DESIGN SHOWN. THE SUITABILITY AND USE OF THIS COMPONENT FOR ANY BUILDING IS THE RESPONSIBILITY OF THE BUILDING DESIGNER PER ANSI/TPI 1 SEC. 2.

JAMES F. COLLINS, JR. LICENSE No. 52212 STATE OF FLORIDA PROFESSIONAL ENGINEER

TC LL	20.0 PSF	REF	R215-- 49622
TC DL	10.0 PSF	DATE	02/17/09
BC DL	10.0 PSF	DRW	HCUSR215 09048012
BC LL	0.0 PSF	HC-ENG	DLJ/DLJ
TOT.LD.	40.0 PSF	SEQN-	172412
DUR.FAC.	1.25	FROM	LRB
SPACING	24.0"	JREF-	1TP9215_Z01

Top chord 2x4 SP #2 N :T2 2x4 SP #2 Dense:
Bot chord 2x4 SP #2 N :B1 2x4 SP #2 Dense:
Webs 2x4 SP #2 N

Calculated horizontal deflection is 0.18" due to live load and 0.18" due to dead load.

Deflection meets L/240 live and L/180 total load.

Shim all supports to solid bearing.

110 mph wind, 15.00 ft mean hgt, ASCE 7-02, CLOSED bldg, not located within 6.50 ft from roof edge, CAT II, EXP B, wind TC DL=5.0 psf, wind BC DL=5.0 psf, Iw=1.00 GCpi(+/-)=0.18

Wind reactions based on MWFRS pressures.

(A) scab brace. 80% length of web member. Same size, species & grade or better. Attach with 10d Box or Gun (0.128"x3",min.)nails @ 6" OC.

The overall height of this truss excluding overhang is 10-0-0.

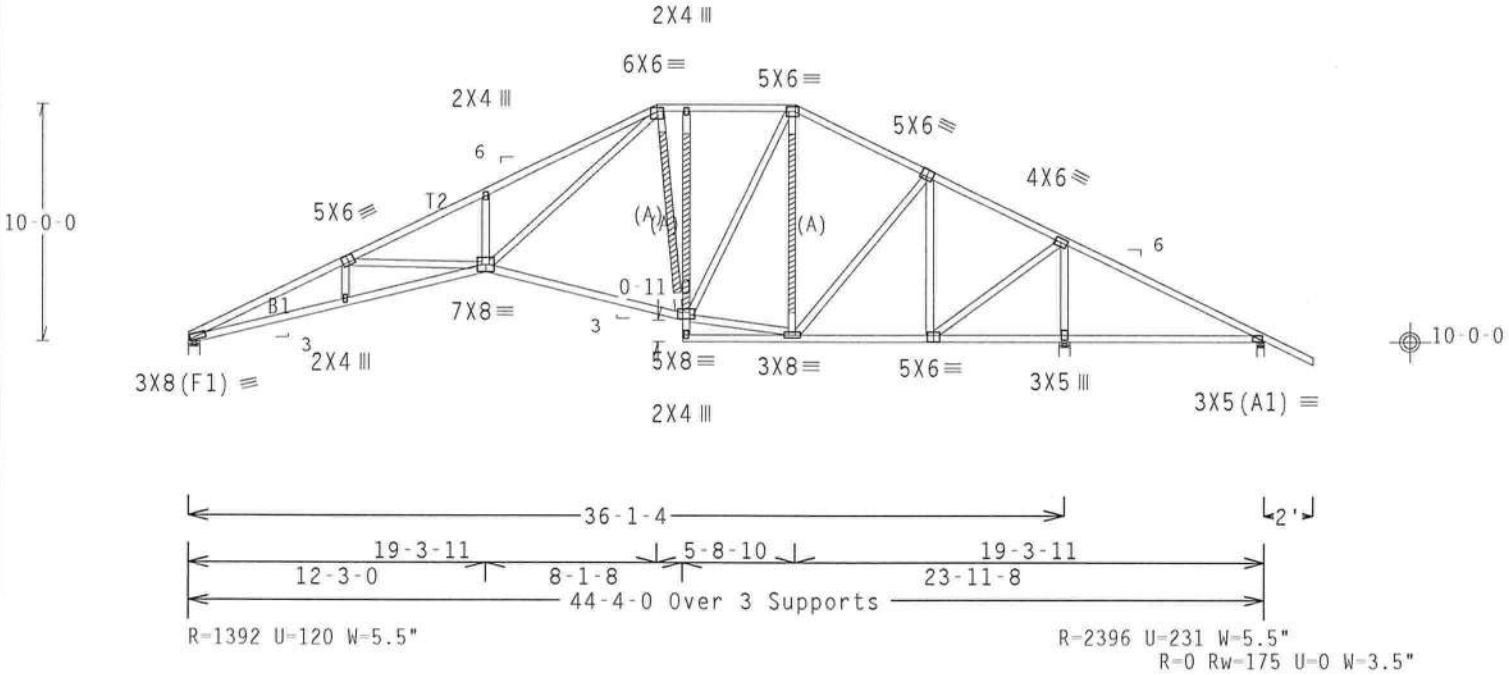

Design Crit: FBC CODE/TPI-2002(STD)

PLT TYP. Wave | FT/RT=20%(0%)/0(0) | 7.38.00.0810.02 | QTY:1 | FL/-/5/-/-/R/- | Scale =.125"/Ft.

ALPINE
ITW Building Components Group Inc.
Haines City, FL 33844
FL COA #0 278

WARNING TRUSSES REQUIRE EXTREME CARE IN FABRICATION, HANDLING, SHIPPING, INSTALLING AND BRACING. REFER TO BCSI (BUILDING COMPONENT SAFETY INFORMATION), PUBLISHED BY TPI (TRUSS PLATE INSTITUTE, 218 NORTH LEE STREET, SUITE 312, ALEXANDRIA, VA, 22314) AND WTCA (WOOD TRUSS COUNCIL OF AMERICA, 6300 ENTERPRISE LANE, MADISON, WI 53719) FOR SAFETY PRACTICES PRIOR TO PERFORMING THESE FUNCTIONS. UNLESS OTHERWISE INDICATED TOP CHORD SHALL HAVE PROPERLY ATTACHED STRUCTURAL PANELS AND BOTTOM CHORD SHALL HAVE A PROPERLY ATTACHED RIGID CEILING.

IMPORTANTFURNISH A COPY OF THIS DESIGN TO THE INSTALLATION CONTRACTOR. ITW BCG, INC. SHALL NOT BE RESPONSIBLE FOR ANY DEVIATION FROM THIS DESIGN; ANY FAILURE TO BUILD THE TRUSS IN CONFORMANCE WITH TPI; OR FABRICATING, HANDLING, SHIPPING, INSTALLING & BRACING OF TRUSSES.
DESIGN CONFORMS WITH APPLICABLE PROVISIONS OF NDS (NATIONAL DESIGN SPEC, BY AF&PA) AND TPI. ITW BCG CONNECTOR PLATES ARE MADE OF 20/18/16GA (H,H/SS/K) ASTM A653 GRADE 40/60 (H, K/H,SS) GALV. STEEL. APPLY PLATES TO EACH FACE OF TRUSS AND, UNLESS OTHERWISE LOCATED ON THIS DESIGN, POSITION PER DRAWINGS 160A-Z. ANY INSPECTION OF PLATES FOLLOWED BY (1) SHALL BE PER ANNEX A3 OF TPI1-2002 SEC.3. A SEAL ON THIS DRAWING INDICATES ACCEPTANCE OF PROFESSIONAL ENGINEERING RESPONSIBILITY SOLELY FOR THE TRUSS COMPONENT DESIGN SHOWN. THE SUITABILITY AND USE OF THIS COMPONENT FOR ANY BUILDING IS THE RESPONSIBILITY OF THE BUILDING DESIGNER PER ANSI/TPI 1 SEC. 2.

JAMES F. COLLINS JR. LICENSE No. 52212 STATE OF FLORIDA PROFESSIONAL ENGINEER

TC LL	20.0 PSF	REF	R215-- 49623
TC DL	10.0 PSF	DATE	02/17/09
BC DL	10.0 PSF	DRW	HCUSR215 09048013
BC LL	0.0 PSF	HC-ENG	DLJ/DLJ
TOT.LD.	40.0 PSF	SEQN-	172399
DUR.FAC.	1.25	FROM	LRB
SPACING	24.0"	JREF-	1TP9215_Z01

(6011-/HAMMOCK RES. /G-N CONSTRUCTION -- , ** - A15)

Top chord 2x4 SP #2 N
Bot chord 2x4 SP #2 N
Webs 2x4 SP #2 N

In lieu of rigid ceiling use purlins to brace BC @ 24" OC.

Deflection meets L/240 live and L/180 total load.

Refer to DWG PB1200109 for piggyback details.

SPECIAL LOADS
------(LUMBER DUR.FAC.=1.25 / PLATE DUR.FAC.=1.25)
TC - From 62 PLF at -0.94 to 62 PLF at 1.88
TC - From 62 PLF at 1.88 to 62 PLF at 4.69
BC - From 4 PLF at -0.94 to 4 PLF at 4.69

The overall height of this truss excluding overhang is 1-5-3.

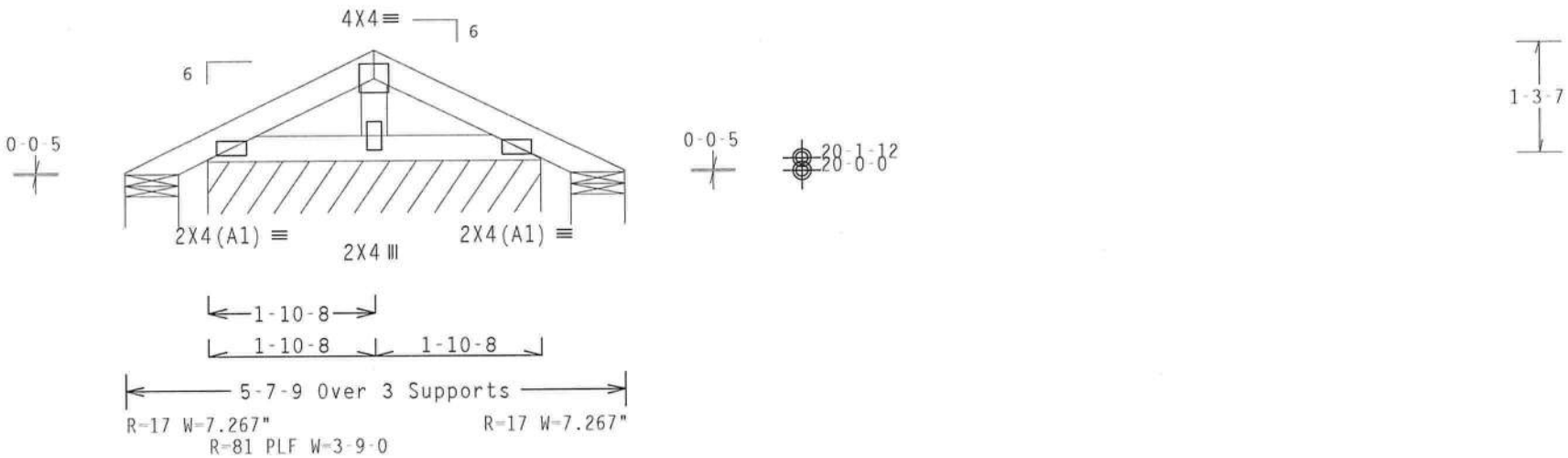

Design Crit: FBC CODE/TPI-2002(STD)
FT/RT=20%(0%)/0(0)

PLT TYP. Wave

7.38.00 / 6.10.02

QTY:14 FL/-/5/-/-/R/-

Scale =.5"/Ft.

ALPINE
ITW Building Components Group Inc.
Haines City, FL 33844
FL COA #0 278

WARNING TRUSSES REQUIRE EXTREME CARE IN FABRICATION, HANDLING, SHIPPING, INSTALLING AND BRACING. REFER TO BCSI (BUILDING COMPONENT SAFETY INFORMATION), PUBLISHED BY TPI (TRUSS PLATE INSTITUTE, 218 NORTH LEE STREET, SUITE 312, ALEXANDRIA, VA, 22314) AND WTCA (WOOD TRUSS COUNCIL OF AMERICA, 6300 ENTERPRISE LANE, MADISON, WI 53719) FOR SAFETY PRACTICES PRIOR TO PERFORMING THESE FUNCTIONS. UNLESS OTHERWISE INDICATED TOP CHORD SHALL HAVE PROPERLY ATTACHED STRUCTURAL PANELS AND BOTTOM CHORD SHALL HAVE A PROPERLY ATTACHED RIGID CEILING.

IMPORTANTFURNISH A COPY OF THIS DESIGN TO THE INSTALLATION CONTRACTOR. ITW BCG, INC. SHALL NOT BE RESPONSIBLE FOR ANY DEVIATION FROM THIS DESIGN; ANY FAILURE TO BUILD THE TRUSS IN CONFORMANCE WITH TPI; OR FABRICATING, HANDLING, SHIPPING, INSTALLING & BRACING OF TRUSSES.
DESIGN CONFORMS WITH APPLICABLE PROVISIONS OF NDS (NATIONAL DESIGN SPEC. BY AF&PA) AND TPI. ITW BCG CONNECTOR PLATES ARE MADE OF 20/18/16GA (W,H/SS/K) ASTM A653 GRADE 40/60 (W, K/H,SS) GALV. STEEL. APPLY PLATES TO EACH FACE OF TRUSS AND, UNLESS OTHERWISE LOCATED ON THIS DESIGN, POSITION PER DRAWINGS 160A-Z. ANY INSPECTION OF PLATES FOLLOWED BY (1) SHALL BE PER ANNEX A3 OF TPI1-2002 SEC.3. A SEAL ON THIS DRAWING INDICATES ACCEPTANCE OF PROFESSIONAL ENGINEERING RESPONSIBILITY SOLELY FOR THE TRUSS COMPONENT DESIGN SHOWN. THE SUITABILITY AND USE OF THIS COMPONENT FOR ANY BUILDING IS THE RESPONSIBILITY OF THE BUILDING DESIGNER PER ANSI/TPI 1 SEC. 2.

JAMES F. SOLLINS, JR. LICENSE No. 52212 STATE OF FLORIDA PROFESSIONAL ENGINEER

TC LL	20.0 PSF	REF	R215-- 49624
TC DL	10.0 PSF	DATE	02/17/09
BC DL	10.0 PSF	DRW	HCUSR215 09048014
BC LL	0.0 PSF	HC-ENG	DLJ/DLJ
TOT.LD.	40.0 PSF	SEQN-	172459
DUR.FAC.	1.25	FROM	LRB
SPACING	24.0"	JREF-	1TP9215_Z01

(6011-/HAMMOCK RES. /G-N CONSTRUCTION -- , ** - AT1)

Top chord 2x4 SP #2 N :T2, T3 2x6 SP SS:
Bot chord 2x6 SP SS :B3 2x4 SP #2 N: :B4 2x6 SP #2 N:
Webs 2x4 SP #2 N

SPECIAL LOADS
------(LUMBER DUR.FAC.=1.25 / PLATE DUR.FAC.=1.25)

TC -	From	62 PLF	at -2.00	to	62 PLF	at	5.53
TC -	From	62 PLF	at 5.53	to	62 PLF	at	8.00
TC -	From	85 PLF	at 8.00	to	85 PLF	at	10.75
TC -	From	62 PLF	at 10.75	to	62 PLF	at	12.00
TC -	From	62 PLF	at 12.00	to	62 PLF	at	12.62
TC -	From	85 PLF	at 12.62	to	85 PLF	at	13.25
TC -	From	107 PLF	at 13.25	to	107 PLF	at	16.00
TC -	From	62 PLF	at 16.00	to	62 PLF	at	18.55
TC -	From	62 PLF	at 18.55	to	62 PLF	at	24.00
PLT-	From	20 PLF	at 11.25	to	20 PLF	at	12.75
BC -	From	20 PLF	at 0.00	to	20 PLF	at	8.00
BC -	From	120 PLF	at 8.00	to	120 PLF	at	16.00
BC -	From	20 PLF	at 16.00	to	20 PLF	at	24.00

BC - 68 LB Conc. Load at 8.00, 16.00
BC - 71 LB Conc. Load at 16.29

Wind reactions based on MWFRS pressures.

(**) 3 plate(s) require special positioning. Refer to scaled plate plot details for special positioning requirements.

110 mph wind, 15.00 ft mean hgt, ASCE 7-02, CLOSED bldg, Located anywhere in roof, CAT II, EXP B, wind TC DL=5.0 psf, wind BC DL=5.0 psf. Iw=1.00 GCpi(+/-)=0.18

Collar-tie braced with continuous lateral bracing at 24" OC. or rigid ceiling.

Deflection meets L/240 live and L/180 total load.

The overall height of this truss excluding overhang is 6-4-3.

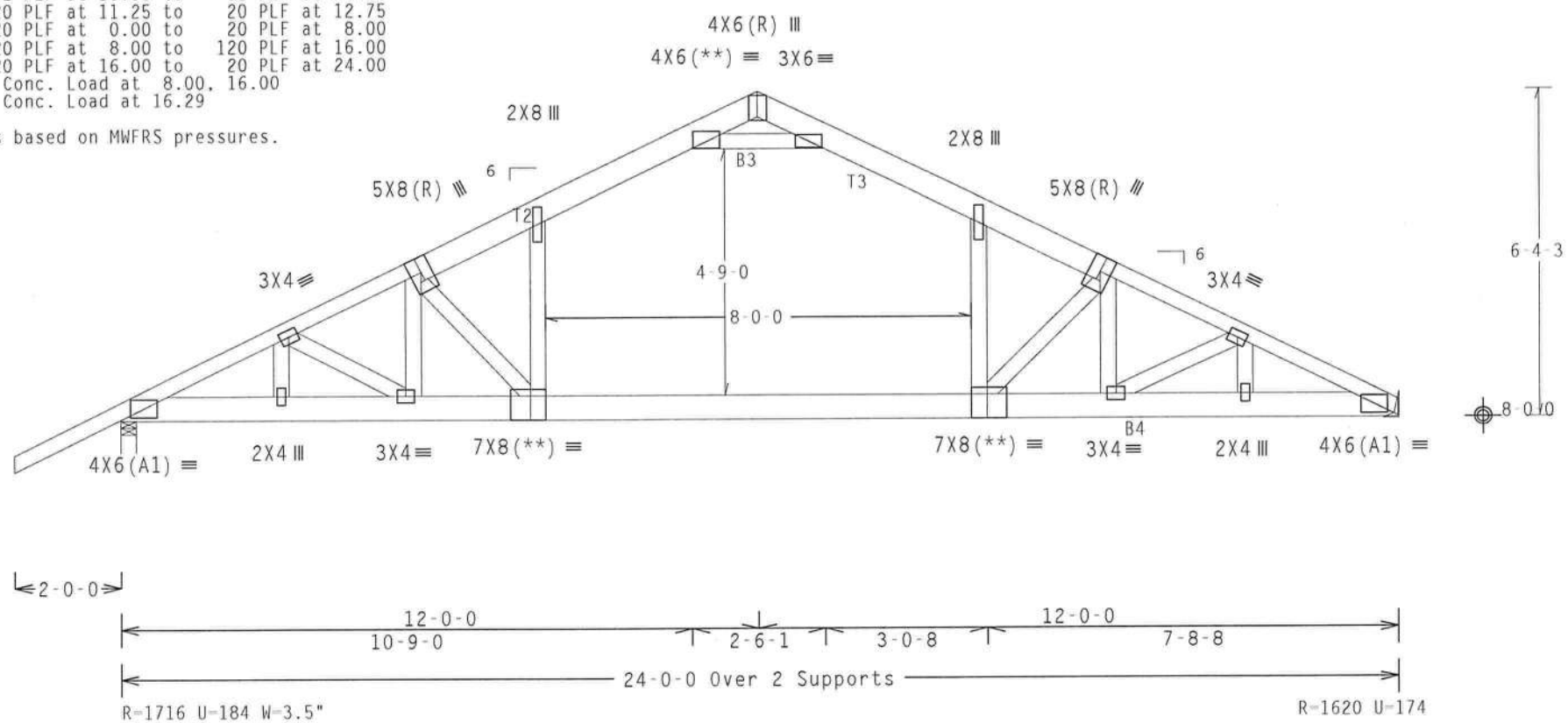

Design Crit: FBC CODE/TPI-2002(STD)

PLT TYP. Wave | FT/RT=20%(0%)/0(0) | 7.38.00.0810.02 | QTY:2 | FL/-/5/-/-/R/- | Scale =.3125"/Ft.

ALPINE
ITW Building Components Group Inc.
Haines City, FL 33844
FL COA #0 278

WARNING TRUSSES REQUIRE EXTREME CARE IN FABRICATION, HANDLING, SHIPPING, INSTALLING AND BRACING. REFER TO BCSI (BUILDING COMPONENT SAFETY INFORMATION), PUBLISHED BY TPI (TRUSS PLATE INSTITUTE, 218 NORTH LEE STREET, SUITE 312, ALEXANDRIA, VA. 22314) AND WTCA (WOOD TRUSS COUNCIL OF AMERICA, 6300 ENTERPRISE LANE, MADISON, WI 53719) FOR SAFETY PRACTICES PRIOR TO PERFORMING THESE FUNCTIONS. UNLESS OTHERWISE INDICATED TOP CHORD SHALL HAVE PROPERLY ATTACHED STRUCTURAL PANELS AND BOTTOM CHORD SHALL HAVE A PROPERLY ATTACHED RIGID CEILING.

IMPORTANT FURNISH A COPY OF THIS DESIGN TO THE INSTALLATION CONTRACTOR. ITW BCG, INC. SHALL NOT BE RESPONSIBLE FOR ANY DEVIATION FROM THIS DESIGN; ANY FAILURE TO BUILD THE TRUSS IN CONFORMANCE WITH TPI; OR FABRICATING, HANDLING, SHIPPING, INSTALLING & BRACING OF TRUSSES.
DESIGN CONFORMS WITH APPLICABLE PROVISIONS OF NDS (NATIONAL DESIGN SPEC. BY AF&PA) AND TPI. ITW BCG CONNECTOR PLATES ARE MADE OF 20/18/16GA (W,H/SS/K) ASTM A653 GRADE 40/60 (W, K/H,SS) GALV. STEEL. APPLY PLATES TO EACH FACE OF TRUSS AND, UNLESS OTHERWISE LOCATED ON THIS DESIGN, POSITION PER DRAWINGS 160A-Z. ANY INSPECTION OF PLATES FOLLOWED BY (I) SHALL BE PER ANNEX A3 OF TPI1-2002 SEC.3. A SEAL ON THIS DRAWING INDICATES ACCEPTANCE OF PROFESSIONAL ENGINEERING RESPONSIBILITY SOLELY FOR THE TRUSS COMPONENT DESIGN SHOWN. THE SUITABILITY AND USE OF THIS COMPONENT FOR ANY BUILDING IS THE RESPONSIBILITY OF THE BUILDING DESIGNER PER ANSI/TPI 1 SEC. 2.

JAMES F. COLLINS JR. LICENSE No. 52212 STATE OF FLORIDA PROFESSIONAL ENGINEER

TC LL	20.0 PSF	REF R215-- 49625
TC DL	10.0 PSF	DATE 02/17/09
BC DL	10.0 PSF	DRW HCUSR215 09048015
BC LL	0.0 PSF	HC-ENG DLJ/DLJ
TOT.LD.	40.0 PSF	SEQN- 172324
DUR.FAC.	1.25	FROM LRB
SPACING	24.0"	JREF- 1TP9215_Z01

(6011-/HAMMOCK RES. /G-N CONSTRUCTION -- , ** - AT2)

Top chord 2x4 SP #2 N :T2, T3 2x6 SP SS:
Bot chord 2x6 SP SS :B3 2x4 SP #2 N: :B4 2x6 SP #2 N:
Webs 2x4 SP #2 N

SPECIAL LOADS
------(LUMBER DUR.FAC.=1.25 / PLATE DUR.FAC.=1.25)

TC -	From	62 PLF	at -2.00	to	62 PLF	at	5.53
TC -	From	62 PLF	at 5.53	to	62 PLF	at	8.00
TC -	From	85 PLF	at 8.00	to	85 PLF	at	10.75
TC -	From	62 PLF	at 10.75	to	62 PLF	at	12.00
TC -	From	62 PLF	at 12.00	to	62 PLF	at	12.62
TC -	From	85 PLF	at 12.62	to	85 PLF	at	13.25
TC -	From	107 PLF	at 13.25	to	107 PLF	at	16.00
TC -	From	62 PLF	at 16.00	to	62 PLF	at	18.55
TC -	From	62 PLF	at 18.55	to	62 PLF	at	24.00
PLT-	From	20 PLF	at 11.25	to	20 PLF	at	12.75
BC -	From	20 PLF	at 0.00	to	20 PLF	at	8.00
BC -	From	120 PLF	at 8.00	to	120 PLF	at	16.00
BC -	From	20 PLF	at 16.00	to	20 PLF	at	24.00

BC - 68 LB Conc. Load at 8.00, 16.00
BC - 71 LB Conc. Load at 16.29

Wind reactions based on MWFRS pressures.

(**) 3 plate(s) require special positioning. Refer to scaled plate plot details for special positioning requirements.

110 mph wind, 15.00 ft mean hgt, ASCE 7-02, CLOSED bldg, Located anywhere in roof, CAT II, EXP B, wind TC DL=5.0 psf, wind BC DL=5.0 psf. Iw=1.00 GCpi(+/-)=0.18

Collar-tie braced with continuous lateral bracing at 24" OC. or rigid ceiling.

Deflection meets L/240 live and L/180 total load.

The overall height of this truss excluding overhang is 6-4-3.

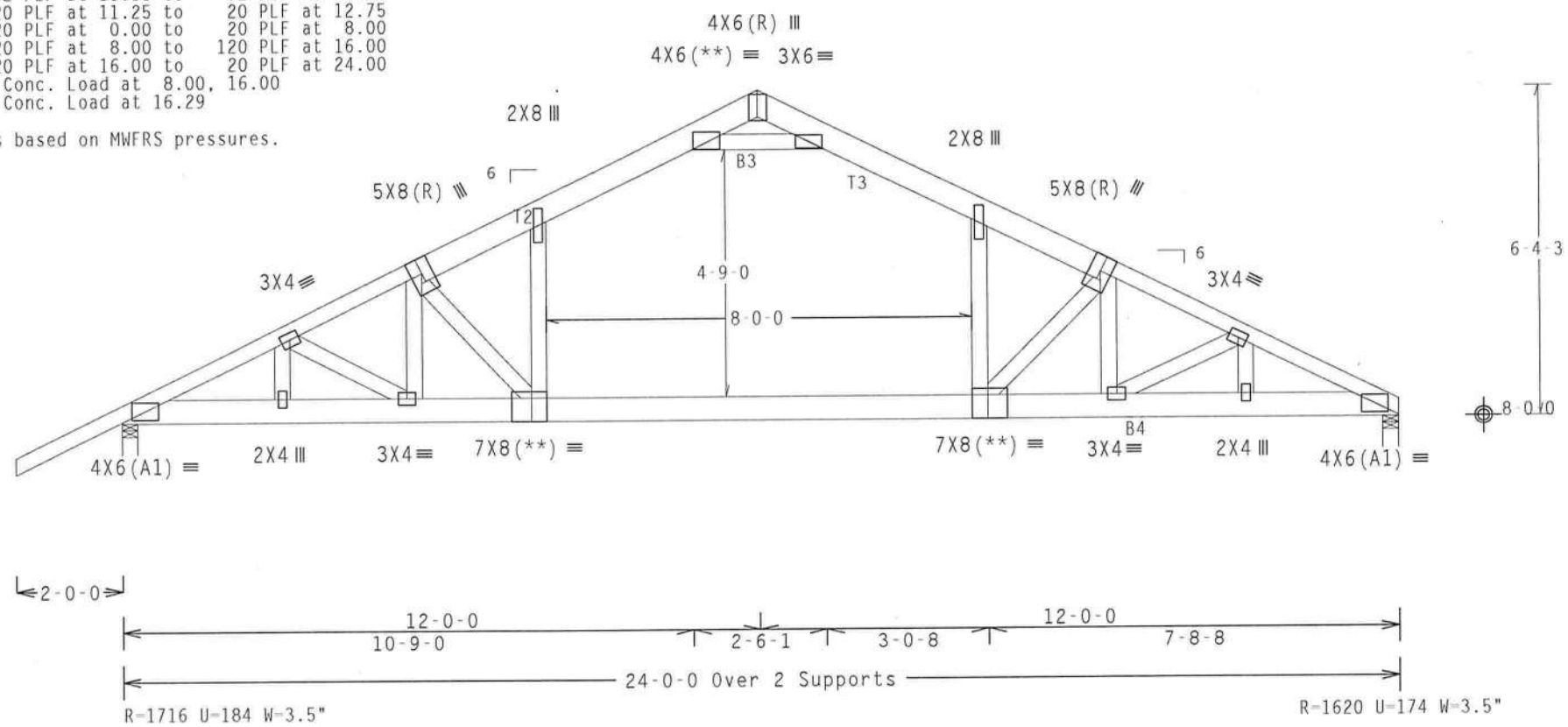

Design Crit: FBC CODE/TPI-2002(STD)
FT/RT=20%(0%)/0(0)

PLT TYP. Wave | 7.38.00.0810.02 | QTY:1 | FL/-/5/-/-/R/- | Scale =.3125"/Ft.

ALPINE
ITW Building Components Group Inc.
Haines City, FL 33844
FL COA #0 278

WARNING TRUSSES REQUIRE EXTREME CARE IN FABRICATION, HANDLING, SHIPPING, INSTALLING AND BRACING. REFER TO BCSI (BUILDING COMPONENT SAFETY INFORMATION), PUBLISHED BY TPI (TRUSS PLATE INSTITUTE, 218 NORTH LEE STREET, SUITE 312, ALEXANDRIA, VA, 22314) AND WTCA (WOOD TRUSS COUNCIL OF AMERICA, 6300 ENTERPRISE LANE, MADISON, WI 53719) FOR SAFETY PRACTICES PRIOR TO PERFORMING THESE FUNCTIONS. UNLESS OTHERWISE INDICATED TOP CHORD SHALL HAVE PROPERLY ATTACHED STRUCTURAL PANELS AND BOTTOM CHORD SHALL HAVE A PROPERLY ATTACHED RIGID CEILING.

IMPORTANT FURNISH A COPY OF THIS DESIGN TO THE INSTALLATION CONTRACTOR. ITW BCG, INC. SHALL NOT BE RESPONSIBLE FOR ANY DEVIATION FROM THIS DESIGN; ANY FAILURE TO BUILD THE TRUSS IN COMFORMANCE WITH TPI; OR FABRICATING, HANDLING, SHIPPING, INSTALLING & BRACING OF TRUSSES. DESIGN CONFORMS WITH APPLICABLE PROVISIONS OF NDS (NATIONAL DESIGN SPEC. BY AF&PA) AND TPI. ITW BCG CONNECTOR PLATES ARE MADE OF 20/18/16GA (W,H/SS/K) ASTM A653 GRADE 40/60 (W, K/H,SS) GALV. STEEL. APPLY PLATES TO EACH FACE OF TRUSS AND, UNLESS OTHERWISE LOCATED ON THIS DESIGN, POSITION PER DRAWINGS 160A-Z. ANY INSPECTION OF PLATES FOLLOWED BY (1) SHALL BE PER ANNEX A3 OF TPI1-2002 SEC.3. A SEAL ON THIS DRAWING INDICATES ACCEPTANCE OF PROFESSIONAL ENGINEERING RESPONSIBILITY SOLELY FOR THE TRUSS COMPONENT DESIGN SHOWN. THE SUITABILITY AND USE OF THIS COMPONENT FOR ANY BUILDING IS THE RESPONSIBILITY OF THE BUILDING DESIGNER PER ANSI/TPI 1 SEC. 2.

JAMES F. COLLINS, JR. LICENSE No. 52212 STATE OF FLORIDA PROFESSIONAL ENGINEER

TC LL	20.0 PSF	REF R215-- 49626
TC DL	10.0 PSF	DATE 02/17/09
BC DL	10.0 PSF	DRW HCUSR215 09048016
BC LL	0.0 PSF	HC-ENG DLJ/DLJ
TOT.LD.	40.0 PSF	SEQN- 172319
DUR.FAC.	1.25	FROM LRB
SPACING	24.0"	JREF- 1TP9215_Z01

(6011-/HAMMOCK RES. /G-N CONSTRUCTION -- , ** - AT3)

Top chord 2x4 SP #2 N :T2, T3 2x6 SP SS:
Bot chord 2x6 SP SS :B3 2x4 SP #2 N: :B4 2x6 SP #2 N:
Webs 2x4 SP #2 N

SPECIAL LOADS
------(LUMBER DUR.FAC.=1.25 / PLATE DUR.FAC.=1.25)

TC -	From	62 PLF	at -2.00	to	62 PLF	at	8.00
TC -	From	85 PLF	at 8.00	to	85 PLF	at	10.87
TC -	From	62 PLF	at 10.87	to	62 PLF	at	12.00
TC -	From	62 PLF	at 12.00	to	62 PLF	at	12.62
TC -	From	85 PLF	at 12.62	to	85 PLF	at	16.00
TC -	From	62 PLF	at 16.00	to	62 PLF	at	26.00
PLT-	From	20 PLF	at 11.75	to	20 PLF	at	12.25
BC -	From	20 PLF	at 0.00	to	20 PLF	at	8.00
BC -	From	120 PLF	at 8.00	to	120 PLF	at	16.29
BC -	From	20 PLF	at 16.29	to	20 PLF	at	24.00

BC - 71 LB Conc. Load at 8.00, 16.29

Wind reactions based on MWFRS pressures.

(**) 3 plate(s) require special positioning. Refer to scaled plate plot details for special positioning requirements.

110 mph wind, 15.00 ft mean hgt, ASCE 7-02, CLOSED bldg, Located anywhere in roof, CAT II, EXP B, wind TC DL=5.0 psf, wind BC DL=5.0 psf. Iw=1.00 GCpi(+/-)=0.18

Collar-tie braced with continuous lateral bracing at 24" OC. or rigid ceiling.

Deflection meets L/240 live and L/180 total load.

The overall height of this truss excluding overhang is 6-4-3.

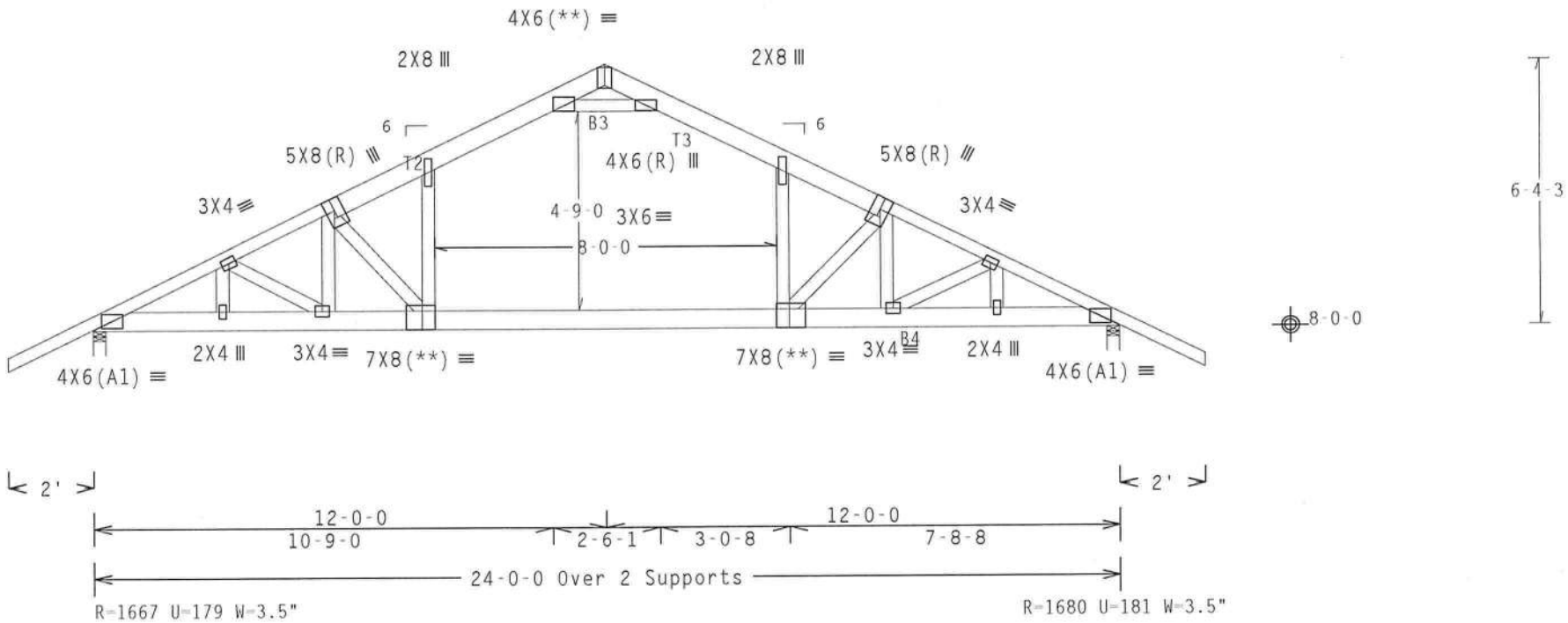

Design Crit: FBC CODE/TPI-2002(STD)

PLT TYP. Wave FT/RT=20%(0%)/0(0) 7.38.00.0810.02 QTY:6 FL/-/5/-/-/R/- Scale =.25"/Ft.

ALPINE
ITW Building Components Group Inc.
Haines City, FL 33844
FL COA #0 278

WARNING TRUSSES REQUIRE EXTREME CARE IN FABRICATION, HANDLING, SHIPPING, INSTALLING AND BRACING. REFER TO BCSI (BUILDING COMPONENT SAFETY INFORMATION), PUBLISHED BY TPI (TRUSS PLATE INSTITUTE, 218 NORTH LEE STREET, SUITE 312, ALEXANDRIA, VA. 22314) AND WTCA (WOOD TRUSS COUNCIL OF AMERICA, 6300 ENTERPRISE LANE, MADISON, WI 53719) FOR SAFETY PRACTICES PRIOR TO PERFORMING THESE FUNCTIONS. UNLESS OTHERWISE INDICATED TOP CHORD SHALL HAVE PROPERLY ATTACHED STRUCTURAL PANELS AND BOTTOM CHORD SHALL HAVE A PROPERLY ATTACHED RIGID CEILING.

IMPORTANT FURNISH A COPY OF THIS DESIGN TO THE INSTALLATION CONTRACTOR. ITW BCG, INC. SHALL NOT BE RESPONSIBLE FOR ANY DEVIATION FROM THIS DESIGN; ANY FAILURE TO BUILD THE TRUSS IN CONFORMANCE WITH TPI; OR FABRICATING, HANDLING, SHIPPING, INSTALLING & BRACING OF TRUSSES.
DESIGN CONFORMS WITH APPLICABLE PROVISIONS OF NDS (NATIONAL DESIGN SPEC. BY AF&PA) AND TPI. ITW BCG CONNECTOR PLATES ARE MADE OF 20/18/16GA (H,M/SS/K) ASTM A653 GRADE 40/60 (H, K/M,SS) GALV. STEEL. APPLY PLATES TO EACH FACE OF TRUSS AND, UNLESS OTHERWISE LOCATED ON THIS DESIGN, POSITION PER DRAWINGS 160A-Z. ANY INSPECTION OF PLATES FOLLOWED BY (1) SHALL BE PER ANNEX A3 OF TPI1-2002 SEC.3. A SEAL ON THIS DRAWING INDICATES ACCEPTANCE OF PROFESSIONAL ENGINEERING RESPONSIBILITY SOLELY FOR THE TRUSS COMPONENT DESIGN SHOWN. THE SUITABILITY AND USE OF THIS COMPONENT FOR ANY BUILDING IS THE RESPONSIBILITY OF THE BUILDING DESIGNER PER ANSI/TPI 1 SEC. 2.

JAMES F. COLLINS, JR. LICENSE No. 52212 STATE OF FLORIDA PROFESSIONAL ENGINEER

TC LL	20.0 PSF	REF R215-- 49627
TC DL	10.0 PSF	DATE 02/17/09
BC DL	10.0 PSF	DRW HCUSR215 09048017
BC LL	0.0 PSF	HC-ENG DLJ/DLJ
TOT.LD.	40.0 PSF	SEQN- 172305
DUR.FAC.	1.25	FROM LRB
SPACING	24.0"	JREF- 1TP9215_Z01

(6011-/HAMMOCK RES. /G-N CONSTRUCTION -- , ** - G1)

Top chord 2x4 SP #2 N
Bot chord 2x4 SP #2 N
Webs 2x4 SP #2 N

Gable end supports 8" max rake overhang.

See DWGS A11015020109 & GBLLETIN0109 for more requirements.

In lieu of structural panels use purlins to brace TC @ 24" OC.

Deflection meets L/240 live and L/180 total load.

The overall height of this truss excluding overhang is 6-0-4.

110 mph wind, 15.00 ft mean hgt, ASCE 7-02, CLOSED bldg, Located anywhere in roof, CAT II, EXP B, wind TC DL=5.0 psf, wind BC DL=5.0 psf. Iw=1.00 GCpi(+/-)=0.18

Wind reactions based on MWFRS pressures.

Stacked top chord must NOT be notched or cut in area (NNL). Dropped top chord braced at 24" o.c. intervals. Attach stacked top chord (SC) to dropped top chord in notchable area using 3x4 tie-plates 24" o.c. Center plate on stacked/dropped chord interface, plate length perpendicular to chord length. Splice top chord in notchable area using 3x6.

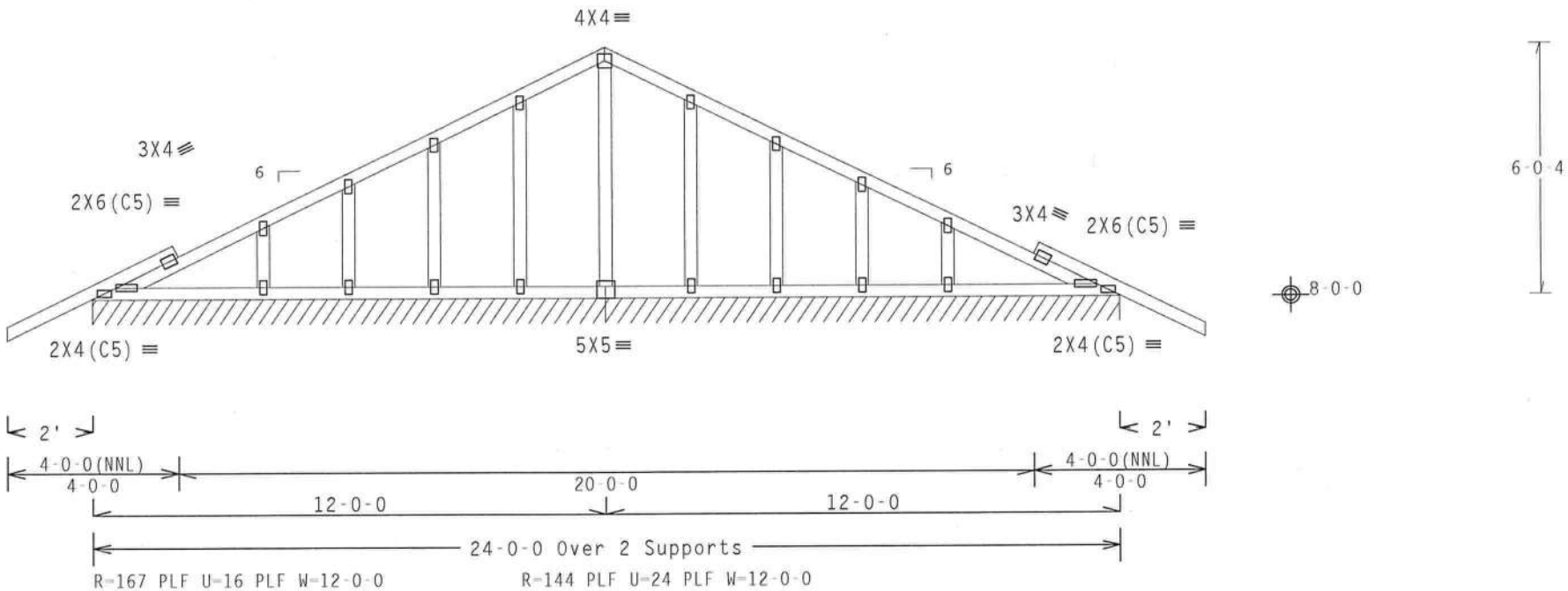

Note: All Plates Are 2X4 Except As Shown.

Design Crit: FBC CODE/TPI-2002(STD)

PLT TYP. Wave FT/RT=20%(0%)/0(0) 7.38.00.7810.02 QTY:1 FL/-/5/-/-/R/- Scale =.25"/Ft.

ALPINE
ITW Building Components Group Inc.
Haines City, FL 33844
FL COA #0 278

WARNING TRUSSES REQUIRE EXTREME CARE IN FABRICATION, HANDLING, SHIPPING, INSTALLING AND BRACING. REFER TO BCSI (BUILDING COMPONENT SAFETY INFORMATION), PUBLISHED BY TPI (TRUSS PLATE INSTITUTE, 218 NORTH LEE STREET, SUITE 312, ALEXANDRIA, VA, 22314) AND WTCA (WOOD TRUSS COUNCIL OF AMERICA, 6300 ENTERPRISE LANE, MADISON, WI 53719) FOR SAFETY PRACTICES PRIOR TO PERFORMING THESE FUNCTIONS. UNLESS OTHERWISE INDICATED TOP CHORD SHALL HAVE PROPERLY ATTACHED STRUCTURAL PANELS AND BOTTOM CHORD SHALL HAVE A PROPERLY ATTACHED RIGID CEILING.

IMPORTANT FURNISH A COPY OF THIS DESIGN TO THE INSTALLATION CONTRACTOR. ITW BCG, INC. SHALL NOT BE RESPONSIBLE FOR ANY DEVIATION FROM THIS DESIGN; ANY FAILURE TO BUILD THE TRUSS IN COMFORMANCE WITH TPI; OR FABRICATING, HANDLING, SHIPPING, INSTALLING & BRACING OF TRUSSES. DESIGN CONFORMS WITH APPLICABLE PROVISIONS OF NDS (NATIONAL DESIGN SPEC. BY AF&PA) AND TPI. ITW BCG CONNECTOR PLATES ARE MADE OF 20/18/16GA (W,H/SS/K) ASTM A653 GRADE 40/60 (W, K/H,SS) GALV. STEEL. APPLY PLATES TO EACH FACE OF TRUSS AND, UNLESS OTHERWISE LOCATED ON THIS DESIGN, POSITION PER DRAWINGS 160A-Z. ANY INSPECTION OF PLATES FOLLOWED BY (I) SHALL BE PER ANNEX A3 OF TPI1-2002 SEC.3. A SEAL ON THIS DRAWING INDICATES ACCEPTANCE OF PROFESSIONAL ENGINEERING RESPONSIBILITY SOLELY FOR THE TRUSS COMPONENT DESIGN SHOWN. THE SUITABILITY AND USE OF THIS COMPONENT FOR ANY BUILDING IS THE RESPONSIBILITY OF THE BUILDING DESIGNER PER ANSI/TPI 1 SEC. 2.

JAMES F. COLLINS JR. LICENSE No. 52212 STATE OF FLORIDA PROFESSIONAL ENGINEER

TC LL	20.0 PSF	REF	R215-- 49628
TC DL	10.0 PSF	DATE	02/17/09
BC DL	10.0 PSF	DRW	HCUSR215 09048018
BC LL	0.0 PSF	HC-ENG	DLJ/DLJ
TOT.LD.	40.0 PSF	SEQN-	172331
DUR.FAC.	1.25	FROM	LRB
SPACING	24.0"	JREF-	1TP9215_Z01

(6011-/HAMMOCK RES. /G-N CONSTRUCTION -- , ** - G2)

Top chord 2x4 SP #2 N
Bot chord 2x4 SP #2 N
Webs 2x4 SP #2 N

Truss spaced at 24.0" OC designed to support 2-0-0 top chord outlookers. Cladding load shall not exceed 0.00 PSF. Top chord must not be cut or notched.

Stacked top chord must NOT be notched or cut in area (NNL). Dropped top chord braced at 24" o.c. intervals. Attach stacked top chord (SC) to dropped top chord in notchable area using 3x4 tie-plates 24" o.c. Center plate on stacked/dropped chord interface, plate length perpendicular to chord length. Splice top chord in notchable area using 3x6.

Deflection meets L/240 live and L/180 total load.

110 mph wind, 15.00 ft mean hgt, ASCE 7-02, CLOSED bldg, Located anywhere in roof, CAT II, EXP B, wind TC DL=5.0 psf, wind BC DL=5.0 psf. Iw=1.00 GCpi(+/-)=0.18

Wind reactions based on MWFRS pressures.

See DWGS A11015020109 & GBLLETIN0109 for more requirements.

(A) Continuous lateral bracing equally spaced on member. Or 1x4 "T" brace. 80% length of web member. Same species & SRB grade or better, attached with 8d Box or Gun (0.113"x2.5",min.)nails @ 6" OC.

In lieu of structural panels use purlins to brace TC @ 24" OC.

The overall height of this truss excluding overhang is 9-1-4.

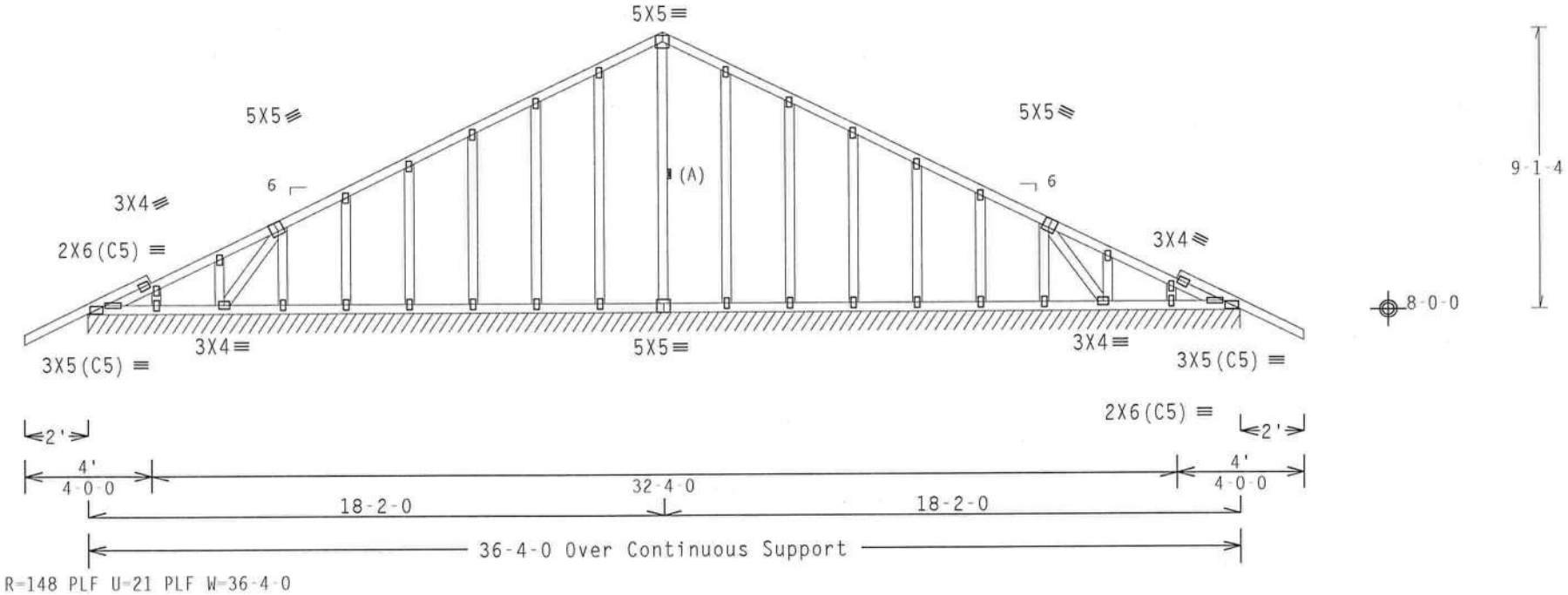

R=148 PLF U=21 PLF W=36-4-0

Note: All Plates Are 2X4 Except As Shown.

Design Crit: FBC CODE/TPI-2002(STD)

PLT TYP. Wave FT/RT=20%(0%)/0(0) 7.38.00.081.T02 QTY:2 FL/-/5/-/-/R/- Scale =.1875"/Ft.

ALPINE
ITW Building Components Group Inc.
Haines City, FL 33844
FL COA #0 278

WARNING TRUSSES REQUIRE EXTREME CARE IN FABRICATION, HANDLING, SHIPPING, INSTALLING AND BRACING. REFER TO BCSI (BUILDING COMPONENT SAFETY INFORMATION), PUBLISHED BY TPI (TRUSS PLATE INSTITUTE, 218 NORTH LEE STREET, SUITE 312, ALEXANDRIA, VA, 22314) AND WTCA (WOOD TRUSS COUNCIL OF AMERICA, 6300 ENTERPRISE LANE, MADISON, WI 53719) FOR SAFETY PRACTICES PRIOR TO PERFORMING THESE FUNCTIONS. UNLESS OTHERWISE INDICATED TOP CHORD SHALL HAVE PROPERLY ATTACHED STRUCTURAL PANELS AND BOTTOM CHORD SHALL HAVE A PROPERLY ATTACHED RIGID CEILING.

IMPORTANTFURNISH A COPY OF THIS DESIGN TO THE INSTALLATION CONTRACTOR. ITW BCG, INC. SHALL NOT BE RESPONSIBLE FOR ANY DEVIATION FROM THIS DESIGN; ANY FAILURE TO BUILD THE TRUSS IN CONFORMANCE WITH TPI; OR FABRICATING, HANDLING, SHIPPING, INSTALLING & BRACING OF TRUSSES.
DESIGN CONFORMS WITH APPLICABLE PROVISIONS OF NDS (NATIONAL DESIGN SPEC, BY AF&PA) AND TPI. ITW BCG CONNECTOR PLATES ARE MADE OF 20/18/16GA (W,H/SS/K) ASTM A653 GRADE 40/60 (W, K/H,SS) GALV. STEEL. APPLY PLATES TO EACH FACE OF TRUSS AND, UNLESS OTHERWISE LOCATED ON THIS DESIGN, POSITION PER DRAWINGS 160A-Z. ANY INSPECTION OF PLATES FOLLOWED BY (1) SHALL BE PER ANNEX A3 OF TPI1-2002 SEC.3. A SEAL ON THIS DRAWING INDICATES ACCEPTANCE OF PROFESSIONAL ENGINEERING RESPONSIBILITY SOLELY FOR THE TRUSS COMPONENT DESIGN SHOWN. THE SUITABILITY AND USE OF THIS COMPONENT FOR ANY BUILDING IS THE RESPONSIBILITY OF THE BUILDING DESIGNER PER ANSI/TPI 1 SEC. 2.

JAMES F. DOLLINS, JR. LICENSE No. 52212 STATE OF FLORIDA PROFESSIONAL ENGINEER

TC LL	20.0 PSF	REF R215-- 49629
TC DL	10.0 PSF	DATE 02/17/09
BC DL	10.0 PSF	DRW HCUSR215 09048019
BC LL	0.0 PSF	HC-ENG DLJ/DLJ
TOT.LD.	40.0 PSF	SEQN- 172354
DUR.FAC.	1.25	FROM LRB
SPACING	24.0"	JREF- 1TP9215_Z01

GABLE STUD REINFORCEMENT DETAIL

ASCE 7-02: 110 MPH WIND SPEED, 15' MEAN HEIGHT, ENCLOSED, I = 1.00, EXPOSURE C, Kzt = 1.00

MAX GABLE VERTICAL LENGTH

2X4 GABLE VERTICAL SPACING	SPECIES	BRACE / GRADE	NO BRACES	(1) 1X4 "L" BRACE * GROUP A	(1) 1X4 "L" BRACE * GROUP B	(1) 2X4 "L" BRACE * GROUP A	(1) 2X4 "L" BRACE * GROUP B	(2) 2X4 "L" BRACE ** GROUP A	(2) 2X4 "L" BRACE ** GROUP B	(1) 2X6 "L" BRACE * GROUP A	(1) 2X6 "L" BRACE * GROUP B	(2) 2X6 "L" BRACE ** GROUP A	(2) 2X6 "L" BRACE ** GROUP B
24" O.C.	SPF HF	#1 / #2	3' 10"	6' 8"	6' 10"	7' 11"	8' 1"	9' 5"	9' 8"	12' 5"	12' 9"	14' 0"	14' 0"
		#3	3' 9"	6' 0"	6' 0"	7' 11"	7' 11"	9' 5"	9' 5"	12' 4"	12' 4"	14' 0"	14' 0"
		STUD	3' 9"	6' 0"	6' 0"	7' 11"	7' 11"	9' 5"	9' 5"	12' 3"	12' 3"	14' 0"	14' 0"
		STANDARD	3' 9"	5' 2"	5' 2"	6' 9"	6' 9"	9' 1"	9' 1"	10' 7"	10' 7"	14' 0"	14' 0"
	SP DFL	#1	4' 3"	6' 8"	7' 2"	7' 11"	8' 6"	9' 5"	10' 2"	12' 5"	13' 5"	14' 0"	14' 0"
		#2	4' 2"	6' 8"	7' 2"	7' 11"	8' 6"	9' 5"	10' 2"	12' 5"	13' 5"	14' 0"	14' 0"
		#3	4' 0"	6' 2"	6' 2"	7' 11"	8' 1"	9' 5"	9' 11"	12' 5"	12' 8"	14' 0"	14' 0"
		STUD	4' 0"	6' 1"	6' 1"	7' 11"	8' 0"	9' 5"	9' 11"	12' 5"	12' 6"	14' 0"	14' 0"
		STANDARD	3' 10"	5' 3"	5' 3"	6' 11"	6' 11"	9' 4"	9' 4"	10' 10"	10' 10"	14' 0"	14' 0"
16" O.C.	SPF HF	#1 / #2	4' 5"	7' 8"	7' 10"	9' 1"	9' 4"	10' 10"	11' 1"	14' 0"	14' 0"	14' 0"	14' 0"
		#3	4' 4"	7' 4"	7' 4"	9' 1"	9' 1"	10' 10"	10' 10"	14' 0"	14' 0"	14' 0"	14' 0"
		STUD	4' 4"	7' 4"	7' 4"	9' 1"	9' 1"	10' 10"	10' 10"	14' 0"	14' 0"	14' 0"	14' 0"
		STANDARD	4' 4"	6' 4"	6' 4"	8' 4"	8' 4"	10' 10"	10' 10"	12' 11"	12' 11"	14' 0"	14' 0"
	SP DFL	#1	4' 10"	7' 8"	8' 3"	9' 1"	9' 9"	10' 10"	11' 8"	14' 0"	14' 0"	14' 0"	14' 0"
		#2	4' 9"	7' 8"	8' 3"	9' 1"	9' 9"	10' 10"	11' 8"	14' 0"	14' 0"	14' 0"	14' 0"
		#3	4' 6"	7' 7"	7' 7"	9' 1"	9' 6"	10' 10"	11' 4"	14' 0"	14' 0"	14' 0"	14' 0"
		STUD	4' 6"	7' 6"	7' 6"	9' 1"	9' 6"	10' 10"	11' 4"	14' 0"	14' 0"	14' 0"	14' 0"
		STANDARD	4' 5"	6' 5"	6' 5"	8' 6"	8' 6"	10' 10"	11' 1"	13' 3"	13' 3"	14' 0"	14' 0"
12" O.C.	SPF HF	#1 / #2	4' 11"	8' 5"	8' 8"	10' 0"	10' 3"	11' 11"	12' 3"	14' 0"	14' 0"	14' 0"	14' 0"
		#3	4' 9"	8' 5"	8' 5"	10' 0"	10' 0"	11' 11"	11' 11"	14' 0"	14' 0"	14' 0"	14' 0"
		STUD	4' 9"	8' 5"	8' 5"	10' 0"	10' 0"	11' 11"	11' 11"	14' 0"	14' 0"	14' 0"	14' 0"
		STANDARD	4' 9"	7' 3"	7' 3"	9' 7"	9' 7"	11' 11"	11' 11"	14' 0"	14' 0"	14' 0"	14' 0"
	SP DFL	#1	5' 4"	8' 5"	9' 1"	10' 0"	10' 9"	11' 11"	12' 10"	14' 0"	14' 0"	14' 0"	14' 0"
		#2	5' 3"	8' 5"	9' 1"	10' 0"	10' 9"	11' 11"	12' 10"	14' 0"	14' 0"	14' 0"	14' 0"
		#3	5' 0"	8' 5"	8' 5"	10' 0"	10' 6"	11' 11"	12' 6"	14' 0"	14' 0"	14' 0"	14' 0"
		STUD	5' 0"	8' 5"	8' 7"	10' 0"	10' 6"	11' 11"	12' 6"	14' 0"	14' 0"	14' 0"	14' 0"
		STANDARD	4' 11"	7' 5"	7' 5"	9' 10"	9' 10"	11' 11"	12' 3"	14' 0"	14' 0"	14' 0"	14' 0"

BRACING GROUP SPECIES AND GRADES:

GROUP A:

SPRUCE-PINE-FIR

#1 / #2	STANDARD
#3	STUD

HEM-FIR

#2	STUD
#3	STANDARD

DOUGLAS FIR-LARCH

#3
STUD
STANDARD

SOUTHERN PINE

#3
STUD
STANDARD

GROUP B:

HEM-FIR

#1 & BTR
#1

SOUTHERN PINE

#1
#2

DOUGLAS FIR-LARCH

#1
#2

GABLE TRUSS DETAIL NOTES:

LIVE LOAD DEFLECTION CRITERIA IS L/240.

PROVIDE UPLIFT CONNECTIONS FOR 80 PLF OVER CONTINUOUS BEARING (5 PSF TC DEAD LOAD).

GABLE END SUPPORTS LOAD FROM 4' 0" OUTLOOKERS WITH 2' 0" OVERHANG, OR 12" PLYWOOD OVERHANG.

ATTACH EACH "L" BRACE WITH 10d NAILS. (0.128"x3" min)

* FOR (1) "L" BRACE: SPACE NAILS AT 2" O.C. IN 18" END ZONES AND 4" O.C. BETWEEN ZONES.

** FOR (2) "L" BRACES: SPACE NAILS AT 3" O.C. IN 18" END ZONES AND 6" O.C. BETWEEN ZONES.

"L" BRACING MUST BE A MINIMUM OF 80% OF WEB MEMBER LENGTH.

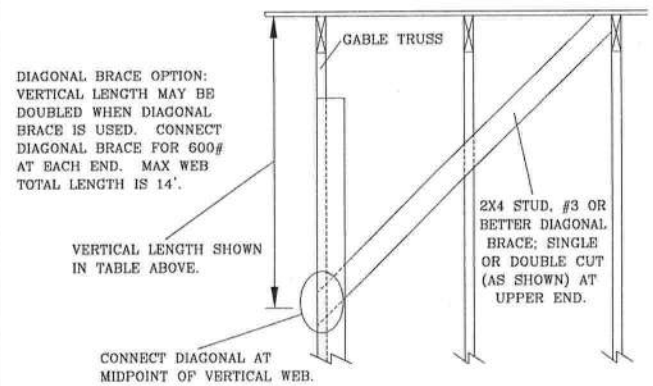

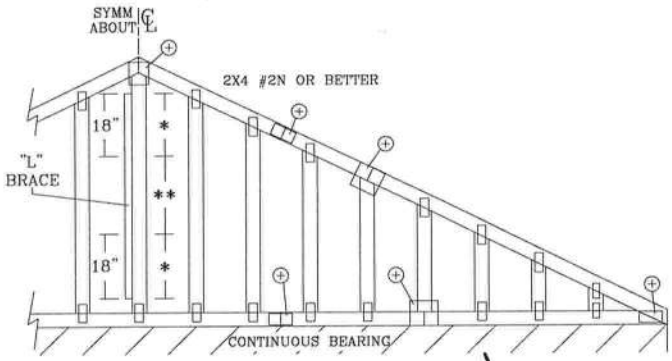

REFER TO CHART ABOVE FOR MAX GABLE VERTICAL LENGTH.

GABLE VERTICAL PLATE SIZES

VERTICAL LENGTH	NO SPLICE
LESS THAN 4' 0"	1X4 OR 2X3
GREATER THAN 4' 0", BUT LESS THAN 11' 6"	2.5X4
GREATER THAN 11' 6"	3X4

+ REFER TO COMMON TRUSS DESIGN FOR PEAK, SPLICE, AND HEEL PLATES.

TW Building Components Group Inc.

Earth City, MO 63045

WARNING READ AND FOLLOW ALL NOTES ON THIS SHEET!
Trusses require extreme care in fabricating, handling, shipping, installing and bracing. Refer to and follow BCSI (Building Component Safety Information, by TPI and WTCA) for safety practices prior to performing these functions. Installers shall provide temporary bracing per BCSI. Unless noted otherwise, top chord shall have properly attached structural panels and bottom chord shall have a properly attached rigid ceiling. Locations shown for permanent lateral restraint of webs shall have bracing installed per BCSI sections B3 & B7. See this job's general notes page for more information.

IMPORTANT FURNISH COPY OF THIS DESIGN TO INSTALLATION CONTRACTOR.
ITW Building Components Group Inc. (ITWBCG) shall not be responsible for any deviation from this design, any failure to build the truss in conformance with TPI, or fabricating, handling, shipping, installing & bracing of trusses. ITWBCG connector plates are made of 20/18/16GA (W,H/S/K) ASTM A653 grade 37/40/60 (K/W/H,S) galv. steel. Apply plates to each face of truss, positioned as shown above and on Joint Details. A seal on this drawing or cover page indicates acceptance and professional engineering responsibility solely for the truss component design shown. The suitability and use of this component for any building is the responsibility of the Building Designer per ANST/TPI 1 Sec. 2.
ITW-BCG: www.itwbcg.com; TPI: www.tpinst.com; WTCA: www.sbcindustry.com; ICC: www.iccsafe.org

JAMES F. COLLINS, JR. LICENSE No. 52212 STATE OF FLORIDA PROFESSIONAL ENGINEER

Feb 27 '09

MAX. TOT. LD. 60 PSF

MAX. SPACING 24.0"

REF	ASCE7-02-GAB11015
DATE	1/1/09
DRWG	A11015020109

GABLE DETAIL
FOR LET-IN VERTICALS

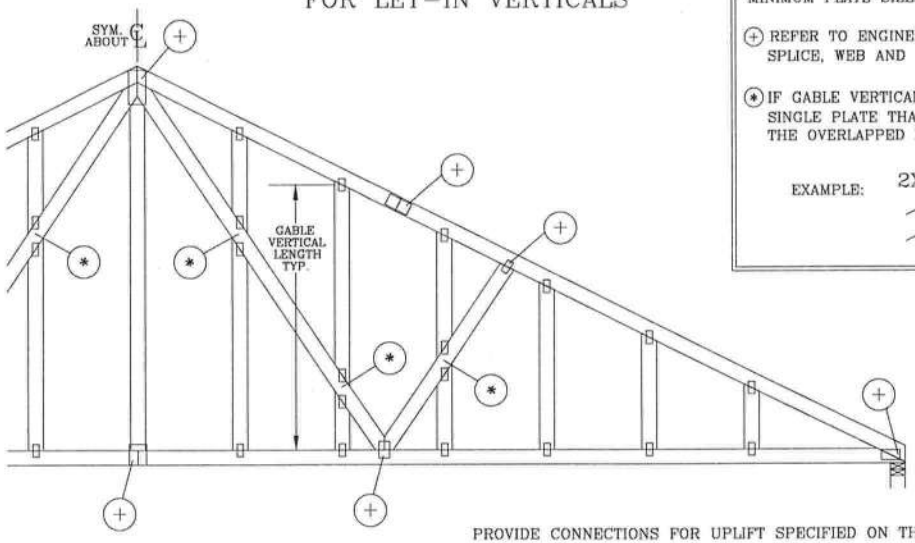

GABLE TRUSS PLATE SIZES

REFER TO APPROPRIATE ITW GABLE DETAIL FOR MINIMUM PLATE SIZES FOR VERTICAL STUDS.

(+) REFER TO ENGINEERED TRUSS DESIGN FOR PEAK, SPLICE, WEB AND HEEL PLATES.

(*) IF GABLE VERTICAL PLATES OVERLAP, USE A SINGLE PLATE THAT COVERS THE TOTAL AREA OF THE OVERLAPPED PLATES TO SPAN THE WEB.

EXAMPLE:

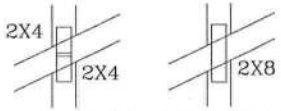

"T" REINFORCEMENT ATTACHMENT DETAIL

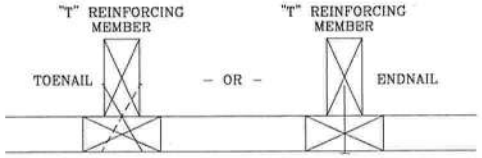

TO CONVERT FROM "L" TO "T" REINFORCING MEMBERS, MULTIPLY "T" INCREASE BY LENGTH (BASED ON APPROPRIATE ITW GABLE DETAIL).

MAXIMUM ALLOWABLE "T" REINFORCED GABLE VERTICAL LENGTH IS 14' FROM TOP TO BOTTOM CHORD.

WEB LENGTH INCREASE W/ "T" BRACE

WIND SPEED AND MRH	"T" REINF. MBR. SIZE	"T" INCREASE
140 MPH	2x4	10 %
15 FT	2x6	50 %
140 MPH	2x4	10 %
30 FT	2x6	50 %
130 MPH	2x4	10 %
15 FT	2x6	50 %
130 MPH	2x4	10 %
30 FT	2x6	50 %
120 MPH	2x4	10 %
15 FT	2x6	50 %
120 MPH	2x4	10 %
30 FT	2x6	40 %
110 MPH	2x4	10 %
15 FT	2x6	40 %
110 MPH	2x4	10 %
30 FT	2x6	50 %
100 MPH	2x4	20 %
15 FT	2x6	30 %
100 MPH	2x4	10 %
30 FT	2x6	40 %
90 MPH	2x4	20 %
15 FT	2x6	20 %
90 MPH	2x4	20 %
30 FT	2x6	30 %

EXAMPLE:
ASCE WIND SPEED = 100 MPH
MEAN ROOF HEIGHT = 30 FT, Kzt = 1.00
GABLE VERTICAL = 24" O.C. SP #3
"T" REINFORCING MEMBER SIZE = 2X4
"T" BRACE INCREASE (FROM ABOVE) = 10% = 1.10
(1) 2X4 "L" BRACE LENGTH = 6' 7"
MAXIMUM "T" REINFORCED GABLE VERTICAL LENGTH
1.10 x 6' 7" = 7' 3"

PROVIDE CONNECTIONS FOR UPLIFT SPECIFIED ON THE ENGINEERED TRUSS DESIGN.

ATTACH EACH "T" REINFORCING MEMBER WITH
END DRIVEN NAILS:
10d COMMON (0.148"X 3.",MIN) NAILS AT 4" O.C. PLUS
(4) NAILS IN TOP AND BOTTOM CHORD.

TOENAILED NAILS:
10d COMMON (0.148"x3",MIN) TOENAILS AT 4" O.C. PLUS
(4) TOENAILS IN TOP AND BOTTOM CHORD.

THIS DETAIL TO BE USED WITH THE APPROPRIATE ITW GABLE DETAIL FOR ASCE WIND LOAD.
ASCE 7-98 GABLE DETAIL DRAWINGS
A13015980109, A12015980109, A11015980109, A10015980109,
A13030980109, A12030980109, A11030980109, A10030980109
ASCE 7-02 GABLE DETAIL DRAWINGS
A13015020109, A12015020109, A11015020109, A10015020109, A14015020109,
A13030020109, A12030020109, A11030020109, A10030020109, A14030020109
ASCE 7-05 GABLE DETAIL DRAWINGS
A13015050109, A12015050109, A11015050109, A10015050109, A14015050109,
A13030050109, A12030050109, A11030050109, A10030050109, A14030050109

SEE APPROPRIATE ITW GABLE DETAIL FOR MAXIMUM UNREINFORCED GABLE VERTICAL LENGTH.

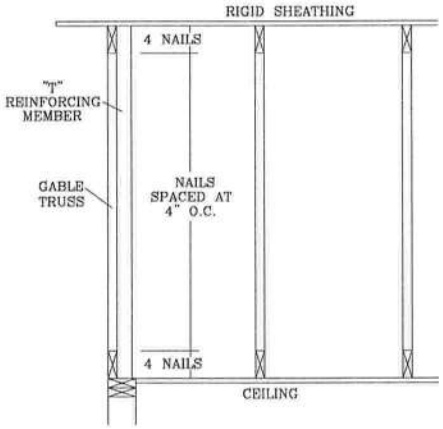

ITW Building Components Group Inc.

Earth City, MO 63045

WARNING READ AND FOLLOW ALL NOTES ON THIS SHEET!
Trusses require extreme care in fabricating, handling, shipping, installing and bracing. Refer to and follow BCSI (Building Component Safety Information, by TPI and WTCA) for safety practices prior to performing these functions. Installers shall provide temporary bracing per BCSI. Unless noted otherwise, top chord shall have properly attached structural panels and bottom chord shall have a properly attached rigid ceiling. Locations shown for permanent lateral restraint of webs shall have bracing installed per BCSI sections B3 & B7. See this job's general notes page for more information.

IMPORTANT FURNISH COPY OF THIS DESIGN TO INSTALLATION CONTRACTOR.
ITW Building Components Group Inc. (ITWBCG) shall not be responsible for any deviation from this design, any failure to build the truss in conformance with TPI, or fabricating, handling, shipping, installing & bracing of trusses. ITWBCG connector plates are made of 20/18/16GA (W,H/S/K) ASTM A653 grade 37/40/60 (K/W/H,S) galv. steel. Apply plates to each face of truss, positioned as shown above and on Joint Details. A seal on this drawing or cover page indicates acceptance and professional engineering responsibility solely for the truss component design shown. The suitability and use of this component for any building is the responsibility of the Building Designer per ANSI/TPI 1 Sec. 2.
ITW-BCG: www.itwbcg.com; TPI: www.tpinst.com; WTCA: www.sbcindustry.com; ICC: www.iccsafe.org

JAMES F. COLLINS, JR. LICENSE No. 52212 STATE OF FLORIDA PROFESSIONAL ENGINEER

FEB 1 '09

MAX TOT. LD. 60 PSF
DUR. FAC. ANY
MAX SPACING 24.0"

REF	LET-IN VERT
DATE	1/1/09
DRWG	GBLLETIN0109

CLB WEB BRACE SUBSTITUTION

THIS DETAIL IS TO BE USED WHEN CONTINUOUS LATERAL BRACING (CLB) IS SPECIFIED ON A TRUSS DESIGN BUT AN ALTERNATIVE WEB BRACING METHOD IS DESIRED.

NOTES:

THIS DETAIL IS ONLY APPLICABLE FOR CHANGING THE SPECIFIED CLB SHOWN ON SINGLE PLY SEALED DESIGNS TO T-BRACING OR SCAB BRACING.

ALTERNATIVE BRACING SPECIFIED IN CHART BELOW MAY BE CONSERVATIVE. FOR MINIMUM ALTERNATIVE BRACING, RE-RUN DESIGN WITH APPROPRIATE BRACING.

WEB MEMBER SIZE	SPECIFIED CLB BRACING	ALTERNATIVE BRACING T OR L-BRACE	ALTERNATIVE BRACING SCAB BRACE
2X3 OR 2X4	1 ROW	2X4	1-2X4
2X3 OR 2X4	2 ROWS	2X6	2-2X4
2X6	1 ROW	2X4	1-2X6
2X6	2 ROWS	2X6	2-2X4(*)
2X8	1 ROW	2X6	1-2X8
2X8	2 ROWS	2X6	2-2X6(*)

T-BRACE, L-BRACE AND SCAB BRACE TO BE SAME SPECIES AND GRADE OR BETTER THAN WEB MEMBER UNLESS SPECIFIED OTHERWISE ON ENGINEER'S SEALED DESIGN.

(*) CENTER SCAB ON WIDE FACE OF WEB. APPLY (1) SCAB TO EACH FACE OF WEB.

T-BRACING OR L-BRACING:

APPLY TO EITHER SIDE OF WEB NARROW FACE.
ATTACH WITH 10d BOX OR GUN
(0.128"x 3.",MIN) NAILS.
AT 6" O.C.
BRACE IS A
MINIMUM 80% OF WEB
MEMBER LENGTH

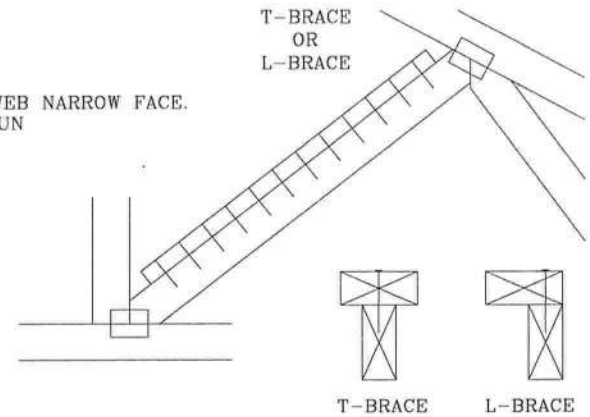

SCAB BRACING:

APPLY SCAB(S) TO WIDE FACE OF WEB.
NO MORE THAN (1) SCAB PER FACE.
ATTACH WITH 10d BOX OR GUN
(0.128"x 3.",MIN) NAILS.
AT 6" O.C.
BRACE IS A MINIMUM
80% OF WEB MEMBER LENGTH

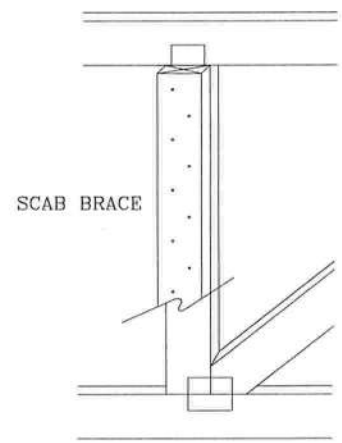

ITW Building Components Group Inc.

Earth City, MO 63045

WARNING READ AND FOLLOW ALL NOTES ON THIS SHEET!
Trusses require extreme care in fabricating, handling, shipping, installing and bracing. Refer to and follow BCSI (Building Component Safety Information, by TPI and WTCA) for safety practices prior to performing these functions. Installers shall provide temporary bracing per BCSI. Unless noted otherwise, top chord shall have properly attached structural panels and bottom chord shall have a properly attached rigid ceiling. Locations shown for permanent lateral restraint of webs shall have bracing installed per BCSI sections B3 & B7. See this job's general notes page for more information.

IMPORTANT FURNISH COPY OF THIS DESIGN TO INSTALLATION CONTRACTOR.
ITW Building Components Group Inc. (ITWBCG) shall not be responsible for any deviation from this design, any failure to build the truss in conformance with TPI, or fabricating, handling, shipping, installing & bracing of trusses. ITWBCG connector plates are made of 20/18/16GA (W,H/S/K) ASTM A653 grade 37/40/60 (K/W/H,S) galv. steel. Apply plates to each face of truss, positioned as shown above and on Joint Details. A seal on this drawing or cover page indicates acceptance and professional engineering responsibility solely for the truss component design shown. The suitability and use of this component for any building is the responsibility of the Building Designer per ANST/TPI 1 Sec. 2.
ITW-BCG: www.itwbcg.com; TPI: www.tpinst.com; WTCA: www.sbcindustry.com; ICC: www.iccsafe.org

JAMES F. COLLINS, JR. LICENSE No. 52212 STATE OF FLORIDA PROFESSIONAL ENGINEER

FEB 17 '09

TC LL	PSF	REF CLB SUBST.
TC DL	PSF	DATE 1/1/09
BC DL	PSF	DRWG BRCLBSUB0109
BC LL	PSF	
TOT. LD.	PSF	
DUR. FAC.		
SPACING		

120 PIGGYBACK DETAIL

UP TO 120 MPH WIND, 30.00 FT MEAN HGT, ASCE 7-02 OR ASCE 7-05, ENCLOSED BLDG. LOCATED ANYWHERE IN ROOF, CAT II, EXP C, WIND DL= 5.0 PSF KZT=1.0.

MAXIMUM TRUSS SPACING IS 24" O.C.
DETAIL IS NOT APPLICABLE IF CAP SUPPORTS ADDITIONAL LOADS SUCH AS CUPOLA, STEEPLE, CHIMNEY OR DRAG STRUT LOADS.

NOTE: TOP CHORDS OF TRUSSES SUPPORTING PIGGYBACK CAP TRUSSES MUST BE ADEQUATELY BRACED BY SHEATHING OR PURLINS. THE BUILDING ENGINEER OF RECORD SHALL PROVIDE DIAGONAL BRACING OR OTHER SUITABLE ANCHORAGE TO PERMANENTLY RESTRAIN PURLINS.

** REFER TO ENGINEER'S SEALED TRUSS DESIGN DRAWING FOR PIGGYBACK AND BASE TRUSS SPECIFICATIONS.

DETAIL A

PIGGYBACK CAP TRUSS SLANT NAILED TO ALL TOP CHORD PURLIN BRACING WITH (2) 16d BOX NAILS (0.135"x3.5") AND SECURE TOP CHORD WITH 2X4 #3 GRADE SCAB (1 SIDE ONLY AT EACH END) ATTACHED WITH 2 ROWS OF 10d BOX NAILS (0.128"x3.0") AT 4" O.C.

ATTACH PURLIN BRACING TO THE FLAT TOP CHORD USING (2) 16d BOX NAILS (0.135"x3.5")

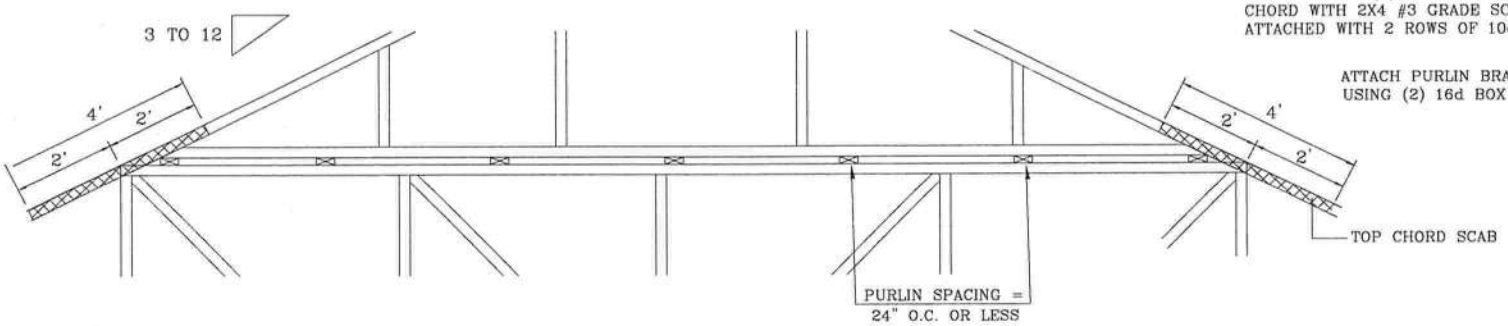

DETAIL B

PIGGYBACK CAP TRUSS SLANT NAILED TO ALL TOP CHORD PURLIN BRACING WITH (2) 16d BOX NAILS (0.135"x3.5") AND SECURE TOP CHORD WITH 2X4 #3 GRADE SCAB (1 SIDE ONLY AT EACH END) ATTACHED WITH 2 ROWS OF 10d BOX NAILS (0.128"x3.0") AT 4" O.C.

ATTACH PURLIN BRACING TO THE FLAT TOP CHORD USING (2) 16d BOX NAILS (0.135"x3.5")

PIGGYBACK CAP TRUSS NAILED TO TOP CHORD OF BASE TRUSS AND SECURED WITH 2x4 SPF#2, FULL CHORD DEPTH SCABS @ 8' O.C. EACH FACE, STAGGERED 4' O.C. ATTACH WITH 3 10d BOX NAILS (0.128"x3") INTO BOTH CHORDS (TOTAL OF 6 NAILS PER SCAB) AS SHOWN BY CIRCLED NUMBER.

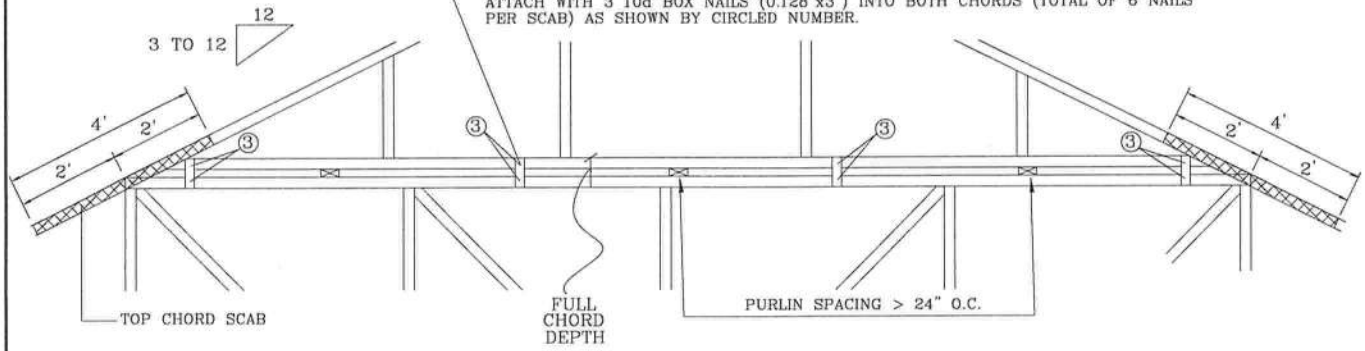

ALTERNATE ATTACHMENTS
TRULOX USE 3x8 TRULOX PLATES FOR 2x4 CHORD MEMBER, AND 3x10 TRULOX PLATES FOR 2x6 AND LARGER CHORD MEMBERS. ATTACH TO EACH FACE @ 8' O.C. WITH (4) 0.120"x1.375" NAILS INTO CAP BOTTOM CHORD AND (4) IN BASE TRUSS TOP CHORD. TRULOX PLATES MAY BE STAGGERED 4' O.C. FRONT TO BACK FACES.
PLYWOOD GUSSET 8"x8"x1/2" RATED SHEATHING GUSSETS (EACH FACE). ATTACH @ 8' O.C. WITH (8) 6d COMMON (0.113"x2") NAILS PER GUSSET, (4) IN CAP BOTTOM CHORD AND (4) IN BASE TRUSS TOP CHORD. GUSSETS MAY BE STAGGERED 4' O.C. FRONT TO BACK FACES.

TW
Building Components Group Inc.

Earth City, MO 63045

WARNING READ AND FOLLOW ALL NOTES ON THIS SHEET!
Trusses require extreme care in fabricating, handling, shipping, installing and bracing. Refer to and follow BCSI (Building Component Safety Information, by TPI and WTCA) for safety practices prior to performing these functions. Installers shall provide temporary bracing per BCSI. Unless noted otherwise, top chord shall have properly attached structural panels and bottom chord shall have a properly attached rigid ceiling. Locations shown for permanent lateral restraint of webs shall have bracing installed per BCSI sections B3 & B7. See this job's general notes page for more information.

IMPORTANT FURNISH COPY OF THIS DESIGN TO INSTALLATION CONTRACTOR.
ITW Building Components Group Inc. (ITWBCG) shall not be responsible for any deviation from this design, any failure to build the truss in conformance with TPI, or fabricating, handling, shipping, installing or bracing of trusses. ITWBCG connector plates are made of 20/18/16GA (W,H/S/K) ASTM A653 grade 37/40/60 (K/W/H,S) galv. steel. Apply plates to each face of truss, positioned as shown above and on Joint Details. A seal on this drawing or cover page indicates acceptance and professional engineering responsibility solely for the truss component design shown. The suitability and use of this component for any building is the responsibility of the Building Designer per ANST/TPI 1 Sec. 2.
ITW-BCG: www.itwbcg.com; TPI: www.tpinst.com; WTCA: www.sbcindustry.com; ICC: www.iccsafe.org

JAMES F. COLLINS, JR.
LICENSE
No. 52212
STATE OF FLORIDA
PROFESSIONAL ENGINEER

Feb 17 '09

SPACING 24.0"

REF	PIGGYBACK
DATE	1/1/09
DRWG	PB1200109

CERTIFICATE OF

OCCUPANCY

COLUMBIA COUNTY, FLORIDA

Department of Building and Zoning Inspection

This Certificate of Occupancy is issued to the below named permit holder for the building and premises at the below named location, and certifies that the work has been completed in accordance with the Columbia County Building Code.

Parcel Number 15-2S-16-01612-003 **Building permit No.** 000027740

Use Classification SFD/UTILITY **Fire:** 6.42

Permit Holder GARY NEWSOME **Waste:** 16.75

Owner of Building W. ROSS HAMMOCK & E. BROOKE HAMMOCK **Total:** 23.17

Location: 437 NW CECILEY PLACE,LAKE CITY, FL

Date: 09/10/2009

Harry Dicks

Building Inspector

POST IN A CONSPICUOUS PLACE
(Business Places Only)

Certificate of Compliance for Termite Protection

#27740

(As required by Florida Building Code (FBC) 1816.1.7)

Live Oak
PEST CONTROL, INC.
17856 U.S. 129
McALPIN, FLORIDA 32062
(386) 362-3887
1-800-771-3887
Fax: (386) 364-3529

W. Ross Hammock 437 NW Cecile Place Lake City, FL 32055

Address of Treatment or Lot/Block of Treatment

soil barrier spray

Method of Termite Prevention Treatment - soil barrier, wood treatment, bait system, other *(describe)*

The building has received a complete treatment for the prevention of subterranean termites. The treatment is in accordance with rules and laws established by the Florida Department of Agriculture and Consumer Services.

Authorized Signature

IMPORTANT

If the certificate holder is an ADDITIONAL INSURED, the policy(ies) must be endorsed. A statement on this certificate does not confer rights to the certificate holder in lieu of such endorsement(s).

If SUBROGATION IS WAIVED, subject to the terms and conditions of the policy, certain policies may require an endorsement. A statement on this certificate does not confer rights to the certificate holder in lieu of such endorsement(s).

DISCLAIMER

The Certificate of Insurance on the reverse side of this form does not constitute a contract between the issuing insurer(s), authorized representative or producer, and the certificate holder, nor does it affirmatively or negatively amend, extend or alter the coverage afforded by the policies listed thereon.

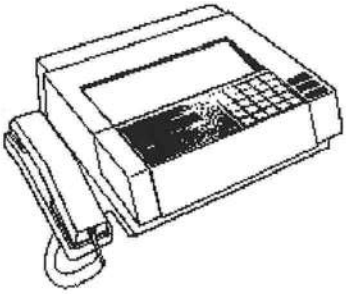

Fax

From the Desk of Heather Parks
Company: Labrato Insurance and Bonding
Phone: (904) 398-6440
Fax: (904) 398-1914

To:

Company: Columbia County

Phone: ( ) -

Fax: (386) 758-2160

Pages: 3

Date: 9/16/2009 01:25:13 PM

Subject: All City Electrical

Message:

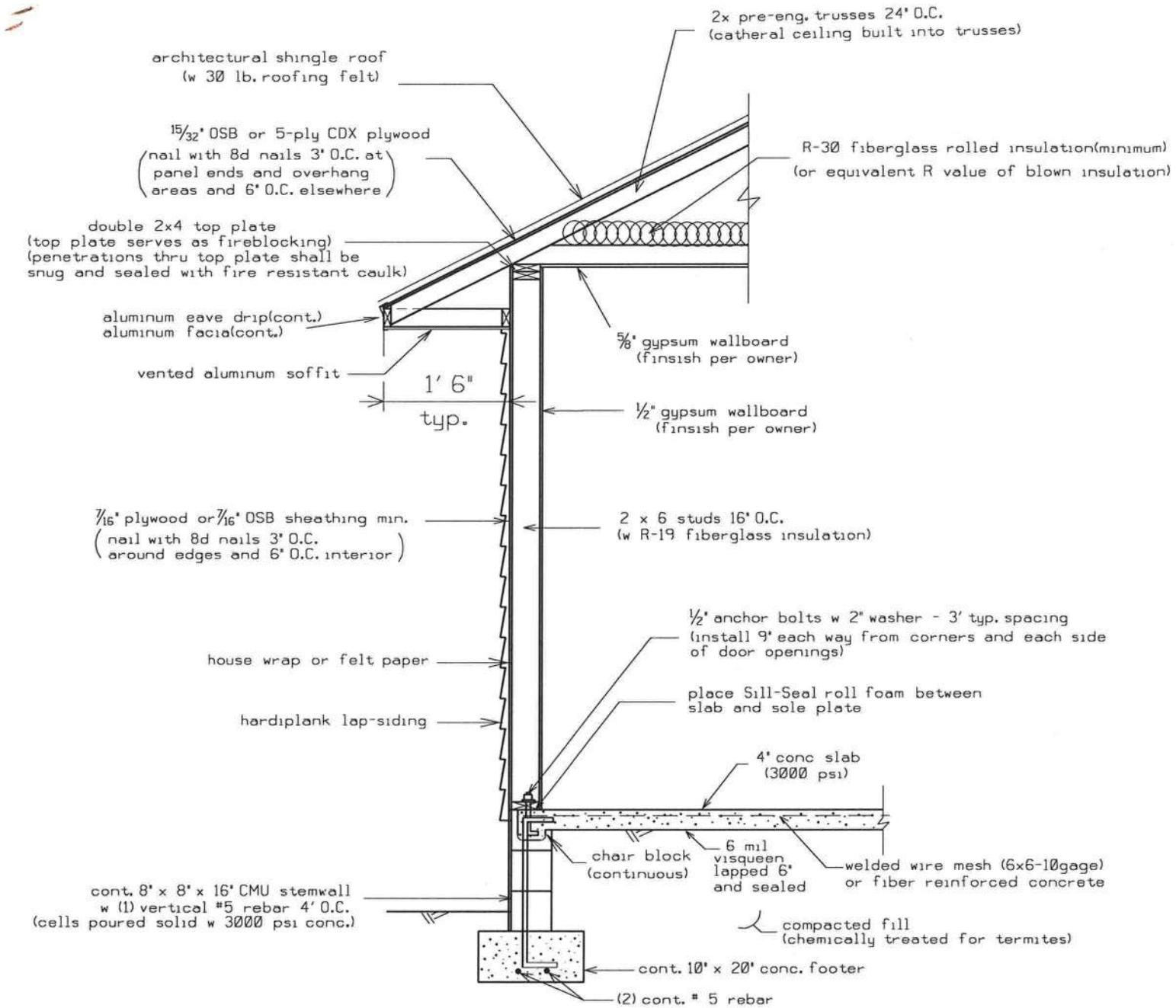

DETAIL A - WALL TYPICAL(N.T.S.)

HEADER SIZES/MATERIAL SHALL BE AS FOLLOWS:

WINDOWS & DOORS: 2-#2 SYP 2x10's with 2x6 top and bottom (nail 2x6 to 2x10's with 1-12d nail 10" O.C.)

BAY AREA HEADER(extends from wall each side of bay area): 2-#2 SYP 2x12's

FRONT PORCH BEAMS SHALL BE: 2 - #2 SYP 2X10's with 1/2" plywood or OSB between. Porch beams shall be connected to wall framing with 1-Simpson HUC210-2 hanger.

BREEZEWAY HEADER SHALL BE: 2 - #2 SYP 2X8's with 1/2" plywood or OSB between. Connected to wall framing and garage header with 1-Simpson HUC28-2 hanger.

GARAGE BEAMS SHALL BE: 2 - #2 SYP 2X12's with 1/2" plywood or OSB between.

JACK AND KING(FULL) STUD REQURIEMENTS AT OPENINGS:

FOR 3' OR SMALLER WINDOW & DOOR OPENINGS: INSTALL 1 JACK STUD AND 1 KING STUD EACH END OF THE HEADER

FOR 4' WINDOWS: INSTALL 1 JACK STUD AND 2 KING STUDS EACH END OF THE HEADER

STRAPPING AND ANCHOR REQUIREMENTS

(Designed In accordance with the 2007 FBC):

WINDLOAD DATA AND EXPOSURE:

Basic Wind Speed = 100 mph
Importance Factor = 1.0
Exposure Category = B
Residential Occupancy = Group R3
Mean Roof Height = 16.5'
Height and Exposure Adjustment Coefficient = 1.0
Roof Cross Slope = 6:12
Wall Height = 8' & 10'
Analysis Method = ASCE 7-05 Simplified Procedure
Component and Cladding Pressures = Roof(Zone 1=10.4,-16.5, Zone 2=10.4,-28.7, Zone 3=10.4,-42.4), Wall(Zone 4=18,-19.5, Zone 5=18,-24.1)(units are psf)

TRUSS ANCHORS:

At Truss to Exterior walls, Carport and Porch Beam Locations: install one Simpson model H10 anchor for all trusses greater than 10' in length. For trussses 10' or less in length install one Simpson mdoel H2.5A anchor.

WALL STRAP TIES:

At top and bottom of wall install one Simpson model SP6 at each side of each door and window 4' or less in width. At top and bottom of wall for windows and doors larger than 4' in width install two Simpson model SP6's each side of openings. At each side of the Bay Window opening where the bay window header connects into to the wall install 2-SPH6's top and bottom of the wall. All other wall locations install one SP4 top and bottom of the wall 4' on center.

GABLE ENDS:

At gable ends install one Simpson model H5 anchor where lookouts connect to end gable truss.

At gable ends install one Simpson LSTA18 - 4' on center connecting gable end truss to top of wall framing.

BRACING: At each gable end install one 2x4 SPF 8' stud spaced 6' on center horizontal along top of bottom chord of trusses, nail with 2-12d nails at each truss including end truss. In addition, install a 2x4 brace extending from this stud at the gable end truss 45 degrees to truss at roof sheathing, nail with 2-12d nails where it crosses truss members and at ends. Gable end truss shall be built to recieve sheathing with vertical members 2' on center. Vertical members of gable end truss greater than 5' in height shall be stiffened with one 2x4 SPF nailed with 12d nails 8" on center to back of vertical member(see detail)

SHEATHING:

Wall sheathing shall be installed with long dimension vertical on exterior walls and full-depth blocking shall be required at horizontal joints in sheathing.

FRONT PORCH COLUMNS:

Install Simpson model ABU66 and notch top of 6x6 PT column for double 2x10 beam and install 2-5/8" galvanized carriage bolts at each location. If load bearing columns are installed: install 5/8" x 10" anchor bolt at each column location with Simpson CNW coupler and 5/8" all thread to top of porch header with 3"x3" sqare washer.

Equivalent capacity anchors may be substituted, installed in accordance with the manufacturers requirements.

Marty J. Humphries 3-31-09

NOTE: THIS SHEET WAS REVISED ON 3-31-09 ADDING JACK AND KING STUD REQUIREMENTS FOR WINDOW AND DOOR OPENINGS.

PLANS PREPARED BY:
MARTY J. HUMPHRIES P.E. # 51976
7932 240TH ST., O'BRIEN, FL 32071

HAMMOCK RESIDENCE
COLUMBIA COUNTY, FLORIDA

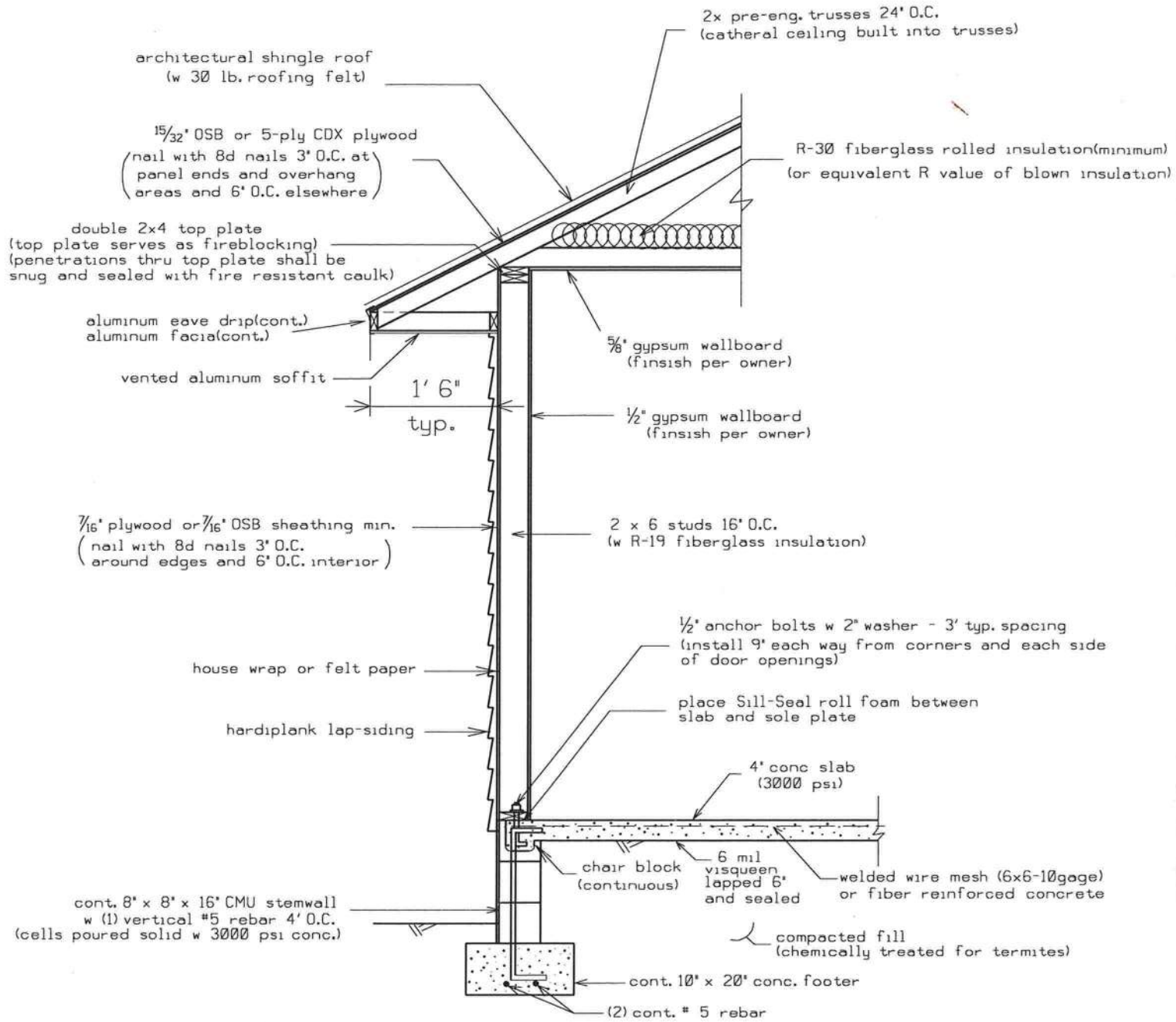

DETAIL A - WALL TYPICAL(N.T.S.)

HEADER SIZES/MATERIAL SHALL BE AS FOLLOWS:

WINDOWS & DOORS: 2-#2 SYP 2x10's with 2x6 top and bottom (nail 2x6 to 2x10's with 1-12d nail 10" O.C.)

BAY AREA HEADER(extends from wall each side of bay area): 2-#2 SYP 2x12's

FRONT PORCH BEAMS SHALL BE: 2 - #2 SYP 2X10's with 1/2" plywood or OSB between. Porch beams shall be connected to wall framing with 1-Simpson HUC210-2 hanger.

BREEZEWAY HEADER SHALL BE: 2 - #2 SYP 2X8's with 1/2" plywood or OSB between. Connected to wall framing and garage header with 1-Simpson HUC28-2 hanger.

GARAGE BEAMS SHALL BE: 2 - #2 SYP 2X12's with 1/2" plywood or OSB between.

JACK AND KING(FULL) STUD REQURIEMENTS AT OPENINGS:

FOR 3' OR SMALLER WINDOW & DOOR OPENINGS: INSTALL 1 JACK STUD AND 1 KING STUD EACH END OF THE HEADER

FOR 4' WINDOWS: INSTALL 1 JACK STUD AND 2 KING STUDS EACH END OF THE HEADER

STRAPPING AND ANCHOR REQUIREMENTS

(Designed In accordance with the 2007 FBC):

WINDLOAD DATA AND EXPOSURE:

Basic Wind Speed = 100 mph
Importance Factor = 1.0
Exposure Category = B
Residential Occupancy = Group R3
Mean Roof Height = 16.5'
Height and Exposure Adjustment Coefficient = 1.0
Roof Cross Slope = 6:12
Wall Height = 8' & 10'
Analysis Method = ASCE 7-05 Simplified Procedure
Component and Cladding Pressures = Roof(Zone 1=10.4,-16.5, Zone 2=10.4,-28.7, Zone 3=10.4,-42.4), Wall(Zone 4=18,-19.5, Zone 5=18,-24.1)(units are psf)

TRUSS ANCHORS:

At Truss to Exterior walls, Carport and Porch Beam Locations: install one Simpson model H10 anchor for all trusses greater than 10' in length. For trussses 10' or less in length install one Simpson mdoel H2.5A anchor.

WALL STRAP TIES:

At top and bottom of wall install one Simpson model SP6 at each side of each door and window 4' or less in width. At top and bottom of wall for windows and doors larger than 4' in width install two Simpson model SP6's each side of openings. At each side of the Bay Window opening where the bay window header connects into to the wall install 2-SPH6's top and bottom of the wall. All other wall locations install one SP4 top and bottom of the wall 4' on center.

GABLE ENDS:

At gable ends install one Simpson model H5 anchor where lookouts connect to end gable truss.

At gable ends install one Simpson LSTA18 - 4' on center connecting gable end truss to top of wall framing.

BRACING: At each gable end install one 2x4 SPF 8' stud spaced 6' on center horizontal along top of bottom chord of trusses, nail with 2-12d nails at each truss including end truss. In addition, install a 2x4 brace extending from this stud at the gable end truss 45 degrees to truss at roof sheathing, nail with 2-12d nails where it crosses truss members and at ends. Gable end truss shall be built to recieve sheathing with vertical members 2' on center. Vertical members of gable end truss greater than 5' in height shall be stiffened with one 2x4 SPF nailed with 12d nails 8" on center to back of vertical member(see detail)

SHEATHING:

Wall sheathing shall be installed with long dimension vertical on exterior walls and full-depth blocking shall be required at horizontal joints in sheathing.

FRONT PORCH COLUMNS:

Install Simpson model ABU66 and notch top of 6x6 PT column for double 2x10 beam and install 2-5/8" galvanized carriage bolts at each location. If load bearing columns are installed: install 5/8" x 10" anchor bolt at each column location with Simpson CNW coupler and 5/8" all thread to top of porch header with 3"x3" sqare washer.

Equivalent capacity anchors may be substituted, installed in accordance with the manufacturers requirements.

3-31-09

NOTE: THIS SHEET WAS REVISED ON 3-31-09 ADDING JACK AND KING STUD REQUIREMENTS FOR WINDOW AND DOOR OPENINGS.

PLANS PREPARED BY:
MARTY J. HUMPHRIES P.E. # 51976
7932 240TH ST., O'BRIEN, FL 32071

HAMMOCK RESIDENCE
COLUMBIA COUNTY, FLORIDA

HAMMOCK RESIDENCE
PLANS
COLUMBIA COUNTY, FL

Plan Sheet Index:

Marty J. Humphries
2-13-09

PLANS PREPARED BY:
MARTY J. HUMPHRIES P.E. # 51976
7932 240TH ST., O'BRIEN, FL 32071

HAMMOCK RESIDENCE
COLUMBIA COUNTY, FLORIDA

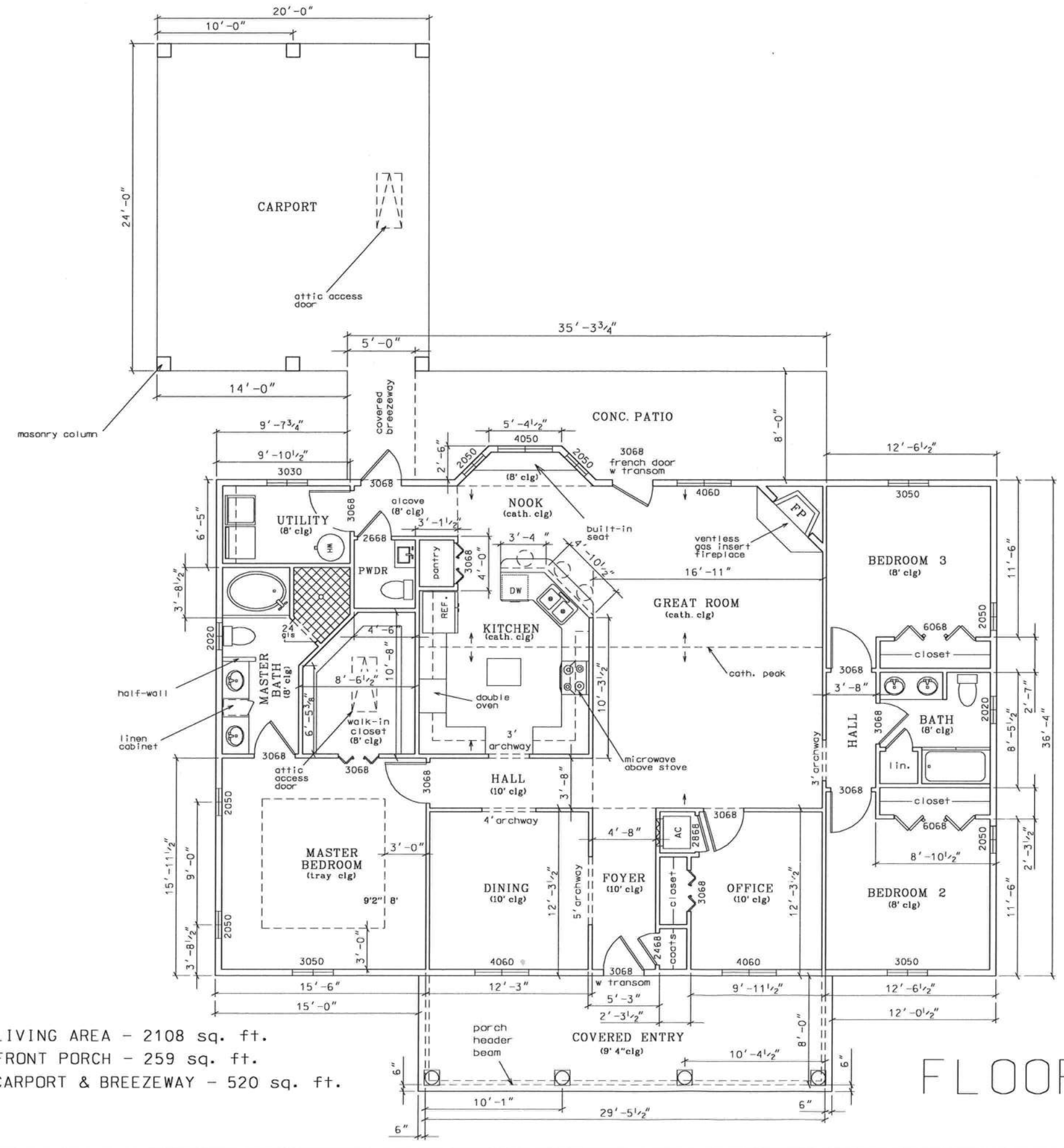

LIVING AREA - 2108 sq. ft.
FRONT PORCH - 259 sq. ft.
CARPORT & BREEZEWAY - 520 sq. ft.

FLOOR PLAN

0 4' 8'
scale

Marty J. Humphries
2-13-09

PLANS PREPARED BY:
MARTY J. HUMPHRIES P.E. # 51976
7932 240TH ST., O'BRIEN, FL 32071

HAMMOCK RESIDENCE
COLUMBIA COUNTY, FLORIDA

SHEET 2 OF 9

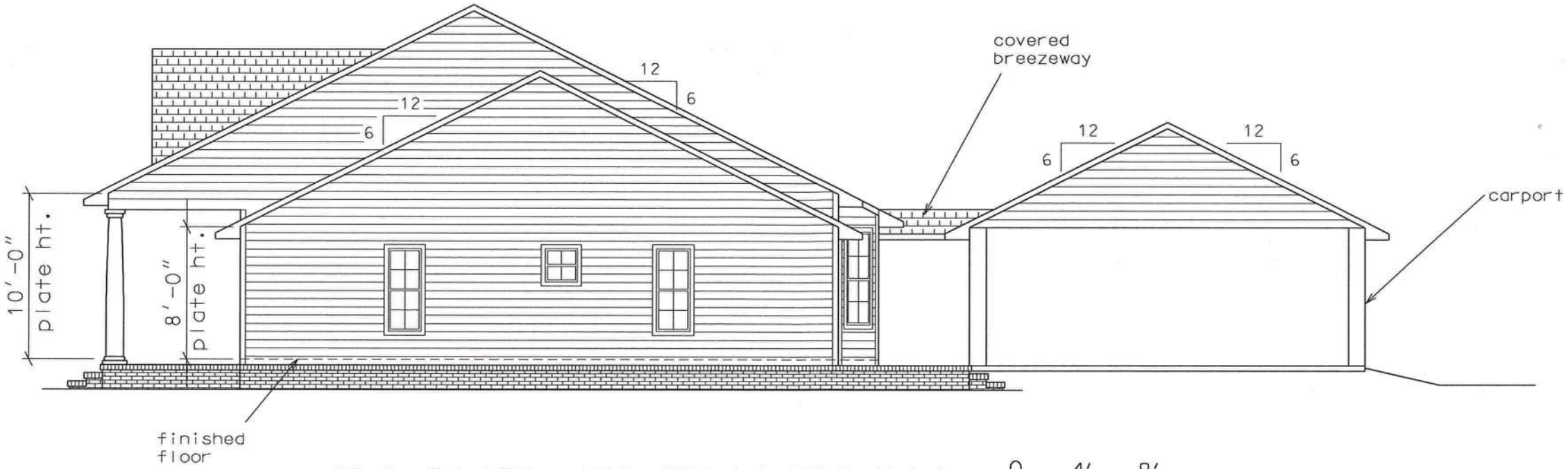

RIGHT ELEVATION

0 4' 8'
scale

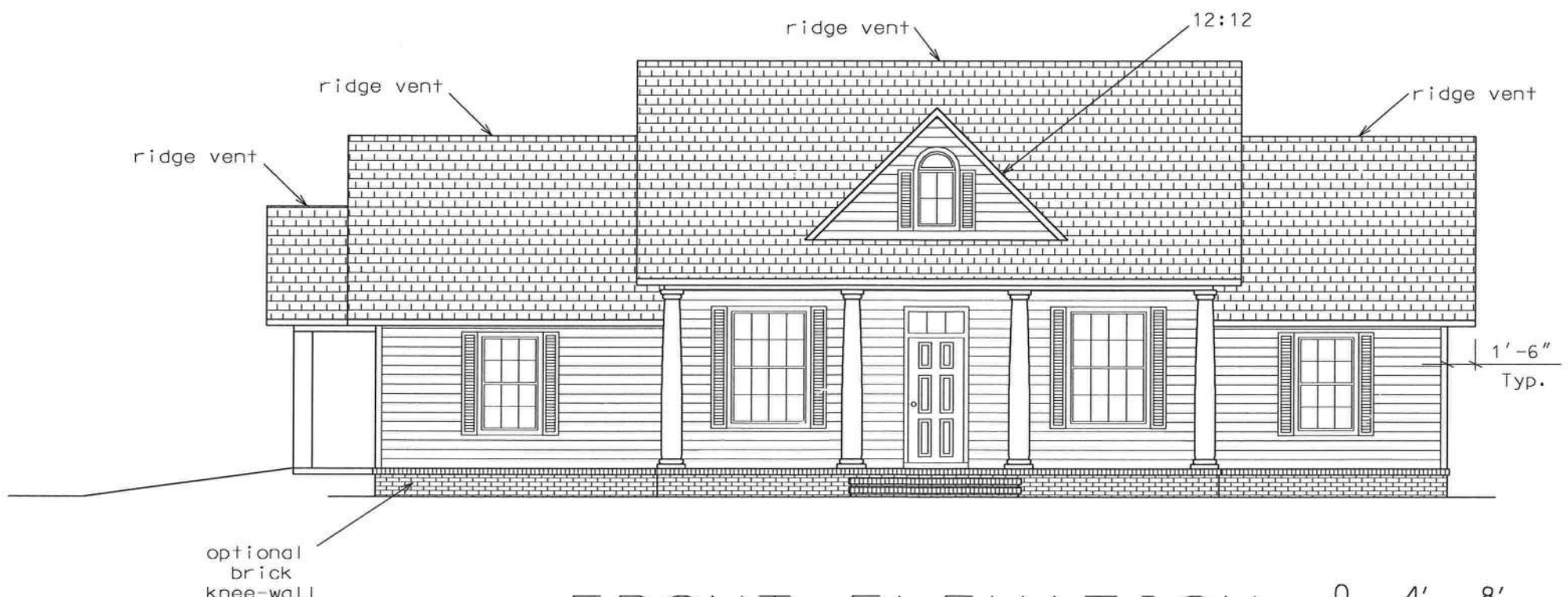

FRONT ELEVATION

0 4' 8'
scale

Marty J. Humphries
2-13-09

PLANS PREPARED BY:
MARTY J. HUMPHRIES P.E. # 51976
7932 240TH ST. • O'BRIEN, FL 32071

HAMMOCK RESIDENCE
COLUMBIA COUNTY, FLORIDA

SHEET
3
OF
9

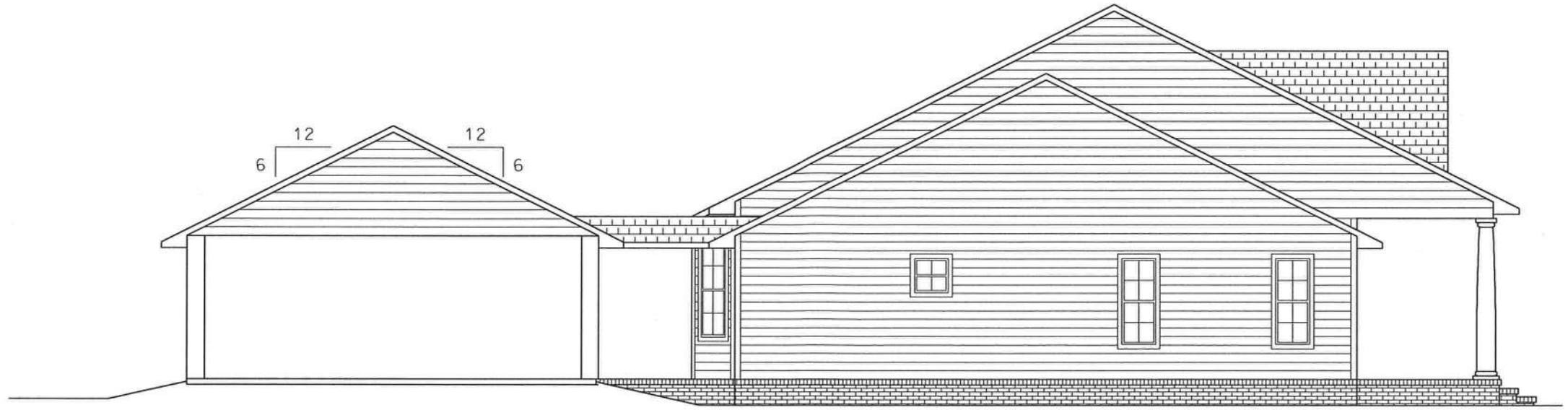

LEFT ELEVATION 0 4′ 8′ scale

REAR ELEVATION 0 4′ 8′ scale

Marty J. Humphries
2-13-09

PLANS PREPARED BY:
MARTY J. HUMPHRIES P.E. # 51976
7932 240TH ST., O'BRIEN, FL 32071

HAMMOCK RESIDENCE
COLUMBIA COUNTY, FLORIDA

SHEET 4 OF 9

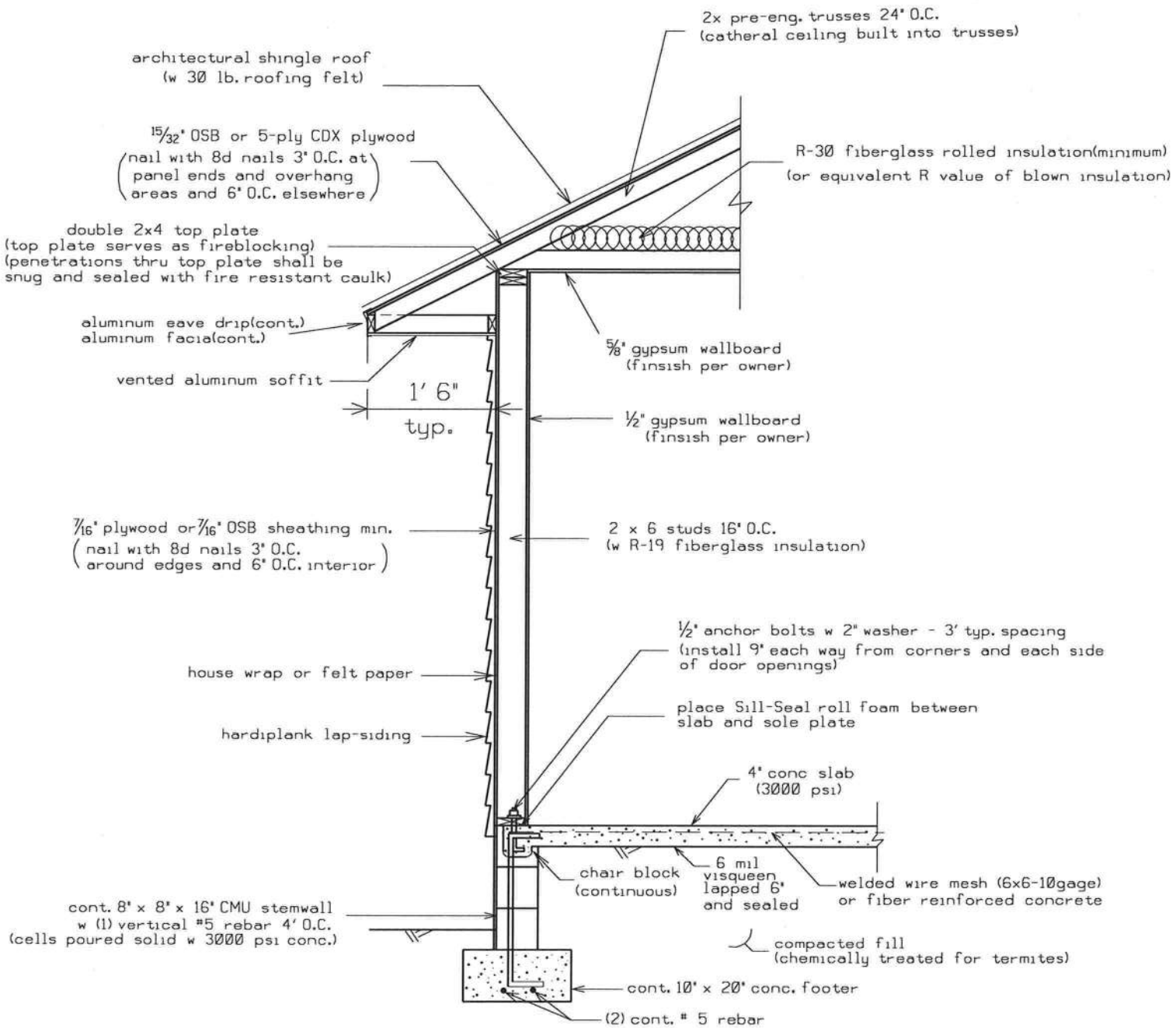

DETAIL A - WALL TYPICAL(N.T.S.)

HEADER SIZES/MATERIAL SHALL BE AS FOLLOWS:

WINDOWS & DOORS: 2-#2 SYP 2x10's with 2x6 top and bottom (nail 2x6 to 2x10's with 1-12d nail 10" O.C.)

BAY AREA HEADER(extends from wall each side of bay area): 2-#2 SYP 2x12's

FRONT PORCH BEAMS SHALL BE: 2 - #2 SYP 2X10's with 1/2" plywood or OSB between. Porch beams shall be connected to wall framing with 1-Simpson HUC210-2 hanger.

BREEZEWAY HEADER SHALL BE: 2 - #2 SYP 2X8's with 1/2" plywood or OSB between. Connected to wall framing and garage header with 1-Simpson HUC28-2 hanger.

GARAGE BEAMS SHALL BE: 2 - #2 SYP 2X12's with 1/2" plywood or OSB between.

STRAPPING AND ANCHOR REQUIREMENTS

(Designed In accordance with the 2007 FBC):

WINDLOAD DATA AND EXPOSURE:

Basic Wind Speed = 100 mph
Importance Factor = 1.0
Exposure Category = B
Residential Occupancy = Group R3
Mean Roof Height = 16.5'
Height and Exposure Adjustment Coefficient = 1.0
Roof Cross Slope = 6:12
Wall Height = 8' & 10'
Analysis Method = ASCE 7-05 Simplified Procedure
Component and Cladding Pressures = Roof(Zone 1=10.4,-16.5, Zone 2=10.4,-28.7, Zone 3=10.4,-42.4), Wall(Zone 4=18,-19.5, Zone 5=18,-24.1)(units are psf)

TRUSS ANCHORS:

At Truss to Exterior walls, Carport and Porch Beam Locations:
install one Simpson model H10 anchor for all trusses greater than 10' in length.
For trussses 10' or less in length install one Simpson mdoel H2.5A anchor.

WALL STRAP TIES:

At top and bottom of wall install one Simpson model SP6 at each side of each door and window 4' or less in width. At top and bottom of wall for windows and doors larger than 4' in width install two Simpson model SP6's each side of openings. At each side of the Bay Window opening where the bay window header connects into to the wall install 2-SPH6's top and bottom of the wall. All other wall locations install one SP4 top and bottom of the wall 4' on center.

GABLE ENDS:

At gable ends install one Simpson model H5 anchor where lookouts connect to end gable truss.

At gable ends install one Simpson LSTA18 - 4' on center connecting gable end truss to top of wall framing.

BRACING: At each gable end install one 2x4 SPF 8' stud spaced 6' on center horizontal along top of bottom chord of trusses, nail with 2-12d nails at each truss including end truss. In addition, install a 2x4 brace extending from this stud at the gable end truss 45 degrees to truss at roof sheathing, nail with 2-12d nails where it crosses truss members and at ends. Gable end truss shall be built to recieve sheathing with vertical members 2' on center. Vertical members of gable end truss greater than 5' in height shall be stiffened with one 2x4 SPF nailed with 12d nails 8" on center to back of vertical member(see detail)

SHEATHING:

Wall sheathing shall be installed with long dimension vertical on exterior walls and full-depth blocking shall be required at horizontal joints in sheathing.

FRONT PORCH COLUMNS:

Install Simpson model ABU66 and notch top of 6x6 PT column for double 2x10 beam and install 2-5/8" galvanized carriage bolts at each location. If load bearing columns are installed: install 5/8" x 10" anchor bolt at each column location with Simpson CNW coupler and 5/8" all thread to top of porch header with 3"x3" sqare washer.

Equivalent capacity anchors may be substituted, installed in accordance with the manufacturers requirements.

2-13-09

PLANS PREPARED BY:
MARTY J. HUMPHRIES P.E. # 51976
7932 240TH ST.. O'BRIEN. FL 32071

HAMMOCK RESIDENCE
COLUMBIA COUNTY. FLORIDA

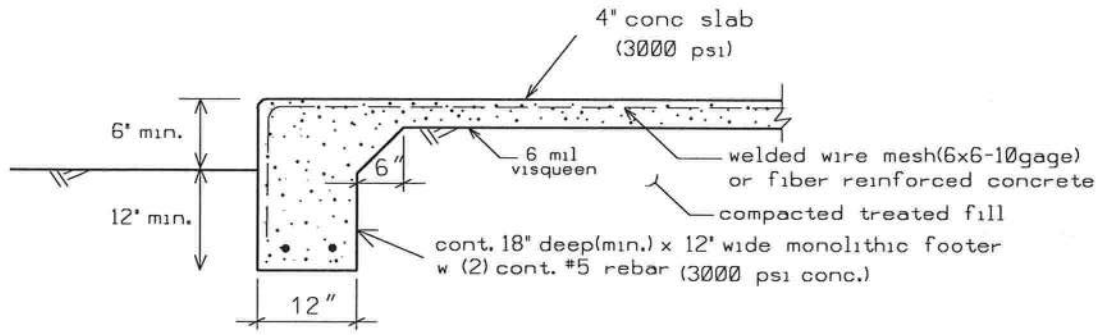

PORCH MONOLITHIC FOOTER DETAIL(TYP.)N.T.S.

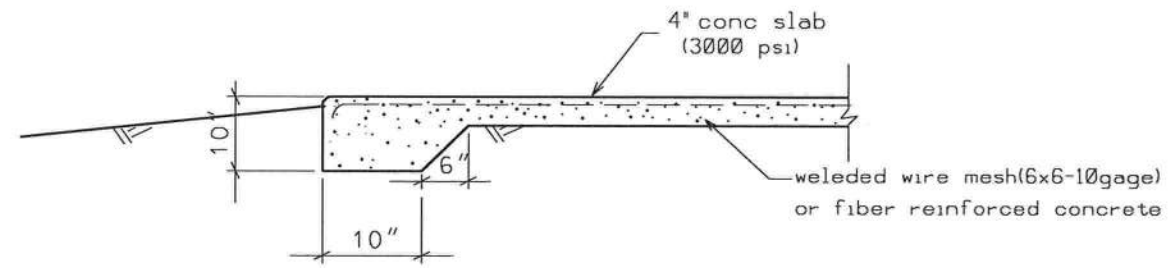

DETAIL "C"
PAD EDGE THIICKENING DETAIL(N.T.S.)

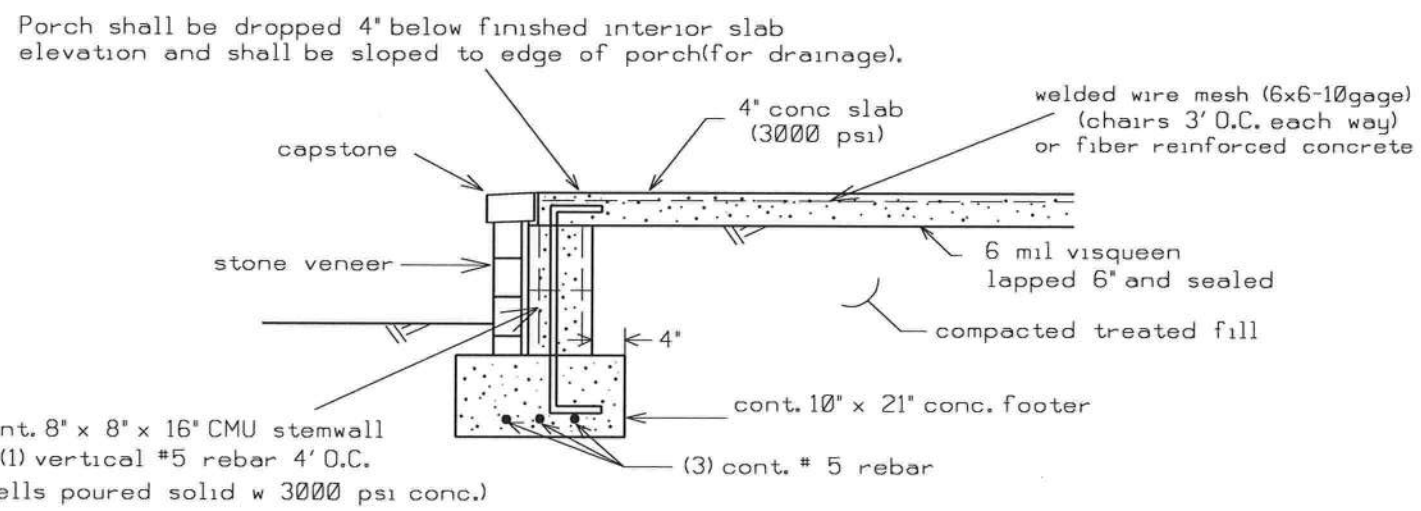

OTPIONAL STONE VENEER
PORCH FOUNDATION DETAIL (N.T.S.)

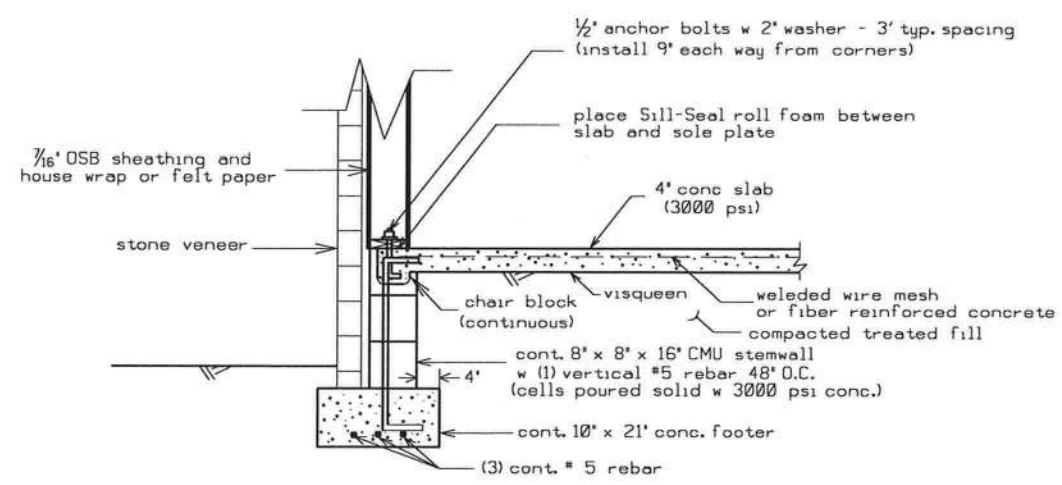

DETAIL C
STONE VENEER FOOTER DETAIL (N.T.S.)

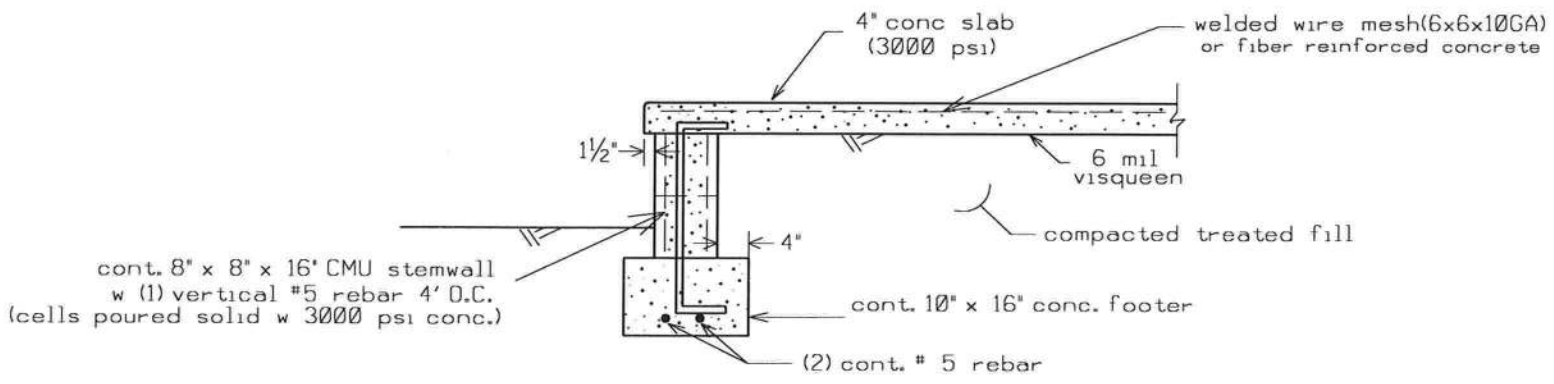

DETAIL B
PORCH FOUNDATION (N.T.S.)

2-13-09

PLANS PREPARED BY:
MARTY J. HUMPHRIES P.E. # 51976
7932 240TH ST., O'BRIEN, FL 32071

HAMMOCK RESIDENCE
COLUMBIA COUNTY, FLORIDA

SHEET
6
OF
9

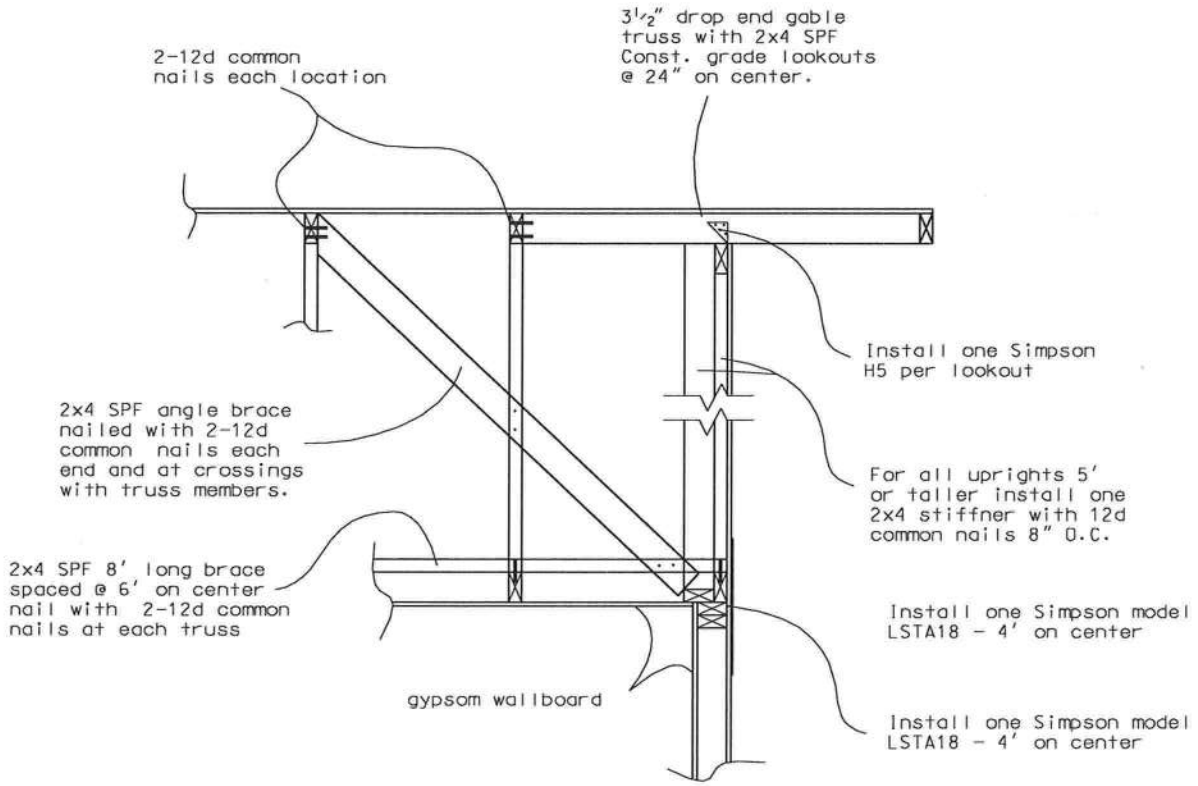

GABLE END BRACING DETAIL (N.T.S.)

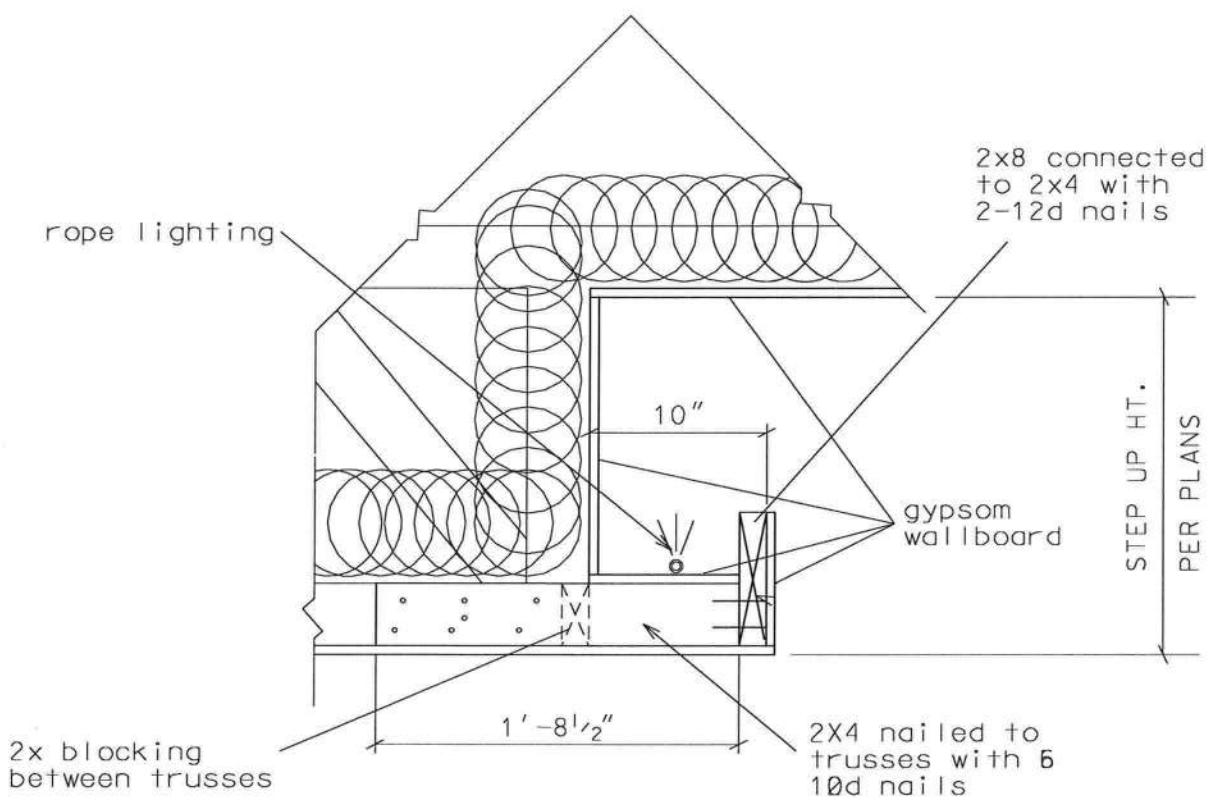

TRAY CEILING DETAIL (N.T.S.)

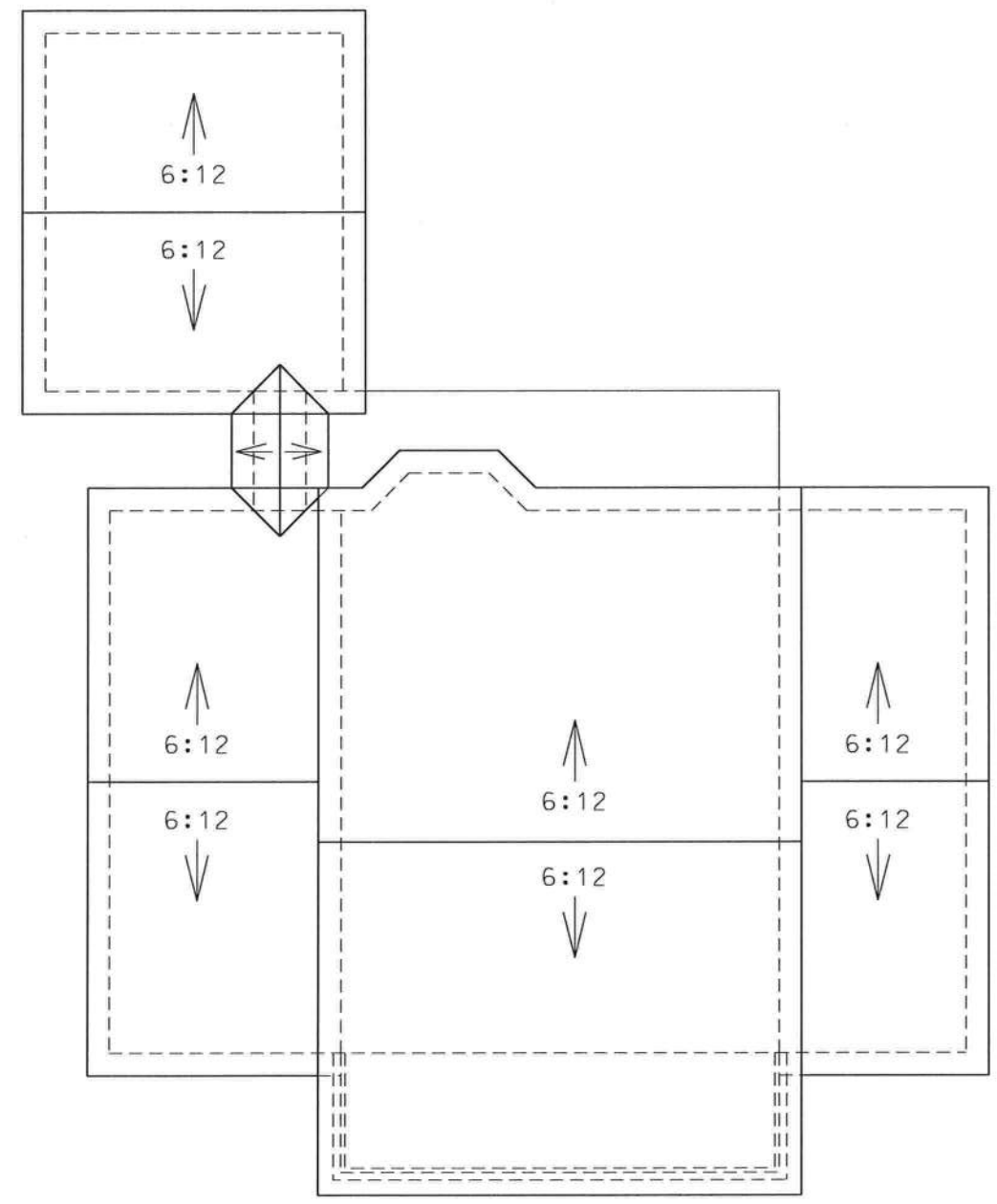

ROOF PLAN n.t.s.

Marty J. Humphries
2-13-09

PLANS PREPARED BY:
MARTY J. HUMPHRIES P.E. # 51976
7932 240TH ST. • O'BRIEN, FL 32071

HAMMOCK RESIDENCE
COLUMBIA COUNTY, FLORIDA

SHEET 7 OF 9

MASONRY CARPORT COLUMNS:

Masonry pier footer shall be 30" x30" x 18" deep with 5-#5 rebar each way(mat), with 4 - #5 vertical rebar with ACI hooks in footer(3000 psi concrete). Piers shall be 12" x 12" column blocks with 4 - #5 vertical rebar poured solid with 3000 psi concrete. Install 1 - Simpson model SSTB24 (5/8" diameter) and 1 Simpson model HD5A with 2 -¾" bolts each column to beam connection.

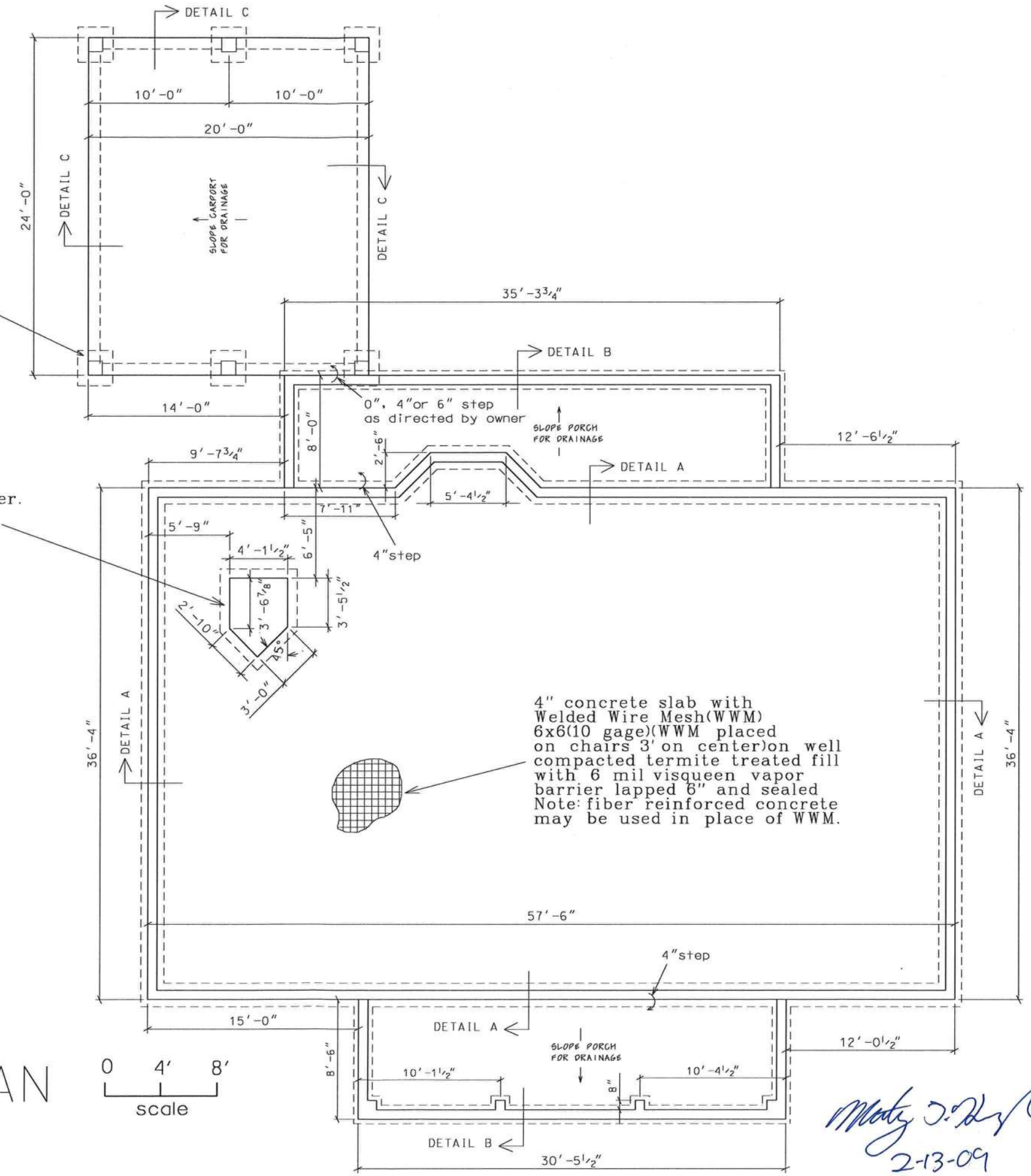

3½" step-down to shower. Thicken slab to 8" within 8" of stepdown

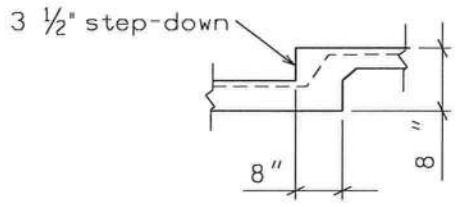

4" concrete slab with Welded Wire Mesh(WWM) 6x6(10 gage)(WWM placed on chairs 3' on center)on well compacted termite treated fill with 6 mil visqueen vapor barrier lapped 6" and sealed Note: fiber reinforced concrete may be used in place of WWM.

Note: stemwall with footer foundations shown, see optional foundation details.

FOUNDATION PLAN

0 4' 8'
scale

Marty J. O'Brien
2-13-09

PLANS PREPARED BY:
MARTY J. HUMPHRIES P.E. # 51976
7932 240TH ST., O'BRIEN, FL 32071

HAMMOCK RESIDENCE
COLUMBIA COUNTY, FLORIDA

SHEET 8 OF 9

ELECTRICAL LEGEND

- CEILING FAN w LIGHTS
- LIGHT FIXTURE
- RECESSED CAN LIGHT FIXTURE
- WALL MOUNTED LANTERN STYLE FIXTURE
- $ - SINGLE POLE SWITCH
- $3 - THREE-WAY SWITCH
- $1 - SINGLE POLE ILLUMINATED SWITCH
- D - DIMMER SWITCH
- D3 - THREE-WAY DIMMER SWITCH
- RECEPT.
- GFI RECEPT OR PART OF A GFI CIRCUIT.
- SECURITY LIGHT
- EXHAUST WITH LIGHT
- 220 V.
- S - SMOKE DETECTOR (AC/DC and interconnected)
- TELEPHONE AND RG6 COAX

NOTES:

1.) ALL EXTERIOR RECEPTACLES SHALL BE WEATHERPROOF.

2.) ALL BEDROOM RECPTS SHALL BE PART OF AN AFCI CIRCUIT. EACH BEDROOM SHALL BE ON AN INDIVIDUAL AFC CIRCUIT.

3.) PLACE 4 LIGHTS IN HOME ATTIC AREA WITH ILLUMINATED SWITCH LOCATED IN THE MASTER BEDROOM CLOSET. IN CARPORT AREA INSTALL SWITCH IN ATTIC WITH TWO LIGHTS.

ELECTRICAL PLAN

0 4' 8'
scale

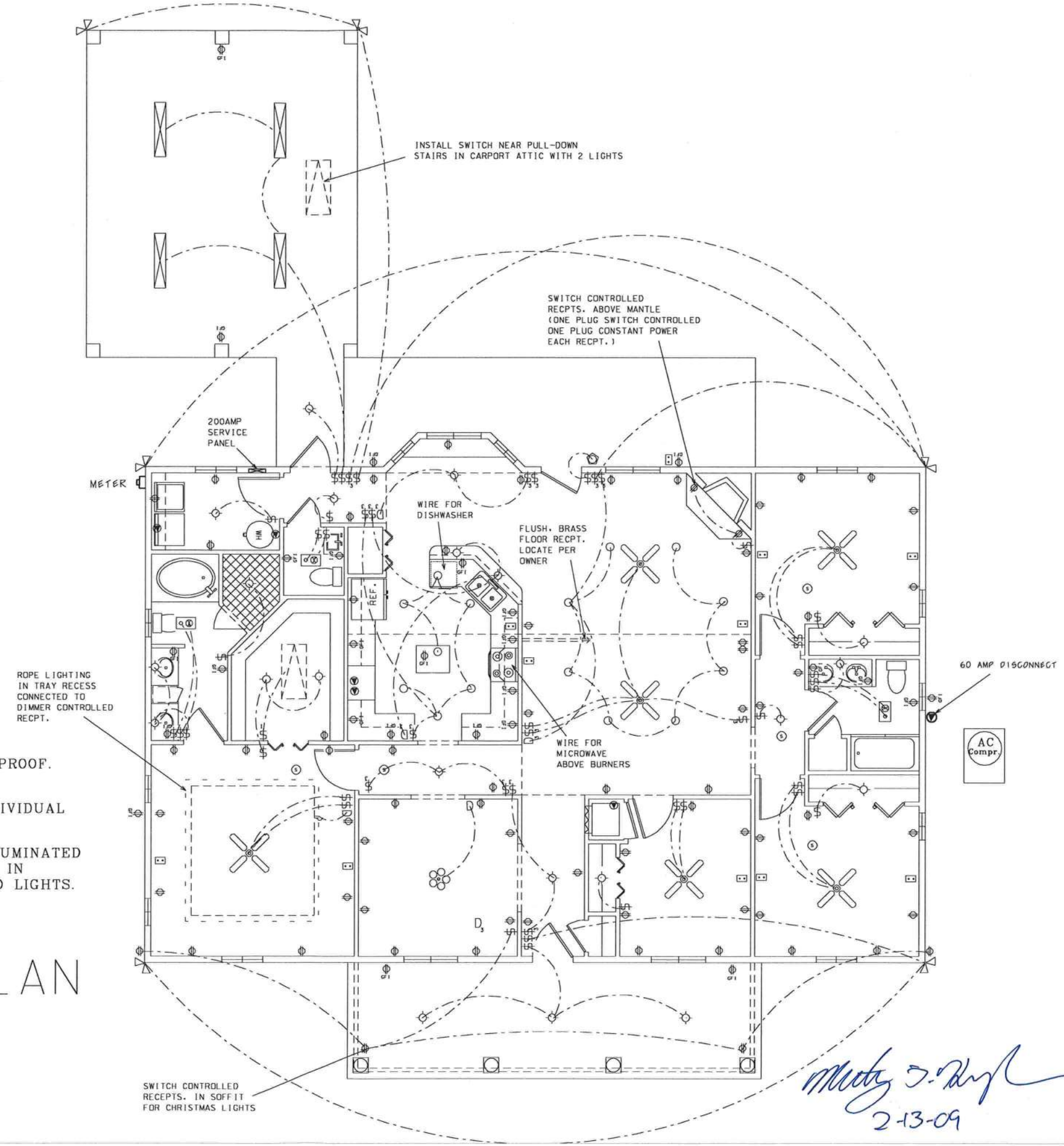

2-13-09

PLANS PREPARED BY:
MARTY J. HUMPHRIES P.E. # 51976
7932 240TH ST., O'BRIEN, FL 32071

HAMMOCK RESIDENCE
COLUMBIA COUNTY, FLORIDA

SHEET 9 OF 9